FED. RD.	STATE	PROJECT	
2	OHIO	U-19(12)	

1
460

SUMMIT COUNTY
SUM - 8 - 17.63

STATE OF OHIO
DEPARTMENT OF HIGHWAYS
SUM-8-17.63
CITY OF CUYAHOGA FALLS
CITY OF STOW
VILLAGE OF SILVER LAKE
SUMMIT COUNTY

Sheet No. 374, 375, 376, 378, 381, & 382 revised 8-3-70 EBL
Sheet No. 347, 348, 357, 358, 361, 383, 389, 385, 386, 389 & 390 revised 12-18-70 EBL
Sheet No. 358A and 389A added 12-18-70 EBL
Sheet No. 349A, 352A, 359A & 360A supersede
sheet No. 349, 352, 359 & 360 respectively. 12-18-70 EBL
Sheet No. 398, 349A, & 352A revised 2-5-71 EBL

U-19 (12)
SUM-8-17.63
LIMITED ACCESS
1969 SPECIFICATIONS

MICROFIL
NOV 17 1986

THE STANDARD SPECIFICATIONS OF THE STATE OF OHIO, DEPARTMENT OF HIGHWAYS, INCLUDING CHANGES AND SUPPLEMENTAL SPECIFICATIONS LISTED IN THE PROPOSAL SHALL GOVERN THIS IMPROVEMENT.

THE RIGHT-OF-WAY FOR THIS IMPROVEMENT WILL BE PROVIDED BY THE STATE OF OHIO.

I HEREBY APPROVE THESE PLANS AND DECLARE THAT THE MAKING OF THIS IMPROVEMENT WILL NOT REQUIRE THE CLOSING OF THE HIGHWAY TO TRAFFIC AND THAT PROVISIONS FOR THE MAINTENANCE AND SAFETY OF TRAFFIC WILL BE AS SET FORTH ON THESE PLANS AND ESTIMATES.

Approved L. James Martin
Date 6/21/69 Deputy Service Director, City of Stow
Approved Robert B. Grant
Date 6-24-69 Director of Public Service, Cuyahoga Falls, O.
Approved Clifton M. Mumford
Date 6-24-69 Division Deputy Director
Approved C. H. Galbreath
Date 10-23-69 Engineer of Bridges
Approved R. E. Gatlin
Date 10-24-69 Engineer of Location and Design
Approved George J. Thurman
Date 10-24-69 Deputy Director of Design and Construction
Approved T. M. Bowers
Date 4-3-70 Deputy Director of Right of Way
Approved Thomas Myers
Date 4-3-70 Deputy Director of Planning and Programming
Approved _____
Date _____ First Assistant Director
Approved _____
Date _____ Director of Highways

OK 7-8-70 10-14-69

LIMITED ACCESS

This improvement is especially designed for through traffic and has been declared a Limited Access highway or freeway by action of the Director of Highways in accordance with the provisions of Section 5511.02 of the Revised Code of Ohio.

MAY 01 1970

CONVENTIONAL SIGNS

Water Line
Gas Line
Storm Sewer
Sanitary Sewer
Center Line
Corporation Line
Fence Line
Guard Rail (existing)
Guard Rail (proposed)
Railroad
Power Poles
Telephone Poles
Trees or Stumps (existing)
Limited Access
Right of Way
Limited Access & Right of Way
Property Line

INDEX

	SHEET NO.
Title Sheet	1
Schematic Plan & Design Designation	2-4
Geometric Layout	5-8
Cross Section Layout	9
Typical Sections	10-17
General Notes	18-22
Maintenance of Traffic	23
Computations	24-30
Quantity Summary	31-37 & 37A
Superelevation Diagrams & Tables	38-44
Plan & Profile S.R.8	45-57
Ramp Plan & Profiles	58-73
Storm Sewer Profiles	74-80
Sanitary Sewer Profiles	81-82, 82-A
Water Main Profiles	83, 83-A, 83B
Sanitary & Water Quantities	84
Intersection Details	85-87, 87-A, 88-93
Grading Plans	94-95, 95A
Cross Section S.R.8	96-128, 128-A, 129-174, 174-A, 174-B, 174-C
Ramp Cross Sections	175-205
Front St. Plan, Profile & Cross Sections	206-211, 211-A
Relocated Second St.-Profile & Cross Sections	212-217
Bailey Rd. Plan, Profile & Cross Sections	218-219
Hudson Dr. Plan, Profile & Cross Sections	220-221
Ashland-Rudolph, Profile & Cross Sections	222-224
Allenside Nutwood-Charles, Details & Cross Sections	225, 225-A, 225-B, 226
Graham Rd. Plan, Profile & Cross Sections	227-235
Temporary Runaround - Graham Rd.	236-240
Structures 20' Span & Under	241-246
Drainage Details	247-249
Roadway Details	250-252, 251A & 251B
Utility Details	253-254
Lighting Plans	255-268, 268A & 268B
Signing Plans	269, 270, 270A, 271-312, 312A, 312B, 312C
Planting Plans	313-325, 325A, 325B & 325C — DELETED FROM PLAN
Structures Over 20 ft. Span	326-404, 404A, 404B, 404C, 404D, 404E, 404F, 404G, 404H,
Right of Way Plans	405-445, 445A, 445B, 446-460

LINE DATA

Begin Project - Sta. 229+00.00
End Project - Sta. 1043+44.20
Equation - Sta. 333+79.30 Bk. = Sta. 1035+00.00 Ahd.
Net Length of Project = 11,323.50 Lin. Ft. 2.144 Miles
Add for Approaches = 6,379.36 Lin. Ft. 1.208 Miles (see sheet no. 23)
Total Length of Work = 17,702.86 Lin Ft. 3.352 Miles

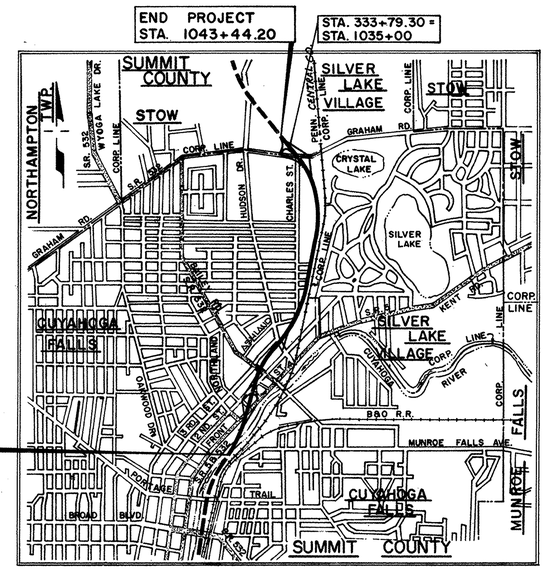

LOCATION MAP
SCALE OF MILES 0 ½ 1

Portion to be improved
State Roads
Other Roads

SCALE
Plan 0' 50' 100'
Profile: Horizontal 0' 50' 100'
Profile: Vertical 0' 5' 10'
Cross Sections 0' 10' 20'

File No.	Summit County - Sum-8-17.68
	Date of Letting _____ 19___
	Contract No. _____

SUPPLEMENTAL PRINTS OF STANDARD CONSTRUCTION DRAWINGS

BP-1	6-1-65	F-3	3-10-69	I-2A	6-6-69	F-1	6-1-65	BR-1-65	11-24-65
BP-2	12-1-68	F-4	6-1-65	MH-1	10-1-68	I-2	6-6-69	BR-2-67	11-6-67
BP-3	12-1-68	RB-1-55	2-2-55	MH-1A	10-1-68	GR-5	1-15-68		
BP-4	12-1-68	SD-1-65	11-8-65	MH-2	10-1-68	GR-6	7-15-68		
BP-5	6-1-65	FAC-1	9-15-67	GR-1	1-1-67	GR-2B	2-15-68		
BP-6	6-1-65	FAC-2	6-1-65	GR-2A	1-1-67	HL-1	11-1-65		
BP-7	1-1-66	HW-1	6-1-65	AS-1-67	6-12-69	HL-2	11-1-65		
MC-1	6-13-69	HW-E	6-1-65	L-1	6-1-65	HL-3	11-1-65		
MC-3	6-20-69	CB-2-2A&B	6-1-65			HL-4	1-1-66		
MC-4	6-13-69	CB-5	9-1-69			MH-2A	10-1-68		
		CB-6	6-1-65	MC-8	12-1-67	MC-6	6-1-65		
F-1	3-10-69	CB-8	9-1-69	C8-4	9-1-69				

SUPPLEMENTAL SPECIFICATIONS

801	1-1-69
606	1-1-69
934	1-1-69
608	1-1-69
814	1-1-69
811	1-1-65
815	1-1-69
816	1-1-69
935	1-1-65
938	8-12-69
1001	1-1-69

PREPARED AND RECOMMENDED BY
DALTON-DALTON ASSOCIATES,
CONSULTING ENGINEERS
AKRON OHIO CLEVELAND

DEPARTMENT OF TRANSPORTATION
FEDERAL HIGHWAY ADMINISTRATION
BUREAU OF PUBLIC ROADS

APPROVED:

_____ DIVISION ENGINEER

_____ DATE

FED RD.	STATE	PROJECT	
2	OHIO	U-19(12)	

1/460

SUMMIT COUNTY
SUM - 8 - 17.63

MICROFILMED
MAY 0 4 1979

STATE OF OHIO
DEPARTMENT OF HIGHWAYS
SUM-8-17.63
CITY OF CUYAHOGA FALLS
CITY OF STOW
VILLAGE OF SILVER LAKE
SUMMIT COUNTY

Sheet No. 374, 375, 376, 378, 381, & 382 revised 8-3-70 EBL
Sheet No. 347, 348, 357, 358, 361, 383, 384, 385, 386, 389 & 390 revised 12-18-70 EBL
Sheet No. 358A and 389A added 12-18-70 EBL
Sheet No. 349A, 352A, 359A & 360A supersede sheet No. 349, 352, 359 & 360 respectively. 12-18-70 EBL
Sheet No. 398, 349A, & 352A revised 2-5-71 EBL

U-19 (12)
SUM-8-17.63
LIMITED ACCESS
1969 SPECIFICATIONS

MICROFILMED
NOV 17 1986

THE STANDARD SPECIFICATIONS OF THE STATE OF OHIO, DEPARTMENT OF HIGHWAYS, INCLUDING CHANGES AND SUPPLEMENTAL SPECIFICATIONS LISTED IN THE PROPOSAL SHALL GOVERN THIS IMPROVEMENT.

THE RIGHT-OF-WAY FOR THIS IMPROVEMENT WILL BE PROVIDED BY THE STATE OF OHIO.

I HEREBY APPROVE THESE PLANS AND DECLARE THAT THE MAKING OF THIS IMPROVEMENT WILL NOT REQUIRE THE CLOSING OF THE HIGHWAY TO TRAFFIC AND THAT PROVISIONS FOR THE MAINTENANCE AND SAFETY OF TRAFFIC WILL BE AS SET FORTH ON THESE PLANS AND ESTIMATES.

Approved L. James Martin
Date 8/20/69 County Service Director, City of Stow
Approved Robert B. Trout
Date 6-24-69 Director of Public Service, Cuyahoga Falls, O.
Approved Clifton M. Mumford
Date 6-24-69 Division Deputy Director
Approved C. D. Galbreath
Date 10-23-69 Engineer of Bridges
Approved R. E. Gatti
Date 10-24-69 Engineer of Location and Design
Approved George J. Thurman
Date 10-24-69 Deputy Director of Design and Construction
Approved T. A. Bowers
Date 4-3-70 Deputy Director of Right of Way
Approved Thomas Myers
Date 4-3-70 Deputy Director of Planning and Programming
Approved _____
Date _____ First Assistant Director
Approved _____
Date _____ Director of Highways

OK JBV 7 10-14-69

LIMITED ACCESS

This improvement is especially designed for through traffic and has been declared a Limited Access highway or freeway by action of the Director of Highways in accordance with the provisions of Section 5511.02 of the Revised Code of Ohio.

CONVENTIONAL SIGNS

Water Line
Gas Line
Storm Sewer
Sanitary Sewer
Center Line
Corporation Line
Fence Line
Guard Rail (existing)
Guard Rail (proposed)
Railroad
Power Poles
Telephone Poles
Trees or Stumps (existing)
Limited Access
Right of Way
Limited Access & Right of Way
Property Line

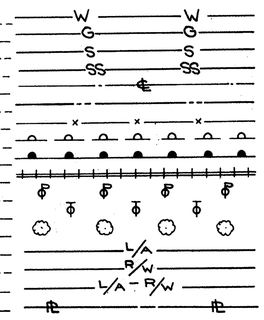

INDEX

	SHEET Nº
Title Sheet	1
Schematic Plan & Design Designation	2-4
Geometric Layout	5-8
Cross Section Layout	9
Typical Sections	10-17
General Notes	18-22
Maintenance of Traffic	23
Computations	24-30
Quantity Summary	31-37 & 37A
Superelevation Diagrams & Tables	38-44
Plan & Profile S.R.8	45-57
Ramp Plan & Profiles	58-73
Storm Sewer Profiles	74-80
Sanitary Sewer Profiles	81-82, 82-A
Water Main Profiles	83, 83-A & 83-B
Sanitary & Water Quantities	84
Intersection Details	85-87, 87-A, 88-93
Grading Plans	94-95 & 95A
Cross Section S.R.8	96-128, 128-A, 129-174, 174-A, 174-B, 174-C
Ramp Cross Sections	175-205
Front St. Plan, Profile & Cross Sections	206-211, 211-A
Relocated Second St.-Profile & Cross Sections	212-217
Bailey Rd. Plan, Profile & Cross Sections	218-219
Hudson Dr. Plan, Profile & Cross Sections	220-221
Ashland-Rudolph, Profile & Cross Sections	222-224
Allenside Nutwood-Charles, Details & Cross Sections	225, 225-A, 225-B, 226
Graham Rd. Plan, Profile & Cross Sections	227-235
Temporary Runaround - Graham Rd.	236-240
Structures 20' Span & Under	241-246
Drainage Details	247-249
Roadway Details	250-252, 251A & 251B
Utility Details	253-254
Lighting Plans	255-268, 268A & 268B
Signing Plans	269, 270, 270A, 271-312, 312A, 312B, 312C — DELETED FROM PLAN
Planting Plans	313-325, 325A, 325B & 325C
Structures Over 20 ft. Span	326-404, 404A, 404B, 404C, 404D, 404E, 404F, 404G, 404H.
Right of Way Plans	405-445, 445A, 445B, 446-460

LINE DATA

Begin Project - Sta. 229+00.00
End Project - Sta. 1043+44.20
Equation - Sta. 333+79.30 Bk. = Sta. 1035+00.00 Ahd.
Net Length of Project = 11,323.50 Lin. Ft. 2.144 Miles
Add for Approaches = 6,379.36 Lin. Ft. 1.208 Miles (see sheet no. 23)
Total Length of Work = 17,702.86 Lin Ft. 3.352 Miles

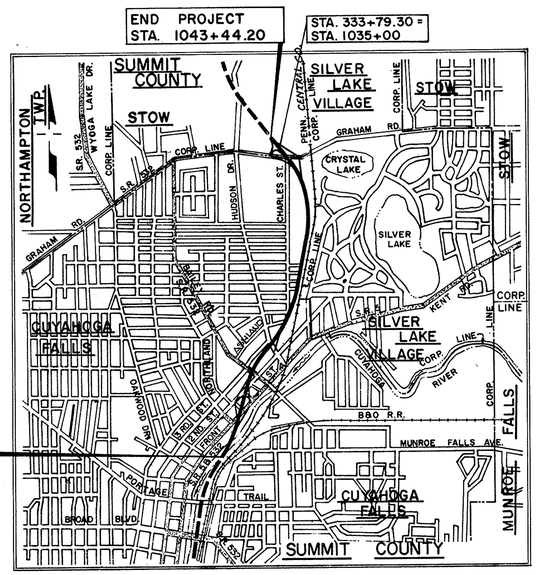

LOCATION MAP
0 ½ 1
SCALE OF MILES

Portion to be improved
State Roads
Other Roads

SCALE

Plan 0' 50' 100'
Profile: Horizontal 0' 50' 100'
Profile: Vertical 0' 5' 10'
Cross Sections 0' 10' 20'

SUPPLEMENTAL PRINTS OF STANDARD CONSTRUCTION DRAWINGS

BP-1	6-1-65	F-3	3-10-69	I-2A	6-6-69	I-1	6-1-65	BR-1-65 11-24-65
BP-2	12-1-68	F-4	6-1-63	MH-1	10-1-68	I-2	6-6-69	BR-2-67 11-6-67
BP-3	12-1-68	RB-1-E55	2-2-66	MH-1A	10-1-68	GR-5	1-15-68	
BP-4	12-1-68	SD-1-65	11-8-65	MH-2	10-1-68	GR-6	7-15-68	
BP-5	6-1-65	FAC1-1	5-15-67	GR-1	1-1-67	GR-2B	2-15-68	
BP-6	6-1-65	FAC1-2	6-1-65	GR-2A	1-1-67	HL-1	11-1-65	
BP-7	1-1-66	HW-1	6-1-65	AS-1-67	6-12-69	HL-2	11-1-65	
MC-1	6-13-69	HW-E	6-1-65	L-1	6-1-65	HL-3	11-1-65	
MC-3	6-20-69	CB-2-2-A&B	6-1-65			HL-4	1-1-66	
MC-4	6-13-69	CB-5	9-1-69			MH-2A	10-1-68	
		CB-6	6-1-65	MC-8	12-1-67	MC-6	6-1-65	
F-1	3-10-69	CB-8	9-1-69	CB-4	9-1-69			

SUPPLEMENTAL SPECIFICATIONS

801	1-1-69
806	1-1-69
934	1-1-69
808	1-1-69
814	1-1-69
811	1-1-69
815	1-1-69
816	1-1-69
825	1-1-69
938	8-12-69
1001	1-1-69

File Nº	Summit County - Sum-8-17.68
	Date of Letting _____ 19___
	Contract Nº _____

PREPARED AND RECOMMENDED BY
DALTON-DALTON ASSOCIATES,
CONSULTING ENGINEERS
AKRON OHIO CLEVELAND

DEPARTMENT OF TRANSPORTATION
FEDERAL HIGHWAY ADMINISTRATION
BUREAU OF PUBLIC ROADS

APPROVED:

_____ DIVISION ENGINEER

_____ DATE

MICROFILMED
MAR 01 1979
REPRODUCTION

FED. RD.	STATE	PROJECT	
2	OHIO		

2
460

SUMMIT COUNTY
SUM -8 - 17.63

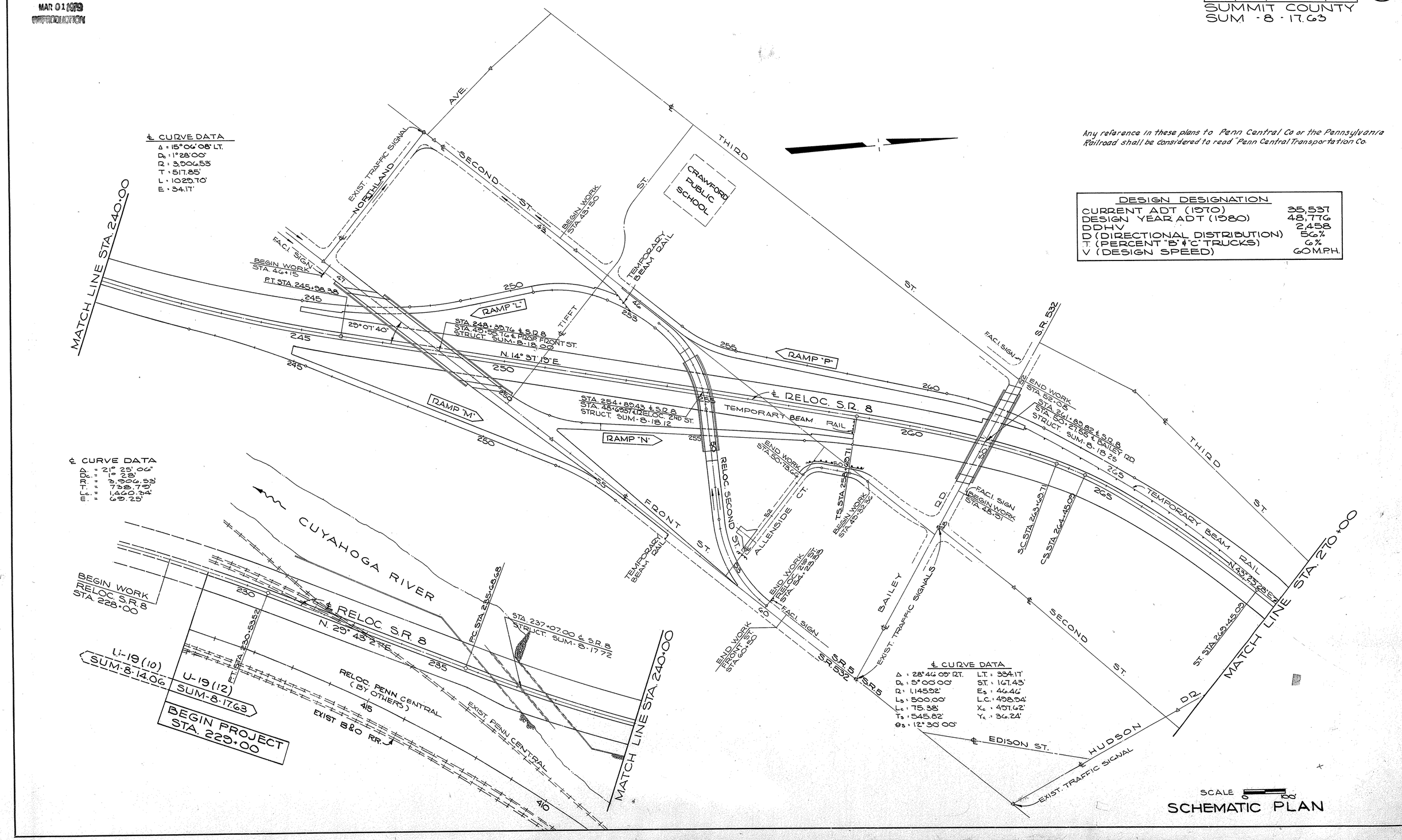

Any reference in these plans to Penn Central Co or the Pennsylvania Railroad shall be considered to read "Penn Central Transportation Co.

DESIGN DESIGNATION	
CURRENT ADT (1970)	35,537
DESIGN YEAR ADT (1980)	48,776
DDHV	2,458
D (DIRECTIONAL DISTRIBUTION)	56%
T (PERCENT "B" & "C" TRUCKS)	6%
V (DESIGN SPEED)	60 M.P.H.

SCHEMATIC PLAN

K & E-AKRON

RECEIVED
MAR 01 1979
HIGHWAY ENGINEERING

FED. RD.	STATE	PROJECT	
2	OHIO		

3
460

SUMMIT COUNTY
SUM -8 - 17.63

MATCH LINE STA. 270+00

TEMPORARY BEAM RAIL

FAC. SIGN THIRD ST.

HUDSON DR.

END WORK STA. 51+32.53

T.S. 271+32.53

STA. 271+19.61 & S.R.S. STRUCT. SUM-8-17.63 HUDSON DR.

ASHLAND AVE.

MELVIN AVE.

SHELDON AVE.

FAC. SIGN BEGIN WORK STA. 47+40.5

SECOND ST.

RAMP Q

BEGIN WORK STA. 47+68

RUDOLPH AVE.

S.C. 271+12.32

S.C. 271+32.53

CONNECTOR

END WORK STA. 51+71.02

S.T. 271+12.32

CONNECTOR

NUTWOOD AVE.

MARGUERITE AVE.

KATHRON AVE.

NOTRE DAME AVE.

FRANKLIN AVE.

LEHIGH AVE.

ORRVILLE AVE.

CHARLES ST.

AERO AVE.

ROSE AVE.

CLOVER AVE.

GARDEN AVE.

LEHIGH AVE. (NOT OPEN)

SAUNDERS AVE. (NOT OPEN)

N. 14° 24' 05" E.

CORPORATION LINE

PENN CENTRAL CO.

CORPORATION LINE

~CITY OF CUYAHOGA FALLS~

~VILLAGE OF SILVER LAKE~

20" H.P. EOG. PIPE LINE

MATCH LINE STA. 302+00

275 275 285 290 295 300

℄ CURVE DATA

Δ = 28° 55' 23" LT.	L.T. = 334.17'
D_c = 5° 00' 00"	S.T. = 167.43'
R = 1,145.92	E_s = 47.05'
L_s = 500.00'	L.C. = 498.04'
L_c = 70.74'	X_c = 497.62'
T_s = 548.15'	Y_c = 36.24'
Θ_s = 12° 30' 00"	

SCALE

SCHEMATIC PLAN

K & E - AKRON

FED. RD.	STATE	PROJECT	
2	OHIO		

4
460

SUMMIT COUNTY
SUM -8-17.63

MAR 31 1969

MATCH LINE STA. 302+00

MATCH LINE STA. 104+50

MATCH LINE STA. 103+00

MATCH LINE STA. 103+70.00

ROANOKE AVE.

ROANOKE AVE. (NOT OPEN)

SAUNDERS AVE. (NOT OPEN)

ALMEDA AVE.

SERVICE ROAD

℄ GRAHAM RD.

TEMP. ROAD

104

F.A.I. SIGN
BEGIN WORK
STA. 105+55

HUDSON DR.

069

END WORK
RELOC. S.R. 8
STA. 1049+25

RAMP "B"

℄ SR 8

N 45° 05' 20" W. 1040

RAMP "D"

END PROJECT
STA. 1043+44.20

SUM-8-17.63
U-19 (12)

SUM-8-19.77
U-19 (14)

℄ CURVE DATA

Δ = 55° 33' 25"	L.T. = 233.44'
D_R = 3° 00' 00"	S.T. = 116.76'
R = 1,909.86'	E_S = 203.64'
L_S = 350.00'	L.C. = 349.87'
L_C = 1,635.23'	X_C = 349.71'
T_S = 1,269.31'	Y_C = 10.68'
Θ_S = 5° 15' 00"	

T.S. STA. 304+09.41

N 14° 24' 05" E.

305

S.C. 307+58.41

20" H.P. E.O.G. PIPE LINE

HOLLYWOOD CIRCLE

ROBERTS JUNIOR HIGH SCHOOL

CHARLES ST.

45

48

C.S. STA. 329+87.44

RAMP "E"

STA. 321+37.44

20" H.P. E.O.G. PIPE LINE

STA. 314+04.50 S.R. 8
STA. 5.0+00.00 PED. BRIDGE
STRUCT. № SUM-8-1927

310

315

℄ RELOC. S.R. 8

320

2 TEMPORARY BEAM RAIL

325

TEMPORARY BEAM RAIL

RAMP "C"

STA. 327+86.45 S.R. 8
STA. 113+17.56 ℄ GRAHAM
STRUCT. SUM-8-19.50

STA. 116+37.00 ℄ GRAHAM
STA. 327+63.41 ℄ RAMP "C"
STA. 1027+55.13 ℄ RAMP "D"

CORPORATION LINE

PENN CENTRAL CO.

~CITY OF CUYAHOGA FALLS~

~VILLAGE OF SILVER LAKE~

~CITY OF STOW

℄ MILLBORO RD.

SERVICE ROAD

TEMPORARY BEAM RAIL
STA. 104+50

103.4

RAMP "B"

RELOC. GRAHAM RD. ~CITY OF CUYAHOGA FALLS~ ~CITY OF STOW~

110'

1032

335

ROAD

RAMP "A"

STA. 333+19.30 BACK
STA. 1038+00 AHEAD

332

N 45° 05' 20" W.

330

TEMPORARY BEAM RAIL

1035

RAMP "D"

℄ EXIST. GRAHAM RD.

1030

TEMPORARY BEAM RAIL

1025

CORPORATION LINE

EQUATION
STA. 116+48.33 Bk.°
STA. 118+78.60 AHD.

MATCH STA. 122+00

MATCH STA. 122+00

END WORK
STA. 124+80

F.A.C.I. SIGN

SCALE 0 100'

SCHEMATIC PLAN

K & E - AKRON

FED. RD.	STATE	PROJECT	
2	OHIO		

5
460

SUMMIT COUNTY
SUM - 8 - 17.63

CURVE DATA

CODE	LOCATION	P.C. STATION	P.C. N.	P.C. E.	P.I. STATION	P.I. N.	P.I. E.	P.T. STATION	P.T. N.	P.T. E.	Δ	D_c	R	T	L_c	E
1	℄ S.R. 8	215+93.19	536,483.53	2,280,628.75	223+31.98	537,214.57	2,280,735.48	230+69.53	537,856.15	2,281,101.79	21° 25' 06"	1° 28'	3906.53	738.79'	1,460.34'	69.25'
1-A	℄ S.R. 8	235+68.68	538,303.52	2,281,357.21	240+86.53	538,753.23	2,281,613.57	245+38.38	539,254.31	2,281,744.70	15° 06' 08"	1° 28'	3,906.53	517.85'	1029.70'	34.17'
5	RAMP "M"	242+33.12	538,886.54	2,281,688.74	245+82.16	539,026.63	2,281,739.67	245+30.78	539,158.52	2,281,808.50	7° 26' 29"	2° 30'	2,291.83	149.04'	297.66'	5.84'
6	RAMP "M"	251+89.01	539,744.00	2,282,111.84	252+73.44	539,818.15	2,282,150.31	253+55.80	539,878.22	2,282,208.34	16° 35' 20"	10° 00'	572.96	83.53'	165.88'	6.06'
7	RAMP "L"	244+88.61	539,161.78	2,281,649.25	246+19.67	539,290.50	2,281,682.73	247+50.01	539,425.18	2,281,692.66	10° 21' 21"	4° 00'	1,432.39	131.06	261.40'	5.58'
8	RAMP "L"	247+50.01	539,425.18	2,281,692.66	248+12.85	539,487.58	2,281,697.39	248+74.85	539,549.85	2,281,691.24	9° 58' 14"	8° 00'	716.20'	62.58'	124.84'	2.73'
9	RAMP "L"	250+52.85	539,728.57	2,281,689.66	251+48.29	539,823.54	2,281,680.27	252+38.31	539,908.08	2,281,724.70	33° 22' 56"	18° 00'	318.31'	95.44'	185.46'	14.00'
10	RAMP "L"	252+38.31	539,908.02	2,281,724.70	253+06.45	539,968.36	2,281,756.43	253+73.76	540,017.41	2,281,805.18	16° 15' 08"	12° 00'	477.46	68.18'	135.44'	5.02'
11	RELOC. 2ND	46+69.00	540,026.44	2,281,794.43	47+01.35	540,118.81	2,281,883.60	49+12.09	540,119.77	2,282,011.89	45° 34' 45"	18° 45'	305.58	128.38'	243.09'	25.88'
12	RELOC. 2ND	51+77.05	540,121.76	2,282,276.34	53+07.11	540,122.74	2,282,407.00	54+23.33	540,216.28	2,282,497.37	45° 53' 40"	18° 30'	309.71'	130.06'	246.28'	26.20'
13	RAMP "P"	253+79.14	540,082.49	2,281,806.85	254+53.74	540,135.73	2,281,858.25	255+24.95	540,206.58	2,281,873.59	21° 13' 35"	18° 45'	305.58	74.00	145.21'	8.83'
14	RAMP "P"	260+48.47	540,707.83	2,282,030.60	261+74.78	540,828.78	2,282,067.03	262+99.51	540,935.34	2,282,134.81	15° 41' 25"	6° 15'	916.73	126.31'	251.04'	8.66'
15	RAMP "P"	262+99.51	540,935.34	2,282,134.82	264+24.79	541,041.07	2,282,202.05	265+50.00	541,142.95	2,282,274.85	3° 07' 52"	1° 15'	4,583.66	125.28'	250.49'	1.71'
16	RAMP "N"	257+53.58	540,353.04	2,282,11051	258+11.68	540,410.49	2,282,119.15	258+69.71	540,467.06	2,282,132.40	4° 38' 43"	4° 00'	1,432.39	58.10'	116.13'	1.18'
16-A	RAMP "N"	249+84.39	539,624.40	2,281,908.64	250+52.85	539,672.41	2,281,954.40	251+18.47	539,731.15	2,281,985.70	15° 50' 56"	12° 00'	477.47'	66.46'	132.08'	4.60'
16-B	RAMP "N"	251+18.47	539,731.15	2,281,985.70	251+60.79	539,768.54	2,282,005.50	252+02.29	539,810.39	2,282,011.79	15° 21' 23"	23° 05' 33"	248.11'	42.32'	83.82'	3.58'

✳ SEE CURVE DATA FOR CURVE Nº2 BELOW

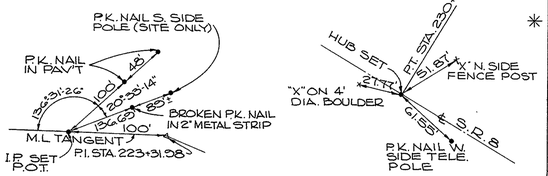

REF. TIE "M"

REF. TIE "L"

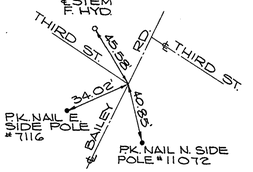

REF. TIE "K"

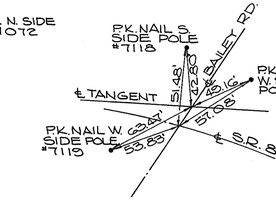

REF. TIE "J"

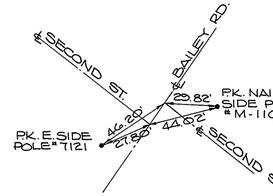

REF. TIE "I"

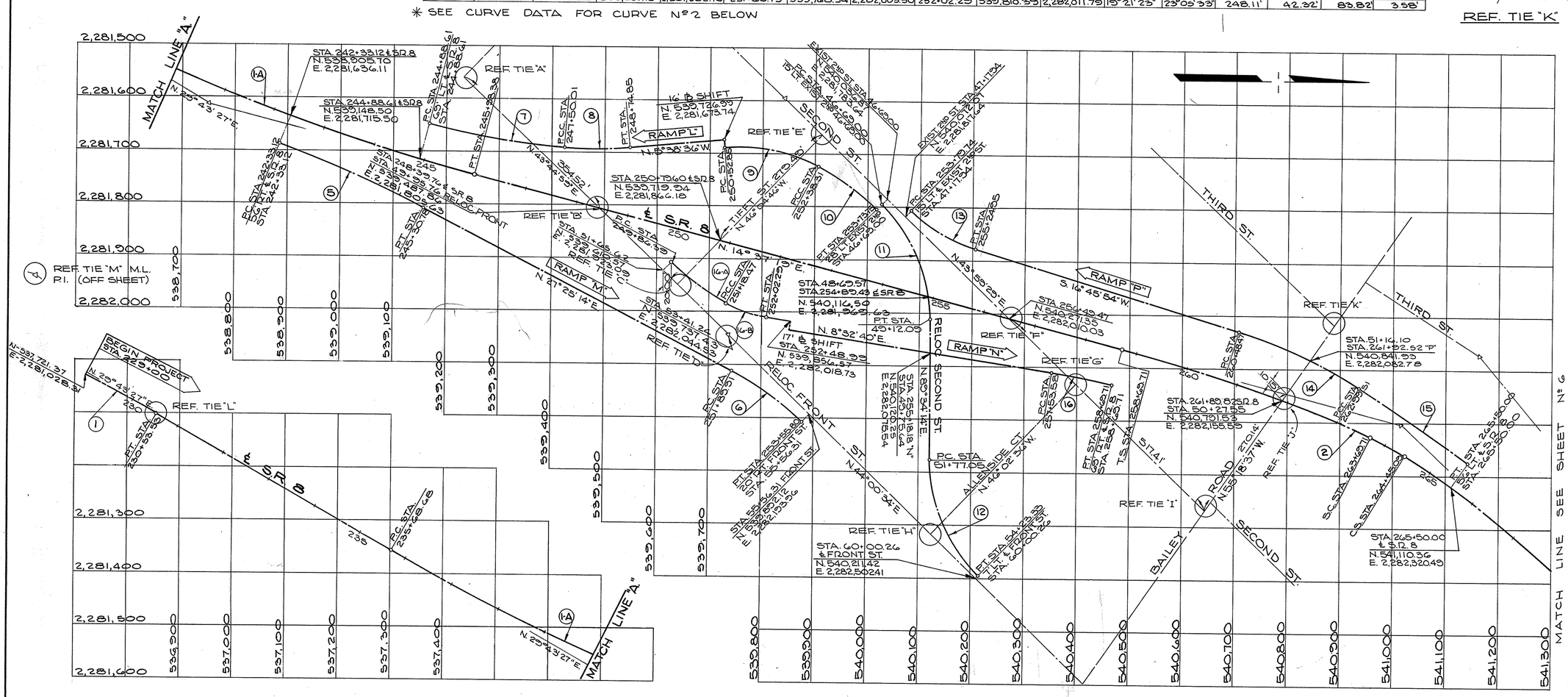

CURVE DATA

CODE	LOCATION	T.S. STATION	T.S. N.	T.S. E.	S.C. STATION	S.C. N.	S.C. E.	P.I. STATION	P.I. N	P.I. E	C.S. STATION	C.S. N.	C.S. E.	S.T. STATION	S.T. N.	S.T. E.	Δ	D_c	L_c	T_s	E_s	L_s	Θ_s	L.T.	S.T.	R.
2	℄ S.R. 8	258+69.71	540,484.45	2,282,065.62	260+68.71	540,556.81	2,282,226.31	264+15.53	541,012.61	2,282,203.42	264+45.00	541,022.73	2,282,262.86	265+45.09	541,109.24	2,282,518.38	28° 46' 08"	5° 00'	75.38'	545.82'	46.46'	500'	12° 30' 00"	334.17'	167.43'	1145.92'

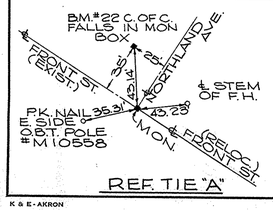

REF. TIE "A"

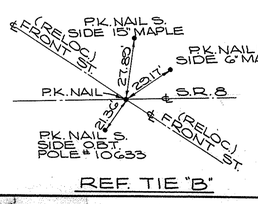

REF. TIE "B"

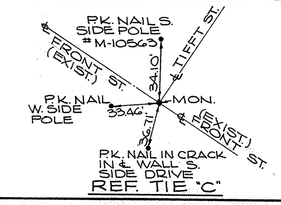

REF. TIE "C"

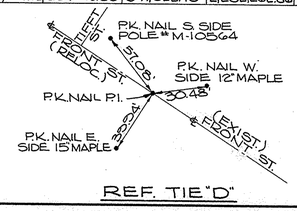

REF. TIE "D"

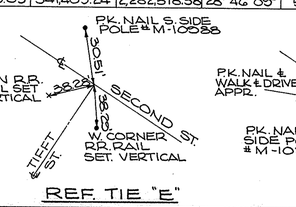

REF. TIE "E"

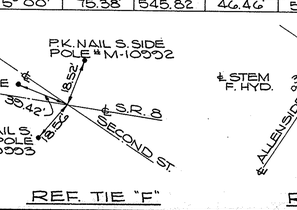

REF. TIE "F"

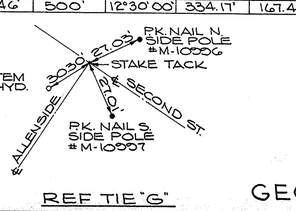

REF. TIE "G"



REF. TIE "H"

GEOMETRIC LAYOUT

K & E - AKRON

FED. RD.	STATE	PROJECT	
2	OHIO		

6
460

SUMMIT COUNTY
SUM-8-17.63

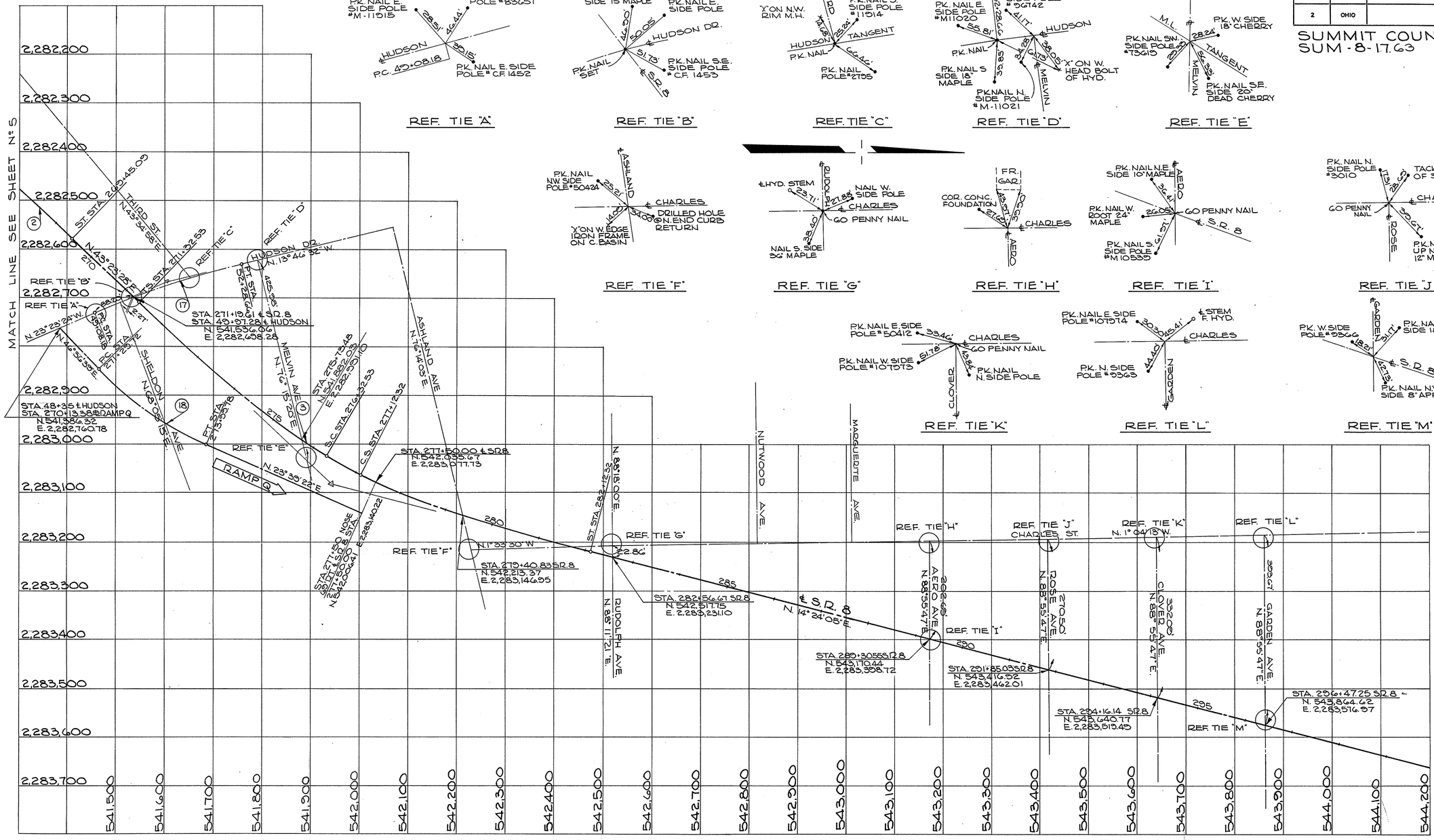

CURVE DATA

CODE	LOCATION	P.C. OR T.S. STATION	P.C. OR T.S. N.	P.C. OR T.S. E.	S.C. STATION	S.C. N.	S.C. E.	P.I. STATION	P.I. N.	P.I. E.	C.S. STATION	C.S. N.	C.S. E.	P.T. OR S.T. STATION	P.T. OR S.T. N.	P.T. OR S.T. E.	Δ	D_c	L_c	T OR T_s	E OR E_s	L_s	Θ_s	L.T.	ST.	R
2	℄S.R. 8	258+65.71	540,484.45	2,282,065.62	263+68.71	540,554.81	2,282,226.31	264+15.53	541,012.61	2,282,203.42	264+45.03	541,022.73	2,282,262.86	265+45.08	541,400.24	2,282,578.38	28°46'09"	5°00'	75.38'	545.82	46.46'	500'	12°30'00"	334.17'	167.43'	1145.92'
3	℄S.R. 8	271+32.53	541,545.43	2,282,707.14	276+32.53	541,931.95	2,283,022.61	276+80.72	541,943.81	2,283,083.74	277+12.32	542,001.80	2,283,061.22	282+12.32	542,414.78	2,283,220.08	28°59'23"	5°00'	78.73'	548.15'	47.05'	500'	12°30'00"	334.17'	167.43'	1145.92'
17	HUDSON	49+08.18	541,453.43	2,282,751.73				50+68.80	541,600.91	2,282,667.36				52+28.66	541,756.91	2,282,625.72	9°36'52"	3°00'	320.48'	160.62'	6.74'					1909.86'
18	RAMP "Q"	271+29.72	541,466.24	2,282,845.32										273+99.78	541,685.62	2,282,998.70	22°57'17"	8°30'	270.06	136.86'	13.75'					674.07'

GEOMETRIC LAYOUT

K & E - AKRON

FED. RD.	STATE	PROJECT	
2	OHIO		

7
460

SUMMIT COUNTY
SUM - 8 - 17.63

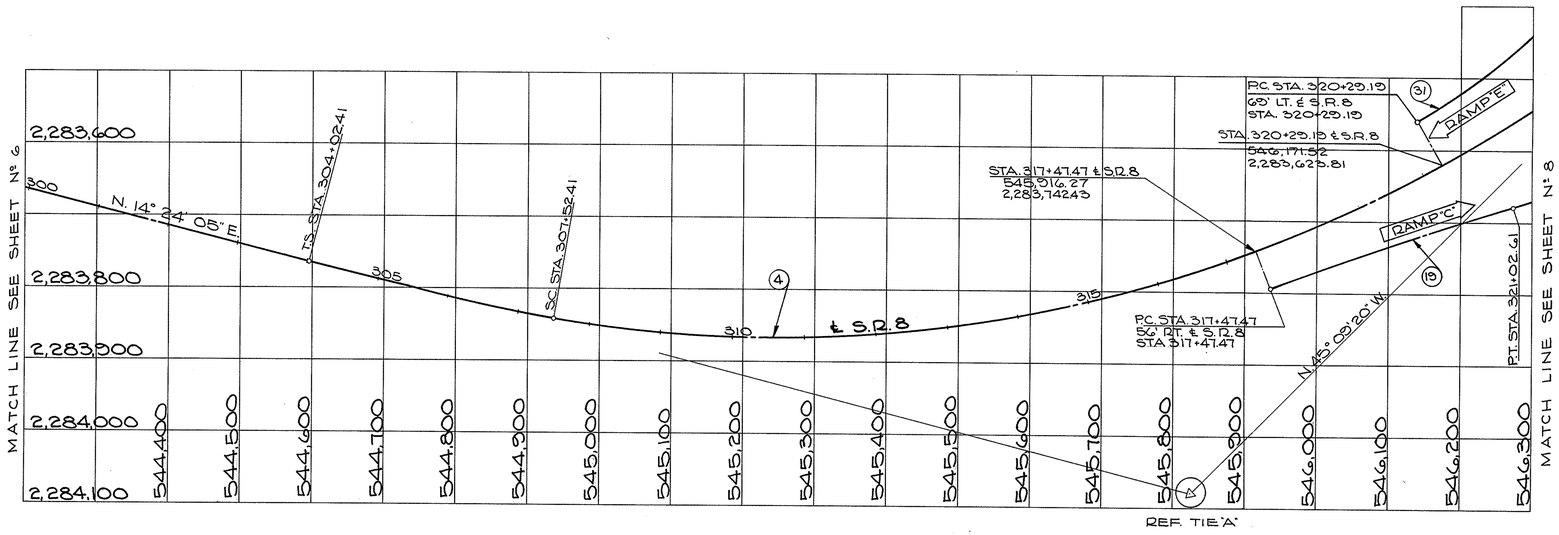

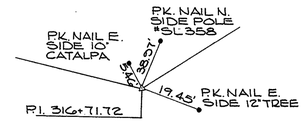

REF. TIE "A"

CURVE DATA

CODE	LOCATION	P.C. OR T.S. STATION	P.C. OR T.S. N.	P.C. OR T.S. E.	S.C. STATION	S.C. N.	S.C. E.	P.I. STATION	P.I. N.	P.I. E.	C.S. STATION	C.S. N.	C.S. E.	P.T. OR S.T. STATION	P.T. OR S.T. N.	P.T. OR S.T. E.	Δ	D_c	L_c	T OR T_s	E OR E_s	L_s	θ_s	L.T.	S.T.	R
4	℄ S.R. 8	304+02.41	544,596.03	2,283,764.78	307+52.41	544,537.41	2,283,841.42	316+71.72	545,825.47	2,284,080.48	323+87.64	546,466.38	2,283,420.93	327+37.64	546,720.57	2,283,180.51	55° 33' 25"	3° 00'	1,635.23'	1,269.31'	203.64'	350.00	5° 15'	233.44	116.76'	1909.86
19	RAMP "C"	317+47.47	545,936.08	2,283,704.81				319+25.10	546,102.24	2,283,732.03				321+02.61	546,271.57	2,283,679.65	3° 33' 05"	1° 00'	355.14'	177.63'	2.75'					5720.58
31	RAMP "E"	320+29.19	546,137.91	2,283,663.55				322+04.11	546,365.57	2,283,428.76				325+46.03	546,492.00	2,283,195.74	31° 00' 37"	6° 00'	516.84	264.92	36.07'					954.93

GEOMETRIC LAYOUT

K & E - AKRON

FED. RD.	STATE	PROJECT	
2	OHIO		

8
460

SUMMIT COUNTY
SUM-8-17.63

CURVE DATA

CODE	LOCATION	P.C. STATION	P.C. N	P.C. E	P.I. STATION	P.I. N	P.I. E	P.T. STATION	P.T. N	P.T. E	Δ	Dc	R	T	Lc	E.
31	RAMP "E"	320+29.19	546,137.91	2,283,563.55	322+94.11	546,365.97	2,283,428.76	325+46.03	546,492.00	2,283,195.74	31°00'37"	6°00'	954.93'	264.92'	516.84'	36.07'
32	RAMP "E"	325+46.03	546,492.00	2,283,195.74	328+39.32	546,629.61	2,282,941.27	331+20.24	546,685.70	2,282,657.47	17°13'35"	3°00'	1909.86'	289.29'	574.21'	21.79'

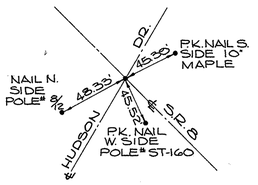

REF. TIE "E"



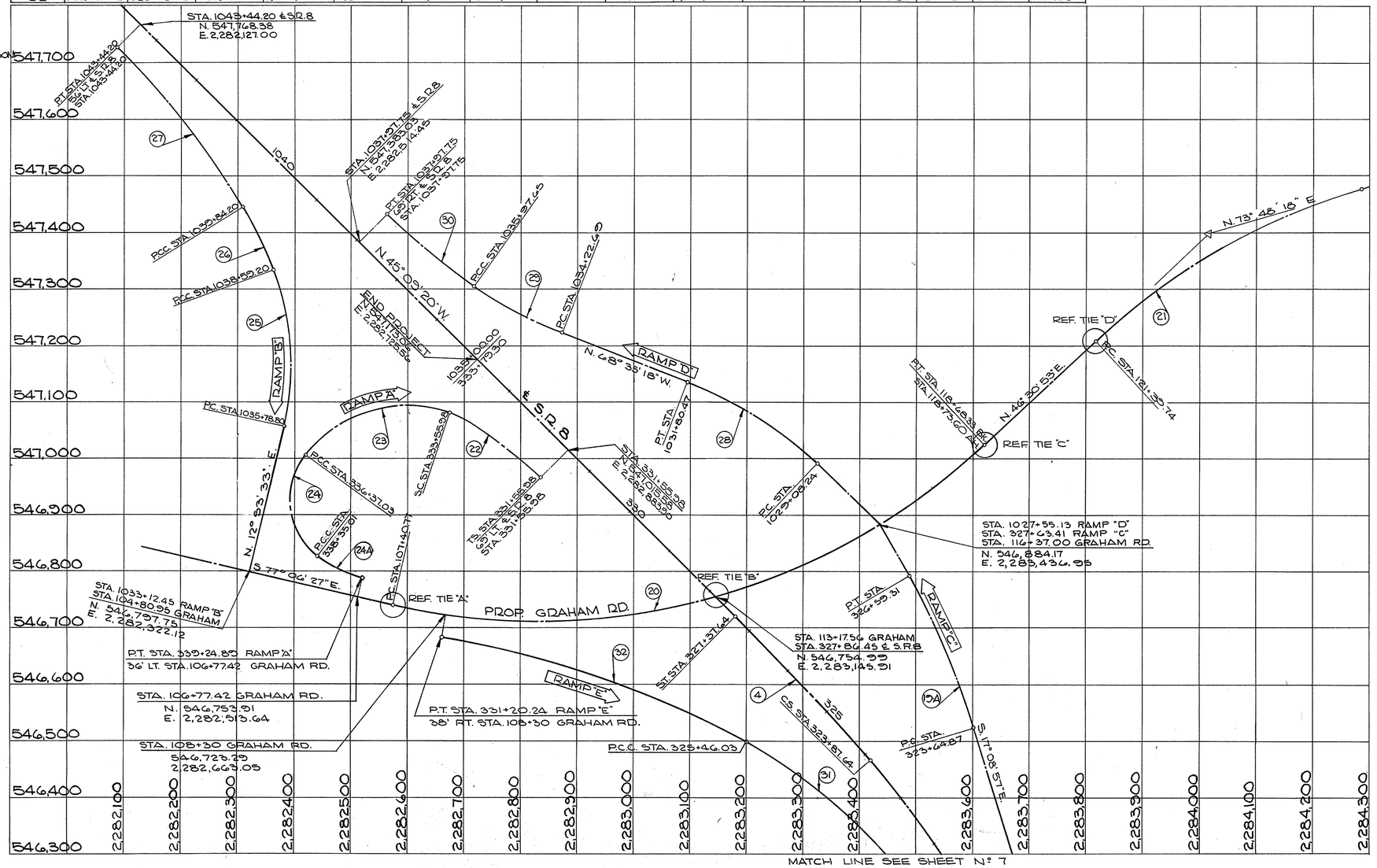

MATCH LINE SEE SHEET N° 7

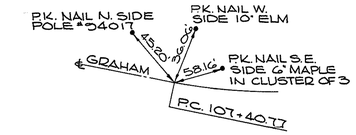

REF. TIE "A"

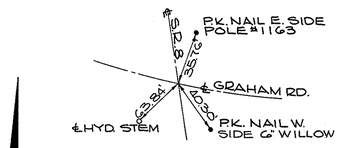

REF. TIE "B"

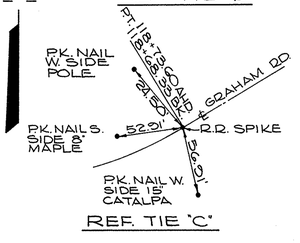

REF. TIE "C"

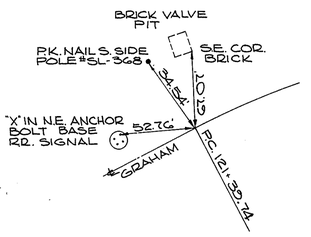

REF. TIE "D"

CURVE DATA

CODE	LOCATION	P.C. OR T.S. STATION	P.C. OR T.S. N.	P.C. OR T.S. E.	S.C. STATION	S.C. N.	S.C. E.	P.I. STATION	P.I. N.	P.I. E.	C.S. STATION	C.S. N.	C.S. E.	P.T. OR S.T. STATION	P.T. OR S.T. N.	P.T. OR S.T. E.	Δ	D_c	L_c	T or T_s	L_s	θ_s	E or E_s	L.T.	S.T.	R.
4	℄ S.R. 8	304+02.41	544,506.03	2,283,764.75	307+52.41	544,937.41	2,283,841.42	316+71.72	545,825.47	2,284,080.48	323+87.64	546,466.38	2,283,420.93	327+37.64	546,720.57	2,283,180.51	59°33'25"	3°00'	1,635.23	1,260.31	350.00'	5°15'	233.64'	233.44'	116.76'	1909.86'
22	RAMP "A"	331+55.98	546,966.65	2,282,835.24	333+55.98	547,080.66	2,282,672.98														200.00'	25°00'		134.63'	67.90'	

CURVE DATA

CODE	LOCATION	P.C. STATION	P.C. N.	P.C. E.	P.I. STATION	P.I. N.	P.I. E.	P.T. STATION	P.T. N.	P.T. E.	Δ	D_c	R	T	L_c	E
20	GRAHAM RD.	107+40.77	546,739.78	2,282,575.39	113+54.82	546,602.75	2,283,174.05	118+68.33	547,025.39	2,283,419.65	56°22'40"	5°00'	1,145.92'	614.15'	1,127.56'	154.20'
21	GRAHAM RD.	121+39.74	547,208.53	2,283,812.74	124+17.92	547,300.57	2,284,014.58	126+85.55	547,477.56	2,284,281.72	21°17'25"	5°00'	1,145.92'	278.18'	545.81'	33.28'
23	RAMP "A"	333+55.98	547,080.66	2,282,672.98	335+17.07	547,131.94	2,282,852.13	336+37.03	547,005.30	2,282,420.08	70°00'48"	24°54'40"	230.00'	161.05'	281.05'	50.80'
24	RAMP "A"	336+37.03	547,005.30	2,282,420.08	337+63.67	546,904.05	2,282,341.42	338+35.01	546,828.69	2,282,441.68	90°44'46"	45°50'12"	125.00'	126.64'	197.98'	52.94'
25	RAMP "B"	1035+78.80	547,051.39	2,282,381.55	1037+23.17	547,198.12	2,282,413.76	1038+59.20	547,333.12	2,282,366.60	33°38'53"	12°00'	477.46'	144.37'	280.40'	21.35'
26	RAMP "B"	1038+59.20	547,333.12	2,282,366.60	1039+21.86	547,391.71	2,282,340.38	1039+84.20	541,445.56	2,282,308.35	10° 00'	8°00'	716.20'	62.66'	125.00'	2.74'
27	RAMP "B"	1039+84.20	547,445.56	2,282,308.35	1041+65.15	547,601.06	2,282,215.81	1043+44.20	547,728.67	2,282,087.51	14° 24'00"	4°00'	1,432.39'	180.95'	360.00'	11.38'
28	RAMP "D"	1029+08.24	546,988.96	2,283,328.31	1030+46.02	547,085.26	2,283,224.86	1031+80.47	547,133.55	2,283,090.59	21°46'43"	8°00'	716.20'	137.85'	272.23'	6.12'
29	RAMP "D"	1034+22.69	547,221.98	2,282,811.09	1035+10.61	547,254.08	2,282,780.24	1035+97.65	547,305.01	2,282,717.58	13° 59'41"	8°00'	716.20	87.92	174.95	5.38'
30	RAMP "D"	1035+87.65	547,305.01	2,282,717.58	1036+97.87	547,363.08	2,282,635.50	1037+97.75	547,431.95	2,282,563.11	8°00'15"	4°00'	1,432.39'	100.25'	201.04'	3.50'
24-A	RAMP "A"	338+35.01	546,828.69	2282,441.68	338+80.53	546,800.88	2,282,477.72	339+24.89	546,788.96	2,282,521.66	22°28'11"	25°00'	229.18	45.52'	89.88'	4.49'
19-A	RAMP "C"	323+64.87	546,522.57	2,283,602.32	325+12.61	546,663.74	2,283,558.76	326+59.31	546,799.05	2,283,487.29	11°46'40"	4°00'	1,432.39	147.74'	294.44'	7.60'

GEOMETRIC LAYOUT

K & E - AKRON

FED. RD.	STATE	PROJECT	
2	OHIO		

9
460

SUM-8-17.63

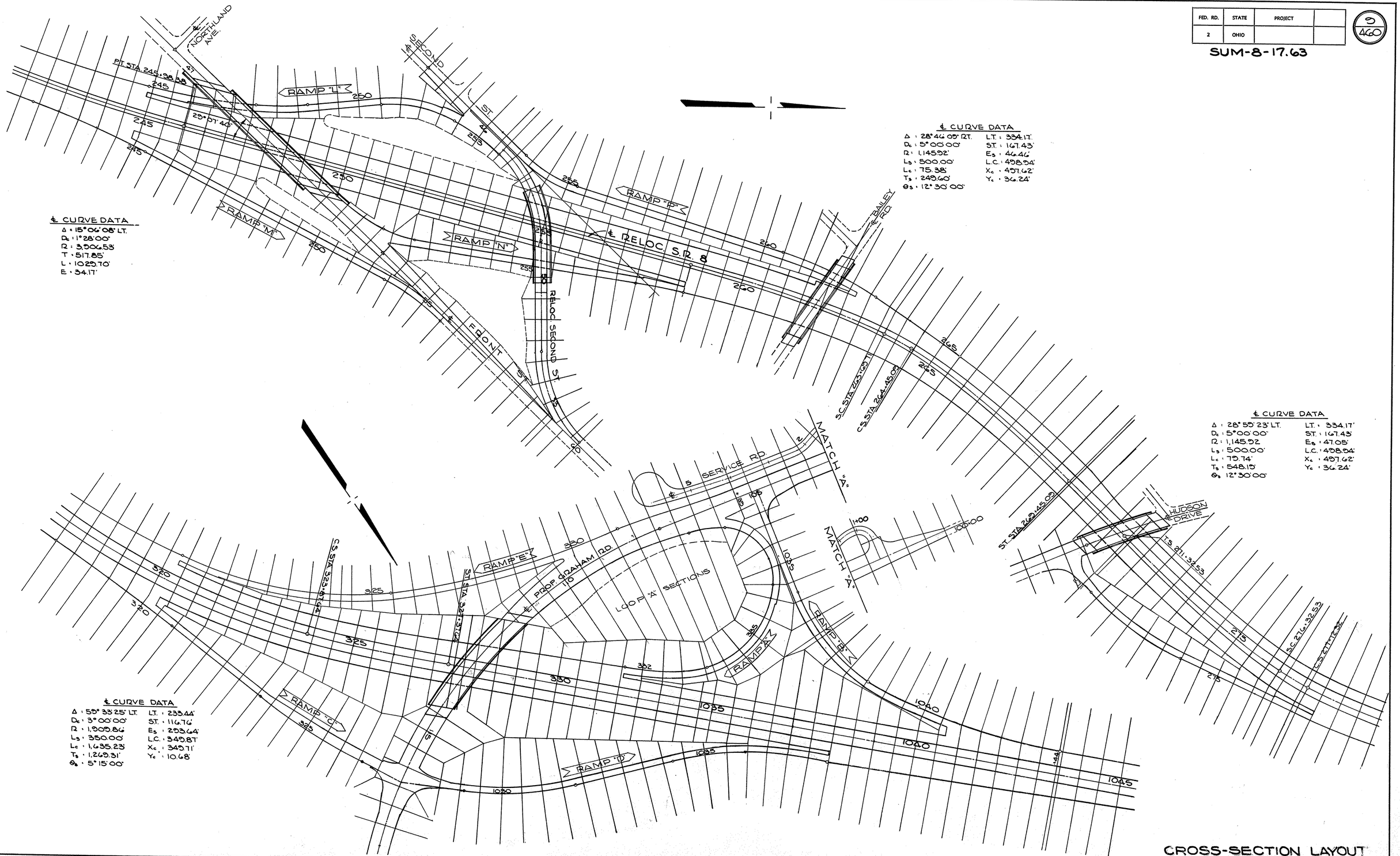

℄ CURVE DATA

Δ = 15°06'08" LT.
D_c = 1°28'00"
R = 3,906.53'
T = 517.85'
L = 1029.70'
E = 34.17'

℄ CURVE DATA

Δ = 28°46'09" RT.
D_c = 5°00'00"
R = 1,145.92'
L_s = 500.00'
L_c = 75.38'
T_s = 249.60'
θ_s = 12°30'00"
L.T. = 334.17'
S.T. = 167.43'
E_s = 46.46'
L.C. = 498.94'
X_c = 497.62'
Y_c = 36.24'

℄ CURVE DATA

Δ = 28°59'23" LT.
D_c = 5°00'00"
R = 1,145.92
L_s = 500.00'
L_c = 79.74'
T_s = 548.19'
θ_s = 12°30'00"
L.T. = 334.17'
S.T. = 167.43'
E_s = 47.05'
L.C. = 498.94'
X_c = 497.62'
Y_c = 36.24'

℄ CURVE DATA

Δ = 59°33'25" LT.
D_c = 3°00'00"
R = 1,909.86'
L_s = 350.00'
L_c = 1,635.23'
T_s = 1,269.31'
θ_s = 5°15'00"
L.T. = 233.44'
S.T. = 116.76'
E_s = 293.64'
L.C. = 349.87'
X_c = 349.71'
Y_c = 10.68'

CROSS-SECTION LAYOUT

FED. RD.	STATE	PROJECT	
2	OHIO		

10
460

SUMMIT COUNTY
SUM - 8 - 17.63

TYPICAL SECTIONS

TYPE 451
CODE TYPE 7221

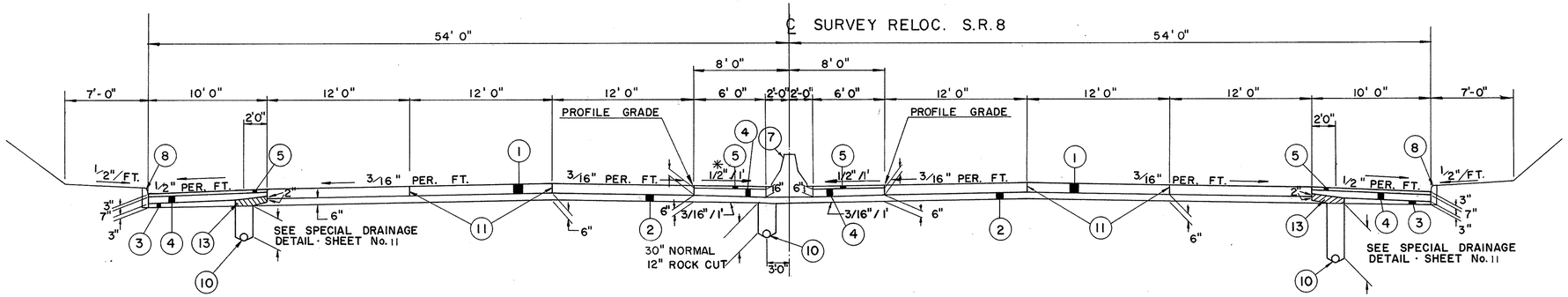

NORMAL SECTION

6 LANES

LIMITING STATIONS

STA. 248+93.22 TO STA. 256+48.84
*STA. 248+93.22 TO STA. 249+43.22 SHOULDER SLOPE TRANS. .0200'/FT. TO .0417'/FT.
*STA. 255+98.84 TO STA. 256+48.84 SHOULDER SLOPE TRANS. .0417'/FT. TO .0200'/FT.

NOTE:
SEE PROPOSAL FOR PRE-SPLITTING IN ROCK CUT AREAS.

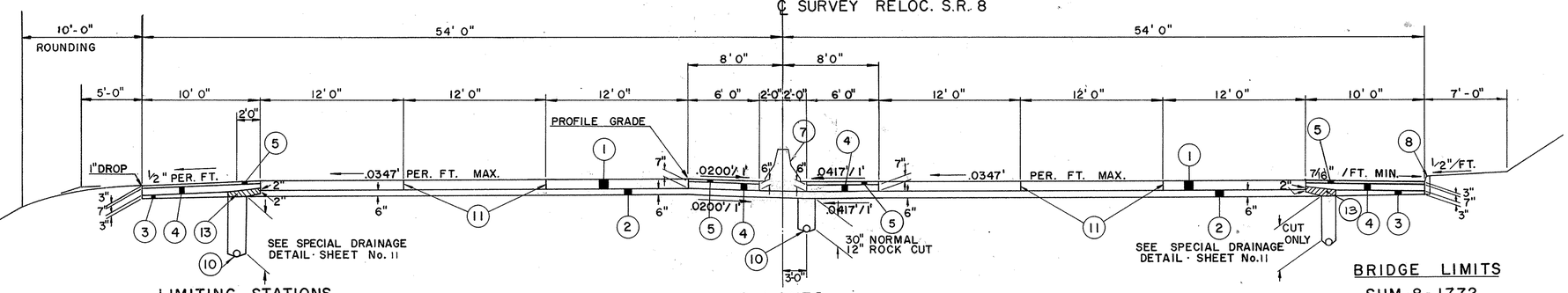

LIMITING STATIONS
TYPICAL WITHOUT CURB

STA. 229 + 00 TO STA. 236 + 30.71 N.B.L. & S.B.L.
STA. 237 + 80.80 TO STA. 244 + 00 N.B.L.

6 LANES
SUPERELEVATED SECTION
CURVE NOT EXCEEDING 1° 30'

LIMITING STATIONS WITH CURB

STA. 244 + 00 TO STA. 248 + 93.22 N.B.L.
STA. 237 +81.37 TO STA. 248 + 93.22 S B.L.

BRIDGE LIMITS
SUM-8-1772

STA. 236 + 30.71 TO STA. 237 + 80.80

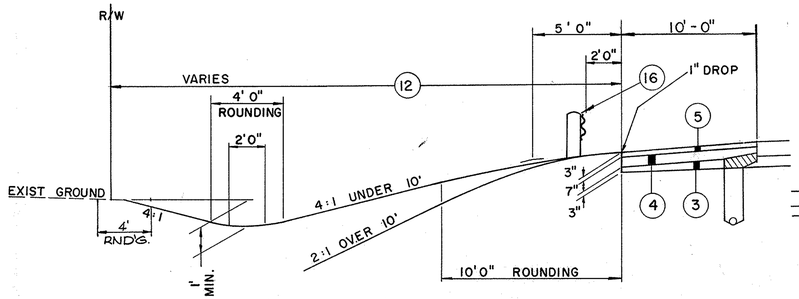

TYPICAL FILL SLOPE DETAIL
WITHOUT CURB

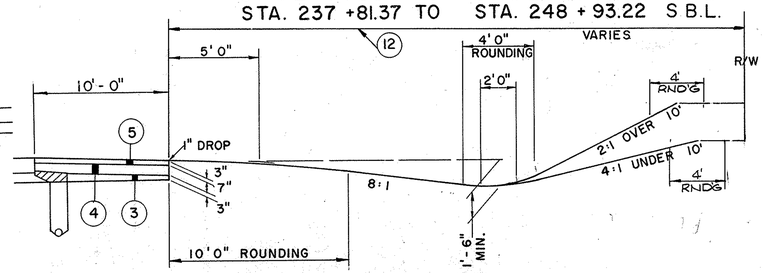

TYPICAL CUT SLOPE DETAIL
WITHOUT CURB

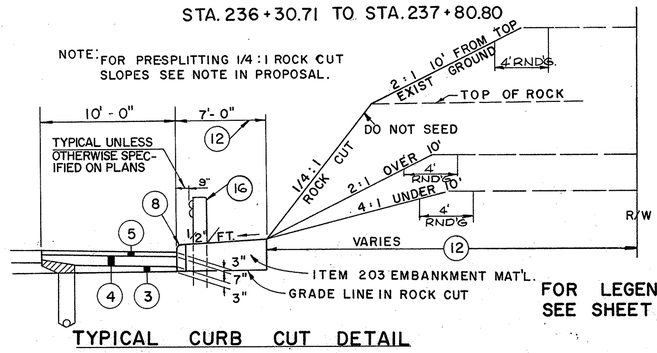

TYPICAL CURB CUT DETAIL

FOR LEGEND SEE SHEET NO. 14

NOTE: ALL SLOPES TYPICAL UNLESS OTHERWISE SHOWN ON CROSS SECTIONS.

KAE

FED. RD.	STATE	PROJECT	
2	OHIO		

SUMMIT COUNTY
SUM - 8 - 17.63

11
460

TYPICAL SECTIONS

TYPE 451
CODE TYPE 7221

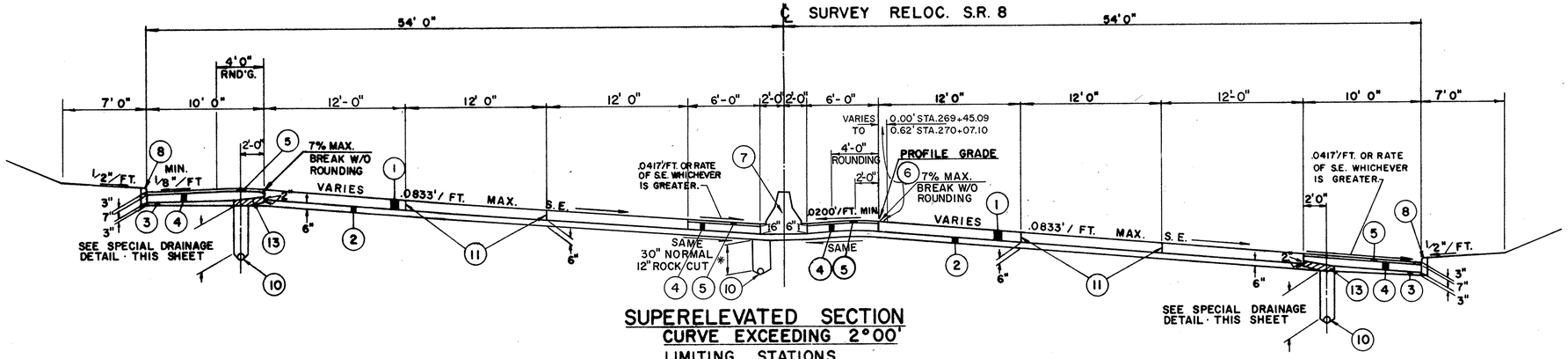

SUPERELEVATED SECTION
CURVE EXCEEDING 2°00'

LIMITING STATIONS

STA. 256+48.84	TO	STA. 270+07.10	N.B.L.
STA. 256+48.84	TO	STA. 270+70.52	S.B.L.

NOTE: PROFILE GRADE SHIFTS FROM N.B. TO S.B. AT STA. 269 + 31.80

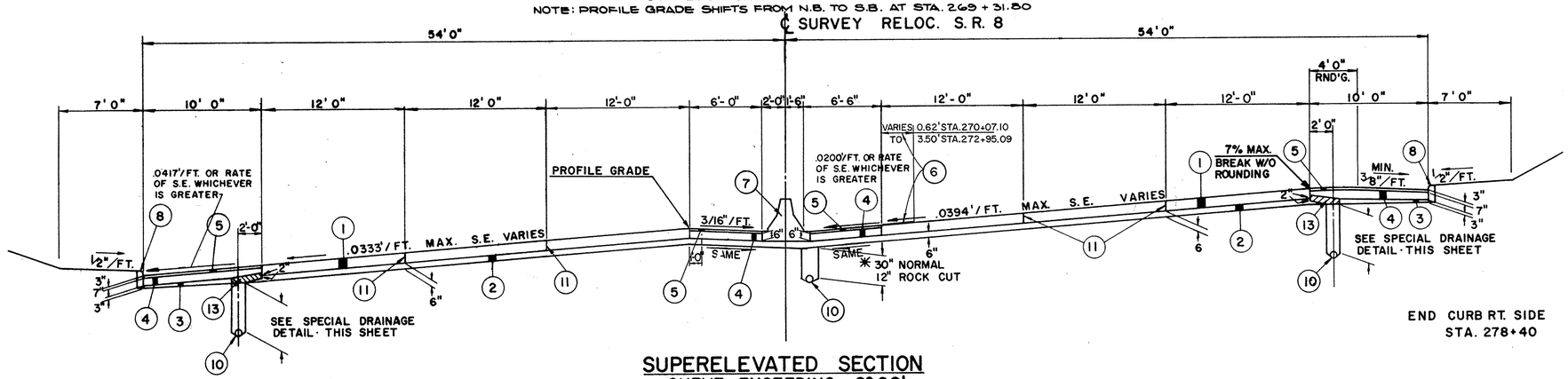

END CURB RT. SIDE
STA. 278+40

SUPERELEVATED SECTION
CURVE EXCEEDING 2°00'

LIMITING		STATIONS	
STA. 270+07.10	TO	STA. 272+95.09	N.B.L.
STA. 270+70.52	TO	STA. 272+95.09	S.B.L.

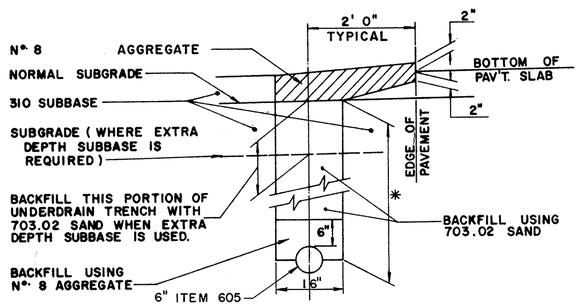

SPECIAL DRAINAGE DETAIL

* UNLESS OTHERWISE SHOWN ON PLANS, UNDERDRAINS SHALL BE PLACED PARALLEL TO PROFILE GRADE WITH 30" OF COVER FROM BOTTOM OF SUBBASE TO CROWN OF PIPE. WHERE DEEP UNDERDRAINS ARE CALLED FOR, 50" OF COVER FROM BOTTOM OF SUBBASE TO CROWN OF PIPE SHALL BE PROVIDED. IN ROCK CUT, UNDERDRAINS SHALL BE 6" ITEM 605, 707.01 TYPE III OR 707.12 PIPE WITH 12" OF COVER FROM BOTTOM OF SUBBASE TO CROWN OF PIPE. UNDERDRAINS SHALL BE OMITTED ON THE HIGH SIDE OF SUPERELEVATION IN FILL SECTIONS.

NOTE: SEQUENCE OF OPERATIONS, (1) INSTALL PIPE UNDERDRAIN ON OUTSIDE SHOULDER. INSTALLATION OF SHALLOW UNDERDRAIN IN MEDIAN MAY BE DEFERRED UNTIL 451 IS PLACED. (2) PLACE SUBBASE TO OUTSIDE EDGE OF UNDERDRAIN OR TO ONE FOOT BEYOND EDGE OF PAVEMENT WHERE NO UNDERDRAIN IS PRESENT. PAYMENT SHALL BE MADE FOR ALL SUBBASE PLACED IN THIS OPERATION. (3) CONSTRUCT PAVEMENT. (4) REMOVE SUBBASE AND ANY CONTAMINATED BACKFILL OVER DRAIN AND REPLACE WITH Nº 8 AGGREGATE AS SHOWN BY (13) (5) COMPLETE SHOULDER CONSTRUCTION.

FOR TYPICAL SLOPE DETAILS SEE SHEET NO. 10

FOR LEGEND SEE SHEET NO. 14

FOR MEDIAN TRANSITION DETAIL SEE SHEET NO. 251

FED. RD.	STATE	PROJECT	
2	OHIO		

12
460

SUMMIT COUNTY
SUM. - 8 - 17.63

TYPICAL SECTIONS

TYPE 451
CODE TYPE 7221

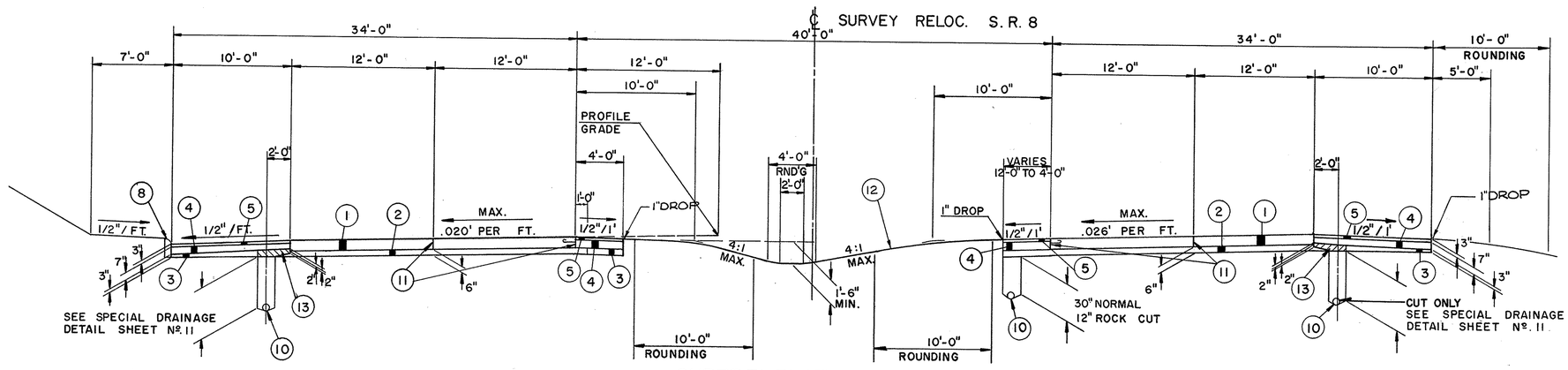

SUPERELEVATED SECTION

LIMITING STATIONS
STA. 281+45.09 TO STA. 284+37.73

FOR TYPICAL SLOPE DETAILS
SEE SHEET NO. 10

FOR LEGEND
SEE SHEET NO. 14

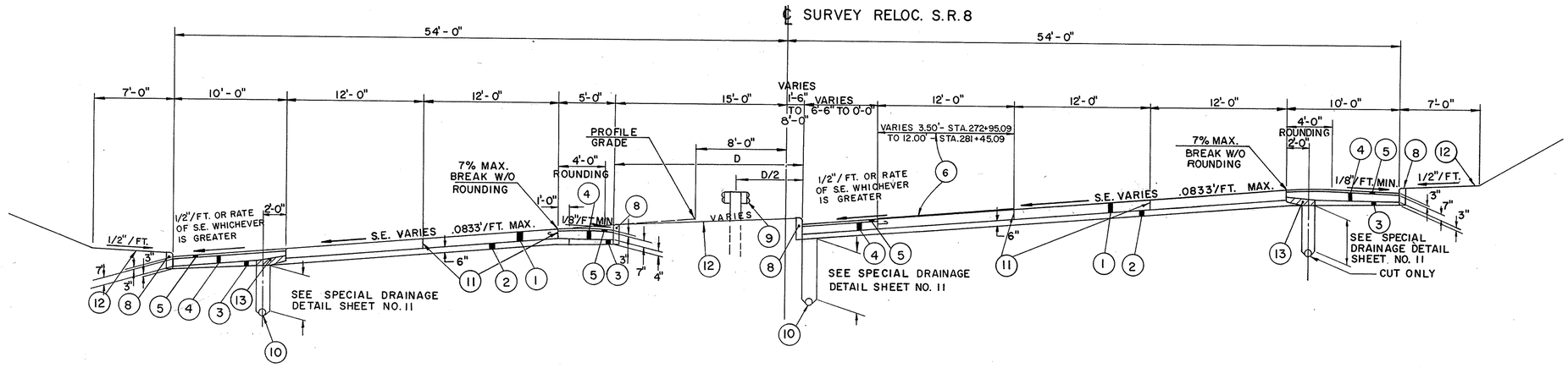

SUPERELEVATED SECTION

LIMITING STATIONS

STA. 272+95.09 TO STA. 281+45.09

FORM DDA-5

TYPICAL SECTIONS

FED. RD.	STATE	PROJECT	
2	OHIO		

13
460

SUMMIT COUNTY
SUM - 8 - 17.63

TYPICAL SECTIONS

TYPE 451
CODE TYPE 7221

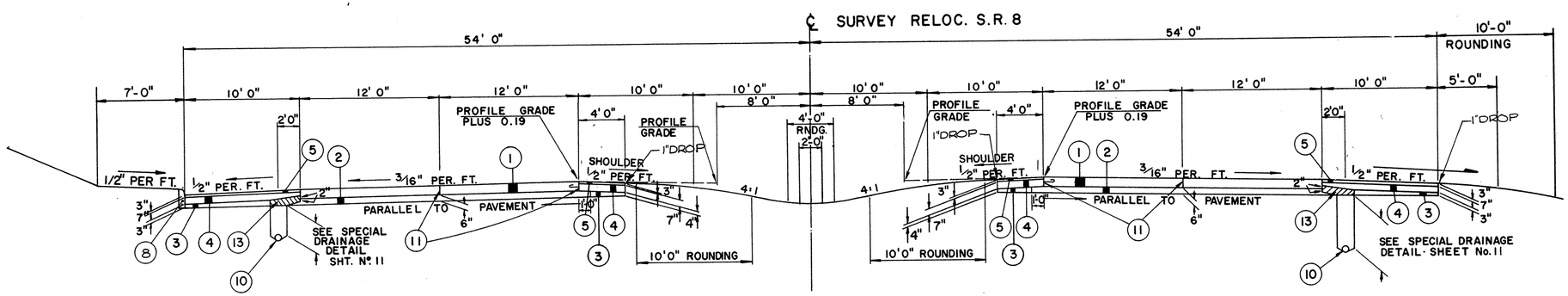

END CURB LT. SIDE
STA. 290+00

NORMAL SECTION

4 LANES

LIMITING STATIONS

STA. 284+37.73 TO STA. 301+02.41

FOR TYPICAL SLOPE DETAILS SEE SHEET NO. 10

FOR LEGEND SEE SHEET NO. 14

FED. RD.	STATE	PROJECT	
2	OHIO		

14
460

SUMMIT COUNTY
SUM - 8 - 17.63

TYPICAL SECTIONS

TYPE 451
CODE TYPE 7221

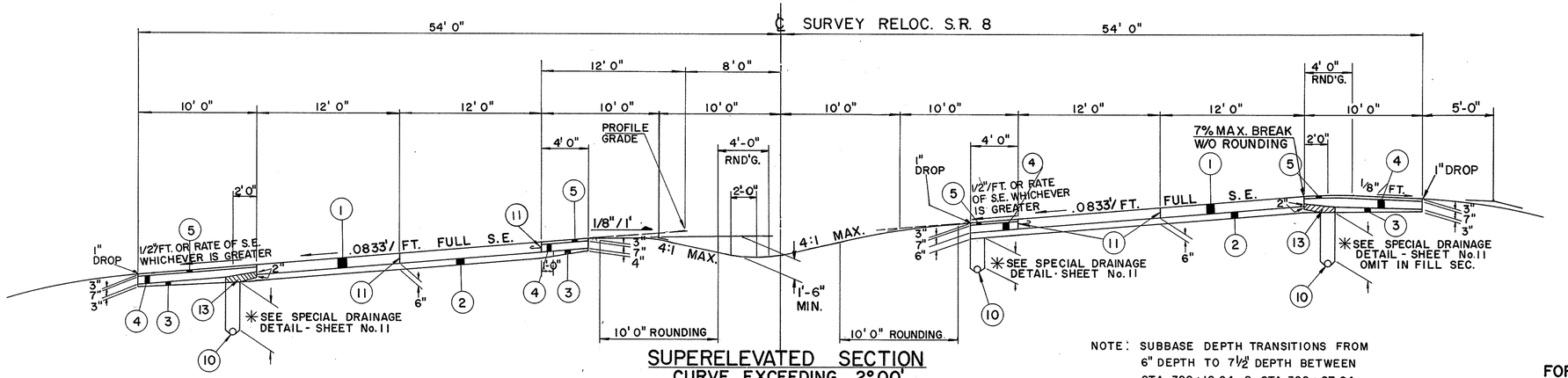

SUPERELEVATED SECTION
CURVE EXCEEDING 2° 00'
4 LANES
LIMITING STATIONS
STA. 301+02.41 TO STA. 330+37.64

NOTE: SUBBASE DEPTH TRANSITIONS FROM 6" DEPTH TO 7½" DEPTH BETWEEN STA. 328+12.64 & STA. 328+87.64

FOR TYPICAL SLOPE DETAILS SEE SHEET NO. 10

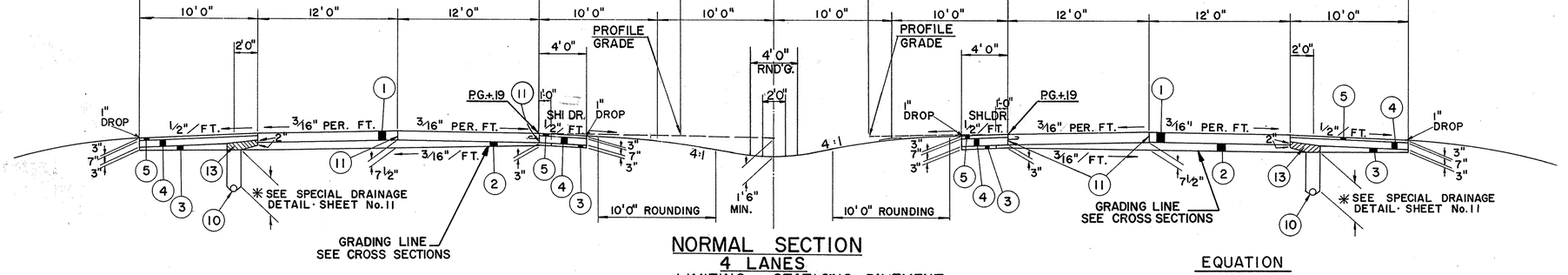

NORMAL SECTION
4 LANES
LIMITING STATIONS PAVEMENT
STA. 330+37.64 TO STA. 333+79.30
STA. 1035+00 TO STA. 1043+44.20
LIMITING STATIONS GRADING ONLY
STA. 1043+44.20 TO 1048+68

EQUATION
BACK ~ STA. 333+79.30 = STA. 1035+00 - AHEAD

(1)	451	10" REINFORCED PORTLAND CEMENT CONCRETE PAVEMENT
(2)	310	SUBBASE GRADING A AS PER PLAN (SEE GENERAL NOTE) (THICKNESS AS SHOWN)
(3)	310	SUBBASE, REGULAR GRADING ✳✳ (THICKNESS AS SHOWN)
(4)	304	AGGREGATE BASE. (THICKNESS AS SHOWN)
(5)	301	3" BITUMINOUS AGGREGATE BASE; 702.01 (85-100) OR 702.09, RT.-10 AS PER PLAN (SEE NOTE IN PROPOSAL)
(6)	409	BITUMINOUS SEAL COAT, USING 0.008 CU.YD. NO. 8 COVER AGGREGAT PER SQ.YD. & 0.30 GAL. BITUMINOUS MATERIAL PER SQ. YD. (SEE NOTE IN PROPOSAL)
(7-A)	612	STANDARD CONCRETE MEDIAN (STD. DWG. MC-6) (SEE MAINTENANCE OF TRAFFIC SHEET Nº 23)
(7)	612	CONCRETE BARRIER MEDIAN, AS PER PLAN (SEE SHEET NO. 25L)
(8)	609	CONCRETE CURB STANDARD TYPE 6.
(9)	606	GUARD RAIL TYPE 5 BARRIER DESIGN
(10)	605	6" PIPE UNDERDRAIN (SEE SPECIAL DRAINAGE DETAIL - SHEET NO. 11).
(11)		STANDARD LONGITUDINAL JOINT. (SEE GENERAL NOTES SHEET 19 FOR PLACING ½ STANDARD HOOK BOLT & TAP BOLT)
(12)	659	SEEDING AND MULCHING. SEE GENERAL NOTES
(13)		ITEM SPECIAL DRAINAGE CONNECTION USING NO. 8 AGGREGATE (SEE SPECIAL DRAINAGE, DETAIL - SHEET NO. 11). (SEE NOTE IN PROPOSAL)
(14)	609	CONCRETE CURB STANDARD TYPE 8, MODIFIED AS PER PLAN
(15)	451	9" REINFORCED PORTLAND CEMENT CONCRETE PAVEMENT
(16)	606	GUARD RAIL - TYPE 5.

✳✳ SUBBASE UNDER PAVED SHOULDERS SHALL MEET THE GRADING REQUIREMENTS OF REGULAR GRADING 310, EXCEPT THAT IN AREAS REQUIRING EXTRA DEPTH SUBBASE, GRADING "A" AS PER PLAN SHALL BE USED. THE LIMITS FOR REGULAR GRADING 310 ARE FROM THE UNDERDRAIN TRENCH (OR ONE FOOT BEYOND THE SLAB EDGE WHERE UNDERDRAINS ARE NOT USED) TO THE EDGE OF SHOULDER.

K&E

FED. RD.	STATE	PROJECT	
2	OHIO		

15
460

SUMMIT COUNTY
SUM.-8- 17.63

TYPICAL SECTIONS

TYPE 451
CODE TYPE 7221

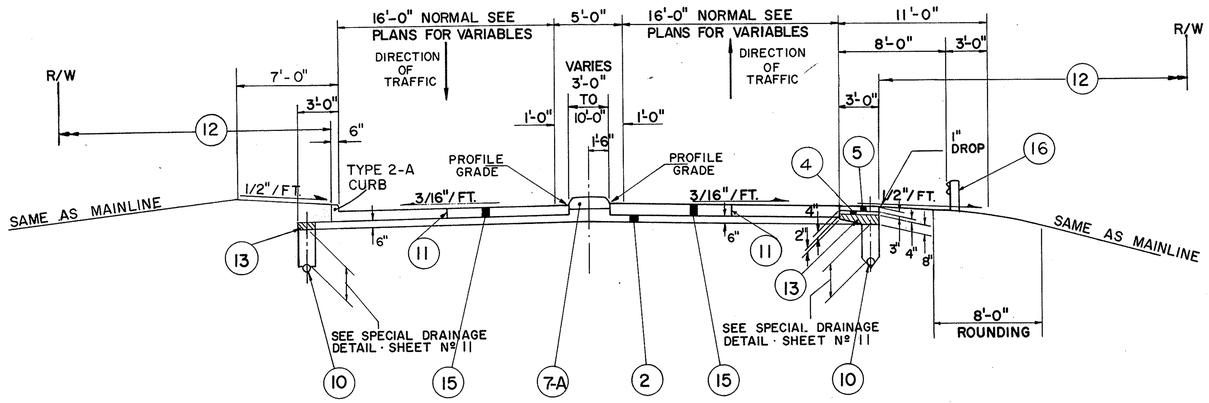

NORMAL TWO WAY RAMP SECTION

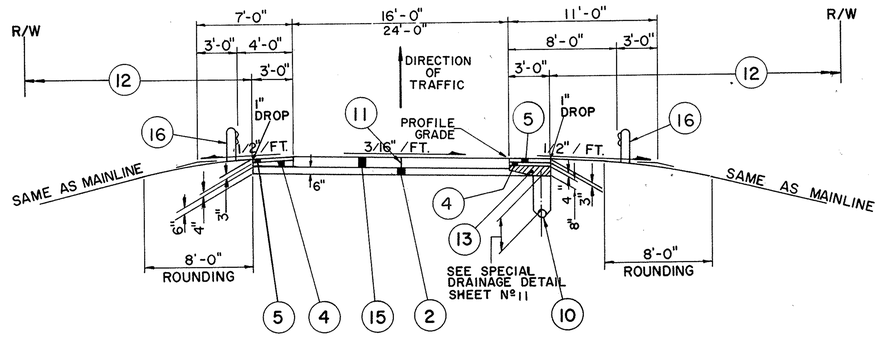

NORMAL RAMP SECTION

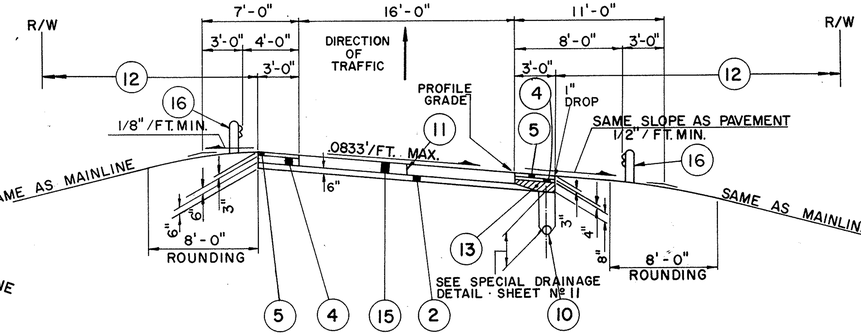

SUPERELEVATED RAMP SECTION

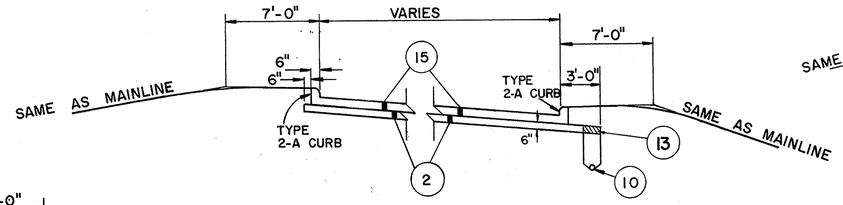

TYPICAL CURBED RAMP SECTION

(FOR LEGEND SEE SHEET Nº. 14)

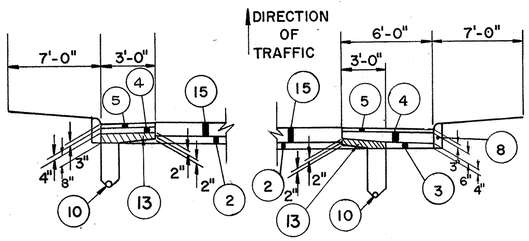

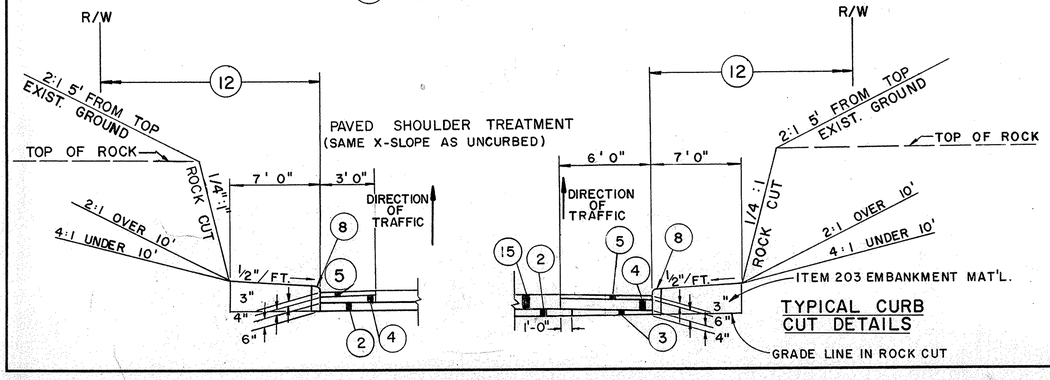

TYPICAL CURB CUT DETAILS

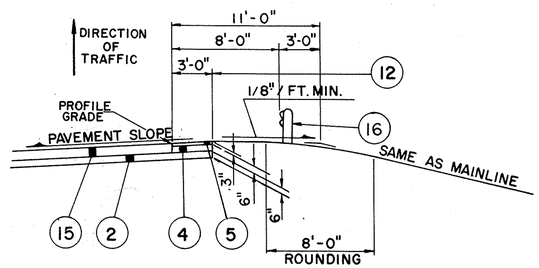

RAMP SHOULDER SUPERELEVATED TO LEFT

10'-0" RAMPS "B" & "D" ONLY SEE SHEET NO. 89 & 91

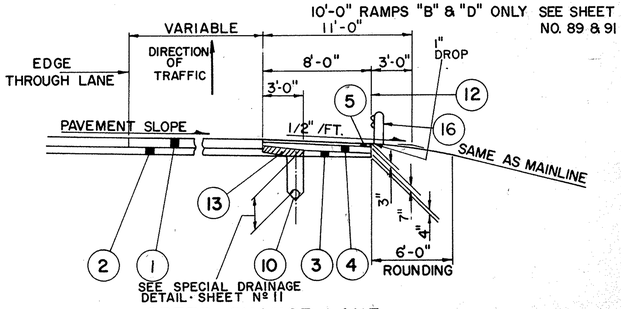

SPEED CHANGE LANE

RAMP TYPICAL SECTIONS

TYPICAL SECTIONS

FED. RD.	STATE	PROJECT	
2	OHIO		

16
4GO

SUMMIT COUNTY
SUM - 8 - 17.63

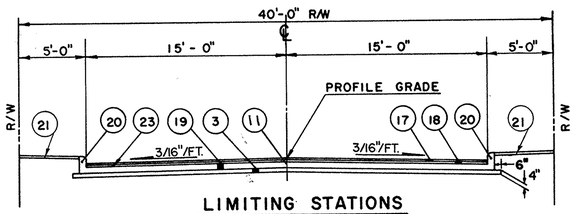

LIMITING STATIONS
STA. 49+00 TO STA. 49+31.22
STA. 51+80.88 TO STA. 52+00
BAILEY RD.

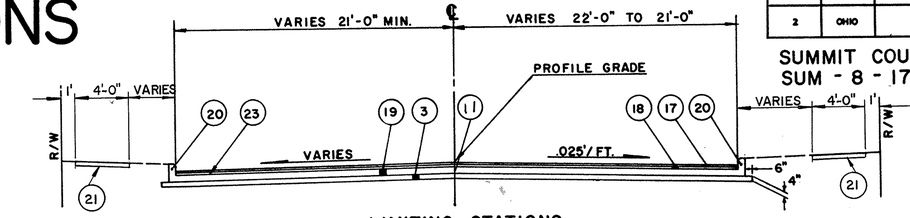

LIMITING STATIONS
STA. 51+02.48 TO STA. 51+50
HUDSON DRIVE

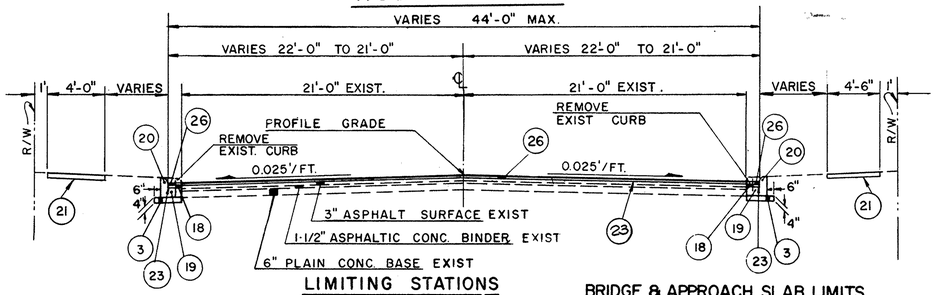

LIMITING STATIONS
STA. 47+50 TO STA. 48+96.58
HUDSON DRIVE

BRIDGE & APPROACH SLAB LIMITS
STRUCT. NO SUM-8-1845
STA. 48+96.58 - STA. 51+02.48

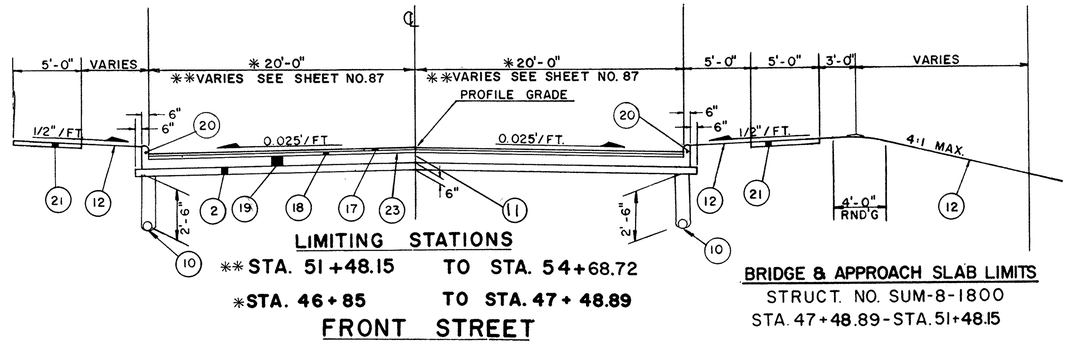

LIMITING STATIONS
** STA. 51+48.15 TO STA. 54+68.72
* STA. 46+85 TO STA. 47+48.89
FRONT STREET

BRIDGE & APPROACH SLAB LIMITS
STRUCT. NO. SUM-8-1800
STA. 47+48.89 - STA. 51+48.15

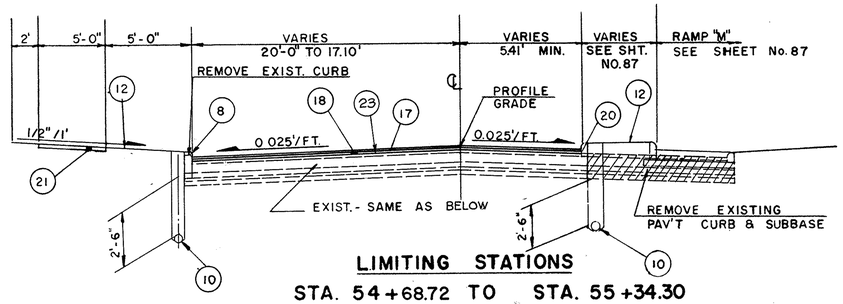

LIMITING STATIONS
STA. 54+68.72 TO STA. 55+34.30
FRONT STREET

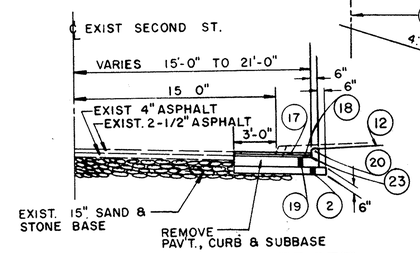

EXIST. SECOND STREET
LIMITING STATIONS
STA. 43+50.00 TO STA. 45+39.80 RT.

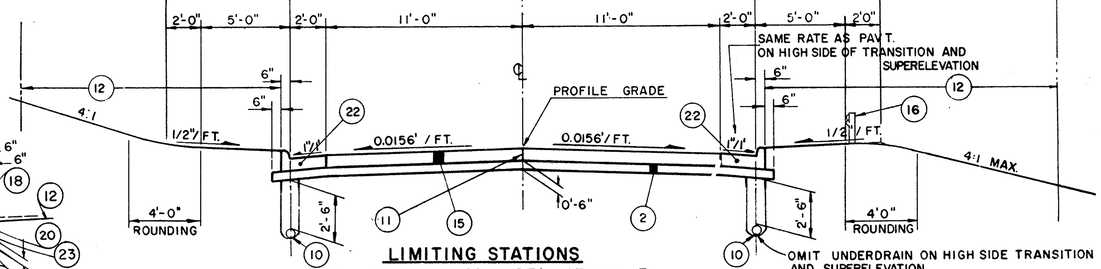

LIMITING STATIONS
STA. 46+69 TO STA. 47+81.13
STA. 50+01.89 TO STA. 54+23.33
RELOCATED SECOND STREET

BRIDGE & APPROACH SLAB LIMITS
STRUCT. NO. SUM-8-1812
STA. 47+61.13 - STA. 50+26.89

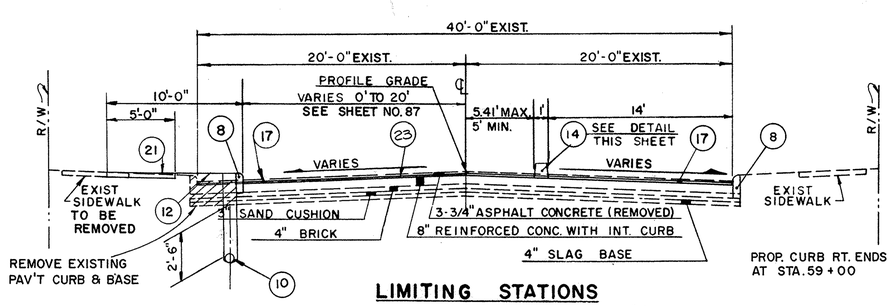

LIMITING STATIONS
STA. 55+34.30 TO STA. 60+50
FRONT STREET

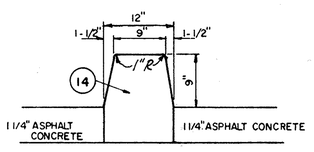

DETAIL TYPE - 8 CURB MODIFIED
AS PER PLAN
LIMITING STATIONS
STA. 55+56.31 TO STA. 57+07
FRONT STREET

(3)	310	SUBBASE, REGULAR GRADING (THICKNESS AS SHOWN)	(14)	609	CONCRETE CURB STD. TYPE 8 MODIFIED AS PER PLAN
(8)	609	CONCRETE CURB	(21)	608	4" CONCRETE WALK
(10)	605	6" PIPE UNDERDRAIN.	(23)	407	TACK COAT: 702.04, MS-2 or RS-1; or 702 02, RC-70 or RC-250, APPLIED AT THE RATE OF 0.10 GAL. PER SQ. YD.
(11)		STANDARD LONGITUDINAL JOINT			
(12)	659	SEEDING AND MULCHING (SEE GENERAL NOTE)	(16)	606	GUARD RAIL TYPE 5.
(15)	451	9" REINFORCED PORTLAND CEMENT CONCRETE PAVEMENT			
(17)	404	1-1/4" ASPHALT CONCRETE (70-85)	(2)	310	SUBBASE GRADING A AS PER PLAN (SEE GENERAL NOTE) (THICKNESS AS SHOWN)
(18)	402	1-1/2" ASPHALT CONCRETE (70-85)			
(22)	609	COMBINATION CURB AND GUTTER - STANDARD TYPE 2 (SEE DETAIL - SHEET NO. 17)			
(19)	305	9" PORT. CEMENT CONC. BASE	(26)	404	VARIABLE DEPTH ASPHALT CONCRETE (1¼" MIN.) (70-85)
(20)	609	CONCRETE CURB STANDARD TYPE-2B			

TYPICAL SECTIONS

TYPICAL SECTIONS

FED. RD.	STATE	PROJECT	
2	OHIO		

17
460

SUMMIT COUNTY
SUM - 8 - 17.63

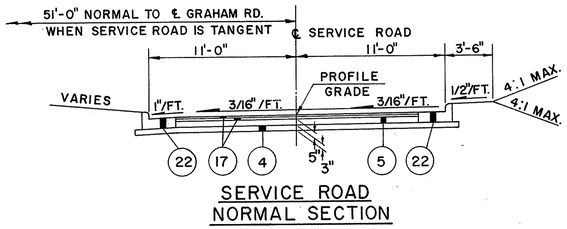

SERVICE ROAD
NORMAL SECTION

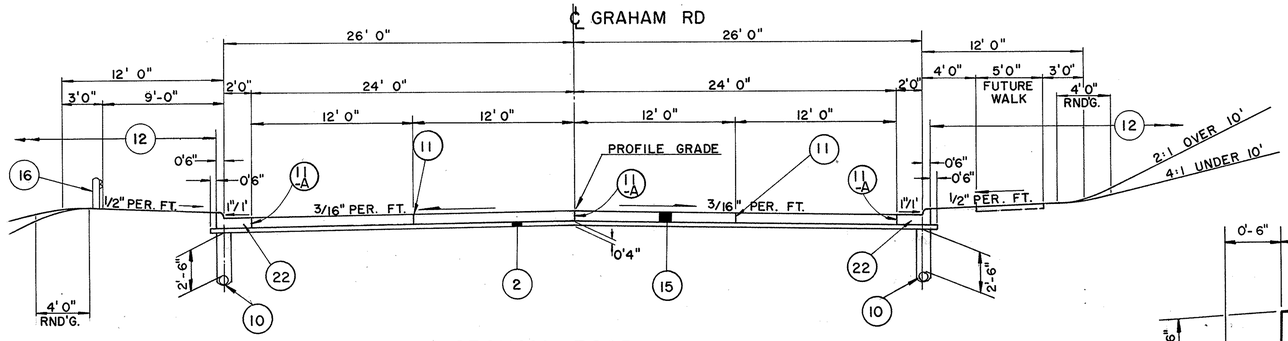

GRAHAM ROAD
NORMAL SECTION

LIMITING STATIONS

STA. 103+61.63 TO STA. 105+24.77
STA. 120+85.00 TO STA. 121+39.74

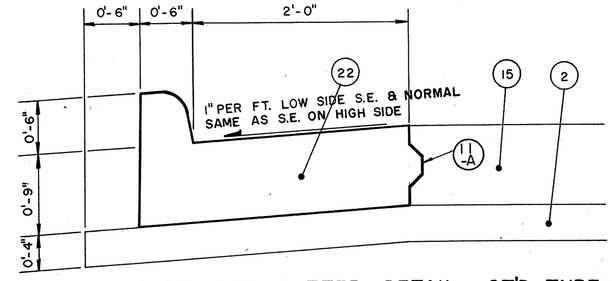

CURB AND GUTTER DETAIL - ST'D. TYPE 2

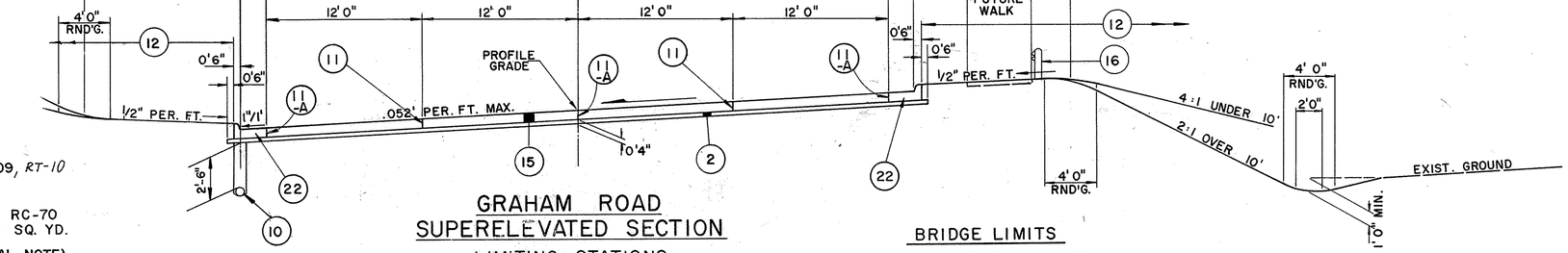

GRAHAM ROAD
SUPERELEVATED SECTION

LIMITING STATIONS

STA. 105+24.77 TO STA. 111+61.56
STA 114+34.50 TO STA. 120+85.00

BRIDGE LIMITS

STRUCT. NO. SUM-8-1950
STA. 111+61.56-STA. 114+34.50

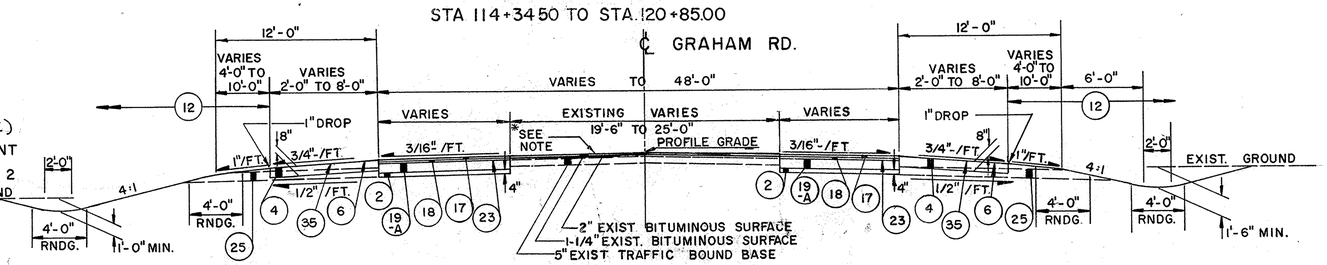

GRAHAM ROAD
PAVEMENT WIDTH TRANSITION

STA. 100+50 TO STA. 103+61.63
STA. 121+39.74 TO STA. 124+50

* NOTE: 404 1¼" ASPHALT CONCRETE (70-85) FULLWIDTH RESURFACING, LIMITING STA. 100+50 TO 103+61.63 STA. 121+39.74 TO 124+50

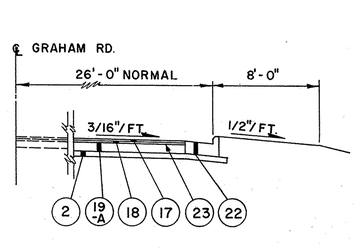

GRAHAM ROAD
LIMITING STATIONS

STA. 101+75.66 RT. TO STA. 103+61.63 RT.

(5)	301	BITUMINOUS AGGREGATE BASE: 702.01 (85-100) OR 702.09, *RT-10*
(23)	407	TACK COAT, 702.04, MS-2 OR RS-1, OR 702.02 RC-70 OR RC-250, APPLIED *AT THE RATE OF* 0.10 GAL. PER SQ. YD.
(2)	310	SUBBASE GRADING A AS PER PLAN (SEE GENERAL NOTE) (THICKNESS AS SHOWN)
(25)	605	AGGREGATE DRAINS (SEE GENERAL NOTE)
(11-A)		STANDARD KEY JOINT WITHOUT TIEBARS
(16)	606	GUARD RAIL TYPE 5.
(10)	605	6" PIPE UNDERDRAIN.
(11)		STANDARD LONGITUDINAL JOINT.
(12)	659	SEEDING AND MULCHING. (SEE GENERAL NOTE)
(15)	451	9" REINFORCED PORTLAND CEMENT CONCRETE PAVEMENT
(22)	609	COMBINATION CURB AND GUTTER STANDARD TYPE 2 (SEE DETAIL THIS SHEET)
(4)	304	AGGREGATE BASE (THICKNESS AS SHOWN)
(35)	408	BITUMINOUS PRIME COAT 702.09 RT-2 OR RT-3 APPLIED AT THE RATE OF 0.40 GAL. PER SQ. YD.
(6)	409	BITUMINOUS SEAL COAT USING 0.008 CU. YD. NO. 8, COVER AGGREGATE PER SQ. YD. & 0.30 GAL. 702.09, RT-3 or RT-10; or 702.02, MC-800 or MC-3000 PER SQ. YD.
(17)	404	1-1/4" ASPHALT CONCRETE (70-85)
(18)	402	1-1/2" ASPHALT CONCRETE (70-85)
(19-A)	305	8" PORTLAND CEMENT CONCRETE BASE

PAVED SHOULDER WIDTHS

LT. SIDE	WIDTH
100+50 to 101+00	4' to 8'
101+00 to 103+00	8'
103+00 to 103+61.63	8' to 2'
121+39.74 to 122+00	2' to 8'
122+00 to 123+50	8'
123+50 to 124+00	8' to 4'

PAVED SHOULDER WIDTHS

RT. SIDE	WIDTH
100+50 to 101+75.66	4' to 2'
121+39.74 to 122+00	2' to 8'
122+00 to 123+50	8'
123+50 to 124+00	8' to 4'

TYPICAL SECTIONS GRAHAM RD.

KAE

FED. RD.	STATE	PROJECT	
2	OHIO		

18
460

SUM-8-17.63

GENERAL NOTES

FIELD OFFICE - ITEM 619

THE CONTRACTOR SHALL PROVIDE A MINIMUM OF 800 SQ. FT. OF FLOOR SPACE FOR THE FIELD OFFICE AND IN ADDITION TO THE REQUIREMENTS OF ITEM 619, SHALL PROVIDE AND MAINTAIN SANITARY PROVISIONS AS PER 107.06. ALL THE ABOVE IS INCLUDED IN THE LUMP SUM PRICE BID FOR ITEM 619, FIELD OFFICE.

ROUNDING OF CORNERS SHOWN ON CROSS SECTIONS

THE ROUNDED CORNERS SHOWN ON THE TYPICAL SECTIONS APPLY TO ALL CROSS SECTIONS EVEN THOUGH OTHERWISE SHOWN ON THESE PLANS.

UNDERGROUND UTILITIES

THE LOCATIONS OF THE UNDERGROUND UTILITIES SHOWN ON THE PLANS HAVE BEEN OBTAINED BY DILIGENT FIELD CHECKS AND SEARCHES OF AVAILABLE RECORDS. IT IS BELIEVED THAT THEY ARE ESSENTIALLY CORRECT, BUT THE STATE OF OHIO DOES NOT GUARANTEE THEIR ACCURACY OR COMPLETENESS.

ESTIMATED QUANTITIES

SPECIFIC LOCATIONS AND USAGE OF ESTIMATED QUANTITIES SET UP ON THIS PLAN TO BE USED "AS DIRECTED BY THE ENGINEER" SHALL BE MADE A MATTER OF RECORD BY INCORPORATION INTO THE FINAL CHANGE ORDER GOVERNING COMPLETION OF THIS PROJECT. MATERIALS TO BE USED "AS DIRECTED BY THE ENGINEER" SHALL NOT BE DELIVERED TO THE PROJECT UNTIL REQUESTED BY THE ENGINEER.

CONSTRUCTION LAYOUT STAKES

SEE NOTE IN PROPOSAL DESCRIBING THE WORK INCLUDED IN THIS LUMP SUM PAY ITEM.

ELEVATION DATUM

ALL ELEVATIONS ARE BASED ON U.S.G.S. DATUM.

FEDERAL AID CONSTRUCTION IDENTIFICATION SIGNS

THE CONTRACTOR SHALL FURNISH, ERECT, MAINTAIN AND SUBSEQUENTLY REMOVE FEDERAL AID CONSTRUCTION IDENTIFICATION SIGNS AT EACH OF THE FOLLOWING APPROXIMATE LOCATIONS:

1. FRONT STREET (S.R.5) STA 46 + 56 RT. & STA 60 + 00 LT.
2. BAILEY ROAD (S.R. 532) STA 48 + 91 RT. & STA 52 + 40 LT.
3. HUDSON DR. STA 47 + 50 RT. & STA 51 + 50 LT.
4. GRAHAM ROAD STA 100 + 50 RT. & STA 124 + 50 LT.

SIGN DETAILS SHALL BE AS SPECIFIED ON STANDARD DRAWING FACI-1, CODE N-54 (1) - ~~96~~ (3).

THE SIGNS SHALL BE ERECTED IN ACCORDANCE WITH STANDARD DRAWING FACI-2. ADDITIONAL REQUIREMENTS SHALL BE IN ACCORDANCE WITH NOTES IN THE PROPOSAL.

REMOVAL OF TREES AND STUMPS

ALL TREES AND STUMPS SPECIFICALLY MARKED FOR REMOVAL WITHIN THE CONSTRUCTION LIMITS OF THIS PROJECT SHALL BE REMOVED UNDER THE LUMP SUM PRICE BID FOR ITEM 201 CLEARING AND GRUBBING, EXCEPT THAT THOSE TREES FOR WHICH PROTECTION AND PRESERVATION WORK IS INDICATED ELSEWHERE IN THESE PLANS SHALL NOT BE REMOVED.

THE FOLLOWING IS AN APPROXIMATE ESTIMATE OF THE NUMBER OF TREES AND STUMPS TO BE REMOVED.

Fed., State & City

SIZES	NO. TREES	NO. STUMPS
18"	364	0
30"	32	0
48"	2	0
60"	0	0

THE ABOVE ESTIMATE IS APPROXIMATE AND THE STATE OF OHIO RESERVES THE RIGHT TO ORDER THE REMOVAL OF ADDITIONAL TREES OR STUMPS OUTSIDE OF THE LIMITS OF CONSTRUCTION, BUT WITHIN THE RIGHT OF WAY AND/OR EASEMENT LINES. PAYMENT FOR THE REMOVAL OF THESE ADDITIONAL TREES OR STUMPS SHALL BE INCLUDED IN THE LUMP SUM PRICE BID FOR ITEM 201 CLEARING AND GRUBBING.

CONTRACTION AND EXPANSION JOINTS

ALTHOUGH SPECIFIC LOCATIONS OF CERTAIN EXPANSION AND CONTRACTION JOINTS HAVE BEEN DETAILED ON THIS PLAN, NO WAIVER OF THE SPECIFICATIONS IS INTENDED. PROVISION OF EXPANSION JOINTS AT ALL MAJOR STRUCTURES AND THE MAXIMUM SPACING BETWEEN CONTRACTION JOINTS SHALL IN ALL CASES BE IN ACCORDANCE WITH STANDARD CONSTRUCTION DRAWINGS AND THE SPECIFICATIONS.

ITEM 310 SUBBASE, GRADING A AS PER PLAN

Material for this item shall contain not more than 10% passing a #200 sieve after all operations of spreading and compaction.

CONCRETE WALKS

WALKS SHALL BE CONSTRUCTED TO A DEPTH OF 6" AT ALL DRIVEWAYS, AND THE COST SHALL BE AT THE UNIT PRICE BID FOR ITEM 452 6" PLAIN PORTLAND CEMENT CONCRETE PAVEMENT.

PAVEMENT INTERSECTIONS

THE ELEVATIONS APPEARING ON THE INTERSECTION DETAILS HAVE BEEN DETERMINED FROM FIELD SURVEY AND REFLECT THE CALCULATED ELEVATIONS REQUIRED TO PROVIDE A SMOOTH TRANSITION OF INTERSECTING GRADES.

CURBS ON APPROACH SLABS

THE HEIGHT AND FACE OF CURBS ON APPROACH SLABS SHALL BE TRANSITIONED FROM THE STANDARD SECTION USED ON THE APPROACH PAVEMENT TO THE SECTION USED ON THE BRIDGE CURBING WITHIN THE LIMITS OF THE APPROACH SLAB.

LOCATIONS OF GUARDRAIL

THE LOCATIONS OF GUARDRAIL RUNS AS SHOWN IN THESE PLANS ARE SUBJECT TO ADJUSTMENT TO ASSURE THE PLANNED INSTALLATIONS WILL AFFORD MAXIMUM PROTECTION FOR TRAFFIC.

ITEM 609 DRIVEWAY CURB REPLACEMENT

THE CONTRACTOR SHALL REPLACE EXISTING CURBS AT ABANDONED DRIVEWAY WITH STANDARD 609 TYPE 6 CONCRETE CURB AT LOCATIONS CALLED FOR ON THE PLANS AND AS DIRECTED BY THE ENGINEER.

THE CONTRACTOR SHALL MEET EXISTING CURB ALIGNMENT AND ELEVATIONS AND PROVIDE A NEAT SEALED JOINT ADJACENT TO THE EXISTING PAVEMENT.

PAYMENT WILL BE MADE AT THE UNIT BID PRICE FOR ITEM 609 STANDARD TYPE 6 CONCRETE CURB.

DESIGN SPEED

THE GEOMETRICS FOR THIS PROJECT HAVE BEEN PLANNED FOR THE FOLLOWING DESIGN SPEEDS:

FREEWAY	60 M.P.H.
RAMPS	35 M.P.H.

DUST CONTROL

THE CONTRACTOR SHALL FURNISH AND APPLY WATER OR CALCIUM CHLORIDE FOR DUST CONTROL PURPOSES AS DIRECTED BY THE ENGINEER.

THE FOLLOWING QUANTITIES HAVE BEEN INCLUDED FOR DUST CONTROL PURPOSES:

5 TONS:	616 CALCIUM CHLORIDE
100 M-GAL:	616 WATER

FENCE CL MODIFIED AS PER PLAN

The fence along the west side of Parcel No. 335 WL shall be in accordance with 607 Type CL except that the fence shall be 10 foot high.

UTILITIES

THE CONSTRUCTION PLANS INCLUDE RELOCATION OF CITY OWNED SEWER AND WATER LINES DISRUPTED BY CONSTRUCTION OF THE ROADWAYS. THE CONTRACTOR SHALL NOTIFY AT LEAST TWO WORKING DAYS BEFORE BREAKING GROUND ALL PUBLIC OR PRIVATE UTILITIES AFFECTED BY THIS PROJECT INCLUDING THOSE NOT SHOWN IN THESE PLANS. ANY OR ALL WORK REQUIRED FOR PRIVATE UTILITIES WILL BE DONE BY AND AT THE EXPENSE OF THEIR RESPECTIVE OWNERS, UNLESS OTHERWISE NOTED ON THESE PLANS.

THE FOLLOWING IS A LIST OF THE UTILITIES WITHIN THE LIMITS OF THIS PROJECT:

OHIO BELL TELEPHONE COMPANY
50 WEST BOWERY STREET
AKRON, OHIO

EAST OHIO GAS COMPANY
1717 EAST NINTH STREET
CLEVELAND, OHIO

OHIO EDISON COMPANY
47 NORTH MAIN STREET
AKRON, OHIO

CITY OF CUYAHOGA FALLS
WATER UTILITIES DEPARTMENT
2310 SECOND STREET
CUYAHOGA FALLS, OHIO

CITY OF CUYAHOGA FALLS
MUNICIPAL ELECTRIC SERVICE
2310 SECOND STREET
CUYAHOGA FALLS, OHIO

ITEM 606 TEMPORARY BEAM RAIL

TEMPORARY BEAM RAIL SHALL BE PLACED AT THE FOLLOWING LOCATIONS AS INDICATED ON SHEETS 2,3 AND 4 OF THE PLANS AND AS DIRECTED BY THE ENGINEER.

PAYMENT SHALL BE PER ITEM 606 LINEAL FEET TEMPORARY BEAM RAIL, AS PER PLAN (SEE NOTE IN PROPOSAL)

LOCATION	LIN. FT.
SR-8 STA 262 + 70 TO STA 270 + 70 LEFT	800
SR-8 STA 312 + 00 TO STA 320 + 00 RIGHT	800
SR-8 STA 331 + 56 LEFT	37.5'
RAMP "L" STA 252 + 49 TO STA 253 + 00	50'
FRONT STREET STA 57 + 07 RIGHT	12.5'
SR.8 STA. 320+30± LEFT	25'
GRAHAM ROAD STA 104 + 00 TO STA 105+00 LEFT	100
GRAHAM ROAD STA 216 + 00 TO STA 217 + 00 LEFT	100
	1925 LIN. FT.

PAVEMENT REPLACEMENT FOR ITEM 202 ITEM 603 & ITEM 814

EXISTING PAVEMENT REMOVED UNDER ITEM 202 ITEM 603 OR ITEM 814 OUTSIDE OF THE WORK LIMITS COVERED BY NEW PAVEMENT CONSTRUCTION SHALL BE REPLACED IN ACCORDANCE WITH THE DETAIL SHOWN ON SHEET 254 OF THE PLANS UNLESS OTHERWISE NOTED.

PAYMENT FOR THIS PAVEMENT REPLACEMENT SHALL BE PER ITEM 305 SQ. YD. PORTLAND CEMENT CONCRETE BASE AND ITEM 404 CU.YD. ASPHALT CONCRETE.

PAVEMENT REPLACEMENT FOR ITEM 202, ITEM 603 OR ITEM 814 SHALL CONSIST OF EIGHT (8") INCHES OF ITEM 304 AGGREGATE BASE IN LIEU OF ITEM 305& ITEM 404 FOR THE FOLLOWING STREETS.

ALLENSIDE COURT
MELVIN AVENUE
CHARLES STREET
SECOND STREET (BETWEEN HUDSON DR & PENN. RR)

PAYMENT FOR USING ITEM 304 AGGREGATE BASE SHALL BE INCLUDED IN THE UNIT PRICE BID FOR THE PERTINENT ITEM 202, ITEM 603 OR ITEM 814.

MEDIAN PAVEMENT ON APPROACH SLABS

THE WIDTH AND TYPE OF MEDIAN PAVEMENT ON APPROACH SLABS SHALL BE TRANSITIONED FROM THE STANDARD SECTION USED ON THE APPROACH PAVEMENT TO THE SECTION USED ON THE BRIDGE WITHIN THE LIMITS OF THE APPROACH SLAB.

CALC. BY F.A.E. 10/67
CHECKED BY H.C.S. 11/68

GENERAL NOTES

FED. RD.	STATE	PROJECT	
2	OHIO		

13
460

SUM-8-17.63

FUTURE LANE CONSTRUCTION

To provide for future lane construction, the Contractor shall provide and install standard longitudinal key joints with the female end of the standard hook bolt cast into the concrete pavement at 30" spacing as called for on Standard Drawing BP-3.

The above joints shall be placed on the inside edge of the proposed pavement as shown on the typical sections, for State Route 8 between the following Stations:

Northbound Lane Sta. 281+45.09 to Sta.1043+44.20
Southbound Lane Sta. 272+95.09 to Sta.1043+44.20

After the forms have been removed, the 5/8" tap bolt shall be re-inserted into the hook bolt to protect the threads and left in place in lieu of the male end of the hook bolt. The exposed metal shall then be painted with two coats of asphalt varnish.

Payment for all of the above shall be included in the unit price bid for the pertinent pavement item.

DRILLING AND BLASTING IN ROCK CUTS

THE CONTRACTOR IN ADDITION TO COMPLYING WITH SECTION 203.04 (c) OF THE SPECIFICATIONS SHALL OBTAIN THE NECESSARY PERMITS FROM LOCAL GOVERNING AGENCIES AND CONFORM WITH LOCAL ORDINANCES CONTROLLING BLASTING OPERATIONS.

CONCRETE TUNNELS STA 234 + 00 TO 235 + 75

EXISTING CONCRETE TUNNELS SHALL HAVE THE TOP SLAB BROKEN AND THE TUNNEL VOID FILLED IN ACCORDANCE WITH SECTION 203.07 OF THE SPECIFICATIONS.

PAYMENT FOR DEMOLITION & FILLING OF THE TUNNELS SHALL BE INCLUDED IN THE LUMP SUM BID PRICE FOR ITEM 202, PORTIONS OF EXISTING STRUCTURES REMOVED.

ITEM SPECIAL, DRILLED WELL ABANDONED

THE EXISTING CONCRETE OR STONE SLAB WELL COVER AND PUMPING EQUIPMENT SHALL BE REMOVED AND DISPOSED OF. THE CASING SHALL BE CUT OFF AT LEAST TWO (2) FEET BELOW THE PROPOSED FINISHED GRADE OUTSIDE PROPOSED PAVEMENT AREAS OR AT LEAST TWO (2) FEET BELOW THE PROPOSED SUBGRADE ELEVATION INSIDE PROPOSED PAVEMENT AREAS AND CAPPED WITH CLASS C CONCRETE OR A STANDARD THREADED PIPE CAP.

THE UNIT PRICE BID FOR EACH "DRILLED WELL ABANDONED" SHALL INCLUDE PAYMENT FOR ALL LABOR, TOOLS, MATERIALS, AND INCIDENTALS NECESSARY TO COMPLETE THIS ITEM.

RIGHT OF WAY FENCE

PRIOR TO BEGINNING ANY WORK IN THE VICINITY OF ROBERTS JR. HIGH SCHOOL, STATION 313+88± TO 322+28±, THE CONTRACTOR SHALL INSTALL THE CHAIN LINK RIGHT-OF-WAY FENCE TO PREVENT ENTRY TO THE CONSTRUCTION SITE FROM THE SCHOOL PROPERTY. ALSO THE WORK AREA AT THE WEST END OF THE PEDESTRIAN BRIDGE SHALL BE ENCLOSED WITH A TEMPORARY CHAIN LINK FENCE, AS DIRECTED BY THE ENGINEER, TO PREVENT ENTRY TO THIS AREA. THIS REQUIREMENT FOR FENCING IS A CONDITION TO OUR ENTRY ONTO THE SCHOOL PROPERTY, PARCEL 335.

PAYMENT FOR THE FENCE TO BE ERECTED ALONG THE RIGHT-OF-WAY LINE WILL BE MADE IN ACCORDANCE WITH THE UNIT PRICE BID FOR ITEM 607 FENCE TYPE CL. PAYMENT FOR FURNISHING, ERECTING AND REMOVING THE TEMPORARY CHAIN LINK FENCE WILL BE INCLUDED IN THE LUMP SUM PRICE BID FOR MAINTAINING TRAFFIC.

GRANULAR EMBANKMENT GRAHAM ROAD AND RAMP "C"

TO FACILITATE THE EMBANKMENT CONSTRUCTION AND PROVIDE A DRAINAGE FACE, A TWO FOOT LAYER OF GRANULAR MATERIAL FOR INITIAL EMBANKMENT CONSTRUCTION OF THE LOW AREAS BELOW ELEVATION 995', BETWEEN STATIONS 326+00 TO 327 + 70 ON RAMP "C" AND STATIONS 116+00 TO 118+50 ON GRAHAM ROAD. GRANULAR MATERIAL FOR THIS ITEM SHALL MEET THE REQUIREMENTS OF 203.02, EXCEPT THAT NOT LESS THAN 85 PERCENT BY WEIGHT OF THE GRAINS OR PARTICLES SHALL BE RETAINED ON A NO. 200 SIEVE. AS AN ADDITIONAL SAFEGUARD AGAINST EMBANKMENT FAILURE, THE RATE OF EMBANKMENT PLACEMENT BETWEEN STATIONS 116+00 TO 118+50 ON GRAHAM ROAD, STATIONS 326+00 TO 327+70 ON RAMP "C" AND STATIONS 328+00 TO 330+00 ON RAMP "D" SHALL BE ACCORDING TO THE FOLLOWING:

ALLOWABLE RATE OF FILL PLACEMENT (PER SEVEN CALENDAR DAYS)	HEIGHT OF FILL MEASURED FROM LOWEST POINT ON CROSS SECTION
3'	0' TO 10'
2'	10' TO FINAL GRADE

PAYMENT SHALL BE AT THE UNIT BID PRICE FOR ITEM 203 EMBANKMENT USING GRANULAR MATERIAL, AS PER PLAN.

COUNTER BERM-GRAHAM ROAD AND RAMP "C"

A 7-FOOT DEPTH COUNTERBERM SHALL BE USED, ONLY IF DIRECTED BY THE ENGINEER, BETWEEN STATION 326+00 RAMP "C" AND THE POINT OF INTERSECTION WITH THE GRAHAM ROAD EMBANKMENT. THIS OPTIONAL BERM SHALL BE CONSTRUCTED AS SHOWN ON THE CROSS SECTION SHEETS ALONG WITH THE 2-FOOT GRANULAR LAYER WHICH SHALL BE CARRIED OUT TO THE TOE OF THE COUNTERBERM.

THIS COUNTERBERM SHALL BE USED IF THERE ARE INDICATIONS OF EMBANKMENT DISTRESS AS EVIDENCED BY SUDDEN VERTICAL OR LATERAL MOVEMENT, CRACKING, OR HEAVING BEYOND THE TOE OF THE EMBANKMENT.

TREATMENT OF EXPOSED CURB ENDS

WHERE EXPOSED ENDS OF TYPE 6, TYPE 7 AND TYPE 2-A CURB ARE PROPOSED ON THE MAINLINE AND RAMPS A TRANSITION IN THE HEIGHT OF CURB SHALL BE FROM 2" TO NORMAL HEIGHT OF CURB IN 20'.

PART WIDTH CONSTRUCTION

BECAUSE OF THE NECESSITY OF BUILDING PORTIONS OF THIS PROJECT UNDER TRAFFIC AND CONSTRUCTING THE PAVEMENT PART AT A TIME, EXTREME CARE SHALL BE TAKEN TO PREVENT THE CONSTRUCTION OF A BUTT JOINT IN THE 310 SUBBASE AT THE PAVEMENT JOINTS. THIS SHALL BE ACCOMPLISHED BY BUILDING THE 310 SUBBASE AT LEAST EIGHTEEN (18) INCHES BEYOND THE PAVEMENT JOINT. WHEN THE ABUTTING PORTION OF THE PAVEMENT IS BUILT, AT LEAST TWELVE (12) INCHES OF THIS PROJECTING SUBBASE SHALL BE BROKEN DOWN AND THOROUGHLY BLENDED WITH THE NEWLY PLACED CORRESPONDING SUBBASE. PAYMENT FOR THIS OPERATION SHALL BE INCLUDED IN THE UNIT PRICE BID FOR ITEM 310 SUBBASE.

CROWN AT RAILROAD CROSSING

THE CROWN SHALL BE WORKED OUT OF THE PAVEMENT ON EACH SIDE OF THE RAILROAD CROSSING BEGINNING 50 FEET FROM THE CROSSING BY RAISING THE EDGE OF THE PAVEMENT TO MEET THE RAIL ELEVATION. SEE DETAIL SHT. N° 252

PAVEMENT REMOVAL OUTSIDE NORMAL CONSTRUCTION LIMITS

AFTER THE EXISTING PAVEMENT AS INDICATED ON THE PLANS HAS BEEN REMOVED, THE OLD ROADWAY SHALL BE GRADED TO THE LEVEL OF THE SURROUNDING GROUND, THE OLD DITCHES FILLED AND THE DISTURBED AREAS SLOPED TO DRAIN AND LEFT IN A NEAT CONDITION READY FOR SEEDING. SEEDING SHALL BE MEASURED AND PAID FOR IN ACCORDANCE WITH ITEM 659 SEEDING AND MULCHING. PAYMENT FOR ALL OTHER WORK REQUIRED SHALL BE INCLUDED IN THE UNIT PRICE BID FOR ITEM 203 EXCAVATION, NOT INCLUDING EMBANKMENT.

SEEDING

QUANTITIES FOR SEEDING ARE CALCULATED FOR THE SOIL AREAS BETWEEN THE RIGHT-OF-WAY FENCE LINES, BETWEEN THE RIGHT-OF-WAY LINES IN UNFENCED AREAS, AND WITHIN THE WORK LIMITS FOR AREAS OUTSIDE THE RIGHT-OF-WAY LINES COVERED BY WORK AGREEMENT OR SLOPE EASEMENT.

SPECIAL SEEDING PREPARATION AREAS

THE REFERENCE IN THE FIRST PARAGRAPH OF 659.09 TO PREPARATION OF THE SEED BED IN FRONT OF RESIDENCES, ETC., SHALL ON THIS PROJECT BE CONSIDERED TO BE PARTICULARLY APPLICABLE TO ALL AREAS LISTED IN 659.09 IN ADDITION TO THE FOLLOWING AREAS:

1. ALL GRAHAM ROAD SOIL AREAS OUTSIDE THE LA LINES INCLUDING THE GRAHAM - SERVICE ROAD.
2. ALL RUDOLPH - ASHLAND SOIL AREAS OUTSIDE THE LA LINES.
3. STA. 54+25 LT. TO 57+75 LT. FRONT ST.
4. ALL SOIL AREAS INVOLVED IN TEE-TURNAROUNDS, CUL-DE-SACS, DRIVEWAY RELOCATIONS AND STREET CONNECTORS.

ITEM 203 PROOF ROLLING

AN ESTIMATED QUANTITY FOR THIS ITEM HAS BEEN PROVIDED IN THE GENERAL SUMMARY FOR USE IN PROOF ROLLING OF SUBGRADE FOR THE MAINLINE AND RAMP PAVEMENTS, AND FOR PAVED SHOULDERS, IN ACCORDANCE WITH SUPPLEMENTAL SPECIFICATION 801.

EMBANKMENT, USING ROCK, AS PER PLAN

IN THE AREA BETWEEN STATIONS 230+50 AND 242+50, ROCK EMBANKMENT INDICATED ON THE PLANS MAY BE PLACED BY THE METHOD OF END DUMPING IF SURFACE WATER IS PRESENT AT THE TIME OF CONSTRUCTION. END DUMPING METHODS MAY BE USED UP TO AN ELEVATION TWO FEET ABOVE THE WATER LEVEL. ABOVE THIS ELEVATION, EMBANKMENT CONSTRUCTION SHALL BE IN ACCORDANCE WITH 203.07 TO 203.12 INCLUSIVE.

EARTHWORK COMPUTATIONS - CURVED ALIGNMENTS

WHEN THE ROADWAY IS ON A CURVED ALIGNMENT THE CENTER OF GRAVITY OR THE CENTROID FOR THE END AREA, MAY NOT BE ON OR NEAR THE BASE LINE OR CENTER LINE. THEREFORE A CORRECTION FOR THE TRUE ARC LENGTH BETWEEN STATIONS HAS BEEN MADE TO OBTAIN A TRUE MEASUREMENT OF EARTHWORK.

THE DIAGRAM SHOWN INDICATES THE METHOD USED TO DETERMINE THE CORRECTED ARC LENGTH FOR COMPUTING THE TRUE MEASUREMENT OF EARTHWORK.

THE CORRECTED ARC LENGTHS & EARTHWORK TABULATIONS APPEAR ON THE AFFECTED CROSS SECTION SHEETS.

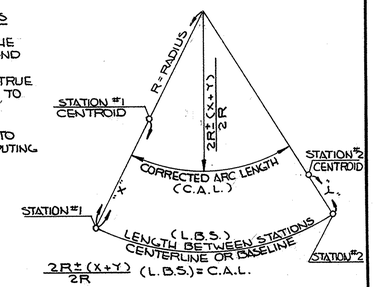

GENERAL NOTES

GENERAL NOTES

FED. RD.	STATE	PROJECT	
2	OHIO		

20
460

SUM-8-17.63

CONNECTIONS TO EXISTING PIPE

AT PLACES WHERE THE PLANS PROVIDE FOR PROPOSED PIPE TO BE CONNECTED TO EXISTING PIPE, IT SHALL BE THE RESPONSIBILITY OF THE CONTRACTOR TO LOCATE THE EXISTING PIPE BOTH AS TO LINE AND GRADE BEFORE HE STARTS TO LAY THE PROPOSED PIPE. THE COST OF THIS OPERATION SHALL BE INCLUDED IN THE UNIT PRICE BID FOR THE PERTINENT 603 CONDUIT ITEM.

ITEM 605 AGGREGATE DRAINS GRAHAM ROAD

AGGREGATE DRAINS SHALL BE PLACED AT FIFTY (50) FOOT INTERVALS ON EACH SIDE OF NORMAL CROWNED SECTIONS AND AT TWENTY-FIVE (25) FOOT INTERVALS ON THE LOW SIDE ONLY OF SUPERELEVATED SECTIONS, EXCEPT WHERE ITEM 605 PIPE UNDERDRAINS HAVE BEEN PROVIDED.

AN AGGREGATE DRAIN SHALL BE PLACED AT THE LOW POINT OF EACH SAG VERTICAL CURVE.

604 MANHOLES, INLETS AND CATCH BASINS

MANHOLES, INLETS AND CATCH BASINS ARE STATIONED AND LOCATED AS FOLLOWS:

MANHOLES - CENTER LINE COVER
NO. 5, NO. 2-3 MOD., NO. 2-2A, 2-2B CENTER LINE GRATE
NO. 3 INLET, NO. 3 COMB. M.H. INLET - CENTER LINE COVER, FACE OF CURB

ALL ELEVATIONS SHOWN ON THE PLANS FOR MANHOLES, INLETS AND CATCH BASINS ARE ACTUAL FINISH GRADE ELEVATIONS. ALL MANHOLE COVERS SHALL BE SET TO CONFORM TO ALL LOCAL GRADES OR AS DIRECTED BY THE ENGINEER.

MANHOLES, CATCH BASINS AND INLETS REMOVED.

REMOVAL OF MANHOLES, CATCH BASINS AND INLET STRUCTURES, NOT SPECIFICALLY REMOVED OR ABANDONED UNDER ITEM 202 SHALL BE PAID FOR UNDER ITEM 203 - "ROADWAY EXCAVATION NOT INCLUDING EMBANKMENT".

604 INLETS AND MANHOLES, AS PER PLAN

THE 604 ITEMS LISTED BELOW, WHERE CALLED FOR ON THESE PLANS. ARE DETAILED ON SHEET NO. 248,249 & 250

604 - CUY. FALLS : NO. 1 & 3 INLET, AS PER PLAN CITY OF CUYAHOGA FALLS STD.
604- STANDARD Nº 2-10, MEDIAN INLET, MODIFIED AS PER PLAN
604 M.H. Nº 2 MODIFIED SEE SHEET 82-A

REMOVAL OF EXISTING PIPE

THE REMOVAL OF ALL EXISTING PIPE DRAINS WHICH WOULD NORMALLY BE REMOVED IN VARIOUS EXCAVATION ITEMS SHALL BE INCLUDED FOR PAYMENT IN THE UNIT PRICES BID FOR THE RESPECTIVE EXCAVATION ITEMS, UNLESS OTHERWISE ITEMIZED IN THE PLANS.

SHEET PILING LEFT IN PLACE

SHEET PILING SHALL BE LEFT IN PLACE ONLY IN AREAS WHERE SOIL CONDITIONS INDICATE THAT LATERAL DISPLACEMENT WILL TAKE PLACE, AS DETERMINED BY THE ENGINEER.

THE CONTRACTOR SHALL LEAVE IN PLACE, SEWER TRENCH SHEETING, NOT TO EXCEED ONE (1) FOOT ABOVE THE CROWN OF THE SEWER.

THE FOLLOWING QUANTITY HAS BEEN INCLUDED IN THE PLANS, FOR USE AS DIRECTED BY THE ENGINEER. THE ACTUAL LOCATIONS OF SHEET PILING LEFT IN PLACE WILL BE DETERMINED BY THE PROJECT ENGINEER AND PAYMENT WILL BE MADE ON FINAL MEASUREMENT.

50# SHEET PILING LEFT IN PLACE - 10,000 SQ. FT.

STORM AND SANITARY CONSTRUCTION AND PROTECTION

WHERE PROPOSED STORM AND SANITARY SEWERS ARE TO BE CONSTRUCTED ADJACENT TO EXISTING PRIVATE OR PUBLIC UNDERGROUND LINES, THE CONTRACTOR SHALL PROVIDE SUITABLE PROTECTIVE DEVICES SO AS TO PREVENT ANY DAMAGE OR CREATE A SITUATION THAT WOULD CAUSE SUSPENSION OF SERVICES.

MAINTENANCE OF SEWER FLOWS

THE CONTRACTOR SHALL CONDUCT HIS OPERATIONS SO AS TO MAINTAIN AT ALL TIMES SEWER FLOWS THROUGH EXISTING FACILITIES TO REMAIN IN PLACE AND THROUGH EXISTING FACILITIES TO BE REPLACED UNTIL NEW FACILITIES ARE COMPLETED AND PLACED INTO USE.

PAYMENT FOR ANY ADDITIONAL COSTS INVOLVED IN MAINTAINING THESE FLOWS BY PUMPING OR BY ANY OTHER MEANS APPROVED BY THE ENGINEER SHALL BE INCLUDED IN THE UNIT PRICES BID FOR THE RESPECTIVE ITEMS OF 603 CONDUIT.

TILE FOR SUBGRADE DRAINAGE

SIX (6) INCH DRAIN TILE (SEC. 706.07 OR 706.09) SHALL BE FURNISHED AND PLACED BY THE CONTRACTOR IN MANHOLES, CATCH BASINS AND INLETS FOR SUBGRADE DRAINAGE, WHERE AND AS DIRECTED BY THE ENGINEER. PAYMENT FOR SAME SHALL BE INCLUDED IN THE PRICE BID PER "EACH" FOR MANHOLES, CATCH BASINS AND INLETS.

SPECIAL DITCHES

FOR SPECIAL DITCH GRADES, SEE CROSS SECTIONS.

ITEM SPECIAL - CLEANING AND DISPOSING OF SEPTIC TANKS

THIS ITEM SHALL INCLUDE CLEANING, BACKFILLING, AND REMOVING OF ALL OR ANY PORTION OF EXISTING SEPTIC TANKS. AS REQUIRED

ALL SEPTIC TANKS LYING WITHIN THE PROPOSED RIGHT-OF-WAY LIMITS SHALL BE CLEANED AND EMPTIED. MATERIAL REMOVED FROM THESE TANKS SHALL BE CLASSIFIED AS UNSUITABLE AND DISPOSED OF OUTSIDE THE RIGHT-OF-WAY OR EASEMENT LINES.

WHEN THE SEPTIC TANKS ARE LOCATED ABOVE THE FINISHED PAVEMENT OR GROUND LINES, THEY SHALL BE ENTIRELY REMOVED AND DISPOSED OF IN ACCORDANCE WITH ITEM 202.

WHEN THE SEPTIC TANKS ARE LOCATED BELOW THE FINISHED PAVEMENT OR GROUND LINES, THE TOPS OF THE TANKS SHALL BE REMOVED, AND THE WALLS SHALL BE REMOVED TO A DEPTH OF 3 FEET BELOW THE FINISHED SUBGRADE OR GROUND LINES. THE REMOVED MATERIAL SHALL BE DISPOSED OF AS EXPLAINED ABOVE. THE TANKS SHALL BE BACKFILLED WITH SUITABLE SOIL OR GRANULAR MATERIAL IN ACCORDANCE WITH ITEM 203.

THIS ITEM SHALL BE PAID FOR AT THE UNIT PRICE BID FOR EACH "ITEM SPECIAL-CLEANING AND DISPOSING OF SEPTIC TANKS", WHICH PRICE AND PAYMENT SHALL CONSTITUTE FULL COMPENSATION FOR CLEANING, REMOVING AND DISPOSING OF EXCESS MATERIALS, BACKFILLING AND FOR ALL LABOR, TOOLS, EQUIPMENT, AND INCIDENTALS NECESSARY TO COMPLETE THIS ITEM INCLUDING INCIDENTAL EXCAVATION.

TREATED SANITARY FLOW INTO HIGHWAY DRAINAGE SYSTEMS

TREATED SANITARY FLOW MAY BE DISCHARGED INTO THE HIGHWAY DRAINAGE SYSTEM PROVIDED THE OWNER HAS SECURED THE APPROVAL OF THE LOCAL HEALTH AUTHORITIES AND HAS ACQUIRED FROM THE STATE HIGHWAY DEPARTMENT, THE OFFICIAL PERMIT TO HAVE THE CONNECTION MADE.

IN EACH CASE WHERE A PERMIT HAS BEEN ISSUED FOR A SANITARY CONNECTION TO BE MADE INTO A HIGHWAY DRAINAGE CONDUIT, IT SHALL BE PROVIDED WITH AN INSPECTION WELL, IN ACCORDANCE WITH THE DETAIL SHOWN ON STANDARD DRAWING MC-8.

THE FOLLOWING ESTIMATED QUANTITIES HAVE BEEN INCLUDED IN THE GENERAL SUMMARY, FOR USE AS DIRECTED BY THE ENGINEER, IN MAKING THE ABOVE DESCRIBED CONNECTIONS:

ITEM 603, 6 " CONDUIT, TYPE C 200 LIN. FT.
*ITEM 604, INSPECTION WELLS 4 EACH
AND NECESSARY BENDS & BRANCHES SHALL BE INCLUDED FOR PAYMENT IN THE PERTINENT CONDUIT ITEM.

NONE OF THE ABOVE MATERIALS SHALL BE ORDERED BY THE CONTRACTOR UNTIL AUTHORIZED BY THE ENGINEER.

*NO INSPECTION WELL IS REQUIRED IF EFFLUENT IS DISCHARGED INTO AN OPEN DITCH, CHANNEL, CATCH BASIN OR MANHOLE.

SANITARY SERVICE LINES

EXISTING SANITARY SEWER SERVICE LINES ENCOUNTERED DURING CONSTRUCTION WHICH REQUIRE CONTINUED SERVICE SHALL BE CONNECTED SO AS TO PROVIDE AN UNOBSTRUCTED FLOW.

THE LOCATION, TYPE, SIZE AND GRADE, IF NOT SPECIFIED ON THE PLANS, SHALL BE DETERMINED BY THE ENGINEER DURING CONSTRUCTION AND PAYMENT SHALL BE MADE ON FINAL MEASUREMENTS. MATERIALS SHALL NOT BE ORDERED UNTIL SO DIRECTED BY THE ENGINEER.

THE FOLLOWING ESTIMATED QUANTITIES HAVE BEEN INCLUDED IN THE GENERAL SUMMARY FOR THE WORK NOTED ABOVE:

603	100 LIN. FT.	6" CONDUIT TYPE "B" 706.08 WITH 706.12 JOINTS (SANITARY)
	10 EACH	6" PIPE SPECIALS 706.08 WITH 706.12 JOINTS (SANITARY)

STEEL PIPE FOR SANITARY LINES

THE STEEL PIPE SPECIFIED IN THE PLANS FOR SANITARY LINES SHALL BE IN ACCORDANCE WITH SECTION 707.08 OF THE SPECIFICATIONS CONFORMING WITH ASTM A 53, TYPE "E", GRADE "B" AND THE FOLLOWING TABLE.

SIZE NOMINAL	O.D.	I.D.	WALL THICKNESS
8"	8.625"	8.001"	0.312"
12"	12.75"	12.062"	0.344"
16"	16.00"	15.25"	0.375"
18"	18.00"	17.00"	0.500"

ALL PIPE SHALL HAVE A PROTECTIVE SHOP COATING BOTH INSIDE AND OUTSIDE WITH ONE (1) COAT OF PRIMER AND ONE COAT OF COAL TAR ENAMEL IN ACCORDANCE WITH AWWA SPECIFICATION C 203-62.

PIPE SHALL BE JOINED TOGETHER BY MEANS OF MECHANICAL COUPLING JOINTS.

DRAIN PIPES

EXISTING DOWNSPOUT DRAIN PIPE ENCOUNTERED DURING CONSTRUCTION ARE TO BE REPLACED WITH 4" DIAMETER PIPE TYPE "F" 707.09 AT THE DIRECTION OF THE ENGINEER.

THE FOLLOWING QUANTITY IS PROVIDED FOR THIS PURPOSE:

603 200 LIN. FT. 4" CONDUIT, TYPE "F" 707.09 AS PER PLAN

CALC. BY F.M.R. 10/67
CHECKED BY H.C.S. 11/68

GENERAL NOTES

FED. RD.	STATE	PROJECT	
2	OHIO		

SUM-8-17.63

21
460

WATER LINE RELOCATIONS - SPECIFICATIONS

ALL WATER LINE RELOCATIONS SHALL BE MADE IN ACCORDANCE WITH DEPARTMENT OF HIGHWAYS SUPPLEMENTAL SPECIFICATIONS 814 "WATER MAINS AND SERVICE BRANCHES", DATED JANUARY 1, 1965, EXCEPT AS MODIFIED BY THE FOLLOWING SPECIAL PROVISIONS. IN ALL CASES OF CONFLICT WITH SUPPLEMENTAL SPECIFICATIONS 814, THESE NOTES SHALL GOVERN. THE FIGURE IN PARENTHESIS IN THESE NOTES REFERS TO THE SECTION OF SUPPLEMENTAL SPECIFICATIONS 814 WHICH IS BEING MODIFIED.

DUCTILE IRON WATER MAIN PIPE AND FITTINGS (S.S. 814.026)

CENTRIFUGALLY CAST PIPE AND FITTINGS SHALL BE DUCTILE IRON PIPE, MEETING THE REQUIREMENTS OF ASA A21.51 AND AWWA C151-65. ALL DUCTILE IRON PIPE SHALL BE CEMENT MORTAR LINED AND OUTSIDE BITUMINOUS COATED AS SPECIFIED IN ASA A21.4 OR AS NOTED IN THESE PLANS. CERTIFIED COPIES OF INSPECTIONS AND TEST REPORTS BY AN AWWA APPROVED TESTING LABORATORY SHALL BE FURNISHED TO THE CITY OF CUYAHOGA FALLS ENGINEERING DEPARTMENT, AND TO THE ENGINEER, PRIOR TO INSTALLATION. PIPE AND FITTINGS FURNISHED FOR THIS PROJECT MUST HAVE BEEN MANUFACTURED WITHIN 2 YEARS OF THE TIME IT IS TO BE INSTALLED. ALL CENTRIFUGALLY CAST, DUCTILE IRON PIPE SHALL HAVE THE FOLLOWING BARREL DIMENSIONS AND JOINTS.

NOMINAL INSIDE DIAM.	CLASS	BARREL O.D.	WALL THICKNESS	TYPE JOINT
3"	4	3.96"	0.34"	PUSH ON
4"	4	4.80"	0.35"	PUSH ON
6"	4	6.90"	0.37"	PUSH ON
8"	3	9.05	0.36"	PUSH ON
12"	3	13.20"	0.40"	PUSH ON
16"	3	17.40"	0.43"	MECHANICAL

FITTINGS FOR ALL CAST IRON PIPE SHALL BE MANUFACTURED IN CONFORMITY WITH A.W.W.A. C110, ASA A 21.10 SPECIFICATIONS. FITTINGS FOR 3 INCH THRU 12 INCH PIPE SHALL BE DUCTILE IRON PIPE WITH PUSH ON JOINTS OF THE SAME CLASS AND DIMENSIONS AS THE CORRESPONDING SIZES LISTED ABOVE. FITTINGS FOR 16" PIPE SHALL BE OF 250# PRESS.RAT. CAST IRON, AWWA C106 OR AWWA C108, AND MANUFACTURED IN CONFORMITY TO AWWA C110 ASA A21.0 WITH MECHANICAL JOINTS.

EVERY PIPE SHALL BE MARKED FOR IDENTIFICATION WITH THE LETTERS C.F.W.W., THE INITIAL OF THE MAKER'S NAME AND FIGURES SHOWING THE YEAR IN WHICH IT WAS CAST, THE NUMBER SIGNIFYING THE ORDER IN POINT OF TIME IN WHICH IT WAS CAST, THE FIGURES DENOTING THE YEAR ABOVE AND THE NUMBER BELOW. THE WEIGHT AND THE CLASS LETTER SHALL BE CONSPICUOUSLY PAINTED IN WHITE ON THE INSIDE OF EACH PIPE AFTER THE COATING HAS BECOME HARD.

JOINTS

PUSH ON TYPE JOINTS AND MECHANICAL JOINTS SHALL BE MADE WITH LUBRICANTS AND GASKETS ACCORDING TO A.W.W.A. C111-64. WHERE JOINING PIPE WITH PUSH ON JOINTS TO EXISTING BELL & SPIGOT LEAD JOINT PIPE, THE BELL OF THE PUSH ON PIPE CAN BE BEVELED 1/4" TO ACCOMODATE THE SPIGOT OF THE EXISTING PIPE. THE BELL OF THE EXISTING PIPE WILL ACCOMODATE THE PUSH ON SPIGOT. THESE JOINTS SHALL BE MADE WITH AN APPROVED BRAIDED HEMP AND POURED LEAD. SOLID SLEEVES ARE ALSO PROVIDED, TO BE USED WHERE NEEDED, TO JOIN NEW LINES TO EXISTING PIPE.

FURNISHING AND INSTALLING STEEL CARRIER PIPE

STEEL PIPE AND FITTINGS

ALL STEEL PIPE AND FITTINGS TO BE FURNISHED AND INSTALLED SHALL BE MILL PIPE, MANUFACTURED IN ACCORDANCE WITH A.W.W.A. SPECIFICATIONS C 202-64 OR LATEST REVISION THEREOF. LENGTHS OF STANDARD PIPE SECTIONS SHALL HAVE NOT MORE THAN ONE LONGITUDINAL AND A MINIMUM NUMBER OF GIRTH JOINTS.

STEEL PIPE SHALL BE AS FOLLOWS:

NOMINAL PIPE SIZE	O.D.	WALL THICKNESS	GRADE	WEIGHT
6"	6.625"	0.25"	B	17.02 #/L.F.
12"	12.75"	0.375"	B	49.56 #/L.F.

THE PIPE SHALL BE ORDERED IN LENGTHS DETERMINED BY THE CONTRACTOR, TO BEST SUIT HIS PLANNED METHOD OF STRINGING PIPE IN THE BRIDGE FRAMING AND ARRANGING JOINTS CLEAR OF PIPE SUPPORTS. THE PIPE SHALL HAVE PLAIN ENDS AND SHALL BE SHOP COATED, BY MECHANICAL MEANS, INSIDE AND OUT, WITH A COAL TAR PRIMER AND A HOT COAT OF COAL TAR ENAMEL. IN ADDITION THE OUTSIDE SHALL BE COATED WITH BONDED ASBESTOS FELT WRAPPER AND WATER RESISTANT WHITE WASH, ALL IN ACCORDANCE WITH APPROPRIATE SECTIONS OF A.W.W.A. SPECIFICATIONS C-203-62.

HANDLING STEEL PIPE

THE TRANSPORTATION AND HANDLING OF ENAMELED STEEL PIPE SHALL BE AS PROVIDED FOR IN A.W.W.A. SPECIFICATIONS C-203-62 FOR COAL TAR ENAMEL PROTECTIVE COATINGS.

FIELD JOINTS

SECTIONS OF STEEL PIPE SHALL BE JOINED BY USING COUPLINGS, DRESSER STYLE 38, SMITH BLAIR STYLE 411, OR APPROVED EQUAL. WHERE STEEL PIPE IS TO BE JOINED TO CAST IRON PIPE, COUPLINGS, DRESSER STYLE 62, SMITH BLAIR STYLE 433, OR APPROVED EQUAL, SHALL BE USED. NON-CORROSIVE, PLATED, STEEL BOLTS AND NUTS SHALL BE SUPPLIED WITH THESE COUPLINGS. ALL METAL PARTS OF THE COUPLINGS, INCLUDING BOLTS AND NUTS, SHALL BE SHOP COATED WITH BITUMINOUS PRIMER.

WHEN IT BECOMES NECESSARY TO CUT A LENGTH OR LENGTHS OF STEEL PIPE IN THE FIELD, THE BITUMINOUS COATING, BOTH INSIDE AND OUTSIDE OF THE PIPE, SHALL BE RESTORED.

AFTER PIPE AND COUPLINGS ARE INSTALLED THE CONTRACTOR SHALL COMPLETELY COVER ALL COUPLINGS AND PORTIONS OF THE PIPE WHICH ARE UNCOATED AND UNWRAPPED BY ENCLOSING THE ENDS OF THE PIPE AND THE COUPLINGS WITH A TIGHT CANVAS OR OTHER FABRICATION OR WITH LIGHT GAGE METAL AND SHALL POUR THE SPACE, INCLUDING THE EXTERIOR OF THE COUPLINGS, FULL OF COMPOUND OF THE SAME TYPE AS USED IN THE PIPE ENAMEL COATING.

STEEL PIPE SLEEVES IN THE BRIDGE ABUTMENTS WILL BE PROVIDED ON THE BRIDGE PLAN DRAWINGS AND WILL BE INSTALLED DURING CONSTRUCTION OF ABUTMENTS. AFTER INSTALLATION OF THE STEEL MAIN THE SPACE WITHIN THE TWO ABUTMENT BACK WALL SLEEVES SHALL BE SEALED WITH BITUMASTIC JOINT MATERIAL IN ACCORDANCE WITH A.W.W.A. SPEC. C-204.

THE SURFACES OF ALL PLATES, STRAPS, SADDLES, U BOLTS AND PIPE SUPPORTS SHALL BE FINISHED IN ACCORDANCE WITH SECTION 514 OF STATE HIGHWAY SPECIFICATIONS.

INSTALLATION OF PIPE

PIPE TO BE KEPT CLEAN

THE PIPE SHALL BE THOROUGHLY CLEANED BEFORE BEING LOWERED INTO THE TRENCH, AND SHALL BE KEPT CLEAN UNTIL ACCEPTED IN THE COMPLETED WORK. THE EXPOSED ENDS OF ALL UNCOMPLETED LINES SHALL BE CLOSED WITH WOODEN BULKHEADS AT ALL TIMES WHEN PIPE LAYINGIS NOT ACTUALLY IN PROGRESS.

ADJUSTMENT OF WATER MAINS

WATER MAINS SHALL BE ADJUSTED TO MAINTAIN A MINIMUM VERTICAL CLEARANCE OF 6" BETWEEN ALL SEWERS AND CULVERTS. MAINS SHALL BE CONSTRUCTED IN THE LOCATION AND TO THE GRADE INDICATED ON THE PLAN SHEETS. IN GENERAL, THE TOP OF THE PIPE SHALL BE 4'-6" BELOW THE FINISHED GRADE. CONNECTIONS OF EXISTING MAINS WITH NEW MAINS, PIPE, FITTINGS, EXCAVATION AND BACKFILL WILL BE SUPPLIED AND PERFORMED BY THE CONTRACTOR.

INSTALLATION OF THE PIPE AND HYDRANTS, INCLUDING EXCAVATION, FURNISHING LEAD AND BRAIDED HEMP, FURNISHING AND PLACING SAND CUSHION, BACKFILLING, BLOCKS, ALL FITTINGS, VALVES, ETC., DISPOSAL OF SURPLUS EXCAVATION AND ALL INCIDENTALS WILL BE PAID FOR UNDER "ITEM SS-814.

CONNECTIONS TO EXISTING PIPE

WHERE THE PLANS PROVIDE FOR PROPOSED PIPE TO BE CONNECTED TO EXISTING WATER LINE, IT SHALL BE THE RESPONSIBILITY OF THE CONTRACTOR TO LOCATE THE EXISTING WATER LINE BOTH AS TO LINE AND GRADE BEFORE HE BEGINS THE PIPE LAYING OPERATIONS. THE COST OF THIS SHALL BE INCLUDED IN THE UNIT PRICE BID FOR THE PERTINENT PIPE ITEM.

WATER SERVICE TO ALL CONSUMERS REMAINING SUBSEQUENT TO THE COMPLETED PROJECT SHALL BE MAINTAINED THROUGHOUT CONSTRUCTION.

REACTION BLOCKING (SS-814.06)

PAYMENT FOR CONCRETE BLOCKING SHALL BE INCLUDED IN THE PRICE BID FOR THE PERTINENT PIPE ITEM. FOR BLOCKING DETAILS SEE SHEET No. 254.

814.07 HYDROSTATIC TESTING

ALL WATER MAIN RELOCATIONS, CUT AND PLUG WORK, AND FIRE HYDRANT INSTALLATIONS PERFORMED BY THE CONTRACTOR SHALL BE HYDROSTATICALLY TESTED UNDER ALTERNATE "A". OPERATING PRESSURE SHALL BE CONSIDERED 100 #/SQ.IN.

VALVES (SS-814.02 d)

THE VALVES SHALL CONFORM TO THE LATEST REVISION OF A.W.W.A. SPECIFICATIONS C-500 FOR GATE DISC VALVES FOR ORDINARY WATER WORKS SERVICE, EXCEPT AS HEREINAFTER SPECIFIED.

THE VALVES SHALL BE IRON-BODY BELL END, BRONZE MOUNTED, DOUBLE DISC, PARALLEL SEAT, GATE VALVES WITH INSIDE NON-RISING STEM INTENDED FOR ORDINARY WATER WORKS PURPOSES. VALVES WILL BE INSTALLED IN A VERTICAL POSITION AND DESIGNED TO OPERATE EQUALLY WELL WITH PRESSURE ON EITHER SIDE OF THE GATE. VALVES SHALL BE DESIGNED FOR 300 POUND TEST AND 150 POUND WORKING PRESSURE AND ARE TO OPEN BY TURNING THE OPERATING NUT TO THE LEFT OR COUNTER CLOCKWISE.

O-RING SEAL STUFFING BOX SHALL BE DESIGNED SO THAT THE VALVE CAN BE PACKED UNDER PRESSURE WHEN THE VALVE IS FULLY OPENED.

ALL PARTS OF THE WEDGING MECHANISM SHALL BE OF BRONZE OR BRONZE-MOUNTED.

ALL BOLTS AND NUTS SHALL BE CADMIUM-PLATED STEEL EXCEPT THAT THE NUTS FOR THE STUFFING BOX BOLTS SHALL BE OF BRONZE.

CERTIFIED COPIES OF INSPECTION AND TEST REPORTS FOR ALL VALVES SHALL BE FURNISHED TO THE CITY.

AFTER INSPECTION AND TESTING, THE VALVES SHALL BE PAINTED WITH TWO (2) COATS OF PAINT MEETING THE REQUIREMENTS OF THE AMERICAN WATER WORKS ASSOCIATION.

THE VALVES SHALL HAVE PUSH ON TYPE JOINT BELLS.

VALVES TO BE FURNISHED SHALL BE AS MANUFACTURED BY THE DARLING VALVE CO., EDDY VALVE CO., OR APPROVED EQUAL.

A VALVE BOX SHALL BE FURNISHED WITH EACH VALVE SEE DETAIL SHEET NO. 253 FOR VALVE BOX REQUIREMENTS.

SERVICE LINE AND FITTINGS (S.S. 814.15 & S.S. 814.17)

SERVICE LINES AND FITTINGS, FROM THE MAIN TO AND INCLUDING THE STOP BOX, SHALL BE FURNISHED AND INSTALLED BY THE CITY OF CUYAHOGA FALLS WATER DEPARTMENT AT NO COST TO THE CONTRACTOR.

WATER METERS AND BOXES REMOVED AND RESET (S.S. 814.19)

WORK UNDER THIS ITEM SHALL BE DONE BY THE CITY OF CUYAHOGA FALLS WATER DEPARTMENT AT NO COST TO THE CONTRACTOR.

SERVICE STOPS AND BOXES REMOVED AND RESET (S.S. 814.16)

WORK UNDER THIS ITEM SHALL BE DONE BY THE CITY OF CUYAHOGA FALLS WATER DEPARTMENT AT NO COST TO THE CONTRACTOR.

SERVICE BOXES ADJUSTED TO GRADE (SS 814.18)

THE WORK REQUIRED UNDER THIS ITEM SHALL BE PERFORMED BY THE CONTRACTOR AS SET FORTH IN SUPPLEMENTAL SPECIFICATIONS 814. ITEM 814.18. PAYMENT SHALL BE AT THE UNIT BID PRICE EACH FOR ITEM 814 SERVICE BOXES ADJUSTED TO GRADE.

VALVE BOXES ADJUSTED TO GRADE

WHERE CALLED FOR ON THE PLANS THE CONTRACTOR SHALL PERFORM THE NECESSARY WORK OF EXCAVATING AROUND THE VALVE BOX AND RESETTING THE TOP SECTION, BY SCREWING UP OR DOWN ON THE CENTER SECTION, TO ADJUST TO THE NEW GRADE. IF AN EXTENSION IS NECESSARY TO REACH THE NEW GRADE, IT WILL BE FURNISHED, OR A NEW TOP SECTION FURNISHED, BY THE CONTRACTOR. THIS WORK WHEN COMPLETED WILL GIVE AN UNDAMAGED VALVE BOX WITH THE TOP FLUSH WITH THE PAVEMENT OR NEW GROUND SURFACE. PAYMENT SHALL BE AT THE UNIT BID PRICE EACH FOR ITEM 814 VALVE BOXES ADJUSTED TO GRADE.

GENERAL NOTES

FED. RD.	STATE	PROJECT	
2	OHIO		

22
460

SUM-8-17.63

ITEM S.S. 814 CUT AND PLUG EXISTING LINE

THIS ITEM SHALL CONSIST OF PLUGGING OR CAPPING EXISTING WATER MAINS AS INDICATED ON THE PLANS OR AS DIRECTED BY THE ENGINEER INCLUDING THE FURNISHING OF ALL MATERIALS INCLUDING THE CAP OR PLUG, EXCAVATING AND BACKFILLING, CONSTRUCTING ALL NECESSARY JOINTS AND CONNECTIONS, HYDROSTATIC TESTING, DISINFECTION, AND DISPOSAL OF ALL SURPLUS EXCAVATION AND DISCARDED MATERIAL WHICH MAY BE REQUIRED TO COMPLETE THIS ITEM. THIS ITEM SHALL ALSO PROVIDE FOR REACTION BACKING AS OUTLINED UNDER SECTION 814.06 NEW WATER MAIN AND AS AMENDED ABOVE.

A. EXCAVATION.- NO EXCAVATION SHALL BE MADE UNTIL THE VALVE ON THE BRANCH HAS BEEN CLOSED TO RELIEVE PRESSURE ON THE BRANCH TO BE CUT AND PLUGGED. EXCAVATION SHALL BE PERFORMED AS REQUIRED UNDER SEC. 814.05 NEW WATER MAIN.

B. INSTALLATION - THE PLUG OR CAP SHALL BE INSTALLED AND REACTION BACKING PROVIDED AS OUTLINED UNDER SECTION 814.06 NEW WATER MAIN.

C. TESTING - PRIOR TO BACKFILLING, TESTING SHALL BE PERFORMED BY SUBJECTING ALL JOINTS TO THE WORKING PRESSURE OF THE MAIN FOR A SUFFICIENT LENGTH OF TIME TO ALLOW FOR A THOROUGH EXAMINATION OF THE JOINTS WHICH HAVE BEEN EXPOSED AS WELL AS ALL NEW JOINTS. ANY JOINTS FOUND TO BE LEAKING SHALL BE MADE GOOD BY THE CONTRACTOR AT NO ADDITIONAL COST.

D. BACKFILLING - BACKFILLING SHALL BE PERFORMED AS REQUIRED UNDER SECTION 814.08 NEW WATER MAIN.

E. DISINFECTION - DISINFECTION SHALL BE PERFORMED AS REQUIRED UNDER SECTION 814.09 NEW WATER MAIN.

METHOD OF MEASUREMENT - THE QUANTITIES TO BE PAID FOR SHALL BE THE ACTUAL QUANTITY, MEASURED IN PLACE, COMPLETE AND ACCEPTED. THE QUANTITY SHALL BE MEASURED PER EACH FOR THE NUMBER OF EXISTING WATER MAINS CUT AND PLUGGED.

BASIS OF PAYMENT - THE QUANTITY MEASURED ABOVE SHALL BE PAID FOR AT THE CONTRACT UNIT PRICE BID PER EACH FOR "ITEM 814 CUT AND PLUG EXISTING LINE. THIS PRICE AND PAYMENT SHALL CONSTITUTE FULL COMPENSATION FOR NECESSARY EXCAVATION AND BACKFILL, THE DISPOSAL OF ALL SURPLUS EXCAVATION AND DISCARDED MATERIAL, THE FURNISHING, PREPARING AND PLACING OF ALL MATERIAL INCLUDING SEALING JOINTS AND REACTION BACKING, HYDROSTATIC TESTING, AND DISINFECTING, AND FOR ALL LABOR, EQUIPMENT, TOOLS, AND INCIDENTALS NECESSARY TO COMPLETE THIS ITEM.

WHERE CUT AND PLUG IS PERFORMED OUTSIDE THE LIMITS OF CONSTRUCTION THE GROUND SURFACE SHALL BE RETURNED TO FORMER CONDITION. IF THIS WORK OCCURS WITHIN A PAVED STREET SEE DETAIL SHEET NO. 254.

FIRE HYDRANTS REMOVED AND RESET AS PER PLAN

S.S. 814.13 FIRE HYDRANTS REMOVED AND RESET, SHALL BE MODIFIED AS FOLLOWS; AND SHALL BE CALLED FIRE HYDRANTS REMOVED AND RESET AS PER PLAN.

WHERE A HYDRANT IS SHOWN TO BE REMOVED ON THE PLANS IT WILL NOT BE LISTED AS A PAY ITEM. WHERE A HYDRANT IS SHOWN TO BE RESET ON THE PLANS IT WILL BE LISTED AS A PAY ITEM AND THE COST OF REMOVING THE HYDRANT WILL BE INCLUDED IN THE UNIT PRICE BID FOR FIRE HYDRANTS REMOVED AND RESET AS PER PLAN, EACH. THIS ITEM SHALL INCLUDE THE FOLLOWING WORK BY THE CONTRACTOR. THE HYDRANT, WHERE INDICATED ON THE PLANS, SHALL BE REMOVED BY THE CONTRACTOR IN THE MANNER SET FORTH IN S.S. 814.13 FIRE HYDRANT REMOVED AND RESET, AND SHALL BE TAKEN BY THE CONTRACTOR TO THE CITY WATER DEPARTMENT GARAGE, 1484 MAIN STREET, CUYAHOGA FALLS, OHIO, WHERE THE CONTRACTOR WILL EXCHANGE THE HYDRANT FOR A REBUILT OR NEW HYDRANT, AT NO COST TO THE CONTRACTOR. THE CONTRACTOR SHALL INSTALL THE EXCHANGED HYDRANT, IN THE LOCATION SHOWN ON THE PLANS, IN THE MANNER SET FORTH IN S.S. 814.13 FIRE HYDRANTS REMOVED AND RESET, WITH THE VALVE, PIPE AND FITTINGS PROVIDED. THE WORK WHEN COMPLETED; (REMOVAL, TRANSPORTATION, EXCHANGE, INSTALLATION, BLOCKING, TESTING, STERILIZATION, EXCAVATION AND BACKFILL) SHALL BE PAID FOR AS FIRE HYDRANTS REMOVED AND RESET AS PER PLAN - EACH.

FED. RD.	STATE	PROJECT	
2	OHIO		

23
460

MAINTENANCE OF TRAFFIC

MAINTENANCE OF TRAFFIC

TEN (10) DAYS PRIOR TO ANY INTERRUPTION OF NORMAL TRAFFIC FLOW WITHIN THE LIMITS OF THIS PROJECT, THE CONTRACTOR SHALL SUBMIT IN WRITING HIS PROPOSED METHODS AND PROCEDURES PLANNED FOR THE MAINTENANCE OF TRAFFIC THROUGHOUT THE LIFE OF THE PROJECT. THE CONTRACTOR SHALL OBTAIN WRITTEN APPROVAL OF HIS PLAN FROM THE ENGINEER AND THE CITY OF CUYAHOGA FALLS SERVICE DIRECTOR BEFORE CAUSING ANY INTERRUPTIONS TO THE EXISTING TRAFFIC FLOW.

THE CONTRACTOR SHALL IN ADDITION TO THE GENERAL REQUIREMENTS OF ITEM 614 ON THIS PROJECT PERFORM THE FOLLOWING;

PROVIDE, ERECT, AND MAINTAIN STANDARD 48"x 30" SIZE "ROAD CLOSED" SIGNS, SIGN SUPPORTS, AND LIGHTS AT THE FOLLOWING LOCATIONS DURING PERIODS IN WHICH THE AFFECTED ROADS ARE CLOSED TO TRAFFIC:

ROAD CLOSED		SIGN AT INTERSECTING STREET
1 – FRONT STREET	–	EAST OF NORTHLAND AVE. & EAST BAILEY RD.
2 – SECOND STREET	–	EAST OF NORTHLAND AVE. WEST OF BAILEY RD & EAST OF TIFFT ST.
3 – BAILEY ROAD	–	NORTH OF SECOND ST. & SOUTH OF THIRD ST.
4 – HUDSON DRIVE	–	NORTH OF SECOND ST. & SOUTH OF ASHLAND
5 – ASHLAND AVE.	–	WEST OF HUDSON
6 – RUDOLPH AVE.	–	WEST OF HUDSON
7 – NUTWOOD AVE.	–	WEST OF HUDSON
8 – CHARLES ST.	–	SOUTH OF MARGUERITE & NORTH OF HOLLYWOOD CIRCLE

PAYMENT FOR PROVIDING, ERECTING, MAINTAINING, AND REMOVING, LIGHTS, SIGNS, AND SIGN SUPPORTS SHALL BE INCLUDED IN THE LUMP SUM PRICE BID FOR "ITEM 614 MAINTAINING TRAFFIC."

MAINTAINING TRAFFIC

THE FOLLOWING STREETS WILL BE SEVERED BY THE EXPRESSWAY AND SHALL BE CLOSED TO THROUGH TRAFFIC UNLESS OTHERWISE NOTED.

STREET	LOCATION
TIFF STREET	FRONT STREET TO SECOND STREET
SECOND STREET	TIFF STREET TO ALLENSIDE COURT
ALLENSIDE COURT	
SHELDON AVENUE	
MELVIN AVENUE	
ASHLAND AVENUE	HUDSON DRIVE TO CHARLES STREET
RUDOLPH AVENUE	HUDSON DRIVE TO CHARLES STREET
AERO AVENUE	
ROSE AVENUE	
CLOVER AVENUE	
GARDEN AVENUE	
CHARLES STREET	HOLLYWOOD CIRCLE TO GRAHAM ROAD
CHARLES STREET	RUDOLPH AVENUE TO NUTWOOD AVENUE

THE FOLLOWING QUANTITIES ARE INCLUDED FOR MAINTAINING TRAFFIC AND ARE TO BE USED AS DIRECTED BY THE ENGINEER.

ITEM 404 100 C.Y. ASPHALTCONCRETE OR AN APPROVED BITUMINOUS PREMIXED SURFACE COURSE

ITEM 410 50 C.Y. TRAFFIC COMPACTED SURFACE TYPE A OR B,

ITEM 410 50 C.Y. TRAFFIC COMPACTED SURFACE TYPE C,

FRONT STREET

FRONT STREET (S. R. 5) MAY BE CLOSED TO THROUGH TRAFFIC BETWEEN NORTHLAND AVENUE AND BAILEY ROAD, DURING THE CONSTRUCTION OF THE FRONT STREET STRUCTURES AND APPROACHES.

FRONT STREET AND RELOCATED SECOND STREET STRUCTURE AND APPROACHES SHALL NOT BE CONSTRUCTED SIMULTANEOUSLY.

FRONT STREET SHALL REMAIN OPEN TO THROUGH TRAFFIC THROUGHOUT ANY PERIOD IN WHICH BAILEY ROAD OR SECOND STREET (OR RELOCATED SECOND STREET) IS CLOSED TO THROUGH TRAFFIC. EXISTING OR PROPOSED SIDEWALKS SHALL BE MAINTAINED AND AVAILABLE FOR PEDESTRIAN USE DURING THE PERIODS THAT BAILEY ROAD AND SECOND STREET ARE CLOSED TO THROUGH TRAFFIC.

FRONT STREET SHALL REMAIN OPEN FOR LOCAL EGRESS AND INGRESS BETWEEN NORTHLAND AVENUE AND STATION 47 + 50 AND BETWEEN ALLENSIDE COURT AND BAILEY ROAD.

THROUGH TRAFFIC FOR FRONT STREET (S. R. 5 EASTBOUND) WILL BE DETOURED BY USING NORTHLAND AVENUE AS ONEWAY TRAFFIC WESTBOUND TO SECOND STREET AND TWO-WAY TRAFFIC ON SECOND STREET AND RELOCATED SECOND STREET TO FRONT STREET (S.R.5).

THROUGH TRAFFIC FOR FRONT STREET (S.R.5 WESTBOUND) WILL BE DETOURED OVER RELOCATED SECOND STREET.

THE NEW CURB RETURN AT NORTHLAND AND SECOND STREET SHALL BE CONSTRUCTED PRIOR TO THE CLOSING OF FRONT STREET TO THROUGH TRAFFIC.

SECOND STREET

SECOND STREET MAY BE CLOSED TO THROUGH TRAFFIC BETWEEN NORTHLAND AVENUE AND BAILEY ROAD, DURING THE CONSTRUCTION OF RELOCATED SECOND STREET STRUCTURES AND APPROACHES.

FRONT STREET AND RELOCATED SECOND STREET STRUCTURE AND APPROACHES SHALL NOT BE CONSTRUCTED SIMULTANEOUSLY.

IT IS THE INTENT OF THESE NOTES THAT RELOCATED SECOND STREET BE CONSTRUCTED FIRST AND USED FOR THE MAINTENANCE OF THROUGH TRAFFIC WHILE FRONT STREET IS BEING CONSTRUCTED. EXISTING OR PROPOSED SIDEWALKS SHALL BE MAINTAINED AND AVAILABLE FOR PEDESTRIAN USE DURING THE PERIODS THAT BAILEY ROAD IS CLOSED TO THROUGH TRAFFIC.

SECOND STREET SHALL REMAIN OPEN FOR LOCAL EGRESS AND INGRESS BETWEEN NORTHLAND AVENUE AND TIFF STREET AND BETWEEN ALLENSIDE COURT AND BAILEY ROAD.

THROUGH TRAFFIC FOR SECOND STREET MAY BE DETOURED OVER NORTHLAND AVENUE, BAILEY ROAD AND FRONT STREET (S. R. 5).

THE STANDARD CONCRETE MEDIAN BETWEEN SECOND STREET AND RAMP "P", FROM STATIONS 45 + 40 TO STATION 47 + 38 SHALL NOT BE CONSTRUCTED UNTIL THE FRONT STREET STRUCTURE AND APPROACHES ARE COMPLETED AND OPEN TO TRAFFIC. THIS WILL PERMIT TWO WAY TRAFFIC ON RELOCATED SECOND STREET DURING THAT PERIOD OF CONSTRUCTING THE FRONT STREET STRUCTURE AND APPROACHES. DURING THAT INTERIM PERIOD, TEMPORARY PAVEMENT SHALL BE PLACED IN THE MEDIAN VOID THROUGH THE ABOVE LIMITING STATIONS. THE TEMPORARY PAVEMENT SHALL CONSIST OF ITEM 305 - 6" PORTLAND CEMENT CONCRETE BASE, SURFACED WITH ITEM 402 1-3/4" DEPTH ASPHALT CONCRETE AND ITEM 404 1-1/4" DEPTH ASPHALT CONCRETE. THE ASPHALT COURSES SHALL BE REMOVED UPON THE OPENING OF FRONT STREET TO THROUGH TRAFFIC. THE STANDARD CONCRETE MEDIAN SHALL THEN BE PLACED ON TOP OF THE CONCRETE BASE. PAYMENT FOR THIS SHALL BE INCLUDED IN THE UNIT BID PRICE FOR ITEM 615 CLASS "A" TEMPORARY PAVEMENT.

ALLENSIDE COURT

ALLENSIDE COURT MAY BE CLOSED TO THROUGH TRAFFIC BETWEEN SECOND STREET AND FRONT STREET.

A TURN AROUND SHALL BE CONSTRUCTED AT ITS MOST EASTERLY TERMINUS AND A NEW CONNECTOR CONSTRUCTED AT SECOND STREET AS DETAILED ON THE PLANS.

THIRD STREET

THIRD STREET BETWEEN BAILEY ROAD AND HUDSON DRIVE MAY BE CLOSED TO THROUGH TRAFFIC DURING THE CONSTRUCTION OF THE WESTERLY PORTION OF THE HUDSON DRIVE BRIDGE APPROACH AND SEWER RELOCATIONS. THIRD STREET SHALL NOT BE CLOSED TO THROUGH TRAFFIC DURING THAT PERIOD IN WHICH BAILEY ROAD IS CLOSED TO TRAFFIC.

HUDSON DRIVE

HUDSON DRIVE MAY BE CLOSED TO THROUGH TRAFFIC BETWEEN SECOND STREET AND THIRD STREET DURING CONSTRUCTION OF THE HUDSON DRIVE STRUCTURE AND APPROACHES.

BAILEY ROAD AND THIRD STREET SHALL NOT BE CLOSED TO THROUGH TRAFFIC DURING THAT PERIOD IN WHICH HUDSON DRIVE IS CLOSED TO THROUGH TRAFFIC.

BAILEY ROAD (SR 532)

BAILEY ROAD (SR 532) MAY BE CLOSED TO THROUGH TRAFFIC BETWEEN SECOND STREET AND THIRD STREET DURING THE CONSTRUCTION OF THE BAILEY ROAD STRUCTURE AND APPROACHES. TRAFFIC FOR BAILEY ROAD MAY BE DETOURED OVER NORTHLAND AVENUE, SECOND STREET OR (RELOCATED SECOND STREET, THIRD STREET AND HUDSON DRIVE.

BAILEY ROAD SHALL REMAIN OPEN TO THROUGH TRAFFIC DURING ANY PERIOD THAT HUDSON DRIVE IS CLOSED TO TRAFFIC.

ASHLAND AVENUE AND RUDOLPH AVENUE SUM-8-17.63

ASHLAND AVENUE AND RUDOLPH AVENUE MAY BE CLOSED TEMPORARILY TO THROUGH TRAFFIC BETWEEN HUDSON DRIVE AND CHARLES STREET DURING THE CONSTRUCTION OF THE ASHLAND - RUDOLPH SERVICE ROAD CONNECTOR.

NUTWOOD AVENUE

NUTWOOD AVENUE MAY BE CLOSED TEMPORARILY TO THROUGH TRAFFIC BETWEEN HUDSON DRIVE AND CHARLES STREET DURING CONSTRUCTION OF THE NUTWOOD AVENUE - CHARLES STREET CONNECTOR.

CHARLES STREET

CHARLES STREET MAY BE CLOSED TEMPORARILY TO THROUGH TRAFFIC BETWEEN ASHALND AVENUE AND RUDOLPH AVENUE DURING THE CONSTRUCTION OF THE ASHLAND - RUDOLPH SERVICE ROAD CONNECTOR.

CHARLES STREET MAY BE CLOSED TO THROUGH TRAFFIC BETWEEN NUTWOOD AVENUE AND MARGUERITE AVENUE TEMPORARILY DURING THE CONSTRUCTION OF THE NUTWOOD AVENUE - CHARLES STREET CONNECTOR.

CHARLES STREET SHALL BE CLOSED TO THROUGH TRAFFIC BETWEEN HOLLYWOOD CIRCLE AND GRAHAM ROAD AND A CUL-DE-SAC CONSTRUCTED AT ITS MOST NORTHERLY TERMINUS AS DETAILED ON SHEET 225 OF THE PLANS.

GRAHAM ROAD

GRAHAM ROAD SHALL REMAIN OPEN TO THROUGH TRAFFIC WITH TWO-WAY TRAFFIC MAINTAINED AT ALL TIMES – DURING THE CONSTRUCTION OF RELOCATED GRAHAM ROAD STRUCTURE . THIS SHALL BE ACCOMPLISHED BY CONSTRUCTING TEMPORARY ROADS USING CLASS "A" PAVEMENT AND BY UTILIZING PART WIDTH CONSTRUCTION AS CALLED FOR AND DETAILED ON SHEETS 236 THROUGH 240 OF THE PLANS.

THE TEMPORARY ROADS SHALL BE CONSTRUCTED TO THE LINES AND GRADES SHOWN ON SHEETS 236 THROUGH 240. THE CONTRACTOR SHALL PROVIDE TEMPORARY DRAINAGE FOR THE TEMPORARY ROAD WHETHER SHOWN OR NOT SHOWN ON THE PLANS.

COST OF THE ABOVE SHALL BE INCLUDED IN ITEM 615 SQ. YDS. CLASS "A" TEMPORARY PAVEMENT AND ITEM 615 LUMP SUM TEMPORARY ROADS.

LINE DATA CALCULATIONS FOR ROADS AND APPROACHES

SUM 8 - 17.63

MAINLINE APPROACHES
BEGIN WORK - STA 228 + 00
BEGIN PROJECT - STA 229 + 00
APPROACH LENGTH - 100 LIN. FT.

END PROJECT - STA 1043 + 44.20
END WORK - STA 1049 + 25.00
APPROACH LENGTH - 580.80 LIN. FT.
TOTAL APPROACHES- 680.80 LIN. FT.

FRONT STREET
BEGIN WORK - STA. 46 + 15.00
END WORK - STA. 60 + 50.00
WORK LENGTH - 1435.00 LIN. FT.

SECOND STREET
BEGIN WORK - STA 43 + 50.00
END WORK - STA 54 + 23.33
WORK LENGTH - 1073.33 LIN. FT.

BAILEY ROAD
BEGIN WORK - STA 48 + 91
END WORK - STA 52 + 08
WORK LENGTH - 317 LIN. FT.

HUDSON DRIVE
BEGIN WORK - STA 47 + 40.5
END WORK - STA 51 + 69
WORK LENGTH - 428.5 LIN. FT.

GRAHAM ROAD
BEGIN WORK - STA 100 + 50
END WORK - STA 125 + 00
EQUATION - STA 118 + 68.33 BACK - STA 118 + 73.60 AHEAD
WORK LENGTH - 2444.73

TOTAL LENGTH WORK AND APPROACHES - 6379.56 LIN. FT.

TEMPORARY CLOSING OF STREETS

WHERE ANY WORK CALLED FOR UNDER THIS PROJECT NECESSITATES THE TEMPORARY CLOSING OF EXISTING STREETS, THE CONTRACTOR SHALL PERFORM HIS WORK IN A MANNER TO INSURE THE LENGTH OF TIME REQUIRED IN CLOSING THESE STREETS IS KEPT TO A MINIMUM.

ALTERNATE METHODS

IF THE CONTRACTOR SO ELECTS, HE MAY SUBMIT ALTERNATE METHODS FOR MAINTAINING TRAFFIC. PROVIDED THE INTENT OF THE ABOVE PROVISIONS ARE FOLLOWED, AND NO ADDITIONAL INCONVENIENCE TO THE TRAVELING PUBLIC RESULTS THEREFROM. NO ALTERNATE PLAN SHALL BE PLACED INTO EFFECT UNTIL APPROVAL HAS BEEN GRANTED IN WRITING, BY THE CITY OF CUYAHOGA FALLS AND BY THE DIRECTOR OF HIGHWAYS.

MAINTENANCE OF TRAFFIC

QUANTITY CALCULATIONS

FED. RD.	STATE	PROJECT	
2	OHIO		

SUM-8-17.63

24/460

ITEM SPECIAL DRAINAGE CONNECTION C.Y.

LOCATION			CALCULATIONS			QUANTITY
OUTSIDE SHOULDERS OF MAIN LINE AND SPEED CHANGE LANES						
233+00.00	TO	235+09.00(LT.)	209.00'	X	1.37847 S.F. X 1/27	10.67
236+92.00	TO	244+88.61(LT.)	796.61'	X	1.37847 S.F. X 1/27	40.67
244+88.61	TO	261+70.00(LT.)	1,681.39'	X	1.24444 S.F. X 1/27	77.50
262+55.59	TO	263+69.71(LT.)	114.12'	X	1.46633 S.F. X 1/27	6.20
263+69.71	TO	264+45.09(LT.)	75.38'	X	1.55419 S.F. X 1/27	4.34
264+45.09	TO	266+10.42(LT.)	165.33'	X	1.46633 S.F. X 1/27	8.98
266+10.42	TO	270+68.86(LT.)	458.44'	X	1.37847 S.F. X 1/27	23.41
270+68.86	TO	310+69.19(LT.)	4,000.33'	X	1.24444 S.F. X 1/27	184.38
310+69.19	TO	320+29.19(LT.)	960.00'	X	1.37847 S.F. X 1/27	49.01
320+29.19	TO	321+95.98(LT.)	166.79'	X	1.24444 S.F. X 1/27	7.69
321+95.98	TO	328+12.64(LT.)	616.66'	X	1.37847 S.F. X 1/27	31.48
328+12.64	TO	328+87.64(LT.)	75.00'	X	1.47873 S.F. X 1/27	4.11 *
328+87.64	TO	331+55.98(LT.)	268.34'	X	1.57899 S.F. X 1/27	15.69 *
331+55.98	TO	333+79.30(LT.)	223.32'	X	1.45000 S.F. X 1/27	11.99 *
1035+00.00	TO	1040+65.84(LT.)	565.84'	X	1.45000 S.F. X 1/27	30.39 *
1040+67.19	TO	1043+44.20(LT.)	277.01'	X	1.57899 S.F. X 1/27	16.20 *
229+00.00	TO	235+95.00(RT.)	695.00'	X	1.24444 S.F. X 1/27	32.03
242+75.00	TO	244+90.65(RT.)	215.65'	X	1.37847 S.F. X 1/27	11.01
245+90.00	TO	258+69.71(RT.)	1,279.71'	X	1.24444 S.F. X 1/27	58.98
258+69.71	TO	268+29.71(RT.)	960.00'	X	1.37847 S.F. X 1/27	49.01
268+29.71	TO	274+67.20(RT.)	637.49'	X	1.24444 S.F. X 1/27	29.38
274+67.20	TO	276+32.53(RT.)	165.33'	X	1.33611 S.F. X 1/27	8.18
276+32.53	TO	277+50.00(RT.)	117.47'	X	1.42777 S.F. X 1/27	6.21
277+50.00	TO	287+10.00(RT.)	960.00'	X	1.37847 S.F. X 1/27	49.01
287+10.00	TO	302+50.00(RT.)	1,540.00'	X	1.24444 S.F. X 1/27	70.98
311+00.00	TO	312+00.00(RT.)	100.00'	X	1.42777 S.F. X 1/27	5.29
312+00.00	TO	319+50.00(RT.)	750.00'	X	1.55419 S.F. X 1/27	43.17
319+50.00	TO	320+28.06(RT.)	78.06'	X	1.37847 S.F. X 1/27	3.99
320+20.13	TO	323+87.64(RT.)	367.51'	X	1.42777 S.F. X 1/27	19.43
323+87.64	TO	325+10.17(RT.)	122.53'	X	1.33611 S.F. X 1/27	6.06
325+10.17	TO	328+12.64(RT.)	302.47'	X	1.24444 S.F. X 1/27	13.94
328+12.64	TO	328+87.64(RT.)	75.00'	X	1.34722 S.F. X 1/27	3.74 *
328+87.64	TO	333+79.30(RT.)	491.66'	X	1.45000 S.F. X 1/27	26.40 *
1035+00.00	TO	1037+97.75(RT.)	297.75'	X	1.45000 S.F. X 1/27	15.99 *
1037+97.75	TO	1043+44.20(RT.)	546.45'	X	1.57899 S.F. X 1/27	31.96 *
					SUB TOTAL	851.00 C.Y. 156.47 C.Y. *
RAMP SHOULDERS						
RAMP ''A''						
331+55.98	TO	333+55.98(LT.)	200.00'	X	1.51172 S.F. X 1/27	11.20 *
333+55.98	TO	336+37.03(LT.)	281.05'	X	1.44444 S.F. X 1/27	15.04 *
336+37.03	TO	339+24.89(LT.)	287.86'	X	.66667 S.F. X 1/27	7.11 *
RAMP ''B''						
1033+95.82	TO	1039+67.19(LT.)	571.37'	X	1.44444 S.F. X 1/27	30.57 *
1039+67.19	TO	1040+67.19(LT.)	100.00'	X	1.51172 S.F. X 1/27	5.60 *
RAMP ''C''						
323+63.00	TO	326+60.00(LT.)	297.00'	X	1.44444 S.F. X 1/27	15.89
320+28.06	TO	321+28.06(RT.)	100.00'	X	1.41146 S.F. X 1/27	5.23
321+28.06	TO	323+50.00(RT.)	221.94'	X	1.44444 S.F. X 1/27	11.87
RAMP ''D''						
1028+22.32	TO	1032+00.00(LT.)	377.68'	X	1.44444 S.F. X 1/27	20.21 *
1032+00.00	TO	1035+97.65(RT.)	397.65'	X	1.44444 S.F. X 1/27	21.27 *
1035+97.65	TO	1037+97.75(RT.)	200.10'	X	1.41146 S.F. X 1/27	10.46 *
RAMP ''E''						
320+29.19	TO	322+29.19(LT.)	200.00'	X	1.41146 S.F. X 1/27	10.46
322+29.19	TO	329+50.00(LT.)	720.81'	X	1.44444 S.F. X 1/27	38.56
329+50.00	TO	329+70.00(LT.)	20.00'	X	.66667 S.F. X 1/27	.49
RAMP ''L''						
244+88.61	TO	245+88.61(LT.)	100.00'	X	1.64063 S.F. X 1/27	6.08
245+88.61	TO	250+25.00(LT.)	436.39'	X	1.90278 S.F. X 1/27	30.75
250+27.00	TO	251+82.00(RT.)	155.00'	X	1.44444 S.F. X 1/27	8.29
251+82.00	TO	253+73.75(RT.)	191.75'	X	.66667 S.F. X 1/27	4.73
RAMP ''M''						
244+90.65	TO	245+90.65(RT.)	100.00'	X	1.64063 S.F. X 1/27	6.08
245+90.65	TO	252+25.00(RT.)	634.35'	X	1.90278 S.F. X 1/27	44.70
RAMP ''N''						
249+86.00	TO	252+48.99(LT.)	262.99'	X	.66667 S.F. X 1/27	6.49
252+48.99	TO	252+80.00(LT.)	31.01'	X	1.44444 S.F. X 1/27	1.66
252+98.99	TO	257+69.71(RT.)	470.72'	X	1.90278 S.F. X 1/27	33.17
257+69.71	TO	258+69.71(RT.)	100.00'	X	1.64063 S.F. X 1/27	6.08
RAMP ''P''						
252+01.60	TO	254+31.00(LT.)	229.40'	X	.66667 S.F. X 1/27	5.66
254+31.00	TO	255+24.95(LT.)	93.95'	X	1.67361 S.F. X 1/27	5.82
255+24.95	TO	260+21.00(LT.)	496.05'	X	1.90278 S.F. X 1/27	34.96
260+00.00	TO	261+55.95(RT.)	155.95'	X	1.44444 S.F. X 1/27	8.34
261+55.95	TO	262+55.95(RT.)	100.00'	X	1.67361 S.F. X 1/27	6.20
RAMP ''Q''						
270+53.00	TO	270+87.11(LT.)	34.11'	X	.66667 S.F. X 1/27	.84
270+87.11	TO	276+50.00(LT.)	562.89'	X	1.44444 S.F. X 1/27	30.11
					SUB TOTAL	322.46 C.Y. 121.46 C.Y. *
					GRAND TOTAL	1,173.46 C.Y. 277.93 C.Y. *

* QUANTITIES THAT INVOLVE STATE AND FEDERAL FUNDS ONLY.

ITEM 202
EXISTING PAVEMENT, DRIVEWAYS, SIDEWALKS, CURBS & STRUCTURES
REMOVED AND DISPOSED OF

LOCATION	STATION	SIDE	**PAVEMENT (RIGID) SQ. YDS.	CURB OR CURB & GUTTER LIN. FT.	SIDEWALKS SQ. FT.	STRUCTURES - LUMP: CONCRETE STEPS	CONCRETE WALLS	STONE WALLS	BLOCK OR BRICK WALLS
℄ RELOC. S.R.8									
	242+50±	℄						1	
	243+00±	LT.			650				
	245+40±	RT.							1
	260+75±	LT.			230	1			
	261+20±	LT.	67		60				
	261+50±	LT.	67		75				
	267+00±	LT.			247	1			
	268+00±	LT.			288	1			
	268+70±	LT.			52	1			
FRONT ST.	46+10±	RT.			390	1			
	46+75±	RT.			165				
	48+82±	LT.			96				
	48+67±	RT.	62.2						
	49+17±	RT.			150				
	49+40±	RT.	27.2						
	49+50±	RT.					1		
	50+00±	RT.	29						
	50+60±	RT.						1	
	49+70±	LT.	117.3						
	50+35±	LT.	31.1						
	49+60±	RT.			208				
	51+00±	RT.			150				
	50+10±	RT.	46						
	50+70±	LT.			128				
	51+10±	LT.			128				
	51+58±	LT.			148				
	51+65±	RT.			212				
	52+10±	RT.			168				
	52+57±	RT.			148				
	52+90±	RT.			81				
	53+52±	RT.			140				
	54+90±	RT.	8						
	52+80±	LT.	75						
	53+10±	LT.			400				
	53+28±	LT.	35						
	53+95+	LT.			90	1			
	47+48.89to54+00	℄	3178						
	54+00to60+00	RT.&LT.	765						
	46+90±to55+56.31	RT.		866					
	47+70±to60+00	LT.		1,230					
	46+57±to55.56.31	RT.			3,597				
	47+70±to60+00	LT.			4,740				
TIFFT ST.									
	FRONT TO SECOND	RT.&LT.	1,145	720	3,412	1			
SECOND ST.									
	43+50±to52+77±	RT.		862					
	45+40±to52+77±	LT.		737					
	45+12±to52+60±	LT.			2,992				
	44+70±to52+60±	RT.			2,980				
	45+80±	RT.			80				
	46+50±	RT.	72						
	47+00±	RT.	35						
	47+50±	RT.	53						
	47+88±	RT.			140	1			
	49+12±	RT.			80				
	49+75±	RT.							1
ALLENSIDE CT.									
	51+50±	RT.			66				
	51+40±	LT.			75				
BAILEY ROAD									
	49+65±	LT.			104	1			
	50+06±	LT.			104				
	50+90±	LT.	41		48				
	52+00±	RT.			200				
	48+91±to51+87±	LT.		297	1,184				
	49+35±to51+85±	RT.		250	1,000				
	49+29±to51+81±	℄	840						
HUDSON DR.									
	48+54±	LT.			68				
	49+10±	LT.			105	1			
	50+15±	LT.			128	1			
	48+75±	RT.			159				
	50+25±	RT.			79				
	50+85±	RT.			60				
	48+00±to50+90±	LT.			1,160				
	47+55±to51+69±	RT.			1,556				
	48+96.57±to51+02.44±	℄	964						
	47+77±to50+90±	LT.		313					
	47+62±to51+14±	RT.		352					
	PREVIOUS SUB-TOTAL		45	943	6,925	5	1	—	1
	GRAND TOTAL		7702.8	6,570	35,446	16	1	2	3

** TOTAL INCLUDES CONCRETE DRIVES

ITEM 202
EXISTING PAVEMENT, DRIVEWAYS, SIDEWALKS, CURBS & STRUCTURES
REMOVED AND DISPOSED OF

LOCATION	STATION	SIDE	**PAVEMENT (RIGID) SQ. YDS.	CURB OR CURB & GUTTER LIN. FT.	SIDEWALKS SQ. FT.	STRUCTURES - LUMP: CONCRETE STEPS	CONCRETE WALLS	STONE WALLS	BLOCK OR BRICK WALLS
SHELDON AVE.	HUDSON TO PENN CEN. R.R.				1,330	1			
MELVIN AVE.	LA LINE TO PENN CEN. R.R.				780	1	1		
ASHLAND	47+68 TO PENN CEN. R.R	RT.		275					
	47+75 TO PENN CEN. R.R.	RT.			1,280				
	47+92 TO PENN CEN. R.R.	LT.		235					
	47+95 TO PENN CEN. R.R.	LT.			965				
	WITHIN LA LINES				375	1			
RUDOLPH	48+58 TO CHARLES ST.	RT.		130					
	48+75 TO CHARLES ST.	RT.			490				
	48+67 TO CHARLES ST.	LT.		123					
	49+11 TO CHARLES ST.	LT.			315				
	WITHIN LA LINES				350	1			
AERO	WITHIN LA LINE				335		1		
ROSE	WITHIN LA LINE				75				
CHARLES	WITHIN LA LINE		45		480	1			1
GRAHAM RD.	102 + 92± DRIVE CURB	RT.		180					
	119 + 20±	RT.			150				
	Sub-Total		45	943	6,925	5	1	0	1

CALCULATED BY F.A.E. 7-67

CHECKED BY S.D.D. 10-68

COMPUTATIONS

FED. RD.	STATE	PROJECT	
2	OHIO		

25
460

SUM-8-17.63

ITEM 203 - SUBGRADE COMPACTION S.Y.

LOCATION	CALCULATIONS	QUANTITY
MAINLINE LIMITING STATIONS 229+00 TO 236+30.71		
UNDER 3'' ITEM 301	202.87 C.Y. x 36/ 3.00	2,434.44
UNDER APPROACH SLAB	320.00 S.Y.	320.00
UNDER 10'' ITEM 451	6,632.51 S.Y.	6,632.51
UNDER BARRIER	730.71' X 4.00' X 1/9	324.76
UNDER TYPE 6 CURB	730.71' X 1.00' X 1/9	81.19
MAINLINE LIMITING STATIONS 237+80.80 TO 243+00		
UNDER 10'' ITEM 451	5,370.57 S.Y.	5,370.57
UNDER BARRIER	519.20' X 4.00' X 1/9	230.76
UNDER MEDIAN SHOULDERS	489.20' X 12.00' X 1/9	652.27
UNDER OUTSIDE SHOULDERS	889.68 S.Y.	889.68
UNDER TYPE 6 CURB	519.20' X 1.00' X 1/9	57.69
UNDER APPROACH SLAB	320.00 S.Y.	320.00
APPROXIMATE LIMITS OF ROCK CUT 243+00 TO 283+00		
MAINLINE LIMITING STATIONS 283+00 TO 1043+44.20		26,100.06
UNDER 10'' ITEM 451	36,136.36 S.Y.	10,036.30 *
UNDER 3'' ITEM 301	1,503.85 C.Y. X 36/ 3.00	13,809.96
		4,236.24 *
RAMPS A,B, AND D		
UNDER 9'' ITEM 451	5,097.02 S.Y.	5,097.02 *
UNDER 3'' ITEM 301	117.00 C.Y. X 36/ 3.00	1,404.00 *
UNDER ITEM 612	63.00 S.Y.	63.00 *
UNDER TYPE 6,7,AND 8 CURB	521.00' X 1.00' X 1/9	57.89 *
RAMPS C AND E		
UNDER 9'' ITEM 451	3,761.36 S.Y.	3,761.36
UNDER 3'' ITEM 301	92.41 C.Y. X 36/ 3.00	1,108.92
UNDER ITEM 612	14.70 S.Y.	14.70
UNDER TYPE 6,7, AND 8 CURB	421.00' X 1.00' X 1/9	46.78
RAMPS WITH A PORTION IN ROCK CUT		
RAMP ''L'' FROM APPROX. 252+00 TO 253+73.75		
UNDER 9'' ITEM 451	382.89 S.Y.	382.89
UNDER TYPE 2 COMB C. AND G.	136.00' X 3.00' X 1/9	45.33
UNDER ITEM 612	15.10 S.Y.	15.10
RAMP ''M'' FROM APPROX. 251+00 TO 253+55.80		
UNDER 9'' ITEM 451	436.11 S.Y.	436.11
UNDER 3'' ITEM 301	2.58 C.Y. X 36/ 3.00	30.96
UNDER TYPE 6 CURB	68.00' X 0.50' X 1/9	3.78
RAMP ''N'' FROM 249+86.39 TO APPROX. 252+49		
UNDER 9'' ITEM 451	234.22 S.Y.	234.22
RAMP ''P'' FROM 252+01.60 TO APPROX. 257+00		
UNDER 9'' ITEM 451	584.25 S.Y.	584.25
UNDER 3'' ITEM 301	18.50 C.Y. X 36/ 3.00	222.00
UNDER TYPE 6 CURB	269.00' X 0.50' X 1/9	14.94
RAMP ''Q'' FROM 270+87.11 TO APPROX 273+00		
UNDER 9'' ITEM 451	642.49 S.Y.	642.49
UNDER 3'' ITEM 301	35.92 C.Y. X 36/ 3.00	431.04
UNDER TYPE 6 CURB	237.00' X 0.50' X 1/9	13.17
GRAHAM ROAD		
UNDER ITEM 310 4''DEPTH	1,122.30 C.Y. X 36/ 4.00	10,100.70
RELOCATED 2ND STREET		
UNDER ITEM 451	1,394.57 S.Y.	1,394.57
UNDER CONCRETE ISLAND	11.70 S.Y.	11.70
UNDER APPROACH SLABS	135.00 S.Y.	135.00
UNDER TYPE 2-A CURB	30.00' X 1.00' X 1/9	3.33
UNDER COMB. CURB + GUTTER	2,302.65' X 3.00' X 1/9	767.55
UNDER ITEM 310 AT WIDENING	190.00' X 3.50' X 1/9	73.89
RELOCATED FRONT STREET		
UNDER ITEM 305	1,525.94 S.Y.	1,525.94
UNDER APPROACH SLABS	227.78 S.Y.	227.78
RUDOLPH-ASHLAND CONNECTOR		
UNDER ITEM 301 3''DEPTH	72.10 C.Y. X 36/ 3.00	865.20
HUDSON DRIVE		
UNDER ITEM 305	371.83 S.Y.	371.83
UNDER APPROACH SALBS	200.00 S.Y.	200.00
ALLENSIDE CONNECTOR		
UNDER 3'' ITEM 304	74.85 C.Y. X 36/ 3.00	898.20
ALLENSIDE TEE-TURNAROUND		
UNDER 7'' ITEM 310	24.45 C.Y. X 36/ 7.00	125.74
CHARLES ST. CUL-DE-SAC		
UNDER 7'' ITEM 310	157.80 C.Y. X 36/ 7.00	811.54
NUTWOOD-CHARLES CONNECTOR		
49+39.30 TO 50+32.85	93.55' X 23.00' X 1/9	239.07
BAILEY ROAD		
UNDER ITEM 350	232.54 S.Y.	232.54
UNDER APPROACH	137.77 S.Y.	137.77
GRAND TOTAL		53,394.28 20,804.25 S.Y. *

ITEM 301-3'' BITUMINOUS AGGREGATE BASE C.Y.

LOCATION	CALCULATIONS	QUANTITY
OUTSIDE SHOULDERS OF MAIN LINE AND SPEED CHANGE LANES		
229+00.00 TO 233+00.00(LT.)	400.00' X 2.00000 S.F. X 1/27	29.63
233+00.00 TO 235+09.00(LT.)	209.00' X 2.00000 S.F. X 1/27	15.48
235+09.00 TO 235+39.00(LT.)	30.00' X 2.00000 S.F. X 1/27	2.22
236+92.00 TO 244+88.61(LT.)	796.61' X 2.00000 S.F. X 1/27	59.01
244+88.61 TO 261+70.00(LT.)	1,681.39' X 2.50000 S.F. X 1/27	155.68
262+55.59 TO 263+69.71(LT.)	114.12' X 2.00000 S.F. X 1/27	8.45
263+69.71 TO 264+45.09(LT.)	75.38' X 2.00000 S.F. X 1/27	5.58
264+45.09 TO 266+10.42(LT.)	165.33' X 2.00000 S.F. X 1/27	12.25
266+10.42 TO 270+68.86(LT.)	458.44' X 2.00000 S.F. X 1/27	33.96
270+68.86 TO 310+69.19(LT.)	4,000.33' X 2.50000 S.F. X 1/27	370.40
310+69.19 TO 320+29.19(LT.)	960.00' X 2.00000 S.F. X 1/27	71.11
320+29.19 TO 321+95.98(LT.)	166.79' X 2.50000 S.F. X 1/27	15.44
321+95.98 TO 328+12.64(LT.)	616.66' X 2.00000 S.F. X 1/27	45.68
328+12.64 TO 328+87.64(LT.)	75.00' X 2.00000 S.F. X 1/27	5.56 *
328+87.64 TO 331+55.98(LT.)	268.34' X 2.00000 S.F. X 1/27	19.88 *
331+55.98 TO 333+79.30(LT.)	223.32' X 2.50000 S.F. X 1/27	20.68 *
1035+00.00 TO 1040+65.84(LT.)	565.84' X 2.50000 S.F. X 1/27	52.39 *
1040+67.19 TO 1043+44.20(LT.)	277.01' X 2.00000 S.F. X 1/27	20.52 *
229+00.00 TO 235+95.00(RT.)	695.00' X 2.50000 S.F. X 1/27	64.35
235+95.00 TO 237+30.00(RT.)	135.00' X 2.00000 S.F. X 1/27	10.00
238+75.00 TO 242+75.00(RT.)	400.00' X 2.00000 S.F. X 1/27	29.63
242+75.00 TO 244+90.65(RT.)	215.65' X 2.00000 S.F. X 1/27	15.97
245+90.00 TO 258+69.71(RT.)	1,279.71' X 2.50000 S.F. X 1/27	118.49
258+69.71 TO 268+29.71(RT.)	960.00' X 2.00000 S.F. X 1/27	71.11
268+29.71 TO 274+67.20(RT.)	637.49' X 2.50000 S.F. X 1/27	59.03
274+67.20 TO 276+32.53(RT.)	165.33' X 2.50000 S.F. X 1/27	15.31
276+32.53 TO 277+50.00(RT.)	117.47' X 2.50000 S.F. X 1/27	10.88
277+50.00 TO 287+10.00(RT.)	960.00' X 2.00000 S.F. X 1/27	71.11
287+10.00 TO 302+90.00(RT.)	1,540.00' X 2.50000 S.F. X 1/27	142.59
302+50.00 TO 306+29.88(RT.)	379.88' X 2.50000 S.F. X 1/27	35.17
306+29.88 TO 307+52.41(RT.)	122.53' X 2.50000 S.F. X 1/27	11.35
307+52.41 TO 311+00.00(RT.)	347.59' X 2.50000 S.F. X 1/27	32.18
311+00.00 TO 312+00.00(RT.)	100.00' X 2.50000 S.F. X 1/27	9.26
312+00.00 TO 319+50.00(RT.)	750.00' X 2.00000 S.F. X 1/27	55.56
319+50.00 TO 320+28.06(RT.)	78.06' X 2.00000 S.F. X 1/27	5.78
320+20.13 TO 323+87.64(RT.)	367.51' X 2.50000 S.F. X 1/27	34.03
323+87.64 TO 325+10.17(RT.)	122.53' X 2.50000 S.F. X 1/27	11.35
325+10.17 TO 328+12.64(RT.)	302.47' X 2.50000 S.F. X 1/27	28.01
328+12.64 TO 328+87.64(RT.)	75.00' X 2.50000 S.F. X 1/27	6.94 *
328+87.64 TO 333+79.30(RT.)	491.66' X 2.50000 S.F. X 1/27	45.52 *
1035+00.00 TO 1037+97.75(RT.)	297.75' X 2.50000 S.F. X 1/27	27.57 *
1037+97.75 TO 1043+44.20(RT.)	546.45' X 2.00000 S.F. X 1/27	40.48 *
BETWEEN MAINLINE SHOULDER AND RAMP NOSE (PLANIMETERED)		
RAMP ''A''	3.00'' X 428.00 S.F. X 1/324	3.96 *
RAMP ''D''	3.00'' X 540.00 S.F. X 1/324	5.00 *
RAMP ''E''	3.00'' X 780.00 S.F. X 1/324	7.22
MEDIAN SHOULDERS		
6' WIDE		
229+00.00 TO 236+30.71(LT.+RT.)	730.71' X 3.00000 S.F. X 1/27	81.19
237+80.80 TO 272+95.09(LT.+RT.)	3,514.29' X 3.00000 S.F. X 1/27	390.48
TAPER 6 1/2' TO 0'		
272+95.09 TO 281+45.09(RT.)	850.00' X .81250 S.F. X 1/27	25.58
5' WIDE		
272+95.09 TO 281+45.09(LT.)	850.00' X 1.25000 S.F. X 1/27	39.35
TAPER 12' TO 4'		
281+45.09 TO 283+45.09(RT.)	200.00' X 2.00000 S.F. X 1/27	14.81
4' WIDE		
283+45.09 TO 284+37.73(RT.)	92.64' X 1.00000 S.F. X 1/27	3.43
281+45.09 TO 284+37.73(LT.)	292.64' X 1.00000 S.F. X 1/27	10.84
284+37.73 TO 328+12.64(LT.)	4,374.91' X 1.00000 S.F. X 1/27	162.03
328+12.64 TO 328+87.64(LT.)	75.00' X 1.00000 S.F. X 1/27	2.78 *
328+87.64 TO 333+79.30(LT.)	491.66' X 1.00000 S.F. X 1/27	18.21 *
1035+00.00 TO 1043+44.20(LT.)	844.20' X 1.00000 S.F. X 1/27	31.27 *
284+37.73 TO 301+02.41(RT.)	1,664.68' X 1.00000 S.F. X 1/27	61.65
301+02.41 TO 328+12.64(RT.)	2,710.23' X 1.00000 S.F. X 1/27	100.38
328+12.64 TO 333+79.30(RT.)	566.66' X 1.00000 S.F. X 1/27	20.99 *
1035+00.00 TO 1043+44.20(RT.)	844.20' X 1.00000 S.F. X 1/27	31.27 *
	SUB TOTAL	2,553.01 C.Y. 353.02 C.Y. *
RAMP SHOULDERS		
RAMP ''A''		
331+55.98 TO 333+55.98(LT.)	200.00' X 1.37500 S.F. X 1/27	10.19 *
333+55.98 TO 336+37.03(LT.)	281.05' X .75000 S.F. X 1/27	7.81 *
332+55.98 TO 333+55.98(RT.)	100.00' X .62500 S.F. X 1/27	2.31 *
333+55.98 TO 335+95.00(RT.)	239.02' X .75000 S.F. X 1/27	6.64 *
RAMP ''B''		
1033+95.82 TO 1039+67.19(LT.)	571.37' X .75000 S.F. X 1/27	15.87 *
1039+67.19 TO 1040+67.19(LT.)	100.00' X 1.37500 S.F. X 1/27	5.09 *
1035+78.80 TO 1040+67.19(RT.)	488.39' X .75000 S.F. X 1/27	13.57 *

* QUANTITIES THAT INVOLVE STATE AND FEDERAL FUNDS ONLY.

ITEM 301-3'' BITUMINOUS AGGREGATE BASE C.Y.

LOCATION	CALCULATIONS	QUANTITY
RAMP ''C''		
320+28.06 TO 323+63.00(LT.)	334.94' X .75000 S.F. X 1/27	9.30
323+63.00 TO 326+60.00(LT.)	297.00' X .75000 S.F. X 1/27	8.25
326+60.00 TO 327+03.97(LT.)	43.97' X .75000 S.F. X 1/27	1.22
320+28.06 TO 321+28.06(RT.)	100.00' X 1.37500 S.F. X 1/27	5.09 *
321+28.06 TO 323+50.00(RT.)	221.94' X .75000 S.F. X 1/27	6.17
323+50.00 TO 326+83.64(RT.)	333.64' X .75000 S.F. X 1/27	9.27
RAMP ''D''		
1028+22.32 TO 1032+00.00(LT.)	377.68' X .75000 S.F. X 1/27	10.49 *
1032+00.00 TO 1034+22.69(LT.)	222.69' X .75000 S.F. X 1/27	6.19 *
1034+22.69 TO 1035+97.65(LT.)	174.96' X .75000 S.F. X 1/27	4.86 *
1035+97.65 TO 1036+97.65(LT.)	100.00' X .62500 S.F. X 1/27	2.31 *
1028+24.70 TO 1032+00.00(RT.)	375.30' X .75000 S.F. X 1/27	10.43 *
1032+00.00 TO 1035+97.65(RT.)	397.65' X .75000 S.F. X 1/27	11.05 *
1035+97.65 TO 1037+97.75(RT.)	200.10' X 1.37500 S.F. X 1/27	10.19 *
RAMP ''E''		
320+29.19 TO 322+29.19(LT.)	200.00' X 1.37500 S.F. X 1/27	10.19
322+29.19 TO 329+50.00(LT.)	720.81' X .75000 S.F. X 1/27	20.02
321+29.19 TO 322+29.19(RT.)	100.00' X .62500 S.F. X 1/27	2.31
322+29.19 TO 329+70.55(RT.)	741.36' X .75000 S.F. X 1/27	20.59
RAMP ''L''		
244+88.61 TO 245+88.61(LT.)	100.00' X 1.75000 S.F. X 1/27	6.48
245+88.61 TO 250+25.00(LT.)	436.39' X 1.50000 S.F. X 1/27	24.24
250+25.00 TO 250+52.85(LT.)	27.85' X 1.50000 S.F. X 1/27	1.55
250+52.85 TO 251+52.85(LT.)	100.00' X 1.00000 S.F. X 1/27	3.70
245+88.61 TO 246+88.61(RT.)	100.00' X .62500 S.F. X 1/27	2.31
246+88.61 TO 248+74.85(RT.)	186.24' X .75000 S.F. X 1/27	5.17
248+74.85 TO 250+27.00(RT.)	152.15' X .75000 S.F. X 1/27	4.23
250+27.00 TO 251+82.00(RT.)	155.00' X .75000 S.F. X 1/27	4.31
RAMP ''M''		
244+90.65 TO 245+90.65(LT.)	100.00' X 1.00000 S.F. X 1/27	3.70
245+90.65 TO 251+89.91(LT.)	599.26' X .75000 S.F. X 1/27	16.65
244+90.65 TO 245+90.65(RT.)	100.00' X 1.75000 S.F. X 1/27	6.48
245+90.65 TO 252+25.00(RT.)	634.35' X 1.50000 S.F. X 1/27	35.24
252+25.00 TO 252+68.00(RT.)	43.00' X .75000 S.F. X 1/27	1.19
RAMP ''N''		
252+48.99 TO 252+80.00(LT.)	31.01' X .75000 S.F. X 1/27	.86
252+80.00 TO 256+69.71(LT.)	389.71' X .75000 S.F. X 1/27	10.83
256+69.71 TO 257+69.71(LT.)	100.00' X .62500 S.F. X 1/27	2.31
252+48.99 TO 252+98.99(RT.)	50.00' X 1.00000 S.F. X 1/27	1.85
252+98.99 TO 257+69.71(RT.)	470.72' X 1.50000 S.F. X 1/27	26.15
257+69.71 TO 258+69.71(RT.)	100.00' X 1.75000 S.F. X 1/27	6.48
RAMP ''P''		
254+31.00 TO 255+24.95(LT.)	93.95' X 1.12500 S.F. X 1/27	3.91
255+24.95 TO 260+21.00(LT.)	496.05' X 1.50000 S.F. X 1/27	27.56
260+21.00 TO 261+55.59(LT.)	134.59' X 1.50000 S.F. X 1/27	7.48
261+55.59 TO 262+55.59(LT.)	100.00' X 1.75000 S.F. X 1/27	6.48
255+24.95 TO 260+00.00(RT.)	475.05' X .75000 S.F. X 1/27	13.20
260+00.00 TO 261+55.95(RT.)	155.95' X .75000 S.F. X 1/27	4.33
261+55.95 TO 262+55.95(RT.)	100.00' X 1.12500 S.F. X 1/27	4.17
RAMP ''Q''		
270+87.11 TO 276+50.00(LT.)	562.89' X .75000 S.F. X 1/27	15.64
PLANIMETERED 270+66-271+15.43(RT.)	3.00'' X .090.00 S.F. X 1/324	.83
271+15.43 TO 276+50.00(RT.)	534.57' X 1.50000 S.F. X 1/27	29.70
276+50.00 TO 277+50.00(RT.)	100.00' X 1.75000 S.F. X 1/27	6.48
	SUB TOTAL	375.92 C.Y. 117.00 C.Y. *

ITEM 301 BITUMINOUS AGGREGATE BASE C.Y.

LOCATION	CALCULATIONS	QUANTITY
GRAHAM-SERVICE ROAD		
PLANIMETERED 0+24 TO 0+55.33	5.00'' X 1012.00 S.F. X 1/324	15.62
0+55.33 TO 5+16.63(18'WIDE)	461.30' X 7.50000 S.F. X 1/27	128.14
PLANIMETERED 5+16.63 TO 6+00	5.00'' X 7014.00 S.F. X 1/324	108.24
ALLENSIDE CONNECTOR		
49+32.36 TO 49+80.63(5''DEPTH)	48.27' X 10.41667 S.F. X 1/27	18.62
49+80.63 TO 50+73.66(5''DEPTH)	93.03' X 8.33333 S.F. X 1/27	28.71
RUDOLPH-ASHLAND CONNECTOR		
5''DEPTH		
47+89.11 TO 48+32.25(23'WIDTH)	43.14' X 9.58333 S.F. X 1/27	15.31
48+32.55 TO 51+07.33(20'WIDTH)	274.78' X 8.33333 S.F. X 1/27	84.81
51+07.33 TO 51+63.54(23'WIDTH)	56.21' X 9.58333 S.F. X 1/27	19.95
	SUB TOTAL	419.40 C.Y.
	GRAND TOTAL	3,348.33 C.Y. 470.02 C.Y. *

CALCULATED BY JAE. 7-67

CHECKED BY D.D.S. 10-68

COMPUTATIONS

FED. RD.	STATE	PROJECT	
2	OHIO		

26
460

SUM-8-17.63

ITEM 304 AGGREGATE BASE C.Y.

LOCATION			CALCULATIONS			QUANTITY
OUTSIDE SHOULDERS OF MAIN LINE AND SPEED CHANGE LANES						
229+00.00	TO	233+00.00(LT.)	400.00'	X	4.66667 S.F. X 1/27	69.14
233+00.00	TO	235+09.00(LT.)	209.00'	X	4.41667 S.F. X 1/27	34.19
235+09.00	TO	235+39.00(LT.)	30.00'	X	4.66667 S.F. X 1/27	5.19
236+92.00	TO	244+88.61(LT.)	796.61'	X	4.41667 S.F. X 1/27	130.31
244+88.61	TO	261+70.00(LT.)	1,681.39'	X	5.61111 S.F. X 1/27	349.42
262+55.59	TO	263+69.71(LT.)	114.12'	X	4.46352 S.F. X 1/27	18.87
263+69.71	TO	264+45.09(LT.)	75.38'	X	4.51038 S.F. X 1/27	12.59
264+45.09	TO	266+10.42(LT.)	165.33'	X	4.46352 S.F. X 1/27	27.33
266+10.42	TO	270+68.86(LT.)	458.44'	X	4.41667 S.F. X 1/27	74.99
270+68.86	TO	310+69.19(LT.)	4,000.33'	X	5.61111 S.F. X 1/27	831.34
310+69.19	TO	320+29.19(LT.)	960.00'	X	4.41667 S.F. X 1/27	157.04
320+29.19	TO	321+95.98(LT.)	166.79'	X	5.61111 S.F. X 1/27	34.66
321+95.98	TO	328+12.64(LT.)	616.66'	X	4.41667 S.F. X 1/27	100.87
328+12.64	TO	328+87.64(LT.)	75.00'	X	4.41667 S.F. X 1/27	12.27 *
328+87.64	TO	331+55.98(LT.)	268.34'	X	4.41667 S.F. X 1/27	43.90 *
331+55.98	TO	333+79.30(LT.)	223.32'	X	5.61111 S.F. X 1/27	46.41 *
1035+00.00	TO	1040+65.84(LT.)	565.84'	X	5.61111 S.F. X 1/27	117.59 *
1040+67.19	TO	1043+44.20(LT.)	277.01'	X	4.41667 S.F. X 1/27	45.31 *
229+00.00	TO	235+95.00(RT.)	695.00'	X	5.61111 S.F. X 1/27	144.43
235+95.00	TO	237+30.00(RT.)	135.00'	X	4.66667 S.F. X 1/27	23.33
238+75.00	TO	242+75.00(RT.)	400.00'	X	4.66667 S.F. X 1/27	69.14
242+75.00	TO	244+90.65(RT.)	215.65'	X	4.41667 S.F. X 1/27	35.28
245+90.00	TO	258+69.71(RT.)	1,279.71'	X	5.61111 S.F. X 1/27	265.95
258+69.71	TO	268+29.71(RT.)	960.00'	X	4.41667 S.F. X 1/27	157.04
268+29.71	TO	274+67.20(RT.)	637.49'	X	5.61111 S.F. X 1/27	132.48
274+67.20	TO	276+32.53(RT.)	165.33'	X	5.64236 S.F. X 1/27	34.55
276+32.53	TO	277+50.00(RT.)	117.47'	X	5.67361 S.F. X 1/27	24.68
277+50.00	TO	287+10.00(RT.)	960.00'	X	4.41667 S.F. X 1/27	157.04
287+10.00	TO	302+50.00(RT.)	1,540.00'	X	5.61111 S.F. X 1/27	320.04
302+50.00	TO	306+29.88(RT.)	379.88'	X	5.83333 S.F. X 1/27	82.07
306+29.88	TO	307+52.41(RT.)	122.53'	X	5.83333 S.F. X 1/27	26.47
307+52.41	TO	311+00.00(RT.)	347.59'	X	5.83333 S.F. X 1/27	75.10
311+00.00	TO	312+00.00(RT.)	100.00'	X	5.67361 S.F. X 1/27	21.01
312+00.00	TO	319+50.00(RT.)	750.00'	X	4.51038 S.F. X 1/27	125.29
319+50.00	TO	320+28.06(RT.)	78.06'	X	4.41667 S.F. X 1/27	12.77
320+20.13	TO	323+87.64(RT.)	367.51'	X	5.67361 S.F. X 1/27	77.23
323+87.64	TO	325+10.17(RT.)	122.53'	X	5.64236 S.F. X 1/27	25.61
325+10.17	TO	328+12.64(RT.)	302.47'	X	5.61111 S.F. X 1/27	62.86
328+12.64	TO	328+87.64(RT.)	75.00'	X	5.61111 S.F. X 1/27	15.59 *
328+87.64	TO	333+79.30(RT.)	491.66'	X	5.61111 S.F. X 1/27	102.18 *
1035+00.00	TO	1037+97.75(RT.)	297.75'	X	5.61111 S.F. X 1/27	61.88 *
1037+97.75	TO	1043+44.20(RT.)	546.45'	X	4.41667 S.F. X 1/27	89.39 *
BETWEEN MAINLINE SHOULDER AND RAMP NOSE (PLANIMETERED)						
RAMP "A"			7.00"	X	428.00 S.F. X 1/324	9.25 *
RAMP "D"			7.00"	X	540.00 S.F. X 1/324	11.67 *
RAMP "E"			7.00"	X	780.00 S.F. X 1/324	16.85
MEDIAN SHOULDERS						
6' LENGTH						
229+00.00	TO	236+30.71(LT.+RT.)	730.71'	X	7.00000 S.F. X 1/27	189.44
237+80.80	TO	272+95.09(LT.+RT.)	3,514.29'	X	7.00000 S.F. X 1/27	911.11
TAPER 6 1/2' TO 0'						
272+95.09	TO	281+45.09(RT.)	850.00'	X	1.89583 S.F. X 1/27	59.68
5' LENGTH						
272+95.09	TO	281+45.09(LT.)	850.00'	X	2.91667 S.F. X 1/27	91.82
TAPER 12' TO 4'						
281+45.09	TO	283+45.09(RT.)	200.00'	X	4.66667 S.F. X 1/27	34.57
4' LENGTH						
283+45.09	TO	284+37.73(RT.)	92.64'	X	2.33333 S.F. X 1/27	8.01
281+45.09	TO	284+37.73(LT.)	292.64'	X	2.33333 S.F. X 1/27	25.29
284+37.73	TO	328+12.64(LT.)	4,374.91'	X	2.33333 S.F. X 1/27	378.08
328+12.64	TO	328+87.64(LT.)	75.00'	X	2.33333 S.F. X 1/27	6.48
328+87.64	TO	333+79.30(LT.)	491.66'	X	2.33333 S.F. X 1/27	42.49 *
1035+00.00	TO	1043+44.20(LT.)	844.20'	X	2.33333 S.F. X 1/27	72.96 *
284+37.73	TO	301+02.41(RT.)	1,664.68'	X	2.33333 S.F. X 1/27	143.86
301+02.41	TO	328+87.64(RT.)	2,785.23'	X	2.33333 S.F. X 1/27	240.70
328+87.64	TO	333+79.30(RT.)	491.66'	X	2.33333 S.F. X 1/27	42.49 *
1035+00.00	TO	1043+44.20(RT.)	844.20'	X	2.33333 S.F. X 1/27	72.96 *
						5,824.20 C.Y.
					SUB TOTAL	786.34 C.Y. *
RAMP SHOULDERS						
RAMP "A"						
331+55.98	TO	333+55.98(LT.)	200.00'	X	2.70833 S.F. X 1/27	20.06 *
333+55.98	TO	336+37.03(LT.)	281.05'	X	1.00000 S.F. X 1/27	10.41 *
332+55.98	TO	333+55.98(RT.)	100.00'	X	1.25000 S.F. X 1/27	4.63 *
333+55.98	TO	335+95.00(RT.)	239.02'	X	1.50000 S.F. X 1/27	13.28 *
RAMP "B"						
1033+95.82	TO	1039+67.19(LT.)	571.37'	X	1.00000 S.F. X 1/27	21.16 *
1039+67.19	TO	1040+67.19(LT.)	100.00'	X	2.70833 S.F. X 1/27	10.03 *
1035+78.80	TO	1040+67.19(RT.)	488.39'	X	1.50000 S.F. X 1/27	27.13 *

ITEM 304 AGGREGATE BASE C.Y.

LOCATION			CALCULATIONS			QUANTITY
RAMP "C"						
320+28.06	TO	323+63.00(LT.)	334.94'	X	1.25000 S.F. X 1/27	15.51
323+63.00	TO	326+60.00(LT.)	297.00'	X	1.00000 S.F. X 1/27	11.00
326+60.00	TO	327+03.97(LT.)	43.97'	X	1.25000 S.F. X 1/27	2.04
320+28.06	TO	321+28.06(RT.)	100.00'	X	2.70833 S.F. X 1/27	10.03
321+28.06	TO	323+50.00(RT.)	221.94'	X	1.00000 S.F. X 1/27	8.22
323+50.00	TO	326+83.64(RT.)	333.64'	X	1.50000 S.F. X 1/27	18.54
RAMP "D"						
1028+22.32	TO	1032+00.00(LT.)	377.68'	X	1.00000 S.F. X 1/27	13.99 *
1032+00.00	TO	1034+22.69(LT.)	222.69'	X	1.25000 S.F. X 1/27	10.31 *
1034+22.69	TO	1035+97.65(LT.)	174.96'	X	1.50000 S.F. X 1/27	9.72 *
1035+97.65	TO	1036+97.65(LT.)	100.00'	X	1.25000 S.F. X 1/27	4.63 *
1028+24.70	TO	1032+00.00(RT.)	375.30'	X	1.50000 S.F. X 1/27	20.85 *
1032+00.00	TO	1035+97.65(RT.)	397.65'	X	1.00000 S.F. X 1/27	14.73 *
1035+97.65	TO	1037+97.75(RT.)	200.10'	X	2.70833 S.F. X 1/27	20.07 *
RAMP "E"						
320+29.19	TO	322+29.19(LT.)	200.00'	X	2.70833 S.F. X 1/27	20.06
322+29.19	TO	329+50.00(LT.)	720.81'	X	1.00000 S.F. X 1/27	26.70
321+29.19	TO	322+29.19(RT.)	100.00'	X	1.25000 S.F. X 1/27	4.63
322+29.19	TO	329+70.55(RT.)	741.36'	X	1.50000 S.F. X 1/27	41.19
RAMP "L"						
244+88.61	TO	245+88.61(LT.)	100.00'	X	3.58333 S.F. X 1/27	13.27
245+88.61	TO	250+25.00(LT.)	436.39'	X	2.75000 S.F. X 1/27	44.45
250+25.00	TO	250+52.85(LT.)	27.85'	X	3.00000 S.F. X 1/27	3.09
250+52.85	TO	251+52.85(LT.)	100.00'	X	2.00000 S.F. X 1/27	7.41
245+88.61	TO	246+88.61(RT.)	100.00'	X	1.25000 S.F. X 1/27	4.63
246+88.61	TO	248+74.85(RT.)	186.24'	X	1.50000 S.F. X 1/27	10.35
248+74.85	TO	250+27.00(RT.)	152.15'	X	1.25000 S.F. X 1/27	7.04
250+27.00	TO	251+82.00(RT.)	155.00'	X	1.00000 S.F. X 1/27	5.74
RAMP "M"						
244+90.65	TO	245+90.65(LT.)	100.00'	X	2.00000 S.F. X 1/27	7.41
245+90.65	TO	251+89.91(LT.)	599.26'	X	1.25000 S.F. X 1/27	27.74
244+90.65	TO	245+90.65(RT.)	100.00'	X	3.58333 S.F. X 1/27	13.27
245+90.65	TO	252+25.00(RT.)	634.35'	X	2.75000 S.F. X 1/27	64.61
252+25.00	TO	252+68.00(RT.)	43.00'	X	1.25000 S.F. X 1/27	1.99
RAMP "N"						
252+48.99	TO	252+80.00(LT.)	31.01'	X	1.00000 S.F. X 1/27	1.15
252+80.00	TO	256+69.71(LT.)	389.71'	X	1.25000 S.F. X 1/27	18.04
256+69.71	TO	257+69.71(LT.)	100.00'	X	1.25000 S.F. X 1/27	4.63
252+48.99	TO	252+98.99(RT.)	50.00'	X	2.00000 S.F. X 1/27	3.70
252+98.99	TO	257+69.71(RT.)	470.72'	X	2.75000 S.F. X 1/27	47.94
257+69.71	TO	258+69.71(RT.)	100.00'	X	3.58333 S.F. X 1/27	13.27
RAMP "P"						
254+31.00	TO	255+24.95(LT.)	93.95'	X	1.87500 S.F. X 1/27	6.52
255+24.95	TO	260+21.00(LT.)	496.05'	X	2.75000 S.F. X 1/27	50.52
260+21.00	TO	261+55.59(LT.)	134.59'	X	3.00000 S.F. X 1/27	14.95
261+55.59	TO	262+55.59(LT.)	100.00'	X	3.83334 S.F. X 1/27	14.20
255+24.95	TO	260+00.00(RT.)	475.05'	X	1.25000 S.F. X 1/27	21.99
260+00.00	TO	261+55.95(RT.)	155.95'	X	1.00000 S.F. X 1/27	5.78
261+55.95	TO	262+55.95(RT.)	100.00'	X	1.87500 S.F. X 1/27	6.94
RAMP "Q"						
270+87.11	TO	276+50.00(LT.)	562.89'	X	1.00000 S.F. X 1/27	20.85
PLANIMETERED 270+66-271+15.43(RT.)			6.00"	X	090.00 S.F. X 1/324	1.67
271+15.43	TO	276+50.00(RT.)	534.57'	X	3.00000 S.F. X 1/27	59.40
276+50.00	TO	277+50.00(RT.)	100.00'	X	3.83334 S.F. X 1/27	14.20
					SUB TOTAL	201.00 C.Y. *
						674.67 C.Y.
NUTWOOD-CHARLES CONNECTOR 7" DEPTH						
45+30.30	TO	50+32.85(23' WIDE)	93.55'	X	13.41667 S.F. X 1/27	46.45
50+32.85	TO	50+51.85(22' WIDE)	25.00'	X	12.8333 S.F. X 1/27	11.88
					SUB TOTAL	58.37 C.Y.
8" DEPTH RELOC. GRAHAM ROAD						
100+50.00	TO	101+00.00(LT.)	50.00'	X	4.00000 S.F. X 1/27	7.41
101+00.00	TO	103+00.00(LT.)	200.00'	X	5.33333 S.F. X 1/27	39.51
103+00.00	TO	103+61.63(LT.)	61.63'	X	3.33333 S.F. X 1/27	7.61
121+30.74	TO	122+00.00(LT.)	60.26'	X	3.33333 S.F. X 1/27	7.44
122+00.00	TO	123+50.00(LT.)	150.00'	X	5.33333 S.F. X 1/27	29.63
123+50.00	TO	124+00.00(LT.)	50.00'	X	4.00000 S.F. X 1/27	7.41
100+50.00	TO	101+75.66(RT.)	125.66'	X	2.00000 S.F. X 1/27	9.31
121+30.74	TO	122+00.00(RT.)	60.26'	X	3.33333 S.F. X 1/27	7.44
122+00.00	TO	123+50.00(RT.)	150.00'	X	5.33333 S.F. X 1/27	29.63
123+50.00	TO	124+00.00(RT.)	50.00'	X	4.00000 S.F. X 1/27	7.41
					SUB TOTAL	152.80 C.Y.
GRAHAM-SERVICE ROAD						
UNDER ITEM 301 (3" DEPTH)			3.00"	X	16329.40 S.F. X 1/324	151.20
ALLENSIDE CONNECTOR						
UNDER ITEM 301(3"DEPTH)			3.00"	X	4067.35 S.F. X 1/324	37.66
UNDER 609 CURB(3"WIDE)(3"DEPTH)			1,339.00'	X	.75000 S.F. X 1/27	37.19
UNDER TEE TURN AROUND			7.00"	X	1131.50 S.F. X 1/324	24.45
RUDOLPH-ASHLAND CONNECTOR					SUB TOTAL	99.30 C.Y.
UNDER ITEM 301(3"DEPTH)			3.00"	X	7786.65 S.F. X 1/324	72.10
CHARLES ST. COL-DE-SAC						
PLANIMETERED			7.00"	X	7304.00 S.F. X 1/324	157.80
					GRAND TOTAL	7190.44 C.Y.
						387.34 C.Y. *

ITEM 305-8" PORTLAND CEMENT CONCRETE BASE S.Y.

LOCATION	CALCULATIONS	QUANTITY
RELOCATED GRAHAM ROAD		
PLANIMETERED 100+50-103+61.19	6,149.00 S.F. X 1/9	683.22
PLANIMETERED 121+30.74-124+00	3,237.00 S.F. X 1/9	359.67
	TOTAL	1,042.89 S.Y.

ITEM 305-9" PORTLAND CEMENT CONCRETE BASE S.Y.

LOCATION	CALCULATIONS	QUANTITY
RELOCATED 2ND STREET		
TAPER 3' TO 9'		
43+50.00 TO 45+39.80	189.80' X 6.00' X 1/9	126.53
RELOCATED FRONT STREET		
46+85.00 TO 47+48.89	63.89' X 41.00' X 1/9	291.05
PLANIMETERED 51+48.15 TO 55+34.30	11,114.00 S.F. X 1/9	1,234.89
HUDSON DRIVE		
47+77.00 TO 48+87.00(LT.)	110.00' X 1.50' X 1/9	18.33
48+86.00 TO 49+07.00(RT.)	21.00' X 1.50' X 1/9	3.50
PLANIMETERED 51+02.48 TO 51+50	3,150.00 S.F. X 1/9	350.00
BAILEY ROAD		
PLANIMETERED 51+80.88 TO 52+00	1,125.00 S.F. X 1/9	125.00
49+00.00 TO 49+31.22	31.22' X 31.00' X 1/9	107.54
	TOTAL	2,256.84 S.Y.

* QUANTITIES THAT INVOLVE STATE AND FEDERAL FUNDS ONLY.

CALCULATED BY JAE 7-67

CHECKED BY JJJ 10-68

COMPUTATIONS

ITEM 310 SUBBASE (GRADING A . . C.Y.

LOCATION	CALCULATIONS	QUANTITY
6'' DEPTH UNDER ITEM 451		
(MAINLINE)		
229+00.00 TO 236+00.71(LT.+RT.)	700.71' X 36.00000 S.F. X 1/27	934.28
UNDER APPROACH SLABS	6.00'' X 5760.00 S.F. X 1/324	106.67
238+10.80 TO 272+95.09(LT.+RT.)	3,486.29' X 36.00000 S.F. X 1/27	4,645.72
272+95.09 TO 281+45.09(RT.)	850.00' X 18.00000 S.F. X 1/27	566.67
272+95.09 TO 281+45.09(LT.)	850.00' X 12.00000 S.F. X 1/27	377.78
281+45.09 TO 328+12.64(LT.+RT.)	4,667.55' X 24.00000 S.F. X 1/27	4,148.93
(ACCEL DECEL LANES)		
RAMP 'A' (8.20' AVG WIDTH)	731.66' X 4.10000 S.F. X 1/27	111.10
RAMP 'E' (12.5' AVG WIDTH)	1,000.00' X 6.25000 S.F. X 1/27	231.48
RAMP 'L' (18.5' AVG WIDTH)	520.00' X 9.25000 S.F. X 1/27	178.15
RAMP 'N' (12.5' AVG WIDTH)	1,000.00' X 6.25000 S.F. X 1/27	231.48
RAMP 'Q' (12.5' AVG WIDTH)	1,000.00' X 6.25000 S.F. X 1/27	231.48
80' END TAPER RAMPS A E N Q	320.00' X .50000 S.F. X 1/27	5.93
PLANIMETERED AREAS RAMPS C M P	6.00'' X 17353.00 S.F. X 1/324	321.35
12' LANE PORTION RAMPS C M P	1,222.86' X 6.00000 S.F. X 1/27	271.75
RECOVERY AREA RAMPS M P	100.00' X 5.00000 S.F. X 1/27	18.52
100' END TAPERS RAMPS C M P	300.00' X 3.00000 S.F. X 1/27	33.33
16.67' END TAPERS RAMPS C M P	50.00' X .50000 S.F. X 1/27	.93
(RAMP L COMBINED ACCEL. DECEL. LANE)(12' WIDE)		
229+00.00 TO 236+00.71	700.71' X 6.00000 S.F. X 1/27	155.71
238+10.80 TO 239+68.61	155.79' X 6.00000 S.F. X 1/27	34.62
TRANSITION FROM 6'' TO 7 1/2'' DEPTH		
(UNDER 48' PAV'T 6.1875'' AVG DEPTH)		
328+12.64 TO 328+87.64(LT.+RT.)	75.00' X 24.75000 S.F. X 1/27	68.75 *
(UNDER RAMP 'A' TAPER 6.75'' AVG DEPTH - 17.35' AVG WIDTH)		
328+12.64 TO 328+87.64	75.00' X 9.75938 S.F. X 1/27	27.11 *
7 1/2'' DEPTH		
(MAIN LINE)(AVG DEPTH 7 3/8'')		
328+87.64 TO 333+79.30	491.66' X 25.50000 S.F. X 1/27	464.35 *
1035+00.00 TO 1043+44.20	844.20' X 25.50000 S.F. X 1/27	797.30 *
(ACCEL DECEL LANES)		
(RAMP 'A' ACCEL)	7.50'' X 5808.00 S.F. X 1/324	134.44 *
(RAMP 'B' DECEL)	7.50'' X 6176.00 S.F. X 1/324	142.96 *
(RAMP 'D' ACCEL)	7.50'' X 9929.00 S.F. X 1/324	229.84 *
OUTSIDE SHOULDERS OF MAIN LINE AND SPEED CHANGE LANES		
229+00.00 TO 233+00.00(LT.)	400.00' X .50000 S.F. X 1/27	7.41
233+00.00 TO 235+09.00(LT.)	209.00' X 1.50000 S.F. X 1/27	11.61
235+09.00 TO 235+39.00(LT.)	30.00' X .50000 S.F. X 1/27	.56
236+92.00 TO 244+88.61(LT.)	796.61' X 1.50000 S.F. X 1/27	44.26
244+88.61 TO 261+70.00(LT.)	1,681.39' X 1.33334 S.F. X 1/27	83.03
262+55.59 TO 270+68.86(LT.)	813.27' X 1.50000 S.F. X 1/27	45.18
270+68.86 TO 310+69.19(LT.)	4,000.33' X 1.33334 S.F. X 1/27	197.55
310+69.19 TO 320+29.19(LT.)	960.00' X 1.50000 S.F. X 1/27	53.33
320+29.19 TO 321+95.98(LT.)	166.79' X 1.33334 S.F. X 1/27	8.24
321+95.98 TO 328+12.64(LT.)	616.66' X 1.50000 S.F. X 1/27	34.26
229+00.00 TO 235+95.00(RT.)	695.00' X 1.33334 S.F. X 1/27	34.32
235+95.00 TO 237+30.00(RT.)	135.00' X .50000 S.F. X 1/27	2.50
238+75.00 TO 242+75.00(RT.)	400.00' X .50000 S.F. X 1/27	7.41
242+75.00 TO 244+90.65(RT.)	215.65' X 1.50000 S.F. X 1/27	11.98
245+90.00 TO 258+69.71(RT.)	1,279.71' X 1.33334 S.F. X 1/27	63.20
258+69.71 TO 268+29.71(RT.)	960.00' X 1.50000 S.F. X 1/27	53.33
268+29.71 TO 277+50.00(RT.)	920.29' X 1.33334 S.F. X 1/27	45.45
277+50.00 TO 287+10.00(RT.)	960.00' X 1.50000 S.F. X 1/27	53.33
287+10.00 TO 302+50.00(RT.)	1,540.00' X 1.33334 S.F. X 1/27	76.05
302+50.00 TO 311+00.00(RT.)	850.00' X .50000 S.F. X 1/27	15.74
311+00.00 TO 312+00.00(RT.)	100.00' X 1.33334 S.F. X 1/27	4.94
312+00.00 TO 320+28.06(RT.)	828.06' X 1.50000 S.F. X 1/27	46.00
320+20.13 TO 328+12.64(RT.)	792.51' X 1.33334 S.F. X 1/27	39.14
328+12.64 TO 328+87.64(LT.+RT.)	75.00' X 3.18750 S.F. X 1/27	8.85 *
328+87.64 TO 331+55.98(LT.)	268.34' X 1.87500 S.F. X 1/27	18.63 *
331+55.98 TO 333+79.30(LT.)	223.32' X 1.66667 S.F. X 1/27	13.79 *
1035+00.00 TO 1040+65.84(LT.)	565.84' X 1.66667 S.F. X 1/27	34.93 *
1040+67.19 TO 1043+44.20(LT.)	277.01' X 1.87500 S.F. X 1/27	19.24 *
328+87.64 TO 333+79.30(RT.)	491.66' X 1.66667 S.F. X 1/27	30.35 *
1035+00.00 TO 1037+97.75(RT.)	297.75' X 1.66667 S.F. X 1/27	18.38 *
1037+97.75 TO 1043+44.20(RT.)	546.45' X 1.87500 S.F. X 1/27	37.95 *
MEDIAN PORTION		
(BARRIER AND 6' SHOULDERS)		
229+00.00 TO 236+32.36	732.36' X 9.09044 S.F. X 1/27	246.57
237+81.37 TO 248+93.22	1,111.85' X 9.09044 S.F. X 1/27	374.34
248+93.22 TO 249+43.22	50.00' X 8.27872 S.F. X 1/27	15.33
249+43.22 TO 255+98.84	655.62' X 7.46700 S.F. X 1/27	181.32
255+98.84 TO 256+48.84	50.00' X 8.27872 S.F. X 1/27	15.33
256+48.84 TO 272+95.09	1,646.25' X 9.09044 S.F. X 1/27	554.26

* QUANTITIES THAT INVOLVE STATE AND FEDERAL FUNDS ONLY.

ITEM 310 SUBBASE (GRADING A C.Y.

LOCATION	CALCULATIONS	QUANTITY
(SHOULDER TAPER 6 1/2' TO 0' AT 6'' DEPTH)		
272+95.09 TO 281+45.09(RT.)	850.00' X 1.62500 S.F. X 1/27	51.16
(SHOULDER TAPER 12' TO 4' AT 6'' DEPTH)		
281+45.09 TO 283+45.09(RT.)	200.00' X 4.00000 S.F. X 1/27	29.63
(4' SHOULDERS 6'' DEPTH)		
272+95.09 TO 284+37.73(LT.)	1,142.64' X .50000 S.F. X 1/27	21.16
283+45.09 TO 284+37.73(RT.)	92.64' X 2.00000 S.F. X 1/27	6.86
301+02.41 TO 328+12.64(RT.)	2,710.23' X 2.00000 S.F. X 1/27	200.76
(4' SHOULDERS 5.75'' AVG DEPTH,1' WDTH)		
284+37.73 TO 301+02.41(LT.+RT.)	1,664.68' X .95833 S.F. X 1/27	59.09
301+02.41 TO 328+12.64(LT.)	2,710.23' X .47917 S.F. X 1/27	48.10
(SUBBASE TRANSITION)		
328+12.64 TO 328+87.64(RT.)	75.00' X 1.12500 S.F. X 1/27	3.12 *
328+12.64 TO 328+87.64(LT.)	75.00' X .36458 S.F. X 1/27	1.01 *
(4' SHOULDERS 3'' DEPTH 1' WIDE)		
328+87.64 TO 333+79.30(LT.+RT.)	491.66' X .50000 S.F. X 1/27	9.10 *
1035+00.00 TO 1043+44.20(LT.+RT.)	844.20' X .50000 S.F. X 1/27	15.63 *
SUB TOTAL		15,348.61 C.Y.
		2,075.73 C.Y. *
UNDER 9'' ITEM 451(MINUS GRAHAM ROAD AND PLANIMETERED AREAS OF RAMPS A B AND E)		
6'' DEPTH	6.00'' X 160279.92 S.F. X 1/324	2,207.89
		760.26 *
PLANIMETERED AREAS RAMPS A B AND E UNDER 9'' ITEM 451		
4'' DEPTH	4.00'' X 8388.00 S.F. X 1/324	44.08
		59.48 *
RAMP SHOULDERS		
RAMP ''A''		
331+55.98 TO 338+35.01(LT.)	679.03' X 1.50000 S.F. X 1/27	37.72 *
338+35.01 TO 339+24.89(LT)	89.88' X 1.00000 S.F. X 1/27	3.33 *
332+55.98 TO 333+55.98(RT.)	100.00' X 1.25000 S.F. X 1/27	4.63 *
333+55.98 TO 335+95.00(RT.)	239.02' X 1.50000 S.F. X 1/27	13.28 *
UNDER TYPES 7 AND 8 CURB	208.00' X .50000 S.F. X 1/27	3.85 *
335+95.00 TO 336+56.00(RT.)	61.00' X .25000 S.F. X 1/27	.56 *
337+40.00 TO 338+25.00(RT.)	85.00' X .25000 S.F. X 1/27	.79 *
UNDER ITEM 612	12.00'' X 553.00 S.F. X 1/324	20.48 *
RAMP ''B''		
ADJACENT TYPE 2=A CURB	277.00' X .16667 S.F. X 1/27	1.71 *
1033+95.82 TO 1040+67.19(LT.)	671.37' X 1.50000 S.F. X 1/27	37.30 *
1035+78.80 TO 1040+67.19(RT.)	488.39' X 1.50000 S.F. X 1/27	27.13 *
RAMP ''C''		
320+28.06 TO 326+83.64(RT.)	655.58' X 1.50000 S.F. X 1/27	36.42
320+28.06 TO 327+03.97(LT.)	675.91' X 1.50000 S.F. X 1/27	37.55
ADJACENT TYPE 2=A CURB	151.00' X .25000 S.F. X 1/27	1.40
RAMP ''D''		
1028+24.70 TO 1037+97.75(RT.)	973.05' X 1.50000 S.F. X 1/27	54.06 *
1028+22.32 TO 1035+97.65(LT.)	775.33' X 1.50000 S.F. X 1/27	43.07 *
1035+97.65 TO 1036+97.75(LT.)	100.10' X 1.25000 S.F. X 1/27	4.63 *
ADJACENT TYPE 2=A CURB	142.00' X .25000 S.F. X 1/27	1.31 *
UNDER TYPES 7 AND 8 CURB	261.00' X .50000 S.F. X 1/27	4.83 *
RAMP ''E''		
320+29.19 TO 329+50.00(LT.)	920.81' X 1.50000 S.F. X 1/27	51.16
321+29.19 TO 322+29.19(RT.)	100.00' X 1.25000 S.F. X 1/27	4.63
322+29.19 TO 329+70.55(RT)	741.36' X 1.50000 S.F. X 1/27	41.19
ADJACENT TYPE 2=A CURB	21.00' X .25000 S.F. X 1/27	.19
ADJACENT TYPE 2=A CURB	150.00' X .16667 S.F. X 1/27	.93
UNDER TYPES 7, AND 8 CURB	339.00' X .50000 S.F. X 1/27	6.28
UNDER ITEM 612	12.00'' X 140.00 S.F. X 1/324	5.19
RAMP ''L''		
244+88.61 TO 250+25.00(LT.)	536.39' X 1.50000 S.F. X 1/27	29.80
250+25.00 TO 251+50.00(LT.)	125.00' X .50000 S.F. X 1/27	2.31
245+88.61 TO 246+88.61(RT.)	100.00' X .00000 S.F. X 1/27	.00
246+88.61 TO 253+73.75(RT.)	685.14' X 1.50000 S.F. X 1/27	38.06
ADJACENT TYPE 2=A CURB	143.00' X .25000 S.F. X 1/27	1.32
UNDER TYPE 2 COMB. CURB+GUTTER	135.04' X 1.25000 S.F. X 1/27	6.25
UNDER ITEM 612	12.00'' X 353.00 S.F. X 1/324	13.07
UNDER TYPE 7 CURB	6.00'' X 217.00 S.F. X 1/324	4.02
RAMP ''M''		
244+90.65 TO 245+90.65(LT.)	100.00' X 2.00000 S.F. X 1/27	7.41
245+90.65 TO 251+89.91(LT.)	599.26' X 1.50000 S.F. X 1/27	33.29
244+90.65 TO 252+68.00(RT.)	777.35' X 1.50000 S.F. X 1/27	43.19
ADJACENT TYPE 2=A CURB	176.00' X .25000 S.F. X 1/27	1.63
UNDER ITEM 612	12.00'' X 343.00 S.F. X 1/324	12.70
RAMP ''N''		
249+86.39 TO 256+69.71(LT.)	683.32' X 1.50000 S.F. X 1/27	37.96
256+69.71 TO 257+69.71(LT.)	100.00' X 1.25000 S.F. X 1/27	4.63
252+48.99 TO 258+69.71(RT.)	620.72' X 1.50000 S.F. X 1/27	34.48
ADJACENT TYPE 2=A CURB	91.00' X .25000 S.F. X 1/27	.84
UNDER TYPE 7 CURB	115.00' X .25000 S.F. X 1/27	1.06
UNDER ITEM 612	12.00'' X 306.00 S.F. X 1/324	11.33
RAMP ''P''		
252+01.60 TO 261+25.00(LT.)	923.40' X 1.50000 S.F. X 1/27	51.30
261+25.00 TO 262+55.59(LT.)	130.59' X .50000 S.F. X 1/27	2.42
255+24.95 TO 262+55.59(RT.)	730.64' X 1.50000 S.F. X 1/27	40.59
262+55.59 TO 263+59.59(RT.)	100.00' X 2.00000 S.F. X 1/27	7.41
ADJACENT TYPE 2=A CURB	132.00' X .25000 S.F. X 1/27	1.22
UNDER ITEM 612	12.00'' X 1145.00 S.F. X 1/324	42.41
	SUB TOTAL	2,865.61 C.Y.
		1,078.42 C.Y. *
GRAHAM ROAD		914.25
UNDER 9'' ITEM 451, 4'' DEPTH	4.00'' X 74054.61 S.F. X 1/324	55.07
UNDER TYPE 2 CURB+4'' DEPTH	1,487.00' X 1.00000 S.F. X 1/27	4.27
ADJACENT TYPE 2=A CURB	692.00' X .16667 S.F. X 1/27	75.91
PLANIMETERED 100+50-103+61.19	4.00'' X 6149.00 S.F. X 1/324	32.84
UNDER APPROACH SLABS	4.00'' X 2660.00 S.F. X 1/324	39.96
PLANIMETERED 121+30.74-124+00	4.00'' X 3237.00 S.F. X 1/324	1122.30
	SUB TOTAL	
RELOCATED 2ND STREET		
ADJACENT TYPE 2=A CURB	30.00' X .25000 S.F. X 1/27	.28
UNDER TYPE 2 COMBINED CURB AND GUTTER		
46+69.00 TO 47+44.00(RT.)	75.00' X 1.50000 S.F. X 1/27	4.17
50+26.89 TO 53+23.00(RT.)	296.11' X 1.50000 S.F. X 1/27	16.45
50+26.89 TO 54+23.33(LT.)	396.44' X 1.50000 S.F. X 1/27	22.02
UNDER APPROACH SLABS	6.00'' X 1215.00 S.F. X 1/324	22.50
TAPER 1' TO 6' AT 6'' DEPTH		
43+50.00 TO 45+39.80	189.80' X 1.75000 S.F. X 1/27	12.30
UNDER CONCRETE ISLAND AT FRONT	12.00'' X 105.00 S.F. X 1/324	3.89
RELOCATED FRONT STREET		
UNDER APPROACH SLABS	6.00'' X 2050.00 S.F. X 1/324	37.96
UNDER ITEM 305	6.00'' X 13733.49 S.F. X 1/324	254.32
ADJACENT TYPE 2=B CURB		
+46.85 TO 47+48.89(LT.+RT)	4,702.04' X 1.00000 S.F. X 1/27	174.15
51+48.15 TO 54+75.00(RT.)	326.85' X .50000 S.F. X 1/27	6.05
SUB TOTAL		1676.30 C.Y.
GRAND TOTAL		17,889.61 C.Y.
		3,154.15 C.Y. *

CALCULATED BY JAE 7-67

CHECKED BY D.D.J. 10-68

COMPUTATIONS

FED. RD.	STATE	PROJECT	
2	OHIO		

28/460

SUM-8-17.63

ITEM 310 SUBBASE (REGULAR GRADING) C.Y.

LOCATION			CALCULATIONS			QUANTITY	
OUTSIDE SHOULDERS OF MAIN LINE AND SPEED CHANGE LANES							
229+00.00	TO	233+00.00(LT.)	400.00'	X	3.65625 S.F. X 1/27	54.17	
233+00.00	TO	235+09.00(LT.)	209.00'	X	1.92708 S.F. X 1/27	14.92	
235+09.00	TO	235+39.00(LT.)	30.00'	X	3.65625 S.F. X 1/27	4.06	
236+92.00	TO	244+88.61(LT.)	796.61'	X	1.92708 S.F. X 1/27	56.86	
244+88.61	TO	261+70.00(LT.)	1,681.39'	X	2.50556 S.F. X 1/27	156.03	
262+55.59	TO	263+69.71(LT.)	114.12'	X	2.07352 S.F. X 1/27	8.76	
263+69.71	TO	264+45.09(LT.)	75.38'	X	2.21995 S.F. X 1/27	6.20	
264+45.09	TO	266+10.42(LT.)	165.33'	X	2.07352 S.F. X 1/27	12.70	
266+10.42	TO	270+68.86(LT.)	458.44'	X	1.92708 S.F. X 1/27	32.72	
270+68.86	TO	310+69.19(LT.)	4,000.33'	X	2.50556 S.F. X 1/27	371.22	
310+69.19	TO	320+29.19(LT.)	960.00'	X	1.92708 S.F. X 1/27	68.52	
320+29.19	TO	321+95.98(LT.)	166.79'	X	2.50556 S.F. X 1/27	15.48	
321+95.98	TO	328+12.64(LT.)	616.66'	X	1.92708 S.F. X 1/27	44.01	
328+12.64	TO	328+87.64(LT.)	75.00'	X	2.02474 S.F. X 1/27	5.62	*
328+87.64	TO	331+55.98(LT.)	268.34'	X	2.12240 S.F. X 1/27	21.09	*
331+55.98	TO	333+79.30(LT.)	223.32'	X	2.84167 S.F. X 1/27	23.50	*
1035+00.00	TO	1040+65.84(LT.)	565.84'	X	2.84167 S.F. X 1/27	59.55	*
1040+67.19	TO	1043+44.20(LT.)	277.01'	X	2.12240 S.F. X 1/27	21.78	*
229+00.00	TO	235+95.00(RT.)	695.00'	X	2.50556 S.F. X 1/27	64.49	
235+95.00	TO	237+30.00(RT.)	135.00'	X	3.65625 S.F. X 1/27	18.28	
238+75.00	TO	242+75.00(RT.)	400.00'	X	3.65625 S.F. X 1/27	54.17	
242+75.00	TO	244+90.65(RT.)	215.65'	X	1.92708 S.F. X 1/27	15.39	
245+90.00	TO	258+69.71(RT.)	1,279.71'	X	2.50556 S.F. X 1/27	118.76	
258+69.71	TO	268+29.71(RT.)	960.00'	X	1.92708 S.F. X 1/27	68.52	
268+29.71	TO	274+67.20(RT.)	637.49'	X	2.50556 S.F. X 1/27	59.16	
274+67.20	TO	276+32.53(RT.)	165.33'	X	2.75763 S.F. X 1/27	16.89	
276+32.53	TO	277+50.00(RT.)	117.47'	X	3.00970 S.F. X 1/27	13.09	
277+50.00	TO	287+10.00(RT.)	960.00'	X	1.92708 S.F. X 1/27	68.52	
287+10.00	TO	302+50.00(RT.)	1,540.00'	X	2.50556 S.F. X 1/27	142.91	
302+50.00	TO	306+29.88(RT.)	379.88'	X	3.26250 S.F. X 1/27	45.90	
306+29.88	TO	307+52.41(RT.)	122.53'	X	3.61875 S.F. X 1/27	16.42	
307+52.41	TO	311+00.00(RT.)	347.59'	X	3.97500 S.F. X 1/27	51.17	
311+00.00	TO	312+00.00(RT.)	100.00'	X	3.00970 S.F. X 1/27	11.15	
312+00.00	TO	319+50.00(RT.)	750.00'	X	2.21995 S.F. X 1/27	61.67	
319+50.00	TO	320+28.06(RT.)	78.06'	X	1.92708 S.F. X 1/27	5.57	
320+20.13	TO	323+87.64(RT.)	367.51'	X	3.00970 S.F. X 1/27	40.97	
323+87.64	TO	325+10.17(RT.)	122.53'	X	2.75763 S.F. X 1/27	12.51	
325+10.17	TO	328+12.64(RT.)	302.47'	X	2.50556 S.F. X 1/27	28.07	
328+12.64	TO	328+87.64(RT.)	75.00'	X	2.67361 S.F. X 1/27	7.43	*
328+87.64	TO	333+79.30(RT.)	491.66'	X	2.84167 S.F. X 1/27	51.75	*
1035+00.00	TO	1037+97.75(RT.)	297.75'	X	2.84167 S.F. X 1/27	31.34	*
1037+97.75	TO	1043+44.20(RT.)	546.45'	X	2.12240 S. . X 1/27	42.96	*
BETWEEN MAINLINE SHOULDER AND RAMP NOSE (PLANIMETERED)							
RAMP "A"			3.00"	X	428.00 S.F. X 1/324	3.96	*
RAMP "D"			3.00"	X	540.00 S.F. X 1/324	5.00	*
RAMP "E"			3.00"	X	780.00 S.F. X 1/324	7.22	
MEDIAN SHOULDERS							
5' LENGTH							
272+95.09	TO	281+45.09(LT.)	850.00'	X	1.60000 S.F. X 1/27	50.37	
4' LENGTH							
281+45.09	TO	284+37.73(LT.)	292.64'	X	2.00000 S.F. X 1/27	21.68	
284+37.73	TO	328+12.64(LT.)	4,374.91'	X	1.18750 S.F. X 1/27	192.42	
328+12.64	TO	328+87.64(LT.)	75.00'	X	.98675 S.F. X 1/27	2.69	*
328+87.64	TO	333+79.30(LT.)	491.66'	X	.75000 S.F. X 1/27	13.66	*
1035+00.00	TO	1043+44.20(LT.)	844.20'	X	.75000 S.F. X 1/27	23.45	*
284+37.73	TO	301+02.41(RT.)	1,664.68'	X	.75000 S.F. X 1/27	46.24	
328+87.64	TO	333+79.30(RT.)	491.66'	X	.75000 S.F. X 1/27	13.66	*
1035+00.00	TO	1043+44.20(RT.)	844.20'	X	.75000 S.F. X 1/27	23.45	*
				SUB TOTAL		2,077.19 C.Y.	
						350.89 C.Y.	*
RAMP SHOULDERS							
RAMP "A"							
331+55.98	TO	333+55.98(LT.)	200.00'	X	1.06120 S.F. X 1/27	7.86	*
RAMP "B"							
1039+67.19	TO	1040+67.19(LT.)	100.00'	X	1.06120 S.F. X 1/27	3.93	*
RAMP "C"							
320+28.06	TO	321+28.06(RT.)	100.00'	X	.96354 S.F. X 1/27	3.57	
RAMP "D"							
1035+97.65	TO	1037+97.75(RT.)	200.10'	X	.96354 S.F. X 1/27	7.14	*
RAMP "E"							
320+29.19	TO	322+29.19(LT.)	200.00'	X	.96354 S.F. X 1/27	7.14	
RAMP "L"							
244+88.61	TO	245+88.61(LT.)	100.00'	X	1.52604 S.F. X 1/27	5.65	
245+88.61	TO	250+25.00(LT.)	436.39'	X	1.12500 S.F. X 1/27	18.18	
250+25.00	TO	250+52.85(LT.)	27.85'	X	2.02222 S.F. X 1/27	2.09	
250+52.85	TO	251+52.85(LT.)	100.00'	X	.83333 S.F. X 1/27	3.09	

ITEM 310 SUBBASE (REGULAR GRADING) C.Y.

LOCATION			CALCULATIONS			QUANTITY	
RAMP "M"							
244+90.65	TO	245+90.65(RT.)	100.00'	X	1.52604 S.F. X 1/27	5.65	
245+90.65	TO	252+25.00(RT.)	634.35'	X	1.12500 S.F. X 1/27	26.43	
RAMP "N"							
252+98.99	TO	257+69.71(RT.)	470.72'	X	1.12500 S.F. X 1/27	19.61	
257+69.71	TO	258+69.71(RT.)	100.00'	X	1.52604 S.F. X 1/27	5.65	
RAMP "P"							
254+31.00	TO	255+24.95(LT.)	93.95'	X	.56250 S.F. X 1/27	1.96	
255+24.95	TO	260+21.00(LT.)	496.05'	X	1.12500 S.F. X 1/27	20.67	
260+21.00	TO	261+55.59(LT.)	134.59'	X	2.02222 S.F. X 1/27	10.08	
261+55.59	TO	262+55.59(LT.)	100.00'	X	2.83924 S.F. X 1/27	10.52	
261+55.95	TO	262+55.95(RT.)	100.00'	X	.56250 S.F. X 1/27	2.08	
RAMP "Q"							
271+15.43	TO	276+50.00(RT.)	534.57'	X	2.02222 S.F. X 1/27	40.04	
276+50.00	TO	277+50.00(RT.)	100.00'	X	2.83924 S.F. X 1/27	10.52	
				SUB TOTAL		192.93 C.Y.	
						18.93 C.Y.	*
BAILEY ROAD							
UNDER APPROACH SLABS			6.00"	X	1240.00 S.F. X 1/324	22.96	
UNDER ITEM 305			6.00"	X	2092.82 S.F. X 1/324	38.76	
HUDSON DRIVE							
UNDER APPROACH SLABS			6.00"	X	1800.00 S.F. X 1/324	33.33	
UNDER ITEM 305			6.00"	X	3346.47 S.F. X 1/324	61.97	
				SUB TOTAL		157.02 C.Y.	
				GRAND TOTAL		2,427.14 C.Y.	
						369.82 C.Y.	*

ITEM 402 ASPHALT CONCRETE (70-85) C.Y.

LOCATION			CALCULATIONS			QUANTITY	
1 1/2" DEPTH							
RELOCATED GRAHAM ROAD							
ON ITEM 305			1.50"	X	9386.00 S.F. X 1/324	43.45	
RELOCATED 2ND STREET							
VARIES 3' TO 9'							
43+50.00	TO	45+39.80(RT.)	189.80'	X	.75000 S.F. X 1/27	5.27	
ALLENSIDE TEE-TURNAROUND							
52+73 ALLENSIDE			1.50"	X	7924.00 S.F. X 1/324	36.69	
CHARLES ST. CUL-DE-SAC							
PLANIMETERED			1.50"	X	7149.00 S.F. X 1/324	33.10	
NUTWOOD-CHARLES CONNECTOR							
49+39.30	TO	50+32.85(22'WIDE)	93.55'	X	2.75000 S.F. X 1/27	9.53	
BAILEY ROAD							
ON ITEM 305			1.50"	X	2092.82 S.F. X 1/324	9.69	
RELOCATED FRONT STREET							
ON ITEM 305			1.50"	X	13733.46 S.F. X 1/324	63.58	
54+68.72	TO	55+34.30(25.5'WIDE)	65.58'	X	3.18750 S.F. X 1/27	7.74	
HUDSON DRIVE							
ON ITEM 305			1.50"	X	3346.47 S.F. X 1/324	15.49	
				TOTAL		224.54 C.Y.	

ITEM 404 ASPHALT CONCRETE (70-85) C.Y.

LOCATION			CALCULATIONS			QUANTITY
1 1/4" DEPTH						
RELOCATED GRAHAM ROAD						
ON ITEM 305			1.25"	X	9386.00 S.F. X 1/324	36.21
PLANIMETERED 102+00-103+61.63			1.25"	X	3650.00 S.F. X 1/324	14.08
PLANIMETERED 121+39.74 -124+00			1.25"	X	5900.00 S.F. X 1/324	22.76
RELOCATED 2ND STREET						
VARIES 3' TO 9'						
43+50.00	TO	45+39.80(RT.)	189.80'	X	.62500 S.F. X 1/27	4.39
GRAHAM-SERVICE ROAD						
ON ITEM 301 (2.5"DEPTH)			2.50"	X	16329.40 S.F. X 1/324	126.00
ALLENSIDE CONNECTOR						
UNDER ITEM 301(2.5"DEPTH)			2.50"	X	4067.35 S.F. X 1/324	31.38
ALLENSIDE TEE-TURNAROUND						
52+73 ALLENSIDE			1.25"	X	7924.00 S.F. X 1/324	30.57
CHARLES ST. CUL-DE-SAC						
ON ITEM 402			1.25"	X	7149.00 S.F. X 1/324	27.58
DRIVE CONNECTION(1"DEPTH)			1.00"	X	480.00 S.F. X 1/324	1.48
NUTWOOD-CHARLES CONNECTOR						
49+39.30	TO	50+32.85(22'WIDE)	93.55'	X	2.29167 S.F. X 1/27	7.94
50+32.85	TO	50+57.85(21'WIDE)	25.00'	X	2.18750 S.F. X 1/27	2.03
BAILEY ROAD						
ON ITEM 305			1.25"	X	2092.82 S.F. X 1/324	8.07
RELOCATED FRONT STREET						
ON ITEM 305			1.25"	X	13733.46 S.F. X 1/324	52.98
54+68.72	TO	55+34.30(25.5'WIDE)	65.58'	X	2.65625 S.F. X 1/27	6.45
55+34.30	TO	55+56.31(22'WIDTH)	22.01'	X	2.29167 S.F. X 1/27	1.87
55+56.31	TO	59+20.30(27.5'WIDE)	363.99'	X	2.86458 S.F. X 1/27	38.62
59+20.30	TO	60+00.26(20'WIDTH)	79.96'	X	2.08333 S.F. X 1/27	6.17
60+00.26	TO	60+50.00(40'WIDTH)	49.74'	X	4.16667 S.F. X 1/27	7.68
RUDOLPH-ASHLAND CONNECTOR						
RUDOLPH-ASHLAND CONNECTOR						
UNDER ITEM 301(2.5"DEPTH)			2.50"	X	7786.65 S.F. X 1/324	60.08
HUDSON DRIVE						
ON ITEM 305			1.25"	X	3346.47 S.F. X 1/324	12.91
HUDSON DRIVE RESURFACING 1-1/2" AVG. DEPTH 44' WIDTH						
47+50.00	TO	48+96.58	146.58'	X	5.50000 S.F. X 1/27	29.86
					TOTAL	529.11 C.Y.

* QUANTITIES THAT INVOLVE STATE AND FEDERAL FUNDS ONLY.

CALCULATED BY JAE 7-67

CHECKED BY S.S.S. 10-68

COMPUTATIONS

FED. RD.	STATE	PROJECT	
2	OHIO		

SUM-8-17.63

29
460

ITEM 407 TACK COAT GAL.

LOCATION	CALCULATIONS		QUANTITY
RELOCATED GRAHAM ROAD			
ON ITEM 305	1,042.89 S.Y. X 0.100	GAL/S.Y.	104.29
RELOCATED 2ND STREET			
VARIES 3' TO 9'			
43+50.00 TO 45+39.80(RT.)	189.80' X 6.00' X 1/9 X 0.100	GAL/S.Y.	12.65
BAILEY ROAD			
ON ITEM 305	232.54 S.Y. X 0.100	GAL/S.Y.	23.25
RELOCATED FRONT STREET			
ON ITEM 305	1,525.94 S.Y. X 0.100	GAL/S.Y.	152.59
HUDSON DRIVE			
ON ITEM 305	371.83 S.Y. X 0.100	GAL/S.Y.	37.18
UNDER ITEM 404 47+50 TO 48+26.58 (44'WIDE)	146.58' x 44' x 1/9 x 0.100	GAL/S.Y.	71.66
RELOCATED GRAHAM RD			
UNDER ITEM 402			
54+68.72 TO 55+34.30 (25.5' WIDE)	65.58' x 22' x 1/9 x 0.100	GAL/S.Y.	18.58
UNDER ITEM 404			
55+34.30 TO 55+56.31 (22' WIDE)	22.01' x 22' x 1/9 x 0.100	GAL/S.Y.	5.38
55+56.31 TO 59+20.30 (27.5' WIDE)	363.99' x 27.5' x 1/9 x 0.100	GAL/S.Y.	111.22
59+20.30 TO 60+00.26 (20' WIDE)	79.96' x 20' x 1/9 x 0.100	GAL/S.Y.	17.77
60+00.26 TO 60+50 (40' WIDE)	49.74' x 40' x 1/9 x 0.100	GAL/S.Y.	22.11
		TOTAL	576.68 GAL.

ITEM 408 PRIME COAT GAL.

LOCATION	CALCULATIONS		QUANTITY
RELOC. GRAHAM RD.			
ON 8" DEPTH ITEM 304	152.80 C.Y. x 36/8.00 x 0.400	GAL/S.Y.	275.04
ALLENSIDE TEE-TURNAROUND			
ON 7'' DEPTH ITEM 310	24.44 C.Y. X 36/ 7.00 X 0.400	GAL/S.Y.	50.28
CHARLES ST. CUL-DE-SAC			
ON 7'' DEPTH ITEM 310	157.80 C.Y. X 36/ 7.00 X 0.400	GAL/S.Y.	324.62
NUTWOOD-CHARLES CONNECTOR			
49+39.30 TO 50+32.85(23'WIDE)	93.55' X 23.00' X 1/9 X 0.400	GAL/S.Y.	95.63
		TOTAL	745.57 GAL.

ITEM 409 SEAL COAT COVER AGGREGATE C.Y.

LOCATION	CALCULATIONS		QUANTITY
ON ITEM 451 TAPER 0' TO 12'			
269+45.09 TO 281+45.09	1,200.00' X 6.00' X 1/9 X 0.008	C.Y./S.Y.	6.40
RELOCATED GRAHAM ROAD			
ON 8''DEPTH ITEM 304	152.80 C.Y. X 36/ 8.00 X 0.008	C.Y./S.Y.	5.50
		TOTAL	11.90 C.Y.

ITEM 409 SEAL COAT COVER BITUMINOUS MATERIAL GAL.

LOCATION	CALCULATIONS		QUANTITY
ON ITEM 451 TAPER 0' TO 12'			
269+45.09 TO 281+45.09	1,200.00' X 6.00' X 1/9 X 0.300	GAL/S.Y.	240.00
RELOCATED GRAHAM ROAD			
ON 8''DEPTH ITEM 304	152.80 C.Y. X 36/ 8.00 X 0.300	GAL/S.Y.	206.28
		TOTAL	446.28 GAL.

ITEM 451-9'' REINFORCED PORTLAND CEMENT CONCRETE PAVEMENT S.Y.

LOCATION	CALCULATIONS	QUANTITY
ALL RAMP CURVE LENGTHS BASED ON CENTER OF PAVEMENT		
RAMP ''A''		
331+55.98 TO 333+55.98	206.54' X 15.00' X 1/9	344.24 *
333+55.98 TO 335+95.00	247.36' X 16.00' X 1/9	439.76 *
335+95.00 TO 336+37.03	43.59' X 17.00' X 1/9	82.33 *
336+37.03 TO 336+92.00	58.71' X 17.00' X 1/9	110.89 *
336+92.00 TO 338+35.01	152.73' X 19.00' X 1/9	322.44 *
PLANIMETERED 338+35.01 339+24.89	1,719.00 S.F. X 1/9	191.00 *
UNDER TYPE 2-A CURB	456.00' X .50' X 1/9	25.33 *
RAMP ''B''		
PLANIMETERED 1033+36.45-1033+95.82	3,099.00 S.F. X 1/9	344.33 *
1033+95.82 TO 1035+78.80	182.98' X 17.00' X 1/9	345.63 *
1035+78.80 TO 1038+59.20	285.10' X 16.00' X 1/9	506.84 *
1038+59.20 TO 1039+84.20	126.75' X 16.00' X 1/9	225.33 *
1039+84.20 TO 1040+67.19	84.66' X 16.00' X 1/9	150.50 *
UNDER TYPE 2-A CURB	277.00' X .50' X 1/9	15.39 *
RAMP ''C''		
320+28.06 TO 323+84.31	356.25' X 16.00' X 1/9	633.33
323+84.31 TO 325+34.31	150.00' X 20.00' X 1/9	333.33
325+34.31 TO 327+39.41	203.38' X 24.00' X 1/9	542.35
PLANIMETERED CURB RETURN AREAS	1,515.00 S.F. X 1/9	168.33
UNDER TYPE 2-A CURB	151.00' X .50' X 1/9	8.39
RAMP ''D''		
PLANIMETERED 1027+79.13-1028+72.32	3,260.00 S.F. X 1/9	362.22 *
1028+72.32 TO 1029+08.24	35.92' X 16.00' X 1/9	63.86 *
1029+08.24 TO 1031+80.47	269.19' X 16.00' X 1/9	478.56 *
1031+80.47 TO 1034+22.69	242.22' X 16.00' X 1/9	430.61 *
1034+22.69 TO 1035+97.65	176.91' X 16.00' X 1/9	314.51 *
1035+97.65 TO 1037+97.75	201.22' X 15.00' X 1/9	335.36 *
UNDER TYPE 2-A CURB	142.00' X .50' X 1/9	7.89 *
RAMP ''E''		
320+29.19 TO 322+29.19	201.57' X 15.00' X 1/9	335.95
322+29.19 TO 325+46.03	319.33' X 16.00' X 1/9	567.70
325+46.03 TO 328+70.55	324.52' X 16.00' X 1/9	576.92
328+70.55 TO 329+70.55	100.00' X 17.00' X 1/9	188.89
PLANIMETERED 329+70.55-331+20.24	3,570.00 S.F. X 1/9	396.67
UNDER TYPE 2-A CURB	171.00' X .50' X 1/9	9.50
RAMP ''L''		
244+88.61 TO 246+88.61	201.05' X 15.00' X 1/9	335.08
246+88.61 TO 247+50.01	61.74' X 16.00' X 1/9	109.77
247+50.01 TO 248+74.85	126.23' X 16.00' X 1/9	224.42
248+74.85 TO 250+52.85	178.00' X 16.00' X 1/9	316.44
250+52.85 TO 251+50.00	98.24' X 16.00' X 1/9	174.64
PLANIMETERED 251+50 TO 253+73.75	4,396.00 S.F. X 1/9	488.44
UNDER TYPE 2-A CURB	143.00' X .50' X 1/9	7.94
RAMP ''M''		
244+87.99 TO 250+89.91	601.92' X 16.00' X 1/9	1,070.08
250+89.91 TO 253+55.80	265.89' X 15.00' X 1/9	443.15
UNDER TYPE 2-A CURB	176.00' X .50' X 1/9	9.78
RAMP ''N''		
PLANIMETERED 249+86.39-251+48.99	2,108.00 S.F. X 1/9	234.22
251+48.99 TO 252+48.99	100.00' X 19.00' X 1/9	211.11
252+48.99 TO 256+69.71	420.72' X 16.00' X 1/9	747.95
256+69.71 TO 258+69.71	200.00' X 15.00' X 1/9	333.33
UNDER TYPE 2-A CURB	354.00' X .50' X 1/9	19.67
RAMP ''P''		
252+48.82 TO 253+79.74	130.92' X 14.00' X 1/9	203.65
253+79.74 TO 254+32.00	52.26' X 15.00' X 1/9	87.10
254+32.00 TO 255+24.95	92.95' X 15.50' X 1/9	160.08
255+24.95 TO 260+48.47	523.52' X 16.00' X 1/9	930.70
260+48.47 TO 262+55.59	205.31' X 16.00' X 1/9	365.00
UNDER TYPE 2-A CURB	365.00' X .50' X 1/9	20.28
RAMP ''Q''		
PLANIMETERED HUDSON TO 271+29.721	3,068.00 S.F. X 1/9	340.89
271+27.11 TO 273+99.78	269.43' X 16.00' X 1/9	478.99
273+99.78 TO 275+50.00	150.22' X 16.00' X 1/9	267.06
275+50.00 TO 277+50.00	200.00' X 15.00' X 1/9	333.33
UNDER TYPE 2-A CURB	153.00' X .50' X 1/9	8.50
	SUB TOTAL	11,682.96 S.Y.
		5,097.02 S.Y. *
RELOCATED 2ND STREET		
45+39.80 TO 46+69.00	129.20' X 13.00' X 1/9	186.62
46+69.00 TO 47+56.13	87.13' X 24.00' X 1/9	232.35
50+26.89 TO 53+23.00	296.11' X 22.00' X 1/9	723.82
PLANIMETERED 53+23 - 54+23.33	2,266.00 S.F. X 1/9	251.78
	SUB TOTAL	1354.57 S.Y.
RELOCATED GRAHAM ROAD		
103+61.63 TO 111+36.57(48'WIDE)	774.94' X 48.00' X 1/9	4,133.01
114+59.50 TO 120+44.59(48'WIDE)	585.09' X 48.00' X 1/9	3,120.48
120+70.36 TO 121+30.74(48'WIDE)	65.38' X 48.00' X 1/9	370.05
UNDER TYPE 2-A CURB	692.00' X .50' X 1/9	38.44
RELOCATED GRAHAM ROAD (TAPERED AREAS)		
105+80.00 TO 108+30.00(RT.)	250.00' X 8.00' X 1/9	222.22
106+77.42 TO 109+27.42(LT.)	250.00' X 7.00' X 1/9	194.44
109+77.40 TO 111+57.00(RT.)	179.60' X 7.50' X 1/9	149.67
	SUB TOTAL	8,228.25 S.Y.
	GRAND TOTAL	21,305.82 S.Y.
		5,097.02 S.Y. *

ITEM 451-10'' REINFORCED PORTLAND CEMENT CONCRETE PAVEMENT S.Y.

LOCATION	CALCULATIONS	QUANTITY
MAINLINE - 3 THRU LANES		
229+00.00 TO 236+00.71(LT.+RT.)	700.71' X 72.00' X 1/9	5,605.68
238+10.80 TO 272+95.09(LT.+RT.)	3,484.29' X 72.00' X 1/9	27,874.32
272+95.09 TO 281+45.09(RT.)	850.00' X 36.00' X 1/9	3,400.00
MAINLINE - 2 THRU LANES		
272+95.09 TO 281+45.09(LT.)	850.00' X 24.00' X 1/9	2,266.67
281+45.09 TO 328+12.64(LT.+RT.)	4,667.55' X 48.00' X 1/9	24,893.60
328+12.64 TO 333+79.30(LT.+RT.)	566.66' X 48.00' X 1/9	3,022.19 *
HORIZONTAL EQUATION - 333+79.30 = 1035+00		
1035+00.00 TO 1043+44.20(LT.+RT.)	844.20' X 48.00' X 1/9	4,502.40 *
ACCELERATION LANES		
RAMP A	1,000.00' X 12.50' X 1/9	666.62
		722.27 *
RAMP D	546.45' X 18.17' X 1/9	1,103.22 *
RAMP E	1,000.00' X 12.50' X 1/9	1,388.89
RAMP L	520.00' X 18.50' X 1/9	1,068.89
RAMP N	1,000.00' X 12.50' X 1/9	1,388.89
RAMP Q	1,000.00' X 12.50' X 1/9	1,388.89
(END TAPER 404 COVERED)(80' LONG)		
RAMPS A E N Q	320.00' X 1.00' X 1/9	35.56
DECELERATION LANES		
(PLANIMETERED CURVED AREAS)		
RAMP ''B''	6,176.00 S.F. X 1/9	686.22 *
RAMP ''C''	6,204.00 S.F. X 1/9	689.33
RAMP ''M''	5,212.00 S.F. X 1/9	579.11
RAMP ''P''	5,937.00 S.F. X 1/9	659.67
(12' LANE PORTION)		
313+00.00 TO 317+47.47(RAMP''C'')	447.47' X 12.00' X 1/9	596.63
236+88.59 TO 237+08.00(RAMP''M'')	19.41' X 12.00' X 1/9	25.88
238+96.00 TO 242+33.12(RAMP ''M'')	337.12' X 12.00' X 1/9	449.49
265+50.00 TO 269+68.86(RAMP''P'')	418.86' X 12.00' X 1/9	558.48
(100' RECOVERY AREA)(10' WIDE)		
RAMPS M P	200.00' X 10.00' X 1/9	222.22
(100' END TAPERS 12' TO 0')		
RAMPS C M P	300.00' X 6.00' X 1/9	200.00
(END TAPER 409 COVERED)(16.67' LONG)		
RAMPS C M P	50.00' X 1.00' X 1/9	5.56
(RAMP L COMBINED ACCEL DECEL LANE)(12' WIDE)		
229+00.00 TO 236+00.71	700.71' X 12.00' X 1/9	934.28
238+11.37 TO 239+68.61	155.23' X 12.00' X 1/9	206.97
	TOTAL	75,105.63 S.Y.
		10,036.30 S.Y. *

* QUANTITIES THAT INVOLVE STATE AND FEDERAL FUNDS ONLY.

CALCULATED BY JWE 7-67

CHECKED BY D.D. 10-68

COMPUTATIONS

FED. RD.	STATE	PROJECT	
2	OHIO		

30
460

SUM-8-17.63

EARTHWORK ANALYSIS

SHT. Nº	ITEM 203 LOCATION	EXCAVATION CU. YD.	EMBANKMENT CU. YD.	ROCK EMBANKMENT CU. YD.	GRANULAR EMBANKMENT CU. YD.
45	228 + 00 TO 234 + 00	1,500	12,959	7,034	
46	234 + 00 TO 244 + 00	15,471	22,229	33,795	
47	244 + 00 TO 254 + 00	135,547	685		
48	254 + 00 TO 264 + 00	120,982	670		
49	264 + 00 TO 274 + 00	126,504	1,626		
50	274 + 00 TO 284 + 00	88,285	1,942		
51	284 + 00 TO 294 + 00	17,948	2,642		
52	294 + 00 TO 304 + 00	1,604	14,010		
53	304 + 00 TO 314 + 00	33,135	4,108		
54	314 + 00 TO 324 + 00	39,307	1,040		
55	324 + 00 TO 333 + 79.30	47,687	707		
		20,463 *	232 *		
56	1035 + 00 TO 1045 + 00	31,576 *	4,276 *		
57	1045 + 00 TO 1049 + 25	322 *	17,734 *		
64	RAMP "A"	13,886 *	, 27 *		
66	RAMP "A" LOOP INTERIOR	4,216 *	,687 *		
67	RAMP "B"	10,868 *	0 *		
68-69	RAMP "C"	12,117	26,415		254
71-71	RAMP "D"	17,146 *	3,715 *		
72-73	RAMP "E"	42,435	6,295		
58-59	RAMP "L"	12,993	272		
60-61	RAMP "M"	20,023	279		
62	RAMP "N"	17,069	344		
63-64	RAMP "P"	27,468	350		
65	RAMP "Q"	14,389	123		
206-207	FRONT STREET	365	700		
212-213	RELOC. SECOND ST.	1,159	1,354		
218	BAILEY ROAD	48	0		
220	HUDSON DR. 48 +00 TO 49+50	415	21		
57	HUDSON DR. 70+00 TO 72+50	110	0		
227	GRAHAM ROAD	2,990	47,098		1,208
227	GRAHAM SERVICE ROAD	1,074	435		
225	NUTWOOD CHARLES CONN.	103	7		
222	RUDOLPH ASHLAND CONN.	784	0		
225	ALLENSIDE CONNECTOR	176	5		
	DRIVEWAYS (SEE THIS SHEET)	46 *	65 *		
		18	71		
225	CHARLES STREET CUL-DE-SAC	500	6	40,829	1,462
	TOTAL	843,306	146,393		
	TOTAL *	104,523 *	26,736 *		

ITEM 659 SEEDING

TOTAL AREA WITHIN LA AND R/W LINES INCLUDING TEMPORARY EASEMENTS AND SEWER EASEMENTS, WHERE SEEDING IS REQUIRED. THIS TOTAL DOES NOT INCLUDE AREAS OF ROCK CUT SLOPE, POROUS AGGREGATE MATERIAL, WORK AGREEMENTS, AND OTHER AREAS WHICH REQUIRE NO SEEDING.

	58,295	S.Y. *
ITEM 667	-2,626	S.Y. *
TOTAL ITEM 659 SEEDING	55,669	S.Y. *
	193,873	S.Y.
ITEM 667	-5,504	S.Y.
TOTAL ITEM 659 SEEDING	188,369	S.Y.

ITEM 659 COMMERCIAL FERTILIZER

193,873 S.Y. X 0.00009 TON/S.Y.	17.45	TONS
58,295 S.Y. X 0.00009 TON/S.Y.	5.25	TONS *

ITEM 659 AGRICULTURAL LIMING

193,873 S.Y. X 0.00045 TONS/S.Y.	87.24	TONS
58,295 S.Y. X 0.00045 TONS/S.Y.	26.23	TONS *

ITEM 203 PROOF ROLLING

*20,894.45/3000 (SHEET Nº 25)	7	HOURS*
83,334.28 /3000 (SHEET Nº 25)	27.8	HOURS

(COMPUTATION) DRIVEWAYS AND MAILBOX APPROACHES

DRIVEWAYS	LOCATION MAILBOX APPROACHES	ITEM 203 EARTHWORK EXCAVATION CU. YDS.	EMBANKMENT CU. YDS.	ITEM 304 AGGREGATE BASE CU. YDS.	ITEM 404 ASPHALT. CONCRETE CU. YDS.	ITEM 408 BITUMINOUS PRIME COAT GAL.	ITEM 203 SUBGRADE COMPACTION SQ. YDS.	ITEM 452 6" PLAIN PORTLAND CEMENT CONCRETE PAVEMENT SQ. YDS.
*STA. 101 + 00 LT. GRAHAM ROAD		2 *	10 *	9.27 *	3.73 *	26.66 *	66.67 *	
STA. 101 + 00 RT. GRAHAM ROAD		2	13	11.18	4.50	32.18	80.44	
	STA. 101 + 13 RT. GRAHAM ROAD			1.20	.49	3.47	8.67	
	*STA. 101 + 75 LT.			1.57 *	.63 *	4.53*	11.33 *	
*STA 101 + 94 LT. GRAHAM ROAD		2*	9*	7.89 *	3.18 *	22.71 *	56.78 *	
*STA 102 + 21 LT. GRAHAM ROAD		24*	46*	37.37*	15.06 *	107.54 *	268.86 *	
*STA. 121 + 50 LT. GRAHAM ROAD		7*	0	17.94*	7.23*	51.63 *	129.08 *	
STA 121 + 93 RT. GRAHAM ROAD		8	0	17.79	7.17	51.19	127.97	
*STA. 123 + 76 LT. GRAHAM ROAD		11 *	0	20.54 *	8.28*	59.11 *	147.78 *	
STA. 1 + 27 RT. SERVICE ROAD				1.53			18.05	8.88
STA. 2 + 75 RT. SERVICE ROAD							8.88	8.88
STA. 3 + 78 RT. SERVICE ROAD							8.88	8.88
STA. 4 + 70 RT. SERVICE ROAD							8.88	8.88
STA. 6 + 00 RT. SERVICE ROAD		2	44	7.41	2.99	21.33	62.21	8.88
STA. 48 + 65 RT. RUDOLPH AVE.							7.00	7.00
STA. 47 + 70 RT. HUDSON DRIVE.							7.77	7.77
STA. 56 + 43 LT. FRONT STREET							7.77	7.77
STA. 50 + 74 LT. ALLENSIDE							7.77	7.77
STA. 45 + 68.5 RT. CHARLES STREET		3	5	4.65	1.87	13.38	33.44	
STA. 45 + 85 LT. CHARLES STREET		2	5	5.79	2.33	16.67	41.67	
STA. 46 + 20 CHARLES STREET		1	4	4.59	1.85	13.22	33.06	
STA. 46 + 32 TO STA. 46 + 50 ℄ CHARLES STREET					1.56			
		46 *	65 *	94.58 *	38.11 *	272.18 *	680.50 *	
TOTAL		18	71	54.14	22.76	151.44	462.46	74.71

* QUANTITIES THAT INVOLVE STATE AND FEDERAL FUNDS ONLY.

CALCULATED BY JAE. 7-67

CHECKED BY DJJ. 10-68

CALCULATIONS

QUANTITY SUMMARY
ROADWAY

FED. RD.	STATE	PROJECT	
	OHIO		

31
460

SUM-8-17.63

TYPE CODE 7221 unless otherwise shown
*TYPE CODE Y-005

STATE, FEDERAL AND CITY OF CUYAHOGA FALLS PARTICIPATION

ITEM	18	23	24	25/276	207	30	45	46	47	48	49	50	51	52	53	54	55	62	63	64	65	69	72	73	84/1	84/2	84/3	206	212	213	218	220	222	224	225	229	237	409
201	LUMP																																					
202			7,703																																			
202			6,570																										68									
202			35,446																										140									
202			LUMP				LUMP																													LUMP			
202								LUMP																														
203						843306																																
203						146,355																																
203						40,820																																
203						1,462																																
203				83,334		463																																
203						28																																
404		100																																			
410		50																																			
410		50																																			
604							1	2	2	2	1				1													1										
604												2	1	1	2	1	1																					
606	1025																																					
606				8			1	1	2	2	1	2	6	2	4	2	2	1	1		1				1			1		4	3	3			6	3			
606										15x4.5	27.5	25	37.5	12.5	25																				325				
606							1	4		2	2								1		1							2	1	2	3	3			4				
606				1200/8			500	1037.5	534.5	378					300	350	1050	512.5	350	450	337.5	425	375		37.5	50	187.5	100	150	50					587.5				
606								2	3	1					2	2	2			1		1	1		1	1	2							1					
606											105	785					2																					
606									1		1																											
607																			83																			
615																												4350	168	385	500	1508						
608					251																																	
615		LUMP																																				
Spec.						6																																
616	5																																					
Spec.																																						
616	100																																					
656						36			36																													
607																																						
659						188,360																																
659						17.45																																
659						87.24																																
667								225				250	367	1315	1565	981	547						125	125											9		14		
601								2					25	15	45	18							26		15	12	16			3				36				
601																									25	25												
607																																						
607																																						

ITEM	TOTAL QUANTITY	UNIT	DESCRIPTION
201	LUMP	LUMP	CLEARING AND GRUBBING
202	7,703	SQ. YDS.	EXISTING PAVEMENT REMOVED AND DISPOSED OF
202	6,638	LIN. FT.	EXISTING CURB OR CURB AND GUTTER REMOVED AND DISPOSED OF
202	35,586	SQ. FT.	EXISTING SIDEWALK REMOVED AND DISPOSED OF
202	LUMP	LUMP	EXISTING STRUCTURES REMOVED
202	LUMP	LUMP	PORTIONS OF EXISTING STRUCTURES REMOVED
203	843,306	CU. YDS.	EXCAVATION NOT INCLUDING EMBANKMENT CONSTRUCTION
203	146,355	CU. YDS.	EMBANKMENT
203	40,820	CU. YDS.	EMBANKMENT USING ROCK, AS PER PLAN
203	1,462	CU. YDS.	EMBANKMENT USING GRANULAR MATERIAL, AS PER PLAN
203	83,797	SQ. YDS.	SUBGRADE COMPACTION
203	28	HOURS	PROOF ROLLING
404	100	CU. YDS.	Asphalt concrete or an approved bituminous premixed surface course for maint. traffic
410	50	CU. YDS.	TRAFFIC COMPACTED SURFACE, TYPE "A" OR "B"
410	50	CU. YDS.	TRAFFIC COMPACTED SURFACE, TYPE "C"
604	10	EACH	STANDARD MONUMENT ASSEMBLY
604	8	EACH	CENTERLINE REFERENCE MONUMENT
606	1025	LIN. FT.	TEMPORARY BEAM RAIL, AS PER PLAN
606	57	EACH	ANCHOR ASSEMBLY
606	645	LIN. FT.	GUARDRAIL, TYPE 4
606	26	EACH	BRIDGE TERMINAL ASSEMBLY
606	9362.5	LIN. FT.	GUARDRAIL, TYPE 5
606	28	EACH	APPROACH END ASSEMBLY SINGLE RAIL
606	300	LIN. FT.	GUARDRAIL, TYPE 5 BARRIER DESIGN
606	4	EACH	APPROACH END ASSEMBLY BARRIER RAIL
607	19,691	LIN. FT.	FENCE, TYPE CL, GALVANIZED STEEL
607	1	EACH	WALK GATE, TYPE CL, GALVANIZED STEEL
615	4665	SQ. YDS	TEMPORARY PAVEMENT, CLASS A
608	7680	SQ. FT.	4" CONCRETE WALK
615	LUMP	LUMP	TEMPORARY ROADS
Special	12	Each	Drilled Well Abandoned
616	8	TONS	CALCIUM CHLORIDE
Special	7	Each	Cleaning and Disposing of Septic Tank
616	100	M-GALS	WATER
656	36	M-Sq. Ft.	Roadside Cleanup
607	780	Lin. Ft.	Fence, Type CL, Galvanized Steel, Modified As Per Plan
			EROSION CONTROL *
659	188,360	SQ. YDS.	SEEDING AND MULCHING
659	17.45	TONS	COMMERCIAL FERTILIZER (12-12-12)
659	87.24	TONS	AGRICULTURAL LIMING
667	5,504	SQ. YDS.	SEEDING AND JUTE MATTING
601	197	Cu. Yds.	Rock Channel Protection Type B
601	89	Sq. Yds.	Rip Rap Using 6" Reinforced Concrete Slab

ALTERNATE BID ITEM

19,691	607	LIN. FT.	FENCE, TYPE CL, ALUMINUM
1	607	EACH	WALK GATE, TYPE CL, ALUMINUM
780	607	Lin. Ft.	Fence, Type CL, Aluminum, Modified As Per Plan

ROADWAY QUANTITY SUMMARY

QUANTITY SUMMARY

ROADWAY

FED.RD.	STATE	PROJECT	
	OHIO		

SUM-8-17.63

32
460

TYPE CODE 7221 UNLESS OTHERWISE SHOWN
*TYPE CODE Y-005

ITEM	TOTAL 31	STATE AND FEDERAL PARTICIPATION 25	30	55	56	57	66	70	71	409	245	246	18	276
201	LUMP												Lump	
202	7,703													
202	6,638													
202	35,586													
202	LUMP													
202	LUMP													
203	843,306		104,523											
203	146,393		26,736											
203	40,829													
203	1,462													
203	83,797	20,805	681											
203	28		7											
404	100													
410	50													
410	50													
604	10													
604	8			1	1									
606	1,925													
606	57							1						3
606	645													
606	26													
606	9825							1625						450
606	28													3
606	300													
606	4													
607	19,691									3,041				
607	1													
615	4,665													
608	7,680													
615	LUMP													
Special	12													
616	5													
Special	7					2								
616	100													
656	36													
607	780													
659	188,368		55,660											
659	17.45		5.25											
659	87.24		26.23											
667	5504			523	375	384	471	456	417					
601	197				2						3	14		
601	89													
607	19,691									3,041				
607	1													
607	780													

ITEM	TOTAL QUANTITY	UNIT
201	Lump	Lump
203	104,523	CU. YDS.
203	26,736	CU. YDS.
203	21,576	SQ. YDS.
203	7	HOURS
604	2	EACH
606	4	EACH
606	612.5	EACH
606	3	Each
607	3,041	LIN. FT.
Special	1	Each
Special	2	Each
659	55,660	SQ. YDS.
659	5.25	TONS
659	26.23	TONS
667	2,626	SQ. YDS.
601	19	Cu. Yds.
601		Sq. Yds.
607	3,041	LIN. FT.

GRAND TOTAL ITEM	QUANTITY	UNIT	DESCRIPTION
201	LUMP	LUMP	CLEARING AND GRUBBING
202	7,703	SQ. YDS.	EXISTING PAVEMENT REMOVED AND DISPOSED OF
202	6,638	LIN. FT.	EXISTING CURB OR CURB AND GUTTER REMOVED AND DISPOSED OF
202	35,586	SQ. FT.	EXISTING SIDEWALK REMOVED AND DISPOSED OF
202	LUMP	LUMP	EXISTING STRUCTURES REMOVED
202	LUMP	LUMP	PORTIONS OF EXISTING STRUCTURES REMOVED
203	947,829	CU. YDS.	EXCAVATION NOT INCLUDING EMBANKMENT CONSTRUCTION
203	173,129	CU. YDS.	EMBANKMENT
203	40,829	CU. YDS.	EMBANKMENT USING ROCK, AS PER PLAN
203	1,462	CU. YDS.	EMBANKMENT USING GRANULAR MATERIAL, AS PER PLAN
203	105,373	SQ. YDS.	SUBGRADE COMPACTION
203	35	HOURS.	PROOF ROLLING
404	100	CU. YDS.	Asphalt concrete or an approved bituminous premixed surface course for maintaining traffic
410	50	CU. YDS.	TRAFFIC COMPACTED SURFACE, TYPE A OR "B"
410	50	CU. YDS.	TRAFFIC COMPACTED SURFACE, TYPE "C"
604	10	EACH	STANDARD MONUMENT ASSEMBLY
604	10	EACH	CENTERLINE REFERENCE MONUMENT.
606	1,925	LIN. FT.	TEMPORARY BEAM RAIL, AS PER PLAN
606	61	EACH	ANCHOR ASSEMBLY
606	645	LIN. FT.	GUARDRAIL, TYPE 4
606	26	EACH	BRIDGE TERMINAL ASSEMBLY
606	9975	LIN. FT.	GUARDRAIL, TYPE 5
606	31	EACH	APPROACH END ASSEMBLY SINGLE RAIL
606	300	LIN. FT.	GUARDRAIL, TYPE 5 BARRIER DESIGN
606	4	EACH	APPROACH END ASSEMBLY BARRIER RAIL
607	22,732	LIN. FT.	FENCE, TYPE CL, GALVANIZED STEEL
607	1	EACH	WALK GATE, TYPE CL, GALVANIZED STEEL
615	4,665	SQ. YDS	TEMPORARY PAVEMENT, CLASS - A
608	7,680	SQ. FT.	4" CONCRETE WALK
615	LUMP	LUMP	TEMPORARY ROADS,
Special	13	Each	Drilled Well Abandoned
616	5	TONS	CALCIUM CHLORIDE
Special	9	Each	Cleaning and Disposing of Septic Tank
616	100	M-GALS	WATER
656	36	M-Sq. Ft.	Roadside Cleaning
607	780	Lin. Ft.	Fence, Type CL, Galvanized Steel, Modified As Per Plan
			EROSION CONTROL *
659	244,038	SQ. YDS.	SEEDING AND MULCHING
659	22.70	TONS	COMMERCIAL FERTILIZER (12-12-12)
659	113.47	TONS	AGRICULTURAL LIMING
667	8,130	SQ. YDS.	SEEDING AND JUTE MATTING
601	216	Cu. Yds.	Rock Channel Protection, Type B
601	89	Sq. Yds.	Rip Rap, Using 6" Reinforced Concrete Slab
			ALTERNATE BID ITEM
607	22,732	LIN. FT.	FENCE, TYPE CL, ALUMINUM
607	1	EACH	WALK GATE, TYPE CL, ALUMINUM
607	780	Lin. Ft.	Fence, Type CL, Aluminum, Modified As Per Plan

ROADWAY QUANTITY SUMMARY

QUANTITY SUMMARY
DRAINAGE

FED.RD.	STATE	PROJECT	
	OHIO		

33
460

SUM - 8 - 17.63

TYPE CODE 7221

FEDERAL, STATE & CITY OF CUYAHOGA FALLS PARTICIPATION

ITEM	20	45	46	47	48	49	50	51	52	53	54	55	58	59	60	61	62	63	64	65	68	69	72	73	206	207	212	213	220	225	241	242	243
202		81	85																				63						75			
202			33																	1						1	1	3	167				
202						1	2																										
202					1		3	2	1											2				1	5		1	3					
504	10,000																																
602			3.7	0.5					0.3	0.6	0.3	2.5			0.3												0.2	1.0		0.7	1.1	1.3	4.8
603																																	
603																																	
603																																	
603																																	
603																																	
603																																	
603		164																															
603																																	
603												34																					
603									34				23				32		24			32			32			30					
603						42	56																				41	158					
603		69	247	156	268	375	322	39	92	92	177																	6	460				
603				25	92																												
603				518	167		6																										
603				68	119	6																											
603							350																										
603				214																													
603							250				186																						
603						200	200																										
603						731																											
603					171	75						308																					
603												150																					
603					424																								570				
603																																	
603			210																											221			
603												144																					
603												46																					
603			152																						30				15				
603					112	307																											
603					100	109	238	126																									
603															134													50					
603												48																					
603											111	200																					
603												28																					
603																							98							168			
603	200																																
603		40	80	110	80	140	90	40	30	30	30	90	30	10	30		30	10	30	20	10		40	10		20		30	50				
603				108			44			1																	45		124				
603		40			58		49																										
603										33																							
603							33																										
603					59	56																											
604		1		2	2	3	6				1	2												1									
604								1				1																					
604					3																							1					
604																										2			1				
604																																	
604			2																														
604				3	4	10	2								1														3				
604						1	3																										
604				1																													
604		1	2	2	1	4																							1				
604				2	1																												
604							1																										
604					1																												
604					1																												
604					1	3																						2	1				
604							2																										
604							2	2																									
604											1																						
604		1	1			1	1				1	2												1									
604																										1			1				
604							1		1	1	1	1																					
604																																	
605								1,000	2,021	1212	118		48				214	299				288	347	171	195	511	280	66	531		196			
605		1055	1504														619	287	445	577										1352			
605			410	2886	2827	2897	2973	960					440	50	285	425								263	115									
605										1092	2941	1088		273										150	50									
605														115																				

ITEM	QUANTITY	UNIT	DESCRIPTION
202	241	LIN. FT.	PIPE REMOVED OVER 15"
202	293	LIN. FT.	PIPE REMOVED 15" UNDER
202	9	EACH	CATCH BASIN OR INLET REMOVED OR ABANDONED
202	13	EACH	MANHOLE REMOVED OR ABANDONED
504	10,000	SQ. FT.	SHEET PILING LEFT IN PLACE
602	17.3	CU. YDS.	CONCRETE MASONRY
603	—	LIN. FT.	18" CONDUIT, TYPE "A" 706.02 OR 706.08
603	—	LIN. FT.	21" CONDUIT, TYPE "A" 706.02 OR 706.08
603	168	LIN. FT.	24" x 38" CONDUIT, TYPE "A" 706.04 CL. HE II
603	21	LIN. FT.	30" CONDUIT, TYPE "A" 706.02 CL. V
603	39	LIN. FT.	30" CONDUIT, TYPE "A" 706.02 CL. V UNDER RAILROAD AS PER PLAN
603	160	LIN. FT.	36" CONDUIT, TYPE "A" 706.08 OR 706.02
603	164	LIN. FT.	36" CONDUIT, TYPE "A" 707.05 12 GAGE
603	—	LIN. FT.	54" CONDUIT, TYPE "A" 707.04 8 GAGE
603	34	LIN. FT.	48" RADIUS CONDUIT, TYPE B 706.02 CL. IV
603	207	LIN. FT.	6" CONDUIT, TYPE "B"
603	297	LIN. FT.	12" CONDUIT, TYPE "B"
603	2297	LIN. FT.	15" CONDUIT, TYPE "B"
603	123	LIN. FT.	18" CONDUIT, TYPE "B"
603	691	LIN. FT.	21" CONDUIT, TYPE "B"
603	193	LIN. FT.	24" CONDUIT, TYPE "B"
603	350	LIN. FT.	27" CONDUIT, TYPE "B"
603	214	LIN. FT.	27" CONDUIT, TYPE "B" 706.02 CL. V
603	436	LIN. FT.	30" CONDUIT, TYPE "B"
603	400	LIN. FT.	36" CONDUIT, TYPE "B"
603	731	LIN. FT.	42" CONDUIT, TYPE "B"
603	554	LIN. FT.	48" CONDUIT, TYPE "B"
603	150	LIN. FT.	48" CONDUIT, TYPE "B" 706.02 CL. IV
603	424	LIN. FT.	54" CONDUIT, TYPE "B"
603	570	LIN. FT.	54" CONDUIT, TYPE "B" 706.02 CL. IV
603	210	LIN. FT.	66" CONDUIT, TYPE "B"
603	365	LIN. FT.	66" CONDUIT, TYPE "B" 706.02 CL. IV
603	46	LIN. FT.	66" RADIUS CONDUIT, TYPE B 706.02 CL. IV
603	152	LIN. FT.	6" CONDUIT, TYPE "C"
603	449	LIN. FT.	12" CONDUIT, TYPE "C"
603	588	LIN. FT.	15" CONDUIT, TYPE "C"
603	134	LIN. FT.	15" CONDUIT, TYPE "C" 706.02 CL. IV
603	98	LIN. FT.	18" CONDUIT, TYPE "C"
603	311	LIN. FT.	36" CONDUIT, TYPE "C"
603	28	LIN. FT.	15" CONDUIT, TYPE C 706.01 E.S., 706.02 or 706.08 E.S.
603	267	LIN. FT.	12" CONDUIT, TYPE "D" 707.01 14 GAGE
603	200	LIN. FT.	4" CONDUIT, TYPE "F" 707.09 AS PER PLAN
603	1080	LIN. FT.	6" CONDUIT, TYPE "F"
603	325	LIN. FT.	12" CONDUIT, TYPE "F"
603	147	LIN. FT.	15" CONDUIT, TYPE "F"
603	33	LIN. FT.	18" CONDUIT, TYPE "F"
603	33	LIN. FT.	21" CONDUIT, TYPE "F"
603	115	LIN. FT.	24" CONDUIT, TYPE "F"
604	18	EACH	MANHOLE, STANDARD Nº 1
604	2	EACH	MANHOLE, STANDARD Nº 1-A
604	4	EACH	MANHOLE, STANDARD Nº 2
604	1	EACH	MANHOLE, RECONSTRUCTED TO GRADE
604	3	EACH	MANHOLE ADJUSTED TO GRADE
604	2	EACH	STANDARD Nº 1 SIDE DITCH INLET
604	23	EACH	STANDARD Nº 2-A-6 PAVED SHOULDER INLET
604	4	EACH	STANDARD Nº 2-A-8 PAVED SHOULDER INLET
604	1	EACH	STANDARD Nº 2-A-10 PAVED SHOULDER INLET
604	10	EACH	STANDARD Nº 2-10 MEDIAN INLET, MODIFIED AS PER PLAN
604	4	EACH	STANDARD Nº 2-A-12 PAVED SHOULDER INLET
604	1	EACH	STANDARD Nº 2-A-16 PAVED SHOULDER INLET
604	1	EACH	STANDARD Nº 2-A-18 PAVED SHOULDER INLET
604	1	EACH	STANDARD Nº 2-A-20 PAVED SHOULDER INLET
604	7	EACH	INLET, CUY. FALLS Nº. 1
604	5	EACH	INLET, CUY. FALLS Nº. 3
604	7	EACH	CATCH BASIN, STANDARD Nº. 2-2A
604	1	EACH	CATCH BASIN, STANDARD Nº. 4
604	8	EACH	CATCH BASIN, STANDARD Nº 5
604	2	EACH	CATCH BASIN, STANDARD Nº 6
604	5	EACH	CATCH BASIN, STANDARD Nº 8
604	—	EACH	CATCH BASIN, ADJUSTED TO GRADE
605	196	LIN. FT.	AGGREGATE DRAINS
605	11,212	LIN. FT.	6" SHALLOW PIPE UNDERDRAINS
605	16,081	LIN. FT.	6" SHALLOW PIPE UNDERDRAINS 707.01 TYPE III OR 707.12
605	5,772	LIN. FT.	6" DEEP PIPE UNDERDRAINS
605	315	LIN. FT.	6" UNCLASSIFIED PIPE UNDERDRAINS

QUANTITY SUMMARY
DRAINAGE

FED.RD.	STATE	PROJECT	
	OHIO		

34
460

SUM - 8 - 17.63

TYPE CODE 7221

FEDERAL & STATE PARTICIPATION ONLY															FEDERAL, STATE & CITY OF CUYAHOGA FALLS PARTICIPATION											GRAND TOTAL			
ITEM	55	56	66	67	70	71	229	245	246					TOTAL	33 SUB-TOTAL			72		218		244			TOTAL	ITEM	QUANTITY	UNIT	DESCRIPTION
202							436							436	241										241	202	677	LIN. FT.	PIPE REMOVED, OVER 15"
202															263										263	202	263	LIN. FT.	PIPE REMOVED, 15" UNDER
202															5										5	202	5	EACH	CATCH BASIN or INLET REMOVED OR ABANDONED
202															19			1							20	202	20	EACH	MANHOLE REMOVED OR ABANDONED
504															10,000										10,000	504	10,000	SQ. FT.	SHEET PILING LEFT IN PLACE
602		0.6					4.9	0.7	0.6					6.8	17.3							1.9			19.2	602	26	CU. YDS.	CONCRETE MASONRY
603									76					76	—										—	603	76	LIN. FT.	18" CONDUIT, TYPE 'A', 706.02 OR 706.08
603								86						86	—										—	603	86	LIN. FT.	21" CONDUIT, TYPE 'A', 706.02 OR 706.08
603															168										168	603	168	LIN. FT.	24" x 38" CONDUIT, TYPE 'A', 706.04 CL. HE II
603															21										21	603	21	LIN. FT.	30" CONDUIT, TYPE 'A', 706.02 CL. V
603															35										35	603	35	LIN. FT.	30" CONDUIT, TYPE 'A', 706.02 CL. V UNDER RAILROAD AS PER PLAN
603															160										160	603	160	LIN. FT.	36" CONDUIT, TYPE 'A', 706.08 OR 706.02
603															164										164	603	164	LIN. FT.	36" CONDUIT, TYPE 'A', 707.05 12 GAGE
603															—							144			144	603	144	LIN. FT.	54" CONDUIT, TYPE 'A', 707.04 8 GAGE
603															34										34	603	34	LIN. FT.	48" RADIUS CONDUIT, TYPE B, 706.02 CL. IV
603	30													30	207										207	603	237	LIN. FT.	6" CONDUIT, TYPE "B"
603															297										297	603	297	LIN. FT.	12" CONDUIT, TYPE "B"
603	140	90					31							261	2257										2257	603	2558	LIN. FT.	15" CONDUIT, TYPE "B"
603															123										123	603	123	LIN. FT.	18" CONDUIT, TYPE "B"
603		218												218	691										691	603	909	LIN. FT.	21" CONDUIT, TYPE "B"
603															193										193	603	193	LIN. FT.	24" CONDUIT, TYPE "B"
603															350										350	603	350	LIN. FT.	27" CONDUIT, TYPE "B"
603															214										214	603	214	LIN. FT.	27" CONDUIT, TYPE "B", 706.02 CL. V
603															436										436	603	436	LIN. FT.	30" CONDUIT, TYPE "B"
603															400										400	603	400	LIN. FT.	36" CONDUIT, TYPE "B"
603															731										731	603	731	LIN. FT.	42" CONDUIT, TYPE "B"
603															554										554	603	554	LIN. FT.	48" CONDUIT, TYPE "B"
603															150										150	603	150	LIN. FT.	48" CONDUIT, TYPE "B", 706.02 CL. IV
603															424										424	603	424	LIN. FT.	54" CONDUIT, TYPE "B"
603															570										570	603	570	LIN. FT.	54" CONDUIT, TYPE "B", 706.02 CL. IV
603															210										210	603	210	LIN. FT.	66" CONDUIT, TYPE "B"
603															365										365	603	365	LIN. FT.	66" CONDUIT, TYPE "B", 706.02 CL. IV
603															46										46	603	46	LIN. FT.	66" RADIUS CONDUIT, TYPE B 706.02 CL. IV
603															152										152	603	152	LIN. FT.	6" CONDUIT, TYPE "C"
603															449										449	603	449	LIN. FT.	12" CONDUIT, TYPE "C"
603															588										588	603	588	LIN. FT.	15" CONDUIT, TYPE "C"
603															134										134	603	134	LIN. FT.	15" CONDUIT, TYPE "C" 706.02 CL. IV
603	150						30							180	98										98	603	278	LIN. FT.	18" CONDUIT, TYPE "C"
603															311										311	603	311	LIN. FT.	36" CONDUIT, TYPE "C"
603															28										28	603	28	LIN. FT.	15" CONDUIT, TYPE C, 706.01 E.S., 706.02 or 706.08 E.S.
603															267										267	603	267	LIN. FT.	12" CONDUIT, TYPE "D", 707.01 14 GAGE
603															200										200	603	200	LIN. FT.	4" CONDUIT, TYPE "F", 707.09 AS PER PLAN
603	30	30	10	20	30									120	1080										1080	603	1200	LIN. FT.	6" CONDUIT, TYPE "F"
603															325										325	603	325	LIN. FT.	12" CONDUIT, TYPE "F"
603															147										147	603	147	LIN. FT.	15" CONDUIT, TYPE "F"
603															33										33	603	33	LIN. FT.	18" CONDUIT, TYPE "F"
603															33										33	603	33	LIN. FT.	21" CONDUIT, TYPE "F"
603															115										115	603	115	LIN. FT.	24" CONDUIT, TYPE "F"
604															18										18	604	18	EACH	MANHOLE, STANDARD Nº 1
604															2										2	604	2	EACH	MANHOLE, STANDARD Nº 1-A
604															4										4	604	4	EACH	MANHOLE, STANDARD Nº 2
604															1										1	604	1	EACH	MANHOLE RECONSTRUCTED TO GRADE
604															3										3	604	3	EACH	MANHOLE ADJUSTED TO GRADE
604															2										2	604	2	EACH	STANDARD Nº 1 SIDE DITCH INLET
604															23										23	604	23	EACH	STANDARD Nº 2-A-6 PAVED SHOULDER INLET
604															4										4	604	4	EACH	STANDARD Nº 2-A-8 PAVED SHOULDER INLET
604							1							1	1										1	604	2	EACH	STANDARD Nº 2-A-10 PAVED SHOULDER INLET
604															10										10	604	10	EACH	STANDARD Nº 2-10 MEDIAN INLET, MODIFIED AS PER PLAN
604															4										4	604	4	EACH	STANDARD Nº 2-A-12 PAVED SHOULDER INLET
604															1										1	604	1	EACH	STANDARD Nº 2-A-16 PAVED SHOULDER INLET
604															1										1	604	1	EACH	STANDARD Nº 2-A-18 PAVED SHOULDER INLET
604															1										1	604	1	EACH	STANDARD Nº 2-A-20 PAVED SHOULDER INLET
604															7										7	604	7	EACH	INLET, CUY. FALLS Nº. 1
604															5										5	604	5	EACH	INLET, CUY. FALLS Nº. 3
604															7										7	604	7	EACH	CATCH BASIN, STANDARD Nº. 2-2A
604															1										1	604	1	EACH	CATCH BASIN, STANDARD Nº. 4
604	1	1												2	8										8	604	10	EACH	CATCH BASIN, STANDARD Nº 5
604															2										2	604	2	EACH	CATCH BASIN, STANDARD Nº 6
604	1	2												3	5										5	604	8	EACH	CATCH BASIN, STANDARD Nº 8
604															—					1					1	604	1	EACH	CATCH BASIN, ADJUSTED TO GRADE
605															196										196	605	196	LIN. FT.	AGGREGATE DRAINS
605			272	314	317									903	11,212										11,212	605	12,115	LIN. FT.	6" SHALLOW PIPE UNDERDRAINS
605															16,081										16,081	605	16,081	LIN. FT.	6" SHALLOW PIPE UNDERDRAINS, 707.01 TYPE III OR 707.12
605	1,435	1,654	395	95		357								3936	5,172										5772	605	5,708	LIN. FT.	6" DEEP PIPE UNDERDRAINS
605			87	282	324	40								733	315										315	605	1,048	LIN. FT.	6" UNCLASSIFIED PIPE UNDERDRAINS

QUANTITY SUMMARY
SANITARY & WATER MAIN

FED.RD.	STATE	PROJECT	
	OHIO		

35/460

SUM - 8 - 17.63

TYPE CODE - Y060

| FEDERAL STATE & CITY OF CUYAHOGA FALLS PARTICIPATION | | |

QUANTITY SUMMARY
PAVEMENT

FED.RD.	STATE	PROJECT	
	OHIO		

36
460

SUM-8-17.63

TYPE CODE 7221

FEDERAL, STATE, & CITY OF CUYAHOGA FALLS PARTICIPATION

ITEM	18	23	24	25	26	27	28	29	30	45	46	47	48	49	50	51	58	59	60	61	62	63	64	65	68	69	72	73	206	207	212	213	218	SUB-TOTAL ITEM	SUB-TOTAL QUANTITY	SUB-TOTAL UNIT	DESCRIPTION
301				3,348																														301	3,348	CU.YDS.	BITUMINOUS AGGREGATE BASE: T02.01(85-100) OR T02.09, RT-10 AS PER PLAN
304					7191				54																									304	7,245	CU.YDS.	AGGREGATE BASE
305					1,043																									27				305	1,070	SQ.YDS.	8" PORTLAND CEMENT CONCRETE BASE
305					2,257																							17	46					305	2,320	SQ.YDS.	9" PORTLAND CEMENT CONCRETE BASE
310						19891																								5				310	19,896	CU.YDS.	SUBBASE, GRADING A AS PER PLAN
310							2427																											310	2,427	CU.YDS.	SUBBASE
402							225																							1.				402	226	CU.YDS.	ASPHALT CONCRETE (70-85)
404							529		23																			1.		1.				404	554	CU.YDS.	ASPHALT CONCRETE (70-85)
404		100																																			
407								577																										407	577	GAL.	TACK COAT: T02.04, MS-2 OR RS-1; OR T02.02, RC-70 OR RC-250
408								746	152																									408	898	GAL.	BITUMINOUS PRIME COAT: T02.09, RT-2 OR RT-3
409								446																										409	446	GAL.	SEAL COAT BITUMINOUS MATERIAL: T02.09, RT-5 OR RT-10; OR T02.02, MC-800 OR MC-3000
409								12																										409	12	CU.YDS.	SEAL COAT COVER AGGREGATE Nº 8
451								75,106																										451	75,106	SQ.YDS.	10" REINFORCED PORTLAND CEMENT CONCRETE PAVEMENT
451								21,306																										451	21,306	SQ.YDS.	9" REINFORCED PORTLAND CEMENT CONCRETE PAVEMENT
452									75																									452	75	SQ.YDS.	6" PLAIN PORTLAND CEMENT CONCRETE PAVEMENT
518												32	15	19																			518	66	CU.YDS.	POROUS BACKFILL
605																		162		170	342	361		155		151		20			172			605	1,533	LIN.FT.	CONCRETE CURB, STANDARD TYPE 2-A
605																													480		232		22	605	743	LIN.FT.	CONCRETE CURB, STANDARD TYPE 2-B
605											721	1826	2,144	2,210	2,848	600	736	331	455	634	621	365	550	675			83	25	730			51	605	15,622	LIN.FT.	CONCRETE CURB, STANDARD TYPE 6
605																	213				260			165			137							605	775	LIN.FT.	CONCRETE CURB, STANDARD TYPE 7
605																											201							605	201	LIN.FT.	CONCRETE CURB, STANDARD TYPE 8
605																														175				605	175	LIN.FT.	CONCRETE CURB, STANDARD TYPE 8 MODIFIED AS PER PLAN
605																		136													76	693		605	905	LIN.FT.	COMBINATION CURB AND GUTTER, STANDARD TYPE 2
605																	74				87			85					57					605	303	LIN.FT.	CONCRETE CURB, SPECIAL AS PER PLAN
611											640																		228		60		138	611	1,066	SQ.YDS.	REINFORCED CONCRETE APPROACH SLAB (T-12")
611																																75		611	75	SQ.YDS.	REINFORCED CONCRETE APPROACH SLAB (T-13")
612																		15	19		10		30					15		19				612	117	SQ.YDS.	CONCRETE TRAFFIC ISLAND
612																															83			612	83	SQ.YDS.	CONCRETE MEDIAN-STANDARD
622										476	794	552	562	881																				622	4,065	LIN.FT.	CONCRETE BARRIER , AS PER PLAN
614		LUMP																																614	LUMP	LUMP	MAINTAINING TRAFFIC
SPECIAL			1,174																															SPECIAL	1,174	CU.YDS.	DRAINAGE CONNECTION, USING Nº 8 AGGREGATE
615	LUMP																																	615	LUMP	LUMP	FIELD OFFICE
	LUMP																																		LUMP	LUMP	CONSTRUCTION LAYOUT STAKES

PAVEMENT QUANTITY SUMMARY

QUANTITY SUMMARY
PAVEMENT

FED.RD.	STATE	PROJECT	
	OHIO		

37-460

SUM-8-1763

TYPE CODE 7221

STATE, FEDERAL, AND CITY OF CUYAHOGA FALLS PARTICIPATION						STATE AND FEDERAL PARTICIPATION																TOTAL			GRAND TOTAL			DESCRIPTION
ITEM	SUB-TOTAL 50	220	222	229		TOTAL			24	25	26	27	28	29	30			66	67	70	71	ITEM	QUANTITY	UNIT	ITEM	QUANTITY	UNIT	
301	3,348	✓				3,348				470												301	470	CU. YDS.	301	3818	CU. YDS.	BITUMINOUS AGGREGATE BASE: 702.01 (85-100) OR 702.09, RT-10 AS PER PLAN
304	7,245	✓				7,245					982				85							304	1082	CU. YDS.	304	8,327	CU. YDS.	AGGREGATE BASE
305	1,070	✓				1070																305	-	SQ. YDS.	305	1,070	SQ. YDS.	8" PORTLAND CEMENT CONCRETE BASE
305	2,320	44				2364																305	-	SQ. YDS.	305	2,364	SQ. YDS.	9" PORTLAND CEMENT CONCRETE BASE
310	19,896	✓				19,896						3,154										310	3154	CU. YDS.	310	23,050	CU. YDS.	SUBBASE, GRADING A AS PER PLAN
310	2,427	✓				2427							370									310	370	CU. YDS.	310	2,797	CU. YDS.	SUBBASE
402	226	✓				226																402	-	CU. YDS.	402	226	CU. YDS.	ASPHALT CONCRETE (70-85)
404	554	✓ 1				555									38							404	38	CU. YDS.	404	593	CU. YDS.	ASPHALT CONCRETE (70-85)
407	577	✓				577																407	-	GAL.	407	577	GAL.	TACK COAT: 702.04, MS-2 OR RS-1; OR 702.02, RC-70 OR RC-250
408	898	✓				898									272							408	272	GAL.	408	1170	GAL.	BITUMINOUS PRIME COAT: 702.09, RT-2 OR RT-3
409	446	✓				446																409	-	GAL.	409	446	GAL.	SEAL COAT BITUMINOUS MATERIAL: 702.09, RT-9 OR RT-10; OR 702.02 MC-800 OR MC-3000
409	12	✓				12																409	-	CU. YDS.	409	12	CU. YDS.	SEAL COAT COVER AGGREGATE Nº 8
451	75,106	✓				75,106								10,036								451	10,036	SQ. YDS.	451	85,142	SQ. YDS.	10" REINFORCED PORTLAND CEMENT CONCRETE PAVEMENT
451	21,306	✓				21,306								5,097								451	5,097	SQ. YDS.	451	26,403	SQ. YDS.	9" REINFORCED PORTLAND CEMENT CONCRETE PAVEMENT
452	75	✓				75																452	-	SQ. YDS.	452	75	SQ. YDS.	6" PLAIN PORTLAND CEMENT CONCRETE PAVEMENT
518	66	✓				66																518	-	CU. YDS.	518	66	CU. YDS.	POROUS BACKFILL
609	1,533	✓		969		2502												540	121	102		609	763	LIN. FT.	609	3,265	LIN. FT.	CONCRETE CURB, STANDARD TYPE 2-A
609	743	✓ 221				964																609	-	LIN. FT.	609	964	LIN. FT.	CONCRETE CURB, STANDARD TYPE 2-B
609	15,622	✓	772			16,394													53			609	53	LIN. FT.	609	16,447	LIN. FT.	CONCRETE CURB, STANDARD TYPE 6
609	775	✓				775												63		90		609	153	LIN. FT.	609	928	LIN. FT.	CONCRETE CURB, STANDARD TYPE 7
609	201	✓				201												145		170		609	315	LIN. FT.	609	516	LIN. FT.	CONCRETE CURB, STANDARD TYPE 8
609	179	✓				179																609	-	LIN. FT.	609	179	LIN. FT.	CONCRETE CURB, STANDARD TYPE 8, MODIFIED AS PER PLAN
609	505	✓		2,350		3855																609	-	LIN. FT.	609	3,855	LIN. FT.	COMBINATION CURB AND GUTTER, STANDARD TYPE 2
609	303	✓				303																609	-	LIN. FT.	609	303	LIN. FT.	CONCRETE CURB, SPECIAL AS PER PLAN
611	1,066	200				1,266																611	-	SQ. YDS.	611	1,266	SQ. YDS.	REINFORCED CONCRETE APPROACH SLAB (T=12")
611	75	✓		295		370																611	-	SQ. YDS.	611	370	SQ. YDS.	REINFORCED CONCRETE APPROACH SLAB (T=13")
612	117	✓				117												10				612	10	SQ. YDS.	612	127	SQ. YDS.	CONCRETE TRAFFIC ISLAND
612	83	✓				83												53				612	53	SQ. YDS.	612	136	SQ. YDS.	CONCRETE MEDIAN, STANDARD
622	4,065	✓				4,065																622	-	LIN. FT.	622	4,065	LIN. FT.	CONCRETE BARRIER , AS PER PLAN
614	LUMP	✓				LUMP																614	LUMP	LUMP	614	LUMP	LUMP	MAINTAINING TRAFFIC
SPECIAL	1174	✓				1174				278												SPECIAL	278	CU. YDS.	SPECIAL	1,452	CU. YDS.	DRAINAGE CONNECTION, USING Nº 8 AGGREGATE
615	LUMP	✓				LUMP																615	-	LUMP	615	LUMP	LUMP	FIELD OFFICE
	LUMP	✓				LUMP																	-	LUMP		LUMP	LUMP	CONSTRUCTION LAYOUT STAKES

STRUCTURE SUMMARY (OVER 20')

SUM-8-1772 ~ SEE SHEET Nº 328
SUM-8-1800 ~ SEE SHEET Nº 348
SUM-8-1812 ~ SEE SHEET Nº 363
SUM-8-1825 ~ SEE SHEET Nº 375
SUM-8-1845 ~ SEE SHEET Nº 384
SUM-8-1950 ~ SEE SHEET Nº 394
SUM-8-1527 ~ SEE SHEET Nº 404B

Signing Summary See Sheet No. 276
LIGHTING SUMMARY SEE SHEET Nº 257
RETAINING WALL SUMMARY SEE SHEET Nº *339*
Signals Summary See Sheet No. 292

PAVEMENT QUANTITY SUMMARY

FED. RD. DIVISION	STATE	PROJECT	
2	OHIO		

37-A
160

SUM-8-17.63

GENERAL SUMMARY

TYPE CODE 7221

ITEM	SHEET NUMBER	Fed., State & City	Federal & State	ITEM	QUANT.	UNIT	DESCRIPTION
							BUILDING REMOVALS
		Lump		202	Lump	Lump	Parcel No. 160-3-WL Removal of one 2-story brick and stucco residence, 1-story brick residence, 1½-story frame residence, frame garage, 2½-story frame residence
		~~Lump~~		~~202~~	~~Lump~~	~~Lump~~	~~Parcel No. 160-7-WD Removal of one 2-story frame residence~~
		~~Lump~~		~~202~~	~~Lump~~	~~Lump~~	~~Parcel No. 173-WL Removal of one 2-story aluminum sided residence, ½ of a 4-car frame garage~~
		~~Lump~~		~~202~~	~~Lump~~	~~Lump~~	~~Parcel No. 174-WL Removal of one 2-story brick residence, ½ of a 4-car frame garage~~
		~~Lump~~		~~202~~	~~Lump~~	~~Lump~~	~~Parcel No. 175-WL Removal of one 2-story concrete block residence, frame garage~~
		~~Lump~~		~~202~~	~~Lump~~	~~Lump~~	~~Parcel No. 189-WL Removal of one 2-story frame residence~~
		~~Lump~~		~~202~~	~~Lump~~	~~Lump~~	~~Parcel No. 195-WL Removal of one 2-story frame residence with attached garage~~
		~~Lump~~		~~202~~	~~Lump~~	~~Lump~~	~~Parcel No. 205-AWL, 205-AS, 205-AWA Removal of one 2½-story frame residence, 1-car frame garage~~
		~~Lump~~		~~202~~	~~Lump~~	~~Lump~~	~~Parcel No. 227-WL-WA Removal of one 1-story brick and concrete block building with concrete block addition~~
		~~Lump~~		~~202~~	~~Lump~~	~~Lump~~	~~Parcel No. 238-WL Removal of one 2-story frame residence, frame barn with attached shed, frame shed~~
		~~Lump~~		~~202~~	~~Lump~~	~~Lump~~	~~Parcel No. 245-WL Removal of one 2-story frame residence, 2-car concrete block garage, frame shed~~
		Lump		202	Lump	Lump	Parcel No. 248-WL Removal of one 2-story brick and frame office building, scale platform
		Lump		202	Lump	Lump	Parcel No. 251-WL-WA Removal of one 1-story concrete block warehouse, 2-story frame storage building
		~~Lump~~		~~202~~	~~Lump~~	~~Lump~~	~~Parcel No. 265-WL Removal of one 1½-story frame residence, 2-car frame garage~~
		Lump		202	Lump	Lump	Parcel No. 268-WL Removal of one 2-story frame residence, 1-car frame garage
		~~Lump~~		~~202~~	~~Lump~~	~~Lump~~	~~Parcel No. 288-WL-WA-S Removal of one 1-story frame residence, 2-car frame garage with attached patio~~
		Lump		202	Lump	Lump	Parcel No. 308-WL Removal of one 1-story aluminum sided residence
		~~Lump~~		~~202~~	~~Lump~~	~~Lump~~	~~Parcel No. 326-WL Removal of one 1-story aluminum sided residence, 2-car frame garage~~
			~~Lump~~	~~202~~	~~Lump~~	~~Lump~~	~~Parcel No. 330-WD Removal of one frame shed~~
		~~Lump~~		~~202~~	~~Lump~~	~~Lump~~	~~Parcel No. 335-WL Removal of one frame shed~~
		Lump		202	Lump	Lump	Parcel No. 341-WL Removal of one frame garage with attached patio
		Lump		202	Lump	Lump	Parcel No. 342-WL-WD Removal of one 1-story brick residence, 2-car frame aluminum sided garage
		Lump		202	Lump	Lump	Parcel No. 343-WL Removal of one 1½-story frame residence, frame shed
		Lump		202	Lump	Lump	Parcel No. 344-WL Removal of two 1½-story frame residences, 2-car frame garage
			~~Lump~~	~~202~~	~~Lump~~	~~Lump~~	~~Parcel No. 351-WL-WD Removal of one 2-story frame residence, 1-story concrete block and brick office and store building, 2-lumber sheds~~
			Lump	202	Lump	Lump	Parcel No. 352-WL Removal of one 1½-story frame residence with attached 2-car garage
			Lump	202	Lump	Lump	Parcel No. 353-WL-WA-Removal of one 1-story frame residence, frame garage
			Lump	202	Lump	Lump	Parcel No. 358-WL-T Removal of one 1-story frame residence
			Lump	202	Lump	Lump	Parcel No. 359-WL Removal of one 1-story frame residence, 1-car frame garage

QUANTITY SUMMARY

Rev. 4-2-70

LD0303
12-29-67

SUPERELEVATION DIAGRAMS

FED. RD.	STATE	PROJECT	
2	OHIO		

38
460

SUMMIT COUNTY
SUM. 8 - 17.63

SOUTHBOUND — NORTHBOUND

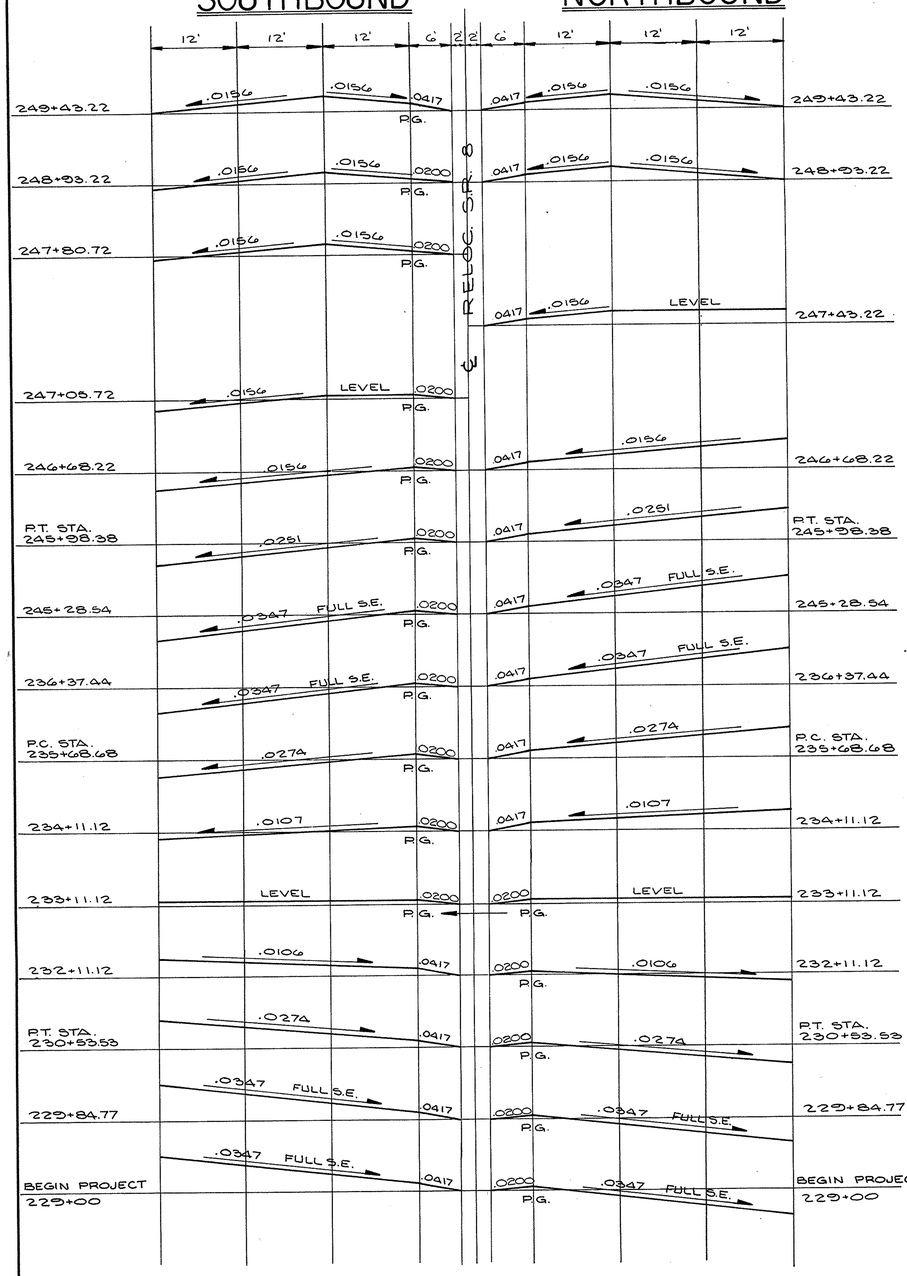

CURVE Nº. 4

Δ = 21° 25' 06" RT.
Dc = 1° 28' 00"
e = 0.0347 FT. PER FT.
P.I. = 223+31.98
P.C. = 215+93.19
P.T. = 230+53.53

CURVE Nº. 5

Δ = 15° 06' 08"
Dc = 1° 28' 00"
e = 0.0347 FT. PER FT.
P.I. = 240+86.53
P.C. = 235+68.68
P.T. = 245+98.38

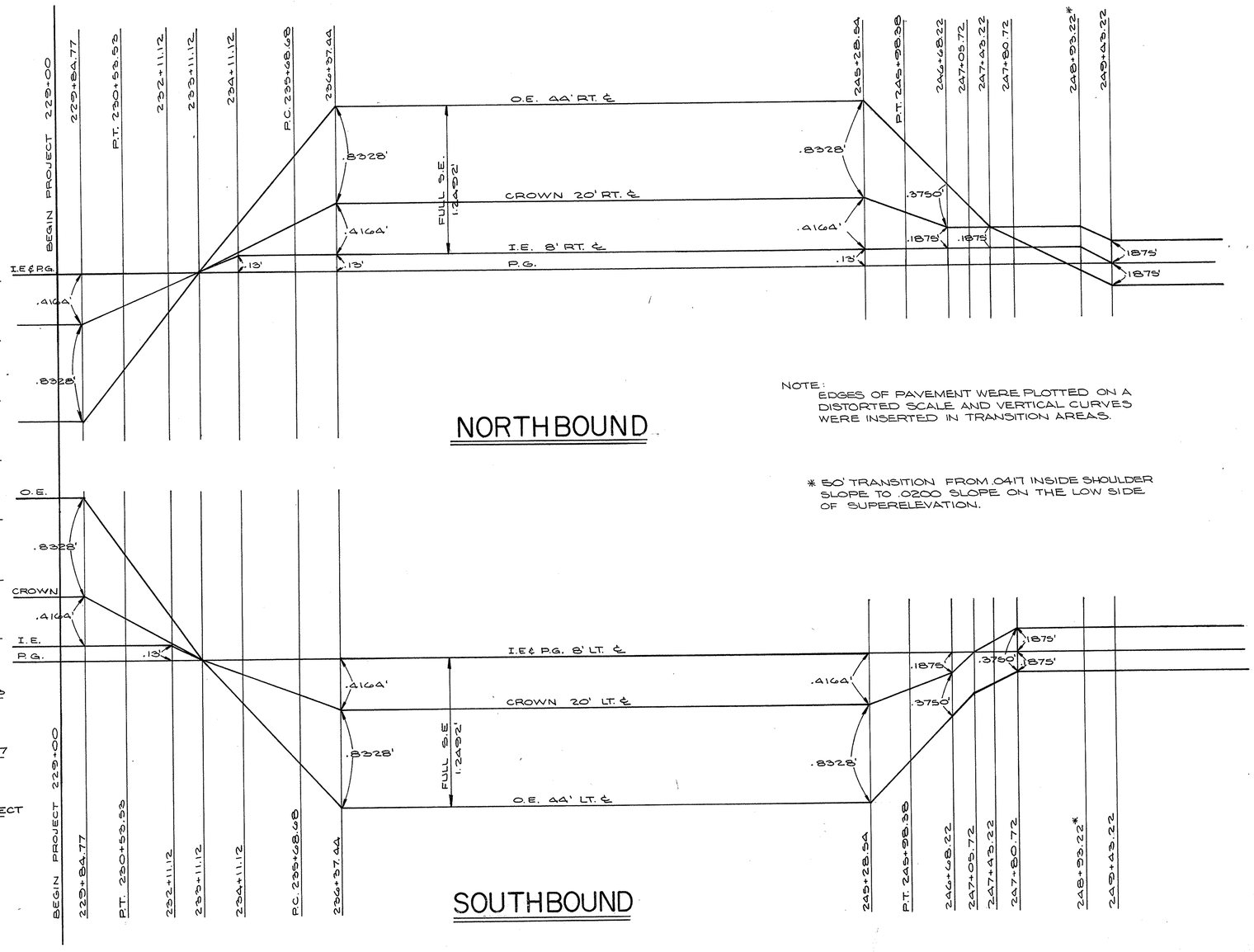

NOTE:
EDGES OF PAVEMENT WERE PLOTTED ON A DISTORTED SCALE AND VERTICAL CURVES WERE INSERTED IN TRANSITION AREAS.

* 50' TRANSITION FROM .0417 INSIDE SHOULDER SLOPE TO .0200 SLOPE ON THE LOW SIDE OF SUPERELEVATION.

SUPERELEVATION DIAGRAM - CURVE Nº. 4 & 5

K & E - AKRON

SUPERELEVATION TABLES

FED. RD.	STATE	PROJECT	
2	OHIO		

35
460

SUMMIT COUNTY
SUM.- 8 - 17.63

CURVE Nº 4

△ = 21° 25' 06"
S.E.= .0347 FT./FT.
P.C. STA 215+93.19
P.T. STA 230+53.52

SOUTH BOUND LANES		PROFILE GRADE		PROFILE GRADE	NORTH BOUND LANES	
44' LT. ℄	20' LT. ℄	8' LT. ℄	STATION	8' RT. ℄	20' RT. ℄	44' RT. ℄
1013.94	1013.11	1012.69	229+00	1012.56	1012.14	1011.31
1013.76	1012.93	1012.51	+25	1012.38	1011.96	1011.15
1013.58	1012.75	1012.33	+50	1012.20	1011.78	1011.00
1013.38	1012.57	1012.15	+75	1012.02	1011.62	1010.87
1013.29	1012.49	1012.08	+84.77	1011.95	1011.55	1010.83
1013.15	1012.37	1011.97	230+00	1011.85	1011.45	1010.76
1012.89	1012.16	1011.80	+25	1011.67	1011.31	1010.65
1012.62	1011.95	1011.62	+50	1011.49	1011.16	1010.56
1012.59	1011.93	1011.60	+53.53 PT	1011.47	1011.14	1010.55
1012.34	1011.75	1011.44	+75	1011.31	1011.02	1010.47
1012.08	1011.54	1011.25	231+00	1011.14	1010.88	1010.38
1011.81	1011.33	1011.07	+25	1010.96	1010.75	1010.31
1011.53	1011.10	1010.89	+50	1010.78	1010.61	1010.23
1011.25	1010.88	1010.70	+75	1010.60	1010.47	1010.15
1010.97	1010.66	1010.52	232+00	1010.43	1010.33	1010.08
1010.84	1010.57	1010.43	+11.12	1010.35	1010.27	1010.04
1010.68	1010.44	1010.32	+25	1010.25	1010.19	1010.00
1010.39	1010.23	1010.12	+50	1010.07	1010.05	1009.92
1010.18	1010.07	1010.98	+66.99	1009.95	1009.96	1009.87
1010.08	1010.00	1009.92	+75	1009.89	1009.91	1009.84
1009.83	1009.83	1009.76	+94.97	1009.76	1009.78	1009.77
1009.77	1009.77	1009.73	233+00	1009.72	1009.77	1009.77
1009.65	1009.67	1009.64	+11.12	1009.64	1009.71	1009.73
1009.49	1009.56	1009.54	+25	1009.55	1009.63	1009.69
1009.46	1009.54	1009.53	+27.27	1009.53	1009.62	1009.68
1009.21	1009.34	1009.36	+50	1009.39	1009.49	1009.61
1009.14	1009.30	1009.32	+55.25	1009.36	1009.47	1009.60
1008.94	1009.12	1009.18	+75	1009.24	1009.35	1009.53
1008.67	1008.90	1009.01	234+00	1009.09	1009.21	1009.46
1008.54	1008.80	1008.93	+11.12	1009.02	1009.15	1009.43
1008.39	1008.68	1008.83	+25	1008.93	1009.07	1009.38
1008.11	1008.47	1008.65	+50	1008.75	1008.94	1009.30
1007.84	1008.26	1008.47	+75	1008.59	1008.80	1009.23
1007.58	1008.05	1008.30	235+00	1008.42	1008.65	1009.15
1007.30	1007.85	1008.12	+25	1008.24	1008.52	1009.07
1007.03	1007.64	1007.94	+50	1008.07	1008.37	1008.98
1006.82	1007.48	1007.81	+68.68 PC	1007.94	1008.27	1008.92
1006.76	1007.43	1007.76	+75	1007.89	1008.23	1008.89
1006.50	1007.22	1007.59	236+00	1007.72	1008.08	1008.79
1006.24	1007.02	1007.41	+25	1007.54	1007.93	1008.68
1006.12	1006.93	1007.31	+37.44	1007.44	1007.85	1008.62
1006.01	1006.83	1007.23	+50	1007.36	1007.77	1008.56
1005.81	1006.64	1007.05	+75	1007.18	1007.60	1008.42
1005.63	1006.46	1006.88	237+00	1007.01	1007.43	1008.25
1005.45	1006.28	1006.70	+25	1006.83	1007.25	1008.08
1005.27	1006.10	1006.52	+50	1006.65	1007.07	1007.90
1005.09	1005.92	1006.34	+75	1006.47	1006.89	1007.72
1004.92	1005.75	1006.17	238+00	1006.30	1006.72	1007.55
1004.74	1005.57	1005.99	+25	1006.12	1006.54	1007.37
1004.56	1005.39	1005.81	+50	1005.94	1006.36	1007.19
1004.38	1005.21	1005.63	+75	1005.76	1006.18	1007.01

*NOTE PROFILE GRADE SHIFTS AT STA. 233+11.12 FROM N.B.L. TO S.B.L.

CURVE Nº 5

△ = 15° 06' 08"
S.E.= .0347 FT./FT.
P.C.STA. 235+68.68
P.T. STA. 245+98.38

SOUTH BOUND LANES		PROFILE GRADE		NORTH BOUND LANES		
44' LT. ℄	20' LT. ℄	8' LT. ℄	STATION	8' RT. ℄	20' RT. ℄	44' RT. ℄
1004.21	1005.04	1005.46	239+00	1005.59	1006.01	1006.84
1004.03	1004.86	1005.28	+25	1005.41	1005.83	1006.66
1003.85	1004.68	1005.10	+50	1005.23	1005.65	1006.48
1003.67	1004.50	1004.92	+75	1005.05	1005.47	1006.30
1003.50	1004.33	1004.75	240+00	1004.88	1005.30	1006.13
1003.32	1004.15	1004.57	+25	1004.70	1005.12	1005.95
1003.14	1003.97	1004.39	+50	1004.52	1004.94	1005.77
1002.96	1003.79	1004.21	+75	1004.34	1004.76	1005.59
1002.79	1003.62	1004.04	241+00	1004.17	1004.59	1005.42
1002.61	1003.44	1003.86	+25	1003.99	1004.41	1005.24
1002.43	1003.26	1003.68	+50	1003.81	1004.23	1005.06
1002.25	1003.08	1003.50	+75	1003.63	1004.05	1004.88
1002.08	1002.91	1003.33	242+00	1003.46	1003.88	1004.71
1001.90	1002.73	1003.15	+25	1003.28	1003.70	1004.53
1001.72	1002.55	1002.97	+50	1003.10	1003.52	1004.35
1001.54	1002.37	1002.79	+75	1002.92	1003.34	1004.17
1001.37	1002.20	1002.62	243+00	1002.75	1003.17	1004.00
1001.20	1002.03	1002.45	+25	1002.58	1003.00	1003.83
1001.04	1001.87	1002.29	+50	1002.42	1002.84	1003.67
1000.90	1001.73	1002.15	+75	1002.28	1002.70	1003.53
1000.77	1001.60	1002.02	244+00	1002.15	1002.57	1003.40
1000.66	1001.49	1001.91	+25	1002.04	1002.46	1003.29
1000.57	1001.40	1001.82	+50	1001.95	1002.37	1003.20
1000.49	1001.32	1001.74	+75	1001.87	1002.29	1003.12
1000.42	1001.25	1001.67	245+00	1001.80	1002.22	1003.05
1000.37	1001.20	1001.62	+25	1001.75	1002.17	1002.97
1000.37	1001.20	1001.61	+28.54	1001.74	1002.16	1002.95
1000.44	1001.20	1001.58	+50	1001.71	1002.09	1002.85
1000.54	1001.22	1001.56	+75	1001.69	1002.03	1002.71
1000.64	1001.25	1001.56	+98.38 P.T.	1001.68	1001.99	1002.59
1000.65	1001.25	1001.56	246+00	1001.68	1001.99	1002.59
1000.79	1001.30	1001.56	+25	1001.69	1001.95	1002.46
1000.94	1001.38	1001.59	+50	1001.72	1001.94	1002.37
1001.06	1001.45	1001.61	+68.22	1001.74	1001.94	1002.30
1001.10	1001.48	1001.63	+75	1001.76	1001.95	1002.29
1001.27	1001.63	1001.68	247+00	1001.81	1001.99	1002.22
1001.31	1001.67	1001.69	+05.72	1001.83	1002.01	1002.20
1001.43	1001.79	1001.75	+25	1001.88	1002.06	1002.16
1001.55	1001.90	1001.81	+43.22	1001.94	1002.13	1002.15
1001.58	1001.95	1001.83	+50	1001.96	1002.15	1002.15
1001.72	1002.10	1001.93	+75	1002.06	1002.25	1002.17
1001.76	1002.13	1001.95	+80.72	1002.08	1002.27	1002.18
1001.85	1002.23	1002.04	248+00	1002.17	1002.36	1002.22
1001.97	1002.35	1002.16	+25	1002.29	1002.48	1002.28
1002.09	1002.47	1002.28	+50	1002.41	1002.61	1002.33
1002.21	1002.59	1002.40	+75	1002.53	1002.72	1002.39
1002.30	1002.68	1002.49	+93.22	1002.60	1002.79	1002.43
1002.33	1002.71	1002.52	249+00	1002.63	1002.81	1002.44
1002.45	1002.83	1002.64	+25	1002.70	1002.88	1002.50
1002.54	1002.92	1002.73	+43.22	1002.73	1002.92	1002.54

CURVE Nº 485
SUPERELEVATION TABLES

SUPERELEVATION DIAGRAMS

FED. RD.	STATE	PROJECT	
2	OHIO		

SUMMIT COUNTY
SUM - 8 - 17.63

40
460

CURVE Nº 6
Δ = 28° 46' 09" RT.
Dc = 5° 00'
S.E. = 0.0833 FT. PER. FT.

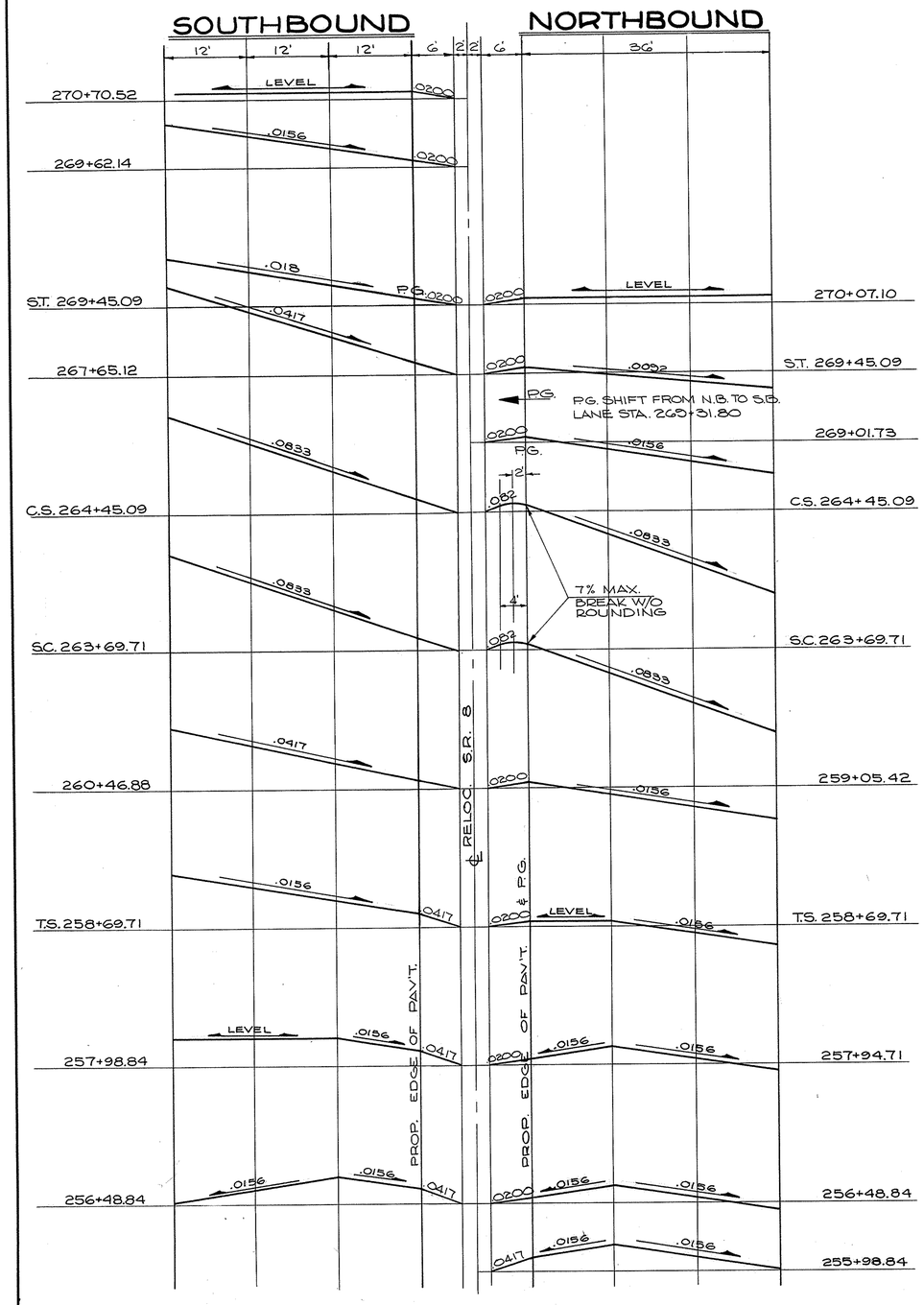

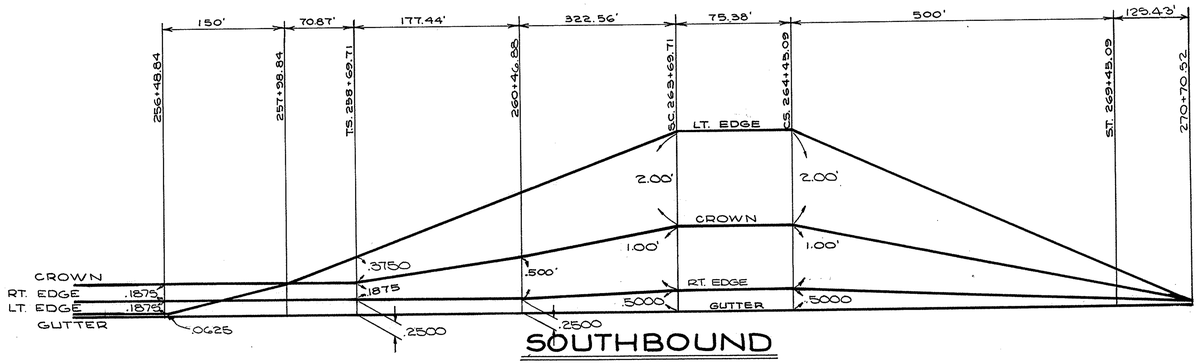

SOUTHBOUND

SEE CURVE Nº 7

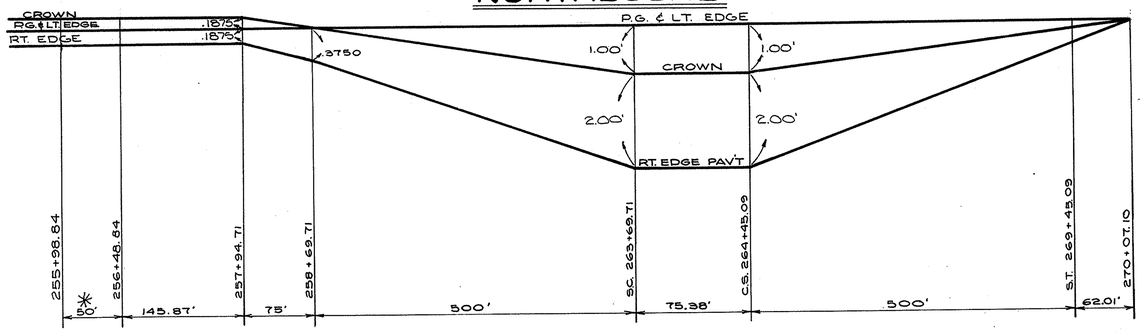

NORTHBOUND

* 50' TRANSITION FROM .0417 INSIDE SHOULDER SLOPE TO .0200 SLOPE ON THE LOW SIDE OF SUPERELEVATION.

SUPERELEVATION DIAGRAM · CURVE Nº 6

KAE

SUPERELEVATION DIAGRAMS

FED. RD.	STATE	PROJECT	
2	OHIO		

41
460

SUMMIT COUNTY
SUM - 8 - 17.63

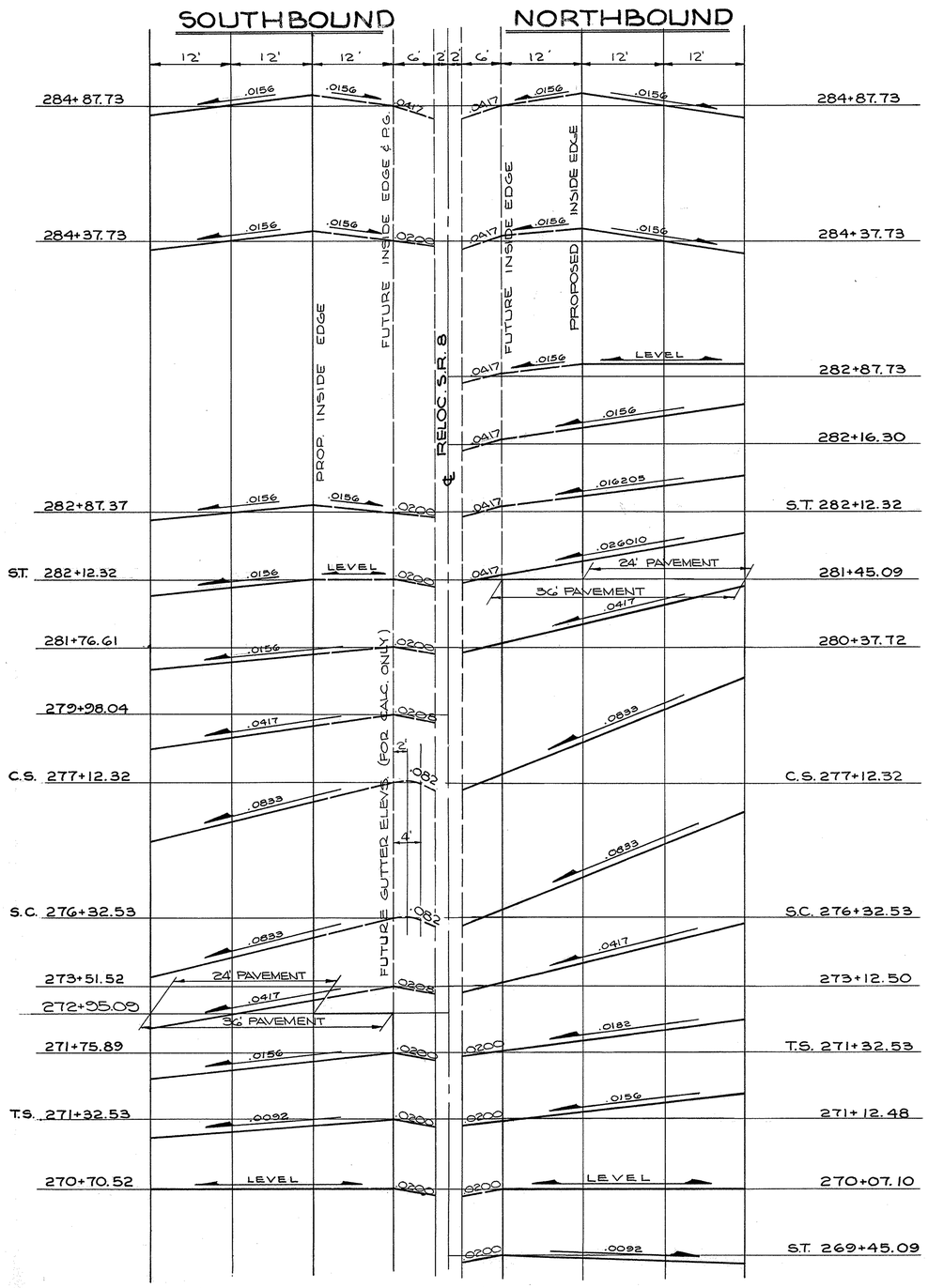

CURVE Nº 7
Δ = 28° 59' 23" LT.
Dc = 5° 00'
e = .0833 FT. PER. FT.

SEE CURVE Nº 6

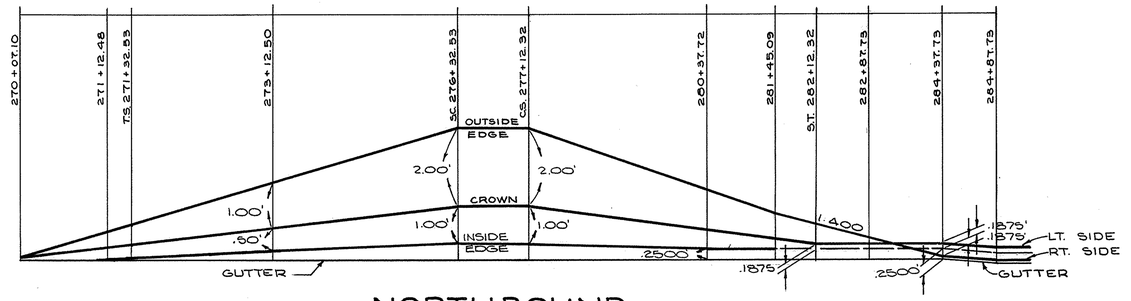

NORTHBOUND

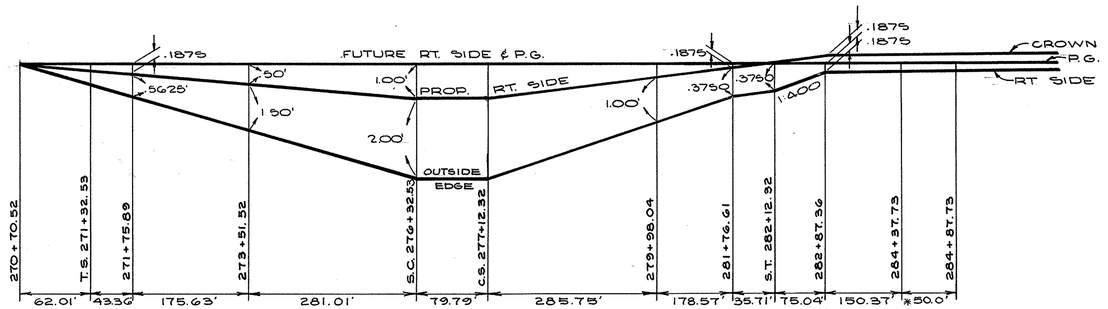

SOUTHBOUND

* 50' TRANSITION FROM .0417 INSIDE SHOULDER SLOPE TO .0200 SLOPE ON THE LOW SIDE OF SUPERELEVATION.

SUPERELEVATION DIAGRAM · CURVE Nº 7

K&E

FED. RD.	STATE	PROJECT	
2	OHIO		

42
460

SUMMIT COUNTY
SUM-8-17.63

SUPERELEVATION TABLES

CURVE Nº 6

$\Delta = 28^{\circ}\ 46'\ 09''$

S.E. = .0833 FT./FT.

SOUTH BOUND LANES						NORTH BOUND LANES				
44+00	32+00	20+00	8+00	2+00	CENTERLINE STATION	2+00	PROFILE GRADE 8+00	20+00	32+00	44+00
1004+41	1004+17	1003+93	1003+69	1003+57	269+31+52	1003+57	1003+69	1003+55	1003+42	1003+28
1004+43	1004+18	1003+93	1003+68	1003+56	269+25	1003+56	1003+68	1003+53	1003+38	1003+24
1004+54	1004+25	1003+96	1003+67	1003+53	269+00	1003+53	1003+65	1003+46	1003+27	1003+08
1004+68	1004+35	1004+02	1003+69	1003+53	268+75	1003+53	1003+65	1003+41	1003+18	1002+94
1004+84	1004+47	1004+11	1003+74	1003+56	268+50	1003+56	1003+68	1003+40	1003+12	1002+84
1005+03	1004+63	1004+22	1003+81	1003+61	268+25	1003+61	1003+73	1003+41	1003+08	1002+76
1005+25	1004+81	1004+36	1003+92	1003+69	268+00	1003+69	1003+81	1003+45	1003+08	1002+71
1005+50	1005+02	1004+53	1004+05	1003+81	267+75	1003+81	1003+93	1003+51	1003+10	1002+69
1005+60	1005+10	1004+60	1004+10	1003+85	267+65+12	1003+85	1003+97	1003+54	1003+11	1002+68
1005+76	1005+24	1004+71	1004+19	1003+93	267+50	1003+93	1004+05	1003+59	1003+13	1002+68
1006+02	1005+46	1004+85	1004+33	1004+05	267+25	1004+05	1004+18	1003+67	1003+17	1002+67
1006+28	1005+68	1005+07	1004+47	1004+17	267+00	1004+17	1004+30	1003+75	1003+21	1002+66
1006+54	1005+90	1005+25	1004+61	1004+29	266+75	1004+29	1004+43	1003+83	1003+24	1002+65
1006+79	1006+11	1005+43	1004+76	1004+42	266+50	1004+42	1004+55	1003+91	1003+28	1002+64
1007+05	1006+33	1005+62	1004+90	1004+54	266+25	1004+54	1004+68	1004+00	1003+32	1002+64
1007+31	1006+55	1005+80	1005+04	1004+66	266+00	1004+66	1004+80	1004+08	1003+35	1002+63
1007+57	1006+77	1005+98	1005+18	1004+78	265+75	1004+78	1004+93	1004+16	1003+39	1002+62
1007+83	1007+99	1006+16	1005+32	1004+90	265+50	1004+90	1005+05	1004+24	1003+42	1002+61
1008+09	1007+21	1006+34	1005+46	1005+02	265+25	1005+02	1005+18	1004+32	1003+46	1002+60
1008+35	1007+43	1006+52	1005+60	1005+15	265+00	1005+15	1005+30	1004+40	1003+50	1002+59
1008+60	1007+65	1006+70	1005+74	1005+27	264+75	1005+27	1005+43	1004+48	1003+53	1002+58
1008+86	1007+87	1006+88	1005+89	1005+39	264+50	1005+39	1005+55	1004+56	1003+57	1002+58
1008+91	1007+91	1006+91	1005+91	1005+41	264+45+09	1005+41	1005+57	1004+57	1003+57	1002+57
1009+01	1008+01	1007+01	1006+01	1005+51	264+25	1005+51	1005+68	1004+68	1003+68	1002+68
1009+14	1008+14	1007+14	1006+14	1005+64	264+00	1005+64	1005+80	1004+80	1003+80	1002+80
1009+26	1008+26	1007+26	1006+26	1005+76	263+75	1005+76	1005+92	1004+92	1003+92	1002+92
1009+28	1008+28	1007+28	1006+28	1005+78	263+69+71	1005+78	1005+95	1004+95	1003+95	1002+95
1009+27	1008+30	1007+33	1006+36	1005+88	263+50	1005+88	1006+03	1005+07	1004+10	1003+14
1009+24	1008+31	1007+38	1006+45	1005+98	263+25	1005+98	1006+14	1005+22	1004+30	1003+38
1009+21	1008+32	1007+42	1006+53	1006+09	263+00	1006+09	1006+24	1005+36	1004+48	1003+60
1009+17	1008+31	1007+46	1006+61	1006+18	262+75	1006+18	1006+33	1005+50	1004+66	1003+83
1009+12	1008+30	1007+49	1006+67	1006+27	262+50	1006+27	1006+41	1005+62	1004+83	1004+04
1009+06	1008+28	1007+51	1006+73	1006+34	262+25	1006+34	1006+49	1005+74	1004+99	1004+25
1009+00	1008+26	1007+52	1006+78	1006+42	262+00	1006+42	1006+56	1005+85	1005+15	1004+45
1008+92	1008+22	1007+53	1006+83	1006+48	261+75	1006+48	1006+61	1005+96	1005+30	1004+64
1008+84	1008+18	1007+52	1006+86	1006+53	261+50	1006+53	1006+67	1006+05	1005+44	1004+82
1008+76	1008+13	1007+51	1006+89	1006+58	261+25	1006+58	1006+71	1006+14	1005+57	1005+00
1008+66	1008+08	1007+50	1006+91	1006+62	261+00	1006+62	1006+75	1006+22	1005+69	1005+16
1008+56	1008+01	1007+47	1006+93	1006+65	260+75	1006+65	1006+78	1006+29	1005+81	1005+33
1008+45	1007+94	1007+44	1006+93	1006+68	260+50	1006+68	1006+80	1006+36	1005+92	1005+48
1008+43	1007+93	1007+43	1006+93	1006+68	260+46+88	1006+68	1006+80	1006+37	1005+93	1005+50
1008+33	1007+87	1007+41	1006+94	1006+69	260+25	1006+69	1006+81	1006+42	1006+02	1005+62
1008+20	1007+78	1007+37	1006+95	1006+70	260+00	1006+70	1006+82	1006+47	1006+11	1005+76
1008+07	1007+70	1007+32	1006+95	1006+70	259+75	1006+70	1006+82	1006+51	1006+20	1005+89
1007+93	1007+60	1007+27	1006+94	1006+69	259+50	1006+69	1006+81	1006+54	1006+28	1006+01
1007+78	1007+49	1007+21	1006+92	1006+67	259+25	1006+67	1006+79	1006+57	1006+35	1006+13
1007+66	1007+41	1007+16	1006+90	1006+65	259+05+42	1006+65	1006+77	1006+59	1006+40	1006+21
1007+62	1007+38	1007+14	1006+90	1006+65	259+00	1006+65	1006+77	1006+61	1006+42	1006+23
1007+46	1007+26	1007+06	1006+87	1006+62	258+75	1006+62	1006+74	1006+71	1006+52	1006+33
1007+42	1007+23	1007+05	1006+86	1006+61	258+69+71	1006+61	1006+73	1006+73	1006+54	1006+35
1007+29	1007+15	1007+01	1006+83	1006+58	258+50	1006+58	1006+70	1006+75	1006+56	1006+37
1007+11	1007+04	1006+97	1006+78	1006+53	258+25	1006+53	1006+65	1006+76	1006+57	1006+39
1006+92	1006+92	1006+91	1006+72	1006+48	258+00	1006+48	1006+59	1006+77	1006+58	1006+39
1006+91	1006+91	1006+91	1006+72	1006+47	257+98+84	1006+47	1006+59	1006+77	1006+58	1006+39
1006+89	1006+89	1006+90	1006+71	1006+46	257+94+71	1006+46	1006+58	1006+77	1006+58	1006+39
1006+79	1006+82	1006+85	1006+66	1006+41	257+75	1006+41	1006+53	1006+72	1006+53	1006+34
1006+66	1006+72	1006+78	1006+59	1006+34	257+50	1006+34	1006+46	1006+65	1006+46	1006+27
1006+52	1006+61	1006+70	1006+51	1006+26	257+25	1006+26	1006+38	1006+57	1006+38	1006+20
1006+37	1006+49	1006+62	1006+43	1006+18	257+00	1006+18	1006+30	1006+49	1006+30	1006+11
1006+21	1006+37	1006+52	1006+34	1006+09	256+75	1006+09	1006+21	1006+39	1006+21	1006+02
1006+05	1006+24	1006+42	1006+23	1005+98	256+50	1005+98	1006+10	1006+29	1006+10	1005+92
1006+04	1006+23	1006+42	1006+23	1005+98	256+48+84	1005+98	1006+10	1006+29	1006+10	1005+91
1005+88	1006+06	1006+25	1006+06	1005+81	256+25	1005+81	1006+00	1006+18	1006+00	1005+81
1005+70	1005+88	1006+07	1005+88	1005+63	256+00	1005+63	1005+88	1006+07	1005+88	1005+69
1005+69	1005+87	1006+06	1005+87	1005+62	255+98+84	1005+62	1005+87	1006+06	1005+87	1005+69

PROFILE GRADE SHIFTS FROM 8' RIGHT OF CENTERLINE TO 8' LEFT OF CENTERLINE AT STA. 269 + 31.80

CURVE Nº 7

$\Delta = 28^{\circ}\ 59'\ 23''$

S.E. = .0833 FT. FT.

SOUTH BOUND LANES						NORTH BOUND LANES				
44+00	32+00	20+00	PROFILE GRADE 8+00	2+00	CENTERLINE STATION	2+00	8+00	20+00	32+00	44+00
1019+16	1019+35	1019+54	1019+35		284+87.73		1019+35	1019+54	1019+35	1019+16
1019+03	1019+21	1019+40	1019+21		284+75		1019+25	1019+44	1019+25	1019+06
1018+76	1018+95	1019+14	1018+95		284+50		1019+05	1019+24	1019+05	1018+86
1018+63	1018+82	1019+01	1018+82		284+37.73		1018+95	1019+14	1018+95	1018+77
1018+50	1018+68	1018+87	1018+68		284+25		1018+81	1019+00	1018+83	1018+66
1018+23	1018+42	1018+61	1018+42		284+00		1018+55	1018+74	1018+60	1018+46
1017+97	1018+15	1018+34	1018+15		283+75		1018+28	1018+47	1018+36	1018+26
1017+70	1017+89	1018+08	1017+89		283+50		1018+02	1018+21	1018+13	1018+05
1017+44	1017+62	1017+81	1017+62		283+25		1017+75	1017+94	1017+90	1017+85
1017+17	1017+36	1017+55	1017+36		283+00		1017+49	1017+68	1017+66	1017+65
1017+04	1017+23	1017+42	1017+23		282+87.73		1017+36	1017+55	1017+55	1017+55
1017+04	1017+23	1017+41	1017+23		282+87.37		1017+36	1017+54	1017+54	1017+55
1016+88	1017+06	1017+25	1017+09		282+75		1017+22	1017+41	1017+45	1017+48
1016+55	1016+74	1016+92	1016+83		282+50		1016+96	1017+15	1017+25	1017+35
1016+22	1016+41	1016+60	1016+56		282+25		1016+69	1016+88	1017+05	1017+21
1016+11	1016+30	1016+48	1016+47		282+16.30		1016+60	1016+79	1016+98	1017+17
1016+06	1016+24	1016+43	1016+43		282+12.32		1016+56	1016+76	1016+95	1017+14
1015+86	1016+05	1016+24	1016+30		282+00		1016+43	1016+65	1016+86	1017+08
1015+49	1015+68	1015+86	1016+05		281+76.61		1016+18	1016+44	1016+70	1016+95
1015+46	1015+65	1015+84	1016+03		281+75		1016+16	1016+42	1016+68	1016+94
1015+07	1015+30	1015+54	1015+77		281+50		1015+90	1016+20	1016+51	1016+81
1014+67	1014+95	1015+23	1015+50		281+25		1015+63	1015+98	1016+33	1016+68
1014+28	1014+60	1014+92	1015+24		281+00		1015+37	1015+76	1016+15	1016+54
1013+88	1014+24	1014+61	1014+97		280+75		1015+10	1015+54	1015+97	1016+41
1013+48	1013+89	1014+30	1014+71		280+50		1014+84	1015+32	1015+80	1016+28
1013+29	1013+72	1014+15	1014+58		280+37.72		1014+71	1015+21	1015+71	1016+21
1013+09	1013+54	1013+99	1014+44		280+25		1014+58	1015+10	1015+62	1016+14
1012+69	1013+19	1013+68	1014+18		280+00		1014+33	1014+89	1015+45	1016+01
1012+66	1013+16	1013+66	1014+16		279+98.04		1014+31	1014+88	1015+44	1016+00
1012+29	1012+83	1013+37	1013+91		279+75		1014+09	1014+68	1015+28	1015+87
1011+90	1012+48	1013+07	1013+65		279+50		1013+84	1014+47	1015+11	1015+74
1011+50	1012+13	1012+76	1013+38		279+25		1013+59	1014+26	1014+93	1015+61
1011+11	1011+78	1012+45	1013+12		279+00		1013+34	1014+05	1014+76	1015+47
1010+71	1011+42	1012+14	1012+85		278+75		1013+09	1013+84	1014+59	1015+34
1010+31	1011+07	1011+83	1012+59		278+50		1012+84	1013+63	1014+42	1015+21
1009+92	1010+72	1011+52	1012+32		278+25		1012+59	1013+42	1014+25	1015+07
1009+52	1010+37	1011+21	1012+06		278+00		1012+34	1013+21	1014+07	1014+94
1009+12	1010+01	1010+90	1011+79		277+75		1012+09	1013+00	1013+90	1014+81
1008+73	1009+66	1010+60	1011+53		277+50		1011+84	1012+79	1013+73	1014+67
1008+33	1009+31	1010+29	1011+26		277+25		1011+60	1012+58	1013+56	1014+54
1008+13	1009+13	1010+13	1011+13		277+12.32		1011+47	1012+47	1013+47	1014+47
1008+00	1009+00	1010+00	1011+00		277+00		1011+34	1012+34	1013+34	1014+34
1007+73	1008+73	1009+73	1010+73		276+75		1011+07	1012+07	1013+07	1014+07
1007+47	1008+47	1009+47	1010+47		276+50		1010+81	1011+81	1012+81	1013+81
1007+28	1008+28	1009+28	1010+28		276+32+53		1010+62	1011+62	1012+62	1013+62
1007+25	1008+23	1009+22	1010+20		276+25		1010+54	1011+53	1012+52	1013+50
1007+11	1008+06	1009+00	1009+94		276+00		1010+26	1011+21	1012+16	1013+10
1006+98	1007+88	1008+78	1009+67		275+75		1009+98	1010+89	1011+80	1012+71
1006+85	1007+70	1008+56	1009+41		275+50		1009+69	1010+57	1011+44	1012+31
1006+72	1007+53	1008+34	1009+14		275+25		1009+41	1010+25	1011+08	1011+91
1006+59	1007+35	1008+12	1008+88		275+00		1009+13	1009+93	1010+72	1011+51
1006+46	1007+18	1007+90	1008+61		274+75		1008+85	1009+60	1010+36	1011+11
1006+32	1007+00	1007+67	1008+35		274+50		1008+57	1009+28	1010+00	1010+71
1006+19	1006+82	1007+45	1008+08		274+25		1008+29	1008+96	1009+64	1010+32
1006+06	1006+65	1007+23	1007+82		274+00		1008+01	1008+64	1009+28	1009+92
1005+93	1006+47	1007+01	1007+55		273+75		1007+73	1008+32	1008+92	1009+52
1005+81	1006+31	1006+81	1007+31		273+51.52		1007+46	1008+02	1008+58	1009+14
1005+80	1006+30	1006+79	1007+29		273+50		1007+44	1008+00	1008+56	1009+12
1005+67	1006+12	1006+57	1007+02		273+25		1007+16	1007+68	1008+20	1008+72
1005+60	1006+03	1006+46	1006+89		273+12.50		1007+02	1007+52	1008+02	1008+52
1005+53	1005+94	1006+35	1006+76		273+00		1006+88	1007+36	1007+84	1008+32
1005+40	1005+77	1006+13	1006+49	1006+37	272+75	1006+37	1006+60	1007+04	1007+48	1007+92
1005+27	1005+59	1005+91	1006+23	1006+11	272+50	1006+11	1006+31	1006+71	1007+12	1007+52
1005+14	1005+42	1005+69	1005+96	1005+84	272+25	1005+84	1006+03	1006+39	1006+75	1007+12
1005+01	1005+24	1005+47	1005+70	1005+58	272+00	1005+58	1005+74	1006+07	1006+39	1006+71
1004+88	1005+06	1005+25	1005+43	1005+31	271+75	1005+31	1005+46	1005+74	1006+03	1006+31
1004+75	1004+89	1005+03	1005+17	1005+05	271+50	1005+05	1005+17	1005+42	1005+67	1005+91
1004+72	1004+86	1004+99	1005+13	1005+01	271+46+08	1005+01	1005+13	1005+37	1005+61	1005+85
1004+65	1004+76	1004+87	1004+98	1004+86	271+32+53	1004+86	1004+98	1005+20	1005+42	1005+64
1004+61	1004+71	1004+81	1004+90	1004+79	271+25	1004+79	1004+90	1005+11	1005+32	1005+52
1004+50	1004+55	1004+60	1004+65	1004+53	271+00	1004+53	1004+65	1004+82	1004+98	1005+14
1004+41	1004+41	1004+42	1004+43	1004+31	270+75	1004+31	1004+43	1004+55	1004+67	1004+79
1004+39	1004+39	1004+39	1004+39	1004+27	270+70+52	1004+27	1004+39	1004+50	1004+61	1004+73
1004+34	1004+31	1004+27	1004+24	1004+12	270+50	1004+12	1004+24	1004+31	1004+39	1004+46
1004+31	1004+23	1004+15	1004+07	1003+95	270+25	1003+95	1004+07	1004+10	1004+13	1004+16
1004+30	1004+19	1004+08	1003+97	1003+85	270+07.10	1003+85	1003+97	1003+97	1003+97	1003+97
1004+30	1004+17	1004+05	1003+93	1003+81	270+00	1003+81	1003+93	1003+92	1003+90	1003+89
1004+32	1004+15	1003+98	1003+82	1003+70	269+75	1003+70	1003+82	1003+76	1003+70	1003+64
1004+36	1004+15	1003+94	1003+73	1003+61	269+50	1003+61	1003+73	1003+63	1003+53	1003+43
1004+37	1004+16	1003+94	1003+72	1003+60	269+45.09	1003+60	1003+72	1003+61	1003+50	1003+39

CURVE Nº 6&7
SUPERELEVATION TABLES

SUPERELEVATION DIAGRAMS

FED. RD.	STATE	PROJECT	
2	OHIO		

43/460

SUMMIT COUNTY
SUM - 8 - 17.63

CURVE Nº 8
Δ = 59° 33' 25" LT.
Dc = 3° 00'
e = 0.0833 FT. PER FT.

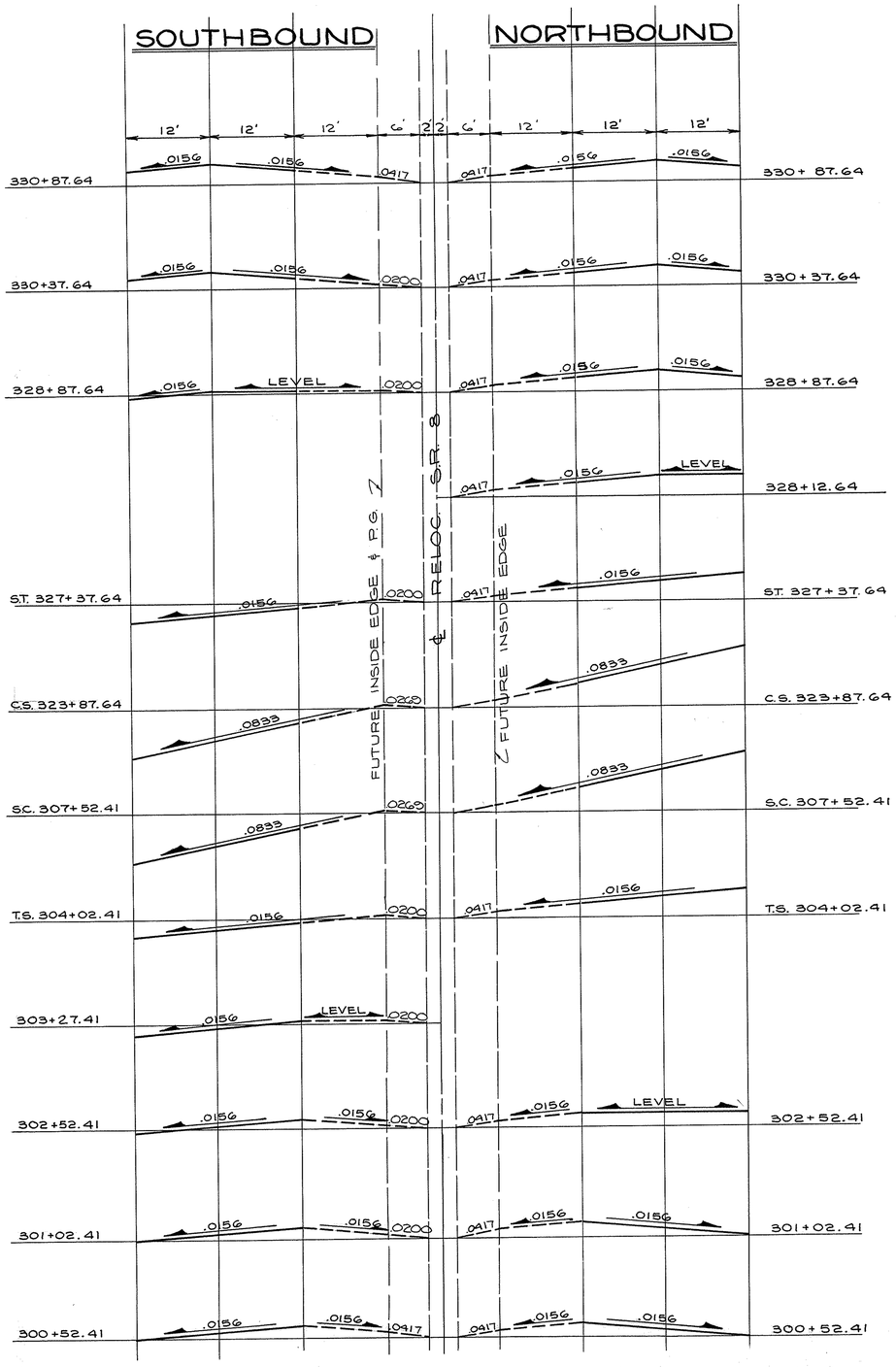

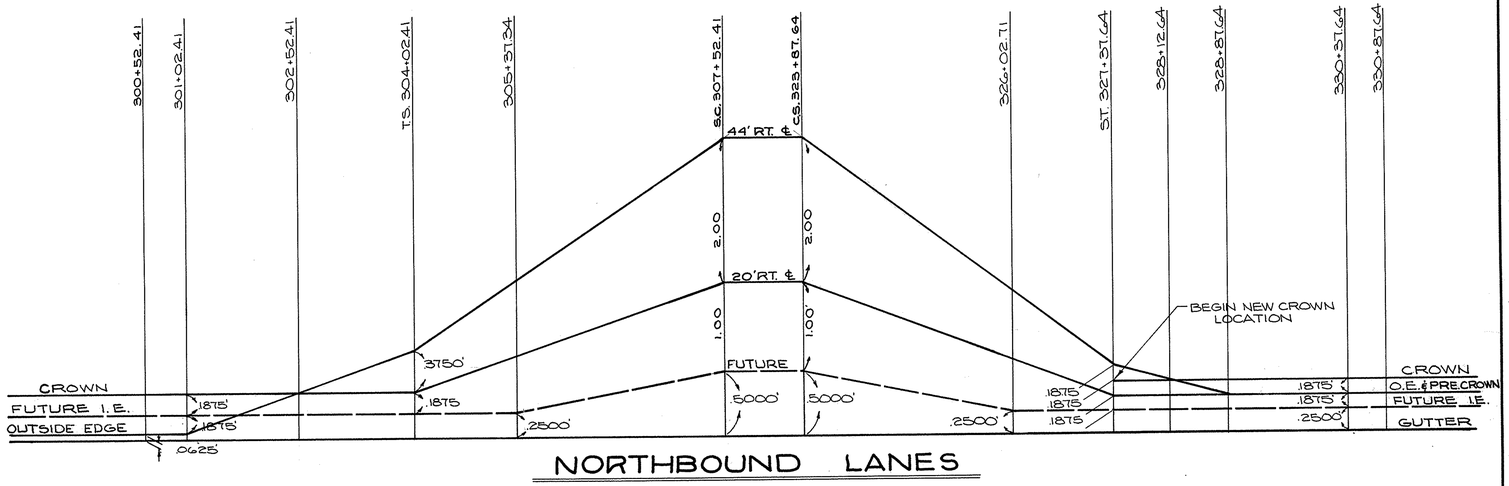

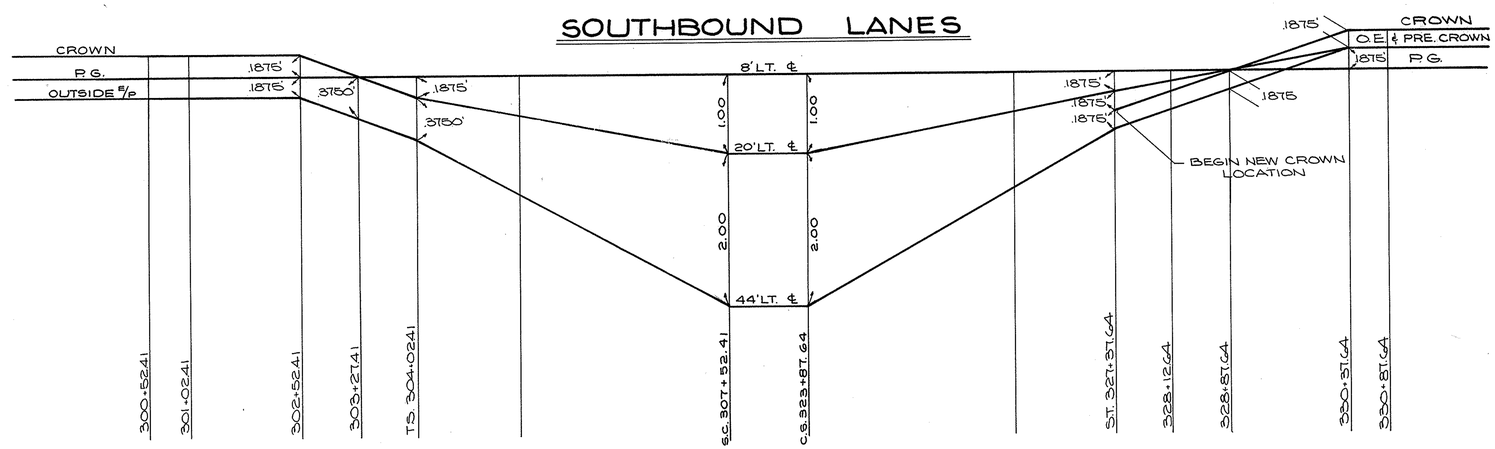

NOTE:
EDGES OF PAVEMENT WERE PLOTTED ON A DISTORTED SCALE AND VERTICAL CURVES WERE INSERTED IN TRANSITION AREAS.

* 50' TRANSITION FROM .0417 INSIDE SHOULDER SLOPE TO .0200 SLOPE ON THE LOW SIDE OF SUPERELEVATION.

SUPERELEVATION DIAGRAM · CURVE Nº 8

KAR

SUPERELEVATION TABLES

FED. RD.	STATE	PROJECT	
2	OHIO		

44
460

SUMMIT COUNTY
SUM.- 8- 17.63

CURVE Nº 8

△ = 59° 33' 25"

S.E. = .0833 FT./FT.

SOUTH BOUND LANES				NORTH BOUND LANES		
44' LT. ℄	32' LT. ℄	20' LT. ℄	STATION	20' RT. ℄	32' RT. ℄	44' RT. ℄
1019.33	1019.52	1019.71	300+52.41	1019.71	1019.52	1019.33
1019.22	1019.41	1019.60	+75	1019.66	1019.47	1019.28
1019.09	1019.28	1019.47	301+00	1019.59	1019.40	1019.21
1019.08	1019.27	1019.46	+02.41	1019.59	1019.40	1019.21
1018.97	1019.16	1019.35	+25	1019.48	1019.32	1019.16
1018.84	1019.03	1019.22	+50	1019.35	1019.22	1019.09
1018.72	1018.91	1019.10	+75	1019.23	1019.13	1019.03
1018.59	1018.78	1018.97	302+00	1019.10	1019.03	1018.96
1018.47	1018.66	1018.85	+25	1018.98	1018.95	1018.92
1018.33	1018.53	1018.72	+50	1018.85	1018.85	1018.85
1018.32	1018.52	1018.71	+52.41	1018.84	1018.84	1018.84
1018.16	1018.35	1018.54	+75	1018.73	1018.76	1018.79
1017.97	1018.16	1018.35	303+00	1018.60	1018.66	1018.72
1017.79	1017.98	1018.17	+25	1018.48	1018.57	1018.66
1017.76	1017.95	1018.14	+27.41	1018.46	1018.55	1018.64
1017.59	1017.78	1017.97	+50	1018.35	1018.47	1018.59
1017.41	1017.60	1017.79	+75	1018.23	1018.38	1018.53
1017.20	1017.40	1017.60	304+00	1018.10	1018.29	1018.48
1017.21	1017.38	1017.58	+02.41 TS	1018.09	1018.29	1018.48
1016.94	1017.18	1017.42	+25	1018.03	1018.27	1018.51
1016.63	1016.93	1017.23	+50	1017.96	1018.26	1018.56
1016.33	1016.69	1017.05	+75	1017.90	1018.26	1018.62
1016.05	1016.46	1016.87	305+00	1017.82	1018.23	1018.64
1015.75	1016.22	1016.69	+25	1017.76	1018.23	1018.70
1015.44	1015.97	1016.50	+50	1017.70	1018.23	1018.76
1015.14	1015.73	1016.32	+75	1017.67	1018.26	1018.85
1014.83	1015.48	1016.13	306+00	1017.62	1018.27	1018.92
1014.56	1015.26	1015.96	+25	1017.58	1018.28	1018.98
1014.25	1015.01	1015.77	+50	1017.53	1018.29	1019.05
1013.95	1014.77	1015.59	+75	1017.49	1018.31	1019.13
1013.64	1014.52	1015.40	307+00	1017.45	1018.33	1019.21
1013.37	1014.30	1015.23	+25	1017.49	1018.33	1019.26
1013.08	1014.06	1015.04	+50	1017.34	1018.32	1019.30
1013.07	1014.05	1015.04	+52.41 SC	1017.34	1018.32	1019.30
1012.91	1013.91	1014.91	+75	1017.25	1018.25	1019.25
1012.78	1013.78	1014.78	308+00	1017.12	1018.12	1019.12
1012.66	1013.66	1014.66	+25	1017.00	1018.00	1019.00
1012.53	1013.53	1014.53	+50	1016.87	1017.87	1018.87
1012.41	1013.41	1014.41	+75	1016.75	1017.75	1018.75
1012.28	1013.28	1014.28	309+00	1016.62	1017.62	1018.62
1012.16	1013.16	1014.16	+25	1016.50	1017.50	1018.50
1012.03	1013.03	1014.03	+50	1016.37	1017.37	1018.37
1011.91	1012.91	1013.91	+75	1016.25	1017.25	1018.25
1011.78	1012.78	1013.78	310+00	1016.12	1017.12	1018.12
1011.66	1012.66	1013.66	+25	1016.00	1017.00	1018.00
1011.53	1012.53	1013.53	+50	1015.87	1016.87	1017.87
1011.41	1012.41	1013.41	+75	1015.75	1016.75	1017.75
1011.28	1012.28	1013.28	311+00	1015.62	1016.62	1017.62
1011.16	1012.16	1013.16	+25	1015.50	1016.50	1017.50
1011.03	1012.03	1013.03	+50	1015.37	1016.37	1017.37
1010.91	1011.91	1012.91	+75	1015.25	1016.25	1017.25
1010.78	1011.78	1012.78	312+00	1015.12	1016.12	1017.12
1010.66	1011.66	1012.66	+25	1015.00	1016.00	1017.00
1010.53	1011.53	1012.53	+50	1014.87	1015.87	1016.87
1010.41	1011.41	1012.41	+75	1014.75	1015.75	1016.75
1010.28	1011.28	1012.28	313+00	1014.62	1015.62	1016.62
1010.16	1011.16	1012.16	+25	1014.50	1015.50	1016.50
1010.03	1011.03	1012.03	+50	1014.37	1015.37	1016.37
1009.91	1010.91	1011.91	+75	1014.25	1015.25	1016.25
1009.78	1010.78	1011.78	314+00	1014.12	1015.12	1016.12
1009.65	1010.65	1011.65	+25	1013.99	1014.99	1015.99
1009.52	1010.52	1011.52	+50	1013.86	1014.86	1015.86
1009.38	1010.38	1011.38	+75	1013.72	1014.72	1015.72
1009.24	1010.24	1011.24	315+00	1013.58	1014.58	1015.58
1009.09	1010.09	1011.09	+25	1013.43	1014.43	1015.43
1008.94	1009.94	1010.94	+50	1013.28	1014.28	1015.28
1008.78	1009.78	1010.78	+75	1013.12	1014.12	1015.12

SOUTH BOUND LANES				NORTH BOUND LANES		
44' LT. ℄	32' LT. ℄	20' LT. ℄	STATION	20' RT. ℄	32' RT. ℄	44' RT. ℄
1008.61	1009.61	1010.61	316+00	1012.95	1013.95	1014.95
1008.44	1009.44	1010.44	+25	1012.78	1013.78	1014.78
1008.27	1009.27	1010.27	+50	1012.61	1013.61	1014.61
1008.09	1009.09	1010.09	+75	1012.43	1013.43	1014.43
1007.91	1008.91	1009.91	317+00	1012.25	1013.25	1014.25
1007.72	1008.72	1009.72	+25	1012.06	1013.06	1014.06
1007.52	1008.52	1009.52	+50	1011.86	1012.86	1013.86
1007.32	1008.32	1009.32	+75	1011.66	1012.66	1013.66
1007.11	1008.11	1009.11	318+00	1011.45	1012.45	1013.45
1006.90	1007.90	1008.90	+25	1011.24	1012.24	1013.24
1006.69	1007.69	1008.69	+50	1011.03	1012.03	1013.03
1006.47	1007.47	1008.47	+75	1010.81	1011.81	1012.81
1006.24	1007.24	1008.24	319+00	1010.58	1011.58	1012.58
1006.01	1007.01	1008.01	+25	1010.35	1011.35	1012.35
1005.77	1006.77	1007.77	+50	1010.11	1011.11	1012.11
1005.53	1006.53	1007.53	+75	1009.87	1010.87	1011.87
1005.28	1006.28	1007.28	320+00	1009.62	1010.62	1011.62
1005.03	1006.03	1007.03	+25	1009.37	1010.37	1011.37
1004.78	1005.78	1006.78	+50	1009.12	1010.12	1011.12
1004.53	1005.53	1006.53	+75	1008.87	1009.87	1010.87
1004.28	1005.28	1006.28	321+00	1008.62	1009.62	1010.62
1004.03	1005.03	1006.03	+25	1008.37	1009.37	1010.37
1003.78	1004.78	1005.78	+50	1008.12	1009.12	1010.12
1003.53	1004.53	1005.53	+75	1007.87	1008.87	1009.87
1003.28	1004.28	1005.28	322+00	1007.62	1008.62	1009.62
1003.03	1004.03	1005.03	+25	1007.37	1008.37	1009.37
1002.78	1003.78	1004.78	+50	1007.12	1008.12	1009.12
1002.53	1003.53	1004.53	+75	1006.87	1007.87	1008.87
1002.28	1003.28	1004.28	323+00	1006.62	1007.62	1008.62
1002.03	1003.03	1004.03	+25	1006.37	1007.37	1008.37
1001.78	1002.78	1003.78	+50	1006.12	1007.12	1008.12
1001.53	1002.53	1003.53	+75	1005.87	1006.87	1007.87
1001.43	1002.42	1003.41	+87.64 CS.	1005.74	1006.73	1007.72
1001.37	1002.34	1003.31	324+00	1005.58	1006.55	1007.52
1001.30	1002.21	1003.12	+25	1005.24	1006.15	1007.06
1001.20	1002.06	1002.92	+50	1004.92	1005.78	1006.64
1001.14	1001.94	1002.74	+75	1004.59	1005.39	1006.19
1001.11	1001.85	1002.59	325+00	1004.30	1005.04	1005.78
1001.10	1001.78	1002.46	+25	1004.03	1004.71	1005.39
1001.12	1001.74	1002.36	+50	1003.78	1004.40	1005.02
1001.13	1001.70	1002.27	+75	1003.57	1004.14	1004.71
1001.20	1001.71	1002.22	326+00	1003.37	1003.88	1004.39
1001.29	1001.74	1002.19	+25	1003.22	1003.67	1004.12
1001.41	1001.80	1002.19	+50	1003.10	1003.49	1003.88
1001.55	1001.88	1002.21	+75	1003.00	1003.33	1003.66
1001.69	1001.97	1002.25	327+00	1002.94	1003.22	1003.50
1001.88	1002.10	1002.32	+25	1002.89	1003.11	1003.33
1001.97	1002.17	1002.37	+37.64 ST.	1002.88	1003.08	1003.28
1002.05	1002.24	1002.41	+50	1002.90	1003.09	1003.25
1002.17	1002.36	1002.50	+75	1002.96	1003.15	1003.24
1002.32	1002.51	1002.62	328+00	1003.05	1003.24	1003.27
1002.41	1002.60	1002.69	+12.64	1003.10	1003.29	1003.29
1002.49	1002.68	1002.76	+25	1003.16	1003.35	1003.32
1002.69	1002.88	1002.93	+50	1003.30	1003.49	1003.40
1002.91	1003.10	1003.12	+75	1003.46	1003.65	1003.49
1003.04	1003.23	1003.23	+87.64	1003.55	1003.74	1003.55
1003.18	1003.37	1003.35	329+00	1003.65	1003.84	1003.65
1003.45	1003.64	1003.59	+25	1003.86	1004.05	1003.86
1003.75	1003.94	1003.86	+50	1004.10	1004.29	1004.10
1004.07	1004.26	1004.15	+75	1004.36	1004.55	1004.36
1004.42	1004.61	1004.47	330+00	1004.65	1004.84	1004.65
1004.77	1004.96	1004.79	+25	1004.94	1005.13	1004.94
1005.00	1005.19	1005.00	+37.64	1005.13	1005.32	1005.13
1005.17	1005.36	1005.17	+50	1005.27	1005.46	1005.27
1005.53	1005.72	1005.53	+75	1005.56	1005.75	1005.56
1005.73	1005.92	1005.73	+87.64	1005.73	1005.92	1005.73

NOTE:

THE TYPICAL SECTION OF THE ADJACENT PROJECT IS SIMILAR TO THE TYPICAL SECTION FOR THIS PROJECT.

NOTE: THE EXISTING PENN. CENTRAL RAILROAD NEAR THE BEGIN PROJECT IS TO BE RELOCATED ON A SEPERATE PROJECT. UNTIL THIS IS DONE NO WORK SHALL BE PERFORMED CLOSER THAN TEN FEET TO THE CENTERLINE OF TRACKS. IF THE TRACKS ARE NOT RELOCATED IN TIME TO COMPLETE THIS PROJECT THE VARIOUS QUANTITIES INVOLVED WITH THIS PROJECT WILL BE NON-PERFORMED AT THE DIRECTION OF THE ENGINEER.

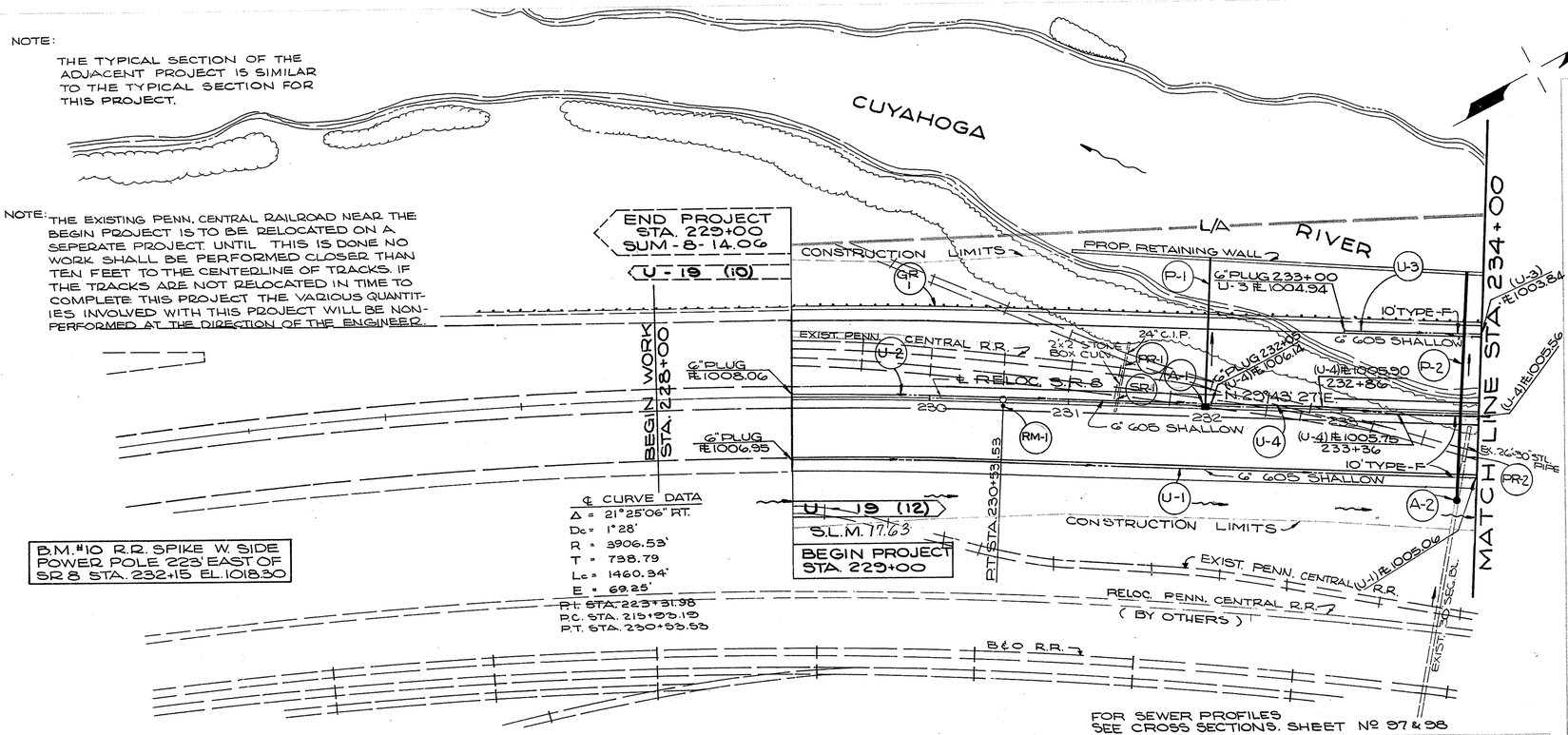

℄ CURVE DATA
Δ = 21°25'06" RT.
Dc = 1°28'
R = 3906.53'
T = 738.79
Lc = 1460.34'
E = 69.25'
P.I. STA. 223+31.98
P.C. STA. 215+93.19
P.T. STA. 230+55.53

P.T. STA. 230+53.53

B.M. #10 R.R. SPIKE W. SIDE POWER POLE 223' EAST OF SR 8 STA. 232+15 EL. 1018.30

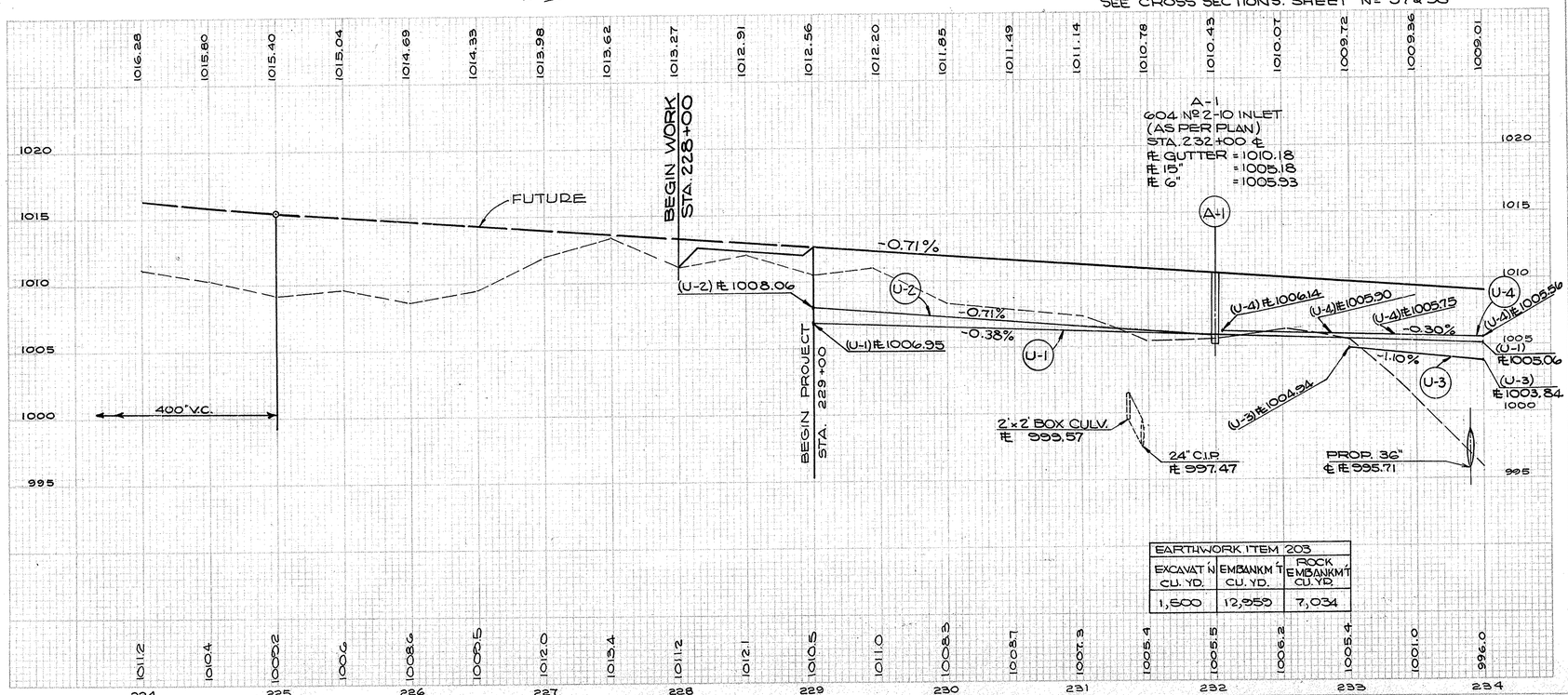

EARTHWORK ITEM 203		
EXCAVATION CU. YD.	EMBANKMENT CU. YD.	ROCK EMBANKMENT CU. YD.
1,600	12,959	7,034

ESTIMATED QUANTITIES

REF. NO.	STATION TO STATION	SIDE	604 MONUMENT ASSEMBLY TYPE-B EACH	606 GUARD RAIL & ANCHOR ASSEMBLY TYPE-B LIN.FT.	622 CONC. BARRIER MEDIAN LIN.FT.	606 GUARD RAIL & ANCHOR ASSEMBLY TYPE-B EACH	605 6" UNDERDRAINS LIN.FT. SHALLOW	604 M.H. INLET Nº 1 EACH	604 2-10 INLET /PLAN EACH	202 EX. PIPE REMOVED OVER 15" LIN.FT.	202 EXIST. STRUCT. REMOVED LUMP
RM-1	230+53.53	5'RT. ℄	1								
GR-1	229+00 TO 234+00	LT.		500		1					
M-1	229+00 TO 234+00	℄			476						
U-1	229+00 TO 234+00	RT.					430				
U-2	229+00 TO A-1	LT.					230				
U-3	233+00 TO 234+00	LT.					90				
U-4	232+05 TO 234+00	LT&RT.					185				
A-1	232+00	℄						1			
A-2	235+90 ~ 61'	RT.							1		
P-1	A-1 TO 108' (LT.)	LT.								26	LUMP
P-2	A-2 TO 105' (LT.℄)	LT&RT.								55	LUMP
PR-1	231+35	LT&RT.								2.02 EX. PIPE REMOVED OVER 15" LIN.FT.	LUMP
PR-2	233+93	RT.									
SR-1	231+40	LT.									
TOTALS	CALC BY CPB 10/67 CHECKED BY H.C.S. 11/68		1	500	476	1	1055	1	1	81	LUMP

BENDS	603 CONDUIT LESS BEDDING TYPE-A 707.05			
BRANCHES	TYPE-F "B"	6"	15"	36"
6"		10	10	40
15"		10	10	68
36"		10	10	164
12℄		2		

603 CONDUIT LESS BEDDING TYPE-A 707.05			
TYPE-F "B"	6"	15"	36"
	40	40	164
	40	68	164

STA. 224+00 TO STA. 234+00

FED. RD. DIVISION	STATE	PROJECT	
2	OHIO		

46
460

SUM-8-17.63

PROPOSED STRUCTURE
BRIDGE № SUM-8-17.72

TYPE: CONTINUOUS STEEL BEAMS WITH REINFORCED CONCRETE DECK AND SUBSTRUCTURE.
SKEW: 60°00' 00" R.F. TO LOC. TAN.
SPANS: 70'-0", 70'-0" c/c BRGS.
ROADWAY: 124'-0" F/F PARAPETS, 6' BARRIER MEDIAN
LOAD FREQUENCY: AASHO H 5-20-44

WEARING SURFACE: 1" MONOLITHIC
APPROACH SLAB: 30' LONG (AS-1-67)
ALIGNMENT: 1°28'00" CURVE LT.
SUPERELEVATION: .034'/FT. MAX.
SLOPE PROTECTION: ROCK CHANNEL PROT.
TRAFFIC: 66,400 - 1985 A.D.T.

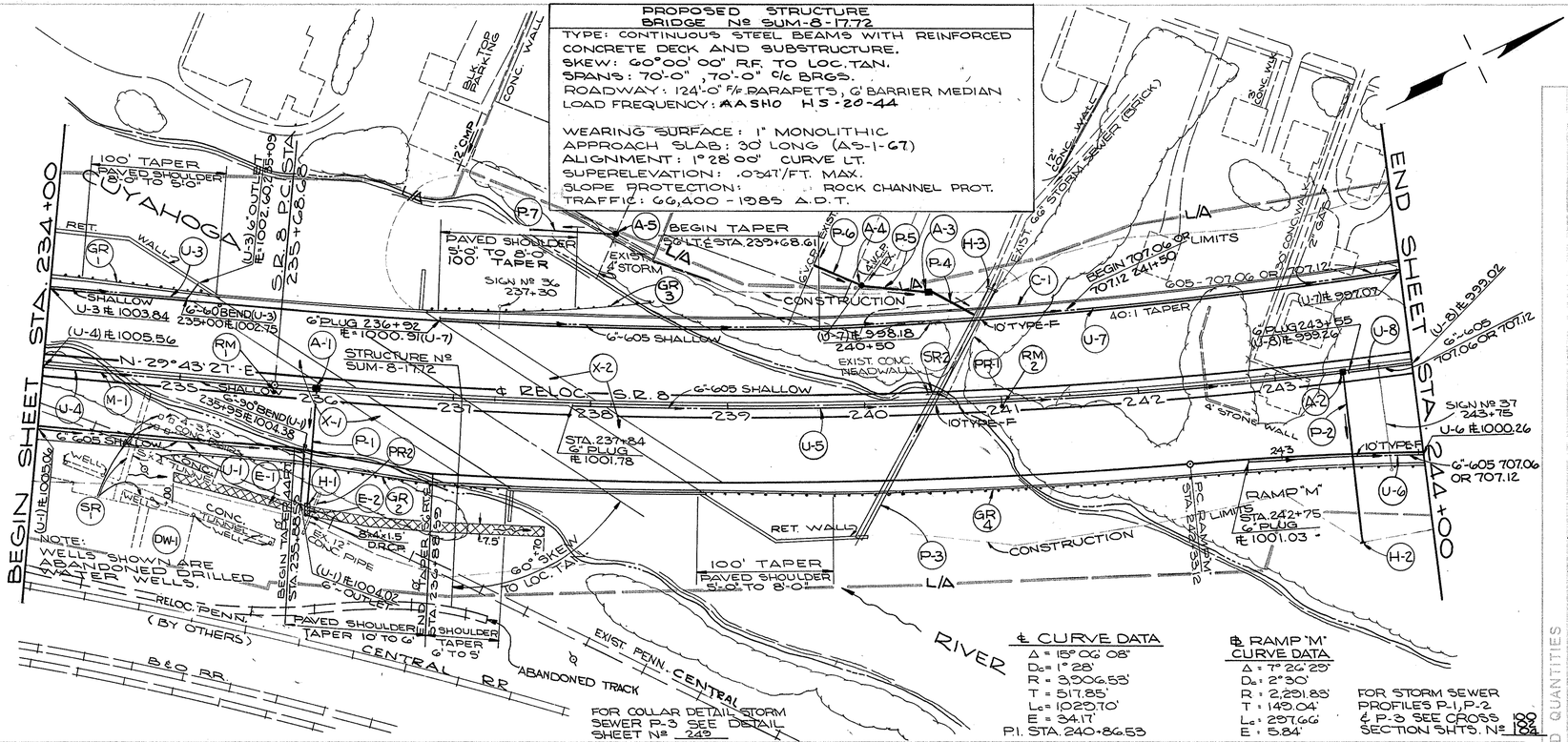

℄ CURVE DATA
Δ = 15°06'08"
D_c = 1°28'
R = 3906.53'
T = 517.85'
L_c = 1029.70'
E = 34.17'
P.I. STA. 240+86.53

℄ RAMP "M" CURVE DATA
Δ = 7°26'29"
D_c = 2°30'
R = 2291.83'
T = 149.04'
L_c = 297.66'
E = 5.84'

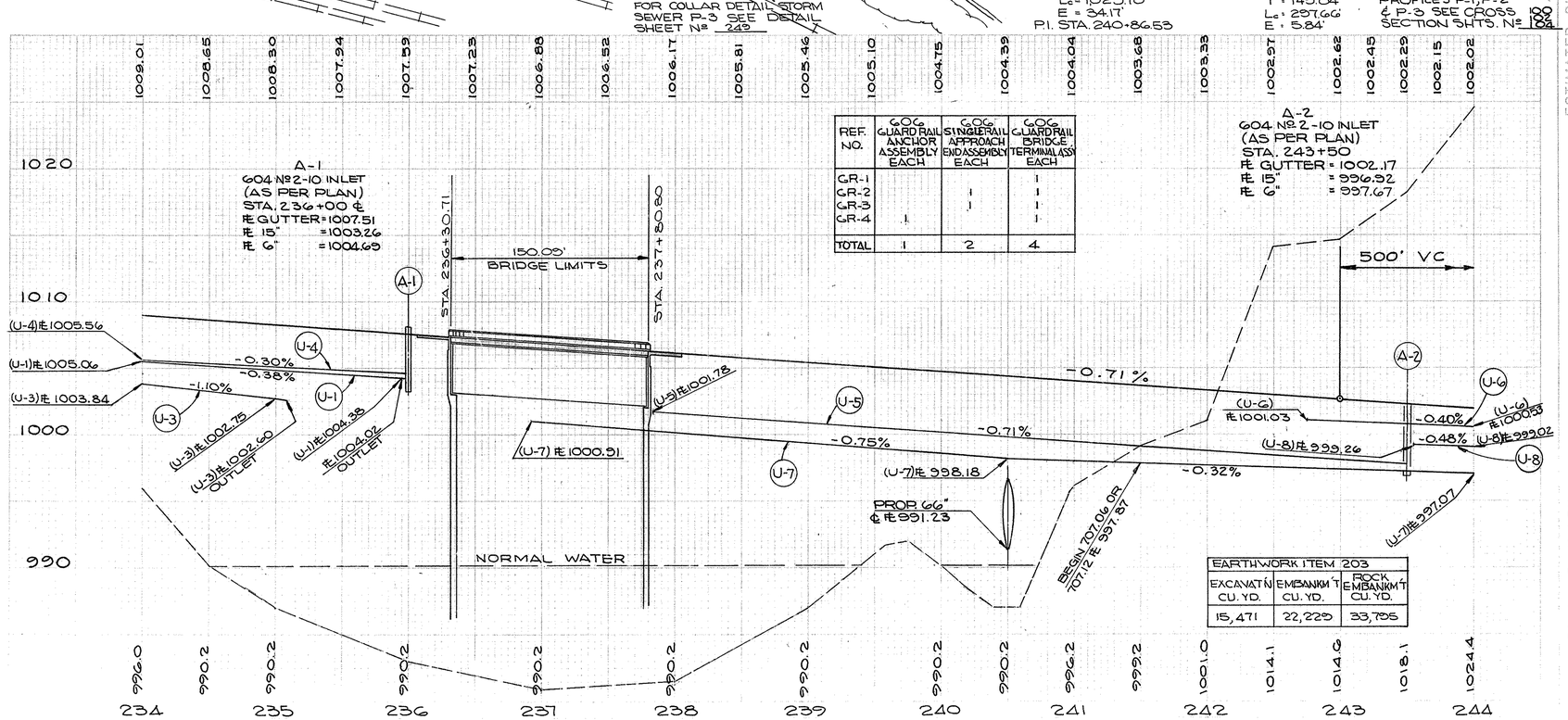

REF. NO.	606 GUARD RAIL ANCHOR ASSEMBLY EACH	606 GUARD RAIL APPROACH END ASSEMBLY EACH	606 GUARD RAIL BRIDGE TERMINAL ASSY EACH
GR-1			1
GR-2		1	1
GR-3		1	1
GR-4	1		1
TOTAL	1	2	4

EARTHWORK ITEM 203

EXCAVATN CU. YD.	EMBANKMT CU. YD.	ROCK EMBANKMT CU. YD.
15,471	22,229	33,705

ESTIMATED QUANTITIES

		SIDE	STATION TO STATION	202 PIPE REMOVED UNDER 15" DIA. LIN. FT.	202 PIPE REMOVED UNDER 15" DIA. LIN. FT.	611 RENF. CONC. CURB 4 SPREAD 13" LIN. FT.	609 CONC. CURB TYPE 6 LIN. FT.	622 CONC. BARRIER TYPE 6 LIN. FT.	606 GUARD RAIL ANCHOR ASSEMBLY EACH	606 GUARD RAIL APPROACH END ASSEMBLY EACH	606 GUARD RAIL BRIDGE TERMINAL ASSY EACH
RM-1	235+68.68	5	RT. ℄								
RM-2	241+00.00	5	RT. ℄								
GR-1	234+00 TO 235+12.50		LT.								
GR-2	234+90 TO 237+40*		RT.								
GR-3	236+75 TO 238+37.5		LT.								
GR-4	238+87.50 TO 244+00		RT.								
PR-1	240+58 TO H-3		LT.								
PR-2	236+00 TO 244+00		LT.								
C-1	236+79 TO 244+00		LT.								
X-1	234+00 TO 235+12.50		LT.								
X-2	237+84 TO 238+37.5		LT.								
M-1	234+00 TO 244+00		℄								
P-4	P-3 TO A-3		LT.								
P-5	A-3 TO A-4		LT.								
P-6	A-4 TO EXIST.		LT.								
P-7	237+50 TO A-5		LT.								
U-1	234+00 TO 235+95		RT.								
U-3	234+00 TO A-1		LT.								
U-4	234+00 TO A-2		RT.								
U-5	237+84 TO 244+00		RT.								
U-6	242+92 TO 244+00		LT.								
U-7	236+92 TO 244+00		RT.								
U-8	243+55 TO 244+00		LT.								
SR-1	234+20 TO 235+80		RT.								
DW-1	234+20 TO 235+80		RT.								
A-1	236+00		℄								
A-2	243+50		℄								
A-3	240+50 (80' LT. ℄)		LT.								
P-1	A-1 TO H-1		RT.								
P-2	A-2 TO H-2		RT.								
P-3	SP-1 TO H-3		LT. & RT.								
A-4	240+00 (85' LT. ℄)		RT.								
H-1	236+00 - 87' RT. ℄		RT.								
H-2	243+50 - 126' RT. ℄		RT.								
H-3	240+97 - 83' LT. ℄		LT.								
E-1	235+00 - 237+70		RT.								
E-2	236+00 - 87' RT. ℄		RT.								
A-5	238+15 (125' LT. ℄)		LT.								
SR-2	240+58 - 5' LT. ℄		LT.								

CALC. BY CDB 10/67
CHECKED BY HCS 11/68

* INTRODUCED FLARE

| | | | | | | | |

B.M.# 22 - CITY OF CUY. FALLS - 35' WEST OF ℄ FRONT ST. & 25' SOUTH ℄ NORTHLAND AVE EL. 1019.60

FOR WATER MAIN RELOCATIONS SEE SHT. 60 & 61 & SHEET 206 & 207.

FOR RAMP "L" PAV'T. DETAILS SEE SHT. № 85

FOR SAN. & WATER QUANTITIES SEE SHT. 84

FOR SAN. SEWER PROFILES SEE SHT. 81

FOR STORM SEWER PROFILES P-1, P-2, P-3, P-4, P-6, P-9, P-10 & P-11 SEE SHT. № 74

FOR RAMP "M" PAV'T. DETAILS SEE SHT. 86

FOR FRONT ST. PLAN & PROFILE SEE SHEET № 206-207

BEGIN SHEET STA. 244+00

END SHEET STA. 254+00

CUYAHOGA RIVER

RAMP "M" CURVE DATA
Δ = 7° 26' 29"
D = 2° 30'
T = 2,291.89
T = 149.04'
L = 297.66'
E = 5.84'

M.L. & CURVE DATA
Δ = 15° 06' 08"
T = 1° 28'
R = 3900.53'
T = 517.85'
L = 1029.70'
E = 34.17'
P.I. STA. 240+86.53

ST. RAMP "M" STA. 245+50.75

BRICK FIREPLACE NOSE: 10' LT. RAMP STA. 244+90.65 & 57.59' RT. ℄ S.R. 8 STA. 244+87.59

REL. STRUCTURE № SUM-8-1800 FRONT ST. STA. 245+39.76 & STA. 245+39.76

P.V.I. STA. 245+50 EL. 1000.84

500' V.C.

EXIST. 8" SAN. ℄ EL. 1017.2

EXIST. 18" SAN. ℄ EL. 1002.8

A-2
604 № 2-10 INLET (AS PER PLAN)
STA. 246+10 ℄
EL GUTTER = 1001.47
EL 21"(N.)&(W.) = 994.54
EL 24" = 994.29
EL 6" = 998.06

A-5
604 № 1 M.H.
STA. 247+50 (6.5' RT. ℄)
COVER EL. = 1001.90
EL 15" = 996.76
EL 21" = 996.26

A-7
604 № 1 M.H.
STA. 249+00 (6.5' RT. ℄)
COVER EL. = 1002.46
EL 21" = 996.80

A-8
604 № 2-10 INLET (AS PER PLAN)
STA. 250+50 ℄
EL GUTTER = 1003.03
EL 15" = 998.05
EL 21" = 997.55
EL 6" = 1000.21

REF. NO.	604 GUARDRAIL ANCHOR ASSEMBLY EACH	604 SINGL. RAIL APPROACH END ASSEMBLY EACH
G.R.-1	- -	- -
G.R.-2	- -	- -
G.R.-3	- -	- -
TOTAL	2	3

EARTHWORK ITEM 203

EXCAVATION CU. YD.	EMBANKMENT CU. YD.
135,547	685

P-5: 140'~21" CONDUIT TYPE-B W/CL. B BEDDING @ 1.23%

P-7: 150'~21" CONDUIT TYPE-B W/CL. B BEDDING @ 0.43%

P-8: 150'~21" CONDUIT TYPE-B W/CL. B BEDDING @ 0.43%

PROP. SAN. SIPHON

+0.48 %

REF. №	STATION TO STATION	SIDE ℄	603 CONDUIT LIN. FT. TYPE-B BEDDING 12"	21"	24"	27"	BENDS FOR 12"	SEE SHEET №	604 MONUMENT ASSEMBLY EACH	606 GUARD RAIL TYPE-5 LIN. FT.	608 CURB TYPE EACH LIN. FT.	622 CONC. POROUS BACKFILL MASONRY CU. YDS.	518 POROUS BACKFILL CU. YDS.	602 CONC. EACH	604 № 1 M.H. EACH	604 № 2-10 INLET EACH	604 № 2-12 INLET EACH	604 № 2-12 INLET EACH	604 № 2-12 INLET EACH
RW-1	248+00 TO 254+00	LT.					31												
RW-2	248+00 TO 250+00	RT.					15												
								74											
								48											
								74											
								74											
								48											
								74											
								74											
								74											
								74											
							12"	74											
								74											
								48											
								74											
								48											
								74											
								74											
								74											
							2	74											
								74											
								74											
								74											

B.M.# 26 - CITY OF CUY. FALLS
31' NORTH OF ℄ BAILEY RD. & 25.5
WEST OF ℄ FRONT ST. EL. 1015.24

FOR RAMP "P" PAV'T DETAILS SEE SHT. No. 87-A

FOR RAMP "P" PLAN & PROFILE SEE SHT. No. 63-64

FOR WATER LINE & SAN. SEWER QUANTITIES SEE SHT No. 84

FOR SAN. SEWER PROFILES SEE SHT No. 82

FOR WATER MAIN RELOCATION ON BAILEY RD. BRIDGE SEE SHEET No. 218.

STRUCTURE No. SUM. 8-1950
STA. 48+69.57 RELOC. 2ND ST.
STA. 254+89.43 ℄ S.R. 8

RAMP "P" CURVE DATA
Δ. = 3° 07' 52"
Dc. = 1° 15' 00"
R. = 4583.66'
T. = 125.28
Lc. = 250.49'

NOTE:
FOR TREATMENT OF GUARD RAIL AT RAMP "P" NOSE SEE GR-4. SHT. No. 2518 DRWG.

SUM 8-17.63

RAMP "N" CURVE DATA
Δ. = 45° 34' 45"
Dc. = 18° 45' 00"
R. = 305.58'
T. = 128.30'
Lc. = 243.09'

RELOC. 2ND ST. CURVE DATA
Δ. = 45° 34' 45"
Dc. = 18° 45' 00"
R. = 305.58'
T. = 128.30'
Lc. = 243.09'

FOR RELOC 2ND ST. PAV'T DETAILS SEE SHT. No. 87-B

FOR RELOC 2ND ST. PLAN & PROFILE SEE SHT. No. 212-213

FOR STORM SEWER PROFILES SEE SHT No. 75-76

FOR RAMP "N" PAV'T DETAILS SEE SHEET No. 86

FOR RAMP "N" PLAN & PROFILE SEE SHT. 62

FOR ALLENSIDE & SECOND ST. CONNECTOR DETAIL SEE SH. 225

STA. 47+67.56 BAILEY RD
STA. 55+12.32 SECOND ST.

FOR DETAILS OF MEDIAN TRANSITION SEE SHT. No. 251

FOR BAILEY RD PLAN & PROFILE SEE SHT. No. 218

FOR RET. WALL DETAILS SEE SHT. No. 371

BEGIN SHEET STA. 254+00

END SHEET STA. 264+00

RAMP "P"

RAMP "N"

RELOCATED SECOND ST.

BAILEY RD. & SECOND ST.

L/A

PROP. 8" SAN.

CONSTRUCTION LIMITS

6" TYPE-B

6" TYPE-F

6" TYPE-S

6" 60° BEND (U-19) 256+55 ℄ 1003.17

6" PLUG 256+47 ℄ 1003.14

6" PLUG 258+47 (U-12) ℄ 1003.42

6" PLUG 261+66 (U-19) ℄ 1006.00

6" PLUG 262+68 (U-20) ℄ 1007.90

6" 60° BEND (U-16) 255+50 ℄ 1004.12

6" 60° BEND (U-18) 258+70 ℄ 1002.68

T.S. STA. 258+60.71

29°22'10"

1050' TAPER 40:1

Past 10 Std. Drwg. G12-5

Guardrail-Bridge Connection, see Drwg. G23-3 No. 231A

Conc. Parapet tank wall with 8 filler caps - 4'-0" ht.

Conc. Curb

Conc. Walk

Conc. Drive

Blk. Top Drive

Blk. Top Parking Area

Conc. Bl. Wall

Conc. Retaining Wall

Conc. Pavement

Conc. Slope Wall

Conc. Gutter

Conc. Median

Conc. Island

Conc. Curb & Gutter

Conc. Curb & Walk

Conc. Curb & Gutter & Walk

Conc. Curb & Gutter & Drive

Conc. Curb & Gutter & Island

Conc. Curb & Gutter & Median

Conc. Curb & Gutter & Pavement

Conc. Curb & Gutter & Slope Wall

Conc. Curb & Gutter & Retaining Wall

Conc. Curb & Gutter & Bl. Wall

Conc. Curb & Gutter & Parking Area

Conc. Curb & Gutter & Tank Wall

Conc. Curb & Gutter & Parapet Wall

Conc. Curb & Gutter & Filler Caps

Conc. Curb & Gutter & Ht.

Conc. Curb & Gutter & Width

Conc. Curb & Gutter & Thickness

Conc. Curb & Gutter & Reinforcement

Conc. Curb & Gutter & Expansion Joint

Conc. Curb & Gutter & Contraction Joint

Conc. Curb & Gutter & Construction Joint

Conc. Curb & Gutter & Keyway

Conc. Curb & Gutter & Dowel

Conc. Curb & Gutter & Tie Bar

Conc. Curb & Gutter & Anchor Bolt

Conc. Curb & Gutter & Weep Hole

Conc. Curb & Gutter & Drain

Conc. Curb & Gutter & Inlet

Conc. Curb & Gutter & Manhole

Conc. Curb & Gutter & Catch Basin

Conc. Curb & Gutter & Storm Sewer

Conc. Curb & Gutter & Sanitary Sewer

Conc. Curb & Gutter & Water Main

Conc. Curb & Gutter & Gas Main

Conc. Curb & Gutter & Electric Line

Conc. Curb & Gutter & Telephone Line

Conc. Curb & Gutter & Cable TV Line

Conc. Curb & Gutter & Fiber Optic Line

Conc. Curb & Gutter & Traffic Signal

Conc. Curb & Gutter & Street Light

Conc. Curb & Gutter & Sign

Conc. Curb & Gutter & Pavement Marking

Conc. Curb & Gutter & Crosswalk

Conc. Curb & Gutter & Stop Bar

Conc. Curb & Gutter & Yield Line

Conc. Curb & Gutter & Bike Lane

Conc. Curb & Gutter & Shoulder

Conc. Curb & Gutter & Median

Conc. Curb & Gutter & Island

Conc. Curb & Gutter & Pavement

Conc. Curb & Gutter & Slope Wall

Conc. Curb & Gutter & Retaining Wall

Conc. Curb & Gutter & Bl. Wall

Conc. Curb & Gutter & Parking Area

Conc. Curb & Gutter & Tank Wall

Conc. Curb & Gutter & Parapet Wall

Conc. Curb & Gutter & Filler Caps

Conc. Curb & Gutter & Ht.

Conc. Curb & Gutter & Width

Conc. Curb & Gutter & Thickness

Conc. Curb & Gutter & Reinforcement

Conc. Curb & Gutter & Expansion Joint

Conc. Curb & Gutter & Contraction Joint

Conc. Curb & Gutter & Construction Joint

Conc. Curb & Gutter & Keyway

Conc. Curb & Gutter & Dowel

Conc. Curb & Gutter & Tie Bar

Conc. Curb & Gutter & Anchor Bolt

Conc. Curb & Gutter & Weep Hole

Conc. Curb & Gutter & Drain

Conc. Curb & Gutter & Inlet

Conc. Curb & Gutter & Manhole

Conc. Curb & Gutter & Catch Basin

Conc. Curb & Gutter & Storm Sewer

Conc. Curb & Gutter & Sanitary Sewer

Conc. Curb & Gutter & Water Main

Conc. Curb & Gutter & Gas Main

Conc. Curb & Gutter & Electric Line

Conc. Curb & Gutter & Telephone Line

Conc. Curb & Gutter & Cable TV Line

Conc. Curb & Gutter & Fiber Optic Line

Conc. Curb & Gutter & Traffic Signal

Conc. Curb & Gutter & Street Light

Conc. Curb & Gutter & Sign

Conc. Curb & Gutter & Pavement Marking

Conc. Curb & Gutter & Crosswalk

Conc. Curb & Gutter & Stop Bar

Conc. Curb & Gutter & Yield Line

Conc. Curb & Gutter & Bike Lane

Conc. Curb & Gutter & Shoulder

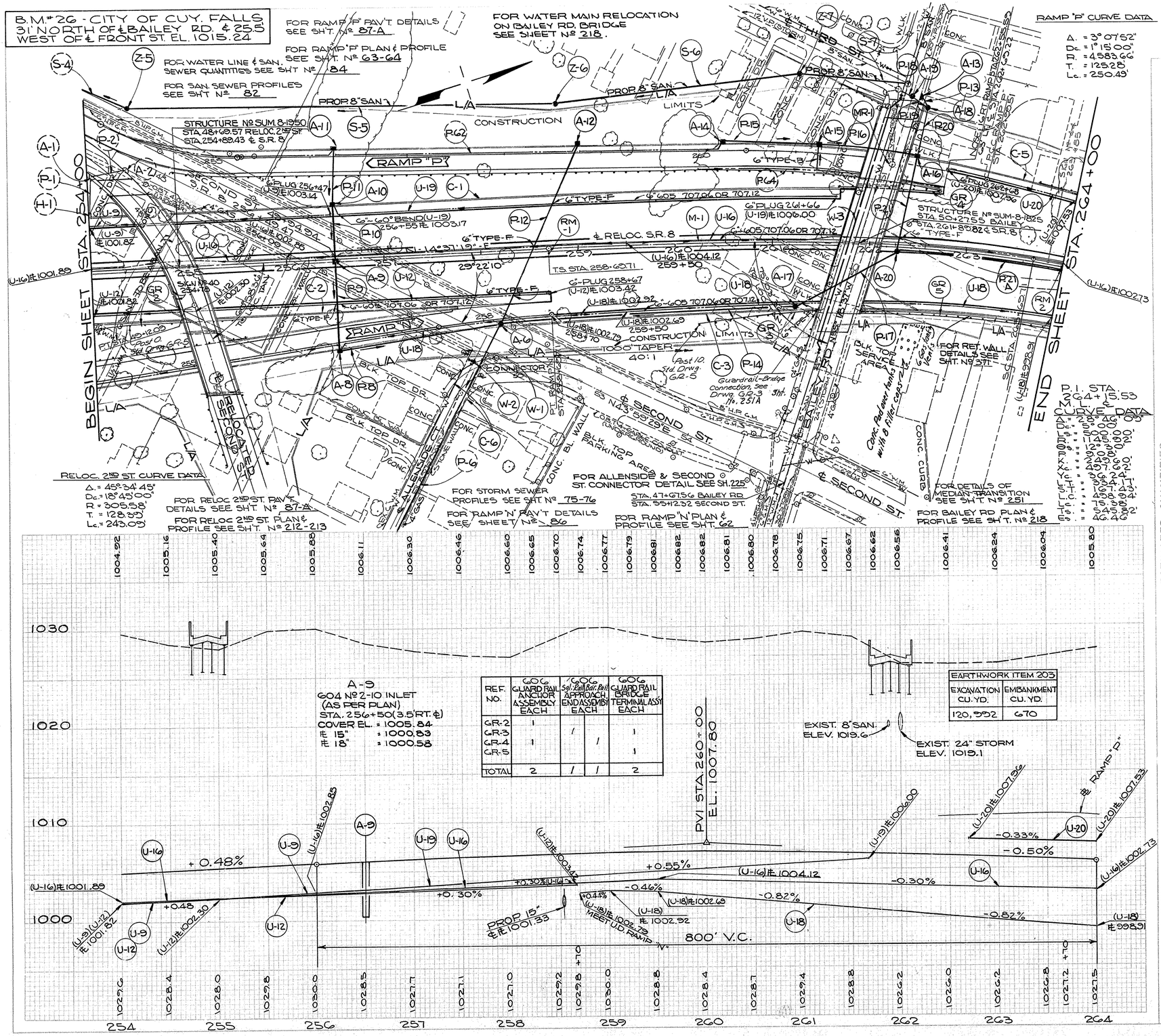

REF. NO.	606 GUARD RAIL ANCHOR ASSEMBLY EACH	606 Sq. End Bar Rail APPROACH END ASSEMBLY EACH		606 GUARD RAIL BRIDGE TERMINAL ASSY EACH
G.R.-2	1			1
G.R.-3		1		
G.R.-4	1		1	
G.R.-5				1
TOTAL	2	1	1	2

EARTHWORK ITEM 203	
EXCAVATION CU. YD.	EMBANKMENT CU. YD.
120,992	670

ESTIMATED QUANTITIES

REF. NO.	STATION TO STATION	SIDE	604 MON. ASSEMBLY EACH TYPE 5 STD.	606 GUARD RAIL LIN. FT. TYPE 5 BARR. STD.	609 CONC. CURB & GUTTER LIN. FT.	610 CONC. CURB & GUTTER LIN. FT.	622 604 CONC. MH. TOP CASTING EA.	604.02 604 INLET EA.	604.04 604 INLET EA.	604.04 2-10 INLET EA.	604.04 2-12 INLET EA.	604.04 2-18 INLET EA.	604.04 2-20 INLET EA.	SEE SHEET NO.
RM-1	258+69.71 5 RT. ℄		—	—										
RM-2	264+00 5 RT. ℄		—	—										
GR-2	254+00 TO 255+53	RT.		153										
GR-3	260+22 TO 261+47	RT.		125										
GR-4	261+64 TO 262+64	LT.		100										
GR-5	261+39 TO 262+39	RT.												
C-1	254+00 TO 254+17	LT.												
C-2	254+00 TO 257+83	RT.												
C-3	258+70 TO 264+00	RT.												
C-5	262+69 TO 264+00	LT.												
C-6	45+32.36 TO 50+13.66	ALLEN RT.												
M-1	254+00 TO 262+03.25	℄												
MR-1	51+12.5 (7' RT. BAILEY)	LT.												
A-6	255+17 — 75' RT. ℄ M.L.	—												
A-7	OMIT	—												
A-8	256+50 — 6' RT. ℄ "N"	—												
A-9	256+50 — ℄ M.L.	—												
A-10	256+50 — 54' LT. ℄ M.L.	—												
A-11	256+25 — 6' LT. ℄ "P"	—												
A-12	256+75 — 6' LT. ℄ "P"	—												
A-13	51+92.15' RT. ℄ BAILEY RD	—												
A-14	260+25 — 6' LT. ℄ "P"	—												
A-15	261+25 — 6' LT. ℄ "P"	—												
A-16	262+25 — 7.5' LT. ℄ "P"	—												
A-17	261+25 — 67' RT. ℄ M.L.	—												
A-18	51+83.25 RT. ℄ BAILEY RD.	—												
A-19	51+86.7 RT. ℄ BAILEY RD.	—												
A-20	262+29.6 RT. ℄ M.L.	—												
TOTALS			2	378	1265	15	2,144	3	1	2	4	1	1	1

CALC. BY C.D.S. 10/67
CHECKED BY H.C.S. 11/68

REF. NO.	STATION TO STATION	SIDE	603 CONDUIT LIN. FT. TYPE-B, W/CL. "B" BEDDING 54"	48"	24"	21"	18"	15"	603 CONDUIT LIN. FT. TYPE F 24"	15"	12"	6"	BENDS & TYPE-BRANCHES W/6" BRD. 24"	15"	12"	6"	SEE SHEET NO.
U-9	254+00 TO 256+47	LT.							20							75	
U-12	254+00 TO 258+67	LT.							30							75	
U-16	254+00 TO 264+00	LT.														75	
U-17	OMIT															75	
U-18	258+70 TO 264+00	RT.							10							75	
U-19	A-10 TO 261+66	LT.							20							75	
U-20	262+68 TO 264+00	LT.														75	
U-21	OMIT															75	
P-7	OMIT															75	
P-8	A-8 TO A-9	RT.														75	
P-9	A-9 TO A-10	RT.														75	
P-10	A-10 TO A-11	LT.											2			75	
P-11	A-11 TO A-12	LT.											2			75	
P-12	A-12 TO A-13	LT.														75	
P-13	A-13 TO A-14	RT.														75	
P-14	A-14 TO A-15	RT.														75	
P-15	A-15 TO A-16	LT.														75	
P-16	A-16 TO A-17	LT.														75	
P-17	A-17 TO A-18	LT.														75	
P-18	A-18 TO A-19	LT.														75	
P-19	A-19 TO A-16	LT.														75	
P-20	A-16 TO A-20	LT.														75	
P-21	A-20 TO 264+00	RT.														75	
P-21A	A-20 TO 264+00	RT.														75	
TOTALS			1265	15	2,144	342	3	1	2	4	1	1	1	1	1	1	

S.R. 8 STA. 254+00 to STA. 264+00

SUM 8-17.63

FOR WATER MAIN RELOCATION ON HUDSON DRIVE BRIDGE SEE SHEET Nº 220.

FOR HUDSON DR. PLAN & PROFILE SEE SHEET Nº 220

BEGIN SHEET STA 264+00

END SHEET STA 274+00

THIRD ST.

MELVIN AVE.

RAMP "P"

RAMP "Q"

CONSTRUCTION LIMITS

L/A

20' BLK. TOP DR.

BLK. TOP PARKING

ASPHALTIC CURB

FOR RET. WALL DETAILS SEE SHT. Nº 371

FOR SANITARY SEWER QUANTITIES SEE SHT. Nº 84

FOR SANITARY SEWER PROFILES SEE SHT. Nº 81-82

FOR RAMP "Q" PLAN & PROFILE SEE SHEET Nº 65

FOR RAMP "Q" PAV'T. DETAILS SEE SHEET Nº 88

FOR RAMP "P" PAV'T. DETAILS SEE SHEET Nº 87-A

FOR STORM SEWER PROFILES SEE SHT. Nº 76-77

STRUCTURE Nº SUM-8-18.45 STA. 49+97.28 HUDSON DR. STA. 271+19.01 S.R. 8

M.L. & CURVE DATA

P.I.	28°46'00"
D	5°00'00"
R	1145.90'
Ds	12° 30'
L	249.60'
Lc	497.62'
T	336.24'
E	334.17'
S.T.	167.43'
R	498.94'
M	75.383'
Ts	545.82'
Es	46.46'

RAMP "P" CURVE DATA

Δ = 3°07'52"
Ds = 1° 15'
R = 4,583.62'
T = 125.27
Lc = 250.51'
E = 1.71'

M.L. & CURVE DATA

L.T. = 334.17'
S.T. = 167.43'
Ds = 12° 30'
Ls = 500.00'

HUDSON DR. CURVE DATA

Δ = 9°36'52"
Ds = 3°00'
R = 1,909.86'
T = 160.62'
Lc = 320.48'
E = 6.74'

P.C. STA. 49+08.18
P.I. STA. 50+68.80
P.T. STA. 52+28.66

PROFILE SHIFT N.B. TO S.B. STA. 269+31.80

350 V.C.

EXIST. 24" STORM ELEV. 1016.5 (TO BE REMOVED)

EXIST. 8" SAN. ELEV. 1013.7 (TO BE REMOVED)

PROP. 8" SAN. ℄ EL. 1001.15

P.V.I. STA. 269+50 EL. 1003.05

PROP. 42" STORM ℄ EL. 994.60

REF. NO.	606 GUARD RAIL ANCHOR ASSEMBLY EACH	606 GUARD RAIL BRIDGE TERMINAL ASSY EACH
GR-1		2
GR-2	1	
TOTAL	1	2

EARTHWORK ITEM 203

EXCAVATION CU. YD.	EMBANKMENT CU. YD.
126,594	1,626

ESTIMATED QUANTITIES

| REF. NO. | STATION TO STATION | SIDE | 603 CONDUIT LIN. FT. BENDS & BRANCHES TYPE-C BRANCHES W/BEND | 603 CONDUIT LIN. FT. TYPE F | 603 CONDUIT LIN. FT. TYPE B W/CLB BEDDING | 603 CONDUIT LIN. FT. UNDER-DRAIN LIN. FT. | 604 MONUMT. ASSEMBLY EACH | 606 GUARD RAIL LIN. FT. | 609 CURB POROUS BACK TYPE CU. YDS. | 518 POROUS BACK LIN. FT. | 202 C.B.E. FRED'K OR ABANDND EACH | 604 CURB INLET EACH | 604 MH. INLET EACH | 604 CATCH BASIN Nº 1 EACH | 604 CATCH BASIN Nº 2 EACH | 604 CATCH BASIN Nº 5 EACH | 604 C.B. P.U.N. EACH | 604 CONC. COLLAR MED. EA. | 604 CONC. COLLAR EA. | 604 MANHOLE EA. | 604 MANHOLE EA. | 604 MANHOLE

P.I. STA. 276+80.72
M.L. & CURVE DATA

Δ	= 28°59'23"
D	= 5°00'00"
R	= 1145.92'
L	= 5000.00'
T	= 2°30'00"
E	= 9.08'
V	= 2496.60'
V'	= 497.72'
LC	= 3962.24'
SC	= 394.41'
ST	= 167.43'
LC	= 498.94'
TC	= 79.73'
ES	= 47.05'

FOR WATER LINE & SANITARY SEWER QUANTITIES SEE SHT Nº 84

FOR SANITARY SEWER PROFILES SEE SHT. Nº 82

FOR WATERLINE PROFILES SEE SHT. Nº 83, 83-A

FOR PLAN & PROFILE ASHLAND & RUDOLPH CONNECTOR SEE SHT. Nº 222

BEGIN SHEET STA. 274+00

END SHEET STA. 284+00

DEAD END W/ VALVE & HYD

BLK. TOP DR. & PARKING

SERVICE LATERAL (SAN.) TO BE ADJUSTED

PROP 8" SAN

ASHLAND & RUDOLPH CONNECTOR

SEE SHEET Nº 222 FOR SERVICE CONN.

SEE SHEET Nº 222 FOR HYDRANT

PROP 8" SAN. FROM 8" W.M.

SIGN Nº 47 283.00'

6" PLUG 281+97 (U-32) ℄ 1012.50

6" PLUG 278+45 (U-29) ℄ 1007.35

RELOC. S.R. 8

6" TYPE E

6" PLUG 277+47 (U-31) ℄ 1011.72

S.R. 8 & ASHLAND AVE.

S.R. 8 STA. 279+40.81

6" PLUG 278+47 (U-35) ℄ 1013.50

6" PLUG 278+53 (U-36) ℄ 1013.73

CHARLES ST.

RAMP "Q"

FOR RAMP "Q" PLAN & PROFILE SEE SHT Nº 65

FOR RAMP "Q" PAV'T. DETAILS SEE SHT Nº 88

CONSTRUCTION LIMITS

L/A-R/W LIMITS

PENN. CENTRAL RAILROAD

SHELDON AVE.

TO BE ABANDONED

EXIST. 8" SAN.

SEE SHEET Nº 83 B FOR WATER MAIN RELOC.

C.M.H. & C.B. THIS AREA TO BE REMOVED, FOR QUANT. SEE SHT. Nº 65

FOR STORM SEWER PROFILES SEE SHT Nº 77 & 78

REF. NO.	COC BARRIER RAIL APPROACH END ASSEMBLY EACH
GR-1	1
TOTAL	1

EARTHWORK ITEM 203

EXCAVATION CU.YD.	EMBANKMENT CU. YD.
89,285	1,342

ESTIMATED QUANTITIES

REF. NO.	STATION TO STATION	SIDE	603 CONDUIT, LIN. FT. TYPE B W/C.B. TYPE B BEDDING	603 UNDER-DRAINS IN FT. SIZE 6"	604 CURB & GUTTER TYPE 2-6 M.L.	606 GUARD RAILS TYPE 5 L.F.	606 BARRIER TYPE 5 L.F.	606 GUARD RAILS TYPE 5 EA. LIN. FT.	606 BARRIER TYPE 5 EA. LIN. FT.	604 CURB & GUTTER TYPE 2-6 EACH	202 REMOVED GUARD RAILS EACH	202 REMOVED CURB & GUTTER EACH	604 MANHOLE N91 EACH	604 C.B. SIZE 2A-6 EACH	604 C.B. SIZE 2A-8 EACH	604 C.B. INLET EACH	604 C.B. INLET MATTING EACH	604 JUTE N95 EACH	604 667 SEE SHEET Nº
U-25	274+00 TO 278+45	LT.		435															
U-30	274+00 TO 275+97	RT.		187															
U-31	274+00 TO 277+47	RT.		337															
U-32	A-51 TO 281+97	LT.		190															
U-33	A-55 TO 284+00	LT.		337															
U-34	A-45 TO 284+00	RT.		780															
U-35	277+50 TO A-52	RT.		130															
U-36	A-52 TO 284+00	RT.		577															
U-37	OMIT																		
P-46	274+00 TO A-43A	LT.																	
P-46A	A-43A TO A-43B	LT.																	
P-46B	A-43B TO A-43C	LT.																	
P-47	A-47 TO A-48	LT.																	
P-47A	A-43A TO A-47	LT.																	
P-48	A-46 TO A-46	L'BART.																	
P-49	A-44 TO A-45	RT.																	
P-50	A-47 TO A-51	LT.																	
P-51	A-49 TO A-50	LT.																	
P-52	A-50 TO A-51	LT.																	
P-53	A-52 TO A-55	L'BART.																	
P-54	A-51 TO A-55	RT.																	
P-56	OMIT																		
P-57	OMIT																		
P-58	A-55 TO A-57	L'BART.																	
P-59	A-56 TO A-55	LT.																	
P-60	A-57 TO A-58	LT.																	
P-61	A-58 TO A-59	LT.																	
P-62	A-59 TO A-60	LT.																	
P-63	A-58 TO 284+00	LT.																	
TOTALS			(2373.56)822.6	2530	1035	0	0	44	49	33	238	125	125	1	1	250			

REF. NO.	STATION TO STATION	SIDE	603 CONDUIT, LIN. FT. TYPES B & C BENDS & BRANCHES	SEE SHEET NO
	277+00			77
	282+12.32			77
RM-1	274+00 TO 281+95	℄		77
RM-2	282+12.32	℄		77
GR-1	274+00 TO 276+68	RT.		77
C-1	274+00 TO 284+00	LT.		77
C-2	274+00 TO 281+45.09	RT.&LT.	1	77
C-3	277+50 TO 278+40	RT.	2	77
A-43A	274+30 - 48	LT. ℄ M.L.		77
A-43B	274+30 - 97	LT. ℄ M.L.		77
A-43C	274+66 - 17.5	LT. ℄ "Q"		77
A-44	276+00 - 41	RT. ℄ M.L.		77
A-45	276+00 - 15'	LT. ℄ M.L.		77
A-46	276+00 - 48	LT. ℄ M.L.		77
A-47	276+00 - 48	LT. ℄ M.L.		77
A-48	276+00 - 54	LT. ℄ M.L.		77
A-45	48 + 20 - 8	RT. ℄ RUDOLPH CONN.		78
A-50	278 + 65 - 54	LT. ℄ M.L.		78
A-51	278 + 50 - 48	LT. ℄ M.L.		78
A-52	278 + 50 - 103	RT. ℄ M.L.		78
A-53	8A-54.0	OMIT		78
A-55	282 +00 - 48	LT. ℄ M.L.		78
A-56	282 +00 - 3	LT. ℄ M.L.		78
A-57	282 +00 - 54	LT. ℄ M.L.		78
A-58	282 +00 - 88	LT. ℄ M.L.		78
A-53	51 +00 - 10	RT. ℄ RUDOLPH		78
A-60	51 +00 - 10	LT. ℄ RUDOLPH		78
E-1	282+07	283+57		78
E-2	278+57	280+07		78
MR1	279+77 - 38	RT. ℄ M.L.		78
MR2	279+81 - 70	RT. ℄ M.L.		78
MR3	279 +70 - 77	RT. ℄ M.L.		78
MR4	279 +90 - 94	RT. ℄ M.L.		78
MR5	282 +46 - 24	LT. ℄ M.L.		78
GR2	274+40 - 274+68	LT.	25	78
TOTALS			25	

CALC. BY C.P.B. 10/67
CHECKED BY H.C.S. 11/68

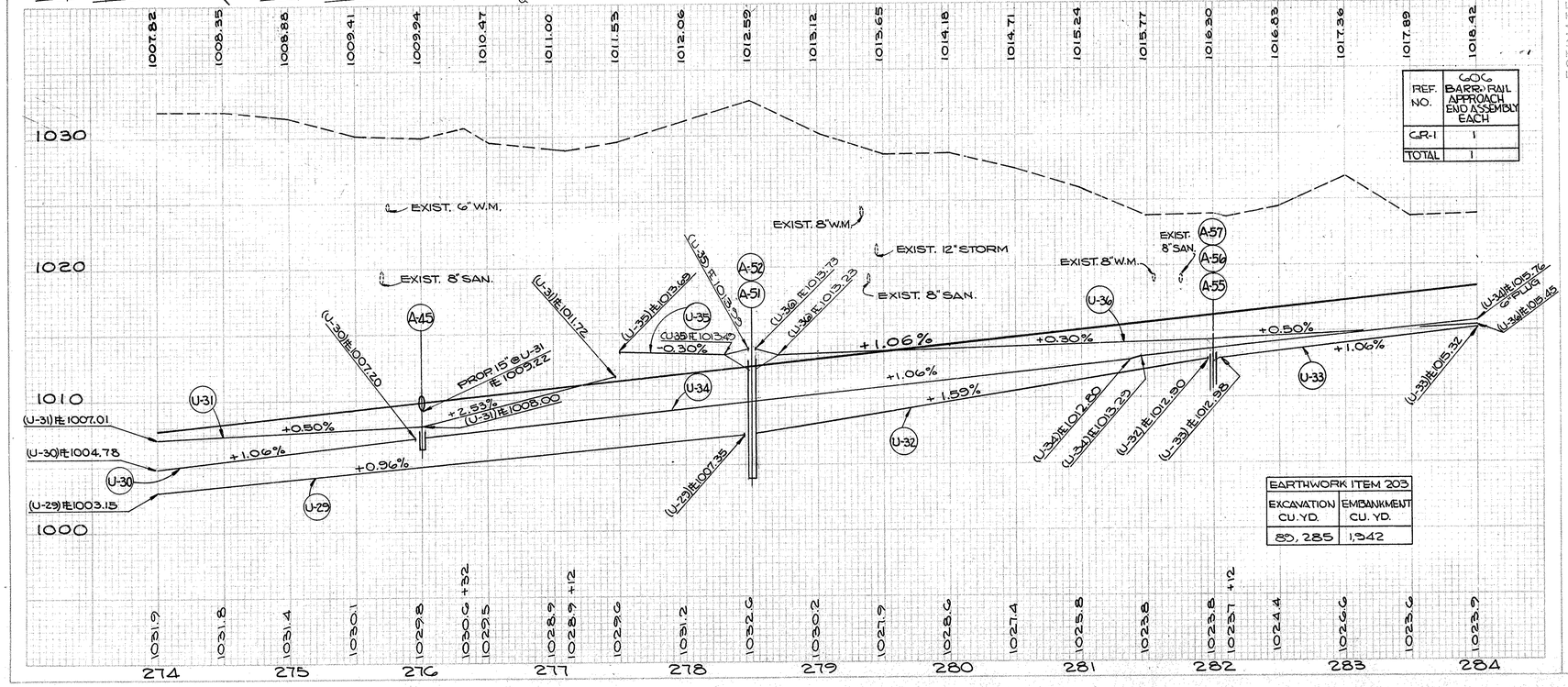

S.R. 8 STA. 274+00 to STA. 284+00

NOTE:
THE EXISTING 8"W.M. & 16" W.M. SHALL NOT BE SHUT DOWN AT THE SAME TIME DURING THE RELOC. OF EITHER LINE

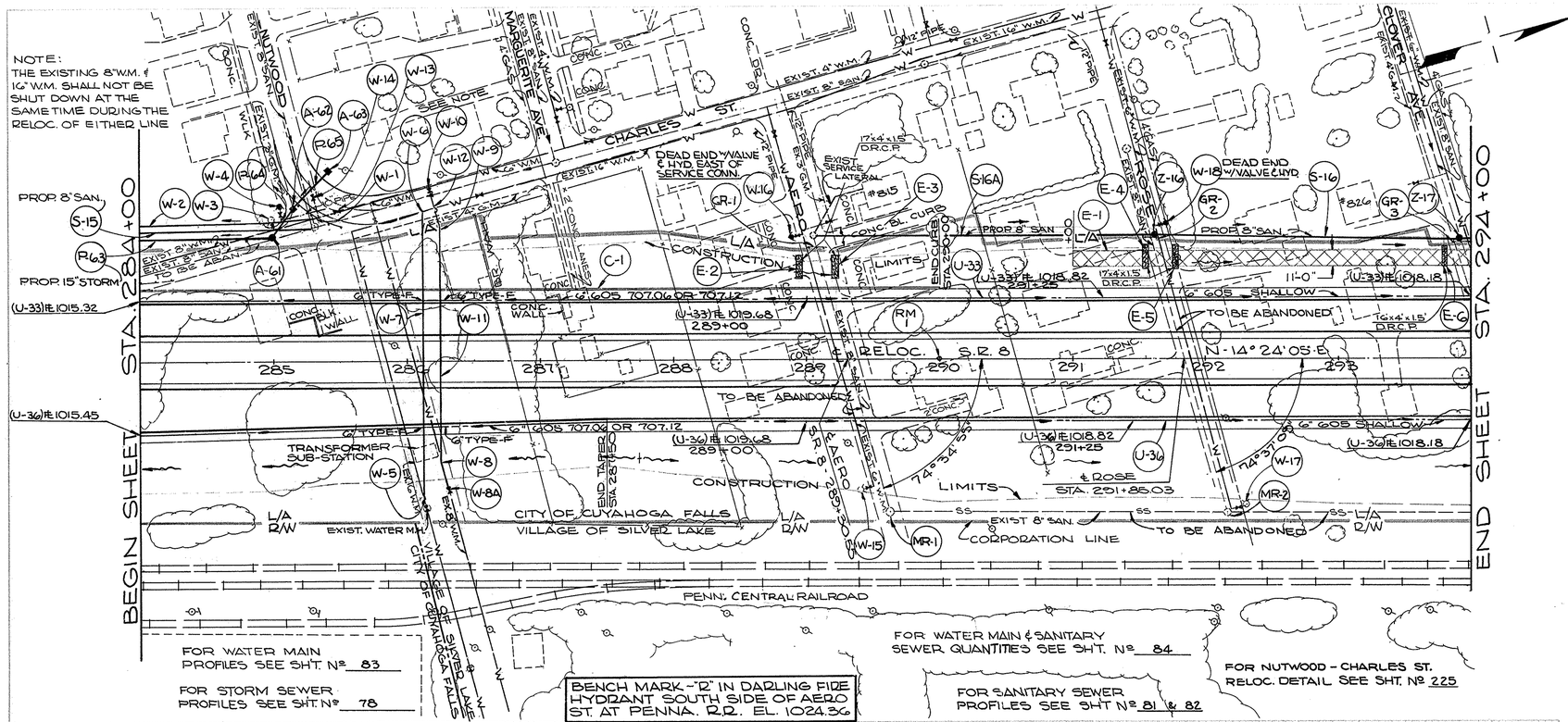

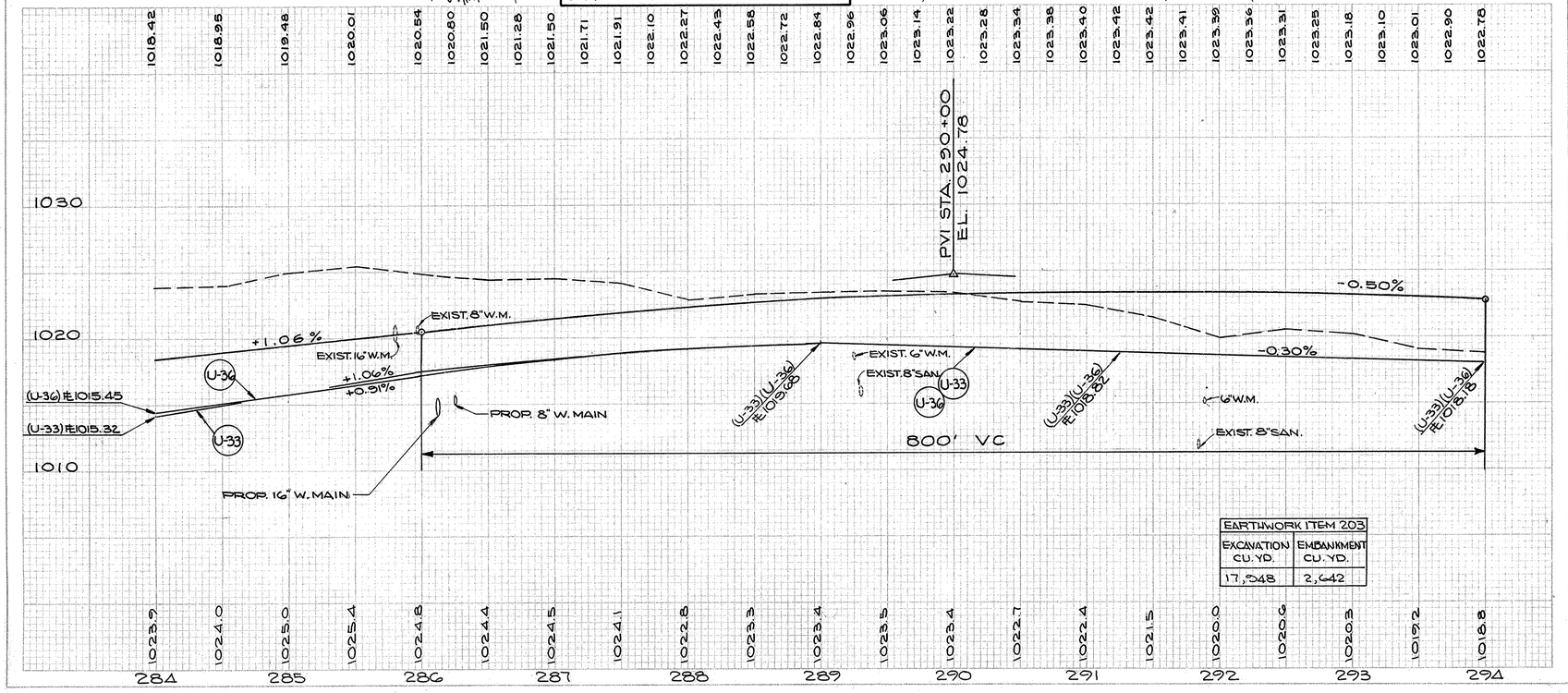

EARTHWORK ITEM 203	
EXCAVATION CU. YD.	EMBANKMENT CU. YD.
17,548	2,642

ESTIMATED QUANTITIES

REF. NO.	STATION TO STATION	SIDE	604 & REF. MONUMT. TYPE	606 GUARD RAIL TYPE-4 DT. EACH	607 MIL. JUTE REMOVED/MATTING DR. ABAND. SQ.YDS.	604 N.I.A. M.H. EACH	604 2-2A C.B. EACH	603 CONDUIT L.F. W.C.I. BEDDING TYPE-6 15"	603 TYPE-F 15"	603 TYPE-F 6"	603 UNDER-DRAINS LIN. FT. 707.01 OR 707.12	605 UNDER-DRAINS LIN. FT. 707.11	609 TYPE-B ROCK CHANNEL PROT. CU. YD.	606 GUARD RAIL ANCHOR ASSEMBLY EACH	SEE SHEET NO.
RM-1	290+00	℄	1												78
C-1	284+00 TO 290+00	LT.		600											78
GR-1	85' LT. ℄ STA. 289+08 S.R.8	LT.			12.5										
GR-2	90' LT. ℄ STA. 291+40 S.R.8	LT.			12.5										
GR-3	87' LT. ℄ STA. 293+90 S.R.8	LT.			12.5										
U-33	284+00 TO 294+00	LT.									500	480	20		
U-36	284+00 TO 294+00	RT.									500	480	20		
A-61	285+00-93 LT. ℄ S.R. 8					1								2	
A-62	49+75-21 RT. ℄ REL. NUTWD.	—					1							2	
A-63	49+75-18 LT. ℄ REL. NUTWD.	—					1							2	
R-63	284+00 TO A-61	LT.								100					
R-64	A-61 TO A-62	LT.								26					
R-65	A-62 TO A-63	LT.								39					
E-1	291+00 TO 294+00	LT.			367										
E-2	288+95 - 61 LT. ℄ S.R. - 8	—													
E-3	289+22 - 61 LT. ℄ S.R. - 8	—													
E-4	291+55 - 68 LT. ℄ S.R. - 8	—													
E-5	291+78 - 68 LT. ℄ S.R. - 8	—													
E-6	293+80 - 69 LT. ℄ S.R. - 8	—													
MR-1	285+63 - 117 RT. ℄ M.L.	—													
MR-2	292+17 - 120 RT. ℄ M.L.	—													
TOTALS	CALC. BY C.D.B. 10/67 CHECKED BY H.C.S. 11/68		1	600	37.5	2	367	1	2	39	126	1000	960	40	

S.R. 8 STA. 284+00 to STA. 294+00

B.M. 91' RT. & S.R. 8 STA. 296+90 USGS. EL. 1016.56

FOR WATER MAIN & SANITARY SEWER QUANTITIES SEE SHT. Nº 84

FOR SANITARY SEWER PROFILES SEE SHT. Nº 81

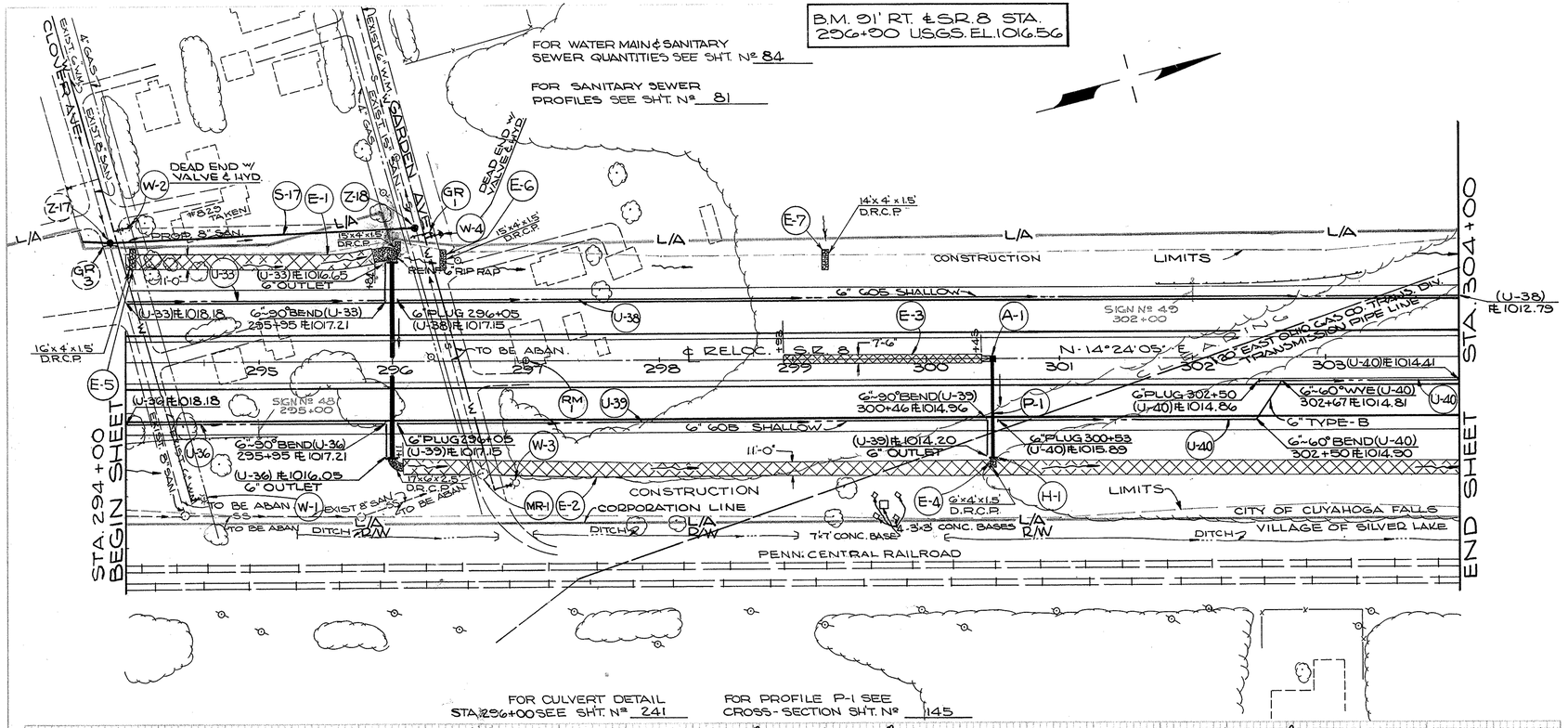

* FOR PROPOSED STRUCTURE DATA SUM-8-1927 SEE SHEET Nº 404-A

M.L. & CURVE DATA

Δ = 59°33'25"
Dc = 3°00'
Ls = 350.00'
R = 1909.86'
Lc = 1136.29'
θs = 5°15.00"
P = 2.97'
XM = 174.95'
Xc = 349.71'
Yc = 10.68'
L.T. = 233.44'
S.T. = 116.76'
Lc = 349.29'
Ts = 1269.91'
Es = 293.64'

B.M. "O" IN OPEN ON HYD. NE. END HOLLYWOOD CIRCLE IN FRONT HSE Nº 841 EL. 1026.05

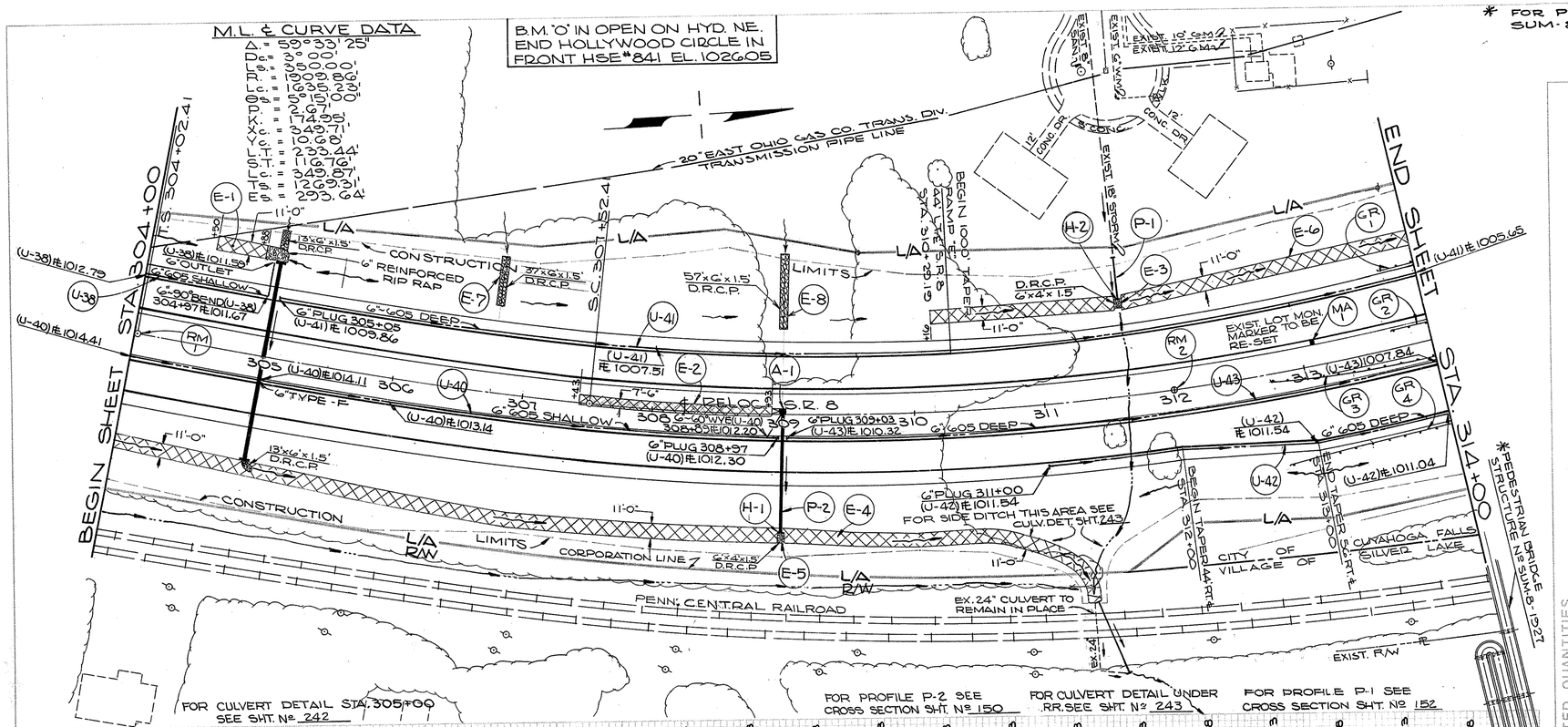

FOR CULVERT DETAIL STA. 305+00 SEE SHT. Nº 242

FOR PROFILE P-2 SEE CROSS SECTION SHT. Nº 150

FOR CULVERT DETAIL UNDER RR SEE SHT. Nº 243

FOR PROFILE P-1 SEE CROSS SECTION SHT. Nº 152

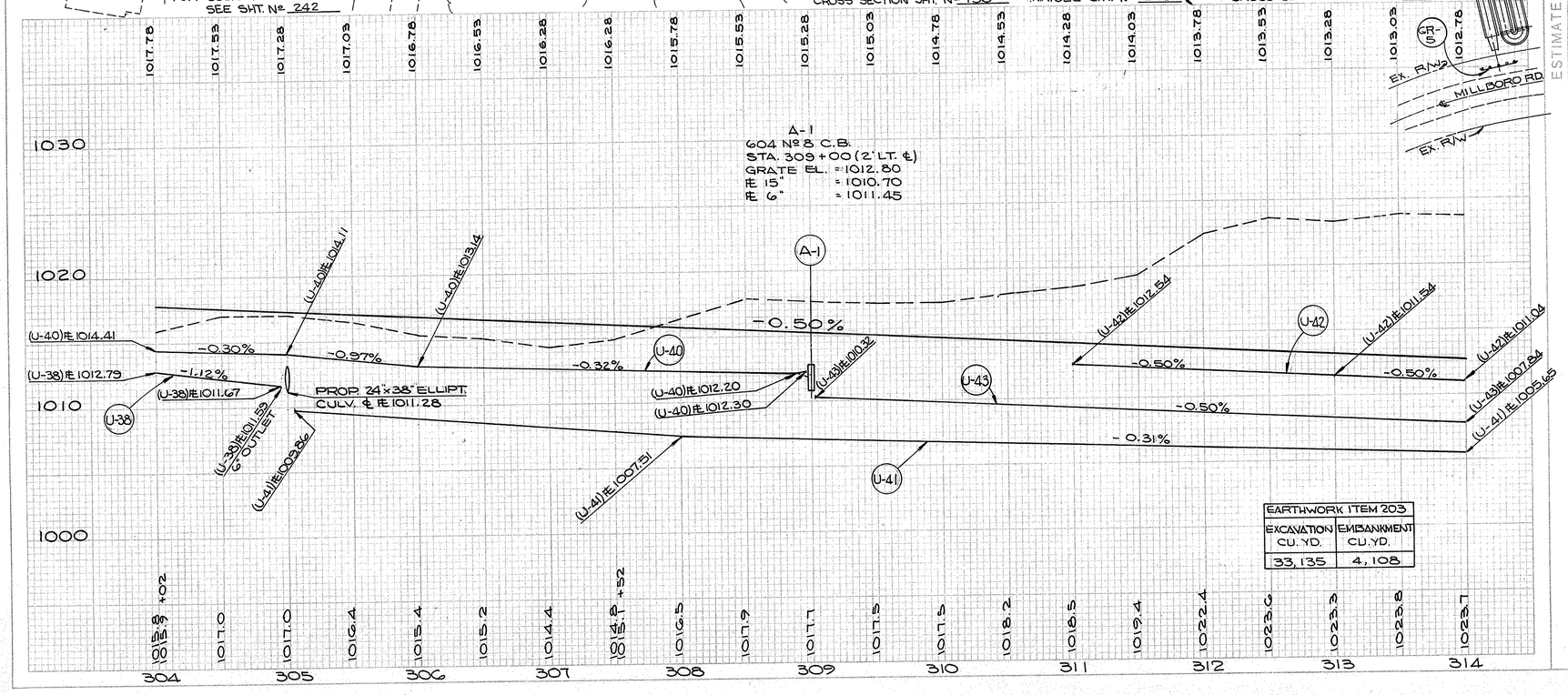

EARTHWORK ITEM 203	
EXCAVATION CU. YD.	EMBANKMENT CU. YD.
33,135	4,108

ESTIMATED QUANTITIES

REF. NO.	STATION TO STATION	SIDE	604 ℄ REF. MONUMENT ASSEMBLY EACH	606 GUARD RAIL TYPE-4 STD. LIN. FT.	606 GUARD RAIL TYPE-5 ANCHOR ASSEMBLY EACH	606 GUARD RAIL SINGLE FACE APPROACH END ASSY EACH	604 Nº 8 C.B. EACH	603 CONDUIT-LIN. FT. TYPE-F 6"	603 CONDUIT-LIN. FT. W/CLASS B BEDDING TYPE-B 18"	603 CONDUIT-LIN. FT. TYPE-B 15"
RM-1	304+02.41	℄	1							
RM-2	312+00	℄	1							
MA-1	313+10 (17.87' LT.)	LT.	1							
U-38	304+00 TO 304+97	LT.						10		
U-40	304+00 TO A-3	RT.						20		
U-41	305+05 TO 314+00	LT.								
U-42	311+00 TO 314+00	RT.								
U-43	309+03 TO 314+00	RT.								
A-1	309+00-2' LT. ℄ M.L.	—					1			
P-1	H-2 TO 106' LT. ℄ M.L.	LT.						33	92	
P-2	A-1 TO H-1	RT.								
GR-1	313+75 TO 314+00	LT.		25	1					
GR-2	313+75 TO 314+00	RT.		25	1					
GR-3	312+75 TO 314+00	RT.		125		1				
GR-4	312+75 TO 314+00	LT.		125		1				
GR-5	313+67.5 TO 313+92.5	RT.		25	2					
E-1	304+50 TO 304+88	LT.								
E-2	307+48 TO 308+93	℄								
E-3	311+66 - 74 LT. ℄ M.L.	LT.								
E-4	304+00 TO P-3	RT.								
E-5	309+00 - 51 RT. ℄ M.L.	LT.								
E-6	310+16 TO 314+00	LT.								
E-7	306+75 - 67 LT. ℄ M.L.	—								
E-8	309+00 - 66 LT. ℄ M.L.	—								
H-1	309+00 - 51 RT. ℄ M.L.	RT.								
H-2	311+66 - 74 LT. ℄ M.L.	LT.								
TOTALS	CALC BY C.D.B. 10/67 CHECKED BY H.C.S. 11/68		2	1	25	300	4	2	1	30	33	92

47	2	2	1/6
125			25
923			
470			0.26
			0.30
2			
113			
499			
600235			
300			
497			
1212.1092		1565	0.56
			45

S.R. 8 STA. 304+00 TO STA. 314+00

FED. RD. DIVISION	STATE	PROJECT	
2	OHIO		

54
460

SUM-8-17.63

FOR RAMP "E" PLAN & PROFILE SEE SHT. No. 72-73

FOR INTERSECTION DETAILS RAMP "E" SEE SHT. No. 93

M.L. & CURVE DATA

Δ = 99° 33' 25"
D = 3° 00'
R = 1909.86'
L.C. = 1955.26'
D = 5° 15' 00"
T = 1374.95'
K = 3491.71'
Y = 110.68'
L.T. = 2334.44'
T.E. = 116.76'
E = 349.87'
T.S. = 1260.31'
E.S. = 293.64'

RAMP "E" CURVE DATA

Δ = 31° 00' 37"
D = 6° 00'
R = 954.93'
T = 264.92'
L = 516.84'
E = 36.07'

P.C. STA. 320+25.19

6' LT. & RELOC. S.R. 8

100' 4' TO 4' DITCH BOTTOM

END 1000' TAPER RAMP "A" STA. 324+55.90

1000' TAPER 40:1

CONSTRUCTION LIMITS

11'-0"

6" CONC. BARRIER

6" GOS DEEP

6" GOS DEEP

6" GOS DEEP

6" GOS DEEP

RAMP "E"

END SHEET STA. 324+00

(U-48) ℄ 994.72

(U-41) ℄ 1005.65

(U-41) ℄ 1005.13 6" OUTLET

6"x6"x1S D.R.C.R.

6"-60° BEND (U-40) 315+00 ℄ 1005.33

6" PLUG 315+03 (U-41) ℄ 1002.10

(U-43) ℄ 1007.84

(U-42) ℄ 1011.04

(U-43) ℄ 1006.50 316+25

6"-60° WYE (U-43) 317+35 ℄ 1006.18

6"-90° BEND (U-42) 317+47 ℄ 1008.82

6" PLUG 317+53 (U-46) ℄ 1005.55

6" PLUG 317+53 (U-45) ℄ 1005.64

(U-42) ℄ 1005.57 6" OUTLET

6" PLUG 320+23 (U-47) ℄ 1005.21

6" PLUG 320+31 (U-48) ℄ 997.58

(U-44) ℄ 996.81 320+29

(U-47) ℄ 1001.44

(U-46) ℄ 999.30 323

SIGN No 50 318+00

SIGN No 50 317+47

P.C. RAMP "C" STA. 317+47.47

P.T. STA. 321+02.61

NOSE 1008.81 320+20 (U-45) ℄ 1008.81 (U-46) ℄ 1005.55 (U-47) ℄ 1005.21 (U-48) ℄ 997.58 (U-44) ℄ 996.81 (U-45) ℄ 1005.64 (U-42) ℄ 1006.42 (U-43) ℄ 1006.28 (U-41) ℄ 1005.33 (U-41) ℄ 1005.13 (U-43) ℄ 1006.50 (U-42) ℄ 1011.04 (U-44) ℄ 1002.10 (U-47) ℄ 1001.44 (U-46) ℄ 999.30 (U-48) ℄ 994.72

LOCATION OF 20' CLEAR ZONE ON CURVE

(U-45) ℄ 1008.81 320+20 (U-46) ℄ 1005.55 (U-47) ℄ 1005.21 (U-48) ℄ 997.58 (U-44) ℄ 996.81 (U-45) ℄ 1005.64 (U-42) ℄ 1006.42 (U-43) ℄ 1006.28 (U-41) ℄ 1005.33 (U-41) ℄ 1005.13 (U-43) ℄ 1006.50 (U-42) ℄ 1011.04 (U-44) ℄ 1002.10 (U-47) ℄ 1001.44 (U-46) ℄ 999.30 (U-48) ℄ 994.72

NOSE 1008.81 320+20 (U-45) ℄ 1008.81 (U-46) ℄ 1005.55 (U-47) ℄ 1005.21 (U-48) ℄ 997.58 (U-44) ℄ 996.81 (U-45) ℄ 1005.64 (U-42) ℄ 1006.42 (U-43) ℄ 1006.28 (U-41) ℄ 1005.33 (U-41) ℄ 1005.13 (U-43) ℄ 1006.50 (U-42) ℄ 1011.04 (U-44) ℄ 1002.10 (U-47) ℄ 1001.44 (U-46) ℄ 999.30 (U-48) ℄ 994.72

PEDESTRIAN BRIDGE STRUCTURE No SUM-8-1927 S.R. 8 STA. 314+00.00 BRIDGE STA. 50+00

BEGIN SHEET STA. 314+00

CONSTRUCTION LIMITS

CORPORATION LINE

CITY OF CUYAHOGA FALLS

VILLAGE OF SILVER LAKE

PENN. CENTRAL RAILROAD

EX. 24' C.I.P.

EXIST. R/W

℄ MILLBORO RD

EXIST. R/W

FOR PROFILE P-4 SEE CROSS-SECTION SHT No. 156

FOR STORM SEWER PROFILE P-1, P-2 & P-3 SEE SHT. No. 79

RAMP "C" CURVE DATA

Δ = 3° 33' 05"
D = 1° 00'
R = 5,729.58'
T = 177.63'
L = 355.14'
E = 2.75'

FOR RAMP "C" PLAN & PROFILE SEE SHT. No. 68-69

FOR RAMP "C" PAVT. DETAILS SEE SHT. No. 91

1012.78 1012.65 1012.52 1012.38 1012.24 1012.09 1011.94 1011.78 1011.61 1011.44 1011.27 1011.09 1010.91 1010.72 1010.52 1010.32 1010.11 1009.90 1009.69 1009.47 1009.24 1009.01 1008.77 1008.53 1008.28 1007.78 1007.28 1006.78 1006.28 1005.78 1005.28 1004.78 1004.28

1030
1020
1010
1000

A-4
604 No 8 C.B.
STA. 317+50 (3' LT. ℄)
GRATE EL. = 1008.04
℄ 15" = 1005.94
℄ 6" = 1006.69

P.V.I. STA. 317+00
EL. 1011.28

-0.50%
-0.30%
-1.00%
600' VC

(U-42) ℄ 1006.42 6" OUTLET
(U-43) ℄ 1006.28
(U-41) ℄ 1005.33
-0.31
(U-43) ℄ 1006.50
(U-47) ℄ 1006.18
(U-44) ℄ 1002.10
(U-44) ℄ 996.81 MEET U.D. RAMP "E"
(U-45) ℄ 1008.81 NOSE
(U-46) ℄ 1005.55
(U-47) ℄ 1005.21
(U-48) ℄ 997.58
(U-47) ℄ 1001.44
(U-46) ℄ 999.30
(U-48) ℄ 994.72

1023.7 1023.6 1023.2 1022.4 1022.2 1022.5 1018.4 1018.6 1021.2 1024.8 1027.4 1028.4 1028.1 1027.2 1027.0 1026.4 1025.9 1026.2 1025.8 1025.4 1025.0 1024.6

314 315 316 317 318 319 320 321 322 323 324

EARTHWORK ITEM 203	
EXCAVATION CU. YD.	EMBANKMENT CU. YD.
99,307	1,040

ESTIMATED QUANTITIES

REF. NO.	STATION TO STATION	SIDE	604 ℄ REF. MONUMENT EACH	604 No 1 M.H. EACH	604 No 5 C.B. EACH	604 No 8 C.B. EACH	603 CONDUIT TYPE-B W/CL 'B' BEDDING 15"	603 CONDUIT TYPE-B W/CL 'B' BEDDING 30"	603 CONDUIT TYPE-C W/CL 'B' BEDDING 30"	603 CONDUIT TYPE-F 6"	604 ℄ REF. MONUMENT EACH	604 No 1 M.H. EACH	604 No 5 C.B. EACH	604 No 8 C.B. EACH	603 CONDUIT TYPE-B W/CL 'B' BEDDING 15"	603 CONDUIT TYPE-B W/CL 'B' BEDDING 30"	603 CONDUIT TYPE-C W/CL 'B' BEDDING 30"	603 CONDUIT TYPE-F 6"
			℄				L.F.	L.F.	L.F.	L.F.	℄				L.F.	L.F.	L.F.	L.F.
RM-1	320+00	℄	1															
GR-1	314+00 TO 315+37.5	LT.																
GR-2	314+00 TO 315+37.5	LT.																
GR-3	314+00 TO 314+37.5	RT.																
GR-4	314+00 TO 314+37.5	RT.																
U-41	314+00 TO 315+14	LT.																
U-42	314+00 TO 317+47	RT.																
U-43	314+00 TO A-4	RT.																
U-44	315+03 TO 320+29	LT.																
U-45	317+53 TO 320+20	RT.																
U-46	317+53 TO 324+00	RT.																
U-47	320+23 TO 324+00	LT.																
U-48	320+31 TO 324+00	LT.																
A-1	321+00 - 30' LT. ℄ "E"	–																
A-2	322+83 - 59' LT. ℄ M.L.	–																
A-3	322+75 - 24' LT. ℄ "E"	–																
A-4	317+50 - 3' LT. ℄ M.L.	–																
P-1	A-1 TO A-2																	
P-2	A-2 TO A-3																	
P-3	A-2 TO 324+00																	
P-4	A-4 TO H-1																	
E-1	315+93 TO 317+43	℄																
E-2	314+00 TO 320+93	LT.																
E-3	315+25 - 80 LT. ℄ M.L.	–																
H-1	317+50 – 102' RT. ℄	–																
TOTALS	CALC BY C.D.B. 10/67 CHECKED BY H.C.S. 11/68		1	1	1	1	30	111	111	177	1	1	1	1	30	111	111	177
															0.26	981	2241	354
															0.26	981	118	186
															18	125	118	186
															18	856	118	186
																	118	186
																	327	186
																	358	56
																	526	111
																	269	121
																	647	186
																	377	56
																	369	111
																	118	186
																	118	186
																	118	186

B.M. "R" IN DARLING HYD. S.W. COR. CHARLES ST. & GRAHAM RD. EL. 1010.57

CUL-DE-SAC CHARLES ST.

HSE. № 3412

DEAD END EX. 6" W.M. W/ VALVE & HYDRANT

W-2

W-3 RESTORE SERVICE

MR-1

P-10 CURVE DATA
Δ = 38°12'15"
R = 50.00'
T = 17.32'
L = 33.34'

RAMP "E"

ABANDONED 2" GAS LINE

CHARLES ST.

CONC.

P-10

48" STORM

TILLCORP LINE

RELOC. GRAHAM RD.

FOR RAMP "E" PLAN & PROFILE SEE SHT. № 72 & 73

FOR RAMP "A" PLAN & PROFILE SEE SHT. № 66

FOR WATER MAIN QUANTITIES SEE SHEET № 84.

FOR RAMP "A" PAV'T. DETAILS SEE SHT. № 89.

RAMP "A"

P.C. RAMP "A" STA. 331+55.08

6"-60° WYE (U-51) 331+55 ℄ 1000.64

E-1

U-60 333

Post 20 Std. Dwg. GR-5 7'-6"

100' TAPER

40'

GR (3)

U-50

6"-60° BEND (U-49) 326+12 ℄ 994.62

6"-45° BEND (U-49) 326+12 ℄ 994.62

6"-60° BEND (U-48) 325+92 ℄ 994.14

6"-60° WYE (U-51) 331+70 ℄ 1001.08

6" PLUG 331+58 (U-51) ℄ 1001.18

6" PLUG 333+76 (U-51) ℄ 1005.14

6"-60° WYE (U-51) 331+55 ℄ 1000.64

6"-60° BEND (U-49) 326+12 ℄ 994.62

6" PLUG 327+35 (U-49) ℄ 995.51

6"-45° BEND (U-49) 327+37 ℄ 995.64

6"-60° BEND (U-49) 331+55 ℄ 995.64

6"-60° BEND (U-49) 327+37.64

6"-60° BEND (U-49) 331+55 ℄ 995.64

STA. 327+09.5 ℄ S.R. 8
= STA. 50+00 REL. STR. SEW.
03°45'38" LOCAL TAN.

STRUCTURE № SUM-8-1950
STA. 327+86.45 ℄ S.R. 8
STA. 113+17.56 ℄ RELOC. GRAHAM RD.

6"-60° WYE (U-51) 331+70 ℄ 1001.08

6" PLUG 331+58 (U-51) ℄ 1001.18

6" PLUG 333+76 (U-51) ℄ 1005.14

6" TYPE-B

6"-60S DEEP

6"-60S DEEP

6" TYPE-F

6" TYPE-R

6" TYPE-F

6" TYPE-F

6" TYPE-F

FED. AID DIVISION | STATE | PROJECT
2 | OHIO |

56
460

SUM - 8 - 17.63

FOR INTERSECTION DETAILS RAMP "B" & M.L. SEE SHT. Nº 89.

FOR PLAN & PROFILE RAMP "B" SEE SHT. Nº 67.

RAMP "B" CURVE DATA
Δ = 14° 24' 00"
D_c = 4° 00'
R = 1,432.38'
T = 180.95'
L_c = 360.00'
E = 11.38'

BEGIN PROJECT STA. 1043+44.20 SUM-8-19.77

U-19 (14)

F-19 (15)

BEGIN SHEET STA. 1035+00

END SHEET STA. 1045+00

RAMP "A"

SWAMP

CONSTRUCTION L/A

LIMITS

RAMP "B"

SIGN Nº 56 1042+00

6" PLUG 1043+44 (U-53) ℄ 1015.14

6" 605 SHALLOW (FUTURE)

6" 605 DEEP

6" 90° BEND (U-52) 1035+15 ℄ 1008.08

6" PLUG 1035+03 (U-52) ℄ 1007.13

(U-52) ℄ 1007.23

6" PLUG 1040+62 (U-52) ℄ 1016.00

1043+46

7'-6"

& RELOC. S.R.8

N - 45° 09' 20" W.

(U-47) ℄ 1008.97 1036+90

6" PLUG 1037+95 (U-47) ℄ 1011.15

(U-54) ℄ 1010.63 1037+97

(U-47) ℄ 1008.40

6" TYPE-F

RAMP "D"

6" PLUG 1043+44 (U-53) ℄ 1018.37

1043+46

CONSTRUCTION LIMITS 1000 TAPER 40 : 1

PT. STA. 1037+07.15

6"x4"x1.5" D.R.C.P.

U-19 (12)

END PROJECT STA. 1043+44.20

S.L.M. = 19.77

FOR INTERSECTION DETAILS RAMP "D" & M.L. SEE SHT. Nº 91.

FOR PLAN & PROFILE RAMP "D" SEE SHT. Nº 70-71.

FOR PROFILE P-1 & P-2 SEE CROSS-SECTION SHT. Nº 168.

FOR PROFILE P-3 SEE CROSS-SECTION SHT. Nº 173.

NOTE: TYPICAL SECTION FOR ADJOINING PROJECT IDENTICAL TO THIS PROJECT.

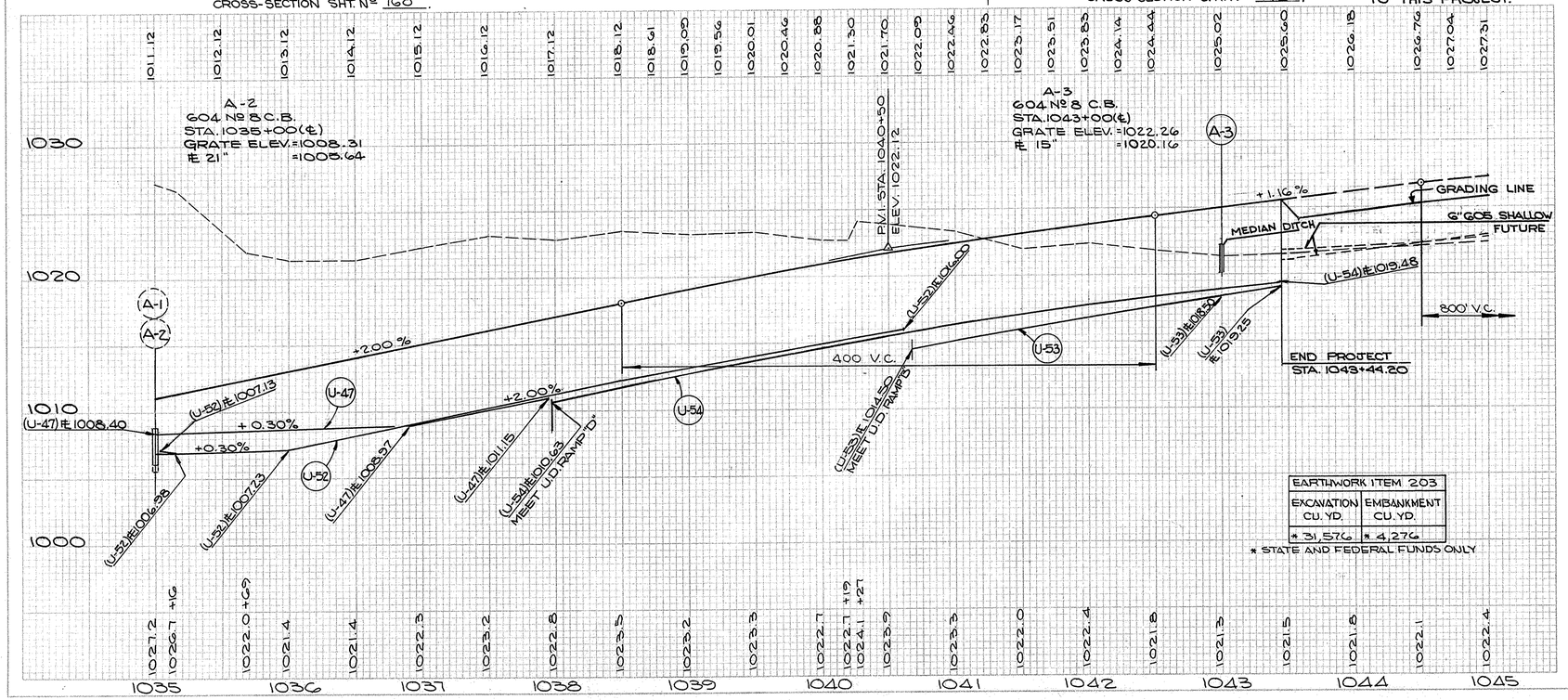

EARTHWORK ITEM 203	
EXCAVATION CU. YD.	EMBANKMENT CU. YD.
* 31,576	* 4,276

* STATE AND FEDERAL FUNDS ONLY

NOTE: ALL QUANTITIES STATE & FEDERAL PARTICIPATION ONLY

ESTIMATED QUANTITIES

REF. NO.	STATION TO STATION	SIDE	604 ℄ REF. MON. EACH	604 Nº 8 C.B. EACH	604 Nº 5 C.B. EACH	602 CONC. MASONRY C.B. CU.YDS.	603 CONDUIT L.F. TYPE-B W/CL-B BEDDING 6"	603 CONDUIT L.F. TYPE-B W/CL-B BEDDING 15"	605 6" UNDER-DRAIN JNT. 21" DEEP	BENDS & BRANCHES 6"
RM-1	1042+50	℄	1							
U-47	1035+00 TO 1037+95	RT.							285	
U-52	A-1 TO 1040+62	LT.							574	
U-53	1040+67 TO 1043+44	LT.							248	
U-54	1037+97 TO 1043+44	RT.							547	
A-1	1035+00 - 72' LT. ℄ M.L.	—			1					
A-2	1035+00 - ℄ M.L.	—								
A-3	1043+00 - ℄ M.L.	—								
P-1	A-1 TO A-2	LT.								72
P-2	A-2 TO H-1	RT.								146
P-3	A-3 TO H-1	LT.								
H-1	1043+00 - 90 LT. ℄ M.L.	—				0.26				90
H-2	1035+00 - 136 RT. ℄ M.L.	—				0.36				
E-1	1035+07 TO 1036+57	LT.								
E-2	1035+07 TO 1036+57	℄								
E-3	1043+07 TO 1044+57	℄								
E-4	1035+00-136 RT. ℄ M.L.	—								
TOTALS			1		1	0.62	1	2	30	90

CALC. BY C.D.B. 10/67
CHECKED BY H.C.S. 11/68

SEE SHEET NO.
168
168
173

601	667	625	626
TYPE-B	JUTE MATTING	CHANNEL PROT.	SQ. YDS. OUTLOS.

PID NO.	STATE	PROJECT	
DIVISION 2	OHIO		

SUM-8-17.63

57
460

B.M.#2 - R.R. SPIKE IN TELE. POLE
250' LT. M.L. ℄ STA. 1047+00 1016.77

NOTE:
FOR X-SECTIONS HUDSON DR.
SEE SHEET No. 174C

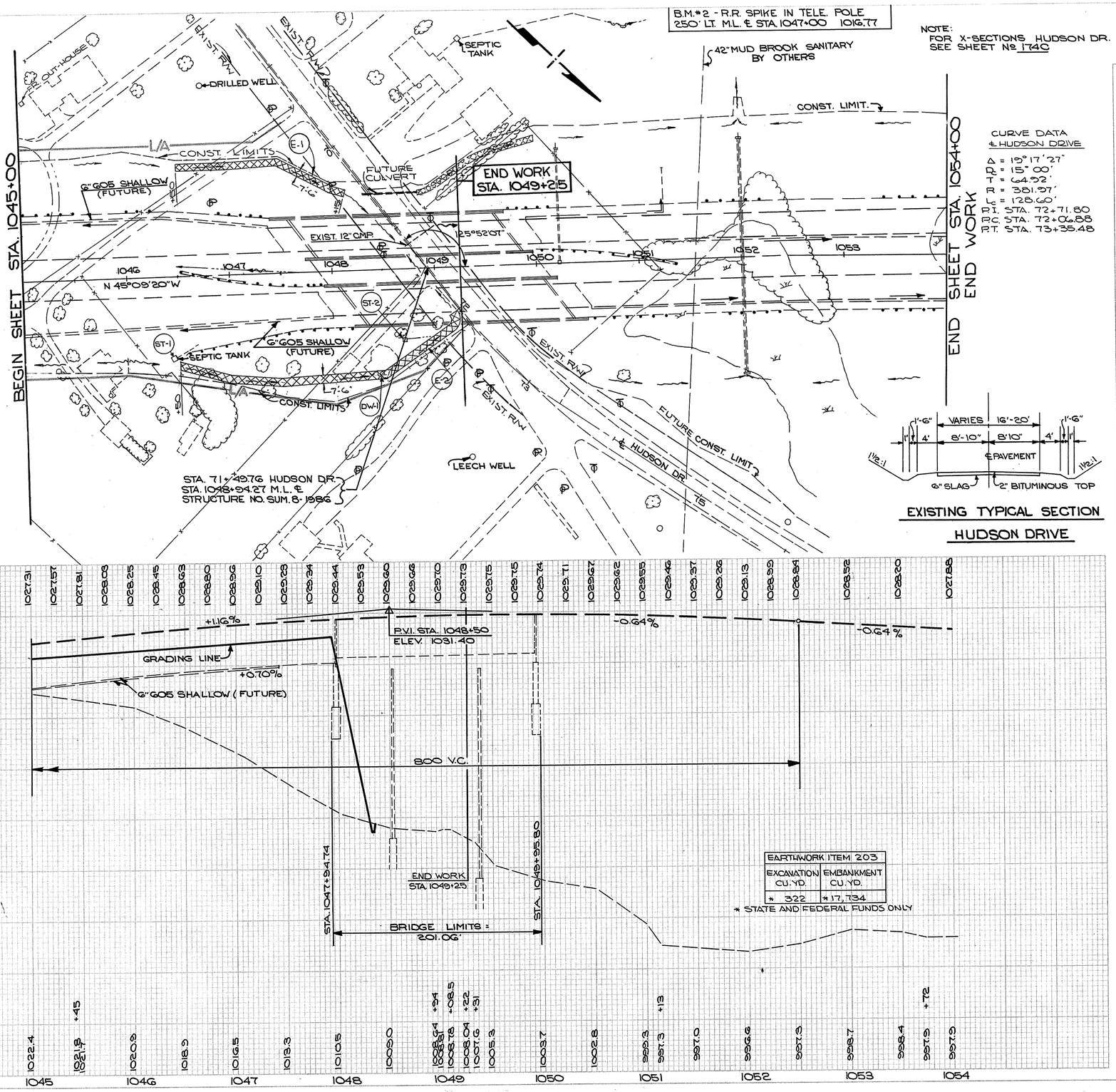

CURVE DATA
℄ HUDSON DRIVE

Δ = 19°17'27"
D = 15°00'
T = 64.92'
R = 381.97'
L_c = 128.60'
P.I. STA. 72+71.80
P.C. STA. 72+06.88
P.T. STA. 73+35.48

EXISTING TYPICAL SECTION
HUDSON DRIVE

EARTHWORK ITEM 203	
EXCAVATION CU. YD.	EMBANKMENT CU. YD.
* 322	* 17,734

* STATE AND FEDERAL FUNDS ONLY

ESTIMATED QUANTITIES

REF. NO.	STATION TO STATION	SIDE	ITEM SPECIAL CLEANING DRILLED WELLS & DISPOSAL OF SEPTIC TANKS EACH	GG7 JUTE MATTING SQ. YDS.	SEE SHEET NO.
DW-1	1048+47	RT.	1		
E-1	46+50 TO 1048+15	LT.		138	
E-2	46+50 TO 72+00 (HUDSON)	RT.		246	
ST-1	1046+45	RT.	1		
ST-2	1048+70	RT.	1		
TOTALS	CALC. BY CDB. 10/67 CHECKED BY HCS. 11/68		2	384	

S.R. 8 STA. 1045+00 TO STA. 1054+00

FED. AID PROJECT	STATE	PROJECT	
2	OHIO		

58
460

SUM - 8 - 17.63

S.R. 8 & CURVE DATA
Δ = 15° 06' 08"
Dc = 1° 28' 00"
R = 3906.58'
T = 517.85'
Lc = 1029.70'
E = 34.17'

RAMP "L" & CURVE DATA
Δ = 10° 27' 21"
Dc = 4° 00'
R = 1432.39'
T = 131.06'
Lc = 261.39'
E = 5.98'

RAMP "L" & CURVE DATA
Δ = 9° 59' 14"
Dc = 8° 00'
R = 716.20'
T = 62.58'
Lc = 124.84'
E = 2.73'

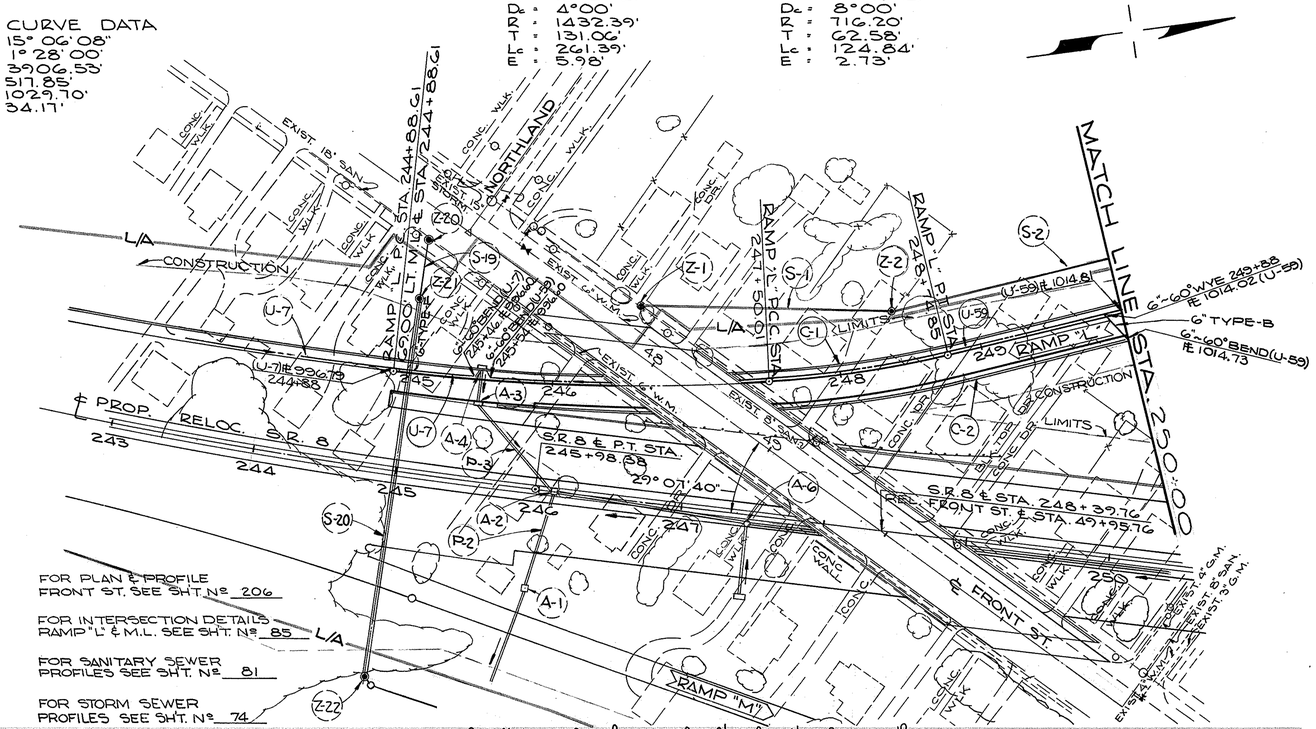

FOR PLAN & PROFILE FRONT ST. SEE SHT. Nº 206

FOR INTERSECTION DETAILS RAMP "L" & M.L. SEE SHT. Nº 85

FOR SANITARY SEWER PROFILES SEE SHT. Nº 81

FOR STORM SEWER PROFILES SEE SHT. Nº 74

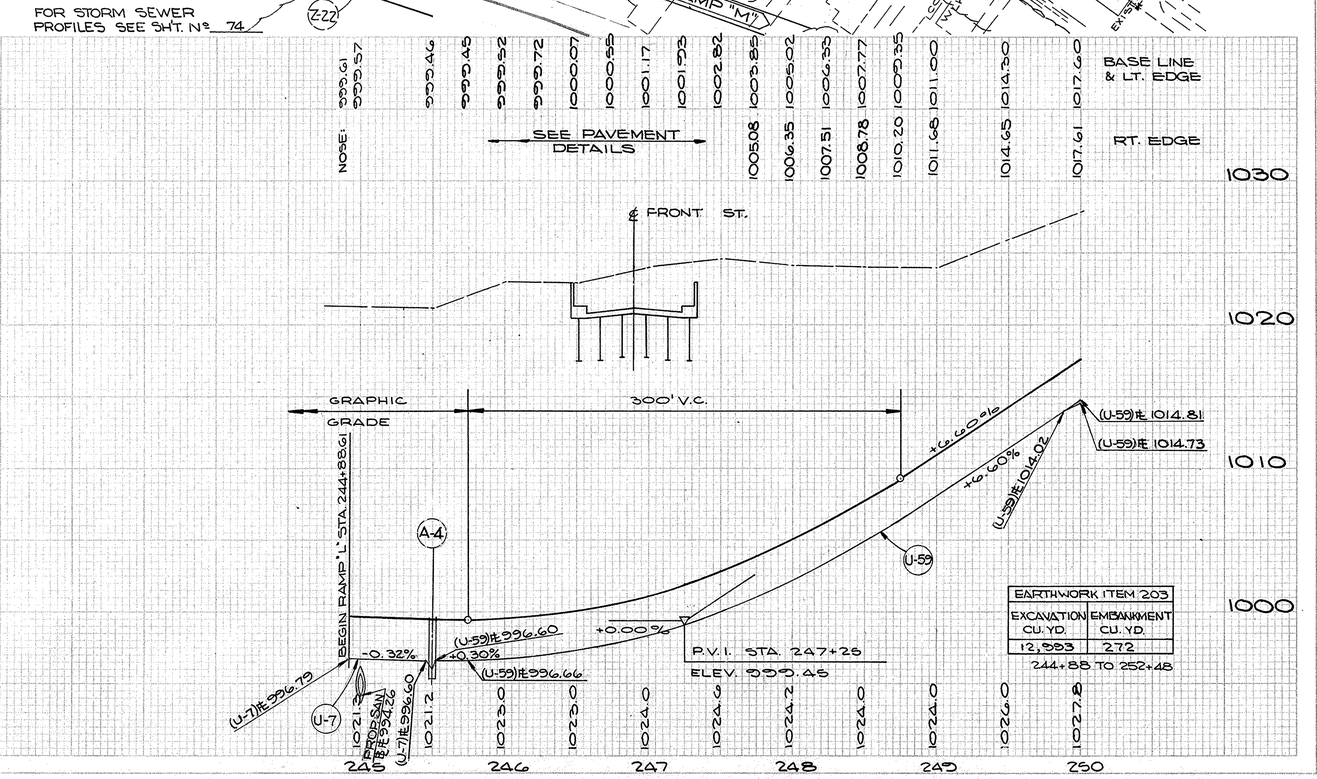

EARTHWORK ITEM 203

EXCAVATION CU. YD.	EMBANKMENT CU. YD.
12,983	272

244+88 TO 252+48

ESTIMATED QUANTITIES

| REF. NO. | STATION TO STATION | SIDE | 609 CURB TYPE 6 LIN. FT. | 609 CURB TYPE 7 SPECIAL LIN. FT. | 609 CURB LIN. FT. | 603 COND. WORK BEHIND TYPE-B LIN. FT. | 605 UNDER-DRAINS TYPE-F LIN. FT. 6" | BENDS & BRANCHES 7070 SHALLOW 7072 LOW 6" | | |

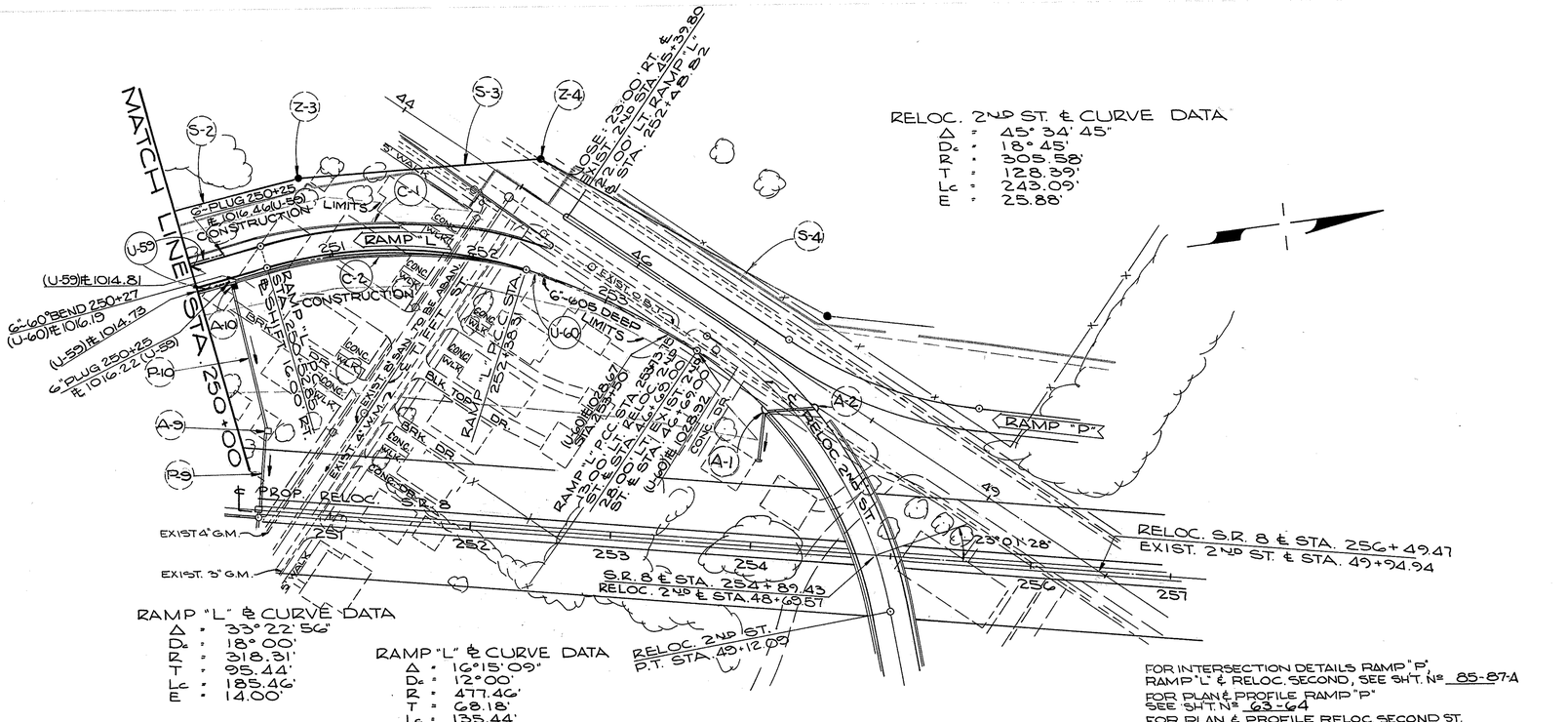
MATCH LINE STA. 250+00
S-2
Z-3
S-3
Z-4
S-4
C-1
C-2
A-10
P-10
A-9
P-9
A-1
A-2
U-59
U-60
44
4C
2SI
25H
252
253
254
256
257
49
(U-59)℄ 1014.81
6"-60° BEND 250+27
(U-60)℄ 1016.15
(U-59) 250+25
6" PLUG 250+25
℄ 1016.22 (U-59)
6"-PLUG 250+25
℄ 1016.44 (U-59)
CONSTRUCTION LIMITS
RAMP "L"
RAMP "P"
RAMP "L" P.C.C. STA. 252+38.38
RAMP "L" P.T. STA. 255+67.46
13.00' LT. REL. STA. 255+50
ST. ℄ STA. 44+68.00
22.00' LT. EXIST. 2ND ST. STA. 44+68.00
ST. ℄ STA. 44+68.00
(U-60)℄ 1028.92
CONC. BR.
EXIST. 4" WATER MAIN
EXIST. 24" RCP
EXIST. 8" SAN. SEWER
EXIST. 12" WATER MAIN
EXIST. 4" GAS MAIN
EXIST. 8" SAN. SEWER
EXIST. 8" WATER MAIN
EXIST. 12" SAN. SEWER
EXIST. 8" WATER MAIN
EXIST. 8

FED. RD. DIVISION	STATE	PROJECT	
2	OHIO		

60
460

SUM - 8 - 17.63

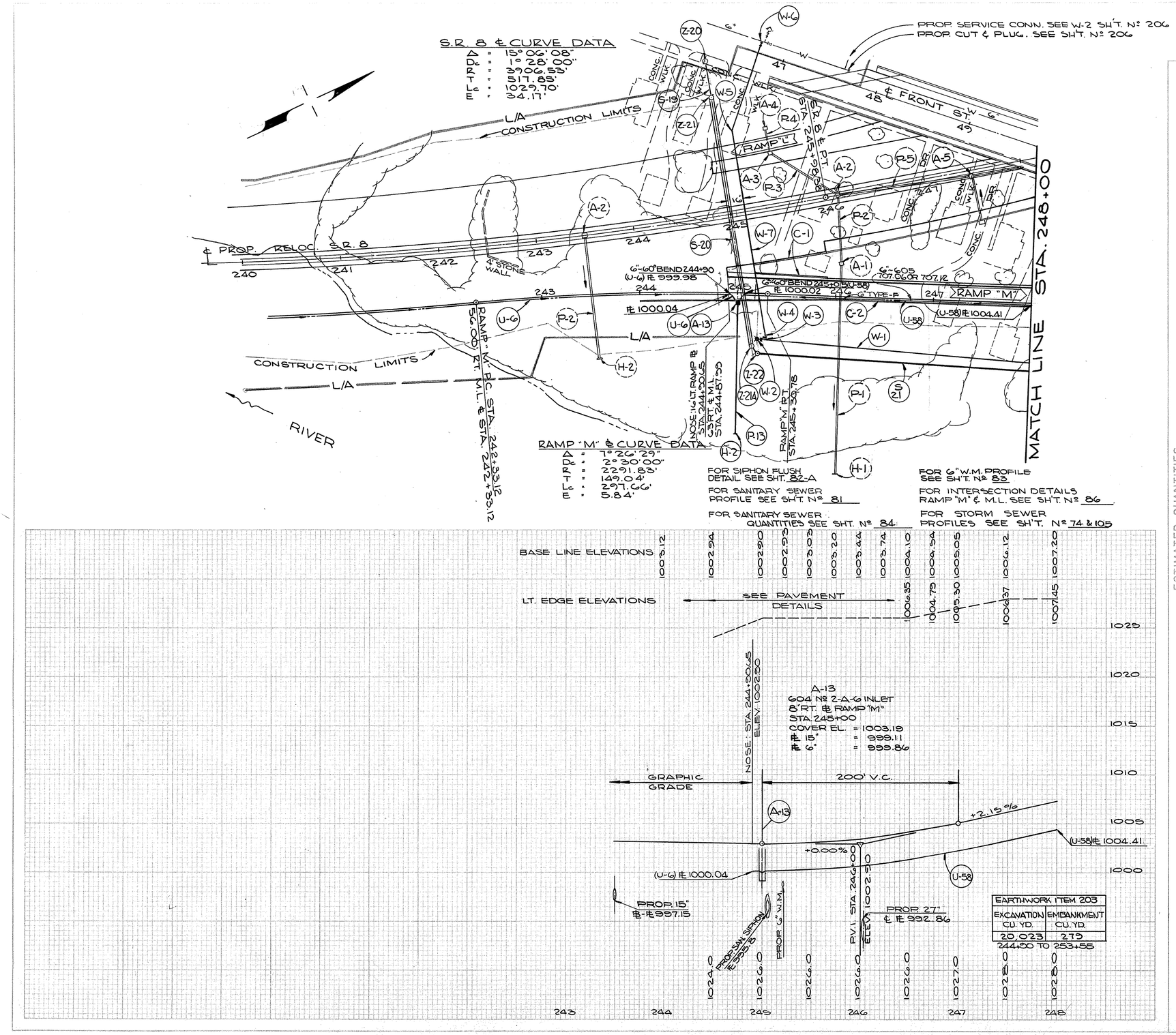

ESTIMATED QUANTITIES

REF. NO.	STATION TO STATION	SIDE	609 CURB TYPE 6 LIN. FT.	612 CONC. TRAFFIC ISLAND SQ. YDS.	604 2-A-6 INLET EACH	602 CONC. MASONRY CU. YDS.	603 TYPE C W/CL. 8" BED 706.02 CL. IV 15"	603 TYPE C 6"	605 TYPE-F 6" UNDER-DRAINS LIN. FT. 707.01 707.12	605 BENDS & BRANCHES 6"	814 WATER MAINS FITTINGS EACH 6" BENDS 11¼	814 WATER MAINS FITTINGS EACH 6" BENDS 22½	814 WATER MAINS FITTINGS EACH 6" BENDS 45°	814 WATER MAINS FITTINGS EACH 6" BENDS 6"x6"x6"	814 WATER MAINS DUCTILE SPLIT 1 P. 6"	814 WATER MAINS TEES CL. 4 6"	814 WATER MAINS TEES EACH 6"	814 WATER MAINS TAPPING SLEEVE & VALVE 6"	814 WATER MAINS TAPPING SLEEVE & VALVE 6"	814 WATER MAINS TAPPING SLEEVE & VALVE 6"	814 WATER MAINS GATE VALVE W/BOX EACH 6"	814 WATER MAINS FIRE HYD. REMOVED & RESET PER PLAN EACH	SEE SHEET NO.
C-1	244+90.04 TO 245+90	LT.	145	19.0																			
C-2	244+90.04 TO 248+00	RT.	310																				
U-6	244+90 TO A-13	RT.						10		1													
U-58	A-13 TO 248+00	RT.						20	285	1													
A-13	245+00 - 8' RT. ℄ "M"	RT.			1																		
P-13	A-13 TO H-2	RT.					134																
H-2	245+00 - 143' RT. ℄ "M"	RT.				0.26																	
W-1	W-2 TO 248+00 ℄ "M"	RT.																					
W-2	245+22 - 46' RT. ℄ RAMP "M"	RT.																					
W-3	245+30 - 47' RT. ℄ RAMP "M"	RT.																					
W-4	245+30 - 42' RT. ℄ RAMP "M"	RT.																					
W-5	46+73 - 83' RT. ℄ FRONT	RT.																					
W-6	46+73 - 12' LT. ℄ FRONT	LT.																					
W-7	W-3 TO W-6	LT. & RT.																					
TOTALS	CALC. BY C.D.B. 10/67 CHECKED BY H.C.S. 11/68		455	19.0	1	0.26	134	30	285														

RAMP "M"

DIST. & DIVISION	STATE	PROJECT	
2	OHIO		

61
460

SUM - 8 - 17.63

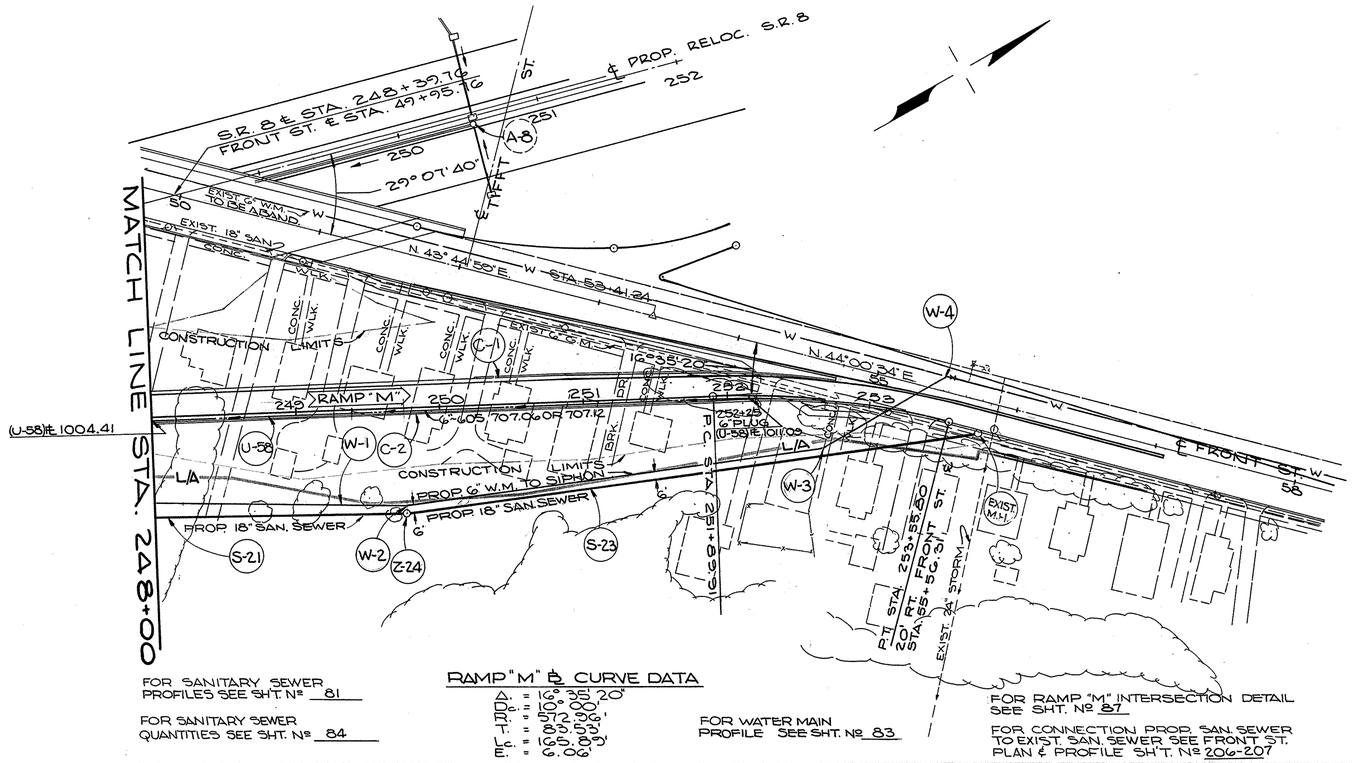

FOR SANITARY SEWER PROFILES SEE SHT. Nº 81

FOR SANITARY SEWER QUANTITIES SEE SHT. Nº 84

RAMP "M" ℄ CURVE DATA

E.C. STA. 252+15.2
Δ = 10° 35' 20"
D = 8° 33' 00"
R = 669.90'
L = 165.85'
T = 83.00'
E = 5.13'
M = 5.06'

FOR WATER MAIN PROFILE SEE SHT. Nº 83

FOR RAMP "M" INTERSECTION DETAIL SEE SHT. Nº 87

FOR CONNECTION PROP. SAN. SEWER TO EXIST. SAN. SEWER SEE FRONT ST. PLAN & PROFILE SH'T. Nº 206-207

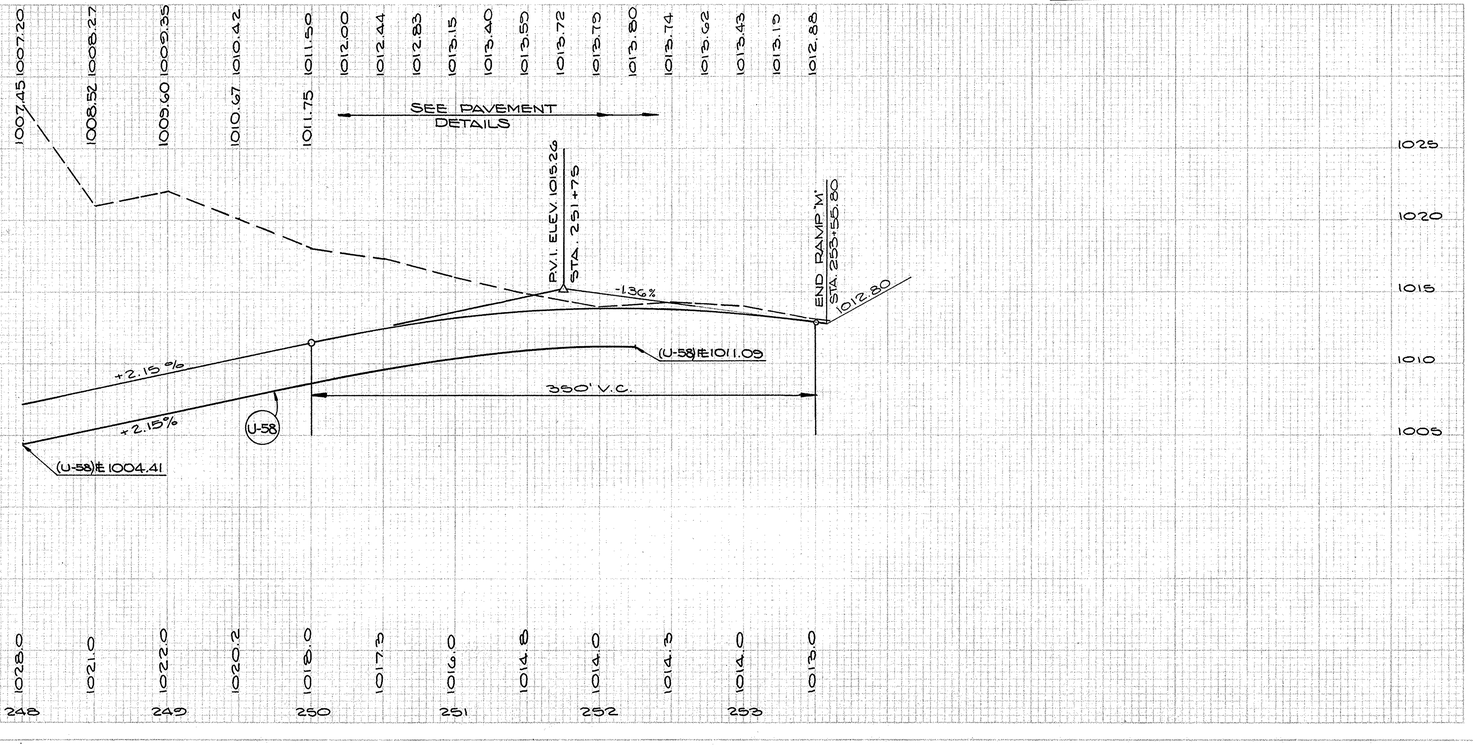

RAMP "M"

ESTIMATED QUANTITIES

REF. NO.	STATION TO STATION	SIDE	609 CURB TYPE 6 LIN. FT.	609 CURB TYPE 6 TYPE 24A LIN. FT.	605 6" UNDER-DRAINS LIN. FT. 707.01 707.12	814 WATER MAINS DUCTILE BENDS 6" LIN. FT. 4 6" 11¼° 22½° 45°
C-1	250+25 TO 252+73	LT.	165	83		
C-2	248+00 TO 253+55.80	RT.	469	87		
U-58	248+00 TO 252+25	RT.			425	
W-1	248+00 TO W-4	RT.				570 4 1 1
W-2	249+75~68 RT. ℄ RAMP "M"	RT.				
W-3	252+68~32 RT. ℄ RAMP "M"	RT.				
W-4	55+47~12' LT. ℄ FRONT ST.	LT.				
TOTALS			634	170	425	

CALC. BY C.D.B. 10/67
CHECKED BY H.C.S. 11/68

SEE SHEET NO.

570

FED. DIVISION	STATE	PROJECT	
2	OHIO		

62
460

SUM -8-17.63

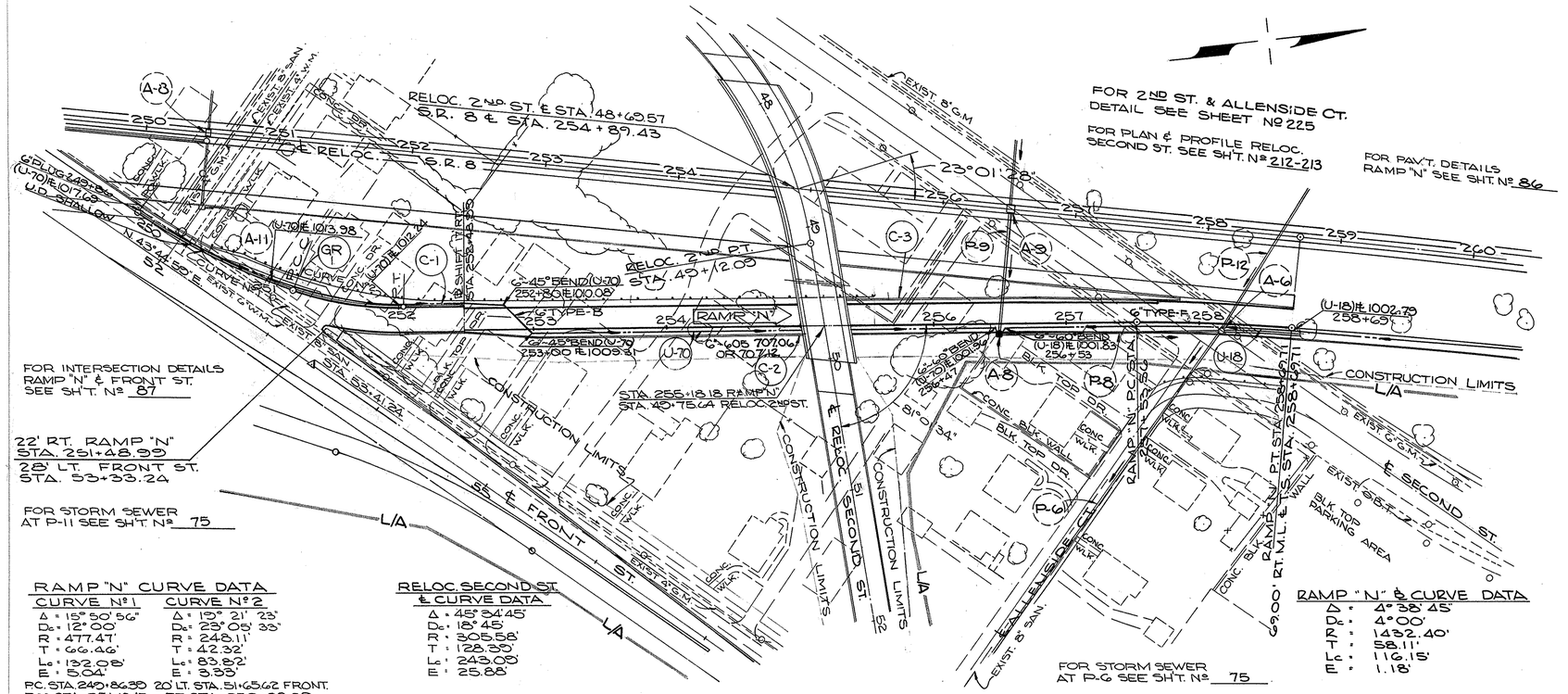
RELOC. 2ND ST. & STA. 48+69.57 S.R. 8 & STA. 254+89.43
℄ RELOC. S.R. 8
EXIST. 8" G.M.
EXIST. 8" SAN.
EXIST. 8" G.M.
EXIST. 12" G.M.
EXIST. 8" SAN.
EXIST. 8" G.M.
EXIST. 8" G.M.
EXIST. 8" SAN.
EXIST. 8" G.M.
EXIST. 8" G.M.
EXIST. 8" G.M

FED. RD. DIVISION	STATE	PROJECT	
2	OHIO		

63
460

SUM - 8 - 17.63

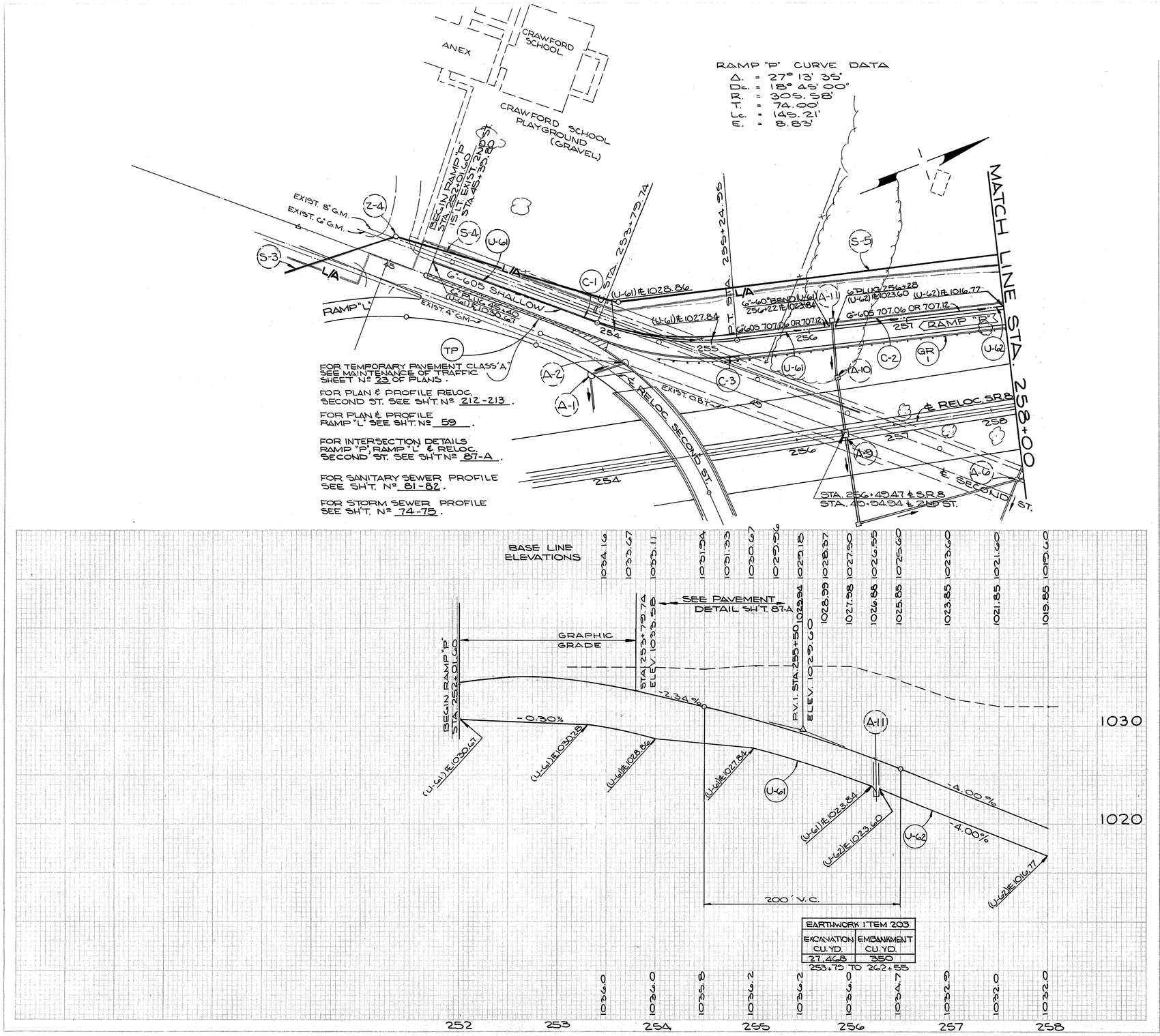

EARTHWORK ITEM 203	
EXCAVATION CU. YD.	EMBANKMENT CU. YD.
27,468	350
253+79 TO 262+55	

ESTIMATED QUANTITIES

REF. NO.	STATION TO STATION	SIDE	609 CURB TYPE 2-A LIN. FT.	609 CURB TYPE 6 LIN. FT.	606 GUARD RAIL STD. TYPE-5 LIN. FT.	606 GUARD ANCHOR ASSEMBLY EACH	615 R. TEMP. PAV'T. CLASS "B" SQ. YD.	603 TYPE F 6"	605 UNDERDRAINS LIN. FT. 707.01 SHALLOW 707.12	BENDS & BRANCHES 6"	SEE SHEET NO.
C-1	46+69 TO 254+31	B&L	229								
C-2	254+31 TO 258+00	LT.		369							
C-3	254+00 TO 255+24.95	RT.	132								
GR-1	254+50 TO 258+00	RT.			350	1					
U-61	252+01 TO A-11	LT.						10	115	299	
U-62	256+28 TO 258+00	LT.							172		
TP	45+40 TO 47+38						83				
TOTALS	CALC. BY C.D.B. 10/67 CHECKED BY H.C.S. 11/68		361	369	350	1	83	10	287	299	

RAMP "P"

DIST. NO.	STATE	PROJECT	
2	OHIO		

64
460

SUM - 8 - 17.63

RAMP "P" & CURVE DATA
Δ = 15°41'25"
D_a = 6°15'00"
R = 916.73'
T = 127.67'
L_c = 251.04'
E = 8.85'

FOR PAV'T. DETAILS
RAMP "P" SEE SH'T. Nº 87-A

FOR PLAN & PROFILE
BAILEY RD. SEE SH'T. Nº 218

RAMP "P" & CURVE DATA
Δ = 3°07'52"
D_a = 1°15'00"
R = 4583.62'
T = 125.27'
L_c = 250.49'
E = 1.71'

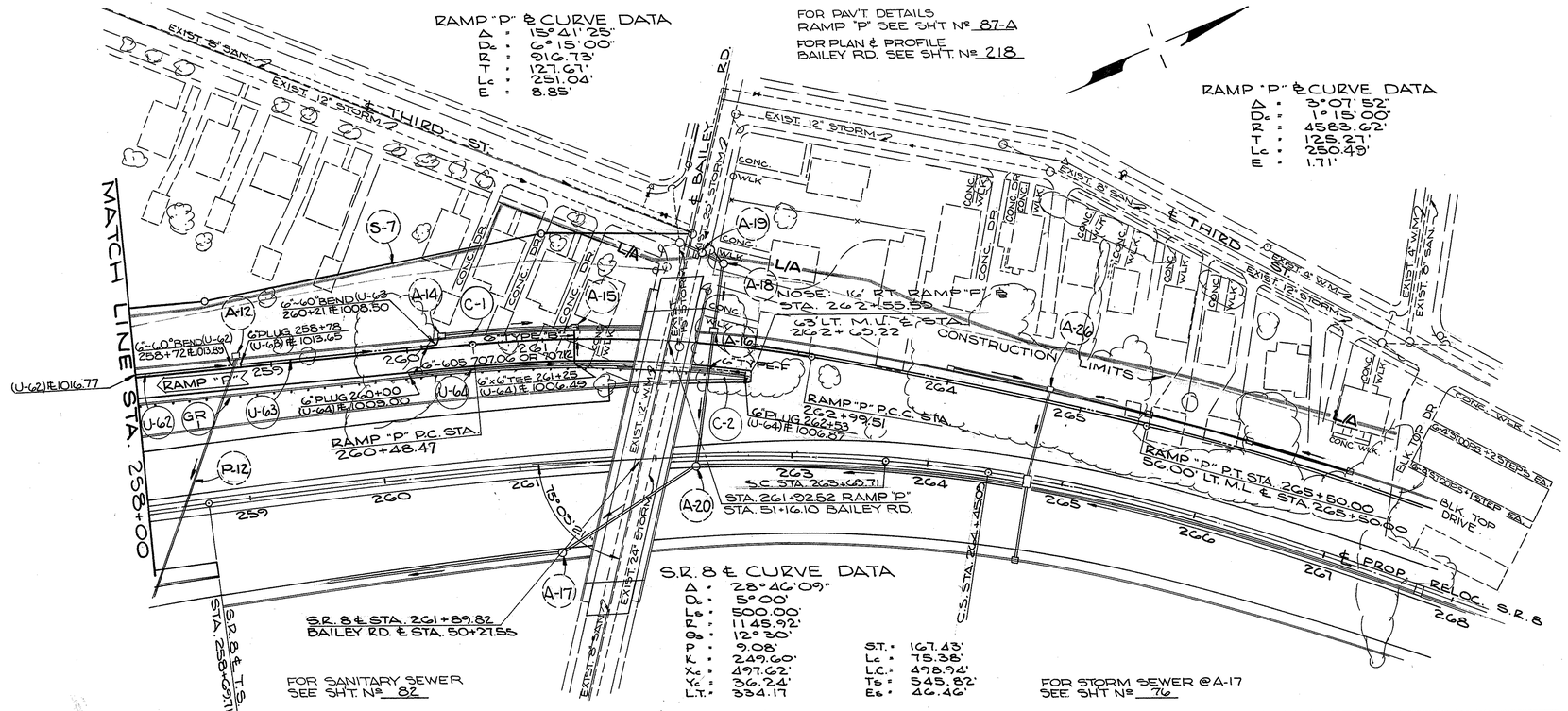

S.R. 8 & CURVE DATA
Δ = 28°46'09"
D_a = 5°00'
L_a = 500.00'
R = 1145.92'
Θ_s = 12°30'
P = 9.08'
K = 249.60'
X_s = 497.62'
Y_s = 36.24'
L.T. = 334.17
S.T. = 167.43'
L_c = 75.38'
L_c = 498.94'
T_s = 545.82'
E_s = 46.46'

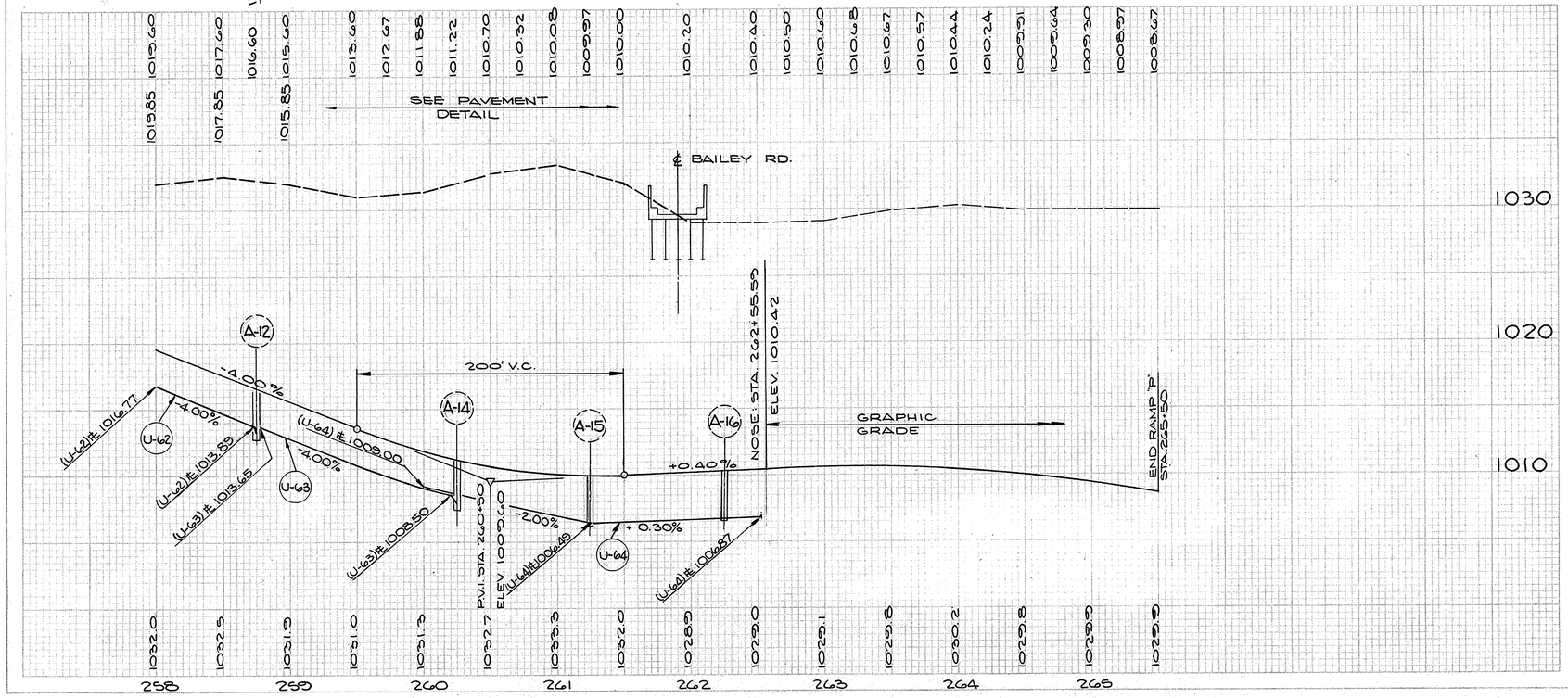

ESTIMATED QUANTITIES

REF. NO.	STATION TO STATION	SIDE	606 GUARD RAIL STANDARD LIN. FT.	609 CURB TYPE LIN. FT.	612 CONC. TRAFFIC ISLAND SQ. YDS.	606 SINGRAIL APPROACH SECTION ASSEMBLY EACH	603 COND. L.F. TYPE TYPE-B W/ FOUNDATION L.F.	BENDS & BRANCHES	6" LIN. FT.	12" LIN. FT.	18" LIN. FT.	24" LIN. FT.	30" LIN. FT.	36" LIN. FT.	42" LIN. FT.	48" LIN. FT.	54" LIN. FT.	60" LIN. FT.	66" LIN. FT.	72" LIN. FT.	78" LIN. FT.	84" LIN. FT.	90" LIN. FT.	96" LIN. FT.	102" LIN. FT.	108" LIN. FT.	114" LIN. FT.	120" LIN. FT.
GR-1	258+00 TO 262+50	RT.	450			1																						
C-1	258+00 TO 262+56.09	LT.		456																								
C-2	261+56.09 TO 262+56.09	RT.		94	39.3																							
U-62	258+00 TO A-12	LT.										10																
U-63	258+78 TO A-14	LT.										10																
U-64	260+00 TO 262+53	RT.										10																
TOTALS			450	550	39.3	1			65	137	243		30	24														445

CALC. BY C.D.B. 10/67
CHECKED BY H.C.S. 11/68

RAMP "P"

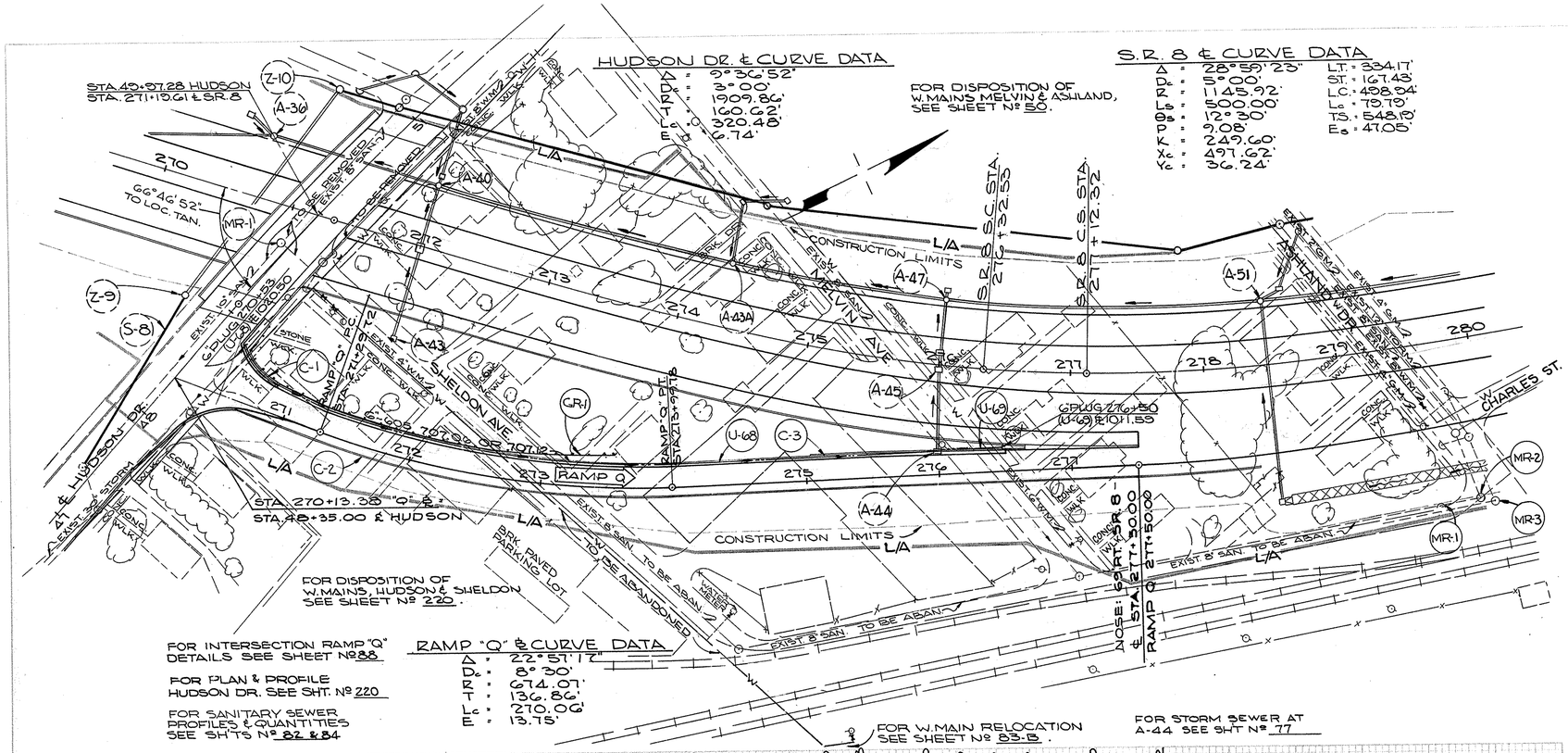
HUDSON DR. & CURVE DATA
Δ = 9°36'52"
Dc = 3°00'
R = 1909.86'
T = 160.62'
Lc = 320.48'
E = 6.74'
S.R. 8 & CURVE DATA
Δ = 28°59'23" LT. = 334.17'
Dc = 5°00' ST. = 167.43'
R = 1145.92' LC. = 498.94'
Spi = 500.00' Le = 79.19'
θs = 12°30' Ts = 548.8'
p = 9.08' Es = 47.05'
K = 249.60'
Xc = 497.62'
Yc = 36.24'
STA. 45+97.28 HUDSON
STA. 271+19.61 & S.R. 8
FOR DISPOSITION OF W. MAINS MELVIN & ASHLAND, SEE SHEET Nº 50.
S.R. 8 S.C. STA. 276+32.55
S.R. 8 C.S. STA. 277+12.32
66°46'52" TO LOC. TAN.
CONSTRUCTION LIMITS
EXIST. 8" SAN.
EXIST. 12" SAN.
EXIST. 8" SAN. TO BE ABAN.
EXIST. 8" SAN. TO BE ABANDONED
EXIST. 8" STORM
EXIST. 24" STORM
EXIST. 36" STORM
EXIST. 42" STORM
EXIST. 48" STORM
EXIST. 54" STORM
EXIST. 60" STORM
EXIST. 72" STORM
EXIST. 12" W.M.
EXIST. 16" W.M.
EXIST. 20" W.M.
EXIST. 24" W.M.
EXIST. 30" W.M.
EXIST. 36" W.M.
EXIST. 42" W.M.
EXIST. 48" W.M.
EXIST. 54" W.M.
EXIST. 60" W.M.
EXIST. 72" W.M.
EXIST. 16" GAS
EXIST. 20" GAS
EXIST. 24" GAS
EXIST. 30" GAS
EXIST. 36" GAS
EXIST. 42" GAS
EXIST. 48" GAS
EXIST. 54" GAS
EXIST. 60" GAS
EXIST. 72" GAS
EXIST. 16" OIL
EXIST. 20" OIL
EXIST. 24" OIL
EXIST. 30" OIL
EXIST. 36" OIL
EXIST. 42" OIL
EXIST. 48" OIL
EXIST. 54" OIL
EXIST. 60" OIL
EXIST. 72" OIL
EXIST. 16" CRUDE OIL
EXIST. 20" CRUDE OIL
EXIST. 24" CRUDE OIL
EXIST. 30" CRUDE OIL
EXIST. 36" CRUDE OIL
EXIST. 42" CRUDE OIL
EXIST. 48" CRUDE OIL
EXIST. 54" CRUDE OIL
EXIST. 60" CRUDE OIL
EXIST. 72" CRUDE OIL
EXIST. 16" GASOLINE
EXIST. 20" GASOLINE
EXIST. 24" GASOLINE
EXIST. 30" GASOLINE
EXIST. 36" GASOLINE
EXIST. 42" GASOLINE
EXIST. 48" GASOLINE
EXIST. 54" GASOLINE
EXIST. 60" GASOLINE
EXIST. 72" GASOLINE
EXIST. 16" DIESEL
EXIST. 20" DIESEL
EXIST. 24" DIESEL
EXIST. 30" DIESEL
EXIST. 36" DIESEL
EXIST. 42" DIESEL
EXIST. 48" DIESEL
EXIST. 54" DIESEL
EXIST. 60" DIESEL
EXIST. 72" DIESEL
EXIST. 16" KEROSENE
EXIST. 20" KEROSENE
EXIST. 24" KEROSENE
EXIST. 30" KEROSENE
EXIST. 36" KEROSENE
EXIST. 42" KEROSENE
EXIST. 48" KEROSENE
EXIST. 54" KEROSENE
EXIST. 60" KEROSENE
EXIST. 72" KEROSENE
EXIST. 16" NAPHTHA
EXIST. 20" NAPHTHA
EXIST. 24" NAPHTHA
EXIST. 30" NAPHTHA
EXIST. 36" NAPHTHA
EXIST. 42" NAPHTHA
EXIST. 48" NAPHTHA
EXIST. 54" NAPHTHA
EXIST. 60" NAPHTHA
EXIST. 72" NAPHTHA

SUM - 8 - 17.63

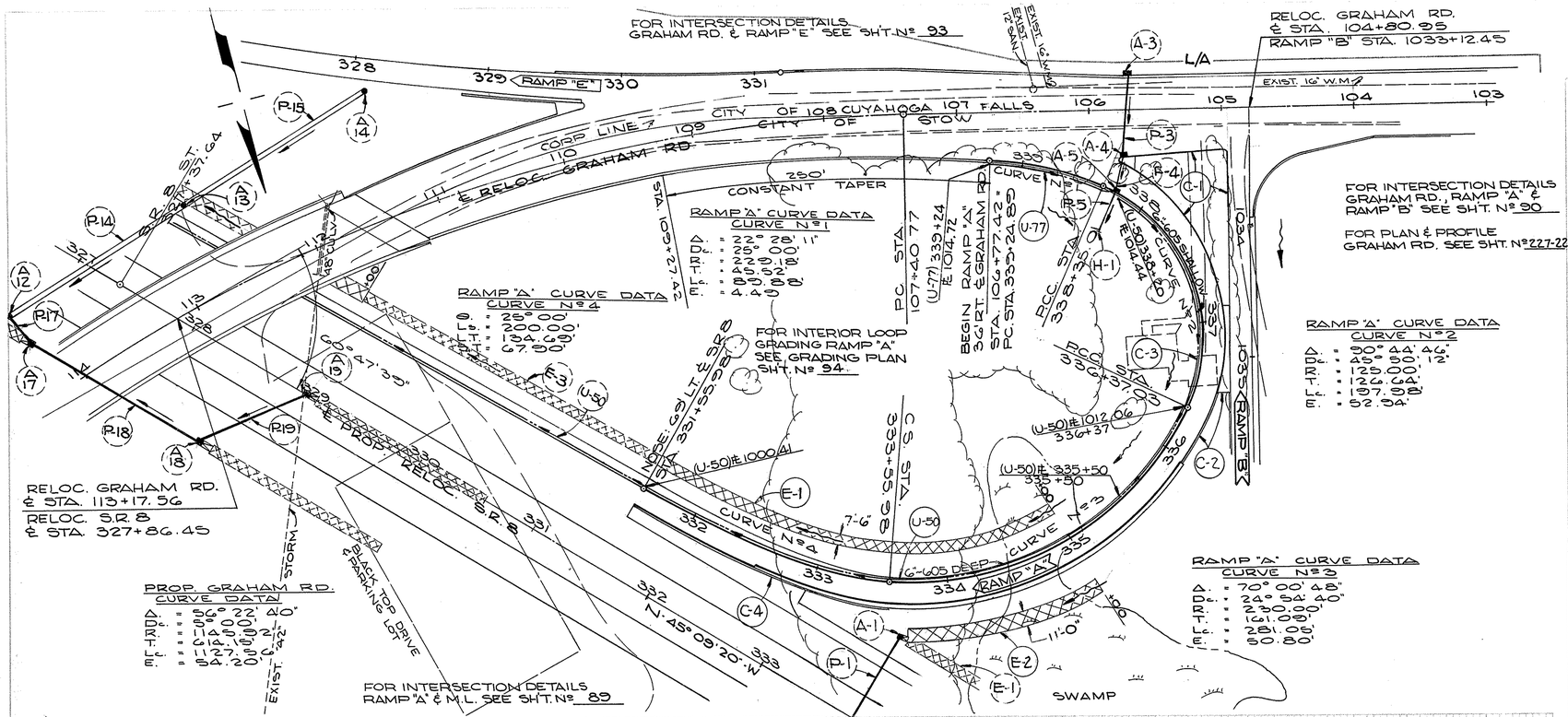

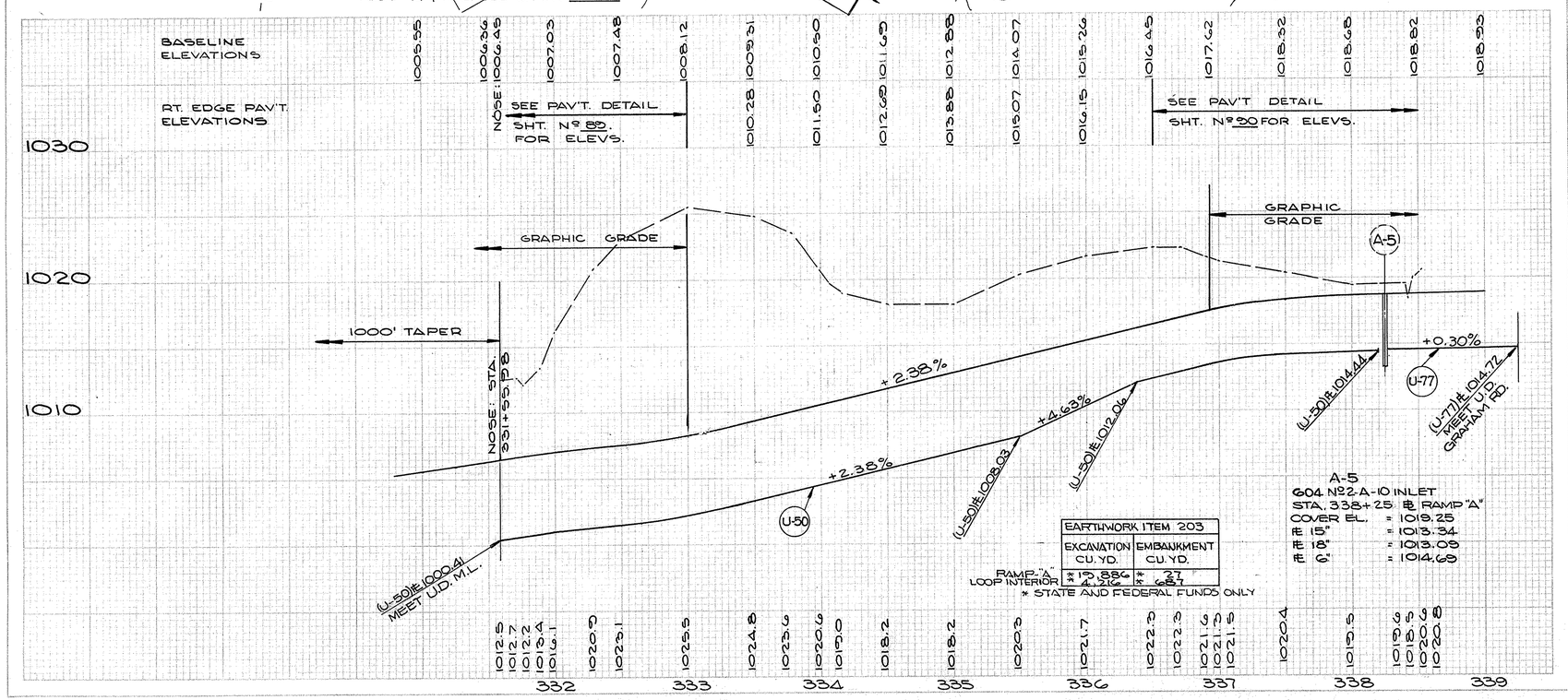

NOTE: ALL QUANTITIES STATE & FEDERAL PARTICIPATION ONLY — ESTIMATED QUANTITIES

REF. NO.	STATION TO STATION	SIDE	609 TYPE 2A CURB LIN. FT.	609 TYPE 7 CURB LIN. FT.	609 CONC. CURB LIN. FT.	612 CONC. MEDIAN SQ. YDS.	667 JUTE MATTING SQ. YDS.	603 TYPE-F UNDER DRAINS LIN. FT.	605 6"- UNDER DRAINS LIN. FT. ON CL SHALLOW DEEP/FILED
C-1	PERIMETER OF ISLAND	RT.	258			53.3			
C-2	335+95 TO 337+35	RT.	66						
C-3	336+37.03 TO 338+35.01	LT.	216						
C-4	331+55.98 TO 333+64	RT.		63	145	9.8			
U-50	331+55 TO 338+20	LT.						183	395 87
U-77	339+24 TO A-3	LT.						10	89
E-1	331+55 TO 335+00	LT.					288		
E-2	A-1 TO 335+00	RT.					183		
TOTALS	CALC. BY C.P.B. 10/67 CHECKED BY H.C.S. 11/68		540	63	145	9.8	53.3	471	10 272 395 87

GRAHAM RD. - RAMP "A"

DIST. NO. DIVISION	STATE	PROJECT	
2	OHIO		

67
460

SUM - 8 - 17.63

RELOC. GRAHAM RD
℄ STA. 104+80.35
RAMP "B" STA. 1033+12.45

RAMP "B"
CURB RETURN
A = 80°54.35'
R = 50.00'
T = 42.64'
L = 70.63'

CURVE No 1
RAMP "B" CURVE DATA
Δ = 33°38.53"
Dᵈ = 12°00'
R = 477.46'
T = 144.27'
Lᶜ = 280.40'
E = 21.35'

CURVE No 2
RAMP "B" CURVE DATA
Δ = 10°00.00"
Dᵈ = 8°00'
R = 716.20'
T = 62.66'
Lᶜ = 125.00'
E = 2.74'

CURVE No 3
RAMP "B" CURVE DATA
Δ = 14°24.00"
Dᵈ = 4°00'
R = 1432.39'
T = 180.95'
Lᶜ = 360.00'
E = 11.38'

STA. 1042+44.20 L.T. MEAS. ℄ STA. RAMP "B" 1043+44.20

80°00.00'

EAST 16.5' OF LOT 105 & ALL OF LOT 106 CITY OF TOLEDO

LINE BETWEEN CITY OF TOLEDO & CITY OF SYLVANIA

LOT CITY OF TOLEDO

EXIST. 16" W.L.
EXIST. 12" SAN.

C-1 · C-2 · A-3 · P-3 · P-4 · A-4 · A-5 · P-5 · H-1

RAMP "B" P.C. STA. 1035+76.80

RAMP "B" P.C.C. STA. 1038+59.20

RAMP "B" P.C.C. STA. 1039+84.20

NOSING FT RAMP "B" STA. 1040+63.54 G.T. LT. SR 8

L/A

BLK. TOP DR

RAMP "A"

(U-57) ℄ 1015.14
1033+95
6"-605 SHALLOW

(U-57) ℄ 1012.46
1035+25

(U-57) ℄ 1011.73
6" OUTLET

SEE No 88 FOR 6"-605 DEEP

6"-90° BEND (U-57)
1035.05 ℄ 1011.25

6"-90° BEND (U-53)
1037+05 ℄ 1011.95

CURVE No 1

(U-53) ℄ 1011.73
6" OUTLET

CONSTRUCTION LIMITS

(U-53) ℄ 1012.76
1039+75

6"-605 DEEP

CURVE No 2

CURVE No 3

(U-58)

1041 1042 1043 1044

(U-53) ℄ 1040.50
1040+61

1042 Δ 45°09'20" W

1039 ℄ PROP. RELOC. S.R. 8 1040 1041

9'-4"x15' S.R.C.R.

FOR PAV'T. DETAILS
RAMP "B" & GRAHAM RD.
SEE SHT. No 90

FOR GRAHAM RD.
PLAN & PROFILE
SEE SHEET No 227-228

FOR CULVERT DETAIL STA. 1037+00
RAMP "B" ~ SEE SHEET No 845

FOR GRADING PLAN
SEE SHEET No 95-A

MARSH AREA

FOR PAV'T. DETAILS
RAMP "B" SEE SHT. No 89

BASELINE ELEVATIONS: 1020.87 · 1020.46 · 1020.24 · 1019.26 · 1018.28 · 1017.30 · 1016.32 · 1015.87 · 1015.50 · 1015.22 · 1015.02 · 1014.90 · 1014.86 · 1014.91 · 1015.05 · 1015.24 · 1015.52 · 1015.90 · 1016.39 · 1017.34 · 1018.33 · 1019.32 · 1020.31 · 1021.22 · 1022.22 · 1023.16 · 1023.96 · 1024.65 · 1025.22

RT. EDGE PAV'T. ELEVATIONS: SEE PAV'T. DETAIL SHEET No 90 FOR ELEVS. 1016.42 · 1016.34 · 1016.23 · 1016.19 · 1016.24 · 1016.36 · 1016.57 · 1016.89 · 1017.23 · 1017.62 · 1018.36 · 1019.35 · SEE PAV'T. DETAIL SHT. No 89 FOR ELEVS.

1030
1020
1010

℄ GRAHAM RD. 1020.87

300' V.C.

GRAPHIC GRADE

STA. 1040+15 ELEV. 1020.81

END RAMP "B"

-1.96%
-0.30%
+0.30%
+1.98%

(U-57) ℄ 1015.14 MEET U.D. GRAHAM RD.

(U-57) ℄ 1012.46

(U-57) ℄ 1011.25
(U-57) ℄ 1011.73
6" OUTLET

P.V.I. STA. 1037+00
ELEV. 1013.38

(U-53) ℄ 1011.95
(U-53) ℄ 1011.73
6" OUTLET
PROP. 21" CULV. ℄ ℄ 1011.11

(U-53) ℄ 1012.76

(U-53) ℄ 1040.50 MEET U.D. M.L.

PROP 15" ℄ ℄ 1019.73

EARTHWORK ITEM 203	
EXCAVATION CU. YD.	EMBANKMENT CU. YD.
*10,868	* 0

* STATE AND FEDERAL FUNDS ONLY

1018.9 · 1019.1 · 1019.7 · 1020.4 · 1021.2 · 1021.4 · 1022.4 · 1022.7 · 1023.7 · 1023.6 · 1021.4 · 1019.7 · 1018.9 · 1020.2 · 1022.2 · 1023.3 · 1023.6 · 1022.4 · 1022.2 · 1022.3 · 1021.9 · 1023.1 · 1022.1 · 1020.8 · 1019.6 · 1020.0 · 1020.2

1035 1036 1037 1038 1039 1040 1041 1042 1043

NOTE: ALL QUANTITIES STATE & FEDERAL PARTICIPATION ONLY

ESTIMATED QUANTITIES

REF. NO.	STATION TO STATION	SIDE	609 CURB TYPE 2A TYPE 6	609 CURB TYPE 2A TYPE 6	605 6" UNDER-DRAINS LIN. FT. SHALLOW UNCL. LOW DEEP/FILLED 6"	603 TYPE-F LIN. FT. 6"	BENDS & BRANCHES 6"
C-1	1033+88.84 GRAHAM RD.	LT.	121	53			
C-2	1035+26.10 1035+78.90	RT.					
U-53	1037+05 TO 1040+47	LT.			314	95 282	20
U-57	1033+95 TO 1034+95	LT.					
TOTALS			121	53	314	95 282	20

CALC. BY C.D.B. 10/67
CHECKED BY R.S. 11/68

GRAHAM RD. - RAMP "B"

FED. RD. DIVISION	STATE	PROJECT	
2	OHIO		

68
460

SUM - 8 - 17.63

℄ S.R.8 CURVE DATA

Δ = 59°33' 25"
Dc = 3°00'
Ls = 350.00'
R = 1909.86'
Lc = 1635.23'
Θs = 5°15'00"
L.T. = 233.44'
S.T. = 116.76'
Lc = 349.87'
Ts = 1269.31'
Es = 293.64'

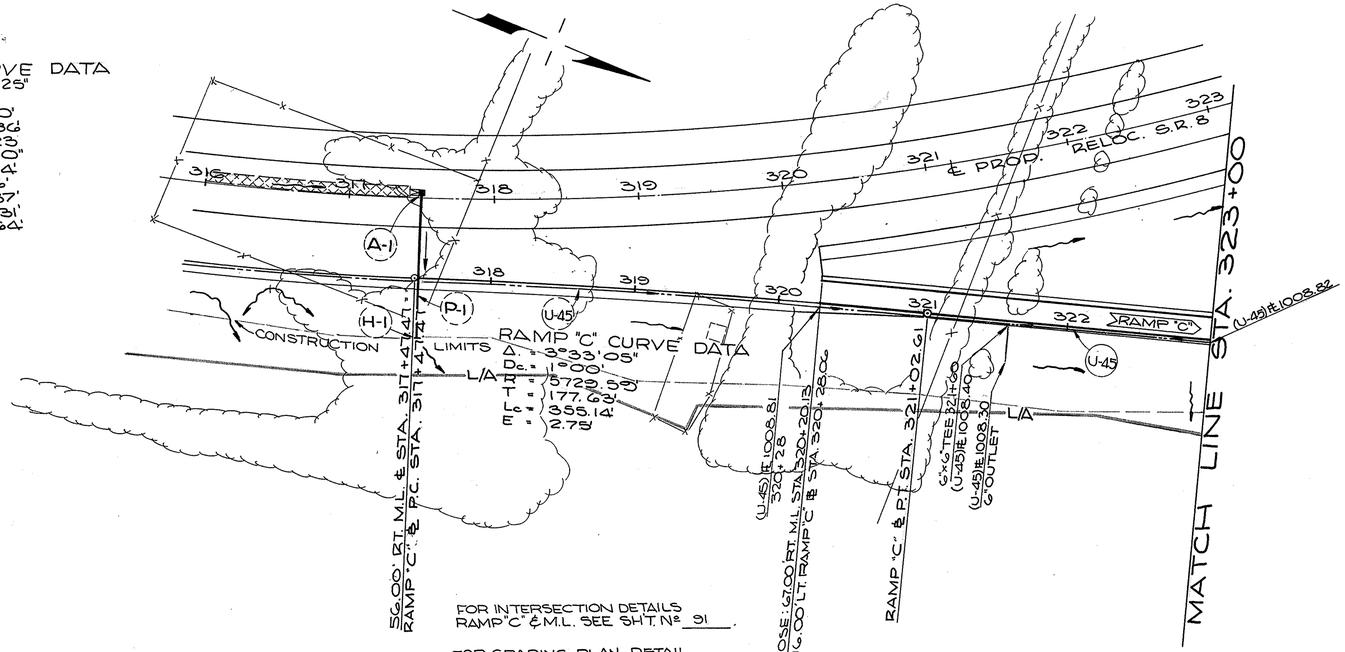

FOR INTERSECTION DETAILS
RAMP "C" & M.L. SEE SHT. Nº 91.

FOR GRADING PLAN DETAIL
RAMP "C" SEE SHT. Nº 95

FOR PROFILE P-1
SEE CROSS-SECTION
SHT. Nº 156

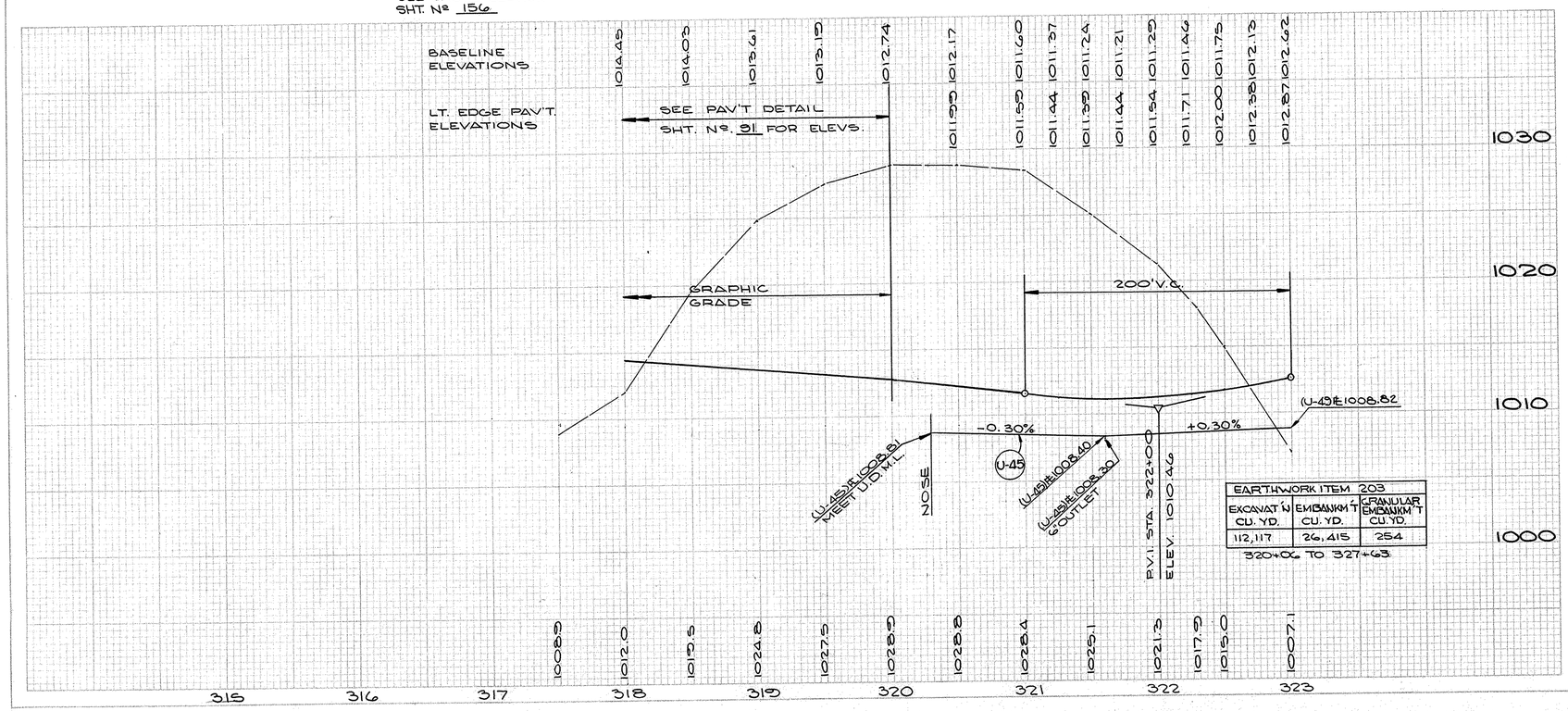

EARTHWORK ITEM 203		
EXCAVAT'N CU. YD.	EMBANKM'T CU. YD.	GRANULAR EMBANKM'T CU. YD.
112,117	26,415	254

320+00 TO 327+63

ESTIMATED QUANTITIES

REF. NO.	STATION TO STATION	SIDE	605 UNDER DRAINS LIN. FT. SHAL. LOW	BENDS & BRANCHES EACH	603 TYPE L.F. 6"	
U-45	320+28 TO 323+00	RT.	288	1	10	10
TOTALS			288			

SEE SHEET NO.

CALC. BY C.P.B. 10/67
CHECKED BY H.C.S. 11/28

GRAHAM RD. - RAMP "C"

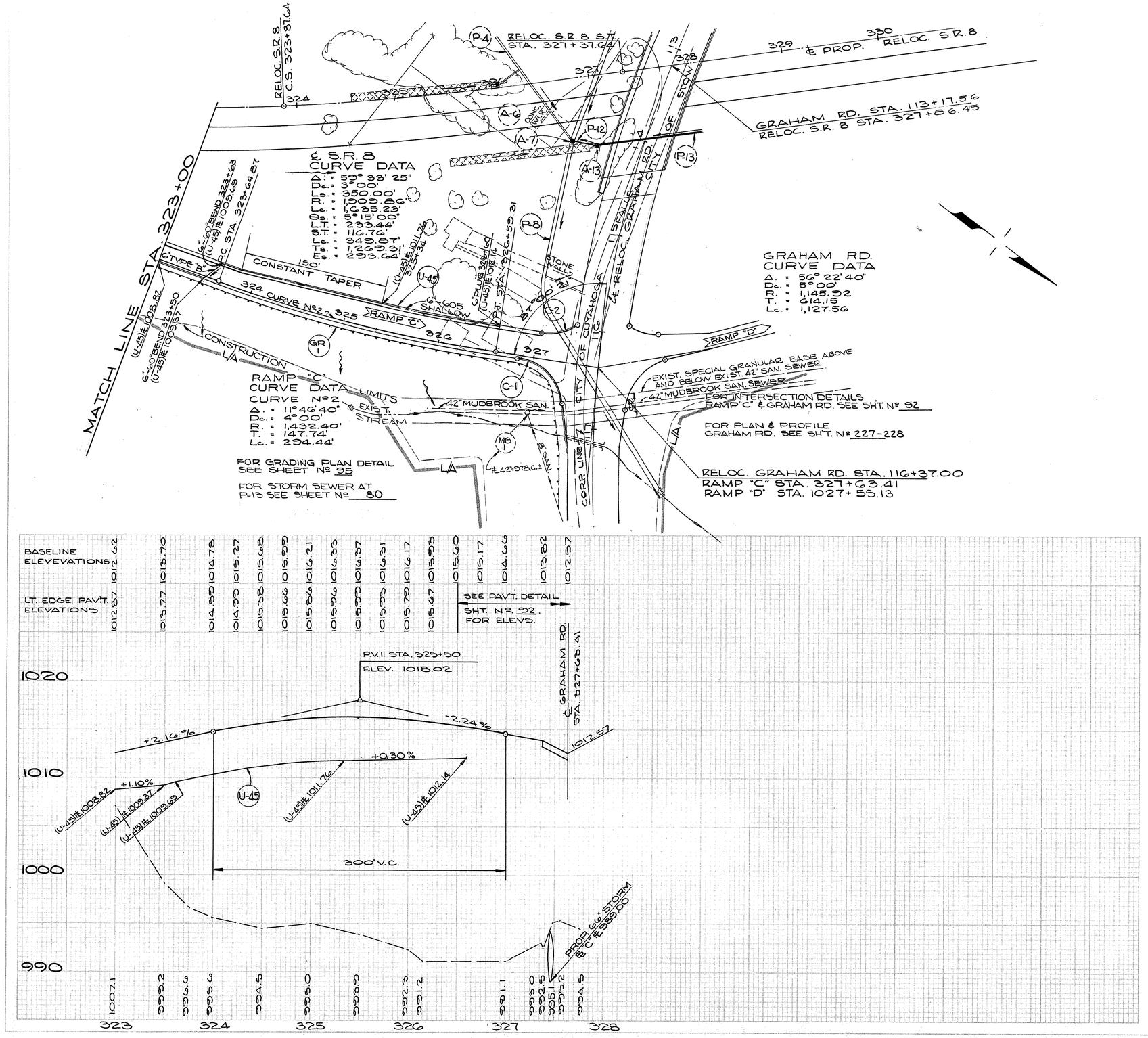

ESTIMATED QUANTITIES

REF. NO.	STATION TO STATION	SIDE	606 SINGRAIL GUARD APPROACH RAIL STD. END ASSEMBLY EACH	606 GUARD RAIL STD. TYPE-5 LIN. FT.	609 CURB TYPE 2-A LIN. FT.	603 L.F. TYPE-B W/CL.B BEDDING 6"	605 6" UNDER-DRAINS LIN. FT. SHAL-LOW	605 BENDS & BRANCHES 6"
GR-1	323+00 TO 327+25	RT.	1	425				
C-1	326+83.64 TO 117+24.00	RT.			116			
C-2	327+03.97 TO 115+97.87	LT.			35			
U-45	323+00 TO 326+60	LT.&RT.				32	347	2
TOTALS	CALC. BY C.D.B. 10/67 CHECKED BY H.C.S. 11/68		1	425	151	32	347	2

GRAHAM RD. - RAMP "C"

FED. AID DIVISION	STATE	PROJECT	
2	OHIO		

70
460

SUM -8-17.63

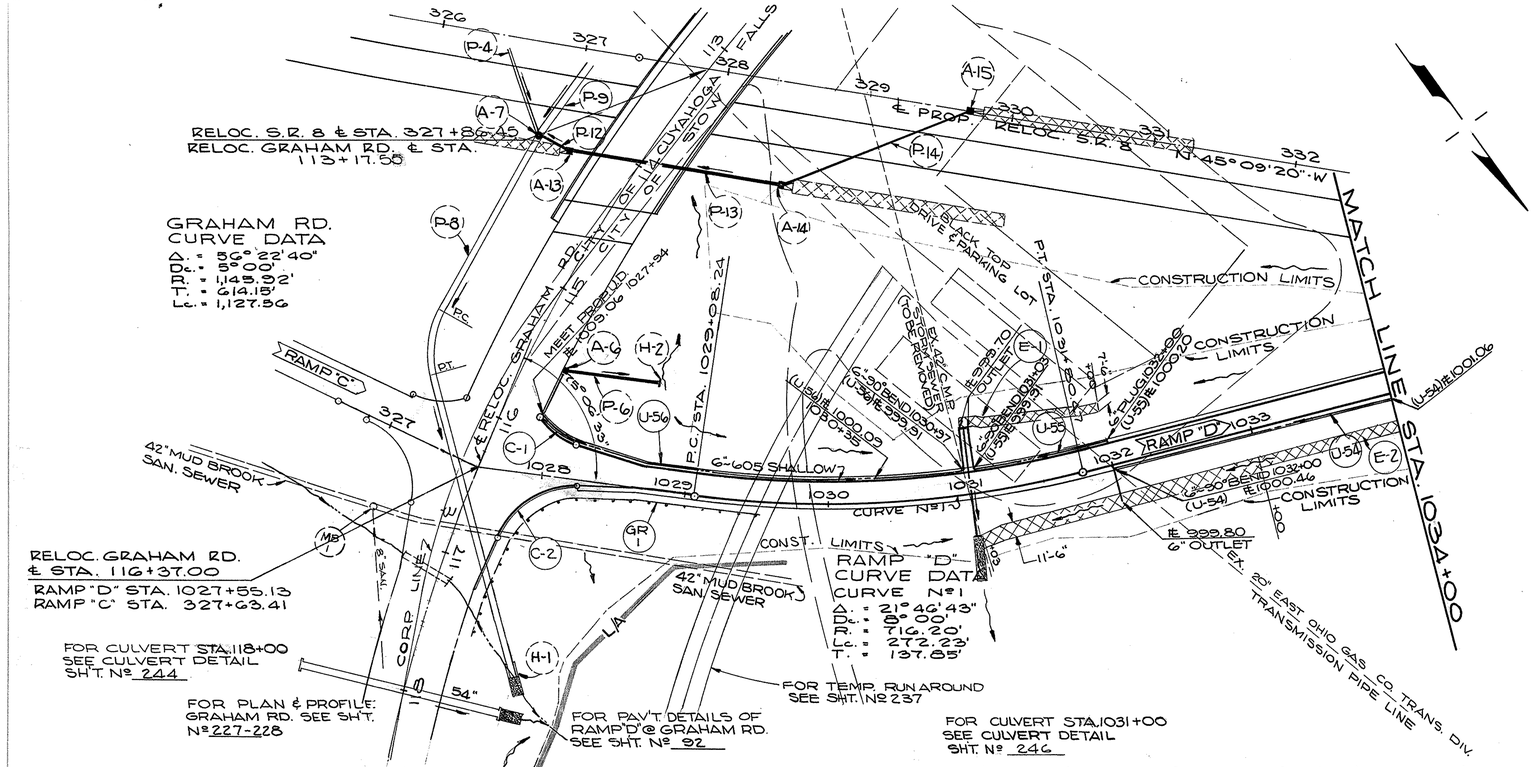

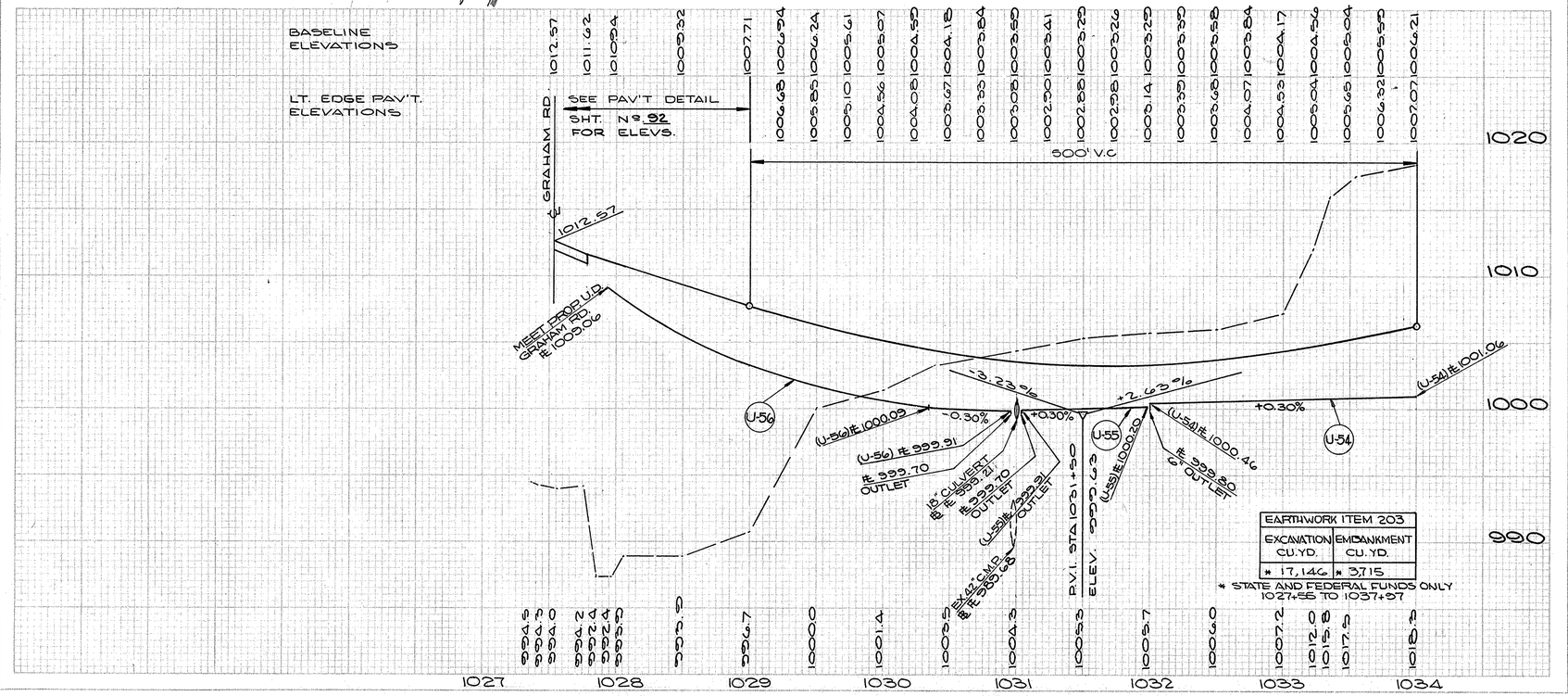

NOTE: ALL QUANTITIES STATE & FEDERAL PARTICIPATION ONLY

ESTIMATED QUANTITIES

REF. NO.	STATION TO STATION	SIDE	606 GUARD RAIL STD. TYPE-S LIN. FT.	609 CURB TYPE 2.4 LIN. FT.	606 GUARD RAIL ANCHOR ASSEMBLY EACH	607 JUTE MATTING SQ. YDS.	605 UNDER DRAINS LIN. FT. 6"	605 BENDS & BRANCHES LIN. FT. 6"
GR-1	1028+94 TO 1029+50	RT.	162.5		1			
C-1	115+87.94 TO 1028+22.32	LT.		33				
C-2	117+15.66 TO 1028+24.70	RT.		65				
U-54	1032+00 TO 1034+00	RT.					213	1
U-55	1031+03 TO 1032+00	LT.					111	1
U-56	1027+94 TO 1030+97	LT.					317	
E-1	1030+97 TO 1032+00	LT.				86		
E-2	1031+03 TO 1034+00	RT.				370		
TOTALS	CALC. BY C.D.B. 10/67 CHECKED BY H.C.S. 11/68		162.5	102	1	456	317	324

GRAHAM RD. - RAMP "D"

FED. RD. DIVISION	STATE	PROJECT	
2	OHIO		

SUM - 8 - 17.63

71
460

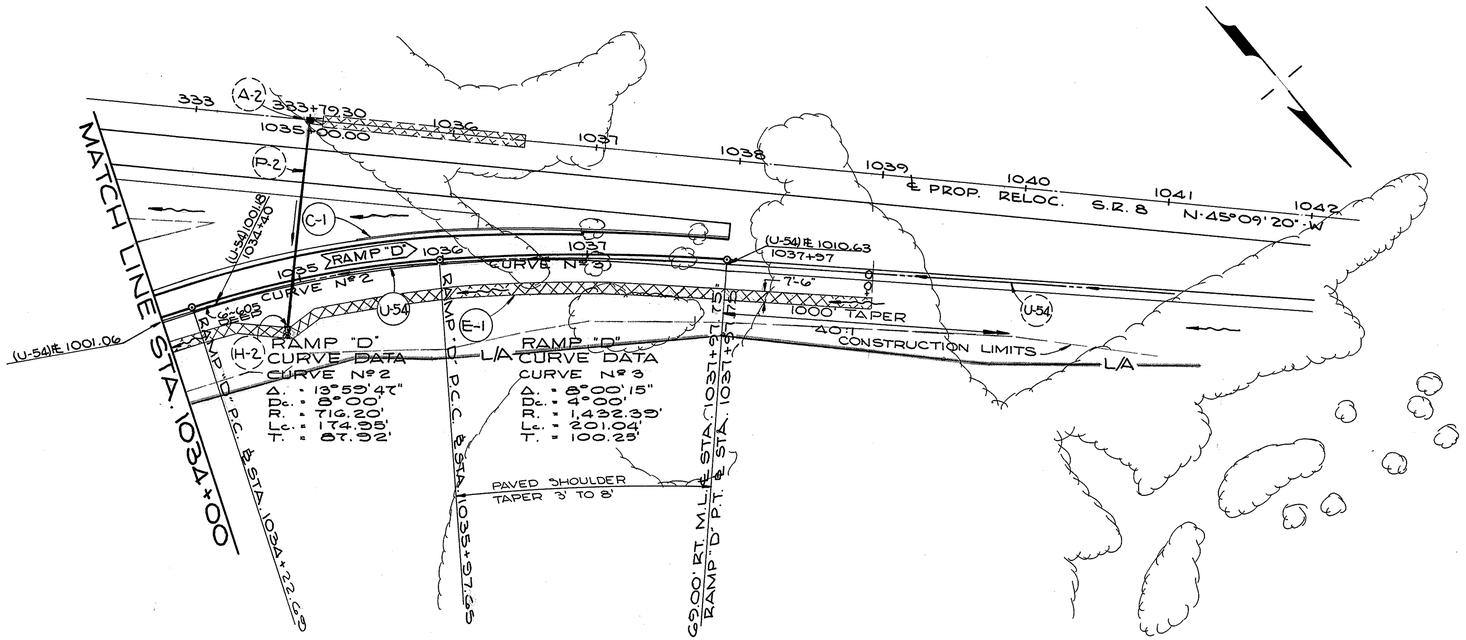

FOR PROFILE STORM PIPE P-2 SEE CROSS-SECTION SHT. Nº 168

FOR PAV'T. DETAILS RAMP "D" SEE SHT. Nº 91

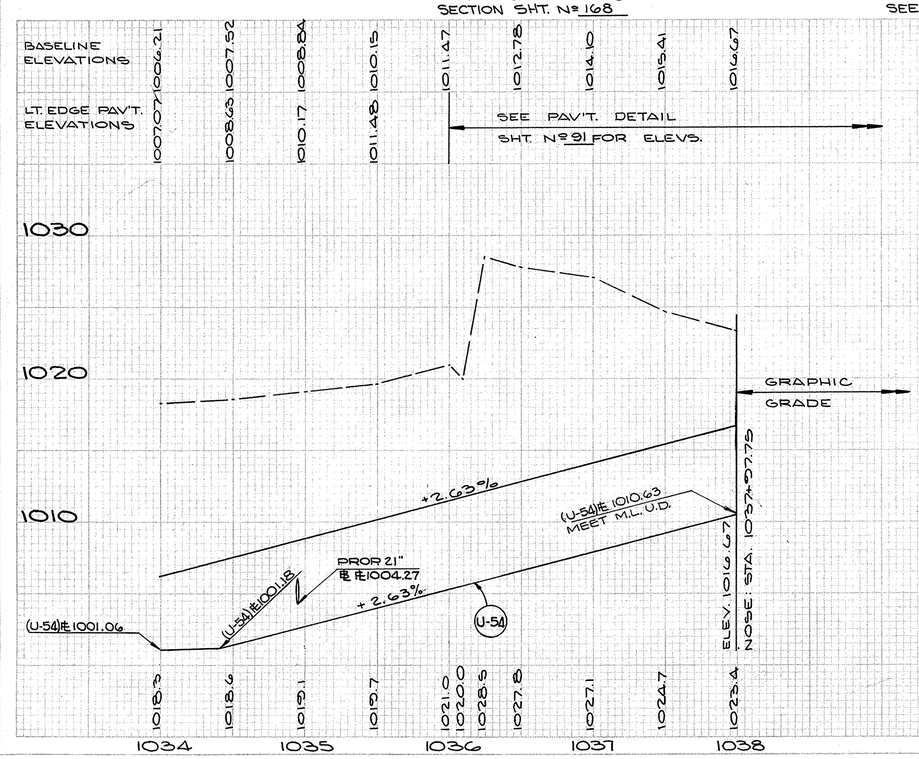

NOTE: ALL QUANTITIES STATE & FEDERAL PARTICIPATION ONLY

ESTIMATED QUANTITIES

REF. NO.	STATION TO STATION	SIDE	609 CURB TYPE 7 LIN. FT.	609 CURB TYPE 8 LIN. FT.	667 JUTE MATTING SQ. YDS.	605 UNDER DRAINS LIN. FT. DEEP PIPE
C-1	1035+41 TO 1037+97.75	LT.	30	170		
U-54	1034+00 TO 1037+97	RT.			357	40
E-1	1034+00 TO 1039+00	RT.			417	
TOTALS	CALC. BY C.D.B. 10/67 CHECKED BY H.C.S. 11/68		30	170	417	357 40

GRAHAM RD. - RAMP "D"

FED. ROAD DIVISION	STATE	PROJECT	
2	OHIO		

72
460

SUM-8-17.63

FOR PAV'T. DETAIL
RAMP "E" SEE SHEET No. 93

RAMP "E" CURVE DATA

CURVE No. 1	CURVE No. 2
Δ = 31° 00' 37"	Δ = 17° 13' 35"
Dc = 6° 00'	Dc = 3° 00'
R = 954.93'	R = 1909.86'
T = 264.92'	T = 289.23'
Lc = 516.84'	Lc = 574.21'
E = 36.07'	E = 21.79'

CENTERLINE S.R. 8 CURVE DATA

- Δ = 58° 33' 25"
- Dc = 3° 00'
- Ls = 350'
- R = 1909.86'
- Lc = 1639.23'
- Θs = 5° 15' 00"
- P = 2.67'
- K = 174.95'
- Xc = 349.71'
- Yc = 10.68'
- L.T. = 233.44'
- S.T. = 116.76'
- L.C. = 349.87'
- Ts = 1269.31'
- Es = 293.64

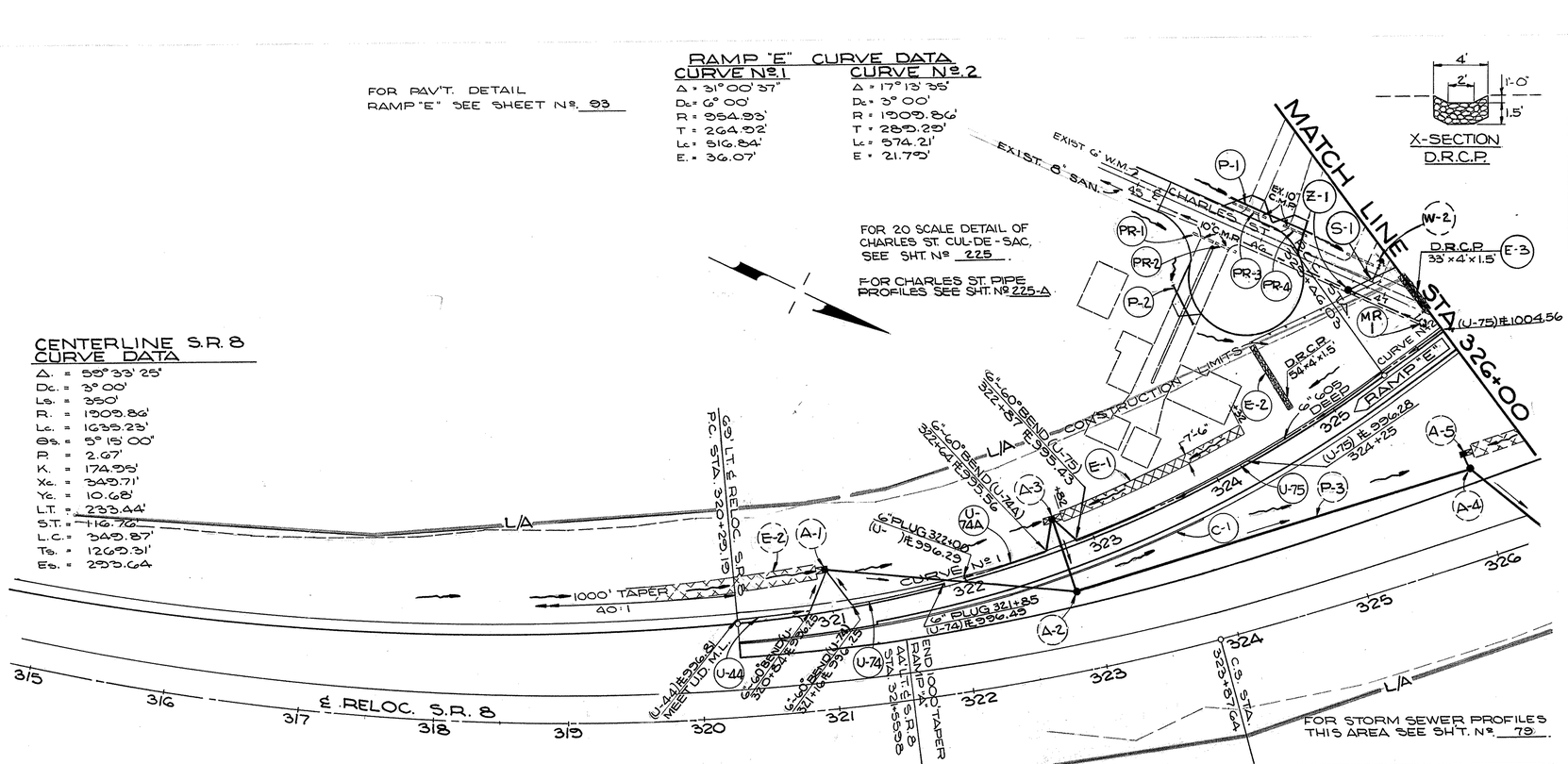

FOR 20 SCALE DETAIL OF CHARLES ST. CUL-DE-SAC. SEE SHT No. 225.

FOR CHARLES ST. PIPE PROFILES SEE SHT. No. 225-A.

BASELINE ELEVATIONS

RT. EDGE PAV'T. ELEVATIONS

1002.90 1002.64 1002.01 1001.38 1000.85 1000.43 1000.15 1000.08 1000.11 1000.27 1000.58 1001.02 1001.60 1002.32 1003.18 1004.18 1005.31 1006.64 1007.76 1008.56 1007.92 1011.34 1010.60

FOR ELEVATIONS IN THIS AREA SEE SHEET No. 93.

1004.51 1005.91

Z-1 STA. 46+75 (10' RT. ℄ CHARLES)
G04 No. 1 M.H.
COVER EL. = 1021.00±
℄ 8" = 1015.08±
℄ 6" = 1015.25±

MR 1

0.50%

EXIST. 8" @ 0.50%

CHARLES ST. SEWER

46 47

EARTHWORK ITEM 203	
EXCAVATION CU.YD.	EMBANKMENT CU.YD.
42,435	6,295

320+29 TO 323+70

GRAPHIC GRADE

P.C. STA. 320+29.15 ELEV. 1002.90

300' V.C.

P.C.C. STA. 325+46.03 ELEV. 1007.71

+5.36%

(U-75) ℄ 1004.56

A-1 A-2

-1.26%

U-74 (U-74) ℄ 996.25

(U-44) ℄ 996.81 MEET U.D. M.L.

U-44 -1.00%

(U-44) ℄ 996.25

+0.30%

(U-74) ℄ 996.49

PROF. 33 ℄ 996.78

U-74A -1.26%

(U-74A) ℄ 996.29

+0.58%

(U-75) ℄ 996.28

P.V.I. STA. 323+75 ELEV. 998.54

U-75

+5.36%

1030 1020 1015 1010 1000

320 321 322 323 324 325 326

ESTIMATED QUANTITIES

REF. NO.	ITEM	SIDE	STATION TO STATION	609 TYPE 7 CURB LIN.FT.	609 TYPE 8 CURB LIN.FT.	202 PIPE M.H. REMOVED EACH	202 PIPE REMOVED OR ABAN. UNDER EMBANKMENT LIN.FT.	601 TYPE B JUTE MATTING SQ.YD.	603 TYPE F CU.YDS.	605 6" UNDER-DRAIN SHALLOW DEEP LIN.FT.	605 BENDS & BRANCHES UNCONNECTED 6" EACH	605 6" UNDER-DRAIN LIN.FT. UNCONNECTED 12"
C-1		LT.	320+29.15 TO 323+87	137	201							
U-44	320+29 TO A-1	LT.								10	88	1
U-74	A-1 TO 321+85	LT.								10	92	1
U-75	A-3 TO 326+00	LT.								10	175	150
U-74A	322+00 TO A-3									10	79	1
E-1	322+82 TO 324+32	LT.						125				
E-2	324+75 TO 73' LT. ℄	LT.						16				
E-3	326+00 TO 52' LT. ℄	LT.						10				
P-1	45+46 TO 44+32.18	LT.	℄ CHARLES ST.									
P-2	45+89.55 TO 45+83.76	RT.	℄ CHARLES ST.									
PR-1	45+61 TO 45+75	RT.	℄ CHARLES						14			
PR-2	45+78 TO 45+93.14	RT.	℄ CHARLES						15			
PR-3	45+74 TO 45+90	LT.	℄ CHARLES						20			
PR-4	46+13 TO 46+27	LT.	℄ CHARLES						14			
MR-1	47+32	10' RT. ℄ CHARLES				1						
Z-1	46+75	10' RT. ℄ CHARLES									1	
S-1	46+75	CHARLES										
TOTALS				137	201	1	63	26	125	40	171	263 150

CALC. BY C.D.B. 10/27
CHECKED BY H.C.S. 11/28

225-A 225-A

G04 NO1 MH
G03 TYPE-B SANITARY MANHOLES
EACH
LIN.FT.

46 1 46

66 32 1 98 X 150

RAMP "E"

SEC. NO.	STATE	PROJECT
2	OHIO	

T3 460

SUM-8-17.63

RAMP "E" CURVE DATA

Δ = 17° 13' 35"
Dc = 3° 00'
R = 1909.86'
T = 289.29'
Lc = 574.21'
E = 21.79'

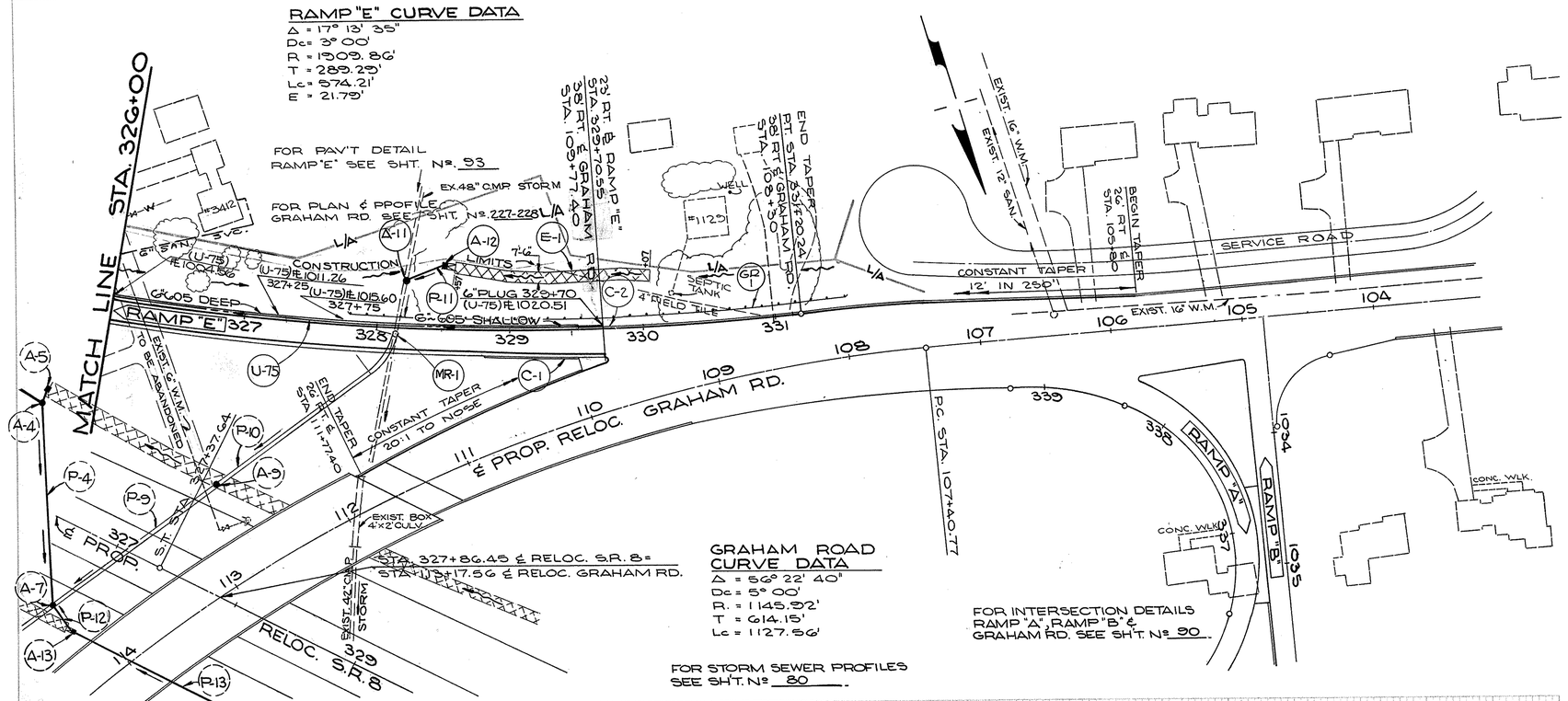

GRAHAM ROAD CURVE DATA

Δ = 56° 22' 40"
Dc = 5° 00'
R = 1145.92'
T = 614.15'
Lc = 1127.56'

FOR STORM SEWER PROFILES SEE SHT. No. 80.

FOR INTERSECTION DETAILS RAMP "A", RAMP "B" & GRAHAM RD. SEE SHT. No. 90.

FOR ELEVATIONS IN THIS AREA SEE SHEET No. 93

BASELINE ELEVATIONS

R.T. EDGE PAV'T. ELEVATIONS

| | | |

FED. RD. DIVISION	STATE	PROJECT	
2	OHIO		

SUM -8-17.63

74
460

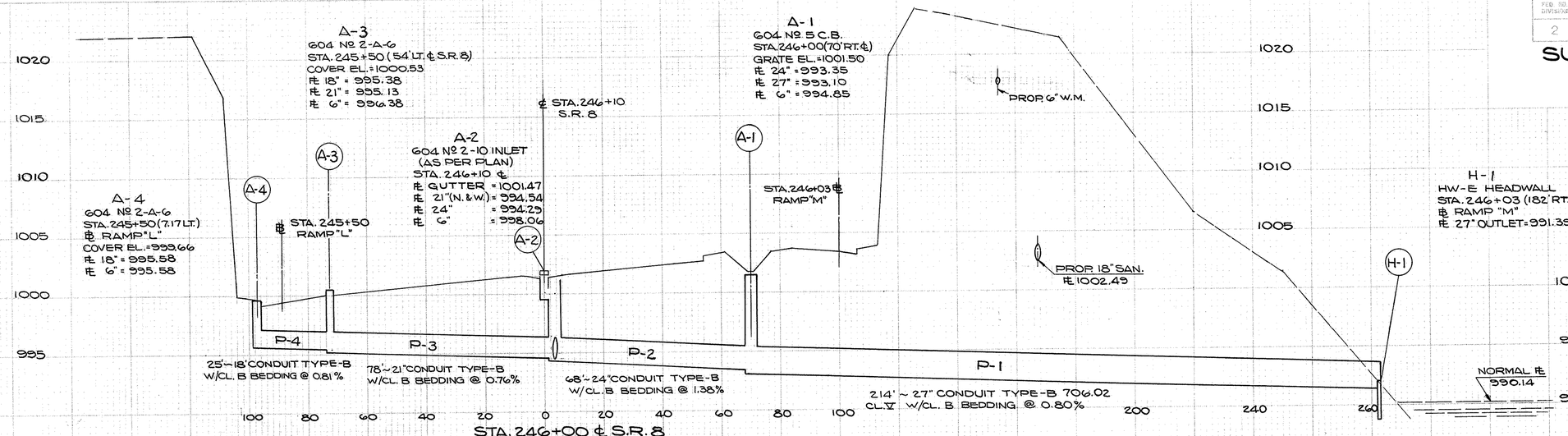

STA. 246+00 ℄ S.R. 8

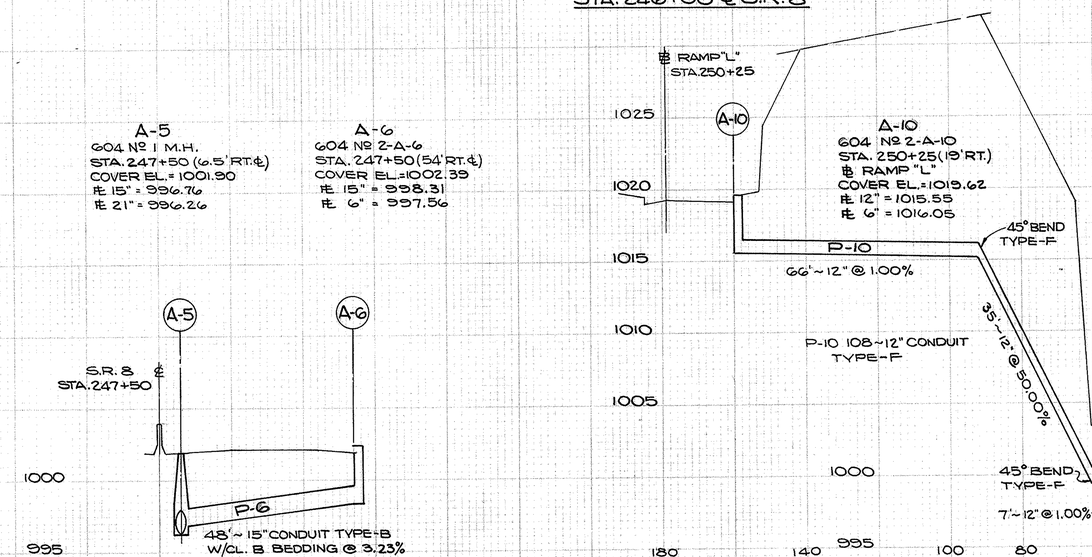

STA. 247+50 ℄ S.R. 8

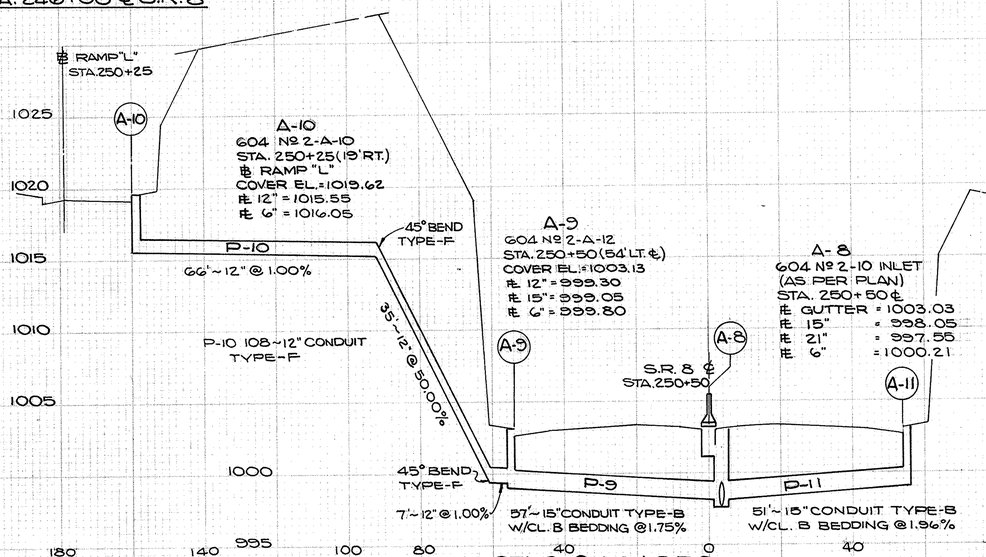

STA. 250+50 ℄ S.R. 8

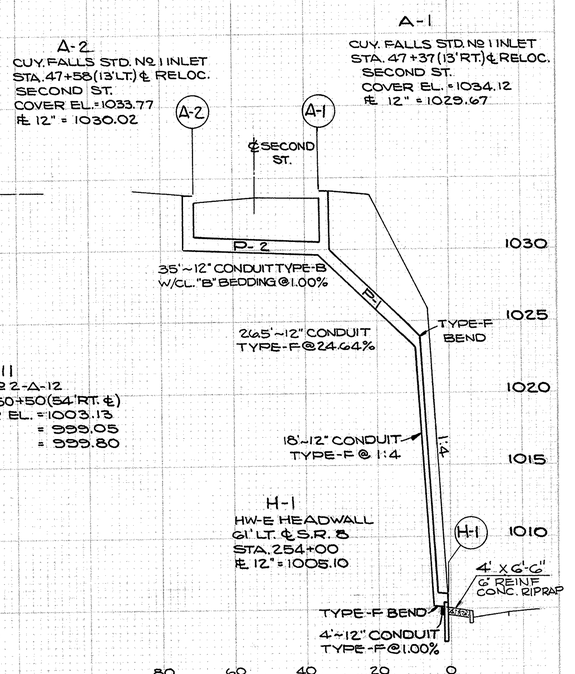

RT. STA. 254+00 S.R. 8

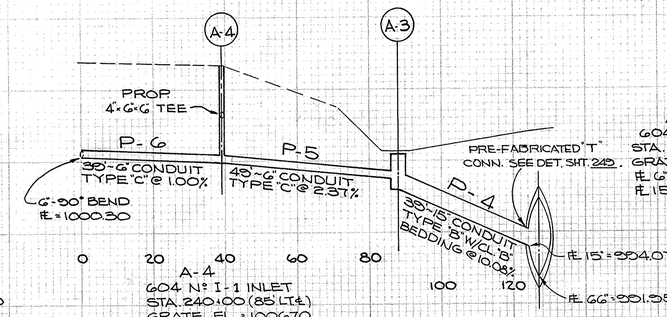

A-4
604 Nº 1-1 INLET
STA. 240+100 (85' LT ℄)
GRATE EL. = 1006.70
℄ EX. 4" = 1003.00
℄ PROP 6" = 999.91 N.S.

STA. 239+60 TO STA. 240+90 LT. ℄ S.R. 8

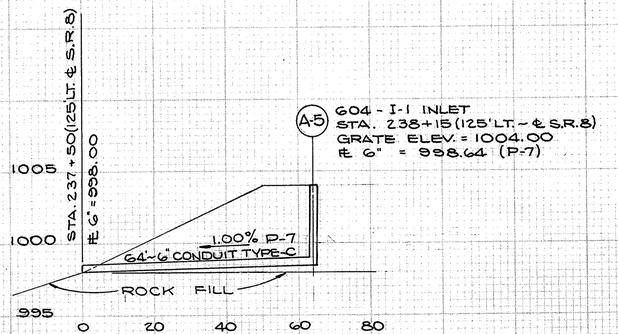

STA. 237+50 TO STA. 238+15 LT. ℄ S.R. 8

SEE M.L. PLAN & PROF. SHEET FOR SEWER PROFILES ALONG M.L. ℄ 246+00 TO 250+50

STORM SEWER PROFILES
STA. 237+50 TO STA. 254+00

FED. RD. DIVISION	STATE	PROJECT		
2	OHIO			

75
460

SUM-8-17.63

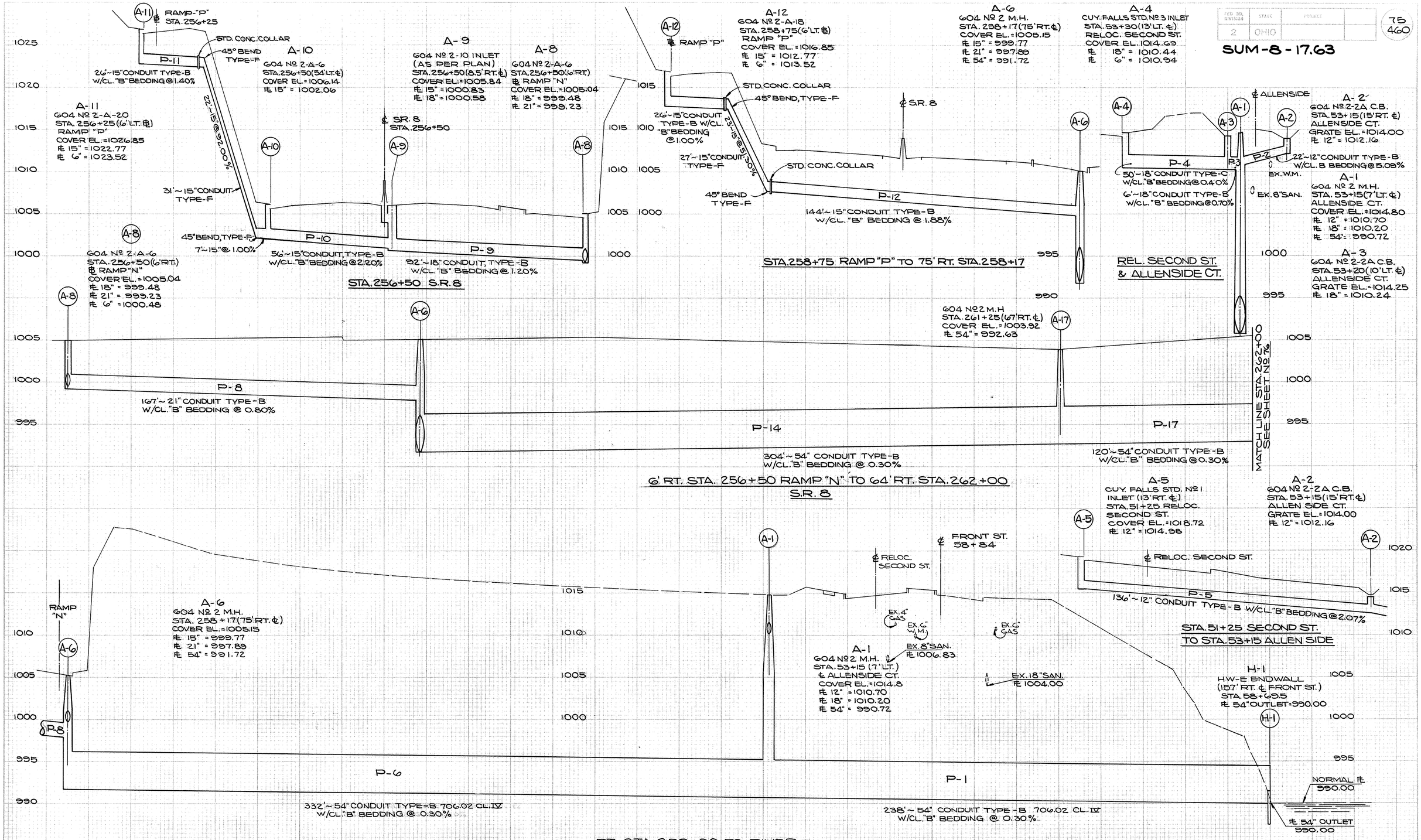

STORM SEWER PROFILES
STA. 256+50 TO STA. 262+14

FED. RD. DIVISION	STATE	PROJECT	
2	OHIO		

76
460

SUM-8-17.63

A-19
604 Nº 1 M.H.
STA. 51+86 (7' RT. ℄)
BAILEY RD.
COVER EL.=1030.90
℄ 15" = 1022.95
℄ EX. 20" = 1022.53
℄ 24" = 1022.02

A-18
604 Nº 1 M.H.
STA. 51+83 (25' RT. ℄)
BAILEY RD.
COVER EL.=1031.00
℄ 24" = 1021.84
℄ 12" = 1025.75

EX. M.H. BAILEY RD.
STA. 51+88.5 (9.5' LT. ℄)
COVER EL.= 1031.11
℄ 12" = 1026.27 (EX.)
℄ 15" = 1026.02
REFORM BOTTOM M.H.
COST TO BE INCLUDED
IN PRICE OF PIPE

A-13
CUY. FALLS STD. Nº1 INLET
STA. 51+90 (15' RT. ℄)
BAILEY ROAD
COVER EL.= 1031.15
℄ 12" = 1027.40

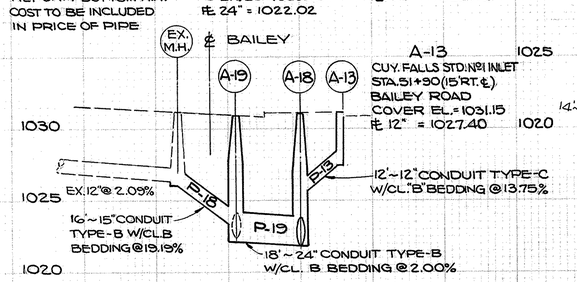

BAILEY ROAD

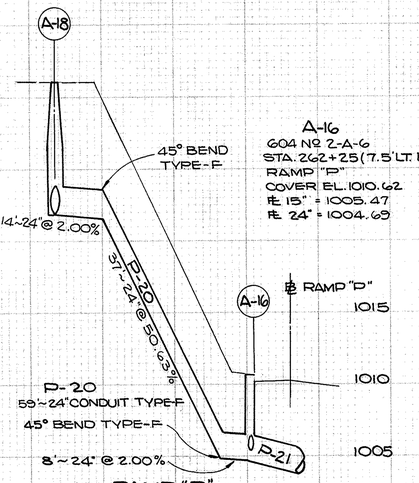

LT. RAMP "P"
STA. 262+35

A-16
604 Nº 2-A-6
STA. 262+25 (7.5' LT. ℄)
RAMP "P"
COVER EL. 1010.62
℄ 15" = 1005.47
℄ 24" = 1004.69

A-25
604 Nº 2-A-6
STA. 264+00 (8' LT. ℄)
RAMP "P"
COVER EL.=1011.03
℄ 12" = 1006.95

A-26
604 Nº 2-A-6
STA. 264+75 (8' LT. ℄)
RAMP "P"
COVER EL.=1010.24
℄ 12" = 1002.67
℄ 15" = 1002.42

A-27
604 Nº 2-A-6
STA. 265+50 (8' LT. ℄)
RAMP "P"
COVER EL.= 1009.25
℄ 12" = 1002.90

A-28
604 Nº 2-A-6
STA. 266+25
64' LT. ℄ S.R. 8
COVER EL.= 1008.33
℄ 12" = 1003.12

A-29
604 Nº 2-A-6
STA. 267+00
64' LT. ℄ S.R. 8
COVER EL.=1007.43
℄ 12" = 1003.35

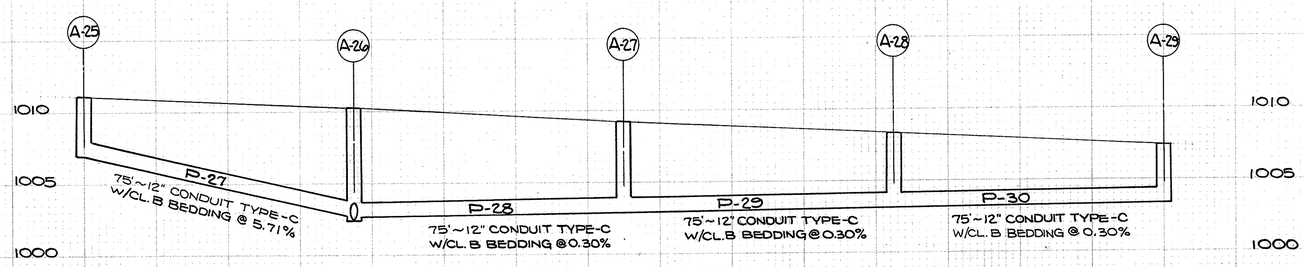

LT. RAMP "P" STA. 264+00 TO LT. 267+00 S.R. 8

A-14
604 Nº 2-A-12
STA. 260+25 (6' LT. ℄)
RAMP "P"
COVER EL.=1011.47
℄ 12" = 1007.39
℄ 6" = 1007.89

A-15
604 Nº 2-A-6
STA. 261+25 (6' LT. ℄)
RAMP "P"
COVER EL.=1010.35
℄ 12" = 1006.27
℄ 15" = 1006.02
℄ 6" = 1006.42

A-16
604 Nº 2-A-6
STA. 262+25 (7.5' LT. ℄)
RAMP "P"
COVER EL.=1010.62
℄ 15" = 1005.47
℄ 24" = 1006.69

A-20
604 Nº 2 M.H.
STA. 262+29 (6' RT. ℄)
COVER EL.= 1006.09
℄ 24" = 999.64
℄ 48" = 993.49
℄ 54" = 992.99

A-26
604 Nº 2-A-6
STA. 264+75 (8' LT. ℄)
RAMP "P"
COVER EL.=1010.24
℄ 12" = 1002.67
℄ 15" = 1002.42

A-21
604 Nº 2-10 INLET
(AS PER PLAN)
STA. 264+75 ℄ S.R. 8
℄ GUTTER = 1005.27
℄ 15" = 999.72 (LT.)
℄ 15" = 996.98 (RT.)
℄ 42" = 994.73
℄ 48" = 994.23
℄ 6" = 1002.30

℄ S.R. 8
STA. 264+75

A-22
604 Nº 2-A-6
STA. 264+75 (62' RT. ℄)
COVER EL.=1001.66
℄ 15" = 997.35
℄ 6" = 998.24

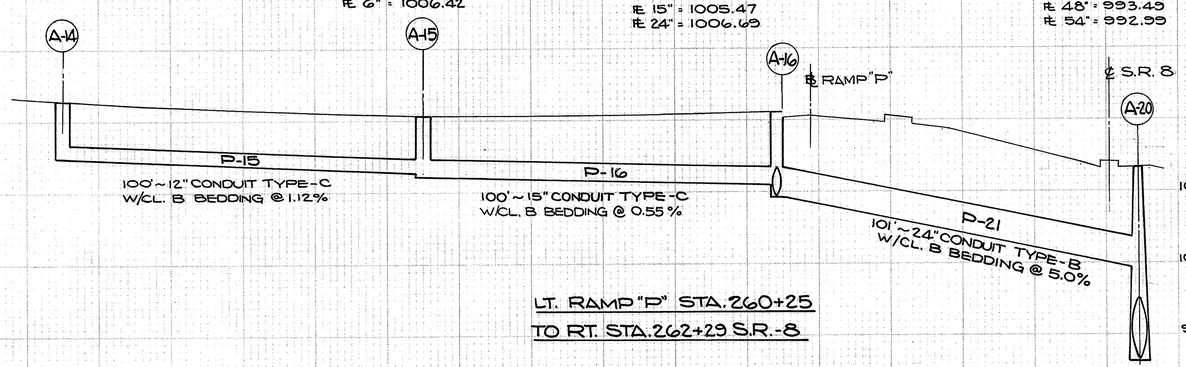

LT. RAMP "P" STA. 260+25
TO RT. STA. 262+29 S.R.-8

A-23
604 Nº 2-A-6
STA. 264+41 (62.7' RT. ℄)
COVER EL.= 1001.65
℄ 15" = 997.50

A-22
604 Nº 2-A-6
STA. 264+75 (62' RT. ℄)
COVER EL.= 1001.66
℄ 15" = 997.35
℄ 6" = 998.24

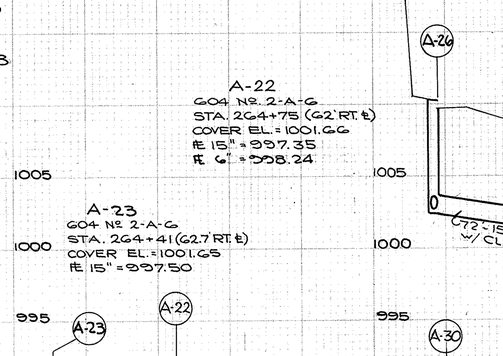

STA. 264+41 to STA. 265+50

A-30
604 Nº. 2-A-6
STA. 265+50 (60' RT. ℄)
COVER EL.= 1001.85
℄ 15" = 997.70

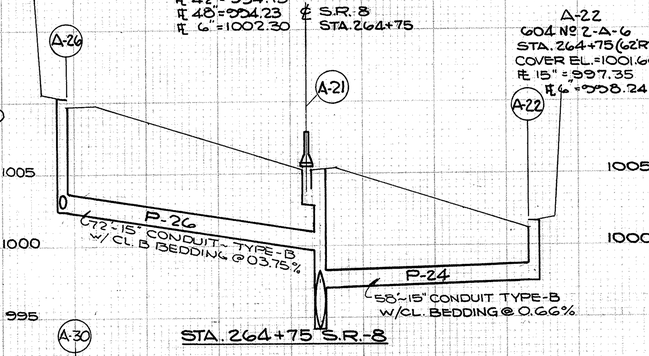

STA. 264+75 S.R.-8

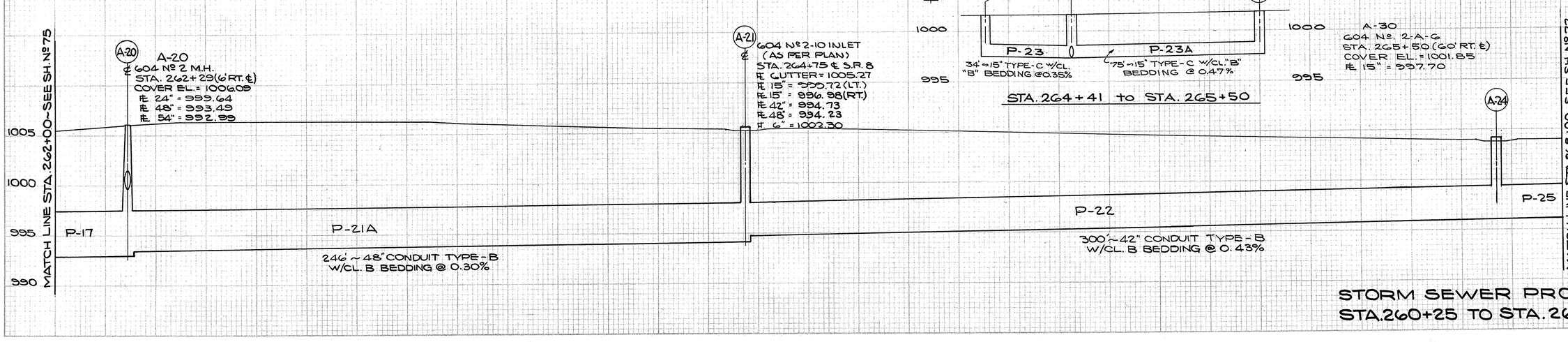

STORM SEWER PROFILES
STA. 260+25 TO STA. 268+00

FED. RD. DIVISION	STATE	PROJECT	
2	OHIO		

77
460

SUM-8-17.63

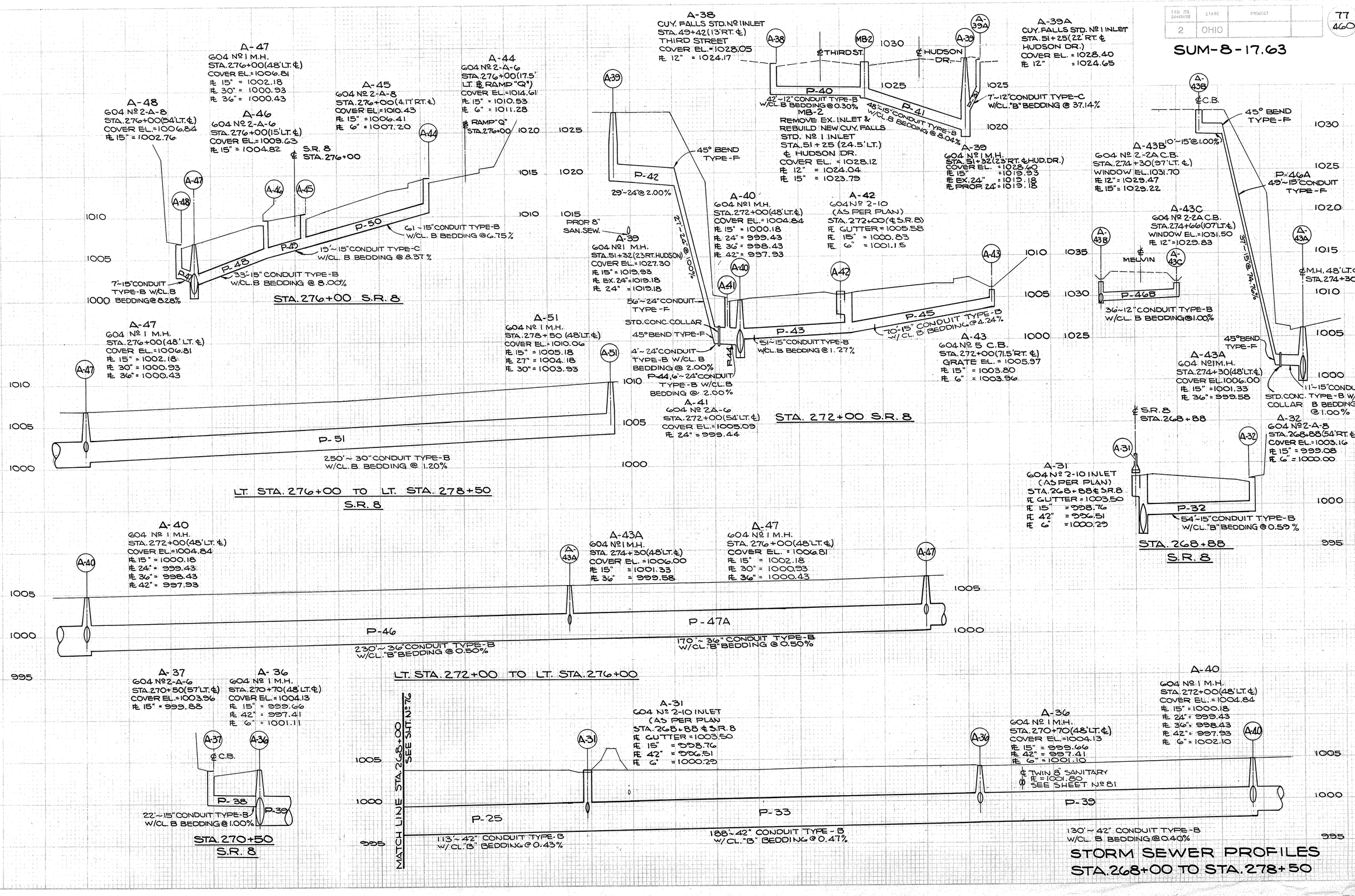

STORM SEWER PROFILES
STA. 268+00 TO STA. 278+50

FED. RD. DIVISION	STATE	PROJECT	
2	OHIO		

78
460

SUM-8-17.63

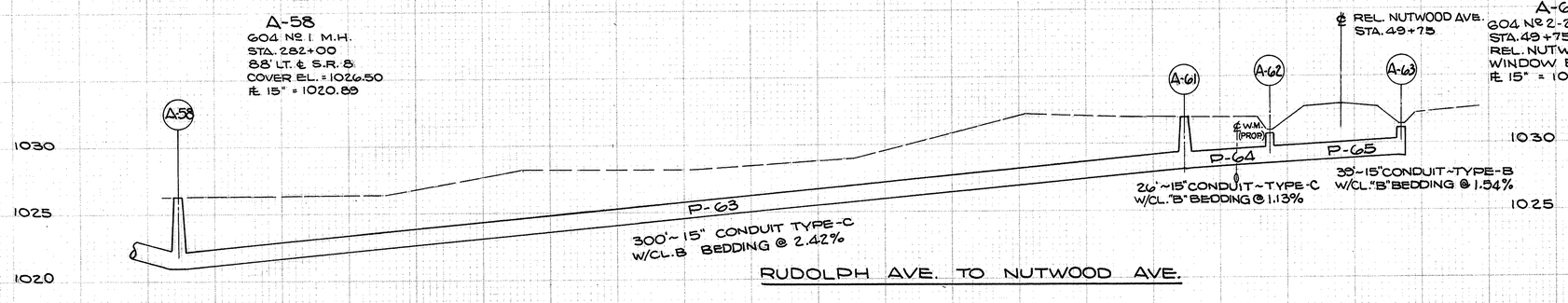

RUDOLPH AVE. TO NUTWOOD AVE.

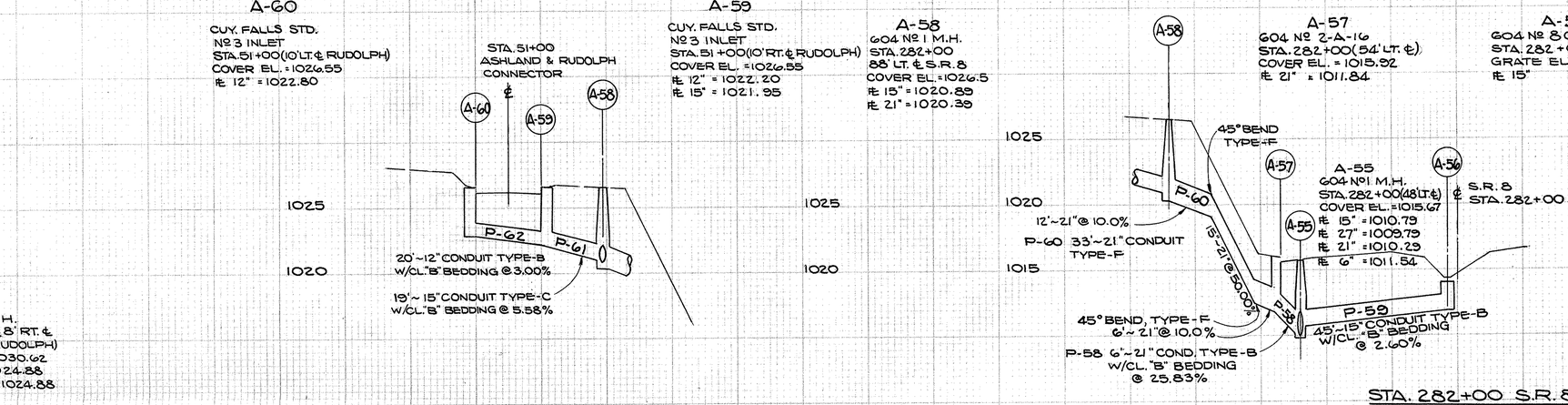

STA. 282+00 S.R. 8

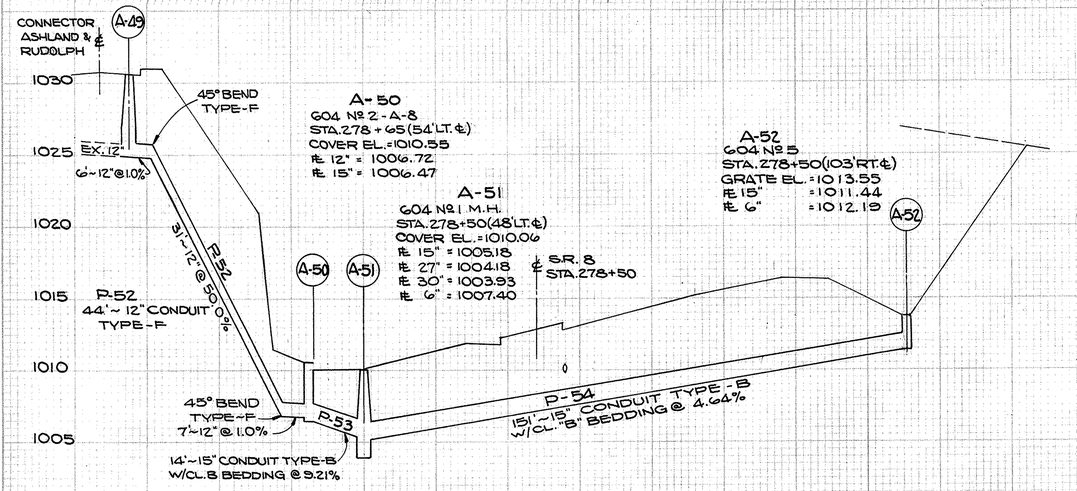

STA. 278+50 S.R. 8

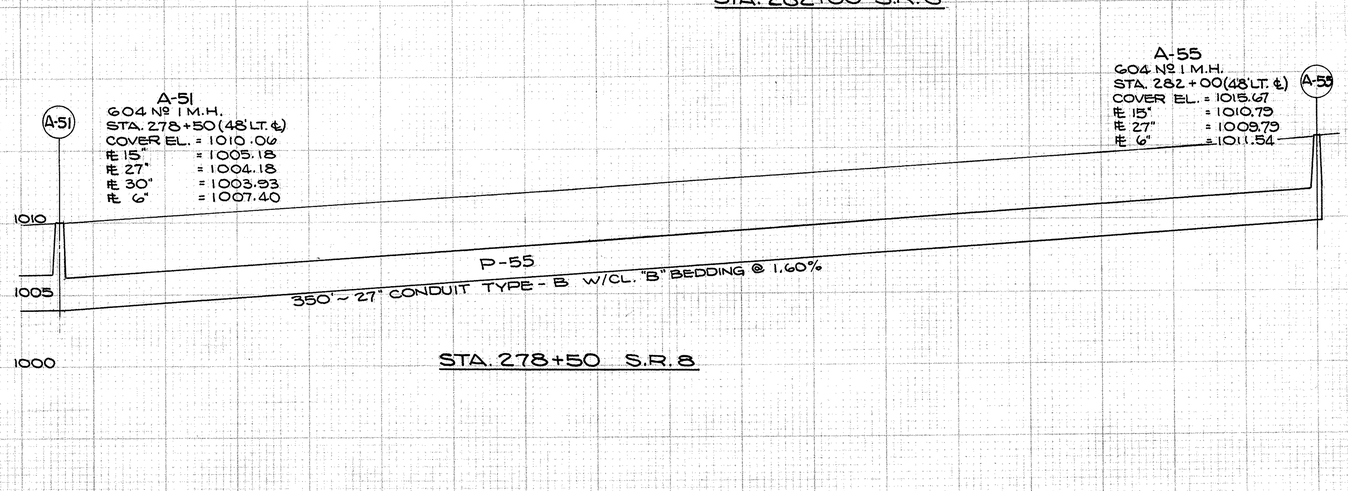

STA. 278+50 S.R. 8

STORM SEWER PROFILES
STA. 278+50 TO STA. 282+22

FED. RD. DIVISION	STATE	PROJECT	
2	OHIO		

79
460

SUM-8-17.63

A-2
604-№1 M.H.
STA. 322+89 (58' LT. ℄)
COVER ELEV. 1001.19
℄ 15" = 995.24
℄ 30" = 993.96
℄ 36" = 993.58

A-3
604-№5 C.B.
STA. 322+75 (24' LT. RAMP "E" ℄)
GRATE ELEV. 997.41
℄ 15" = 995.41
℄ 6" = 995.41

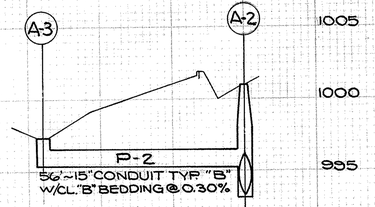

LT. STA. 322+75 RAMP ℄ TO STA. 322+89 S.R. 8

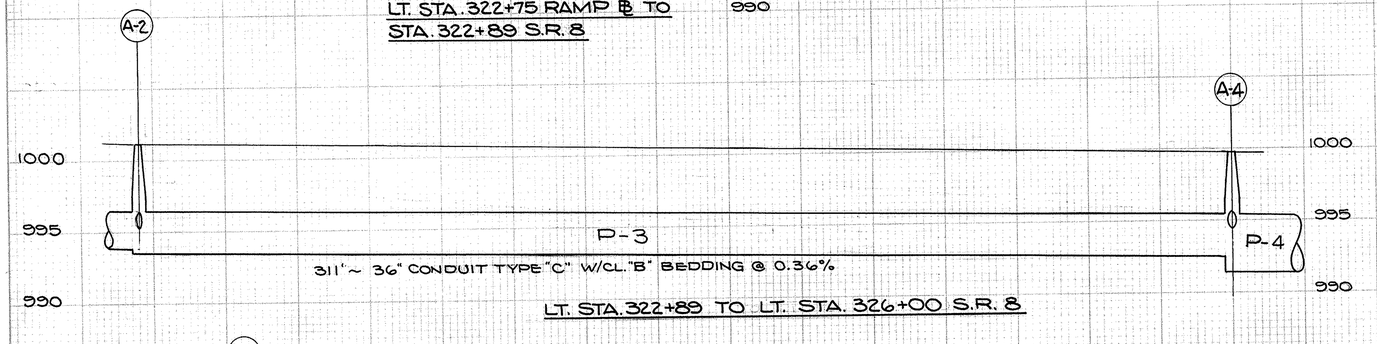

LT. STA. 322+89 TO LT. STA. 326+00 S.R. 8

A-4
604 №. 1 M.H.
STA. 326+00 (67' LT. ℄)
COVER EL. = 999.75
℄ 36" = 992.46
℄ 48" = 991.46
℄ 18" = 993.96
℄ 6" = 994.04

A-5
604 № 5 C.B.
STA. 326+00 (88' LT ℄)
GRATE EL. = 997.35
℄ 18" = 994.97

A-7
604 № 1A M.H.
STA. 50+72 (℄ REL. SEW.)
COVER ELEV. = 1002.75
℄ 18" = 993.75
℄ 48" = 991.00
℄ 66" = 989.72
℄ 6" = 995.80

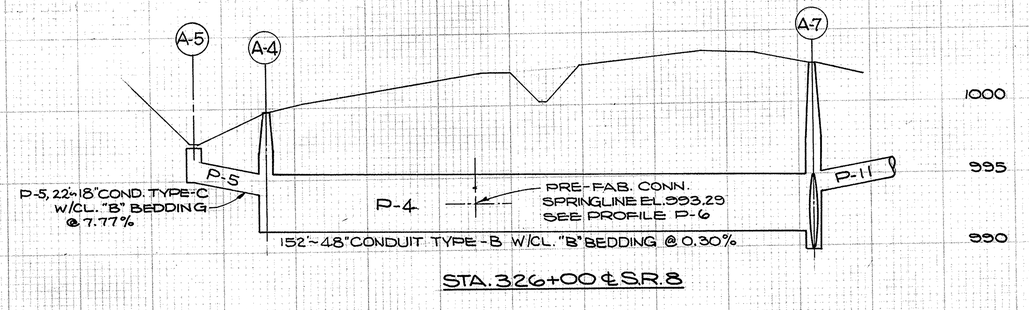

STA. 326+00 ℄ S.R. 8

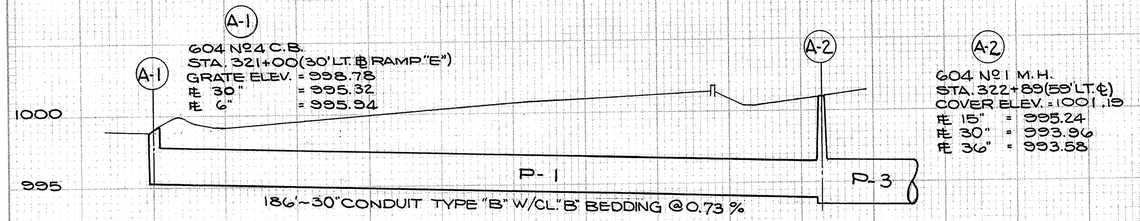

A-1
604 №24 C.B.
STA. 321+00 (30' LT. ℄ RAMP "E")
GRATE ELEV. = 998.78
℄ 30" = 995.32
℄ 6" = 995.54

A-2
604 №1 M.H.
STA. 322+89 (58' LT. ℄)
COVER ELEV. = 1001.19
℄ 15" = 995.24
℄ 30" = 993.96
℄ 36" = 993.58

A-6
604 № 8 C.B.
STA. 326+05 (3' LT. ℄ S.R. 8)
GRATE EL. = 1000.35
℄ 15" = 998.29
℄ 6" = 998.29

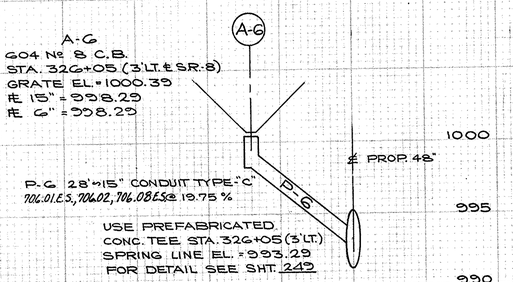

STA. 326+05 ℄ S.R. 8

STORM SEWER PROFILES
STA. 321+00 TO STA. 326+30

FED. RD. DIVISION	STATE	PROJECT	
2	OHIO		

80
460

SUM-8-17.63

A-15
604 Nº 8 C.B.
STA. 329+70 ℄ M.L.
GRATE ELEV. = 1001.32
℄ 15" = 999.22

A-14
604 Nº 5 C.B.
STA. 328+50 (72' RT. ℄ M.L.)
GRATE ELEV. = 999.95
℄ 15" = 998.06
℄ 18" = 997.81

A-13
604 Nº 5 C.B.
STA. 327+00 (72' RT. ℄)
GRATE ELEV. = 1000.35
℄ 18" = 995.71

A-7
604 Nº 1A M.H.
STA. 50+72 (SEW. STA.)
COVER ELEV. = 1002.75
℄ 18" = 993.79
℄ 48" = 991.00
℄ 66" = 989.72

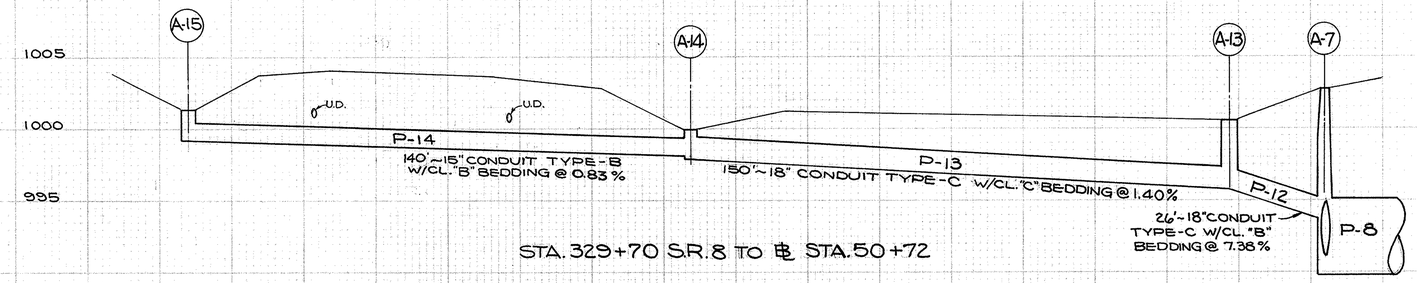

STA. 329+70 S.R. 8 TO ℄ STA. 50+72

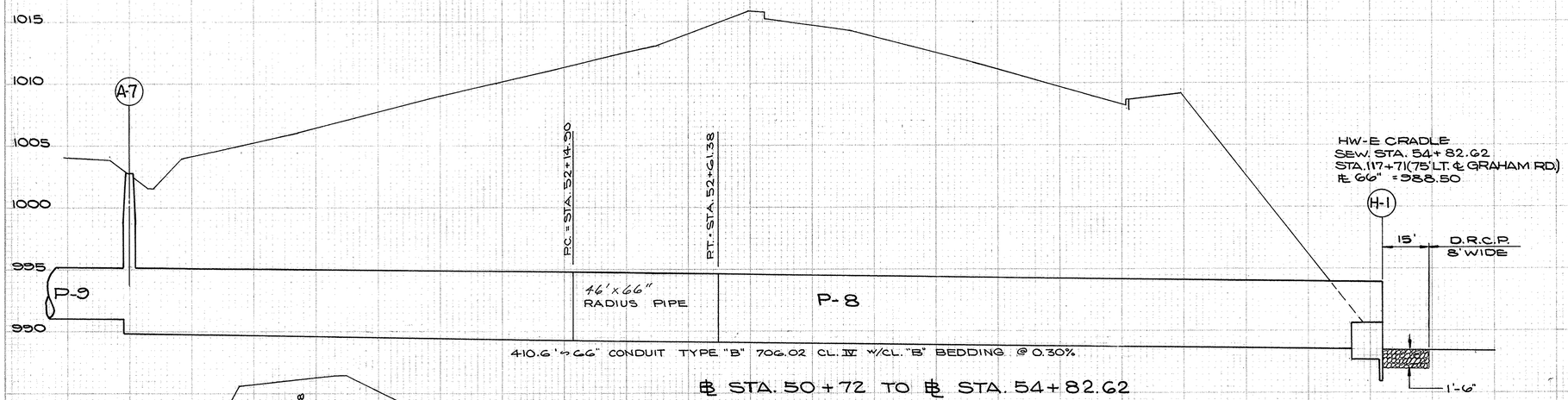

HW-E CRADLE
SEW. STA. 54+82.62
STA. 117+71 (75' LT. ℄ GRAHAM RD.)
℄ 66" = 988.50

A-12
604 Nº 5 C.B.
STA. 328+50 (47' LT. ℄ RAMP "E")
GRATE ELEV. 1004.87
℄ 12" = 1003.03

A-11
604 Nº 1 M.H.
STA. 328+20 (36' LT. ℄ RAMP "E")
COVER ELEV. = 1008.50
℄ 12" = 1002.86
℄ EXIST. 48" = 1001.36

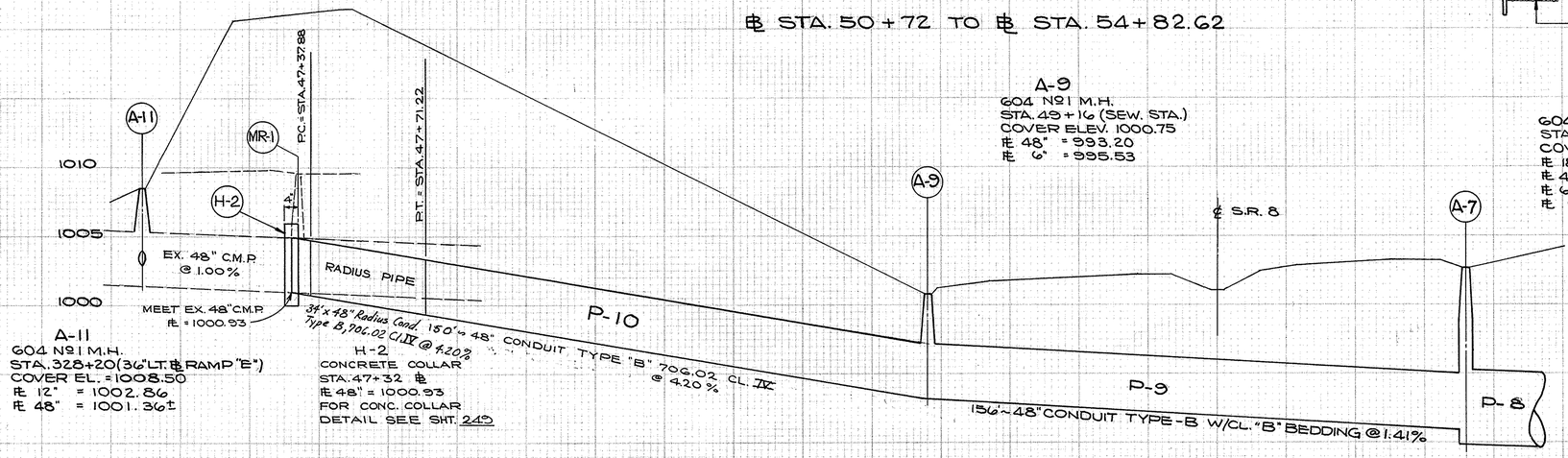

A-11
604 Nº 1 M.H.
STA. 328+20 (36" LT. ℄ RAMP "E")
COVER EL. = 1008.50
℄ 12" = 1002.86
℄ 48" = 1001.36±

H-2
CONCRETE COLLAR
STA. 47+32 ℄
℄ 48" = 1000.93
FOR CONC. COLLAR
DETAIL SEE SHT. 249

A-9
604 Nº 1 M.H.
STA. 49+16 (SEW. STA.)
COVER ELEV. 1000.75
℄ 48" = 993.20
℄ 6" = 995.53

A-7
604 Nº 1A M.H.
STA. 50+72 (SEW. STA.)
COVER ELEV. = 1002.75
℄ 18" = 993.79
℄ 48" = 991.00
℄ 66" = 989.72
℄ 6" = 995.80

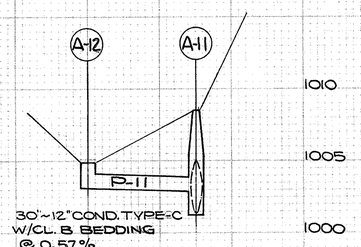

STA. 328+20 RAMP "E" ℄
STA. 328+50 RAMP "E" ℄

℄ STA 47+32 TO ℄ STA. 50+72

48 49 50 51

STORM SEWER PROFILES
M.L. STA. 326+78 TO STA. 329+00 & RT. OF GRAHAM ROAD

FED. RD. DIVISION	STATE	PROJECT		
2	OHIO			

81
460

SUM-8-17.63

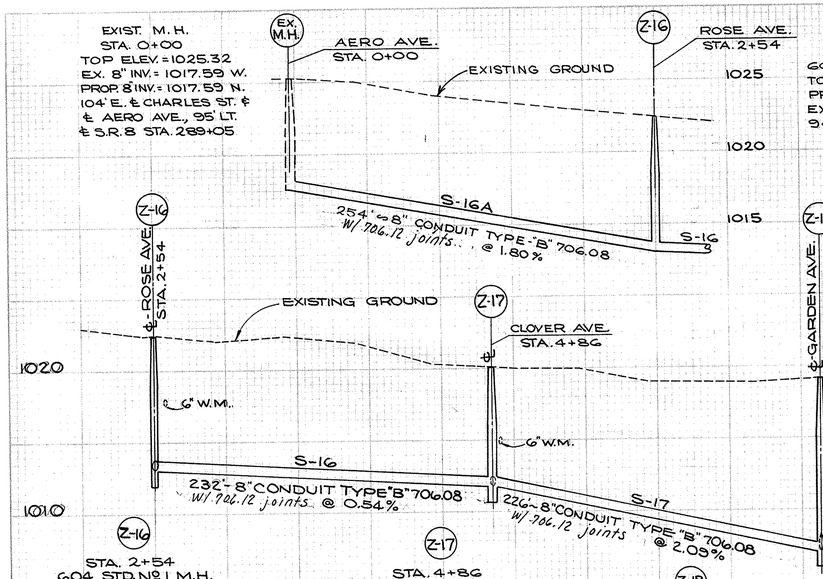

Z-16
STA. 2+54
604 STD. Nº 1 M.H.
TOP ELEV.=1022.4±
PROP. 8" ℄=1013.02 N.&S.
EX. 8" ℄ =1013.02 W.
94' LT. & STA. 291+60

Z-17
STA. 4+86
604 STD. Nº 1 M.H.
TOP ELEV.=1020.2±
PROP. 8" ℄=1011.77 N.&S.
EX. 8" ℄ =1011.77 W.
90' LT. & STA. 293+90

Z-18
STA. 7+12
604 STD. Nº 1 M.H.
TOP ELEV.=1024.3±
PROP. 8" ℄=1007.05 S.
EX. 15" ℄ =1007.05 W.
96' LT. & STA. 296+15

LEFT S.R.8 STA. 291+60 TO STA. 296+19

Z-16
STA. 2+54
604 STD. Nº 1 M.H.
TOP ELEV.=1022.4±
PROP. 8" ℄=1013.02 N.&S.
EX. 8" ℄=1013.02 W.
94' LT. & STA. 291+60

Z-27
STA. 0+00
604 STD. Nº 1 M.H.
TOP ELEV.=1022.50
℄ 8" = 1014.52 (E.)
℄ 8" STUB=1014.52 (W.)(PLUG)
57.5' RT. STA. 102+07
GRAHAM RD.

Z-26
STA. 4+46
604 STD. Nº 1 M.H.
TOP ELEV.=1018.90
℄ 8" = 1008.90
℄ 12" = 1008.57 (EX.)
57.5' RT. STA. 106+53
GRAHAM RD.

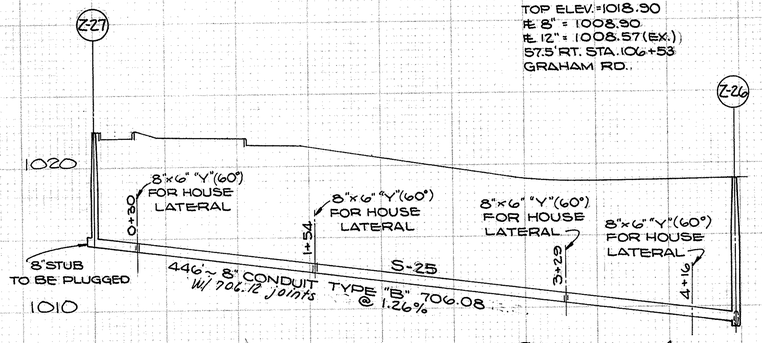

SERVICE RD. @ GRAHAM RD.

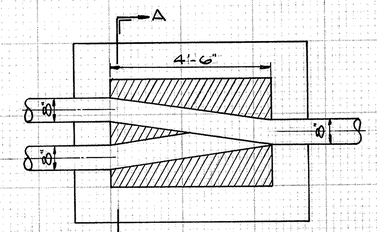

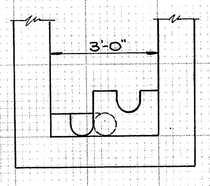

SECTION A-A

DETAIL STD. Nº 2 M.H. Z-9 & Z-10

Z-9
STA. 48+85
35' LT. & HUDSON
604 STD. Nº 2 M.H.
TOP ELEV.=1022.4
℄ 8" = 1011.32 N.&S. (S-9A)
℄ 8" = 1011.99 N. (S-9)
SEE DETAIL THIS SHEET

Z-10
STA. 50+77
54' LT. & HUDSON
604 STD. Nº 2 M.H.
TOP ELEV. 1027.4
S-9A ℄ 8" = 1012.62 N.&S.
S-9 ℄ 8" = 1013.29 S.
96' LT. & STA. 271+08
SEE DETAIL THIS SHT.

STA. 47+40.5 EX. M.H.
10' LT. & HUDSON DR.
TOP EL. = 1022.06
℄ EX. 8" (E.) = 1010.68
℄ PROP. 8" (NW) = 1010.68
℄ EX. 10" (N.) = 1010.68 (ABAND.)

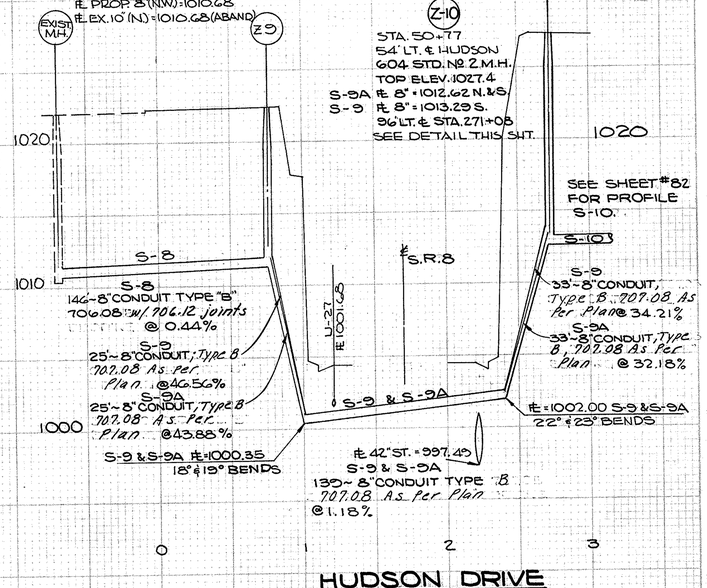

HUDSON DRIVE

Z-20
STA. 0+00
604 Nº 2 M.H.
160' LT. 245+00 MAINLINE
TOP ELEV.=1020.0
℄ EXIST. 18" = 1002.12
℄ NEW 18" = 1002.12
(CONSTRUCT ON EXIST. 18" SAN. SEWER)

Z-21
STA. 0+40
604 Nº 2 M.H.
120' LT. 245+00 MAINLINE
TOP ELEV.=1021.0
℄ 3" = 1002.17
℄ 12" = 1002.17
℄ 15" = 1002.17
℄ 18" = 1002.17

Z-21A
STA. 2+87
604 Nº 2 M.H. MOD.
137' RT. 245+00 MAINLINE
TOP EL. = 1016.0
℄ 8" = 1002.37
℄ 12" = 1002.37
℄ 15" = 1002.37
℄ 18" = 1002.37

Z-22
STA. 3+05
604 Nº 1 M.H.
145' RT. 245+04 MAINLINE
TOP EL. = 1014.0
℄ 18" = 1002.38

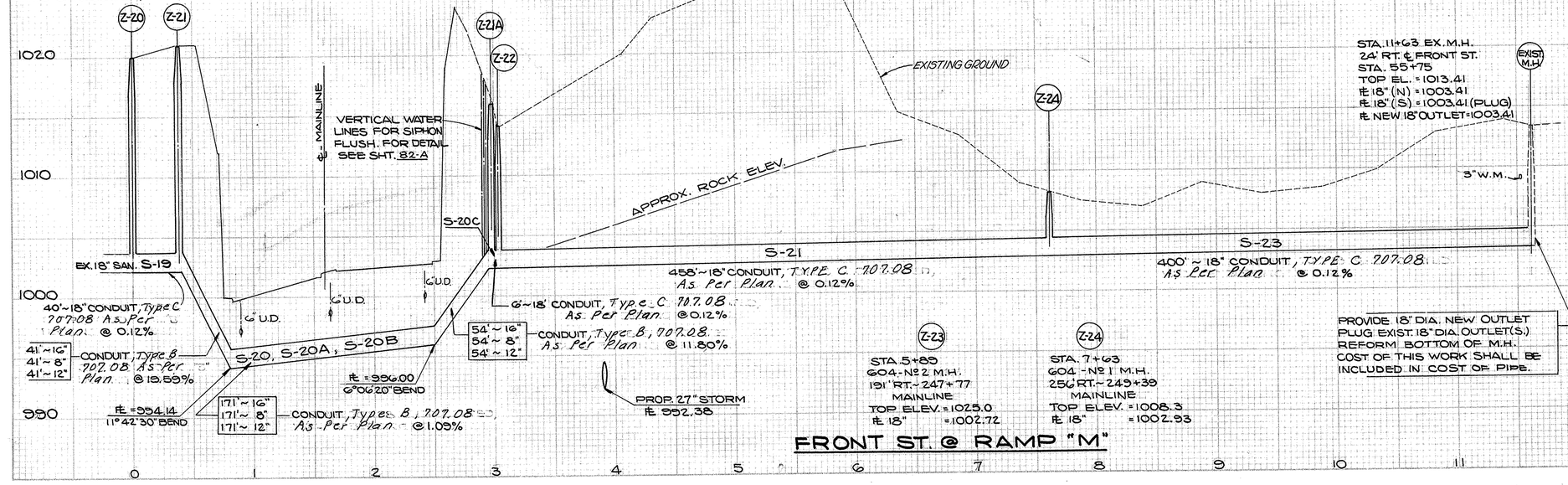

Z-23
STA. 5+89
604 - Nº 2 M.H.
191' RT. ~ 247+77 MAINLINE
TOP ELEV. = 1025.0
℄ 18" = 1002.72

Z-24
STA. 7+63
604 - Nº 1 M.H.
256' RT. ~ 249+39 MAINLINE
TOP ELEV. = 1008.3
℄ 18" = 1002.93

PROVIDE 18" DIA. NEW OUTLET PLUG EXIST. 18" DIA. OUTLET(S.) REFORM BOTTOM OF M.H. COST OF THIS WORK SHALL BE INCLUDED IN COST OF PIPE.

FRONT ST. @ RAMP "M"

EXIST. M.H.
STA. 0+00 EX. M.H.
7.5 LT. ℄ HUDSON DR.
STA. 4.5+63
TOP ELEV. = 1021.05
℄ EX. 8" = 1009.79
℄ NEW 8" = 1009.79

Z-25
STA. 2+50
604 Nº 1 M.H. (10' RT. STA. 2+35 SECOND ST.)
TOP ELEV. = 1020.4
℄ 8" = 1011.04

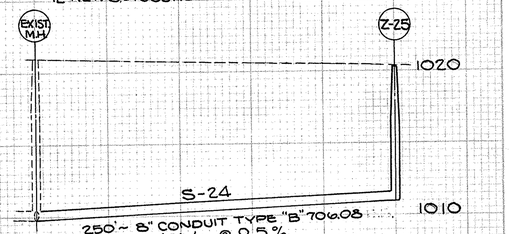

SECOND ST. @ HUDSON DRIVE

NOTE:
FOR SANITARY SEWER QUANTITIES SEE SHEET Nº 84.

SANITARY SEWER PROFILES

FED. RD. DIVISION	STATE	PROJECT	
2	OHIO		

82
460

SUM-8-17.63

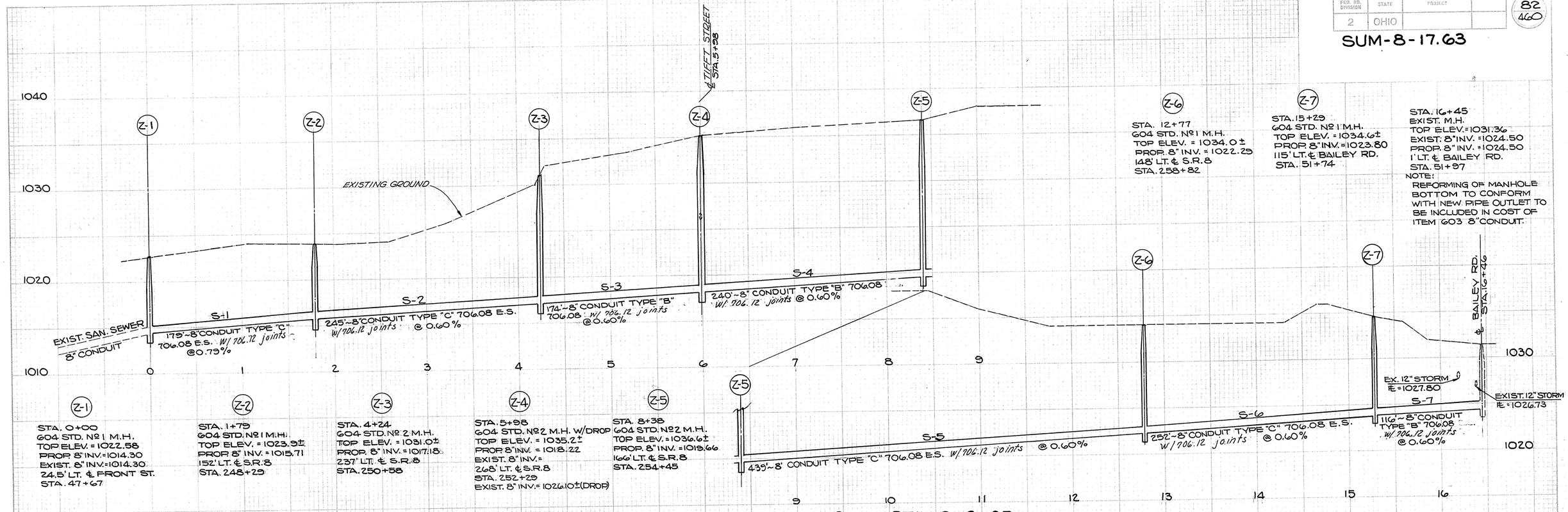

Z-1
STA. 0+00
604 STD. Nº 1 M.H.
TOP ELEV. = 1022.58
PROP 8" INV. = 1014.30
EXIST. 8" INV. = 1014.30
24.5' LT. ℄ FRONT ST.
STA. 47+67

Z-2
STA. 1+79
604 STD. Nº 1 M.H.
TOP ELEV. = 1023.9±
PROP 8" INV. = 1015.71
152' LT. ℄ S.R. 8
STA. 248+29

Z-3
STA. 4+24
604 STD. Nº 2 M.H.
TOP ELEV. = 1031.0±
PROP. 8" INV. = 1017.18
237' LT. ℄ S.R. 8
STA. 250+58

Z-4
STA. 5+98
604 STD. Nº 2 M.H. W/DROP
TOP ELEV. = 1035.2±
PROP 8" INV. = 1018.22
EXIST. 8" INV. =
268' LT. ℄ S.R. 8
STA. 252+29
EXIST. 8" INV. = 1026.10± (DROP)

Z-5
STA. 8+38
604 STD. Nº 2 M.H.
TOP ELEV. = 1036.6±
PROP. 8" INV. = 1019.66
166' LT. ℄ S.R. 8
STA. 254+45

Z-6
STA. 12+77
604 STD. Nº 1 M.H.
TOP ELEV. = 1034.0 ±
PROP. 8" INV. = 1022.29
148' LT. ℄ S.R. 8
STA. 258+82

Z-7
STA. 15+29
604 STD. Nº 1 M.H.
TOP ELEV. = 1034.6±
PROP 8" INV. = 1023.80
115' LT. ℄ BAILEY RD.
STA. 51+74

STA. 16+45
EXIST. M.H.
TOP ELEV. = 1031.36
EXIST. 8" INV. = 1024.50
PROP. 8" INV. = 1024.50
1' LT. ℄ BAILEY RD.
STA. 51+97
NOTE:
REFORMING OF MANHOLE BOTTOM TO CONFORM WITH NEW PIPE OUTLET TO BE INCLUDED IN COST OF ITEM 603 8" CONDUIT.

LEFT S.R. 8 STA. 246+50 TO STA. 262+25

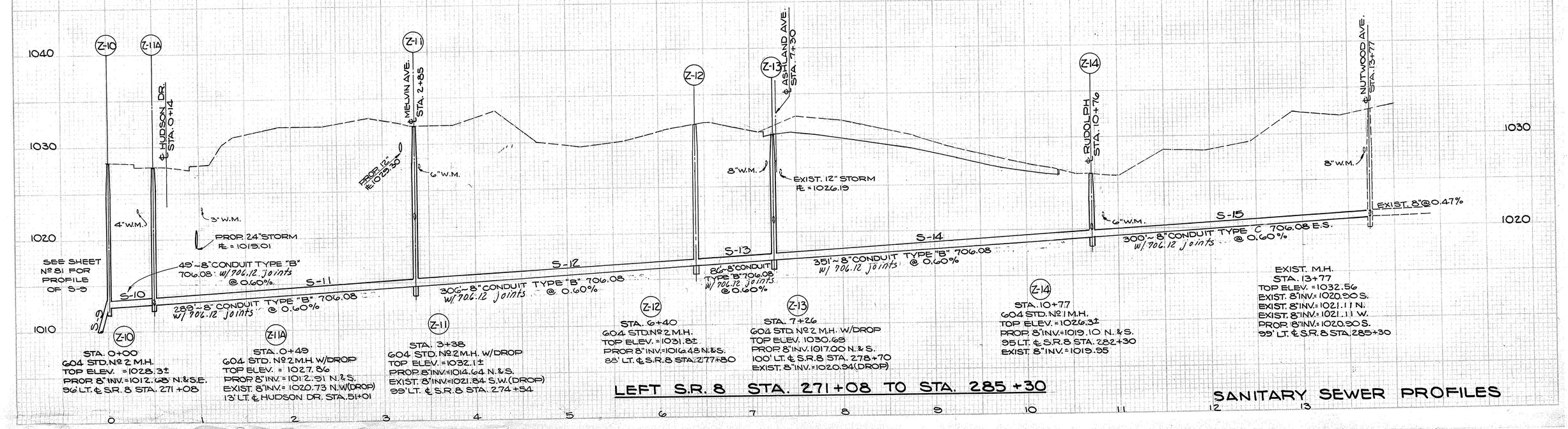

Z-10
STA. 0+00
604 STD. Nº 2 M.H.
TOP ELEV. = 1028.3±
PROP 8" INV. = 1012.68 N. & S.E.
96' LT. ℄ S.R. 8 STA. 271+08

Z-11A
STA. 0+49
604 STD. Nº 2 M.H. W/DROP
TOP ELEV. = 1027.86
PROP 8" INV. = 1012.91 N. & S.
EXIST. 8" INV. = 1020.73 N.W. (DROP)
13' LT. ℄ HUDSON DR. STA. 51+01

Z-11
STA. 3+38
604 STD. Nº 2 M.H. W/DROP
TOP ELEV. = 1032.1±
PROP. 8" INV. = 1014.64 N. & S.
EXIST. 8" INV. = 1021.84 S.W. (DROP)
99' LT. ℄ S.R. 8 STA. 274+54

Z-12
STA. 6+40
604 STD. Nº 2 M.H.
TOP ELEV. = 1031.8±
PROP 8" INV. = 1016.48 N. & S.
86' LT. ℄ S.R. 8 STA. 277+80

Z-13
STA. 7+26
604 STD. Nº 2 M.H. W/DROP
TOP ELEV. 1030.68
PROP 8" INV. 1017.00 N. & S.
100' LT. ℄ S.R. 8 STA. 278+70
EXIST. 8" INV. = 1020.94 (DROP)

Z-14
STA. 10+77
604 STD. Nº 1 M.H.
TOP ELEV. = 1026.3±
PROP. 8" INV. = 1019.10 N. & S.
95 LT. ℄ S.R. 8 STA. 282+30
EXIST. 8" INV. = 1019.95

EXIST. M.H.
STA. 13+77
TOP ELEV. = 1032.56
EXIST. 8" INV. = 1020.90 S.
EXIST. 8" INV. = 1021.11 N.
EXIST. 8" INV. = 1021.11 W.
PROP. 8" INV. = 1020.90 S.
99' LT. ℄ S.R. 8 STA. 285+30

LEFT S.R. 8 STA. 271+08 TO STA. 285+30

SANITARY SEWER PROFILES

FED. RD.	STATE	PROJECT	
2	OHIO		

82A
460

SUMMIT COUNTY
SUM-8-17.63

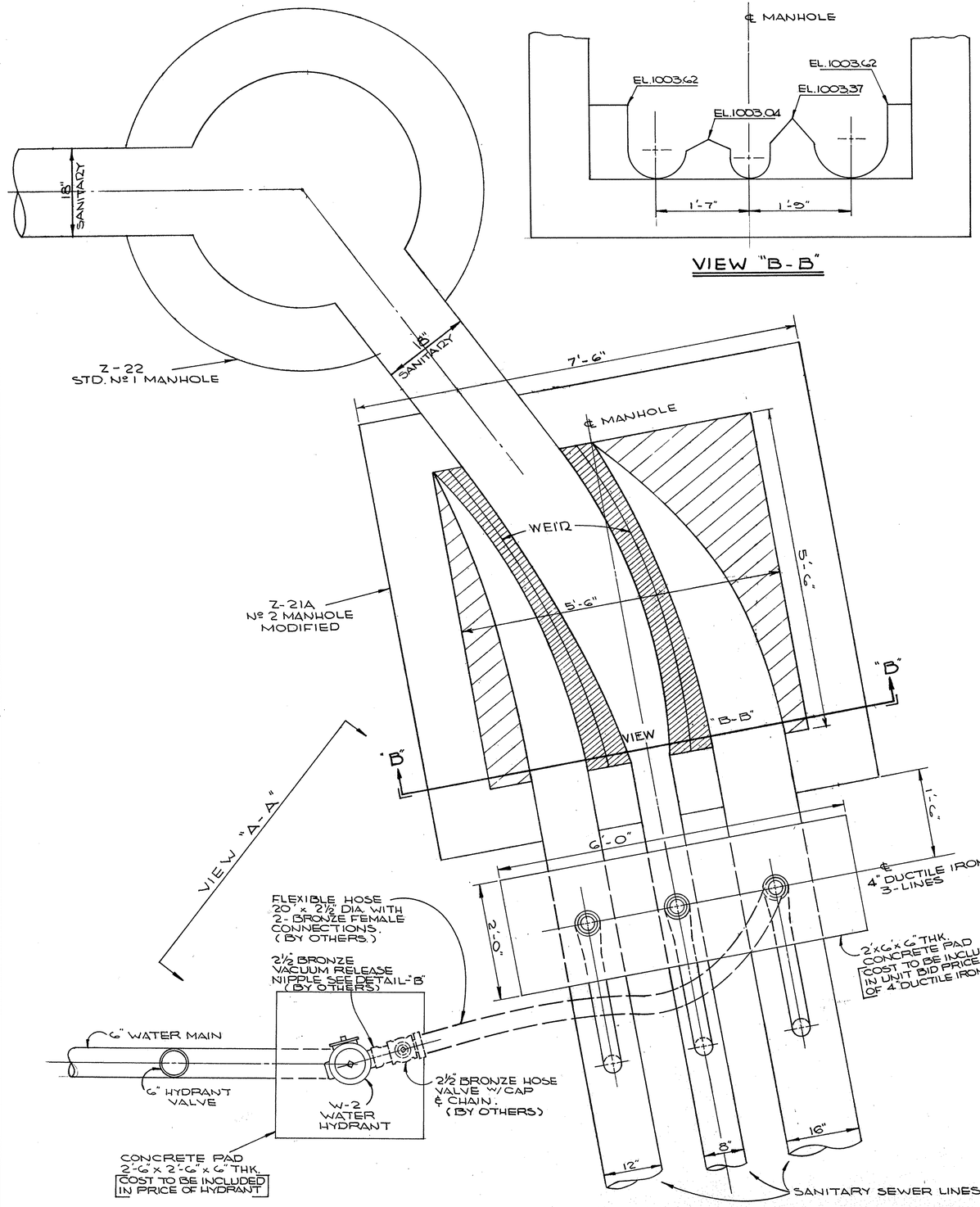

VIEW "A-A"

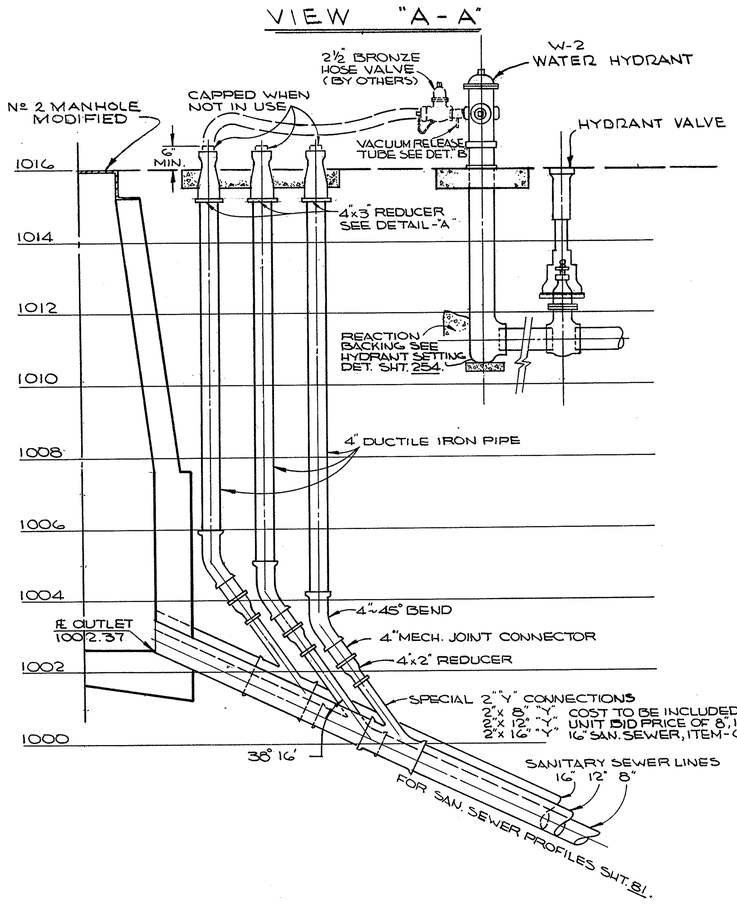

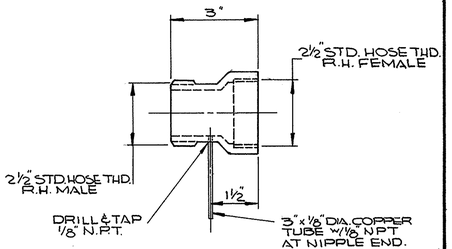

* DETAIL-"B"
VACUUM RELEASE NIPPLE
BY CITY OF CUYAHOGA FALLS

NOTE:
VACUUM RELEASE TUBE USED TO PREVENT SEWAGE FROM BEING DRAWN INTO WATER LINE BY A DROP IN WATER MAIN PRESSURE.

DATA
2½" STANDARD HOSE THD.

	MALE	FEMALE
OUTSIDE DIAMETER OF THREAD	3.250"	2.994"
DIAMETER AT ROOT OF THREAD	2.962"	3.282"
TOTAL LENGTH THREADED	15/16"	7/8"

CLEARANCE BETWEEN MALE AND FEMALE THREAD .032", FLAT AT TOP AND VALLEY OF THREAD .01". PITCH OR NUMBER OF THREADS PER INCH - 6.

OUTER ENDS OF MALE AND FEMALE THREADS TERMINATED BY THE "HIGBEE CUT" TO AVOID CROSSING AND MUTILATION OF OTHERWISE FINELY DRAWN OUT THREAD. OUTER END OF MALE THREAD LEFT BLANK FOR ⅛".

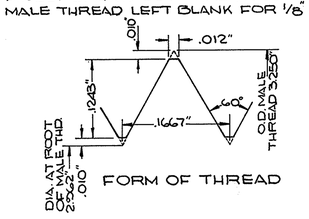

FORM OF THREAD

* BRONZE PARTS
TO BE MADE OF THE FOLLOWING PROPORTIONS:

NOT LESS THAN	83% COPPER
NOT LESS THAN	5% TIN
NOT MORE THAN	7% ZINC
NOT MORE THAN	3% LEAD

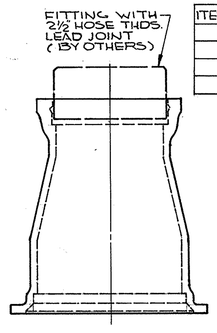

DETAIL-"A"
4"x3" REDUCER
LARGE END-MECH. JOINT
SMALL END-BELL

ITEM 603-42' ~ 4" DUCTILE IRON PIPE
3-4"~45° BENDS
3-4"x2" REDUCERS
3-4"x3" REDUCERS
3-4" MECHANICAL JOINT CONNECTORS

COST OF ABOVE FITTINGS TO BE INCLUDED IN UNIT BID PRICE OF 4" DUCTILE IRON PIPE ITEM-603

CALC. BY C.D.B 10/67
CHECKED BY H.C.S. 11/68

SEE PLAN & PROFILE SHT. Nº 60 & QUANTITY SHT. Nº 84 FOR LOCATIONS & QUANTITIES OF SEWER MANHOLES & WATER HYDRANT.

SIPHON FLUSHING DETAIL

FED. AID DIVISION	STATE	PROJECT	
2	OHIO		

83
460

SUM-8-17.63

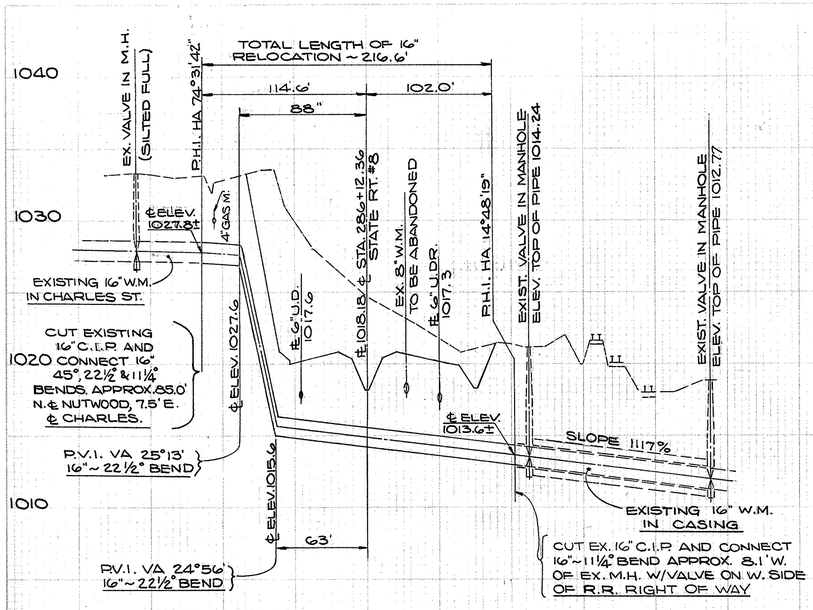

16" WATER MAIN RELOCATION
CHARLES ST. TO RT. OF M.L.
STA. 2.86+12.36 SEE PLAN SHT. Nº 51

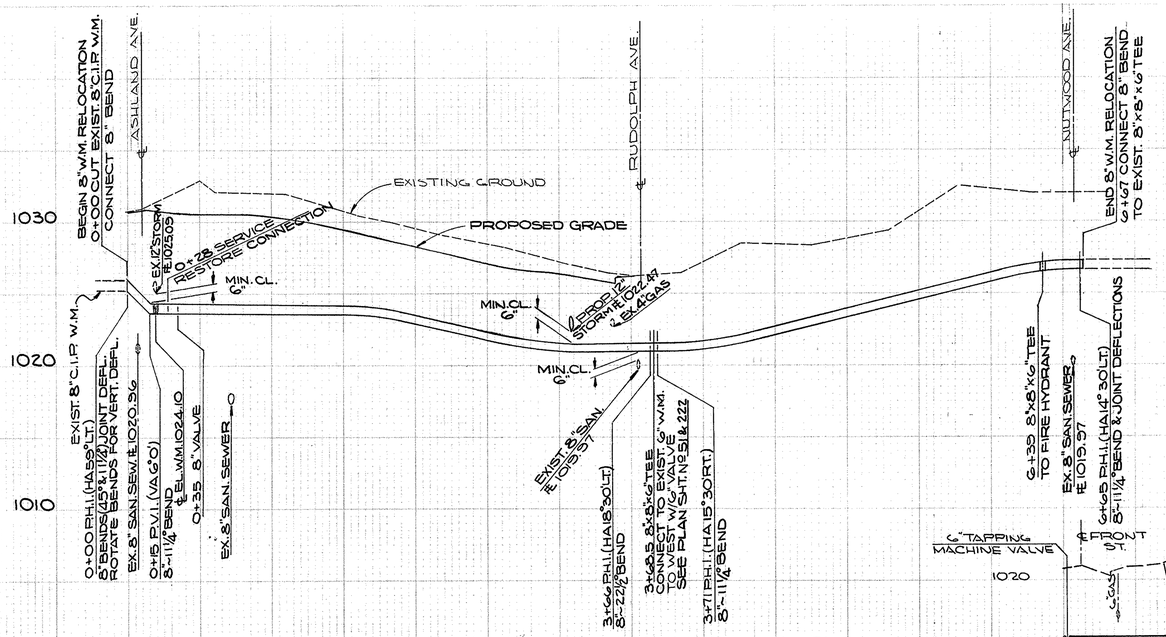

8" WATER MAIN RELOCATION
ASHLAND AVE. TO NUTWOOD AVE.
SEE PLAN SHEET Nº 50 & 51

ALL WATER MAINS ADJUST FOR ALL VERT. & HORIZ. ALIGNMENTS WITH JOINT DEFLECTIONS AND BY ROTATING BENDS WHERE NEEDED.

WATER MAINS 8" & OVER REQUIRE CONC. THRUST BLOCKING & ANCHORAGES ON ALL BENDS 11¼° & GREATER FOR DETAIL SEE SHEET Nº 254

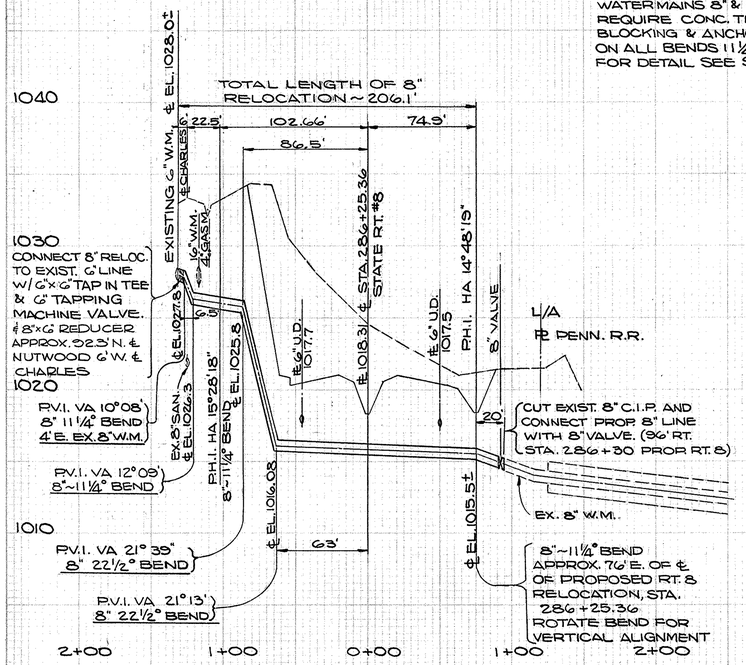

8" WATER MAIN RELOCATION
CHARLES ST. TO RT. OF M.L.
STA. 286+25.36 SEE PLAN SHT. Nº 51.

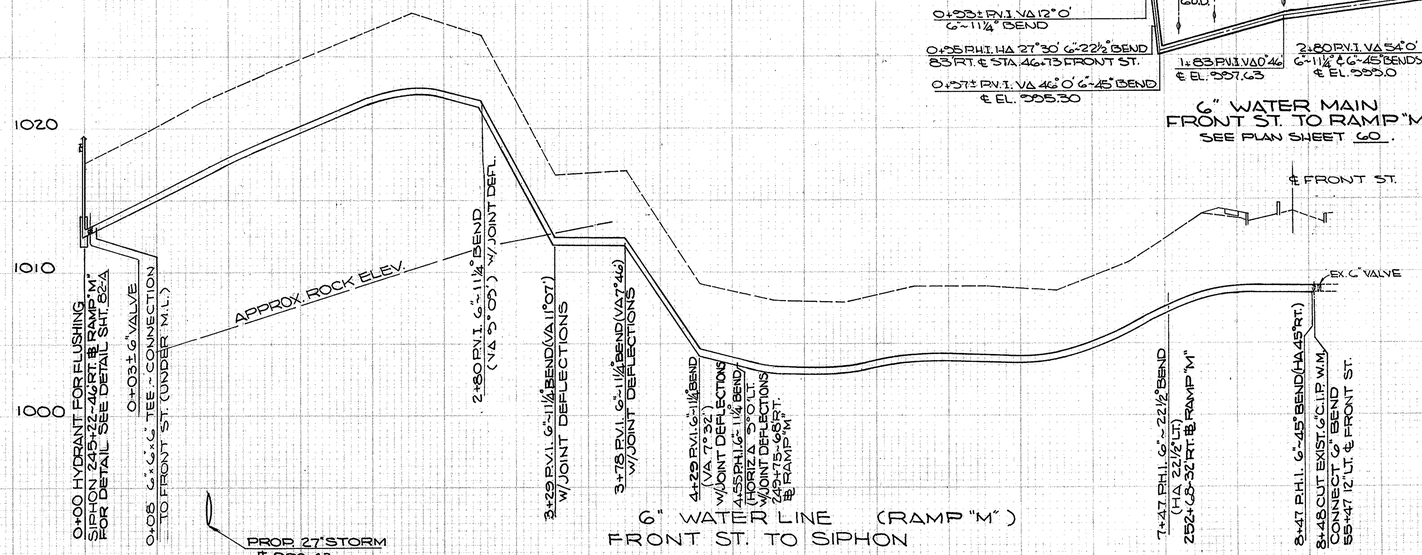

6" WATER LINE (RAMP "M")
FRONT ST. TO SIPHON
SEE PLAN SHEET Nº 60 & 61

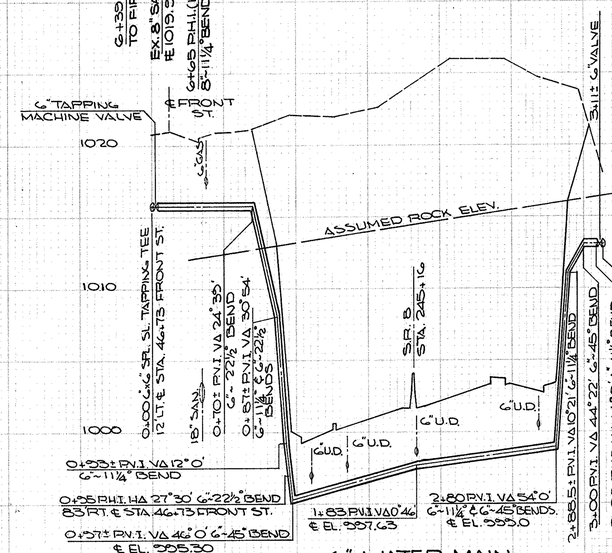

6" WATER MAIN
FRONT ST. TO RAMP "M"
SEE PLAN SHEET 60.

WATERLINE PROFILES

FED. RD. DIVISION	STATE	PROJECT	
2	OHIO		

88-A 460

SUM-8-17.63

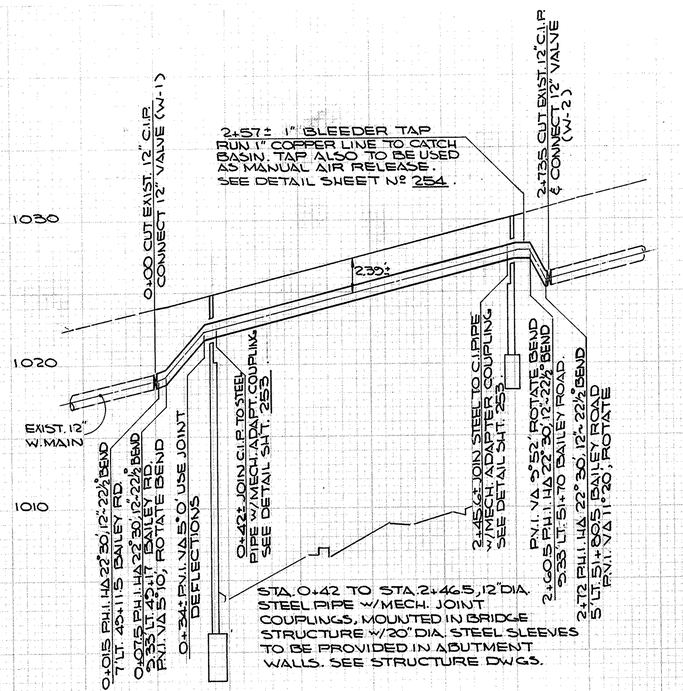

STA. 0+42 TO STA. 2+46.5, 12" DIA. STEEL PIPE W/MECH. JOINT COUPLINGS, MOUNTED IN BRIDGE STRUCTURE W/20" DIA. STEEL SLEEVES TO BE PROVIDED IN ABUTMENT WALLS. SEE STRUCTURE DWGS.

12" WATER MAIN
BAILEY ROAD BRIDGE
SEE PLAN SHEET Nº 216
W-3

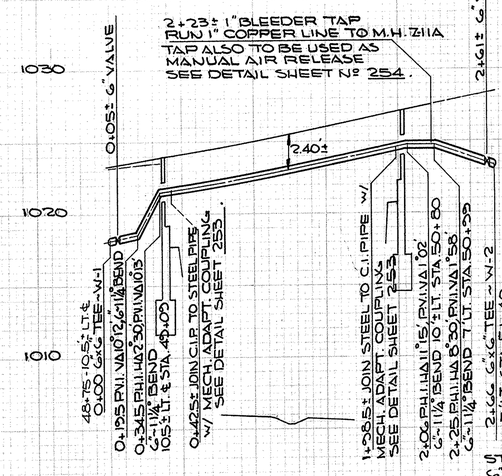

STA. 0+42.5 TO STA. 1+38.5 6" DIA. STEEL PIPE, W/MECH. JOINT COUPLINGS, MOUNTED IN BRIDGE STRUCTURE W/ 16" DIA. STEEL SLEEVES TO BE PROVIDED IN ABUTMENT WALLS SEE STRUCT. DWGS.

6" WATER MAIN
HUDSON DR. BRIDGE
SEE PLAN SHEET Nº 220
W-3

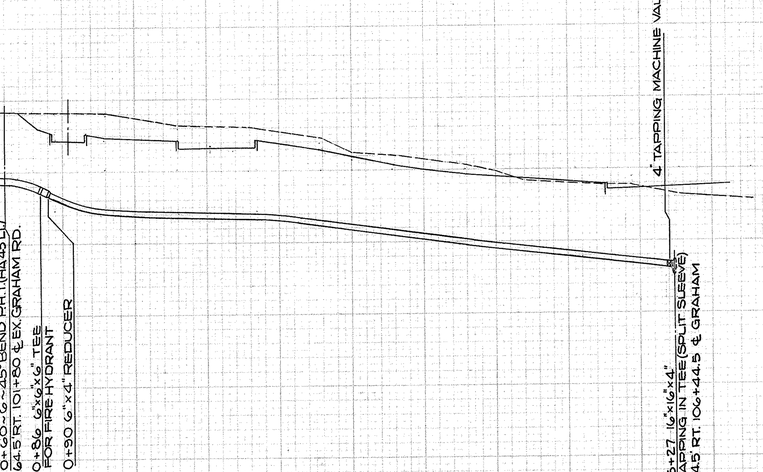

6" TO 4" WATER MAIN
GRAHAM RD. SERVICE RD.

SEE PLAN SHEET Nº 227

ALL WATER MAINS ADJUST FOR ALL VERT. & HORIZ. ALIGNMENTS WITH JOINT DEFLECTIONS AND BY ROTATING BENDS WHERE NEEDED.

WATER MAINS 8" & OVER REQUIRE CONC. THRUST BLOCKING & ANCHORAGES ON ALL BENDS 11¼° & GREATER. FOR DETAIL SEE SHEET Nº 254.

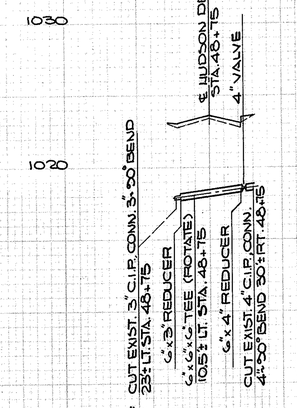

6" WATER MAIN
HUDSON DR. STA. 48+75
SEE PLAN SHEET Nº 220.
W-1

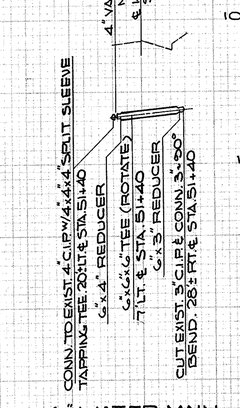

6" WATER MAIN
HUDSON DR. STA. 51+40
SEE PLAN SHEET Nº 220.
W-2

WATERLINE PROFILES

FINAL SURVEY
ORIGINAL SURVEY
NOTE BEFORE REVISED
NO.
DATE
BY
APPROVED
ORIGINAL SURVEY
NOTE BEFORE REVISED
NO.
DATE
BY
APPROVED
K&E PLATE 3, CROSS SECTION KEUFFEL & ESSER CO.

FED. RD.	STATE	PROJECT	
2	OHIO		

83-B
460

SUM-8-17.63

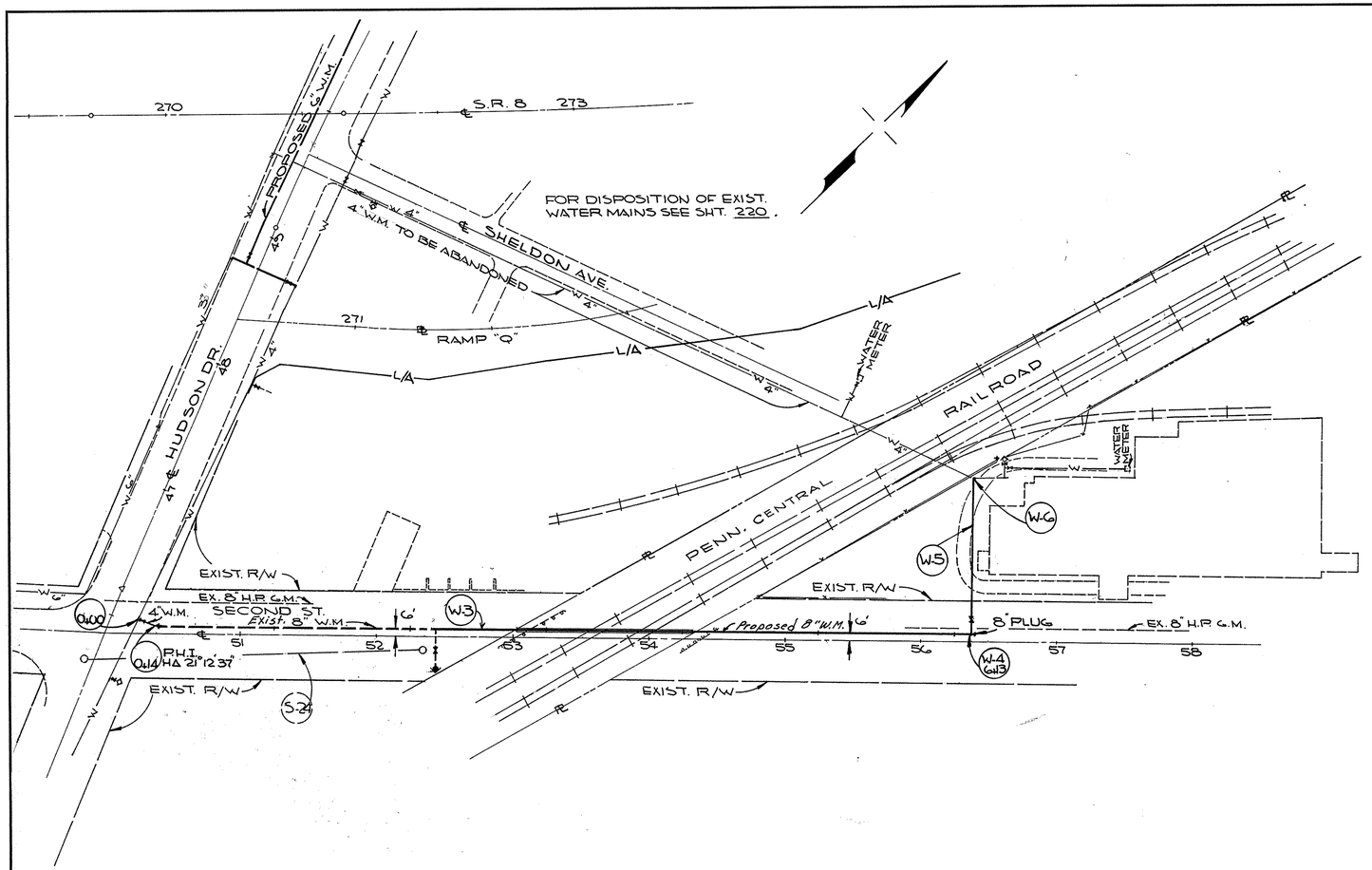

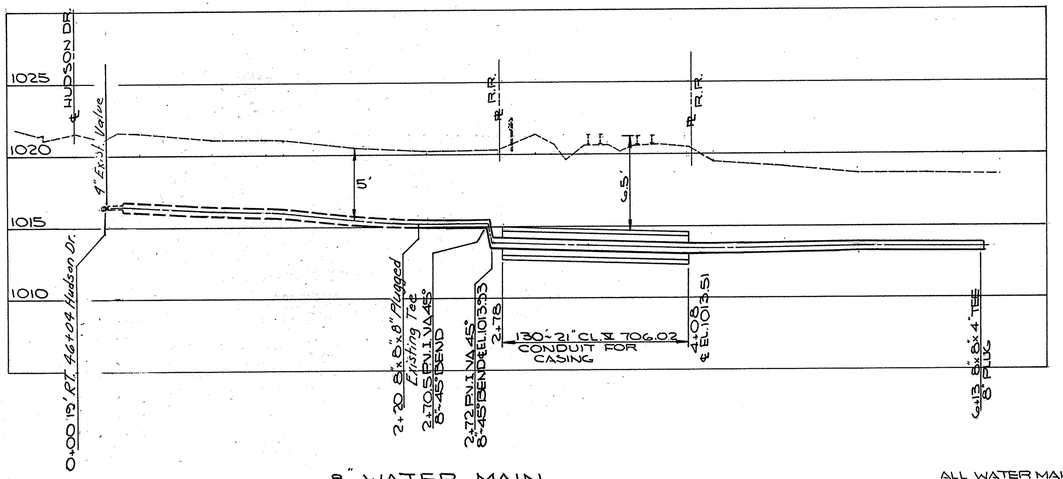

8" WATER MAIN
SECOND ST.
W-3

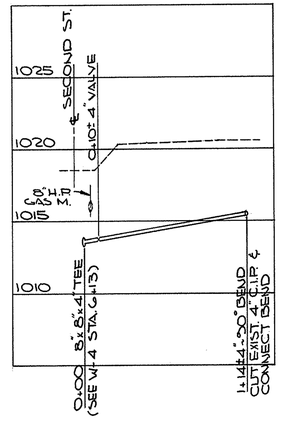

4" WATER SERVICE LINE
W-5

WATERMAINS 8" & OVER REQUIRE CONC. THRUST BLOCKING & ANCHORAGES ON ALL BENDS 11¼" & GREATER FOR DETAIL SEE SHEET No. 254.

ALL WATER MAINS ADJUST FOR ALL VERT. & HORIZ. ALIGNMENTS WITH JOINT DEFLECTIONS AND BY ROTATING BENDS WHERE NEEDED

ESTIMATED QUANTITIES

REF. NO.	STATION TO STATION	SIDE	603 TYPE A CONDUIT 706.02 CL. V WALL B LIN. FT. 21"	D.I.P. CL. 4 LIN. FT. 4"	D.I.P. CL. 3 LIN. FT. 6"	D.I.P. CL. 3 LIN. FT. 8"	GATE VALVE & BOX EACH 4"	GATE VALVE & BOX EACH 6"	FITTINGS - EACH BENDS 90° 4"	BENDS 45° 8"	TEES 8"x8"x4"	REDUCERS	PLUGS 8"
W-1	19±RT. 46+04 HUDSON DR.												
W-2	33RT. 46+04 HUDSON DR.												
W-3	W-1 TO W-4	RT.	130			362*				2			
W-4	6' LT. 56+37 & 2ND EXT.										1		1
W-5	W-4 TO W-6	LT.		114			1						
W-6	120±LT. 56+37 & 2ND EXT.								1				
W-7	23.5RT. 52+44 & 2ND EXT.	RT.											
	TOTALS		130	114		362*	1						

CALC. BY F.M.R. 10/67
CHECKED BY C.D.B. 11/68

* PROJECT PARTICIPATION 25% - CITY OF CUYAHOGA FALLS 75%

WATER MAIN RELOCATION
SECOND STREET

FORM D D A-5

FED. RD.	STATE	PROJECT	
2	OHIO		

84
460

SUM-8-17.63

SANITARY SEWER & WATER MAINS

REF. NO.	STATION TO STATION	DUCTILE IRON PIPE LIN. FT. CL 4 4"	6"	CL 3 8"	12"	16"	STEEL PIPE LIN. FT. 6"	12"	JOINT COUPLINGS EACH ADAPT. CL. TO STEEL 6"	12"	6"	12"	FITTINGS EACH BENDS 11 1/4° 6"	8"	22 1/2° 16"	8"	12"	45° 16"	6"	8"	90° 16"	3"	4"	6"	TEES 6"x6"x6"	8"x8"x6"	REDUCERS 6"x4"	6"x4"	8"x6"	8"x6"	PLUGS 4"	6"	1" BLEEDER TAP ASSEMBLY EACH	TAPPING IN TEE SPLIT SLEEVE EACH 4"x4"x4"	6"x6"x6"	16"x16"x4"	TAPPING MACHINE VALVE W/BOX EACH 4"	6"	GATE VALVES W/BOX EACH 4"	6"	8"	12"	VALVE BOX ADJUST TO GRADE EACH	FIRE HYDRANT REMOVED & RESET AS PER PLAN EACH	FIRE HYD. REMOVED	SEE SHEET NO.
W-1	13'S. ℄ TIFFT-34'E. ℄ 2ND																																														47
W-1	14'S. ℄ ALLENSIDE-27'E. ℄ 2ND																																														48
W-2	- ℄ ALLENSIDE-30'E. ℄ 2ND		12																				1																				1			48
W-1	16'N. ℄ MELVIN-220'E. ℄ HUD. DR.		10																				1																				1			50
W-2	17'N. ℄ MELVIN-569'E. ℄ HUD. DR.																																													50
W-4	7'S. ℄ ASHLAND-203'W. ℄ CHARLES												1					1																												50
W-5	W-4 TO W-7			367									1		1																										1					50
W-6	29'S. ℄ RUDOLPH-17'W. ℄ CHARLES																																													50
W-7	9.5'N. ℄ RUDOLPH-80'W. ℄ CHARLES		2																						1																				50
W-8	W-7 TO STA. 284+00 LT.			163									1																																50
W-1	4.4'N. ℄ NUTWOOD-6'W. ℄ CHARLES												1																																51
W-2	STA. 284+00 TO W-1 LT.			135																					1																				51
W-3	28'S. ℄ NUTWOOD-16'W. ℄ CHARLES																																													51
W-4	20'S. ℄ NUTWOOD-23'W. ℄ CHARLES		10																																											51
W-5	102'E. ℄ S.R. 8 STA. 286+12.4 RT.													1																																51
W-6	115'W. ℄ S.R. 8 STA. 286+12.4 LT.													1		.1			1																										51
W-7	W-5 TO W-6				217											2																														51
W-8	75'E. ℄ S.R. 8 STA. 286+25.4 RT.												1																																51
W-9	102.7'W. ℄ S.R. 8 STA. 286+25.4 LT.												1																																51
W-10	92.3'N. ℄ NUTWOOD-6'W. ℄ CHARLES																																													51
W-11	W-8A TO W-9			198											2																																51
W-12	W-9 TO W-10			28									2																																		51
W-13	21.5'N. ℄ NUTWOOD-6'W. ℄ CHARLES																																													51
W-14	6.5'N. ℄ NUTWOOD-22'W. ℄ CHARLES																																													51
W-15	15'S. ℄ AERO.-300E. ℄ CHARLES																																													51
W-16	15'S. ℄ AERO-103'E. ℄ CHARLES		9																				1																				1			51
W-17	15.5'N. ℄ ROSE-391'E. ℄ CHARLES																1																												51
W-18	15.5'N. ℄ ROSE-170'E. ℄ CHARLES		9																				1																				1			51
W-8A	96'E. ℄ S.R. 8 STA. 286+30 RT.																																													51
W-1	15.0'N. ℄ CLOVER-445'E. ℄ CHARLES																																													52
W-2	15.0'N. ℄ CLOVER-234'E. ℄ CHARLES		9																				1																				1			52
W-3	18.5'N. ℄ GARDEN-499'E. ℄ CHARLES																																													52
W-4	16.0'N. ℄ GARDEN-304'E. ℄ CHARLES		10																				1																				1			52
W-1	30'W. ℄ CHARLES STA. 49+38																																													55
W-2	21'W. ℄ CHARLES STA. 46+88		15																				1																				1			55
W-1	12'LT. 47+65 FRONT STREET																																													206
W-1	23.5'LT.-55+72 FRONT STREET																																													207
W-2	29' LT. 55+69 FRONT STREET		5																				1																				1			207
W-3	23.5'LT. 55+64 FRONT STREET																																													207
W-4	12.5'LT. 58+69 FRONT STREET																																													207
W-1	7'LT. 49+10 BAILEY ROAD																																													218
W-2	5'LT. 51+82 BAILEY ROAD																																													218
W-3	W-1 TO W-2 BAILEY ROAD			70			204		2		12					4																														218
W-1	23'LT. 48+75 HUDSON DRIVE 30' RT.		53															1	1		1				1																				220
W-2	20'LT. 51+40 HUDSON DRIVE 28' RT.		48															1			1				1																				220
W-3	W-1 TO W-2 HUDSON DRIVE		110			156		2		9		4																																		220
W-4	20'LT. 51+05 HUDSON DRIVE																																													220
W-5	58'RT. 49+52 HUDSON DRIVE																																													220
W-2	16.5'N. 49+15 RUDOLPH (EXT)		7																						1																					222
	TOTALS		303	891	70	217	156	204	X	X	X	X	X	X	X	X	X	X	-	X	X	X	X	X	X	X	X	X	X	X	X	X	X	X	2	1	1	—	1	1	1	11	2	2	4	11	1	X	
	100% CITY OF CUYAHOGA FALLS																																													
W-1	23'S. 101+55 GRAHAM ROAD																																													227
W-2	40'S. 101+55 GRAHAM ROAD																				1																								227
W-3	65'S. 101+80 GRAHAM ROAD																				1																								227
W-4	W-1 TO W-5	434	85									1																																	227
W-5	65'S. 106+44 GRAHAM ROAD																	1																											227
W-6	73'S. 102+05 GRAHAM ROAD		8																																										227
	TOTALS	434	93	—	—	—	—	—	X	X	X	X	X	X	X	X	X	X	X	X	X	X	X	X	X	X	X	X	X	X	X	X	X	X	—	—	—	1	1	-	-	1	-	-	-	1	X		

REF. NO.	STATION TO STATION		SIDE	604 STANDARD MANHOLES EACH NO. 1	NO. 2	NO. 2 w/DROP.	NO. 2 MOD.	SEE SHEET NO.
Z-1	47 + 67 FRONT ST. 24.5'		LT.	1				47 & 82
Z-2	248+29 S.R. 8 152'		LT.	1				47 & 82
Z-3	250 + 58 S.R. 8 237'		LT.		1			47 & 82
Z-4	252 + 29 S.R. 8 268'		LT.			1		47 & 82
Z-5	254 + 46 S.R. 8 166'		LT.		1			48 & 82
Z-6	258 + 82 S.R. 8 148'		LT.	1				48 & 82
Z-7	51 + 74 BAILEY RD. 115'		LT.	1				48 & 82
Z-9	270 + 08 S.R. 8 95'		RT.		1			49 & 81
Z-10	271 + 08 S.R. 8 96'		LT.		1			49 & 82
Z-11A	51 + 01 HUDSON DR. 13'		LT.			1		49 & 82
Z-11	274 + 54 S.R. 8 99'		LT.			1		50 & 82
Z-12	277 + 80 S.R. 8 88		LT.		1			50 & 82
Z-13	278 + 70 S.R. 8 100'		LT.			1		50 & 82
Z-14	282 + 30 S.R. 8 95'		LT.	1				50 & 82
Z-16	291 + 60 S.R. 8 94'		LT.	1				51 & 81
Z-17	293 + 90 S.R. 8 90'		LT.	1				51 & 81
Z-18	296 + 18 S.R. 8 100'		LT.	1				52 & 81
Z-20	245 + 00 S.R. 8 160'		LT.		1			60 & 81
Z-21	245 + 00 S.R. 8 120'		LT.		1			60 & 81
Z-21A	245 + 00 S.R. 8 137'		RT.				1	60 & 81
Z-22	245 + 04 S.R. 8 145'		RT.	1				60 & 81
Z-23	(OMIT)							
Z-24	249 + 39 S.R. 8 256'		RT.	1				61 & 81
Z-25	2 + 35 SECOND ST. 10'		RT.	1				220 & 81
Z-26	106 + 53 GRAHAM RD. 57.5'		RT.	1				227 & 81
Z-27	102 + 07 GRAHAM RD. 57.5'		RT.	1				227 & 81
TOTALS				13	7	4	1	

ITEM 603 SEWER LATERALS

HOUSE NO.	LOCATION	SIDE	APPROX. SEWER STA.	TYPE "B" W/CL. "B" BEDDING 706.08 E.S. 6" DIA. LIN. FT.	PIPE BENDS & BRANCHES 706.08 E.S. "Y" 60° 8" X 6"	LONG RADIUS BENDS 6" DIA. 30°	45°	REDUCERS 6" X 4"	SEE SHEET NO.
1060	GRAHAM RD.	RT.	0 + 30	42	1	1	1	1	227
1070	GRAHAM RD.	RT.	1 + 54	11	1	1	1	1	227
*1088	GRAHAM RD.	RT.	3 + 29	11	1	1	1		227
*1098	GRAHAM RD.	RT.	4 + 16	12	1	1	1		227
	TOTALS (PARTIC.)			53	X	X	X	X	
*	TOTALS (100% CITY)			23	X	X	X	X	

ITEM 814 SERVICE LINES - CITY WATER DEPARTMENT TO DO WORK

REF. NO.	STATION TO STATION	SIDE	NEW SERVICE BRANCHES TYPE "K" COPPER LINE & FITTINGS PIPE 3/4"DIA. LIN. FT.	STOP & BOX 3/4" DIA. EACH	BENDS	COPPER TO LEAD ADAPTER	SEE SHEET NO.
W-3	HOUSE NO. 643, MELVIN		28	1	2	1	50
W-3	HOUSE NO. 3412, CHARLES		4		1		55
W-2	HOUSE NO. 2516, FRONT		45	1	2	1	206
W-1	HOUSE NO. 725, ASHLAND		11		1	1	222
	TOTAL		X	X	X	X	

ITEM 603 CONDUIT SANITARY LIN. FT.

REF. NO.	STATION TO STATION		603 CONDUIT SANITARY LIN. FT WITH 706.12 JOINTS TYPE "B" 706.08	TYPE "C" 706.08ES	TYPE B 707.08 AS PER PLAN 8"	12"	16"	TYPE C 707.08 AS PER PLAN 18"	SEE SHEET NO.
S-1	Z-1	Z-2		179					47 & 82
S-2	Z-2	Z-3		245					47 & 82
S-3	Z-3	Z-4	174						47 & 82
S-4	Z-4	Z-5	240						47 & 82
S-5	Z-5	Z-6		439					48 & 82
S-6	Z-6	Z-7		252					48 & 82
S-7	Z-7 EXIST. M.H. 1' LT. ℄ STA. 51+97 BAILEY RD.		116						48 & 82
S-8	EXIST. M.H. 10'LT. Z-9 ℄ HUDSON STA47+405		146						49 & 81
S-9	Z-9	Z-10			197				49 & 81
S-10	Z-10	Z-11A	49						49 & 82
S-11	Z-11A	Z-11	289						49,50 & 82
S-12	Z-11	Z-12	306						50 & 82
S-13	Z-12	Z-13	87						50 & 82
S-14	Z-13	Z-14	351						50 & 82
S-15	Z-14 EXIST. M.H. 99'LT. ℄ S.R. 8 STA. 285 + 30			300					50,51 & 82
S-16	Z-16	Z-17	232						51 & 81
S-17	Z-17	Z-18	226						52 & 81
S-19	Z-20	Z-21						40	60 & 81
S-20	Z-21	Z-21A					266		60 & 81
S-20A	Z-21	Z-21A			266				60 & 81
S-20B	Z-21	Z-21A				266			60 & 81
S-20C	Z-21	Z-21A						6	60 & 81
S-21	Z-22	Z-24						458	60 & 81
S-23	Z-24 EXIST. M.H. 24' RT. ℄ FRONT ST. 55 + 75							400	61 & 81
S-24	EXIST. M.H. 7.5'LT. Z-25 ℄ SECOND ST. 45+63		250						220 & 81
S-25	Z-26	Z-27	446						227 & 81
S-9A	Z-9	Z-10			197				
S-16A	EXIST. M.H. 104'E. ℄ Z-16 CHARLES & ℄ AERO		254						
TOTALS			3166	1415	660	266	266	904	

CALC. BY F.M.R. 10/67
CHECKED BY C.D.B. 11/68

SANITARY & WATER MAIN QUANTITIES

FORM D D A-8

FED. RD.	STATE	PROJECT	
2	OHIO		

85
460

SUM-8-17.63

RAMP "L" CURVE DATA

CURVE Nº 1		CURVE Nº 2	
Δ. =	10° 27' 21"	Δ. =	9° 59' 14"
Dc. =	4° 00'	Dc. =	8° 00'
R. =	1,432.39'	R. =	716.20'
T. =	131.06'	T. =	62.58'
Lc. =	261.40'	Lc. =	124.84'
E. =	5.98'	E. =	2.73'

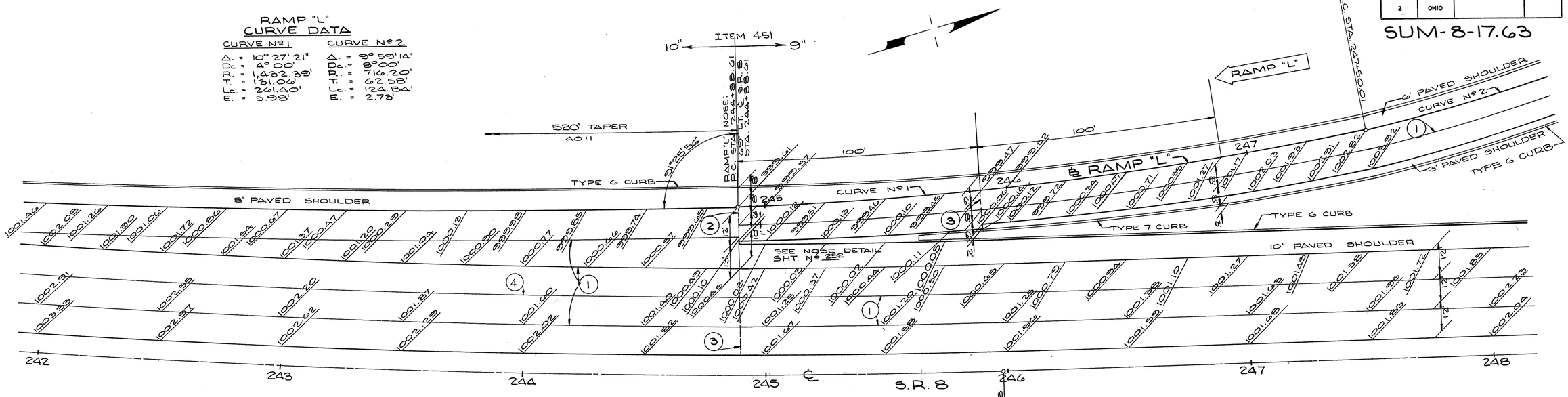

℄ S.R. 8 CURVE DATA

Δ. =	15° 06' 08"
Dc. =	1° 28'
R. =	3,900.53'
T. =	738.79'
Lc. =	1,460.34'
E. =	69.25'

STATION	ELEV. RT. EDGE MAINLINE PAV'T 44' LT. OF ℄	ELEV. OUTSIDE EDGE OF ACCEL-ERATION LANE	DIST. LT. EDGE M.L. PAV'T TO OUTSIDE EDGE ACCEL. LANE
239+68.61	1003.72	1003.30	12.00'
+75	1003.67	1003.25	12.17'
240+00	1003.50	1003.06	12.78'
+25	1003.32	1002.85	13.42'
+50	1003.14	1002.65	14.04'
+75	1002.96	1002.45	14.67'
241+00	1002.79	1002.26	15.29'
+25	1002.61	1002.06	15.92'
+50	1002.43	1001.86	16.54'
+75	1002.25	1001.65	17.17'

JOINT LEGEND

(1) STANDARD LONGITUDINAL JOINT

(2) STANDARD EXPANSION JOINT

(3) STANDARD CONTRACTION JOINT

(4) KEY JOINT WITHOUT TIE BARS ℄ IN

INTERSECTION DETAIL RAMP "L"

K & E - AKRON

FED. RD.	STATE	PROJECT	
2	OHIO		

86
460

SUM-8-17.63

℄ S.R.8 CURVE DATA

Δ = 15° 06' 08"
Dc = 1° 28'
R = 3,900.53'
T = 517.85'
Lc = 1,029.70

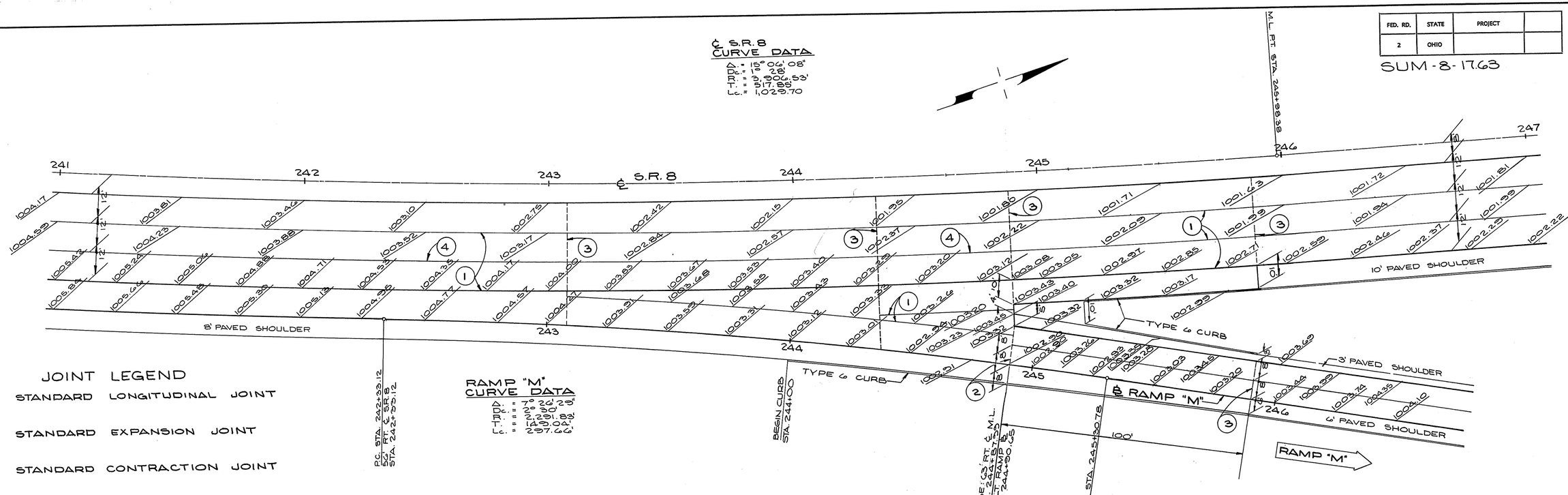

RAMP "M" CURVE DATA

Δ = 14° 20' 29"
Dc = 19° 30'
R = 291.88'
Lc = 73.02'
T = 297.66'

JOINT LEGEND

(1) STANDARD LONGITUDINAL JOINT

(2) STANDARD EXPANSION JOINT

(3) STANDARD CONTRACTION JOINT

(4) KEY JOINT WITHOUT TIE BARS

℄ S.R.8 CURVE DATA

Δ = 28° 46' 09"
Dc = 5° 00'
Lc = 75.38'
Tc = 545.82'
Ec = 46.46'
Ls = 500'
θs = 12° 30' 00"
L.T. = 334.17'
S.T. = 167.43'

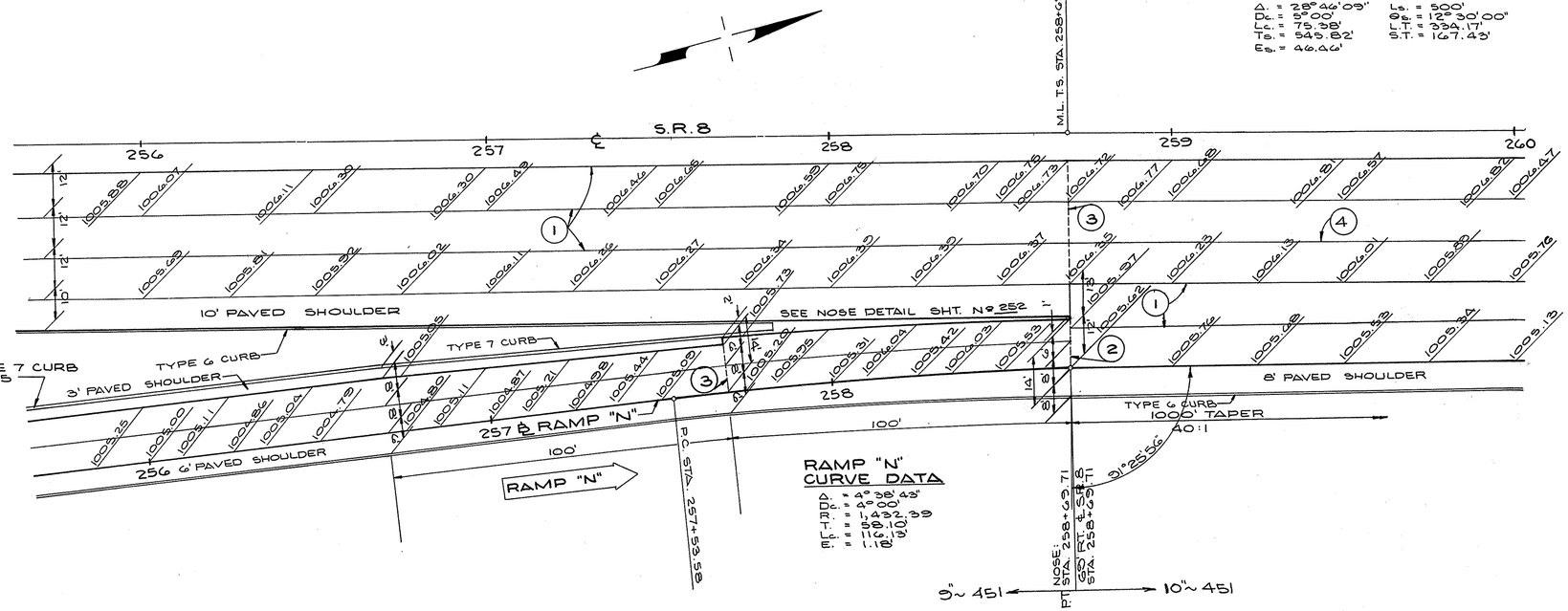

RAMP "N" CURVE DATA

Δ = 49° 38' 43"
Dc = 4° 00'
R = 1,432.39'
T = 58.10'
Lc = 116.13'
E = 1.18'

STATION	ELEV. RT. EDGE MAINLINE PAVT. 44' RT. OF ℄	ELEV. OUTSIDE EDGE OF ACCEL-ERATION LANE	DIST. RT. EDGE M.L. PAV'T. TO OUTSIDE EDGE ACCEL. LANE
260+00	1005.76	1005.13	21.74'
+25	1005.62	1004.93	21.12'
+50	1005.48	1004.73	20.49'
+75	1005.33	1004.53	19.87'
261+00	1005.16	1004.31	19.24'
+25	1005.00	1004.11	18.62'
+50	1004.82	1003.90	17.99'
+75	1004.64	1003.69	17.37'
262+00	1004.45	1003.43	16.74'
+25	1004.25	1003.24	16.12'
+50	1004.04	1003.01	15.49'
+75	1003.83	1002.79	14.87'
263+00	1003.60	1002.56	14.24'
+25	1003.38	1002.35	13.62'
+50	1003.14	1002.09	12.99'
+75	1002.92	1001.93	12.37'
264+00	1002.80	1001.82	11.74'
+25	1002.68	1001.75	11.12'
+50	1002.58	1001.73	10.49'
+75	1002.58	1001.81	9.87'
265+00	1002.50	1001.91	9.24'
+25	1002.60	1001.98	8.62'
+50	1002.61	1002.07	7.99'
+75	1002.62	1002.15	7.37'
266+00	1002.63	1002.22	6.74'
+25	1002.64	1002.29	6.12'
+50	1002.64	1002.36	5.49'
+75	1002.65	1002.42	4.87'
267+00	1002.66	1002.47	4.24'
+25	1002.67	1002.52	3.62'
+50	1002.68	1002.57	2.99'
+75	1002.69	1002.61	2.37'
268+00	1002.71	1002.66	1.74'
+25	1002.76	1002.73	1.12'
+50	1002.84	1002.83	.49
+69.71	1002.92	1002.92	.00

INTERSECTION DETAILS
RAMP "M"
RAMP "N"

K & E - AKRON

FED. RD.	STATE	PROJECT	
2	OHIO		

SUM-8-17.63

87
460

RAMP "N" CURVE DATA

Δ = 15° 50' 56"
D = 12° 00'
R = 477.47'
T = 66.46'
L = 132.08'
P.C. = STA. 249+84.39
P.T. = STA. 251+18.47

Δ = 190° 21' 23"
D = 12° 00' 33"
R = 477.47'
T = 66.46'
L = 158.68'
P.C. = STA. 251+18.47
P.T. = STA. 252+02.29

* INDICATES TOP OF CURB ELEVATIONS

MATCH LINE STA. 57+00

RAMP "M" CURVE DATA

Δ = 16° 35' 20"
D = 10° 00'
R = 572.96'
T = 83.83'
L = 165.89'
P.C. = STA. 251+89.91
P.T. = STA. 253+55.80

RELOC. 2ND ST. CURVE DATA

Δ = 45° 33' 40"
D = 15° 30' 00"
R = 369.71'
T = 160.06'
L = 294.28'
P.C. = STA. 51+77.05
P.T. = STA. 54+23.33

JOINT LEGEND

1. STANDARD LONGITUDINAL JOINT
2. STANDARD EXPANSION JOINT
3. STANDARD CONTRACTION JOINT
4. KEY JOINT WITHOUT TIE BARS

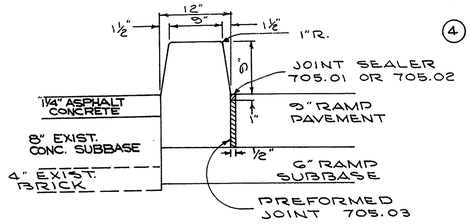

DETAIL TYPE 8 CURB

LIMITING STATIONS
STA 55+28± TO STA 55+56.31

INTERSECTION DETAIL
RAMP "M"
RAMP "N"
RELOC. 2ND ST.

FED. RD.	STATE	PROJECT	
2	OHIO		

87-A 460

SUM-8-17.63

BEGIN WORK STA. 43+50

℄ PROP. 5' WALK STA. 44+75

EXIST. 4' SIDEWALK

TIFFT ST. ℄

EXIST. 2ND ST. ℄

SEE DETAIL SHEET Nº 20

TYPE 2-B CURB

EXIST. 4' SIDEWALK

STA. 43+59.80

30:1 TAPER 180'

SEE TYPICAL SECTION SHT. 16

TYPE 2-A CURB

TYPE 2 COMBINED CURB & GUTTER

CURVE Nº 3

TYPE 2-A CURB

RAMP "L"

TYPE G CURB

℄ RAMP "L"

3' PAVED SHOULDER

STA. 250+52.86 P.T.

SHIFT 14' TO R.

TYPE G CURB

RAMP "P" ℄

CURVE Nº 2

TYPE G CURB

6' PAVED SHOULDER

10' PAVED SHOULDER

1/2"/1' CROSS SLOPE

NOSE: 22' LT. RAMP "L" ℄ STA. 252+48.82

22' RT. EXIST. 2ND ST. ℄ STA. 45+39.80

BEGIN RAMP "P" STA. 252+60.00 15' LT. EXIST. 2ND ST. STA. 45+35.80

SEE SHEET Nº 23 FOR TEMPORARY PAVEMENT CLASS "A"

STANDARD CONCRETE MEDIAN SEE STD. DWG. MC-6

STA. 252+30.80 EXIST. 2ND ST.

TYPE 2-A CURB

P.C. RAMP "P" STA. 253+79.74

RAMP "P" CURVE DATA

Δ = 27° 13' 35"
D = 18° 45' 00"
R = 305.58'
T = 74.00'
L = 145.21'
P.C. = STA. 253+79.74
P.T. = STA. 255+24.95

RAMP "P" ℄

TYPE G CURB

5' PAVED SHOULDER

3' PAVED SHOULDER

TYPE 2-A CURB

RAMP "P" ℄

TYPE 2-A CURB

RELOC. 2ND ST.

RELOC. 2ND ST.

RELOC. 2ND ST. CURVE DATA

Δ = 45° 34' 49"
D = 18° 45' 00"
R = 305.58'
T = 126.28'
L = 243.09'
P.C. = STA. 46+69
P.T. = STA. 49+12.09

END RAMP "L" 25' RT. STA. 44+73.75 EX. 2ND ST.

BEGIN RELOC. 2ND ST. P.C. STA. 44+69 EXIST 2ND ST. STA. 44+69

RAMP "L" CURVE DATA

CURVE Nº 3
Δ = 38° 22' 56"
D = 18° 00'
R = 318.31'
T = 55.44'
L = 195.46'
P.C. = STA. 250+52.86
P.C.C. = STA. 252+38.31

CURVE Nº 4
Δ = 16° 15' 09"
D = 12° 00'
R = 477.46'
T = 68.18'
L = 135.44'
P.C.C. = STA. 252+38.31
P.T. = STA. 253+73.75

9" 451 ℄ RAMP "L" 10" 451

STA. 262+55.22 ℄ EXIST. 2ND ST.

P.C.C. STA. 262+93.51

P.C.C. STA. 262+38.31

100'

100'

8' PAVED SHOULDER

TYPE G CURB

1/8"/1' CROSS SLOPE

CURVE Nº 1

END RAMP "P" 25' RT. STA. 265+50 50' LT. M.L. STA. 265+50

RAMP "P" CURVE DATA

CURVE Nº 1
Δ = 3° 07' 52"
D = 1° 15' 00"
R = 4588.66'
T = 125.28'
L = 250.49'
P.T. = STA. 265+50
P.C.C. = STA. 262+99.49

CURVE Nº 2
Δ = 15° 41' 29"
D = 9° 15' 00"
R = 616.73'
T = 126.91'
L = 251.04'
P.C. = STA. 260+48.49
P.C.C. = STA. 262+99.49

℄ RAMP "P" STA. 262+41.84

RAMP "P"

CURVE Nº 2

TYPE G CURB

3' PAVED SHOULDER

10' PAVED SHOULDER

1/2"/1' CROSS SLOPE

P.C. STA. 260+41.84

260

261

262

263

264

265

S.R. 8

℄ S.R. 8 CURVE DATA

Δ = 28° 46' 09"
Dc = 5° 00'
Rc = 1145.92'
Lc = 300'
Tc = 75.38'
Te = 545.82'
es = 12° 30' 00"
Es = 46.46'

P.C. STA. 263+69.71

P.C.S. STA. 264+45.09

JOINT LEGEND

1. STANDARD LONGITUDINAL JOINT
2. STANDARD EXPANSION JOINT
3. STANDARD CONTRACTION JOINT
4. KEY JOINT WITHOUT TIE BARS

INTERSECTION DETAIL
RAMP "P"
RAMP "L"
RELOC. 2ND ST.

K & E - AKRON

FED. RD.	STATE	PROJECT	
2	OHIO		

88
460

SUM-8-17.63

℄ S.R. 8
CURVE DATA
Δ = 25° 59' 23"
Dc. = 5° 00'
R = 1145.92'
Ls. = 500.00'
θs. = 12° 30'
P. = 9.08'
K. = 249.60'
Xc. = 497.62'
Yc. = 36.24'
L.T. = 334.17'
S.T. = 167.43'
L.C. = 498.94'
Lc. = 79.79'
Ts. = 548.19'
Es. = 47.05'

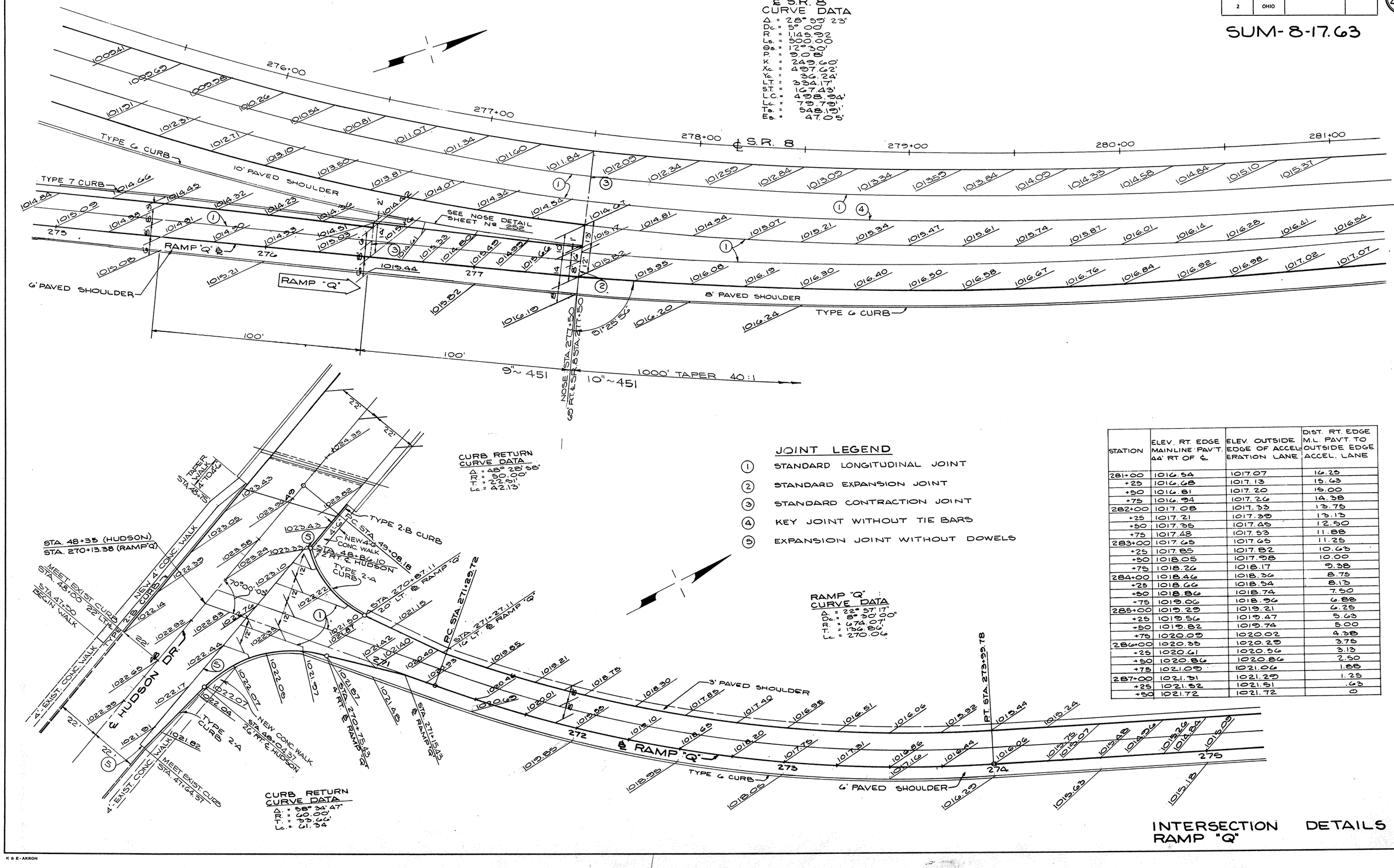

JOINT LEGEND

1. STANDARD LONGITUDINAL JOINT
2. STANDARD EXPANSION JOINT
3. STANDARD CONTRACTION JOINT
4. KEY JOINT WITHOUT TIE BARS
5. EXPANSION JOINT WITHOUT DOWELS

STATION	ELEV. RT. EDGE MAINLINE PAV'T. 44' RT OF ℄	ELEV. OUTSIDE EDGE OF ACCELERATION LANE	DIST. RT. EDGE M.L. PAV'T. TO OUTSIDE EDGE ACCEL. LANE
281+00	1016.54	1017.07	16.25
+25	1016.68	1017.13	15.63
+50	1016.81	1017.20	15.00
+75	1016.94	1017.26	14.38
282+00	1017.08	1017.33	13.75
+25	1017.21	1017.39	13.13
+50	1017.35	1017.45	12.50
+75	1017.48	1017.53	11.88
283+00	1017.65	1017.65	11.25
+25	1017.85	1017.82	10.63
+50	1018.05	1017.98	10.00
+75	1018.26	1018.17	9.38
284+00	1018.46	1018.36	8.75
+25	1018.66	1018.54	8.13
+50	1018.86	1018.74	7.50
+75	1019.06	1018.96	6.88
285+00	1019.29	1019.21	6.25
+25	1019.56	1019.47	5.63
+50	1019.82	1019.74	5.00
+75	1020.09	1020.02	4.38
286+00	1020.35	1020.29	3.75
+25	1020.61	1020.56	3.13
+50	1020.86	1020.86	2.50
+75	1021.09	1021.06	1.88
287+00	1021.31	1021.29	1.25
+25	1021.52	1021.51	.63
+50	1021.72	1021.72	0

INTERSECTION DETAILS
RAMP "Q"

K & E - AKRON

FED. RD.	STATE	PROJECT	
2	OHIO		

SUM-8-17.63

85
460

RAMP "A" CURVE DATA

SPIRAL CURVE
Θs = 25°00'
Ls = 200.00'
LT. = 134.69'
ST. = 67.30
C.S. STA. 333+55.98
P.T. STA. 331+55.98

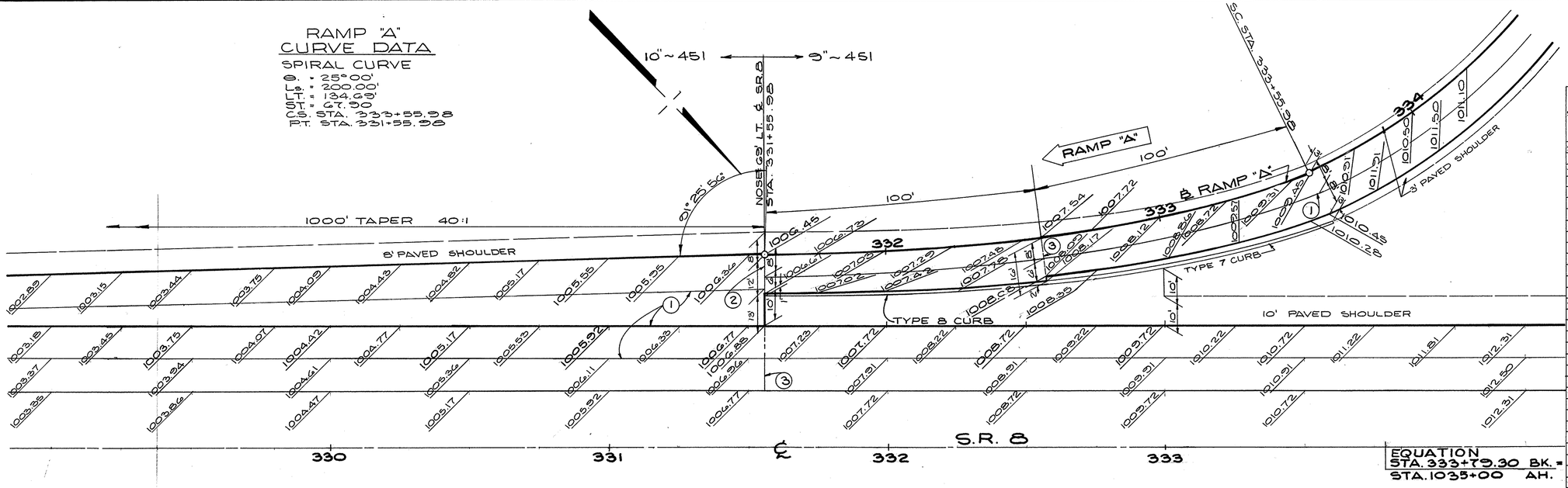

STATION	ELEV. RT. EDGE MAINLINE PAV'T. 44' RT. OF ℄	ELEV. OUTSIDE EDGE OF ACCELERATION LANE.	DIST. RT. EDGE M.L. PAV'T. TO OUTSIDE EDGE ACCEL. LANE
321+55.98	1003.72	1003.72	.00
+75	1003.53	1003.49	.48
322+00	1003.28	1003.19	1.10
+25	1003.03	1002.89	1.73
+50	1002.78	1002.58	2.35
+75	1002.53	1002.28	2.98
323+00	1002.28	1001.98	3.60
+25	1002.03	1001.68	4.23
+50	1001.78	1001.38	4.85
+75	1001.53	1001.08	5.45
324+00	1001.27	1000.88	6.10
+25	1001.30	1000.73	6.73
+50	1001.20	1000.68	7.35
+75	1001.14	1000.61	7.98
325+00	1001.11	1000.58	8.60
+25	1001.10	1000.58	9.23
+50	1001.12	1000.61	9.85
+75	1001.13	1000.64	10.48
326+00	1001.20	1000.73	11.10
+25	1001.29	1000.85	11.73
+50	1001.41	1001.01	12.35
+75	1001.55	1001.19	12.98
327+00	1001.69	1001.38	13.60
+25	1001.88	1001.62	14.23
+50	1002.05	1001.82	14.85
+75	1002.17	1001.93	15.48
328+00	1002.32	1002.07	16.10
+25	1002.49	1002.23	16.73
+50	1002.69	1002.42	17.35
+75	1002.91	1002.63	17.98
329+00	1003.18	1002.89	18.60

RAMP "B" CURVE DATA

CURVE Nº 2		CURVE Nº 3	
Δ =	10°00'00"	Δ =	14°24'00"
Ds =	8°00'	Ds =	4°00'
R =	716.20'	R =	1432.39'
T =	62.66'	T =	180.95'
Lc =	125.00'	Lc =	360.00'
E =	2.74'	E =	11.38

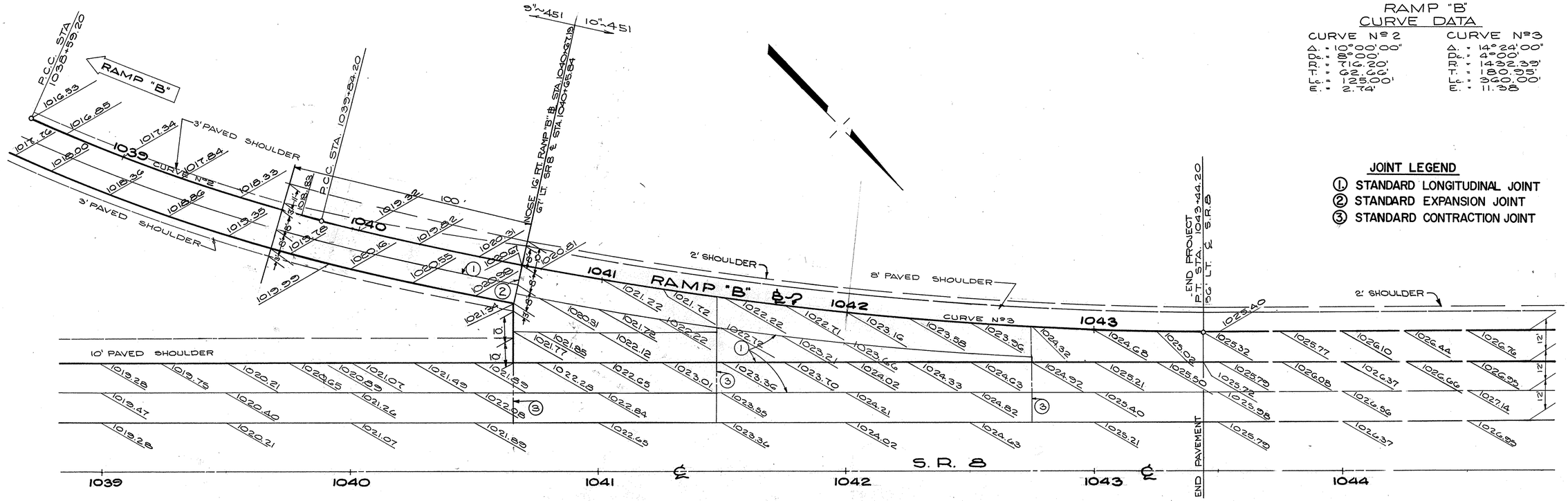

JOINT LEGEND

① STANDARD LONGITUDINAL JOINT
② STANDARD EXPANSION JOINT
③ STANDARD CONTRACTION JOINT

INTERSECTION DETAILS RAMPS A & B

K & E-AKRON

FED. RD.	STATE	PROJECT	
2	OHIO		

SUM-8-17.63

30
460

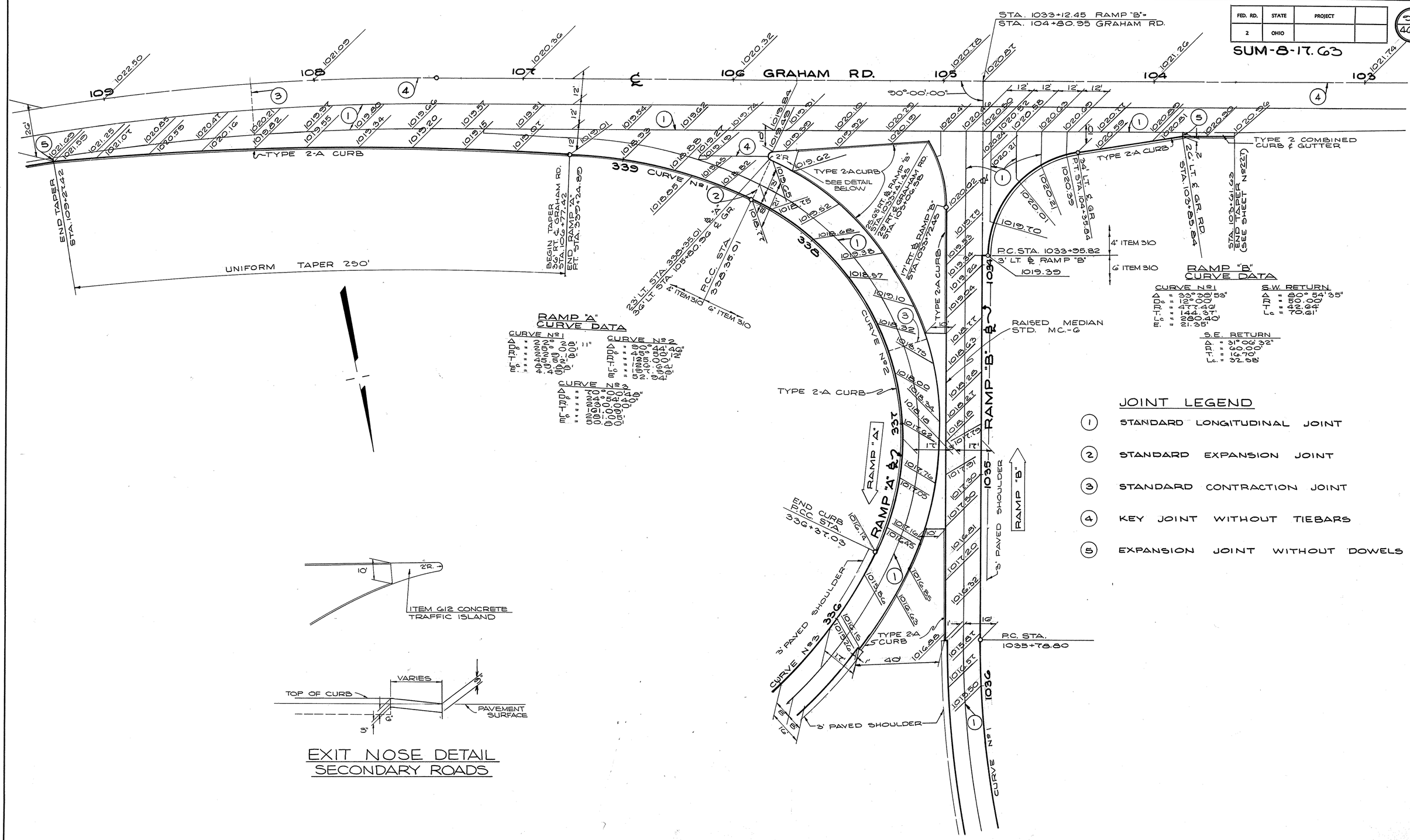

JOINT LEGEND

1. STANDARD LONGITUDINAL JOINT
2. STANDARD EXPANSION JOINT
3. STANDARD CONTRACTION JOINT
4. KEY JOINT WITHOUT TIEBARS
5. EXPANSION JOINT WITHOUT DOWELS

EXIT NOSE DETAIL SECONDARY ROADS

INTERSECTION DETAILS RAMPS A & B

K & E - AKRON

FED. RD.	STATE	PROJECT	
2	OHIO		

91/460

SUM-8-17.63

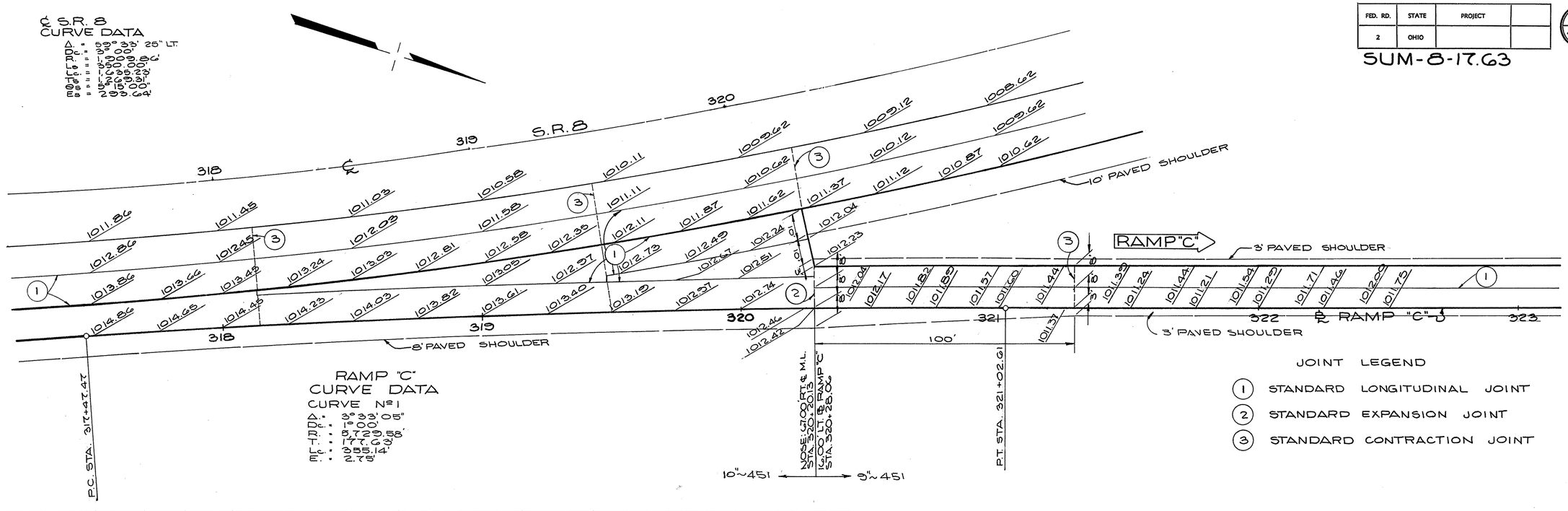

STATION	ELEV. RT. EDGE MAINLINE PAV'T. 44' RT. OF ℄	ELEV. OUTSIDE EDGE OF ACCELERATION LANE	DIST. RT. EDGE M.L. PAV'T TO OUTSIDE EDGE ACCEL. LANE
1043+00	1025.21	1025.02	12.44'
+25	1025.50	1025.32	11.82'
+50	1025.79	1025.62	11.19'
+75	1026.08	1025.92	10.57'
1044+00	1026.37	1026.21	9.94'
+25	1026.66	1026.51	9.32'
+50	1026.95	1026.81	8.69'
+75	1027.23	1027.10	8.07'
1045+00	1027.50	1027.38	7.44'
+25	1027.76	1027.65	6.82'
+50	1028.00	1027.90	6.19'
+75	1028.22	1028.13	5.57'
1046+00	1028.44	1028.36	4.94'
+25	1028.64	1028.57	4.32'
+50	1028.82	1028.76	3.69'
+75	1028.98	1028.93	3.07'
1047+00	1029.15	1029.14	2.44'
+25	1029.29	1029.26	1.82'
+50	1029.42	1029.40	1.19'
+75	1029.53	1029.52	.57'
+97.75	1029.62	1029.62	0'

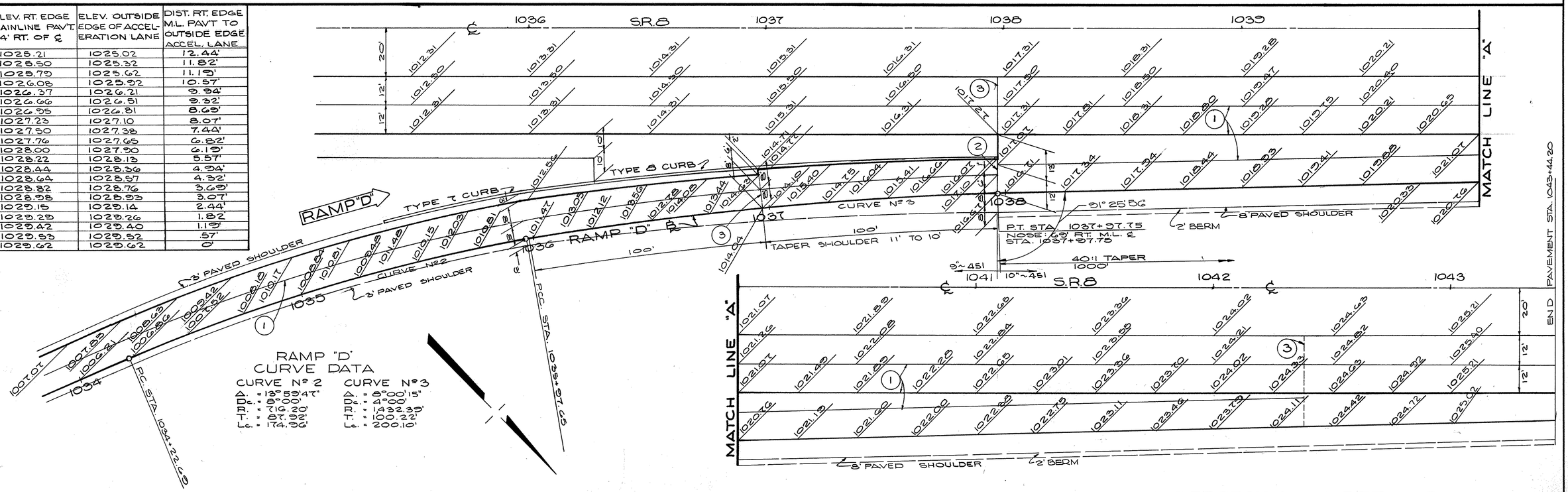

INTERSECTION DETAILS
RAMPS "C" & "D"

K & E - AKRON

FED. RD.	STATE	PROJECT	
2	OHIO		

SUM-8-17.63

32
460

JOINT LEGEND

1. STANDARD LONGITUDINAL JOINT
2. STANDARD EXPANSION JOINT
3. STANDARD CONTRACTION JOINT
4. KEY JOINT WITHOUT TIEBARS
5. EXPANSION JOINT WITHOUT DOWELS

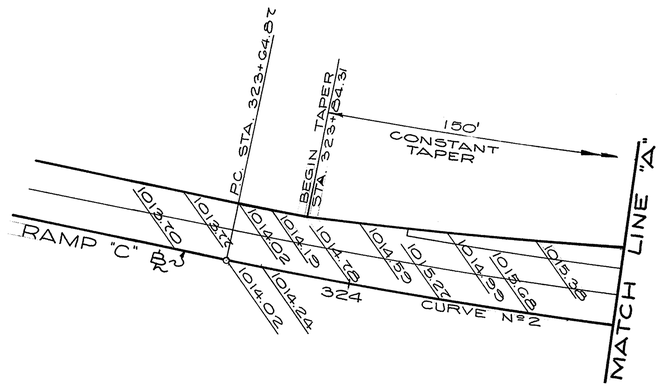

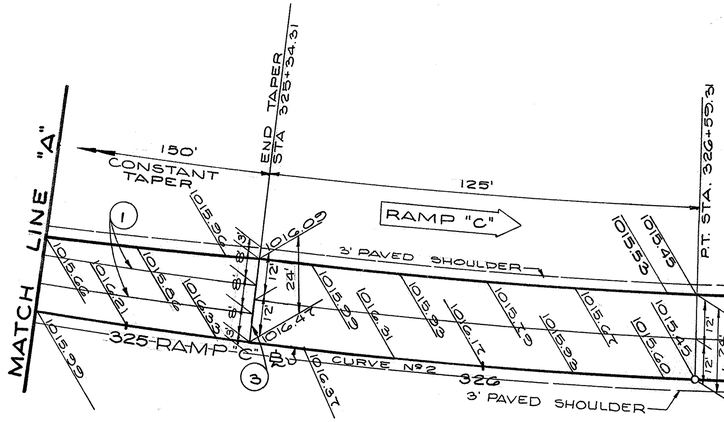

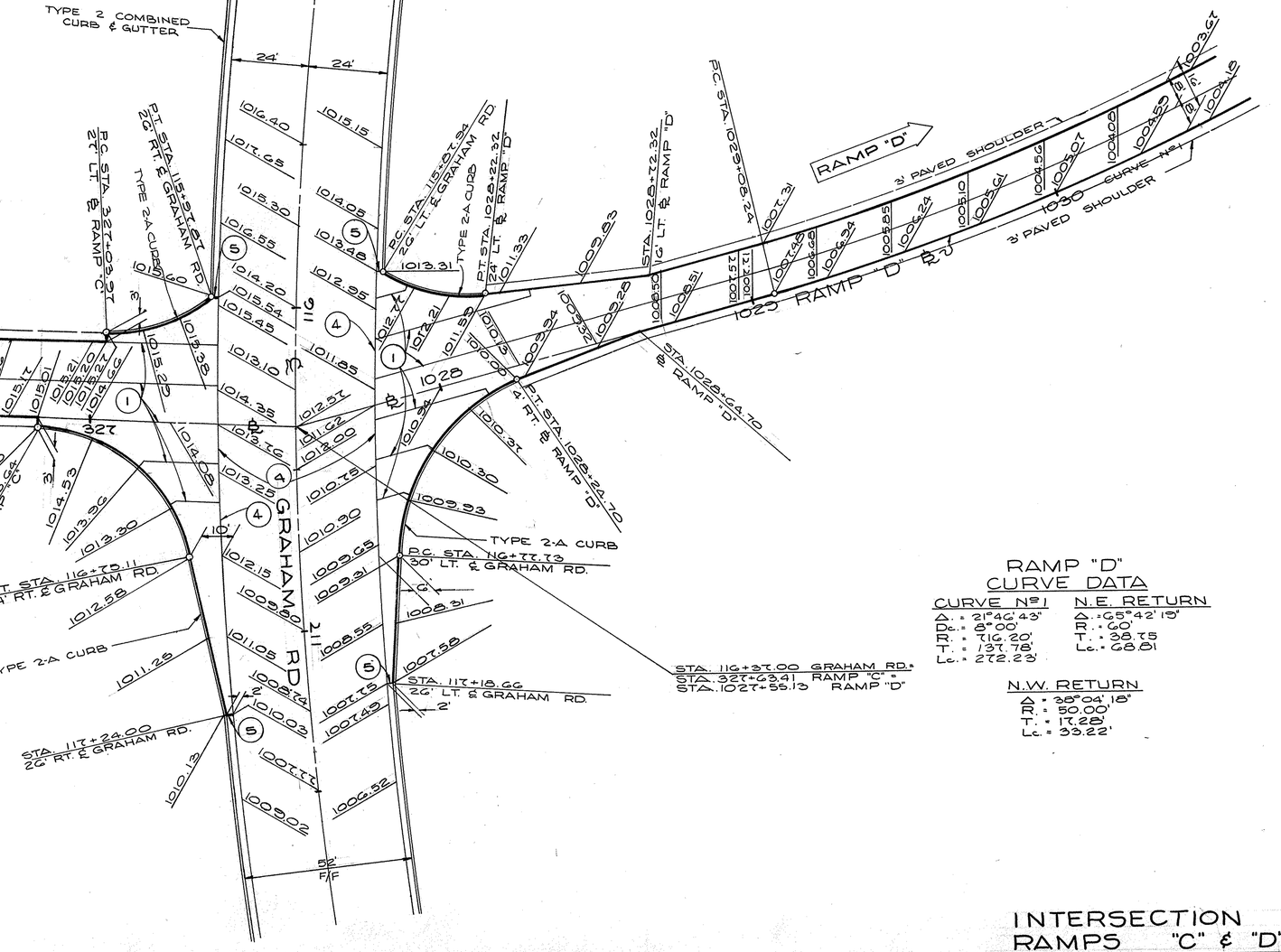

RAMP "C" CURVE DATA

CURVE Nº 2	S.E. RETURN
Δ. = 11°46'40"	Δ. = 76°00'45"
D. = 4°00'	R. = 50'
R. = 1432.40'	T. = 39.07'
T. = 147.74'	Lc. = 66.33'
Lc. = 294.44'	
E. = 7.60'	

S.W. RETURN
Δ. = 35°53'42"
R. = 50'
T. = 18.15'
Lc. = 34.81'

RAMP "D" CURVE DATA

CURVE Nº 1	N.E. RETURN
Δ. = 21°46'43"	Δ. = 65°42'19"
D. = 8°00'	R. = 50'
R. = 716.20'	T. = 38.75
T. = 137.78'	Lc. = 68.81
Lc. = 272.23'	

N.W. RETURN
Δ. = 35°04'18"
R. = 50.00'
T. = 17.22'
Lc. = 33.22'

INTERSECTION DETAILS RAMPS "C" & "D"

K & E - AKRON

FED. RD.	STATE	PROJECT	
2	OHIO		

SUM-8-17.63

33
460

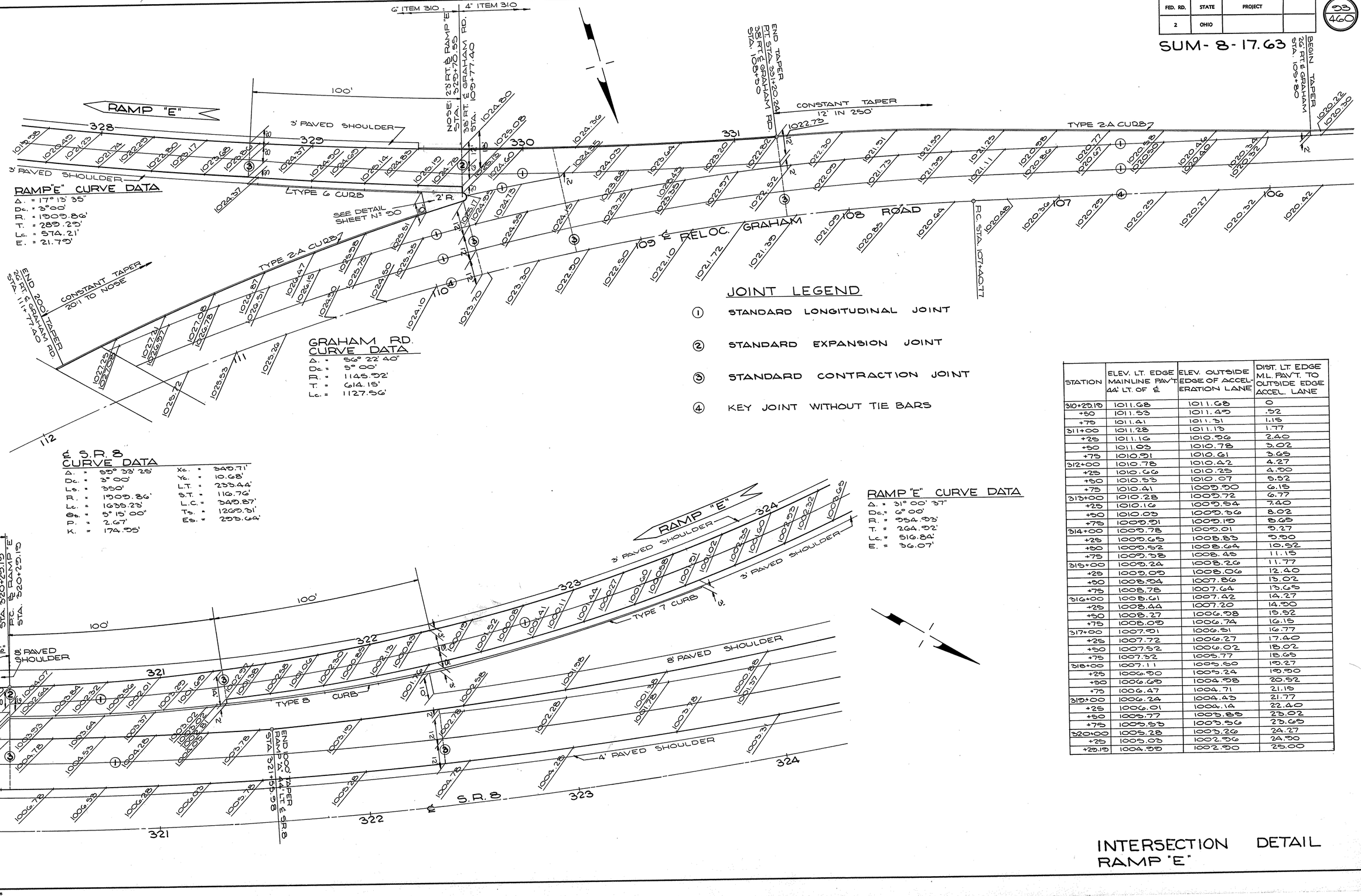

GRAHAM RD. CURVE DATA

Δ. =	56° 22' 40"		
Dc. =	5° 00'		
R. =	1145.92'		
T. =	614.15'		
Lc. =	1127.56'		

℄ S.R. 8 CURVE DATA

Δ. =	55° 33' 25"	Xc. =	349.71'
Dc. =	3° 00'	Yc. =	10.68'
Ls. =	350'	L.T. =	233.44'
R. =	1909.86'	S.T. =	116.76'
Lc. =	1635.23'	L.C. =	349.87'
θs. =	5° 15' 00"	Ts. =	1265.31'
P. =	2.67'	Es. =	293.64'
K. =	174.55'		

RAMP "E" CURVE DATA

Δ. =	17° 13' 35"
Dc. =	3° 00'
R. =	1909.86'
T. =	289.23'
Lc. =	574.21'
E. =	21.79'

RAMP "E" CURVE DATA

Δ. =	31° 00' 37"
Dc. =	6° 00'
R. =	954.93'
T. =	264.92'
Lc. =	516.84'
E. =	36.07'

JOINT LEGEND

① STANDARD LONGITUDINAL JOINT

② STANDARD EXPANSION JOINT

③ STANDARD CONTRACTION JOINT

④ KEY JOINT WITHOUT TIE BARS

STATION	ELEV. LT. EDGE MAINLINE PAV'T 44' LT. OF ℄	ELEV. OUTSIDE EDGE OF ACCEL-ERATION LANE	DIST. LT. EDGE M.L. PAV'T. TO OUTSIDE EDGE ACCEL. LANE
310+29.19	1011.68	1011.68	0
+50	1011.53	1011.45	.52
+75	1011.41	1011.31	1.15
311+00	1011.28	1011.13	1.77
+25	1011.16	1010.96	2.40
+50	1011.03	1010.78	3.02
+75	1010.91	1010.61	3.65
312+00	1010.78	1010.42	4.27
+25	1010.66	1010.25	4.90
+50	1010.53	1010.07	5.52
+75	1010.41	1009.90	6.15
313+00	1010.28	1009.72	6.77
+25	1010.16	1009.54	7.40
+50	1010.03	1009.36	8.02
+75	1009.91	1009.19	8.65
314+00	1009.78	1009.01	9.27
+25	1009.65	1008.83	9.90
+50	1009.52	1008.64	10.52
+75	1009.38	1008.45	11.15
315+00	1009.24	1008.26	11.77
+25	1009.09	1008.06	12.40
+50	1008.94	1007.86	13.02
+75	1008.78	1007.64	13.65
316+00	1008.61	1007.42	14.27
+25	1008.44	1007.20	14.90
+50	1008.27	1006.98	15.52
+75	1008.09	1006.74	16.15
317+00	1007.91	1006.51	16.77
+25	1007.72	1006.27	17.40
+50	1007.52	1006.02	18.02
+75	1007.32	1005.77	18.65
318+00	1007.11	1005.50	19.27
+25	1006.90	1005.24	19.90
+50	1006.69	1004.98	20.52
+75	1006.47	1004.71	21.15
319+00	1006.24	1004.43	21.77
+25	1006.01	1004.14	22.40
+50	1005.77	1003.83	23.02
+75	1005.53	1003.56	23.65
320+00	1005.28	1003.26	24.27
+25	1005.03	1002.96	24.90
+29.19	1004.95	1002.90	25.00

INTERSECTION DETAIL RAMP "E"

FORM D D A-5

FED. RD.	STATE	PROJECT	
2	OHIO		

SUM-8-17.63

34
460

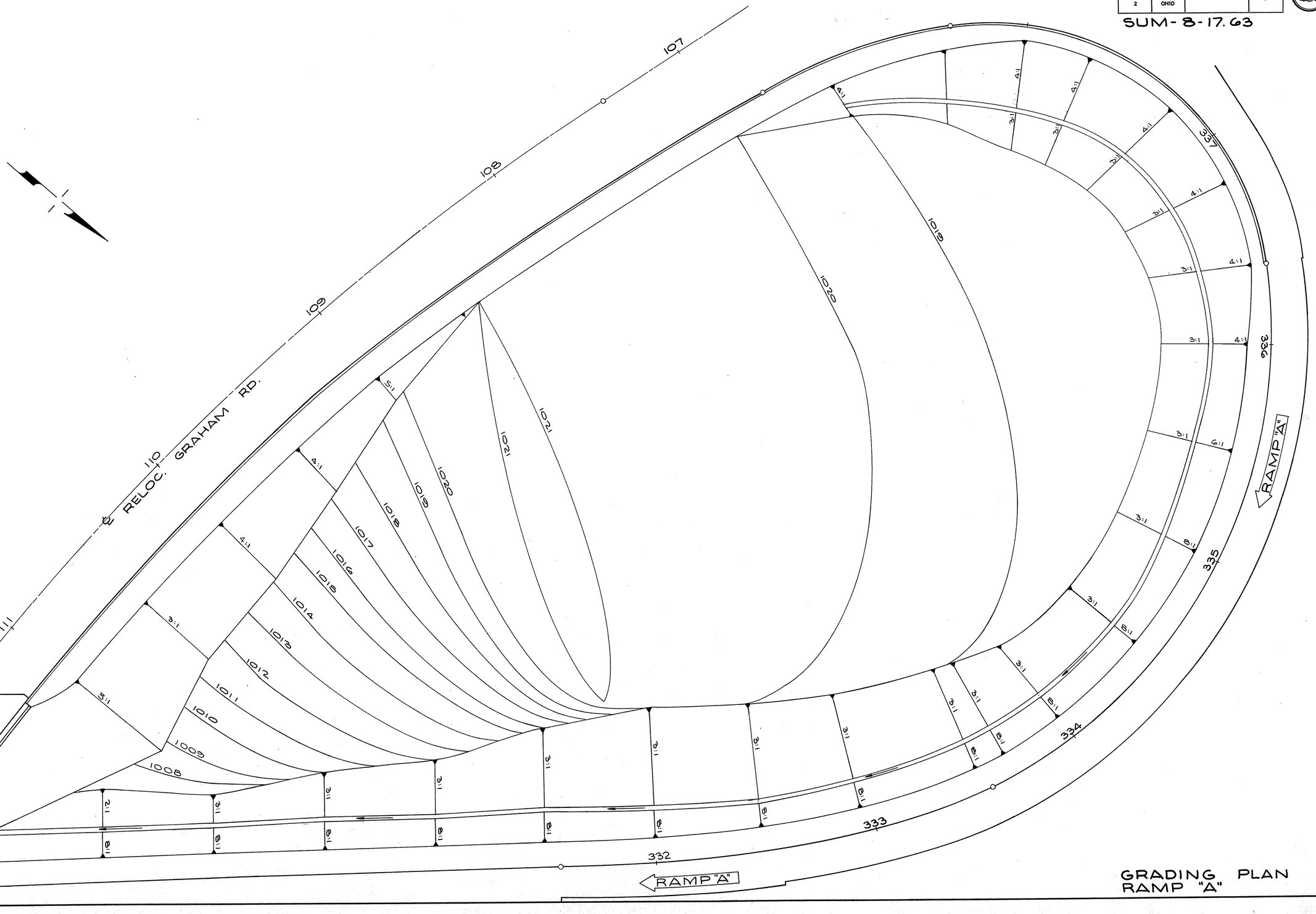

GRADING PLAN
RAMP "A"

FORM DDA-8

FED. RD.	STATE	PROJECT	
2	OHIO		

95/460

SUM-8-17.63

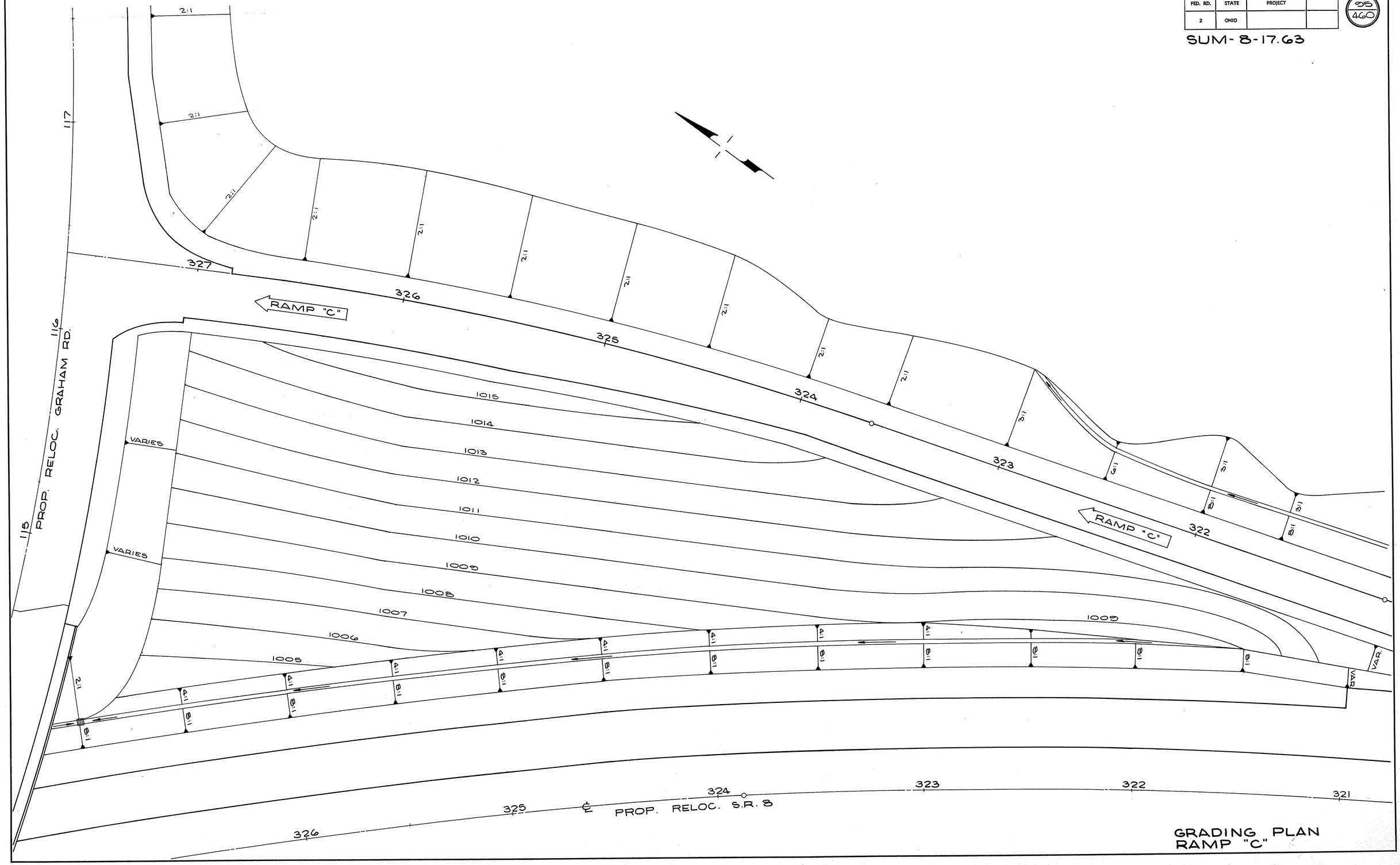

GRADING PLAN
RAMP "C"

FORM DDA-5

FED. RD. DIVISION	STATE	PROJECT	
2	OHIO		

96
460

SUM - 8-17.63

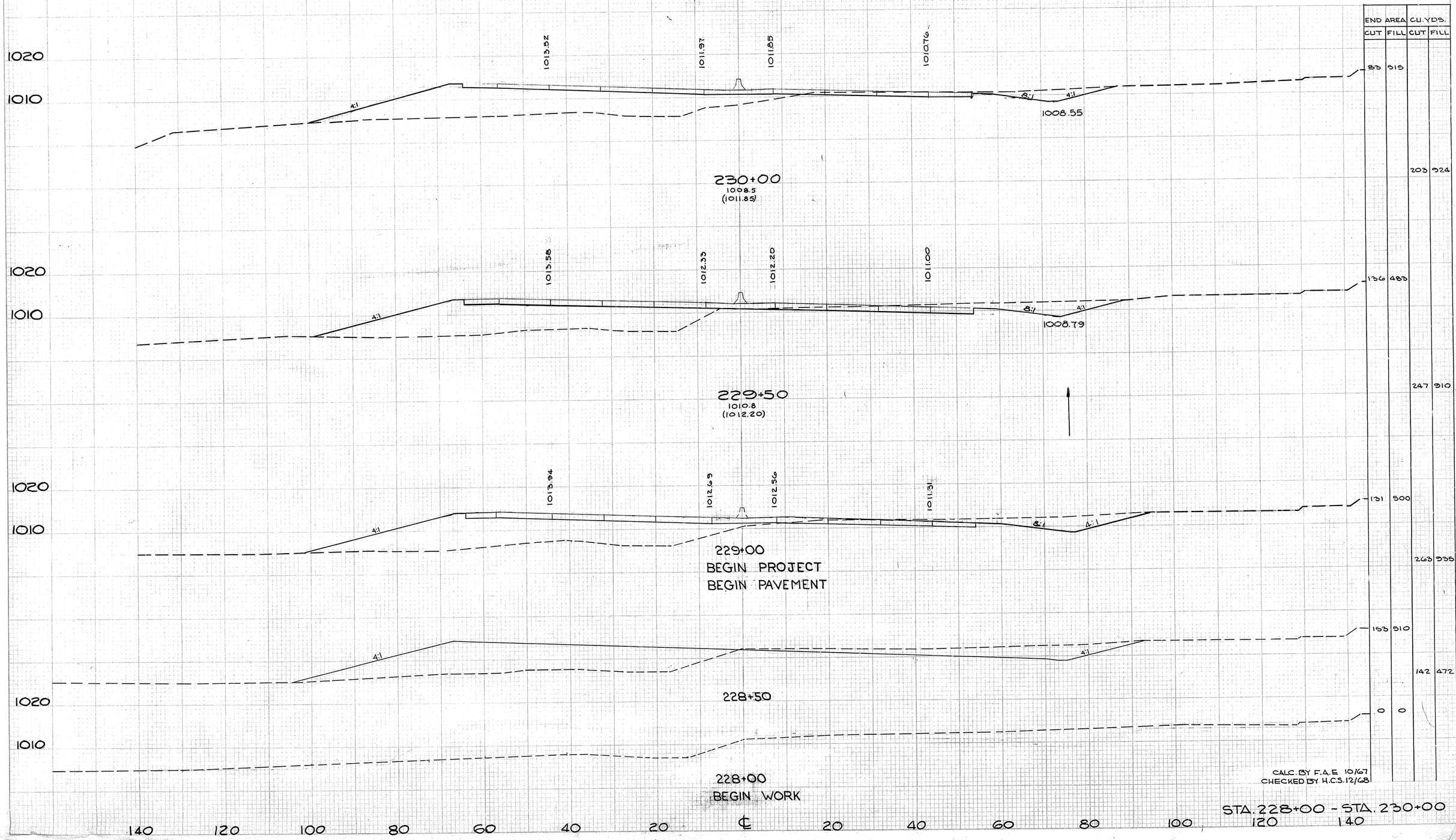

END AREA		CU. YDS.	
CUT	FILL	CUT	FILL
85	515		
		203	924
136	483		
		247	910
131	500		
		263	935
193	510		
		142	472
0	0		

CALC. BY F.A.E. 10/67
CHECKED BY H.C.S. 12/68

STA. 228+00 - STA. 230+00

FED. RD.	STATE	PROJECT	
2	OHIO		

35-A
460

SUM-8-17.63

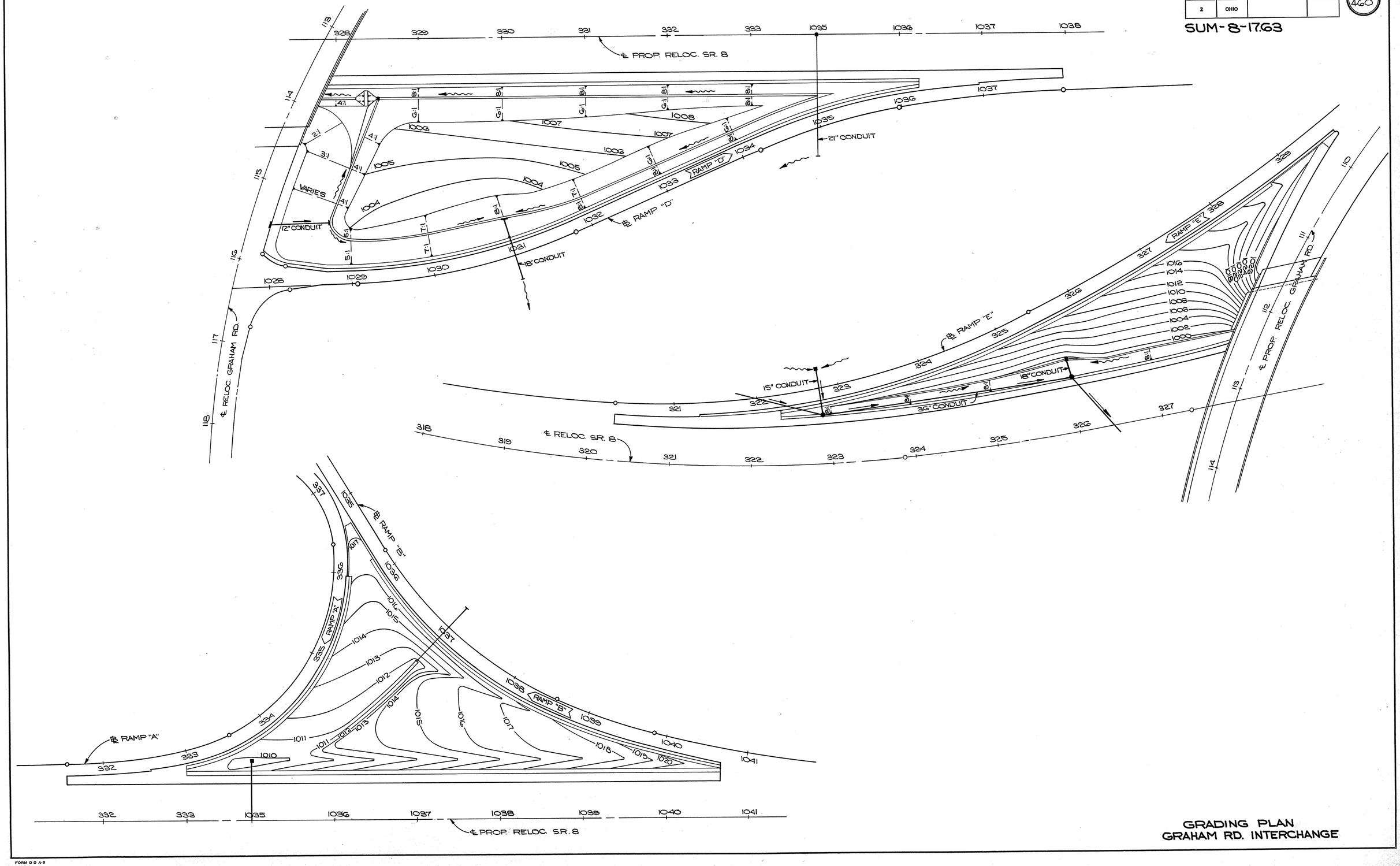

GRADING PLAN
GRAHAM RD. INTERCHANGE

FORM D D A-5

FED. RD. DIVISION	STATE	PROJECT		37
2	OHIO			460

SUM-8-17.63

A-1
604 2-10 INLET (AS PER PLAN)
232+00 ℄
℄ GUTTER = 1010.18
℄ 15" = 1005.18
℄ 6" = 1005.93

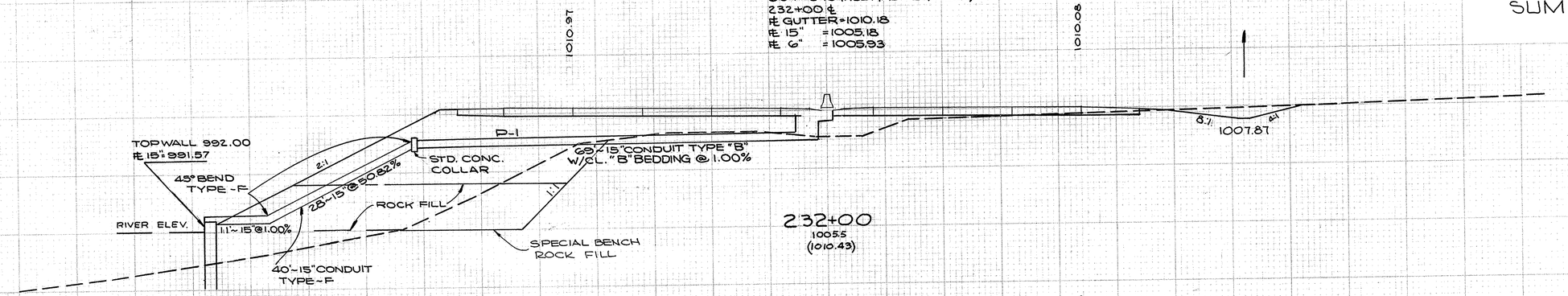

232+00
1005.5
(1010.43)



231+50
1003.4
(1010.78)

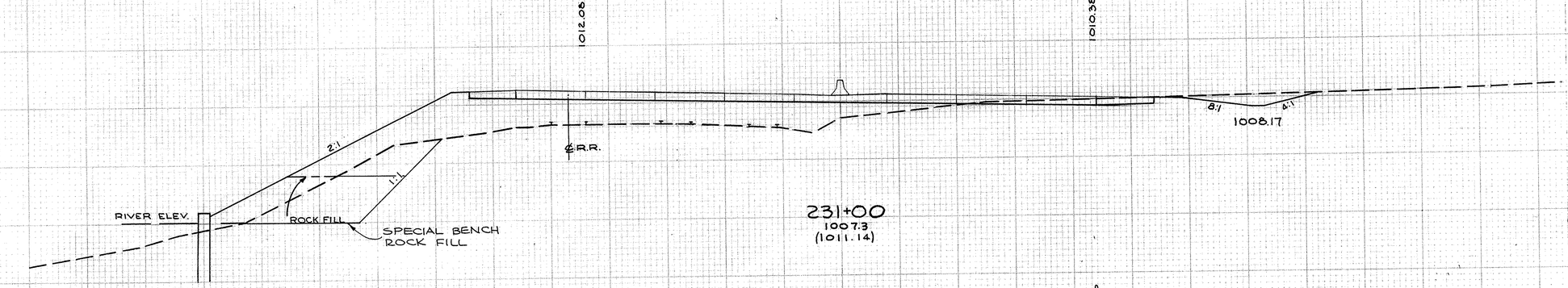

231+00
1007.3
(1011.14)

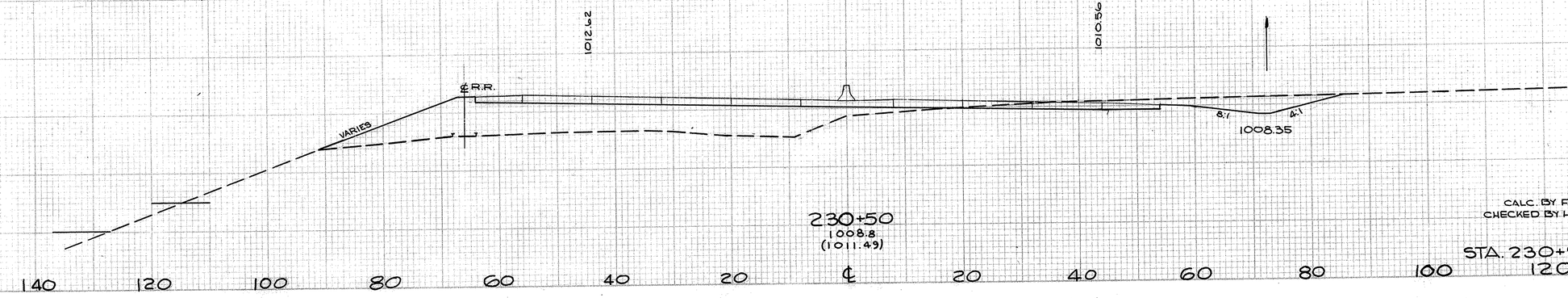

230+50
1008.8
(1011.49)

ROCK FILL END AREA	CU. YDS.	END AREA CUT	END AREA FILL	CU. YDS. CUT	CU. YDS. FILL
427		32	550		
	657			56	1053
282		28	550		
	430			83	1018
182		61	455		
	160			153	815
0		104	425		
				173	871

CALC. BY F.A.E. 10/67
CHECKED BY H.C.S. 12/68

STA. 230+50 - STA. 232+00

140 120 100 80 60 40 20 ℄ 20 40 60 80 100 120 140

FED. RD. DIVISION	STATE	PROJECT	
2	OHIO		

98
460

SUM-8-17.63

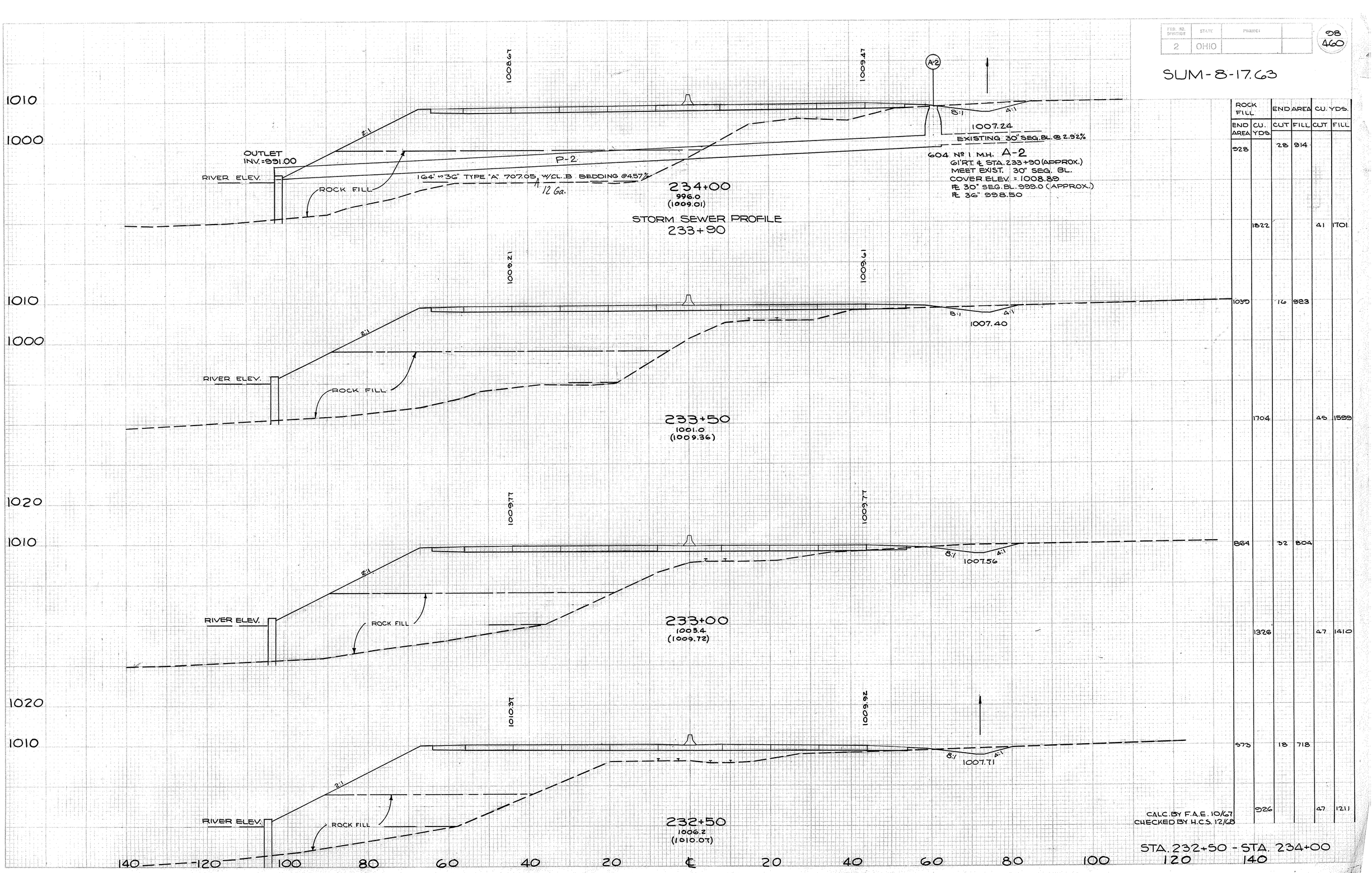

ROCK FILL END AREA	CU. YDS.	END AREA CUT	END AREA FILL	CU. YDS. CUT	CU. YDS. FILL
928		28	914		
	1822			41	1701
1035		16	923		
	1704			45	1599
864		32	804		
	1326			47	1410
573		18	718		
	926			47	1211

CALC. BY F.A.E. 10/67
CHECKED BY H.C.S. 12/68

STA. 232+50 - STA. 234+00

FED. HWY. DIVISION	STATE	PROJECT	
2	OHIO		

88
460

SUM-8-17.63

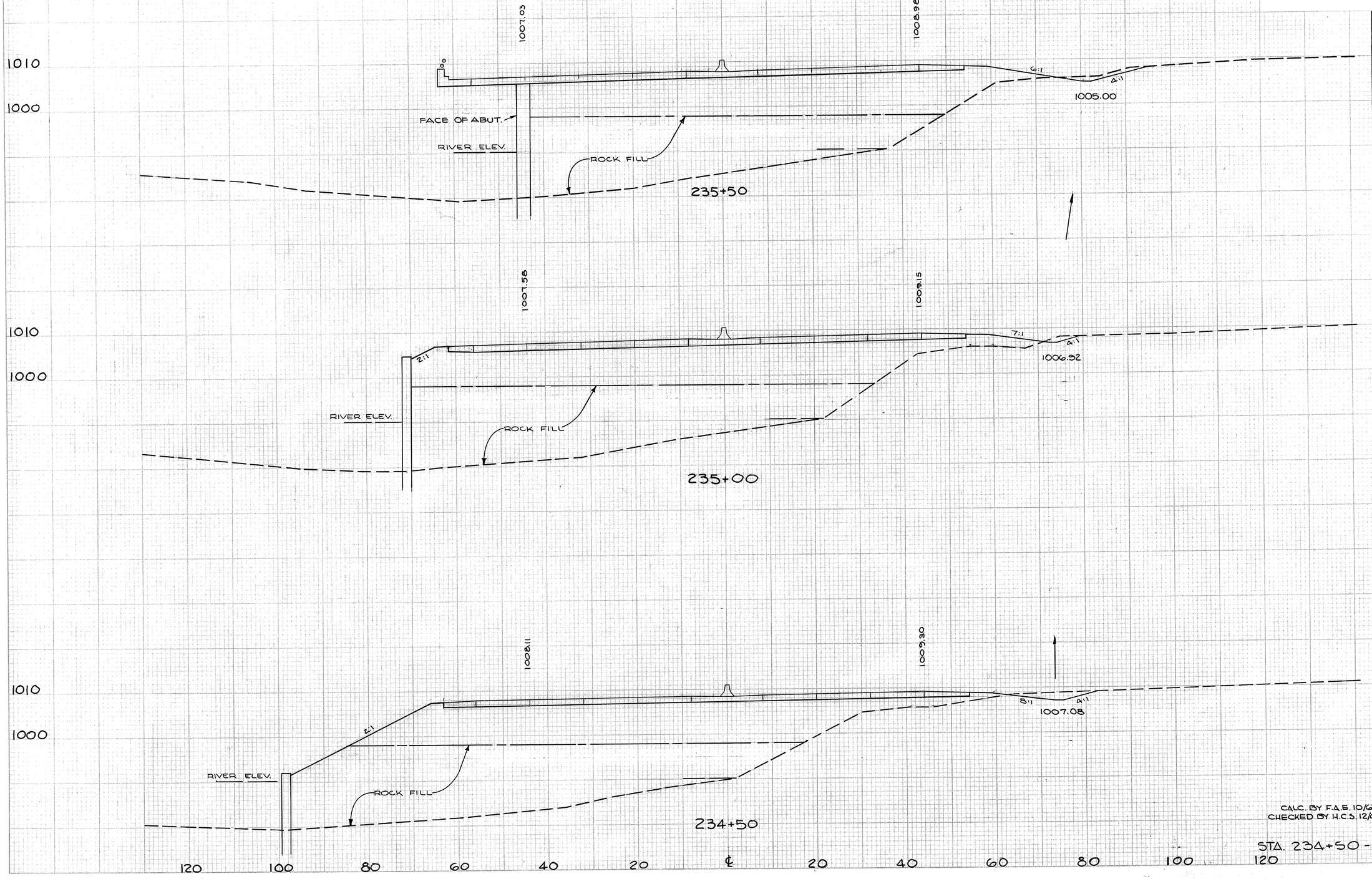

	ROCK FILL		END AREA		CU. YDS.	
	END AREA	CU. YDS.	CUT	FILL	CUT	FILL
	1082		14	878		
		2231			16	1730
	1327		4	990		
		2609			22	1817
	1497		13	972		
		2190			44	1724

CALC. BY F.A.E. 10/67
CHECKED BY H.C.S. 12/68

STA. 234+50 - STA. 235+50

F.A.I. NO. DIVISION	STATE	PROJECT	
2	OHIO		

100
460

SUM-8-17.63

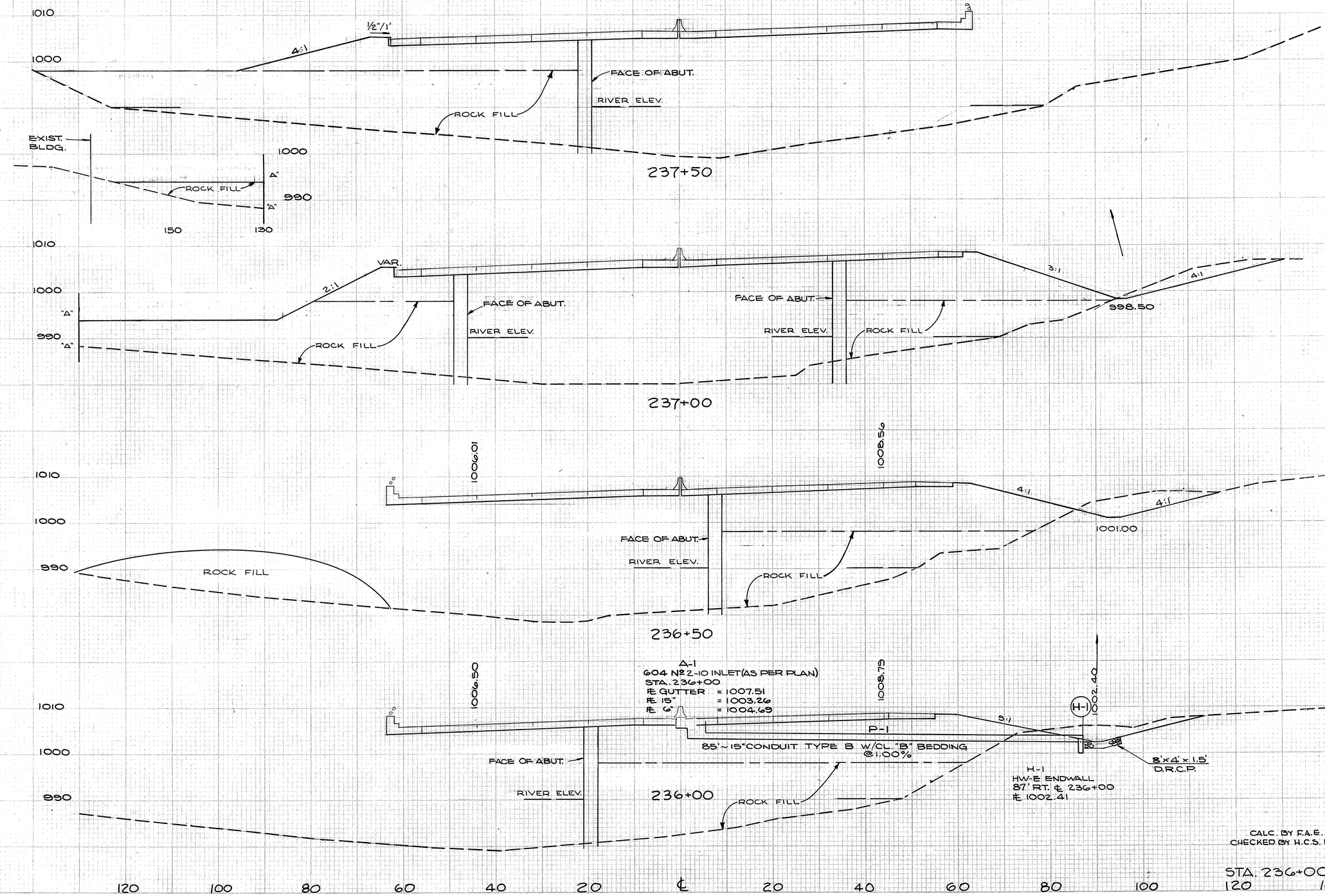

	ROCK FILL END AREA	ROCK FILL CU. YDS.	END AREA CUT	END AREA FILL	CU. YDS. CUT	CU. YDS. FILL
LT.	1280		0	360		
RT.	0		0	0		
LT.		2079			49	334
RT.		998			56	989
LT.	965		53	150		
RT.	430		60	420		
LT.		894			49	139
RT.		1000			139	963
LT.	0		0	0		
RT.	650		90	620		
		1436			146	1200
		900		65	730	
		1836			73	1489

CALC. BY F.A.E. 10/67
CHECKED BY H.C.S. 12/68

STA. 236+00 - STA. 237+50

FED. HWY. DIVISION	STATE	PROJECT	
2	OHIO		

101
460

SUM-8-17.63

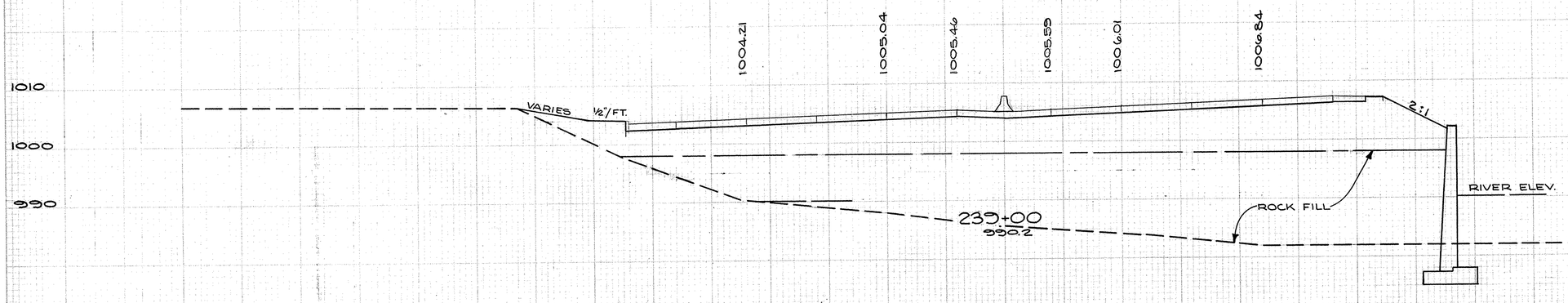

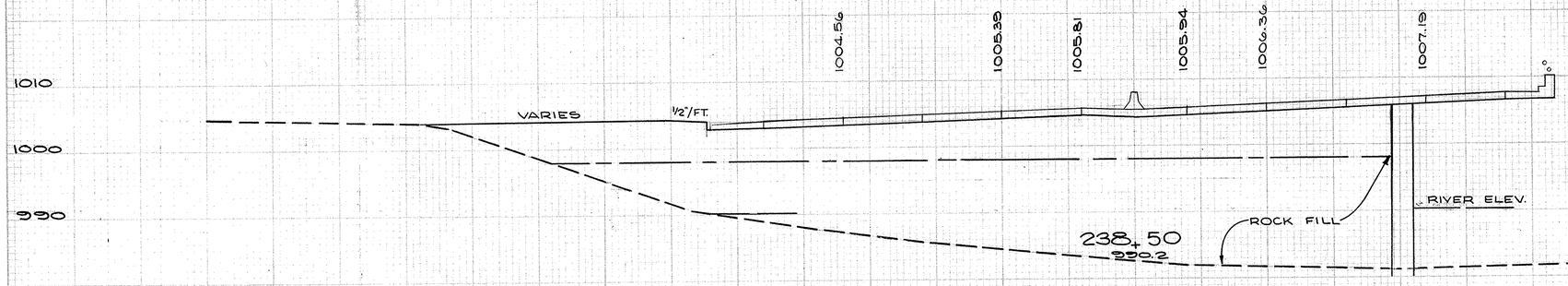

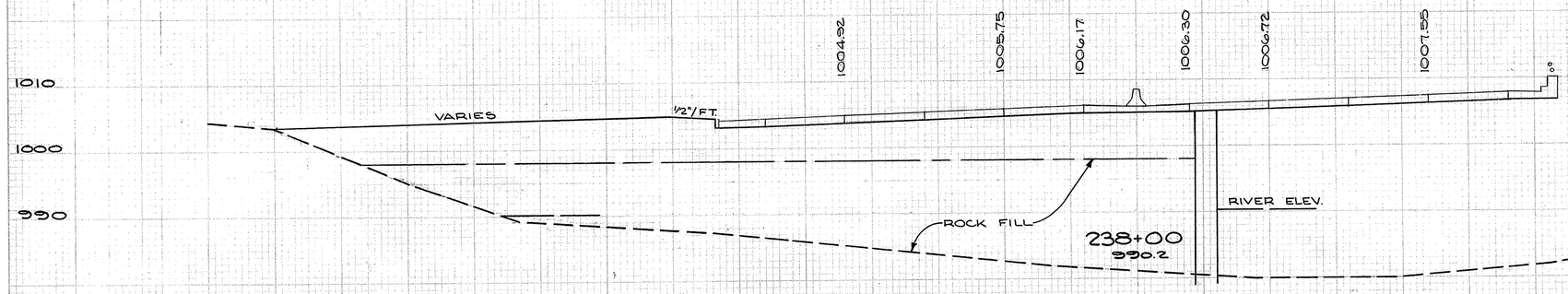

ROCK FILL END AREA	ROCK FILL CU. YDS.	END AREA CUT	END AREA FILL	CU. YDS. CUT	CU. YDS. FILL
1655		0	966		
2523		0	1678		
1501		0	847		
2738		0	1546		
1456		0	822		
2534		0	1095		

CALC. BY F.A.E. 10/67
CHECKED BY H.C.S. 12/68

STA. 238+00 - STA. 239+00

SUM-8-17.63

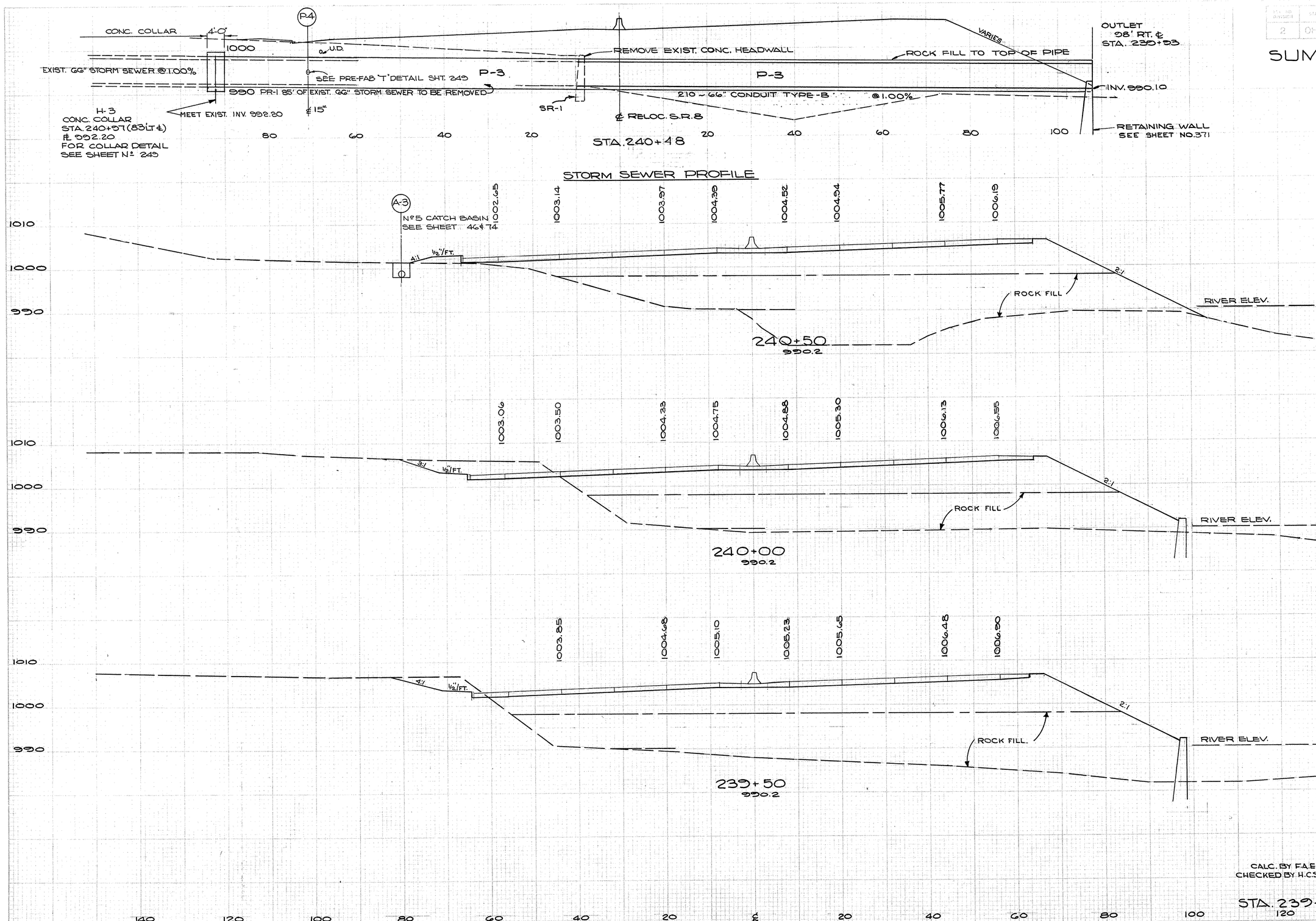

ROCK FILL END AREA	ROCK FILL CU YDS	END AREA CUT	END AREA FILL	CU. YDS CUT	CU. YDS FILL
1362		0	.714		
	2212			93	1327
1026		100	719		
	1536			134	1436
1632		44	832		
	3044			41	1655

CALC. BY F.A.E. 10/67
CHECKED BY H.C.S. 12/68

STA. 239+50 - STA. 240+50

STATE	COUNTY	PROJECT	
2	OHIO		

103
460

SUM-8-17.63

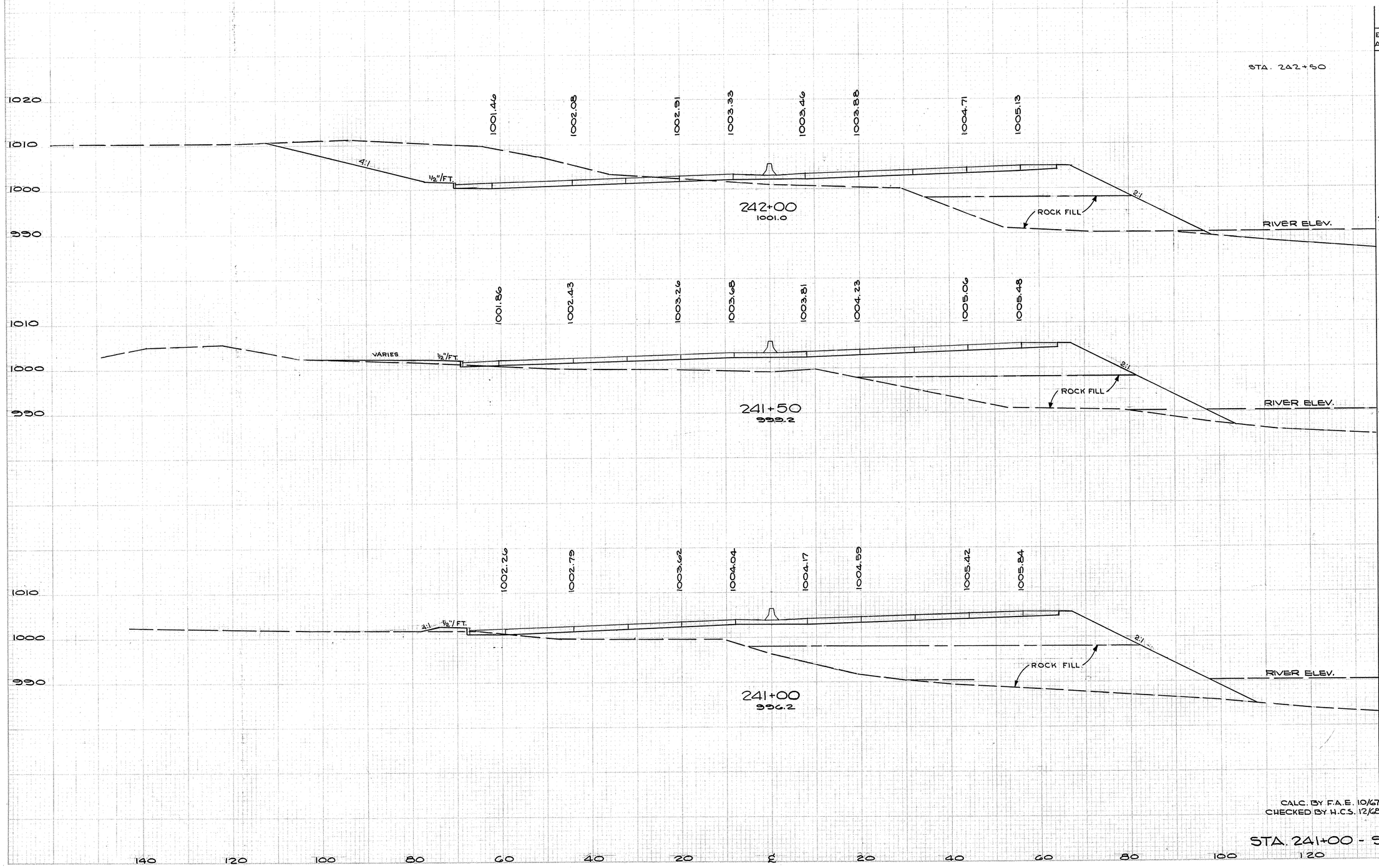

ROCK FILL END AREA	ROCK FILL CU. YDS.	END AREA CUT	END AREA FILL	CU. YDS. CUT	CU. YDS. FILL
STA. 242+50					
0					
	315				
340		482	322		
	704			447	804
420		1	546		
	1147			8	1080
764		7	528		
	1969			7	1216

CALC. BY F.A.E. 10/67
CHECKED BY H.C.S. 12/68

STA. 241+00 - STA. 242+00

140 120 100 80 60 40 20 ℄ 20 40 60 80 100 120 140

FED. HWY. DIVISION	STATE	PROJECT	
2	OHIO		

104
460

SUM-8-17.63

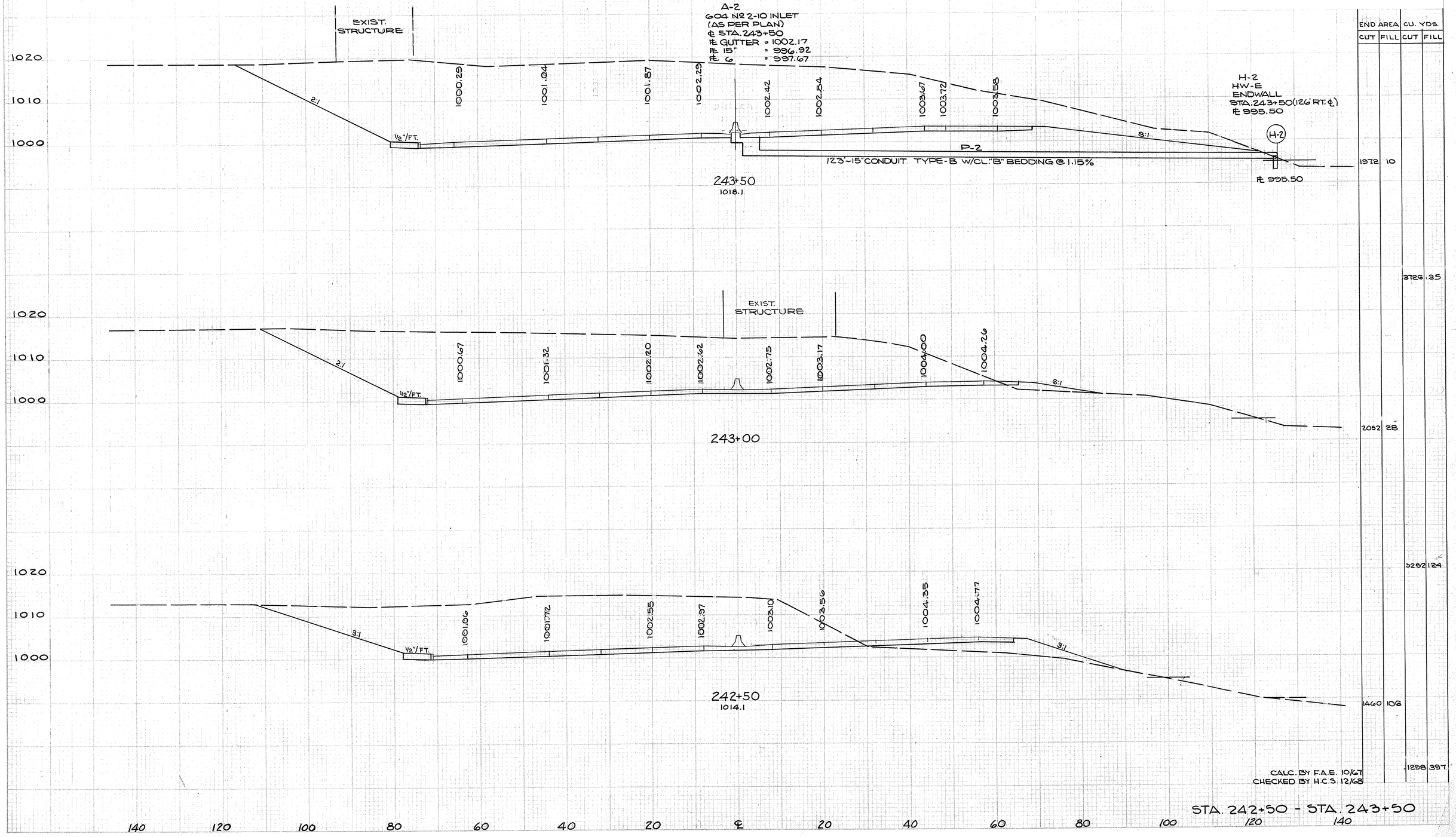

END AREA		CU. YDS.	
CUT	FILL	CUT	FILL
1972	10		
		3726	35
2052	28		
		3252	129
1460	106		
1298	397		

CALC. BY F.A.E. 10/67
CHECKED BY H.C.S. 12/68

STA. 242+50 - STA. 243+50

SUM-8-17.63

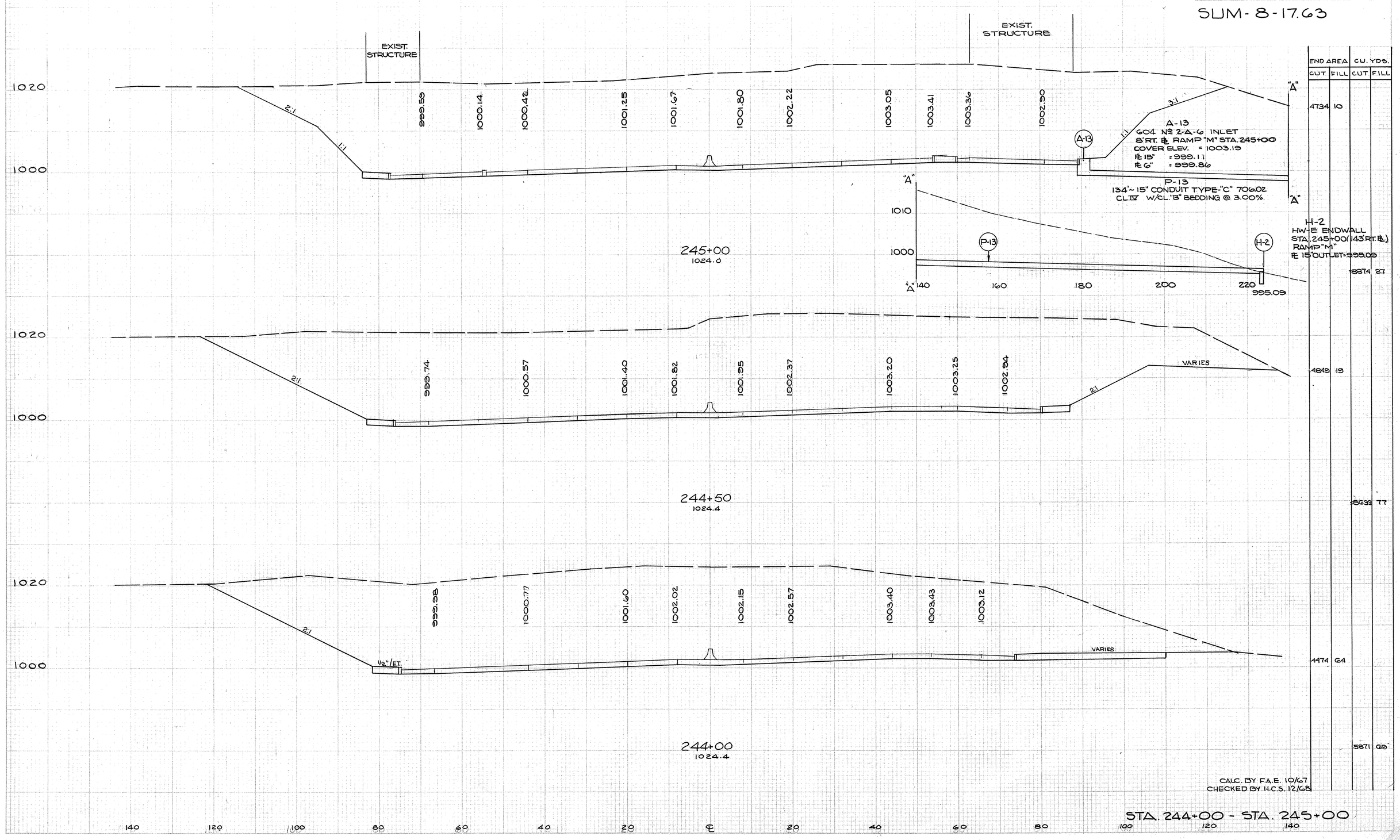

END AREA CUT	END AREA FILL	CU. YDS. CUT	CU. YDS. FILL
4734	10		
		8874	27
4849	19		
		8633	77
4474	64		
		5871	69

H-2
HW-E ENDWALL
STA. 245+00 (143' RT. ℄)
RAMP "M"
℄ 15" OUTLET = 995.09

CALC. BY F.A.E. 10/67
CHECKED BY H.C.S. 12/68

STA. 244+00 - STA. 245+00

FED. RD. DIVISION	STATE	PROJECT	
2	OHIO		

106
460

SUM-8-17.63



END AREA		CU. YDS.	
CUT	FILL	CUT	FILL
3847	16		
5144	30		
		385	2
5192	30		
		8852	66
4878	44		
		8800	50

CALC. BY F.A.E. 10/67
CHECKED BY H.C.S. 12/68

STA. 245+50 - STA. 246+00

FED. RD. DIVISION	STATE	PROJECT	
2	OHIO		

107
460

SUM-8-17.63

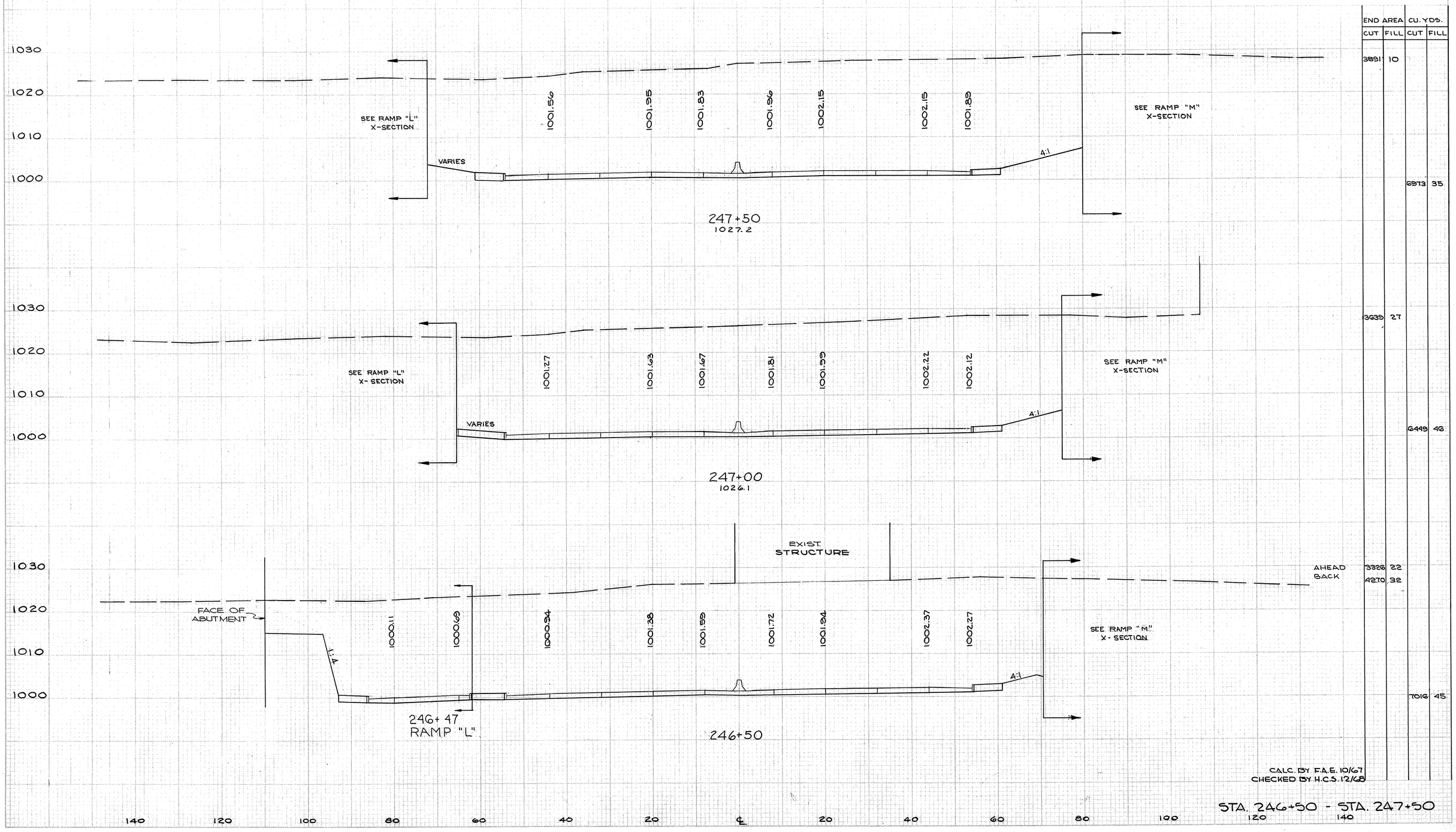

END AREA		CU. YDS.	
CUT	FILL	CUT	FILL
3891	10		
		6973	35
3639	27		
		6449	46
3326	22		
4270	32		
		7016	45

CALC. BY F.A.E. 10/67
CHECKED BY H.C.S. 12/68

STA. 246+50 - STA. 247+50

FED. RD. DIVISION	STATE	PROJECT	
2	OHIO		

108
460

SUM-8-17.63

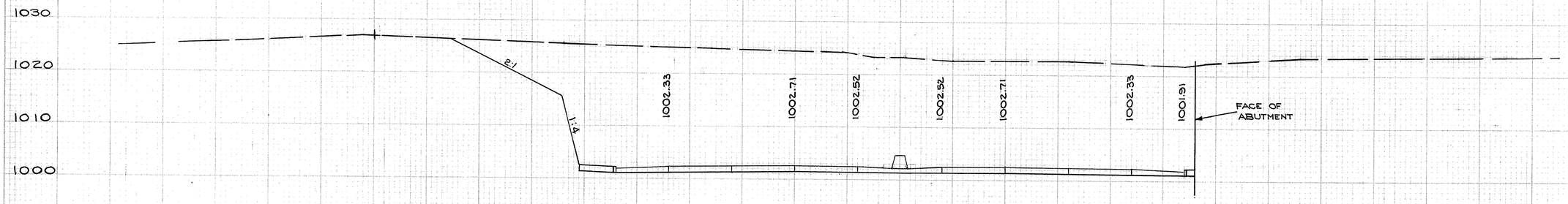

249+00
1023.2

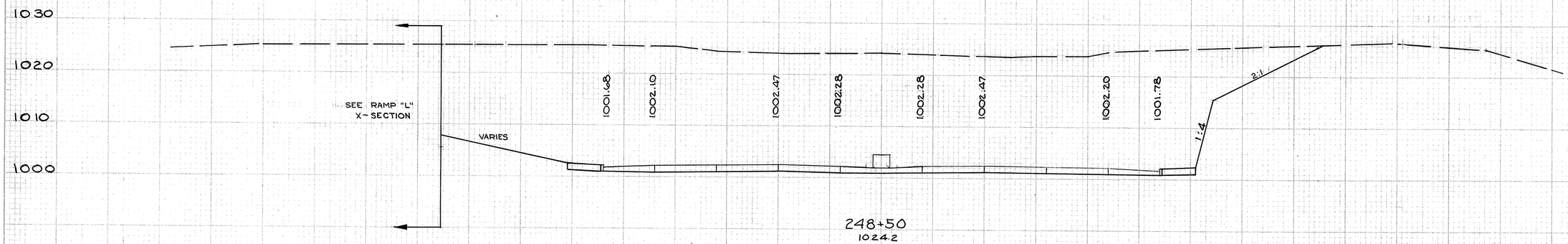

248+50
1024.2



248+00
1024.4

END AREA		CU. YDS.	
CUT	FILL	CUT	FILL
2820	12		
		5909	21
3561	10		

U.S. H.D. DIVISION	STATE	PROJECT	
2	OHIO		

105
460

SUM-8-17.63

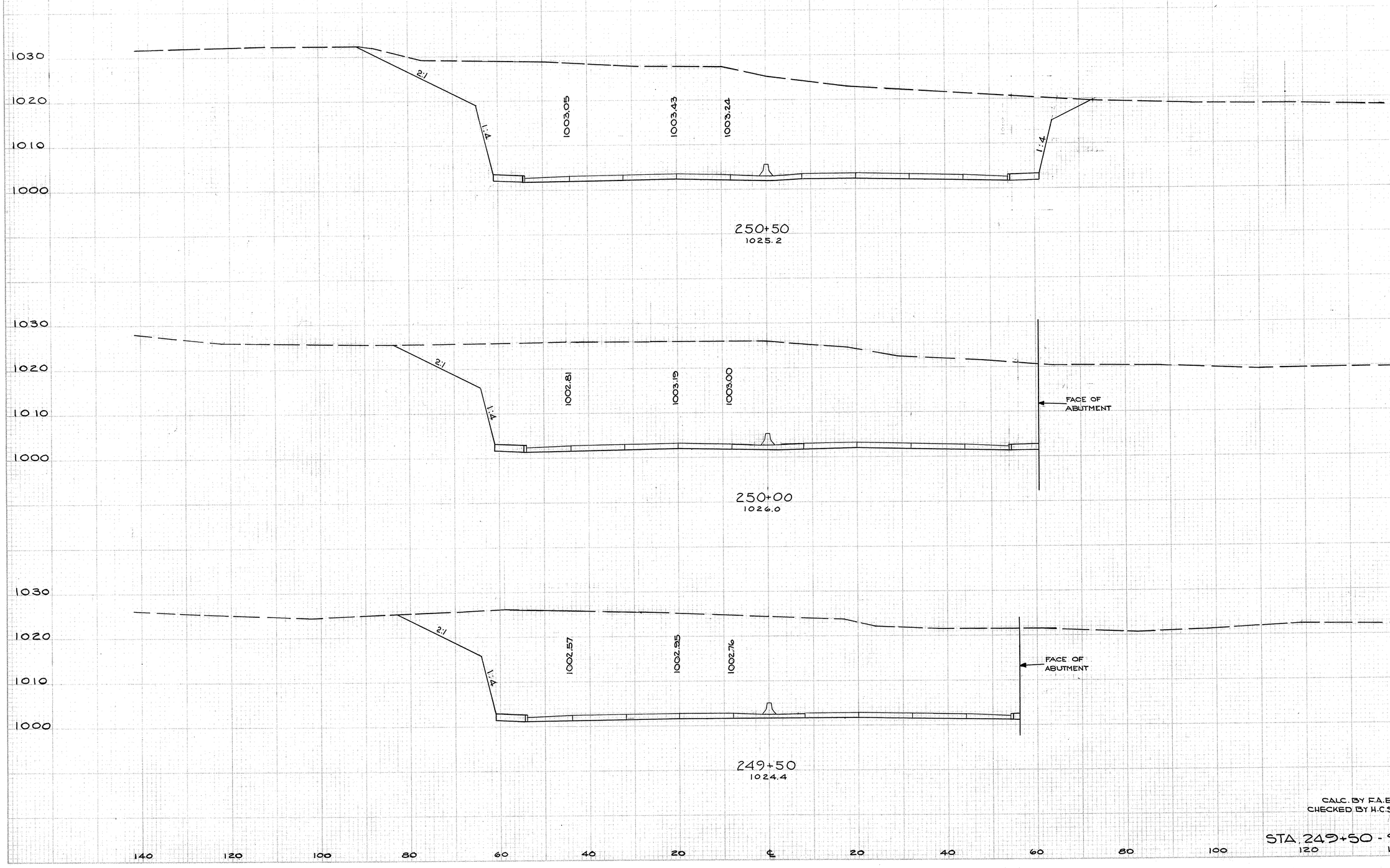

END AREA		CU. YDS.	
CUT	FILL	CUT	FILL
3118	20		
		5638	37
2972	20		
		5383	30
2841	12		
		5242	22

CALC. BY F.A.E. 10/67
CHECKED BY H.C.S. 12/68

STA. 249+50 - STA. 250+50

FED. RD. DIVISION	STATE	PROJECT	
2	OHIO		

110
460

SUM-8-17.63

END AREA		CU. YDS.	
CUT	FILL	CUT	FILL
3423	12		
		6471	30
3565	20		
		6313	37
3253	20		
		5899	37

CALC. BY F.A.E. 10/67
CHECKED BY H.C.S. 12/68

STA. 251+00 - STA. 252+00

FED. RD. DIVISION	STATE	PROJECT	
2	OHIO		

111
460

SUM - 8- 17.63

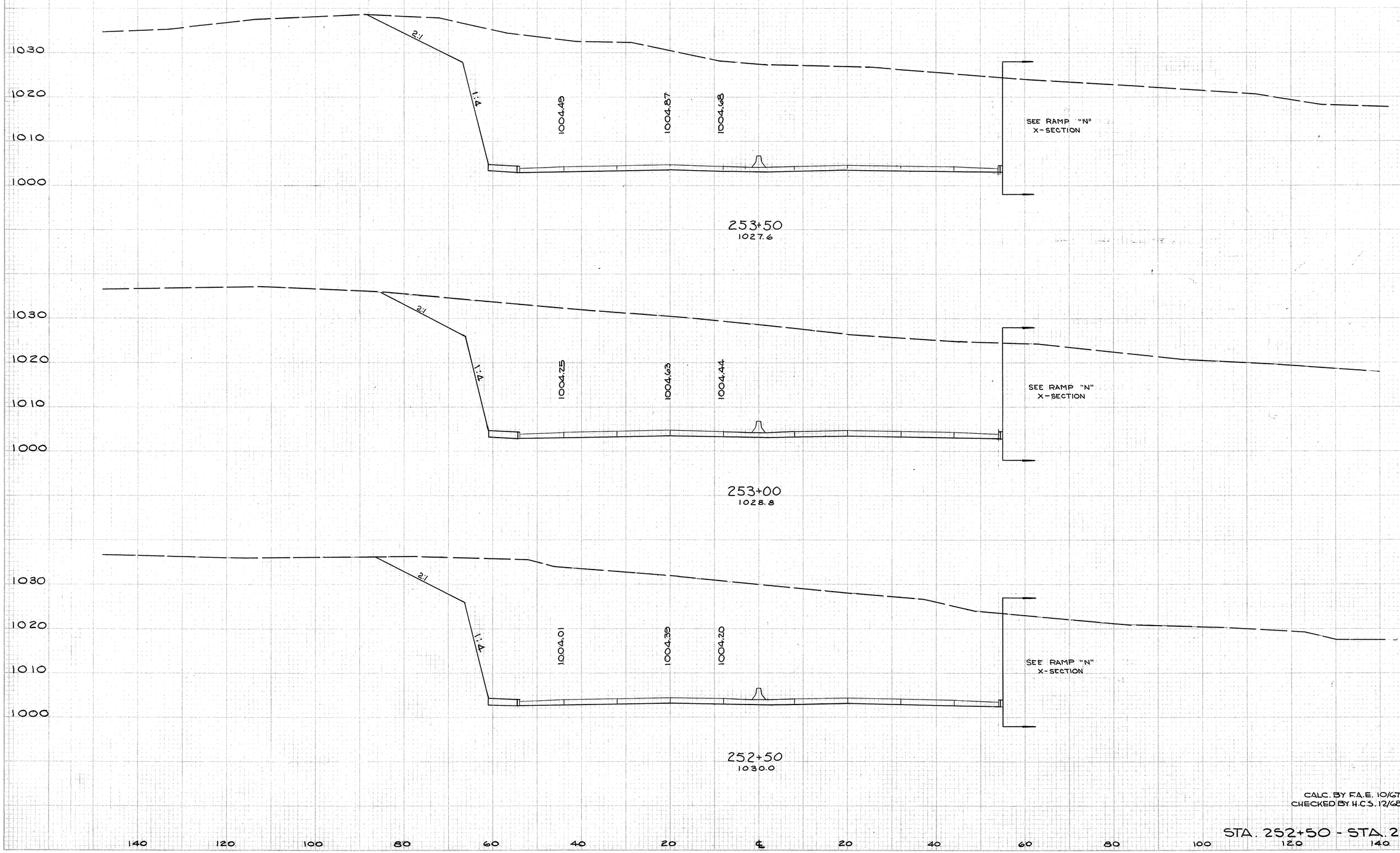

END AREA CU. YDS.			
CUT	FILL	CUT	FILL
3213	11		
		5910	21
3170	11		
		6078	21
3334	11		
		6312	82

CALC. BY F.A.E. 10/67
CHECKED BY H.C.S. 12/68

STA. 252+50 - STA. 253+50

FED. RD. DIVISION	STATE	PROJECT	
2	OHIO		

112
460

SUM-8-17.63

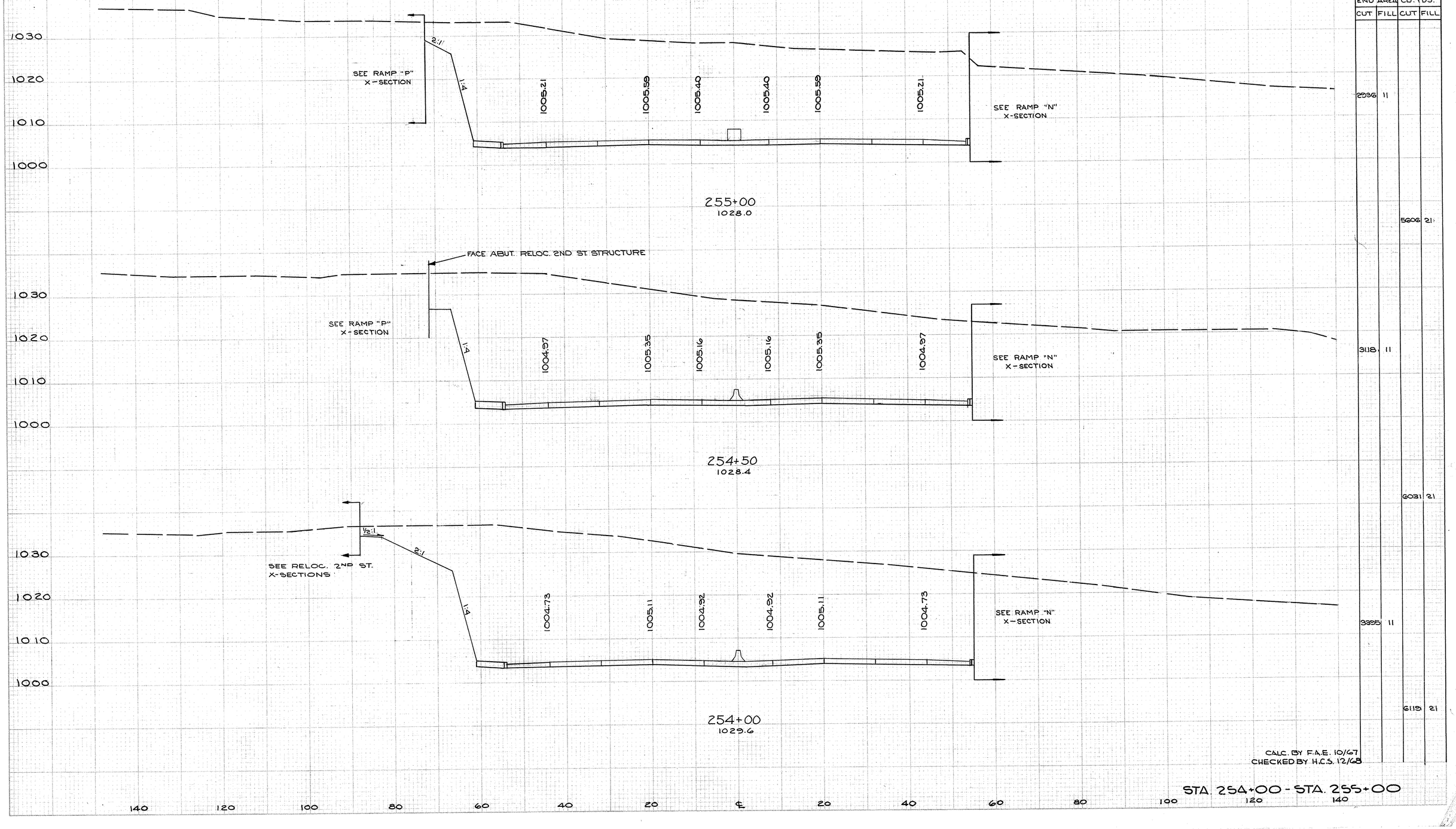

END AREA CU. YDS.			
CUT	FILL	CUT	FILL
	2936. 11		
		5606. 21	
	3118. 11		
		6031. 21	
	3895. 11		
		6119. 21	

CALC. BY F.A.E. 10/67
CHECKED BY H.C.S. 12/68

STA. 254+00 - STA. 255+00

FED. RD. DIVISION	STATE	PROJECT	
2	OHIO		

113
460

SUM-8-17.63

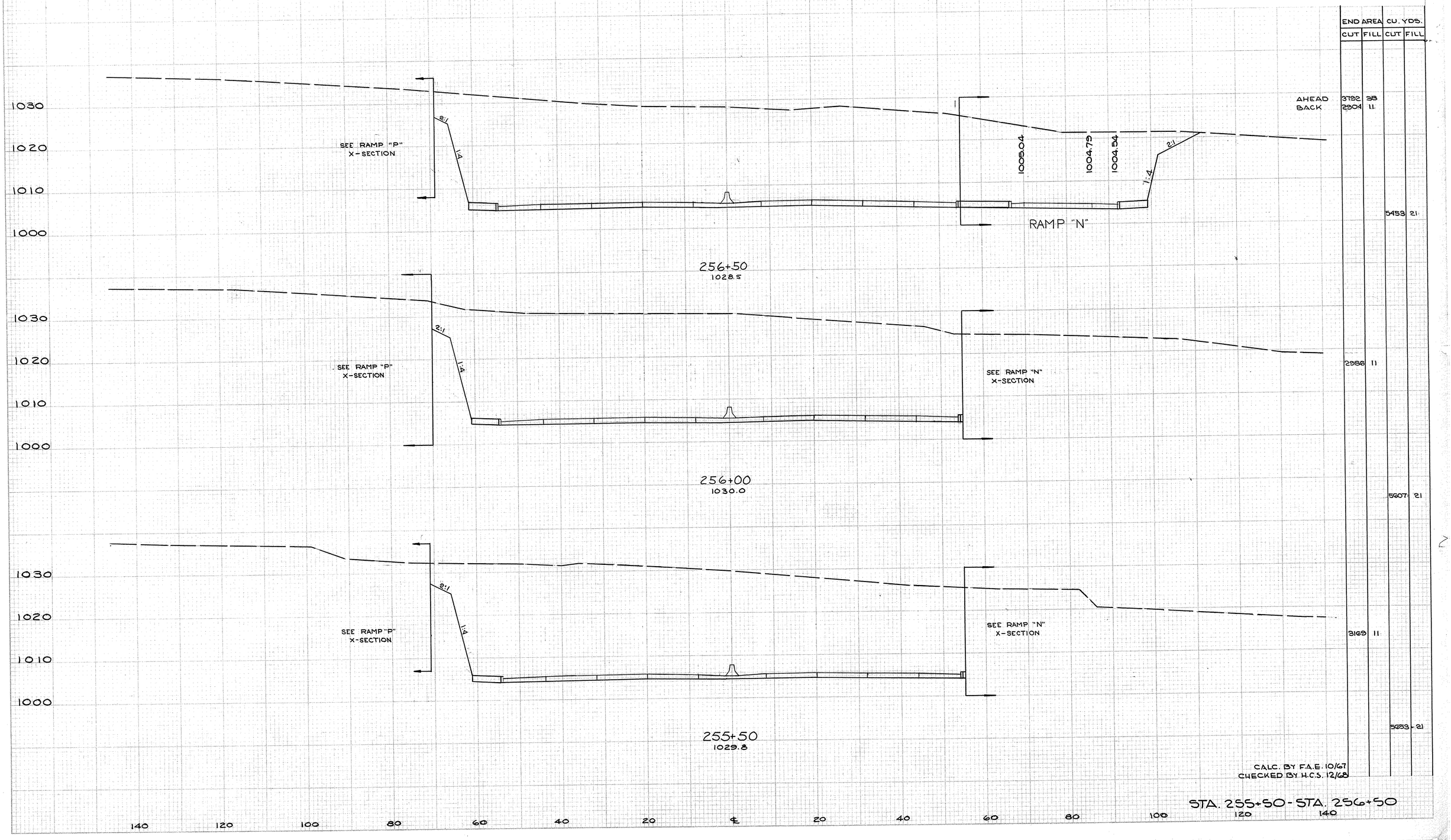

	END AREA CUT	END AREA FILL	CU. YDS. CUT	CU. YDS. FILL
AHEAD	3782	38		
BACK	2304	11		
			5453	21
	2986	11		
			5607	21
	3169	11		
			5653	21

CALC. BY F.A.E. 10/67
CHECKED BY H.C.S. 12/68

STA. 255+50 - STA. 256+50

FED. AID DIVISION	STATE	PROJECT	
2	OHIO		

114
4460

SUM-8-17.63

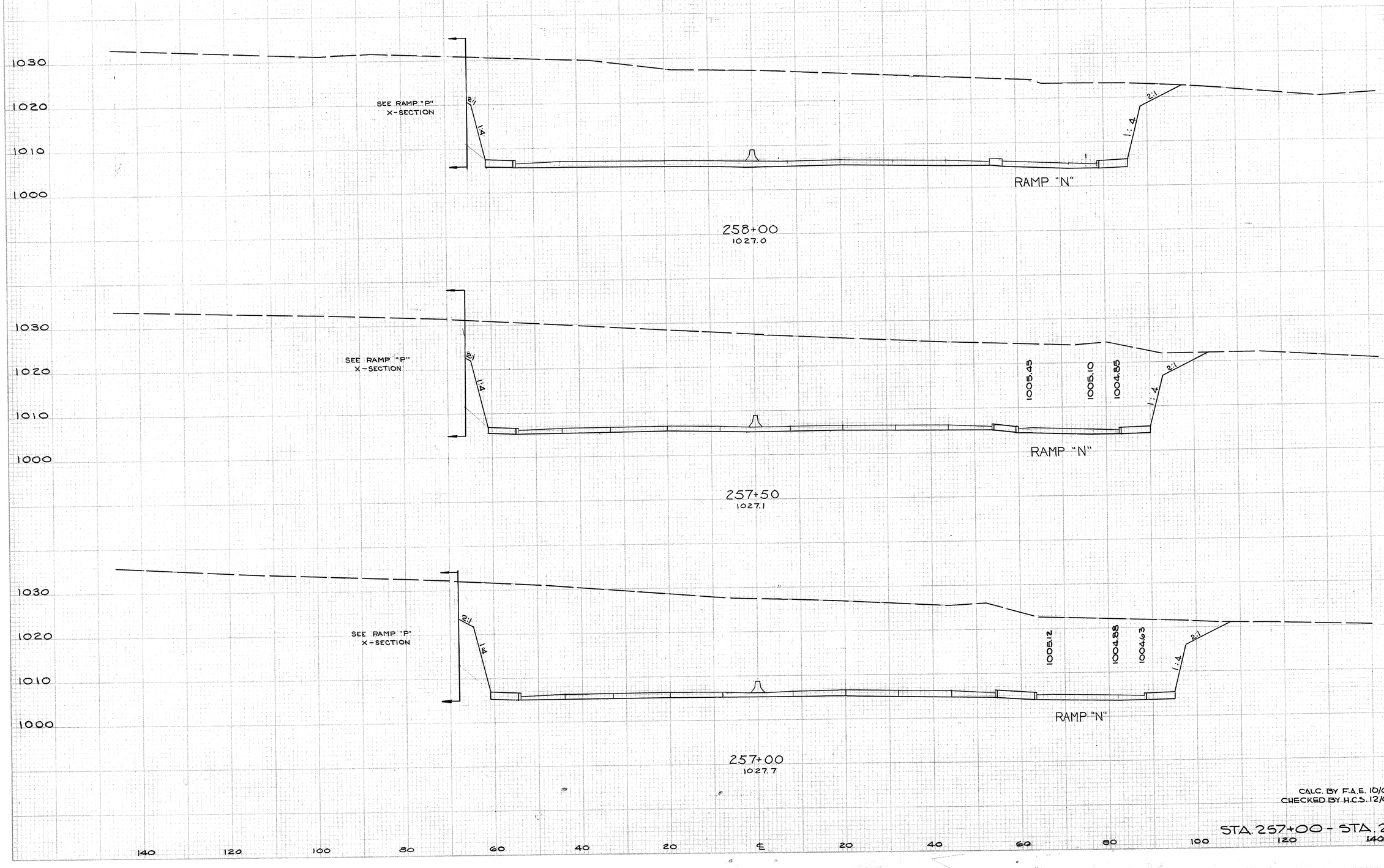

END AREA		CU. YDS	
CUT	FILL	CUT	FILL
3249	25		
		6141	49
3389	28		
		6415	54
3550	30		
		6758	63

CALC. BY F.A.E. 10/67
CHECKED BY H.C.S. 12/68

STA. 257+00 - STA. 258+00

FED. RD. DIVISION	STATE	PROJECT	
2	OHIO		

115
460

SUM-8-17.63

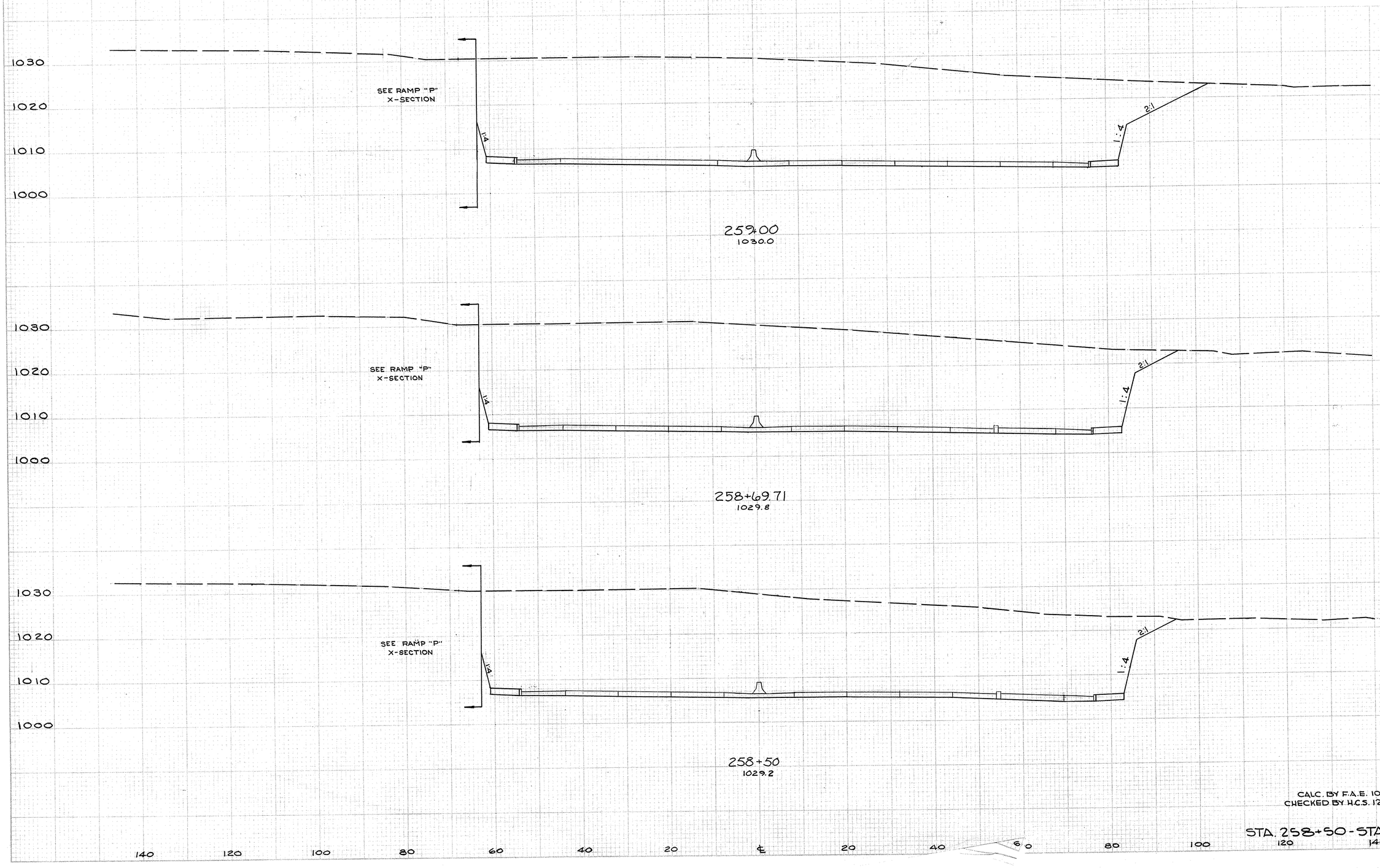

END AREA CUT	END AREA FILL	CU. YDS. CUT	CU. YDS. FILL
	3431	20	
		3773	23
	3361	22	
		2458	16
	3276	22	
		6036	44

CALC. BY F.A.E. 10/67
CHECKED BY H.C.S. 12/68

STA. 258+50 - STA. 259+00

FED. RD. DIVISION	STATE	PROJECT	
2	OHIO		

116
460

SUM-8-17.63

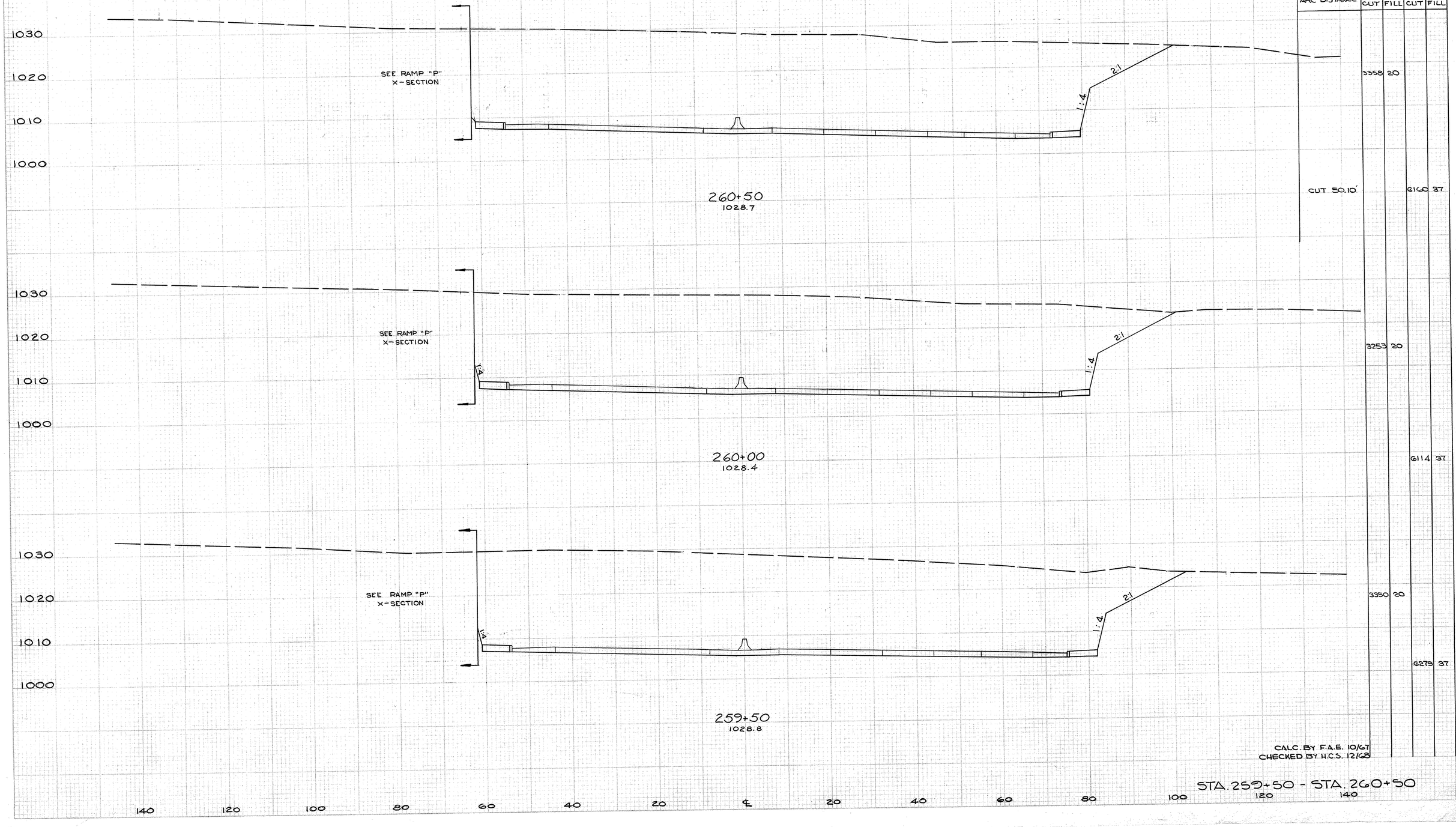

CORRECTED ARC DISTANCE	END AREA CUT	END AREA FILL	CU. YDS. CUT	CU. YDS. FILL
	3358	20		
CUT 50.10'			G160	37
	3253	20		
			G114	37
	3350	20		
			G279	37

CALC. BY F.A.E. 10/67
CHECKED BY H.C.S. 12/68

STA. 259+50 - STA. 260+50

FED. RD. DIVISION	STATE	PROJECT	
2	OHIO		

117
460

SUM-8-17.63

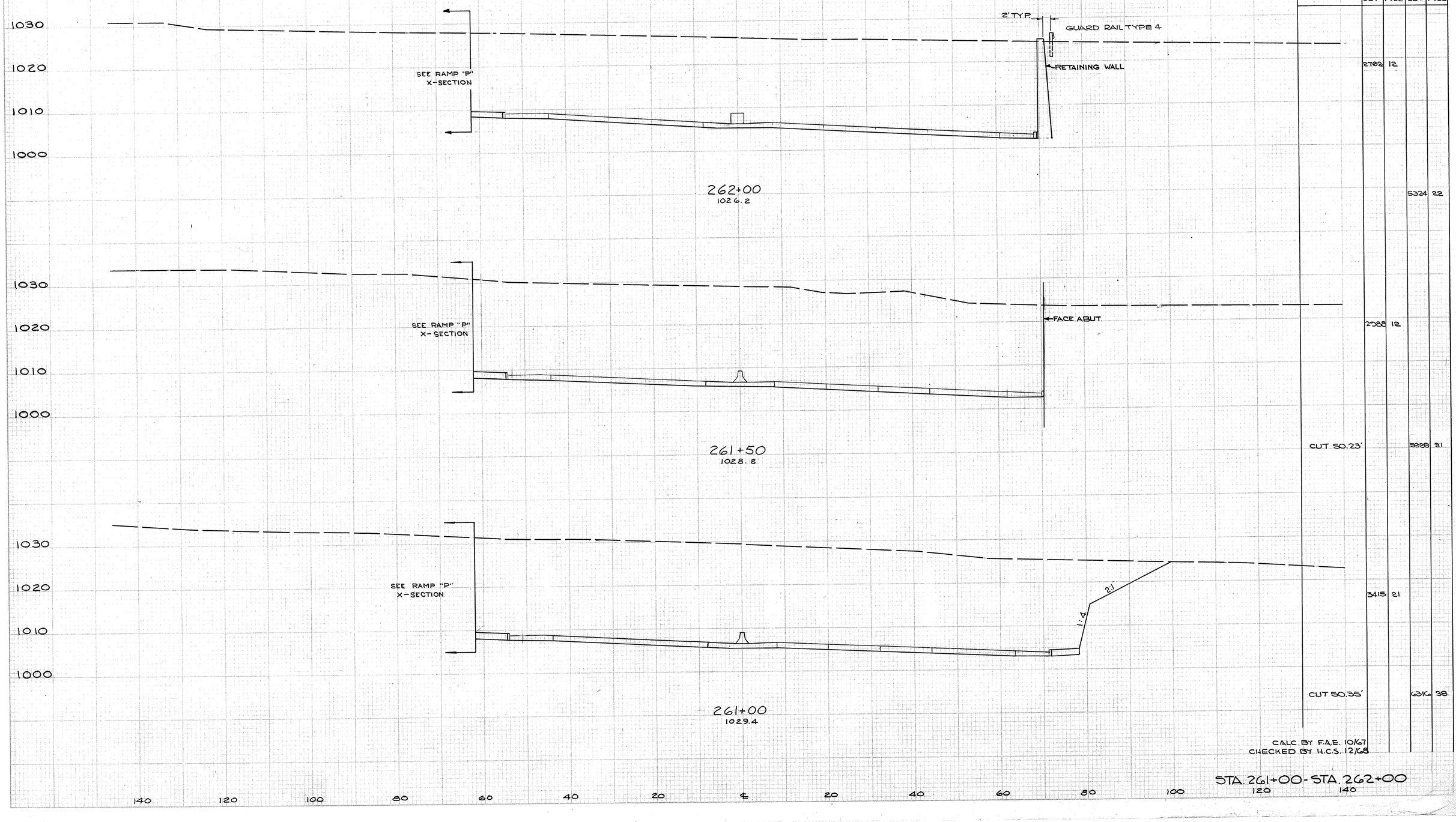

CORRECTED ARC DISTANCE	END AREA CUT	END AREA FILL	CU. YDS CUT	CU. YDS FILL
	2702	12		
			5324	22
	2388	12		
CUT 50.23'			5928	31
	3415	21		
CUT 50.35'			6316	38

CALC. BY F.A.E. 10/67
CHECKED BY H.C.S. 12/68

STA. 261+00 - STA. 262+00

FED. RD. DIVISION	STATE	PROJECT	
2	OHIO		

118
460

SUM-8-17.63

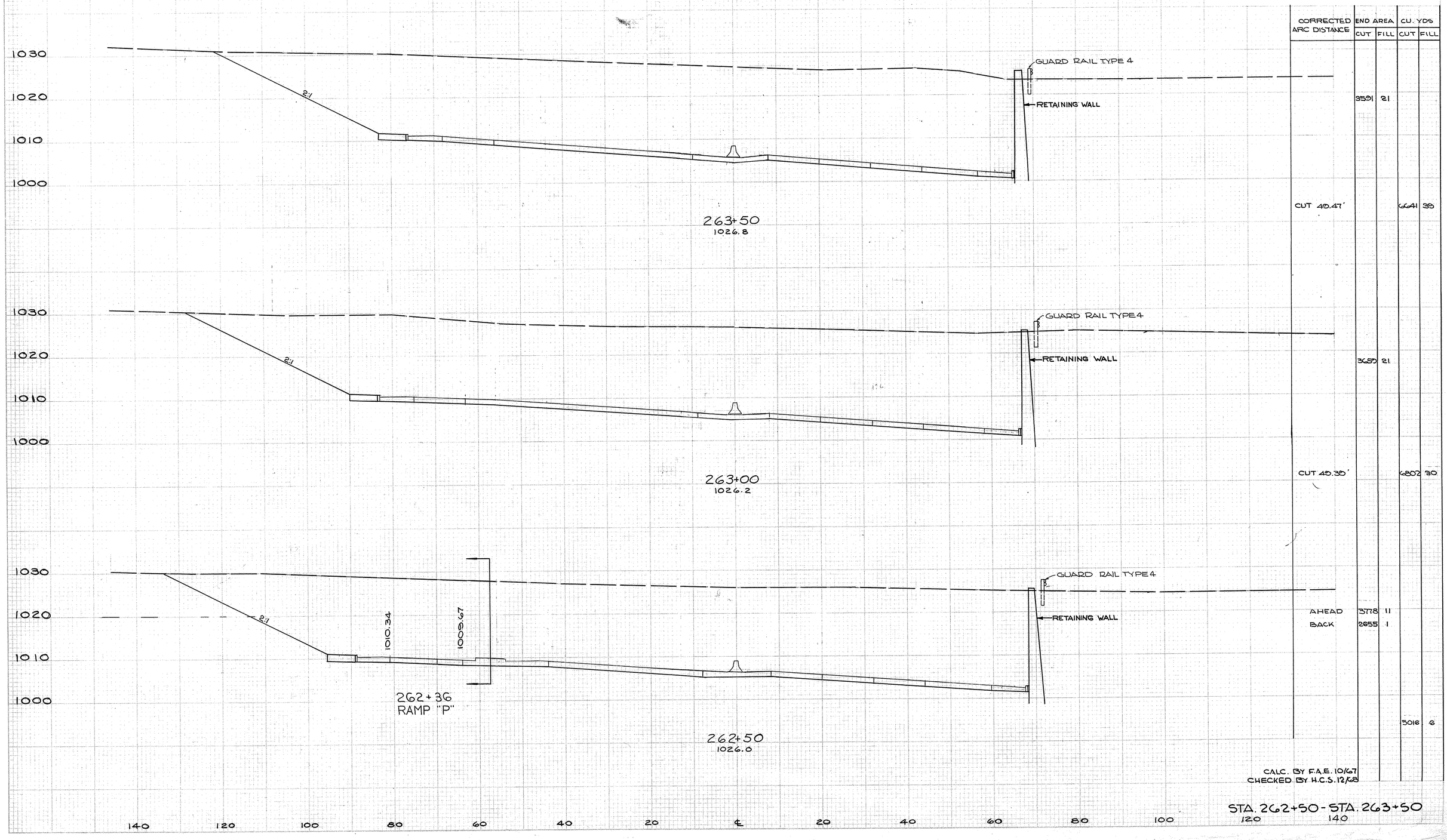

CORRECTED ARC DISTANCE	END AREA CUT	END AREA FILL	CU. YDS CUT	CU. YDS FILL
	3591	21		
CUT 45.47'			6641	38
	3650	21		
CUT 45.39'			6802	30
AHEAD	3778	11		
BACK	2655	1		
			3016	6

CALC. BY F.A.E. 10/67
CHECKED BY H.C.S. 12/68

STA. 262+50 - STA. 263+50

F.A. RD. DIVISION	STATE	PROJECT	
2	OHIO		

119
460

SUM-8-17.63

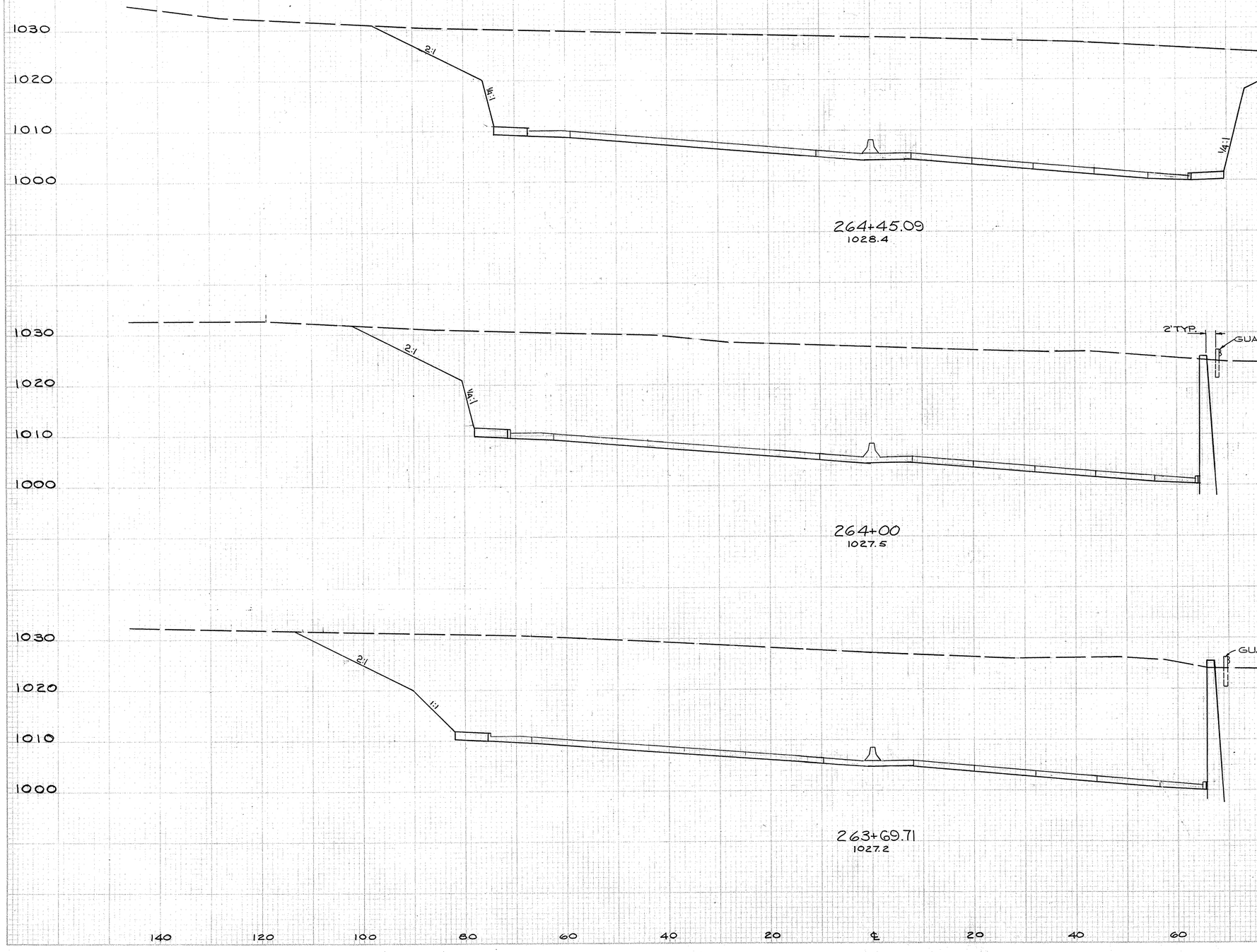

CORRECTED ARC DISTANCE	END AREA CUT	END AREA FILL	CU. YDS. CUT	CU. YDS. FILL
	3650	33		
CUT 44.53'			5832	45
	3350	21		
CUT 30.03'			3550	23
	3574	21		
CUT 15.53'			2501	16

CALC. BY F.A.E. 10/67
CHECKED BY H.C.S. 12/68

STA. 263+70 - STA. 264+45

FED. HWY. DIVISION	STATE	PROJECT		
2	OHIO			

120
460

SUM-8-17.63

CORRECTED ARC DISTANCE	END AREA CUT	END AREA FILL	CU. YDS. CUT	CU. YDS. FILL
	3081	34		
CUT 45.85'			6082	63
	3517	34		
CUT 49.96'			6618	80
	3636	31		
			663	66

CALC. BY F.A.E. 10/67
CHECKED BY H.C.S. 12/68

STA. 264+50 - STA. 265+50

FED. RD. DIVISION	STATE	PROJECT	
2	OHIO		

121
460

SUM-8-17.63

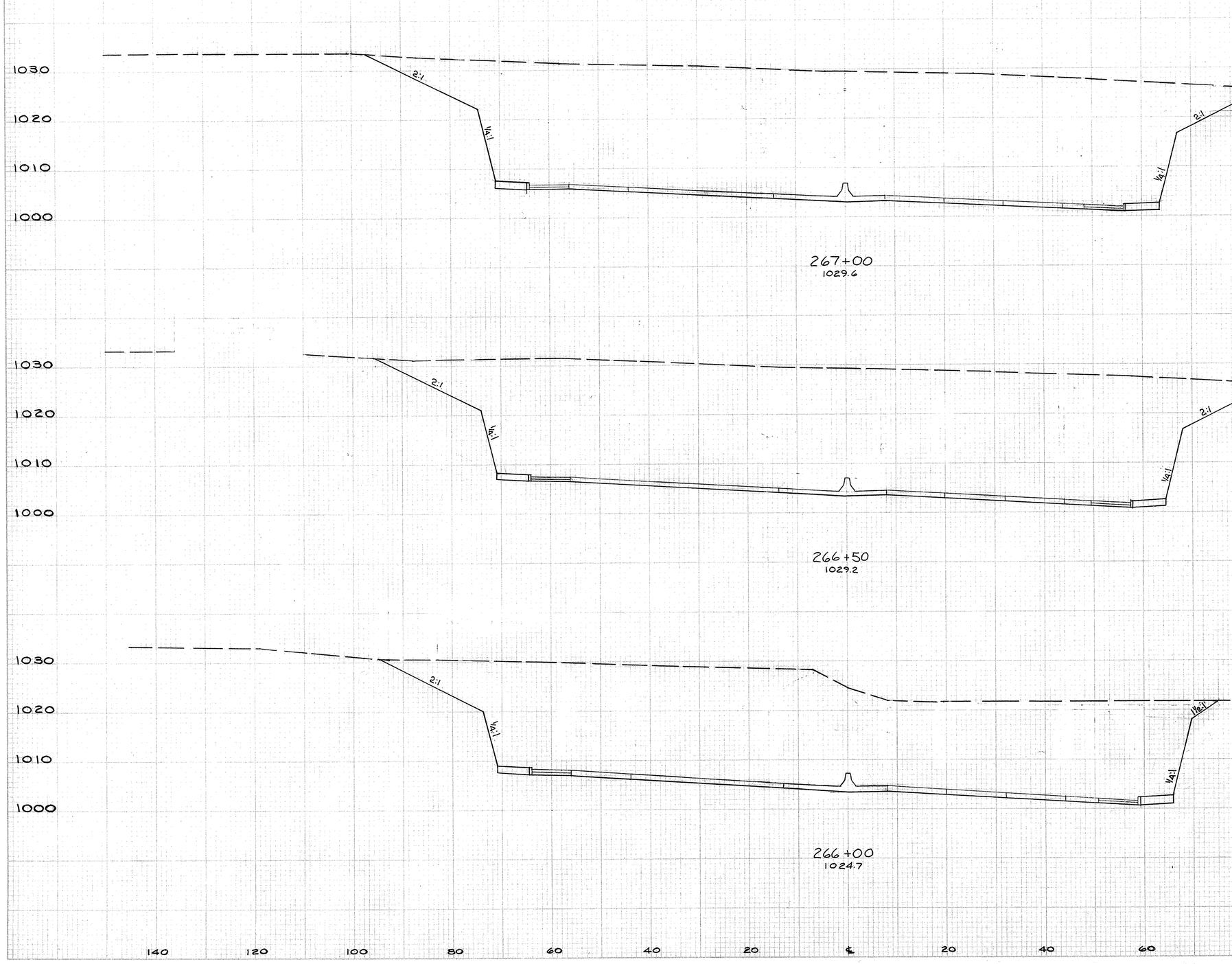

CORRECTED ARC DISTANCE	END AREA CUT	END AREA FILL	CU. YDS. CUT	CU. YDS. FILL
	3868	37		
			7043	69
	3730	37		
CUT 40.83'			6384	66
	3125	34		
CUT 45.75'			5717	63

CALC. BY F.A.E. 10/67
CHECKED BY H.C.S. 12/68

STA. 266+00 - STA. 267+00

FED. RD. DIVISION	STATE	PROJECT	
2	OHIO		

122
4160

SUM-8-17.63

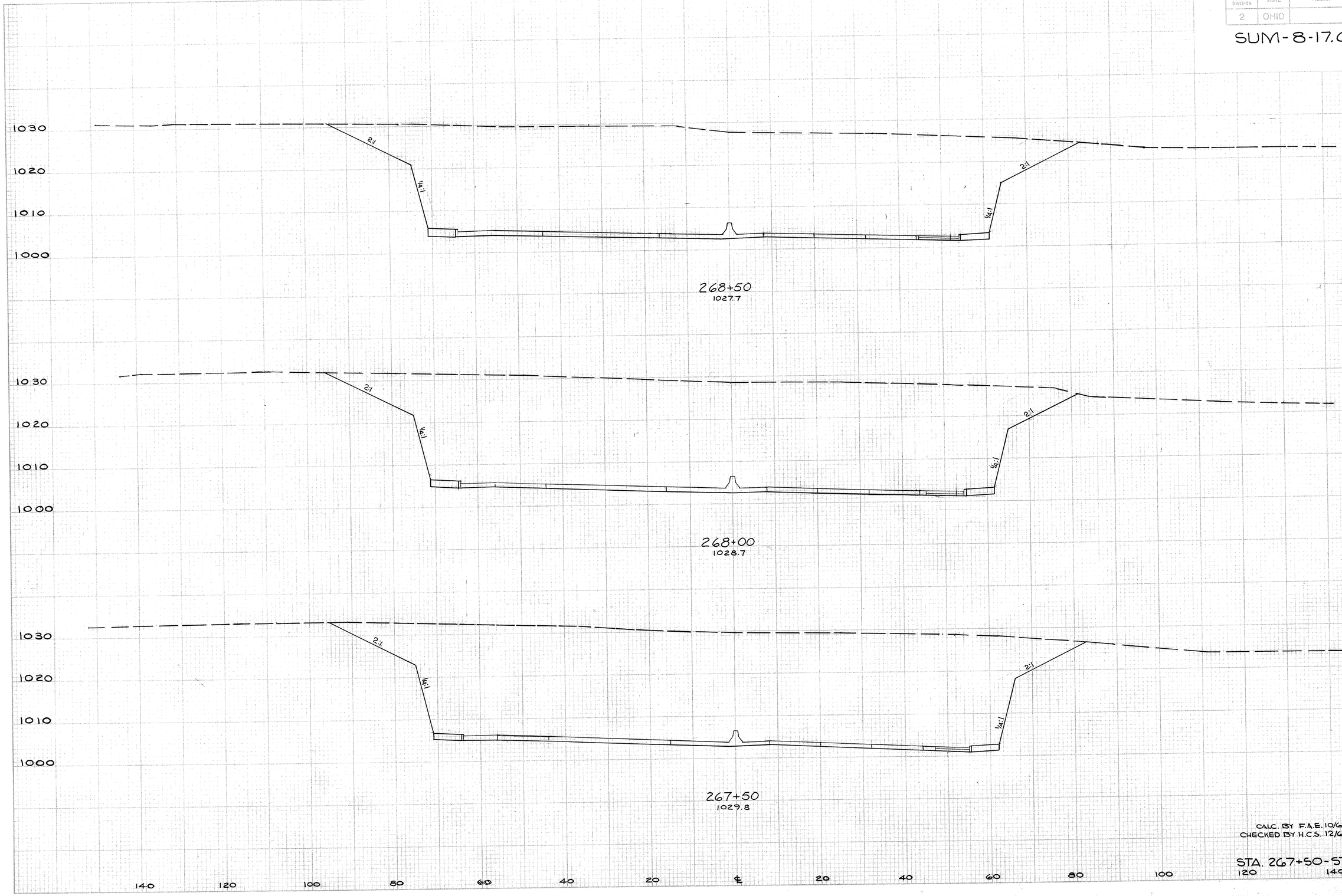

END AREA		CU. YDS.	
CUT	FILL	CUT	FILL
3688	38		
		6267	71
3836	38		
		7209	70
3949	37		
		7234	65

CALC. BY F.A.E. 10/67
CHECKED BY H.C.S. 12/68

STA. 267+50 - STA. 268+50

FED. HWY. DIVISION	STATE	PROJECT	
2	OHIO		

123
460

SUM-8-17.63

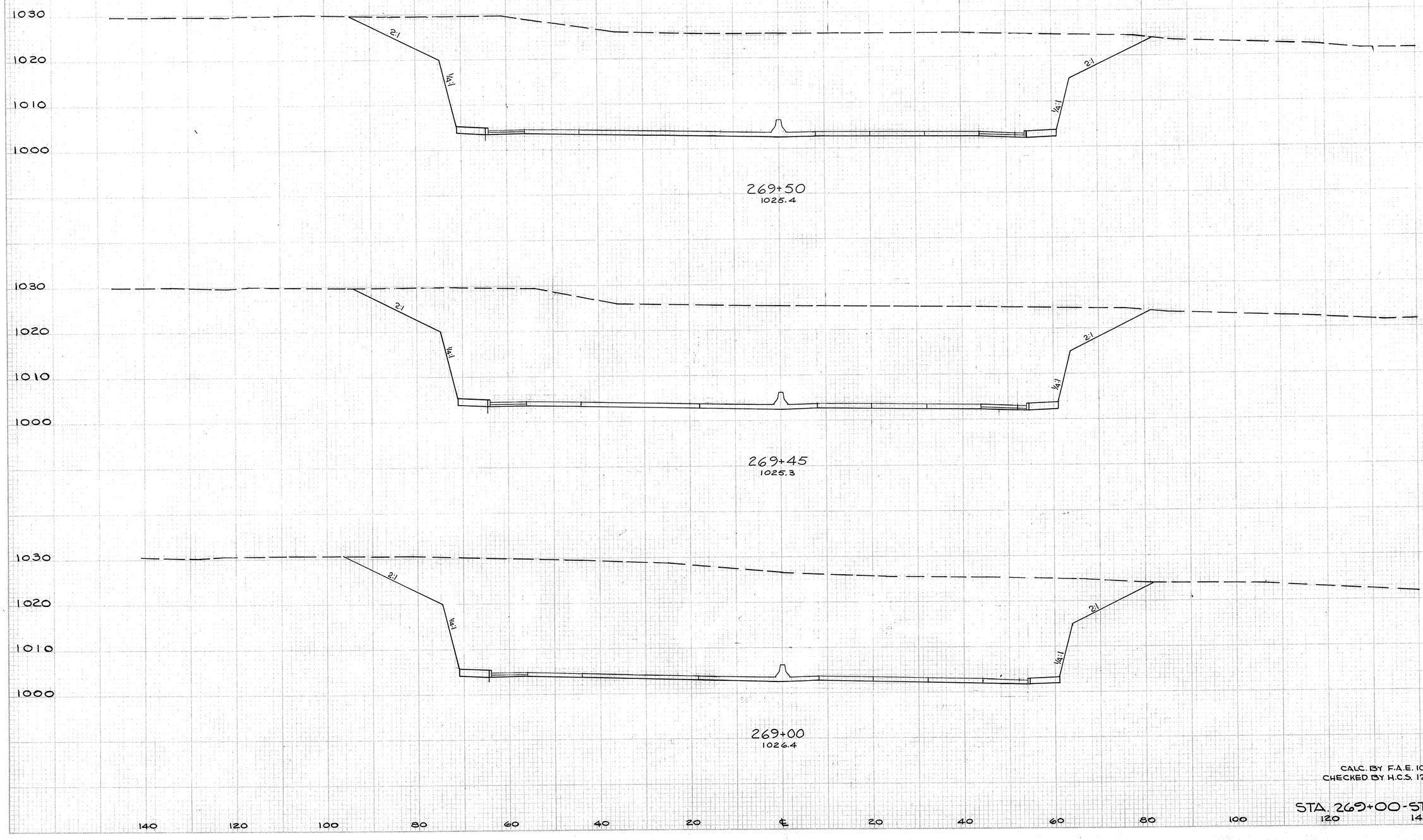

END AREA		CU. YDS.	
CUT	FILL	CUT	FILL
3369	40		
		4623	74
3363	40		
		5761	67
3550	40		
		6702	72

CALC. BY F.A.E. 10/67
CHECKED BY H.C.S. 12/68

STA. 269+00 - STA. 269+50

FED. AV. DIVISION	STATE	PROJECT		
2	OHIO			

124
460

SUM-8-17.63

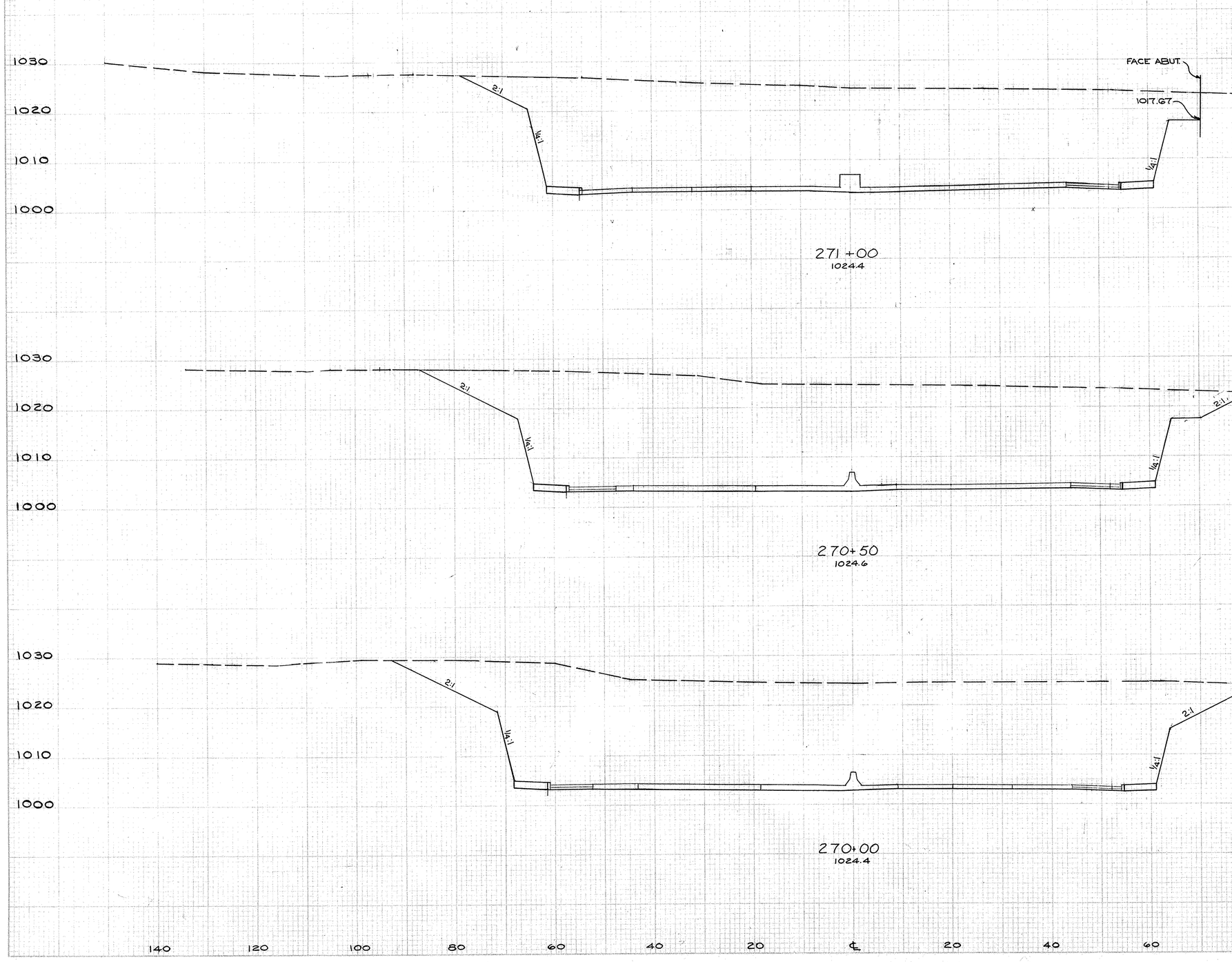

END AREA		CU. YDS.	
CUT	FILL	CUT	FILL
2771	44		
			5347 81
3004	48		
			5703 78
3155	41		
			6042 75

CALC. BY F.A.E. 10/67
CHECKED BY H.C.S. 12/68

STA. 270+00 - STA. 271+00

FED. HIGHWAY DIVISION	STATE	PROJECT	
2	OHIO		

125
460

SUM-8-17.63

END AREA		CU. YDS.	
CUT	FILL	CUT	FILL
3600	51		
		6082	95
2968	51		
		BTG	17
2885	51		
		4294	72

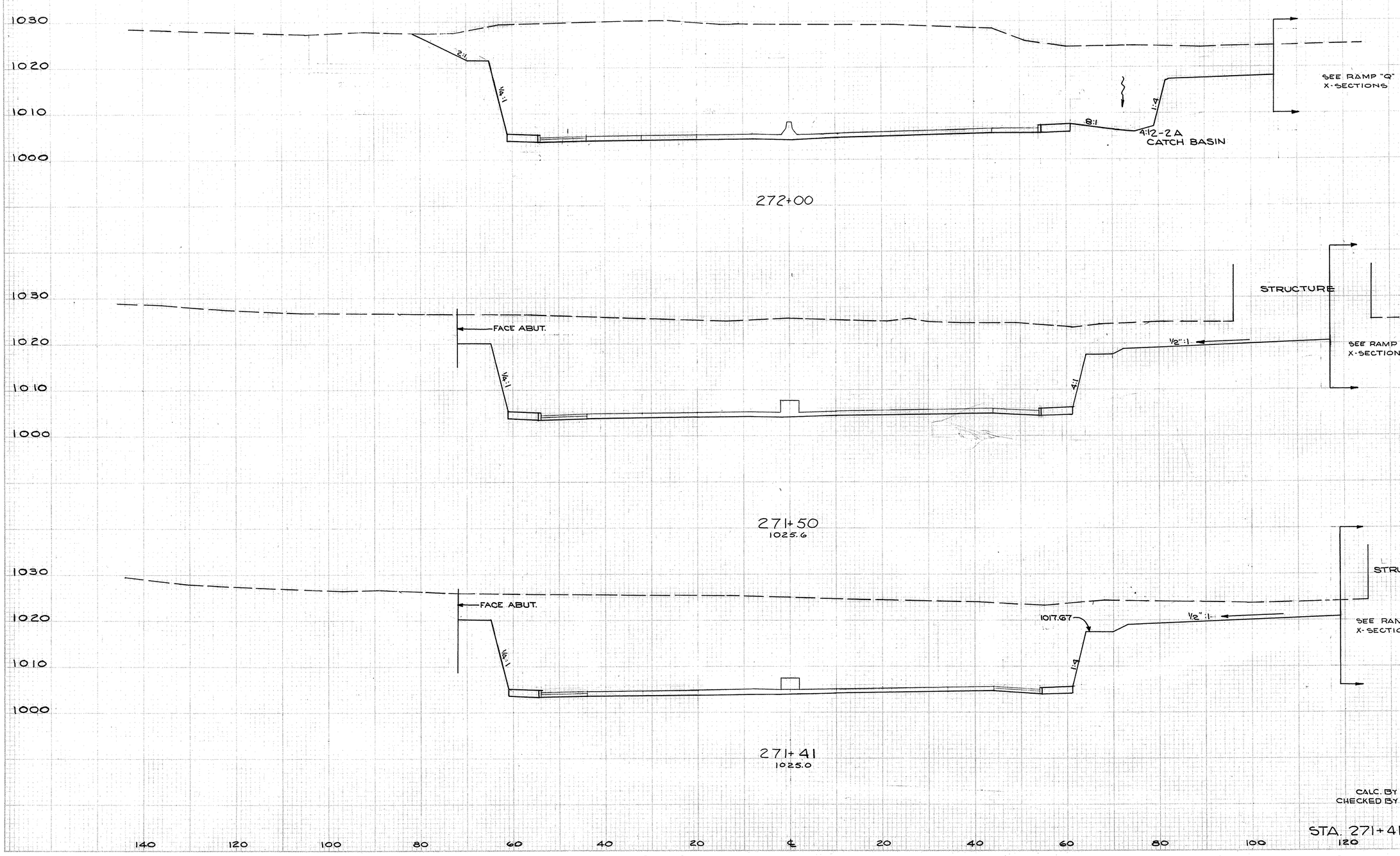

CALC. BY F.A.E. 10/67
CHECKED BY H.C.S. 12/68

STA. 271+41 - 272+00

FED. RD. DIVISION	STATE	PROJECT
2	OHIO	

126
460

SUM-8-17.63

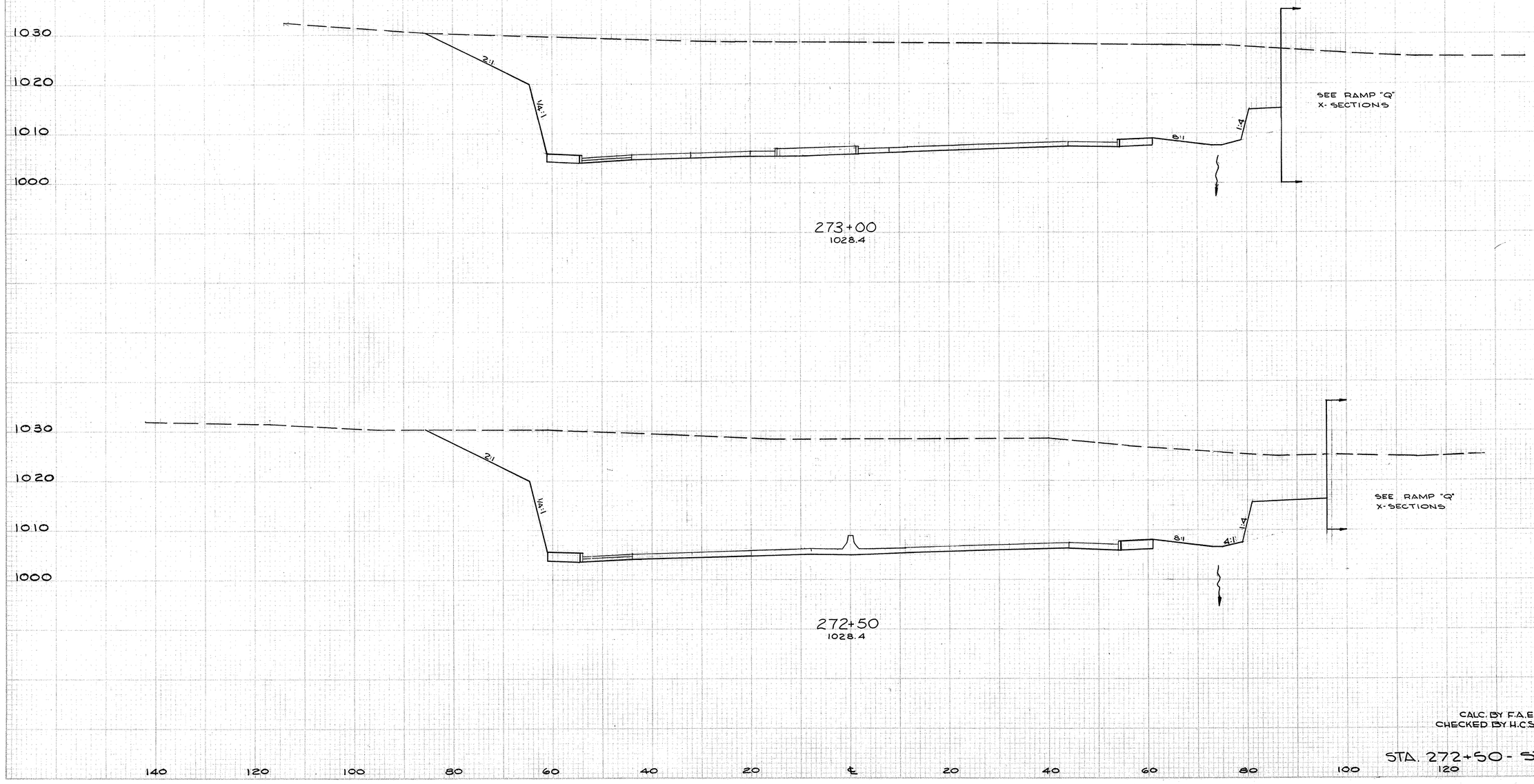

END AREA CU. YDS.			
CUT	FILL	CUT	FILL
	3378	54	
		6427	100
	3562	54	
		6132	87

CALC. BY F.A.E. 10/67
CHECKED BY H.C.S. 12/68

STA. 272+50 - STA. 273+00

FED. RD. DIVISION	STATE	PROJECT	
2	OHIO		

127
460

SUM-8-17.63

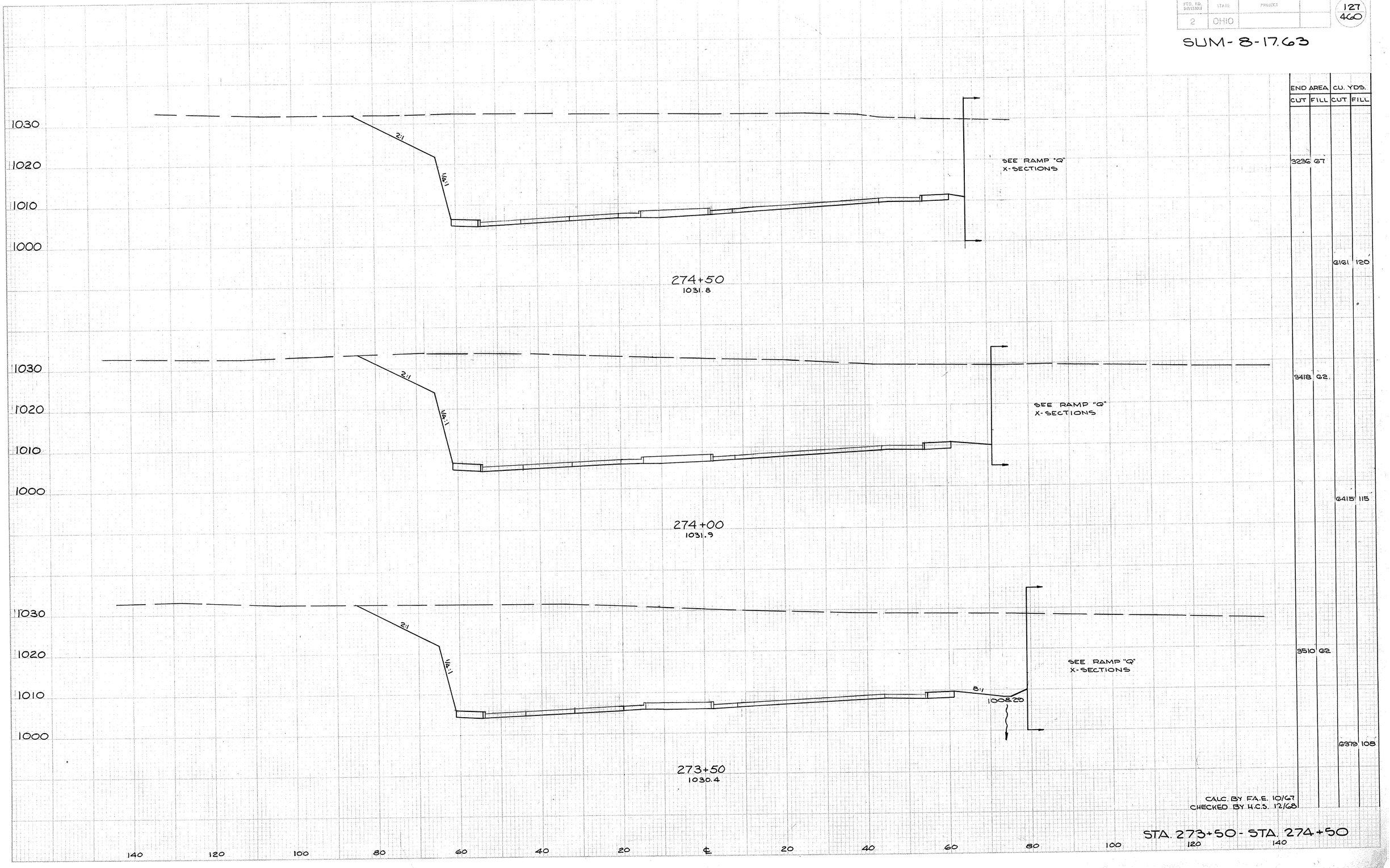

END AREA		CU. YDS.	
CUT	FILL	CUT	FILL
	3236 G7		
		G161	120
	3418 G2		
		G415	115
3510 G2			
		G379	108

CALC. BY F.A.E. 10/67
CHECKED BY H.C.S. 12/68

STA. 273+50 - STA. 274+50

FED. RD. DIVISION	STATE	PROJECT	
2	OHIO		

128
460

SUM-8-17.63

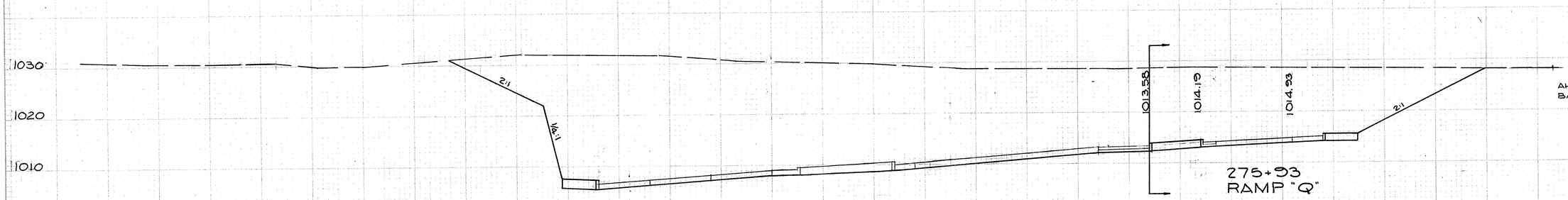

276+00
1029.8

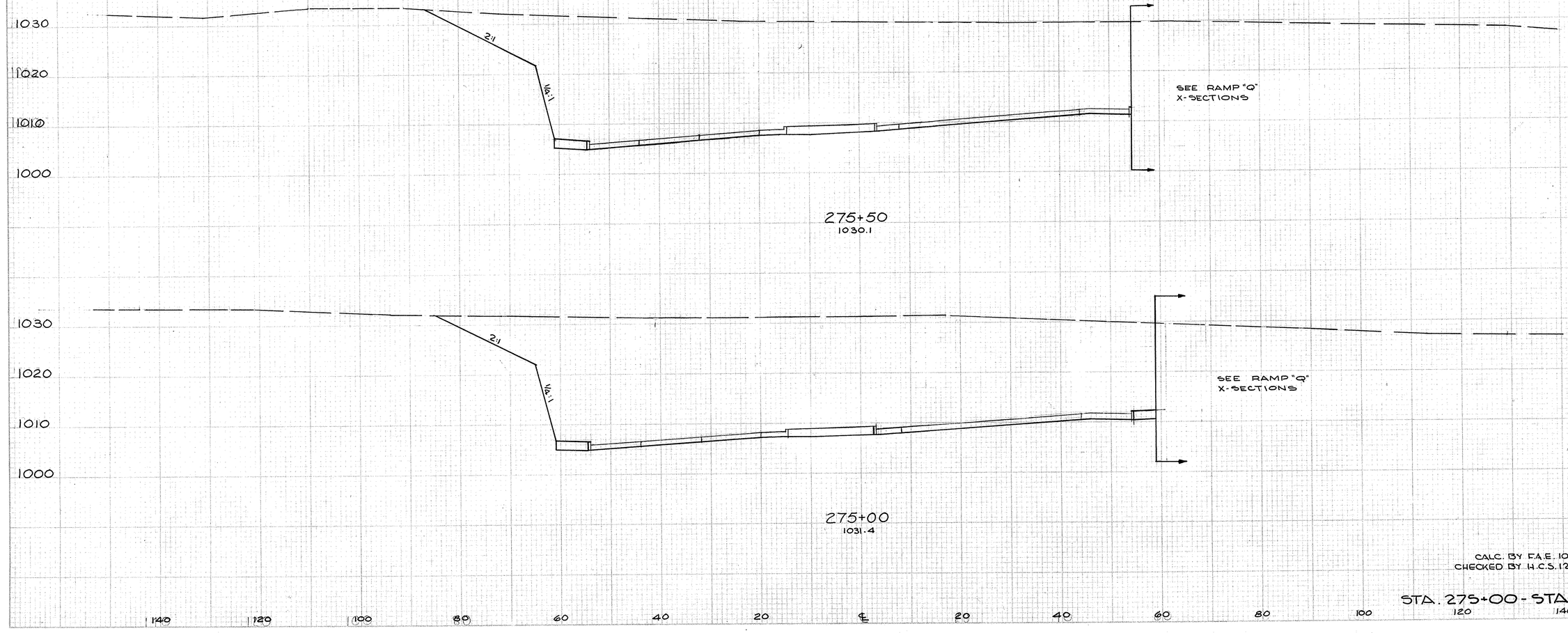

275+50
1030.1

275+00
1031.4

	END AREA		CU. YDS.	
	CUT	FILL	CUT	FILL
AHEAD	3348	85		
BACK	2586	24		
			4913	77
	2720	60		
			5277	113
			2979	62
			5662	120

CALC. BY F.A.E. 10/67
CHECKED BY H.C.S. 12/68

STA. 275+00 - STA. 276+00

140 120 100 80 60 40 20 ℄ 20 40 60 80 100 120 140

FED. RD. DIVISION	STATE	PROJECT	
2	OHIO		

1284
460

SUM-8-17.63

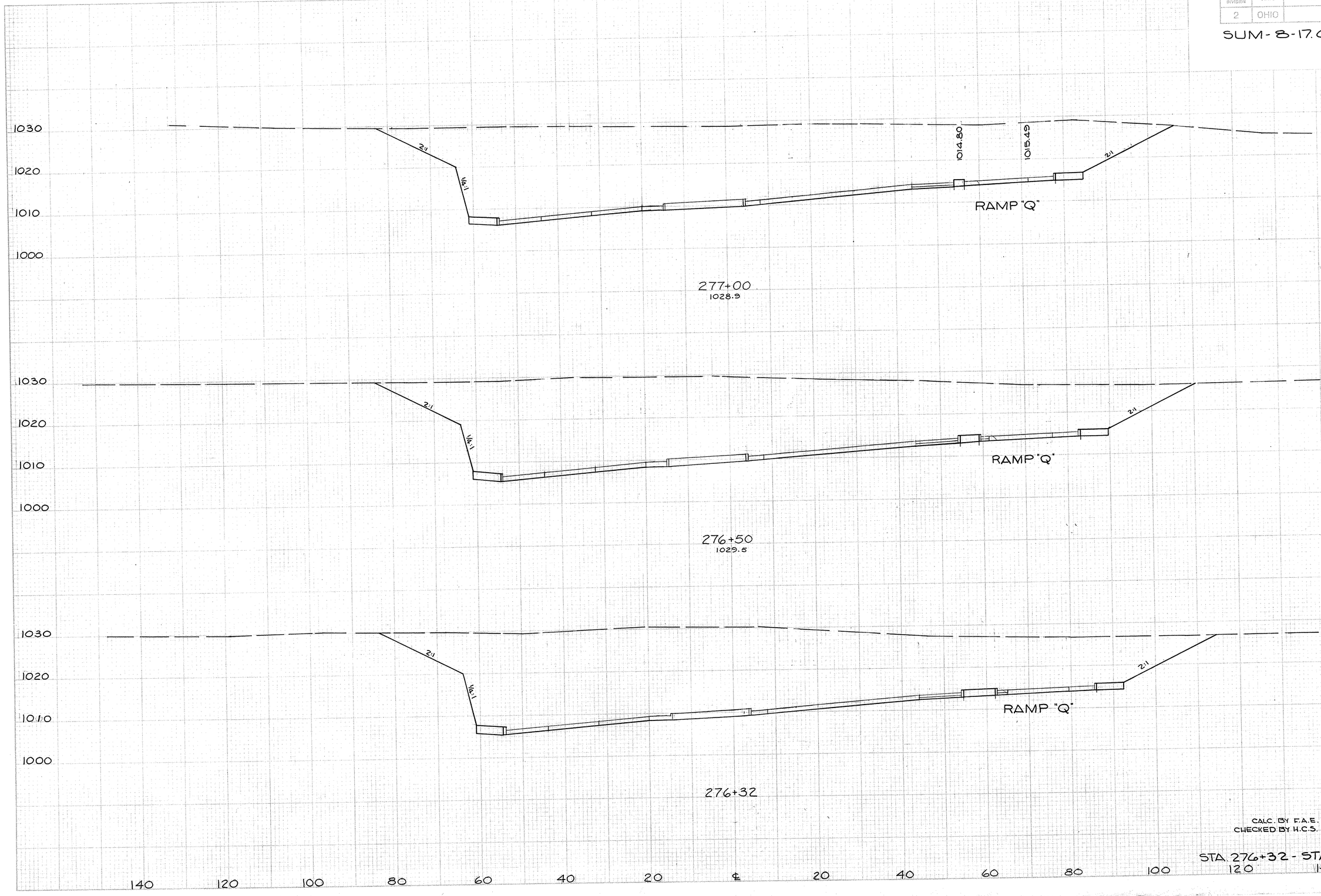

END AREA		CU. YDS.	
CUT	FILL	CUT	FILL
2884	80		
		5425	152
2575	84		
		2024	55
3087	80		
		3719	98

CALC. BY F.A.E. 10/67
CHECKED BY H.C.S. 12/68

STA. 276+32 - STA. 277+00

PROJ. NO. DIVISION	STATE	PROJECT	
2	OHIO		

129
460

SUM-8-17.63

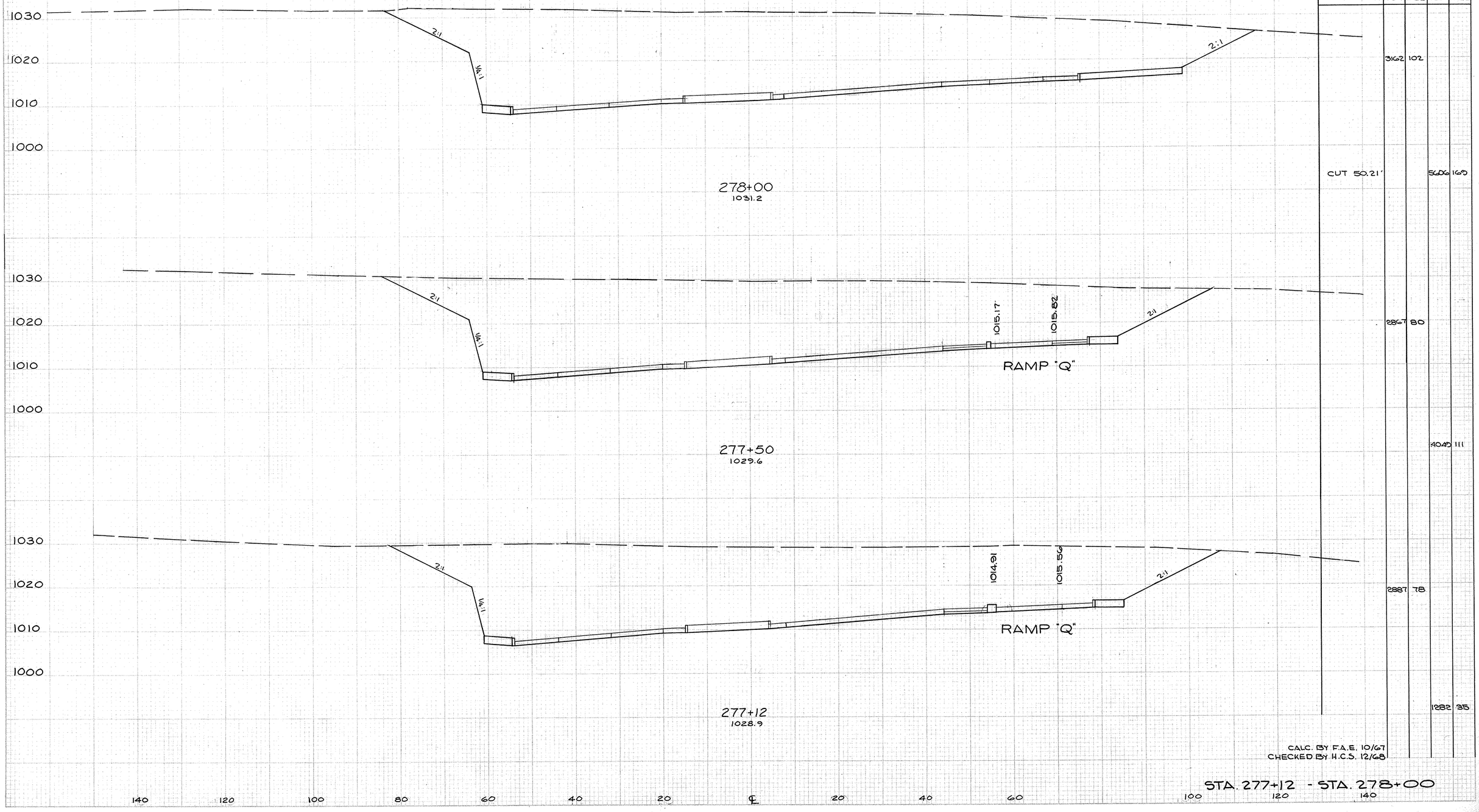

CORRECTED ARC DISTANCE	END AREA CUT	END AREA FILL	CU. YDS. CUT	CU. YDS. FILL
	3162	102		
CUT 50.21'			5606	169
	2867	80		
	4043	111		
	2887	78		
	1282	35		

CALC. BY F.A.E. 10/67
CHECKED BY H.C.S. 12/68

STA. 277+12 - STA. 278+00

SHEET	DATE		
9	OHIO		

130
4660

SUM-8-17.63

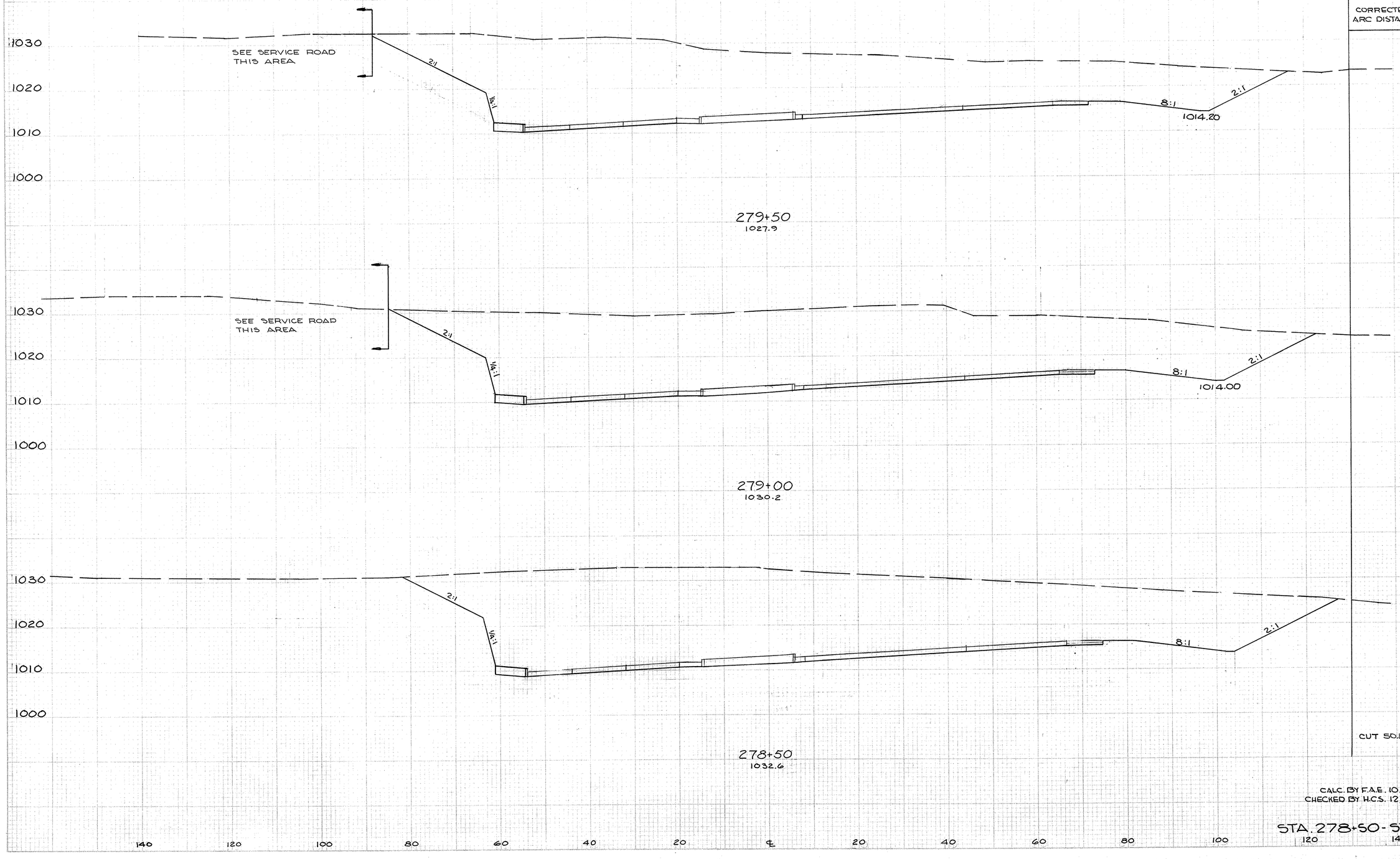

CORRECTED ARC DISTANCE	END AREA CUT	END AREA FILL	CU. YDS. CUT	CU. YDS. FILL
	2537	62		
			4945	125
	2803	73		
			5647	131
	3225	68		
CUT 50.84'			6018	157

CALC. BY F.A.E. 10/67
CHECKED BY H.C.S. 12/68

STA. 278+50 - STA. 279+50

FED. RD. DIVISION	STATE	PROJECT	
2	OHIO		

131
460

SUM-8-17.63

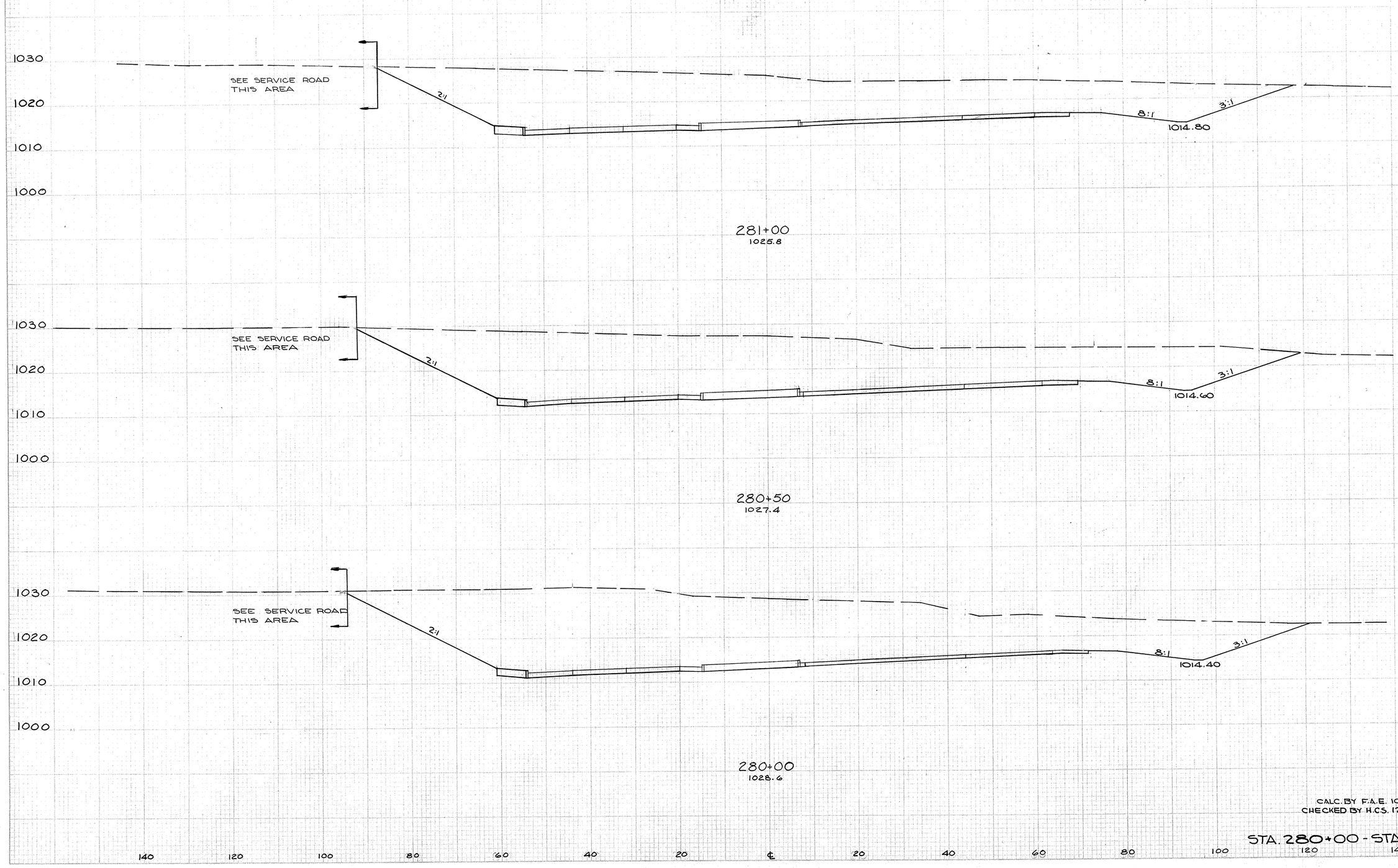

END AREA		CU. YDS	
CUT	FILL	CUT	FILL
1903	76		
		3796	150
2198	77		

FED. HD. DIVISION	STATE	PROJECT	
2	OHIO		

132
460

SUM-8-17.63

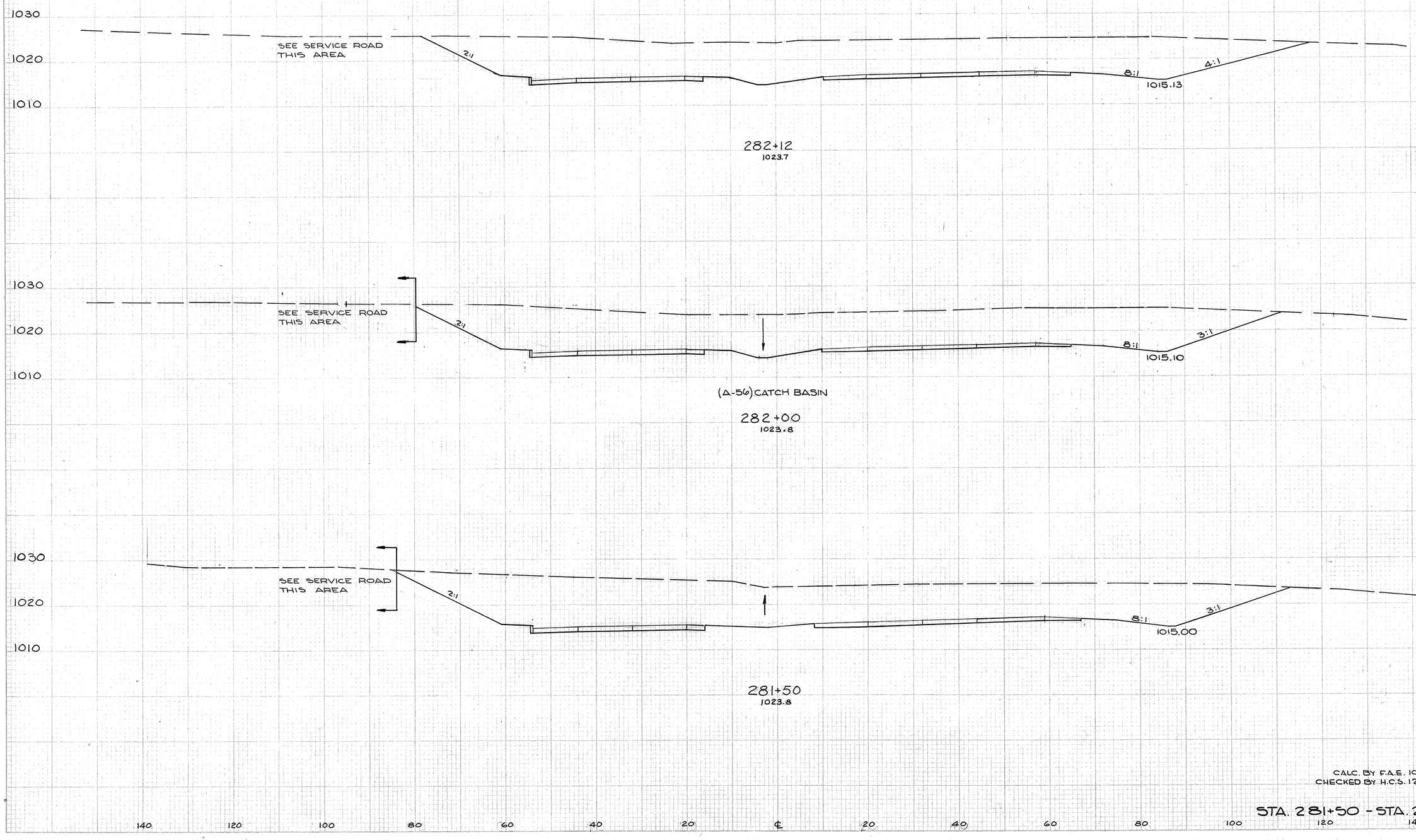

END AREA		CU.YDS.	
CUT	FILL	CUT	FILL
1491	0		
		867	0
1509	0		
		2981	0
1656	0		
		3296	71

CALC. BY F.A.E. 10/67
CHECKED BY H.C.S. 12/68

STA. 281+50 - STA. 282+12

FED. ROAD DIVISION	STATE	PROJECT	
2	OHIO		

133
460

SUM-8-17.63

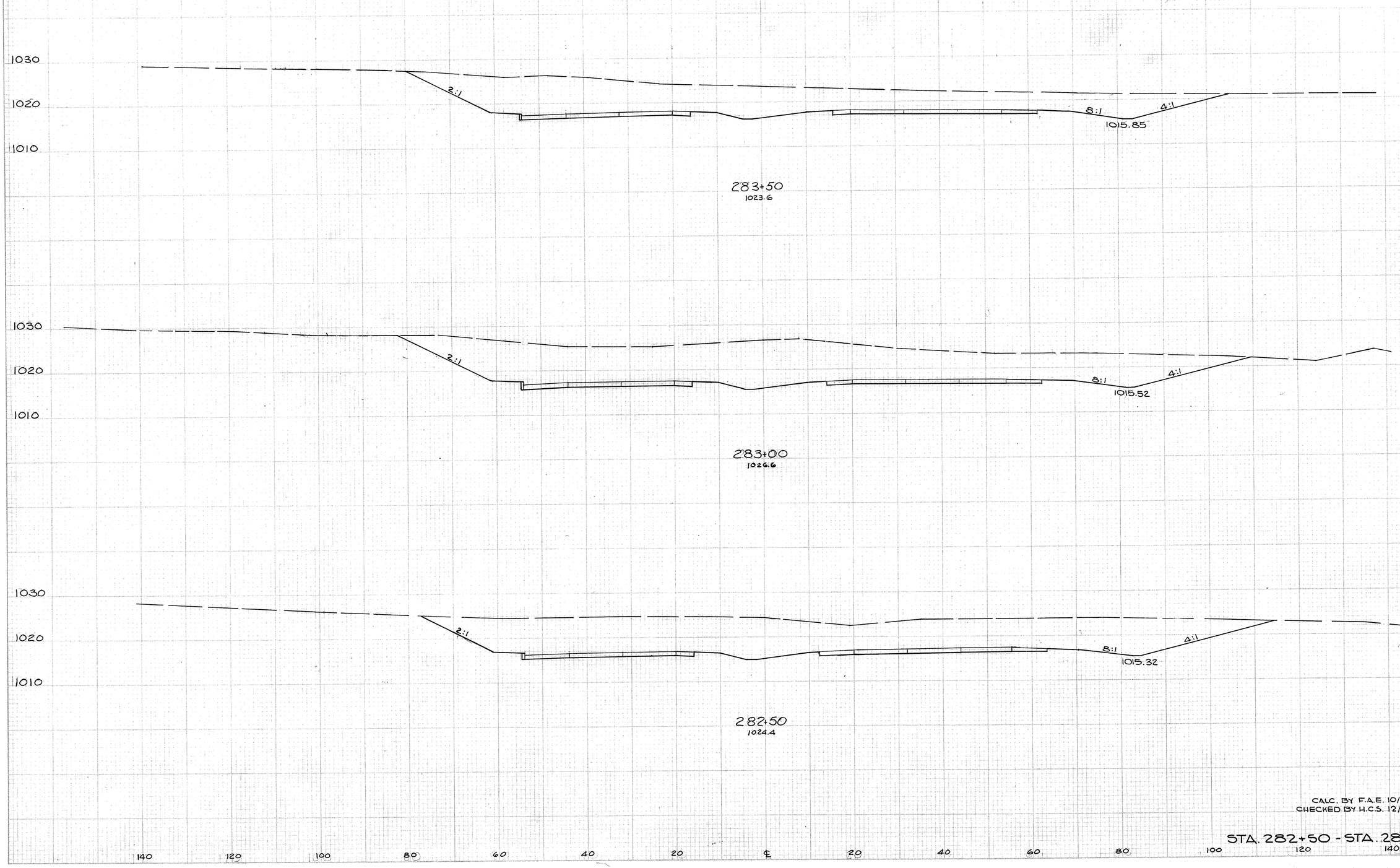

END AREA		CU. YDS	
CUT	FILL	CUT	FILL
1037	0		
		2268	0
1412	0		
		2545	0
1336			
		1989	0

CALC. BY F.A.E. 10/67
CHECKED BY H.C.S. 12/68

STA. 282+50 - STA. 283+50

FED. RD. DIVISION	STATE	PROJECT	
2	OHIO		

134
460

SUM-8-17.63

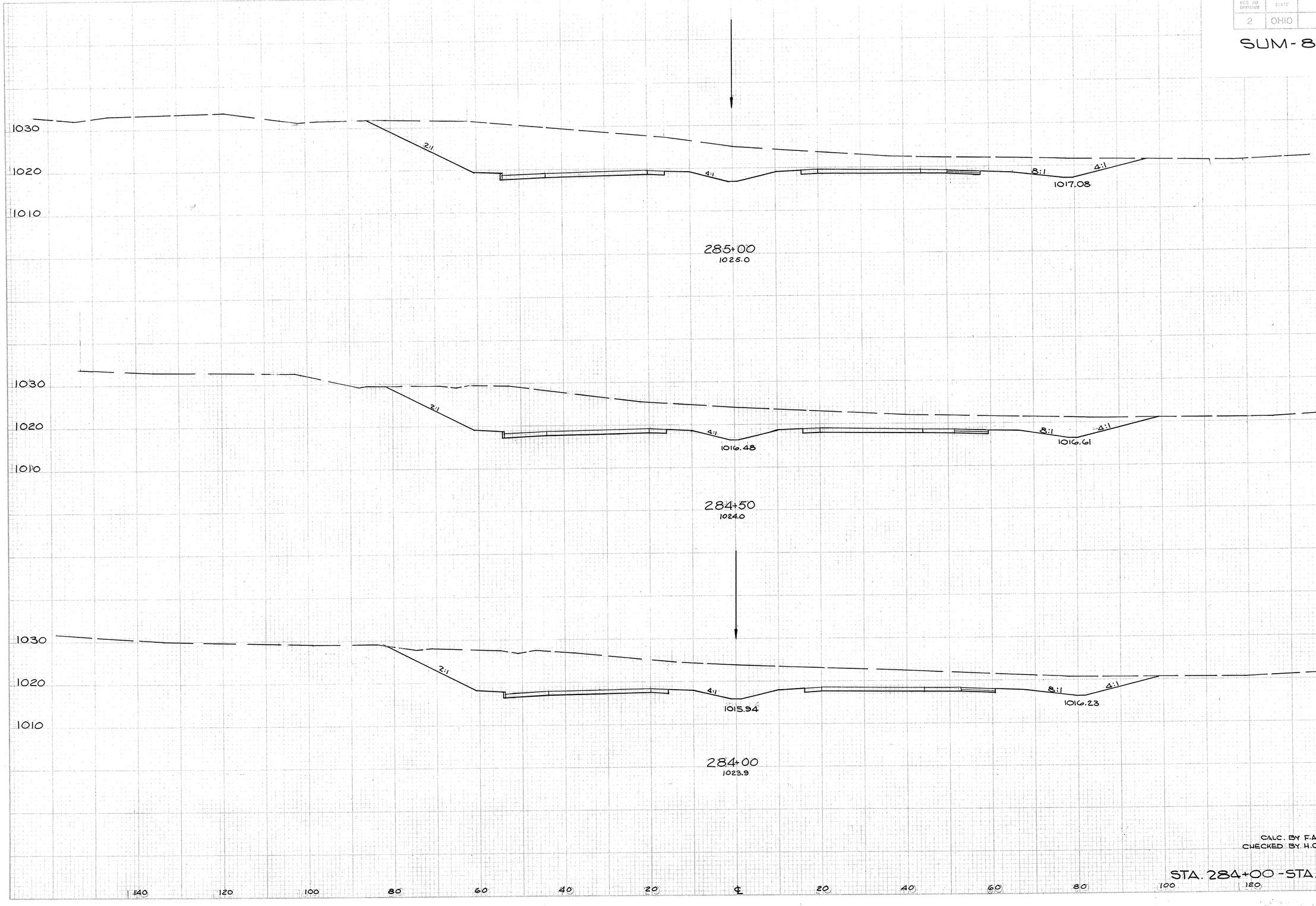

END AREA		CU. YDS	
CUT	FILL	CUT	FILL
1160	0		
		2087	0
1089	0		
		1992	0
1058	0		
		1980	0

CALC. BY F.A.E. 10/67
CHECKED BY H.C.S. 12/68

STA. 284+00 - STA. 285+00

FED. RD. DIVISION	STATE	PROJECT	
2	OHIO		

135
460

SUM-8-17.63

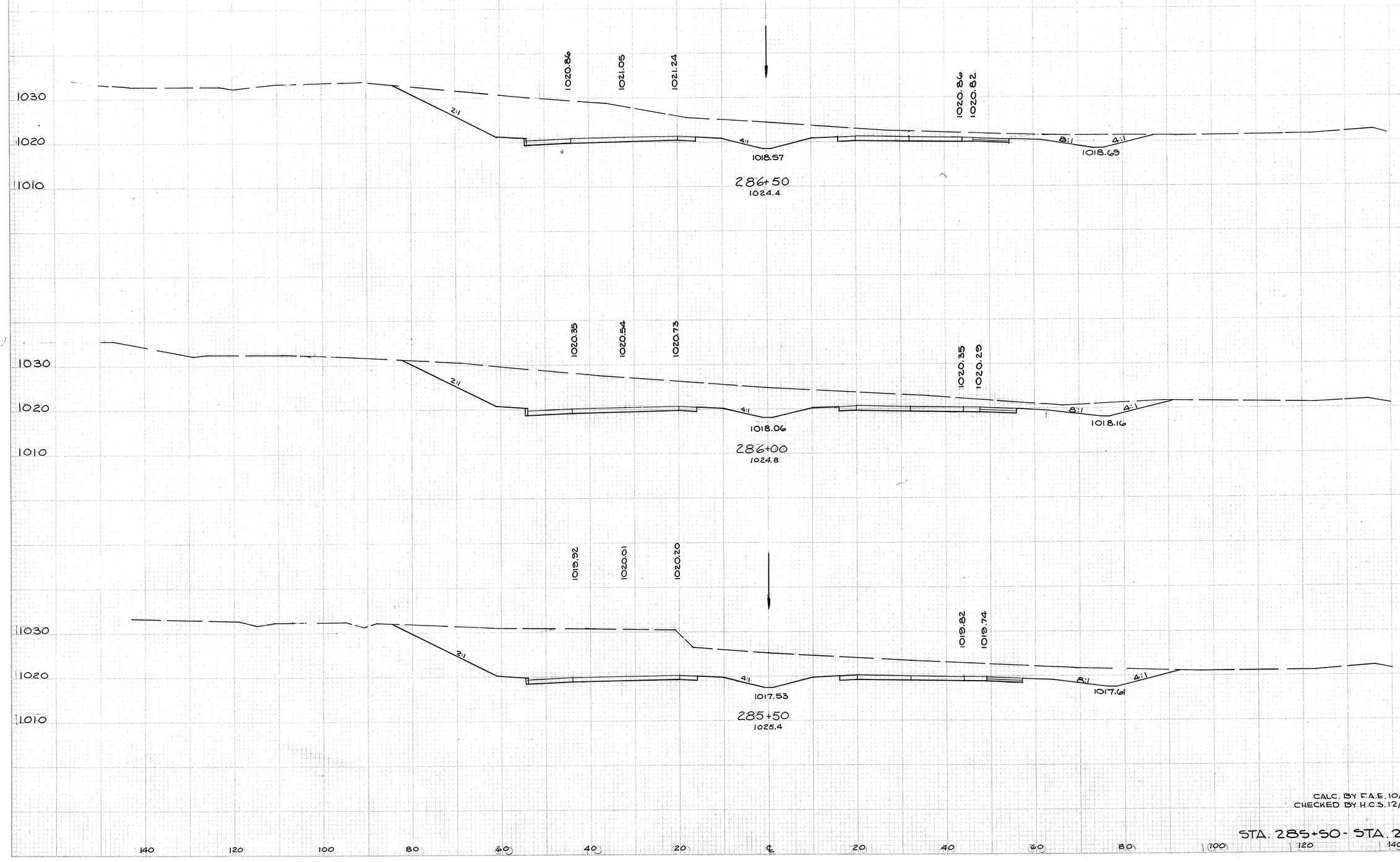

END AREA		CU.YDS.	
CUT	FILL	CUT	FILL
765	0		
		2360	0
1880	0		
		2789	0
1106	0		
		2099	0

CALC. BY F.A.S. 10/67
CHECKED BY H.C.S. 12/68

STA. 285+50 - STA. 286+50

FED. RD. DIVISION	STATE	PROJECT	
2	OHIO		

136
460

SUM-8-17.63

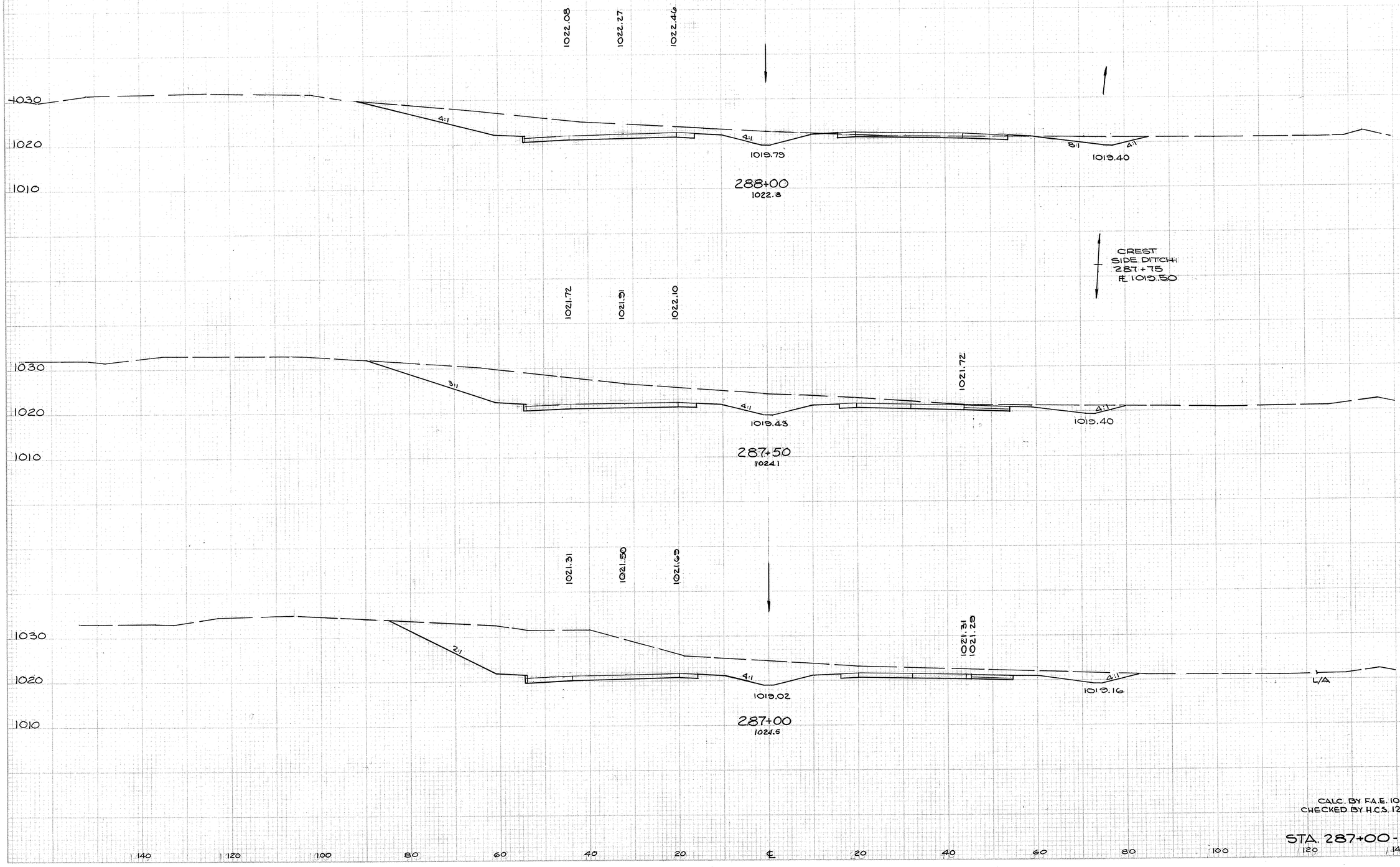

END AREA		CU. YDS.	
CUT	FILL	CUT	FILL
336	1		
		846	1
577	0		
		1482	0
807	0		
		1456	0

CALC. BY F.A.E. 10/67
CHECKED BY H.C.S. 12/68

STA. 287+00 - STA. 288+00

FED. RD. DIVISION	STATE	PROJECT	
2	OHIO		

137
460

SUM-8-17.63

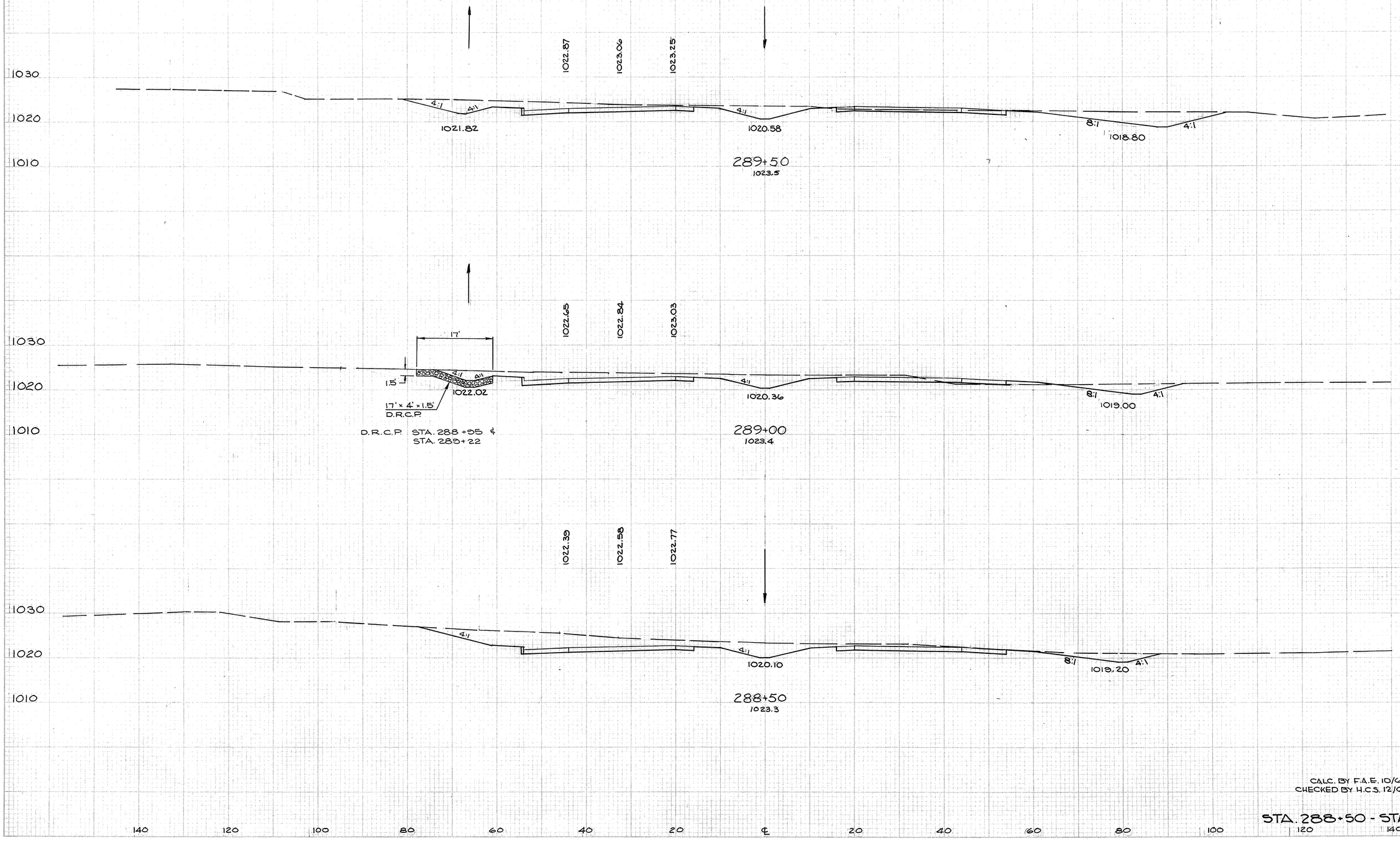

END AREA		CU. YDS.	
CUT	FILL	CUT	FILL
233	1		
		421	7
211	6		
		473	6
300	0		
		586	1

CALC. BY F.A.E. 10/67
CHECKED BY H.C.S. 12/68

STA. 288+50 - STA. 289+50

FED. RD. DIVISION	STATE	PROJECT	
2	OHIO		

138
460

SUM-8-17.63

	END AREA		CU. YDS.	
	CUT	FILL	CUT	FILL
		42		
			245	45
	153	6		
			327	6
	200	0		
			410	1

CALC. BY F.A.E. 10/67
CHECKED BY H.C.S. 12/68

STA. 290+00 - STA. 291+00

FED. RD. DIVISION	STATE	PROJECT	
2	OHIO		

130
460

SUM-8-17.63

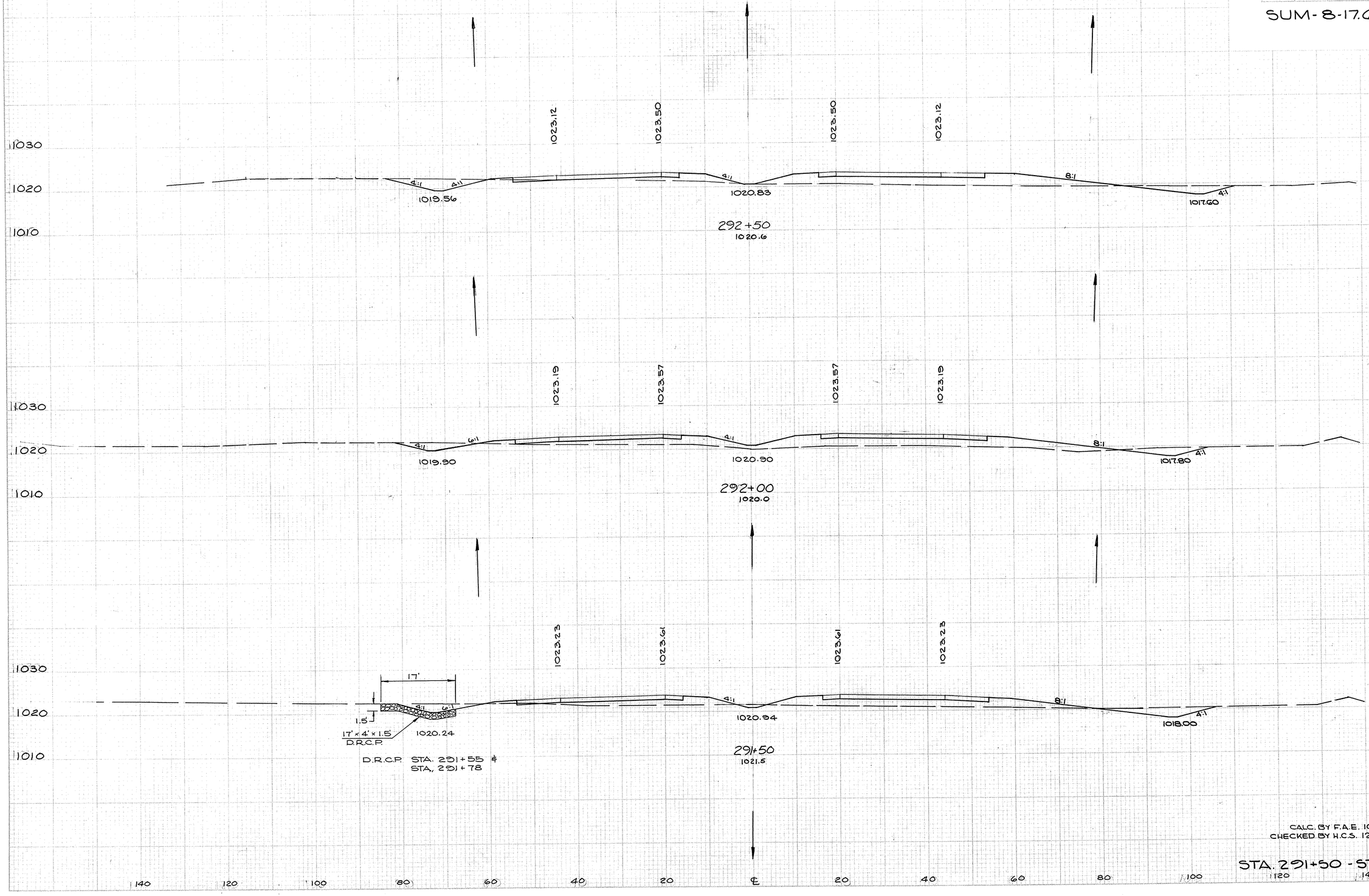

D.R.C.P. STA. 291+55 &
STA. 291+78

END AREA		CU. YDS.	
CUT	FILL	CUT	FILL
50	170		
		72	356
28	214		
		70	325
48	142		
		147	171

CALC. BY F.A.E. 10/67
CHECKED BY H.C.S. 12/68

STA. 291+50 - STA. 292+50

FED. RD. DIVISION	STATE	COUNTY	
2	OHIO		

140
460

SUM-8-17.63

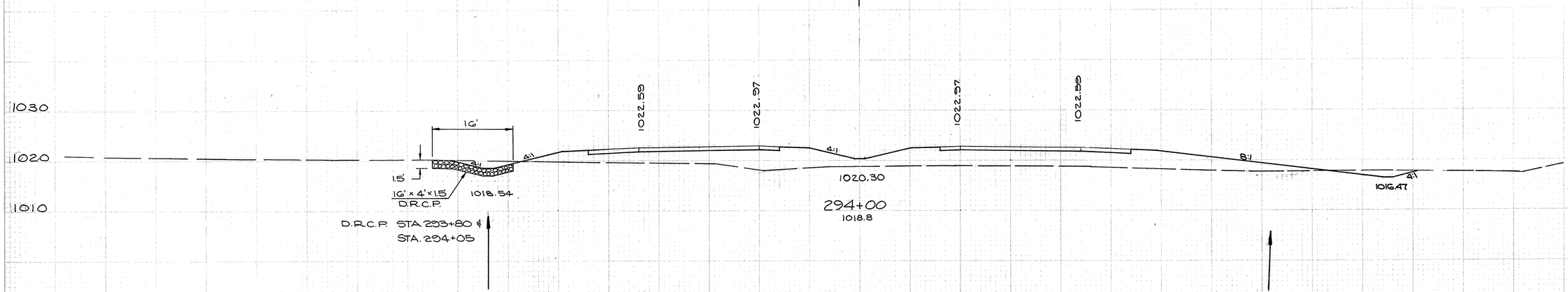

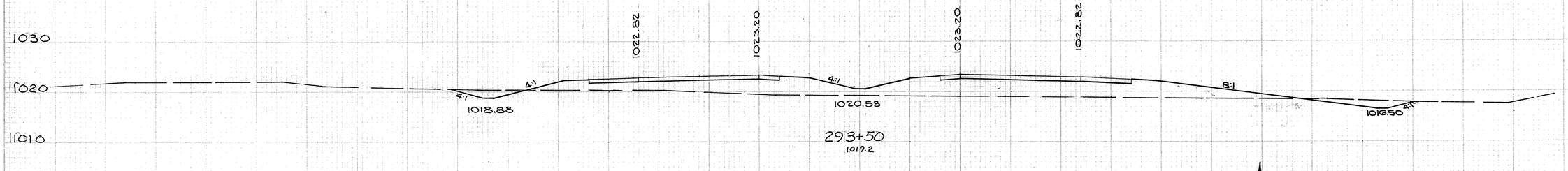

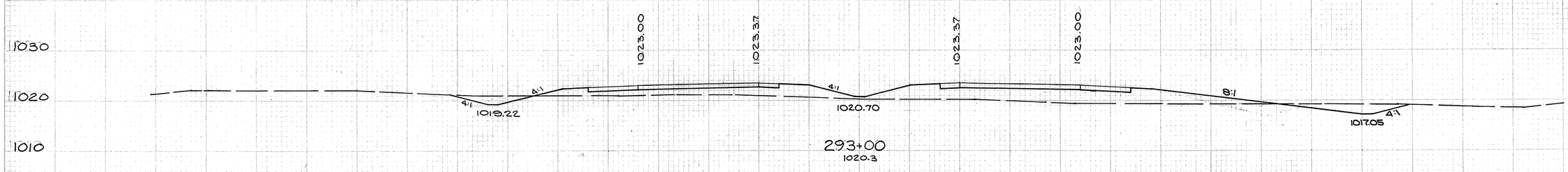

END AREA		CU. YDS.	
CUT	FILL	CUT	FILL
18	416		
		46	726
31	368		
		61	590
35	269		
		79	407

CALC. BY F.A.E. 10/67
CHECKED BY H.C.S. 12/68

STA. 293+00 - STA. 294+00

FED. RD. DIVISION	STATE	PROJECT	
2	OHIO		

141
460

SUM-8-17.63

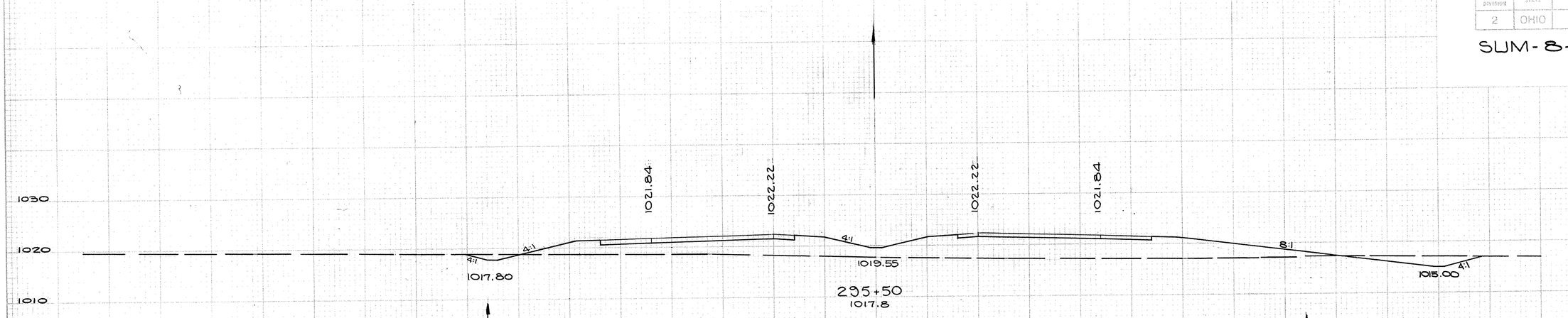

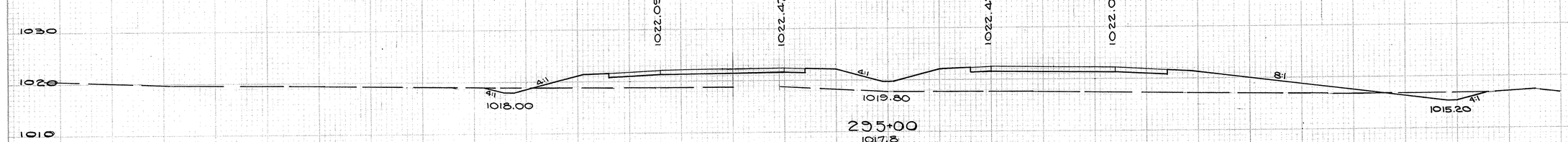

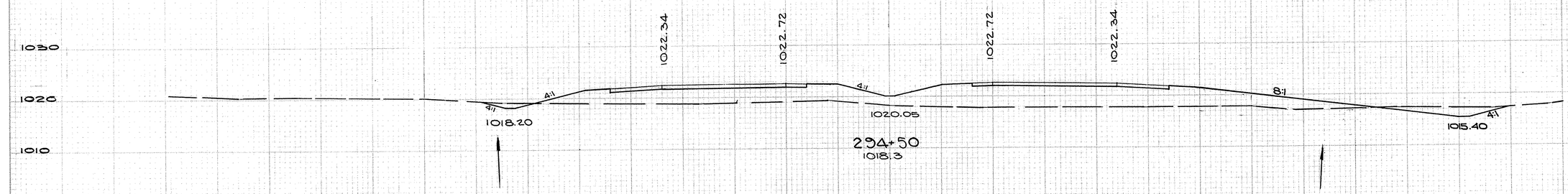

	END AREA		CU. YDS.	
	CUT	FILL	CUT	FILL
295+50				
	29	462		
			45	869
295+00				
	19	476		
			40	872
294+50				
	28	466		
			38	817

CALC. BY F.A.E. 10/67
CHECKED BY H.C.S. 12/68

STA. 294+50 - STA. 295+50

FED. AID DIVISION	STATE	PROJECT	
2	OHIO		

142
460

SUM-8-17.63

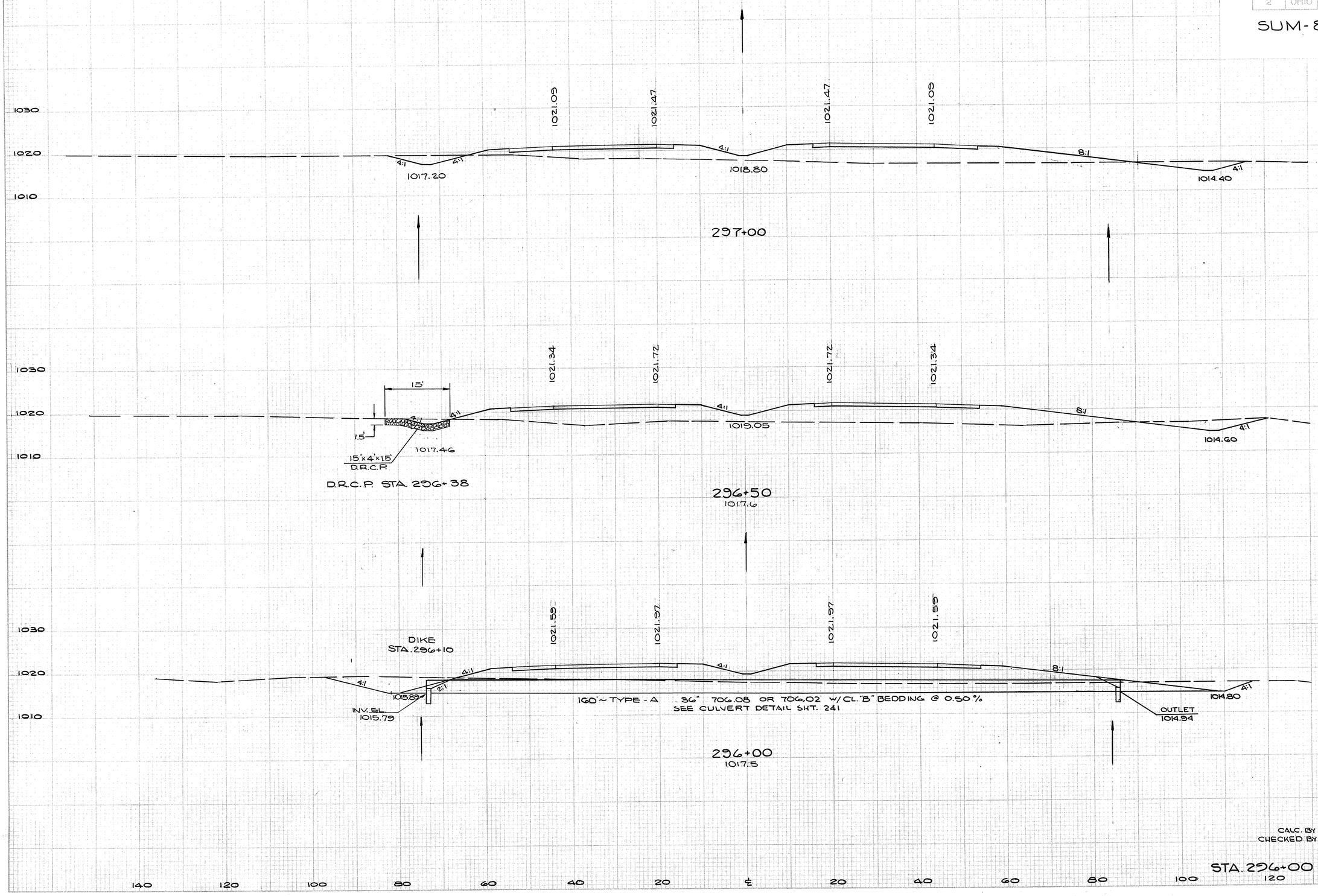

END AREA		CU. YDS.	
CUT	FILL	CUT	FILL
48	395		
		69	806
26	475		
		107	847
89	439		
		110	835

CALC. BY F.A.E. 10/67
CHECKED BY H.C.S. 12/68

STA. 296+00 - STA. 297+00

FED. RD. DIVISION	STATE	PROJECT	
2	OHIO		

143
460

SUM- 8-17.63

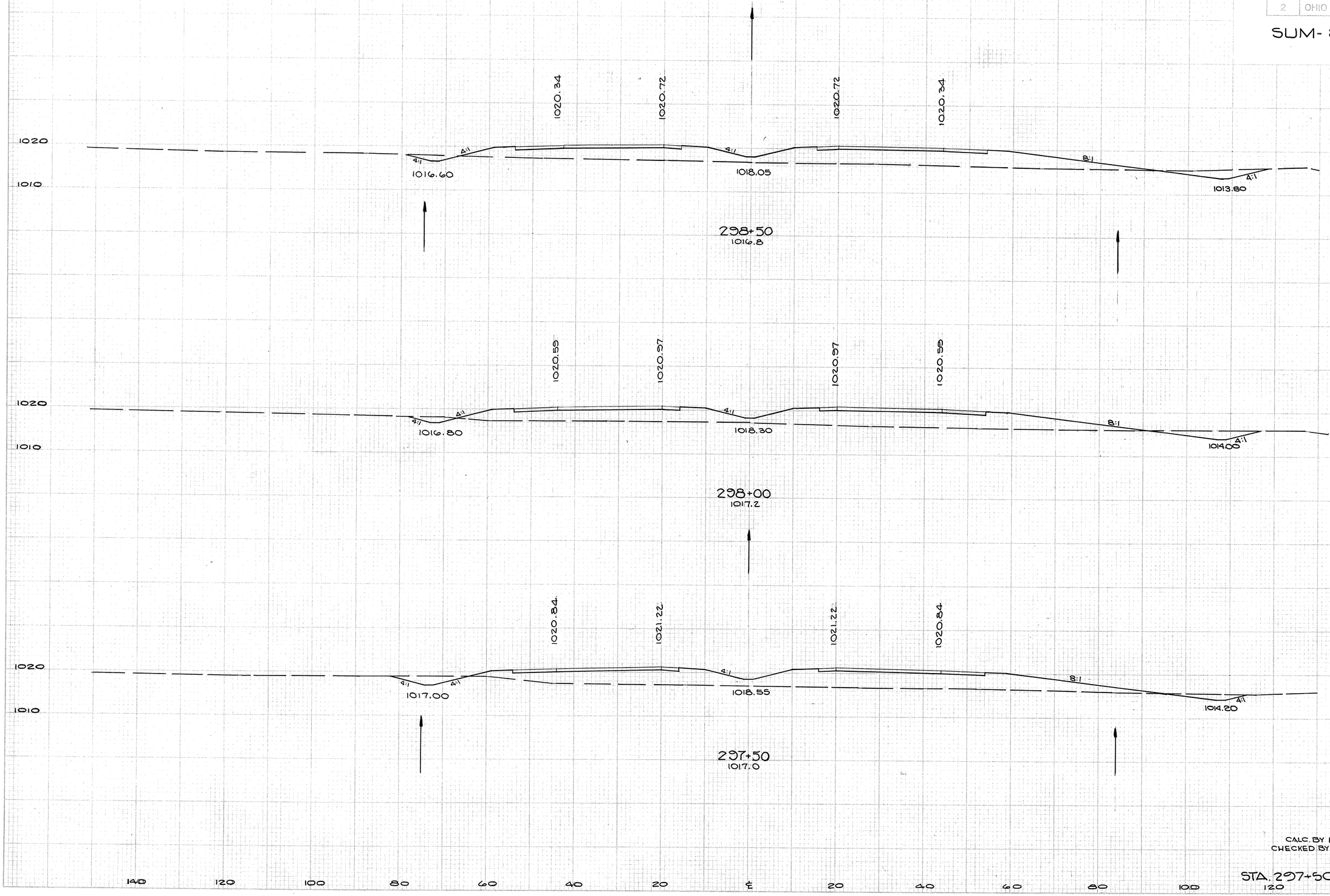

END AREA		CU. YDS.	
CUT	FILL	CUT	FILL
25	413		
		49	749
28	396		
		64	765
41	430		
		83	764

CALC. BY F.A.E. 10/67
CHECKED BY H.C.S. 12/68

STA. 297+50 - STA. 298+50

FED. RD. DIVISION	STATE	PROJECT	
2	OHIO		

144
460

SUM-8-17.63

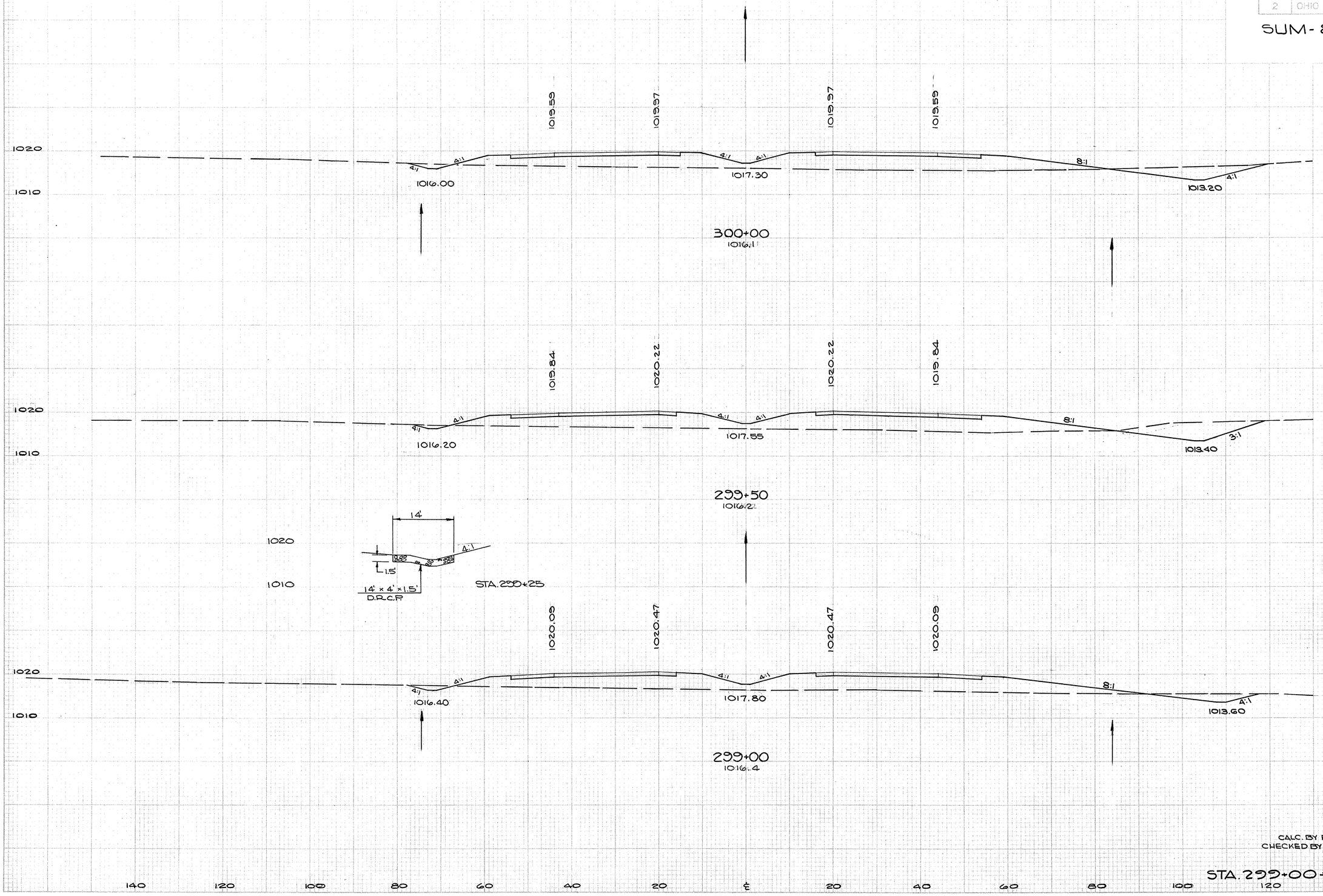

END AREA		CU. YDS.	
CUT	FILL	CUT	FILL
36	373		
		72	709
92	392		
		62	747
25	415		
		47	768

CALC. BY F.A.E. 10/67
CHECKED BY H.C.S. 12/68

STA. 299+00 - STA. 300+00

FED. RD. DIVISION	STATE	PROJECT	
2	OHIO		

145
460

SUM-8-17.63

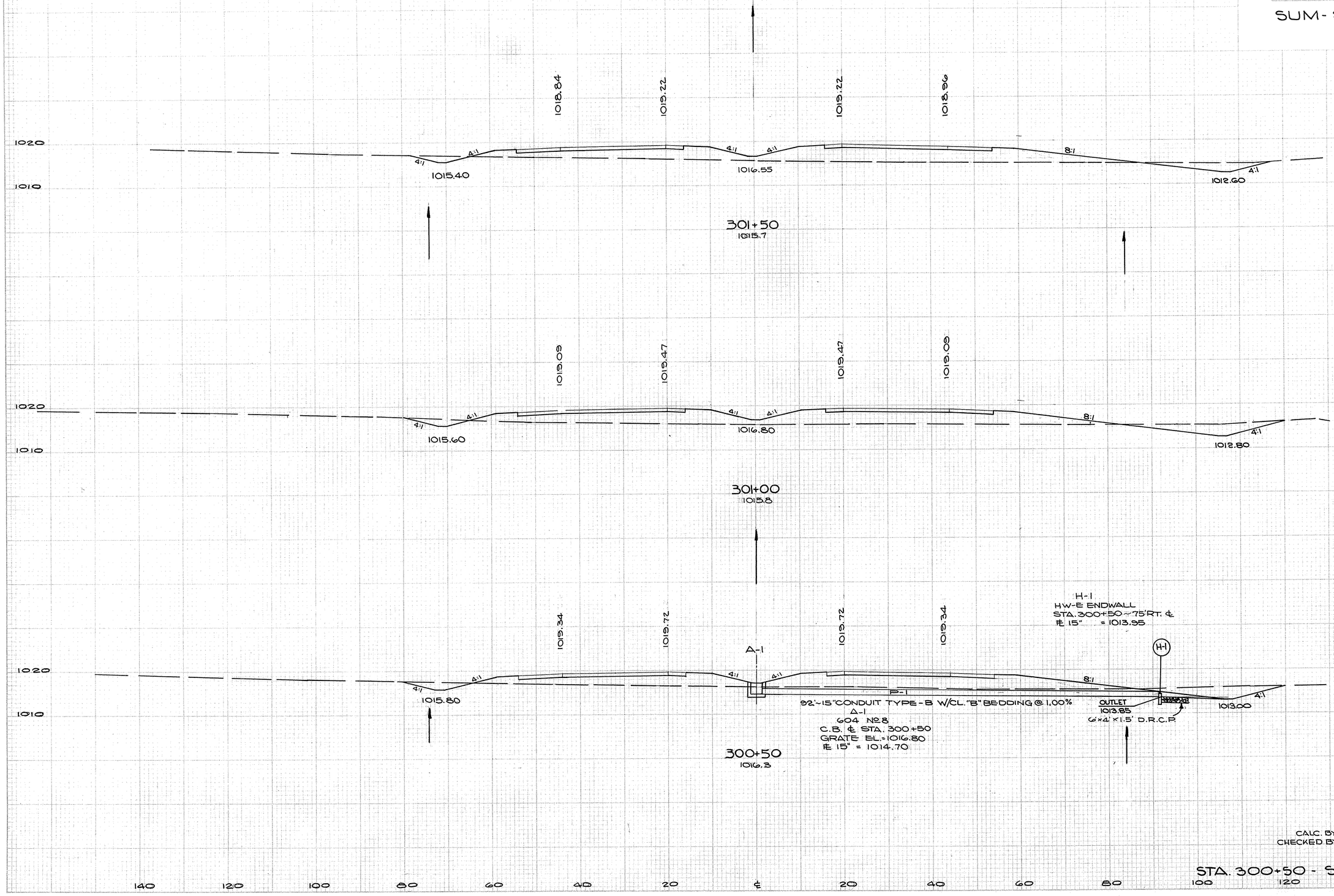

END AREA		CU. YDS.	
CUT	FILL	CUT	FILL
38	327		
		85	617
54	339		
		95	604
48	313		
		78	685

CALC. BY F.A.E. 10/67
CHECKED BY H.C.S. 12/68

STA. 300+50 - STA. 301+50

FED. ROAD DIVISION	STATE	PROJECT
2	OHIO	

146
460

SUM-8-17.63

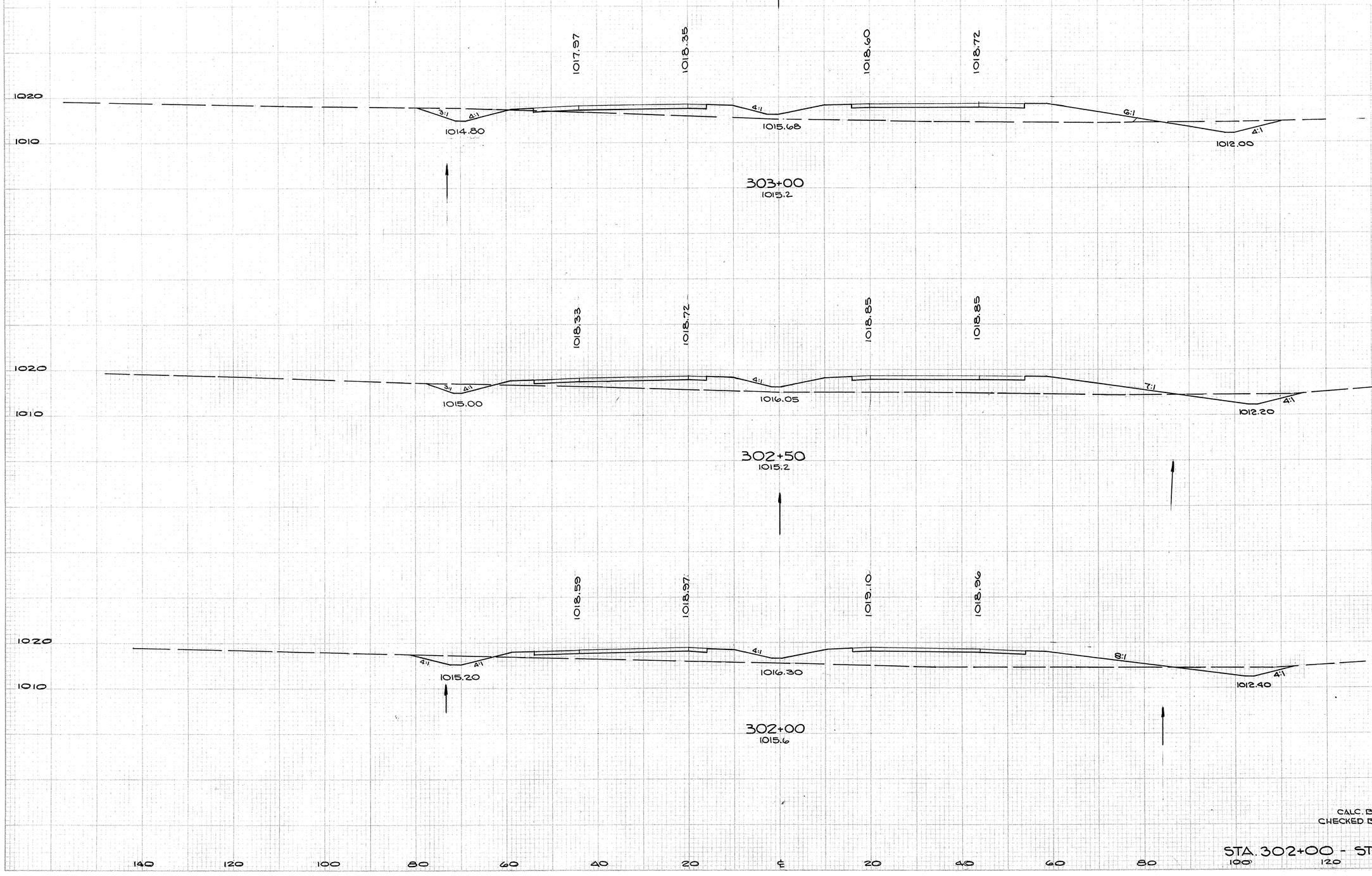

END AREA		CU. YDS.	
CUT	FILL	CUT	FILL
57	285		
		92	559
42	318		
		72	598
86	322		
		68	601

CALC. BY F.A.E. 10/67
CHECKED BY H.C.S. 12/68

STA. 302+00 - STA. 303+00

FED. AID DIVISION	STATE	PROJECT	
2	OHIO		

148
460

SUM-8-17.63

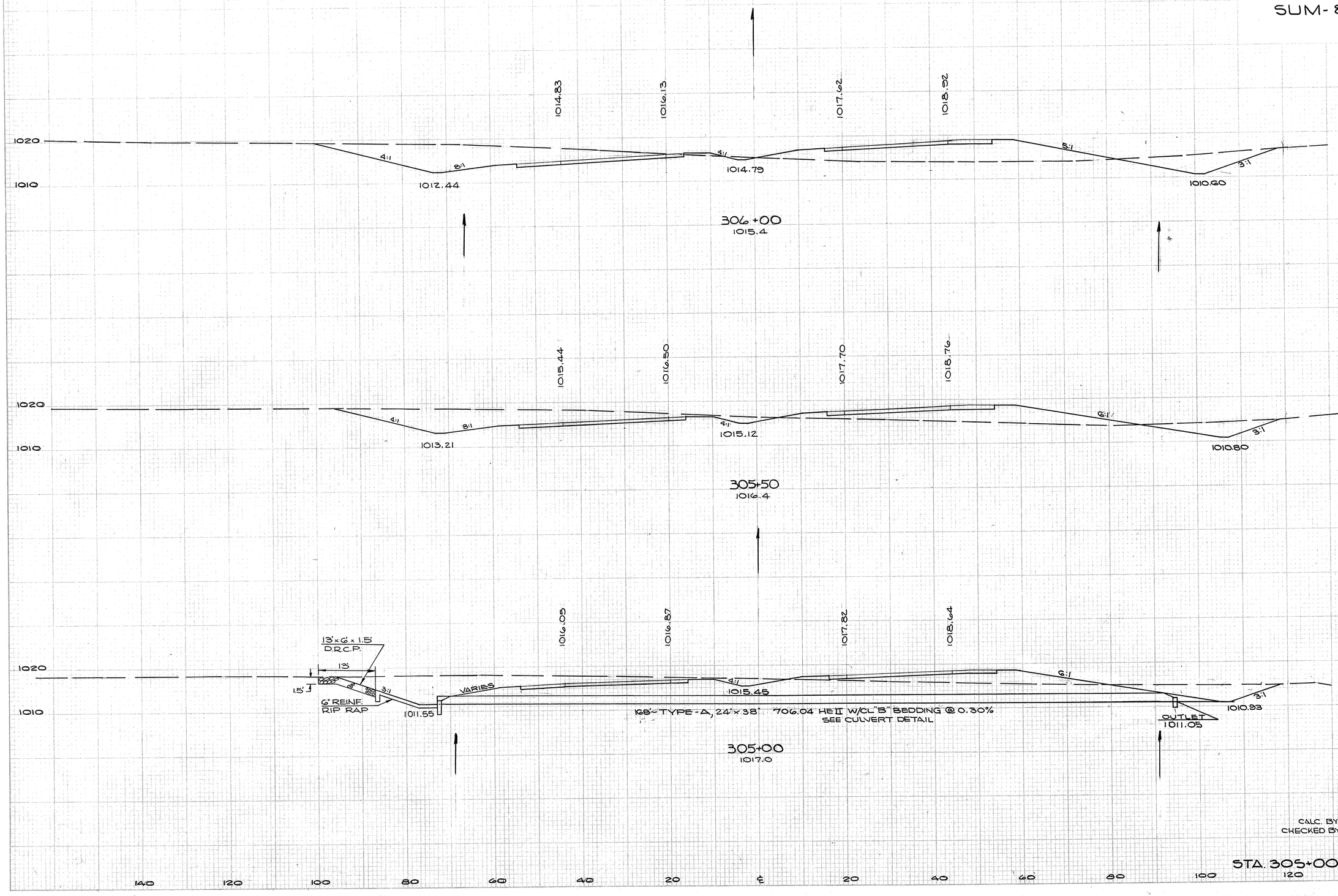

END AREA		CU. YDS.	
CUT	FILL	CUT	FILL
342	242		
		602	373
308	161		
		586	240
326	98		
		503	170

CALC. BY F.A.E. 10/67
CHECKED BY H.C.S. 12/68

STA. 305+00 - STA. 306+00

FED. RD. DIV. SIGN	STATE	PROJECT	
2	OHIO		

147
460

SUM-8-17.63

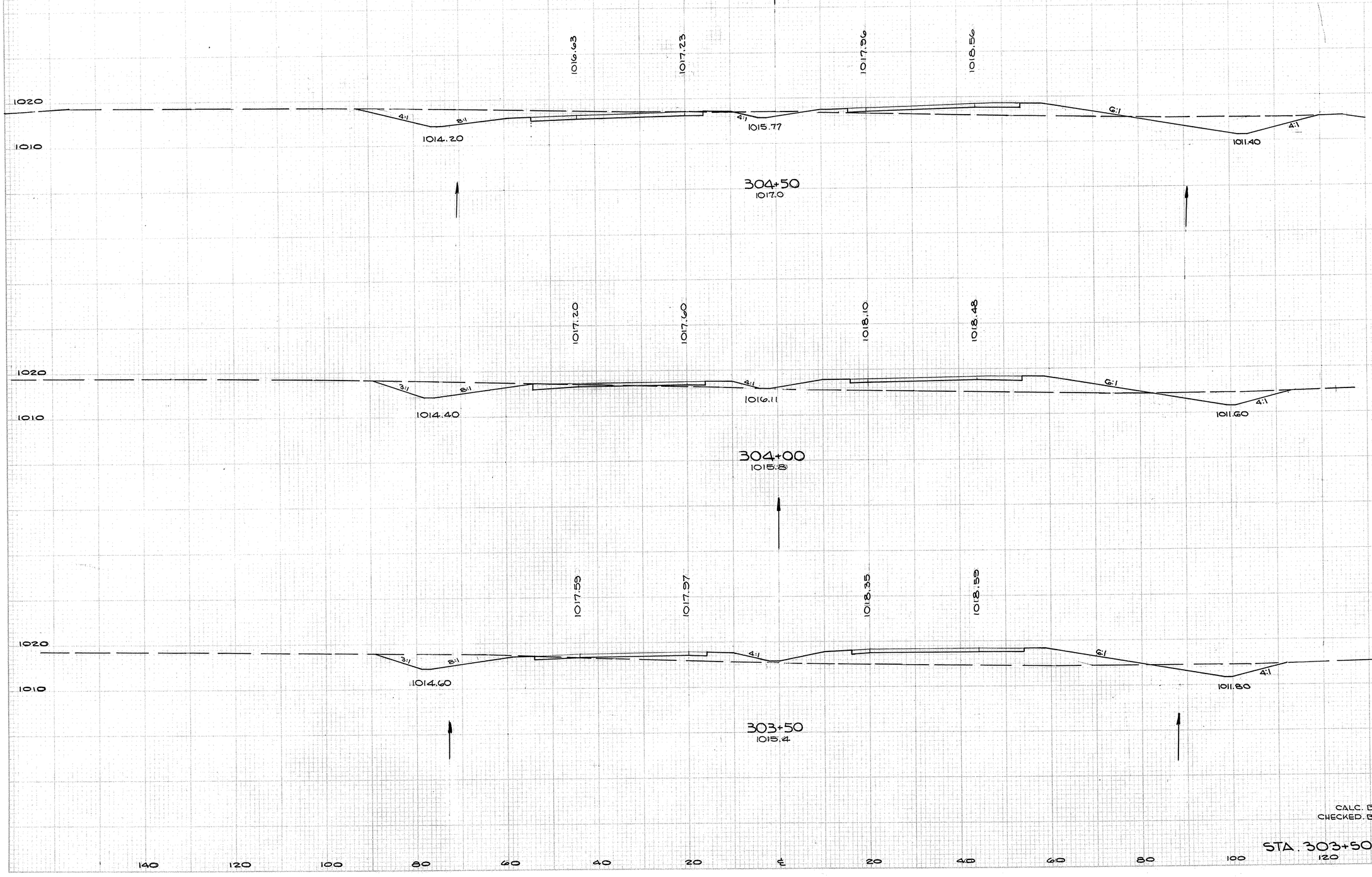

END AREA		CU. YDS	
CUT	FILL	CUT	FILL
215	85		
		303	290
110	174		
		188	372
93	229		
		139	476

CALC. BY F.A.E. 10/67
CHECKED. BY H.C.S. 12/68

STA. 303+50 - STA. 304+50

FED. RD. DIVISION	STATE	PROJECT	
2	OHIO		

145
460

SUM-8-17.63

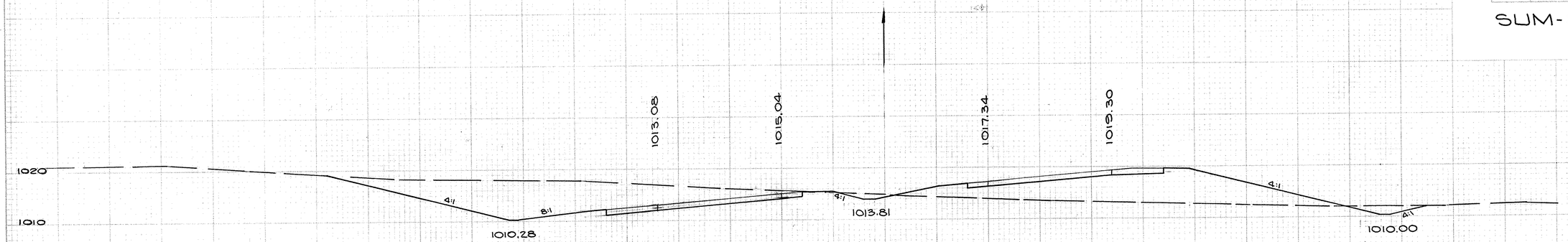

END AREA		CU. YDS.	
CUT	FILL	CUT	FILL
406	304		
		663	585

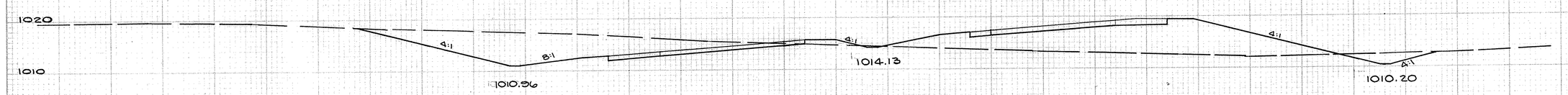

310	328		
		592	582

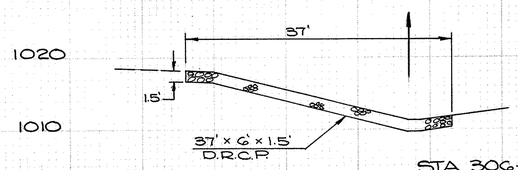

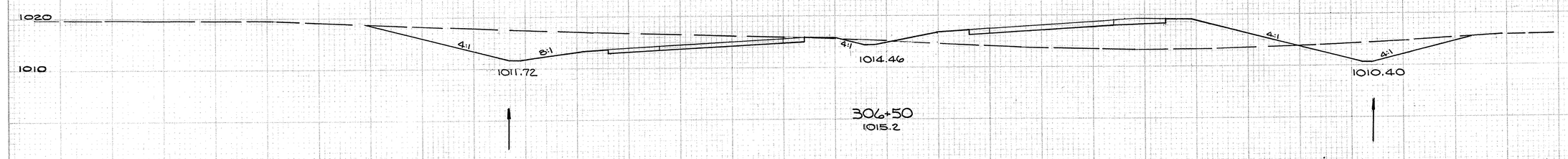

329	246		
		622	452

CALC. BY F.A.E. 10/67
CHECKED BY H.C.S. 12/68

STA. 306+50 - STA. 307+50

140 120 100 80 60 40 20 ℄ 20 40 60 80 100 120 140

FED. AID DIVISION	STATE	PROJECT	
2	OHIO		

150
460

SUM-8-17.63

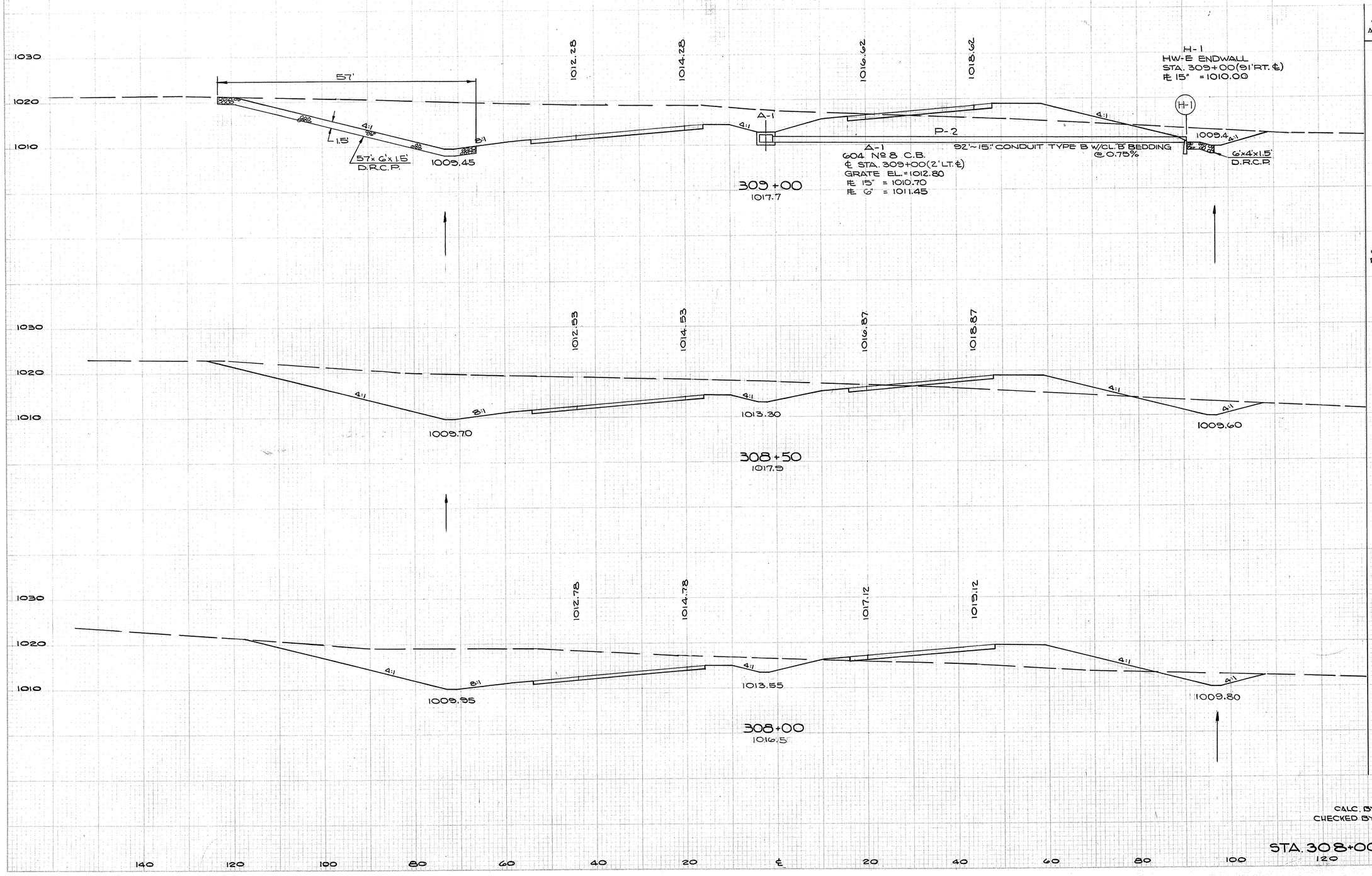

CORRECTED ARC DISTANCE	END AREA CUT	END AREA FILL	CU. YDS. CUT	CU. YDS. FILL
	878	93		
CUT 48.85' FILL 51.46'			1553	175
	839	91		
CUT 48.77' FILL 51.42'			1336	253
	641	175		
			970	444

CALC. BY F.A.E. 10/67
CHECKED BY H.C.S. 12/68

STA. 308+00 - STA. 309+00

FED. RD. DIVISION	STATE	PROJECT	
2	OHIO		

151
460

SUM-8-17.63

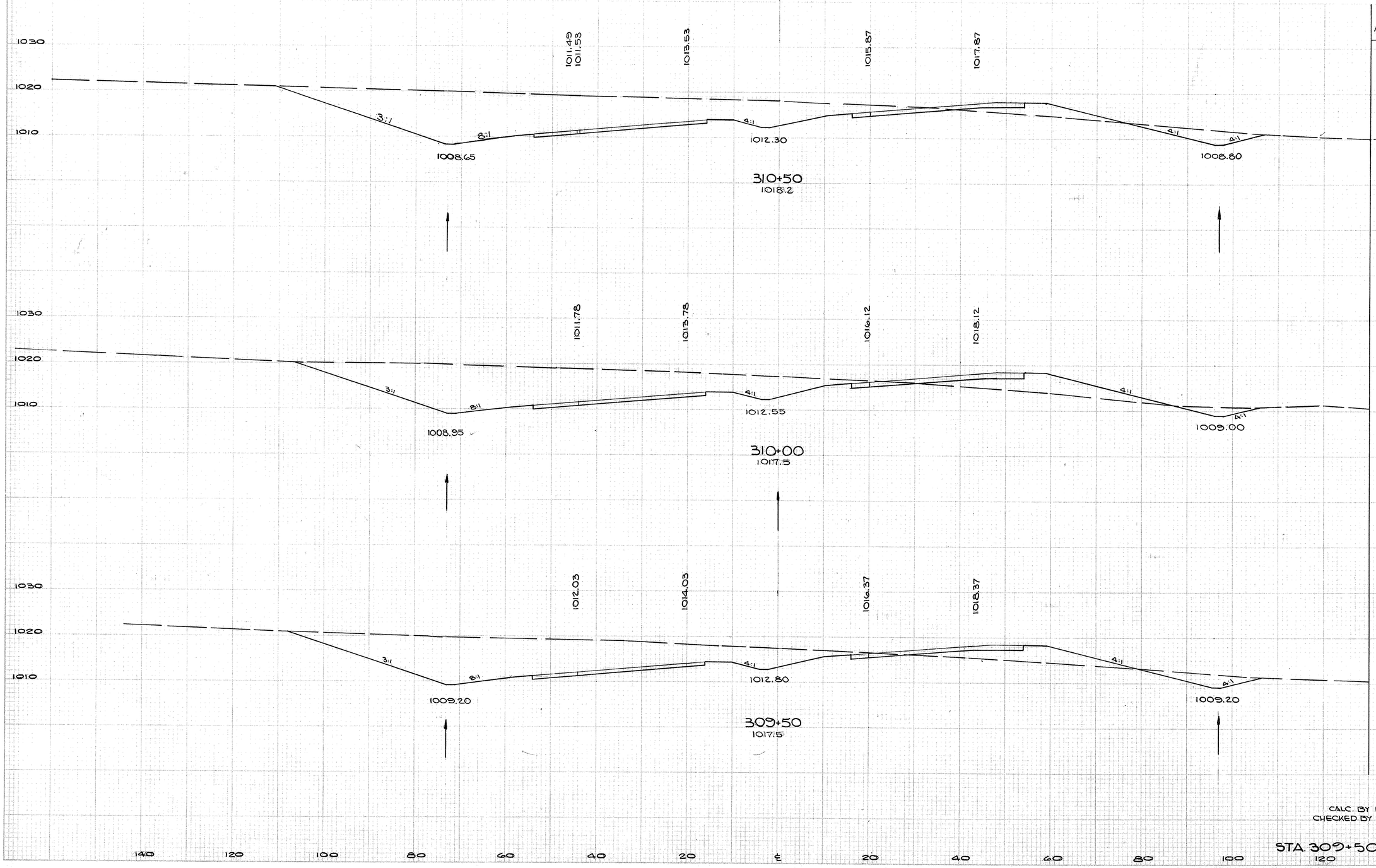

CORRECTED ARC DISTANCE	END AREA CUT	END AREA FILL	CU. YDS. CUT	CU. YDS. FILL
	921	58		
CUT 48.88' FILL 51.53'			1548	169
	730	119		
			1448	196
	773	92		
			1580	172

CALC. BY F.A.E. 10/67
CHECKED BY H.C.S. 12/68

STA. 309+50 - STA. 310+50

FED. RD. DIVISION	STATE	COUNTY
2	OHIO	

152
460

SUM-8-17.63

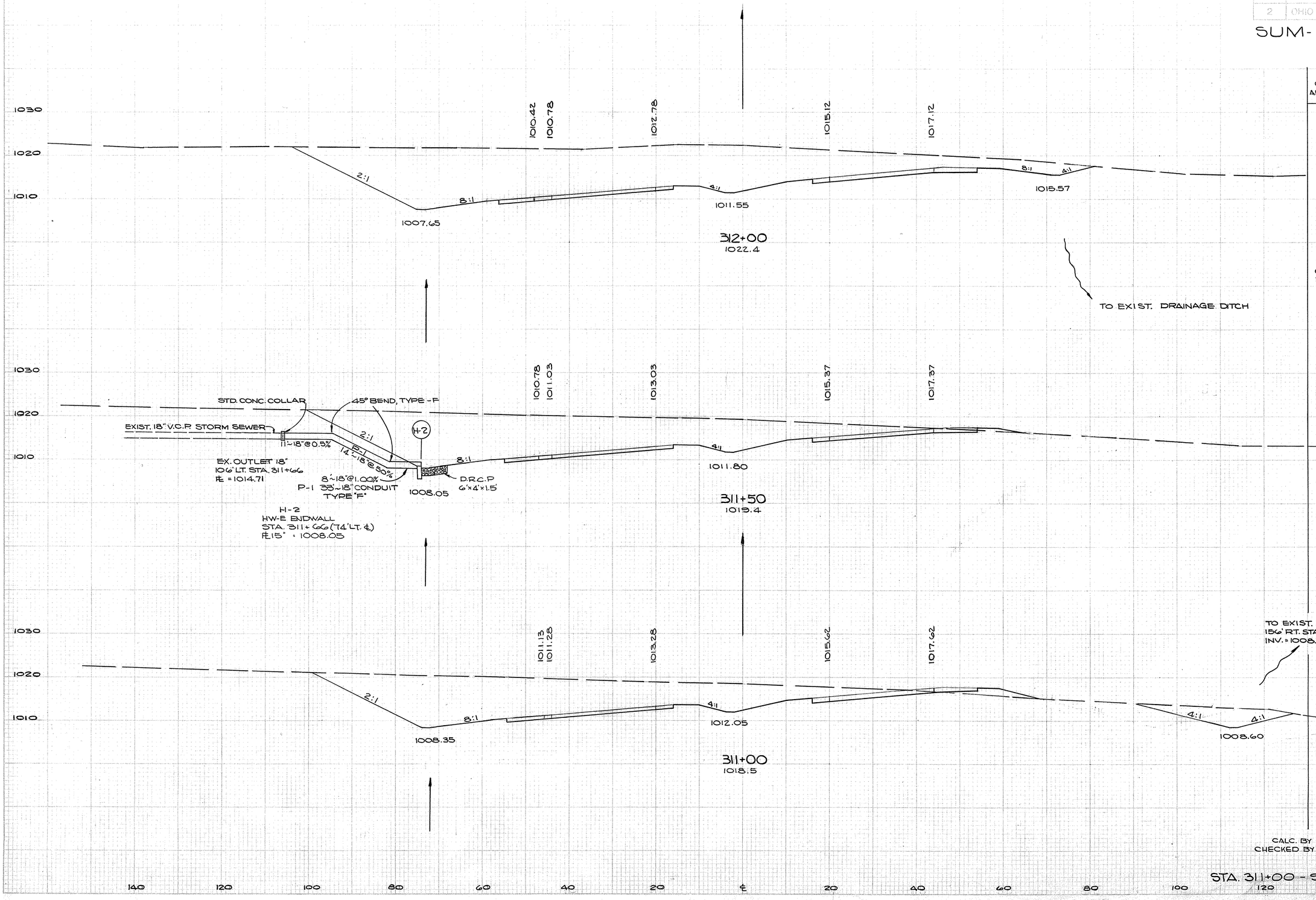

CORRECTED ARC DISTANCE	END AREA CUT	END AREA FILL	CU. YDS CUT	CU. YDS FILL
	1468	0		
CUT 45.14' FILL 50.76'			2270	6
			1026	6
CUT 45.13' FILL 51.52'			1830	26
			986	21
CUT 45.11' FILL 51.51'			1734	75

CALC. BY F.A.E. 10/67
CHECKED BY H.C.S. 12/68

STA. 311+00 - STA. 312+00

FED. AID DIVISION	STATE	PROJECT	
2	OHIO		

153
460

SUM-8-17.63

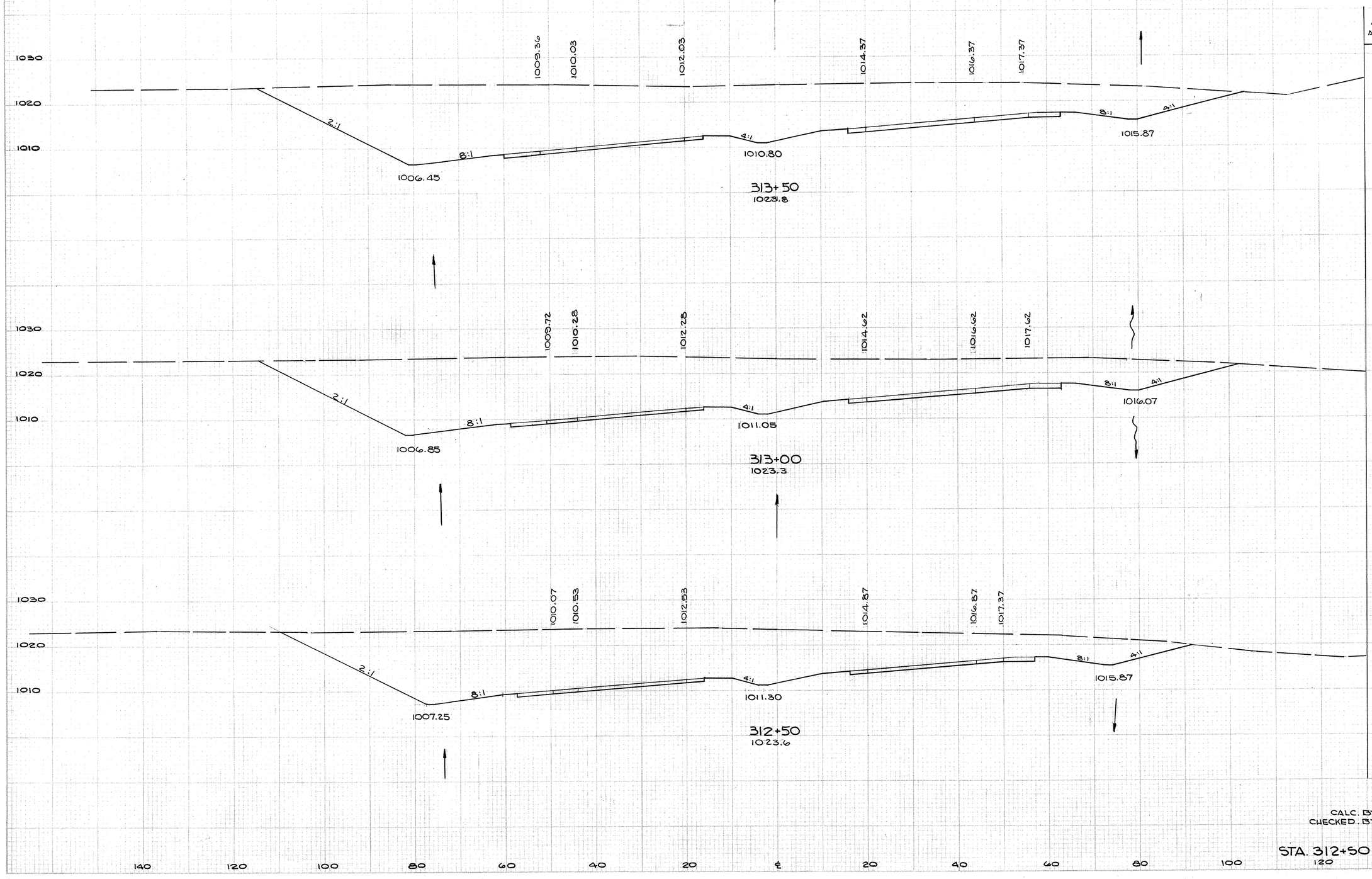

CORRECTED ARC DISTANCE	END AREA CUT	END AREA FILL	CU. YDS. CUT	CU. YDS. FILL
	2277	0		
CUT 45.46'			4032	0
	2125	0		
CUT 45.42'			3088	0
	1905	0		
CUT 45.34'			3082	0

CALC. BY F.A.E. 10/67
CHECKED. BY H.C.S. 12/68

STA. 312+50 - STA. 313+50

FED. RD. DIVISION	STATE	PROJECT	
2	OHIO		

154
460

SUM-8-17.63

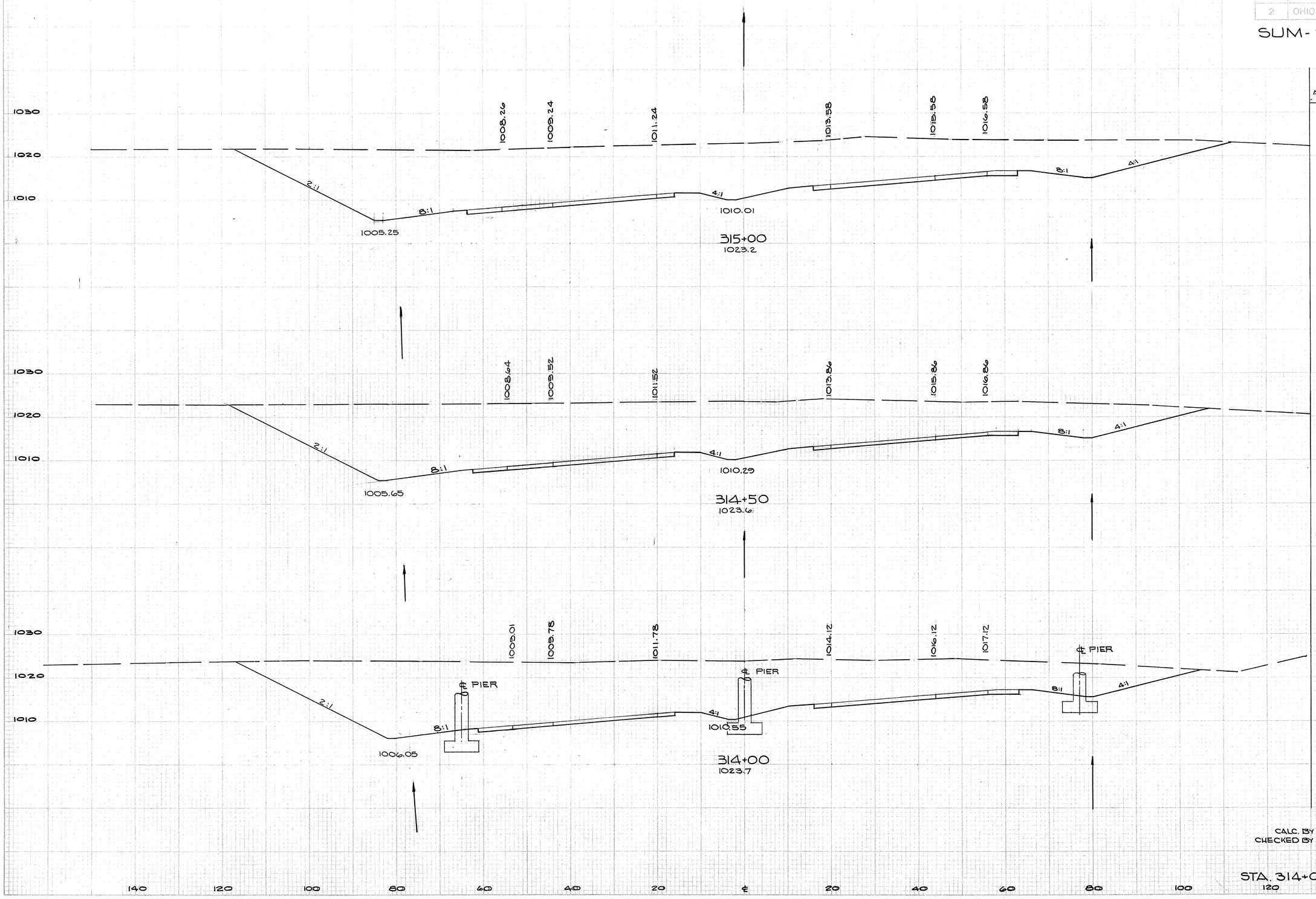

CORRECTED ARC DISTANCE	END AREA CUT	END AREA FILL	CU. YDS. CUT	CU. YDS. FILL
	2368	0		
CUT 45.55'			4347	0
	2370	0		
CUT 45.45'			4328	0
	2353	0		
CUT 45.48'			4242	0

CALC. BY F.A.E. 10/67
CHECKED BY H.C.S. 12/68

STA. 314+00 - STA. 315+00

FED. AID DIVISION	STATE	PROJECT	
2	OHIO		

155
460

SUM-8-17.63

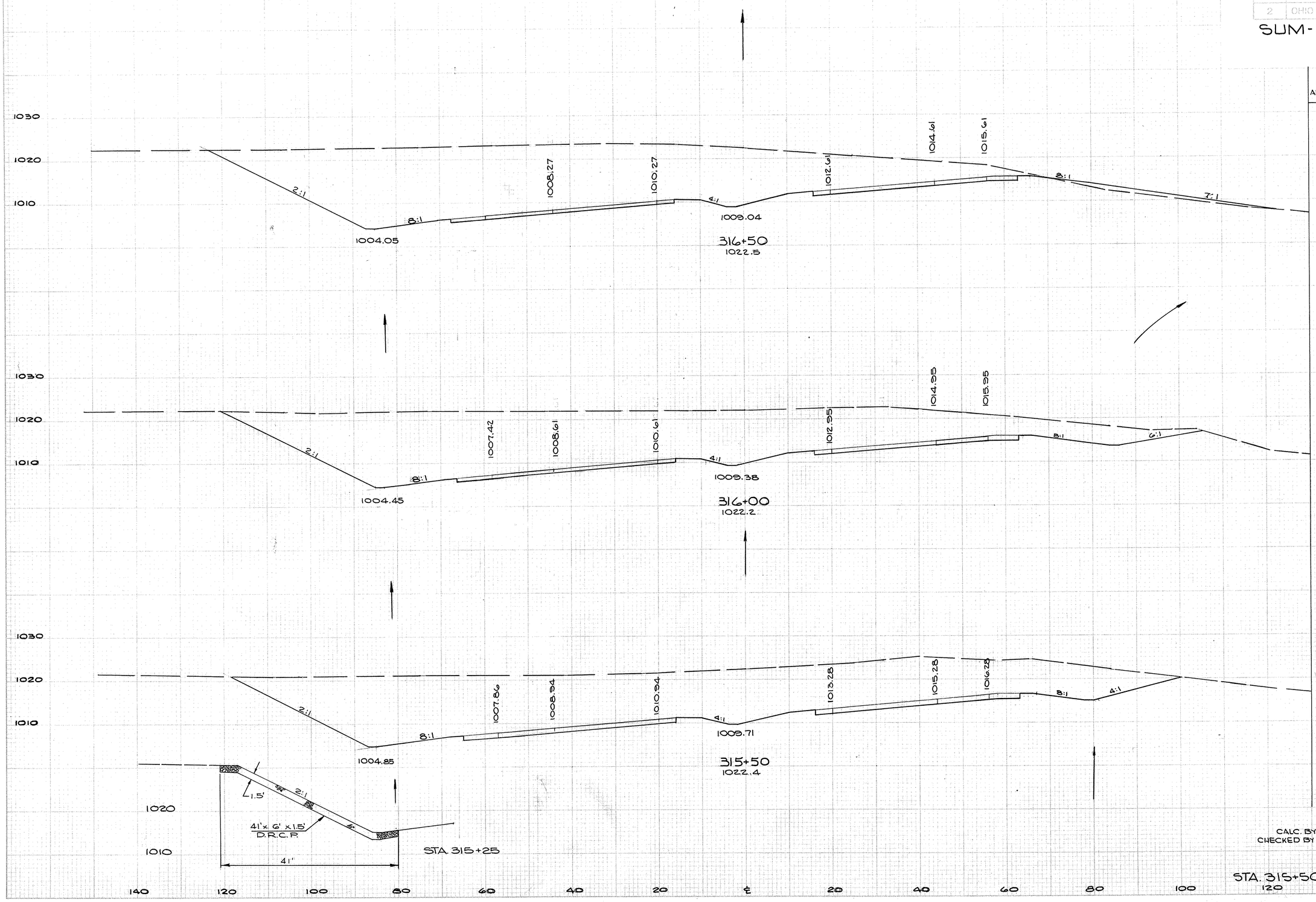

CORRECTED ARC DISTANCE	END AREA CU. YDS. CUT	FILL	CU. YDS. CUT	FILL
	2180	31		
CUT 45.15' FILL 51.25'			4053	30
	2273	0		
CUT 45.43'			4196	0
	2311	0		
CUT 45.56'			4204	0

CALC. BY F.A.E. 10/67
CHECKED BY H.C.S. 12/68

STA. 315+50 - STA. 316+50

FED. AID DIVISION	STATE	PROJECT	
2	OHIO		

156
460

SUM-8-17.63

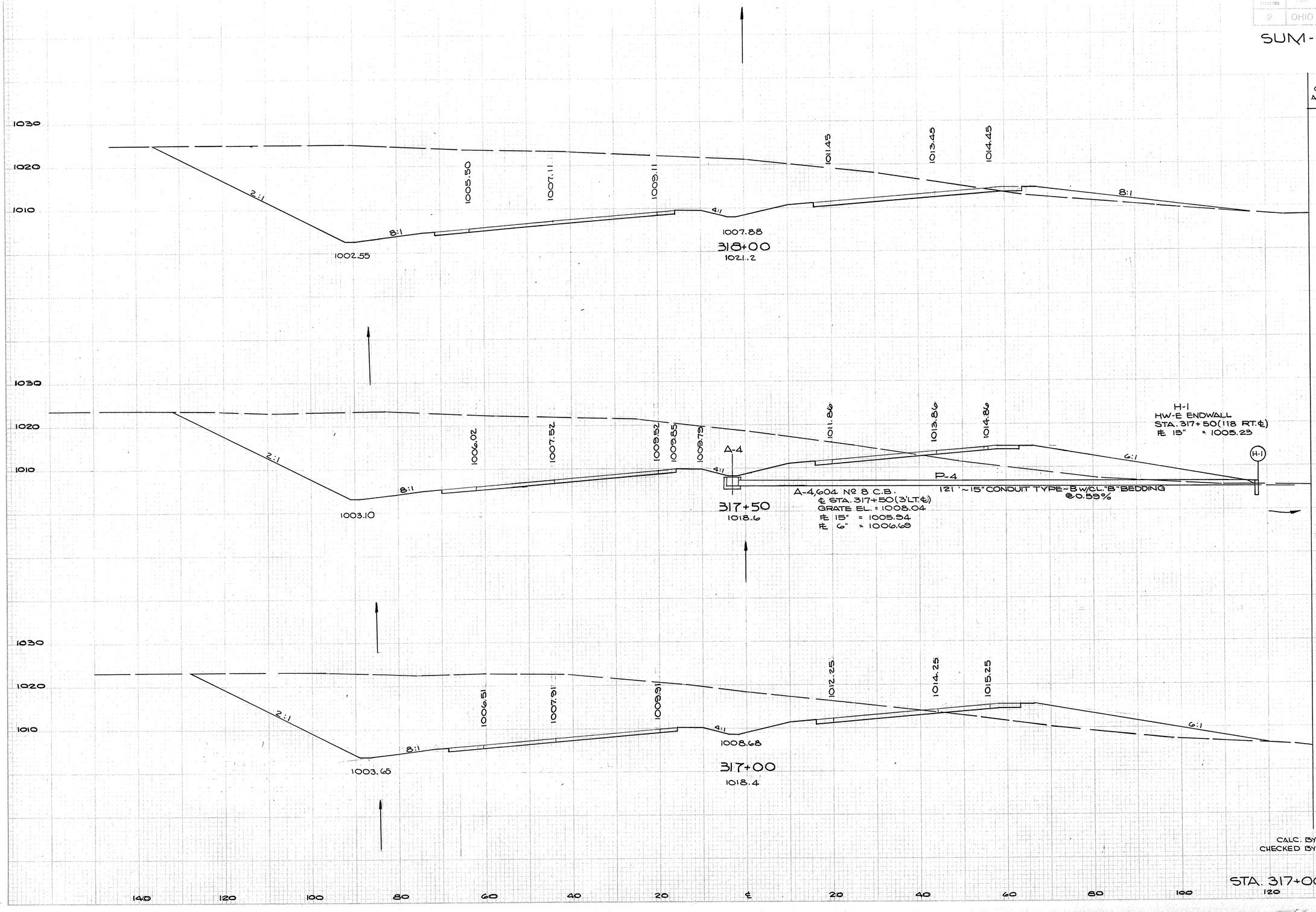

CORRECTED ARC DISTANCE	END AREA CU. YDS. CUT	FILL	CU. YDS. CUT	FILL
	2344	55		
CUT 48.60' FILL 52.08'			3086	304
	1585	260		
CUT 48.55' FILL 52.07'			3510	437
	1916	193		
CUT 48.80' FILL 52.25'			3701	217

CALC. BY F.A.E. 10/67
CHECKED BY H.C.S. 12/68

STA. 317+00 - STA. 318+00

FED. AID DIVISION	STATE	PROJECT	
2	OHIO		

157
460

SUM-8-17.63

CORRECTED ARC DISTANCE	END AREA CUT	END AREA FILL	CU. YDS. CUT	CU. YDS. FILL
AHEAD	3641	0		
BACK	4816	0		
CUT 49.58'			8412	0
	4347	0		
CUT 49.32'			7166	0
	3499	0		
CUT 48.88' FILL 51.05'			5380	52

CALC. BY F.A.E. 10/67
CHECKED BY H.C.S. 12/68

STA. 318+50 - STA. 319+50

FED. RD. DIVISION	STATE	PROJECT	
2	OHIO		

158
460

SUM-8-17.63

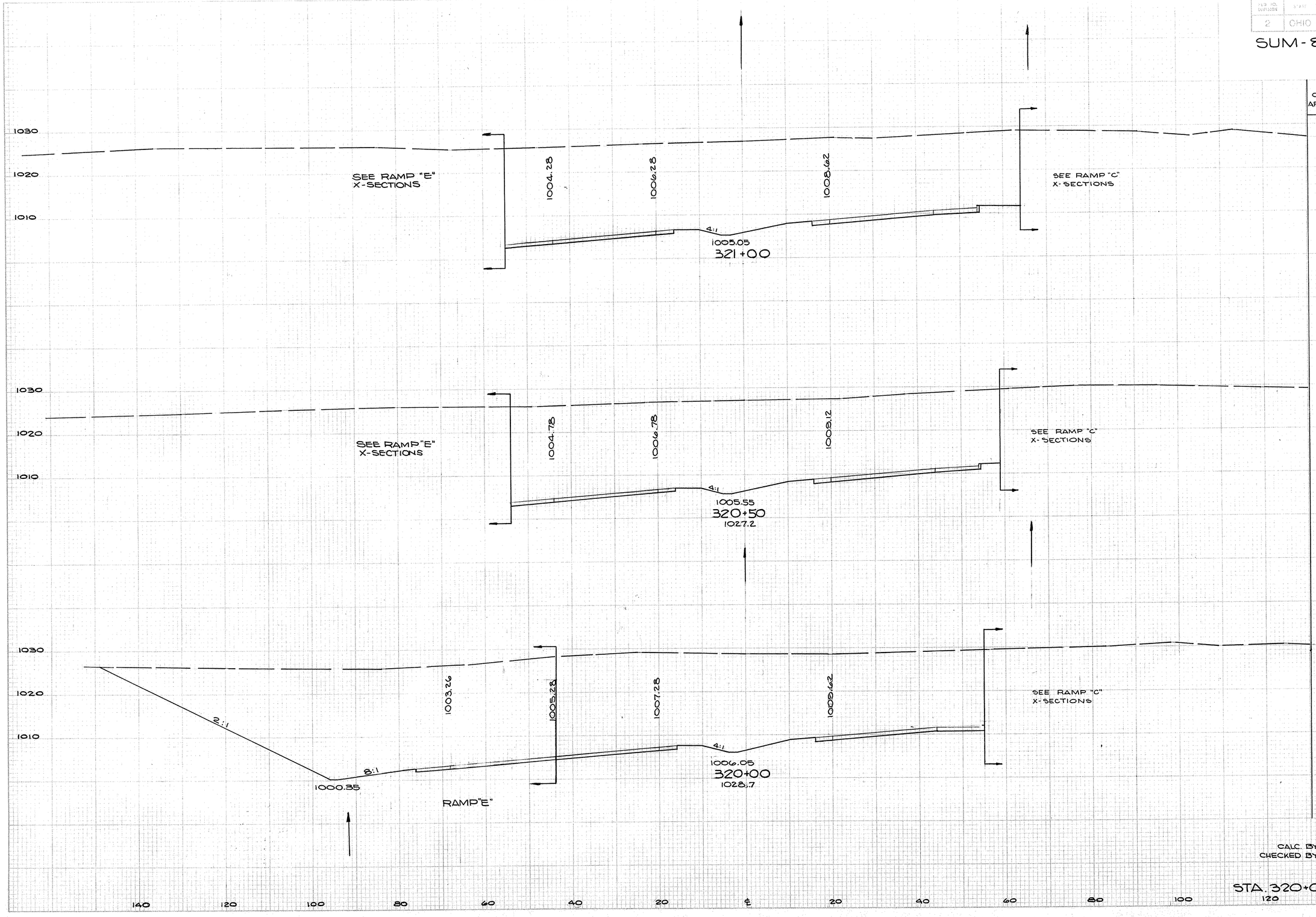

CORRECTED ARC DISTANCE	END AREA CUT	END AREA FILL	CU. YDS. CUT	CU. YDS. FILL
	2400	0		
			4311	0
	2256	0		
			4003	0
AHEAD 2067		0		
BACK 3351		0		
CUT 48.91'			6013	0

CALC. BY F.A.E. 10/67
CHECKED BY H.C.S. 12/68

STA. 320+00 - STA. 321+00

FED. RD. DIVISION	STATE	PROJECT	
2	OHIO		

150
460

SUM-8-17.63

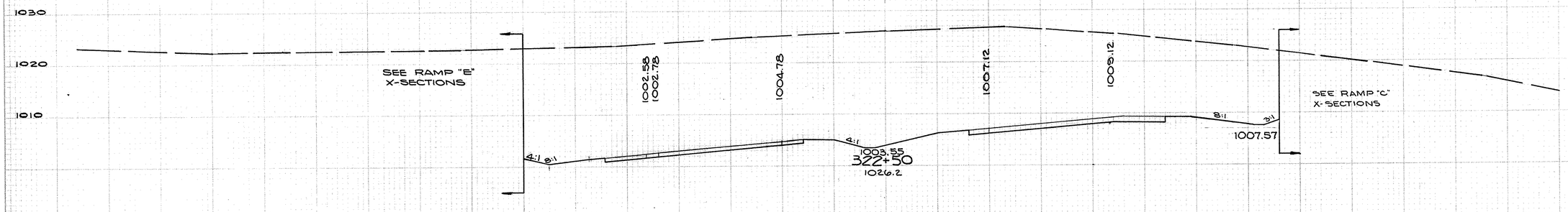

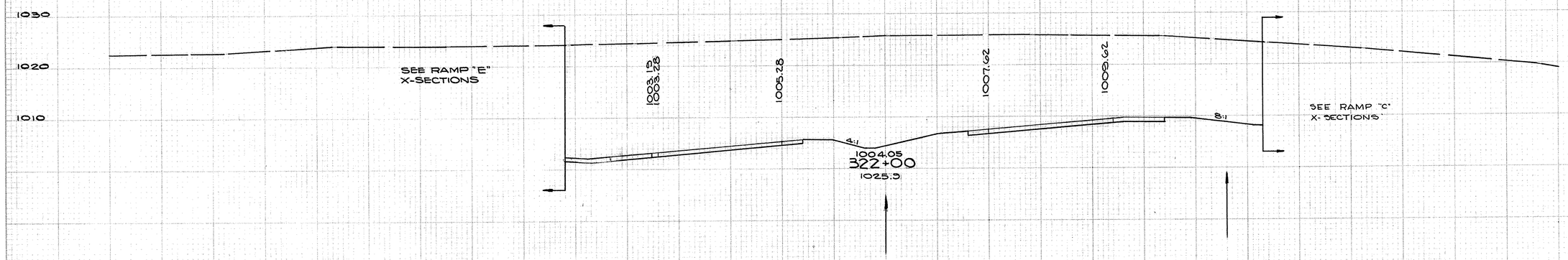

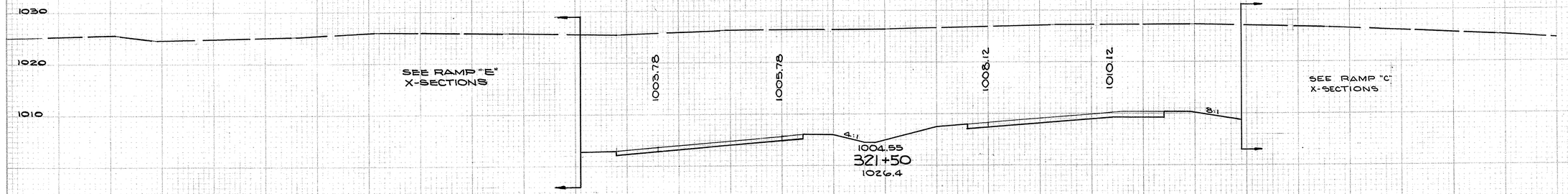

	END AREA		CU. YDS.	
	CUT	FILL	CUT	FILL
	2881	0		
			5080	0
	2616	0		
			4810	0
	2579	0		
			4610	0

CALC. BY F.A.E. 10/67
CHECKED BY H.C.S. 12/68

140 120 100 80 60 40 20 ℄ 20 40 60 80 100 120 140

STA. 321+50 - STA. 322+50

FED. RD. DIVISION	STATE	PROJECT	
2	OHIO		

160
460

SUM-8-17.63

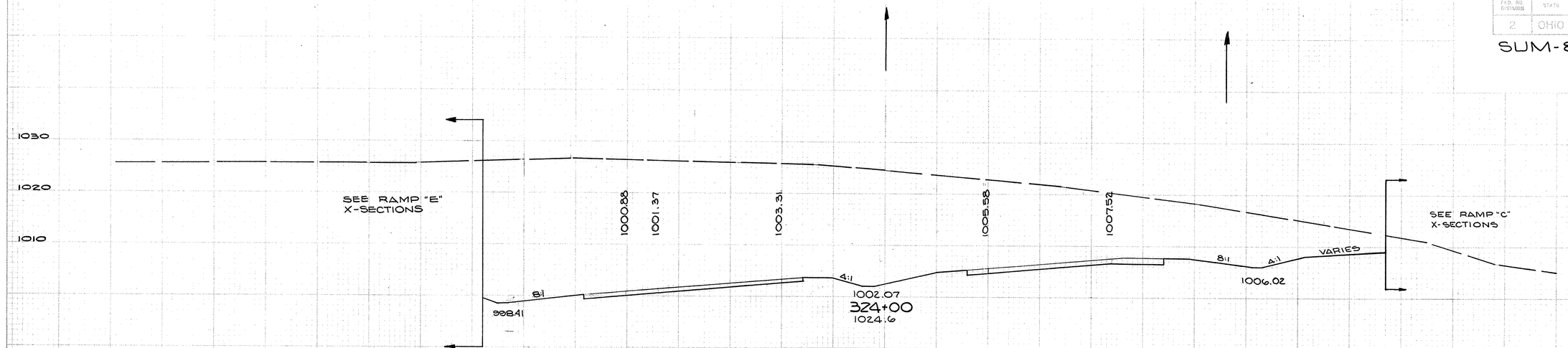

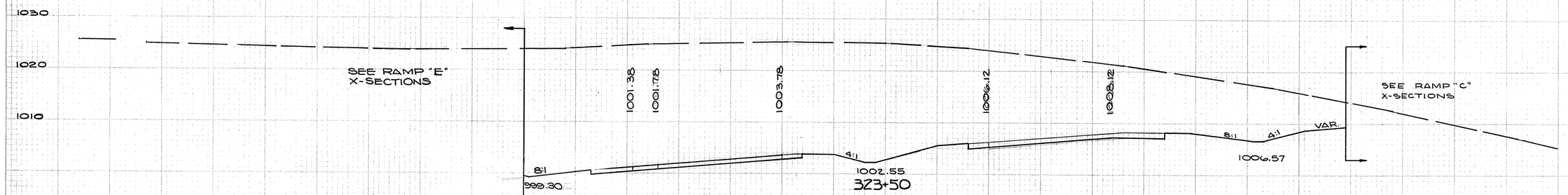

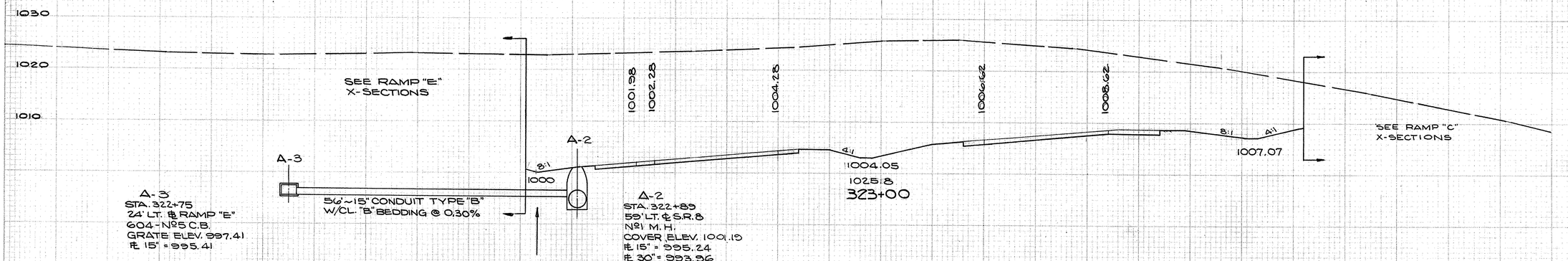

A-3
STA. 322+75
24' LT. ℄ RAMP "E"
604-№5 C.B.
GRATE ELEV. 997.41
℄ 15" = 995.41

A-2
STA. 322+89
59' LT. ℄ S.R. 8
№1 M.H.
COVER ELEV. 1001.18
℄ 15" = 995.24
℄ 30" = 993.96
℄ 36" = 993.58

END AREA CUT	END AREA FILL	CU. YDS. CUT	CU. YDS. FILL
3185	0		
		5630	0
2885	0		
		5285	0
2823	0		
		5282	0

CALC. BY F.A.E. 10/67
CHECKED BY H.C.S. 12/68

140 120 100 80 60 40 20 ℄ 20 40 60 80 100 120 140

STA. 323+00 - STA. 324+00

FED. RD. DIVISION	STATE	PROJECT	
2	OHIO		

161
460

SUM-8-17.63

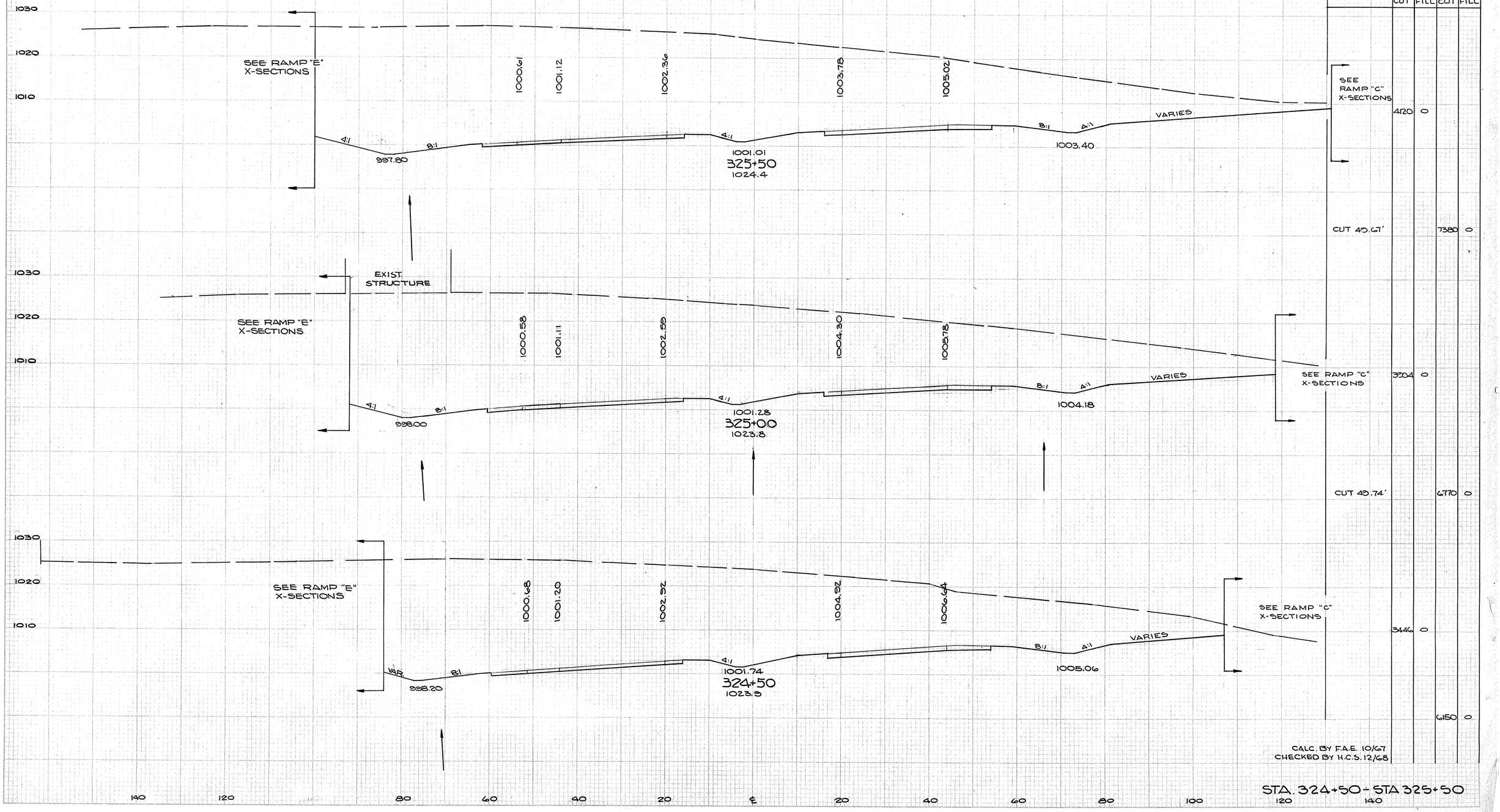

CORRECTED ARC DISTANCE	END AREA CU. YDS. CUT	FILL	CUT	FILL
	4120	0		
CUT 45.67'			7380	0
	3304	0		
CUT 49.74'			6770	0
	3446	0		
			6150	0

CALC. BY F.A.E. 10/67
CHECKED BY H.C.S. 12/68

STA. 324+50 - STA 325+50

FED. AID DIVISION	STATE	PROJECT	
2	OHIO		

162
460

SUM-8-17.63

CORRECTED ARC DISTANCE	END AREA CUT	END AREA FILL	CU. YDS. CUT	CU. YDS. FILL
	2647	46		
			6150	71
	4005	80		
			7753	41
	4360	14		
CUT 45.53' FILL 51.82'			7787	14

1030
1020
1010

SEE RAMP "E" X-SECTIONS

VARIES 8:1

999.34

1001.38 1001.69 1002.25 1002.94 1003.50

4:1 4:1 4:1

VARIES

BRIDGE ABUTMENT

327+00
1016.6

SEE RAMP "E" X-SECTIONS

VARIES 8:1

998.97

1001.01 1001.41 1002.16 1003.10 1003.58

4:1 4:1 4:1

8:1 4:1

VARIES

1002.03

SEE RAMP "C" X-SECTIONS

326+50
1018.4

SEE RAMP "E" X-SECTIONS

VARIES 8:1

997.60

1000.73 1001.20 1002.22 C.B. STA. 326+05 1003.37 1004.39

4:1 4:1 4:1

8:1 4:1

VARIES

1002.69

SEE RAMP "C" X-SECTIONS

326+00

CALC. BY F.A.E. 10/67
CHECKED BY H.C.S. 12/68

140 120 100 80 60 40 20 ℄ 20 40 60 80 100 120 140

STA. 326+00 - STA. 327+00

F.H.D. RD. DIVISION	STATE	PROJECT	
2	OHIO		

163
460

SUM-8-17.63

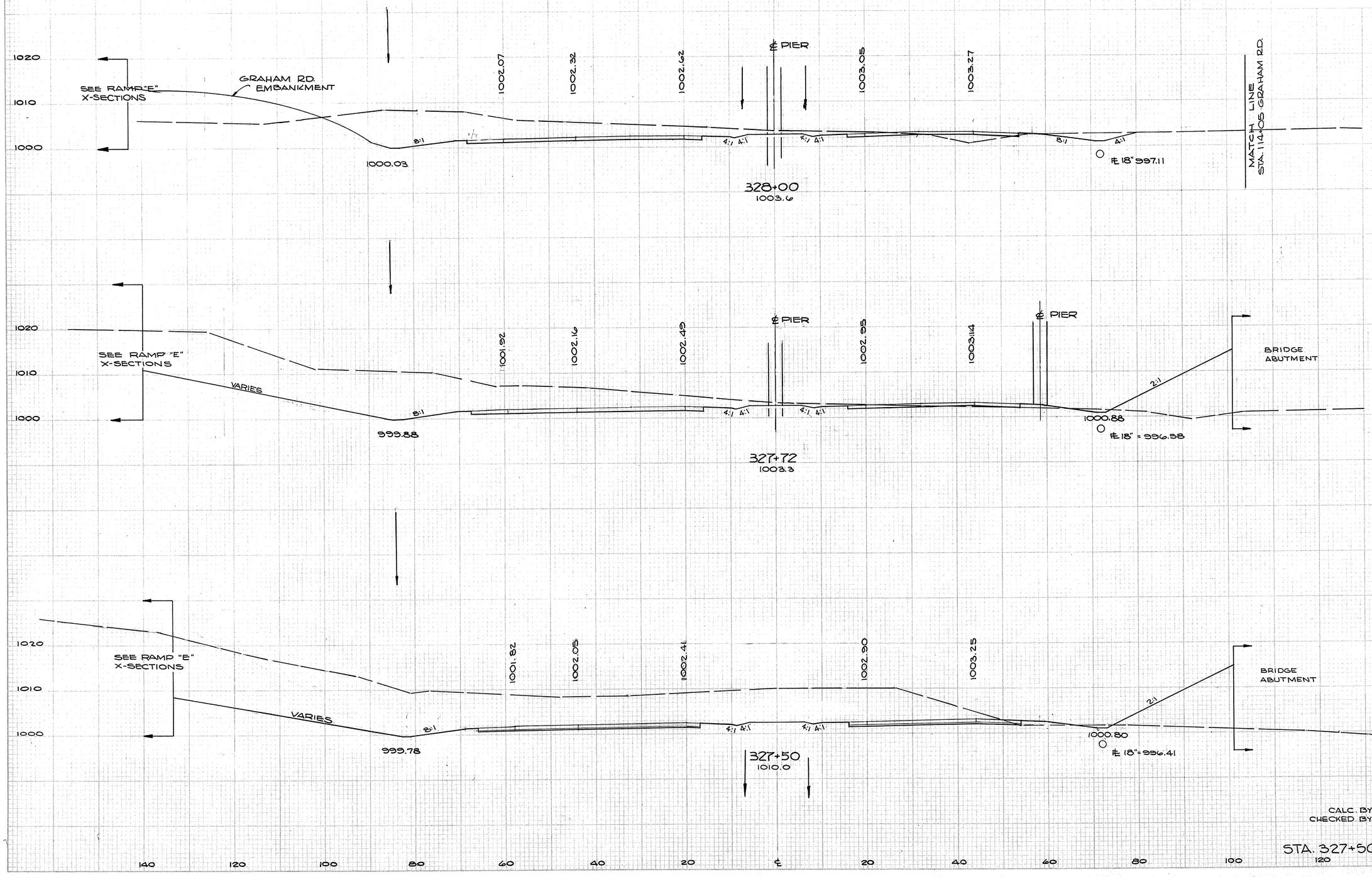

END AREA		CU. YDS.	
CUT	FILL	CUT	FILL
1516	186		
		777	198
981	198		
		1030	159
1546	193		
		3882	226

CALC. BY F.A.E. 10/67
CHECKED BY H.C.S. 12/68

STA. 327+50 - STA. 328+00

FED. AID DIVISION	STATE	PROJECT	
2	OHIO		

164
460

SUM-8-17.63

C.B. STA. 329+70

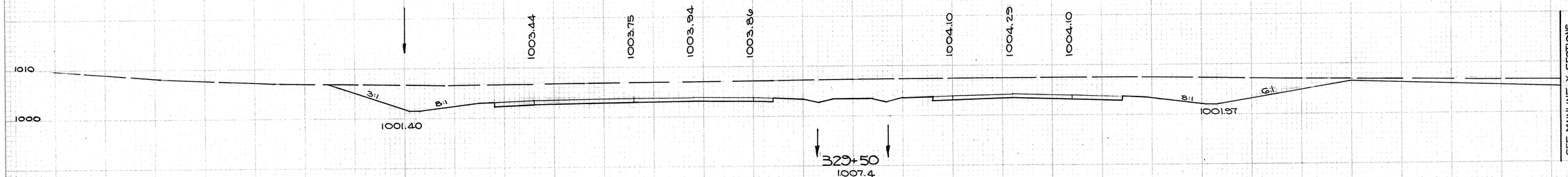

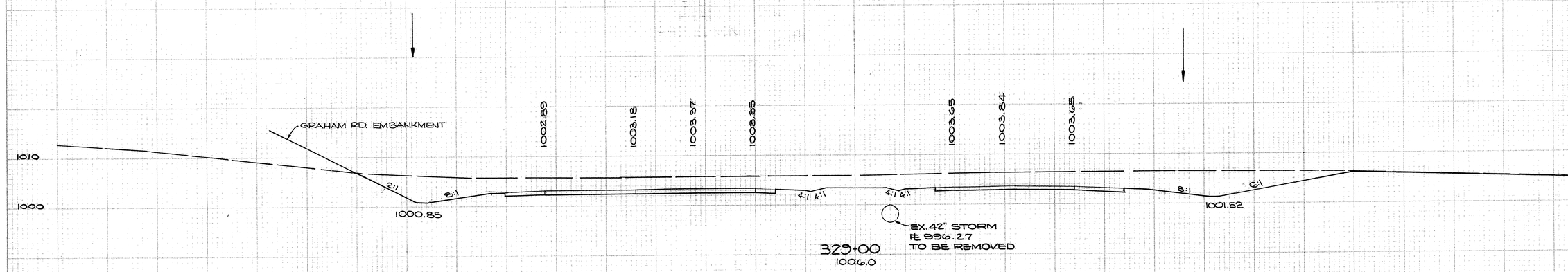



A-18
STA. 328+50
72' RT. ℄ S.R. 8
604 - № 5 C.B.
GRATE ELEV. = 999.95
℄ 15" = 998.06
℄ 18" = 997.81

CALC. BY F.A.E. 10/67
CHECKED BY H.C.S. 12/68

	END AREA		CU. YDS.	
	CUT	FILL	CUT	FILL
SEE MAINLINE X-SECTIONS	839	0		
			1401	0
	671	0		
			1184. 9	
	607. 9			
			1077. 181	

140 120 100 80 60 40 20 ℄ 20 40 60 80 100 120 140

STA. 328+50 - STA. 329+50

FED. AID DIVISION	STATE	PROJECT	
2	OHIO		

165
460

SUM-8-17.63

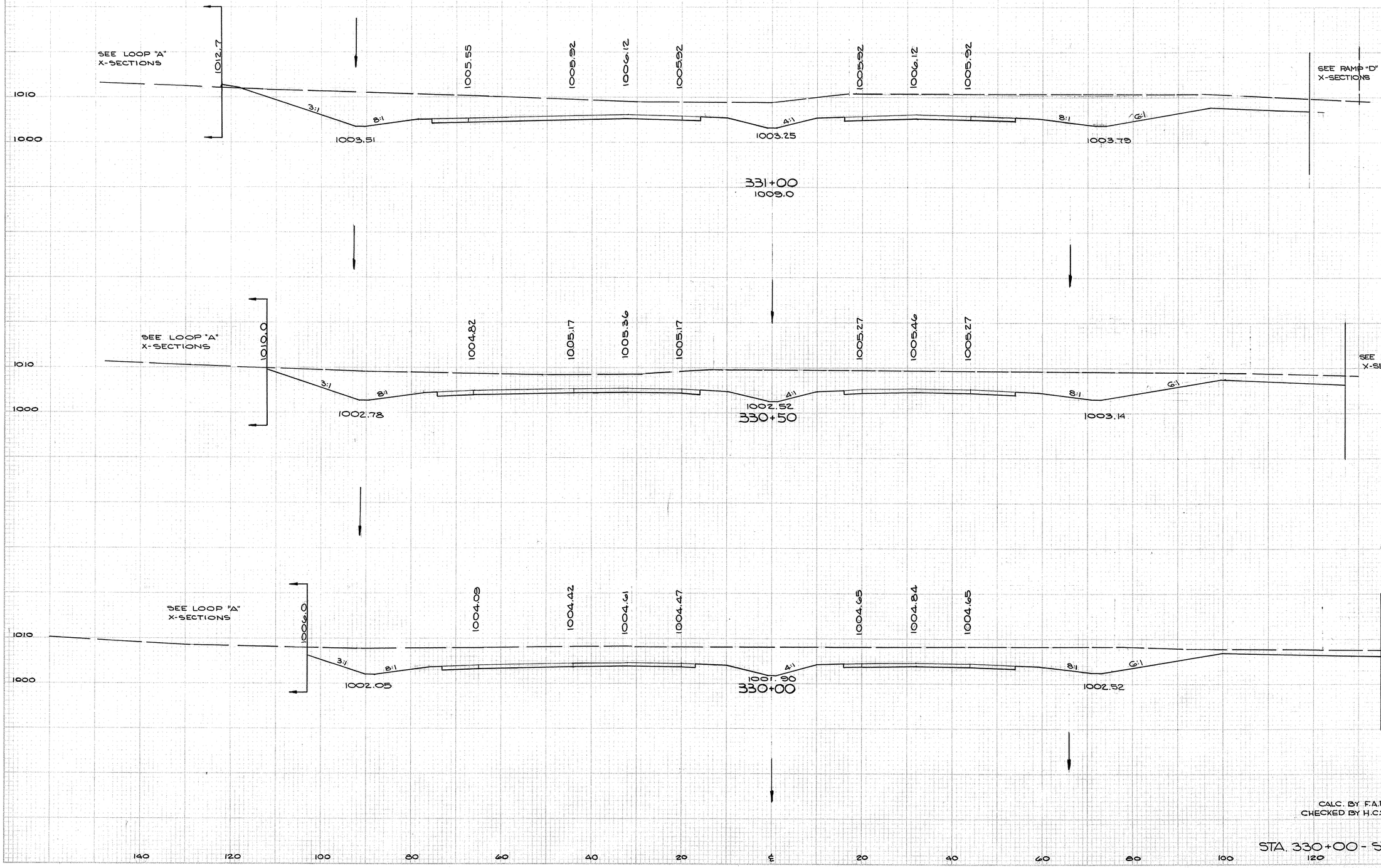

END AREA		CU. YDS.	
CUT	FILL	CUT	FILL
1066	2		
		1953	2
1043	0		
		1815	0
917	0		
		1626	0

CALC. BY F.A.E. 10/67
CHECKED BY H.C.S. 12/68

STA. 330+00 - STA. 331+00

FED. RD. DIVISION	STATE	PROJECT	
2	OHIO		

166
460

SUM-8-17.63



	END AREA		CU. YDS.	
	CUT	FILL	CUT	FILL
	334	14		
			944	18
	425	6		
	884	6		
AHEAD	529	0		
BACK	987	0		
	1901	2		

CALC. BY F.A.E. 10/67
CHECKED BY H.C.S. 12/68

STA. 331+50 - STA. 332+50

FED. RD. DIVISION	STATE	PROJECT	
2	OHIO		

167
460

SUM-8-17.63

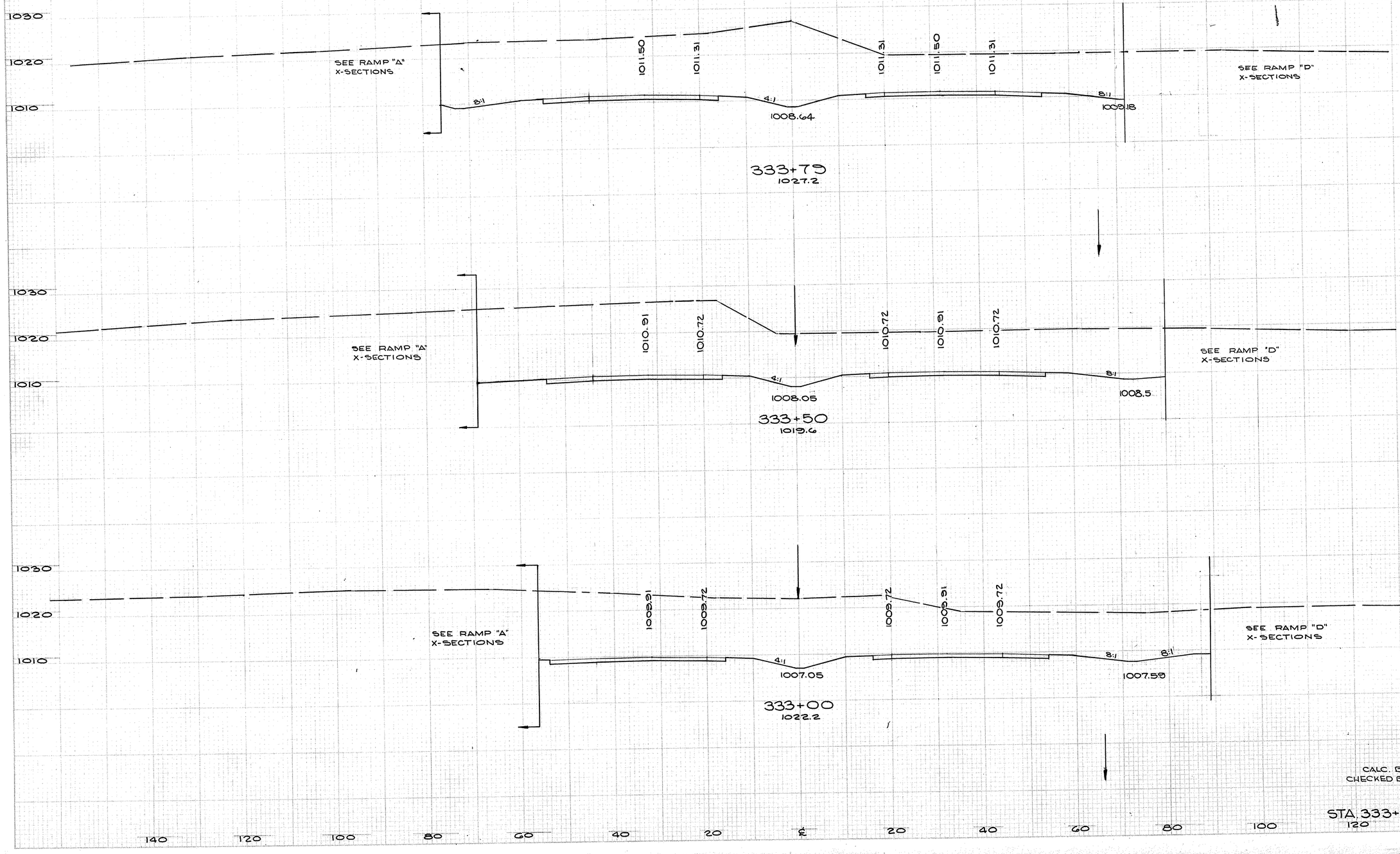

END AREA		CU. YDS.	
CUT	FILL	CUT	FILL
1815	0		
		1933	0
1867	0		

FED. RD. DIVISION	STATE	PROJECT	
2	OHIO		

168
460

SUM-8-17.63

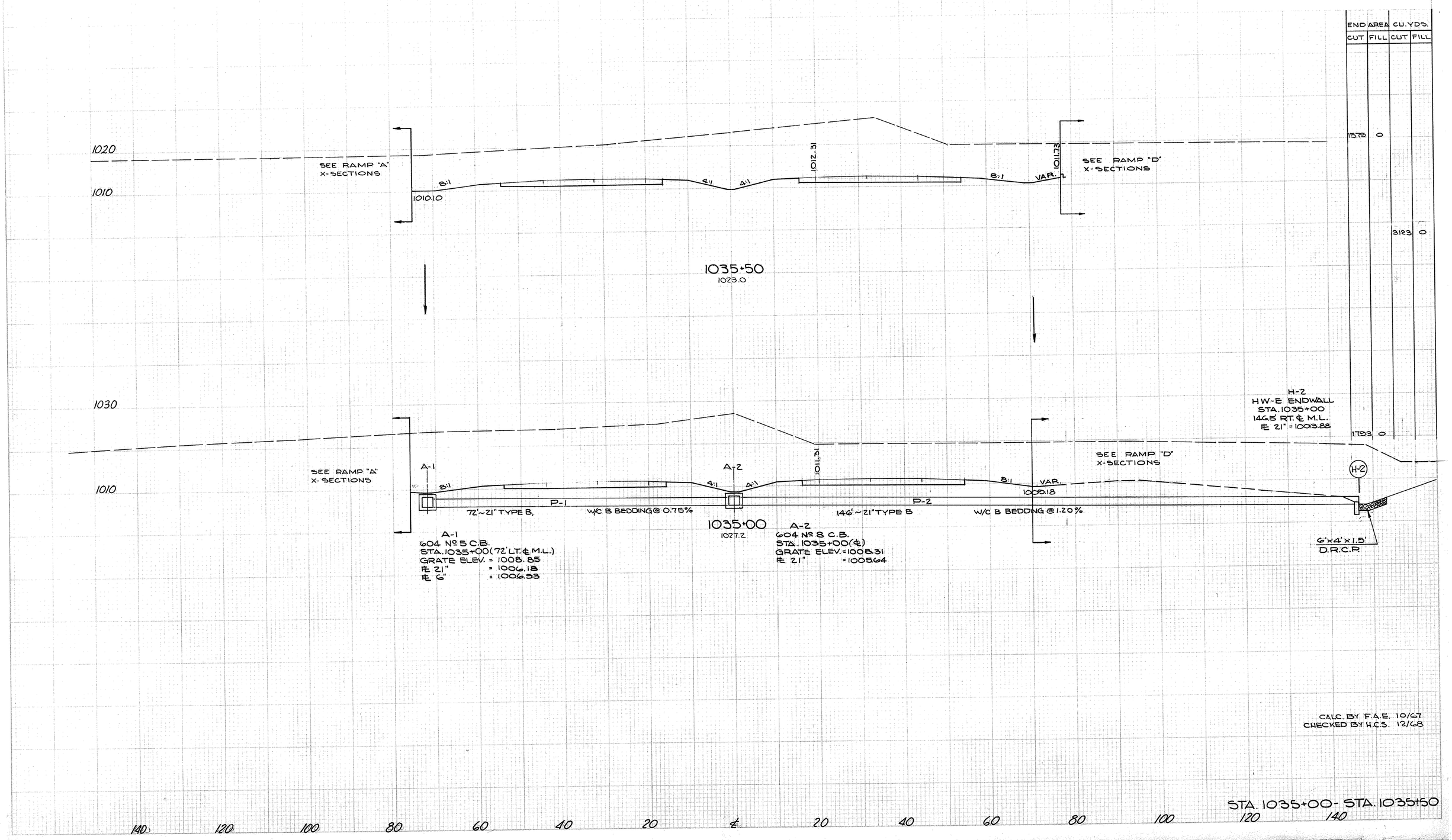

END AREA		CU. YDS.	
CUT	FILL	CUT	FILL
1579	0		
		3123	0
1793	0		

CALC. BY F.A.E. 10/67
CHECKED BY H.C.S. 12/68

STA. 1035+00 - STA. 1035+50

FED. RD. DIVISION	STATE	PROJECT	
2	OHIO		

163
460

SUM-8-17.63

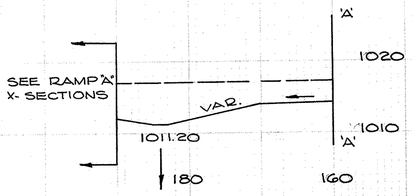

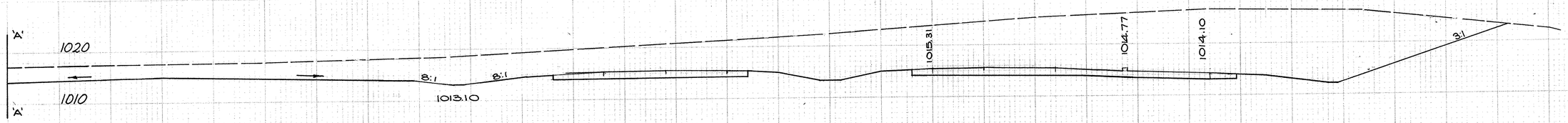

1037+00
1022.3

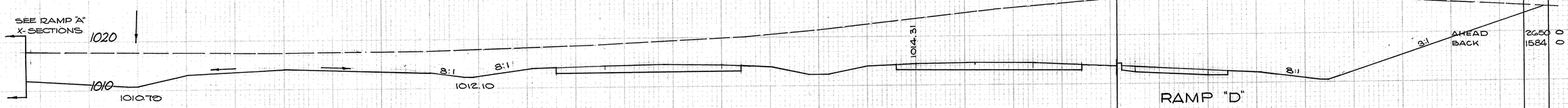

1036+50
1021.4

RAMP "D"

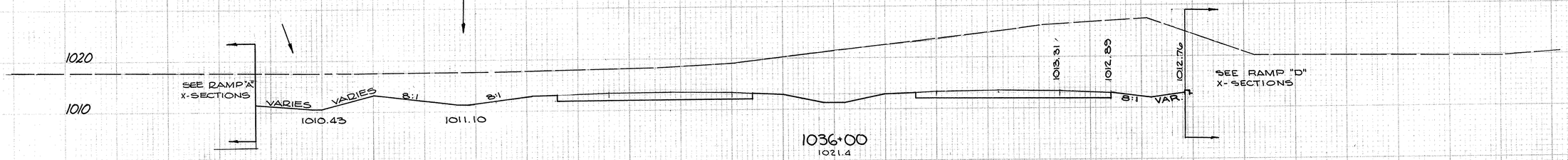

1036+00
1021.4

END AREA		CU. YDS	
CUT	FILL	CUT	FILL
2226	0		
		4515	0
2650	0		
1584	0		
		2324	0
1574	0		
		2321	0

CALC. BY F.A.E. 10/67
CHECKED BY H.C.S. 12/68

STA. 1036+00 - STA. 1037+00

140 120 100 80 60 40 20 ℄ 20 40 60 80 100 120 140

FED. RD DIVISION	STATE	PROJECT	
2	OHIO		

170
460

SUM-8-17.63

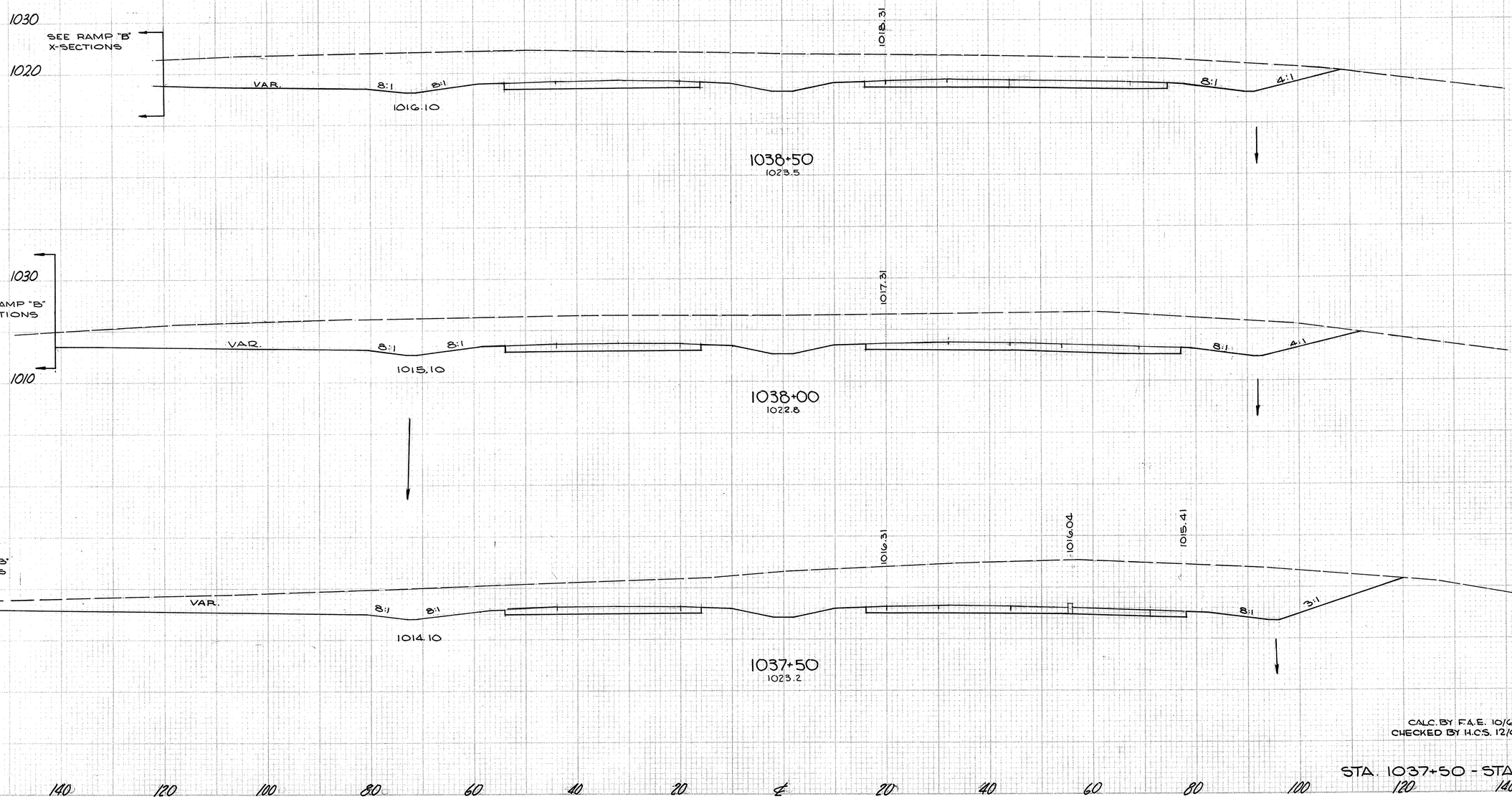

END AREA CU. YDS			
CUT	FILL	CUT	FILL
1414	0		
		2719	0
1522	0		
		2978	0
1693	0		
		3430	0

CALC. BY F.A.E. 10/67
CHECKED BY H.C.S. 12/68

STA. 1037+50 - STA. 1038+50

FED. RD. DIVISION	STATE	PROJECT	
2	OHIO		

171
460

SUM-8-17.63

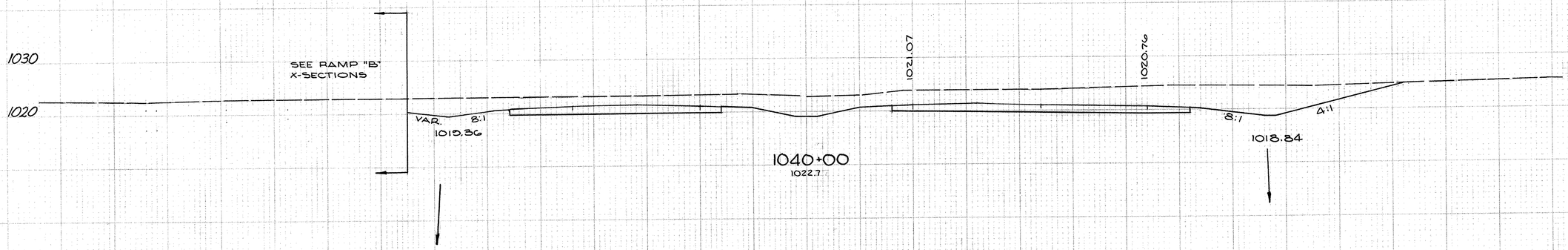

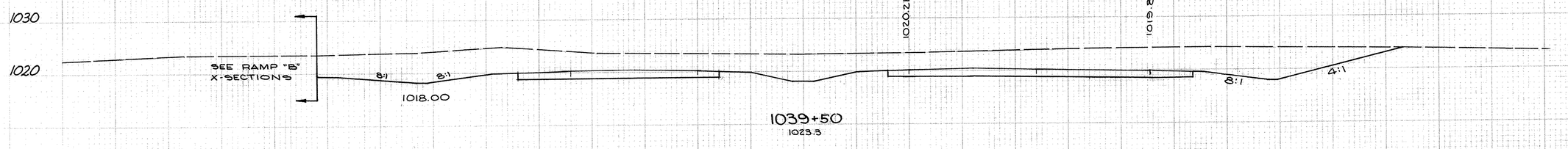

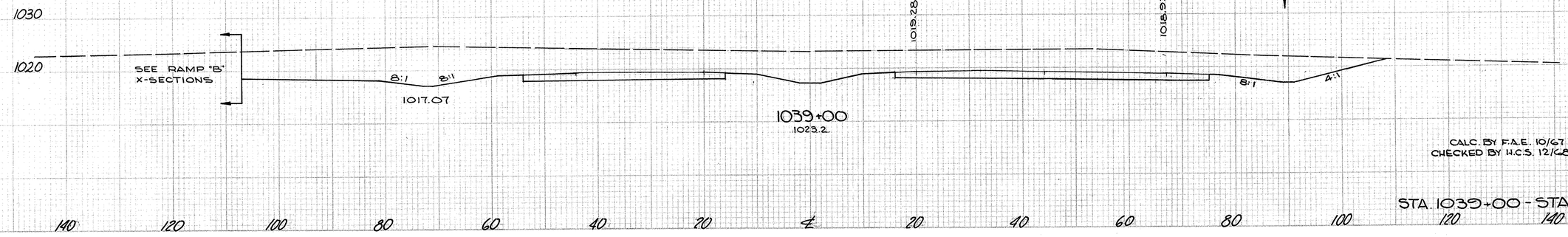

END AREA		CU. YDS.	
CUT	FILL	CUT	FILL
661	0		
		1498	0
957	0		
		1822	0
1118	0		
		2345	0

CALC. BY F.A.E. 10/67
CHECKED BY H.C.S. 12/68

STA. 1039+00 - STA. 1040+00

140 120 100 80 60 40 20 ℄ 20 40 60 80 100 120 140

FED. RD. DIVISION	STATE	PROJECT	
2	OHIO		

172
460

SUM-8-17.63

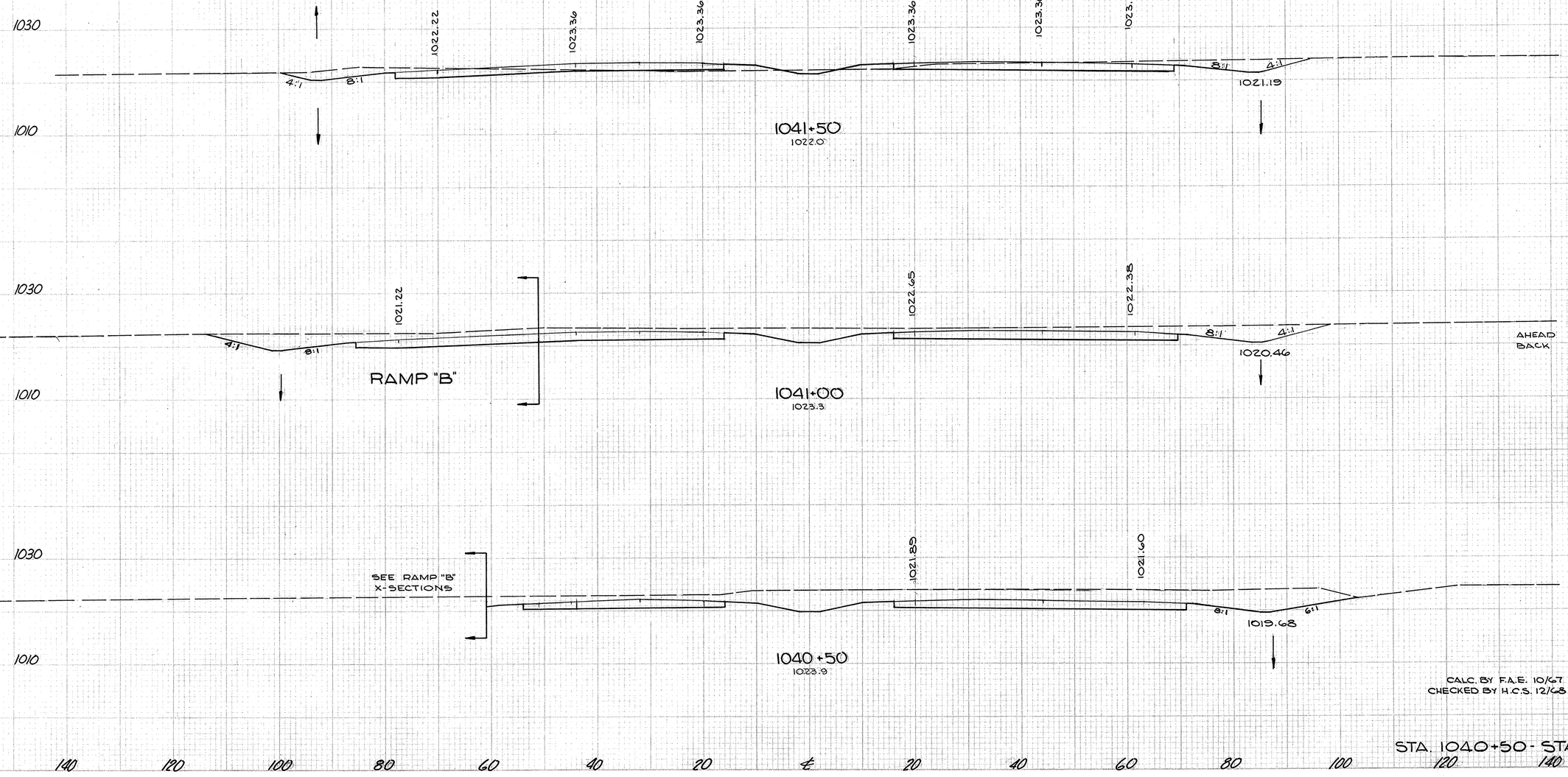

	END AREA CUT	END AREA FILL	CU. YDS. CUT	CU. YDS. FILL
	179	26		
			588	24
AHEAD	456	0		
BACK	303	0		
			656	0
	475	0		
			1052	0

CALC. BY F.A.E. 10/67
CHECKED BY H.C.S. 12/68

STA. 1040+50 - STA. 1041+50

FED. RD. DIVISION	STATE	PROJECT	
2	OHIO		

173
460

SUM-8-17.63

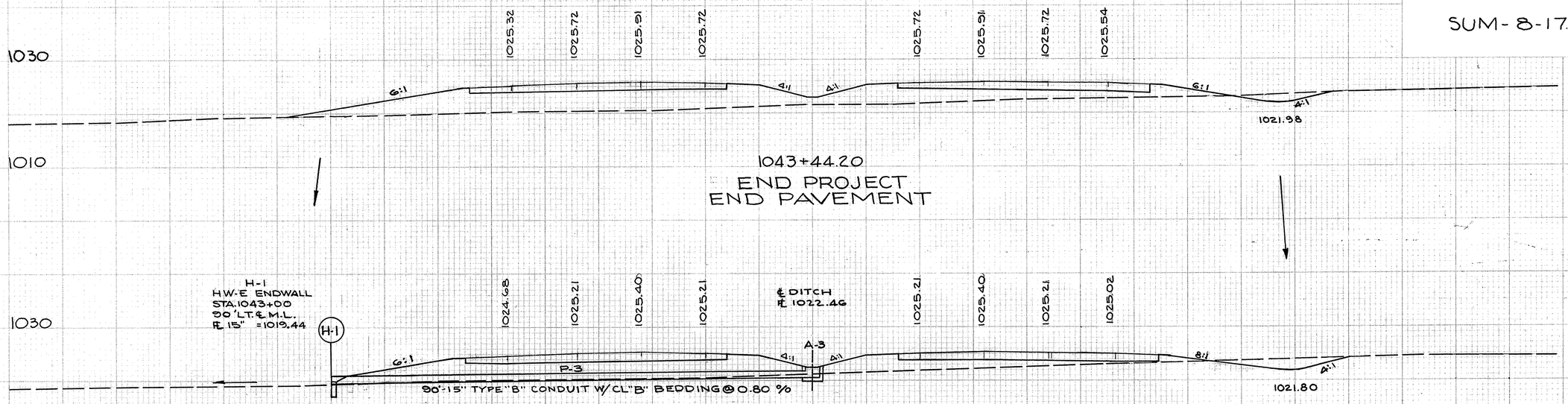

END AREA		CU. YDS.	
CUT	FILL	CUT	FILL
23	438		
		42	628
29	333		
		102	492
81	198		
		181	261
114	84		
		272	102

CALC. BY F.A.E. 10/67
CHECKED BY H.C.S. 12/68

STA. 1042+00-1043+44.20

FED. RD. DIVISION	STATE	PROJECT	
2	OHIO		

174
4660

SUM-8-17.63

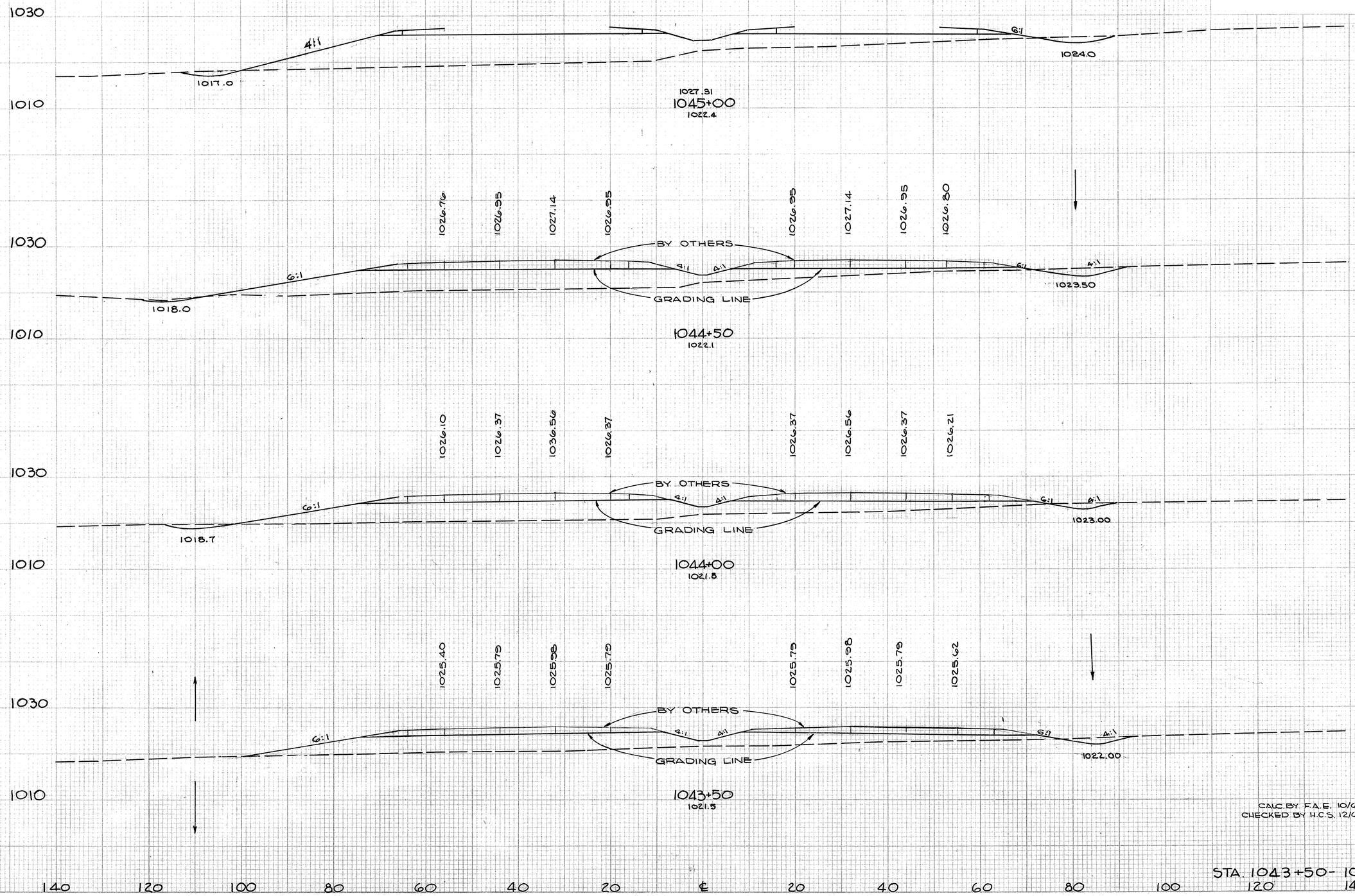

END AREA		CU. YDS.	
CUT	FILL	CUT	FILL
27	670		
		44	1038
20	451		
		32	842
14	458		
		28	795
16	400		
		4	93

CALC. BY F.A.E. 10/67
CHECKED BY H.C.S. 12/68

STA. 1043+50 - 1045+00

SEEDING	
END WIDTH	SQ. YDS.

FED. RD. DIVISION	STATE	PROJECT	
2	OHIO		

174-A
460

SUM-8-17.63

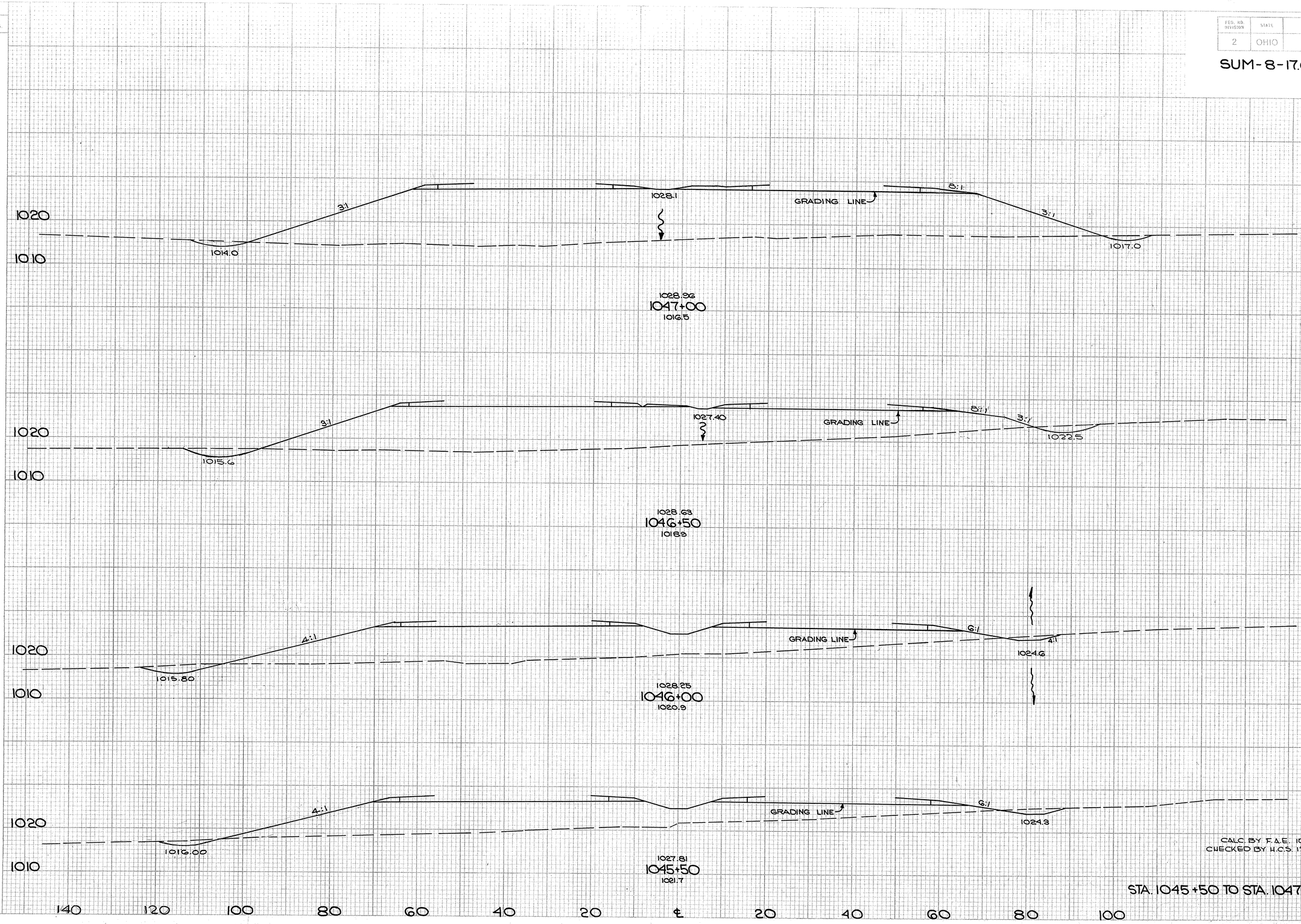

END AREA		VOLUME	
CUT	FILL	CUT	FILL
	27		1924
		52	3010
	29		1326
		47	2091
	21		932
		33	1609
	14		805
		38	1366

CALC. BY F.A.E. 10/67
CHECKED BY H.C.S. 12/68

STA. 1045+50 TO STA. 1047+00

FED. RD. DIVISION	STATE	PROJECT	
2	OHIO		

174-B
460

SUM-8-17.63

SEEDING	
END WIDTH	SQ. YDS.

1029.73
1049+25
1007.00

END WORK
ZERO SECTION

TO RT. DITCH
STA. 72+00
HUDSON DR.

1010.0

1029.70
1049+00
1008.8

END EMBANKMENT
STA. 1048+68

2:1 2:1
1012.85

1029.60
1048+50
1008.0

GRADING LINE

3:1

4:1

1013.0

TO HUDSON DR.
RT. DITCH

2:1 2:1
1009.0

1029.44
1048+00
1010.5

10:1

1028.3

GRADING LINE

VARIES

3:1

4:1
1011.2

4:1

1013.3

1029.23
1047+50
1013.3

CALC. BY F.A.E. 10/67
CHECKED BY H.C.S. 12/68

STA. 1047+50 TO STA. 1049+25

END AREA		VOLUME	
CUT	FILL	CUT	FILL
0	0		
		4	0
8	0		
		14	248
7	268		
		36	1646
32	1508		
		51	3600
23	2476		
		47	4074

100 80 60 40 20 ℄ 20 40 60 80 100

END AREA		VOLUME	
CUT	FILL	CUT	FILL
0	0		
0	0	4	0
6	0	12	0
17	0	24	0
19	0	9	0
30	0	33	0
0	0	28	0

FED. RD. DIVISION	STATE	PROJECT	
2	OHIO		

174-C
460

SUM-8-17.63

72+50

END JUTE MATT'G
STA. 1048+00 SR 8

FROM S.R.-8 SIDE DITCH
STA. 1048+00 RT.

1/2":1'

2:1

1:2

BEGIN JUTE MATT'G
STA. 72+00

1007.0

72+00

1/2":1'

2:1

1:2

1006.8

71+50

EXIST. CULVERT 12" V.C.P.
STA. 71+20 INLET 1006.55

1:2

2:1

1006.8

71+00

1:2

1006.86

70+86

1:2

2:1

1007.00

70+50

FROM SR-8 SIDE DITCH
STA. 1048+00 LT.

70+00

NOTE:
FOR PLAN SHEET HUDSON DR.
SEE SHEET Nº 57

CALC. BY F.A.E. 10/67
CHECKED BY H.C.S. 12/68

STA. 70+00 TO STA. 72+50
HUDSON DR.

ORIGINAL SURVEY — NOTE BOOK — NO.

FINAL SURVEY — NOTE BOOK — NO. — DATE

	END AREA		CU. YDS.	
	CUT	FILL	CUT	FILL
249+00	620	20	1331	37
248+50	818	20	1515	35
248+00	618	18	1530	28
247+50	834	12	1622	22
247+00	917	11	1724	20
M.L. STA. 246+50	994	10		

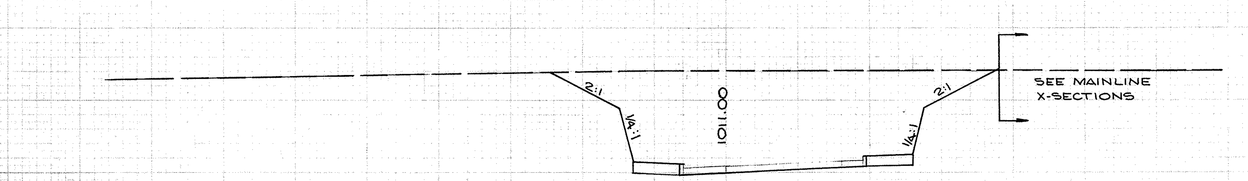

249+00

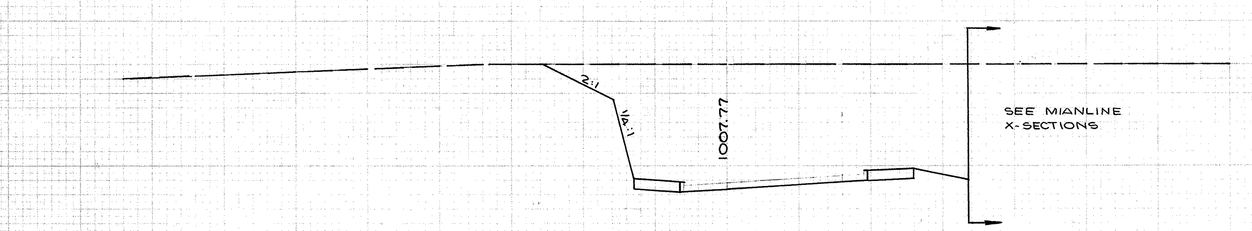

248+50

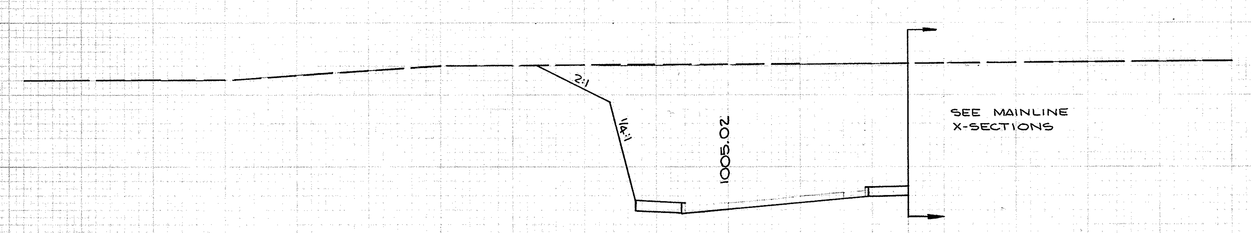

248+00

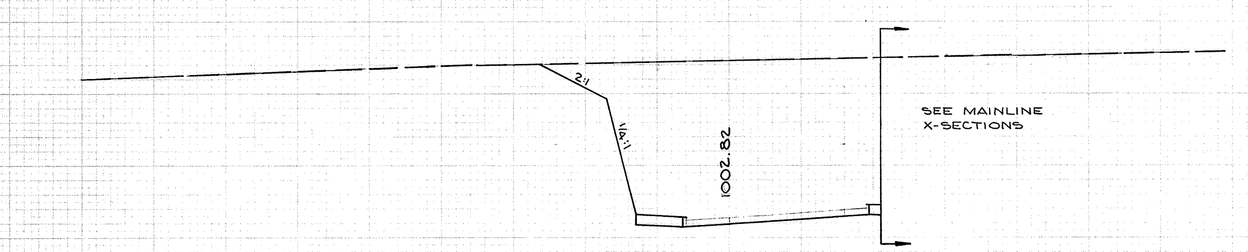

247+50

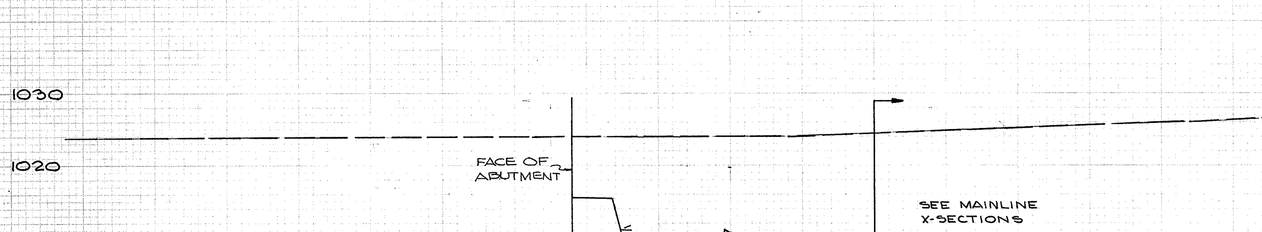

247+00

RAMP "L"
STA. 247+00 - STA. 249+00

CALC. BY: F.A.E. 10/67
CHECKED BY: H.C.S. 12/68

80 60 40 20 B 20 40 60 80

FED. RD.	STATE	PROJECT
2	OHIO	

SUM-8-17.63

175
466

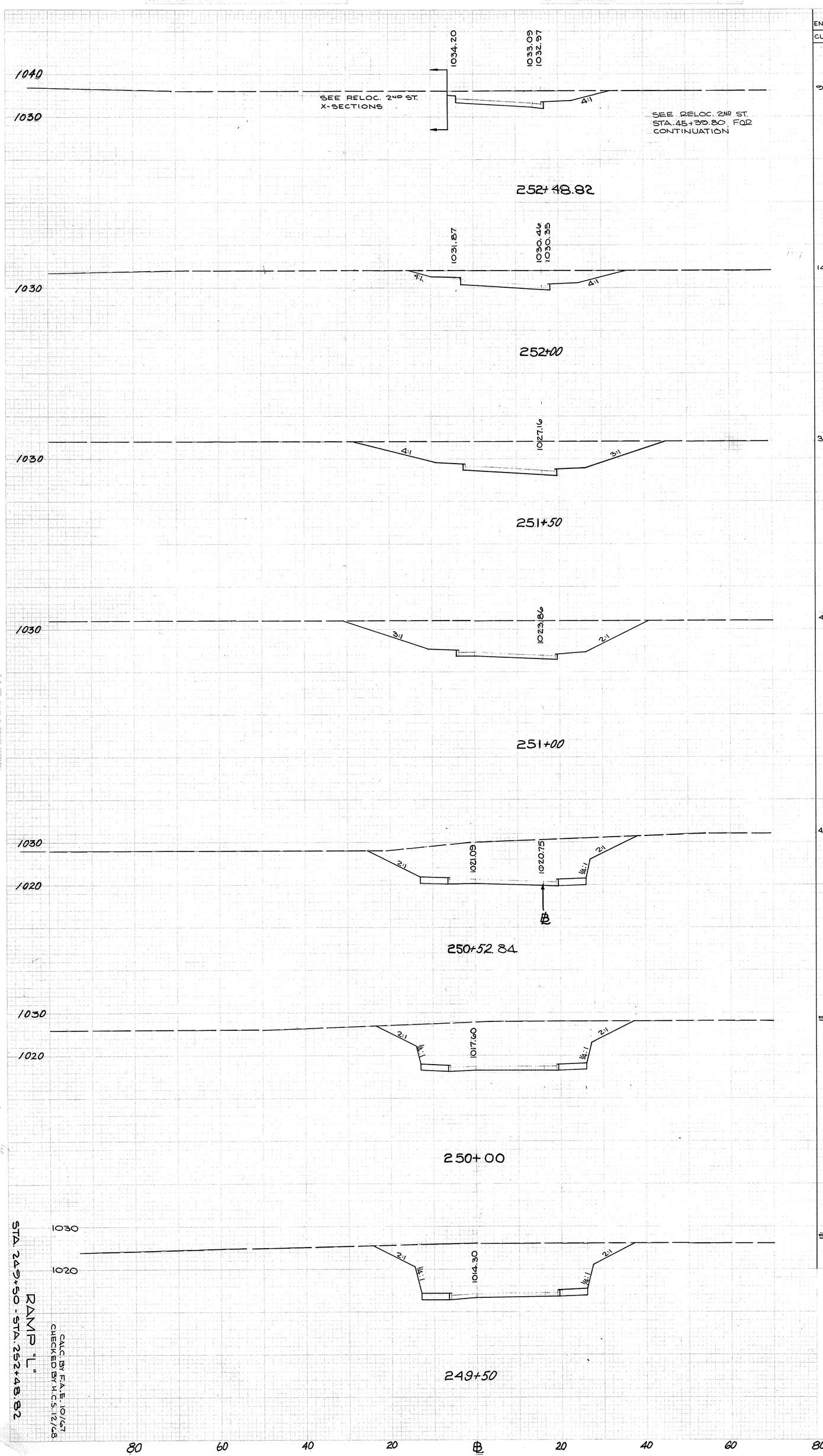

END AREA CUT	END AREA FILL	CU. YDS. CUT	CU. YDS. FILL
96	0		
		170	0
144	0		
		476	0
369	0		
		752	0
442	0		
		785	17
457	20		
		944	39
508	20		
		1020	37
593	20		
		1124	37

RAMP "L"
STA. 249+50 - STA. 252+48.82

CALC. BY F.A.E. 10/67
CHECKED BY H.C.S. 12/68

SUM-8-17.63

FED. RD.	STATE	PROJECT
2	OHIO	

176
460

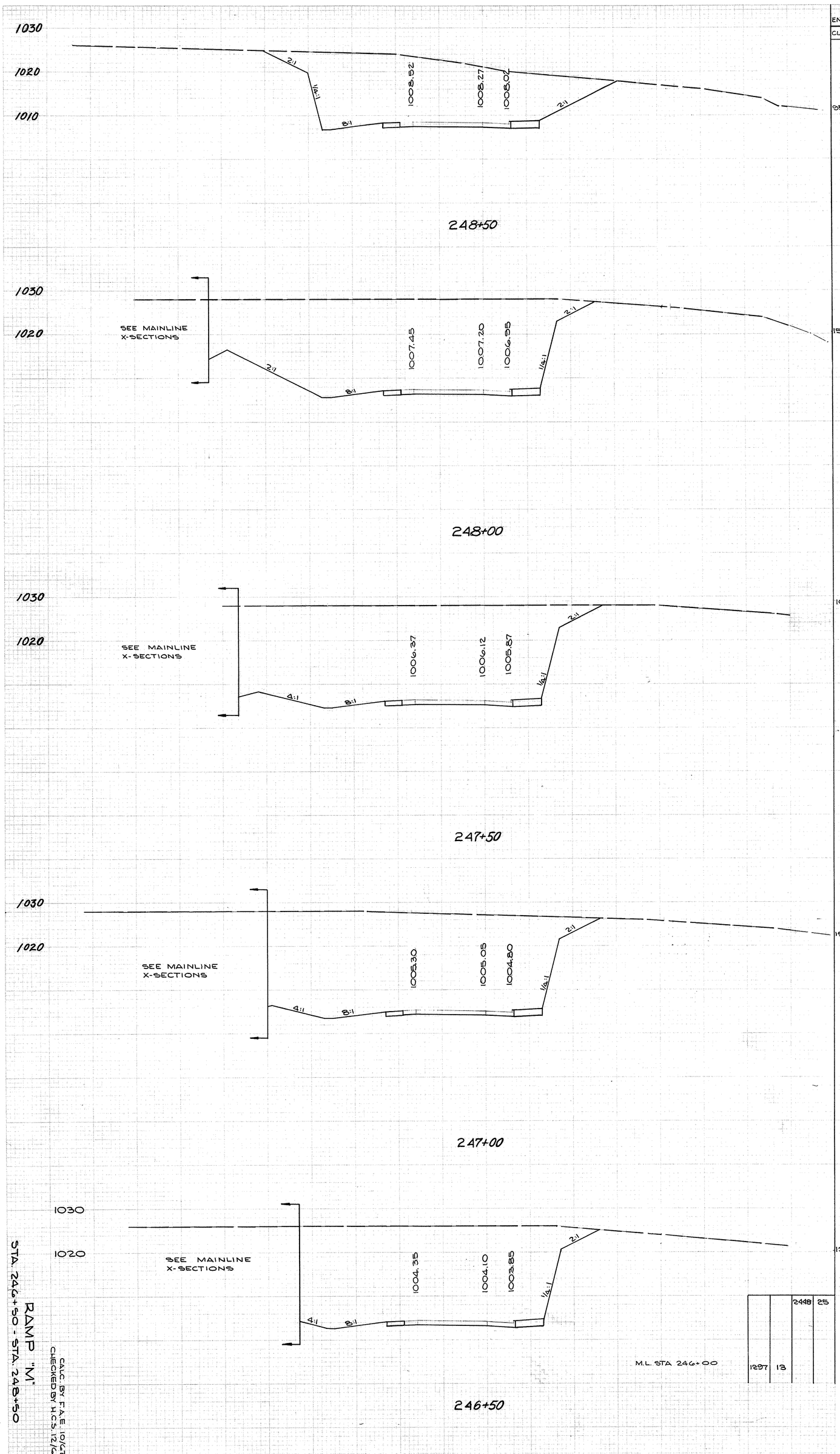

END AREA CUT	END AREA FILL	CU. YDS. CUT	CU. YDS. FILL
951	14		
		2359	26
1597	14		
		3002	26
1645	14		
		2946	26
1536	14		
		2671	26
1347	14		
		2448	25
1297	13		

RAMP "M"
STA. 246+50 - STA. 248+50

CALC. BY F.A.E. 10/67
CHECKED BY H.C.S. 12/68

SUM-8-17.63

FED. RD.	STATE	PROJECT
2	OHIO	

177
460

END AREA		CU. YDS.	
CUT	FILL	CUT	FILL
295	0	556	0
935	0	885	0
620	0	1293	0
775	0	1589	13
340	14	1752	26

FED. RD.	STATE	PROJECT
2	OH10	

178
460

SUM-8-17.63

251+00

1013.16
1013.45
1012.31

VARIES

SEE FRONT ST. X-SECTIONS

1020
1010

250+50

1012.45
1012.70
1012.20

2:1

1020
1010

250+00

1011.50
1011.75
1011.25

2:1

1020
1010

249+50

1010.42
1010.67
1010.17

2:1
1½:1
2:1

1020
1010

249+00

1009.35
1009.60
1009.10

4:1
2:1
1½:1
2:1

1020
1010

80
60
40
20

CALC. BY F.A.E. 10/67
CHECKED BY H.C.S. 12/68

RAMP "M"

STA. 249+00 - STA. 251+00

FINAL SURVEY
ORIGINAL SURVEY
K+E PLATE 2, CROSS SECTION
KEUFFEL & ESSER CO.

ORIGINAL SURVEY
NOTE BOOK
NO.
FINAL SURVEY
NOTE BOOK
NO.

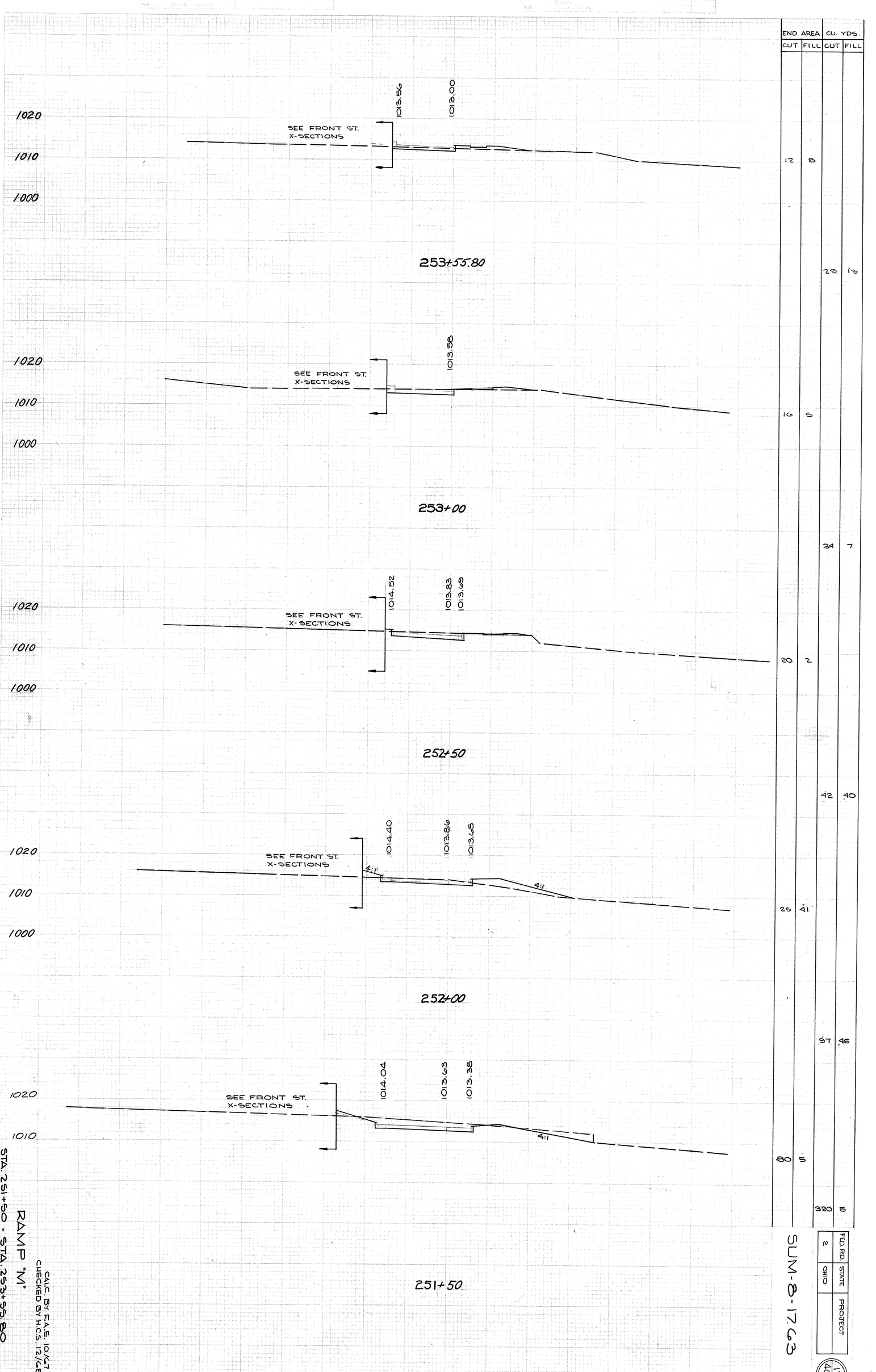

STA.	END AREA CUT	END AREA FILL	CU. YDS. CUT	CU. YDS. FILL
253+55.80	12	0	29	3
253+00	16	0	34	7
252+50	8	2	42	10
252+00	25	41	97	46
251+50	80	5	320	5

80 60 40 20 ℄ 20 40 60 80

RAMP "M"
STA. 251+50 - STA. 253+55.80

CALC. BY F.A.E. 10/67
CHECKED BY H.C.S. 12/68

SUM-8-17.63

FED. RD.	STATE	PROJECT
2	OHIO	

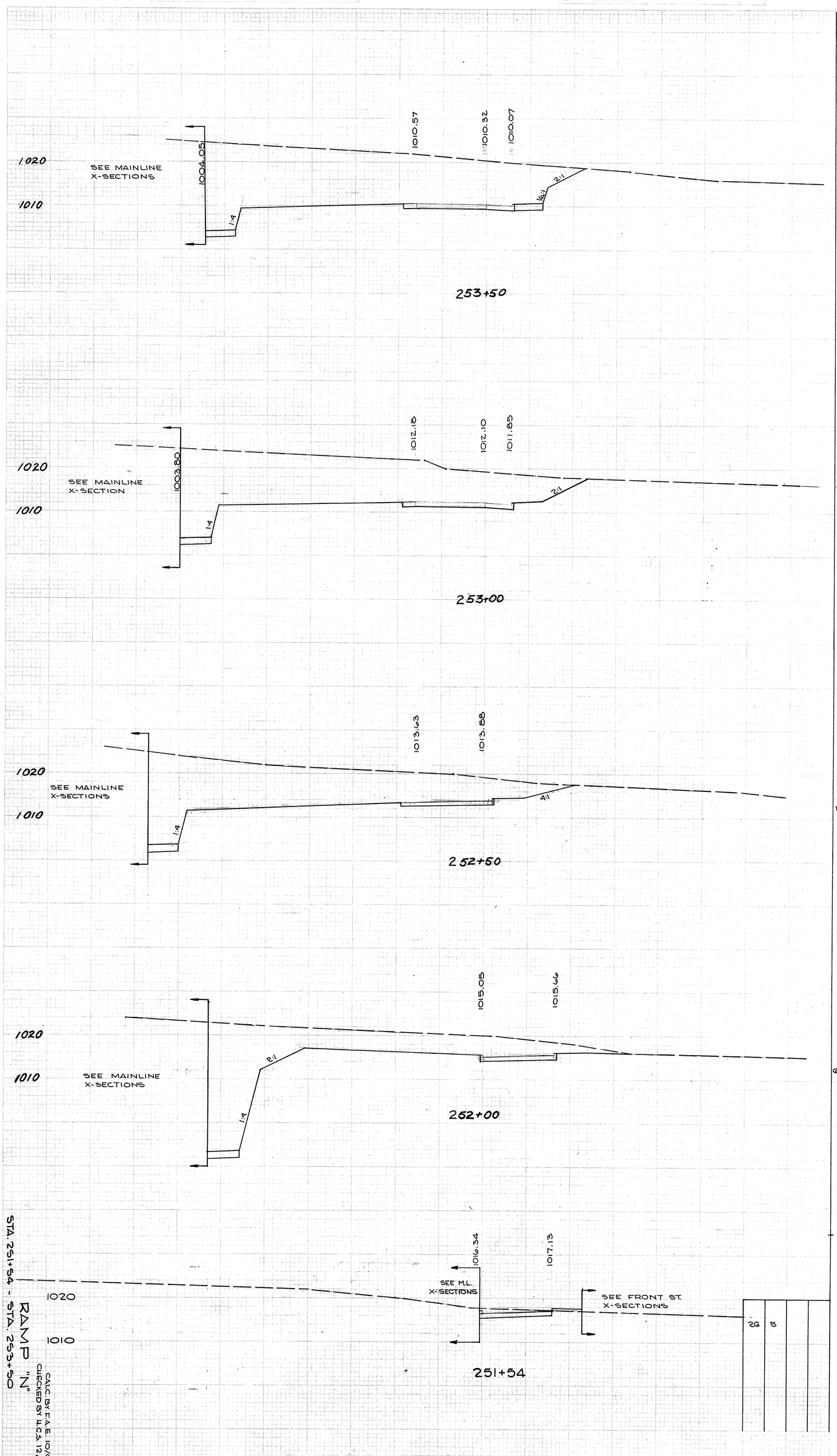

END AREA CUT	END AREA FILL	CU. YDS. CUT	CU. YDS. FILL
1090	20		
		1917	28
979	10		
		1707	19
865	10		
		1431	19
680	10		
		602	13

RAMP "N"
STA. 251+54 - STA. 253+50

CALC. BY F.A.E. 10/67
CHECKED BY H.C.S. 12/68

SUM-8-17.63

FED. RD.	STATE	PROJECT
2	OHIO	

180
460

ORIGINAL SURVEY — NOTE BOOK — NO.

FINAL SURVEY — NOTE BOOK — NO.

	END AREA		CU.YDS.	
	CUT	FILL	CUT	FILL
STA. 256+50 SEE M.L. X-SECTION	842	26		
			1759	61
	1058	40		
			1895	56
	1095	20		
			1913	37
	970	20		
			1891	37
	1072	20		
			1919	37
	1088	20		
			1935	37

1020
1010
SEE MAINLINE X-SECTIONS
1005.26
1005.25
1005.00
1004.75
2:1
1/2:1

256+00

1020
1010
SEE MAINLINE X-SECTIONS
1005.01
1005.75
1005.50
1005.25
2:1
1/2:1

255+50

1020
1010
SEE MAINLINE X-SECTIONS
1004.78
1006.53
1006.28
1006.03
2:1
1/2:1

255+00

1020
1010
SEE MAINLINE X-SECTIONS
1004.53
1007.59
1007.34
1007.09
1:4
2:1
1/2:1

254+50

1020
1010
SEE MAINLINE X-SECTION
1004.29
1008.94
1008.69
1008.44
1:4
1:4
2:1

254+00

RAMP "N"
STA. 254+00 - STA. 256+00

CALC. BY F.A.E. 10/67
CHECKED BY H.C.S. 12/68

80 60 40 20 0 20 40 60 80

2	FED. RD.	STATE
OHIO		PROJECT

SUM-8-17.63

ORIGINAL SURVEY
FINAL SURVEY

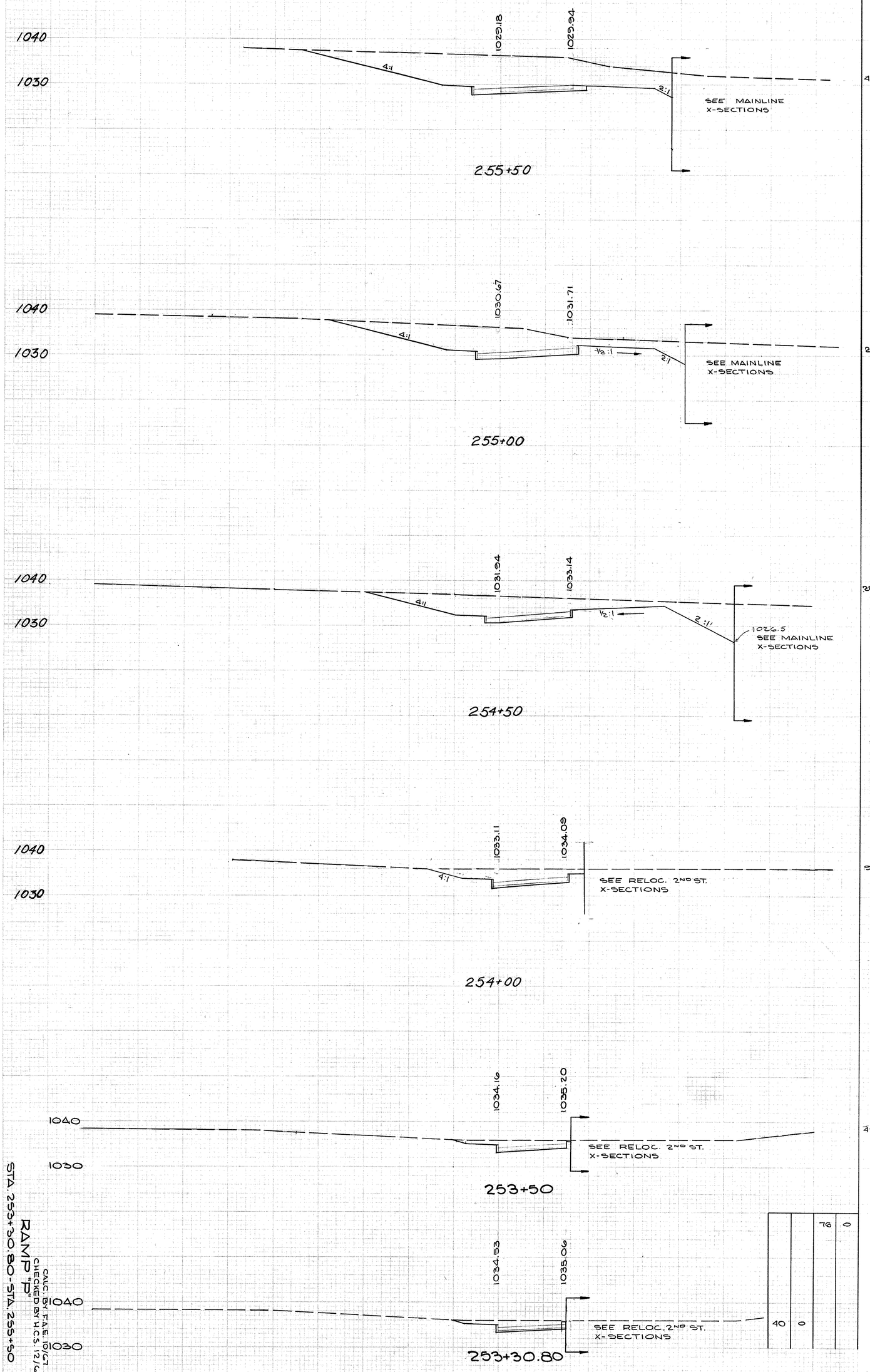

END AREA CUT	END AREA FILL	CU. YDS. CUT	CU. YDS. FILL
436	0		
		670	0
287	0		
		527	0
382	0		
		347	0
93	0		
		125	0
42	0		
40	0	76	0

RAMP "D"
STA. 253+30.80 - STA. 255+50
CALC. BY: T.A.E. 10/67
CHECKED BY: H.C.S. 12/68

SUM-8-17.63

FED. RD.	STATE	PROJECT
2	OHIO	

182
460

ORIGINAL SURVEY — SURVEYED — BY — DATE — NOTE BOOK — PLOTTED — CHECKED — NO.

FINAL SURVEY — SURVEYED — BY — DATE — NOTE BOOK — PLOTTED — CHECKED — NO.

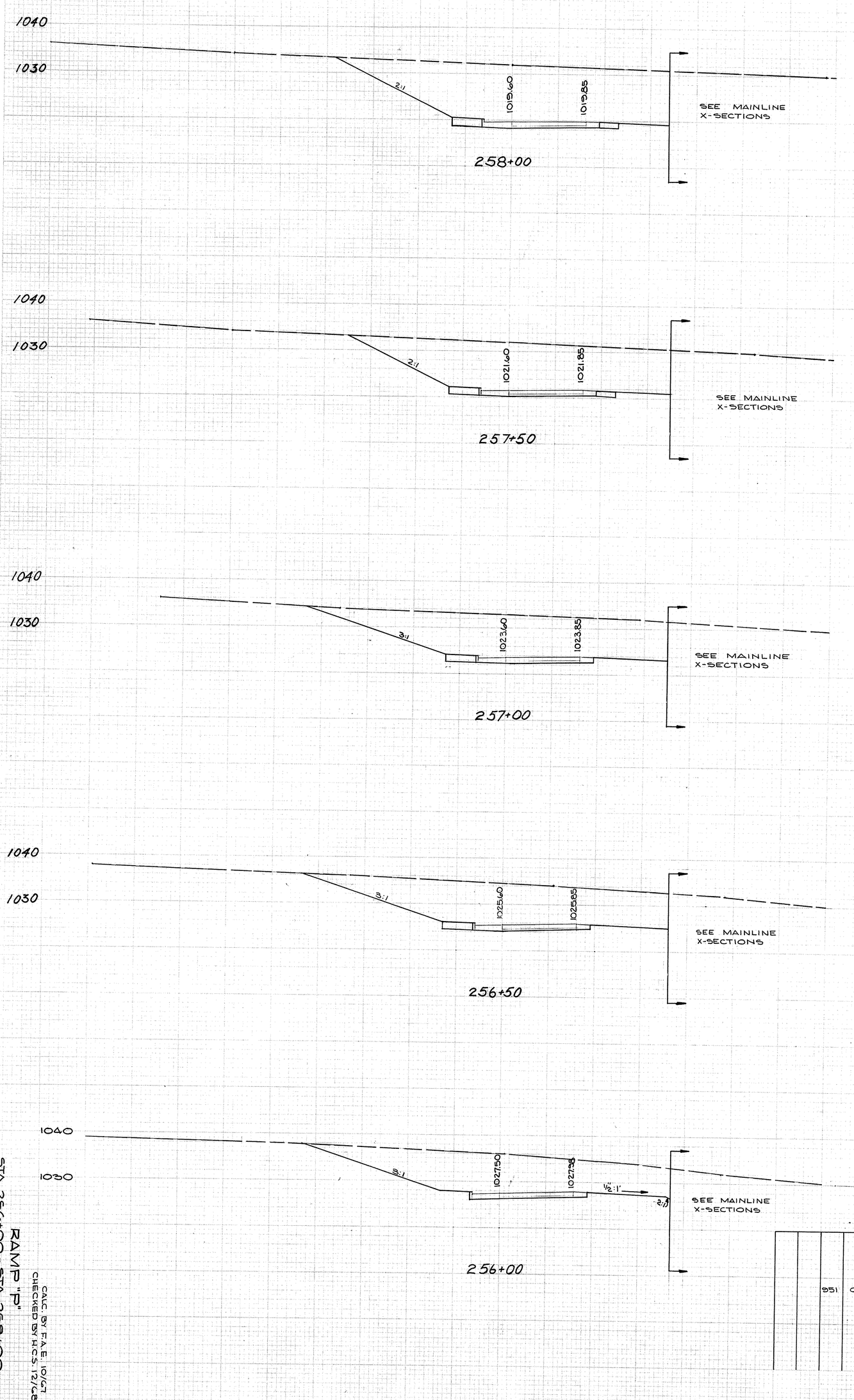

END AREA		C.U. YDS.	
CUT	FILL	CUT	FILL
774	16		
		1323	30
654	16		
		1187	24
628	10		
		1144	19
607	10		
		1110	10
591	0		
		851	0

RAMP "P"
STA. 256+00 - STA. 258+00

CALC. BY F.A.E. 10/67
CHECKED BY H.C.S. 12/68

FED. RD.	STATE	PROJECT
2	OHIO	

SUM-8-17.63

188
420

ORIGINAL SURVEY
NOTE BOOK

FINAL SURVEY
NOTE BOOK

	END AREA		CU. YDS.	
	CUT	FILL	CUT	FILL
1590		16		
			2738	30
1367		16		
			2328	30
1136		16		
			2037	30
1068		16		
			1869	30
955		16		
			1601	30

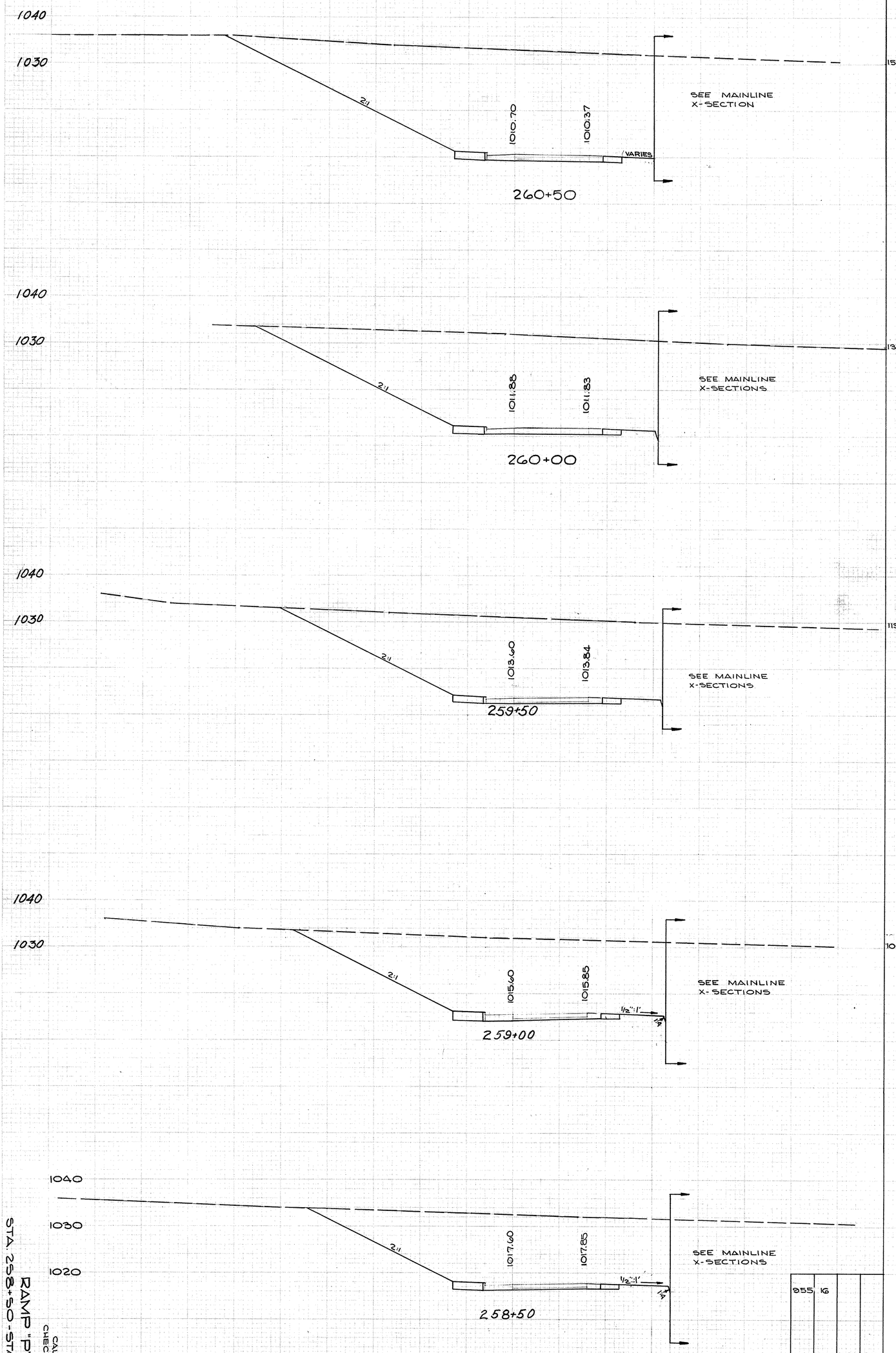

RAMP "P"
STA. 258+50 - STA. 260+50

CALC. BY F.A.E. 10/67
CHECKED BY H.C.S. 12/68

80 60 40 20 ℄ 20 40 60 80

SUM-8-17.63

FED. RD.	STATE	PROJECT
2	OHIO	

184
420

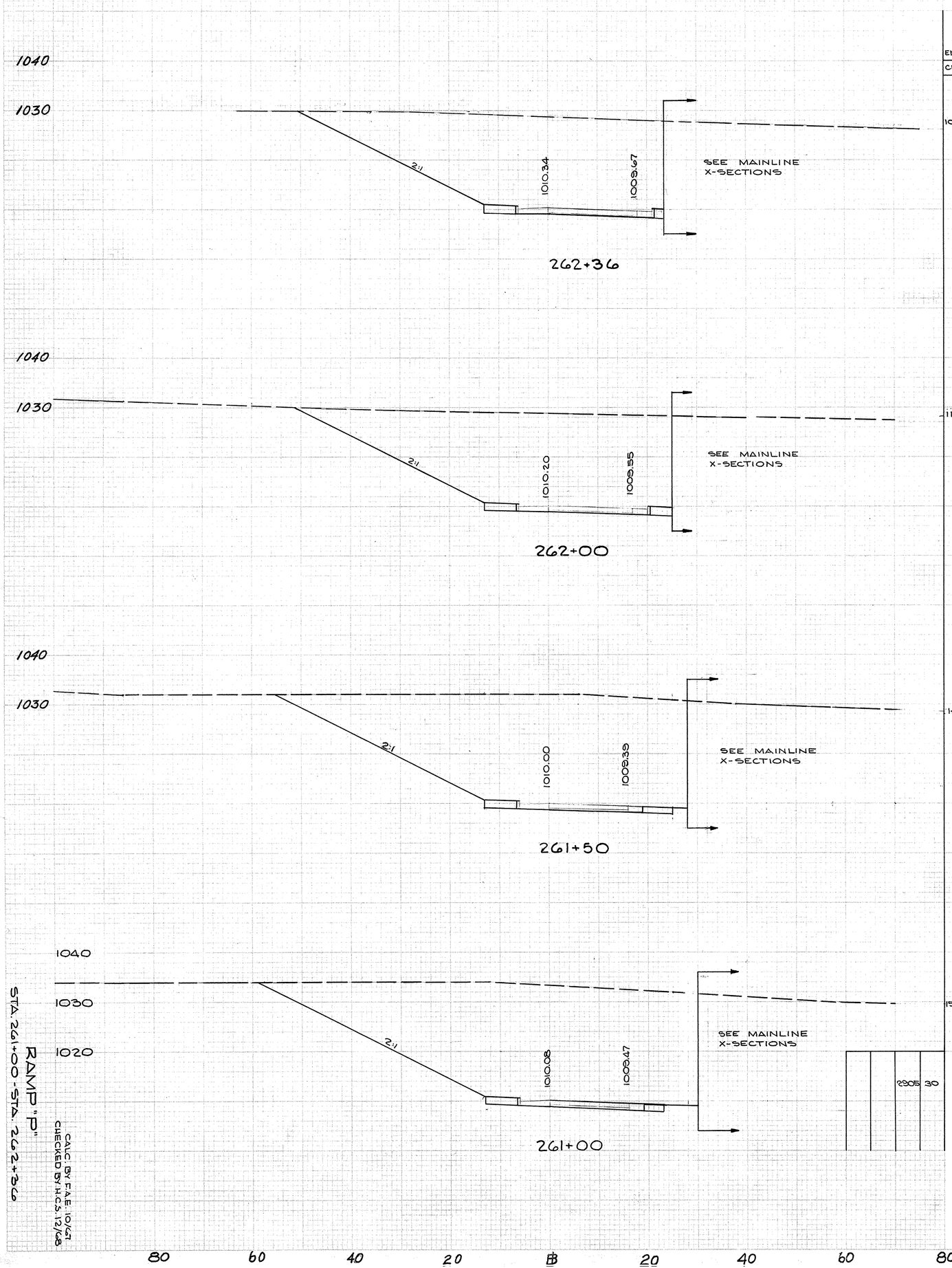

END AREA CUT	END AREA FILL	CU. YDS. CUT	CU. YDS. FILL
1069	13		
		1454	20
1112	17		
		2337	34
1411	19		
		2739	33
1547	16		
		2905	30

RAMP "P"
STA. 261+00 - STA. 262+36

CALC. BY F.A.E. 10/67
CHECKED BY H.C.S. 12/68

SUM-8-17.63

FED. RD.	STATE	PROJECT
2	OHIO	

185
460

CORRECTED ARC DISTANCE	END AREA CUT	END AREA FILL	CU. YDS. CUT	CU. YDS. FILL
	883	0		
CUT 48.22'			1362	0
	649	0		
CUT 48.01			885	0
	469	0		
			653	0
	279	0		
			414	0
	188	0		

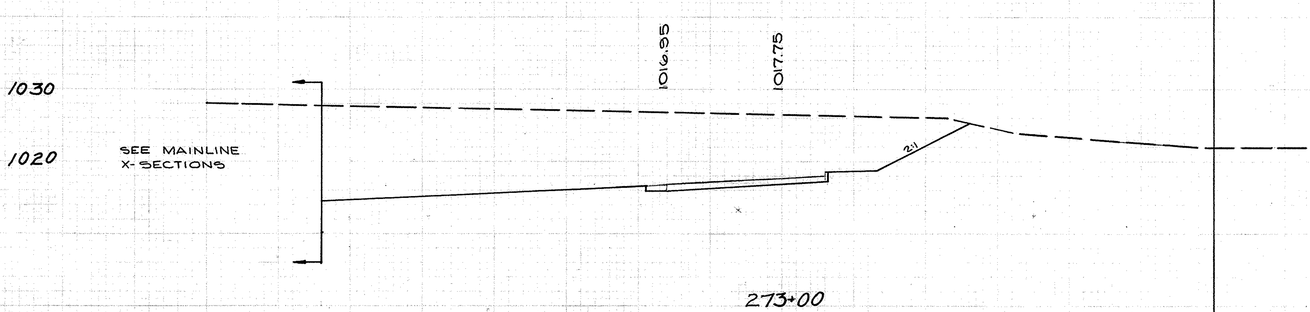

273+00

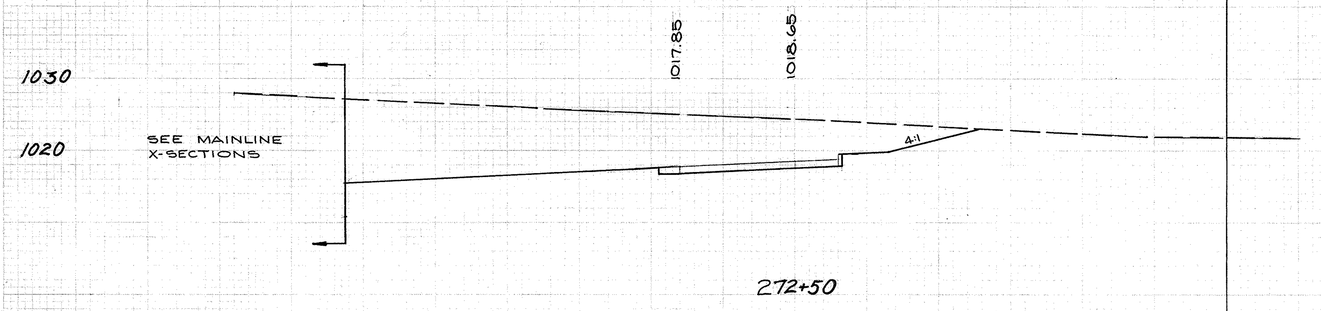

272+50

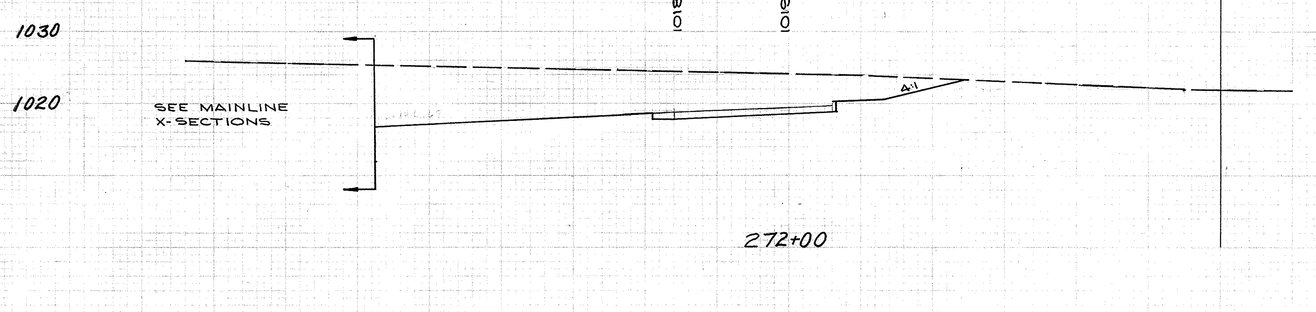

272+00

C.B.
85'LT. STA. 271+63 RAMP "Q"
=71.5' RT. STA. 272+00 S.R. 8

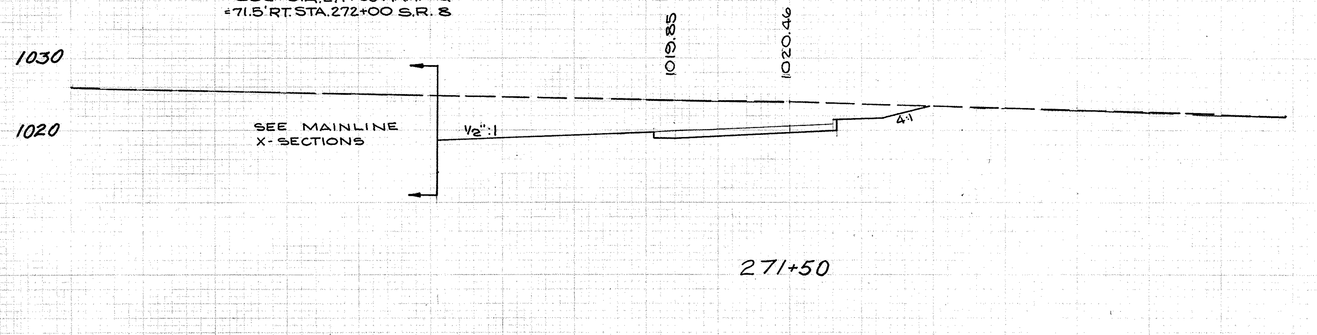

271+50

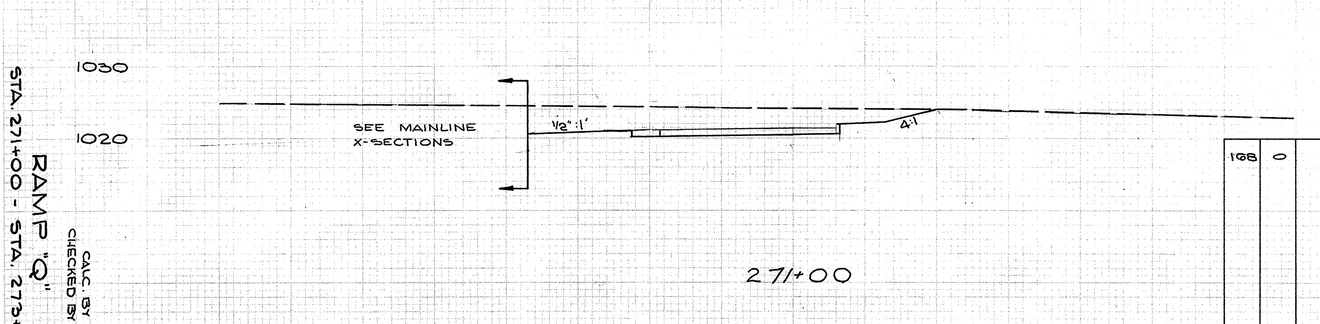

271+00

RAMP "Q"
STA. 271+00 - STA. 273+00

CALC. BY F.A.E. 10/67
CHECKED BY H.C.S. 12/68

60 40 20 ℄ 20 40 60

SUM-8-17.63

FED. RD.	STATE	PROJECT
2	OHIO	

186
460

ORIGINAL SURVEY

FINAL SURVEY

CORRECTED ARC DISTANCE	END AREA CUT	END AREA FILL	CU. YDS. CUT	CU. YDS. FILL
STA. 275+93 SEE M.L. X-SECTIONS SEE SHEET 128	782	0		
			1473	18
	829	19		
			1661	33
	964	16		
			1893	24
	1080	10		
			2135	19
	1225	10		
CUT 48.41'			2038	18
	1048	10		
CUT 48.22			1725	10

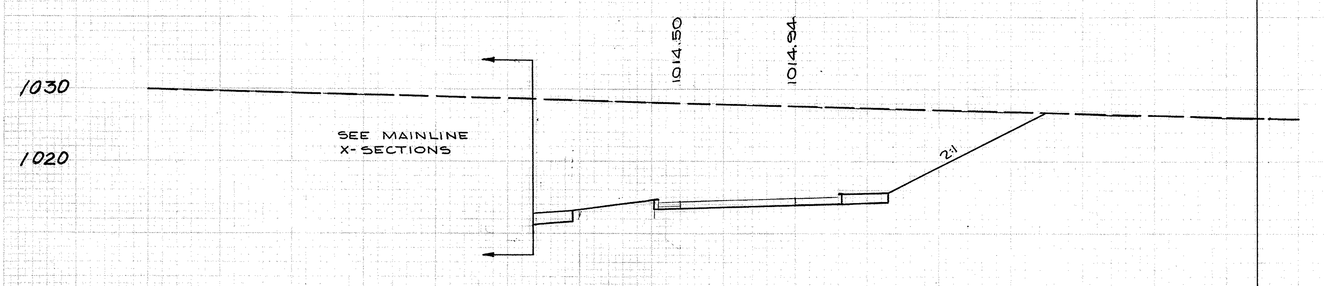

275+43

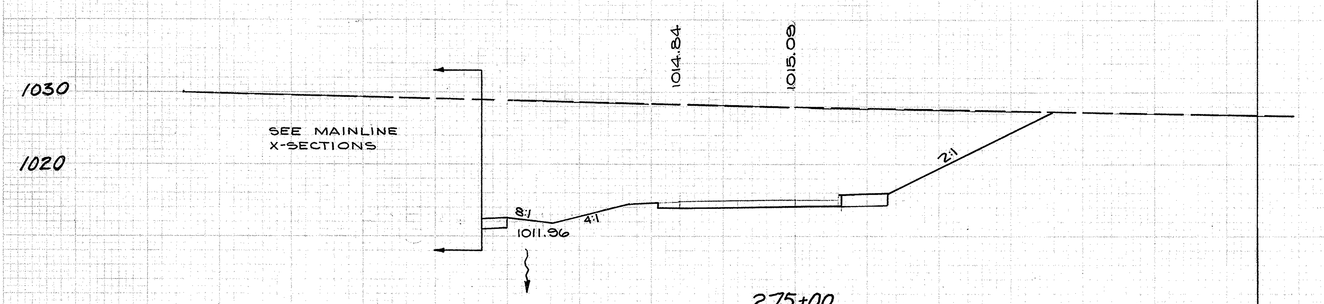

275+00

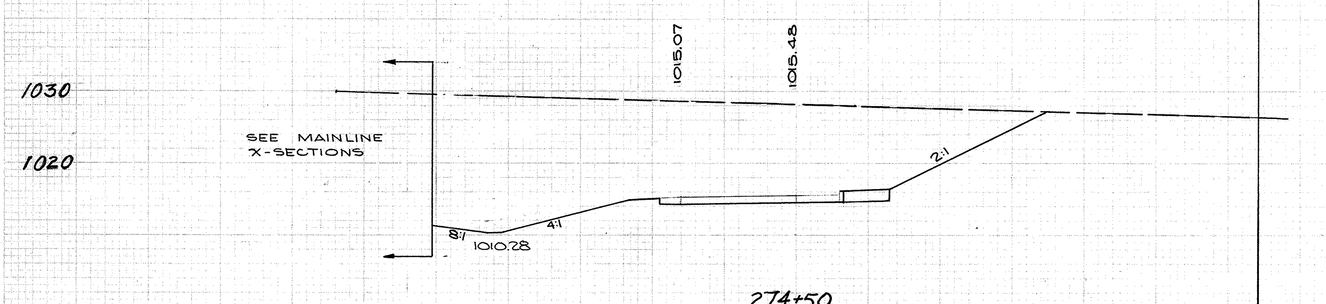

274+50

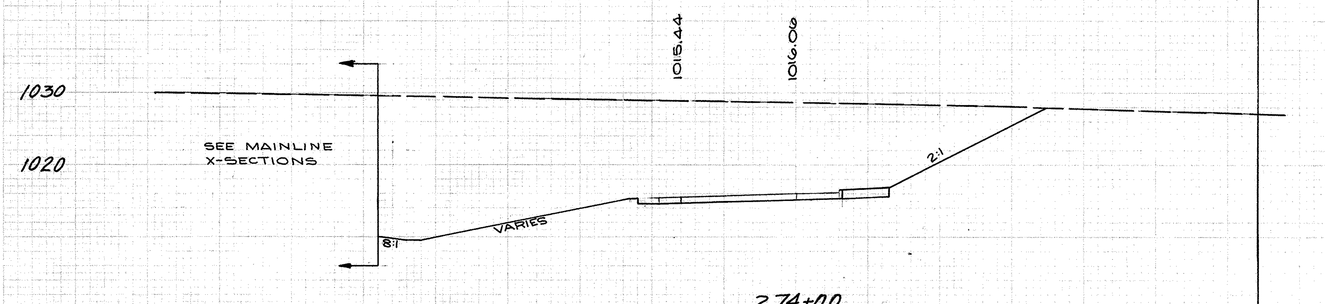

274+00

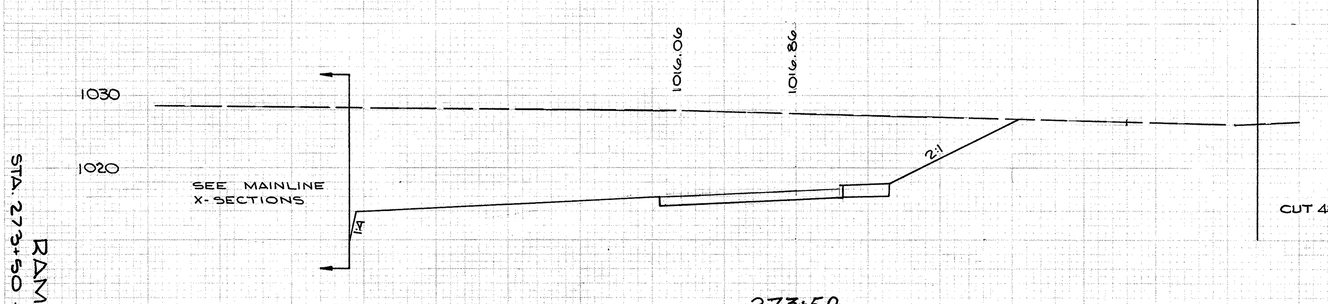

273+50

80 60 40 20 ℄ 20 40 60

RAMP "Q"
STA. 273+50 - STA. 275+43

CALC. BY F.A.E. 10/67
CHECKED BY H.C.S. 12/68

SUM-8-17.63

FED. RD.	STATE	PROJECT
2	OHIO	

187
460

ORIGINAL SURVEY
NOTE BOOK
NO.
FINAL SURVEY
NOTE BOOK
NO.

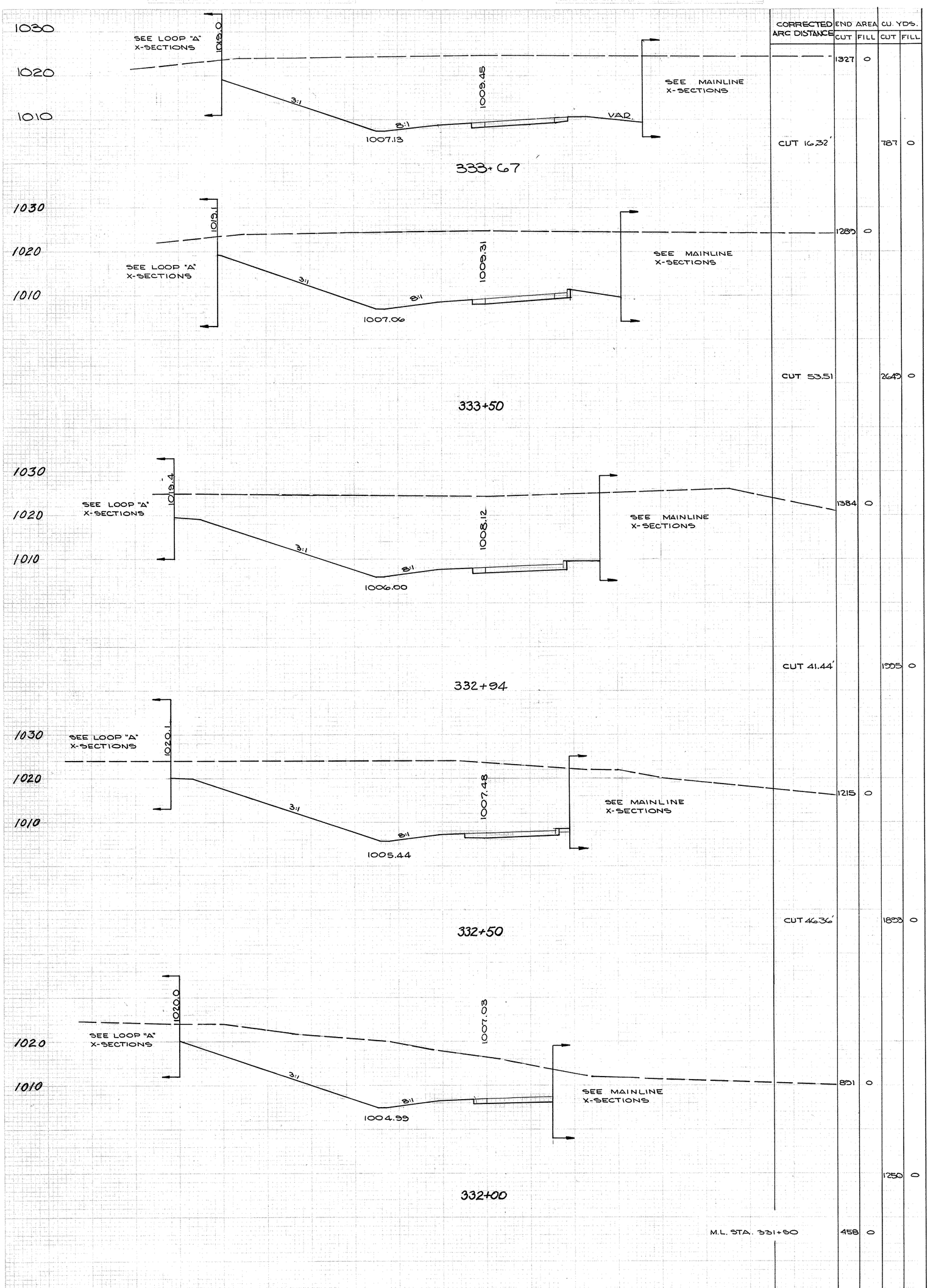

	CORRECTED ARC DISTANCE	END AREA CUT	END AREA FILL	CU. YDS. CUT	CU. YDS. FILL
		1327	0		
	CUT 16.32'			787	0
338+67		1289	0		
	CUT 53.51			2643	0
333+50		1384	0		
	CUT 41.44'			1995	0
332+94		1215	0		
	CUT 46.36'			1893	0
332+50		891	0		
				1250	0
332+00					
	M.L. STA. 331+50	458	0		

80 60 40 20 B 20 40 60 80

RAMP "A"
STA. 332+00 - STA. 338+67

CALC. BY F.A.E. 10/67
CHECKED BY H.C.S. 12/68

SUM-8-17.63

FED. RD.	STATE	PROJECT
2	OHIO	

K&E PLATE & CROSS SECTION PAPER MADE IN U.S.A.

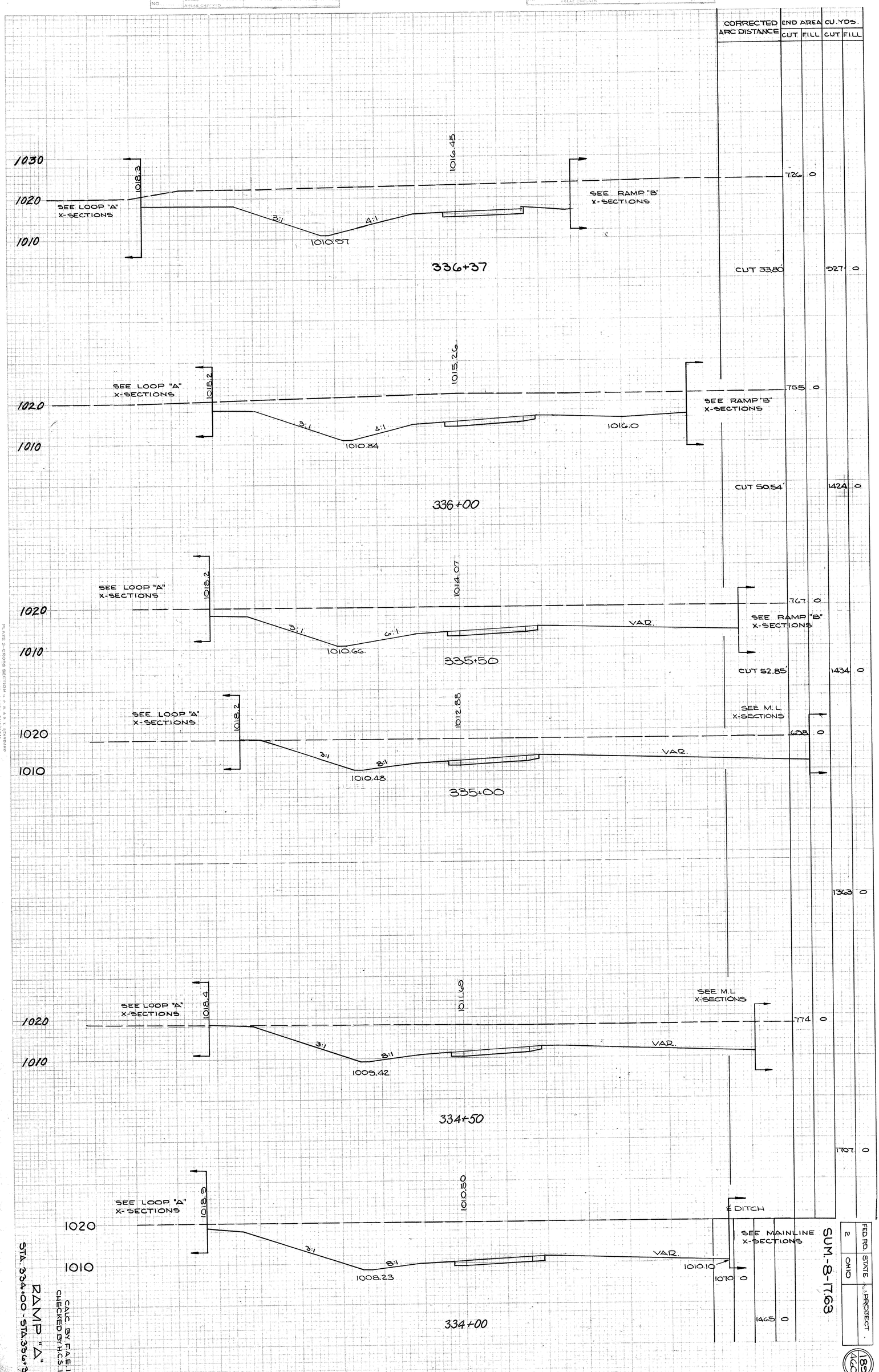

ORIGINAL SURVEY
NOTE BOOK NO.
SURVEYED
PLOTTED
TEMPLATE
AREAS
AREAS CHECKED
BY
DATE
FINAL SURVEY
NOTE BOOK NO.
CORRECTED ARC DISTANCE
END AREA
CU. YDS.
CUT
FILL
1030
1020
1010
SEE LOOP "A" X-SECTIONS
1018.3
1016.45
SEE RAMP "B" X-SECTIONS
3:1
4:1
1010.97
726 0
336+37
CUT 33.80
927 0
1015.26
1018.2
755 0
1016.0
1010.84
CUT 50.54
1424 0
336+00
1014.07
767 0
VAR.
6:1
1010.66
335+50
CUT 52.85
1434 0
1012.88
SEE M.L. X-SECTIONS
698 0
8:1
1010.48
335+00
1363 0
1011.69
1018.4
774 0
1009.42
334+50
1707 0
1010.50
1018.9
℄ DITCH
SEE MAINLINE X-SECTIONS
1010.10
1070 0
1008.23
1465 0
334+00
80
60
40
20
B
20
40
60
80
SUM.-8-17.63
FED. RD.
STATE
PROJECT
2
OHIO
189
460
RAMP "A"
STA. 334+00 - STA. 336+37.03
CALC. BY F.A.E. 10/67
CHECKED BY H.C.S. 12/68
PLATE 3-CROSS SECTION
NATIONAL TRACING PAPER DIVISION

ORIGINAL SURVEY		BY	DATE
	SURVEYED		
	PLOTTED		
NOTE BOOK	TEMPLATE		
NO.	AREAS		
	AREAS CHECKED		

FINAL SURVEY			
	SURVEYED		
	PLOTTED		
NOTE BOOK	TEMPLATE		
NO.	AREAS		
	AREAS CHECKED		

PLATE 2 - CROSS SECTION & P. S. & E. STANDARD
NATIONAL STANDARD (METRIC) VERSION

CORRECTED ARC DISTANCE	END AREA CUT	END AREA FILL	CU. YDS. CUT	CU. YDS. FILL
	336	37		
CUT 26.44 FILL 30.44			371	27
	421	0		
CUT 43.32			1029	0
AHEAD	862	0		
BACK	579	0		
CUT 33.79			759	0
	634	0		
CUT 33.06			833	0

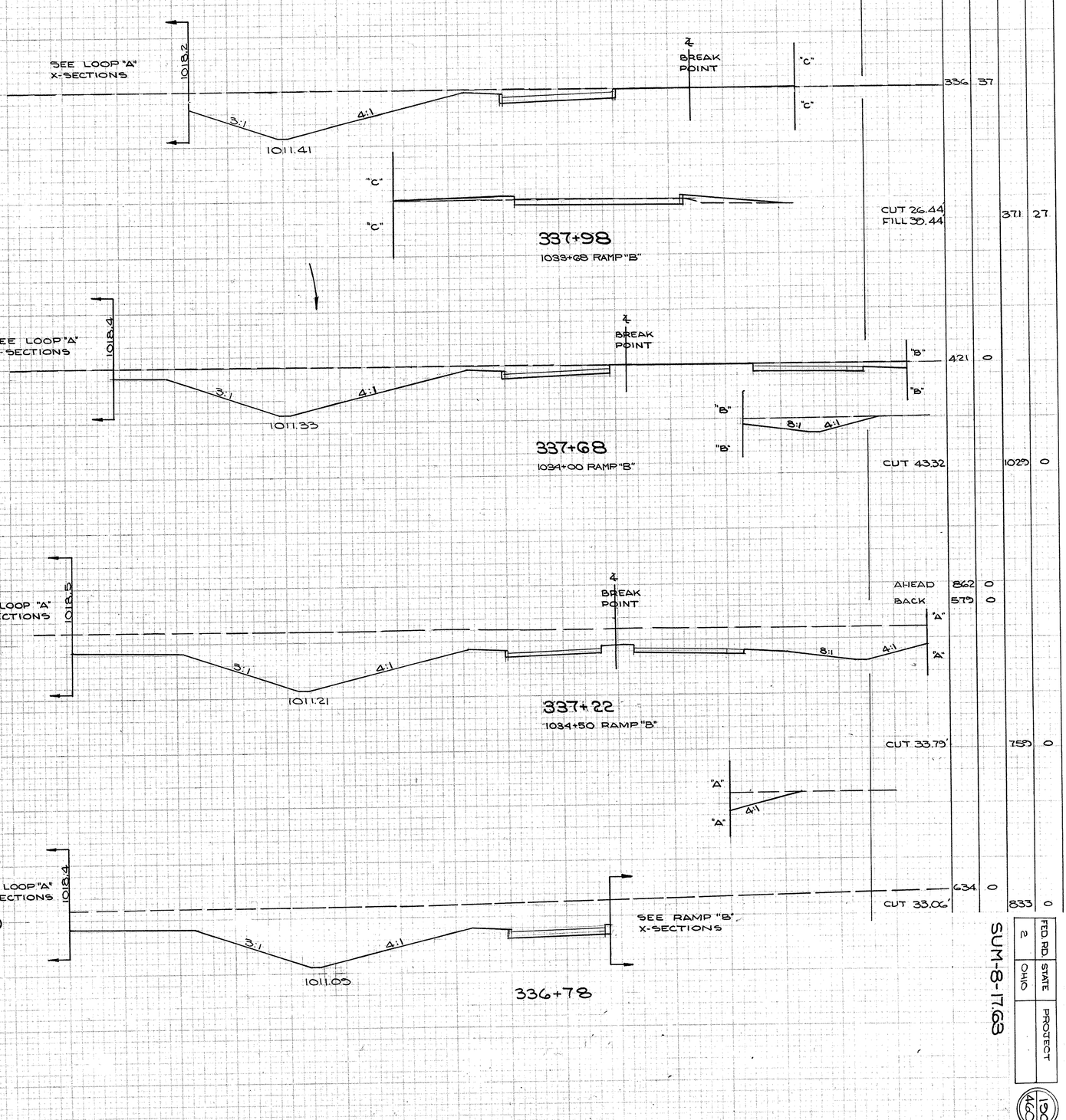

RAMP "A"
STA. 336+78 - STA. 338+00

CALC BY: F.A.E. 10/67
CHECKED BY: H.C.S. 12/68

2	FED. RD.
OHIO	STATE
	PROJECT

SUM-8-17.63

FED. AID DIVISION	STATE	PROJECT	
2	OHIO		

191
460

SUM-8-17.63

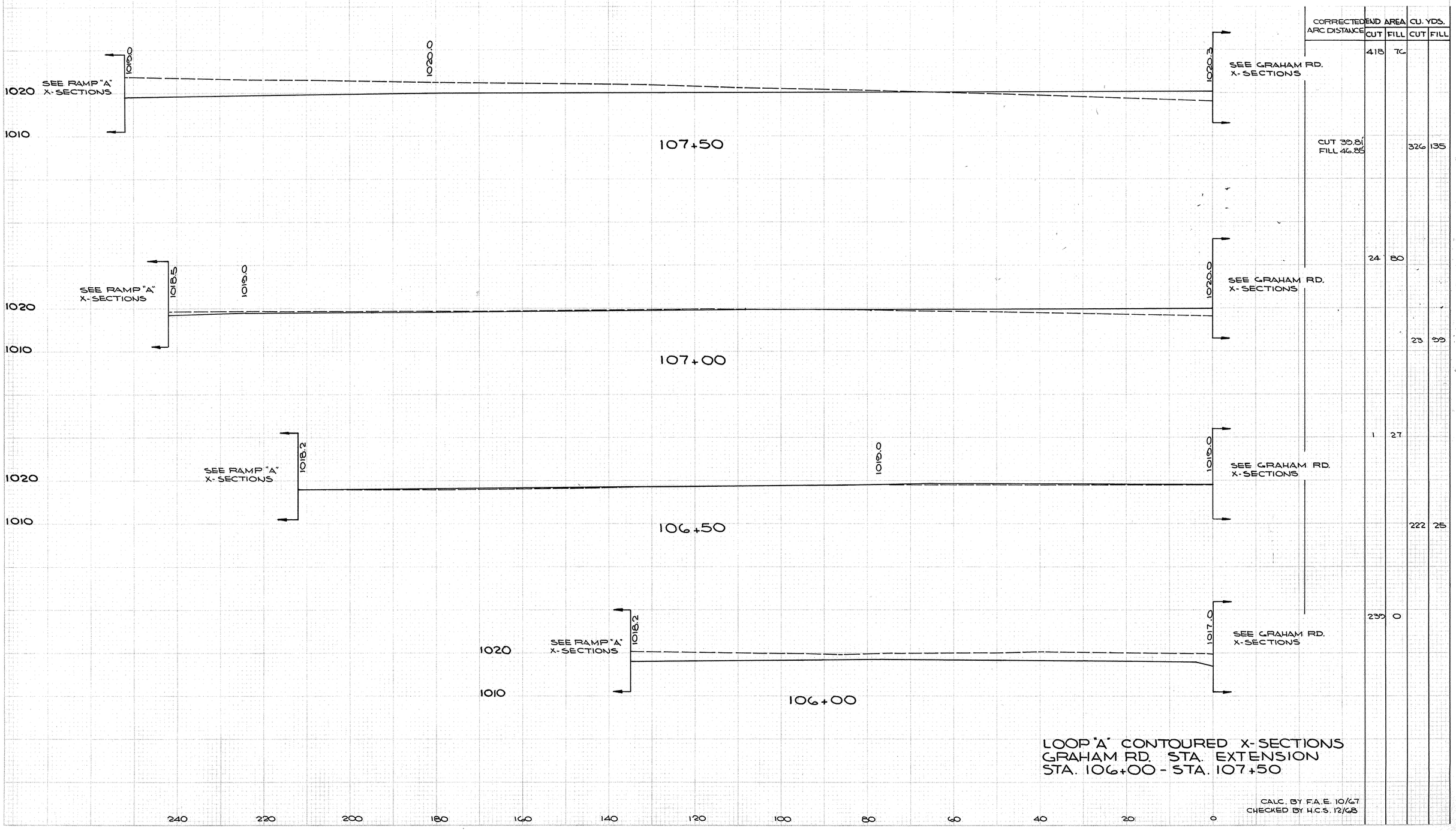

STA.	CORRECTED ARC DISTANCE	END AREA CUT	END AREA FILL	CU. YDS. CUT	CU. YDS. FILL
107+50		418	70		
	CUT 30.8' FILL 46.85			326	135
107+00		24	80		
				23	89
106+50		1	27		
				222	25
106+00		239	0		

LOOP "A" CONTOURED X-SECTIONS
GRAHAM RD. STA. EXTENSION
STA. 106+00 - STA. 107+50

CALC. BY F.A.E. 10/67
CHECKED BY H.C.S. 12/68

FED. HWY. DIVISION	STATE	PROJECT	
2	OHIO		

192
460

SUM-8-17.63

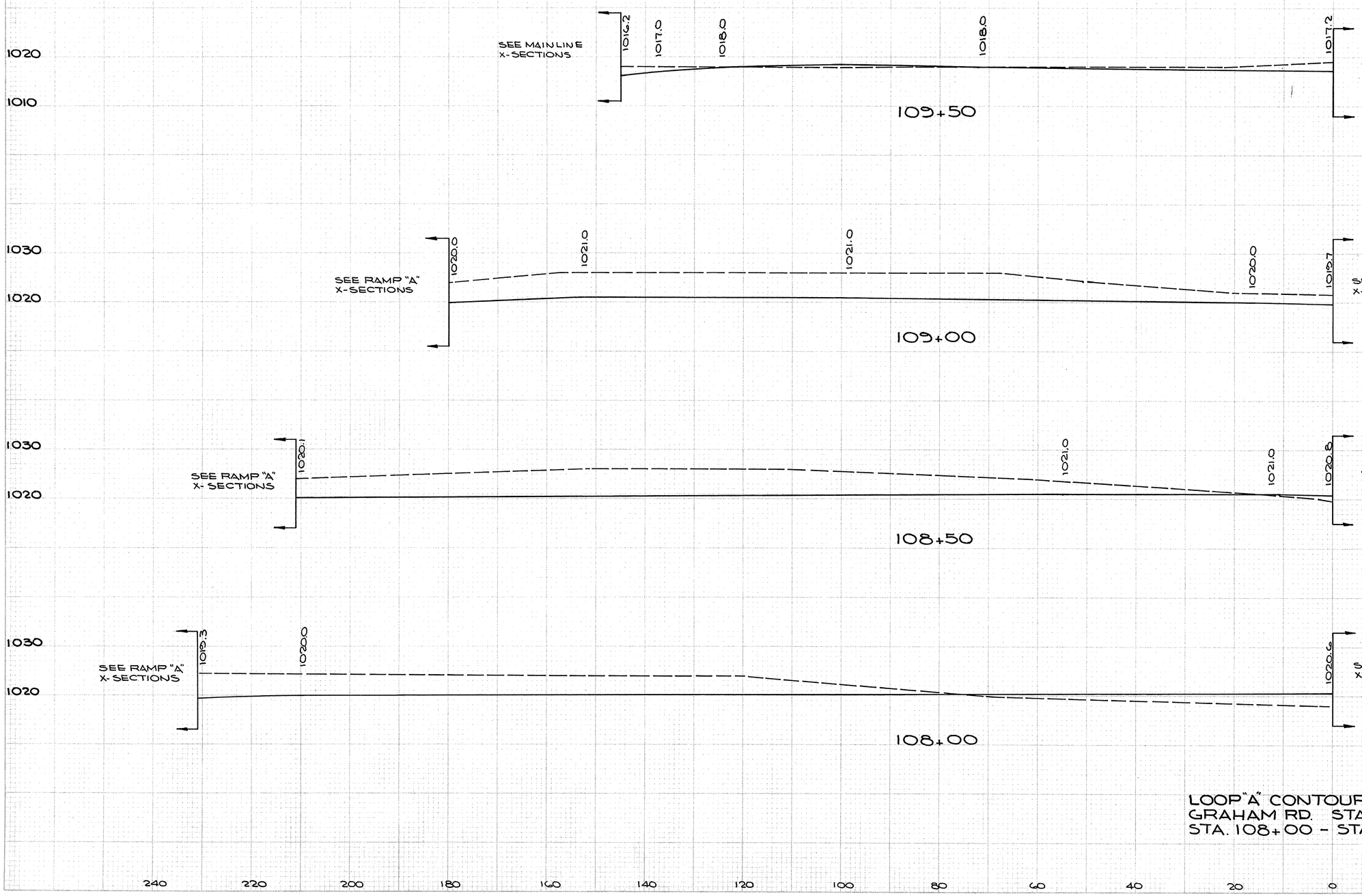

CORRECTED ARC DISTANCE	END AREA CUT	END AREA FILL	CU.YDS. CUT	CU.YDS. FILL
	56	19		
CUT 44.04 FILL 46.42			676	16
	772	0		
CUT 42.80 FILL 48.93			1201	8
	743	0		
CUT 41.43 FILL 47.33			988	108
	543	114		
CUT 40.21 FILL 46.89			715	165

LOOP "A" CONTOURED X-SECTIONS GRAHAM RD. STA. EXTENSION STA. 108+00 - STA. 109+50

CALC. BY F.A.E. 10/67
CHECKED BY H.C.S. 12/68

FED. RD. DIVISION	STATE	PROJECT	
2	OHIO		

193
460

SUM-8-17.63

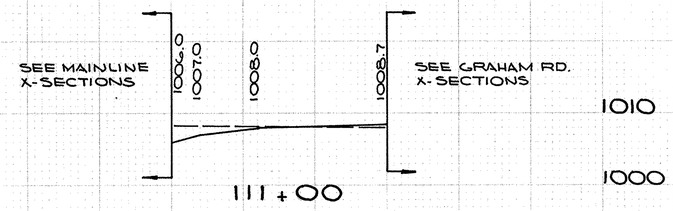

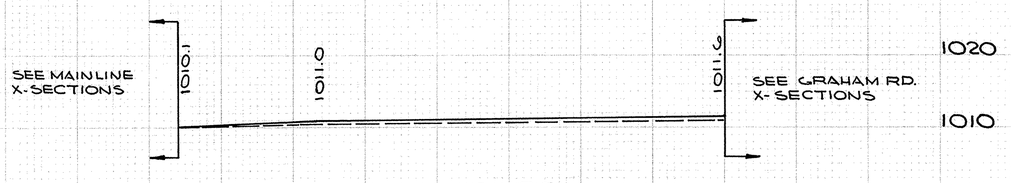

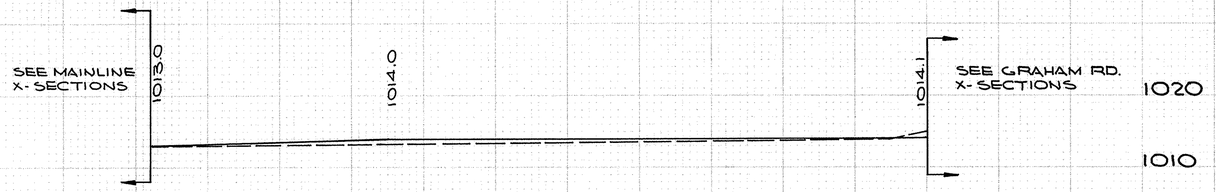

100 80 60 40 20 0

CORRECTED ARC DISTANCE	END AREA CUT	END AREA FILL	CU. YDS. CUT	CU. YDS. FILL
	13	5		
CUT 47.52' FILL 45.58'			12	32
	0	33		
CUT 48.35' FILL 44.63'			3	56
	3	35		
CUT 45.70' FILL 43.44'			50	43

LOOP "A" CONTOURED X-SECTIONS
GRAHAM RD. STA. EXTENSION
STA. 110+00 - STA. 111+00

CALC. BY F.A.E. 10/67
CHECKED BY H.C.S. 12/68

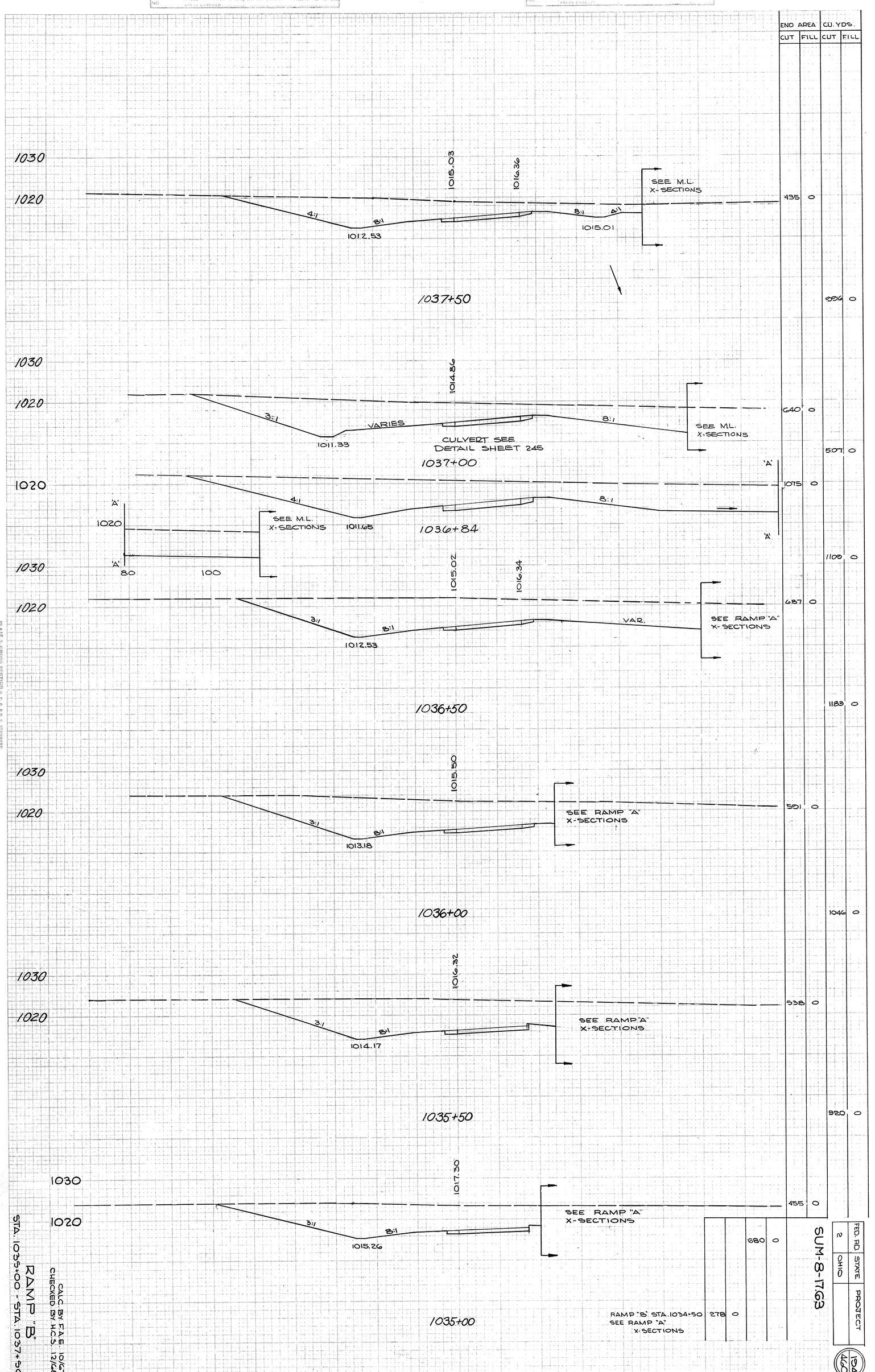

RAMP "B"
STA. 1035+00 - STA. 1037+50

CALC. BY F.A.E. 10/67
CHECKED BY H.C.S. 12/68

SUM-8-17.63

FED. RD.	STATE	PROJECT
2	OHIO	

194
460

ORIGINAL SURVEY — SURVEYED, PLOTTED, TEMPLATE, AREAS, AREAS CHECKED — BY — DATE

FINAL SURVEY — SURVEYED, PLOTTED, TEMPLATE, AREAS, AREAS CHECKED — BY — DATE

NOTE BOOK NO.

	END AREA		CU. YDS.	
	CUT	FILL	CUT	FILL
M.L. STA. 1041+00	153	0		
			276	0
1040+55	177	0		
			485	0
1040+00	300	0		
			544	0
1039+50	287	0		
			650	0
1039+00	414	0		
			807	0
1038+50	457	0		
			843	0
1038+00	452	0		
	822	0		

1030
1020
1020.31
1018.45
4:1
8:1
SEE MAINLINE X-SECTIONS

1030
1020
1019.32
1017.25
4:1
8:1
SEE MAINLINE X-SECTIONS

1030
1020
1018.33
1016.05
4:1
8:1
SEE MAINLINE X-SECTIONS

1030
1020
1017.34
1015.06
4:1
8:1
SEE MAINLINE X-SECTIONS

1030
1020
1016.35
1013.85
4:1
8:1
SEE MAINLINE X-SECTIONS

1030
1020
1015.52
1013.02
4:1
8:1
8:1
4:1
SEE MAINLINE X-SECTIONS

RAMP "B"
STA. 1038+00 - STA. 1040+55

CALC. BY F.A.E. 10/67
CHECKED BY H.C.S. 12/68

80 60 40 20 ℄ 20 40 60 80

SUM-8-17.63

FED. RD.	STATE	PROJECT
2	OHIO	

PLATE 3 CROSS SECTION 2 IN. A. & E. STANDARD
NATIONAL TRACING PAPER DIVISION

ORIGINAL SURVEY — NOTE BOOK — NO. — SURVEYED — PLOTTED — TEMPLATE — AREAS — AREAS CHECKED — BY — DATE

FINAL SURVEY — NOTE BOOK — NO. — SURVEYED — PLOTTED — TEMPLATE — AREAS — AREAS CHECKED — BY — DATE

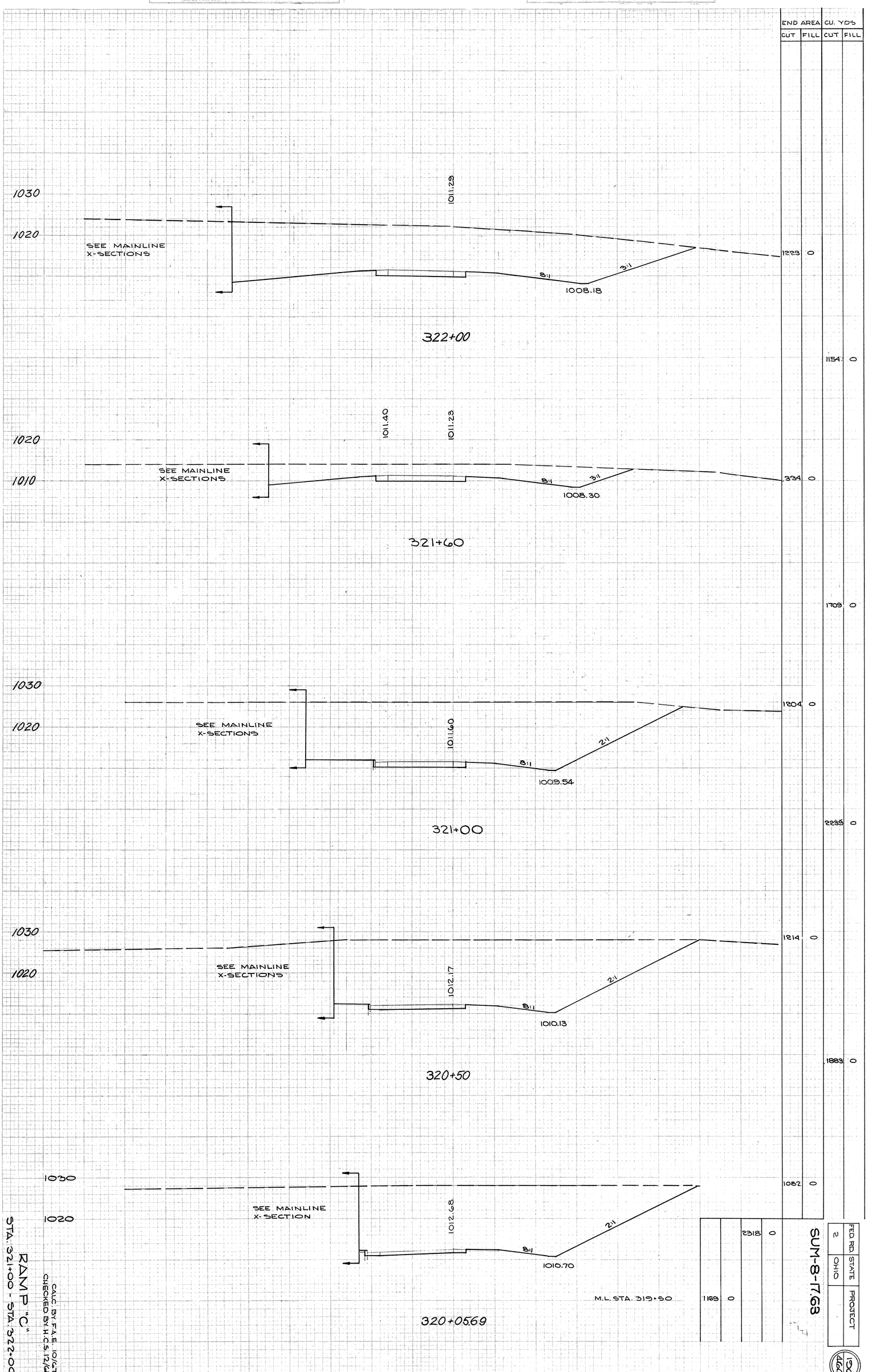

	END AREA CUT	END AREA FILL	CU. YDS CUT	CU. YDS FILL
322+00	1223	0	1154	0
321+60	334	0	1709	0
321+00	1204	0	2239	0
320+50	1214	0	1883	0
320+0569	1082	0	2318	0
M.L. STA. 319+50	1169	0		

RAMP "C"
STA. 321+00 - STA. 322+00

CALC. BY F.A.E. 10/67
CHECKED BY H.C.S. 12/68

80 60 40 20 ℄ 20 40 60 80

FED. RD.	STATE	PROJECT
2	OHIO	

SUM-8-17.68

PLATE 3 CROSS SECTION P. P. & E. STANDARD
RATIONAL TRACING PAPER DIVISION

ORIGINAL SURVEY — SURVEYED / PLOTTED / TEMPLATE / AREAS / AREAS CHECKED — BY / DATE — NOTE BOOK / NO.

FINAL SURVEY — SURVEYED / PLOTTED / TEMPLATE / AREAS / AREAS CHECKED — BY / DATE — NOTE BOOK / NO.

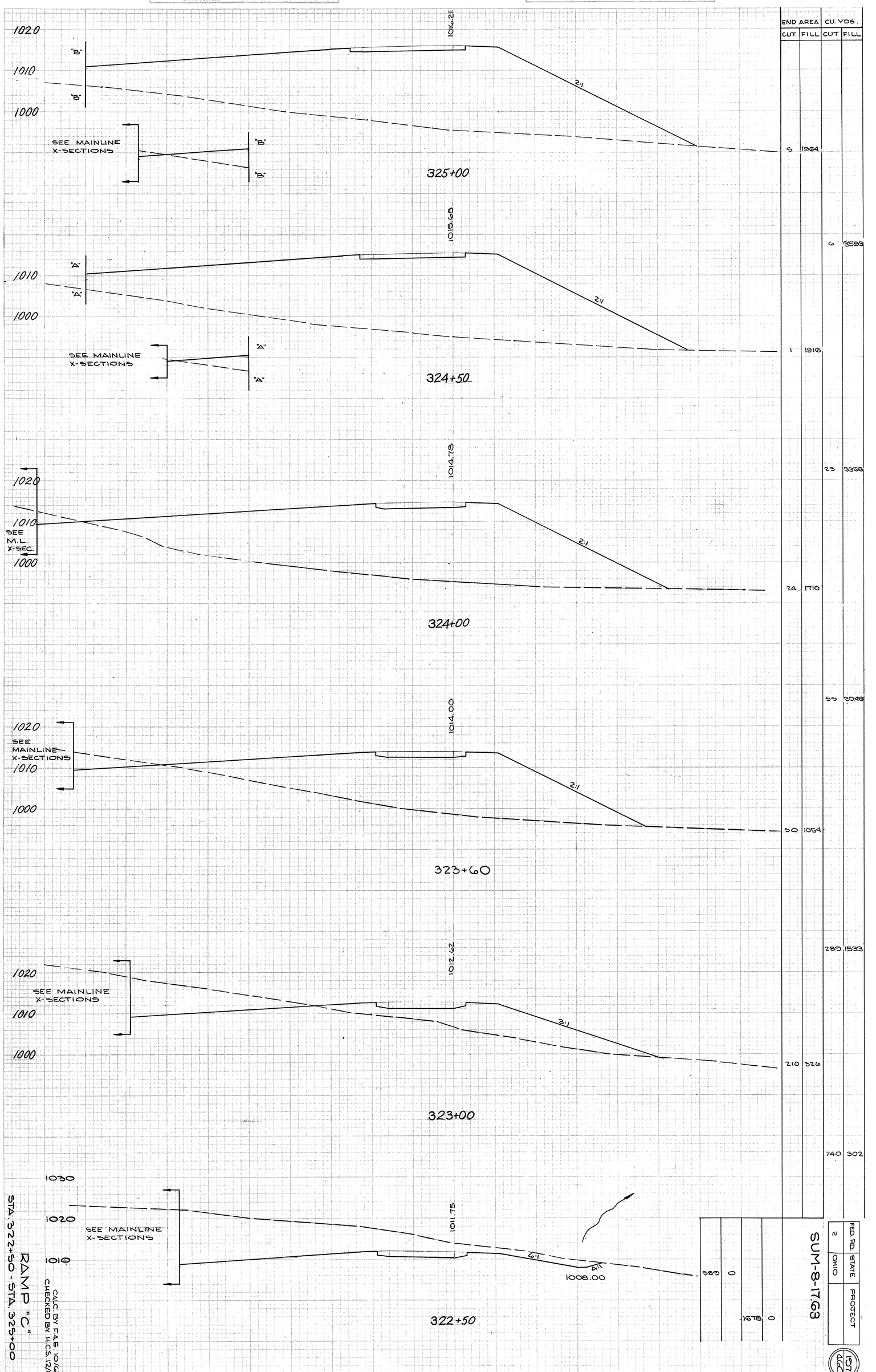

	END AREA CUT	END AREA FILL	CU. YDS. CUT	CU. YDS. FILL
325+00	5	1964		
			6	3598
324+50	1	1916		
			23	3358
324+00	24	1710		
			55	2048
323+60	50	1054		
			289	1533
323+00	210	326		
			740	302
322+50	589	0		
	1678	0		

RAMP "C"
STA. 322+50 - STA. 325+00

CALC. BY: F.A.E. 10/67
CHECKED BY: H.C.S. 12/68

80 60 40 20 ℄ 20 40 60 80

SUM-8-17.68

FED. RD.	STATE	PROJECT
2	OHIO	

1971

ORIGINAL SURVEY — SURVEYED, PLOTTED, TEMPLATE, AREAS, AREAS CHECKED — BY, DATE

FINAL SURVEY — SURVEYED, PLOTTED, TEMPLATE, AREAD, AREAS CHECKED — BY, DATE

NOTE BOOK, NO.

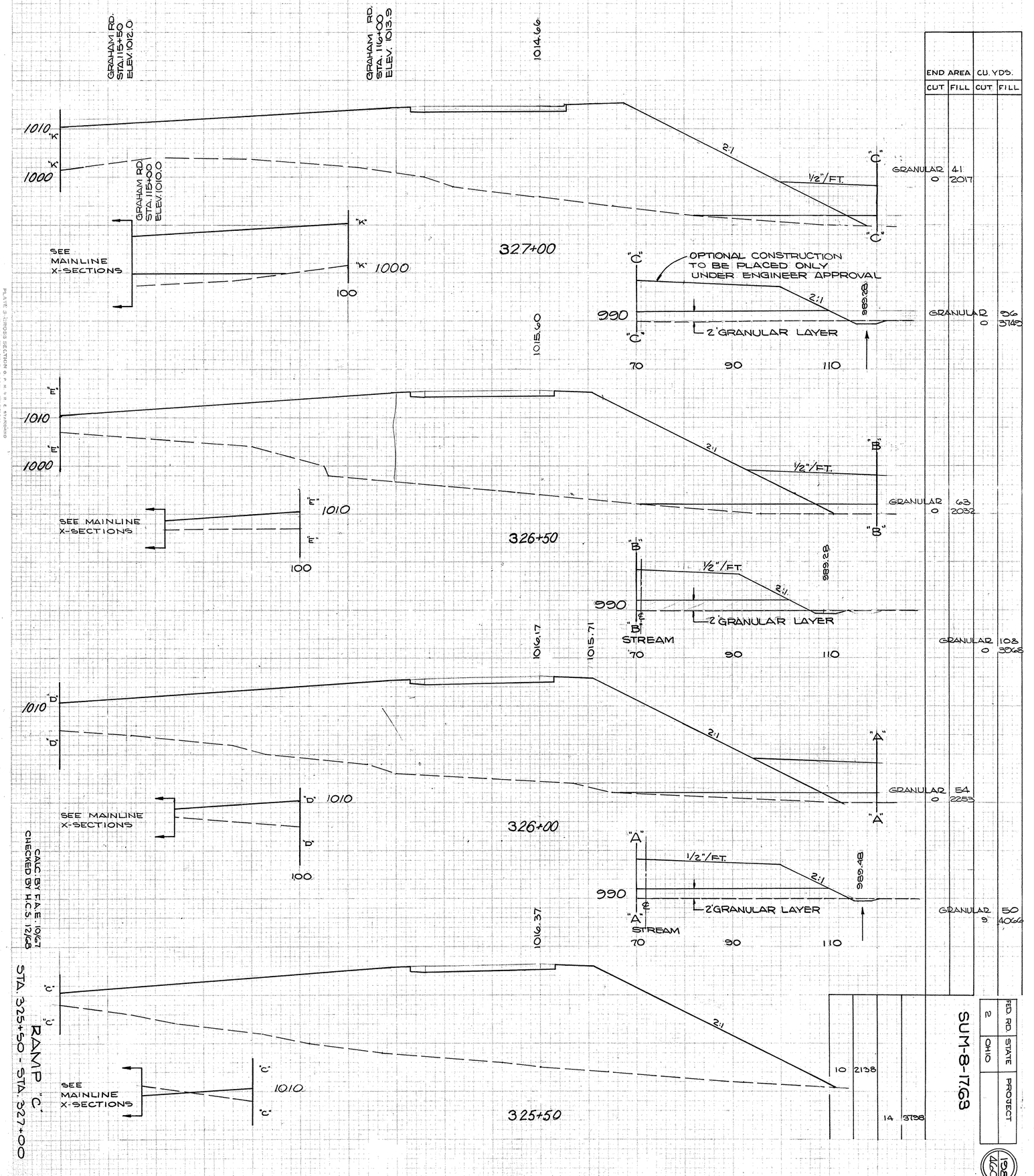

	END AREA		CU. YDS.	
	CUT	FILL	CUT	FILL
GRANULAR	41	2017		
	0			
GRANULAR	63	2032		
	0			
GRANULAR	54	2253		
	0			
GRANULAR	50	4046		
	9			
	10	2138		
	14	3138		
GRANULAR			86	9748
GRANULAR			108	3046

CALC BY F.A.E. 10/67
CHECKED BY H.C.S. 12/68

2	RED RD.	STATE
OHIO		PROJECT

SUM-8-17.68

198

END AREA CU.YDS.	CUT	FILL
	120	238
	561	119
	1193	3
	1781	0
	1112	0

FED. RD.	STATE	PROJECT
2	OHIO	

468

SUM-8-17.63

SEE GRAHAM RD. STA. 117+00

NOTE: COUNTER BERM TO BE CONST. ONLY AS DIRECTED BY ENGINEER

1028+50

1029+00

1029+50

1030+00

1030+50

1004.18

1003.97

1005.07

1004.56

1006.24

1005.85

1007.71

1007.57

1009.32

1009.28

1009.54

4:1

6:1

7:1

2½:1

1000.14

1000.58

1001.05

1001.50

EXIST. STRUCTURE

SEE MAINLINE X-SECTIONS

MATCH LINE 114+50 GRAHAM RD.

MATCH LINE 115+00 GRAHAM RD.

MATCH LINE GRAHAM RD.

1010

1000

120

100

"D"

CALC. BY F.A.E. 10/67
CHECKED BY H.C.S. 12/68

RAMP "D"
STA. 1028+50 - STA. 1030+50

PLATE 3-CROSS SECTION PAPER STANDARD
NATIONAL TRACING PAPER DIVISION

FINAL SURVEY
ORIGINAL SURVEY

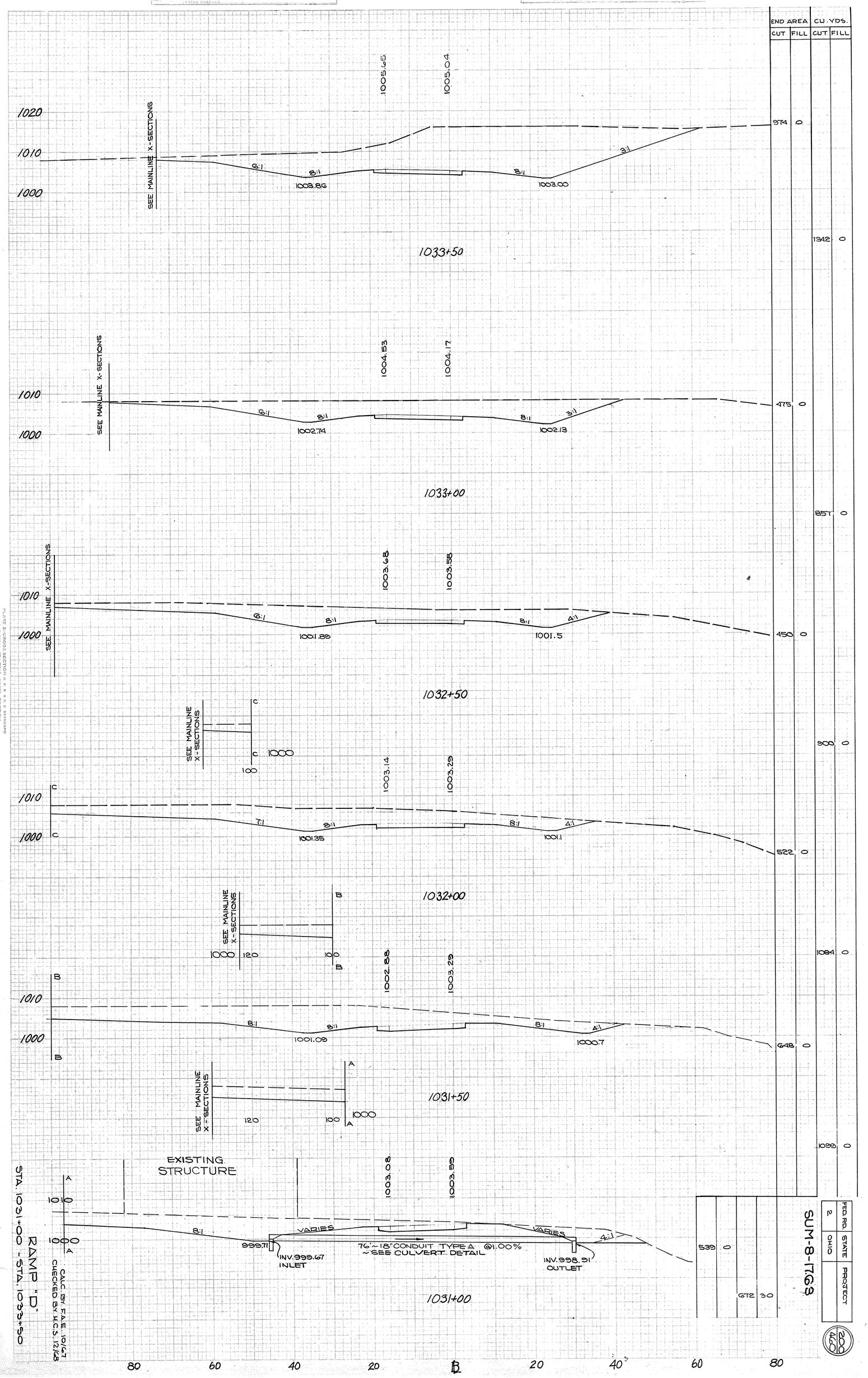

END AREA
CUT
FILL
CU. YDS.
CUT
FILL
1020
1010
1000
SEE MAINLINE X-SECTIONS
1005.65
1005.04
6:1
8:1
1003.86
8:1
3:1
1003.00
974
0
1342
0
1033+50
1004.53
1004.17
6:1
8:1
1002.74
8:1
3:1
1002.13
475
0
1033+00
857
0
1003.68
1003.58
6:1
8:1
1001.89
8:1
4:1
1001.5
450
0
1032+50
SEE MAINLINE X-SECTIONS
C
C
1000
100
900
0
1003.14
1003.29
7:1
8:1
1001.35
8:1
4:1
1001.1
522
0
1032+00
SEE MAINLINE X-SECTIONS
B
1000
120
100
B
1084
0
1002.88
1003.29
8:1
8:1
1001.09
8:1
4:1
1000.7
648
0
1031+50
SEE MAINLINE X-SECTIONS
A
120
100
1000
A
1099
0
EXISTING STRUCTURE
1003.08
1003.59
A
1010
1000
A
8:1
VARIES
VARIES
4:1
999.71
INV. 999.67 INLET
76'~18" CONDUIT TYPE A @1.00%
~SEE CULVERT DETAIL
INV. 998.91 OUTLET
539
0
672
30
1031+00
80
60
40
20
B
20
40
60
80
RAMP "D"
STA. 1031+00 - STA. 1033+50
CALC. BY F.A.E. 10/67
CHECKED BY H.C.S. 12/68
SUM-8-17.63
FED. RD.
STATE
PROJECT
2
OHIO
200
460

ORIGINAL SURVEY — SURVEYED / PLOTTED / TEMPLATE / AREAS / AREAS CHECKED — BY / DATE
NOTE BOOK NO.

FINAL SURVEY — SURVEYED / PLOTTED / TEMPLATE / AS-BUILT / AS-BUILT CHECKED — BY / DATE
NOTE BOOK NO.

	END AREA		CU. YDS.	
	CUT	FILL	CUT	FILL
M.L. STA. 1036+50	967	0		
			1698	0
1036+00	867	0		
			1367	0
1035+50	587	0		
			1414	0
1035+00	930	0		
			1979	0
1034+50	1196	0		
			2262	0
1034+00	1247	0		
			2067	0

1036+00
SEE MAINLINE X-SECTIONS
1012.56
1012.76
1011.47
1009.14
8:1
3:1

1035+50
SEE MAINLINE X-SECTIONS
1011.48
1011.73
1010.15
1007.66
8:1
3:1

1035+00
SEE MAINLINE X-SECTIONS
1010.17
1008.84
1004.85
8:1
8:1
3:1

1034+50
SEE MAINLINE X-SECTIONS
1008.63
1007.52
1007.10
1003.68
6:1
8:1
8:1
3:1

1034+00
SEE MAINLINE X-SECTIONS
1007.07
1006.21
1005.70
1003.48
6:1
8:1
8:1
3:1

1020
1010
1000
80 60 40 20 ℄ 20 40 60 80

RAMP "D"
STA. 1034+00 - STA. 1036+00

CALC. BY F.A.E. 10/67
CHECKED BY H.C.S. 12/68

SUM-81-7.63

FED. RD.	STATE	PROJECT
2	OHIO	

201
460

PLATE 3-CROSS SECTION O. P. R. & S. STANDARD
NATIONAL TRACING PAPER DIVISION

CORRECTED ARC DISTANCE	END AREA CUT	END AREA FILL	CU. YD'S CUT	CU. YD'S FILL
	1750	0		0
CUT 49.14			3038	
	1536	0		0
CUT 49.10			2920	
	1612	0		0
CUT 48.51			2577	
	1607	0		0
CUT 48.82			3064	
	1776	0		0
			3085	
	1640	0		0
			3300	
	1624	0		0

FED. AID DIVISION	STATE	PROJECT	
2	OHIO		

SUM-8-17.68

202
460

M.L. STA. 320+00

MATCH MAINLINE

1001.44

1000.11

323+00
1021.3

8:1

997.70

2:1

A-3
604 № 5 C.B.
STA. 322+75
24' LT. ℄ RAMP "E"
GRATE EL. 997.41
℄ 15" = 995.41

MATCH MAINLINE

1001.52

1000.19

322+50
1021.5

8:1

997.78

2:1

MATCH MAINLINE

1002.86

1002.13

1000.85

322+00
1023.0

8:1

996.44

2:1

MATCH MAINLINE

1002.58

1001.38

321+50
1024.1

8:1

998.84

MATCH MAINLINE

1003.29

1002.01

321+00
1024.2

BEGIN DITCH
321+15
℄ 999.29

8:1

A-1

℄ DITCH
999.05

2:1

A-1
604 № 4 C.B.
STA. 321+00
30 LT. ℄ RAMP "D"
GRATE EL. = 998.78
℄ 30" = 995.32
℄ 6" = 995.04

MATCH MAINLINE

1004.07

1002.30

320+50
1025.0

8:1

01.666

2:1

1030
1020
1010
1000

CALC. BY F.A.E. 10/67
CHECKED BY H.C.S. 12/68

RAMP "E"
STA. 320+50 - STA. 323+00

80 60 40 20 ℄ 20 40 60 80

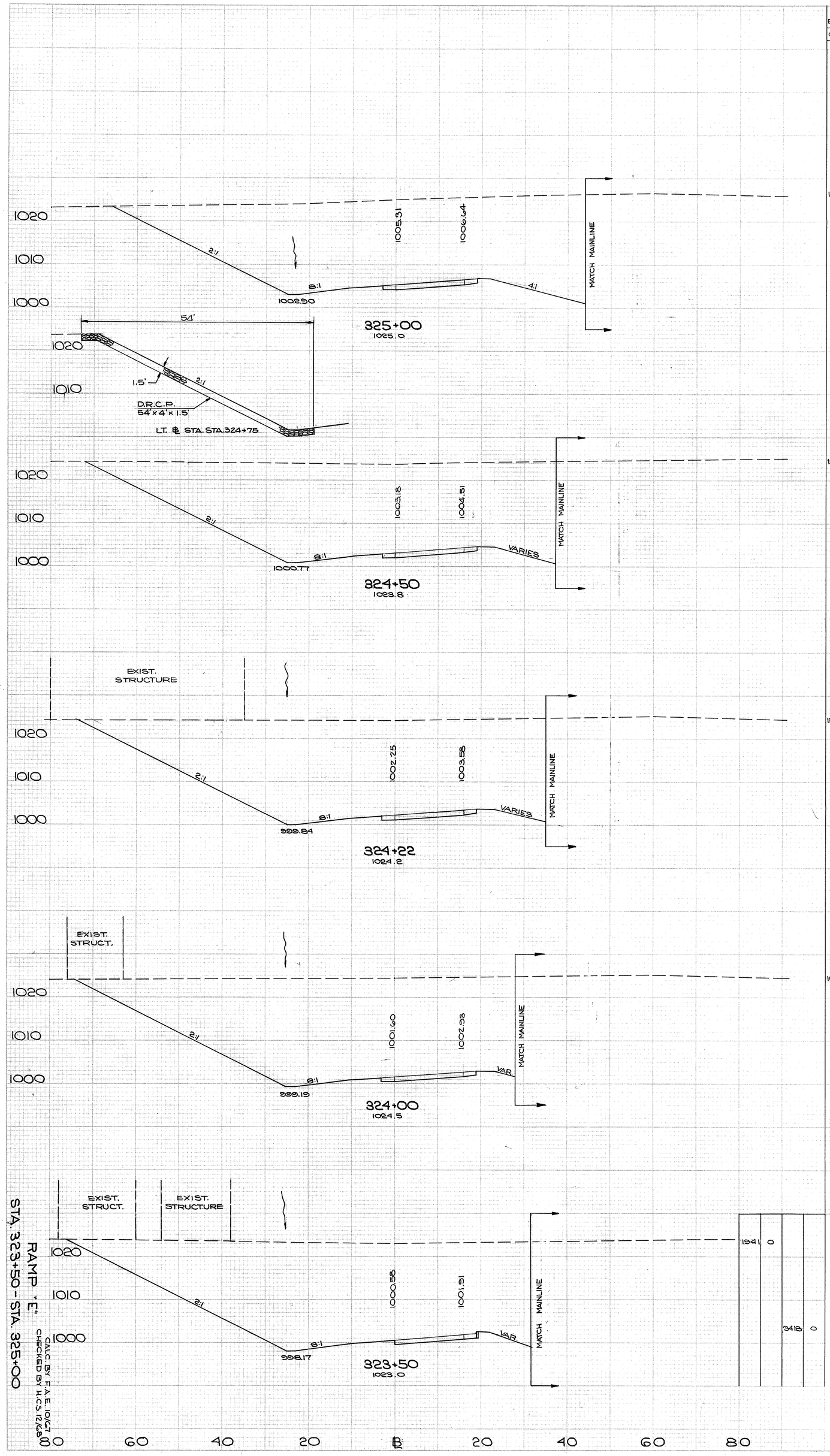

END AREA CUT	END AREA FILL	CU. YDS. CUT	CU. YDS. FILL
1901	0		
		3510	0
1889	0		
		1993	0
1955	0		
		568	0
1892	0		
		3550	0
1941	0		
		3418	0

RAMP "E"
STA. 323+50 - STA. 325+00

CALC. BY F.A.E. 10/67
CHECKED BY H.C.S. 12/68

SUM-8-17.63

FED. ROAD DIVISION	STATE	PROJECT
2	OHIO	

203
460

END AREA	CU. YDS.
CUT	FILL
129	1018
140	87
7	22
397	74
0	7
110	1393
0	0
823	1787
0	0
1000	1698
0	0
1730	2538
0	
2353	

FED. NO. DIVISION	STATE	PROJECT	
2	OHIO		

204
460

SUM-8-17.63

MATCH GRAHAM RD.
1018.66
8:1
1021.74
1021.23
4:1
1008.0
328+00
1012.1

MATCH MAINLINE
VARIES
1019.58
1019.07
8:1
1007.11
4:1
327+58
1020.1

MATCH MAINLINE
VARIES
1018.64
1018.15
8:1
1006.49
4:1
327+50
1022.0

MATCH MAINLINE
VARIES
1015.96
1016.47
8:1
1004.01
2:1
327+00
1024.3

MATCH MAINLINE
VARIES
1013.28
1013.79
8:1
1001.38
2:1
326+50
1020.9

MATCH MAINLINE
VARIES
1010.66
1011.34
8:1
1008.65
33'
2:1
1.5'
D.R.C.P.
33x4'x1.5'
326+00
1018.9

MATCH MAINLINE
4:1
1007.92
1008.96
1:8
1005.71
2:1
325+50
1024.6

1020
1010

CALC. BY F.A.E. 10/67
CHECKED BY H.C.S. 12/68

RAMP "E"
STA. 325+50 - STA. 328+00

80 60 40 20 0 20 40 60 80

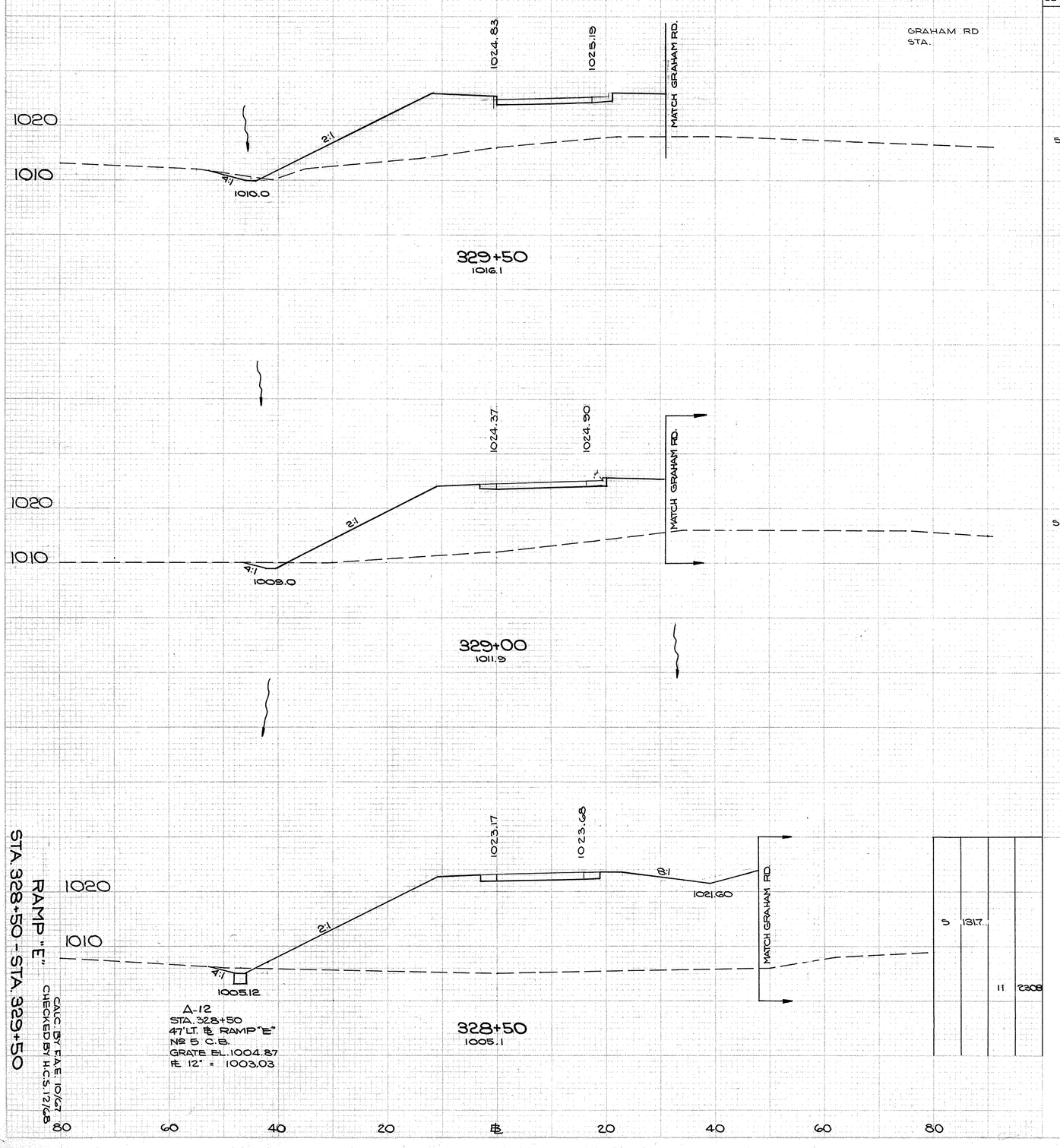

RAMP "E"
STA. 328+50 - STA. 329+50

CALC. BY F.A.E. 10/67
CHECKED BY H.C.S. 12/68

END AREA		CU. YDS.	
CUT	FILL	CUT	FILL
5	552		
		9	1116
5	653		
		9	1824
5	1317		
		11	2308

SUM-8-17.68

2	OHIO		
FED. RD. DIVISION	STATE	PROJECT	

205
460

B.M.# 22 CITY OF CUYAHOGA FALLS - 35' WEST ℄ FRONT ST. ℄ 25' S. ℄ NORTHLAND EL. 1019.60

SHEET NO.	STATE DIVISION	STATE	PROJECT		
2		OHIO			

206 460

SUM - 8 - 17.63

PROPOSED STRUCTURE BRIDGE Nº SUM-8-18.00

TYPE: CONTINUOUS WELDED STEEL PLATE GIRDER, WITH REINFORCED CONCRETE DECK AND SUBSTRUCTURE.
SKEW: 60° 52' 20" LF.
SPANS: 100-0", 122'-3", 117'-3" c/c BRGS.
ROADWAY: 40'-0" F/F 5'-0" SIDEWALKS
LOAD FREQUENCY: AASHO HS-20-44
WEARING SURFACE: 1" MONOLITHIC
APPROACH SLABS: 20' REAR - 30' FWD. (AS-1-67)
ALIGNMENT: TANGENT
SUPERELEVATION: NONE (.025'/FT. X-SLOPE
SLOPE PROTECTION: CRUSHED AGGREGATE
TRAFFIC: 11,102 - 1985 A.D.T.

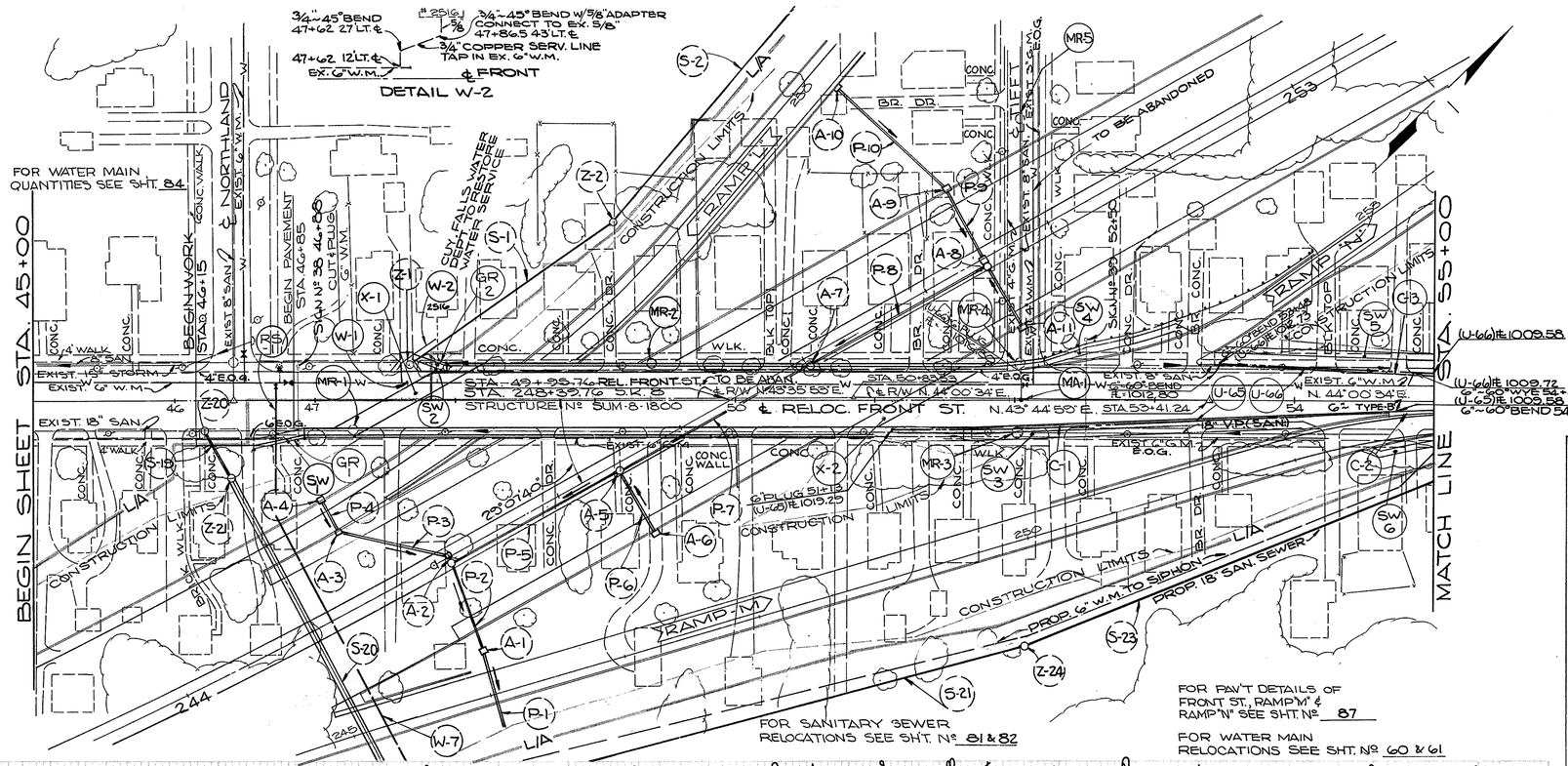

Z-20
SEWER STA. 0+00
604 Nº 2 M.H.
160' LT. 245+00 M.L.
TOP ELEV. = 1020.0
℄ EXIST. 18" = 1002.12
℄ NEW 18" = 1002.12
(CONSTRUCTION EXIST. 18" SAN. SEWER)

Z-1
SEWER STA. 0+00
604 STD. Nº 1 M.H.
24.5' LT. ℄ FRONT ST.
STA. 47+67
TOP ELEV. = 1022.58
℄ EXIST. 8" = 1014.30
℄ NEW 8" = 1014.30
(CONSTRUCT ON EXIST. 8" SAN. SEWER)

REF. NO.	606 GUARD RAIL ANCHOR ASSEMBLY EACH	606 SINGLE RAIL APPROACH END ASSEM. EACH	606 GUARD RAIL BRIDGE TERMINAL ASSY EACH
GR-1		1	1
GR-2	1		1
TOTAL	1	1	2

EARTHWORK ITEM 203	
EXCAVATION CU. YD.	EMBANKMENT CU. YD.
365	700

47+00 TO 55+20

ESTIMATED QUANTITIES

REF Nº	STATION TO STATION	SIDE	606 GUARD RAIL TYPE 5 LIN. FT.	608 CURB TYPE 2B LIN. FT.	609 CURB TYPE 6 LIN. FT.	608 CURB TYPE 2B SPECIAL LIN. FT.	608 4" CONC. WALK SQ. FT.	611 REINF. CONC. APPR. SLAB 12" (T) SQ. YDS.	604 MON. TYPE B ADJ'W/CB'S EACH	603 6"	605 UNDER-DRAINS L.F.	605 BENDS & BRANCHES FOR 6" EACH	202 M.H. ADJ'D EACH	202 405 ASPH. CONC. CONC'S SQ. YDS.	202 404 ASPHALT CONC. CU. YDS.
GR-1	46+67 TO 46+92	RT.	25												
GR-2	47+74.5 TO 47+87	LT.	12.5												
C-1	51+10 TO 54+72	RT.			362										
C-2	54+72 TO 55+29	RT.				57									
C-3	53+48 TO 55+00	LT.		25	127										
SW-1	46+15 TO 47+34	RT.					550								
SW-2	47+60 TO 48+10	LT.					245								
SW-3	50+77 TO 54+27	RT.					1,750								
SW-4	51+55 TO 53+28	LT.					845								
SW-5	53+48 TO 55+00	RT.					760								
SW-6	54+64 TO 55+00	RT.					180								
X-1	47+48.89	℄						91							
X-2	51+18.15	℄						137							
U-65	51+13 TO 54+72	RT.								32	356	1			
U-66	53+48 TO 55+00	LT.									152				
MR-1	47+28 - 22' RT. ℄ FRONT	—													
MR-2	49+40 - 25' LT. ℄ FRONT	—													
MR-3	52+02 - 22' RT. ℄ FRONT	—													
MR-4	52+05 - 25' LT. ℄ FRONT	—													
MR-5	52+05 - 200' LT. ℄ FRONT	—													
MA-1	52+05	℄							1						
RS-1	46+73 13' LT. TO 21' RT.	—													
TOTALS	CALC. BY C.P.S. 10/68 CHECKED BY H.C.S. 11/68		37.5	25	489	57	4,355	228	1	32	511	1	5	17	1.0

RELOCATED FRONT ST.

B.M.#26 CITY OF CUYAHOGA FALLS 31' NORTH OF ℄ BAILEY ℄ 25.5' W. FRONT ST. EL. 1015.24

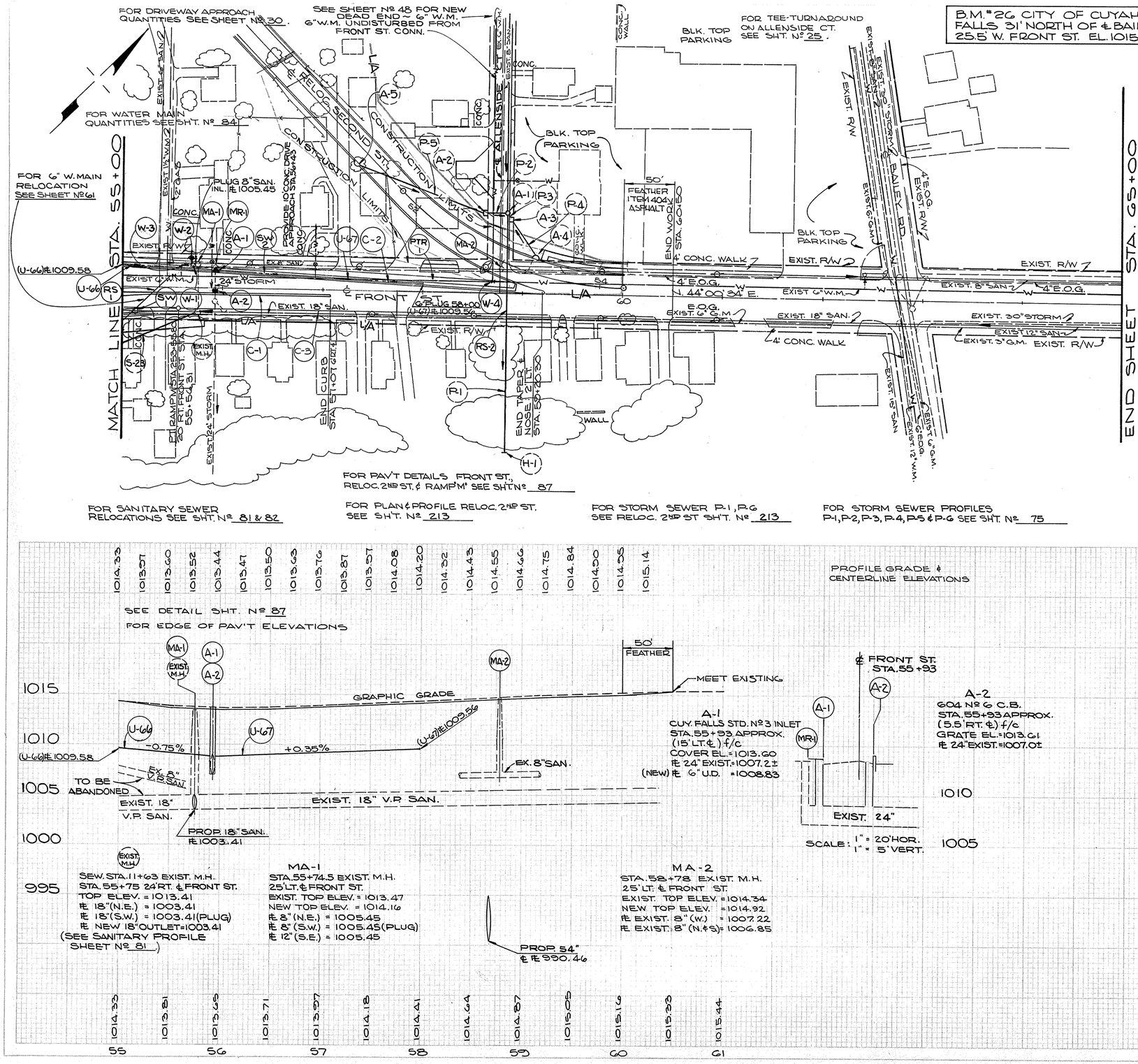

FOR SANITARY SEWER RELOCATIONS SEE SHT. Nº 81 & 82

FOR PLAN & PROFILE RELOC. 2ND ST. SEE SH'T. Nº 213

FOR STORM SEWER P-1, P-6 SEE RELOC. 2ND ST SH'T. Nº 213

FOR STORM SEWER PROFILES P-1, P-2, P-3, P-4, P-5 & P-6 SEE SHT. Nº 75

FOR PAV'T DETAILS FRONT ST., RELOC. 2ND ST. & RAMP 'M' SEE SH'T Nº 87

PROFILE GRADE & CENTERLINE ELEVATIONS

SEW. STA. 11+63 EXIST. M.H.
STA. 55+75 24' RT. ℄ FRONT ST.
TOP ELEV. = 1013.41
℄ 18"(N.E.) = 1003.41
℄ 18"(S.W.) = 1003.41(PLUG)
℄ NEW 18" OUTLET = 1003.41
(SEE SANITARY PROFILE SHEET Nº 81)

MA-1
STA. 55+74.5 EXIST. M.H.
25' LT. ℄ FRONT ST.
EXIST. TOP ELEV. = 1013.47
NEW TOP ELEV. = 1014.16
℄ 8" (N.E.) = 1005.45
℄ 8" (S.W.) = 1005.45 (PLUG)
℄ 12" (S.E.) = 1005.45

MA-2
STA. 58+78 EXIST. M.H.
25' LT. ℄ FRONT ST.
EXIST. TOP ELEV. = 1014.34
NEW TOP ELEV. = 1014.92
℄ EXIST. 8" (W.) = 1007.22
℄ EXIST. 8" (N. & S.) = 1006.85

A-1
CUY. FALLS STD. Nº 3 INLET
STA. 55+93 APPROX.
(15' LT. ℄) f/c
COVER EL. = 1013.60
℄ 24" EXIST. = 1007.2 ±
(NEW) ℄ 6" U.D. = 1008.83

A-2
604 Nº 6 C.B.
STA. 55+93 APPROX.
(5.5' RT. ℄) f/c
GRATE EL. = 1013.61
℄ 24" EXIST. = 1007.01

ESTIMATED QUANTITIES

REF. NO.	STATION TO STATION	SIDE	603 CURB TURB ASPHALT PLAN LIN. FT.	609 CURB CONC. TYPE 6 LIN. FT.	612 CONC. TRAFFIC ISLAND SQ. YDS.	608 4" CONC. WALK SQ. YDS.	305 PORTLAND CEMENT CONCRETE SQ. YDS.	603 LF 6" TYPE F	604 Nº 6 CATCH BASIN EACH	CUY FALLS Nº 3 INLET EACH	604 MH. ADJUST REM. OR TO GRADE REWD. EACH	606 LF GUARDRAIL SHALLOW	608 SQ. YDS. SIDEWALK
C-1	55+28 TO 57+07	RT.	179										
C-2	55+00 TO 58+95	LT.		395	19								
C-3	55+54.31 TO 59+00	RT.		344									
SW-1	55+00 TO 55+54.31	RT.				31							
SW-2	55+00 TO 58+95	LT.				220							
RS-1	55+13 TO 55+50	RT. & LT.					26						
RS-2	58+84	RT.					20						
A-1	55+93 15'	LT.							1				
A-2	55+93 5.5'	RT.								1			
U-66	55+00 TO A-1	LT.						10					
U-67	A-1 TO 58+00	LT.						10					
MR-1	55+93 20' LT. ℄	—									1		
MA-1	55+74.5 ~ 25' LT. ℄ FRONT	—										83	
MA-2	58+78 ~ 25' LT. ℄ FRONT	—										197	
TOTALS	CALC. BY C.O.B. 10/67 CHECKED BY H.C.S. 11/68		179	739	19.1	251	46	20	1	1	1	280	2

RELOCATED FRONT ST.

END AREA	CUT	FILL	CU. YDS. CUT	CU. YDS. FILL
	0	0		
	0	0	0	0
	0	0	0	0
	0	0	40	0
	0	0	0	0
	0	0		

FED. RD. DIVISION	STATE	PROJECT	
2	OHIO		

208
460

SUM - 8 - 17.63

NOTE: 40 C.Y. CUT IS FOR APPROACH SLAB

47+00

1024.80

1025.30

47+50

1022.56

1022.06

48+00

1023.54

1023.04

48+50

1024.52

1024.02

49+00

1024.80

1025.30

BEGIN PAV'T.
STA. 46+85

1030
1020
1010

CALC. BY F.A.E. 10/67
CHECKED BY H.C.S. 12/68

FRONT ST.
STA. 47+00 - STA. 49+00

		49+50	50+00	50+50	51+00	51+50
END AREA	CUT	0	0	0	0	0
	FILL	0	0	0	41	51
CU. YDS.	CUT	0	0	0	0	0
	FILL	0	0	0	38	85

FED. RD. DIVISION	STATE	PROJECT	
2	OHIO		

208
460

SUM-8-17.63

0	
0	
0	
0	

CALC. BY F.A.E. 10/67
CHECKED BY H.C.S. 12/68

FRONT ST
STA. 49+50 - STA. 51+50

FED. RD. DIVISION	STATE	PROJECT	
2	OHIO		

210
460

SUM-8-17.63

	81
	2
37	
2	

	CUT	FILL
END AREA CU. YDS.		
	28	41
	89	55
	57	70
	11	76

	CUT	FILL
	1	
	23	11
AHEAD	7	33
BACK	45	33
	51	30
	19	45

SEE RAMP "M" X-SECTIONS

SEE RAMP "N" X-SECTIONS

SEE M.L. X-SECTIONS

54+00

53+41.24

53+00

52+50

52+00

AHEAD

BACK

1016.20

1016.47

1015.89

1017.77

1018.09

1017.49

1018.86

1019.22

1020.19

1020.59

1021.54

1021.97

1030

1020

1010

60

40

20

0

CALC. BY F.A.E. 10/67
CHECKED BY H.C.S. 12/68

FRONT ST.
STA. 52+00 - STA. 54+00

END AREA		CU. YDS.	
CUT	FILL	CUT	FILL
2	16	4	20
2	12	3	18
1	7	25	13
23	7	46	16
			20
		46	
		10	
		27	

PED. RD. DIVISION	STATE	PROJECT	
2	OHIO		

SUM-8-17.63

21
460

CALC. BY F.A.E. 10/67
CHECKED BY H.C.S. 12/68

FRONT ST.

STA. 54+50 - STA. 56+50

FED. RD. DIVISION	STATE	PROJECT	
2	OHIO		

211-A
460

SUM-8-17.63

END AREA CUT	END AREA FILL	CU. YDS. CUT	CU. YDS. FILL
1	0	1	1
1	4	2	12
1	9	2	27
1	20	2	40
1	23	3	42

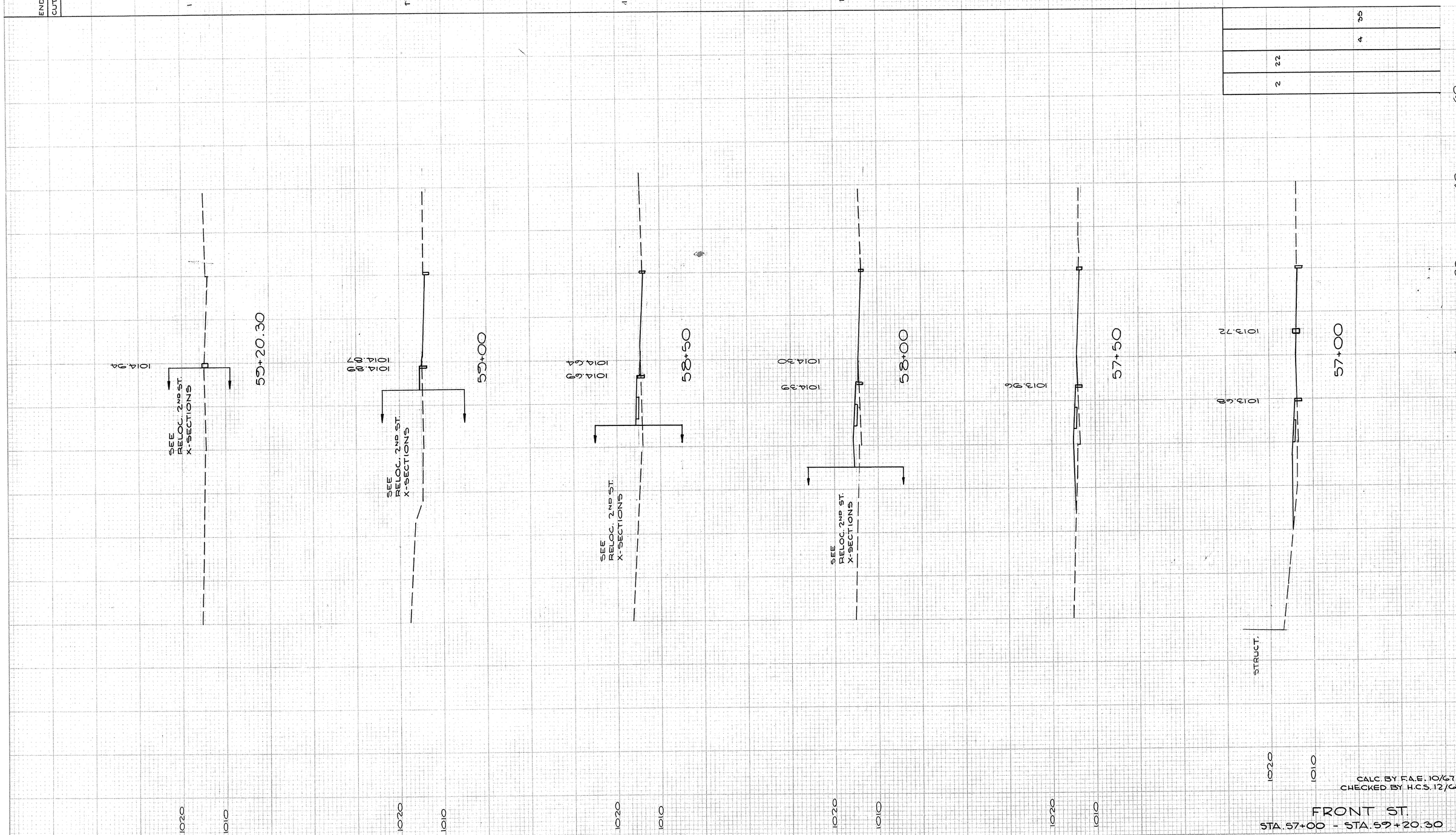

CALC. BY F.A.E. 10/67
CHECKED BY H.C.S. 12/68

FRONT ST.
STA. 57+00 - STA. 59+20.30

FED. HIGHWAY DIVISION	STATE	PROJECT
2	OHIO	

212
460

SUM-8-17.63

FOR SANITARY SEWER RELOCATIONS SEE SHT Nº 82

FOR W. MAIN DISPOSITION TIFFT ST. SEE SHEET Nº 47

FOR PAV'T DETAILS RAMP "P" RAMP "L" & RELOC. SECOND ST. SEE SHT. Nº 87-A

FOR TEMPORARY PAVEMENT CLASS "A" SEE SHEET Nº S 23, 63 & 87-A.

15'-0" | 15'-0"
VARIABLE DEPTH STONE CURB 3'-0" | 4" ASPHALT | 2½" ASPHALT | 3'-0" | VARIABLE DEPTH BROKEN CONC. CURB
15" SAND & STONE BASE

EXIST. SECOND STREET

BEGIN WORK STA. 43+50

EXIST. R/W

EXIST. 8" G.M.

EXIST. 8" SAN.

EXIST. 4" W.M.

EXIST. 6" W.M.

EXIST. 4" G.M.

EXIST. 12" STORM

EXIST. 8" SAN. TO BE ABANDONED

EXIST. 4" W.M. TO BE ABANDONED

EXIST. 4" G.M. TO BE ABANDONED

EXIST. 6" G.M. TO BE ABANDONED

EXIST. 8" G.M. TO BE ABANDONED

EXIST. 12" STORM TO BE ABANDONED

EXIST. 8" SAN. TO BE ABANDONED

EXIST. 4" W.M. TO BE ABANDONED

EXIST. 6

SHEET NO.	STATE	ROUTE
2	OHIO	

SUM-8-17.63

B.M. #26 - CITY OF CUYAHOGA FALLS
31' N. ℄ BAILEY RD. & 25.5' WEST
OF ℄ FRONT ST. EL. 1015.24

PROPOSED STRUCTURE
BRIDGE Nº SUM-8-18.12

TYPE: CONTINUOUS STEEL BEAMS WITH REINFORCED CONCRETE DECK AND SUBSTRUCTURE.
SKEW: 23° 01' 24" LF. TO LOC. TAN.
SPANS: 85'-3", 72'-0", 58'-0" C/C BRGS.
ROADWAY: 26'-0" F/F, 2' SAFETY CURBS
LOAD FREQUENCY: AASHO HS-20-44
WEARING SURFACE: 1" MONOLITHIC
APPROACH SLABS: 20' REAR
25' FORWARD (AS-1-67)
ALIGNMENT: 18° 45' 00" CURVE RT.
SUPERELEVATION: NONE X-SLOPE .015G/FT.
SLOPE PROTECTION: CRUSHED AGGREGATE AT ABUT. A-2 ONLY & BERMS
TRAFFIC: 17,064 - 1985 A.D.T.

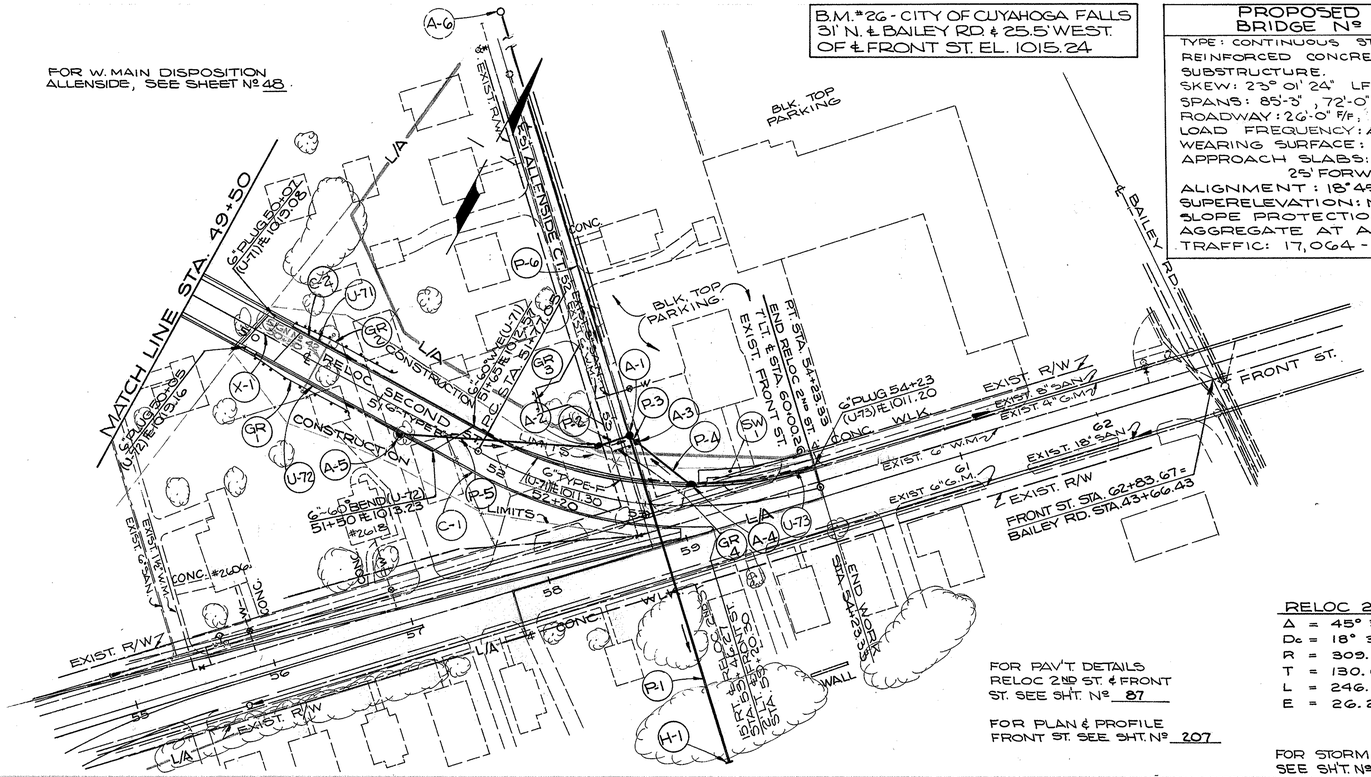

FOR PAV'T. DETAILS RELOC 2ND ST. & FRONT ST. SEE SHT. Nº 87

FOR PLAN & PROFILE FRONT ST. SEE SHT. Nº 207

RELOC 2ND STREET
Δ = 45° 33' 40" RT.
Dc = 18° 30' 00"
R = 309.706'
T = 130.064'
L = 246.276'
E = 26.203'

FOR STORM SEWER PROFILES SEE SHT. Nº 75

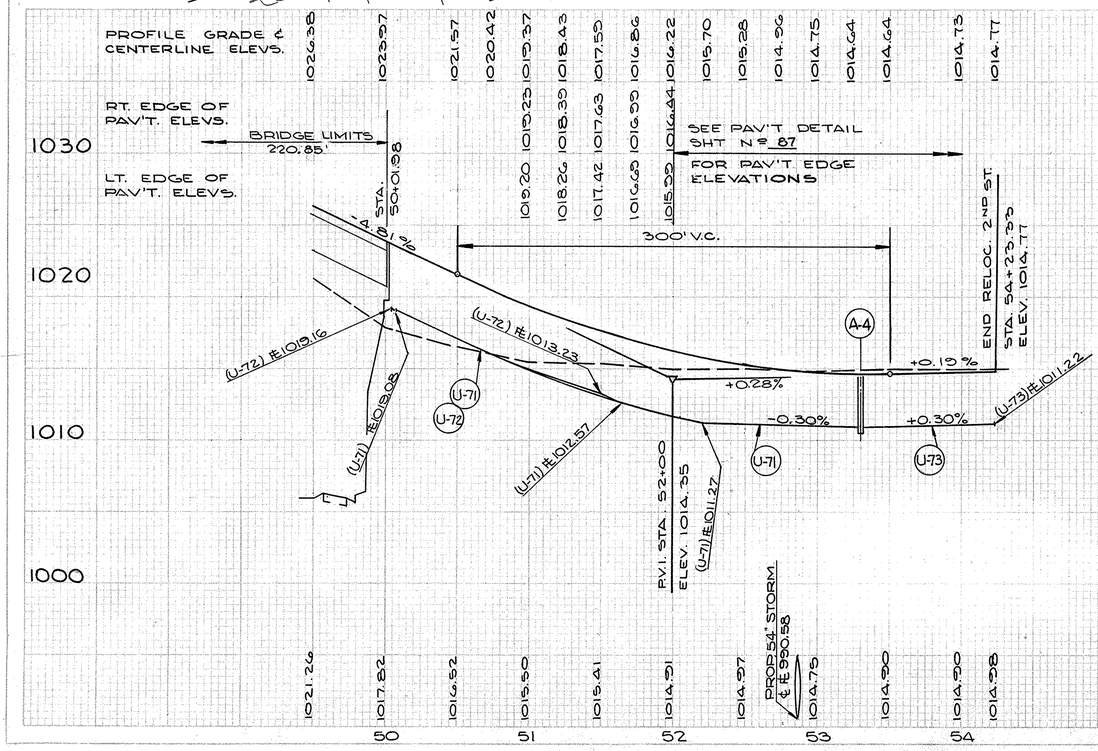

ESTIMATED QUANTITIES

REF. NO.	STATION TO STATION	SIDE	608 4" CONC. WALK SQ.FT.	606 GUARD RAIL STANDARD LIN.FT.	606 GUARD RAIL ANCHOR END ASSEMBLY EACH	606 GUARD RAIL TERMINAL ASSEMBLY EACH	609 CURB & GUTTER LIN.FT.	611 REINF. CONC. SLAB (CY)	603 CONDUIT LIN. FT. TYPE "E" 6"	603 CONDUIT LIN. FT. TYPE C W/CRADLING BEDDING 6"	603 CONDUIT LIN. FT. TYPE C W/CRADLING BEDDING 12"	603 CONDUIT LIN. FT. TYPE C W/CRADLING BEDDING 18"
GR-3	52+73 ALLENSIDE	RT.		25	2							
GR-1	50+11 TO 50+86	RT.		75		1						
GR-2	50+20 TO 50+35	LT.		75		1						
GR-4	53+22 ALLENSIDE	℄		12.5	2							
SW-1	53+39 TO 54+23	LT.	395									
C-1	50+24 TO 53+23	RT.					299					
C-2	50+29 TO 54+23	LT.					394					
X-1	50+01.98	℄						75				
U-71	50+07 TO A-4	LT.							20	30		
U-72	50+05 TO 51+65	LT&RT.										
U-73	A-4 TO 54+23	LT.							10			
A-1	53+15 - 7' LT. & ALLENSIDE	–										
A-2	53+15 - 15' RT. & ALLENSIDE	–										
A-3	53+20 - 10' LT. & ALLENSIDE	–										
A-4	53+30 - 13' LT. & REL. SECOND	–										
A-5	51+25 - 13' RT. & REL. SECOND	–										
P-1	A-1 TO H-1	RT.									22	6
P-2	A-1 TO A-2	RT.										
P-3	A-1 TO A-3	LT. & RT.										
P-4	A-3 TO A-4	LT.										
P-5	A-4 TO A-5	LT. & RT.									136	
P-6	A-1 TO A-6	RT.										
H-1	58+83.5-157' RT. & FRONT	–										
TOTALS	CALC. BY C.D.B. 10/67 CHECKED BY H.C.S. 11/68		395	1875	4	2	693	75	30	30	158	6

	BENDS & BRANCHES	605 6" UNDER-DRAINS LIN. FT.	604 NO2 M.H. EACH	604 2-2A C.B. EACH	604 CUYAHOGA FALLS STD. NO1 INLET EACH	602 CONC. MASONRY CU.YDS.
SHAL.	6"					
LOW		303	1			
		145	1			
		83		1		
					1	0.96

SEE SHEET NO.	
	75
	75
	75
	75
	75
	75

RELOCATED SECOND ST.

| | | |

FED. RD. DIVISION	STATE	PROJECT	
2	OHIO		

215
460

SUM-8-17.63

END AREA CUT	END AREA FILL	CU. YDS. CUT	CU. YDS. FILL
0	0	0	0
0	0	0	0
0	0	35	0
0	0	105	0
0	0	180	0
0	0	89	0

ZERO SECTION
STA. 47+81.13

BEGIN BRIDGE
STA. 47+81.13

SEE SR-8 X SECTIONS

SEE RAMP "P" X-SECTIONS

SEE RAMP "P" X-SECTIONS

RAMP "P" STA 253+30.80

	AHEAD	BACK
	5	
	51	
	0	0
	60	100

48+50
1030.76

48+00
1032.39

47+50
1033.65

47+00
1034.52

46+69.00
1034.87

1030.76
1030.56
1032.39
1032.19
1033.45
1033.65
1034.54
1034.52
1034.87
1035.06
1034.81
1034.70

1040
1030
1040
1030
1040
1030
1040
1030
1040
1030

80
60
40
20
0
20
40
60
80

℄ EXIST. 2ND ST.
℄ RELOC. 2ND ST.

AHEAD
BACK

CALC. BY F.A.E. 10/67
CHECKED BY H.C.S. 12/68

RELOC, SECOND ST.
STA. 46+69 - STA. 48+50

FED. RD. DIVISION	STATE	PROJECT	
2	OHIO		

216
460

SUM-8-17.63

END AREA CUT	END AREA FILL	CU. YDS. CUT	CU. YDS. FILL
0	202	0	474
0	310	0	287
0	0	0	0
0	0	0	0
0	0	0	0
0	0	0	0

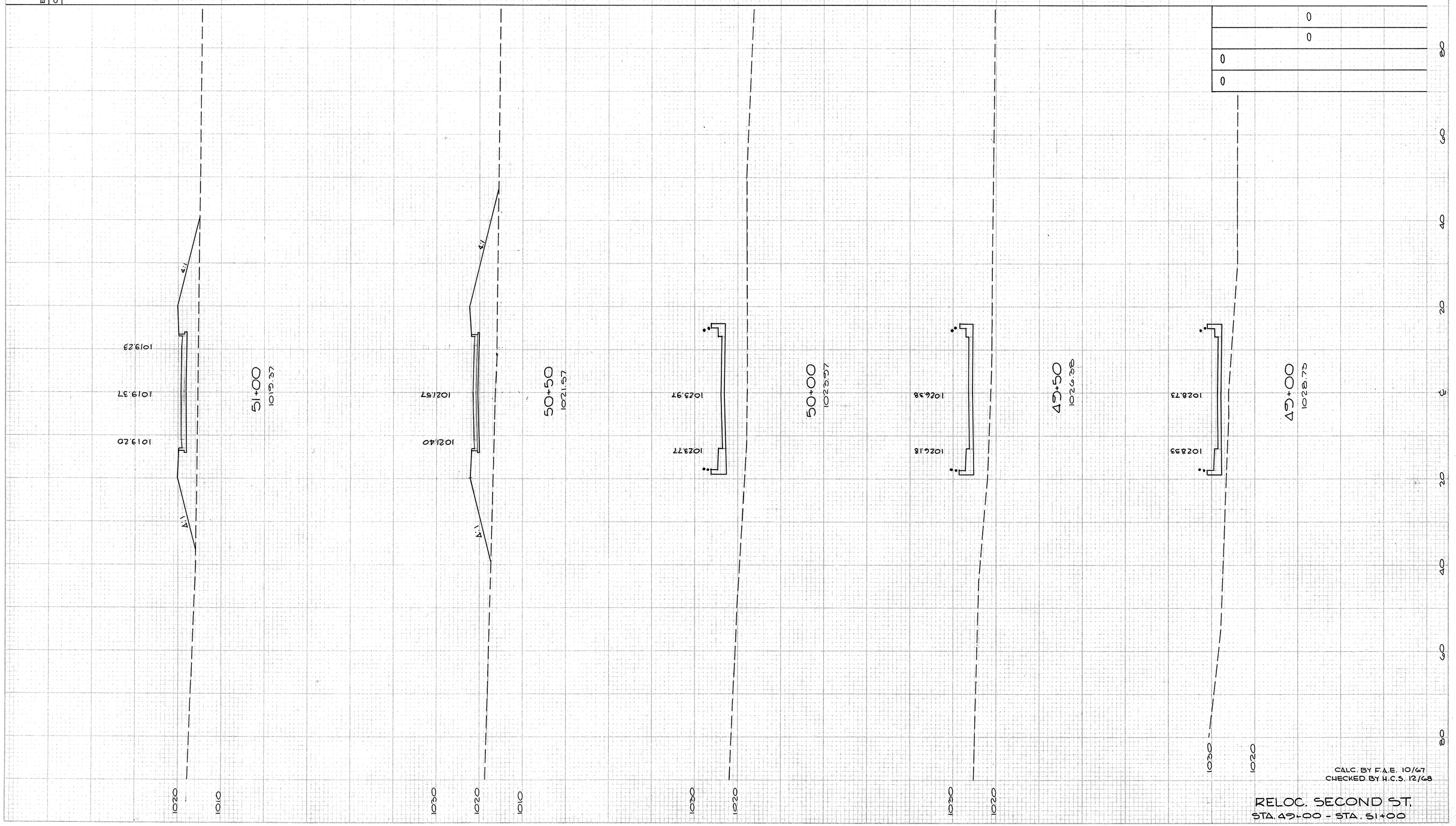

CALC. BY F.A.E. 10/67
CHECKED BY H.C.S. 12/68

RELOC. SECOND ST.
STA. 49+00 - STA. 51+00

END AREA	CUT	31	45	61	65	24	4	
	FILL	0	0	0	7	22	64	
CU. YDS.	CUT	38	57	127	83	26	4	
	FILL	0	0	7	27	80	156	

FED. RD. DIVISION	STATE	PROJECT	
2	OHIO		

217
460

SUM-8-17.63

	284
	0
104	
0	

SEE FRONT ST. X-SECTIONS

54+23.33
1014.58

1015.16
1014.98
1014.67

SEE FRONT ST. X-SECTIONS

54+00
1014.91

1015.11
1014.91
1014.63

SEE FRONT ST. X-SECTIONS

53+50
1014.77

1014.95
1014.77
1014.49

SEE FRONT ST. X-SECTION

53+00
1014.84

1015.12
1014.84
1014.56

52+50
1015.34

1015.62
1015.34
1015.16

52+00
1016.26

1016.48
1016.26
1016.03

51+50
1017.91

1017.75
1017.61
1017.44

CALC. BY F.A.E. 10/67
CHECKED BY H.C.S. 12/68

RELOC. SECOND ST.
STA. 51+50 - STA. 54+23.33

F.I.D. HWY. DIVISION	STATE	PROJECT		
2	OHIO			

218
460

SUM-8-17.63

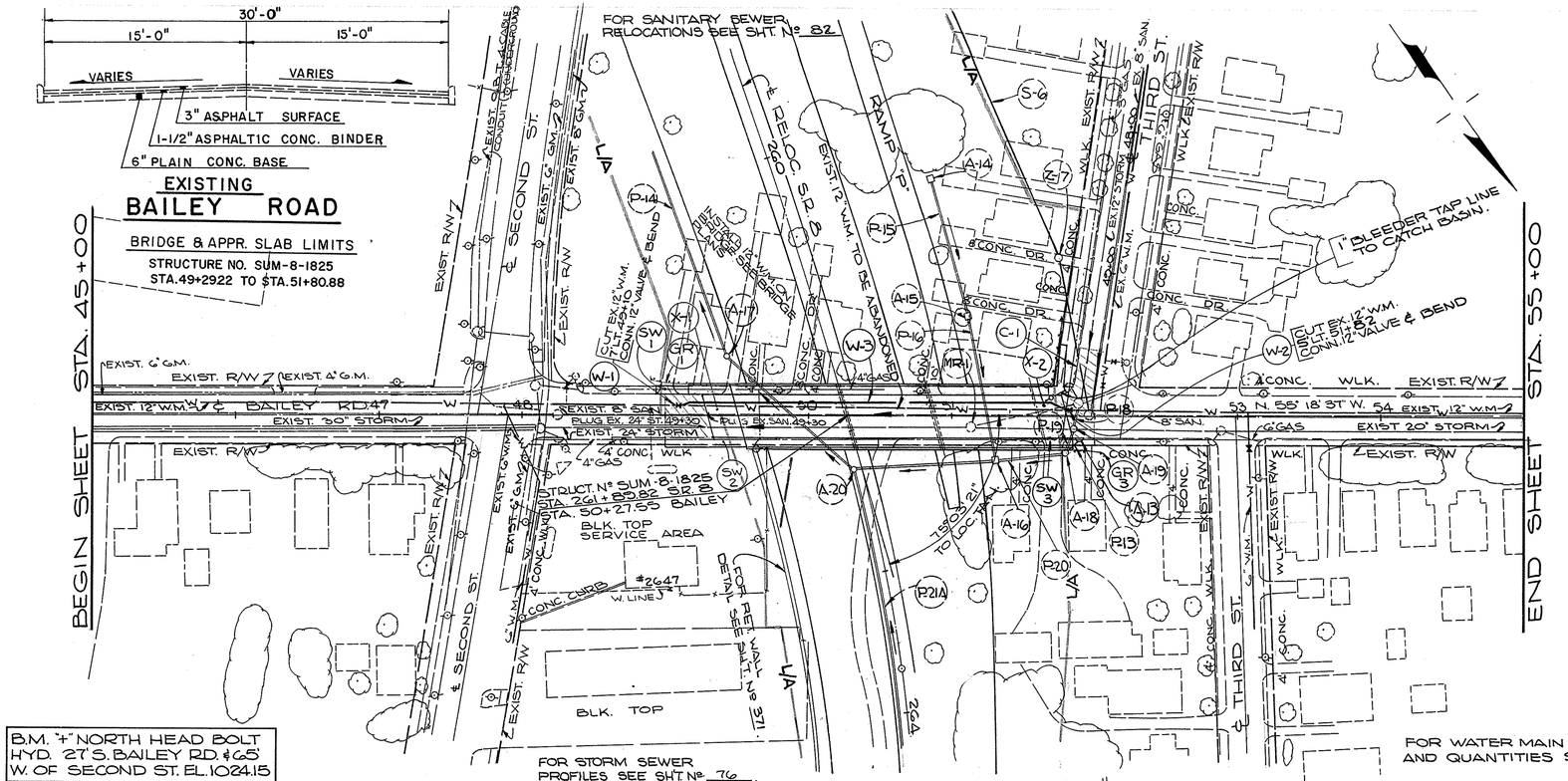

PROPOSED STRUCTURE
BRIDGE No SUM-8-18.25

TYPE: CONTINUOUS STEEL BEAMS WITH REINFORCED CONCRETE DECK AND SUBSTRUCTURE.
SKEW: 14° 56' 35" R.F.
SPANS: 74'-0", 61'-7", 69'-5"
ROADWAY: 30'-0" F/F 5'-0" SIDEWALKS
LOADING - HS-20-44
WEARING SURFACE: 1" MONOLITHIC
APPROACH SLABS: 20' LONG (AS-1-67)
ALIGNMENT: TANGENT
SUPERELEVATION: NONE
SLOPE PROTECTION: CRUSHED AGGREGATE
ABUT. #2 ONLY 4 BERMS
TRAFFIC: 15,907 - 1985 A.D.T.

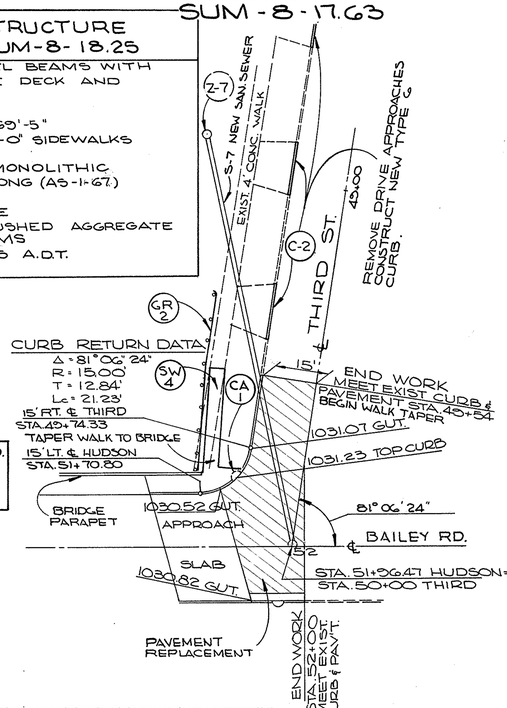

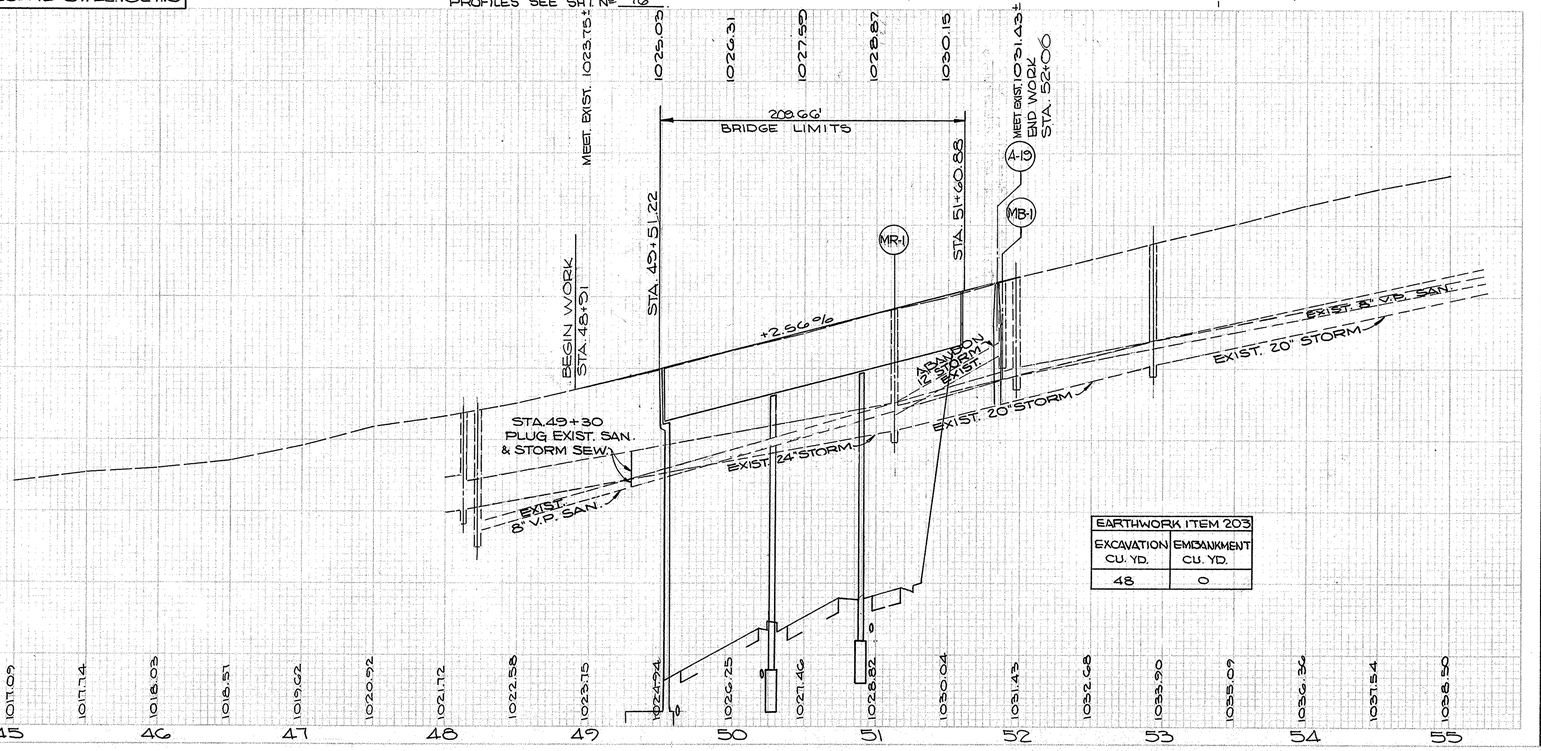

EARTHWORK ITEM 203	
EXCAVATION CU. YD.	EMBANKMENT CU. YD.
48	0

ESTIMATED QUANTITIES

REF. No	STATION TO STATION	SIDE	608 4" CONC. WALK SQ. FT.	608 CURB RAMP TYPE 5 SQ. FT.	611 MISC. CONC. APPR. SLAB SQ. YDS. (2")	609 CURB TYPE 6 LIN. FT.	603 CONC. TYPE 6 LIN. FT.	604 CATCH BASIN TO BE ADJ. TO GRADE EACH	606 GUARD RAIL TERMINAL ASSEMBLY EACH	606 GUARDRAIL BRIDGE TERMINAL ASSEMBLY EACH
X-1	45+29.22 ℄				65					
X-2	51+60.88 ℄				65					
GR-1	48+94 TO 49+18	LT.		25					1	1
GR-2	51+75	LT.		50					1	1
GR-3	51+83 TO 52+08	RT.		25					1	1
SW-1	48+91 TO 49+51.22	LT.	295			9				
SW-2	49+00 TO 49+55	RT.	220							
SW-3	51+63 TO 52+00	RT.	110							
SW-4	51+55 TO 51+87	LT.	220							
C-1	W. SIDE THIRD ST. @ BAILEY	-					22			
C-2	48+50 TO 49+50 THIRD	RT.				42				
MR-1	51+12.5-7 RT. ℄ BAILEY	-						1		
CA-1	51+81.5 13.2' LT.	-						1		
	TOTALS		305	100	138	51	22	1	3	3

CALC. BY C.D.B. 10/67
CHECKED BY H.C.S. 11/68

BAILEY RD.

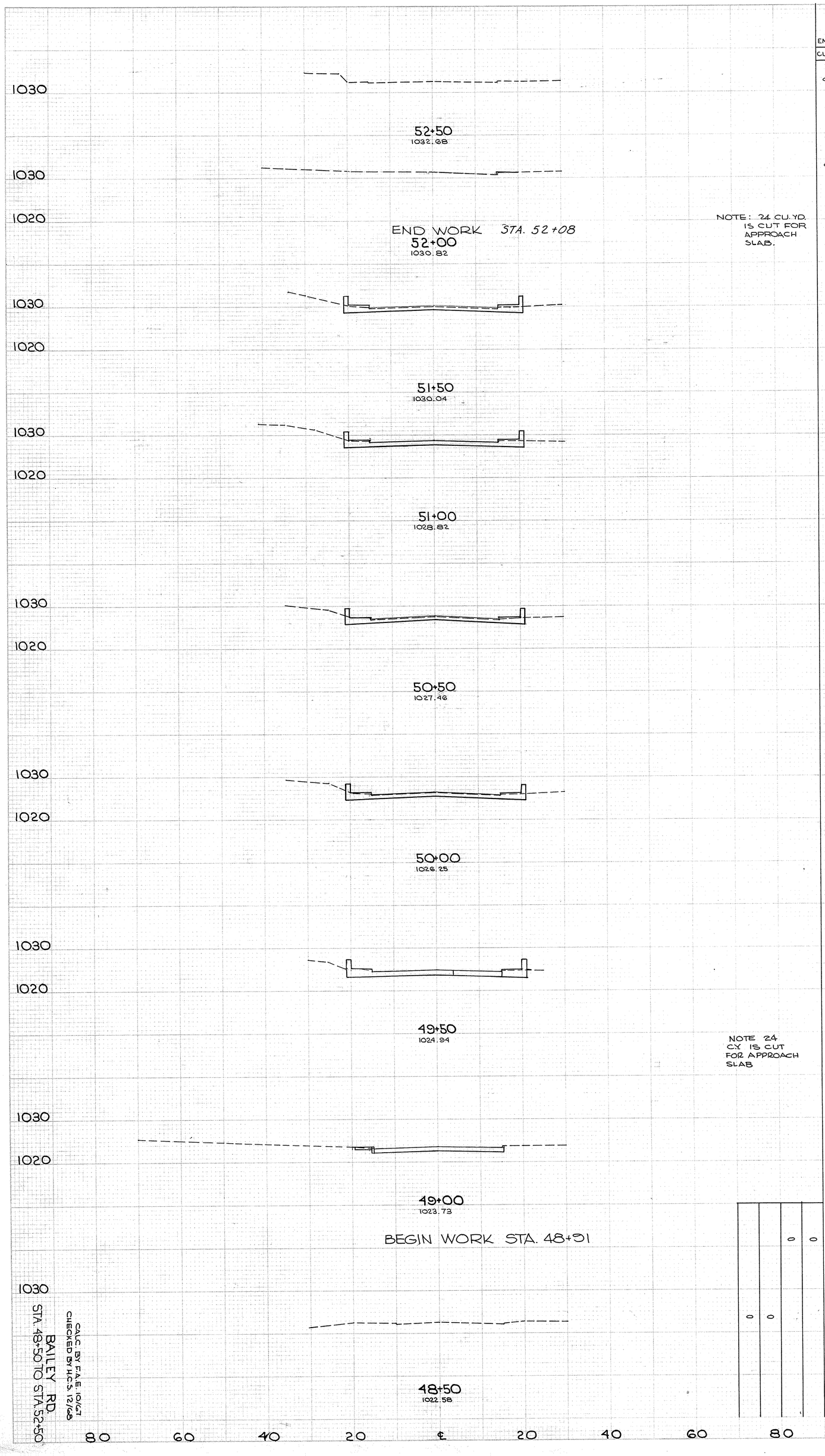

NOTE: 24 CU. YD. IS CUT FOR APPROACH SLAB.

NOTE 24 C.Y. IS CUT FOR APPROACH SLAB

END AREA CUT	END AREA FILL	CU. YDS. CUT	CU. YDS. FILL
0	0		
		0	0
0	0		
		24	0
0	0		
		0	0
0	0		
		0	0
0	0		
		0	0
0	0		
		0	0
0	0		
		24	0
0	0		
0	0		
0	0		

CALC. BY F.A.E. 10/67
CHECKED BY H.C.S. 12/68

BAILEY RD.
STA. 48+50 TO STA. 52+50

SUM-8-17.63

FED. RD. DIVISION	STATE	PROJECT
2	OHIO	

219
460

B.M. "R" IN DARLING HYD. 15' N. OF ℄ MELVIN AVE & 35' EAST OF HUDSON DR. EL. 1034.21

FED. RD. DIVISION	STATE	PROJECT	
2	OHIO		

220
460

SUM - 8 - 17.63

HUDSON DRIVE CURVE DATA

Δ = 8° 36' 52"
D = 3° 00'
R = 1909.86'
T = 160.62'
L = 320.48'
E = 6.74'
PC. STA. 49+08.18
PT. STA. 52+28.66

PROPOSED STRUCTURE
BRIDGE Nº. SUM-8-18.45

TYPE: CONTINUOUS STEEL BEAMS, WITH REINFORCED CONCRETE DECK AND SUBSTRUCTURE.
SKEW: 25° 53' 33" R.F. TO LOC. TAN.
SPAN: 79'-0", 81'-9" & BRGS.
ROADWAY: 44'-0" F/F 5'-0" SIDEWALKS
LOAD FREQUENCY: CF = 400
WEARING SURFACE: 1" MONOLITHIC
APPROACH SLABS: 20' LONG (AS-1-67)
ALIGNMENT: 3° 00' 00" RT.
SUPERELEVATION: NONE
SLOPE PROTECTION: CRUSHED AGGREGATE
TRAFFIC: 2035 - 1985 A.D.T.

S.W. CURB RETURN DATA

Δ = 71° 47' 20"
R = 15.00'
T = 10.86'
L = 18.79'
PC. 13' LT STA. 45+71.60
PT. 22' LT STA. 51+34.10

S.E. CURB RETURN DATA

Δ = 111° 25' 46"
R = 15.00'
T = 22.00'
L = 29.17'

FOR RAMP "O" PLAN & PROFILE SEE SHT. Nº 65.

FOR RAMP "O" & HUDSON DR INTERSECT. DETAILS SEE SHT. Nº 88.

FOR STORM SEWER PROFILES SEE SHT. Nº 77.

FOR DISPOSITION OF WATER MAIN SEE SHEET Nº 51.

FOR WATER MAIN SECOND STREET SEE SHT. Nº 83B.

FOR WATER MAIN (ON BRIDGE) W-3 PROFILE SEE SHT. Nº 83A.

FOR WATER MAIN QUANTITIES SEE SHT. Nº 84.

FOR DRIVEWAY APPR. QUANTITIES SEE SHT. 31

FOR SANITARY SEWER RELOCATIONS SEE SHT. Nº 81 & 82

EXIST. HUDSON DRIVE

3" ASPHALT SURFACE
6" PLAIN CONC. BASE
1-1/2" ASPHALTIC CONC. BINDER
42' (21' + 21')

EARTHWORK ITEM 203

EXCAVATION CU. YD.	EMBANKMENT CU. YD.
415	21

ESTIMATED QUANTITIES

REF. Nº	STATION TO STATION	SIDE	606 GUARD & CONC. TYPE 5 SLOPE LINE FT.	608 4" CONC. WALK SQ. FT.	609 CURB TYPE 2B LIN. FT.	611 REINFCD. CONC. APPR. SQ. YDS. 12"(T)	614 WIRE RAIL ANCHOR EACH	614 GUARD RAIL BRIDGE EACH	614 G.R. & T.L. ANCHOR EACH	202 M.H. EACH	404 ASPH. CONC. CU. YD.	305 CEMENT CONC. CU. YD.	44
GR-2	48+67 TO 48+92	LT.					1	1					
GR-3	48+56 TO 49+54 THIRD	LT.	25				1	1					
GR-4	51+09 TO 51+34	RT.	25				1	1					
SW-1	47+50 TO 49+14	LT.		570									
SW-2	48+82 TO 49+27	RT.		225									
SW-3	48+00 TO 48+20	RT.		100									
SW-4	50+92 TO 51+69	RT.		385									
SW-5	50+97 HUDSON DR.	LT.		214									
SW-6	49+35 THIRD-51+51 HUDSON	LT.		104									
X-1	48+96.58 ℄				100								
X-2	50+82.48 ℄				100								
RS-2	INTERSECT HUDSON & 2ND ST.												
MR-1	49+67 - 5' LT. ℄ HUDSON					87							
MR-2	49+73.5-27' RT. ℄ HUDSON					36				1			
MR-3	50+92 - 22' RT. ℄ HUDSON					21				1			
MR-4	49+50 - 26.3 RT. ℄ HUDSON					14			1				
MR-5	49+83.7-27.3 RT. ℄ HUDSON					63			1				
MR-6	50+86 - 25.5 LT. ℄ HUDSON										0.3	3	
												1.3	
											0.7		
TOTALS			150.0	1,528	221	200	3	3	3	3	1.0	44	

CALC. BY C.D.B. 10/67, CHECKED BY H.C.S. 11/68

HUDSON DR.

| END AREA CU. YDS. | | |

FED. RD. DIVISION	STATE	PROJECT	
2	OHIO		

222
460

SUM - 8 - 17.63

B.M. "R" IN DARLING HYD. 17' RT. & ASHLAND STA. 47+48, FRONT OF HSE # 716 ASHLAND EL. 1033.38

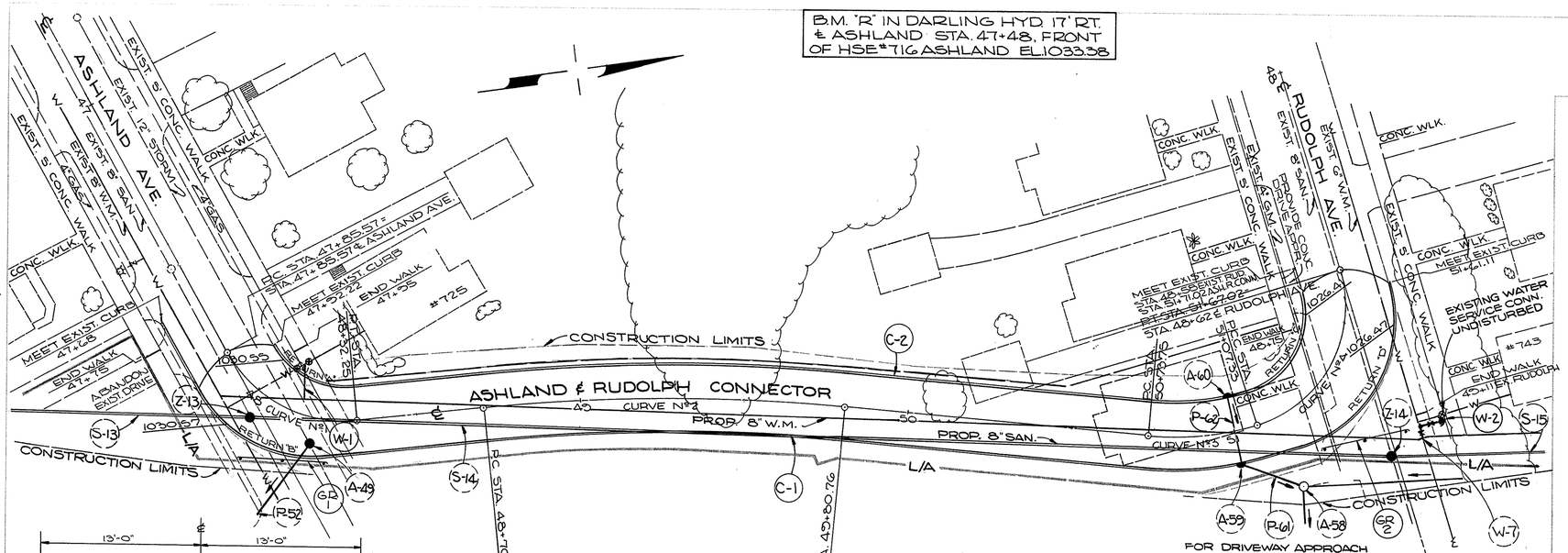

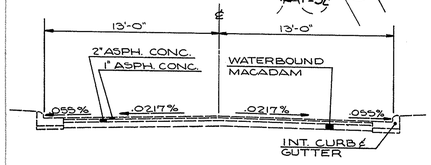

EXIST. ASHLAND & RUDOLPH TYPICAL

FOR PROPOSED TYPICAL OF ASHLAND RUDOLPH CONNECTOR SEE SHEET Nº 225 .

FOR WATER MAIN RELOCATIONS SEE SH'T. Nº 51. FOR QUANTITIES SEE SH'T. 84 .

FOR SANITARY SEWER RELOCATIONS SEE SH'T. Nº 82

FOR STORM SEWER PROFILES SEE SH'T. Nº 78 .

P.T. STA. 49+80.76

℄ CURVE Nº 1
Δ = 67°00'
R = 99.93'
T = 26.48
L = 46.68

℄ CURVE Nº 2
Δ = 11°01'18" RT.
D = 10°00'00"
R = 572.96'
T = 55.28'
L = 110.22'
E = 2.66'

℄ CURVE Nº 3
Δ = 21°57'21" LT.
R = 87.64'
T = 17.00'
L = 33.58'
E = 1.63'

℄ CURVE Nº 4
Δ = 90°
R = 38'
T = 38'
L = 59.69'

FOR DRIVEWAY APPROACH QUANTITY SEE SHEET Nº 31

RETURN "A"
Δ = 67°00'
R = 25'
T = 16.55'
L = 29.23'
P.C. = 12.62' LT. ℄ STA. 47+92.22
P.T. = 10' LT. ℄ STA. 48+32.25

RETURN "B"
Δ = 67°00'
R = 40'
T = 26.48'
L = 46.77'
P.C. = 13.26' RT. ℄ STA. 47+89.55
P.T. = 10.96' RT. ℄ STA. 48+32.25

RETURN "C"
Δ = 90°
R = 25'
T = 25'
L = 39.27'
P.C. = 10' LT. ℄ STA. 51+07.35
P.T. = 12.61' LT. ℄ STA. 51+62.48

RETURN "D"
Δ = 90°
R = 40'
T = 40'
L = 62.83'
P.C. = 11.24' RT. ℄ STA. 51+15.80
P.T. = 13.62' RT. ℄ STA. 51+61.11

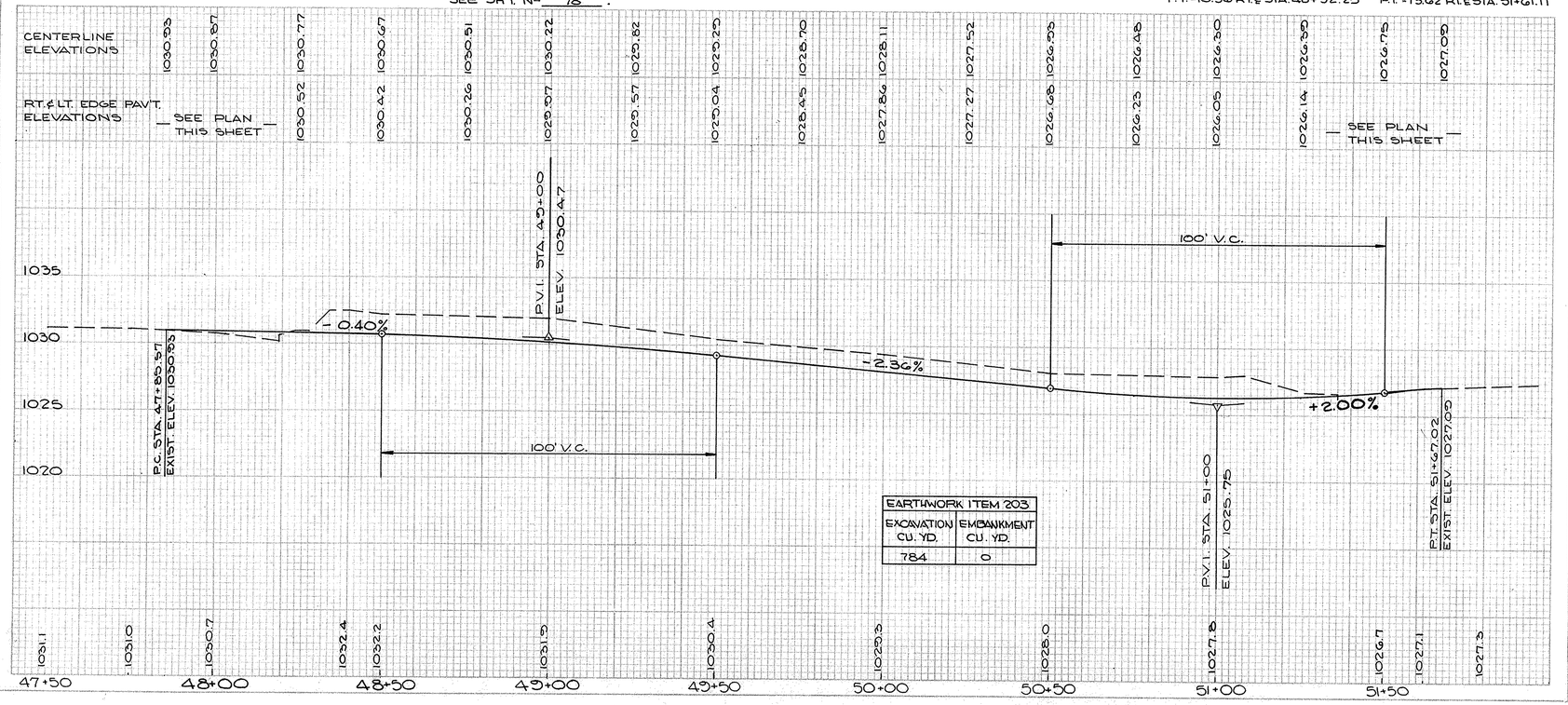

EARTHWORK ITEM 203	
EXCAVATION CU. YD.	EMBANKMENT CU. YD.
784	0

ESTIMATED QUANTITIES

REF. NO.	STATION TO STATION	SIDE	609 TYPE 6 CURB LIN. FT.	606 GUARD RAIL STD. TYPE B LIN. FT.	606 GUARD RAIL ANCHOR ASSEMBLY EACH
C-1	47+68 TO 51+61.11	RT.	393		
C-2	47+92.22 TO 51+71.02	LT.	375		
GR-1	48+05 TO 48+23	RT.		25	2
GR-2	51+15 TO 51+32	RT.		25	2
TOTALS			772	50	4

CALC. BY C.D.B. 10/67
CHECKED BY H.C.S. 11/68

ASHLAND & RUDOLPH CONNECTOR

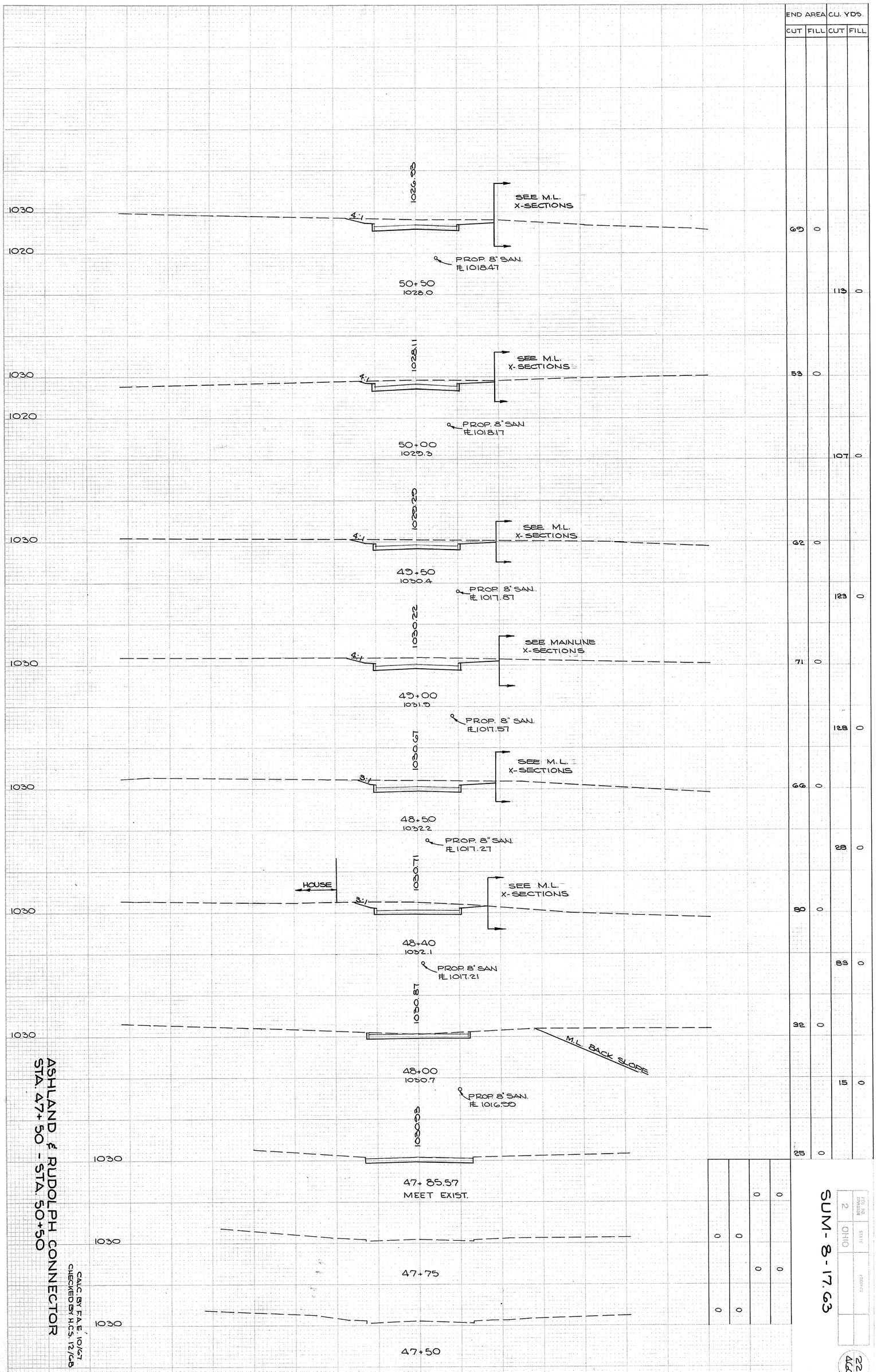

ASHLAND & RUDOLPH CONNECTOR
STA. 47+50 - STA. 50+50

CALC. BY F.A.E. 10/67
CHECKED BY H.C.S. 12/68

SUM-8-17.63

SHEET NO.	STATE	PROJECT
2	OHIO	

223
A60

FED. RD. DIVISION	STATE	PROJECT	
2	OHIO		

224
460

SUM - 8 - 17.63

END AREA	CU. YDS.
CUT	FILL
CUT	FILL
0	
22	
0	0
28	17
0	0
66	
0	
104	
0	
43	

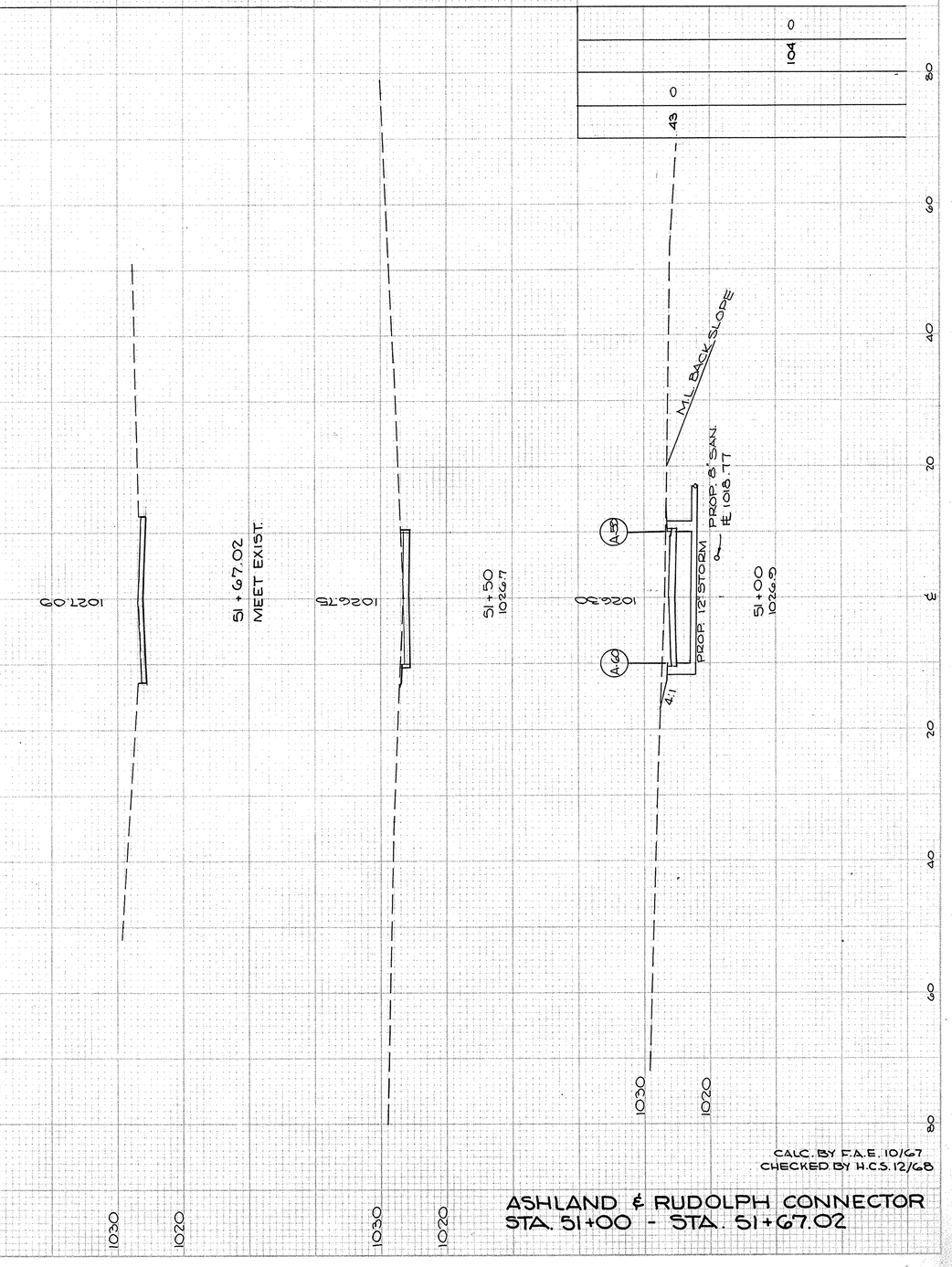

CALC. BY F.A.E. 10/67
CHECKED BY H.C.S. 12/68

ASHLAND & RUDOLPH CONNECTOR
STA. 51+00 - STA. 51+67.02

FED. RD.	STATE	PROJECT	
2	OHIO		

225
460

SUM-8-17.63

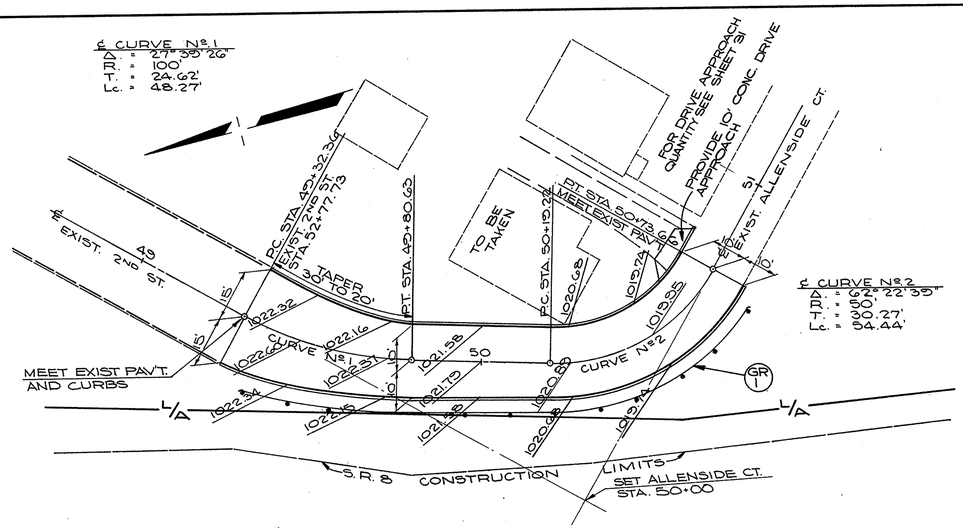

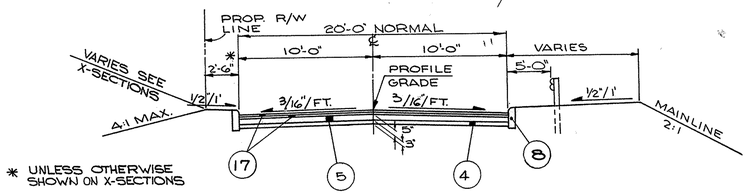

RUDOLPH-ASHLAND & ALLENSIDE CONNECTORS TYPICAL

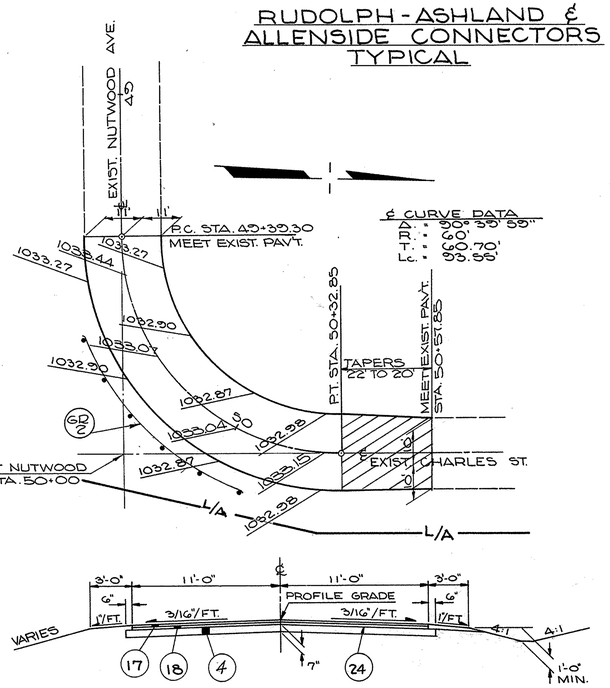

NUTWOOD-CHARLES CONNECTOR TYPICAL

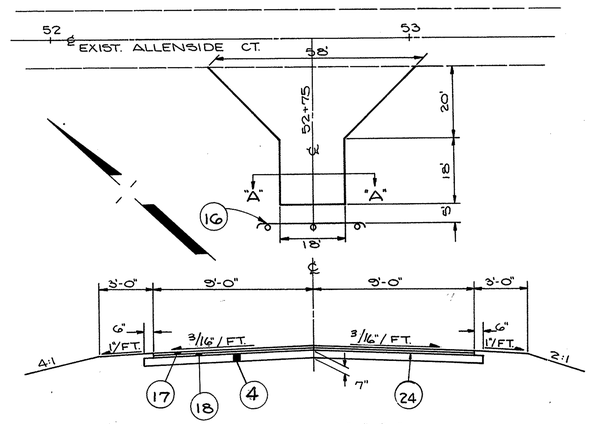

SECTION "A"-"A"

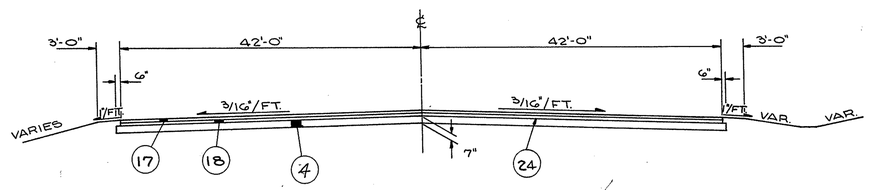

SECTION "B"-"B"

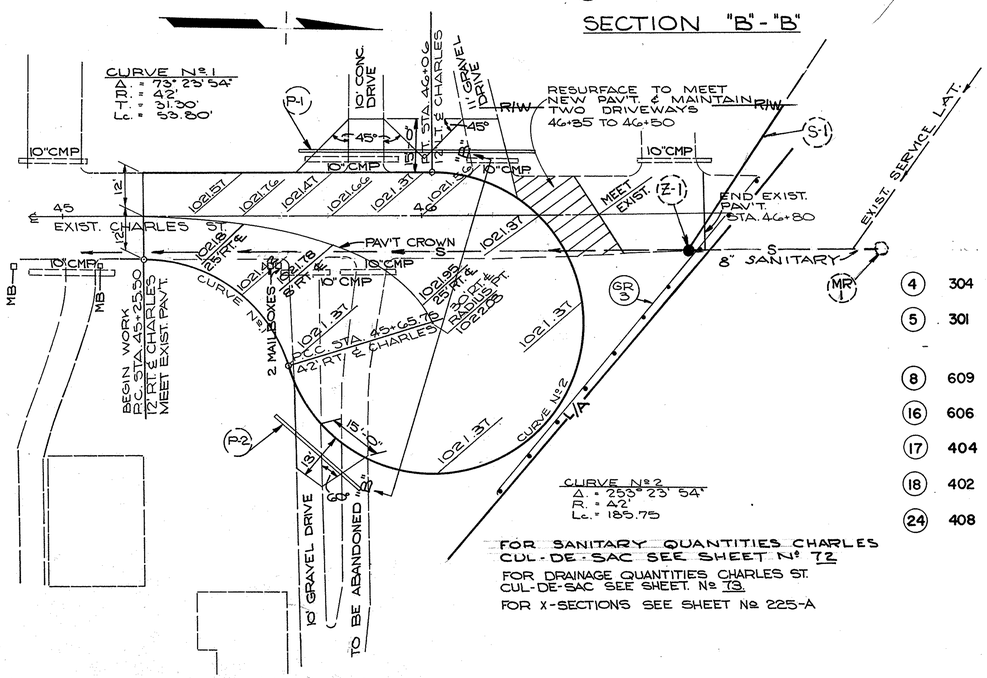
CURVE Nº1
T.ID. = 23° 23' 54"
R. = 42'
T. = 31.30'
Lc. = 53.80'
10' CONC. DRIVE
P.I.
℄ EXIST. CHARLES ST.
STA. 46+06
11' GRAVEL DRIVE
RESURFACE TO MEET NEW PAV'T. & MAINTAIN TWO DRIVEWAYS 46+35 TO 46+50
R/W
R/W
45°
45°
10"CMP
10"CMP
10"CMP
10"CMP
10"CMP
10"CMP
S-1
Z-1
MEET EXIST.
END EXIST. PAV'T. STA. 46+80
EXIST SERVICE L.A.T.
8" S SANITARY
MR 1
GR 5
℄ 45
EXIST. CHARLES ST.
12'
PAV'T CROWN
1021.51
1021.76
1021.41
1021.66
1021.31
1021.56
1021.51
1021.51
1021.37
1021.37
1021.37

SEEDING	
END WIDTH	SQ. YDS.

SECTION DIVISION	STATE	PROJECT		225-A 460
2	OHIO			

SUM-8-17.63

	END AREA		VOLUME	
	CUT	FILL	CUT	FILL

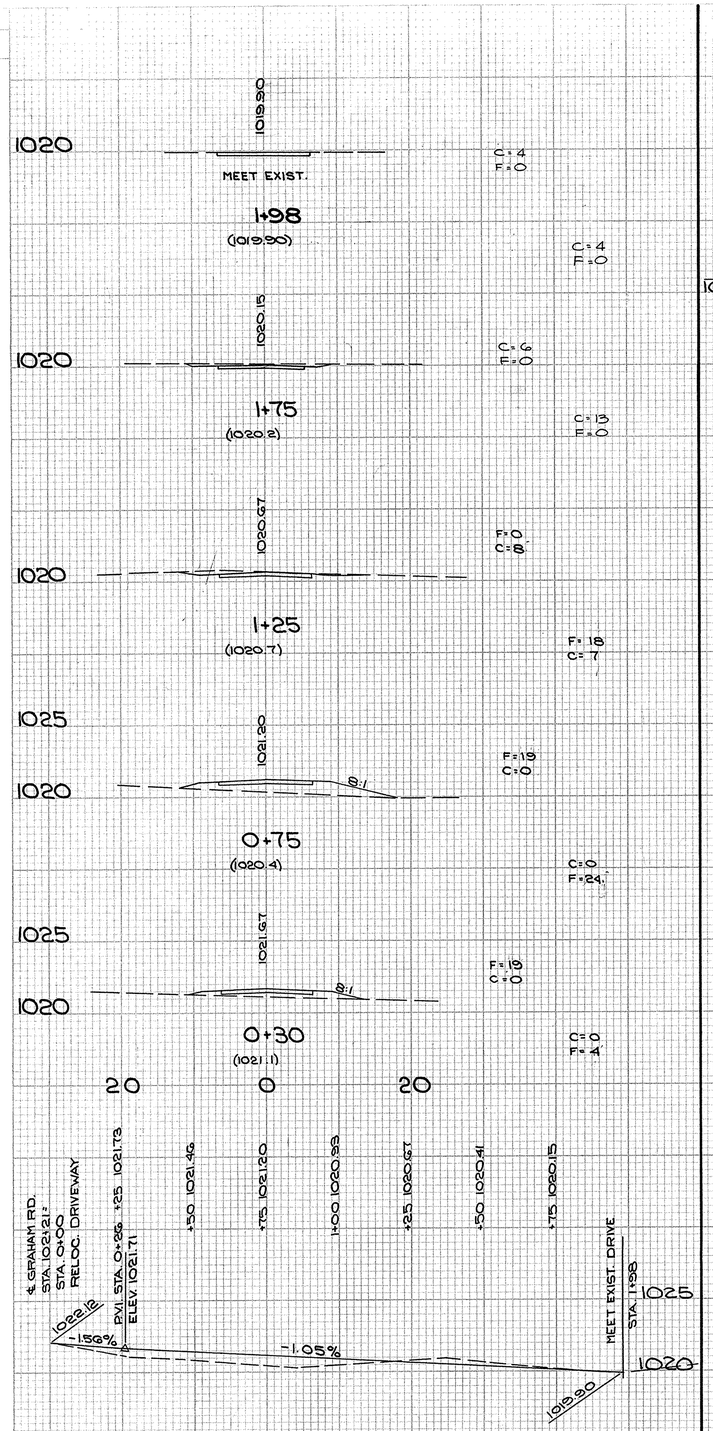

ZERO SECTION
STA. 46+48

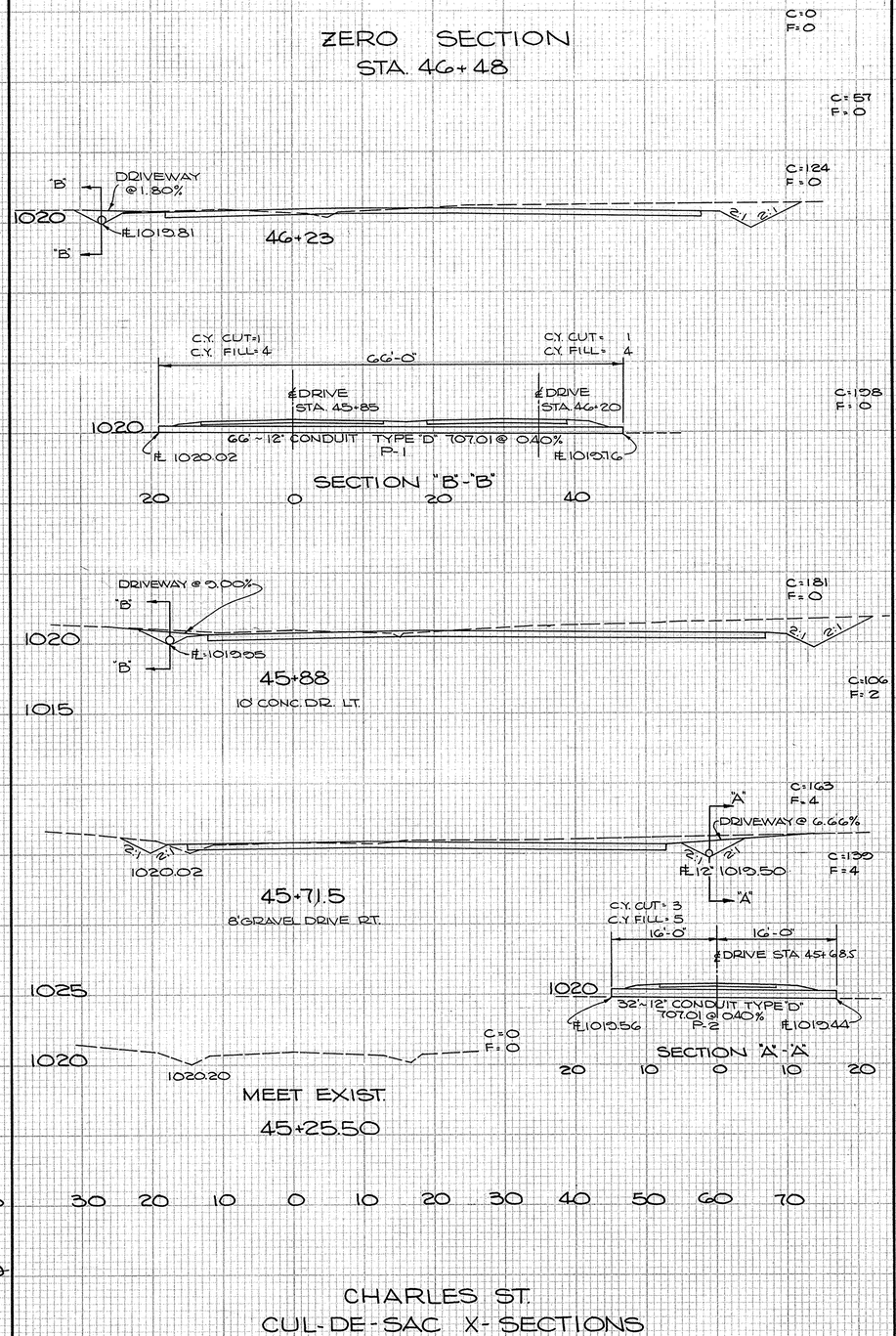

CHARLES ST.
CUL-DE-SAC X-SECTIONS

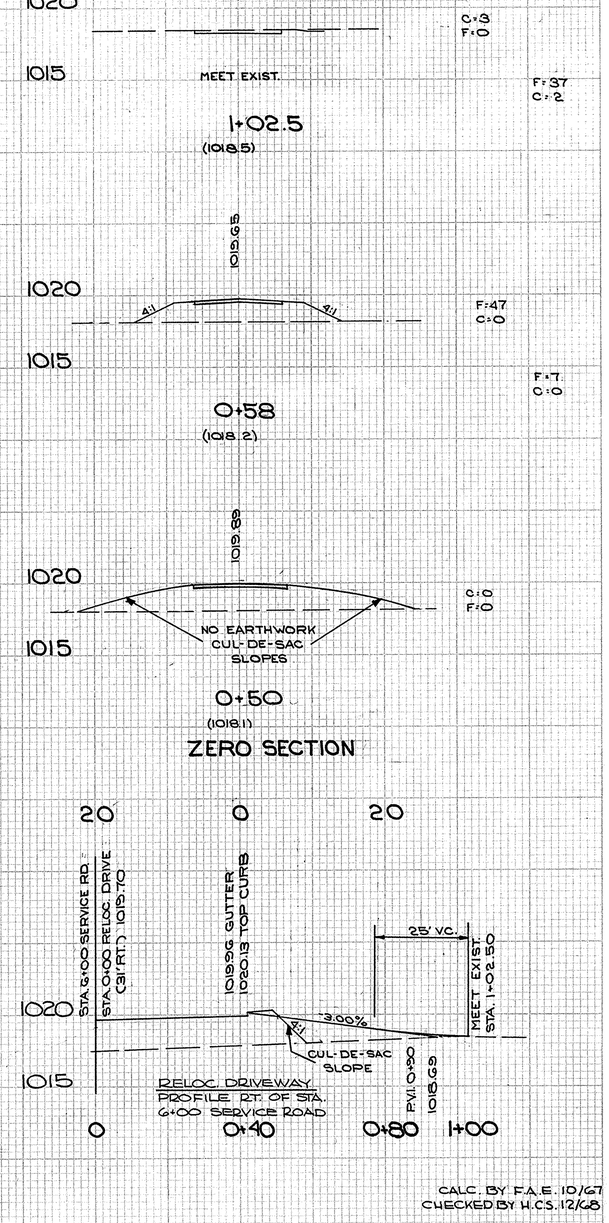

CALC. BY F.A.E. 10/67
CHECKED BY H.C.S. 12/68

CHARLES ST. & GRAHAM RD.
DRIVEWAY, X-SECTIONS & PROFILES

FED. RD. DIVISION	STATE	PROJECT	
2	OHIO		

225B
460

SUM-8-17.63

SEEDING	
END WIDTH	SQ. YDS.

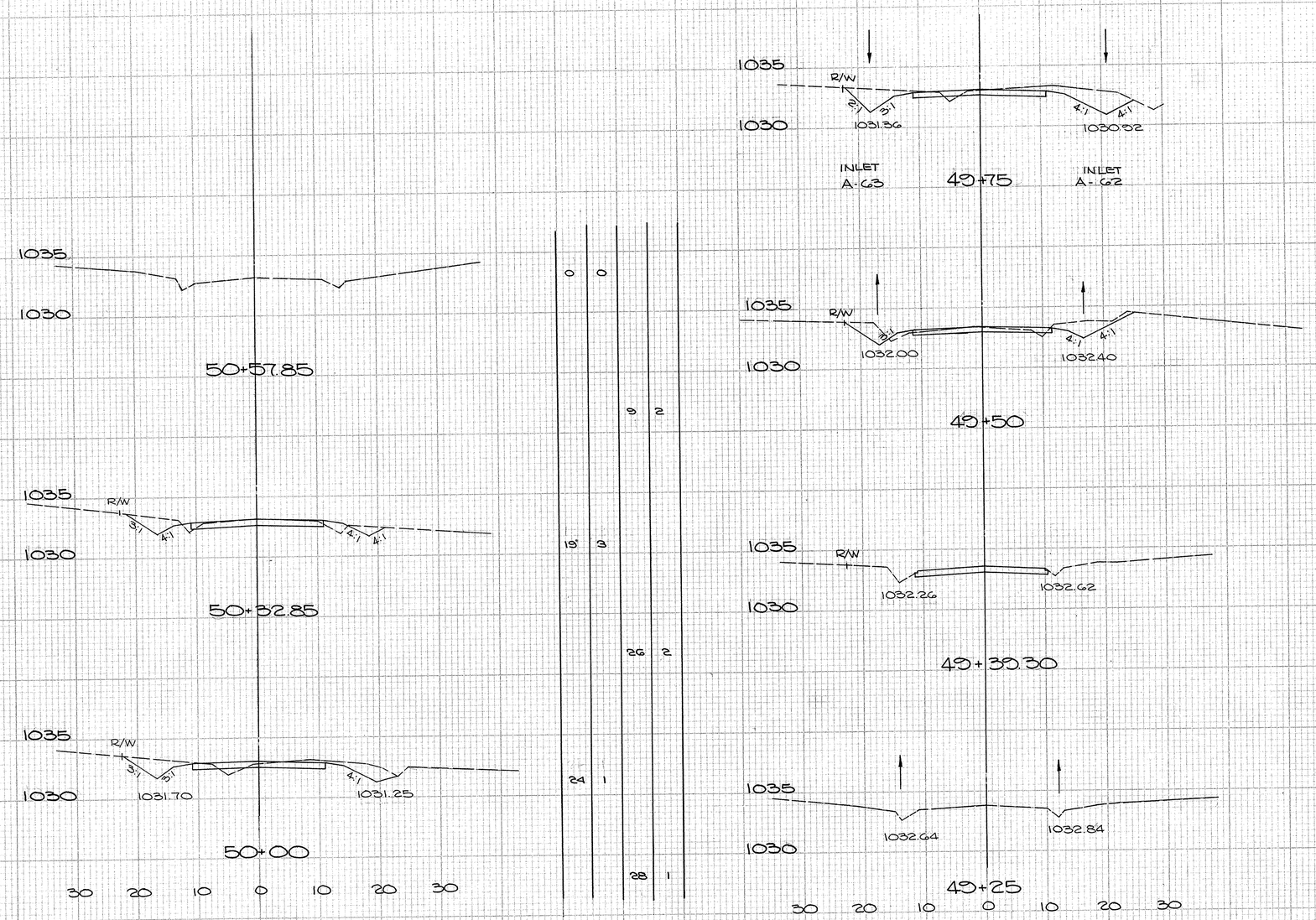

END AREA CUT	END AREA FILL	VOLUME CUT	VOLUME FILL
37	1		
		31	2
29	2		
		9	0
12	0		
		9	0
0	0		

CALC. BY F.A.E. 10/67
CHECKED BY H.C.S. 12/68

NUTWOOD ~ CHARLES CONNECTOR

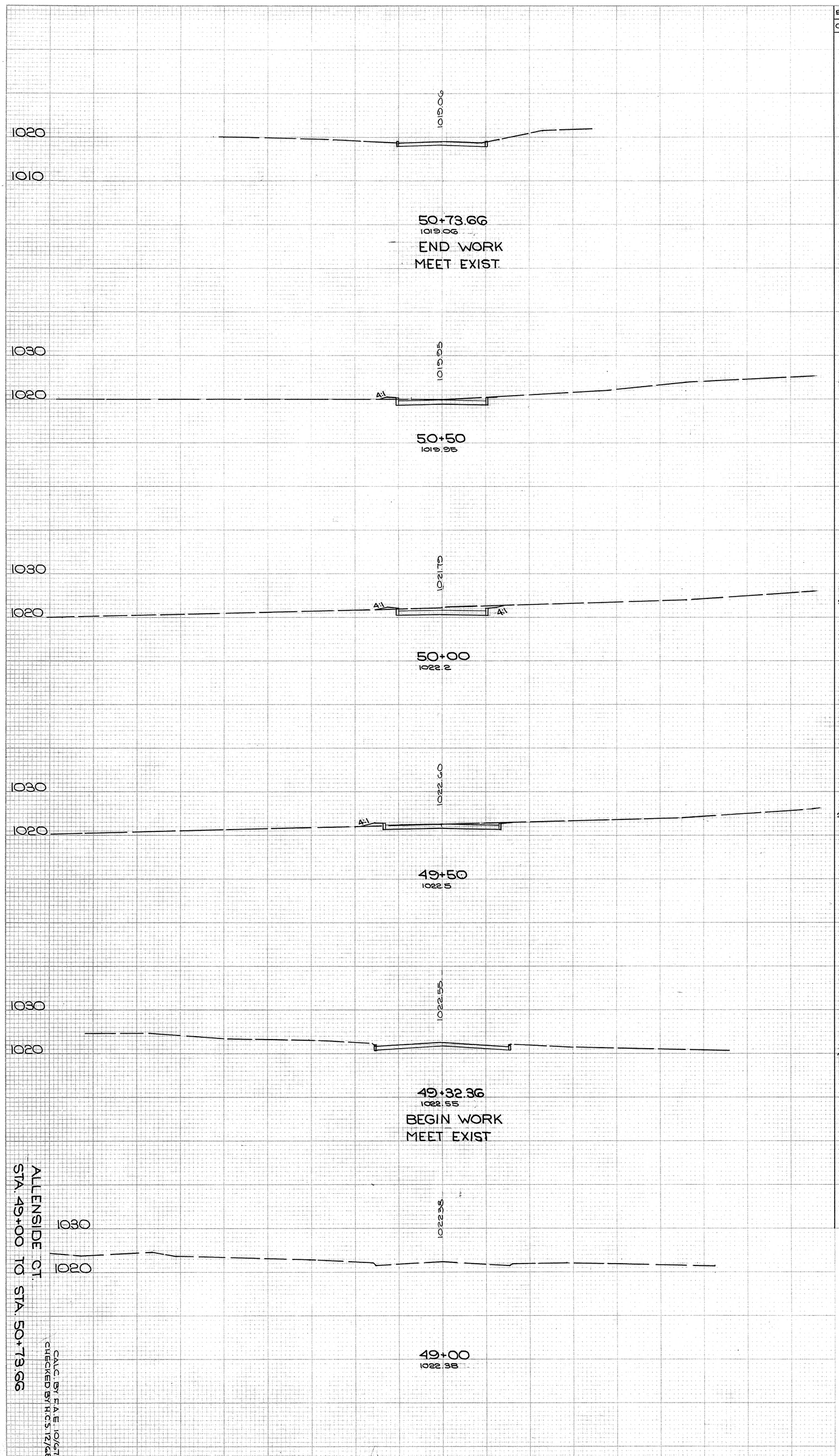

END AREA		CU. YDS.	
CUT	FILL	CUT	FILL
20	0		
		41	0
24	0		
		54	1
34	1		
		61	3
32	2		
		20	1
28	0		

SUM-8-17.68

FED. HWY. DIVISION	STATE	PROJECT
2	OHIO	

226
460

FED. RD. DIVISION	STATE	PROJECT	
2	OHIO		

SUM - 8 - 17.63

227
460

SEE GRADING PLAN RAMP "A" SHT. Nº 94

FOR TEMPORARY RUN-AROUND SEE SHT. Nº 235

TEMPORARY RUN AROUND SEE SHEET Nº 236

FOR DRIVEWAY PROFILES & X-SECTIONS SEE SHT. 225-A

FOR SERVICE RD. PROFILE SEE SHT. 230

PROP. GRAHAM RD. CURVE DATA
Δ = 56° 22' 40"
Dc = 5° 00'
R = 1145.92'
T = 614.15'
Lc = 1127.56'
E = 154.20'

SUPERELEVATION TABLE FOR GRAHAM RD.

STATION	ELEVS. 24' LT. OF ℄	CENTERLINE ELEVS. AND PROFILE GRADE	ELEVS. 24' RT. OF ℄
105+00	1020.41	1020.78	1020.41
+25	1020.29	1020.66	1020.29
+50	1020.10	1020.54	1020.29
+75	1019.91	1020.42	1020.30
106+00	1019.74	1020.32	1020.32
+25	1019.62	1020.27	1020.40
+50	1019.54	1020.25	1020.50
+75	1019.51	1020.29	1020.67
107+00	1019.51	1020.36	1020.86
+25	1019.57	1020.48	1021.11
+50	1019.66	1020.64	1021.39
+75	1019.80	1020.85	1021.73
108+00	1019.97	1021.09	1022.09
+25	1020.21	1021.39	1022.52
+50	1020.47	1021.72	1022.97
+75	1020.85	1022.10	1023.35
109+00	1021.25	1022.50	1023.75
+25	1021.65	1022.90	1024.15
+50	1022.05	1023.30	1024.55
+75	1022.45	1023.70	1024.95
110+00	1022.85	1024.10	1025.35
+25	1023.25	1024.50	1025.75
+50	1023.65	1024.90	1026.16
+75	1024.01	1025.26	1026.51
111+00	1024.28	1025.53	1026.78
+25	1024.47	1025.72	1026.97
+50	1024.58	1025.83	1027.08
+75	1024.61	1025.86	1027.11
112+00	1024.65	1025.80	1027.05
+25	1024.41	1025.66	1026.91
+50	1024.18	1025.43	1026.68
+75	1023.87	1025.12	1026.37
113+00	1023.48	1024.73	1025.98
+25	1023.01	1024.26	1025.51
+50	1022.45	1023.70	1024.95
+75	1021.81	1023.06	1024.31
114+00	1021.08	1022.33	1023.58
+25	1020.27	1021.52	1022.77
+50	1019.38	1020.63	1021.88
+75	1018.41	1019.66	1020.91
115+00	1017.35	1018.60	1019.86
+25	1016.23	1017.50	1018.75
+50	1015.15	1016.40	1017.65
+75	1014.05	1015.30	1016.55
116+00	1012.95	1014.20	1015.45
+25	1011.86	1013.10	1014.35
+50	1010.75	1012.00	1013.25
+75	1009.66	1010.90	1012.15
117+00	1008.55	1009.80	1011.05
+25	1007.43	1008.74	1009.99
+50	1006.52	1007.77	1009.02
+75	1005.68	1006.89	1008.06
118+00	1004.96	1006.10	1007.15
+25	1004.29	1005.37	1006.25
+50	1003.76	1004.77	1005.57
+75	1003.38	1004.34	1005.04
119+00	1002.98	1003.87	1004.45
+25	1002.67	1003.54	1003.94
+50	1002.45	1003.20	1003.53
+75	1002.28	1002.97	1003.17
120+00	1002.12	1002.74	1002.82
+25	1001.96	1002.51	1002.46
+50	1001.80	1002.28	1002.18
+75	1001.63	1002.05	1001.75
121+00	1001.45	1001.82	1001.45

SERVICE ROAD CURVE DATA

CURVE Nº 1
Δ = 82° 54' 30"
R = 35.00'
T = 30.98'
L = 50.65'
PC. 26' RT. STA. 101+75.66
PCC. 11' RT. STA. 0+55.33

CURVE Nº 2
Δ = 173° 15' 34"
R = 42.00'
T = 31.20'
L = 53.70'
PC. 11' RT. STA. 5+16.63

CURVE Nº 3
Δ = 90° 00' 00"
R = 35.00'
T = 35.00'
Lc = 54.98'
PC. ℄ STA. 0+51.00
PCC. ℄ STA. 1+05.98

CURVE Nº 4
Δ = 32° 45' 50"
R = 110.00'
T = 32.34'
Lc = 62.90'
PCC. STA. 1+05.98
PCC. STA. 1+68.88
PT. STA. 2+31.78

CURVE Nº 5
Δ = 7° 30' 00"
Dc = 3° 45'
R = 1527.80'
Lc = 200.00'
T = 100.14'
PC. STA. 4+00
PT. STA. 6+00

CURVE Nº 6
Δ = 90° 00' 00"
R = 25.00'
T = 25.00'
Lc = 39.27'
PC. 26' RT. STA. 102+57.00
PCC. 11' LT. STA. 0+51.00

PROVIDE 6" SAN. LATERALS TO PROPERTY LINE & PLUG.

FOR PROFILE SAN. SEWER SEE SHT. 81

FOR QUANTITIES SAN. SEWER SEE SHT. 84

FOR WATER MAIN PROFILE SEE SHT. Nº 83-A

FOR WATER MAIN QUANTITIES SEE SHT. Nº 84

FOR PROFILE P-1, P-2, P-3, P-4 & P-5 SEE THIS SHEET BELOW

FOR INTERSECTION DETAILS RAMP "A", RAMP "B" & GRAHAM RD. SEE SHT. Nº 90

FOR QUANTITIES ON GRAHAM RD. & SERVICE ROAD SEE SHT. Nº 229

FOR DETAILS SEE SHT. 229

FOR DRIVE APPROACH QUANTITIES SEE SHEET Nº 31

FOR INTERSECTION DETAILS RAMP "E" & GRAHAM RD. SEE SHT. Nº 93

STA. 100+50 BEGIN TRANSITION RT & LT. FULL WIDTH PAVT. RE-SURFACING
STA. 101+00 BEGIN 12' ASPHALT DR.
STA. 105+91.95 BEGIN REINF. CONC. PAVT.
STA. 106+27 END REINF. CONC. PAVT.
STA. 107+40.77 PT. STA. 335+24.89
STA. 108+75 PC. STA. 107+40.77
STA. 110+50 END SHEET STA. 111+00
STA. 1093+1245 RAMP "B" STA. 104+8095 GRAHAM RD.
STA. 1033+1245 RAMP "B" STA. 104+8095 GRAHAM RD.
STA. 338+25 ℄ RAMP "A"
STA. 105+70 ℄ GRAHAM RD.
STA. 105+75 ℄ GRAHAM RD.
STA. 102+00 ℄ GRAHAM RD.
STA. 103+61.63 ELEV. 1021.45
STA. 1033+61.63 ELEV. 1021.45
P.V.C. STA. 105+75 ELEV. 1020.42
P.V.T. STA. 108+75 ELEV. 1022.10
P.V.C. STA. 110+50 ELEV. 1024.30
P.V.I. STA. 107+25 ELEV. 1019.70
MEET EXIST. PAVT. ELEV. 1022.22
MEET U.D. RAMP "A" (U-77) ℄ 1014.72
MEET U.D. RAMP "B" (U-57) ℄ 1015.14
(U-57) ℄ 1016.71
(U-77) ℄ 1020.03
-0.48%
-1.08%
+1.60%
300' V.C.
450' V.C.
400'-15" CONDUIT TYPE "B" W/CL. "B" BEDDING @ 0.64%

A-1 604 Nº 2-2A C.B. STA. 101+75 (43' RT. ℄) GRAHAM RD. GRATE EL. = 1018.07 ℄ 15" = 1016.96

A-2 604 Nº 2-A-6 INLET STA. 105+75 (43' RT.) ℄ GRAHAM RD. COVER EL. 1018.50 ℄ 15" = 1014.40 1½ 20° HORIZ. SCALE: 1" = 5' VERT.

A-3 604 Nº 2-A-6 STA. 105+75 26' RT. ℄ GRAHAM RD. COVER EL. 1020.72 ℄ 15" = 1014.26 RT. ℄ 15" = 1013.03 LT. ℄ 6" = 1015.00

A-4 604 Nº 6 C.B. STA. 105+70 33' LT. ℄ GRAHAM RD. GRATE EL. = 1019.66 ℄ 15" = 1012.43

A-5 604 Nº 2-A-10 INLET STA. 338+25 ℄ RAMP "A" COVER EL. 1019.25 ℄ 15" = 1012.12 ℄ 18" = 1011.87 ℄ 6" = 1014.69

H-2 HW-E ENDWALL STA. 338+25 33' LT ℄ RAMP "A" ℄ 15" = 1011.51

P-1 400'-15" CONDUIT TYPE "B" W/CL. "B" BEDDING @ 0.64%

P-2 15-15" CONDUIT TYPE "C" W/CL. "B" BEDDING @ 1.00%

P-3 60'-15" CONDUIT TYPE "B" W/CL. "B" BEDDING @ 1.00%

P-4 31'-15" CONDUIT TYPE "B" W/CL. "B" BEDDING @ 1.00%

P-5 36'-18" CONDUIT TYPE "C" W/CL. "B" BEDDING @ 1.00%

℄ DITCH 1011.47

EARTHWORK ITEM 203			
	EXCAVATION CU. YD.	EMBANKMENT CU. YD.	GRANULAR EMBANKMENT CU. YD.
℄ GRAHAM ROAD	2,990	47,088	1,208
SERVICE ROAD	1,074	435	0

RELOCATED GRAHAM ROAD

FED.RD. DIVISION	STATE	PROJECT	
2	OHIO		

228
460

SUM - 8 - 17.63

CURVE DATA
PROP. ℄ GRAHAM RD.
Δ = 56° 22' 40"
D_c = 5° 00'
T = 1148.92'
L_c = 1127.56'

CURVE DATA
EXIST. ℄ GRAHAM RD.
Δ = 27° 17' 25"
D_c = 5° 00'
T = 278.18'
L_c = 545.81
D = 1145.92'
E = 34.28
P.I. 124+17.32

BEGIN SHEET STA. 111+00

(U-77)℄ 1020.03

6" PLUG 111+97 (U-77)℄ 1020.28

EXIST. CONC. SIGN POST

EXIST. 10" STORM

EXIST. 6" W.M.

EXIST. 8" SAN.

CORP & CITY LIMIT LINE OF CITY OF CUYAHOGA FALLS & RELOC. GRAHAM RD.

STA. 114+40.51

STRUCTURE Nº SUM-8-1950
STA. 327+62.45 ℄ S.R. 8
STA. 115+17.56 ℄ GRAHAM RD.
6'x4'x1.5' D.R.C.P.
6" PLUG 114+38 (U-78)℄ 1015.65

(U-78)℄ 1012.33
6" PLUG 115+55 (U-54)℄ 1012.45

SR 8 ST STA. 327+31.74

RAMP "E" 327

EXIST. 4'x4' BOX CULV.

EXIST. 20' E.O.G.

EXIST. 4" GAS LINE

EXIST. 8" SAN.

EXIST. 6" W.M.

EXIST. 8" W.M.

EXIST. 12" STORM

EXIST. 24" CONC. BOX CULV.

EXIST. 42" CONC. CULV.

EXIST. GRAHAM RD.

EXIST. CONC. CURB

EXIST. 10" STORM

EXIST. 6" W.M.

EXIST. 8" SAN

FED. RD.	STATE	PROJECT	
2	OHIO		

228
460

SUM-8-17.63

ESTIMATED QUANTITIES

REF. NO.	STATION TO STATION	SIDE	604 Nº 22A C.B. EACH	604 Nº C C.B. EACH	604 2-A-6 INLET EACH	604 2-A-10 INLET EACH	604 2-A-12 INLET EACH	601 TYPE B ROCK CHANNEL PROT. CU. YD.	602 CONC. MASONRY CU. YD.	603 CONDUIT LIN. FT. TYPE-F 6"	TYPE-F 12"	TYPE-B W/CL. 'B' BEDDING 15"	TYPE-B (Encased) 66"	TYPE-C 15"	TYPE-C 18"	TYPE-D 14 Gage 107.01 12"	605 U-DRAINS LIN. FT. SHALLOW	605 BENDS & BRANCHES EACH 12"	604 M.H. REBUILT EACH	203 EXIST. STRUCT. REMOVED LUMP	202 PIPE REMOVED UNDER 15" LIN. FT.	202 PIPE REMOVED OVER 15" LIN. FT.	604 M.H. ADJUST TO GRADE EACH	SPECIAL SEPTIC TANKS REMOVED AND DISPOSED EACH	SEE SHEET NO.
U-56	115+55 TO 115+87	LT.															32								
U-57	103+61 TO 1033+58(D)	LT.															144								
U-76	103+61 TO A-1	RT.								10							204								
U-77	106+77 TO 111+37	LT.															460								
U-78	114+38 TO A-4	LT.								10							102								
U-79	1028+24(D) TO A-5	LT.								20							371								
U-80	A-5 TO 120+49	LT.								10							35								
A-1	101+75-43'RT.&G.RD.	—	1																						
A-2	105+75-41.5'RT.&G.RD	—			1																				
A-3	105+75-26'RT.&G.RD.	—			1																				
A-4	105+70-33'LT&G.RD.	—		1																					
*A-5	338+25-℄ RAMP 'A'	—				1																			
A-6	115+50-26'LT&G.RD.	—			1																				
A-7	120+00-26'LT.&G.RD.	—					1																		
P-1	A-1 TO A-2	RT.										400													
P-2	A-2 TO A-3	RT.												15											
P-3	A-3 TO A-4	LT&RT.										60													
*P-4	A-4 TO A-5	LT.										31													
*P-5	A-5 TO H-2	LT.													30										
P-6	A-6 TO H-3	LT.									67							2							
P-8	℄ REL. SERV RD 0+00 TO H-1	RT.											221												
P-7	A-7 TO H-4	LT.									57							2							
P-9	100+85 TO 101+01	LT.														32									
P-10	101+89 TO 102+05	LT.														24									
P-11	102+14 TO 102+30	LT.														26									
P-12	100+70 TO 101+06	RT.														37									
P-13	123+61 TO 123+93	LT.														50									
*H-1	117+71-75'LT.& GRAHAM RD	—							4.94																
H-2	338+25-30'LT.&RAMP 'A'	—							0.26																
H-3	115+27-21.5'LT.&GRAHAM	—							0.23																
H-4	120+00-84'LT.& GRAHAM	—							0.23																
E-1	115+27-21.5'LT.&G.RD.	—						2																	
E-2	120+00-84'LT.&G.RD.	—						2																	
E-3	117+71-75'LT.&G.RD.	—						10																	
PR-1	100+85 TO 101+01	LT.																							16
PR-2	101+89 TO 102+05	LT.																							16
PR-3	103+40 TO 103+61	LT.																							21
PR-4	100+70 TO 101+06	RT.																							36
PR-5	102+75 TO 102+96	RT.																							21
PR-6	104+09 TO 104+30	RT.																							21
PR-7	105+11 TO 105+31	RT.																							20
PR-8	106+01 TO 106+23	RT.																							16
PR-9	A-14 TO SR-1	RT.																						75	
*PR-10	SR-1 TO SR 1031+05 RMP'D	—																						436	
PR-11	123+61 TO 123+93	LT.																							32
MA-1	120+89-20'RT.& GRAHAM RD.	—																					1		
MB-1	116+87-28.5'RT.& GRAHAM	RT.																	1						
SR-1	111+95	LT.&RT.																		LUMP					
SR-2	117+15	LT.&RT.																		LUMP					
SP-3	100+15-72'RT.& GRAHAM RD	—																							1
SP-4	48+66-61'RT.& CHARLES	—																							1
SP-5	114+26-60'RT.&GRAHAM RD.	—																							1
SP-6	115+54-90'RT.&GRAHAM RD.	—																							1
SP-7	116+31-56'RT.&GRAHAM RD.	—																							1
SP-8	117+27-73'LT.&GRAHAM RD.	—																							1
SP-9	120+04-71'LT.&GRAHAM RD.	—																							1
TOTALS	CALC. BY C.D.B. 10/67 CHECKED BY H.C.S. 11/68		1	1	3	*1	1	14	0.72 *4.94	50	124	460 *31	221	15	*30	169	1352		1	LUMP	167	75 *436	1	7	

* STATE-FEDERAL PARTICIPATION ONLY

ESTIMATED QUANTITIES

REF. NO.	STATION TO STATION	SIDE	609 TYPE 2-A CURB LIN. FT.	609 TYPE 2 COMB. CURB & GUT. LIN. FT.	611 (31) REINF. CONC. APPR. SLAB SQ.YD.	606 GUARD RAIL STD. TYPE-5 LIN. FT.	605 AGG. DRAINS LIN FT	SPECIAL DRILLED WELLS ABAND. EACH	606 GUARD R. ANCHOR ASSEMBLY EACH	606 SINGLE RAIL APPROACH END ASSEM. EACH	606 GUARD RAIL BRIDLE TERMINAL ASS'Y. EACH	SEE SHEET NO.
	102+57.00 TO 105+80.00	RT.		323								
	105+80.00 TO 109+77.40	RT.	403									
	109+95.00 TO 111+58.00	RT.	168									
	114+70.00 TO 115+97.87	RT.		128								
	117+24.00 TO 120+28.50	RT.		305								
	120+57.00 TO 121+41.19	RT.		84								
	103+61.63 TO 103+85.84	LT.		24								
	105+06.58 TO 105+68.00	LT.	62									
	105+80.56 TO 109+27.42	LT.	336									
	109+27.42 TO 111+23.00	LT.		196								
	114+36.50 TO 115+87.94	LT.		151								
	117+18.66 TO 120+62.00	LT.		343								
	120+84.00 TO 121+41.19	LT.		57								
	SERVICE ROAD			1339								
X-1	111+36.57 TO 111+61.57	℄			148							
X-2	114+34.50 TO 114+50.50	℄			147							
GR-1	110+00 TO 111+25	LT.				125			1		1	
GR-2	110+81.50 TO 111+62.50	RT.				75				1		
GR-3	114+31.00 TO 115+00.00	LT.				162.5			1		1	
GR-4	114+62.00 TO 115+35.00	RT.				137.5			1			
GR-5	116+55.00 TO 119+50.00	LT.				287.5						
GR-6	116+55.00 TO 118+50.00	RT.				200.0						
	100+50 TO 103+61.63	LT-RT					112					
	121+41.19 TO 124+00	RT.					84					
DW-1	104+25	LT						1				
DW-2	105+50	LT.						1				
DW-3	116+00	RT.						2				
DW-4	116+85	LT.						1				
DW-5	119+00	LT.						1				
TOTALS	CALC. BY C.D.B. 10/67 CHECKED BY H.C.S. 11/68		969.	2,950	295.	887.5	196	6	3	1	4	

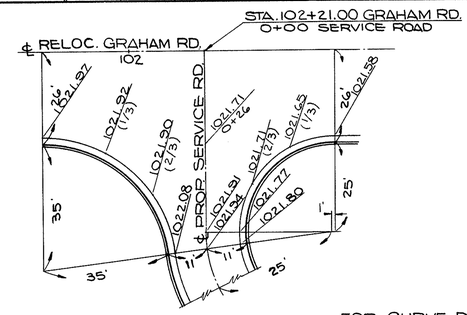

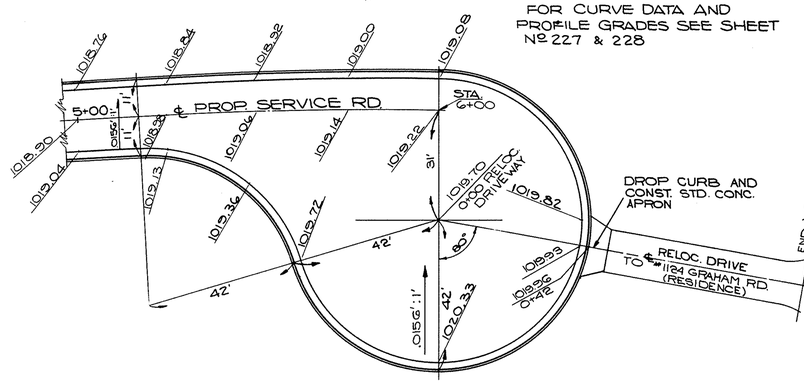

GRAHAM ROAD QUANTITIES & DETAILS

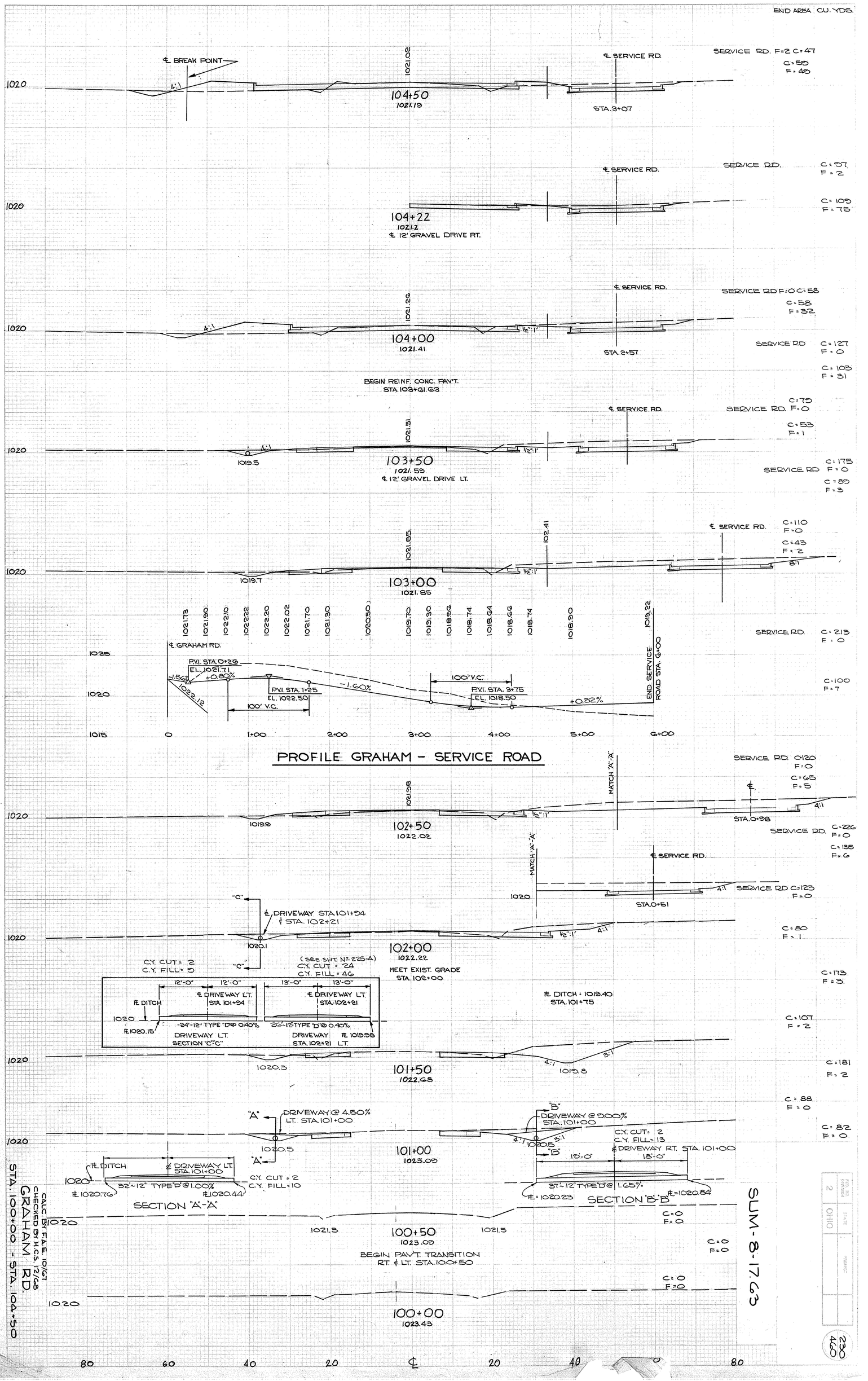
END AREA CU. YDS.
℄ BREAK POINT
℄ SERVICE RD.
SERVICE RD. F=2 C=47
C=59
F=49
104+50
1021.19
STA. 3+07
SERVICE RD.
C=97
F=2
C=109
F=75
104+22
1021.2
℄ 12' GRAVEL DRIVE RT.
SERVICE RD F=0 C=58
C=58
F=32
104+00
1021.41
STA. 2+57
SERVICE RD
C=127
F=0
C=103
F=31
BEGIN REINF. CONC. PAV'T.
STA. 103+61.63
SERVICE RD. F=0
C=79
C=53
F=1
103+50
1021.59
℄ 12' GRAVEL DRIVE LT.
SERVICE RD
C=175
F=0
C=89
F=3
103+00
1021.85
SERVICE RD.
C=110
F=0
C=43
F=2
℄ GRAHAM RD.
P.V.I. STA. 0+26
EL. 1021.71
P.V.I. STA. 1+25
EL. 1022.50
P.V.I. STA. 3+75
EL. 1018.50
100' V.C.
END SERVICE ROAD STA. 6+00
SERVICE RD.
C=213
F=0
C=100
F=7
PROFILE GRAHAM - SERVICE ROAD
SERVICE RD. C=120
F=0
C=65
F=5
MATCH "A"-"A"
102+50
1022.02
STA. 0+98
SERVICE RD.
C=226
F=0
C=135
F=6
SERVICE RD C=123
F=0
STA. 0+51
℄ DRIVEWAY STA. 101+94
& STA. 102+21
102+00
1022.22
MEET EXIST. GRADE
STA. 102+00
C.Y. CUT = 2
C.Y. FILL = 9
(SEE SHT. No. 225-A)
C.Y. CUT = 24
C.Y. FILL = 46
℄ DRIVEWAY LT.
STA. 101+94
℄ DRIVEWAY LT.
STA. 102+21
℄ DITCH
-24'-12" TYPE "D" @ 0.40%
26'-12" TYPE "D" @ 0.40%
DRIVEWAY LT.
SECTION "C"-"C"
DRIVEWAY
STA. 102+21 LT.
℄ DITCH = 1019.40
STA. 101+75
C=80
F=1
C=173
F=3
C=107
F=2
101+50
1022.68
C=181
F=2
C=88
F=0
C=82
F=0
DRIVEWAY @ 4.50%
LT. STA. 101+00
DRIVEWAY @ 9.00%
STA. 101+00
C.Y. CUT = 2
C.Y. FILL = 13
℄ DRIVEWAY RT. STA. 101+00
101+00
1023.09
℄ DITCH
℄ DRIVEWAY LT.
STA. 101+00
C.Y. CUT = 2
C.Y. FILL = 10
32'-12" TYPE "D" @ 1.00%
37'-12" TYPE "D" @ 1.65%
SECTION "A"-"A"
SECTION "B"-"B"
100+50
1023.09
BEGIN PAV'T. TRANSITION
RT. & LT. STA. 100+50
C=0
F=0
100+00
1023.43
CALC. BY F.A.E. 10/67
CHECKED BY H.C.S. 12/68
GRAHAM RD.
STA. 100+00 - STA. 104+50
SUM-8-17.63
2
OHIO
230
460

END AREA	CU. YDS.
CUT / FILL	CUT / FILL
112 / 377	

FED. RD. DIVISION	STATE	PROJECT	
2	OHIO		

231
460

SUM-8-17.63

109+00
1019.55

108+50
1019.62
℄ 12' GRAVEL DR. RT.

108+00
1019.66

107+50
1019.70

107+00
1019.77

106+50
1019.95

106+16
1020.1
℄ 10' BLACKTOP DR. RT.

106+00
1020.25

105+30
1020.5

105+20
1020.7
℄ 12' BLACKTOP DR. RT.

105+00
1020.95

SEE GRADING PLAN
RAMP "A"
LOOP - X - SECTIONS

SEE GRADING PLAN
RAMP "A"
LOOP - X - SECTIONS

END SERVICE RD.
EARTHWORK
STA. 107+75

SERVICE RD. 0 170 3 153 12 238

SERVICE RD. 0 220 12 238

SERVICE RD. 0 80 6 381

SERVICE RD. 0 98 10 98

SERVICE RD. 7 81 60 135

SERVICE RD. 7 19 55 51 120

SERVICE RD. 28 28 276 76

SERVICE RD. 23 11 243 30

SERVICE RD. 47 17 293 72

SERVICE RD. 28 7 47 47

SERVICE RD. 60 5 76 41

SERVICE RD. 55 0 58 10

SERVICE RD. 94 2 109 55

MATCH LINE "A"

MATCH LINE "B"

MATCH LOOP "A"

MATCH "A"-"A"

MATCH RAMP "A"

STA. 15+57

STA. 15+07

STA. 4+57

STA. 3+96

STA. 3+57

CALC. BY F.A.E. 10/67
CHECKED BY H.C.S. 12/68

GRAHAM RD.
STA. 105+00 - STA. 109+00

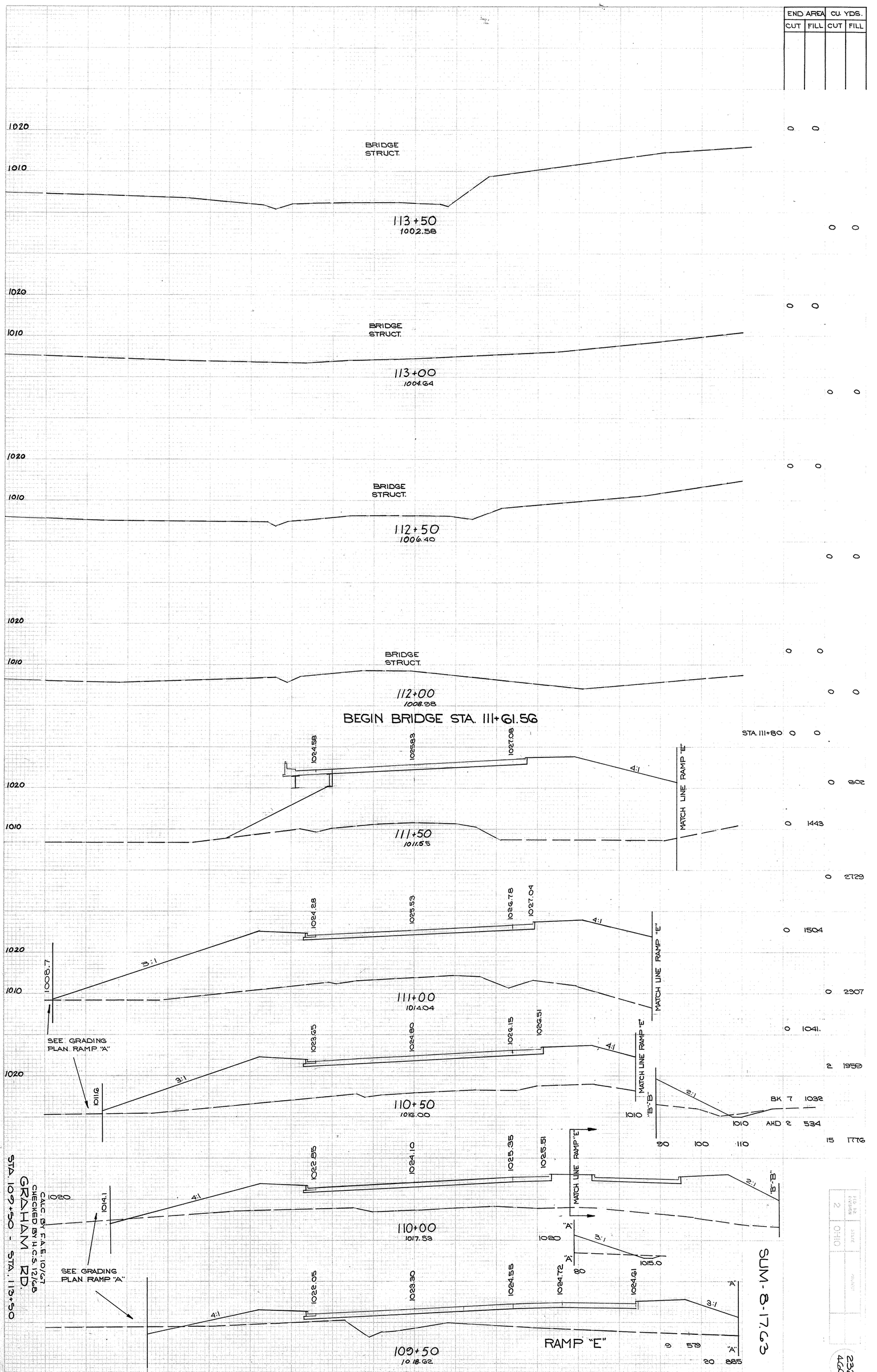
END AREA
CU. YDS.
CUT
FILL
CUT
FILL
BRIDGE STRUCT.
113+50
1002.58
113+00
1004.64
112+50
1006.40
112+00
1008.98
BEGIN BRIDGE STA. 111+61.56
STA. 111+80
111+50
1011.55
111+00
1014.04
110+50
1016.00
110+00
1017.53
109+50
1018.62
MATCH LINE RAMP "E"
SEE GRADING PLAN RAMP "A"
RAMP "E"
BK 7 1032
AHD 2 534
CALC. BY F.A.E. 10/67
CHECKED BY H.C.S. 12/68
GRAHAM RD.
STA. 109+50 - STA. 113+50
SUM-8-17.63
OHIO
232
460

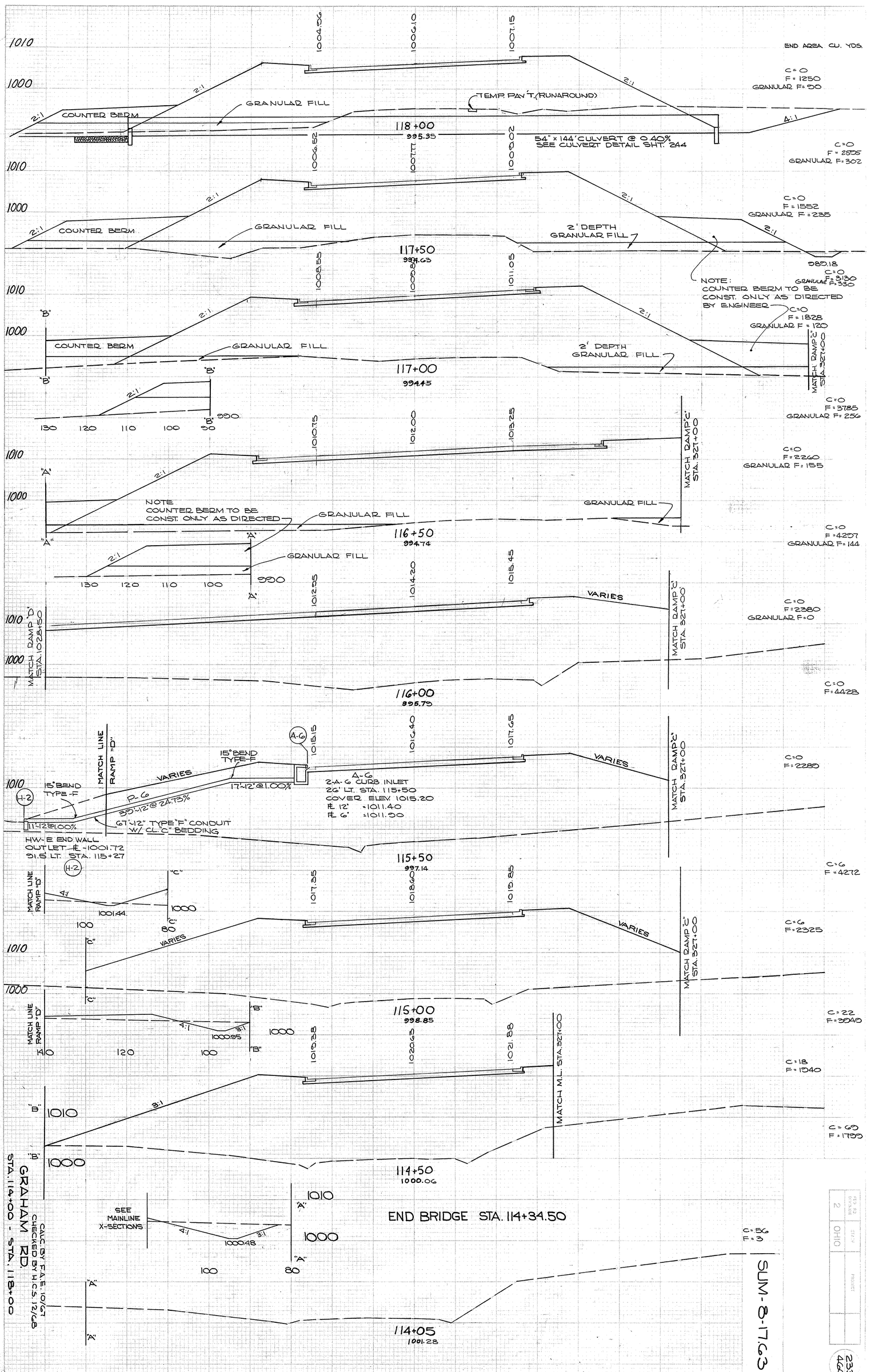
END AREA CU. YDS.
C=0 F=1250 GRANULAR F=90
TEMP. PAV'T. (RUNAROUND)
GRANULAR FILL
COUNTER BERM
118+00
995.35
54" x 144' CULVERT @ 0.40%
SEE CULVERT DETAIL SHT. 244
C=0 F=2895 GRANULAR F=302
C=0 F=1552 GRANULAR F=235
2' DEPTH GRANULAR FILL
117+50
994.63
989.18
C=0 F=3130 GRANULAR F=330
NOTE: COUNTER BERM TO BE CONST. ONLY AS DIRECTED BY ENGINEER
C=0 F=1828 GRANULAR F=120
MATCH RAMP "C" STA. 327+00
117+00
994.45
C=0 F=3785 GRANULAR F=256
C=0 F=2260 GRANULAR F=155
NOTE COUNTER BERM TO BE CONST. ONLY AS DIRECTED
116+50
994.74
C=0 F=4297 GRANULAR F=144
VARIES
MATCH RAMP "D" STA. 1028+50
C=0 F=2380 GRANULAR F=0
116+00
995.79
C=0 F=4428
15° BEND TYPE-F
MATCH LINE RAMP "D"
A-6
2-A-6 CURB INLET
26' LT. STA. 115+50
COVER ELEV. 1015.20
℄ 12" =1011.40
℄ 6" =1011.90
P-6
39'-12" @ 24.73%
17'-12" @ 1.00%
11'-12" @ 1.00%
67'-12" TYPE "F" CONDUIT W/ CL. "C" BEDDING
HW-E END WALL
OUTLET ℄ -1001.72
91.5' LT. STA. 115+27
C=0 F=2289
115+50
997.14
C=6 F=4272
C=6 F=2325
115+00
998.85
C=22 F=3949
C=18 F=1940
MATCH M.L. STA. 327+00
114+50
1000.06
C=69 F=1799
SEE MAINLINE X-SECTIONS
END BRIDGE STA. 114+34.50
C=56 F=3
114+05
1001.28
GRAHAM RD.
STA. 114+00 - STA. 118+00
CALC. BY F.A.E. 10/67
CHECKED BY H.C.S. 12/68
SUM-8-17.63
2 OHIO
233
460

END AREA CU. YDS.

1000

998.72 — TEMP. PAV'T. (RUNAROUND) — 998.38

C = 86
F = 2

122+50
1000.6

C = 127
F = 4

1000

998.92 — TEMP. PAV'T. (RUNAROUND) — 998.58

C = 51
F = 2

122+00
1000.7

1010

1000

TEMP. PAV'T. (RUNAROUND)

C.Y. CUT 8
C.Y. FILL 0

121+93
1000.7

1010

C = 73
F = 22

1000

C.Y. CUT = 7
C.Y. FILL = 0

121+50
1000.8
℄ 20' BLACKTOP DR. LT.
SKEWED SECTION TO ℄ DRIVE

1000

C = 28
F = 22

TEMP. PAV'T. (RUNAROUND)

121+50
1000.8

C = 50
F = 70

EXTEND CURBED TYPICAL TO STA. 121+41

1000

4:1 — 4:1 — 4:1

C = 26
F = 53

TEMP. PAV'T. (RUNAROUND)

121+00
1001.4

C = 85
F = 45

PENNA. R.R.

1000

C = 66
F = 0

120+52.7
1002.2

C = 61
F = 355

(H-4)

HW-E ENDWALL
STA. 120+00 (84' LT. ℄)
℄ 12" = 991.13

1010

(A-7)

15° BEND TYPE-F

1000

(H-4)

15° BEND TYPE-F

4:1

P-7

28'-12" @ 25.00%

17'-12" @ 1.00%

4:1 — 3:1

TEMP. PAV'T. (RUNAROUND)

C = 0
F = 383

A-7
604.2A-G INLET
STA. 120+00 (26' LT. ℄)
COVER EL. = 1002.50
℄ 12" = 998.42
℄ 6" = 998.92

120+00
1001.21

990

12"Ø @ 1.00%

57'-12" TYPE "F" CONDUIT W/CL "C" BEDDING

6'x4'x1.5' D.R.C.P.

C = 7
F = 772

1010

1000

4:1 — 4:1 — 2:1 — 4:1 — 4:1

1002.00

TEMP. PAV'T. (RUNAROUND)

C = 7
F = 450

119+50
999.66

C = 33
F = 967

C = 28
F = 504
GRANULAR F = 0

1000

3:1 — 4:1 — 4:1 — 2:1

1001.6

TEMP. PAV'T. (RUNAROUND)

C = 31
F = 1330
GRANULAR F = 46

119+00
998.13

C = 6
F = 842
GRANULAR F = 50

1000

4:1 — 2:1 — 2:1

1000.80

GRANULAR FILL

990

TEMP. PAV'T. (RUNAROUND)

118+50
996.50

C = 6
F = 1957
GRANULAR F = 130

NOTE:
COUNTER BERM TO BE CONST. ONLY AS DIRECTED BY THE ENGINEER

80 60 40 20 ℄ 20 40 60 80

CALC. BY F.A.E. 10/67
CHECKED BY H.C.S. 12/68

GRAHAM RD
STA. 118+50 - STA. 122+50

SUM-8-1763

OHIO

2

234
460

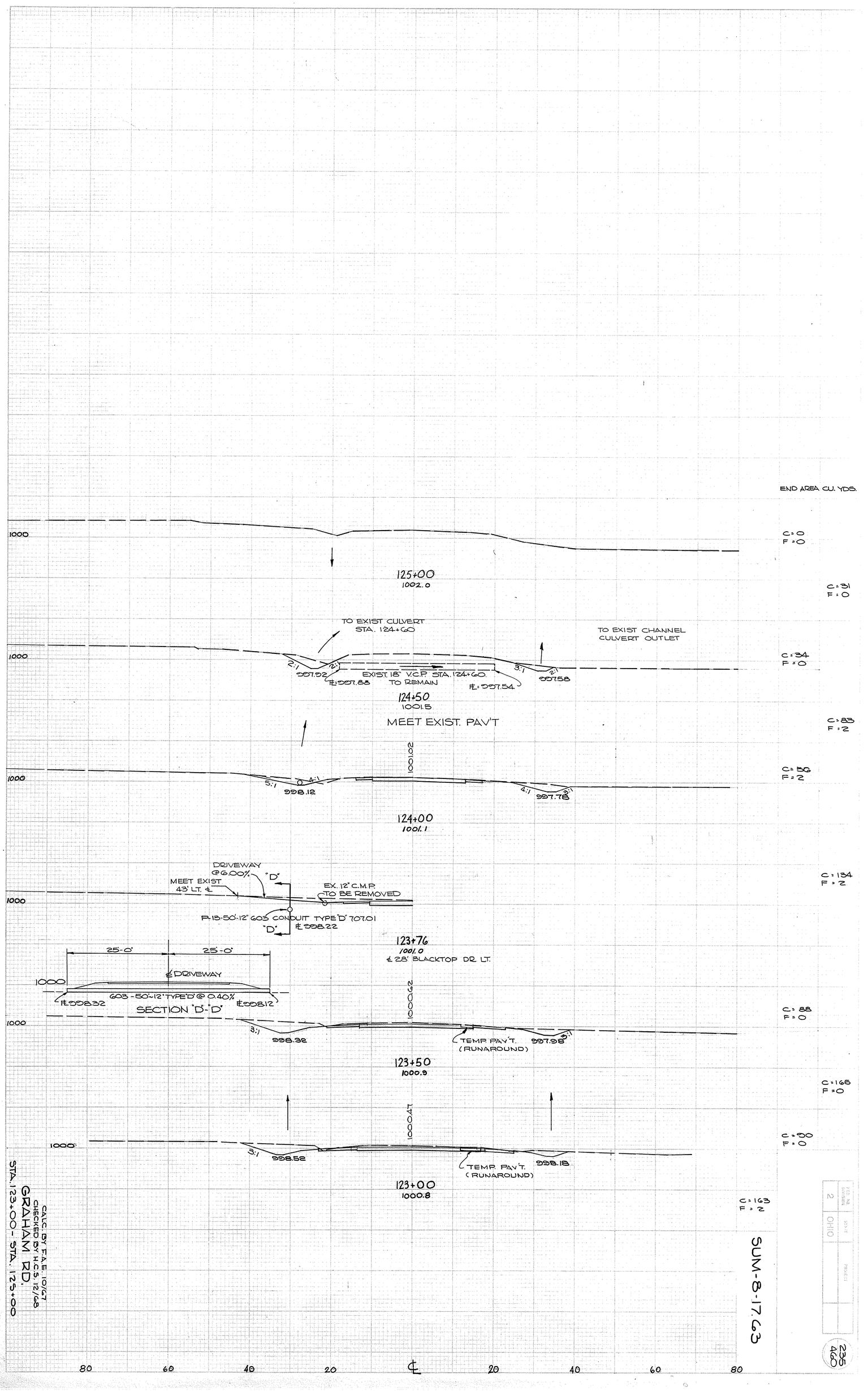

CALC. BY F.A.E. 10/67
CHECKED BY H.C.S. 12/68
GRAHAM RD.
STA. 123+00 - STA. 125+00

SUM-8-17.63

FED. RD. DIVISION	STATE	PROJECT
2	OHIO	

235
460

FED. RD. DIVISION	STATE	PROJECT	
2	OHIO		

236/460

SUM-8-17.63

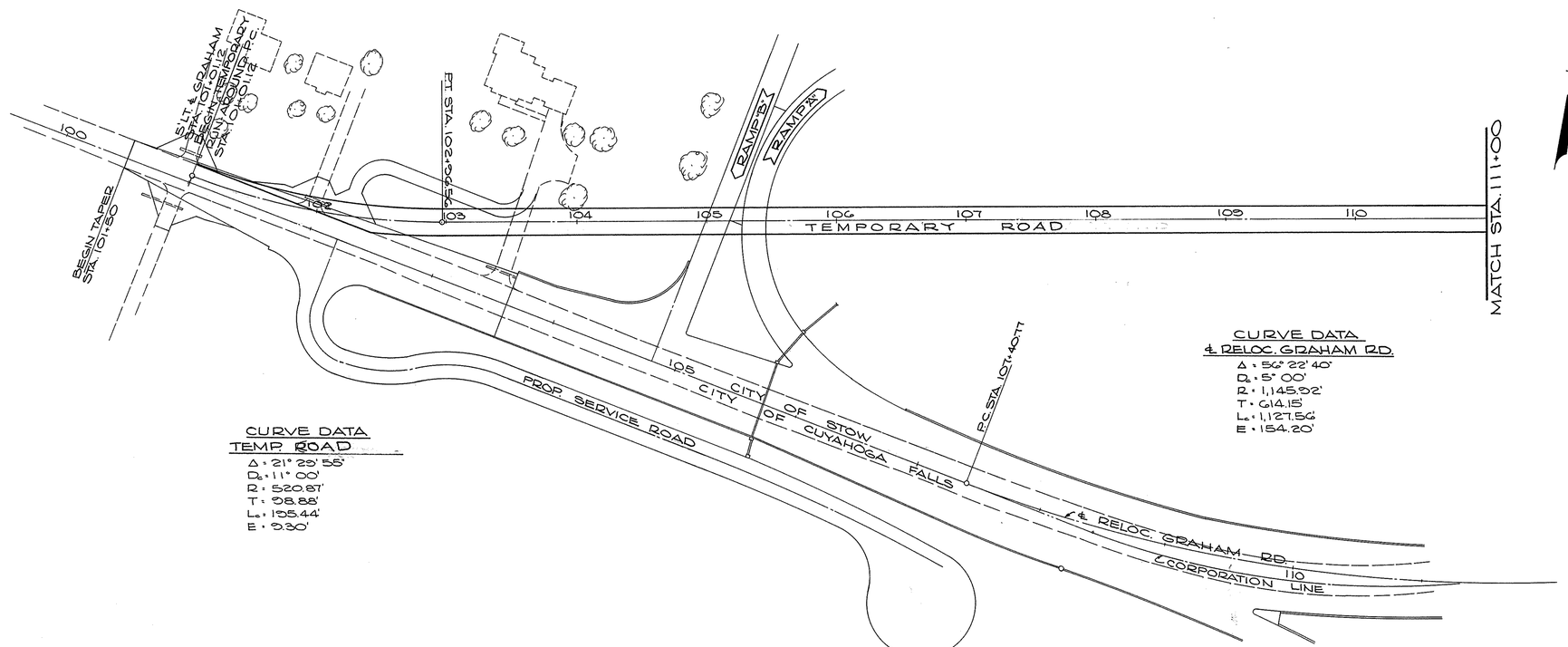

CURVE DATA
TEMP. ROAD
Δ = 21° 29' 55"
D_c = 11° 00'
R = 520.87'
T = 98.88'
L_c = 195.44'
E = 9.30'

CURVE DATA
℄ RELOC. GRAHAM RD.
Δ = 56° 22' 40"
D_c = 5° 00'
R = 1,145.92'
T = 614.15'
L_c = 1,127.56'
E = 154.20'

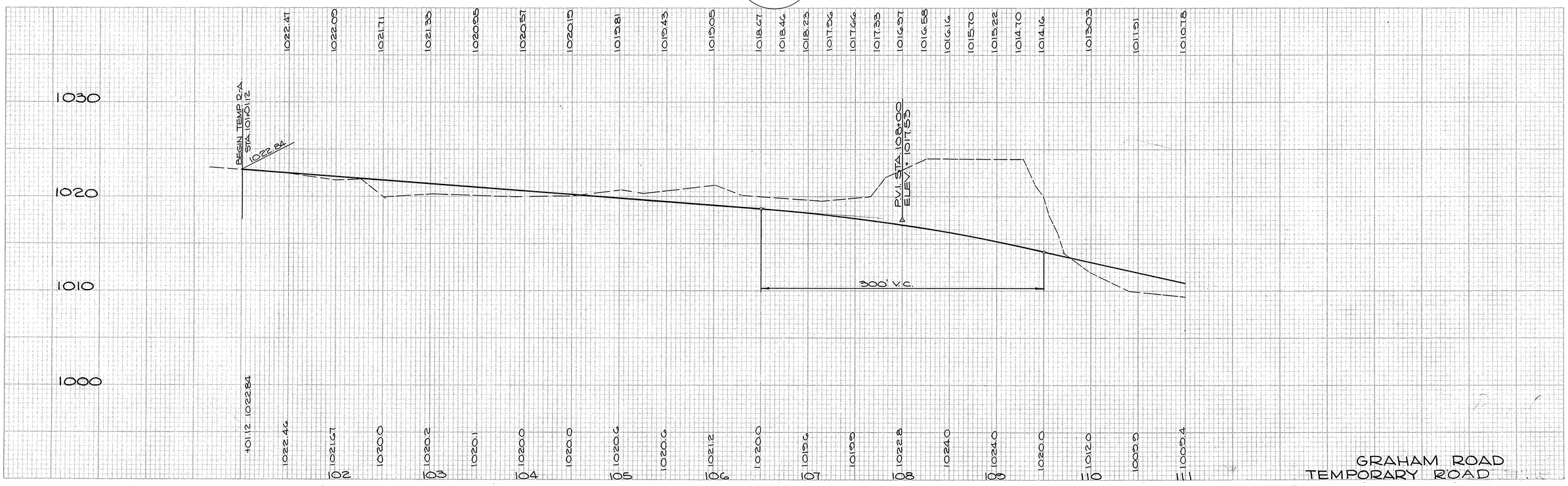

GRAHAM ROAD
TEMPORARY ROAD

FED. RD. DIVISION	STATE	PROJECT	
2	OHIO		

237
460

SUM-8-17.63

CURVE DATA
RUN-AROUND
Δ = 34° 52' 45"
D_c = 20° 00'
R = 286.48'
T = 89.90'
L_c = 174.40'
E = 13.80'
P.I. STA. 118+56.30

CURVE DATA
℄ PROP. GRAHAM R.D.
Δ = 56° 22' 40"
D_c = 5° 00'
R = 1,145.92'
T = 614.15'
L_c = 1,127.56'
E = 154.20'

CURVE DATA
℄ EXIST GRAHAM RD.
Δ = 27° 17' 25"
D_c = 5° 00'
R = 1,145.92'
T = 278.18'
L_c = 545.81'
E = 34.28'
P.I. STA. 124+17.52

ITEM 615
TEMPORARY
PAV'T CLASS "A"
4,582 SY.
CALC. BY F.A.E. 10/67
CHECKED BY H.C.S. 11/68

TYPICAL SECTION
TEMP. ROAD
CLASS "A"
PAVEMENT

GRAHAM ROAD
TEMPORARY ROAD

FORM 204 NO. 3

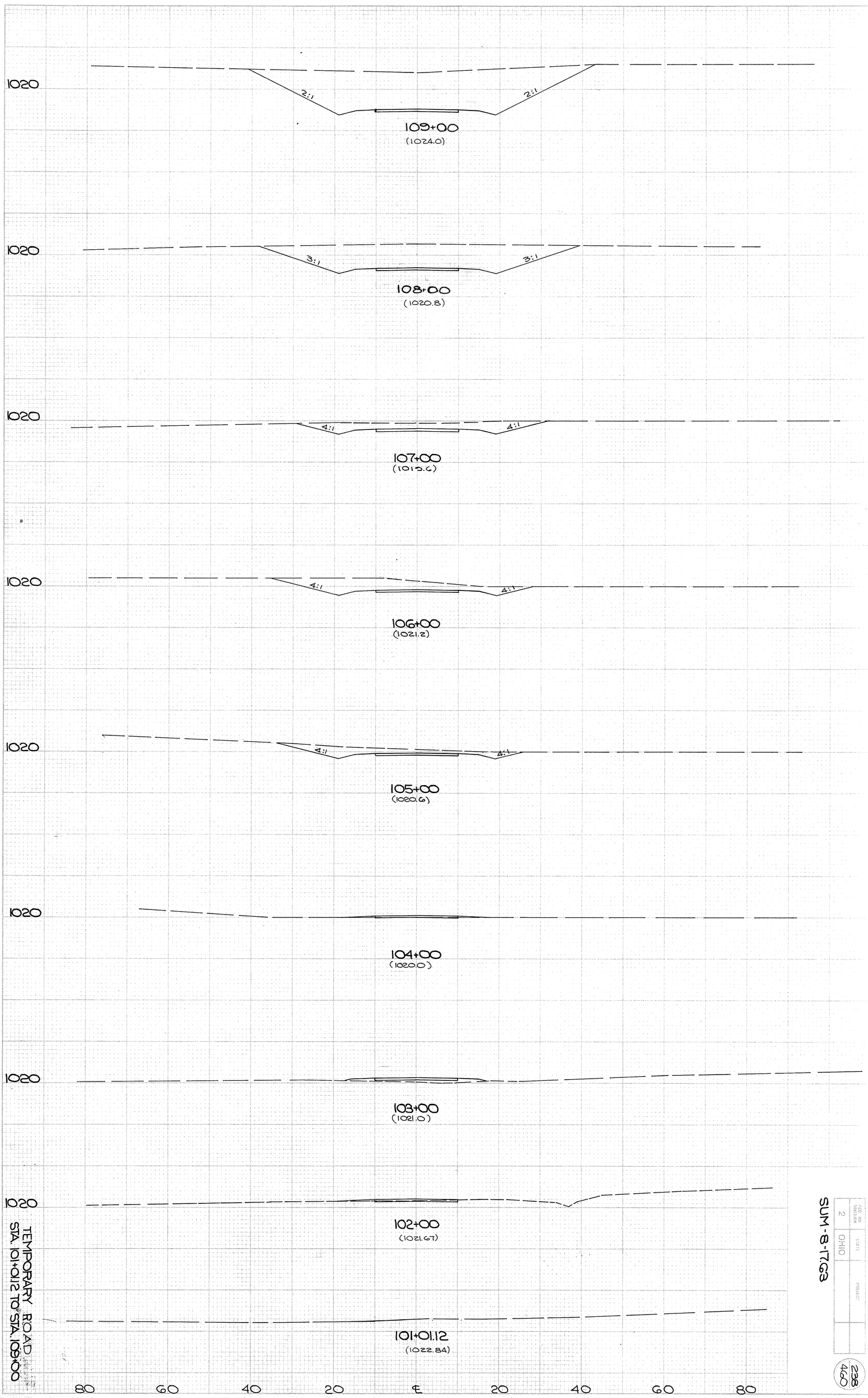

TEMPORARY ROAD
STA. 101+01.12 TO STA. 109+00

SUM-8-17.63

SHEET NO.	STATE	PROJECT
2	OHIO	

FED. RD. DIVISION	STATE	PROJECT	
2	OHIO		

238
460

SUM-8-17.63

TEMPORARY ROAD
STA. 109+50 TO 116+00

FED RD DIVISION	STATE	PROJECT	
2	OHIO		

240
460

SUM-8-17.63

TEMPORARY ROAD
STA. 117+00 TO 119+40.71

FED. RD.	STATE	PROJECT	
2	OHIO		

241
460

SUM-8-17.63

AREA	= 23.3 ACRES
Q_{50}	= 45.74 c.f.s.

CULVERT DATA

TYPE "A" CONDUIT 706.08 OR 706.02 W/CL "B" BEDDING
SIZE - 36" x 160'
SKEW - NONE
WORK REQ'D. BUILD NEW 36" DIA. CONDUIT AS SHOWN

ESTIMATED QUANTITIES

603	36" DIA. CONDUIT - TYPE "A" 706.08 OR 706.02 W/CL "B" BEDDING	= 160' LIN. FT.
602	CONCRETE MASONRY	= 1.1 CU. YDS.
601	TYPE "B" ROCK CHANNEL PROT.	= 15' CU. YDS.
601	6" REINFORCED RIP RAP	= 25 SQ. YDS.

CALC. BY P.V.M. 10/67
CHECKED BY L.T.F. 11/68

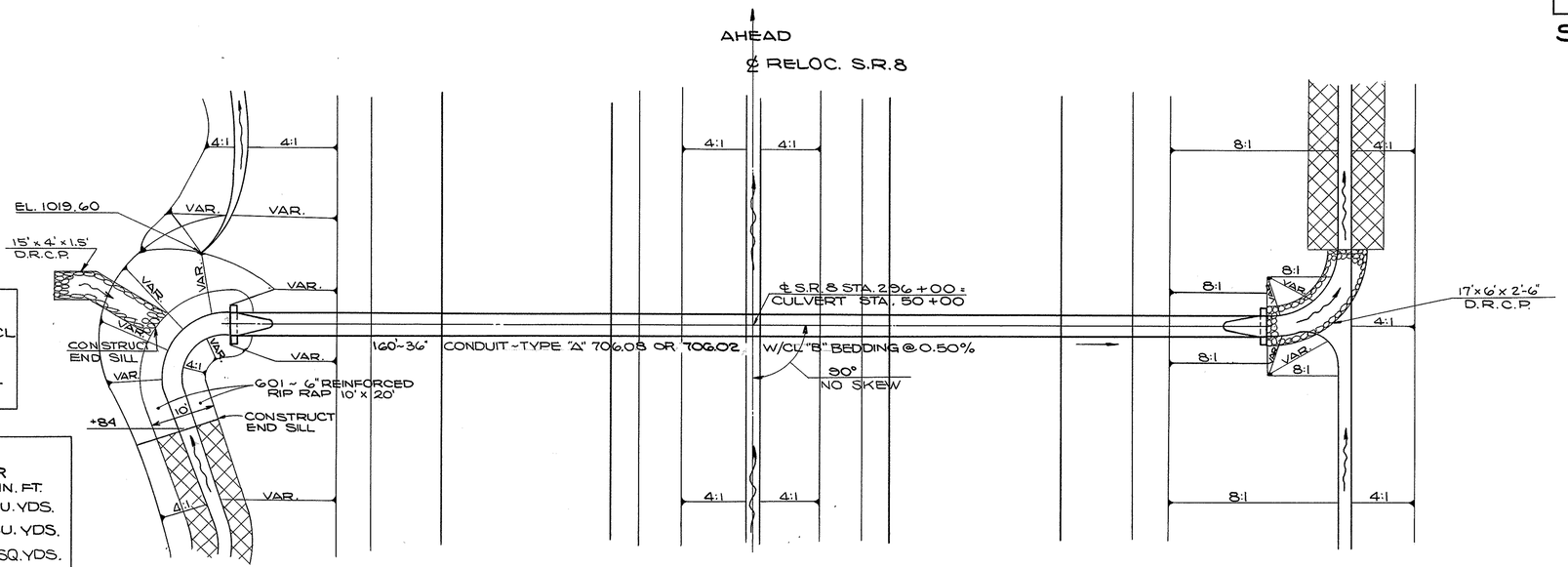

PLAN

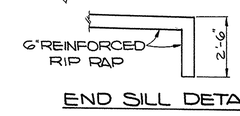

END SILL DETAIL

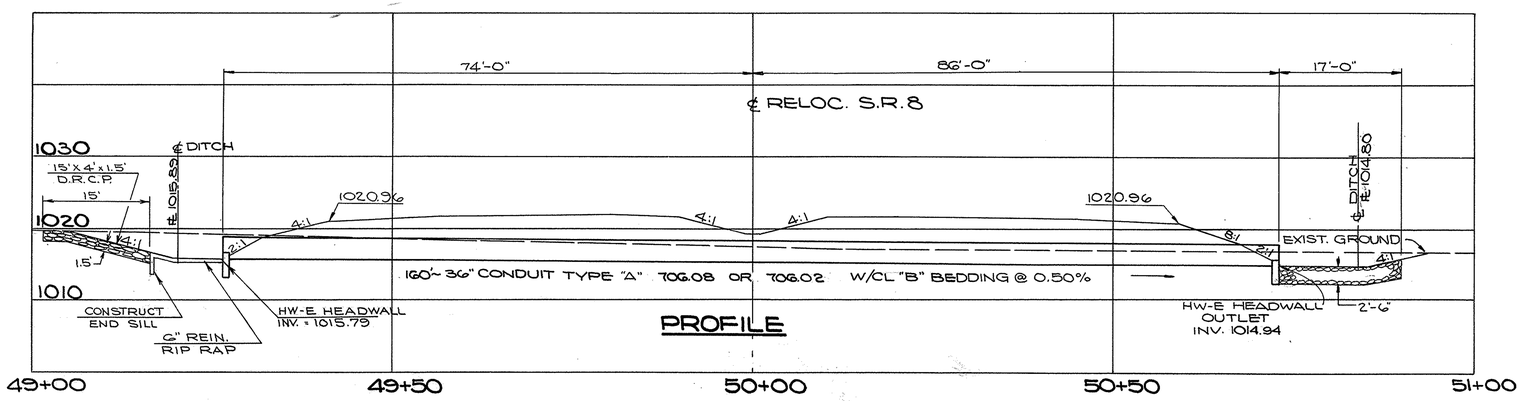

PROFILE

STRUCTURE Nº SUM-8-1890

CULVERT DETAIL
STA. 296+00

FORM D D A-8

FED. RD.	STATE	PROJECT	
2	OHIO		

242
460

SUM-8-17.63

AREA	= 10.17 ACRES
Q_{50}	= 26.79 c.f.s.

CULVERT DATA

TYPE "A" CONDUIT 706.04 CLASS HE-II W/CL. "B" BEDDING
SIZE = 24"×38"×168'
SKEW = NONE
WORK REQ'D. - BUILD NEW 24"×38" CONDUIT AS SHOWN.

ESTIMATED QUANTITIES

603 24"×38" ELLIP. CONDUIT ~ TYPE "A" 706.04 CL. HE-II W/CL "B" BEDDING	= 168' LIN. FT.
602 CONCRETE MASONRY	= 1.3 CU. YDS.
601 TYPE "B" ROCK CHANNEL PROT.	= 12 CU. YDS.
601 6" REINFORCED RIP RAP	= 25 SQ. YDS.

CALC. BY P.V.M. 10/67
CHECKED BY L.T.F. 11/68

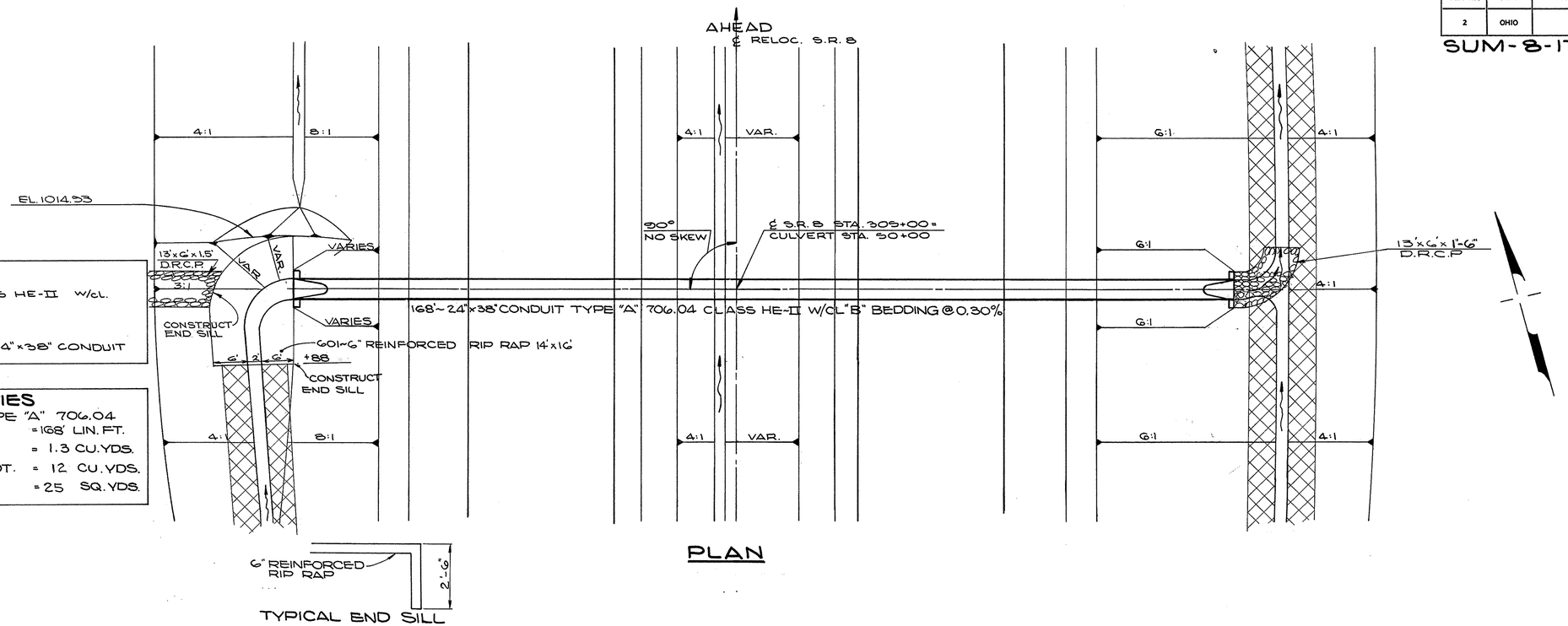

PLAN

TYPICAL END SILL

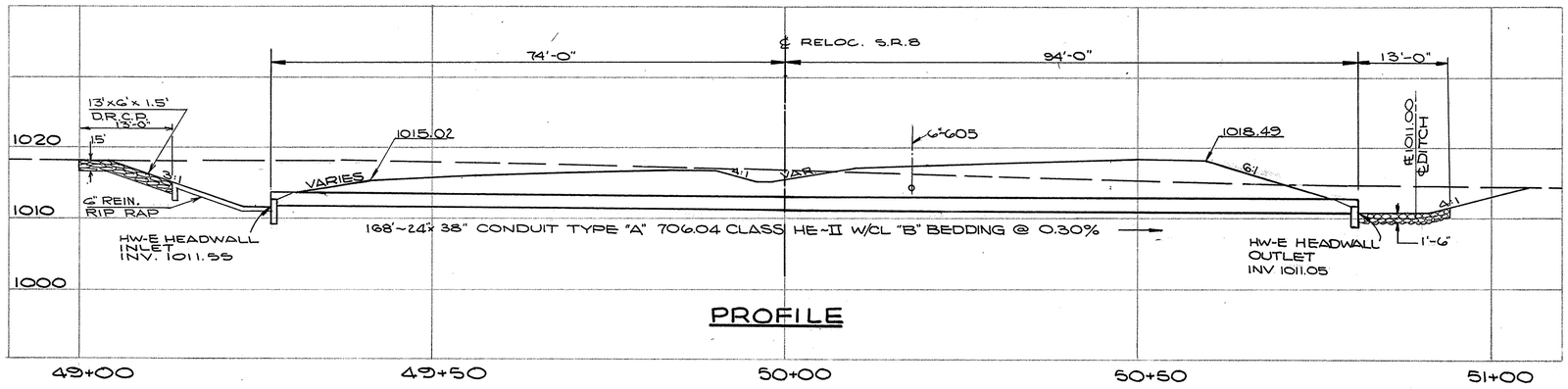

PROFILE

STRUCTURE Nº SUM-8-1907

CULVERT DETAIL
STA. 305+00

FORM DDA-5

FED. RD.	STATE	PROJECT	
2	OHIO		

243
460

SUM-8-17.63

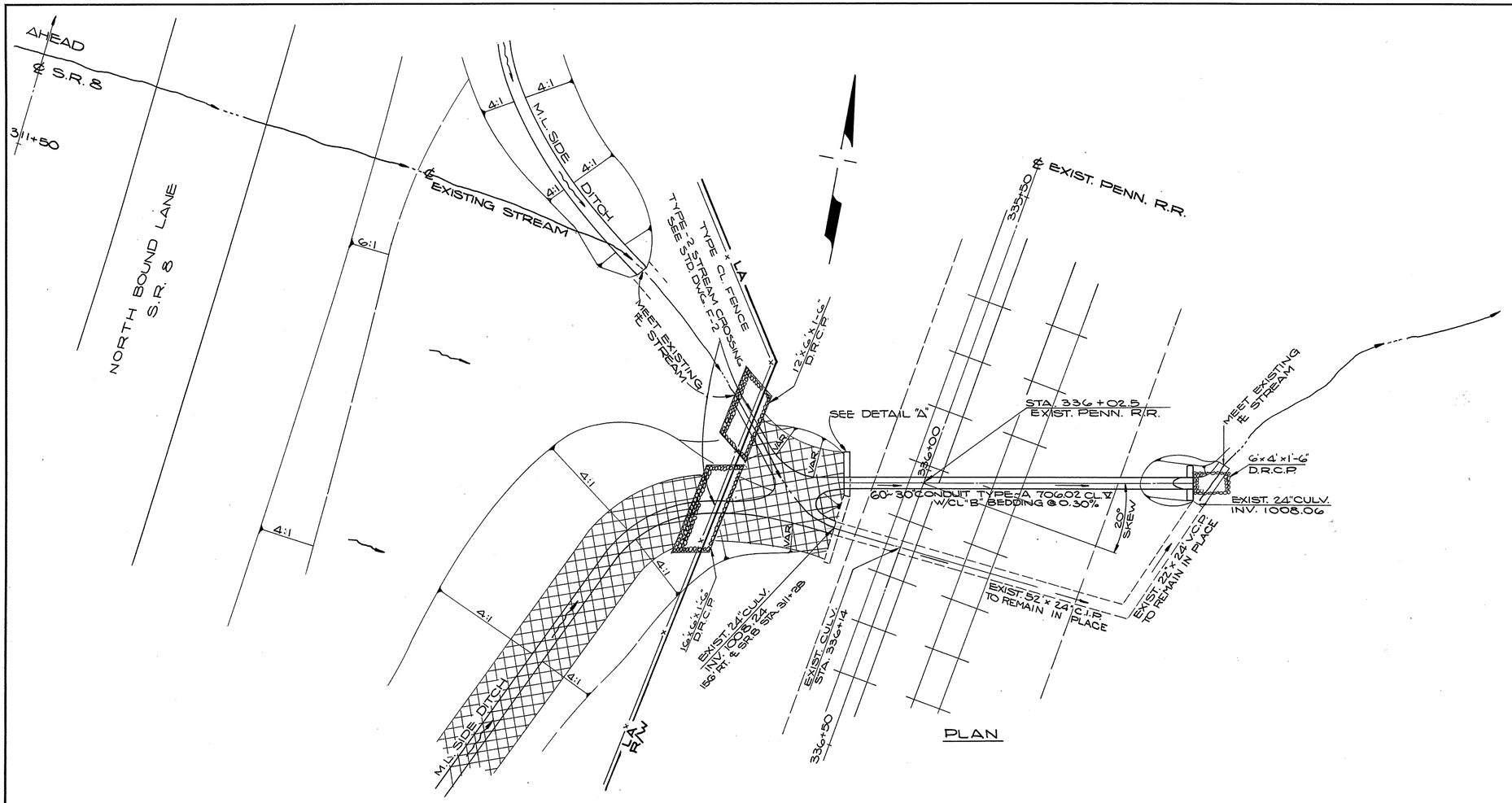

PLAN

AREA	= 42.18 ACRES
Q_{25}	= 39.6 c.f.s.

ESTIMATED QUANTITIES

603	30" TYPE-A CONDUIT 706.02 CL. V UNDER RAILROAD	= 39 LIN. FT.
603	30" TYPE-A CONDUIT 706.02 CL. V W/CL "B" BEDDING	= 21 LIN. FT.
602	CONCRETE MASONRY	= 4.8 CU. YDS.
601	TYPE "B" ROCK CHANNEL PROT.	= 16 CU. YDS.

CULVERT DATA

TYPE: 603 TYPE A CONDUIT 706.02 CL. V W/CL. "B" BEDDING

SIZE: 30"x 60'

SKEW: 20°

WORK REQUIRED: BUILD NEW 30"x 60' 603 TYPE-A PIPE CULVERT WITH SPECIAL HEADWALL ADJOINING EXIST. HEADWALL AS SHOWN.

CALC. BY P.V.M. 10/67
CHECKED BY L.T.F. 11/68

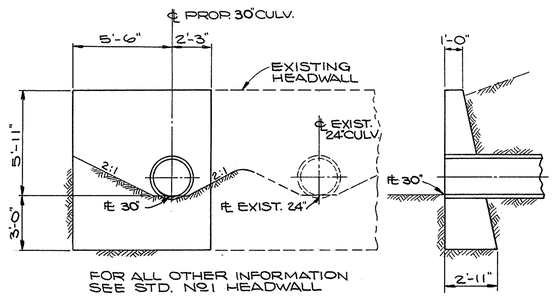

DETAIL "A"

SPECIAL HEADWALL TO BE CONSTRUCTED AS AN EXTENSION TO EXIST. HEADWALL. PROPOSED CULVERT INVERT TO MATCH EXIST. CULVERT INVERT.

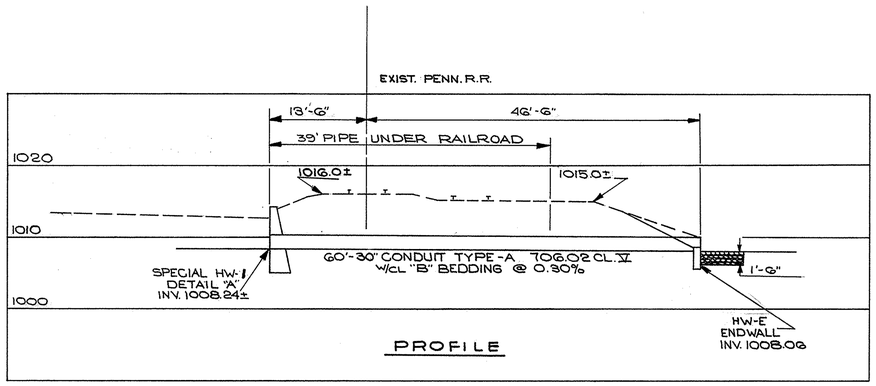

PROFILE

CULVERT DETAIL
EXIST. PENN. R.R.
STA. 336+02.5

FORM D D A-5

FED. RD.	STATE	PROJECT	
2	OHIO		

244
460

SUM-8-17.63

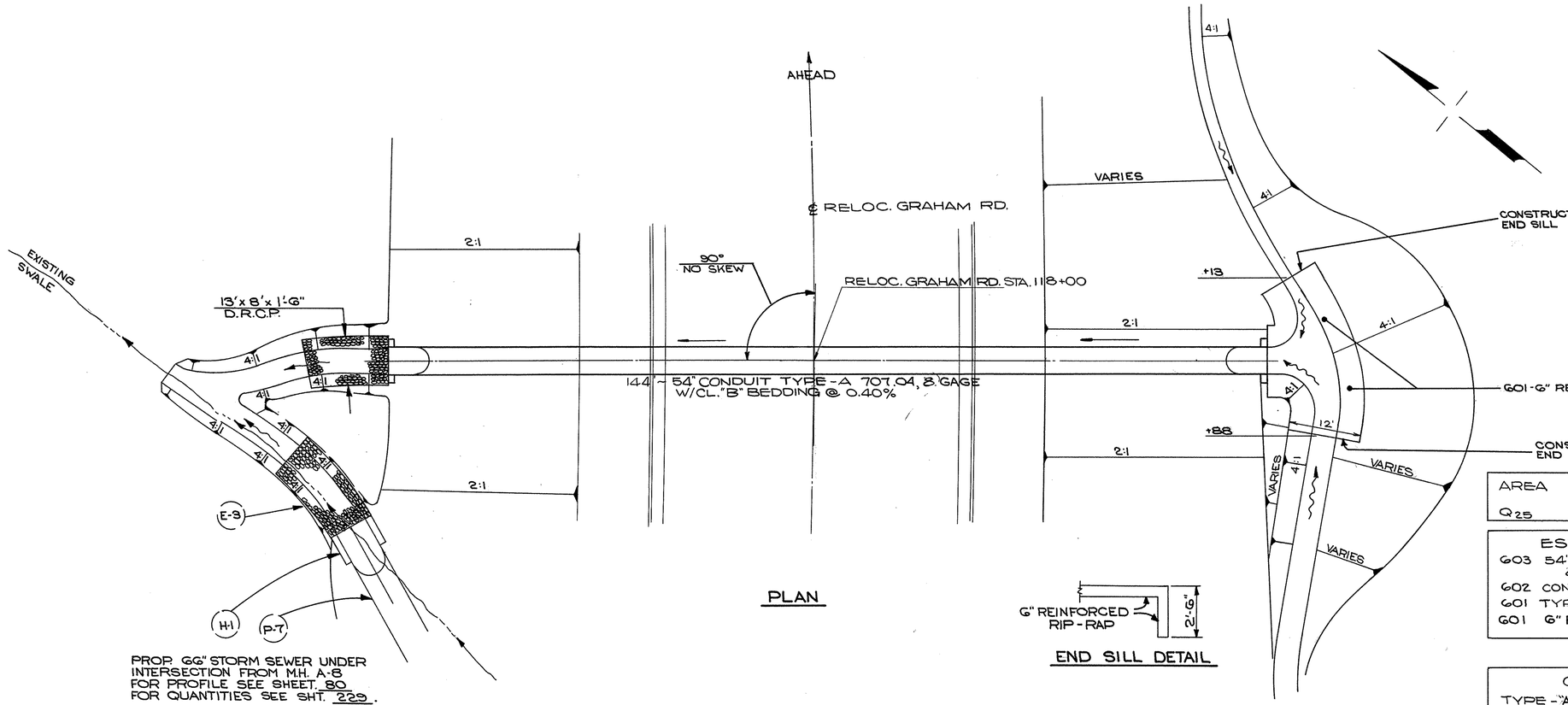

PROP. 66" STORM SEWER UNDER INTERSECTION FROM M.H. A-8
FOR PROFILE SEE SHEET 80
FOR QUANTITIES SEE SHT. 229.

PLAN

END SILL DETAIL

AREA	=	114.4 ACRES
Q_{25}	=	1080 c.f.s.

ESTIMATED QUANTITIES

603	54" TYPE-A CONDUIT 707.04 8 GAGE W/CL."B" BEDDING	= 144.0 LIN. FT.
602	CONCRETE MASONRY	= 1.92 CU. YD.
601	TYPE "B", ROCK CHANNEL PROT.	= 9 CU. YD.
601	6" REINFORCED RIP-RAP	= 36 SQ. YD.

CULVERT DATA

TYPE - "A" CONDUIT 707.04, 12 GAGE W/CL. B BEDDING
SIZE - 54" x 144'
SKEW - NONE
WORK REQ'D. - BUILD NEW 54" x 144' PIPE CULVERT AS SHOWN

CALC. BY P.V.M. 10/67
CHECKED BY L.T.F. 11/68

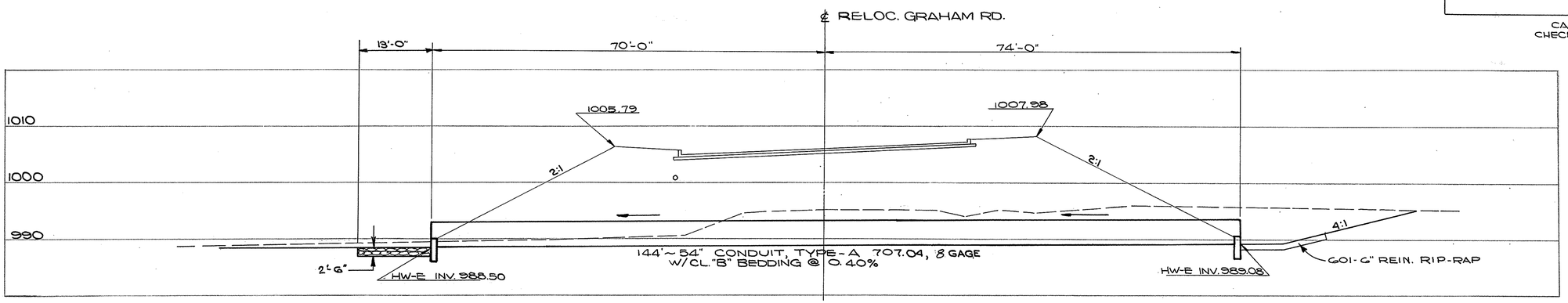

PROFILE

CULVERT DETAIL
RELOC. GRAHAM ROAD
STA. 118+00

FORM D D A-8

FED. RD.	STATE	PROJECT	
2	OHIO		

245
460

SUM-8-17.63

AREA	= 2.46 ACRES
Q_{50}	= 8.85 c.f.s.

CULVERT DATA

TYPE "A" CONDUIT 706.02 CLASS II OR 706.08
"B" BEDDING
SIZE - 21" x 86'
SKEW - NONE
WORK REQ'D. BUILD NEW 21" DIA. CONDUIT AS SHOWN

FEDERAL & STATE PARTICIPATION ONLY

ESTIMATED QUANTITIES

603	21" CONDUIT TYPE-A 706.02 CL II OR 706.08 W/CL B BEDDING	= 86 LIN. FT.
602	CONCRETE MASONRY	= 0.72 CU. YDS.
601	TYPE "B" ROCK CHANNEL PROT.	= 3.0 CU. YDS.

CALC. BY P.V.M. 10/67
CHECKED BY L.T.F. 11/68

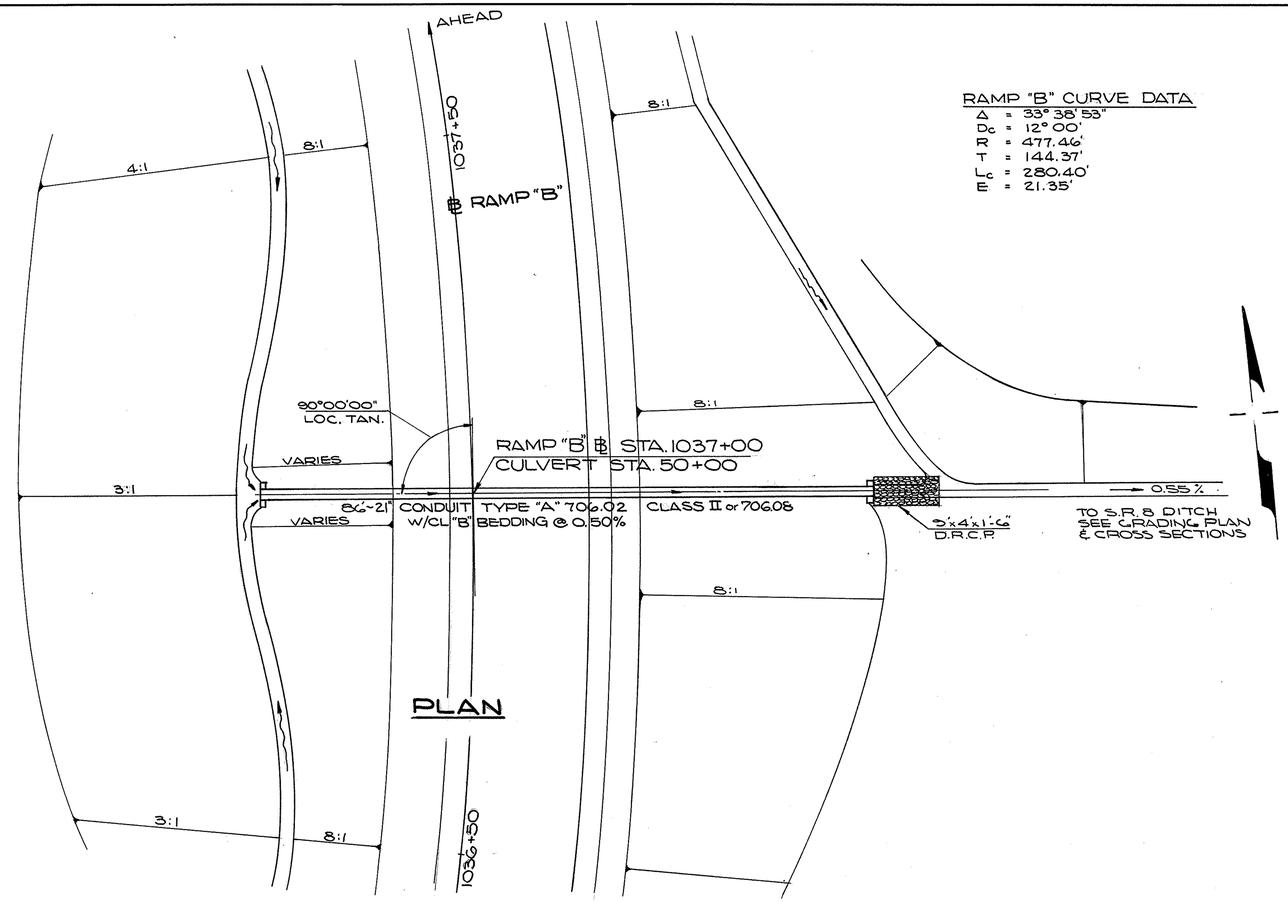

PLAN

RAMP "B" CURVE DATA
Δ = 33° 38' 53"
D_c = 12° 00'
R = 477.46'
T = 144.37'
L_c = 280.40'
E = 21.35'

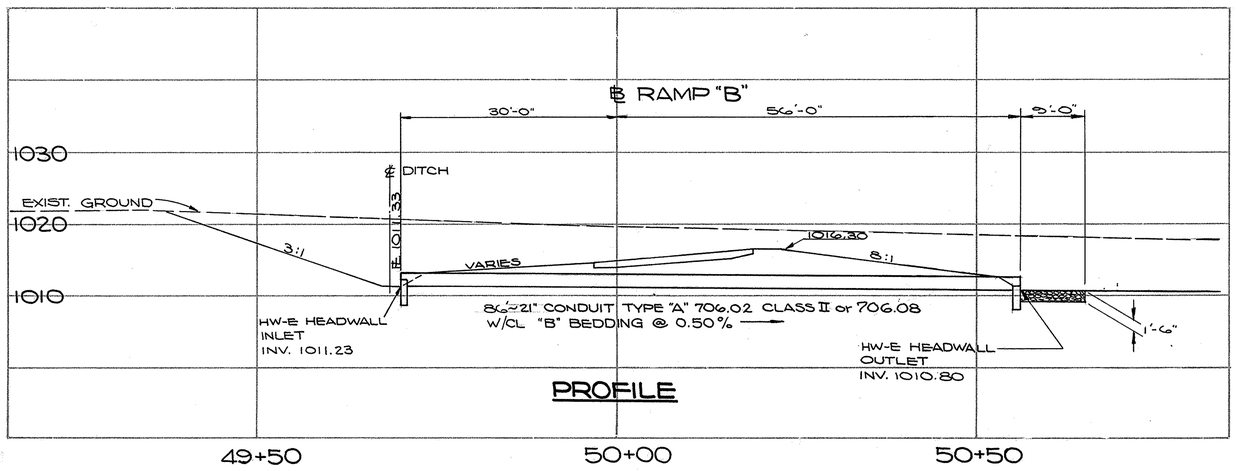

PROFILE

CULVERT DETAIL
RAMP "B"
STA. 1037+00

FORM D D A-5

FED. RD.	STATE	PROJECT	
2	OHIO		

240
460

SUM-8-17.63

SEE GRADING PLAN SHT. 35-A.

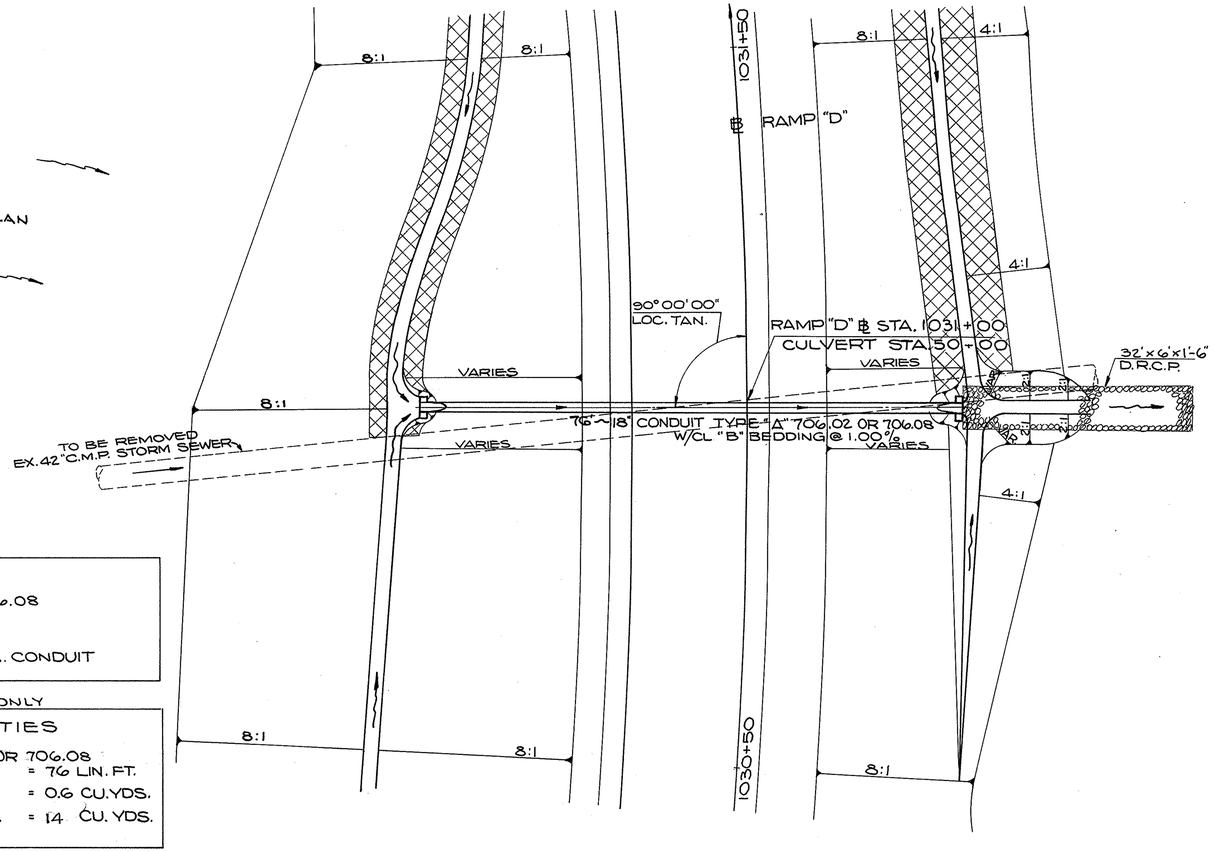

RAMP "D" CURVE DATA

Δ = 21°46'43"
D_c = 8°00'
R = 716.20'
T = 137.78'
L_c = 272.23'

AREA	= 1.5 ACRES
Q_{50}	= 5.52 c.f.s.

CULVERT DATA

TYPE "A" CONDUIT 706.02 OR 706.08
W/CL "B" BEDDING
SIZE - 18" x 76'
SKEW - NONE
WORK REQ'D. BUILD NEW 18" DIA. CONDUIT AS SHOWN

FEDERAL & STATE PARTICIPATION ONLY

ESTIMATED QUANTITIES

603	18" CONDUIT TYPE-A 706.02 OR 706.08 W/CL B BEDDING	= 76 LIN. FT.
602	CONCRETE MASONRY	= 0.6 CU.YDS.
601	TYPE-"B" ROCK CHANNEL PROT.	= 14 CU. YDS.

CALC. BY P.V.M. 10/67
CHECKED BY L.T.F. 11/68

PLAN

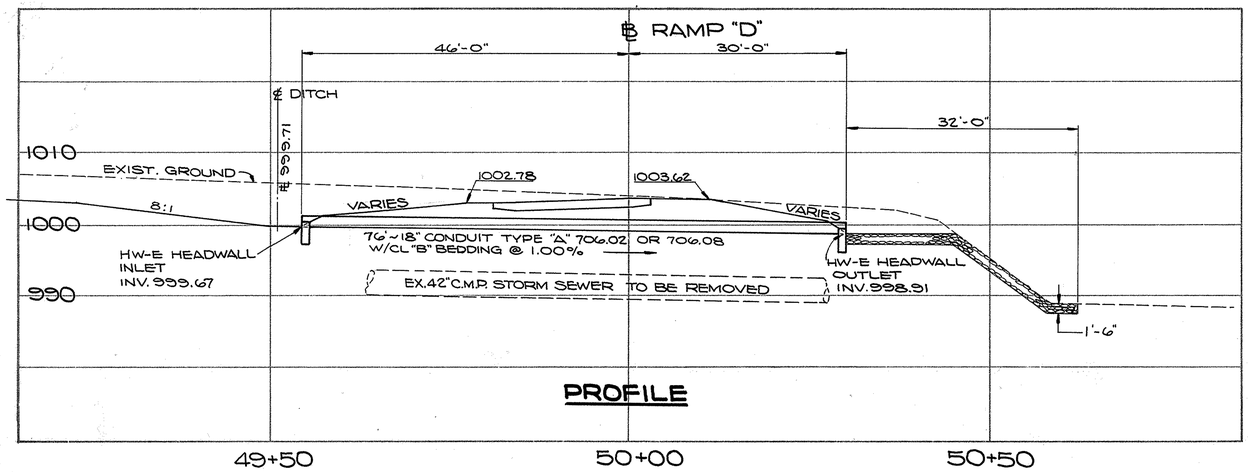

PROFILE

CULVERT DETAIL
RAMP "D"
STA. 1031+00

FORM DD A-5

TYPICAL DETAILS OF UNDERDRAIN OUTLETS

FED. RD.	STATE	PROJECT	
2	OHIO		

247
460

SUM - 8 - 17.63

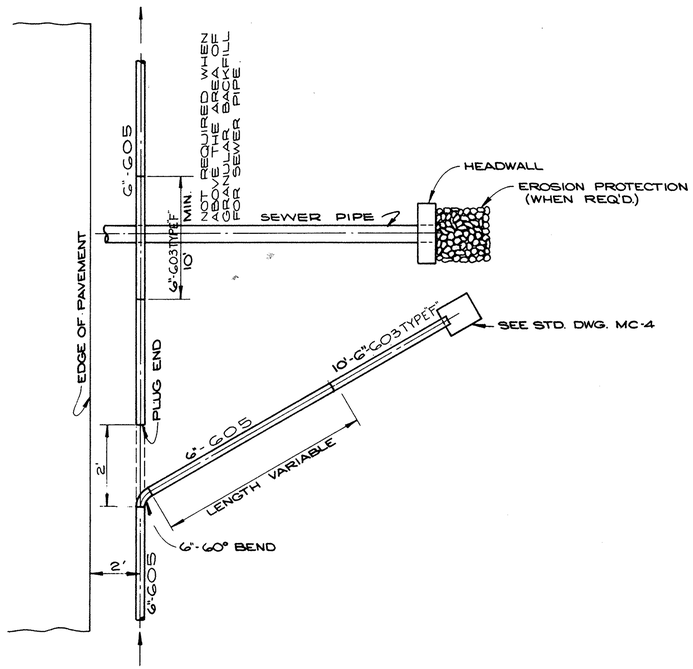

UNDERDRAIN OUTLET DETAIL "A"

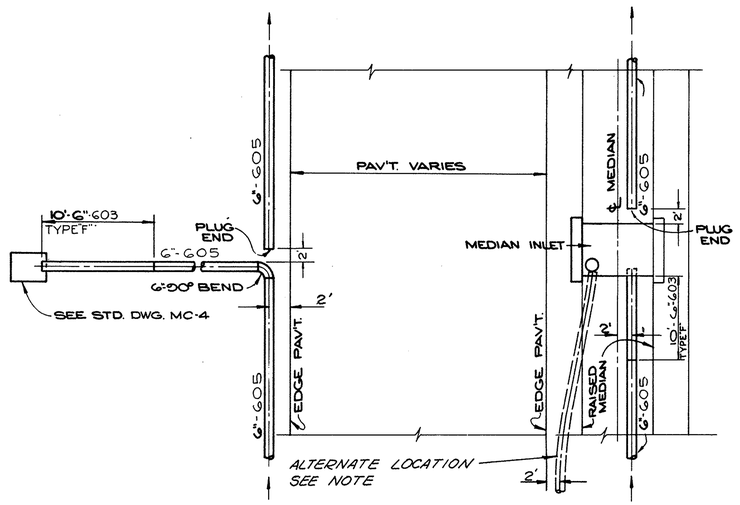

UNDERDRAIN OUTLET DETAIL "B"

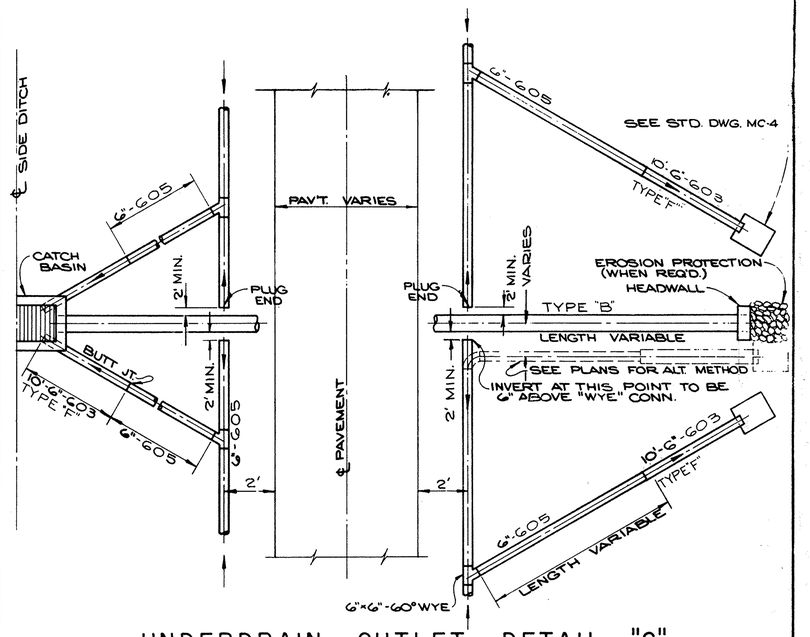

UNDERDRAIN OUTLET DETAIL "C"

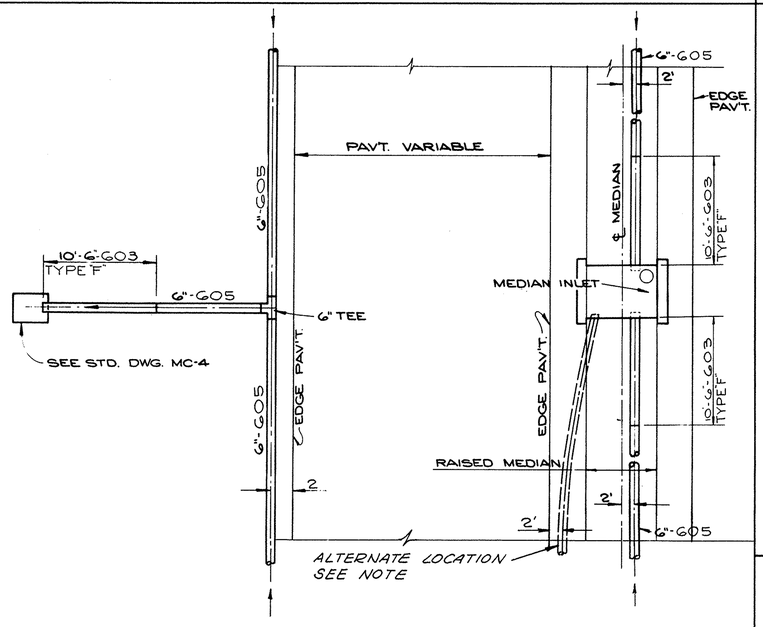

UNDERDRAIN OUTLET DETAIL "D"

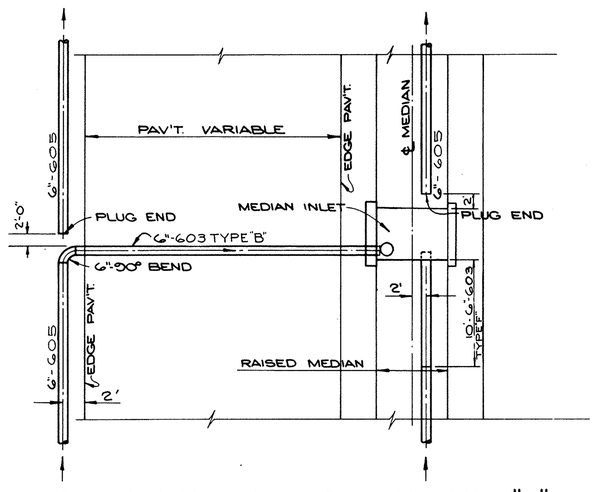

UNDERDRAIN OUTLET DETAIL "E"

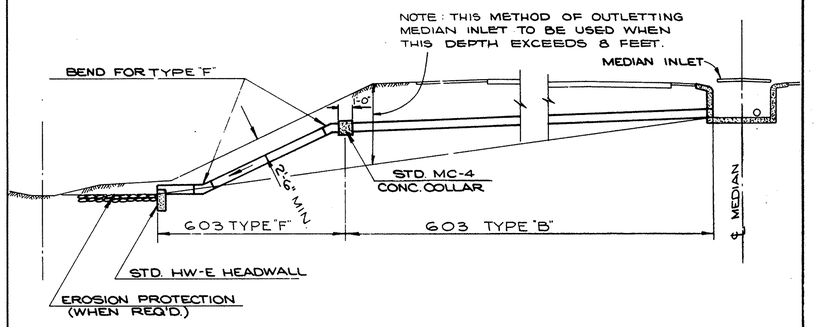

MEDIAN OUTLET DETAIL IN HIGH FILL

NOTES

ALTERNATE LOCATION USED WHEN UNDERDRAIN IS AJACENT TO LONGITUDINAL STORM SEWER. TO BE LOCATED ON HIGH SIDE WHEN ABOVE CONDITION OCCURS IN SUPERELEVATED SECTIONS.

TYPICAL UNDERDRAIN OUTLETS

FED. RD.	STATE	PROJECT	
2	OHIO		

248
460

SUM-8-17.63

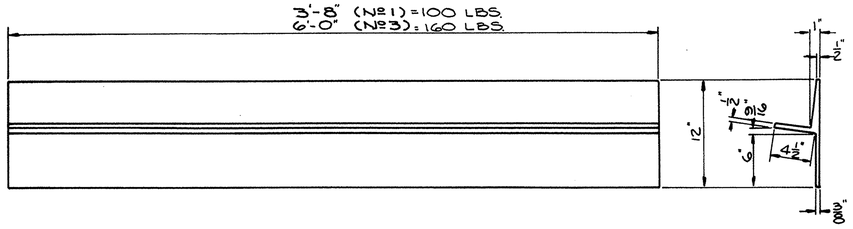

CAST IRON "T" №1 & №3

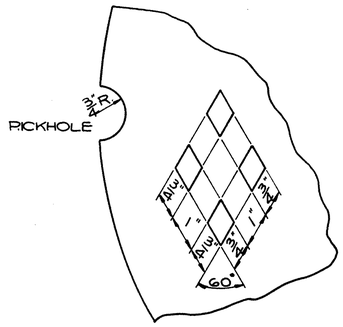

DETAIL OF LID
№1 & №3

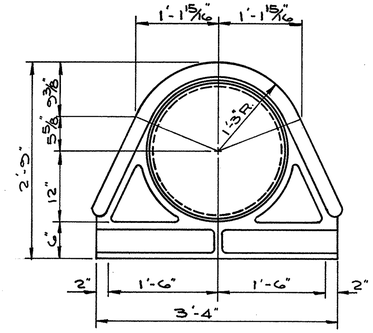

PLAN VIEW №1
APPROX. WEIGHT 230 LBS.
(NOT INCLUDING COVER)

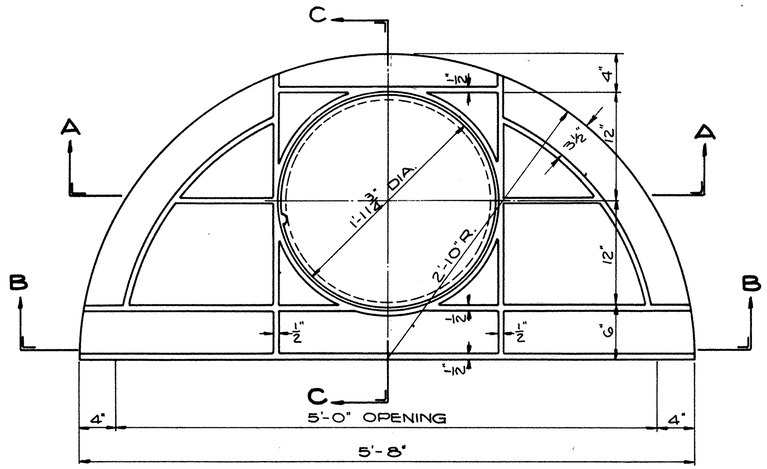

PLAN VIEW №3

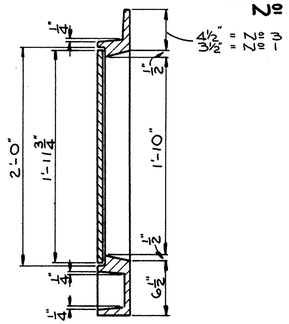

SECTION C-C
№1 & №3

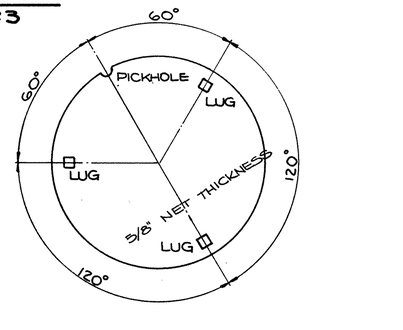

UNDERSIDE OF LID SHOWING
LOCATIONS OF LUGS & PICKHOLE
№1 & №3
APPROX. WT. 64 LBS.

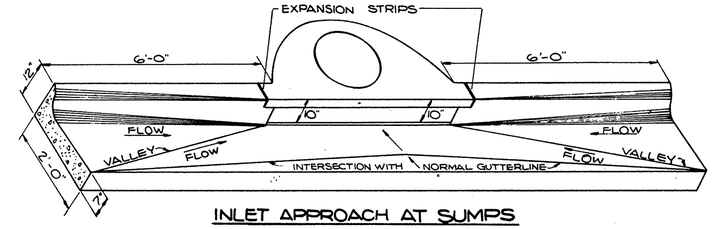

INLET APPROACH AT SUMPS

NOTE: SEE SHEET №245 FOR PLACEMENT OF REINFORCING STEEL IN CURB & GUTTER SECTION THRU INLETS.

NOTE: PREFORMED EXPANSION STRIPS TO BE INSTALLED AS FOLLOWS: ONE 1½" x 9" FOR ENTIRE LENGTH OF FRONT WALL BETWEEN TOP FRONT WALL INLET & BOTTOM OF CURB & GUTTER SECTION. OTHERS AS SHOWN HEREON.

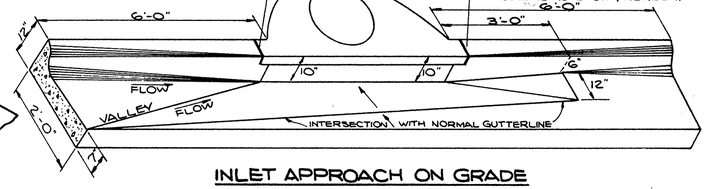

INLET APPROACH ON GRADE

DETAILS OF INLET APPROACH

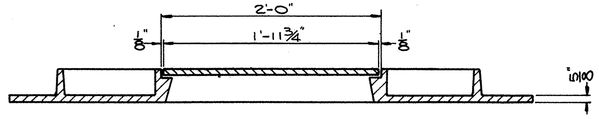

APPROX. WT. 420 LBS
(NOT INCLUDING COVER)

SECTION A-A №3

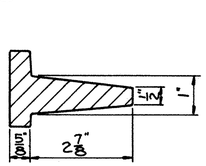

TYPICAL SECTION
OF RIB
№3

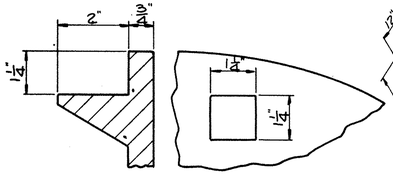

UNDERSIDE OF LID
SHOWING LUG
№1 & №3

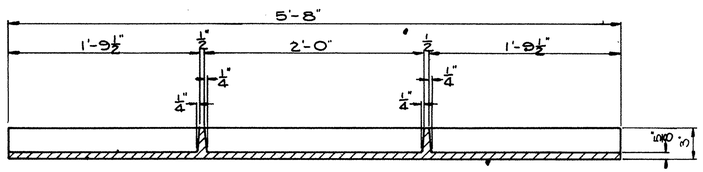

SECTION B-B №3

NOTES
ALL MATERIAL TO BE CAST IRON CONFORMING TO A.S.T.M. SPEC. A-48-48

NOTE:
PAYMENT FOR INLET APPROACH SHALL BE INCLUDED IN THE UNIT PRICE BID FOR ITEM 604 INLET №1 OR №3 CUYAHOGA FALLS INLET.

TOP CASTING FOR STRAIGHT CURB

~CITY OF CUYAHOGA FALLS~
STANDARD CASTINGS
INLET №1 & №3

FED. RD.	STATE	PROJECT	
2	OHIO		

245
460

SUM-8-17.63

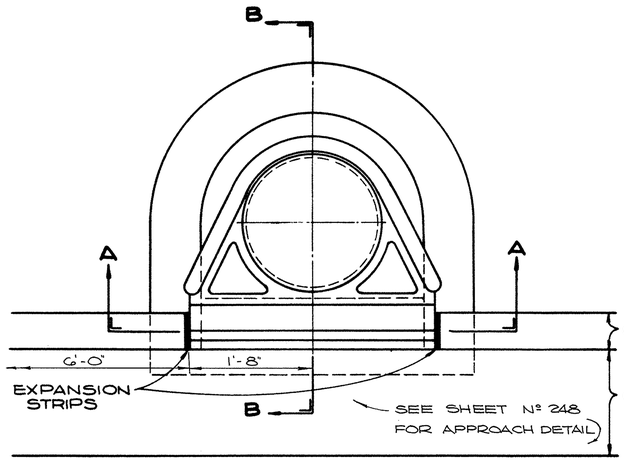

PLAN VIEW

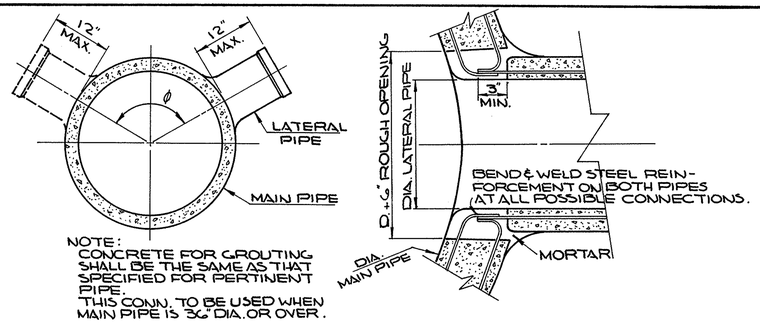

PRE-FABRICATED "T" CONNECTION

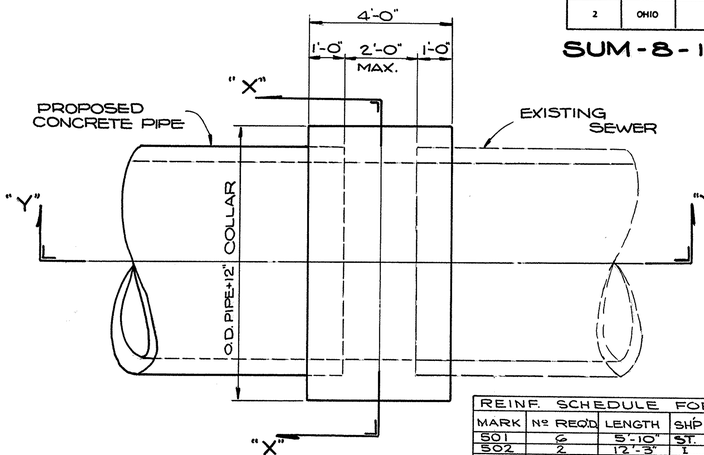

PLAN

REINF. SCHEDULE FOR 48" PIPE								
MARK	Nº REQ'D	LENGTH	SHP	DIMENSIONS A	B	C	D	WEIGHT
501	6	5'-10"	ST.	-	-	-	-	34.5
502	2	12'-3"	1	22¾	11'-7	2'-0	5	25.6
503	4	13'-5"	1	24½	11'-7	2'-0	10¼	56.0
				TOTAL				116.1

2.5 CU. YDS. CONC. FOR 48" PIPE

REINF. SCHEDULE FOR 66" PIPE								
MARK	Nº REQ'D.	LENGTH	SHP	DIMENSIONS A	B	C	D	WEIGHT
501	6	7'-4"	ST.	-	-	-	-	45.7
502	2	18'-8"	1	22¾	11'-7	3'-7	8-0	40.0
503	4	21'-4"	1	38	11'-7	3'-7	11'-6	90.8
				TOTAL				176.5

3.2 CU. YDS. CONC. FOR 66" PIPE

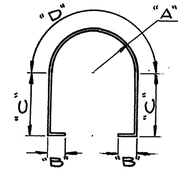

TYPE I

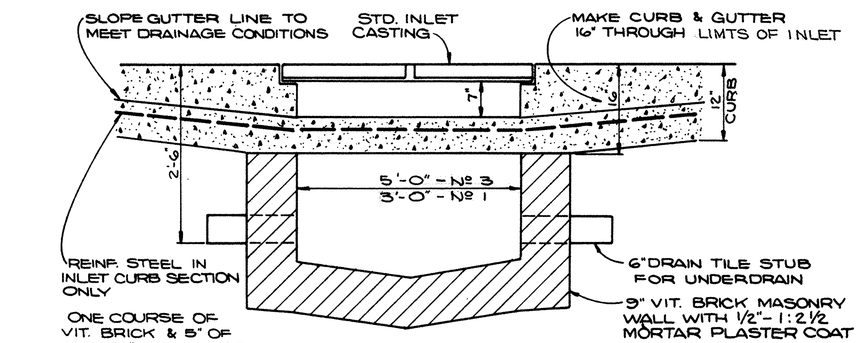

SECTION A-A

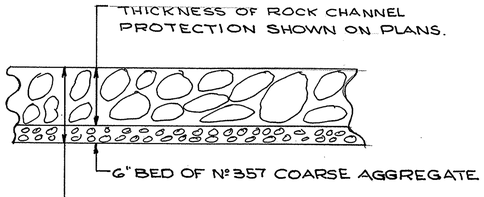

ROCK CHANNEL PROTECTION

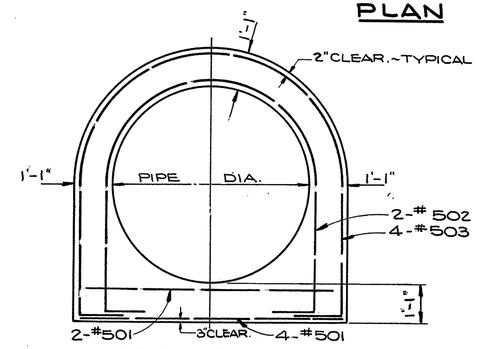

SECTION X-X

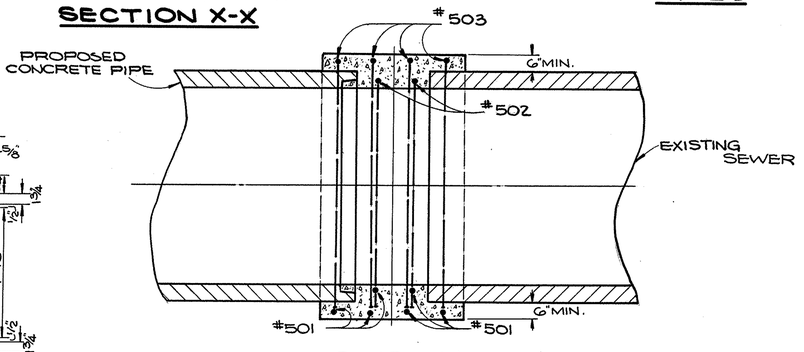

SECTION Y-Y

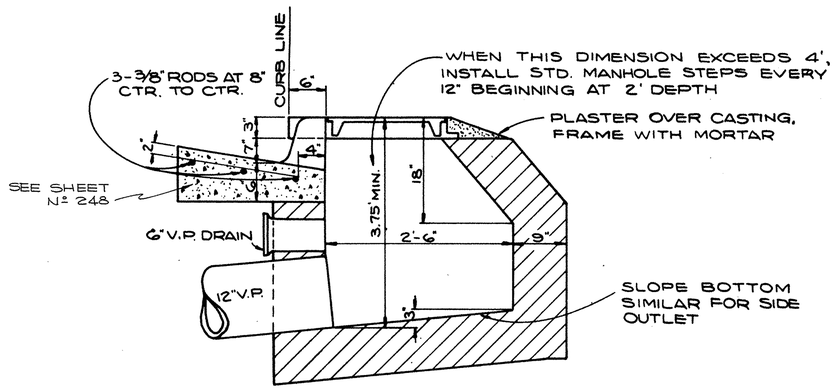

SECTION B-B

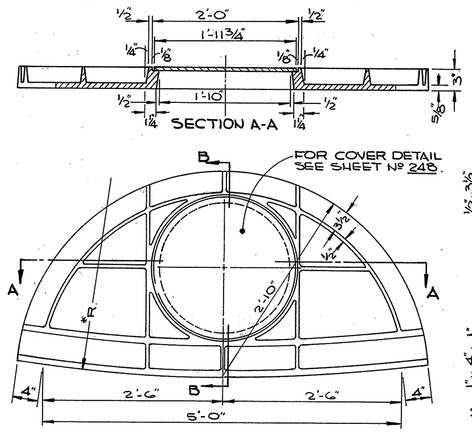

TOP CASTING FOR CURVED CURB-INLET Nº 3

APPROX. CASTING WT. 420 LBS. (NOT INCLUDING COVER)
MATERIAL TO BE CAST IRON CONFORMING TO A.S.T.M. SPEC A 48-48

CONCRETE COLLAR

NOTE:
PAYMENT FOR CONCRETE COLLAR COMPLETE IN PLACE SHALL BE INCLUDED IN THE UNIT PRICE BID FOR ITEM 602 MASONRY.

CUYAHOGA FALLS Nº 1 & Nº 3 INLETS

NOTE: PAYMENT FOR CURB & GUTTER TO BE INCLUDED IN THE PRICE BID PER EACH FOR ITEM 604 Nº 1 OR Nº 3 CUYAHOGA FALLS INLET.

DRAINAGE DETAILS

FED. RD.	STATE	PROJECT	
2	OHIO		

250
460

SUM - 8 - 17.63

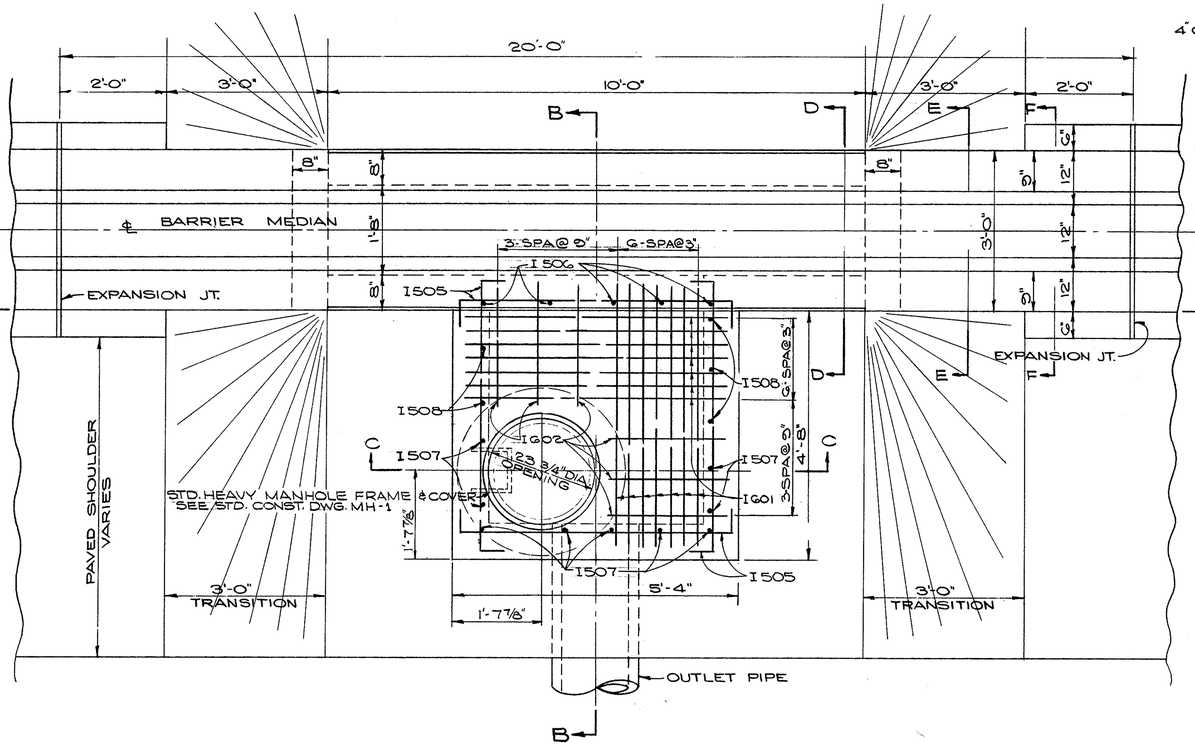

PLAN

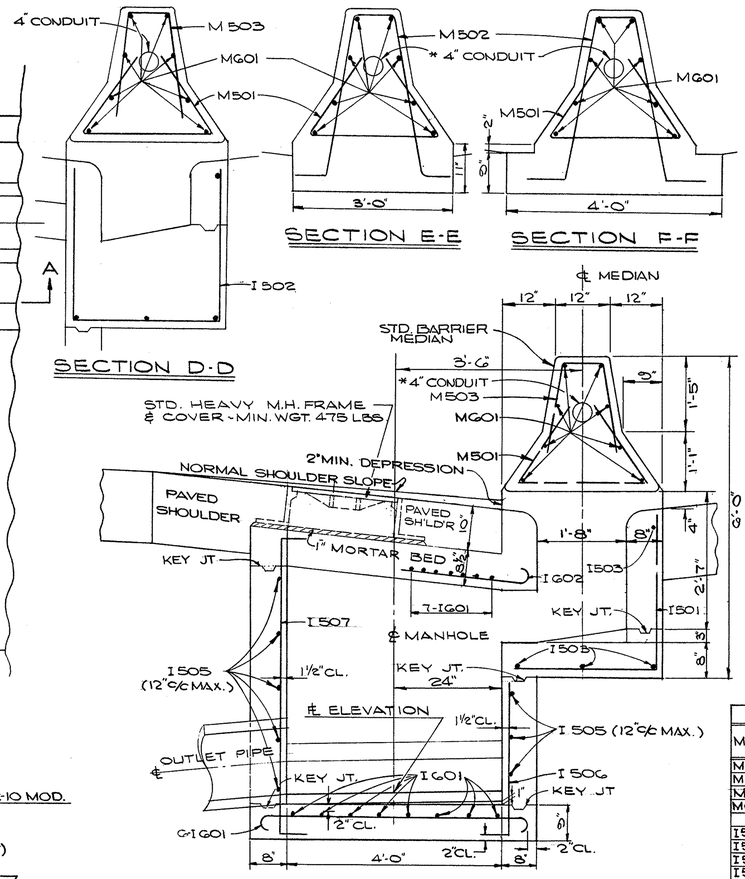

REINFORCING STEEL SHALL BE ROUND BARS IN ACCORDANCE WITH STEEL DETAILS SHOWN HEREON AND CONFORMING TO 509 OF THE CONSTRUCTION MATERIALS SPECIFICATIONS. COST OF FURNISHING AND PLACING REINFORCING STEEL SHALL BE INCLUDED IN 604 FOR PAYMENT.

CONCRETE CAST IN PLACE, TO BE CLASS "C".

STEPS SHALL BE PROVIDED WHERE THE DEPTH EXCEEDS 72" AND SHALL MEET THE REQUIREMENTS OF 604. SEE STANDARD CONSTRUCTION DRAWING MH-1A FOR STEP DETAILS.

QUANTITIES FOR 20 LINEAR FEET OF BARRIER MEDIAN SHALL BE INCLUDED IN THE COST OF THE INLET AND ARE DEDUCTED FROM THE ROADWAY QUATITIES ACCORDINGLY.

CHANNEL SECTIONS IN THE MANHOLE SHALL BE SIMILAR TO THOSE SHOWN ON STANDARD CONSTRUCTION DRAWING MH-1 AND CONSTRUCTED OF SPLIT PIPE OR BRICK EXCEPT CURVED SECTIONS WHICH MAY BE BUILT BY FORMING A CHANNEL IN THE CONCRETE.

THE MANHOLE MAY BE PLACED RIGHT OR LEFT OF THE MEDIAN CENTERLINE.

* 4" LIGHTING CONDUIT TO BE PAID FOR PER LIN.FT. UNDER ITEM 625.

NOTE: THE TABLE OF QUANTITIES, BELOW, IS INCLUDED WITH THIS DWG. FOR ESTIMATING PURPOSES ONLY. THE COST OF FURNISHING AND PLACING ALL CONCRETE, REINFORCING STEEL, CASTING, ETC. SHALL BE INCLUDED IN 604 FOR PAYMENT.

REINFORCING SCHEDULE

MARK	Nº REQ.D	LENGTH	TYPE	DIMENSIONS A	B	C	SERIES INCR.	WEIGHT LBS.
M501	10	5'-4"	1	2'-4"	1'-9"	1'-0"		56
M502	4	7'-10"	2	8"	3'-0½"	9"		33
M503	6	4'-6"	7	8"	2'-0"			28
MG01	8	19'-8"	ST.					236
I501	4	5'-7"	4	2'-11"	2'-9"			
I502	4	8'-4"	3	2'-11"	2'-9"			
I503	4	11'-1"	ST					
I504	2	5'-0"	3	3'-3"	2'-9"			
I505	■18	6'-2"	3	7"	5'-0"			
I506	5	**3'-3"	4	7"	**2'-3"			
I507	9	**6'-6"	3	7"	**5'-4"			
I508	6	**6'-4"	3	7"	**5'-2"			
IG01	30	6'-4"	5	8"	5'-0"			
IG02	6	3'-2"	6	8"	2'-6"			

ABOVE SCHEDULE IS FOR MINIMUM DEPTH INLET 6'-4"

■ - NUMBER OF BARS INCREASE FOR DEPTHS GREATER THAN 6'-4" MAINTAIN 12"℄C SPACING.

** - LENGTH OF 506, 507, 508 INCREASE WITH DEPTH OF INLET OVER 6'-4" SEE PLANS FOR ACTUAL INLET DEPTH.

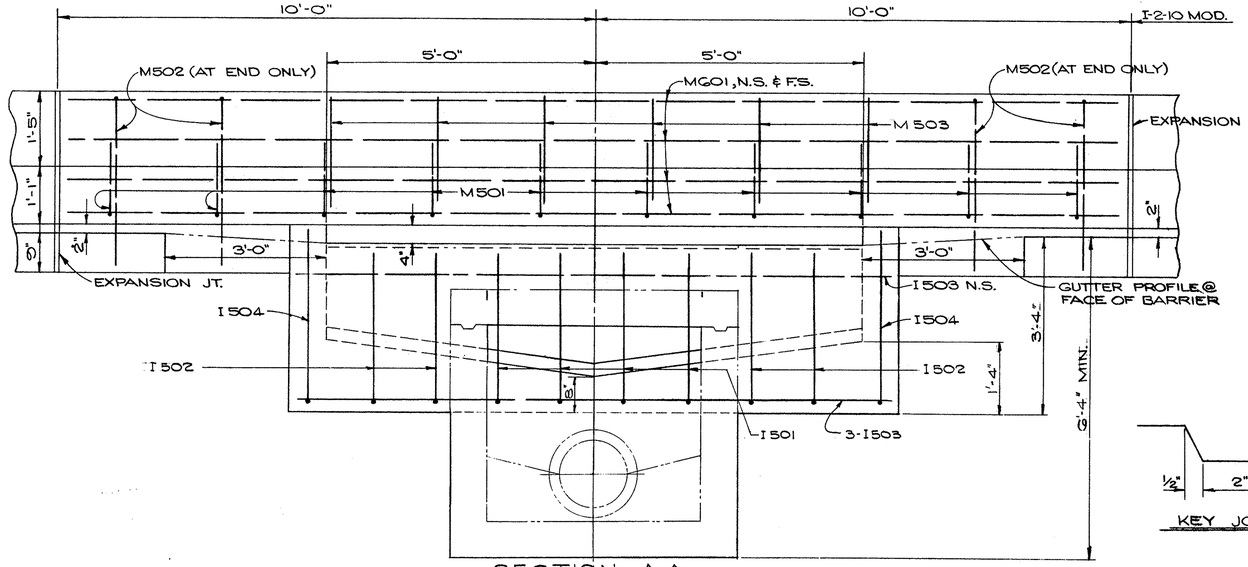

SECTION A-A

KEY JOINT

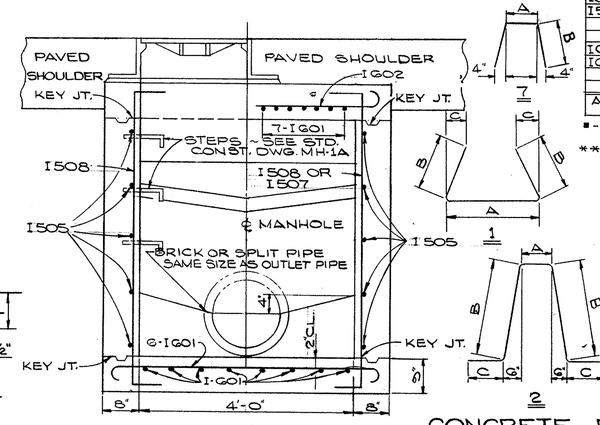

SECTION C-C

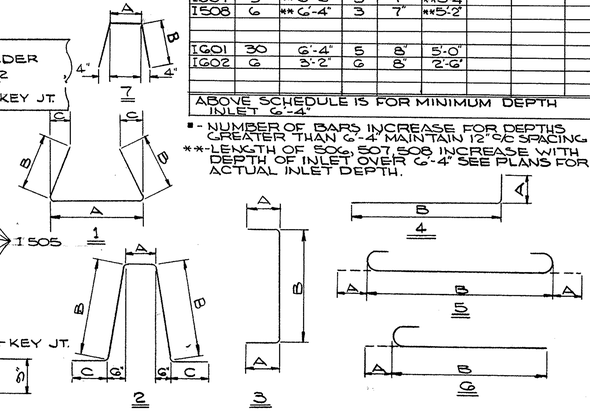

CONCRETE BARRIER MEDIAN INLET I-2-10 MOD

FED. RD.	STATE	PROJECT	
2	OHIO		

SUM. - 8 - 17.63

251

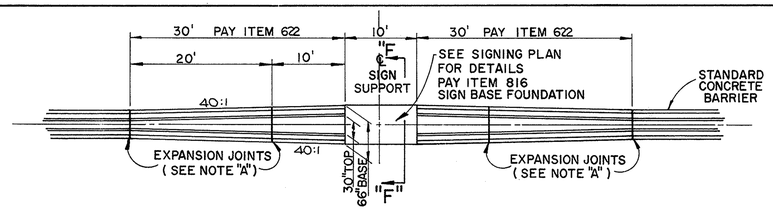

* MIN. 10' UNLESS OTHERWISE SPECIFIED ON PLANS.

TYPICAL CONCRETE MEDIAN BARRIER AT SIGNS

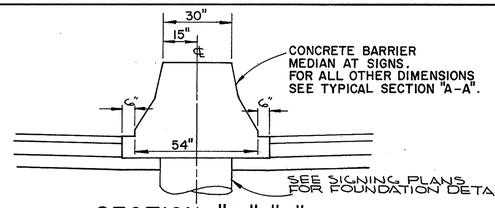

SECTION "F"-"F"

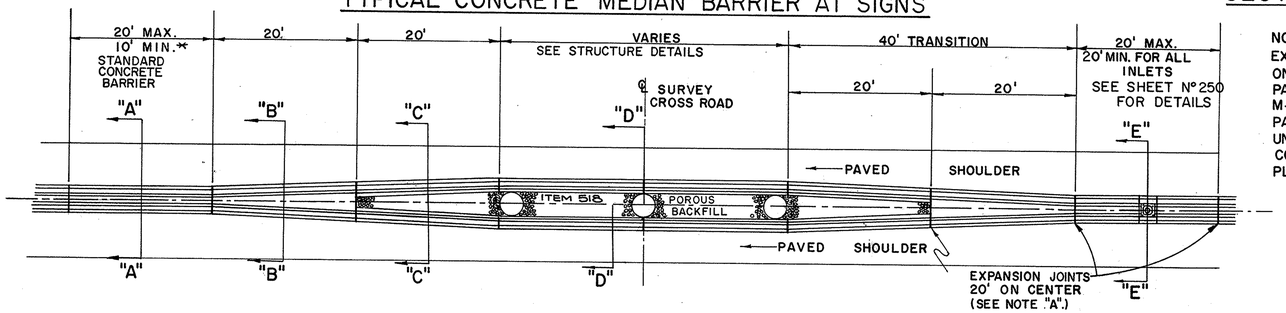

TYPICAL CONCRETE MEDIAN BARRIER AT PIERS

NOTE: COST OF TAPERING CONCRETE BARRIER AT STRUCTURES & SIGN LOCATIONS SHALL BE INCLUDED IN THE UNIT BID PRICE FOR ITEM 622 CONCRETE BARRIER MEDIAN.

POROUS BACKFILL SHALL BE PAID FOR AT THE UNIT BID PRICE CU. YD. FOR ITEM 518 POROUS BACKFILL.

NOTE "A":
EXPANSION JOINTS SHALL BE PLACED 20' MAX. ON CENTER USING 1/2" PERFORMED EXPANSION JOINT FILLER MEETING AASHO M-153.
PAYMENT SHALL BE INCLUDED IN THE UNIT BID PRICE FOR LIN. FT. OF ITEM 622 CONCRETE BARRIER MEDIAN, AS PER PLAN.

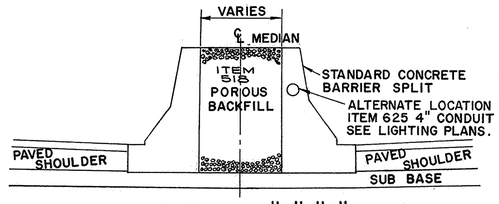

SECTION "C"-"C"

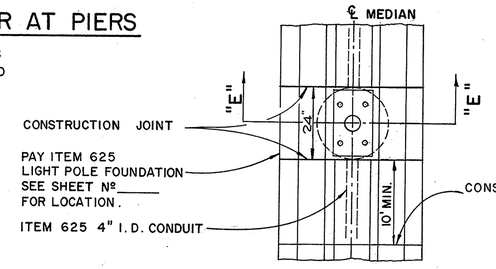

PLAN VIEW LIGHT BASE

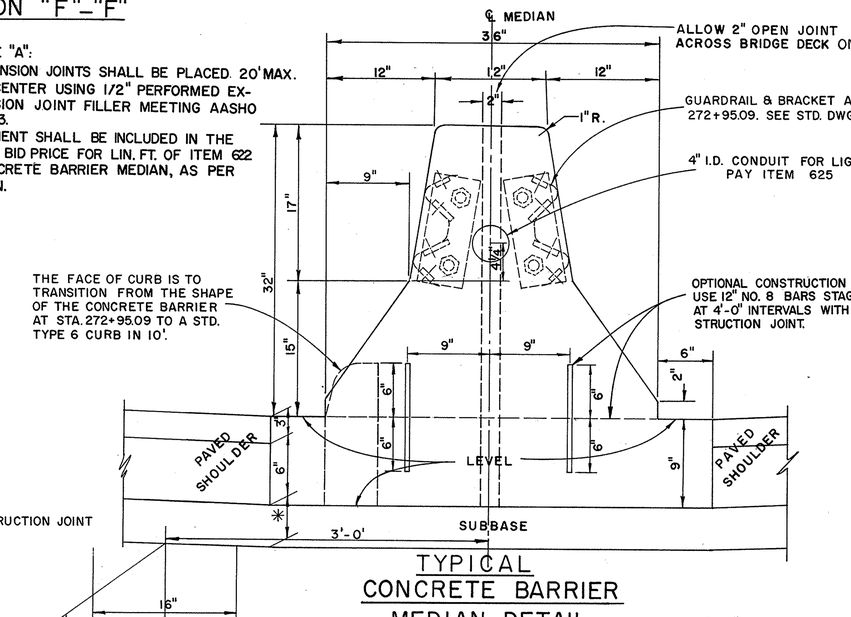

TYPICAL CONCRETE BARRIER MEDIAN DETAIL

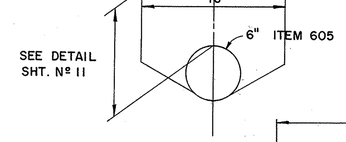

SECTION "A"-"A"

* 5-1/8" NORMAL
7" SUPERELEVATED

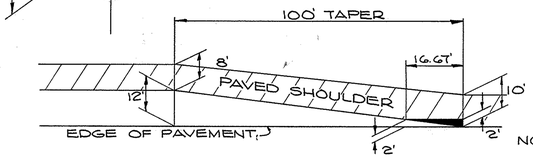

TYPICAL DECELERATION LANE

NOTE:
THE SHADED AREA, SHOWN IN THE END TAPER DETAILS, SHALL BE CONSTRUCTED FULL DEPTH PAVEMENT.

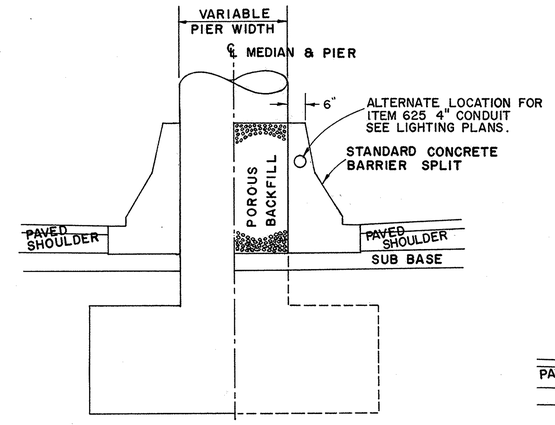

SECTION "D"-"D"

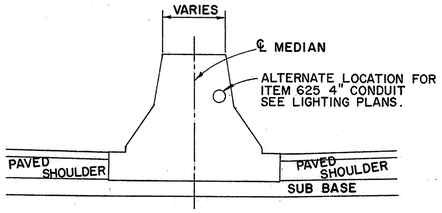

SECTION "B"-"B"

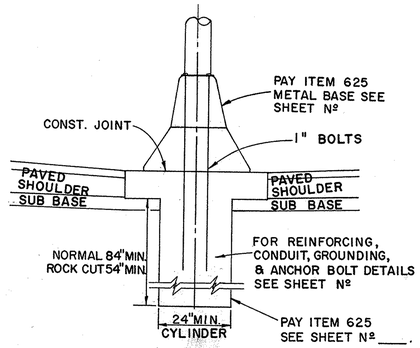

END VIEW LIGHT BASE

SECTION "E"-"E"

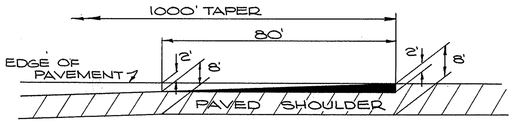

TYPICAL ACCELERATION LANE

TAPER DETAILS

ROADWAY DETAILS

K & E - AKRON

FED. RD. DIVISION	STATE	PROJECT		
2	OHIO			

251A

SUM-8-17.63

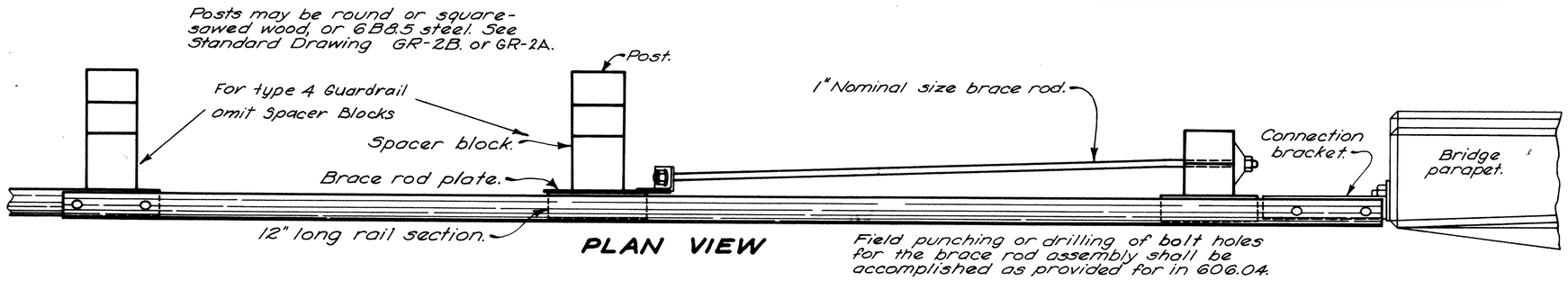

PLAN VIEW

Field punching or drilling of bolt holes for the brace rod assembly shall be accomplished as provided for in 606.04.

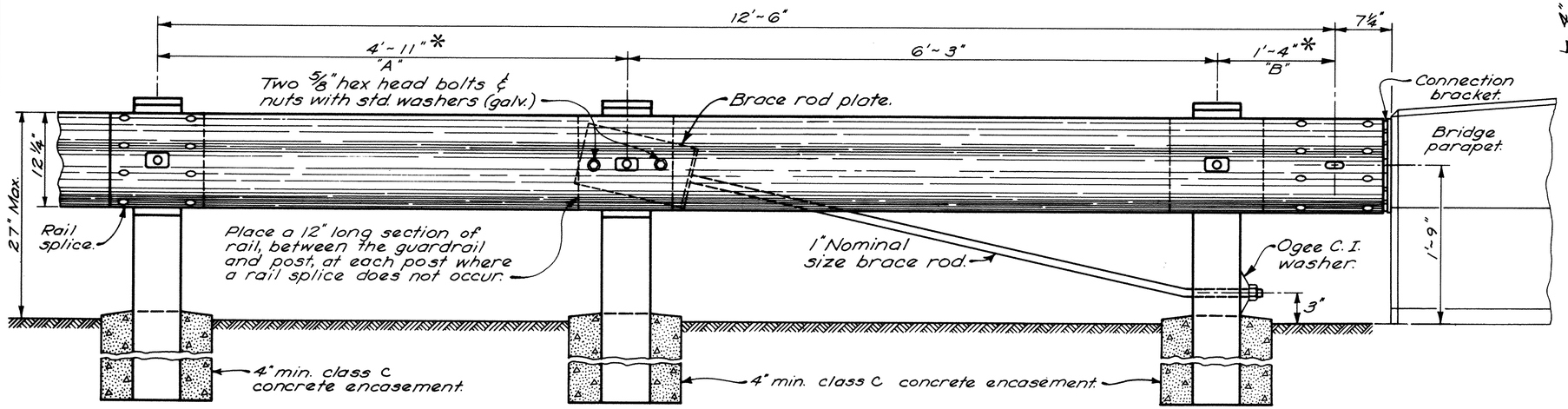

ELEVATION

GUARDRAIL TERMINAL AT BRIDGE

* Dimension "A" shall decrease as dimension "B" increases to accommodate interference by the bridge substructure.

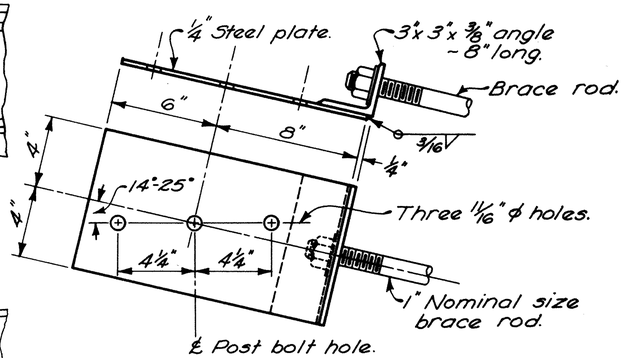

BRACE ROD PLATE

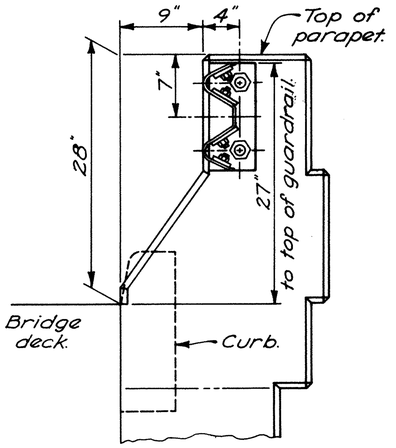

PARAPET APPROACH

For uncurbed approaches, guardrail shall be set 27" above ground line at face of rail. For curbed approaches guardrail shall be located 27" above gutter line and 9" behind the face of curb.

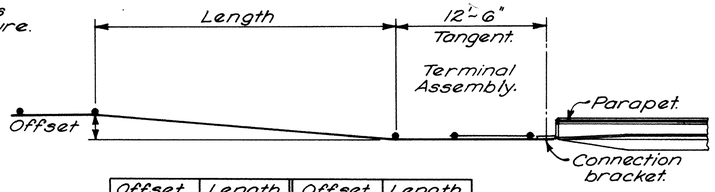

Offset	Length	Offset	Length
1'-0"	25.00'	5'-0"	100.00'
2'-0"	50.00'	6'-0"	100.00'
4'-0"	100.00'	7'-0"	100.00'

GUARDRAIL OFFSET DETAIL

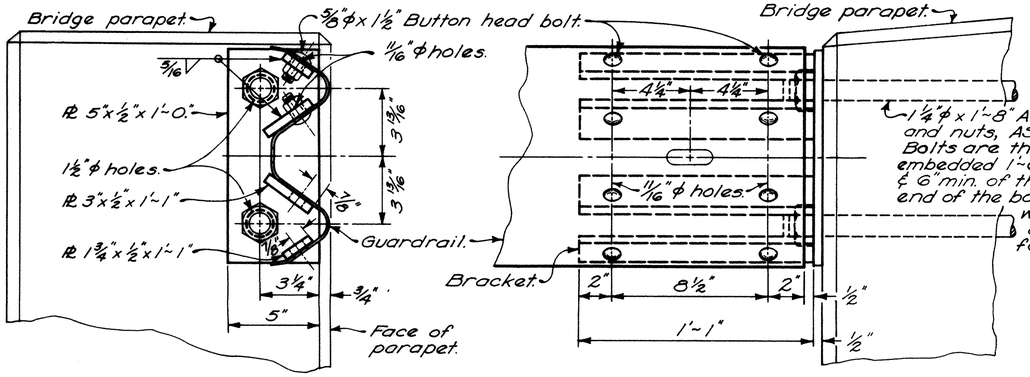

CONNECTION BRACKET DETAIL

GUARDRAIL ~ BRIDGE CONNECTION

The connection bracket shall be galvanized after welding and shall be included with guardrail for payment.

Rev. 7-10-98

FED RD DIVISION	STATE	PROJECT	
2	OHIO		

2518

SUM - 8 - 17.63

NOTES

For details not shown, see Standard Drawings GR-2A and GR-2B.

All steel parts shall be galvanized in accordance with ASTM A123, A153 or A525, whichever may apply.

This drawing shall govern where a conflict arises.

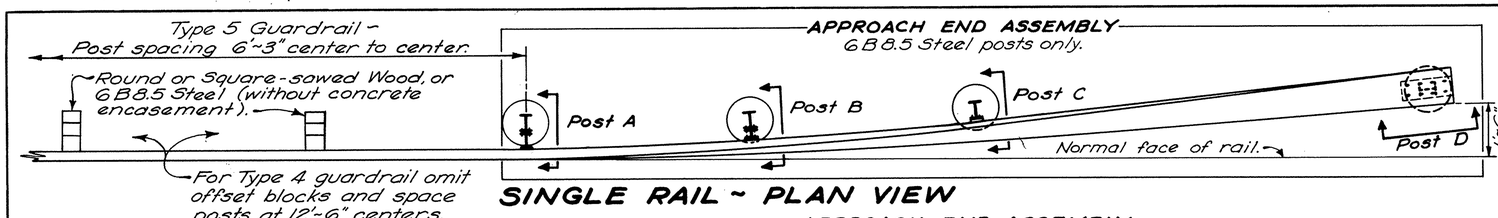

SINGLE RAIL ~ PLAN VIEW

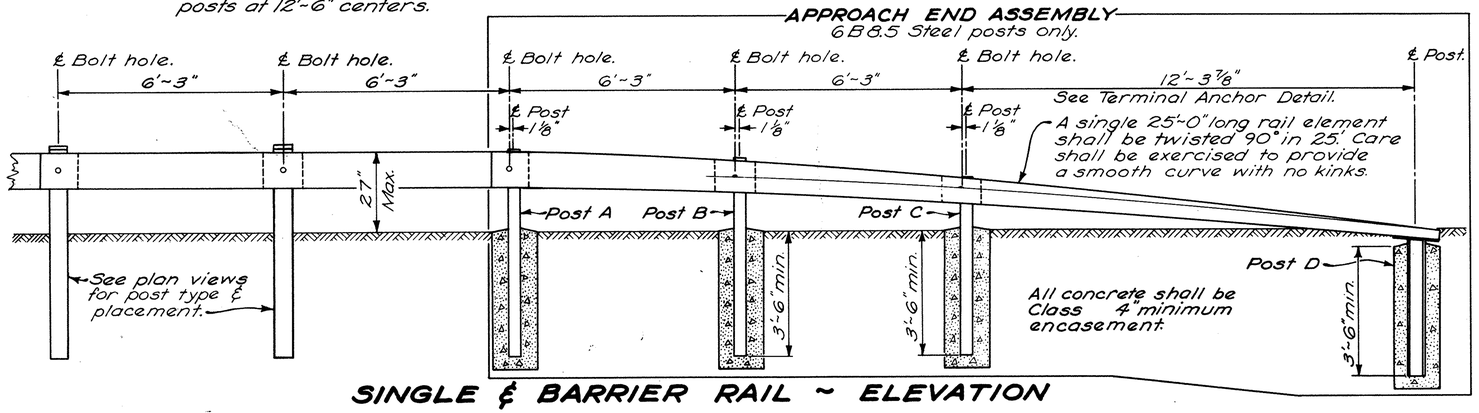

SINGLE & BARRIER RAIL ~ ELEVATION

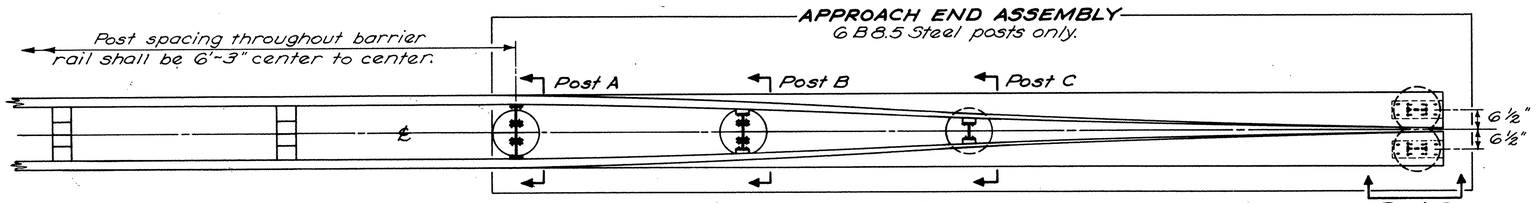

BARRIER RAIL ~ PLAN VIEW

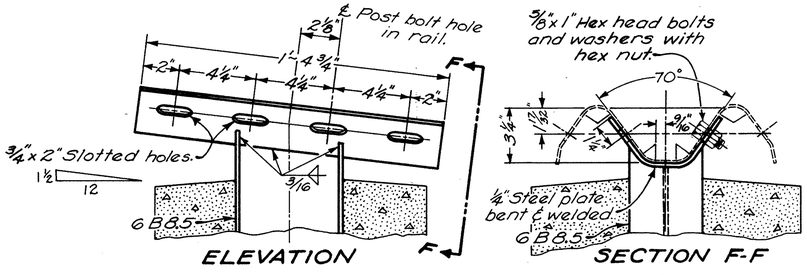

TERMINAL ANCHOR DETAIL

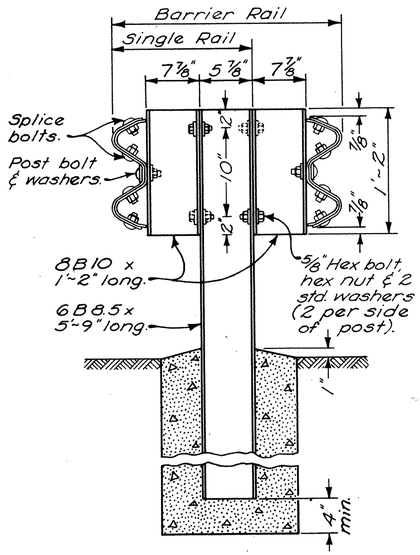

POST A

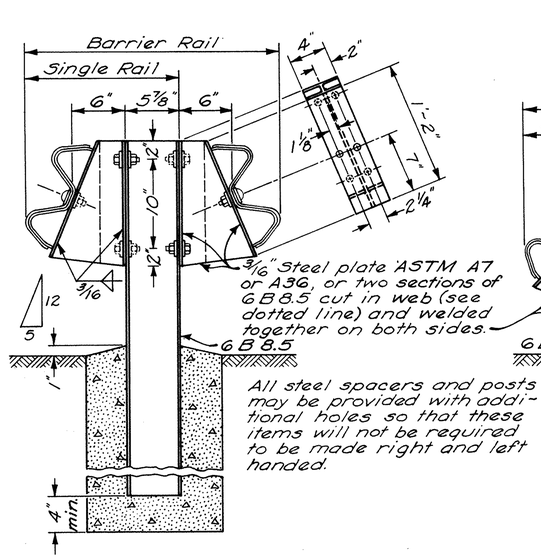

POST B

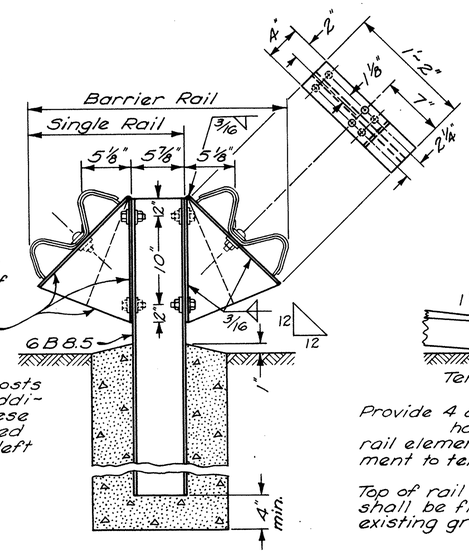

POST C

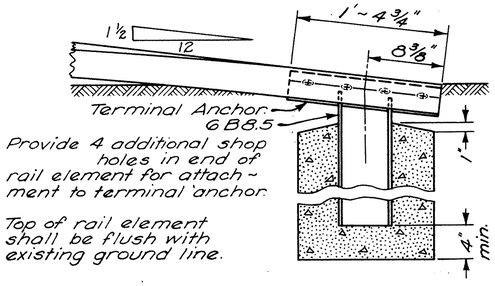

POST D

GR-4: GUARD RAIL ~ APPROACH END ASSEMBLY Rev. 2-15-68

FED. RD.	STATE	PROJECT	
2	OHIO		

258
460

SUM-8-17.63

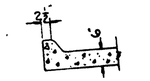

SECTION B-B

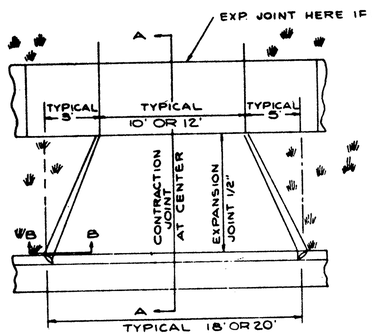

NOTE ALL DIMENSIONS SHOWN ARE TYPICAL UNLESS OTHERWISE NOTED ON PLANS

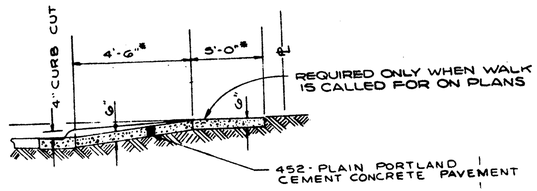

SECTION A-A

* NORMAL UNLESS OTHERWISE SHOWN

TYPICAL CONCRETE DRIVEWAY APPROACH

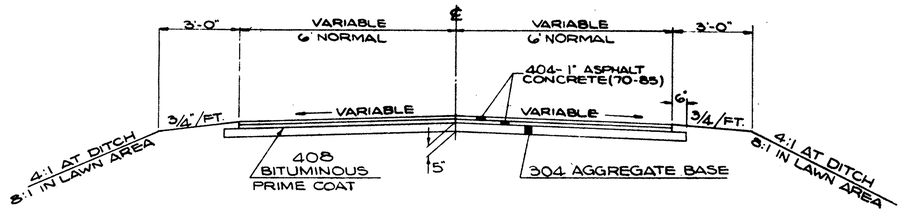

TYPICAL SECTION
ASPHALT CONCRETE DRIVE

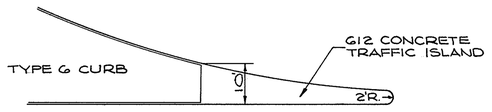

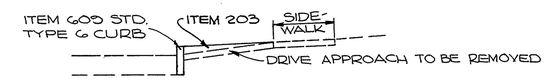

TYPICAL CURB REPLACE-MENT ABANDONED DRIVES

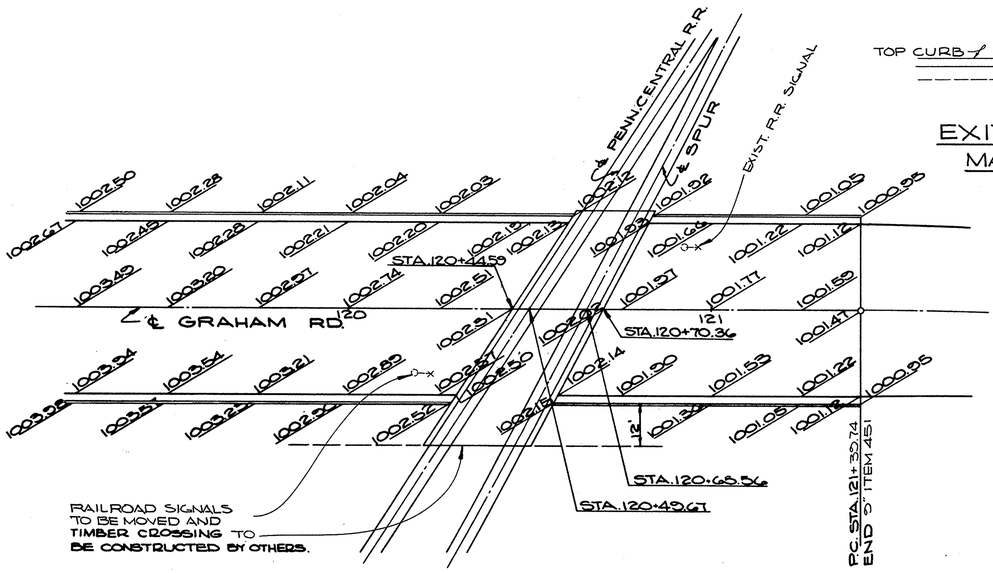

PENN. CENTRAL RAILROAD CROSSING DETAIL

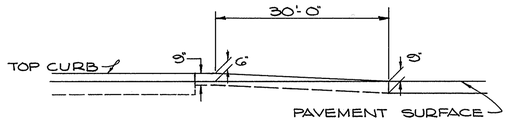

EXIT NOSE DETAIL
MAINLINE ONLY

NOTE:
SECTION AT NOSE SAME AS STD. TYPE B CURB.

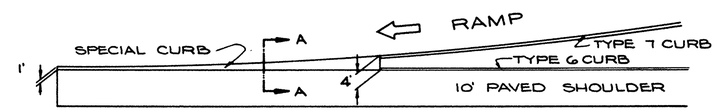

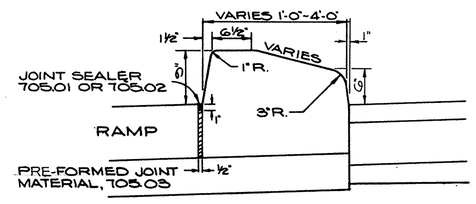

SECTION A-A

SPECIAL CURB DETAIL LOCATIONS

RAMP "L"
RAMP "M"
RAMP "N"
RAMP "Q"

ROADWAY DETAILS

FORM DDA-9

FED. RD.	STATE	PROJECT	
2	OHIO		

253
460

SUM - 8 17.63

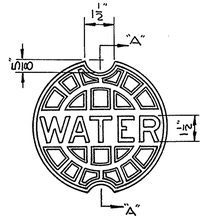

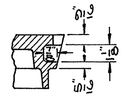

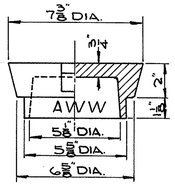

COVER
APPROXIMATE WEIGHT - 33 LBS

NOTES:
VALVE BOXES AND PARTS SHALL BE MADE FROM A GOOD QUALITY OF CAST IRON.

EACH CASTING SHALL BE COATED INSIDE AND OUT WITH COAL-TAR PITCH VARNISH, SIMILAR TO THAT USED FOR COATING CAST-IRON PIPE.
APPROXIMATE WEIGHT - BOX COMPLETE, (BASE, CENTER SECTION. TOP SECTION AND COVER) - 110 LBS.

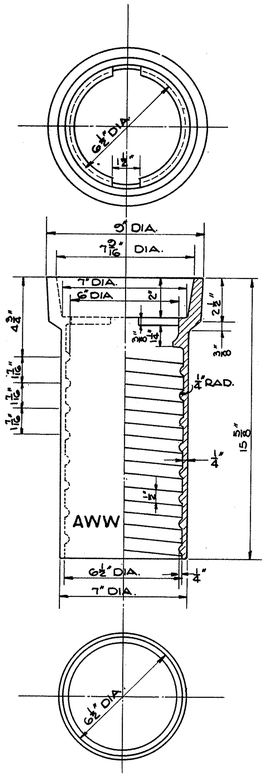

TOP SECTION
APPROXIMATE WEIGHT - 28 LBS.

NOTE:
TOP SECTION ALSO MADE IN 24" LENGTH

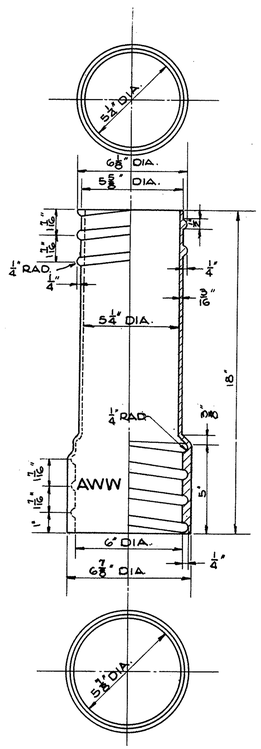

EXTENSION
APPROXIMATE WEIGHT - 20 LBS.

NOTE:
EXTENSIONS ALSO MADE IN 24" & 36" LENGTHS.

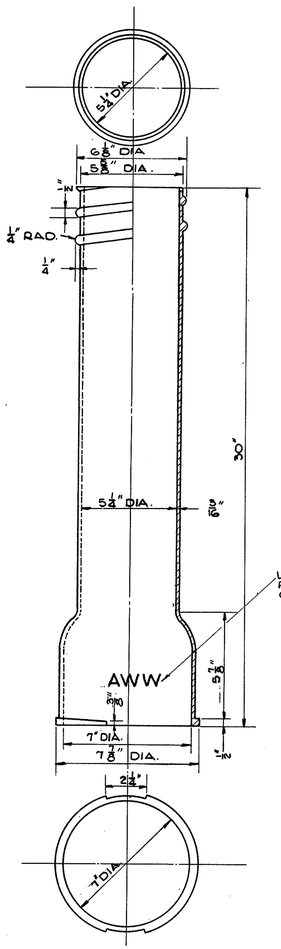

CENTER SECTION
APPROXIMATE WEIGHT - 35 LBS.

NOTE:
CENTER SECTIONS ALSO MADE IN 21" LENGTHS.

NOTE: A CLEARANCE OF 3/16" SHALL BE MAINTAINED BETWEEN SECTIONS AT ALL POINTS.

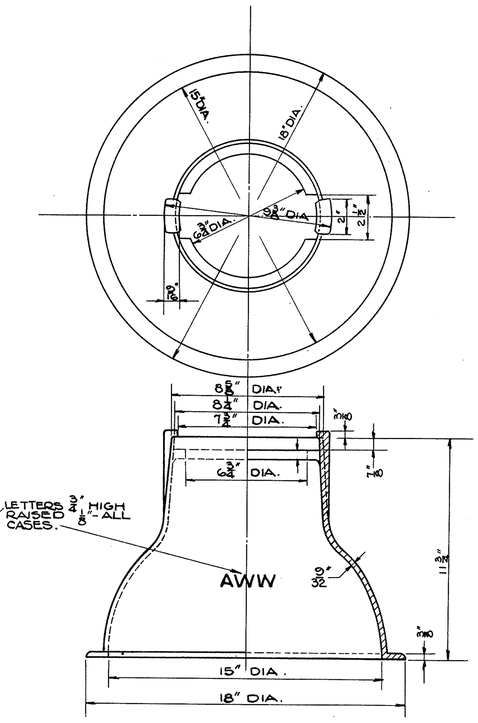

BASE
APPROXIMATE WEIGHT - 33 LBS.

STANDARD VALVE BOX

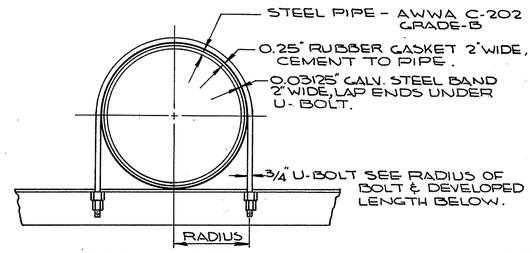

CLAMP DETAIL

NOTE: ALL METAL PARTS OF THIS ASSEMBLY SHALL BE FINISHED IN ACCORDANCE WITH SECTION 514 OHIO STATE HIGHWAY SPECIFICATIONS.

COST OF "U" BOLT AND CLAMP MATERIALS SHALL BE INCLUDED IN COST OF PIPE ITEM 814.

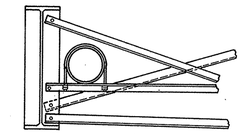

STEEL SUPPORT DETAIL
STEEL WATER MAIN IN BRIDGE STRUCTURE

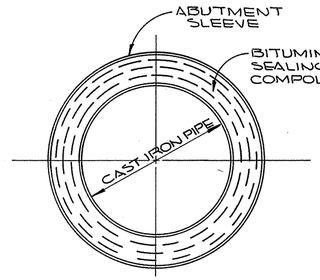

SECTION "A-A"
ABUT. SLEEVE DETAIL

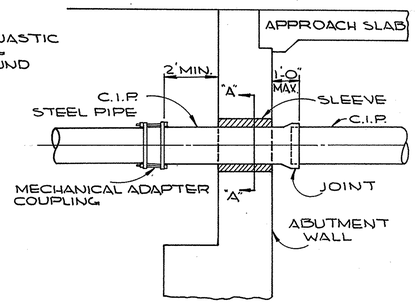

DETAIL
PLACEMENT OF WATER MAIN THROUGH ABUTMENT WALL

BRIDGE LOCATION	STEEL PIPE			U - BOLT	
	NOMINAL DIAMETER	OUTSIDE DIAMETER	WALL THICKNESS	RADIUS	DEVELOPED LENGTH
HUDSON DR.	6"	6.625"	0.25	3.57"	26.5"
BAILEY RD.	12"	12.75"	0.375	7.03"	42.0"

DETAILS OF WATER MAIN INSTALLATION IN BRIDGE STRUCTURE

DETAILS
UTILITIES AND WATER MAIN RELOCATION

FED. RD.	STATE	PROJECT	
2	OHIO		

254
460

SUM-8-17.63

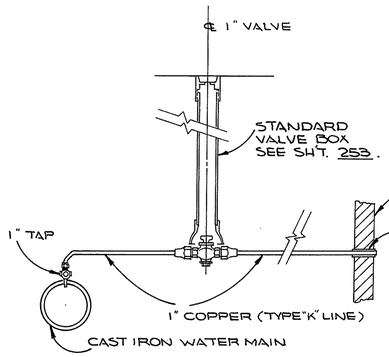

PAY ITEM 814 BLEEDER TAP ASSEMBLY - EACH
INCLUDES:
1" COPPER LINE
1" TAP
1" VALVE
STANDARD VALVE BOX
INSTALLATION INCLUDES TAPPING W. MAIN & RUNNING LINE INTO C.B. OR M.H. AS SHOWN ON PLAN.

BLEEDER TAP ASSEMBLY
(MANUAL AIR RELEASE)

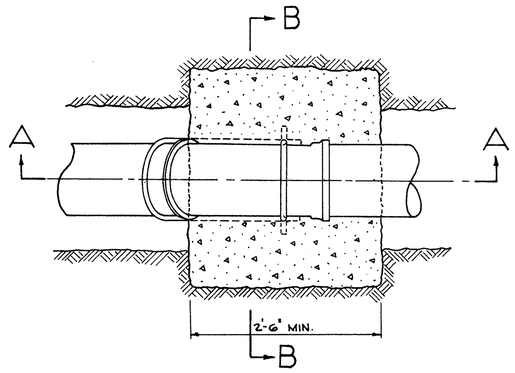

CLASS "E" CONCRETE, 1" DIA. RODS, AND OTHER MATERIALS TO BE INCLUDED IN UNIT PRICE BID FOR ITEM 814 "NEW WATER MAIN" PER LINEAR FT.

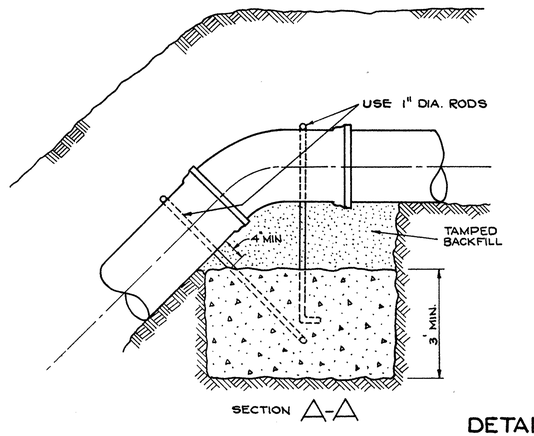

SECTION A-A

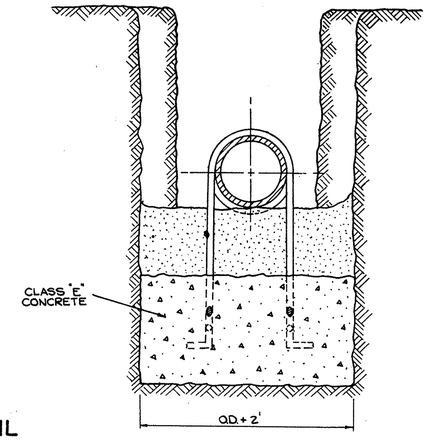

SECTION B-B

DETAIL
REACTION ANCHORAGE
TO BE USED WHERE REACTION BACKING IS REQUIRED FOR VERTICAL BENDS.

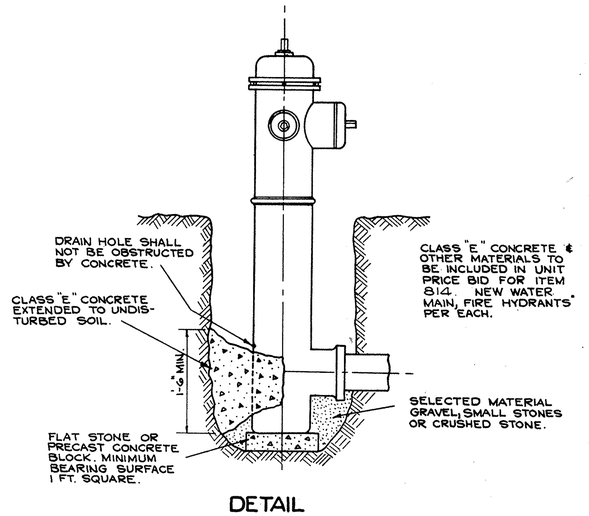

DETAIL
FIRE HYDRANT SETTING

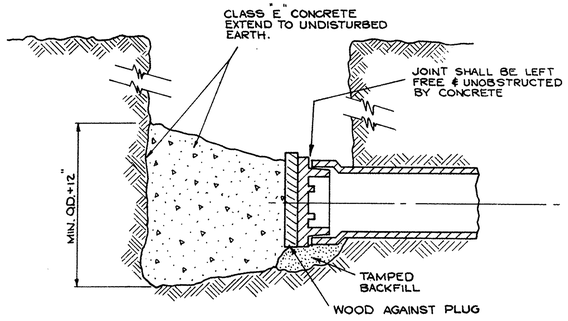

DETAIL
REACTION BACKING AT PLUG OR CAP

CLASS "E" CONCRETE TO BE INCLUDED IN UNIT PRICE BID FOR ITEM 814 "NEW WATER MAIN, CUT & PLUG" PER EACH.

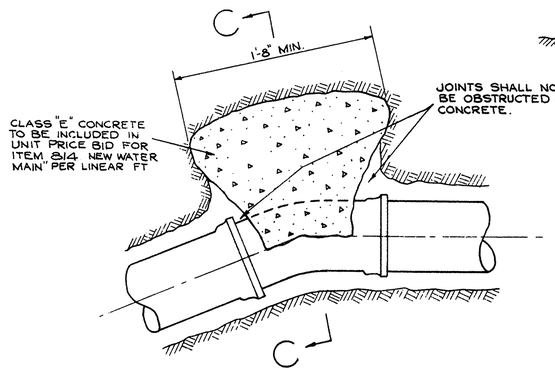

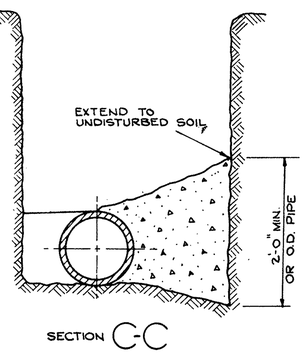

SECTION C-C

DETAIL
CONCRETE THRUST BLOCK
TO BE USED WHERE REACTION BACKING IS REQUIRED FOR HORIZONTAL BENDS.

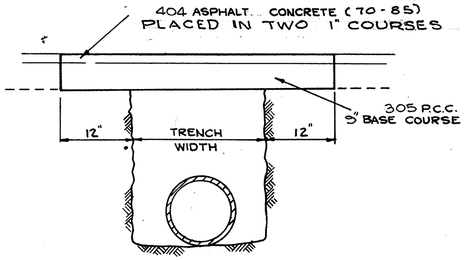

DETAIL
PAVEMENT REPLACEMENT

DETAILS
UTILITIES AND WATER MAIN RELOCATION

GENERAL LIGHTING NOTES

FED. RD.	STATE	PROJECT	
2	OHIO		

255
460

SUM-8-17.63

GENERAL

ELECTRIC POWER SUPPLYING AGENCY: CUYAHOGA FALLS MUNUNICIPAL ELECTRIC SYSTEM, 2550 BAILEY ROAD CUYAHOGA FALLS, OHIO 44221 --- OHIO EDISON CO., III CASCADE PLAZA, AKRON, OHIO, 44308

LIGHTING DESIGN

LIGHTING DESIGN IS BASED ON 1.0 TO 1.2 FOOTCANDLES INITIAL VALUE ON THE FREEWAY, RAMPS, BRIDGES AND CROSS STREETS. USE CLEAR MERCURY VAPOR LAMPS AND A MOUNTING HEIGHT OF 40 FEET ON THE FREEWAY AND 32.5 ON THE RAMPS. LUMINAIRES SHALL OVERHANG THE EDGE. PAVEMENT BY 3' ON THE FREEWAY AND 2' AT ALL OTHER LOCATIONS.

LIGHT POLE

AS EACH POLE IS ERECTED ON ITS FOUNDATION THE HAND HOLE COVER AND/OR TRANSFORMER BASE DOOR SHALL BE INSTALLED AND CLOSED TO PREVENT DIRT AND DEBRIS FROM ENTERING.

THE FOLLOWING SPECIFICATIONS FOR THE LIGHTING POLES ARE SUPPLEMENTARY TO SECTION 625.05 AND 713.01 INDICATING SPECIFIC ITEMS PERTAINING TO THIS PROJECT.

A. SHAFTS:
1. SHAFTS FOR MEDIAN MOUNTED POLES SHALL HAVE 1-1/4" BASE PLATES AS DETAILED ON SHEET NO. 264
2. SHAFTS SHALL HAVE A 4" X 10" HAND HOLE AS SHOWN ON HL-2 OR A 4" X 8" CAST STEEL FORM FITTING HAND HOLE AS SHOWN ON SHEET NO. 265 WITH BOLT ON COVER AND CAPTIVE CHAIN.
3. SHAFTS SHALL CONFORM TO THE MINIMUM REQUIREMENTS FOR DEFLECTION AND PERMANENT SET AS TABULATED FOR THE RESPECTIVE POLE SIZES IN THE FOLLOWING TABLE:
4. LIGHT POLE REFERENCE LETTER K SHALL BE FURNISHED WITH A POLE TOP WITH WIRE ENTRANCE AND WITH A 3/4" x 3½" HEX HEAD BOLT AND THREE FLAT WASHERS.

MECHANICAL PROPERTIES FOR LIGHT POLES

REFERENCE LETTER	POLE DESIGN NUMBER	SHAFT SIZE	TAPER INCHES FT.	GAUGE OF SHAFT	FOUNDATION ANCHOR BOLTS: BOLT SIZE	BOLT CIRCLE	PROJECTION	ARM LENGTH	MOUNTING HEIGHT	ELASTIC DEFLECTION RATE: INCHES PER 100 POUNDS	AT 2/3 OF YIELD STRESS: LOAD 18" DOWN FROM TOP	TOTAL DEFL. INCHES	PERMANENT SET-- INCHES	AT YEILD STRESS: LOAD 18" DOWN FROM TOP	TOTAL DEFL. INCHES	PERMANENT SET-- INCHES	TRANSFORMER BASE STYLE
A	11 A 8B 40	9" X 5.65" X 33'-6"	.10"	11	1" 40"	12.5	3"	8'-0	40.0	2.92	576	17.30	.50	865	28.30	3.00	----
B	11 T 8BB 41.2D	9" X 5.65" X 33'-6"	.10"	11	1" X 86"	8X18"	19"	8'-0	40.0'	2.92	576#	17.30	.50	865#	28.30	3.00	SPEC'L
~~C~~	~~11 A 10B 32.5~~	~~9.0" X 3.87 X 29'-6"~~	~~.14"~~	~~11~~	~~1" X 40"~~	~~11.0"~~	~~2 5/8"~~	~~10'-0~~	~~32.5'~~	~~3.32~~	~~517#~~	~~17.66~~	~~.50~~	~~776#~~	~~28.84~~	~~3.08~~	~~----~~
D	11 AT 10B 34.2	8.0" X 3.87" X 29'-6"	.14"	11	1" X 48"	15.0"	3 1/2"	10'-0	34.2'	3.32	577#	17.66	.50	776#	28.84	3.08	AT-A
E	7A 12B 32.5	9.0" X 4.87" X 29'-6"	.14"	7	1¼"x78" U-Bolt	12.5"	8"	12'-0	32.5'	2.16	659#	14.73	.50	989#	24.00	2.64	-----
F	11AT 12B 34.2'	9.0" X 4.87" X 29'-6"	.14"	11	1" x 48"	15.0"	3 1/2"	12'-0	34.2'	2.16	659#	14.73	.50	989#	24.00	2.64	AT-A
G	11A 12B 40.	9.0" X 5.65" X 33'-6"	.10"	11	1" X 40"	12.5"	3"	12'-0	40.0'	2.92	576#	17.30	.50	865#	28.30	3.00	-----
H	11A 15B 40	9.0" X 5.65" X 33'-6"	.10"	11	1" X 40"	12.5"	3"	15'-0	40.0'	2.92	576#	17.30	.50	865#	28.30	3.00	-----
J	11AT 15B 42	9.0" X 5.65" X 33'-6"	.10"	11	1" X 48"	17.25"	3 1/2"	15'-0	42.0'	2.92	576#	17.30	.50	865#	28.30	3.00	AT-C
K	7A 8B15B 40 D	9.0" X 5.65" X 33'-6"	.10"	7	1¼"x40"	12.5"	3"	8' and 15'-0	40.0	2.92	576	17.30	.50	865	28.30	3.00	------
	REFERENCE LETTER WILL BE USED IN PLAN TO INDICATE THE LIGHT POLE TO BE USE AT A GIVEN STATION																
L	7A 8B 40	9.0" x 5.65" x 33'-6"	.10"	7	1¼" x 78" U-Bolt	12.5"	3"	8'-0	40.0'	1.96	895	18.1	.50	1340	29.5	3.1	-----
M	7A 15 B 40	9.0" x 5.65" x 33'-6"	.10"	7	1¼" x 78" U-Bolt	12.5"	3"	15'-0	40.0'	1.96	895	18.1	.50	1340	29.5	3.1	-----
N	(DESIGNED FOR	REFERENCE "M" POLE)			1¼" x 78" U-Bolt	12.5"	3"		(FOR	FUTURE			USE)				-----

LIGHT POLE DESIGN LEGEND "T" STEEL TRANSFORMER BASE

GAGE (11,7,3,0) — 11 A 6B 40 D

- BASE TYPE ("A"= ANCHOR, "AT"= ALUMINUM TRANSFORMER)
- BRACKET ARM (S)●"B" INDICATES ARM LENGTH IN FEET
- SPECIAL FEATURES
- MOUNTING HEIGHT - VERTICAL DISTANCE FROM TOP OF FOUNDATION TO LUMINAIRE END OF BRACKET ARM.

"B" = SINGLE ARM
"ON"= POST TOP
"BB"= DOUBLE ARMS
(IF UNEQUAL ARM EX: 10B 15B)

LIGHT POLE FOUNDATION:

LIGHT POLE FOUNDATION IN GENERAL SHALL BE AS SPECIFIED IN SECTION 625.06 AND AS DETAILED ON HL-1, EXCEPT TOP SHALL BE A MAXIMUM OF 1" ABOVE GRADE AND 2'-0" BACK OF FACE OF GUARDRAIL IN LIEU OF DIMENSIONS SHOWN ON STANDARD CONSTRUCTION DRAWING HL-1.

FOUNDATION TOPS SHALL HAVE DRAIN-VENT GROOVES AS DETAILED ON THE DRAWING LIGHTING DETAILS SHEET NUMBER 262.

REFER TO FOUNDATION DETAILS SHEET 263 FOR DETAILS AND DIMENSIONS OF FOUNDATIONS FOR MEDIAN MOUNTED POLES.

WHERE SUBSURFACE OBSTRUCTIONS ARE ENCOUNTERED, THE ENGINEER MAY REQUIRE THE CONTRACTOR TO: REMOVE THE OBSTRUCTION, OR REPLACE THE EXCAVATED MATERIAL AND RELOCATE THE FOUNDATION AS DIRECTED BY THE ENGINEER. ALSO WHERE SOLID ROCK IS ENCOUNTERED, THE REMAINING DEPTH TO BE EXCAVATED MAY BE DECREASED AS DIRECTED BY THE ENGINEER TO A MAXIMUM OF 50 PERCENT.

TRANSFORMER BASE

TRANSFORMER BASES SHALL CONFORM TO ALL SIZES AND DIMENSIONS AS SHOWN ON SHEET NO. 262 AND SHEET NO. 264.

THE COST OF TRANSFORMER BASES SHALL BE INCLUDED IN THE CONTRACT UNIT PRICES FOR THEIR RESPECTIVE LIGHT POLES.

LUMINAIRE

ROADWAY LUMINAIRES SHALL HAVE SOCKET IN POSITION TO EFFECT USASI-IES MEDIUM CUTOFF TYPE II OR TYPE III DISTRIBUTION AS SPECIFIED IN LEGEND.

BALLAST FOR 400 WATT AND 250 WATT LUMINAIRES SHALL BE DUAL-VOLTAGE RATED AT 240/480 VOLTS, CONNECT BALLAST FOR 480 VOLTS.

BALLASTS FOR 700 WATT LUMINAIRES SHALL BE SINGLE VOLTAGE RATED 480 VOLTS.

250 WATT LUMINAIRES SHALL BE GENERAL ELECTRIC FORM M250R, WESTINGHOUSE TYPE OV-14, OR MCGRAW EDISON UNISTYLE 250W, OR OTHER MANUFACTURER'S APPROVED EQUAL.

400 WATT LUMINAIRES SHALL BE GENERAL ELECTRIC FORM M-400, WESTINGHOUSE TYPE OV-25, OR MCGRAW-EDISON UNISTYLE 400 W, OR OTHER MANUFACTURER'S APPROVED EQUAL.

700 WATT LUMINAIRES SHALL BE GENERAL ELECTRIC FORM M-1000 W/700 W BALLAST, WESTINGHOUSE TYPE OV-50, OR MCGRAW-EDISON UNISTYLE 700 W, OR OTHER MANUFACTURER'S APPROVED EQUAL.

LUMINAIRES PREDOMINATELY ILLUMINATING A MAIN LINE ROADWAY SHALL BE POSITIONED PERPENDICULARLY THERETO.

LAMP

MERCURY LAMPS SHALL BE GENERAL ELECTRIC "BONUS LINE", WESTINGHOUSE "LIFEGUARD", SYLVANIA "ROUGH SERVICE", OR AN APPROVED EQUAL.

PULL BOX

THE FOLLOWING SPECIFICATIONS FOR PULL BOXES ARE SUPPLEMENTARY TO SECTIONS 625.11 AND 713.09.

ALL PULLBOXES SHALL BE 18" DIAMETER CORRUGATED METAL.

THE CONTRACTOR SHALL CUT ONLY THE NECESSARY SIZE AND LENGTH OF EXTRA SLOTS FOR DUCT CABLE, OR HOLE FOR CROSS OVER CONDUIT AS DETERMINED FOR EACH LOCATION.

THE PULL BOX SHALL PROJECT A MAXIMUM OF 1" ABOVE FINISHED GRADE IN LIEU OF 1-1/2" MINIMUM AS SHOWN ON HL-3.

TRENCH

THE CONTRACTOR SHALL DO ALL EXCAVATION OF EVERY DESCRIPTION TO THE DIMENSIONS AND LEVELS SHOWN ON THE PLANS, OR AS DIRECTED BY THE ENGINEER. EXCAVATION MAY BE ACCOMPLISHED WITH MECHANICAL TRENCHING AND BORING EQUIPMENT EXCEPT THAT THE CONTRACTOR MAY NOT USE A TRENCHER THAT PRODUCES SUCH LIFTING FORCE AS TO DESTROY THE EDGE OR SIDEWALK.

WITHOUT PRIOR APPROVAL OF THE ENGINEER, EXCAVATIONS FOR TRENCHES SHALL NOT EXCEED 12 INCHES IN WIDTH.

THE TRENCH ALIGNMENT SHALL BE IN ACCORDANCE WITH STANDARD CONSTRUCTION DRAWING HL-1.

"ALTERNATE TRENCH ALIGNMENT SHALL ONLY BE USED AS NOTED ON STANDARD CONSTRUCTION DRAWING HL-1. WHEN CABLE IS USED IN CLOSE PROXIMITY TO BACK OF CURB, THE 4'-6" DEEP TRENCH SHALL NOT BE EMPLOYED UNLESS THE CABLE IS INSTALLED BEFORE THE CURB IS SET. IF THERE IS EXISTING CURB OR IF NEW CURB IS INSTALLED BEFORE THE CABLE TRENCH IS PUT IN, STANDARD TRENCH ALIGNMENT SHALL BE EMPLOYED AND EXTREME CARE TAKEN TO ASSURE THAT THE BED FOR CURB IS NOT DISTURBED OR UNDERMINED AND THAT ANY DISPLACED POROUS BACKING IS REPLACED".

CONDUIT

RIGID FERROUS METAL CONDUIT CONFORMING TO SECTION 625.13 AND 713.04 SHALL BE USED GENERALLY THROUGHOUT THE PROJECT.

USE 3" TYPE II OR III CONDUIT FOR ALL CROSS OVER CONDUITS.

USE 2" TYPE II OR III CONDUIT FOR ALL RUNS IN BRIDGES WHERE CONDUIT IS ENCASED IN CONCRETE.

PROVIDE CONDUIT EXPANSION COUPLING FOR RIGID FERROUS METAL CONDUIT AT ALL CONSTRUCTION AND EXPANSION JOINT THROUGHOUT A CONDUIT RUN WHEN CONDUIT IS ENCASED IN CONCRETE. AN EXPANSION COUPLING SHALL ALSO BE PROVIDED AT EVERY CONDUIT ENTRANCE FROM UNDERGROUND INTO CONCRETE ENCASEMENT.

POLYVINYL CHLORIDE PLASTIC CONDUIT CONFORMING TO SECTION 625.13 AND 713.07 SHALL BE USED IN THE CONCRETE BARRIER MEDIAN.

USE 4" TYPE I CONDUIT IN THE BARRIER MEDIAN.

DISTRIBUTION CIRCUIT CABLE

THIS SPECIFICATION FOR ELECTRICAL CABLE IS SUPPLEMENTARY TO SPECIFICATION 713.02 "ELECTRICAL CABLE" FOR THIS PROJECT.

ALL ELECTRICAL CABLE IN CONDUIT SHALL BE NO. 2 AWG; POLE AND BRACKET CABLE SHALL BE NO. 10 AWG, 19 STRAN IN LIEU OF 7 STRAN IN SPECIFICATION 713.02

UNIT TYPE DUCT-CABLE SHALL BE FURNISHED IN 1-1/2" NORMAL SIZE WITH TWO (2) NO. 2 AWG INSULATED CABLES, CONFORMING TO SPECIFICATION 713.03.

ALL CABLES, EXCEPT STRUCTURE GROUNDING SYSTEM CABLE, ENTERING AN ACCESSIBLE ENCLOSURE SUCH AS A PULL BOX, JUNCTION BOX, LIGHT POLE BASE, DEVICE HOUSING, ETC., FOR THE PURPOSE OF BEING TERMINATED OR CONNECTED TO ANOTHER CABLE SHALL BE IDENTIFIED IN SUCH ENCLOSURE WITH THE MATERIAL OR DEVICES SPECIFIED IN 713.18. PAYMENT FOR CABLE IDENTIFICATION SHALL BE INCLUDED IN THE UNIT PRICE BID FOR CABLE.

ALL CABLES SHALL BE WITHOUT SPLICES BETWEEN TERMINATIONS, EXCEPT THAT EXOTHERMICALLY WELDED JOINTS IN STRUCTURE GROUNDING CABLE SHALL NOT BE CONSIDERED AS SPLICES FOR THIS PURPOSE.

SEALING

CONDUIT AND DUCT-CABLE TERMINALS MUST BE SEALED AS SPECIFIED IN 625.13 AND 625.15 IMMEDIATELY UPON COMPLETION OF EACH INDIVIDUAL INSTALLATION. WHEN THE INSTALLATION OF CONDUIT AND DUCT-CABLE IS INTERMITTENT, THEY SHALL BE PROTECTED BY TEMPORARY SEALING OR CAPPING THROUGHOUT THE PROGRESS OF THE WORK. THIS MAY VARY FROM OVERNIGHT, BETWEEN WORK DAYS TO EXTENDED PERIODS OF TIME WHEN PARTIAL INSTALLATIONS ARE LEFT DORMANT BEFORE FINAL COMPLETION.

EMPTY CONDUITS SHALL BE CAPPED IMMEDIATELY AFTER INSTALLATION AND REMAIN CAPPED UNTIL INSERTION OF PULL WIRE OR CABLE. ALL CABLE CONNECTOR KITS AND EXPOSED CABLE ENDS SHALL BE ADEQUATELY PROTECTED BY BEING ENCLOSED IN PLASTIC BAGS, BY TAPING OR BY OTHER APPROVED MEANS UNTIL FINAL CONNECTIONS ARE MADE. PAYMENT FOR ALL PROTECTIVE SEALING, TAPING, BAGGING, ETC., BOTH TEMPORARY AND FINAL SHALL BE INCLUDED IN THE BID PRICE FOR THE RESPECTIVE ITEM INVOLVED.

FORM D D A-1

GENERAL LIGHTING NOTES

FED. RD.	STATE	PROJECT	
2	OHIO		

256
460

SUM-8-17.63

CONNECTIONS

CONNECTIONS CONFORMING TO SECTION 713.15, SECTION 625.17 AND AS SPECIFIED SHALL BE USED FOR ALL CONNECTIONS.

CONNECTOR KITS SHALL BE USED AS FOLLOWS:

IN CORRUGATED METAL PULL BOXES	TYPE 1 UNFUSED KIT FOR BOTH CIRCUIT CABLES WHEN STRAIGHT THROUGHOUT. TYPE IIIB UNFUSED KIT FOR BOTH CIRCUIT CABLES WHERE TAP IS REQUIRED.
IN LIGHT POLES WITh SINGLE BRACKET ARM	TYPE II FUSED KIT IN HOT LEG, TYPE III UNFUSED KIT AND COMPRESSION CONNECTOR IN GROUND LEG AS SHOWN IN HL-3.
IN LIGHT POLE WITH DOUBLE BRACKET ARM	SEE SINGLE BRACKET ARM INSTALLATION AND SHEET 264.
IN COMBINATION POLES	TYPE II FUSED KIT IN HOT LEG, TYPE III UNFUSED KIT IN GROUND LEG AND (3) COMPRESSION CONNECTORS.
IN STRUCTURAL JUNCTION BOXES FOR BRIDGE LIGHT POLES.	TYPE II FUSED KIT IN HOT LEG AND TYPE III UNFUSED KIT IN GROUND LEG.

TYPE II FUSED AND TYPE III UNFUSED SHALL BE USED AT THE LAST LIGHTING POLE IN A CIRCUIT BY PLUGGING THE UNUSED PORTION OF THE CONNECTOR KIT.

SUFFICIENT SLACK SHALL BE PROVIDED IN THE CABLE TO ALLOW CONNECTOR KITS TO BE REMOVED THROUGH THE HAND HOLES FOR TESTING, REFUSING, ETC.

ALL FUSED KITS SHALL BE FURNISHED WITH A 600 VOLT FUSE, INTERRUPTING RATING 100,000 AMPS RMS INSTANTANEOUS, AMP RATING AS FOLLOWS:

LAMP RATING	FUSE RATING	LAMP RATINGS	FUSE RATING
1 - 250 WATT	6 AMPERES	2 - 250 WATTS	6 AMPERES
1 - 400 "	6 "		
1 - 700 "	10 "	2 - 700 "	15 "

STRUCTURE GROUND

GROUNDING IN GENERAL SHALL FOLLOW SECTION 625.20. THE SPECIFIC GROUNDING REQUIREMENTS FOR EACH STRUCTURE SHALL BE AS FOLLOWS:

GROUND CABLE SHALL BE NO. 1/0 AWG, SEVEN STRAND, SOFT ANNEALED COPPER CABLE, ENCASED IN OUTSIDE COLUMN OF EACH STRUCTURE AT FIXED PIER. EACH STRUCTURE AND SECTION OF THE STRUCTURES SHALL BE JOINED BY A JUMPER CABLE EXOTHERMICLY WELDED TO EACH BEAM

SUM 8-17.72 PIER NO. 1 IS FIXED, HAVING NO PILING. CUYAHOGA RIVER

SUM 8-18.00 PIER NO. 2 IS FIXED, HAVING NO PILING. FRONT STREET

SUM 8-18.12 PIER NO. 2 IS FIXED, HAVING NO PILING. SECOND STREET

SUM 8-18.25 PIER NO. 1 IS FIXED, HAVING NO PILING. BAILEY ROAD

SUM 8-18.45 PIER NO. 1 IS FIXED, HAVING NO PILING. HUDSON DRIVE

SUM 8-19.50 PIER NO. 2 IS FIXED GRAHAM ROAD

FOR STRUCTURAL GROUND SEE NOTE ON HL-4

STRUCTURE GROUND CABLE

THIS SPECIFICATION IS IN LIEU OF SPECIFICATION 713.17 "STRUCTURE GROUND CABLE" FOR THIS PROJECT.

STRUCTURE GROUND CABLE SHALL BE SIZE 1.0 AWG. 7-STRAND, SOFT OR ANNEALED BARE COPPER CABLE CONFORMING TO ASTM B-8, CLASS A.

STRUCTURAL JUNCTION BOX

BRIDGE CABLE RACEWAY TYPE "B" SHALL BE USED. JUNCTION BOXES SHALL BE 16" X 12" X 6" IN LIEU OF SIZE AS SHOWN ON HL-4 AND SHALL BE OZ #YR161206, THOMAS & BETTS #10998, KILLARK TYPE WWB OR APPROVED EQUAL.

EXPANSION FITTINGS FOR CONDUIT ON STRUCTURES SHALL BE OZ TYPE AX OR SPRING CITY TYPE AF FOR 4 INCH CONDUIT MOVEMENT

CONTROL CENTER

THE FOLLOWING SPECIFICATIONS FOR THE CONTROL CENTER ARE SUPPLEMENTORY TO SECTION 625.18 AND 713.19 INDICATING SPECIFIC ITEMS PERTAINING TO THIS PROJECT:

(HEAVYDUTY SAFETY SWITCH)

VOLTS	AMPS.	SQUARE D	COLUMBUS ELEC. WORKS	TWYCO ENG. CO.	CONTROL SYS. & EQUIP. CO.
600	30	W999FA221A	CEW101SS4630	T3300OSS	Z30
600	60	W999FA231	CEW101SS4660	T3600OSS	Z60

LIGHTING CONTROLLER

VOLTS	AMPS.	SQUARE D	COLUMBUS ELEC. WORKS	TWYCO ENG. CO.	CONTROL SYS. & EQUIP. CO.
600	30	W939FA609A	CEW17SS4630	T3303OSS	Z3030
600	60	W939FA610A	CEW17SS4660	T3606OSS	Z6060

PHOTOELECTRIC CELL
PHOTOELECTRIC CELL AND MOUNTING BRACKET SHALL BE TORK 200B WITH MOUNTING HARDWARE, FISHER-PIERCE 6660 WITH MOUNTING HARDWARE, GENERAL ELECTRIC C402G200 WITH MOUNTING HARDWARE OR APPROVED EQUAL.

TRANSFORMER ENCLOSURES
TRANSFORMER ENCLOSURES SHALL BE THE MINIMUM SIZE AND DIMENSIONS AS SHOWN ON THE TRANSFORMER ENCLOSURE DETAIL. TRANSFORMER ENCLOSURES SHALL BE ON A CONCRETE PAD AS DETAILED ON THE ABOVE MENTIONED DRAWING.

TRANSFORMER ENCLOSURES SHALL BE LINE MATERIAL DU15E1, GENERAL ELECTRIC COMPANY HTE 6441 OR APPROVED EQUAL.

PAYMENT FOR ITEM 625 CONTROL CENTER WILL BE MADE UNDER LUMP SUM PRICE. INCLUDED IS THE TRANSFORMER ENCLOSURE SET IN PLACE, CONCRETE MOUNTING PAD WITH ANCHOR BOLTS IN PLACE, ALL NECESSARY WIRING, CONDUIT, CONDUIT ELLS, GROUND RODS, PHOTOELECTRIC CELL AND HEAVY DUTY SAFETY SWITCH AND LIGHTING CONTROLLER.

BASIS OF PAYMENT

THIS SPECIFICATION IS SUPPLEMENTARY TO 625.25 "BASIS OF PAYMENT".

PAYMENT FOR JUNCTION BOXES IN TYPE B RACEWAY CONDUIT SHALL INCLUDE THE 1 1/2" DIAMETER 90° CONDUIT ELBOW SHOWN ON STANDARD CONSTRUCTION DRAWING HL-4.

PAYMENT FOR RACEWAY CONDUIT ON STRUCTURES SHALL INCLUDE THE 3/4" DRAIN AS SHOWN ON HL-4.

PAYMENT FOR ITEM 625 "CONCRETE ENCASED CONDUIT" WILL BE MADE UNDER A LINEAR FOOT PRICE AND SHALL BE A 6" MINIMUM CONCRETE ENCASEMENT

PRIMARY FEED to CONTROL CENTER "GR"

Payment for this item shall be made under LUMP and shall include primary cable, cable terminations, 3 inch metal conduit, stand-off brackets as furnished by the Ohio Edison Company, 3 inch fiber conduits, concrete encasement, trenching, backfilling and all incidentals necessary to provide PRIMARY FEED complete and accepted.

ESTIMATED QUANTITIES BY J.J.M.
CHECKED BY H.C.S.

FED.RD.	STATE	PROJECT	
	OHIO		

SUM-8-17.63

257/460

ESTIMATED LIGHTING QUANTITIES

TYPE CODE 7221

LINE NO.	ITEM	STRUCTURES: SUM 8 1772	SUM 8 1800	SUM 8 1812	SUM 8 1825	SUM 8 1845	SUM 8 1950	ROADWAY	SUBTOTAL CUY. FALLS STATE FEDERAL	STRUCTURES: SUM 8 1927	SUM 8 1950	ROADWAY	SUBTOTAL STATE FEDERAL	PROJECT GRAND TOTAL	ITEM	UNIT	DESCRIPTION	LINE NO.
SHEET NO.		258	258	258	259	259	261	258 / 259 / 260 / 261		260	261	261						
1	G25							3 /	3					3	625	EACH	LIGHT POLE - DESIGN 11 A 8B 40	A 1
2	G25							12 / 6	18					18	625	EACH	LIGHT POLE -DESIGN 11 T 8BB 41.2 D	B 2
			4	2				/	6					6	625	EACH	LIGHT POLE DESIGN 7A8B40	L
3	G25														~~625~~	~~EACH~~	~~LIGHT POLE W/10'-0" BRACKET ARM DESIGN 11 A 10B 39.5~~	C 3
4	G25							10 / 4 / 7	21			11	11	32	625	EACH	LIGHT POLE -DESIGN 11 AT 10B 34.2	D 4
		1						/	1					1	625	EACH	LIGHT POLE DESIGN 7A15B 40.0	M
5	G25						1	/	1		1		1	2	625	EACH	LIGHT POLE -DESIGN 7 A 12B 32.5	E 5
6	G25							3 / 4	7			5	5	12	625	EACH	LIGHT POLE -DESIGN 11 AT 12B 34.2	F 6
7	G25							13 /	13					13	625	EACH	LIGHT POLE -DESIGN 11 A 12B 40.0	G 7
8	G25							5 /	5					5	625	EACH	LIGHT POLE -DESIGN 11 A 15B 40.0	H 8
9	G25							4 / 15 / 23 / 7	49			13	13	62	625	EACH	LIGHT POLE -DESIGN 11 AT 15B 42.0	J 9
								/	1			/	2	2	625	EACH	LIGHT POLE DESIGN 7A8B15B 40.0 D	K
10	G25							/ 1 / / 1	2					2	625	EACH	12'-0" BRACKET ARM	10
11	G25							/ 1 / 1 /	2					2	625	EACH	15'-0" BRACKET ARM	11
12	G25							13 / 4 / 11	28			16	16	44	625	EACH	LIGHT POLE FOUNDATION 24" X 6' DEEP MIN.	12
13	G25							25 / 15 / 23 / 7	70			13	13	83	625	EACH	LIGHT POLE FOUNDATION 24" X 8' DEEP MIN.	13
14	G25							12 / 6	18					18	625	EACH	LIGHT POLE FOUNDATION 24" X 48" X 8' DEEP MIN.	14
15	G25							/										15
16	G25	1						30 / 28 / 22 / 7	88			13	13	101	625	EACH	LUMINAIRE, TYPE III 1000 WATT MERCURY, 7/3.11	16
17	G25		4	2				19 / 1 / /	20					20	625	EACH	LUMINAIRE, TYPE II 1000 WATT MERCURY, 7/3.11	17
18	G25						1	13 / 4 / / 13	31		1	16	17	48	625	EACH	LUMINAIRE, TYPE II 400 WATT MERCURY, 7/3.11	18
19	G25							/ / 2 /	2					2	625	EACH	LUMINAIRE, TYPE II 250 WATT MERCURY, 7/3.11	19
20	G25							/		2			2	2	625	EACH	LUMINAIRE, TYPE II 250 WATT MERCURY W/250 WATT BALLAST W/ PHOTO CELL	20
21	G25	1	4	2				49 / 29 / 22 / 7	114			13	13	127	625	EACH	MERCURY VAPOR LAMP, 700 WATT, 7/3.14	21
22	G25						1	13 / 4 / / 13	31		1	16	17	48	625	EACH	MERCURY VAPOR LAMP, 400 WATT, 7/3.14	22
23	G25							/ / 2 /	2		2		2	4	625	EACH	MERCURY VAPOR LAMP 250 WATT, 7/3.14	23
24	G25							4 / 4 / / 2	10			1	1	11	625	EACH	GLARE SHIELD, 7/3.11, 700 WATT LUMINAIRE	24
25	G25							55 / 28 / 24 / 28	135	/		29	30	165	625	EACH	GROUND ROD	25
26	G25							22 / 17 / 3 / 10	52	1		15	16	68	625	EACH	PULL BOX, CIRCULAR, 18", 7/3.09	26
27	G25							1655 / 2335 / /	3990					3990	625	L.F.	TRENCH 19" DEEP	27
28	G25							/ 1050 / 3940 / 1780	6770			3344	3344	10114	625	L.F.	TRENCH, 24" DEEP	28
29	G25							5606 / 3089 / 1516 / 1410	11621			2585	2585	14206	625	L.F.	TRENCH, 4'-6" DEEP	29
30	G25							435 /	435					435	625	L.F.	CONDUIT, 3" TYPE II OR III, 7/3.04	30
31	G25	135	870	255	230	205	290	/ 450 / / 140	2575		290	320	610	3185	625	L.F.	CONDUIT, 2" TYPE II OR III, 7/3.04	31
32	G25							80 / / 200	280			80	80	360	625	L.F.	CONDUIT, 6" CONCRETE ENCASED, 3" TYPE II OR III, 7/3.04	32
33	G25							2005 / 1400 / /	3405					3405	625	L.F.	CONDUIT, POLYVINYL CHLORIDE PLASTIC, 4" TYPE I, 7/3.07	33
34	G25	320	1780	590		430	640	5540 / 4800 / / 360	14460		1240	640	1880	16340	625	L.F.	CIRCUIT CABLE, 600 VOLT NO. 2AWG	34
35	G25	104	312				90	3267 / 3438 / 2669 / 1734	11614		90	2684	2774	14388	625	L.F.	POLE AND BRACKET CABLE, NO. 10 AWG	35
36	G25							7636 / 5334 / 5718 / 3520	22208			7434	7434	29642	625	L.F.	1½" DUCT-CABLE, WITH TWO NO. 2 AWG 600VOLT CABLES	36
37	G25			4				46 / 54 / / 12	116			16	16	132	625	EACH	CONNECTOR KIT, TYPE I	37
38	G25	1	4	2			1	44 / 31 / 22 / 19	124		1	25	26	150	625	EACH	CONNECTOR KIT, TYPE II	38
39	G25	1	4	2			1	44 / 31 / 22 / 19	124		1	25	26	150	625	EACH	CONNECTOR KIT, TYPE III	39
40	G25							8 / 6 / 4 / 10	28			12	12	40	625	EACH	CONNECTOR KIT, TYPE VII B	40
41	G25																	41
42	G25																	42
43	G25																	43
44	G25																	44
45	G25																	45
46	G25																	46
47	G25							LUMP	LUMP					LUMP	625	LUMP	CONTROL CENTER "FR"	47
48	G25							/ LUMP / /	LUMP					LUMP	625	LUMP	CONTROL CENTER "HU"	48
49	G25							/ / / LUMP	LUMP					LUMP	625	LUMP	CONTROL CENTER "CH"	49
50	G25											LUMP	LUMP	LUMP	625	LUMP	CONTROL CENTER "GR"	50
51	G25																	51
52	G25											LUMP	LUMP	LUMP	625	LUMP	PRIMARY FEED to CONTROL CENTER "GR"	52
53	G25																	53
54	G25	1	1	1	1	1	1		6		1		1	7	625	EACH	STRUCTURE GROUND SYSTEM	54
55	G25	1	4	2	1	1	1		10		1		1	11	625	EACH	STRUCTURE JUNCTION-BOX 16"X 12"X 6"	55
56	G25	2	8	4	2	2	2		20	4	2		6	26	625	EACH	LIGHT POLE ANCHOR BOLTS FOR STRUCTURE, "U"	56
57	G25																	57
								3	3					3	625	EACH	MARKER	58

FED. RD.	STATE	PROJECT	
2	OHIO		

258
460

SUMMIT COUNTY
SUM- 8-17.63

END PROJECT
SUM 8 14.06
STA. 225+00

BEGIN PROJECT
SUM 8 17.63
STA. 229+00

CUYAHOGA RIVER

RELOC. SR 8 OVER THE CUYAHOGA RIVER
SUM 8 17.72

RELOC. SECOND STREET OVER RELOC. SR 8
SUM 8 18.12

RELOC. FRONT STREET OVER RELOC. SR 8
SUM 8 18.00

MATCH LINE STA. 259+00

LEGEND

- LIGHT POLE & LUMINAIR W/TWIN. BRACKET ARMS 700 WATT MERCURY VAPOR - TYPE III DISTRIBUTION
- LIGHT POLE & LUMINAIR W/SINGLE BRACKET ARM 700 WATT MERCURY VAPOR - TYPE III DISTRIBUTION
- LIGHT POLE & LUMINAIR W/SINGLE. BRACKET ARM 700 WATT MERCURY VAPOR - TYPE II DISTRIBUTION
- LIGHT POLE & LUMINAIR W/SINGLE BRACKET ARM 400 WATT MERCURY VAPOR - TYPE II DISTRIBUTION
- LIGHT POLE & LUMINAIR BRACKET ARM AS PER PLAN 250 WATT MERCURY VAPOR - TYPE II DISTRIBUTION
- INDICATES LUMINAIR WITH GLARE SHIELD
- 18" CORRUGATED METAL PULL BOX
- STANDARD CONCRETE MARKER

ALTERNATE TRENCH ALIGNMENT — NORMAL TRENCH ALIGNMENT

- DUCT-CABLE BETWEEN LIGHT POLES
- 3" CROSSOVER, TYPE II OR III 713.04 CONDUIT BETWEEN PULL BOXES
- ILLUMINATED OVERHEAD GUIDE SIGNS
- CONCRETE PAD MOUNTED DISTRIBUTION CONTROL CENTER
- GUARD RAIL
- LANE USE ARROWS
- STRUCTURE GROUND

TYPICAL CIRCUIT & LIGHT POLE DESIGNATION

25 FR (10) A

25 CIRCUIT NUMBER
FR CONTROL CENTER
(10) LIGHT POLE NUMBER OR GUIDE SIGN NUMBER
A LIGHT POLE DESIGN REFERENCE LETTER SEE GENERAL NOTES

* CONTROL CENTER "FR"
SEE SHEET Nº 266a 267

FOR CIRCUIT DETAILES
SEE SHEET Nº 268

LIGHTING PLAN
STA. 229+00 TO STA. 259+00

0 100 200

FED. RD.	STATE	PROJECT	
2	OHIO		

259
460

SUMMIT COUNTY
SUM-8-17.63

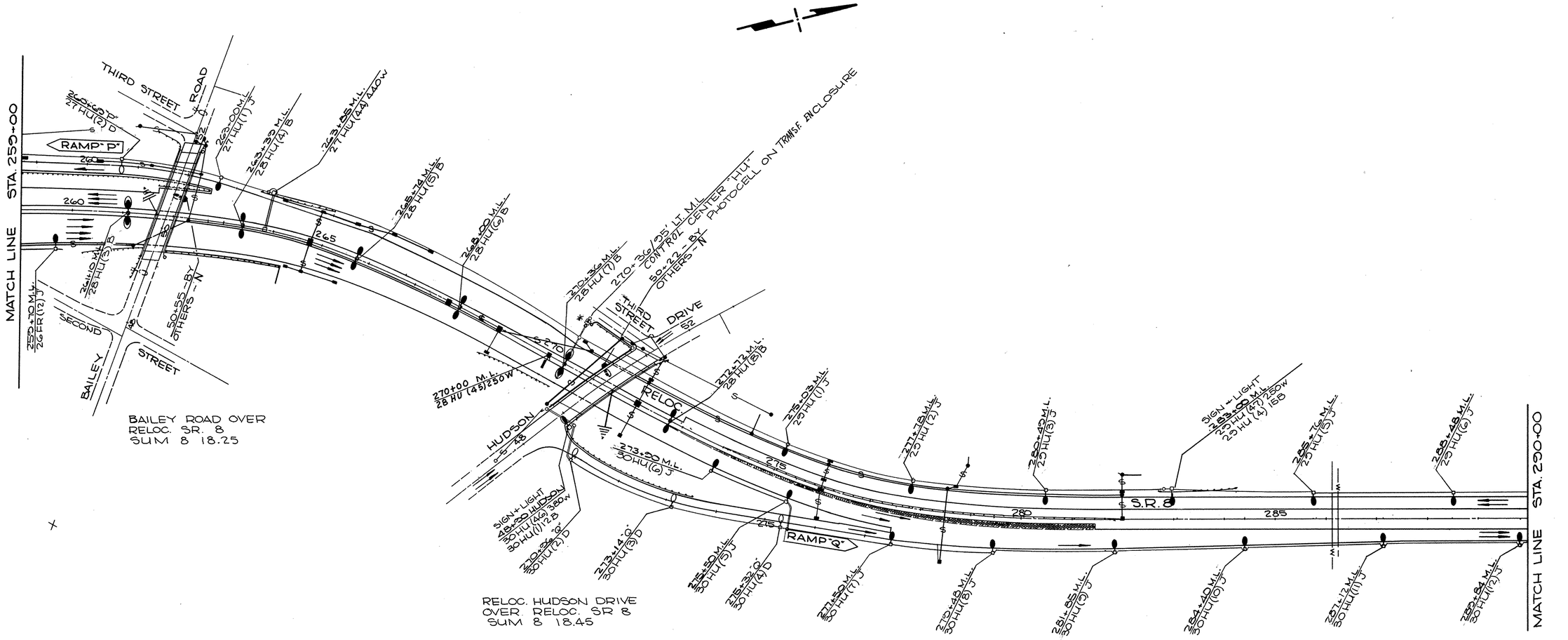

BY OTHERS

SUPPORT PROVIDED ON STRUCTURE AND NECESSARY CONDUIT, POLE AND LUMINAIRE BY OTHERS
(See Mechanical Properties Tabulation)

* CONTROL CENTER "HU"
SEE SHEET Nº 267

FOR CIRCUIT DETAILES
SEE SHEET Nº 268

LIGHTING PLAN
STA. 259+00 TO STA. 290+00

0 100 200

FED. RD.	STATE	PROJECT	
2	OHIO		

260
460

SUMMIT COUNTY
SUM-8-17.63

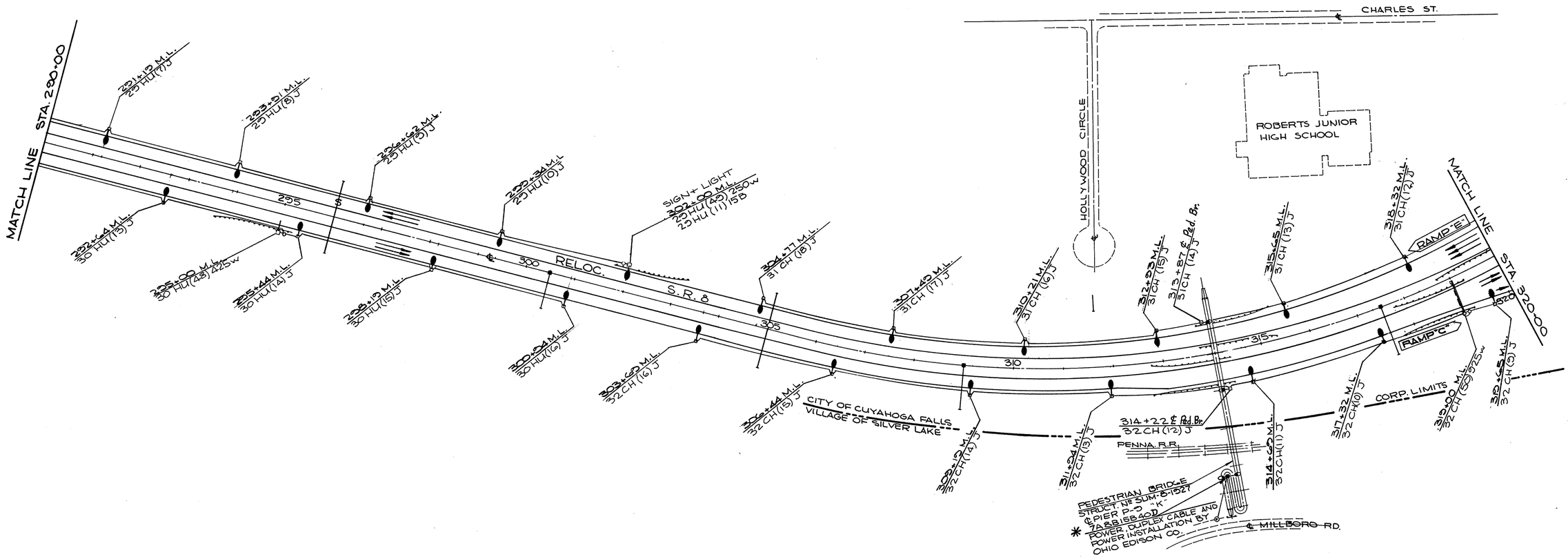

* See Lighting Notes Sheet #255: LIGHT POLE A. 4.

LIGHTING PLAN
STA. 290+00 TO STA. 320+00

0 100 200

FED. RD.	STATE	PROJECT	
2	OHIO		

261
A60

SUMMIT COUNTY
SUM-8-17.63

MATCH LINE STA. 320+00

GRAHAM ROAD
OVER RELOC. SR 8
SUM 8 19.50

BEGIN PROJECT
SUM 8 19.70
STA. 1043+44.20

HUDSON ROAD
OVER RELOC. SR 8
SUM 8 19.86

END PROJECT
SUM 8 17.63
STA. 1043+44.20
END WORK

S.R. 8 RELOC.

RAMP "A"
RAMP "B"
RAMP "C"
RAMP "D"
RAMP "E"

SERVICE ROAD
GRAHAM ROAD
CUYAHOGA FALLS
CITY OF STOW
ST. CHARLES ST.

CIRCUIT DOWN IN 3" ENCASED

31+32 SLOPE CONCRETE CONDUIT

46+55/30 RT. CHARLES CONTROL CENTER "CH"

CITY OF CUYAHOGA FALLS CORP. LIMITS
VILLAGE OF PENN
CITY OF STOW
SILVER LAKE
P.R.R.
R/W
PRIMARY RISER POLE
POLE TOP MOUNT PHOTO ELEC. CELL
STA. 1027+23 RAMP "D" OVERHEAD SIGNAL CENTERLINE OF SIGNAL
STA. EQUATION 333+76.30 BACK = 1035+00 AHEAD
115+80 GRAHAM SIGNAL 33 GR(5Z) 330W 38GR(3) SIGNAL
116+58 GRAHAM SIGNAL LIGHT 33GR(2) SIGNAL 33GR(2) 12B
113+85 GRAHAM 33 GR(3) E
123+00 GRAHAM RD. 33 GR(51) 190W
117+20 GRAHAM RD. 33 GR(1) F
101+10 GRAHAM 31 CH(55) 190W
107+75 GRAHAM RD. 31 CH(58) 370W
107+35 GRAHAM 31 CH(4) F
105+40 GRAHAM 31 CH(3) F
109+40 GRAHAM 31 CH(3) F
104+00 GRAHAM 33 GR(8) F
106+17 GRAHAM 33 GR(6) F
108+21 GRAHAM 33 GR(5) F
110+71 GRAHAM 33 GR(4) F
112+15 GRAHAM 32 CH(1) E
320+30 M.L. 31 CH(11) J
322+25 "E" 31 CH(10) D
322+40 M.L. 31 CH(8) J
324+20 "E" 31 CH(5) D
324+34 M.L. 31 CH(1) J
328+00 "E" 31 CH(2) D
322+15 "E" 31 CH(1) D
321+42 M.L. 31 CH(4) J
324+00 M.L. 32 CH(3) J
326+40 M.L. 32 CH(2) J
321+58 M.L. 32 CH(4) J
324+00 "C" 32 CH(7) D
324+15 "C" 32 CH(6) D
321+82 "C" 32 CH(8) D
329+30 M.L. 36 GR(1) J
332+00 M.L. 32 GR(6) J
331+24 M.L. 34 GR(2) J
332+82 "A" 34 GR(3) D
333+48 M.L. 34 GR(4) J
334+28 "A" 34 GR(7) D
335+74 "A" 34 GR(8) D
337+20 "A" 33 GR(7) D
1037+14 M.L. 34 GR(5) J
1035+64 M.L. 34 GR(6) J
1037+77 "B" 35 GR(2) J
1039+31 "B" 35 GR(3) D
1041+06 M.L. 35 GR(4) J
1042+00 M.L. 35 GR(56) 1040W
1042+56 M.L. 35 GR(5) J STUB OUT
1044+81 M.L. 35 GR(6) J
1047+06 M.L. 35 GR(7) J
1034+17 "B" 35 GR(1) D
1035+80 "D" 36 GR(4) D
1035+21 M.L. 32 GR(8) J
1037+38 M.L. 37 GR(1) J
1040+48 M.L. 37 GR(2) J
1042+38 M.L. 37 GR(8) J STUB OUT
1045+48 M.L. 37 GR(4) J
1047+38 M.L. 37 GR(5) J
1031+44 "D" 32 GR(2) D
1033+62 "D" 36 GR(3) D
1032+26 "D" 36 GR(1) D
1027+33 "D" 32 GR(3) D
1029+62 "D" 32 GR(4) D
1025+62 "D" 32 GR(5) D
1023+62 "D" 32 GR(6) D
1021+62 "D" 32 GR(7) D
1019+62 "D" 32 GR(8) D

UNDERGROUND PRIMARY NORMAL PARTICIPATION (PROPOSED)
See Sheet No. 266 for DETAILS

AERIAL PRIMARY BY OHIO EDISON CO. (EXISTING)

℄ OF GRAHAM ROAD DIVIDES LINES QUANTITY PARTICIPATION

EXISTING DISTRIBUTION

BY OTHERS

LUMINAIRS STATIONED TO GRAHAM ROAD SHALL BE SET 12 FEET BACK OF CURB TO ALLOW FOR FUTURE CONSTRUCTION

* CONTROL CENTER "CH"
** CONTROL CENTER "GR"
SEE SHEET Nº 267

FOR CIRCUIT DETAILES SEE SHEET Nº 268A + 268B.

FOR TRAFFIC CONTROL PLAN SEE SHEET Nº 253

LIGHTING PLAN
STA. 320+00 TO STA. 1048+00

0 100 200

FED. RD. DIVISION	STATE	PROJECT	
2	OHIO		

262
460

SUM 8 17.63

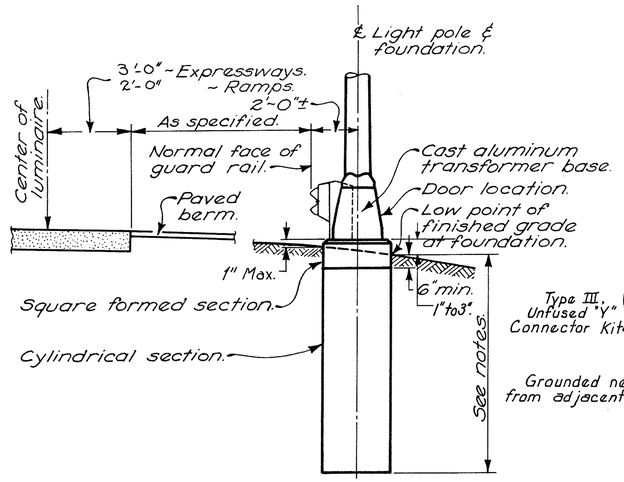

NOTE: Split-bolt Connector shall be made of tin plated copper alloy with tin plated spacer. Acceptable models are: Blackburn #10HPS, Burndy #KSU-25, Line Material #DK-5B-10, Kearney #118109-02 or an approved equal.

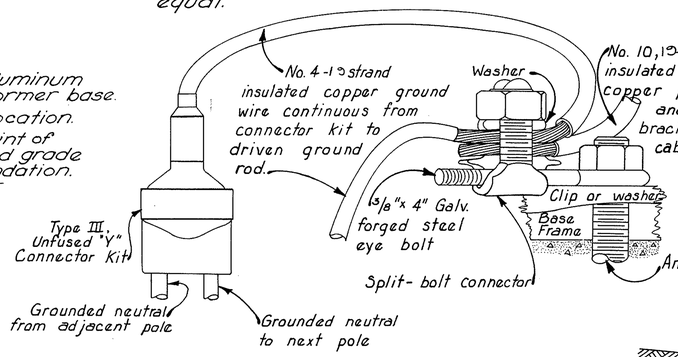

POLE GROUNDING DETAIL

(2-Wire Grounded Neutral System Only)

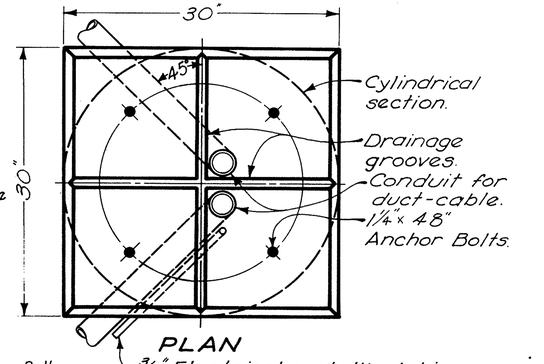

PLAN

LOCATION OF POLE WITH OR WITHOUT ALUMINUM TRANSFORMER BASES

(Supersedes "Location of Light Pole Foundation" shown on Standard Drawing HL-1).

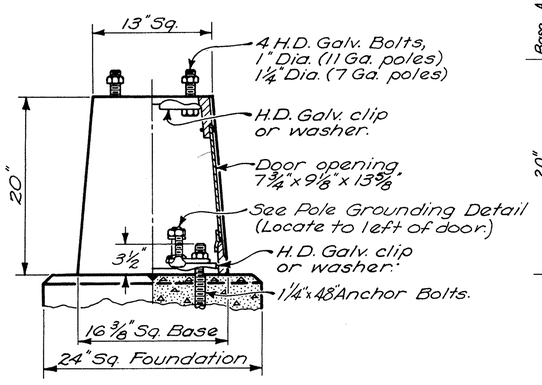

ELEVATION

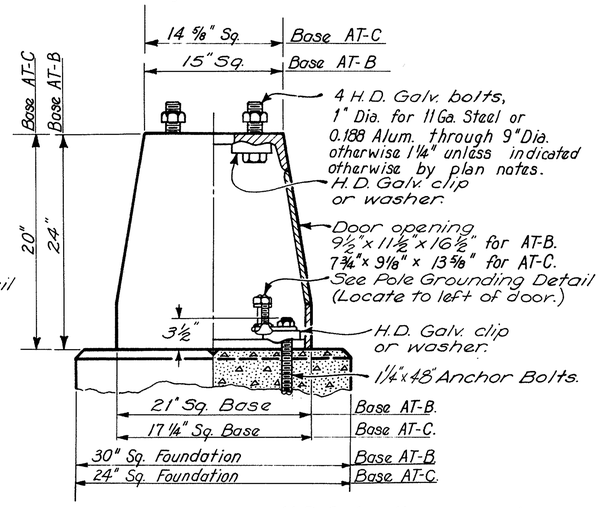

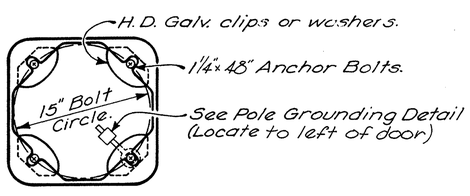

BASE FRAME

BASE AT-A

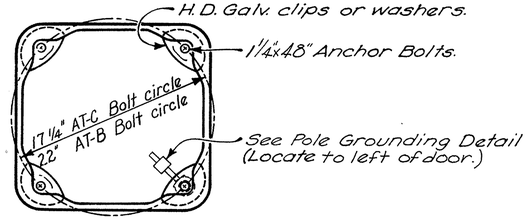

BASE FRAME

BASES AT-B AND AT-C

CAST ALUMINUM TRANSFORMER BASES

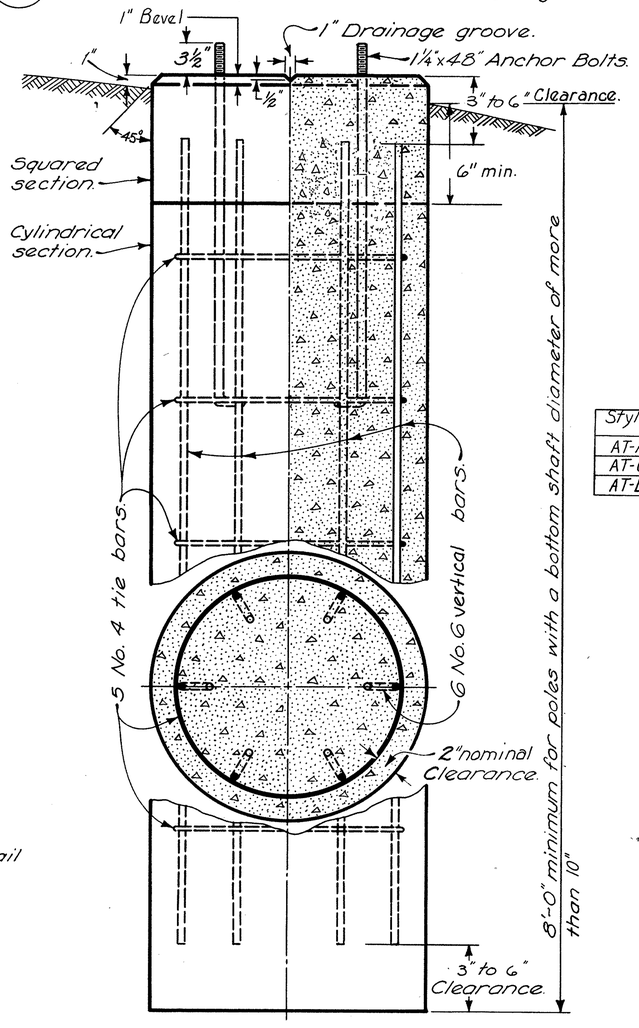

ELEVATION

30" FOUNDATION

NOTES

FOUNDATION: Foundations for light poles shall be poured-in-place concrete (vibrated and spaded 511.09). Each foundation must meet minimum depths as specified, but additional depth may be required by the Engineer because of existing soil conditions. The 30" foundation (detailed hereon) shall be used for light poles having a bottom shaft diameter of more than 10" through 12". The 24" foundation (detailed on Standard Drawing HL-1) shall be used for all light poles having a bottom shaft diameter of 6.0" through 10". See HL-1 for Foundation depth. Rotate reinforcing bars to clear conduit.

Drainage grooves on foundation top, as detailed hereon, shall be required on all foundations even though they do not appear on Standard Drawing HL-1.

ALUMINUM TRANSFORMER BASES: All bases shall be cast from ASTM B-26 or B-108 Alloy SG 70A-T6.

Base AT-A shall be used with anchor base poles of 6" through 9.2" dia. inclusive, thru 34'-6" Mtg. Hgt. Base AT-B shall be used for anchor base poles above 10" through 12" diameter. Base AT-C shall be used for anchor base poles with bottom diameter 9" through 10."*

The transformer bases shall be capable of resisting the following moments in foot pounds with load applied at a distance of 20 feet above the top of the base without collapsing or rupturing.

Style	Bolt Circle	Base Height	Moment-Foot Pounds	Arm Length
AT-A	15"	20"	37,000	15' Max.
AT-C *	17¼"	20"	56,000	10' to 25'
AT-B *	22"	24"	52,000	10' to 25'

Both the bottom of the cast steel pole base and the top of the aluminum transformer base shall be coated or painted with a heavy film of zinc rich paint (Federal Specification TT-P-641-Type II) to reduce galvanic action between the two dissimilar metals.

PAYMENT: 30" Light Pole Foundations shall be paid for at the unit price bid per each foundation.

Aluminum base complete with hardware, eye bolt and connector, zinc rich paint, and installation shall be included with ground-mounted poles for payment.

* AT-C Base can be used with 8" or 8½" dia. base poles, if desired, in order to reduce maintenance items.

Revised: 7-16-69
Traced: 2-31-69 from 1-24-69 Revision
Revised: 3-14-68
Issued: 11-6-67

ALUMINUM TRANSFORMER BASE DETAILS

FED. RD. DIVISION	STATE	PROJECT	
2	OHIO		

263
460

SUM 8 17.63

SECTION CC

Note: Plan view showing Bottom Plate of transformer base including 3" and ¾" Conduits

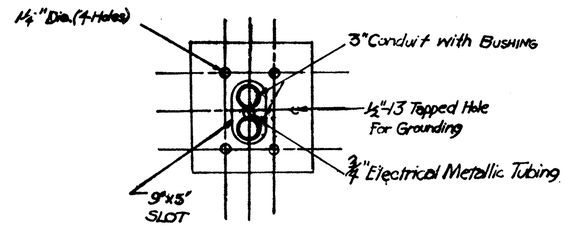

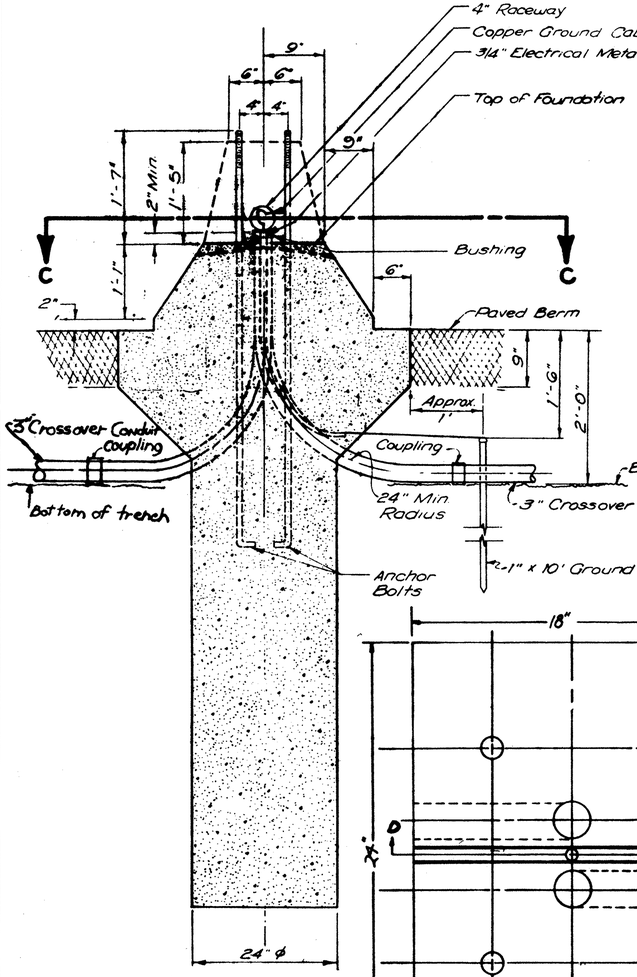

SECTION BB

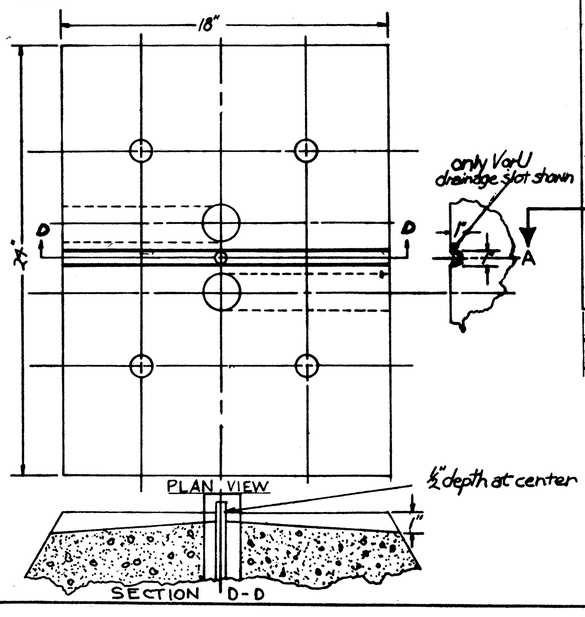

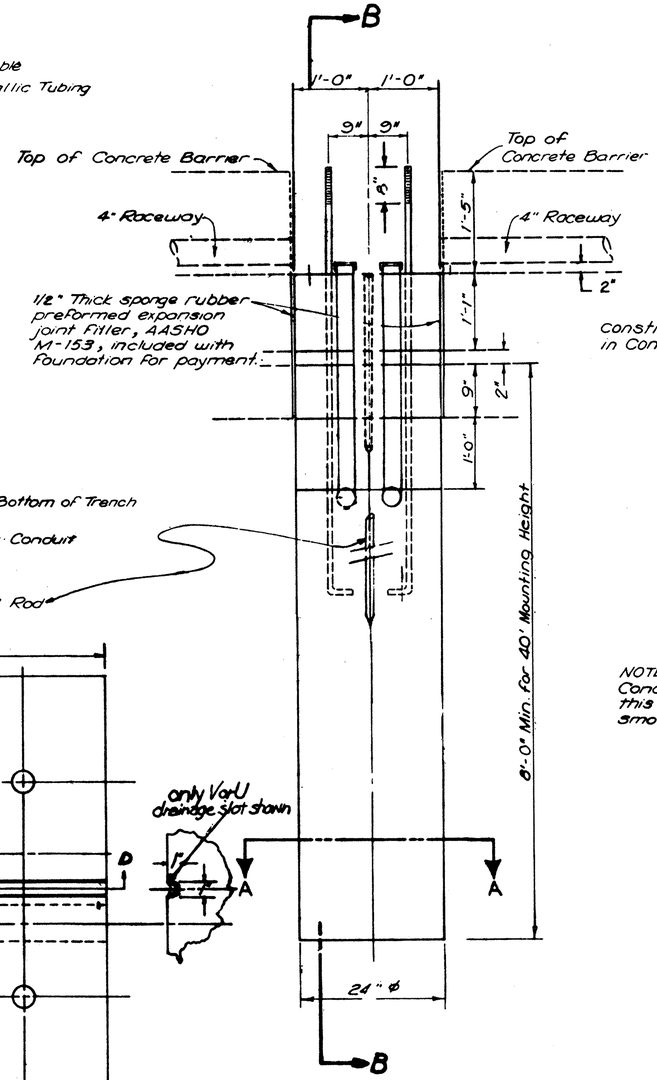

FRONT VIEW

Construction Joint in Concrete Barrier

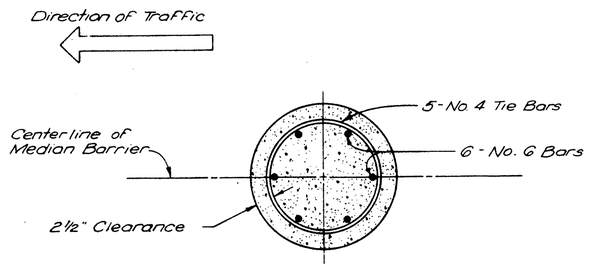

SECTION AA

NOTE:
Concrete on the top of this Foundation must be smooth and level.

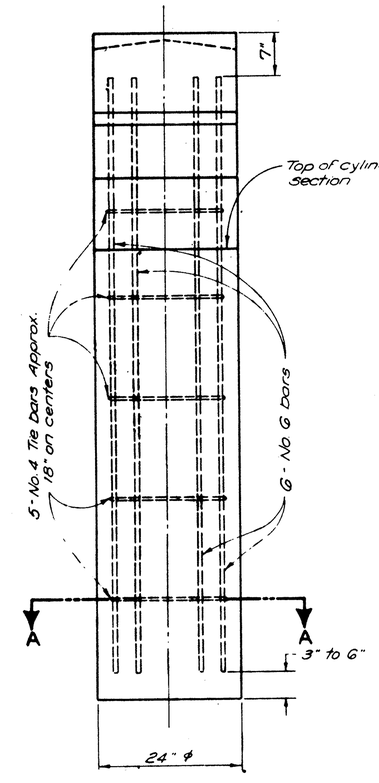

LONGITUDINAL ELEV. SHOWING REINFORCING STEEL

Note:
Transformer Base Same as for Light pole except it has 3/16" Gal. Cover plate bolted to top.

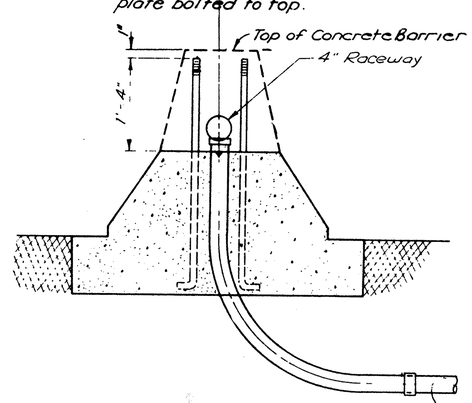

FOUNDATION FOR MEDIAN PULLBOX

NOTES:

1. Light pole anchor bolts shall be threaded 8".
2. Anchor bolts 1" dia. x 80" long including 4" L-bend.
3. Foundation to be Cast-in-place Class C Concrete.
4. Reinforcing to comply with and be placed in accordance with 509.
5. Anchor bolts 1" dia. x 40" long including 4" L-bend for pullbox Foundation.

G25 MEDIAN PULLBOX

The unit price bid for each Item G25, Median Pullbox, as per plan, shall constitute full payment for all labor, equipment, material and incidentals necessary to construct the Median Pullbox and Foundation as detailed above including the Transformer base and cover, at locations shown on the plans.

6-24-69 J.E.W.

MEDIAN LIGHT POLE FOUNDATION DETAILS

FED. RD.	STATE	PROJECT	
2	OHIO		

264
460

SUM 8 17.63

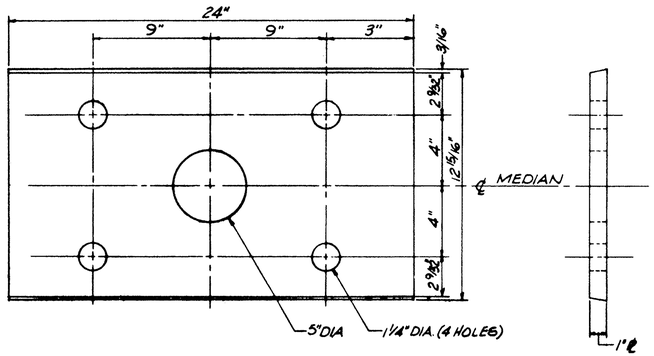

TOP PLATE

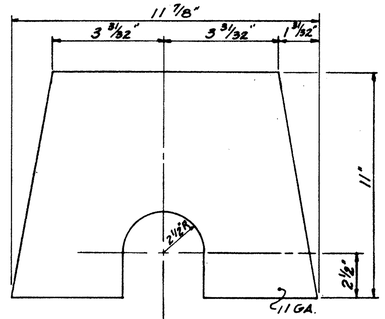

SIDE PLATE

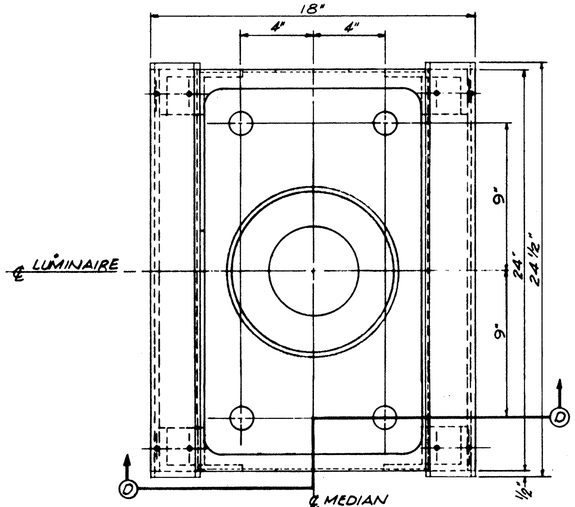

MEDIAN TRANSFORMER BASE
TOP VIEW

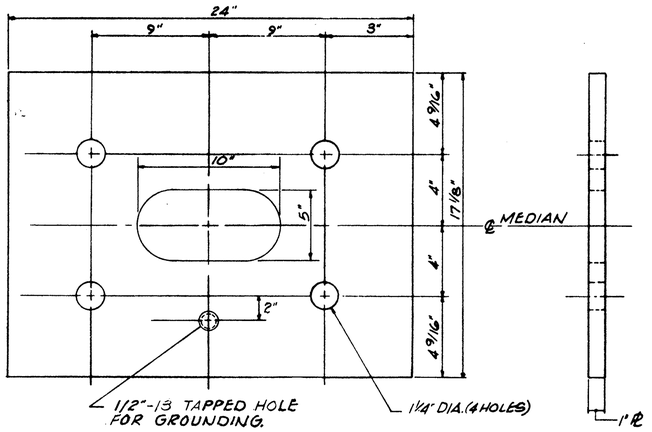

BOTTOM PLATE

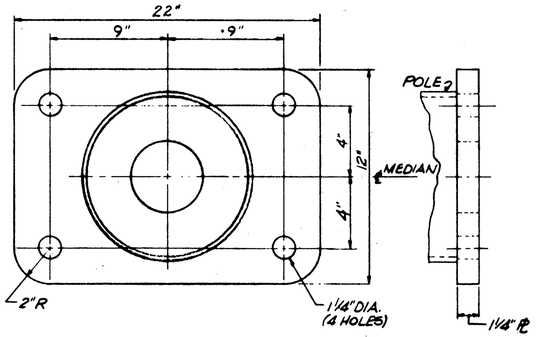

POLE BASE PLATE
(NOT PART OF TRANSFORMER BASE)

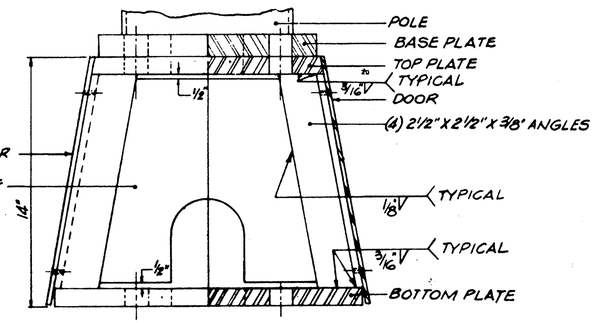

SECTION O-O

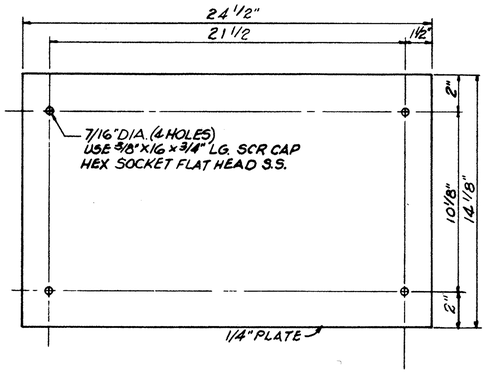

DOOR

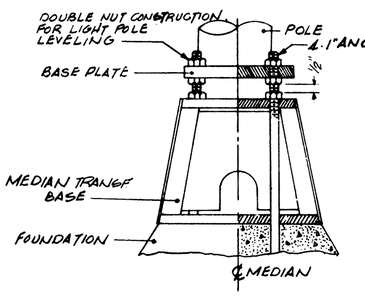

ELEVATION

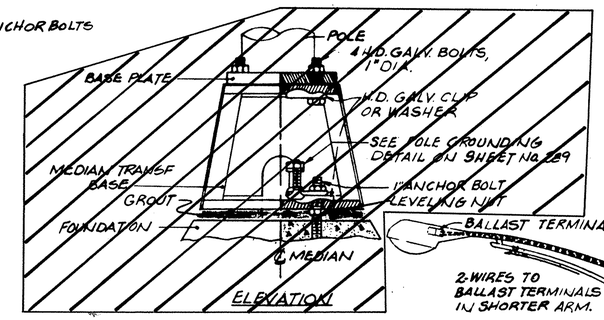

ELEVATION

NOTE: METHOD OF LEVELING SHALL BE DETERMINED BY THE ENGINEER, AND MAYBE DOUBLE NUT CONSTRUCTION IN LIEU OF SHIMMING PER 625.08.

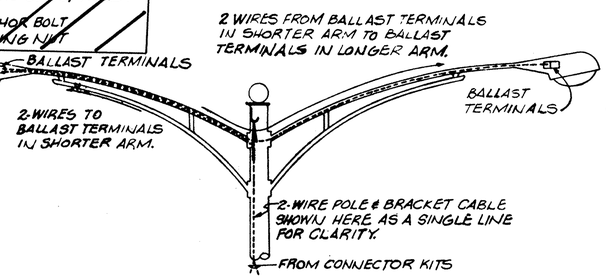

SCHEMATIC WIRING DIAGRAM
FOR DUAL-ARM MEDIAN MTD. POLES

NOTE:
(1) ALL WELDS 1-PASS UNLESS NOTED.
(2) NO WELD PROJECTIONS OR SPATTER ON TOP OR BOTTOM SURFACES.
(3) COMPLETE FABRICATED BASE SHALL BE HOT DIP GALVANIZED AS PER ASTM A123.

TRANSFORMER BASE FOR MEDIAN MOUNTED POLES

FORM D D A-8

FED. RD.	STATE	PROJECT	
2	OHIO		

265
460

SUM 817.63

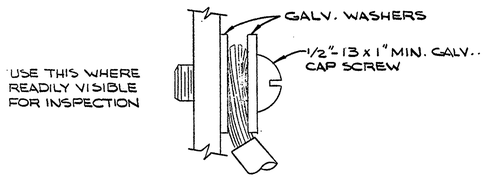

GROUND WIRE TERMINAL
READILY VISIBLE

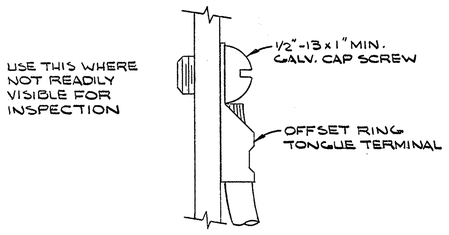

GROUND WIRE TERMINAL
NOT READILY VISIBLE

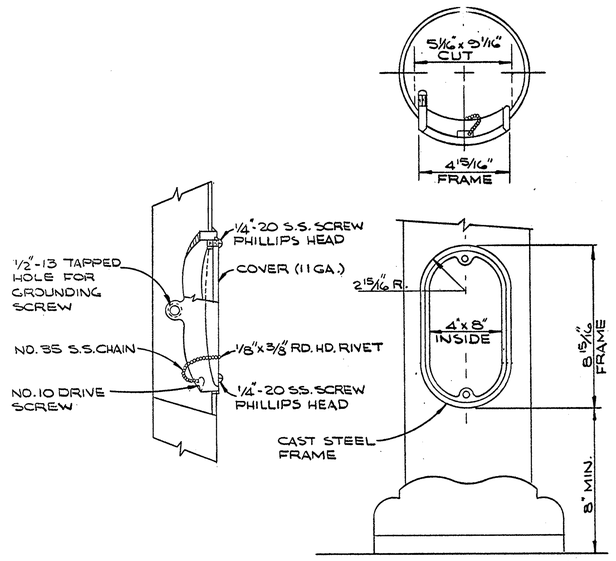

ALTERNATE HAND HOLE DETAIL
4"x8" CURVED HANDHOLE, FRAME & COVER

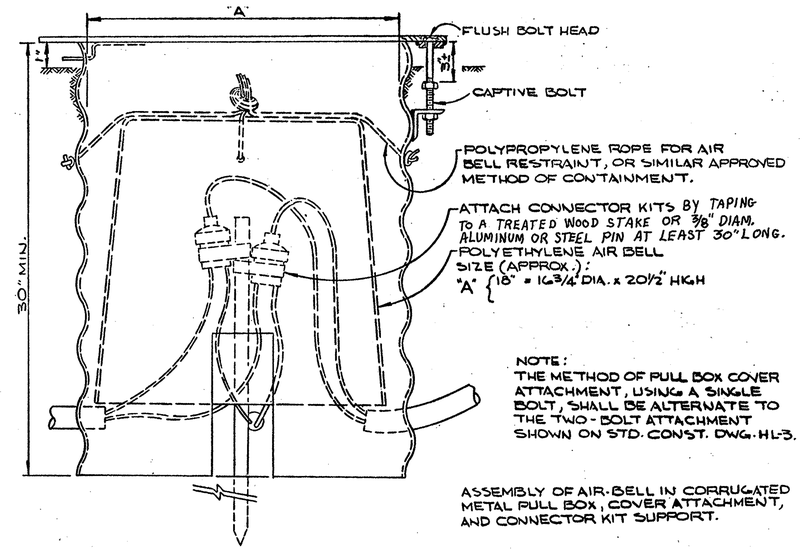

PULL BOX DETAIL
W/ AIR BELL

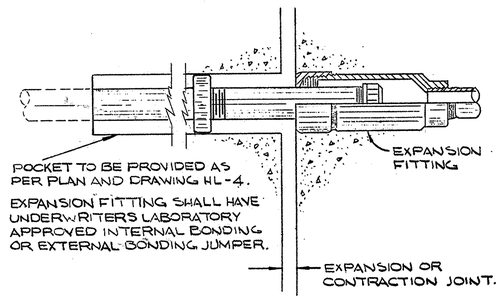

EXPANSION JOINT DETAILS

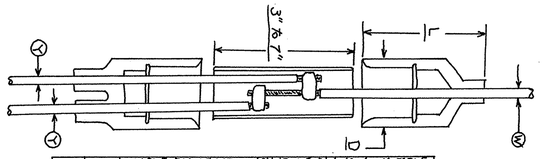

D	L	CABLE DIAMETER Min.	CABLE DIAMETER MAX.	SYMBOL FOR Ⓧ	SYMBOL FOR Ⓨ	AWG 600V CABLE PER 715.02
13/32	4 1/16"	.320"	.430"	D	D	No. 6 & No. 4
"	"	.420"	.585"	E	E	No. 2 & No. 2/0
"	"	.575"	.785"	F	F	No. 3/0 - 250 MCM
"	"	.775"	.985"	N.A.	G	300 MCM - 400 MCM
"	4 3/16"	.975"	1.185"	N.A.	H	500 MCM
"	4 5/16"	1.175"	1.385"	N.A.	J	600 MCM - 750 MCM

N.A. = NOT AVAILABLE

Ⓨ NOTE: BOTH WIRES WITH SYMBOL Ⓨ MUST BE OF EQUAL SIZE FOR A GIVEN CONNECTION.

TYPE VII B CONNECTOR KIT

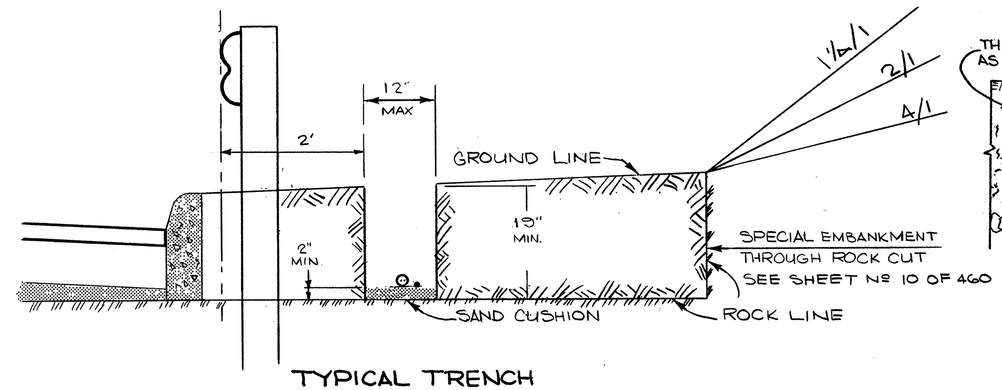

TYPICAL TRENCH
THROUGH SPECIAL EMBANKMENT LIMITS

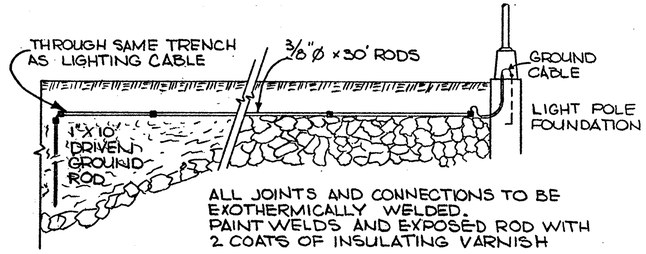

GROUND GRID SYSTEM

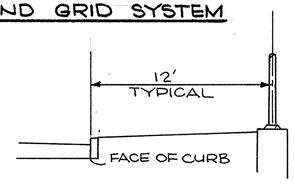

LIGHT POLE OFFSETS FOR CITY STREETS

LIGHTING DETAILS

FORM D D A-8

FED. RD.	STATE	PROJECT	
2	OHIO	.	

SUM 8 17.63

266
460

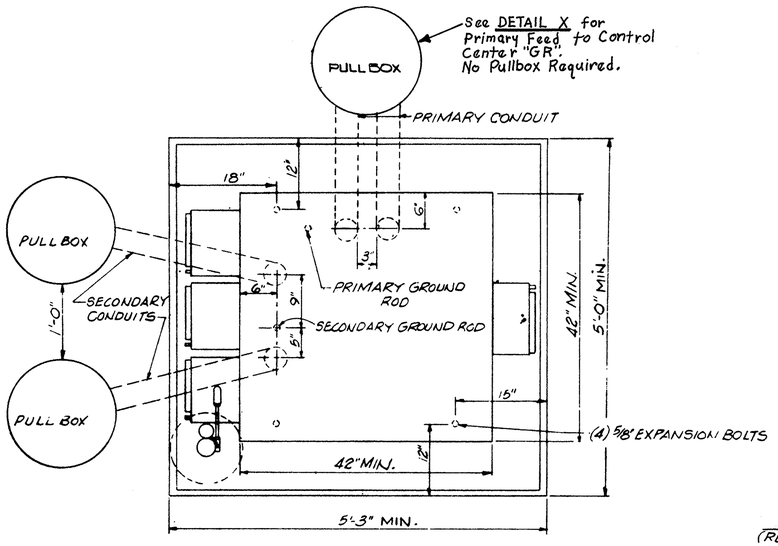

TOP VIEW

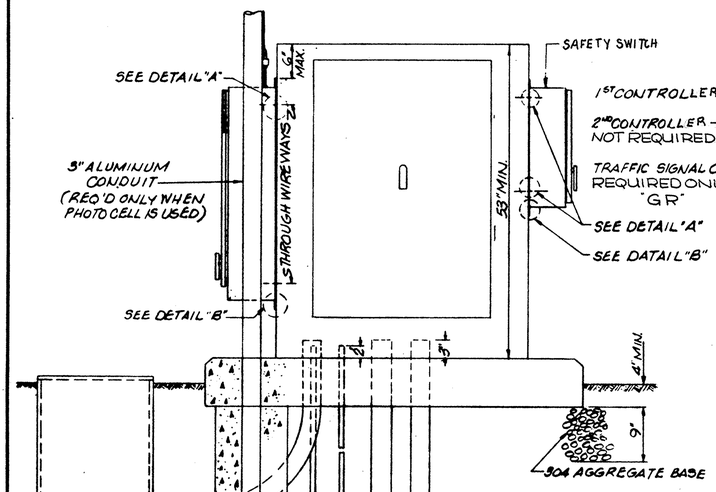

SIDE VIEW

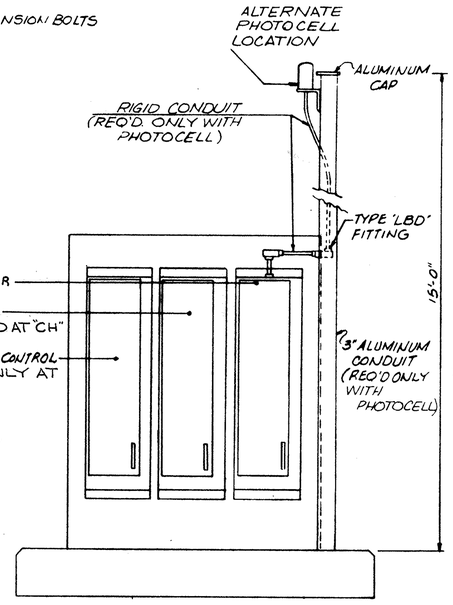

ELEVATION

TRANSFORMER ENCLOSURE FOR CONTROL CENTER

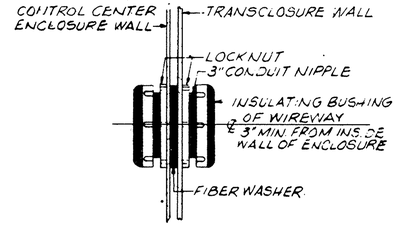

THROUGH WIREWAY DETAIL
DETAIL "A"

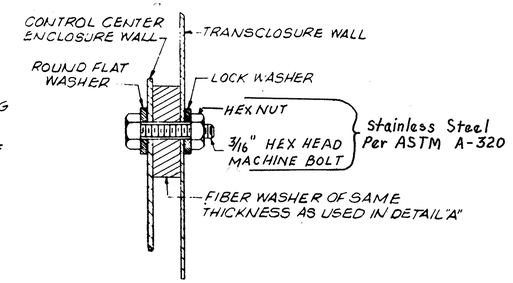

ATTACHMENT DETAIL
DETAIL "B"

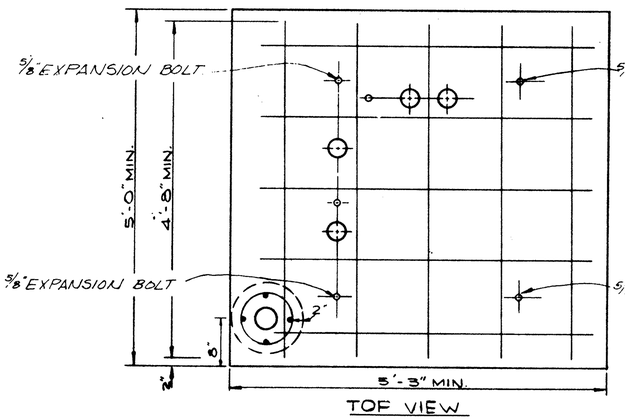

TOP VIEW

NOTE:
EXPANSION BOLT LOCATIONS AS SHOWN ARE TYPICAL. CONTRACTOR SHALL OBTAIN EXACT BOLT LOCATIONS FROM THE MANUFACTURER OF THE TRANSCLOSURE.

CONTRACTOR SHALL FIELD DETERMINE THE BEST ORIENTATION FOR MOUNTING THE EQUIPMENT IN THE TRANSCLOSURE TO FACILITATE CONNECTION TO PRIMARY SERVICE.

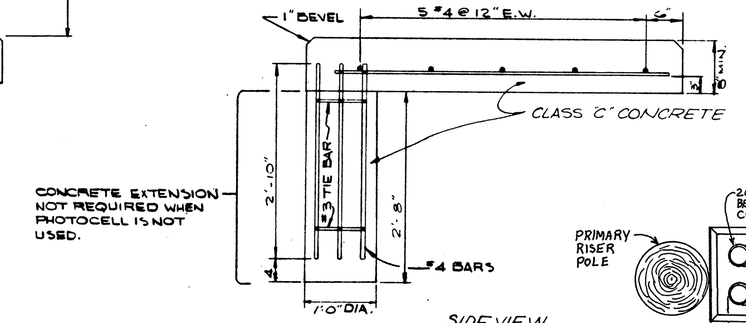

SIDE VIEW
REINFORCING DETAIL

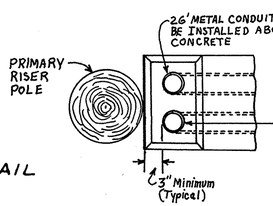

SECTION B-B

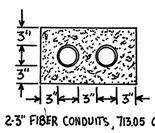

SECTION C-C

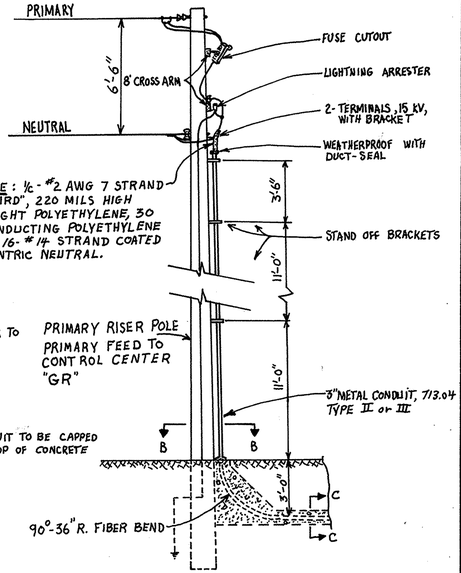

PRIMARY CABLE: ½ - #2 AWG 7 STRAND COPPER 15 KV "URD", 220 MILS HIGH MOLECULAR WEIGHT POLYETHYLENE, 30 MILS SEMI-CONDUCTING POLYETHYLENE JACKET WITH 16-#14 STRAND COATED COPPER CONCENTRIC NEUTRAL.

NOTE: THE CONTRACTOR SHALL FURNISH AND INSTALL THE UNDERGROUND CONDUCTOR, CONDUITS, CABLE TERMINATIONS AND SUPPORTS. THE OHIO EDISON COMPANY WILL FURNISH AND INSTALL THE POLE, GUY, PRIMARY D.E., FUSE CUTOUT AND LIGHTNING ARRESTER. THE STAND OFF BRACKETS WILL BE FURNISHED BY THE OHIO EDISON COMPANY AND INSTALLED BY THE CONTRACTOR.

DETAIL X
CONTROL CENTER DETAILS

FED. RD.	STATE	PROJECT	
2	OHIO		

267
460

SUM 8 17.63

CONTROL CENTER SCHEDULE

Ⓜ WIRE	SAFETY SWITCH	Ⓝ FUSE	Ⓟ WIRE	METER	CONTROLLER	CONTACTOR OR TRANSFORMER	CIRCUIT R.L.	CIRCUIT NO.	Ⓠ FUSE	Ⓡ FUSE	Ⓢ WIRE
2#2AWG RHW IN 2" CONDUIT	"FR" 3POLE, 60A 600VOLT HEAVY DUTY SAFETY SWITCH	60A	2#2AWG RHW IN 2" CONDUIT	REQ'D. BY OTHERS	3 POLE, 60A, 600V FUSED DISCONN.	60A	A	23	30A		3#12AWG THHN IN 1" CONDUIT TO P.C. ON POLE Nº 23FR (1) J
							C	24	30A		
		60A	2#2AWG RHW IN 2" CONDUIT	REQ'D. BY OTHERS	3 POLE 60A, 600V FUSED DISCONN	60A	D	25	30A		
							F	26	30A		
2#2AWG RHW IN 2" CONDUIT	"HU" 3POLE, 60A 600VOLT HEAVY DUTY SAFETY SWITCH	60A	2#2AWG RHW IN 2" CONDUIT	REQ'D. BY OTHERS	3 POLE 60A, 600V FUSED DISCONN.	60A	A	27	30A		3#12AWG THHN IN 1" CONDUIT TO P.C. ON TRANS' CLOSURE
							C	28	30A		
		60A	2#2AWG RHW IN 2" CONDUIT	REQ'D. BY OTHERS	3 POLE 60A, 600V FUSED DISCONN.	60A	D	29	30A		
							F	30	30A		

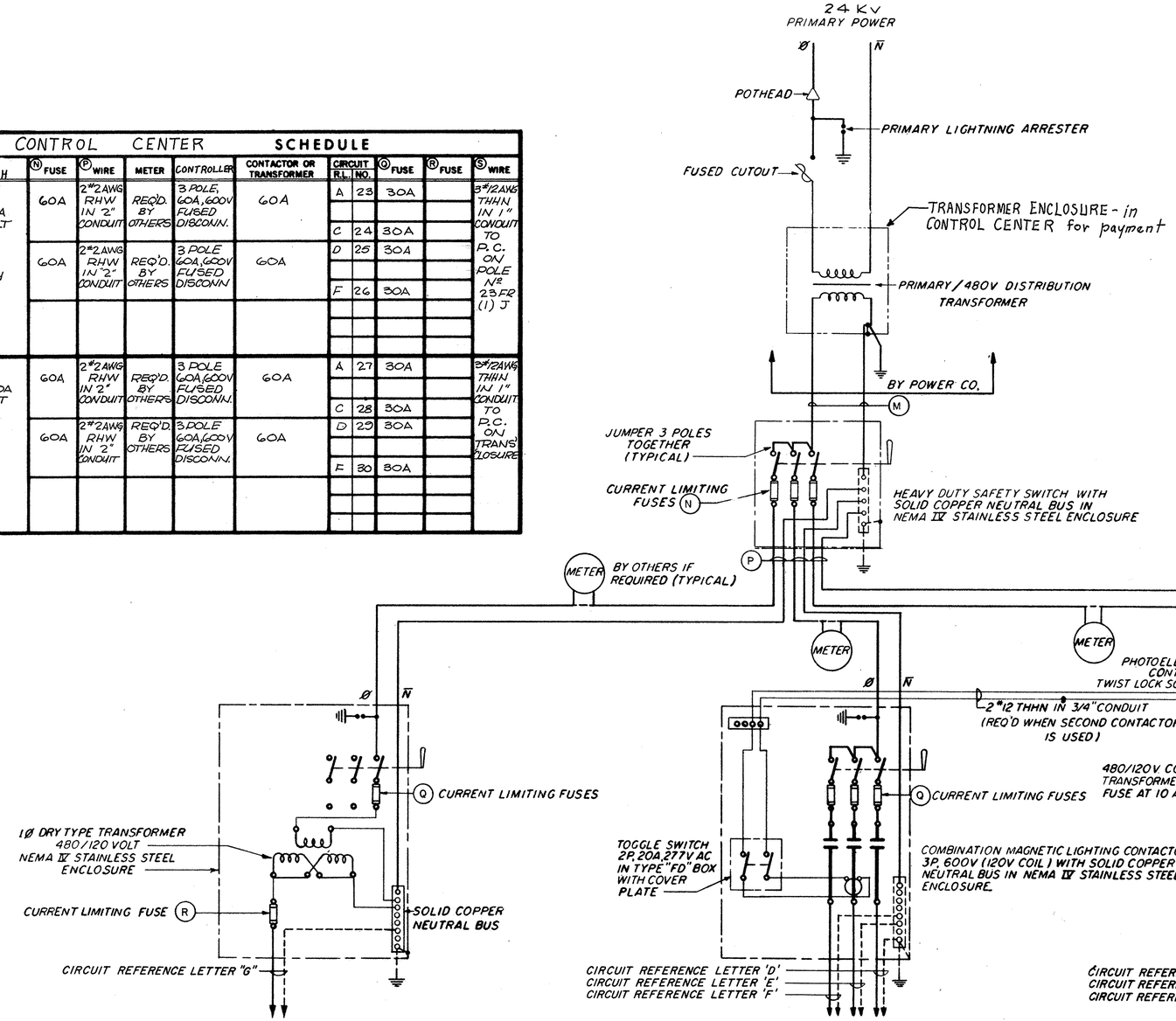

CONTROL CENTER SCHEDULE

Ⓜ WIRE	SAFETY SWITCH	Ⓝ FUSE	Ⓟ WIRE	METER	CONTROLLER	CONTACTOR OR TRANSFORMER	CIRCUIT R.L.	CIRCUIT NO.	Ⓠ FUSE	Ⓡ FUSE	Ⓢ WIRE
2#2AWG RHW IN 2" CONDUIT	"CH" 3POLE, 60A 600V HEAVY DUTY SAFETY SWITCH	60A	2#2AWG RHW IN 2" CONDUIT	REQ'D. BY OTHERS	3 POLE 60A, 600V FUSED DISCONN.	60A	A	31	30A		3#12AWG THHN IN 1" CONDUIT TO P.C. ON TRANS' CLOSURE
							C	32	30A		
2#2AWG RHW IN 2" CONDUIT	"GR" 3POLE, 60A 600V HEAVY DUTY SAFETY SWITCH	45A	2#2AWG RHW IN 2" CONDUIT	N/R	3 POLE 30A, 600V FUSED DISCONN.	30A	A	33	15A		3#12AWG THHN IN 1" CONDUIT TO P.C. ON POLE Nº 36GR (1) (D)
							B	34	15A		
							C	35	15A		
		45A	2#2AWG RHW IN 2" CONDUIT	N/R	3 POLE 30A, 600V FUSED DISCONN.	30A	D	36	15A		
							F	37	15A		
		20A *	2#2AWG RHW IN 2" CONDUIT *	N/R	3 POLE 30A, 600V FUSED DISCONN. *	5 KW *	G *	38 *	15A *	45A *	

* Included for information only - See TRAFFIC CONTROL for location and payment.

TRAFFIC SIGNAL CONTROL CENTER

SEE TRAFFIC CONTROL FOR LOCATION AND PAYMENT

REQUIRED ONLY AT "GR"

TYPICAL LIGHTING CONTROLLER #2

NOT REQUIRED AT "CH"

TYPICAL LIGHTING CONTROLLER #1

WIRING DIAGRAM CONTROL CENTERS

FORM D D A-5

FED. RD.	STATE	PROJECT	
2	OHIO		

268/460

SUM 8 17.63

CONTROL CENTER "FR"
TRANSFORMER ENCLOSURE
STA. 45+20 - 50' LT. ℄ FRONT ST.

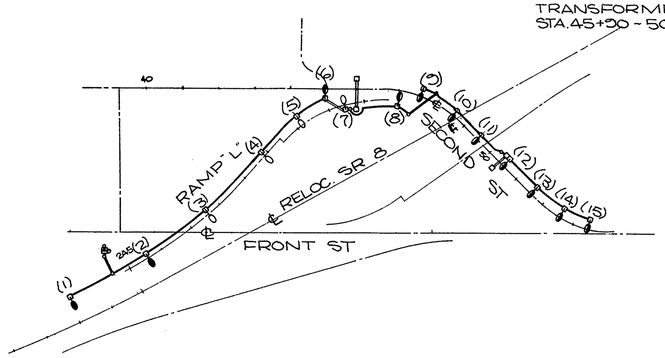

CIRCUIT Nº 23 FR
PLAN SHEET Nº 258
CONNECTED LOAD 11.1 KW
VOLTAGE DROP 8.5v 1.77%

CONTROL CENTER "HU"
TRANSFORMER ENCLOSURE
STA. 270+36/95' LT. M. L.

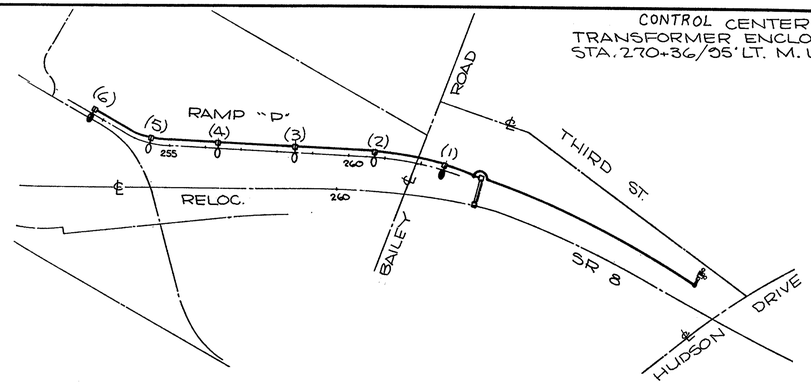

CIRCUIT Nº 27 HU
PLAN SHEET Nº 258 & 259
CONNECTED LOAD 3.8 KW
VOLTAGE DROP 4.7v .97%

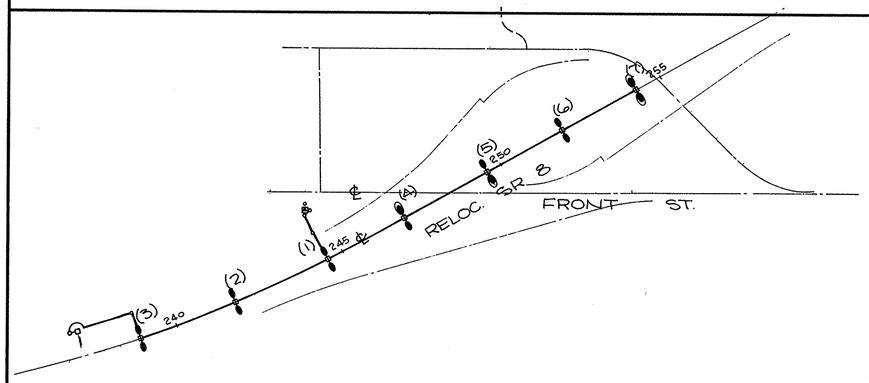

CIRCUIT Nº 24 FR
PLAN SHEET Nº 258
CONNECTED LOAD 11.03 KW
VOLTAGE DROP 8.8v 1.83%

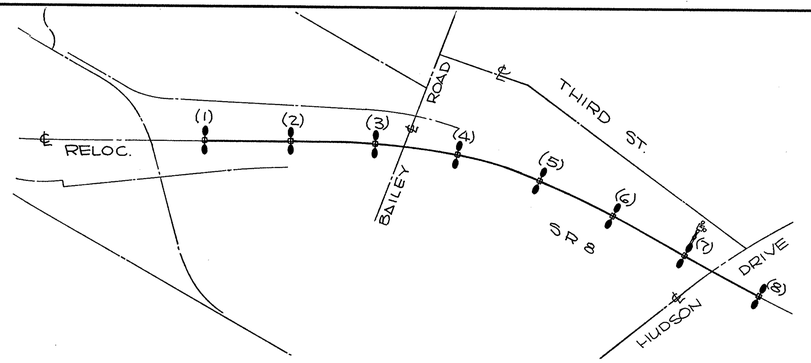

CIRCUIT Nº 28 HU
PLAN SHEET Nº 258 & 259
CONNECTED LOAD 12.6 KW
VOLTAGE DROP 8.6v 1.8%

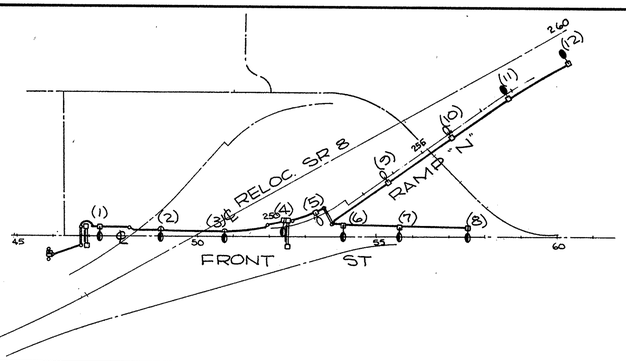

CIRCUIT Nº 26 FR
PLAN SHEET Nº 258 & 259
CONNECTED LOAD 9.43 KW
VOLTAGE DROP 10.0V 2.08%

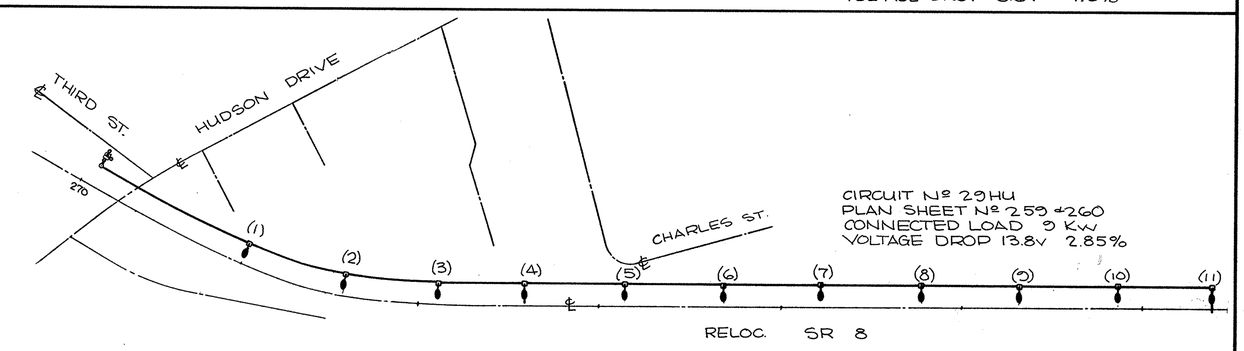

CIRCUIT Nº 29 HU
PLAN SHEET Nº 259 & 260
CONNECTED LOAD 9 KW
VOLTAGE DROP 13.8v 2.85%

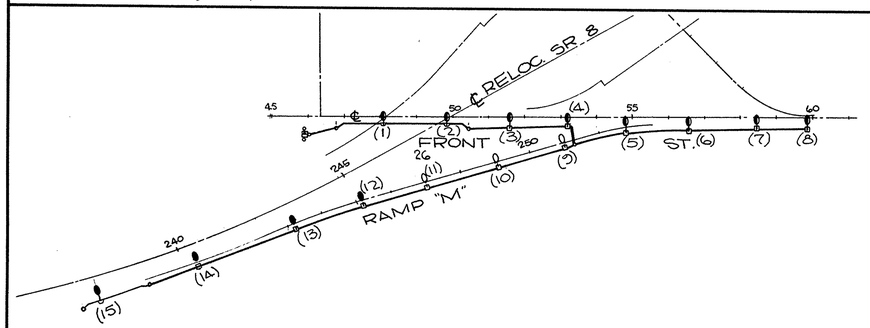

CIRCUIT Nº 25 FR
PLAN SHEET Nº 258
CONNECTED LOAD 11.75 KW
VOLTAGE DROP 12.6v 2.63%

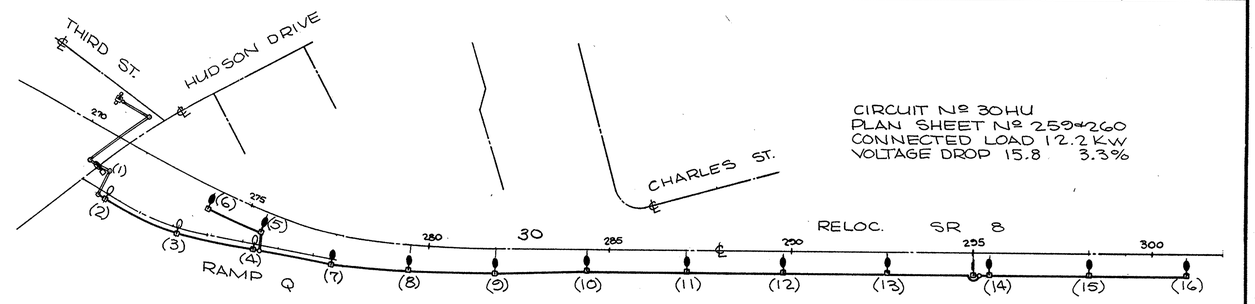

CIRCUIT Nº 30 HU
PLAN SHEET Nº 259 & 260
CONNECTED LOAD 12.2 KW
VOLTAGE DROP 15.8 3.3%

CONTROL CENTER "CH"
TRANSFORMER ENCLOSURE
STA 46+55/30' RT. ℄ CHARLES ST.

FED. RD.	STATE	PROJECT	
2	OHIO		

SUM 8 17.63

268A
460

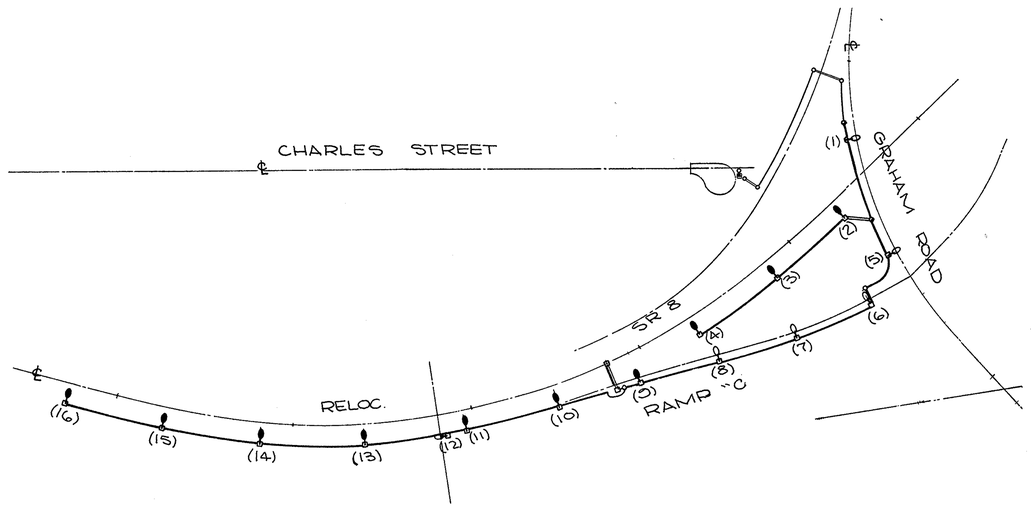

CIRCUIT Nº 32 CH
PLAN SHEET Nº 260+261
CONNECTED LOAD 10.7 KW
VOLTAGE DROP 14.6 V 3.04%

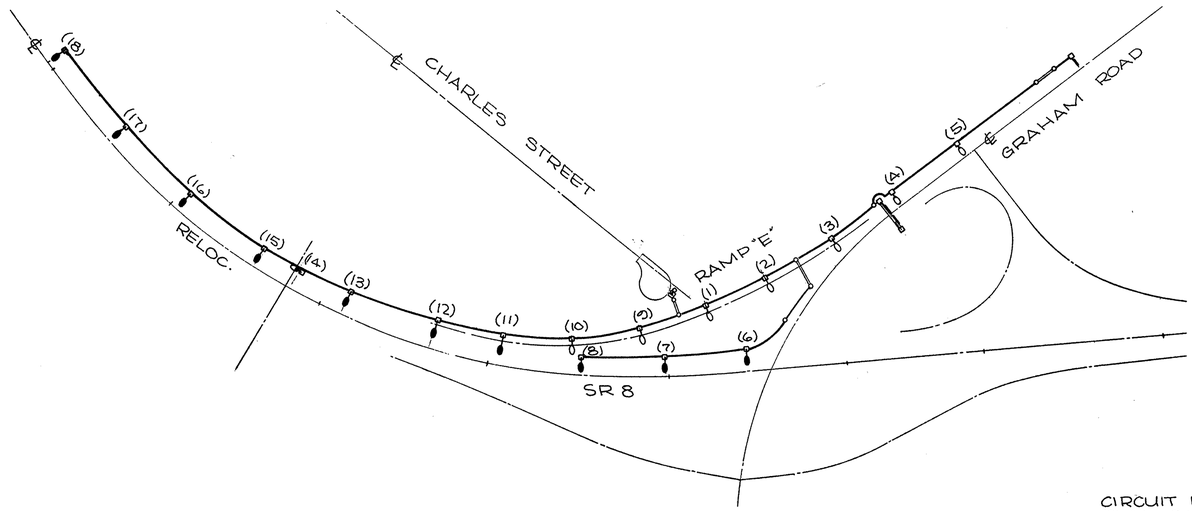

CIRCUIT Nº 31 CH
PLAN SHEET Nº 260+261
CONNECTED LOAD 11.9 Kw
VOLTAGE DROP 15.6 3.25%

FED. RD.	STATE	PROJECT	
2	OHIO		

2688
460

SUM 8 17.63

CONTROL CENTER "GR"
TRANSFORMER ENCLOSURE
STA. 1028+30 / 15' RT ℄ RAMP "D"

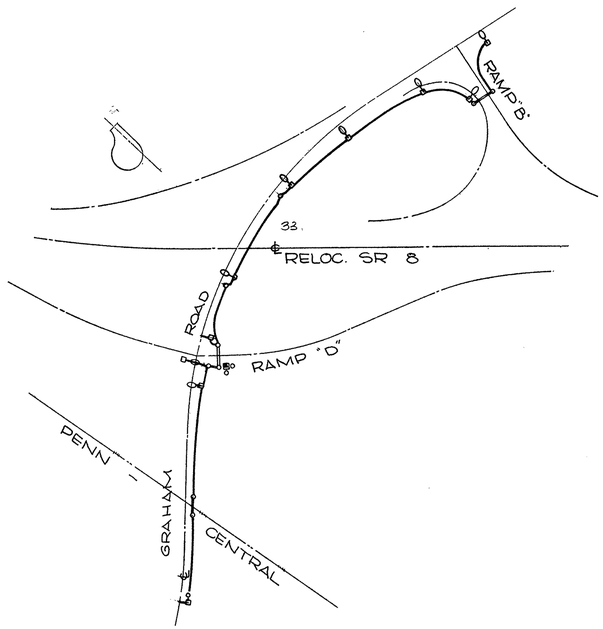

CIRCUIT Nº 33 GR
PLAN SHEET Nº 261
CONNECTED LOAD 4.2 KW
VOLTAGE DROP 7.0V 1.45%

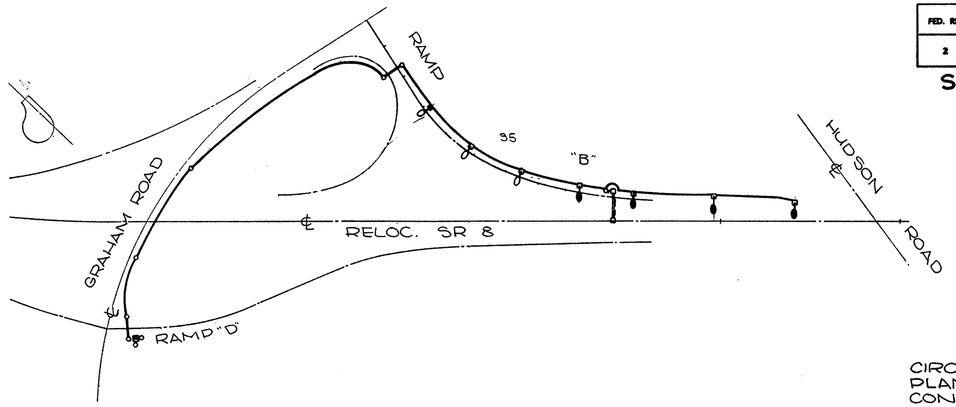

CIRCUIT Nº 35 GR
PLAN SHEET Nº 261
CONNECTED LOAD 5.2 KW
VOLTAGE DROP 10.9V 2.27%

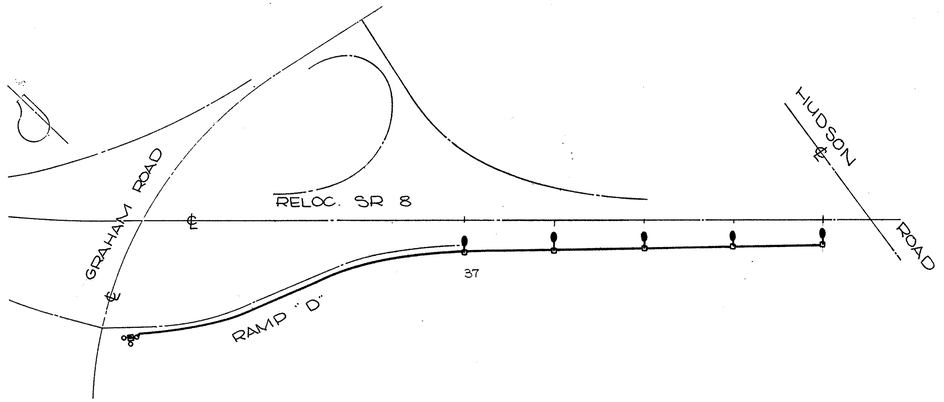

CIRCUIT Nº 37 GR
PLAN SHEET Nº 261
CONNECTED LOAD 3.85 KW
VOLTAGE DROP 8.6V 1.8%

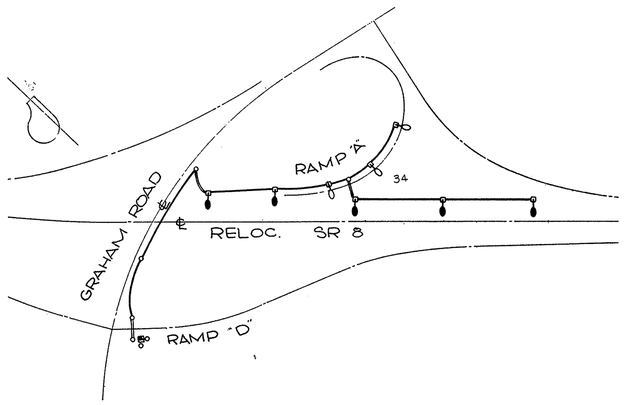

CIRCUIT Nº 34 GR
PLAN SHEET Nº 261
CONNECTED LOAD 5.2 KW
VOLTAGE DROP 8.2V 1.7%

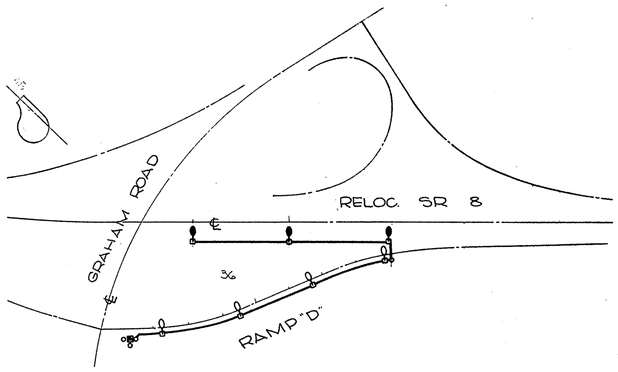

CIRCUIT Nº 36 GR
PLAN SHEET Nº 261
CONNECTED LOAD 4.13 KW
VOLTAGE DROP 2.82V .6%

TRAFFIC CONTROL GENERAL NOTES

FED. RD.	STATE	PROJECT	
2	OHIO		

269 A60

SUM 8 17.63

MATERIALS - GENERAL

MATERIALS TO BE FURNISHED MAY BE SPECIFIED IN THE PLANS BY A GIVEN MANUFACTURER'S CATALOG NUMBER OR TYPE. THIS IS FOR DESCRIPTIVE PURPOSES ONLY AND THE CONTRACTOR MAY ASSUME THAT APPROVED EQUAL MATERIALS MAY BE FURNISHED.

816-ALTERNATE DESIGNS FOR OVERHEAD SIGN SUPPORTS

IF THE CONTRACTOR DESIRES TO FURNISH AN ALTERNATE DESIGN FOR OVERHEAD SIGN SUPPORTS, THE ALTERNATE DESIGNS MUST BE SUBMITTED TO THE STATE AT LEAST 21 DAYS PRIOR TO OPENING OF BIDS. THE BIDDER WILL BE NOTIFIED AS TO ACCEPTANCE OR REJECTION OF ALTERNATE DESIGN AT LEAST 7 DAYS BEFORE BIDS ARE TO BE OPENED. ALTERNATE DESIGNS MUST UTILIZE TUBULAR STRUCTURAL MEMBERS. SUBMISSIONS SHALL BE MADE TO OHIO DEPARTMENT OF HIGHWAYS, BUREAU OF TRAFFIC, 450 EAST TOWN STREET, COLUMBUS OHIO 43216.

816 OVERHEAD SIGN SUPPORT, BY TYPE

ALL COMPONENT PARTS OF THE OVERHEAD SIGN SUPPORTS SHALL BE STEEL, EXCEPT FOR THE TRUSS AND COMPONENTS FOR THE NUMBER 7 SERIES WHICH SHALL BE ALUMINUM. FOR SPECIFIC DETAILS AND MATERIALS, SEE SHEET NUMBERS 299 THROUGH 304.

COST OF FURNISHING AND INSTALLING THE SIGN BRACKETS AND THE FIXTURE SUPPORT ARM, LENGTH "G", WITH MOUNTING HOLES AND HARDWARE SHALL BE INCLUDED IN THE CONTRACT UNIT PRICE BID FOR OVERHEAD SIGN SUPPORTS.

MODIFYING SUPPLEMENTAL SPECIFICATION 816 SWITCH ENCLOSURE MOUNTING BRACKETS INCLUDING MOUNTING BOLTS AND DRILLED HOLES SHALL BE FURNISHED AND INSTALLED UNDER PAYMENT FOR 816 OVERHEAD SIGN SUPPORT STRUCTURES AT THE CONTRACT PRICE PER OVERHEAD SIGN SUPPORT, BY TYPE.

THE ELCTRICAL SERVICE ENTRY THROUGH EACH VERTICAL SIGN SUPPORT POLE SHALL BE PROVIDED BY MEANS OF A TWO INCH (2") HALF-COUPLING CENTERED AT A HEIGHT OF 5'-0" ABOVE THE BOTTOM OF THE BASE PLATE.

THE TYPE "Y" OR "Z" DISCONNECT SWITCH ENCLOSURE SHALL BE MOUNTED IN SUCH A MANNER THAT THE BOTTOM OF THE ENCLOSURE WILL BE 4'-9 1/2" (± 1/4") ABOVE BOTTOM OF BASE PLATE.

ALL HANDHOLES FABRICATED FOR SUPPORTS SHALL BE 4" X 8" IN SIZE WITH FACE FLUSH WITH POLE EXTERIOR AT THE REQUIRED LOCATIONS DESCRIBED IN PLANS.

PAYMENT FOR THIS ITEM SHALL BE MADE AT THE CONTRACT UNIT PRICE BID FOR EACH OVERHEAD SIGN SUPPORT, BY TYPE, INSTALLED IN PLACE AND ACCEPTED, WHICH PRICE SHALL BE FULL COMPENSATION FOR FURNISHING ALL ANCHOR BOLTS (FOR INSTALLATION UNDER 816 CONCRETE FOR OVERHEAD SIGN SUPPORT FOUNDATIONS), AND FOR FURNISHING AND INSTALLING EACH OVERHEAD SIGN SUPPORT STRUCTURE SHOWN ON SHEETS 299 THROUGH 304 INCLUDING FIXTURE SUPPORT ARMS, SWITCH ENCLOSURE MOUNTING BRACKET, SIGN BRACKETS AND ALL COMPONENT PARTS NECESSARY TO MAKE A COMPLETE WORKABLE INSTALLATION READY FOR SIGN ERECTION, INSTALLATION OF DISCONNECT SWITCH AND ENCLOSURE, GROUND ROD AND WIRE CONNECTIONS AND SIGN WIRING.

PAYMENT FOR THE FABRICATION REQUIREMENT SPECIFIED ABOVE SHALL BE INCIDENTAL TO THE COST OF EACH SUPPORT STRUCTURE.

ERECTION OF THESE SUPPORTS SHALL BE ACCOMPLISHED IN A MANNER MEETING THE REQUIREMENTS OF SUPPLEMENTAL SPECIFICATION 816.

SIGN SUPPORT TO BE MODIFIED TO SUPPORT A ROADWAY LIGHTING LUMINAIRE AS PER PLAN. LUMINAIRES AND BRACKET ARMS SHALL BE A SEPARATE PAY ITEM, INCLUDED IN LIGHTING QUANTITIES.

816 STRUCTURAL SUPPORTS, STEEL BEAM (TYPE)

ALL STRUCTURAL STEEL BEAM SUPPORTS INCLUDING 8 AND 6 POUND BEAMS, 4 POUND DRIVE POST AND HARDWARE SHALL BE GALVANIZED IN ACCORDANCE WITH ASTM A-123 AND A-153 RESPECTIVELY.

QUANTITIES FOR ITEM 816 "STRUCTURAL SUPPORTS, STEEL BEAM (TYPE)", APPEARING IN THE QUANTITY TABLES ARE APPROXIMATE. THE CONTRACTOR SHALL BE RESPONSIBLE FOR DETERMINING EXACT SUPPORT LENGTHS PRIOR TO FABRICATION AND GALVANIZING OF SUPPORTS. PAYMENT SHALL BE AT THE CONTRACT UNIT PRICE BID PER LIN. FT WHICH PRICE AND PAYMENT SHALL INCLUDE ALL COSTS IN CONNECTION WITH THE EMBEDMENT OF THE SUPPORTS.

THE COST OF THE CONCRETE USED FOR EMBEDMENT WILL BE A SEPARATE PAY ITEM.

816 STRUCTURAL SUPPORTS, 6 LB. BEAM, AS PER PLAN

THIS ITEM SHALL CONSIST OF THE FURNISHING, ASSEMBLY, AND INSTALLATION OF TWO (2) 3 LB. PER FOOT DRIVE POSTS (6 LB. BEAM) IN COMBINATION WITH A SQUARE SEAM LESS TUBULAR POST EXTENSION SPLICED TO THE TOP OF THE 6 LB. BEAM. DETAILS ARE SHOWN ON SHEET 312.

SQUARE SEAMLESS TUBULAR POST MATERIAL SHALL BE MILD STEEL CONFORMING TO ASA 1020 STEEL, MINIMUM YIELD STRENGTH 35,000 PSI, ULTIMATE YIELD 55,000 PSI.

WORK SHALL INCLUDE ALL LABOR, MATERIALS, EQUIPMENT, TOOLS, AND HARDWARE NECESSARY TO PERFORM THE REQUIRED ITEM OF WORK.

BASIS OF PAYMENT SHALL BE FOR STRUCTURAL SUPPORTS, 6 LB. BEAM, AS PER PLAN PER LINEAR FOOT MEASURED BY TOTAL LENGTH OF COMBINATION BEAM FROM END TO END.

816 CERTIFICATION AND APPROVAL OF SIGN SUPPORT & SIGN LIGHTING ITEMS

THE CONTRACTOR SHALL SUBMIT THROUGH PROPER CHANNELS THE DRAWINGS, INFORMATION, & SAMPLES AS REQUIRED BELOW:

A. 8 COPIES OF SHOP DRAWINGS & MATERIAL LISTS FOR APPROVAL:
   1. OVERHEAD SIGN SUPPORTS
   2 SIGN LIGHTING LAYOUT PLAN & DETAILS FOR WIRING, CONDUIT SIZE AND PLACEMENT FROM SIGN DISCONNECT SWITCH TO FIXTURE.

B. 8 COPIES OF CATALOG CUTS DESCRIPTIONS OF SAMPLES OF FABRICATORS STANDARD ITEMS AS SHOWN IN THE PLANS OR THEIR EQUALS FOR APPROVAL OF THEIR USE.

C. CERTIFICATIONS AND/OR SAMPLES FOR ALL MATERIAL WHICH HAVE BEEN APPROVED ABOVE UNDER "A" AND "B"

D. APPROVAL OF ITEMS UNDER "A" AND "B" SHALL BE IN THE HAND OF THE CONTRACTOR PRIOR TO ANY PURCHASE OR INSTALLATION.

E. CERTIFICATIONS OF SAMPLES UNDER "C" MUST BE IN HAND AND APPROVED PRIOR TO CONTRACT COMPLETION.

816 ERECTION OF OVERHEAD SPAN TYPE SIGN SUPPORTS (7 SERIES)

IN ALL CASES, SPAN TYPE OVERHEAD SIGN SUPPORTS AND SIGNS SHALL BE ERECTED CONCURRENTLY. AT NO TIME SHALL THE BOX TRUSSES BE ERECTED WITHOUT THE SIGN BEING IN PLACE WITHIN EIGHT(8) HOURS.

816 - CONCRETE FOR SIGN SUPPORT FOUNDATIONS, BY TYPE

FOUNDATIONS SHALL BE CONSTRUCTED IN THE MANNER CALLED FOR UNDER SUPPLEMENTAL SPECIFICATION 816. CONCRETE SHALL BE CLASS "C".

PAYMENT FOR INSTALLATION ONLY OF THE 2 INCH GALVANIZED STEEL AND THE 3/4 INCH EMT CONDUIT ELLS WILL BE INCLUDED IN THIS ITEM. PAYMENT FOR FURNISHING THIS CONDUIT IS INCLUDED IN THE UNIT PRICE BID FOR OVERHEAD SIGN SUPPORTS.

PAYMENT FOR THIS ITEM SHALL BE PER CUBIC YARD BASED ON APPROVED PLAN DIMENSIONS OR DIMENSIONS AS MODIFIED BY THE ENGINEER IN LIEU OF PLAN QUANTITIES AS SPECIFIED IN SUPPLEMENTAL SPECIFICATION 816.

816 INTERIM STEEL DRIVE POSTS, 4 LBS. PER FOOT, AS PER PLAN

THIS WORK SHALL CONSIST OF FURNISHING AND INSTALLING 4 POUND PER LINEAR FOOT STEEL DRIVE POSTS AS SPECIFIED FOR INTERIM LANE WIDTH TRANSITIONS.

THIS ITEM SHALL INCLUDE 4 POUNDS PER FOOT STEEL DRIVE POSTS 11'-0" LONG BOLTED TO THE INSIDE OF INTERIM BARRELS FURNISHED UNDER 606 USING A MINIMUM OF THREE 5/16" STEEL BOLTS SPACED ON 12" CENTERS.

POST FLANGES SHALL BE 90 DEGREES TO INTERIM EDGE LINES FACING APPROACHING TRAFFIC. STEEL BEARING PLATES 3" x 2" SHALL BE USED AT EACH BOLT OUTSIDE THE BARREL TO PREVENT PULL THROUGH. MOUNTING OF SIGNS ON THE DRIVE POSTS WITH THE BOTTOM OF THE SIGNS 7' ABOVE THE PAVEMENT SHALL BE INCLUDED IN ITEM 815.

THE QUANTITY FURNISHED AND INSTALLED WILL BE PAID FOR AT THE PRICE BID PER LIN. FT. WHICH PRICE SHALL BE FULL COMPENSATION FOR FURNISHING AND INSTALLING DRIVE POSTS INCLUDING NECESSARY HARDWARE, LABOR AND EQUIPMENT.

EXISTING SIGNS

THE EXISTING SIGNS WHICH ARE WITHIN THE ROADWAY WORK AREAS SHALL BE REMOVED AND RE-ERECTED IN THE LOCATIONS INDICATED BY THE PLANS. "STOP" SIGNS WILL BE MAINTAINED AT ALL TIMES WHILE TRAFFIC IS MAINTAINED. THE COST OF RELOCATING THESE SIGNS SHALL BE CONSIDERED A SUBSIDIARY WORK ITEM, THE COST OF WHICH SHALL BE INCLUDED IN THE PRICE BID FOR THE ROADWAY WORK ITEMS. THE SIGNS WHICH ARE TO BE RE-ERECTED ON THE BERMS SHALL BE LOCATED WITH THE CENTERLINE OF SUPPORT ON THE P.I. OF THE SHOULDER.

815 INTERIM COVERING FOR SIGNS

THIS ITEM SHALL CONSIST OF FURNISHING AND INSTALLING AN INTERIM COVER AND ATTACHMENT MATERIALS FOR SIGNS REFERRED TO IN THE PLANS AS "BAGGED" OR AS DIRECTED BY THE ENGINEER. THIS ITEM SHALL ALSO INCLUDE THE SUBSEQUENT REMOVAL OF COVERS WHEN DIRECTED BY THE ENGINEER.

MATERIAL FOR COVERING SHALL BE PLASTIC COATED, BURLAP BLANKETS IN CONFORMANCE WITH 705.09.

THE ENGINEER SHALL APPROVE THE METHOD PROPOSED FOR ATTACHING INTERIM COVERS TO SIGNS PRIOR TO INSTALLATION OF COVERS.

WORK SHALL INCLUDE ALL NECESSARY MATERIAL, HARDWARE, LABOR AND EQUIPMENT REQUIRED TO PERFORM THE REQUIRED ITEM OF WORK.

BASIS OF PAYMENT SHALL BE INTERIM COVERING FOR SIGNS, PER SQUARE FOOT.

IN ADDITION TO THE 27415 SQ. FT. REFERRED TO IN THE PLANS, AN ADDITIONAL QUANTITY OF 300 SQ. FT. FOR ITEM 815, INTERIM COVERING FOR SIGNS, HAVE BEEN INCLUDED TO COVER SIGNS AS DIRECTED BY THE ENGINEER.

816 TRAFFIC SIGNAL SUPPORT POLES

THE FOLLOWING SPECIFICATIONS ARE SUPPLEMENTARY TO SECTION 625.05, 713.01 AND 816.02 OF THE STATE OF OHIO, DEPARTMENT OF HIGHWAYS CONSTRUCTION AND MATERIAL SPECIFICATIONS DATED JANUARY 1, 1969.

THE TRAFFIC SIGNAL SUPPORT POLES SHALL CONSIST OF A CONTINUOUS TAPERED STEEL SHAFT OF 0.14 INCHES PER FOOT COMPLETE WITH ANCHOR BASE, ANCHOR BOLTS, HANDHOLES, CAST POLE TOP, AND A FLANGE PLATE NEAR THE TOP OF THE POLE FOR MOUNTING THE MAST ARM. THE TAPERED STEEL MAST ARM SHALL BE COMPLETE WITH A MOUNTING FLANGE PLATE, HANGER CLAMPS, OUTLETS HAVING A 1" ID RUBBER GROMMET FOR WIRING EACH SIGNAL, AND A REMOVABLE END CAP.

THE TAPERED SHAFT BEING MADE OF ONLY ONE LENGTH OF BEST GRADE, HOT-ROLLED, BASIC OPEN HEARTH STEEL OF NOT LESS THAN THE SIZE AND GAUGE SPECIFIED IN THE PLANS. THE SHAFT SHALL HAVE A 4" X 10" HAND HOLE AS SHOWN ON STANDARD DRAWING HL-2 OR A 4" X 8" CAST STEEL FORM FITTING HAND HOLE AS DETAILED ON SHEET NO. 298.

A FLANGE PLATE OF 1-1/4" THICKNESS SHALL BE WELDED TO THE POLE NEAR THE TOP AND SUPPORTED WITH SIDE PLATES TANGENT TO THE POLE; GASSET PLATES BOTH TOP AND BOTTOM. THE FLANGE PLATES SHALL HAVE A DEBURRED 2-1/2" DIAMETER WIRING HOLE FOR 1-1/4" HIGH-TENSILE BOLTS.

A J-HOOK WIRE SUPPORT SHALL BE WELDED NEAR THE TOP OF THE SHAFT AS SHOWN ON STANDARD DRAWING HL-2. A CAST POLE TOP SHALL BE SECURED IN PLACE WITH SET SCREWS.

EACH POLE SHALL BE PROVIDED WITH A GROUNDING BOLT AND WASHER AS PER DETAIL ON SHEET NO. 298.

THE MAST ARM SHALL BE MADE OF THE SAME MATERIAL, LONGITUDINAL WELDED, FABRICATED IN THE SAME MANNER AS THE TAPERED SHAFT AND HAVE A MINIMUM YIELD STRENGTH OF 50,000 PSI.

A FLANGE PLATE OF 1-1/4" THICKNESS SHALL TELESCOPE THE LARGE END OF THE ARM AND BE WELDED ACCORDING TO THE SPECIFICATIONS SET FORTH IN SECTION 713.01 FOR ANCHOR TYPE BASES. THIS FLANGE PLATE SHALL HAVE FOUR HOLES FOR THE 1-1/4" HIGH-TENSILE BOLTS, WHICH SHALL MATCH THE FOUR TAPPED HOLES IN THE MOUNTING PLATE ON THE POLE. EACH MAST ARM SHALL BE FACTORY DRILLED ON THE BOTTOM SURFACE WITH WIRE OUTLET HOLES AND RUBBER GROMMET, LOCATED AT EACH SIGNAL POSITION. A PRESSED STEEL REMOVABLE CAP SHALL BE ATTACHED TO THE END OF THE ARM BY A SCREW. FOR EACH REQUIRED SIGNAL A CLAMP AND CLEVIS WITH 11/16" DIAMETER HOLES SHALL BE FURNISHED.

THE POLES AND MAST ARMS SHALL BE OF SUCH DESIGN AT TO MAKE A COMPLETE WIRING RACEWAY AFTER THE POLE AND ARMS ARE ASSEMBLED AND ERECTED.

PAYMENT FOR ITEM 816 TRAFFIC SIGNAL SUPPORT POLES WILL BE MADE FOR EACH POLE ERECTED AND SHALL INCLUDE THE POLE, MAST ARM, ANCHOR BOLTS AND ALL ACCESSORIES. POLE ERECTING SHALL BE ACCOMPLISHED ACCORDING TO SECTION 816.09.

TRAFFIC SIGNAL SUPPORT FOUNDATIONS

THE FOLLOWING SPECIFICATIONS ARE SUPPLEMENTARY TO SECTION 816.06, 816.07, 816.08 AND 816.09 OF THE STATE OF OHIO, DEPARTMENT OF HIGHWAYS, CONSTRUCTION AND MATERIAL SUPPLEMENTARY SPECIFICATION 816 DATED JANUARY 1, 1969.

WHERE SOLID ROCK IS ENCOUNTERED, THE REMAINING DEPTH TO BE EXCAVATED MAY BE DECREASED, IF ANCHORAGE TO SOLID ROCK IS PROVIDED AS DIRECTED BY THE ENGINEER.

PAYMENT FOR ITEM 816 TRAFFIC SIGNAL SUPPORT FOUNDATIONS SHALL BE CUBIC YARDS OF CONCRETE PLACED. PAYMENT FOR REINFORCING, CONDUIT ELLS AND THE 3/4" EMT FOR GROUNDING SHALL BE ENCLUDED IN THIS ITEM.

TRAFFIC CONTROL GENERAL NOTES

FED. RD.	STATE	PROJECT	
2	OHIO		

270
460

SUM 8 17.63

620 DELINEATORS, AS PER PLAN

THE CONTRACTOR SHALL HAVE THE OPTION OF DRIVING OR CONCRETE EMBEDDING THE DELINEATOR POST IN ACCORDANCE WITH DETAILS OF SHEET 3128.

POSTS MAY BE TRIMMED ON THE EMBEDDED ENDS TO ADJUST FOR GRADE AND REQUIRED DELINEATOR MOUNTING HEIGHT. CONCRETE SHALL BE CLASS "C".

IN EITHER CASE, THE CONTRACTOR SHALL BE RESPONSIBLE FOR DAMAGE TO UNDERGROUND UTILITIES OR CABLE DURING PERFORMANCE OF THIS ITEM OF WORK.

THE QUANTITY FURNISHED AND INSTALLED SHALL BE PAID FOR AT THE PRICE BID PER EACH WHICH PRICE SHALL BE FULL COMPENSATION FOR EITHER TYPE OF INSTALLATION.

620 DELINEATORS, CONCRETE EMBEDDED

DELINEATOR POSTS SHALL BE EMBEDDED IN CONCRETE IN ACCORDANCE WITH DETAILS SHOWN ON SHEET 3128.

POSTS MAY BE TRIMMED ON THE EMBEDDED ENDS TO ADJUST FOR GRADE AND REQUIRED DELINEATOR MOUNTING HEIGHT. CONCRETE SHALL BE CLASS "C".

THE CONTRACTOR SHALL BE RESPONSIBLE FOR ANY DAMAGE TO UNDERGROUND UTILITIES OR CABLE DURING PERFORMANCE OF THIS ITEM OF WORK.

PAYMENT FOR THIS ITEM IS PER *EACH DELINEATOR, CONCRETE EMBEDDED*

620 INTERIM DELINEATORS, AS PER PLAN

THIS WORK SHALL CONSIST OF FURNISHING AND INSTALLING INTERIM DELINEATORS AS SPECIFIED ON PLAN SHEETS.

THIS ITEM SHALL INCLUDE 2 POUNDS PER FOOT STEEL DRIVE POSTS 4'-0" LONG BOLTED TO INSIDE OF INTERIM BARRELS FURNISHED UNDER 606 USING A MINIMUM OF THREE 5/16" STEEL BOLTS SPACED ON 12" CENTERS. POST FLANGES SHALL BE 90 DEGREES TO INTERIM EDGE LINES FACING APPROACHING TRAFFIC. TYPE C2 DELINEATORS SHALL BE MOUNTED ON THE DRIVE POST FLANGES WITH THE TOP OF THE DELINEATOR 4' ABOVE THE PAVEMENT.

THE QUANTITY FURNISHED AND INSTALLED WILL BE PAID FOR AT THE PRICE BID PER EACH WHICH PRICE SHALL BE FULL COMPENSATION FOR FURNISHING AND INSTALLING DRIVE POSTS AND DELINEATORS INCLUDING NECESSARY HARDWARE, LABOR AND EQUIPMENT.

815 SIGN ERECTION, EXTRUSHEET OR FLAT SHEET TYPE

THE CONTRACTOR SHALL ERECT SIGN PANELS AS INDICATED ON THE SCHEMATIC SIGNING PLAN SHEET NUMBERS 277 THRU 284. THE PANELS WILL BE FURNISHED BY OTHERS AND SHALL BE MOUNTED ON THE BRACKETS OR BEAM SUPPORTS PROVIDED IN THE PLANS.

ALL SIGN MATERIAL AND ACCESSORIES WILL BE FURNISHED AND TRANSPORTED BY OTHERS TO A DELIVERY POINT DESIGNATED BY THE CONTRACTOR ON OR NEAR THE SUBJECT PROJECT. THE CONTRACTOR SHALL BE RESPONSIBLE FOR THE HANDLING, PROTECTION AND STORAGE OF THE SIGN PANELS AND ACCESSORIES FROM THE TIME OF UNLOADING BY OTHERS AT THE DELIVERY POINT.

LARGE GUIDE SIGNS (OVER 8 FEET IN HEIGHT) MAY BE DELIVERED UNASSEMBLED. WORK SHALL ALSO CONSIST OF ASSEMBLY OF THESE PANELS INCLUDING ATTACHMENT OF DEMOUNTABLE SIGN LEGEND, WHERE NECESSARY, AND ERECTION OF SIGNS IN CONFORMANCE WITH THE SCHEMATIC SIGNING PLAN.

THE CONTRACTOR SHALL SUBMIT, IN THREE COPIES, A SCHEDULE FOR SIGN ERECTION TO THE ENGINEER AT LEAST 120 CALENDAR DAYS PRIOR TO THE START OF ANY SCHEDULED ERECTION WORK. THE SCHEDULE SHALL INCLUDE PROPOSED DATES, SIGN NUMBERS, AND DELIVERY POINT. THE ENGINEER WILL FURNISH COPIES OF THE SCHEDULE TO THE DIVISION TRAFFIC ENGINEER AND TO THE ENGINEER OF DESIGN SERVICES, 25 SOUTH FRONT STREET, COLUMBUS, OHIO, 43215.

THE PRICE BID PER SQUARE FOOT FOR "ITEM 815, SIGN ERECTION, BY TYPE", SHALL INCLUDE PAYMENT FOR ALL NECESSARY EQUIPMENT, LABOR, AND TOOLS TO STORE, ASSEMBLE, AND ERECT THE SIGNS AS SPECIFIED.

815 SIGN ERECTION, INTERIM FLAT SHEET OVERLAY TYPE

THIS ITEM OF WORK SHALL CONSIST OF THE ASSEMBLY AND ERECTION OF INTERIM ALUMINUM FLAT SHEET OVERLAY SIGNS FURNISHED BY OTHERS TO BE PLACED OVER SIGN PANELS AT LOCATIONS SHOWN IN THE PLANS.

METHOD OF ATTACHMENT SHALL BE BY RIVETS ON PERIPHERY AND ENTIRE SURFACE AREA OF THE SHEETING AT A MAXIMUM SPACING OF 2'-6".

CONTRACTOR'S RESPONSIBILITY FOR OVERLAYS FURNISHED BY OTHERS SHALL BE SIMILAR TO THOSE SPECIFIED IN THE "SIGN ERECTION BY TYPE" ITEM CONTAINED IN THESE PLANS.

BASIS OF PAYMENT SHALL BE AT THE CONTRACT BID PRICE PER SQUARE FOOT FOR ERECTION OF INTERIM SIGN OVERLAYS INCLUDING ALL EQUIPMENT, LABOR, MATERIALS INCIDENTAL TO THIS ITEM OF WORK.

INTERIM PAVEMENT MARKING, BY TYPE

THIS WORK SHALL CONSIST OF THE FURNISHING AND INSTALLATION OF INTERIM REMOVABLE MARKINGS AS SPECIFIED HEREIN AND SHOWN ON THE PLANS.

1. MATERIAL

MATERIAL SHALL CONSIST OF A BACKING COATED WITH A PRESSURESENSITIVE ADHESIVE AND A WEATHER AND TRAFFIC RESISTANT REFLECTIVE WHITE OR YELLOW COLORED SURFACE AND ADDITIONAL REQUIREMENTS AS FOLLOWS:

A. REFLECTION - THE WHITE AND YELLOW STRIPING MATERIAL SHALL BE REFLEX-REFLECTIVE, REFLECTING WHITE OR YELLOW RESPECTIVELY AND SHALL BE READILY VISIBLE WHEN VIEWED WITH AUTOMOBILE HEADLIGHTS AT NIGHT.

B. ADHESIVE - THE STRIPING MATERIAL SHALL HAVE A PRECOATED PRESSURE - SENSITIVE ADHESIVE WHICH SHALL NOT REQUIRE A LINER FOR PROTECTION FROM CONTAMINATION, PREADHESION, OR BLOCKING WITHIN THE ROLL AS DELIVERED.

C. CONFORMABILITY - THE STRIPING MATERIAL SHALL BE THIN, FLEXIBLE, FORMABLE, AND FOLLOWING APPLICATION, SHALL REMAIN CONFORMED TO THE TEXTURE OF THE PAVEMENT SURFACE.

D. REMOVABILITY - THE STRIPING MATERIAL BACKING SHALL PERMIT REMOVAL WITHOUT REQUIRING SANDBLAST, SOLVENT, OR GRINDING METHODS.

E. DURABILITY - THE STRIPING MATERIAL APPLIED IN ACCORDANCE WITH RECOMMENDED PROCEDURES SHALL BE WEATHER RESISTANT AND SHOW NO APPRECIABLE FADING, LIFTING OR SHRINKAGE, PRIOR TO COMPLETION OF THIS PROJECT.

F. GENERAL - THE STRIPING MATERIAL AS SUPPLIED SHALL BE OF GOOD APPEARANCE, FREE FROM CRACKS, AND EDGES SHALL BE TRUE, STRAIGHT, AND UNBROKEN. THE STRIPING MATERIAL SHALL BE SUPPLIED IN ROLLS AND THERE SHALL BE NO MORE THAN 3 SPLICES PER 60 YARDS OF LENGTH.

THE STRIPING MATERIAL SHALL BE PREPARED FOR DELIVERY IN STANDARD COMMERCIAL CONTAINERS SO CONSTRUCTED AS TO INSURE ACCEPTANCE BY THE CARRIER AND PREVENT DAMAGE DURING PROPER SHIPMENT AND STORAGE.

THE CONTRACTOR SHALL STORE THE MATERIAL IN A COOL, DRY LOCATION WHERE TEMPERATURE WILL NOT EXCEED 100 DEGREES F. PRIOR TO APPLICATION OF MARKING ON ROADWAY SURFACES.

2. ROAD SURFACE PREPARATION

THE ROAD SURFACE MUST BE CLEAN AND DRY, FREE OF OILS AND GREASE, DUST OR DIRT. ALL SURFACES MUST BE PRIMED.

CONCRETE PAVEMENT SHALL BE SURFACE TREATED IN ACCORDANCE WITH SECTION 621.04. SURFACE SHALL THEN BE GENEROUSLY FLUSHED WITH CLEAN WATER AND ALLOWED TO DRY THROUGHLY PRIOR TO APPLICATION OF PRIMER AND INTERIM MARKINGS.

3. PRIMING

METHOD OF PRIMING SHALL BE AS APPROVED BY THE ENGINEER. THE CONTRACTOR SHALL SUBMIT A PROPOSAL FOR TYPE OF PRIMING TO BE USED. COST FOR PRIMING SURFACES SHALL BE INCIDENTAL TO THE COST OF VARIOUS ITEMS INCLUDED IN ITEM 615, TEMPORARY ROADS, AS PER PLAN.

4. APPLICATION

INTERIM LINES SHALL BE APPLIED TO THE ROAD SURFACE WITH A ROLLER TYPE APPLICATOR AND ROLLED IMMEDIATELY AFTERWARDS BY RUBBER-TIRED ROLLER WITH APPROXIMATE SINGLE WHEEL LOAD BETWEEN ONE THOUSAND (1000) AND TWO THOUSAND (2000) POUNDS.

5. SPECIAL PLAN DETAILS

DETAILS FOR LOCATION OF INTERIM MARKINGS ARE SHOWN ON SIGN LOCATION PLAN SHEETS.

6. BASIS OF PAYMENT

COST OF FURNISHING AND INSTALLATION OF INTERIM PAVEMENT MARKING SHALL BE INCLUDED AT THE CONTRACT UNIT PRICE PER LINEAR FOOT.

TRAFFIC CONTROL GENERAL NOTES

FED. RD.	STATE	PROJECT	
2	OHIO		

270A 460

SUM-8-17.63

625 ELECTRICAL - GENERAL

THIS ITEM SHALL CONSIST OF FURNISHING ALL NECESSARY MATERIAL, LABOR AND FACILITIES REQUIRED TO COMPLETE THE ELECTRICAL INSTALLATION IN ACCORDANCE WITH THE DESIGNS, DIMENSIONS AND DETAILS SHOWN IN THE PLANS AND DESCRIBED IN THE SPECIFICATIONS.

ALL MATERIAL, WORKMANSHIP AND CONSTRUCTION METHODS, EXCEPT AS MODIFIED HEREIN, SHALL CONFORM TO THE GENERAL REQUIREMENTS OF THE STATE OF OHIO, DEPARTMENT OF HIGHWAYS, CONSTRUCTION AND MATERIALS SPECIFICATIONS, JANUARY 1, 1969.

625 SIGN SERVICE

THIS ITEM SHALL CONSIST OF THE COMPLETION OF THE ELECTRICAL SYSTEM AND COMPONENTS FROM THE CONNECTORS IN THE PULL BOX (INCLUDED WITHIN THE ROADWAY LIGHTING QUANTITIES) TO THE PRIMARY SIDE OF THE DISCONNECT SWITCH.

WORK WILL INCLUDE THE FURNISHING AND INSTALLING (INCLUDING TRENCHING AND BACK-FILLING) OF THE 2 INCH GALVANIZED STEEL CONDUIT AND COUPLINGS FROM THE PULL BOX TO THE CONDUIT ELL IN THE SIGN SUPPORT FOUNDATION.

THIS ITEM WILL ALSO INCLUDE THE FURNISHING AND INSTALLING OF THE 1/C 600 VOLT SERVICE WIRE FROM THE CONNECTORS TO THE DISCONNECT SWITCH.

BASIS OF PAYMENT FOR THIS ITEM SHALL BE AT CONTRACT UNIT PRICE PER EACH, WHICH SHALL INCLUDE ALL LABOR, MATERIAL, AND EQUIPMENT REQUIRED TO COMPLETE THIS ITEM OF WORK.

625 SIGNS WIRED, COMPLETE

THIS ITEM SHALL CONSIST OF THE COMPLETION OF THE ELECTRICAL SIGN LIGHTING SYSTEM FOR EACH ILLUMINATED SIGN.

WORK SHALL INCLUDE INSTALLATION OF LIGHT FIXTURES AND BALLASTS, AND FURNISHING AND INSTALLATION OF ALL RIGID AND FLEXIBLE CONDUIT, (CONDULETS) JUNCTION BOXES, CABLE, FASTENERS, HARDWARE, AND ALL OTHER ITEMS REQUIRED TO ENERGIZE THE SIGN LIGHTING SYSTEM. SEE DETAILS ON SHEETS 307 & 308.

THE COST OF FURNISHING AND INSTALLING CABLE, CABLE GRIPS, CABLE SPLICE UNITS, AND NECESSARY FASTENERS FROM THE DISCONNECT SWITCH TO THE SIGNS (OR BETWEEN SIGNS) WITHIN SIGN SUPPORT MEMBERS SHALL BE INCLUDED IN THIS ITEM OF WORK.

BASIS OF PAYMENT SHALL BE AT THE CONTRACT UNIT PRICE PER EACH SIGN WIRED WHICH PRICE SHALL INCLUDE ALL LABOR, MATERIALS, TOOLS, EQUIPMENT, AND OTHER INCIDENTALS TO PROVIDE A COMPLETE AND ACCEPTED ITEM OF WORK.

ILLUMINATED SIGNS REQUIRING TWO (2) BALLASTS SHALL BE CONSIDERED AS AN EQUIVALENT OF TWO (2) SEPARATE SIGNS FOR DETERMINATION OF PAYMENT QUANTITIES.

625 LIGHT FIXUTRE WITH LAMP, BY TYPE AND SIZE

THIS ITEM OF WORK SHALL CONSIST OF FURNISHING ALL LIGHT FIXTURES AND LAMPS, TYPES AND SIZES AS SPECIFIED ON SHEET 307.

BASIS OF PAYMENT FOR THIS ITEM SHALL BE AT CONTRACT UNIT PRICE PER EACH, FURNISHED TO THE JOB FOR INSTALLATION UNDER ITEM 625 SIGNS WIRED, COMPLETE.

625 GROUND RODS

THIS ITEM OF WORK SHALL CONSIST OF FURNISHING AND INSTALLING GROUNG ROD AND CABLE AS DETAILED AND SPECIFIED ON SHEET 309.

BASIS OF PAYMENT FOR THIS ITEM SHALL BE AT CONTRACT UNIT PRICE PER EACH, WHICH SHALL INCLUDE ALL LABOR, MATERIALS AND EQUIPMENT REQUIRED TO COMPLETE THIS ITEM OF WORK.

625 PULL BOXES

THE FOLLOWING SPECIFICATIONS FOR PULL BOXES ARE SUPPLEMENTARY TO SECTION 625.11 AND 713.09.

ALL PULL BOXES SHALL BE 18" DIAMETER CORRUGATED METAL.

THE CONTRACTOR SHALL CUT ONLY THE NECESSARY SIZE AND LENGTH OF EXTRA SLOTS FOR DUCT CABLE, OR HOLE FOR CROSS OVER CONDUIT AS DETERMINED FOR EACH LOCATION.

THE PULL BOX SHALL PROJECT A MAXIMUM OF 1" ABOVE FINISHED GRADE IN LIEU OF 1-1/2" MINIMUM AS SHOWN ON HL-3.

PAYMENT FOR ITEM 625 PULL BOXES SHALL BE PER EACH INSTALLED.

625 TRENCH

THE CONTRACTOR SHALL DO ALL EXCAVATION OF EVERY DESCRIPTION TO THE DIMENSIONS AND LEVELS SHOWN ON THE PLANS, OR AS DIRECTED BY THE ENGINEER. EXCAVATION MAY BE ACCOMPLISHED WITH MECHANICAL TRENCHING AND BORING EQUIPMENT EXCEPT THAT THE CONTRACTOR MAY NOT USE A TRENCHER THAT PRODUCES SUCH LIFTING FORCE AS TO DESTROY THE EDGE OR SIDEWALK.

WITHOUT PRIOR APPROVAL OF THE ENGINEER, EXCAVATIONS FOR TRENCHES SHALL NOT EXCEED 12 INCHES IN WIDTH.

THE TRENCH ALIGNMENT SHALL BE IN ACCORDANCE WITH STANDARD CONSTRUCTION DRAWING HL-1.

PAYMENT FOR ITEM 625 TRENCH SHALL BE PER LINEAR FOOT COMPLETED.

625 CONDUIT

CONDUIT REQUIRED FOR INSTALLATION OF TRAFFIC CONTROL DEVICES SHALL BE 713.04 TYPE II OR III AS PER PLAN.

PAYMENT FOR ITEM 625 CONDUIT SHALL BE PER LINEAR FOOT INSTALLED.

625 WIRE AND CABLE

WIRE AND CABLE FOR TRAFFIC CONTROL DEVICES SHALL CONFORM TO SECTION 625 AND 713 OF THE CONSTRUCTION AND MATERIAL SPECIFICATIONS. ,WIRE OR CABLE INSTALLED UNDERGROUND LEADING FROM THE PULLBOX TO THE DISCONNECT SWITCH SHALL BE #4 AWG, UL TYPE RHW SINGLE CONDUCTOR.
WIRE OR CABLE INSTALLED IN CONDUIT ON OR WITH SIGN STRUCTURES SHALL BE #10 RHH, 600 VOLT STANDARD COPPER WIRE (POLE AND BRACKET CABLE).

SIGNAL SYSTEM CIRCUITS.

WIRE AND CABLE FOR TRAFFIC SIGNALS SHALL CONFORM IN ALL RESPECTS TO SPECIFICATION NO. 20-1-1967 OF THE INTERNATIONAL MUNICIPAL SIGNAL ASSOCIATION (IMSA) WIRE AND CABLE SPECIFICATIONS.

POWER DISTRIBUTION TO THE TRAFFIC SIGNAL CONTROLLE R FROM THE SER VICE CENTER IN UNIT TYPE DUCT-CABLE OR SINGLE CONDUCTOR WIRE IN CONDUIT AS PER PLAN SHALL BE #4 AWG, UL TYPE RHW.

SIGNAL CONTROL CABLES. THE CABLES SUPPLYING SERVICE TO THE VEHICULAR SIGNAL HEADS AND PEDESTRIAN SIGNAL UNITS SHALL BE 5 CONDUCTOR. INDIVIDUAL CONDUCTORS SHALL BE #12 AWG STRANDED. THE OVERALL MAXIMUM OUTSIDE DIAMETER OF THE CABLE SHALL NOT EXCEED 0.50 INCHES.

DETECTOR LEAD-IN CABLES. THE CABLES SHALL BE 2 CONDUCTOR, TWISTED, INDIVIDUAL CONDUCTORS SHALL BE #12 AWG STRANDED & SHIELDED, IMSA 20-4-1967.

LOOP WIRE. THE WIRE SHALL BE AN INSULATED SINGLE CONDUCTOR #12 THW. THE LOOP CONSISTS OF ONE OR MORE TURNS OF WIRE EMBEDDED IN A SLOT IN THE ROAD SURFACE AS PER PLAN. IF THE SLOT IS SAWED INTO THE SURFACE, THE LOOP WIRES SHOULD BE CAREFULLY PUSHED INTO THE SLOT BY USING A WOODEN STICK OR SOME OTHER BLUNT INSTRUMENT IN ORDER TO PREVENT DAMAGE TO THE INSULATION OF THE WIRE. AFTER THE WIRE IS PLACED A HEAT DISIPATING SAND COVER OF APPROXIMATELY 1/2" DEEP SHOULD COVER THE WIRE PRIOR TO FILLING THE SLOT WITH AN APPROVED ASPHALT SUBSTANCE, OR PLACEMENT OF THE PAVEMENT FINAL OVERLAY. THE COMPLETE INSTALLATION SHALL BE WATERTIGHT.

SPADE TYPE LUGS MUST BE USED WHEN STANDARD WIRE IS CONNECTED TO SCREW TYPE TERMINALS. WHEN TERMINALS ARE NOT USED, ALL CONNECTIONS SHALL BE MADE WITH TYPE 713.15 CABLE CONNECTOR KITS OF THE PROPER SIZE TO INSURE A GOOD ELECTRICAL AND MECHANICAL CONNECTION. ALL SPLICES SHALL BE MADE WITH CONNECTORS OF THE PROPER SIZE TO INSURE A GOOD ELECTRICAL AND MECHANICAL CONNECTION.

PAYMENT FOR ITEM 625 WIRE OR CABLE SHALL BE PER LINEAR FOOT.

ALL CABLES ENTERING AN ACCESSIBLE ENCLOSURE FOR THE PURPOSE OF BEING TERMINATED OR CONNECTED TO ANOTHER DEVICE SHALL BE IDENTIFIED IN SUCH ENCLOSURE WITH TAGS OR BANDS AS DESCRIBED IN SECTION 713.18.

NO CABLE SPLICES WILL BE PERMITTED BETWEEN TERMINATIONS.

PAYMENT FOR THE ABOVE SHALL BE INCLUDED IN THE UNIT PRICES BID FOR THE RESPECTIVE CABLE ITEMS.

PROTECTION OF COMPLETED WORK

CONDUIT AND/OR DUCT CABLE TERMINALS SHALL BE SEALED, AS REQUIRED BY 625.13, IMMEDIATELY UPON COMPLETION OF INSTALLATION.

EMPTY CONDUITS SHALL BE CAPPED OR OTHERWISE CLOSED IMMEDIATELY UPON INSTALLATION UNTIL PULL WIRE OR CABLE IS INSTALLED AND FINAL SEALING COMPLETED

HAND HOLES SHALL HAVE COVERS INSTALLED IMMEDIATELY UPON ERECTION OF POLE.

ALL CABLE CONNECTOR KITS AND EXPOSED CABLE ENDS SHALL BE ADEQUATELY PROTECTED BY ENCLOSING IN PLASTIC BAGS, TAPING, OR OTHER APPROVED MEANS, UNTIL CABLE CONNECTIONS HAVE BEEN COMPLETED.

PAYMENT FOR THIS WORK SHALL BE INCLUDED IN THE UNIT PRICES BID FOR EACH OF THE RESPECTIVE ITEMS.

625 BALLAST, BY TYPE

BALLAST FOR FIXTURES SHALL BE WEATHER-PROOF OUTDOOR TYPE FOR A 120 VOLT 60 CYCLE SYSTEM AND SHALL PROVIDE LAMP STARTING AT AN AMBIENT TEMPERATURE OF -20 DEGREES F.

THIS ITEM OF WORK SHALL CONSIST OF FURNISHING ALL BALLAST TYPES A THROUGH D AS DETAILED AND SPECIFIED ON SHEET 308.

BASIS OF PAYMENT FOR THIS ITEM SHALL BE AT CONTRACT UNIT PRICE PER EACH, FURNISHED TO THE JOB FOR INSTALLATION UNDER ITEM 625 "SIGNS WIRED, COMPLETE"

625 TRANSFORMER, BY TYPE

THIS ITEM OF WORK SHALL CONSIST OF FURNISHING AND INSTALLING TRANSFORMERS AS DETAILED AND SPECIFIED ON SHEET 309.

BASIS OF PAYMENT FOR THIS ITEM SHALL BE AT CONTRACT UNIT PRICE PER EACH, WHICH SHALL INCLUDE ALL LABOR, MATERIAL AND EQUIPMENT REQUIRED FOR THIS COMPLETE ITEM OF WORK.

625 DISCONNECT SWITCH WITH TYPE "Y" OR "Z" ENCLOSURE

THIS ITEM SHALL INCLUDE FURNISHING OF A 30 AMP. 600 VOLT FUSED DISCONNECT SWITCH OF TYPE AND MAKE AS INDICATED ON SHEET 309 AND SHALL BE MOUNTED IN A NEMA 4 STAINLESS STEEL ENCLOSURE TYPE "Y" OR "Z" AND ATTACHED TO EACH SIGN SUPPORT BY MEANS OF A MOUNTING BRACKET AS DESCRIBED IN DETAIL ON THE ABOVE SHEET.

EACH SWITCH ENCLOSURE SHALL BE FURNISHED WITH ONE PADLOCK. PADLOCKS SHALL HAVE A BRASS BODY AND WROGHT IRON SHACKLE EQUAL TO RUSSWIN NO. 2882 KA OR MASTER NO. 4 OR APPROVED EQUAL.

BASIS OF PAYMENT FOR THIS ITEM SHALL BE PER EACH AT CONTRACT UNIT PRICE, WHICH SHALL INCLUDE ALL LABOR, MATERIAL, AND EQUIPMENT TO COMPLETE THIS ITEM OF WORK.

625 TRAFFIC SIGNAL SERVICE CENTER

THIS ITEM SHALL INCLUDE FURNISHING AND INSTALLING A 30 AMP. 600-VOLT FUSED DISCONNECT SWITCH OF TYPE AND MAKE AS INDICATED ON SHEET 267, WITH A 5 K.V.A. TRANSFORMER MOUNTED IN A NEMA 4 STAINLESS STEEL ENCLOSURE TYPE "Z" WIRED INTO AND ATTACHED TO THE DISTRIBUTION CENTER AS DESCRIBED ON SHEET 267 OF THE ROADWAY LIGHTING PLANS.

EACH ENCLOSURE SHALL BE FURNISHED WITH ONE PADLOCK. PADLOCKS SHALL HAVE A BRASS BODY AND WROUGHT IRON SHACKLE EQUAL TO RUSSWIN NO. 2882 KA OR MASTER NO. 4KA OR APPROVED EQUAL.

BASIS OF PAYMENT FOR THIS ITEM SHALL BE PER EACH AT THE CONTRACT UNIT PRICE WHICH SHALL INCLUDE WIRING OF THE SERVICE CENTER FROM THE SECONDARY SIDE OF THE DISTRIBUTION CENTER TRANSFORMER TO THE PRIMARY SIDE OF THE TRAFFIC SIGNAL SERVICE CENTER TRANSFORMER INCLUDING ALL LABOR, MATERIALS AND EQUIPMENT NECESSARY TO COMPLETE THIS ITEM OF WORK.

625 INSPECTION AND TESTING OF SIGN LIGHTING

THE CONTRACTOR SHALL FURNISH ALL LABOR, ELECTRICAL POWER, AND EQUIPMENT NECESSARY TO DEMONSTRATE TO THE ENGINEER THAT NO SHORT CIRCUITS AND UNSPECIFIED GROUNDS EXIST AND THAT THE SIGN CIRCUITS ARE PROPERLY CONNECTED AND OPERABLE PRIOR TO ACCEPTANCE.

THIS DEMONSTRATION SHALL INCLUDE A MEGGARING TEST TO SHOW THAT THE POWER CONDUCTORS ARE NOT GROUNDED AND THAT THE RESISTANCE TO GROUND FOR THE GROUND CONDUCTOR IS NOT MORE THAN 25 OHMS. WHERE RESISTANCE EXCEEDS 25 OHMS, ADDITIONAL LENGTH AND/OR NUMBERS OF RODS SHALL BE INSTALLED PER REQUIREMENTS OF 625.10.

A VOLTAGE AND AMPERAGE MEASUREMENT SHALL BE MADE AT THE SIGN SUPPORT SWITCH.

WHERE A LOW VOLTAGE TAP TRANSFORMER IS USED THE VOLTAGE MEASUREMENT SHALL BE USED TO DETERMINE THE APPLICABLE TAP.

AFTER THE SIGN LIGHTING SYSTEM IS COMPLETED, THE ENTIRE SYSTEM SHALL BE OPERATED CONTINUOUS EACH NIGHT UNTIL SEVEN (7) CONSECUTIVE DAYS ELAPSE WITHOUT FAILURE OR DEFECT. THE CONTRACTOR SHALL RECORD AND SUBSEQUENTLY CORRECT ANY DEFECTS WHICH MAY DEVELOP AT NO EXTRA COST TO THE STATE.

DURING THE TEST PERIOD, ADJUSTMENTS TO FIXTURE ARMING ANGLES SHALL BE MADE TO OBTAIN MAXIMUM UNIFORMITY AS DIRECTED BY THE ENGINEER.

THE ABOVE MEASUREMENTS, VOLTAGE TAP SELECTION NOTATIONS, AND METHODS OF DEFECT CORRECTION SHALL BE RECORDED AND DELIVERED TO THE ENGINEER FOR INCLUSION IN THE PROJECT RECORDS.

INSPECTION AND TESTING OF THE SIGN LIGHTING SYSTEM SHALL BE CONSIDERED A SUBSIDARY WORK ITEM AND PAYMENT THEREFORE SHALL BE INCLUDED IN THE UNIT PRICES BID FOR THE RESPECTIVE ITEMS TESTED.

TRAFFIC CONTROL GENERAL NOTES

FED. RD.	STATE	PROJECT	
2	OHIO		

271
460

SUM-8-17.63

LOCATION FROM	TO	DISTANCE FROM CENTERLINE OR BASELINE	4" EDGE LINE L.F.	4" LANE LINE L.F.	6" LANE LINE L.F.	8" CHAN. LINE L.F.	24" BROAD TRANS. STRIPE L.F.	4" YELLOW BARRIER LINE L.F.	PAINTED ISLAND L.F.	PAINTED CURB L.F.	24" STOP BAR L.F.	12" CROSS-WALK LINE L.F.
NORTHBOUND MAINLINE												
229 + 00	269 + 45	20' RT.			1517							
229 + 00	1043 + 44	32' RT.			4247							
229 +00	269 + 45	8' RT.	4045									
229 + 00	235 + 89	44' RT.	689									
235 + 89	244 + 88	44' TO 79' RT.	899									
240 + 37	243 + 85	44' RT.		131								
243 + 85	245 + 88	44' RT.				203						
244 + 88	245 + 17	54' RT.							171			
245 + 17	245 + 88	54' RT								71		
245 + 88	263 + 10	44' RT.	1722									
258 + 70	260 + 70	69' TO 63' RT.				200						
260 + 70	263 + 10	44' RT.		90								
262 + 19	262 + 69	54' RT.							354			
262 + 69	262 + 19	54' RT.								50		
268 + 70	282 + 25	44' RT.	1355									
269 + 45	281 + 45	8' TO 20' RT.	1200									
277 + 50	279 + 49	44' RT.				199						
277 + 50	287 + 50	69' TO 44' RT.	1000									
279 + 49	281 + 90	44' RT.		91								
281 + 45	1043 + 44	20' RT.	6078									
287 + 50	312 + 00	44' RT.	2450									
312 + 00	320 + 20	44' TO 82' RT.	820									
315 + 25	318 + 50	44' RT.		122								
318 + 50	320 + 20	44' RT.				170						
320 + 20	1042 + 37	44' RT.	2096									
1037 + 98	1039 + 95	55' TO 49' RT.				197						
1037 + 98	1043 + 44	69' TO 44' RT.	546									
1039 + 95	1042 + 37	44' RT.		91								
SOUTHBOUND LANES												
299 + 00	272 + 95	20' LT.			1536							
229 + 00	1043 + 44	32' LT.			4247							
299 + 00	272 + 95	8' LT.	4095									
229 + 00	244 + 89	56' TO 69' LT.	1589									
240 + 48	261 + 69	44' LT.	2121									
240 + 48	242 + 89	44' LT.		90								
242 + 89	244 + 89	50' TO 56' LT.				200						
261 + 70	264 + 25	44' LT.				255						
262 + 69	270 + 69	44' TO 79' LT.	800									
264 + 25	266 + 97	44' LT.		102								
270 + 69	310 + 29	44' LT.	3960									
272 + 95	1043 + 44	20' LT.	6929									
310 + 29	320 + 29	44' TO 69' LT.	1000									
315 + 89	321 + 56	44' LT.	567									
315 + 89	318 + 29	44' LT.		90								
318 + 29	320 + 29	55' TO 49' LT.				200						
321 + 56	331 + 56	44' TO 69' LT.	1000									
327 + 16	329 + 56	44' LT.		90								
327 + 16	1040 + 66	44' LT.	1229									
329 + 56	331 + 56	50' TO 56' LT.				200						
1040 + 66	1042 + 50	44' LT.				184						
1042 + 50	1043 + 44	44' LT.		35								
RAMP "L"												
244 + 89	245 + 89	15' RT.								100		
244 + 89	253 + 74	℄	885									
245 + 89	250 + 53	16' RT.	464									
250 + 52.85	251 + 49	16' LT.	96									
251 + 49	252 + 30	RT.								81		
252 + 30	252 + 50	LT.							136			
252 + 49	253 + 25	20' TO 12' RT.				76	24					
RAMP "M"												
243 + 85	244 + 91	16' LT.				106	122					
244 + 91	253 + 56	℄	865									
245 + 19	245 + 91	18' LT.								72		
245 + 91	251 + 90	16' LT.	600									
252 + 56		RT.&LT.										70
RAMP "N"												
251 + 48	251 + 62	20' RT.							90			
251 + 50		RT.										52
251 + 50	251 + 49	16' TO 20' RT.				200						
251 + 62	252 + 49	18' RT.								107		
252 + 49	268 + 70	℄	1621									
252 + 49	257 + 70	16' LT.	521									
257 + 70	258 + 70	16' LT.								100		
RAMP "P"												
254 + 31	262 + 56	℄	825									
255 + 25	261 + 56	16' LT.	631									
261 + 56	262 + 00	19' RT.								44		
262 + 56	264 + 25	16' RT.				169	180					
RAMP "Q"												
270 + 40		RT.&LT.										136
270 + 75	277 + 50	℄	675									
270 + 87	275 + 00	16' LT.	413									
276 + 50	277 + 50	17' LT.								100		
RAMP "A"												
331 + 56	332 + 56	17' LT.								100		
331 + 56	336 + 37	℄	481									
333 + 56	336 + 00	16' LT.	244									
335 + 96	336 + 55	16' LT.								65		
336 + 55	337 + 36	17' LT.							480			
337 + 36	338 + 35	20' LT.								99		
338 + 35	338 + 37	20' LT.							88			
338 + 35	338 + 75	20' LT.				40	52					
SUB TOTAL			54,511	932	11,547	2599	378	—	1319	989	—	258

LOCATION FROM	TO	DISTANCE FROM CENTERLINE OR BASELINE L.F.	4" EDGE LINE L.F.	4" LANE LINE L.F.	6" LANE LINE L.F.	8" CHAN. LINE L.F.	24" BROAD TRANS. STRIPE L.F.	4" YELLOW BARRIER LINE L.F.	PAINTED ISLAND S.F.	PAINTED CURB L.F.	24" STOP BAR L.F.	12" CROSS-WALK LINE L.F.
RAMP "B"												
N.W. RETURN @ GRAHAM RD.										111		
1033 + 40	1034 + 34	16' RT.								93		
1033 + 96	1043 + 44	℄	948									
1035 + 79	1040 + 67	16' LT.	488									
1035 + 79	1035 + 25	16' RT.								54		
1040 + 67	1042 + 50	16' RT.				183	224					
RAMP "C"												
S.W. RETURN @ GRAHAM RD.										35		
S.E. RETURN @ GRAHAM RD.										66		
318 + 50	320 + 28	16' LT.				178	224					
320 + 28	326 + 84	℄	656									
320 + 28	323 + 84	16' LT.	356									
323 + 84	325 + 34	16' TO 24' LT.	150									
325 + 34	327 + 04	24' LT.	170	300								
327 + 24		RT. & LT.									54	
RAMP "D"												
N.W. RETURN @ GRAHAM RD.										33		
N.E. RETURN @ GRAHAM RD.										69		
1028 + 22	1028 + 73	16' TO 24' Lt.	50									
1028 + 25	1037 + 98	℄	973									
1028 + 72	1036 + 98	16' LT.	825									
1036 + 98	1037 + 98									100		
RAMP "E"												
320 + 29	329 + 50	℄	921									
320 + 29	321 + 29	15' RT.								100		
321 + 29	328 + 71	16' RT.	741									
328 + 71	329 + 71	16' TO 18' RT.	100									
328 + 71	329 + 71	23' RT.								81		
329 + 52	329 + 72	23' RT.							132			
329 + 71	330 + 75	18' RT.				104	133					
FRONT STREET												
46 + 85	51 + 65	6.5' LT.		180								
46 + 85	52 + 50	6.5' RT.		212								
51 + 18	57 + 07	RT.								589		
51 + 16	55 + 65	6' TO 18' LT.				351						
53 + 47	58 + 75	LT.								548		
58 + 95	59 + 22	LT.							172			
59 + 20	60 + 50	1' LT. TO ℄						260				
59 + 20	60 + 50	10' RT.		49								
60 + 00	60 + 50	10' LT.		19								
SECOND STREET												
43 + 50	46 + 69	15' RT.				319						
43 + 50	45 + 21	RT.								171		
43 + 50	45 + 38	℄		71								
44 + 73		Lt. & RT.										68
45 + 40	47 + 38	℄ & RT.							750			
46 + 69	54 + 23	℄ To 3' RT.		283								
53 + 40		LT. & RT.										52
BAILEY RD.												
48 + 91	51 + 80	℄						578				
HUDSON DRIVE												
N.W. RETURN @ RAMP "Q"										42		
N. E. RETURN @ RAMP "Q"										92		
47 + 50	50 + 90	11' LT.		128								
47 + 50	50 + 90	11' LT.		128								
47 + 50	48 + 45	℄						390				
49 + 00	50 + 90	℄						380				
THIRD @ BAILEY RD.												
49 + 83		LT. & RT.										100
THIRD @ HUDSON												
49 + 65		LT. & RT.										70
GRAHAM ROAD												
100 + 50	101 + 95	4' LT. TO ℄						290				
102 + 50	114 + 75	12' RT.		459								
102 + 50	104 + 85	℄						470				
103 + 62	104 + 50	12' LT.		33								
105 + 00	115 + 75	12' LT.		403								
105 + 07	106 + 77	24' LT.				170	52					
105 + 15	114 + 75	℄						2120				
108 + 75	111 + 58	24' RT.				283						
114 + 75	115 + 75	12' RT.				100						
115 + 75		RT.									24	
116 + 50	117 + 50	12' Lt.				100						
116 + 50	124 + 50	℄						1600				
116 + 50		LT.									37	
116 + 50	121 + 40	12' LT.		184								
117 + 50	112 + 40	12' RT.		146								
PREVIOUS SUB TOTAL			54,511	932	11,547	2599	378	—	1319	989	—	258
GRAND TOTAL			60,889	3227	11,547	4387	1011	6088	2373	3173	115	548

PAVEMENT MARKING

FED. RD.	STATE	PROJECT	
2	OHIO		

272
460

SUM-8-17.63

SIDE *	STATION FROM	STATION TO	SPACING (FT.)	POST C-2	BRKT. C-2	CONCRETE EMBEDDED C-2	INTERIM C-2
		- MAINLINE NORTHBOUND -					
RT.	312 + 50	315 + 50	100'				4
RT.	317 + 50	319 + 50	200'				2
		- MAINLINE SOUTHBOUND -					
LT.	270 + 20	267 + 20	100'				4
LT.	265 + 20	263 + 20	200'				2
		- RAMP "L" -					
RT.	252 + 10	250 + 50	40'			5	
RT.	250 + 50	248 + 90	80'			2	
LT.	248 + 90	247 + 40	50'	4			
LT.	247 + 40	245 + 80	80'			2	
RT.	245 + 80	245 + 00	80'	2			
RT.	245 + 00	229 + 00	100'	15	1		
		- RAMP "M" -					
RT.	235 + 90	250 + 90	100'		1	15	
RT.	250 + 90	251 + 70	80'			1	
LT.	251 + 70	252 + 20	50'	2			
		- RAMP "N" -					
RT.	251 + 65	251 + 95	30'			2	
RT.	251 + 95	252 + 55	60'			1	
RT.	252 + 55	257 + 55	100'			5	
LT.	257 + 55	268 + 55	100'	8		4	
		- RAMP "P" -					
RT.	270 + 70	266 + 50	70'			7	
RT.	266 + 50	263 + 50	100'			3	
RT.	263 + 50	260 + 50	60'			5	
RT.	260 + 50	255 + 50	100'			5	
LT.	255 + 50	254 + 90	60'	2			
LT.	254 + 90	254 + 00	30'	2			
		- RAMP "Q" -					
RT.	270 + 40	271 + 20	80'			2	
RT.	271 + 20	273 + 20	50'			4	
RT.	273 + 20	274 + 00	80'			1	
RT.	274 + 00	278 + 00	100'			4	
RT.	278 + 00	281 + 50	70'			5	
RT.	281 + 50	287 + 50	100'			6	
		- RAMP "A" -					
LT.	338 + 25	337 + 35	30'	4			
LT.	337 + 35	336 + 45	30'	0			
LT.	336 + 45	333 + 15	30'	11			
RT.	333 + 15	332 + 25	30'			4	
RT.	332 + 25	331 + 65	60'			1	
RT.	331 + 65	322 + 65	100'			9	
		- RAMP "B" -					
RT.	1043 + 75	1040 + 65	80'			5	
LT.	1040 + 65	1039 + 85	80'	2			
LT.	1039 + 85	1038 + 85	50'	2			
LT.	1038 + 85	1036 + 05	40'	7			
LT.	1036 + 05	1035 + 35	70'	1			
RT.	1035 + 35	1034 + 35	100'			2	
RT.	1034 + 35	1033 + 75	60'			1	
RT.	1033 + 75	1033 + 55	30'	1			
RT.	1033 + 55	1033 + 45	60'	1			
		- RAMP "C" -					
RT.	312 + 00	323 + 00	100'			12	
RT.	323 + 00	326 + 50	70'			5	
RT.	326 + 50	327 + 25	30'			3	
RT.	327 + 25	327 + 40	60'			1	
LT.	323 + 70	326 + 50	70'			5	
LT.	326 + 50	327 + 10	60'			1	
		- RAMP "D" -					
RT.	1027 + 60	1027 + 80	60'			2	
RT.	1027 + 80	1028 + 65	30'			3	
RT.	1028 + 65	1031 + 65	60'			5	
RT.	1031 + 65	1033 + 65	100'			2	
RT.	1033 + 65	1033 + 25	60'			1	
LT.	1033 + 25	1036 + 05	60'	4			
RT.	1036 + 05	1038 + 45	80'			4	
RT.	1038 + 45	1043 + 45	100'			5	
		- RAMP "E" -					
LT.	329 + 50	325 + 50	100'	5			
LT.	325 + 50	322 + 50	60'	5			
RT.	322 + 50	321 + 30	60'			3	
RT.	321 + 30	310 + 30	100'			11	
		TOTAL		78	2	164	12

DELINEATORS

QUANTITY SUMMARY

FED.RD.	STATE	PROJECT	
	0H10		

SUM-8-17.63

273
460

* Denotes Federal & State Partic

SHEET Nº		271	272	285														286									287					SUB-TOTAL			DESCRIPTION
ITEM	SIGN Nº			36	37-A	37-B	37-C	38-A	38-B	38-C	39-A	39-B	39-C	40-A	40-B	41-A	41-B	42-A	42-B	44-A	44-B	45	46	47	48	49	50-A	50-B	50-C	51*	52*		ITEM	QUANTITY	UNIT	
606																				150		150		150	150	150	450						606	1,200	LIN. FT.	GUARD RAIL, TYPE 5
606																				1		1		1	1	1	3						606	8	EACH	APPROACH END ASSEMBLY
606																				1		1		1	1	1	3						606	8	EACH	ANCHOR ASSEMBLY
620			12																														620	12	EACH	INTERIM DELINEATORS, TYPE "C-2"
620			78																														620	78	EACH	DELINEATORS, TYPE "C-2" POST MOUNTED
620			2																														620	2	EACH	DELINEATORS, TYPE "C-2" BRACKET MOUNTED
620			164																														620	164	EACH	DELINEATORS, TYPE "C-2" CONCRETE EMBEDDED
621		60889																															621	60,889	LIN. FT.	4" EDGE LINES
621		3,227																															621	3,227	LIN. FT.	4" LANE LINES
621		11,547																															621	11,547	LIN. FT.	6" LANE LINES
621		4,387																															621	4,387	LIN. FT.	8" CHANNELIZING LINES
621		1,011																															621	1,011	LIN. FT.	24" BROAD TRANSVERSE STRIPES
621		6,088																															621	6,088	LIN. FT.	4" YELLOW BARRIER LINE
621		3,173																															621	3,173	LIN. FT.	PAINTED CURBS
621		2,373																															621	2,373	SQ. FT.	PAINTED ISLANDS
621		115																															621	115	LIN. FT.	24" STOP BAR LINE
621		548																															621	548	LIN. FT.	12" CROSSWALK LINE
625								1	1	1	1	1	1				1	1	1		1		2			1				1	2		625	16	EACH	SIGN BALLAST, TYPE "A"
625				1											1					1			1				1					625	6	EACH	SIGN BALLAST, TYPE "B"
625					1									1								1						1				625	3	EACH	SIGN BALLAST, TYPE "C"
625						1	1								1									1								625	5	EACH	SIGN BALLAST, TYPE "D"
625				2				1	1	1						2	1		1	2			2	2		2			1		2		625	20	EACH	72" LIGHT FIXTURE WITH HO LAMP
625																		1			1				2			1	1	1			625	5	EACH	96" LIGHT FIXTURE WITH HO LAMP
625						1					1	1	1		2										2			1	1				625	9	EACH	72" LIGHT FIXTURE WITH SHO LAMP
625					1	1	2							1								1										625	7	EACH	96" LIGHT FIXTURE WITH SHO LAMP
625																														1			625	1	EACH	.25 KVA 480/120 VOLT TRANSFORMER
625				1														1				1	1	1	1					1			625	7	EACH	.50 KVA 480/120 VOLT TRANSFORMER
625								1		1						1				1					1								625	5	EACH	.75 KVA 480/120 VOLT TRANSFORMER
625													1																			625	1	EACH	1.00 KVA 480/120 VOLT TRANSFORMER
625					1																					1						625	2	EACH	1.50 KVA 480/120 VOLT TRANSFORMER
625				1				1		1					1			1		1		1	1	1	1	1				1	1		625	13	EACH	30 AMP. FUSEABLE DISCONNECT SWITCH W/TYPE "Y" ENCLOSURE
625					1																												625	3	EACH	30 AMP. FUSEABLE DISCONNECT SWITCH W/TYPE "Z" ENCLOSURE
625				1	1			1		1				1		1		1		1		1	1	1	1	1				1	1		625	16	EACH	GROUND ROD
625														122																			625	122	LIN. FT.	NO. 4 AWG ELECTRIC CABLE 713.02
625														56																			625	56	LIN. FT.	1 1/4" 713.04 TYPE II OR III CONDUIT
625				1	1	1	1	1	1	1	1	1	1	1	1	1	1	1	1	1	1	1	2	1	1	1	1	1	1	1	2		625	30	EACH	SIGNS WIRED COMPLETE
625				1										1	1	1	1			1	1	1	1	1	1	1				1	1		625	16	EACH	SIGN SERVICE
815							48			40.5													63							50			815	201.5	SQ. FT.	INTERIM COVERING FOR SIGNS
815																																	815	—	SQ. FT.	SIGN ERECTION - FLAT SHEET TYPE
815				78	88	144	168	48	49	40	40.5	63	40	88	104	54	48	60	32	78	66	88	63	72	104	78	77	128	96	50	84		815	2128.5	SQ. FT.	SIGN ERECTION - EXTRU SHEET TYPE
815																54		60		78				72		78	77	128		25	84		815	656	SQ. FT.	SIGN ERECTION - INTERIM FLAT SHEET OVERLAY TYPE
816																																	816	—	CU. YDS.	CONCRETE FOR GROUND MOUNTED SIGN SUPPORT FOUNDATIONS
816				30	10.0			5.9		5.9						6.0		5.9		10.0		3.2	2.9	3.2	3.2	3.2	8.9			24			816	73.7	CU. YDS.	CONCRETE FOR OVERHEAD SIGN SUPPORT FOUNDATIONS
816				1																				1	1	1							816	4	EACH	OVERHEAD SIGN SUPPORT, NO. 12.24 - DES. 3 (MODIFIED)
816					1																												816	1	EACH	OVERHEAD SIGN SUPPORT, NO. 7.5 - DES. 2 (MODIFIED) 74' SPAN
816								1																									816	1	EACH	OVERHEAD SIGN SUPPORT, NO. 7.2 - DES. 1 - 55' SPAN
816									1																								816	1	EACH	OVERHEAD SIGN SUPPORT, NO. 7.2 - DES. 1 - 70' SPAN
816													1																				816	1	EACH	SPECIAL SIGN SUPPORT
816																1																	816	1	EACH	OVERHEAD SIGN SUPPORT, NO. 7.2 - DES. 1 (MODIFIED) - 65' SPAN
816																		1															816	1	EACH	OVERHEAD SIGN SUPPORT, NO. 7.2 - DES. 1 - 42' SPAN
816																			1														816	1	EACH	OVERHEAD SIGN SUPPORT, NO. 7.5 - DES. 2 (MODIFIED) - 75' SPAN
816																						1											816	1	EACH	OVERHEAD SIGN SUPPORT, NO. 12.24 - DES. 3
816																							1										816	1	EACH	OVERHEAD SIGN SUPPORT, NO. 12.24 - DES. 1 (MODIFIED)
816																										1							816	1	EACH	OVERHEAD SIGN SUPPORT, NO. 7.4 - DES. 1 (MODIFIED) - 71' SPAN
816																														1			816	1	EACH	OVERHEAD SIGN SUPPORT, NO. 12.24 - DES. 2
816																																	816	—	EACH	OVERHEAD SIGN SUPPORT, NO. 7.4 - DES. 4 (MODIFIED) 91' SPAN
816																																	816	—	EACH	OVERHEAD SIGN SUPPORT, NO. 7.4 - DES. 2 (MODIFIED) 69' SPAN
816																																	816	—	LIN. FT.	STRUCTURAL SUPPORT - 4 LB. POST
816																																	816	—	LIN. FT.	STRUCTURAL SUPPORT - 6 LB. BEAM
816																																	816	—	LIN. FT.	STRUCTURAL SUPPORT - 8 LB. BEAM

SIGNING SUMMARY

QUANTITY SUMMARY

FED.RD.	STATE	PROJECT	
	OHIO		

274
460

SUM-8-17.63

* Denotes Federal & State Partic.

| SHEET Nº | 287 | | | | 288 | | | | | | 277 | | | | | |

QUANTITY SUMMARY

FED.RD.	STATE	PROJECT	
	OHIO		

275
460

SUM-8-17.63

SHEET Nº		277				278																				279							SUB-TOTAL			
ITEM	SUB-TOTAL	122	123	124	125	126	127	128	129	130						161	162	163	164/168	165	166			182	183	184	131	132	133	134	135	169	170	ITEM	QUANTITY	UNIT	DESCRIPTION
G06	1650																																606	1650	LIN. FT.	GUARD RAIL, TYPE 5
G06	11																																606	11	EACH	APPROACH END ASSEMBLY
G06	11																																606	11	EACH	ANCHOR ASSEMBLY
G20	12																																820	12	EACH	INTERIM DELINEATORS, TYPE "C-2"
G20	78																																620	78	EACH	DELINEATORS, TYPE "C-2" POST MOUNTED
G20	2																																620	2	EACH	DELINEATORS, TYPE "C-2" BRACKET MOUNTED
620	164																																620	164	EACH	DELINEATORS, TYPE "C-2" CONCRETE EMBEDDED
G21	60,889																																621	60,889	LIN. FT.	4" EDGE LINES
G21	3,227																																621	3,227	LIN. FT.	4" LANE LINES
G21	11,547																																621	11,547	LIN. FT.	6" LANE LINES
G21	4,387																																621	4,387	LIN. FT.	8" CHANNELIZING LINES
G21	1,011																																621	1,011	LIN. FT.	24" BROAD TRANSVERSE STRIPES
G21	6,088																																621	6,088	LIN. FT.	4" YELLOW BARRIER LINE
G21	3,173																																621	3,173	LIN. FT.	PAINTED CURBS
G21	2,373																																621	2,373	SQ. FT.	PAINTED ISLANDS
G21	115																																621	115	LIN. FT.	24" STOP BAR LINE
G21	548																																621	548	LIN. FT.	12" CROSSWALK LINE
G25	21																																625	21	EACH	SIGN BALLAST, TYPE "A"
G25	6																																625	6	EACH	SIGN BALLAST, TYPE "B"
G25	3																																625	3	EACH	SIGN BALLAST, TYPE "C"
G25	7																																625	7	EACH	SIGN BALLAST, TYPE "D"
625	23																																625	23	EACH	72" LIGHT FIXTURE WITH NO LAMP
625	7																																625	7	EACH	96" LIGHT FIXTURE WITH NO LAMP
G25	10																																625	10	EACH	72" LIGHT FIXTURE WITH SHO LAMP
G25	10																																625	10	EACH	96" LIGHT FIXTURE WITH SHO LAMP
G25	2																																625	2	EACH	.25 KVA 480/120 VOLT TRANSFORMER
G25	7																																625	7	EACH	.50 KVA 480/120 VOLT TRANSFORMER
G25	6																																625	6	EACH	.75 KVA 480/120 VOLT TRANSFORMER
G25	1																																625	1	EACH	1.00 KVA 480/120 VOLT TRANSFORMER
G25	3																																625	3	EACH	1.50 KVA 480/120 VOLT TRANSFORMER
G25	15																																625	15	EACH	30 AMP. FUSEABLE DISCONNECT SWITCH W/TYPE "Y" ENCLOSURE
G25	4																																625	4	EACH	30 AMP. FUSEABLE DISCONNECT SWITCH W/TYPE "Z" ENCLOSURE
G25	19																																625	19	EACH	GROUND ROD
G25	122																																G25	122	LIN. FT.	Nº 4 AWG ELECTRIC CABLE 713.02
G25	56																																G25	56	LIN. FT.	1 1/4" 713.04 TYPE II OR III CONDUIT
G25	37																																625	37	EACH	SIGNS WIRED COMPLETE
G25	19																																G25	19	EACH	SIGN SERVICE
815	3325															2	4	3.1	2	4	3.1							20	20	16			815	406.7	SQ. FT.	INTERIM COVERING FOR SIGNS
815	190.5	10.5	4	9	16	9	6.3	16	9	4.5						2	4	3.1	2 48	4	3.1			7.5	50	10.5	20	20	16	4.5	9	37.5	48	815	364.0	SQ. FT.	SIGN ERECTION - FLAT SHEET TYPE
815	2779.5																																815	2779.5	SQ. FT.	SIGN ERECTION - EXTRU SHEET TYPE
815	729																																815	729	SQ. FT.	SIGN ERECTION - INTERIM FLAT SHEET OVERLAY
816	2.2	0.1		0.1	0.1	0.1	0.1	0.1	0.1								0.1		0.2	0.1				0.1		0.1	0.1	0.2			0.1		0.2	816	4.1	CU. YDS.	CONCRETE FOR GROUND MOUNTED SIGN SUPPORT FOUNDATIONS
816	95.5																																816	95.5	CU. YDS.	CONCRETE FOR OVERHEAD SIGN SUPPORT FOUNDATIONS
816	4																																816	4	EACH	OVERHEAD SIGN SUPPORT, NO. 12.24 - DES. 3 (MODIFIED)
816	1																																816	1	EACH	OVERHEAD SIGN SUPPORT, NO. 7.5 - DES. 2 (MODIFIED) 74' SPAN
816	1																																816	1	EACH	OVERHEAD SIGN SUPPORT, NO. 7.2 - DES. 1 - 55' SPAN
816	1																																816	1	EACH	OVERHEAD SIGN SUPPORT, NO. 7.2 - DES. 1 - 70' SPAN
816	1																																816	1	EACH	SPECIAL SIGN SUPPORT
816	1																																816	1	EACH	OVERHEAD SIGN SUPPORT, NO. 7.2 - DES. 1 (MODIFIED) - 65' SPAN
816	1																																816	1	EACH	OVERHEAD SIGN SUPPORT, NO. 7.2 - DES. 1 - 42' SPAN
816	1																																816	1	EACH	OVERHEAD SIGN SUPPORT, NO. 7.5 - DES. 2 (MODIFIED) - 75' SPAN
816	1																																816	1	EACH	OVERHEAD SIGN SUPPORT, NO. 12.24 - DES. 3
816	1																																816	1	EACH	OVERHEAD SIGN SUPPORT, NO. 12.24 - DES. 1 (MODIFIED)
816	2																																816	1	EACH	OVERHEAD SIGN SUPPORT, NO. 7.4 - DES. 1 (MODIFIED) - 71' SPAN
816	1																																816	2	EACH	OVERHEAD SIGN SUPPORT, NO. 12.24 - DES. 2
816	1																																816	1	EACH	OVERHEAD SIGN SUPPORT NO. 7.4 - DES.4 (MODIFIED) 91' SPAN
816	1																																816	1	EACH	OVERHEAD SIGN SUPPORT NO. 7.4 - DES. 2 (MODIFIED) 69' SPAN
816	140						14.5																	14.5	80						63		816	312	LIN. FT.	STRUCTURAL SUPPORT - 4 LB. BEAM
816	1325	14		17.0	16.5	13.5		17.5	16.5								15.0			15.0					14		36		16.5			816	324.0	LIN. FT.	STRUCTURAL SUPPORT - 6 LB. BEAM
816	88																		33								17					33	816	171	LIN. FT.	STRUCTURAL SUPPORT - 8 LB. BEAM

SIGNING SUMMARY

QUANTITY SUMMARY

FED. RD.	STATE	PROJECT	
	OHIO		

276
460

SUM-8-17.63

* Denotes Federal & State Partic.

★ Quantities carried to Sh. 31&32 Code 7221

| SHEET Nº | | 279 | | | | | | 280 | | | | | |

FED. RD.	STATE	PROJECT	
2	OHIO		

277
460

SUMMIT COUNTY
SUM- 8-17.63

CUYAHOGA RIVER

NORTHLAND AVE.

TIFFT ST.

FRONT ST

RELOC. S.R. 8

RELOC. SECOND ST.

SECOND ST.
STA 45+25/77 LT.

SECOND ST.
STA 44+82/32 LT.

SECOND ST.
STA 44+92/21 RT.

FRONT ST.
STA 46+23/39 LT.

FRONT ST.
STA 46+35/34 RT.

SECOND ST.
STA 43+22

FRONT ST.
STA 51+10

SECOND ST.
STA 51+77

FRONT ST.
STA 254+50

FRONT ST.
STA 256+94

SECOND ST.
STA 58+30

STA. 248+00

STA. 259+00

MATCH LINE

RAMP "L"

RAMP "M"

RAMP "N"

RAMP "P"

RAMP "L"
STA 252+00

RAMP "M"
STA 252+25

RAMP "N"
STA 251+85

RAMP "P"
STA 252+62

TEMPORARY GUARD RAIL

STOP
DO NOT ENTER
ONE WAY
NO RIGHT TURN
DO NOT ENTER
NO RIGHT TURN
PEDESTRIANS PROHIBITED
R-42 D
PEDESTRIANS AND BICYCLES PROHIBITED
R-15-30
MERGING TRAFFIC
W4-9-48
FREEWAY ENDS 1 MILE
W-55-144
25 MPH
W143-24
W2-36
TWO WAY TRAFFIC AHEAD
W3-5-36
KEEP RIGHT
R37A-36
END ONE WAY
R-46-30
DO NOT ENTER
R-41-24
R-1-30
R-20-24
R-44R-18
R-44L-18
R-41-24
R-44-24
R-20-24

230 235 240 245 250 255 260

0 100 200

REGULATORY AND WARNING SIGN PLAN

FORM D D A-8

FED. RD.	STATE	PROJECT	
2	OHIO		

278
460

SUMMIT COUNTY
SUM-8-17.63

ANCHOR DETAIL FOR TEMPORARY BEAM RAIL

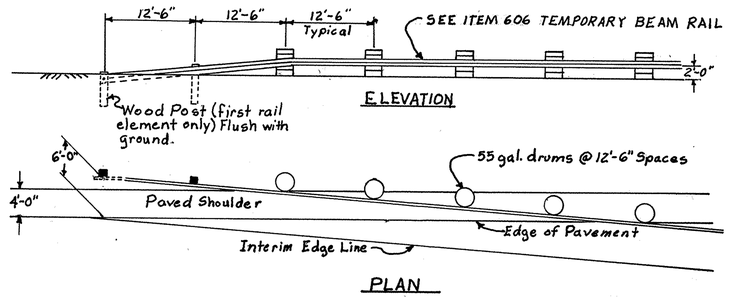

REGULATORY AND WARNING SIGN PLAN

FORM DD A-8

FED. RD.	STATE	PROJECT	
2	OHIO		

278
460

SUMMIT COUNTY
SUM-8-17.63

MATCH LINE STA. 290+00

MINIMUM SPEED 40

(131) R-7-48 INTERIM COVER

STA. 290+00

LEFT LANE ENDS 1/2 MILE

(179) W-54-144 (MOD)

STA. 292+50

295

(48)

SPEED LIMIT 60

TRUCKS 50

(132) R-10-48 INTERIM COVER

(133) R-16-48

STA. 295+00

LEFT LANE ENDS 3/4 MILE

(49) INTERIM OVERLAY

300 RELOC. U.S.R. 8

SOUTH 8

STA. 308+00

(134) M-38-36

(135) M-2-36

305

310

SEE ANCHOR DETAIL FOR TEMPORARY BEAM RAIL SHEET NO. 278

PEDESTRIAN BRIDGE STRUCT. NO. SUM-8-1527

RAMP "E"

MATCH LINE STA. 320+00

315

TEMPORARY GUARD RAIL

RAMP "C"

(50)

EXIT 35 M.P.H.

(172) W-38-36

STA. 320+00

STA. 302+00

TRUCKS 50

(178) R-16-48

SPEED LIMIT 60

(177) R-10-48 INTERIM COVER

MINIMUM SPEED 40

(176) R-7-48 INTERIM COVER

STA. 306+00

STA. 312+00
STA. 313+00
STA. 314+00
STA. 315+00
STA. 317+00
STA. 319+00

(169) W-138-30

LEFT LANE ENDS MERGE RIGHT

STA. 311+00

(170) W-54-144

DO NOT PASS

STA. 313+00

(171) R-33-30

PENNA. R.R.

MILLBORO RD.

0 100 200

REGULATORY AND WARNING SIGN PLAN

FORM D D A-6

FED. RD.	STATE	PROJECT	
2	OHIO		

280
460

SUMMIT COUNTY
SUM-8-17.63

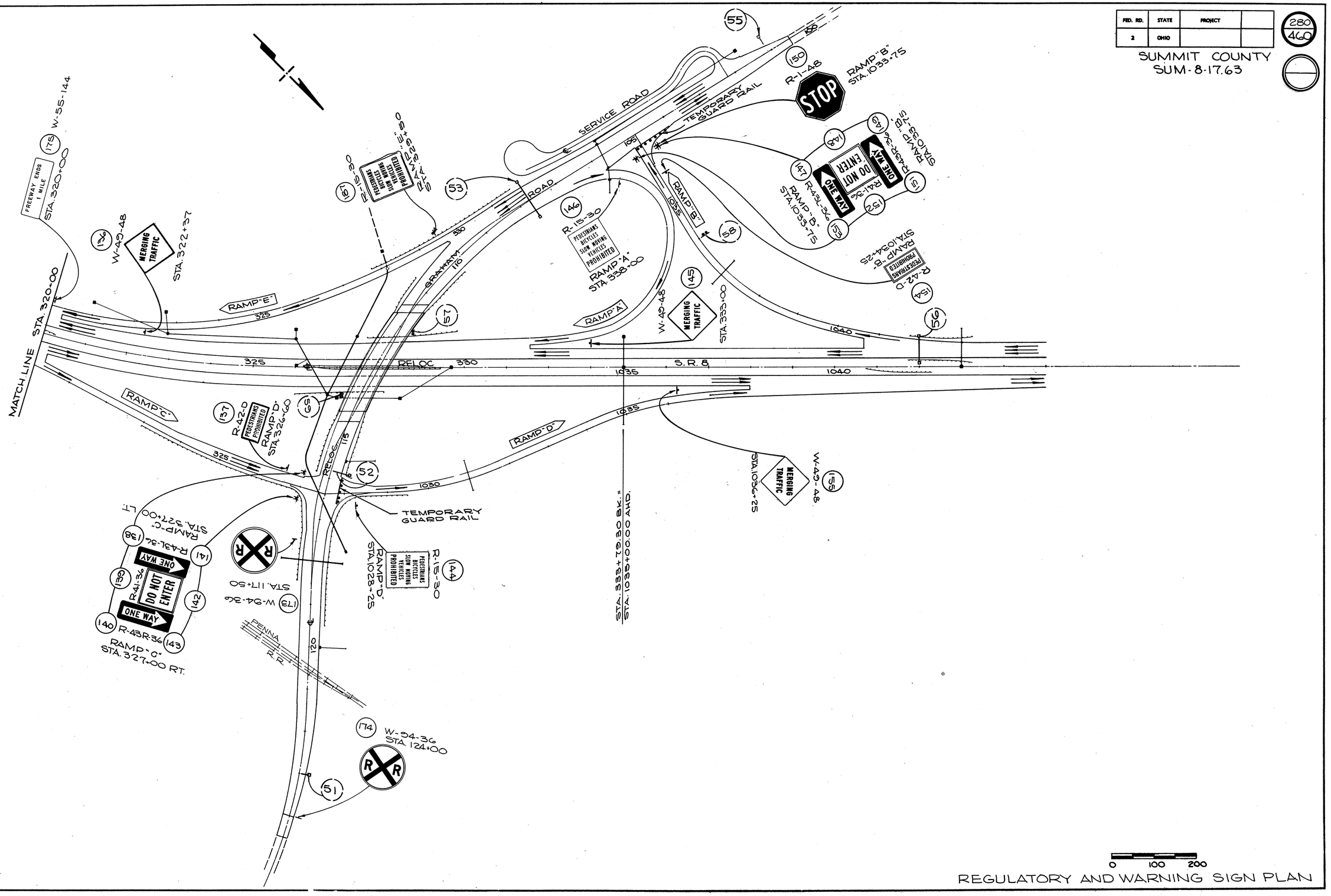

0 100 200

REGULATORY AND WARNING SIGN PLAN

FORM D D A-8

281
449

FED. RD.	STATE	PROJECT
2	OHIO	

SUMMIT COUNTY
SUM-8-17.63

GUIDE SIGN PLAN

0 100 200

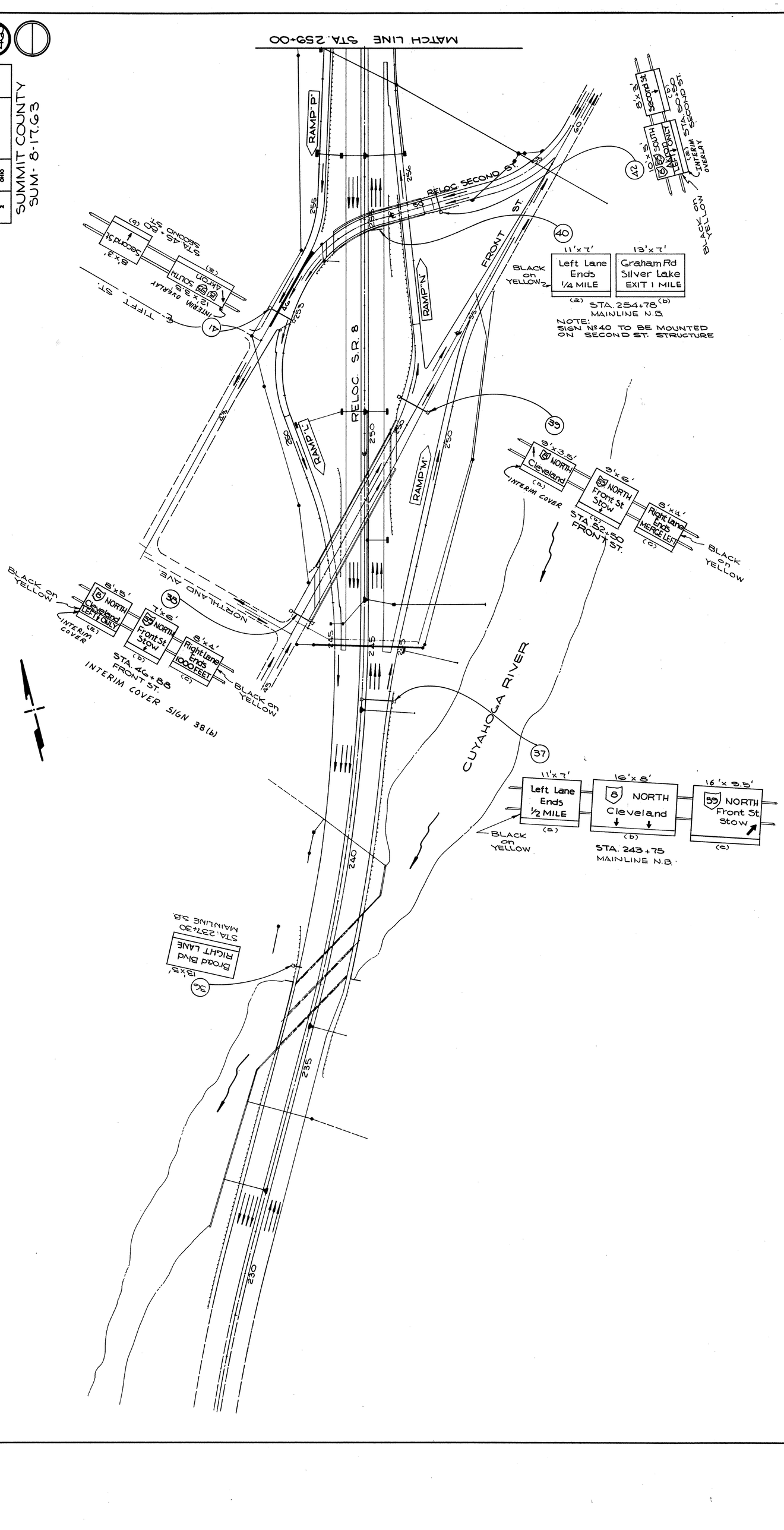

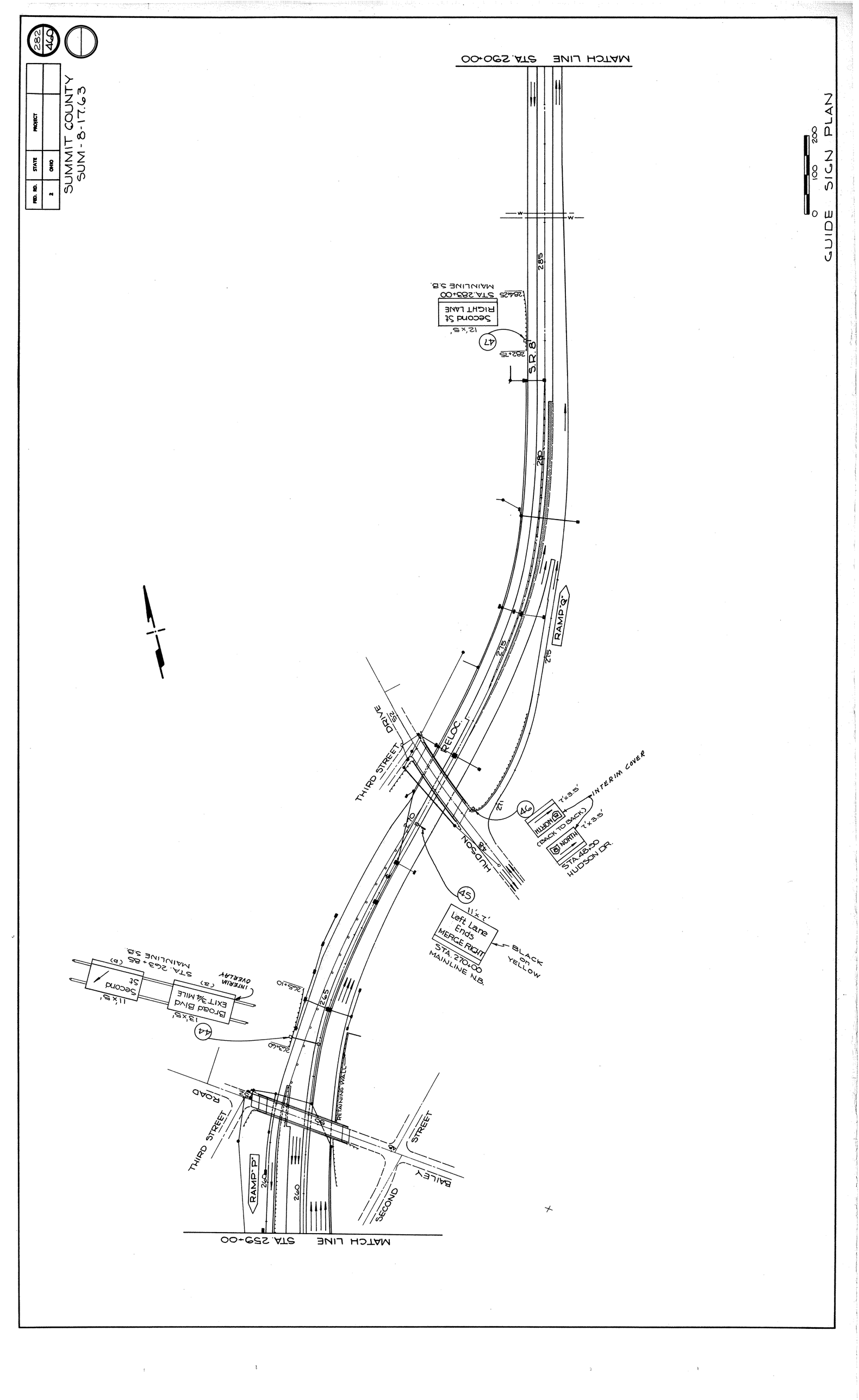
282
440
FED. RD. 2
STATE OHIO
PROJECT
SUMMIT COUNTY
SUM-8-17.63
GUIDE SIGN PLAN
0 100 200
MATCH LINE STA. 290+00
MAINLINE S.B.
STA. 283+00
Second St
RIGHT LANE
12'x 8'
47
S.R. 8
STA. 282+75
285
280
RAMP "Q"
275
RELOC.
DRIVE
THIRD STREET
NOSDLH
HUDSON DR.
46
HUDSON
(BACK TO BACK)
NORTH
7'x 3.5'
INTERIM COVER
STA. 48+50
271
45
11'x 7'
Left Lane Ends
MERGE RIGHT
STA. 270+00
MAINLINE N.B.
BLACK ON YELLOW
STA. 263+85 (b)
MAINLINE S.B.
Second St
11'x 8'
Broad Blvd
EXIT 3/4 MILE
13'x 8'
(a)
INTERIM OVERLAY
44
265
263+10
260
263+60
ROAD
THIRD STREET
RETAINING WALL
RAMP "P"
240
260
STREET
BAILEY
SECOND
MATCH LINE STA. 259+00

FED. RD.	STATE	PROJECT	
2	OHIO		

283
460

SUMMIT COUNTY
SUM-8-17.63

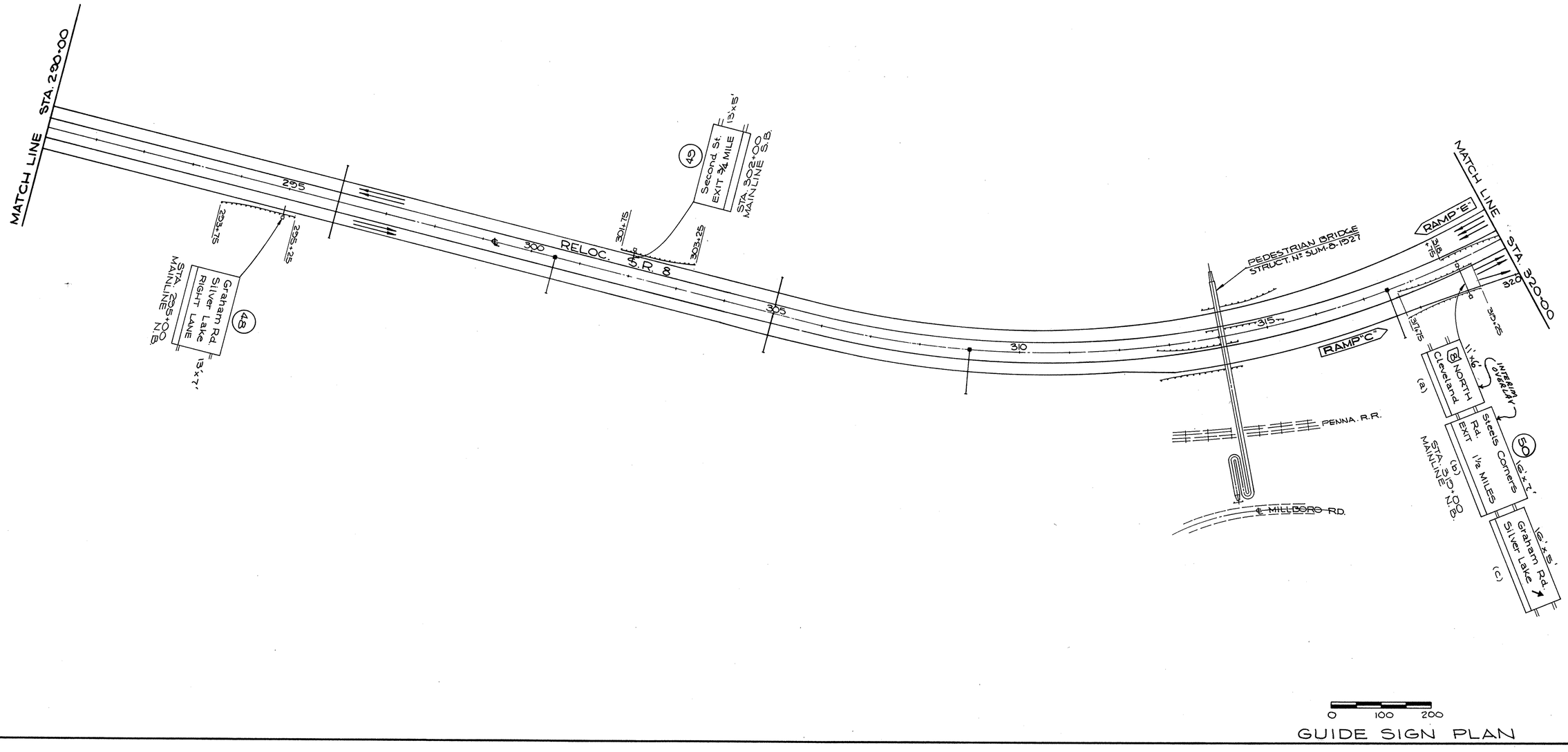

GUIDE SIGN PLAN

FED. RD.	STATE	PROJECT	
2	OHIO		

284
460

SUMMIT COUNTY
SUM-8-17.63

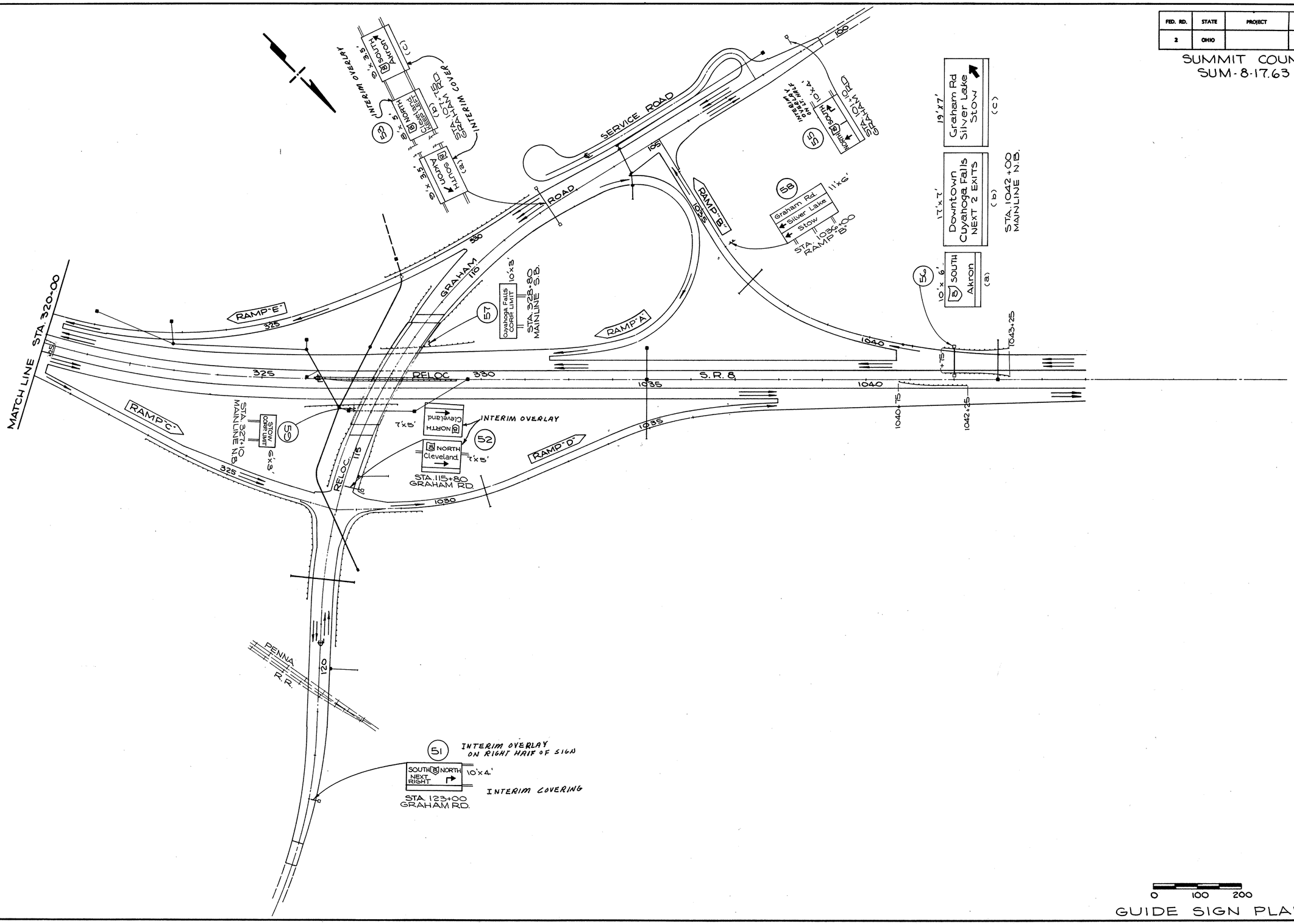

0 100 200

GUIDE SIGN PLAN

FED. RD.	STATE	PROJECT	
2	OHIO		

285
460

SUM-8-17.63

(36)

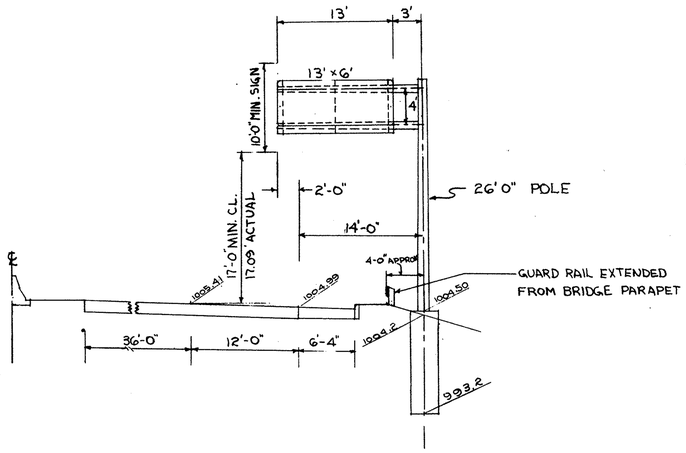

MAINLINE STA. 237+30 - SOUTHBOUND
816 - OVERHEAD SIGN SUPPORT
Nº 12.24 - DES. 3 (MODIFIED)

13'x6' = 78 SQ. FT.
SPACING = 6", 6'-0", 6'-0", & 6"
Nº OF BRACKETS = 3, HT: 6', TYPE X_5
FIXTURES: 2 @ 75 3/8"

(37)

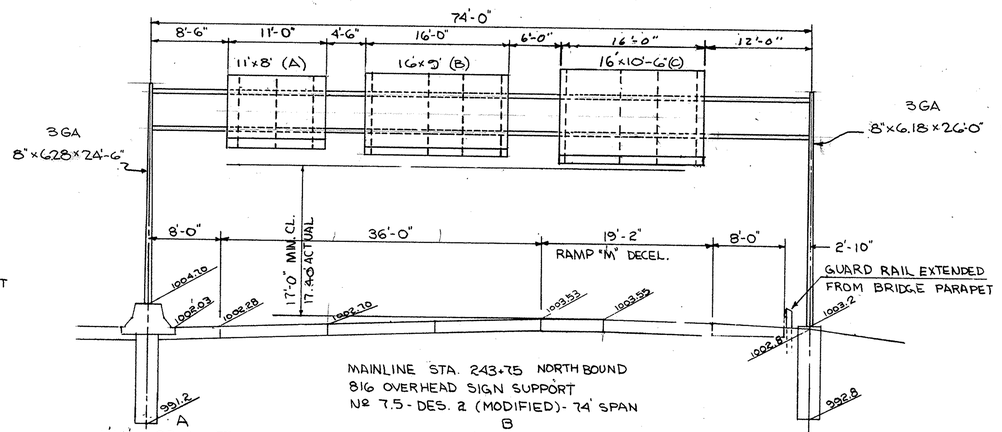

MAINLINE STA. 243+75 NORTH BOUND
816 OVERHEAD SIGN SUPPORT
Nº 7.5 - DES. 2 (MODIFIED) - 74' SPAN

11'x8' = 88 SQ. FT.
SPACING = 16 3/8", 4'-1 5/8", 4'-1 3/4", 16 1/4"
Nº OF BRACKETS = 3, HT = 8', TYPE X_2
FIXTURES = 1 @ 99 3/8"

16'x9' = 144 SQ. FT.
SPACING = 8 5/8", 6'-3 3/8", 4'-0", 4'-3 1/8", & 8 5/8"
Nº OF BRACKETS = 4, HT. = 9', TYPE Y_2
FIXTURES = 1@ 75 3/8" & 1 @ 99 3/8"

16'x10.5' = 168 SQ. FT.
SPACING = 8 5/8", 6'-3 3/8", 4'-2", 4'-1 3/8", 8 5/8"
Nº OF BRACKETS = 3, HT: 10'-6" TYPE Y_2
FIXTURES = 1 @ 75 3/8" & 1@ 99 3/8"

(38)

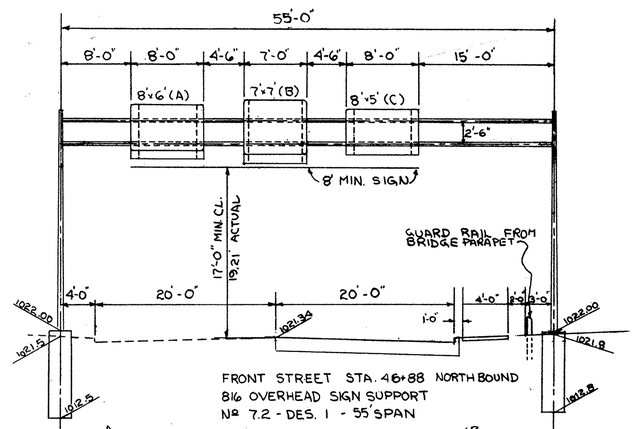

FRONT STREET STA. 46+88 NORTH BOUND
816 OVERHEAD SIGN SUPPORT
Nº 7.2 - DES. 1 - 55' SPAN

8'x6' = 48 SQ. FT.
SPACING = 10 3/8", 6'-3 3/8", & 10 1/4"
Nº OF BRACKETS = 2, HT = 6', TYPE Y_2
FIXTURES = 1@ 75 3/8"

7'x7' = 49 SQ. FT.
SPACING = 6", 6'-0", & 6"
Nº OF BRACKETS = 2, HT. = 7', TYPE Y_2
FIXTURES = 1@ 75 3/8"

8'x5' = 40 SQ. FT.
SPACING = 10 3/8", 6'-3 3/8", & 10 1/4"
Nº OF BRACKETS = 2, HT. = 5', TYPE X_2
FIXTURES = 1 @ 75 3/8"

(39)

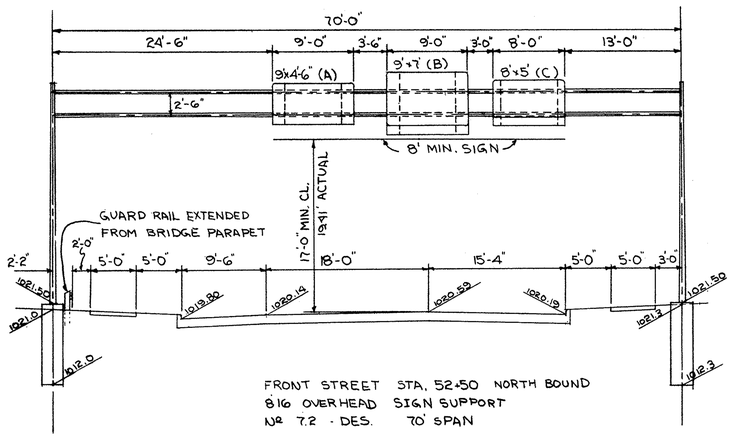

FRONT STREET STA. 52+50 NORTH BOUND
816 OVERHEAD SIGN SUPPORT
Nº 7.2 - DES. 70' SPAN

A

9'x4.5' = 40.5 SQ. FT.
SPACING = 16 3/8", 6'-3 3/8", & 16 1/4"
Nº OF BRACKETS = 2, HT. = 4'-6" TYPE X_2
FIXTURES = 1 @ 75 3/8"

B

9'x7 = 63 SQ. FT.
SPACING = 16 3/8", 6'-3 3/8", & 16 1/4"
Nº OF BRACKETS = 2, HT. = 7', TYPE Y_2
FIXTURES = 1@ 75 3/8"

C

8'x5' = 40 SQ. FT.
SPACING = 10 3/8", 6'-3 3/8", & 10 1/4"
Nº OF BRACKETS = 2, HT. = 5' TYPE X_2
FIXTURES = 1@ 75 3/8"

(40)

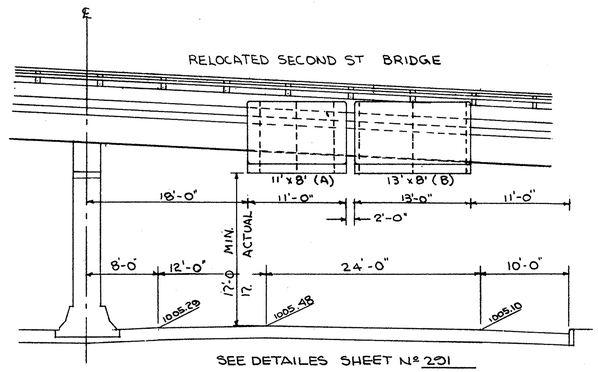

SEE DETAILES SHEET Nº 291

MAINLINE STA 254+78 (APPROX.) NORTHBOUND
ON SECOND ST. STRUCTURE
816 SPECIAL SIGN SUPPORT

A

11'x8' = 88 SQ. FT.
SPACING = 16 3/8", 4'-1 5/8", 4'-1 3/4", & 16 1/4"
Nº. OF BRACKETS = 3, HT = 8'
FIXTURES = 1@ 99 3/8"

13'x8' = 104 SQ. FT.
SPACING = 6", 6'-0", 6'-0", & 6"
Nº OF BRACKETS = 3, HT.= 8'
FIXTURES = 2@ 75 3/8"

(41)

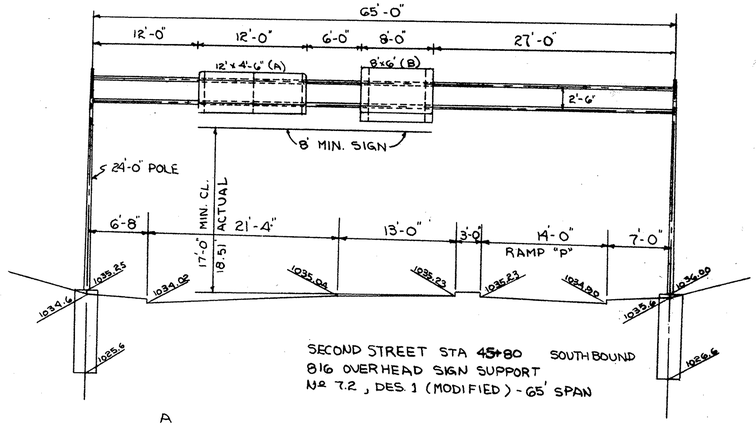

SECOND STREET STA 45+80 SOUTHBOUND
816 OVERHEAD SIGN SUPPORT
Nº 7.2, DES. 1 (MODIFIED) - 65' SPAN

A

12'x4.5' = 54 SQ FT.
SPACING = 6", 5'-6", 5'-6", & 6"
Nº OF BRACKETS = 3, HT = 4'-6", TYPE X_2
FIXTURES = 2@ 75 3/8"

8'x6' = 48 SQ. FT.
SPACING = 10 3/8", 6'-3 3/8", 10 1/4"
Nº OF BRACKETS = 2, HT. = 6', TYPE Y_2
FIXTURES = 1@ 75 3/8"

SIGN ELEVATIONS - Nºs 36 THRU 41

FED. RD.	STATE	PROJECT	
2	OHIO		

SUM-8-17.63

386
409

(42)

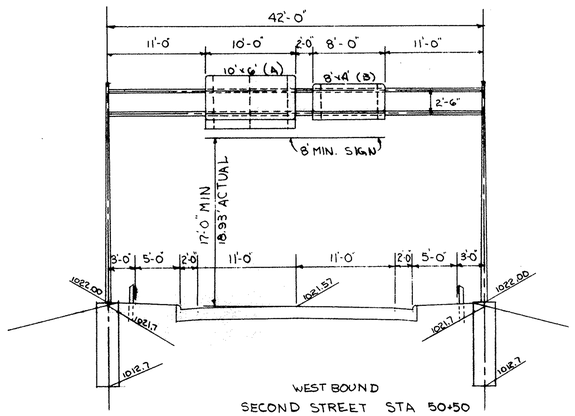

WEST BOUND
SECOND STREET STA 50+50
816 OVERHEAD SIGN SUPPORT
Nº. 7.2 DESIGN 1 - 42' SPAN

A
10'x6' = 60 SQ.FT.
SPACING = 10 3/8", 4'-1 5/8", 4'-1 1/4", & 10 3/4"
Nº OF BRACKETS = 3, HT. = 6', TYPE Y_2
FIXTURES = 1@ 99 3/8"

8'x4' = 32 SQ. FT.
SPACING = 10 3/8", 6'-3 3/8", & 10 1/4
Nº OF BRACKETS = 2, HT. = 4', TYPE Y_2
FIXTURES = 1@ 75 3/8"

(44)

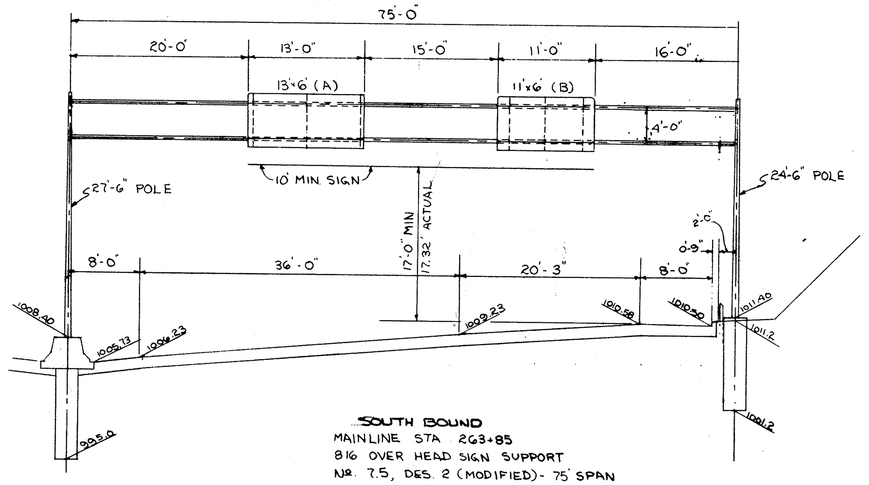

SOUTH BOUND
MAINLINE STA 263+85
816 OVER HEAD SIGN SUPPORT
Nº. 7.5, DES. 2 (MODIFIED)- 75' SPAN

A
13'x6' = 78 SQ.FT.
SPACING = 6", 6'-0", 6'-0", & 6"
Nº OF BRACKETS = 3, HT = 6', TYPE X_2
FIXTURES = 2@ 75 3/8"

B
11'x6' = 66 SQ.FT.
SPACING = 16 3/8", 4'-1 3/8", 4'-1 3/4", & 16 1/4"
Nº OF BRACKETS = 3, HT = 6', TYPE = X_2
FIXTURES = 1@ 99 3/8"

(45)

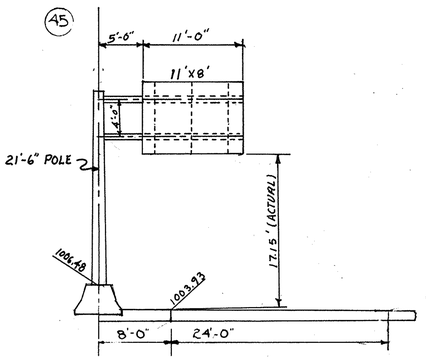

MAINLINE STA 270+00 NORTHBOUND
816 OVERHEAD SIGN SUPPORT
Nº 12.24, DES. 3

11'x8' = 88 SQ. FT.
SPACING = 16 3/8", 4'-1 3/8", 4'-1 3/4", & 16 1/4"
Nº OF BRACKETS = 3, HT. = 8' TYPE Y_2
FIXTURES = 1@ 99 3/8"

(47)

(46)

SEE LIGHTING PLAN FOR LUMINAIRE DETAILS

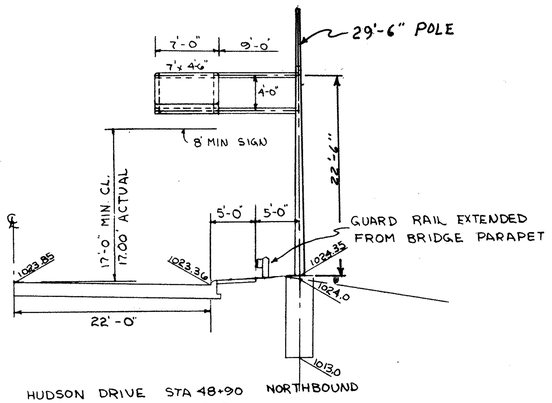

HUDSON DRIVE STA 48+90 NORTHBOUND
816 COMBINATION SUPPORT
Nº. 12.24, DES. 1 (MODIFIED)

2 SIGNS 1 EACH SIDE
7'x4.5'x2 = 63 SQ. FT.
SPACING (BOTH) 6", 6'-0", & 6"
Nº OF BRACKETS = 4, HT = 4'-6", TYPE X_2
FIXTURES = 2@ 75 3/8"

SEE LIGHTING PLANS FOR LUMINAIRE DETAILS

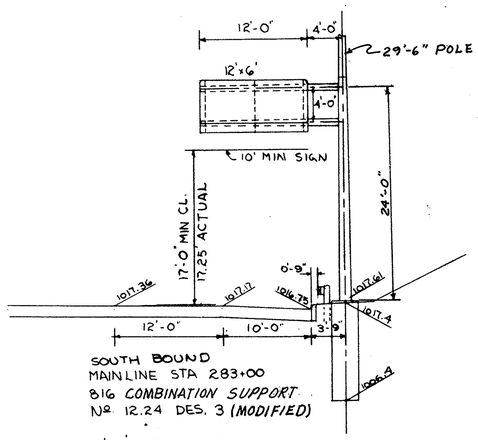

SOUTH BOUND
MAINLINE STA 283+00
816 COMBINATION SUPPORT
Nº 12.24 DES. 3 (MODIFIED)

12'x6' = 72 SQ.FT.
SPACING = 6', 5'-6", 5'-6", & 6"
Nº OF BRACKETS = 3, HT. = 6' TYPE Y_2
FIXTURES = 2@ 75 3/8"

(48)

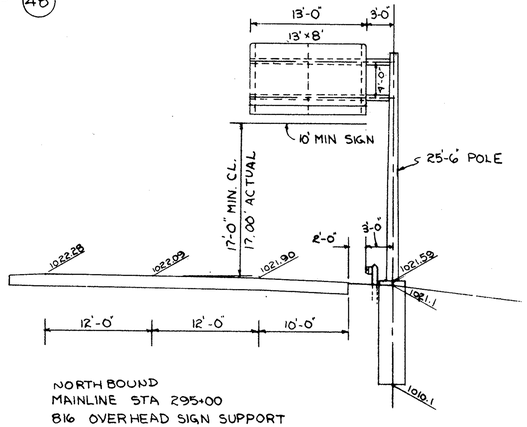

NORTH BOUND
MAINLINE STA 295+00
816 OVERHEAD SIGN SUPPORT
Nº 12.24 DES. 3 (MODIFIED)

13'x8' = 104 SQ.FT.
SPACING = 6", 6'-0", 6'-0", & 6"
Nº OF BRACKETS = 3, HT. = 8', TYPE Y_2
FIXTURES = 2@ 75 3/8"

(49)

SEE LIGHTING PLANS FOR LUMINAIRE DETAILS

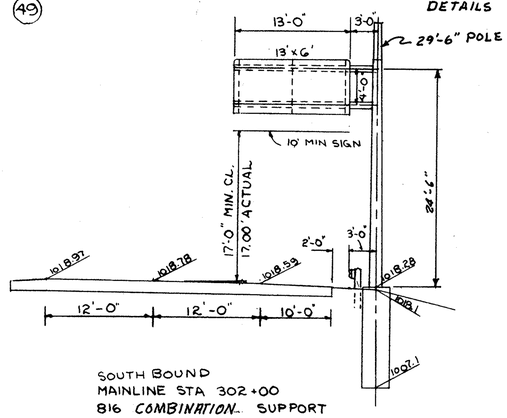

SOUTH BOUND
MAINLINE STA 302+00
816 COMBINATION SUPPORT
Nº 12.24 DES. 3 (MODIFIED)

13'x6' = 78 SQ FT.
SPACING = 6", 6'-0", 6'-0", & 6"
Nº OF BRACKETS = 3, HT. = 6', TYPE Y_2
FIXTURES = 2@ 75 3/8"

SIGN ELEVATIONS-Nºs 42 THRU 49

FORM 99 A-6

FED. RD.	STATE	PROJECT	
2	OHIO		

287
460

SUM-8-17.63

(50)

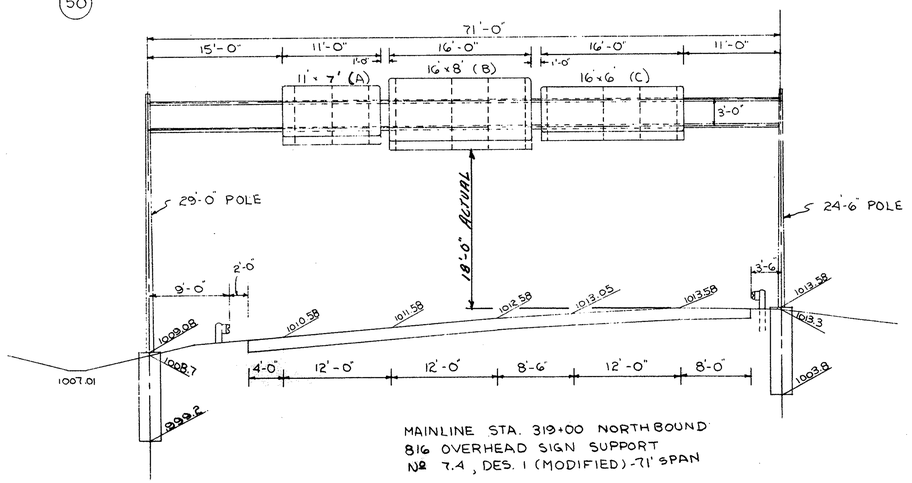

MAINLINE STA. 319+00 NORTH BOUND
816 OVERHEAD SIGN SUPPORT
Nº 7.4, DES. 1 (MODIFIED) - 71' SPAN

A

11'x7' = 77 SQ. FT.
SPACING = 16 3/8", 4'-1 5/8", 4'-1 3/4", & 16 1/4"
Nº OF BRACKETS = 3 HT. = 7' TYPE Y2
FIXTURES = 1@ 99 3/8"

B

16'x8' = 128 SQ. FT.
SPACING = 8 5/8", 6'-3 3/8", 4'-1 5/8", 4'-1 3/4" & 8 5/8"
Nº OF BRACKETS = 4, HT.= 8', TYPE Y2
FIXTURES = 1@ 75 3/8", & 1@ 99 3/8"

C

16'x6' = 96 SQ. FT.
SPACING = 8 5/8", 6'-3 3/8", 4'-1 5/8", 4'-1 3/4", & 8 5/8"
Nº OF BRACKETS = 4, HT = 6' TYPE Y2
FIXTURES = 1@ 75 3/8" & 1@ 99 3/8"

(51)

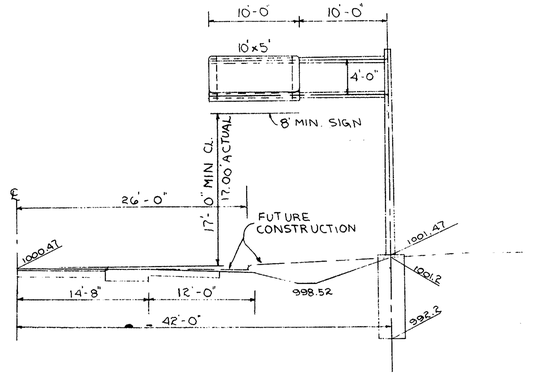

GRAHAM ROAD STA 123+00 WEST BOUND
816 OVERHEAD SIGN SUPPORT
Nº 12.24 DES. 2

10'x5' = 50 SQ FT
SPACING = 10 3/8", 8-3 3/8", & 10 1/4"
Nº BRACKETS = 2, HT = 5' TYPE Y2
FIXTURES = 1@ 99 3/8"

(52)

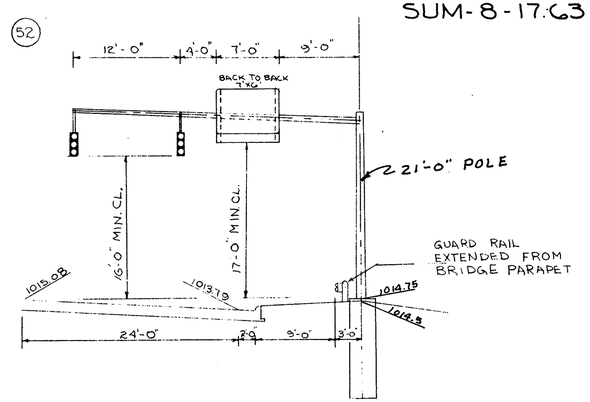

GRAHAM ROAD STA 115+80 WEST BOUND
816 OVERHEAD SIGN

7'x6'x2 = 84 SQ FT.
SPACING = 6", 6'-0", & 6"
Nº OF BRACKETS = 4, HT: 6 TYPE Y2
FIXTURES = 2@ 75 3/8"

FOR POST, ARM, & SIGNAL QUANTITIES SEE SHEET Nº 282

(53)

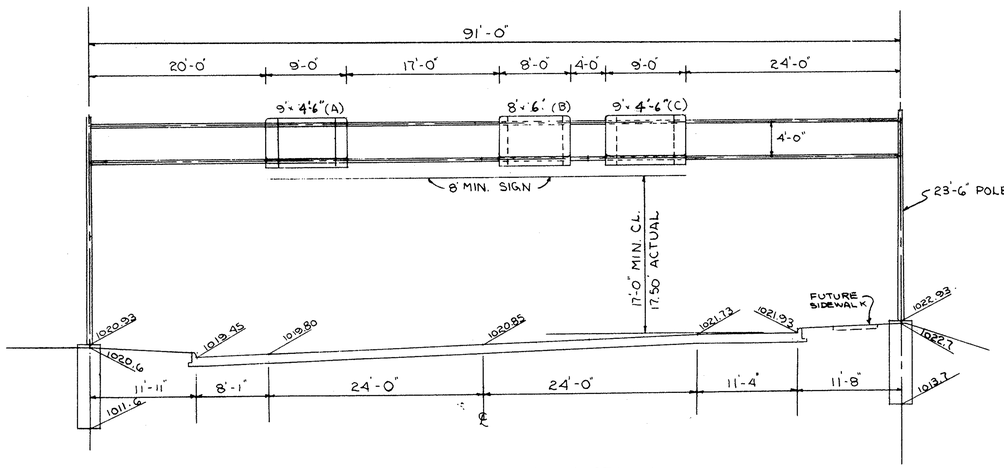

GRAHAM ROAD STA 107+75 EAST BOUND
816 OVERHEAD SIGN SUPPORT
Nº 7.2 DES. 3 (MODIFIED) 91' SPAN

A

9'x4'6" = 40.5 SQ. FT.
SPACING = 16 3/8", 6'-3 3/8", & 16 1/4"
Nº OF BRACKETS = 2, HT = 4'-6" TYPE X2
FIXTURES = 1@ 75 3/8"

B

8'x6' = 48 SQ. FT.
SPACING = 10 3/8", 6'-3 3/8", & 10 1/4"
Nº OF BRACKETS = 2, HT. = 6', TYPE X2
FIXTURES = 1@ 75 3/8"

C

9'x4'-6" = 40.5 SQ FT.
SPACING = 16 3/8", 6'-3 3/8", & 16 1/4"
Nº OF BRACKETS = 2, HT = 4'-6" TYPE X2
FIXTURES = 1@ 75 3/8"

(55)

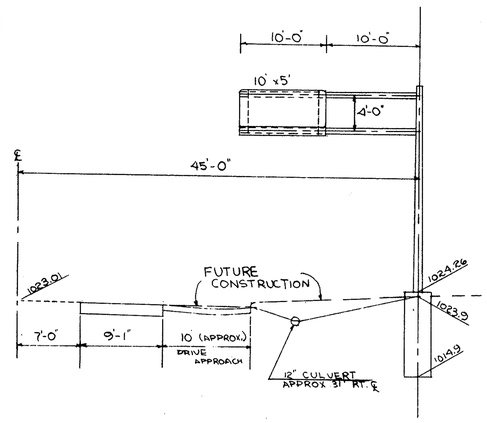

GRAHAM ROAD STA 101+10 EAST BOUND
816 OVERHEAD SIGN SUPPORT
Nº 12.24 DES. 2

10'x5' = 50 SQ. FT.
SPACING = 10 3/8", 8'-3 3/8", & 10 1/4"
Nº OF BRACKETS = 2, HT = 5' TYPE X2
FIXTURES = 1@ 99 3/8"

SIGN ELEVATIONS - Nºs 50 THRU 55

FED. RD.	STATE	PROJECT	
2	OHIO		

288
460

SUM-8-17.63

56

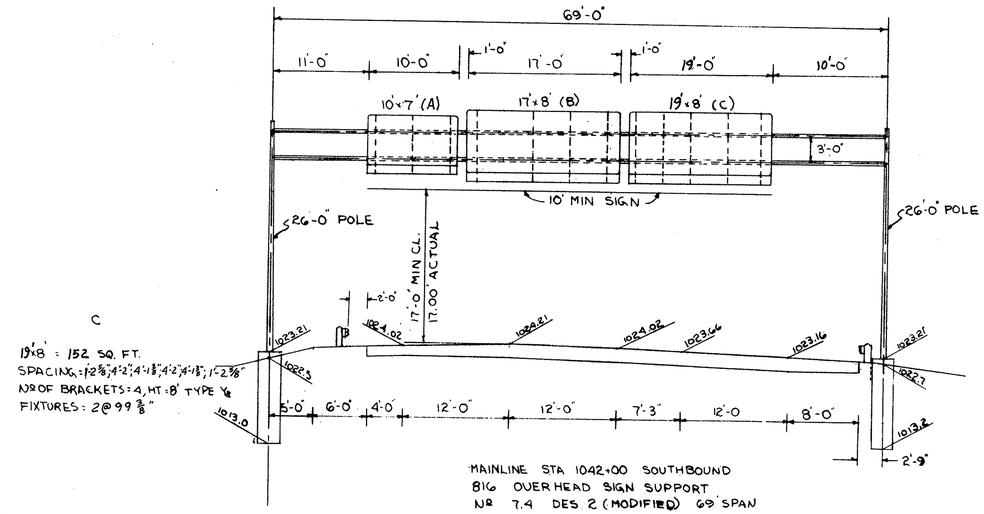

MAINLINE STA 1042+00 SOUTHBOUND
816 OVERHEAD SIGN SUPPORT
NR 7.4 DES 2 (MODIFIED) 69' SPAN

C

19'x8' = 152 SQ. FT.
SPACING = 1'-2⅜", 4'-2", 4'-1⅜", 4'-2", 4'-1⅜", 1'-2⅜"
NR OF BRACKETS = 4, HT = 8' TYPE Y_2
FIXTURES = 2@ 99⅜"

A

10'x 7' = 70 SQ FT.
SPACING: 10⅜", 4'-1⅜", 4'-1¾", 10'4"
NR OF BRACKETS = 3, HT: 7' TYPE Y_2
FIXTURES = 1@ 99⅜"

B

17'x8' = 136 SQ. FT.
SPACING = 14⅝", 6'-3⅜", 4'-1⅝", 4'-1¾", & 14⅝"
NR OF BRACKETS = 4, HT. = 8' TYPE Y_2
FIXTURES = 1@ 75⅜" & 1@ 99⅜"

57

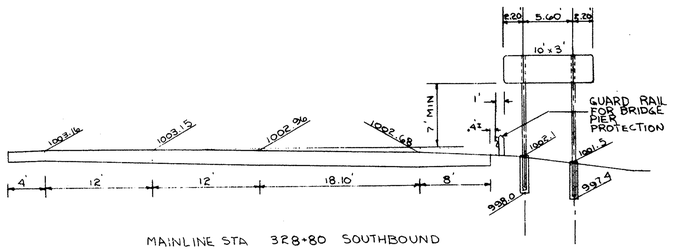

MAINLINE STA 328+80 SOUTHBOUND
GROUND MOUNTED SIGN

3'x10' = 30 SQ FT
2- 6" POST BEAMS, LENGTH @ 15.5' & @ 16'
FOUNDATION = 12" x 4.1'
TOTAL CONCRETE = 0.2 C.Y.

58

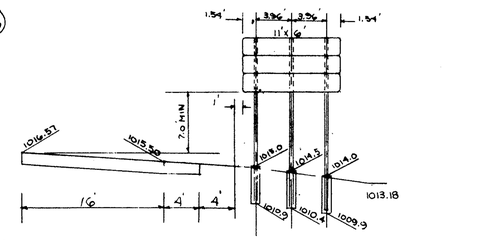

RAMP "B" STA 1036+00 SOUTHBOUND
GROUND MOUNTED SIGN
11'x6' = 66 SQ. FT.
3- 8" POST BEAMS, LENGTH @ 18.5', @ 19', & @ 19.5'
FOUNDATION = 12" x 4.1'
TOTAL CONCRETE = 0.3 C.Y.

59

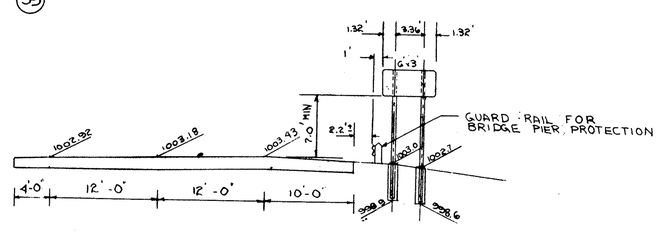

MAINLINE STA 327+10 NORTHBOUND
GROUND MOUNTED SIGN

6'x3' = 18 SQ.FT.
2 -- 6" POST BEAMS, LENGTH = 14.5
FOUNDATION = 12" x 4.1'
TOTAL CONCRETE = 0.2 CU. YDS.

SIGN ELEVATIONS-NOS 56 THRU 59

FORM D D A-6

FED. RD.	STATE	PROJECT	
2	OHIO		

289
460

SUM-8-17.63

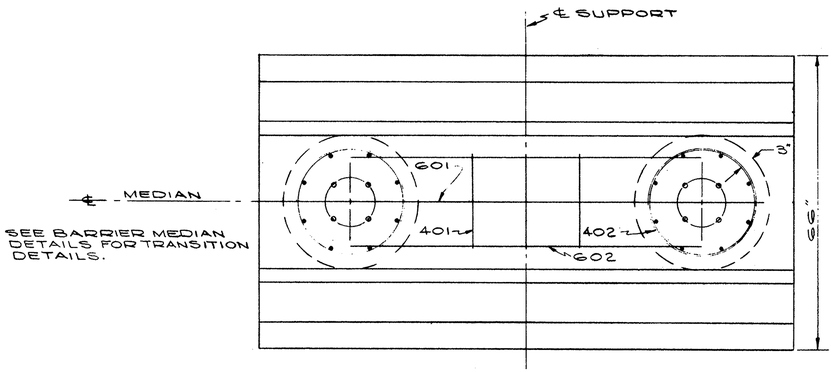

PLAN VIEW

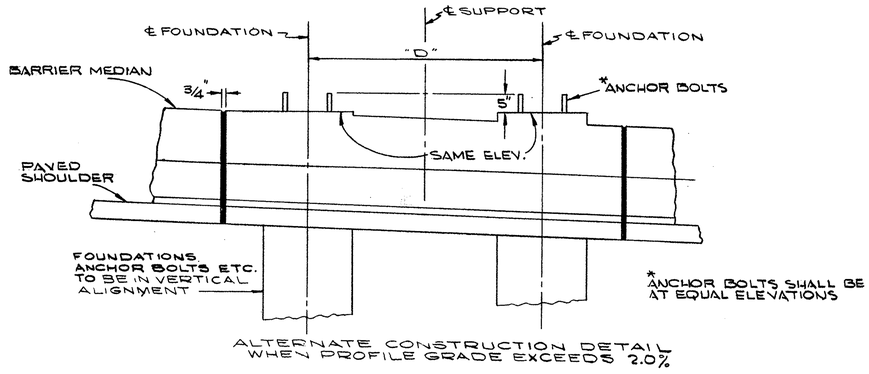

ALTERNATE CONSTRUCTION DETAIL WHEN PROFILE GRADE EXCEEDS 2.0%

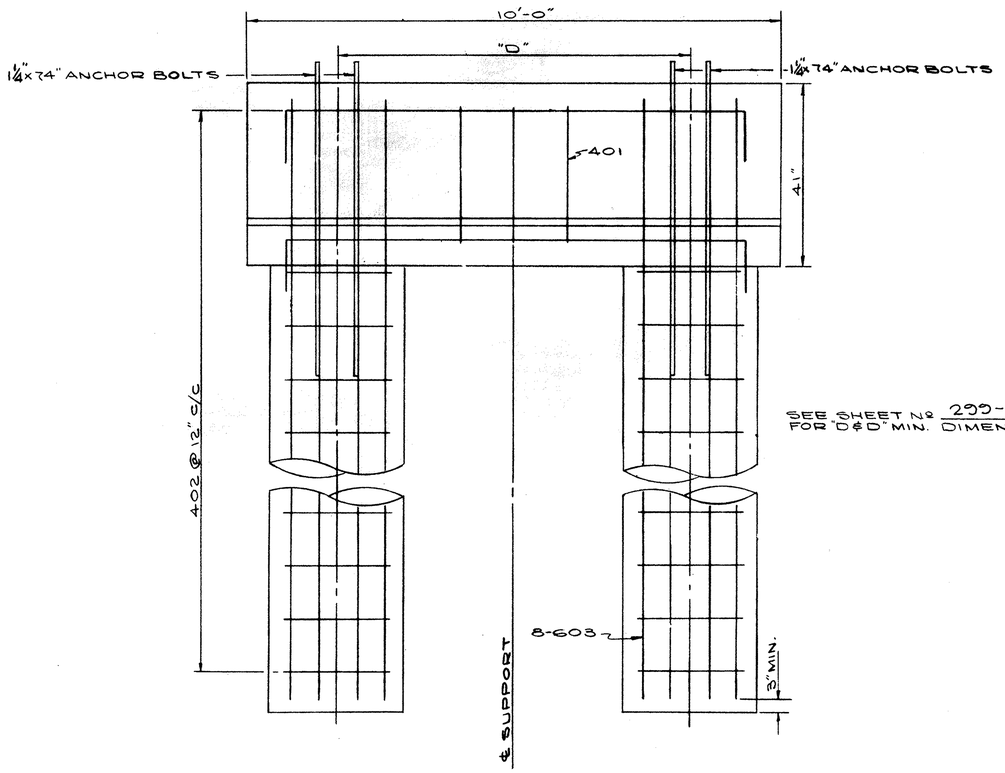

SEE SHEET No 299-303 FOR "D" & "D" MIN. DIMENSIONS.

ELEVATION VIEW

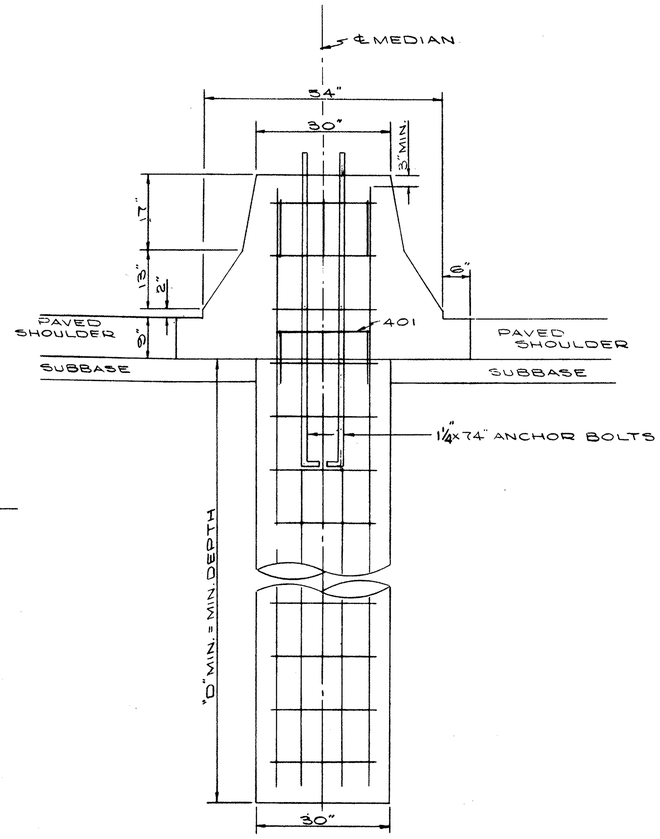

END VIEW

REINFORCEMENT SCHEDULE			
MARK	NO	LENGTH	TYPE
401	12"C/C		102
402	12"C/C	7'-6"	103
601	2	D+48"	101
602	4	D+24"	101
603	6	DMIN.+38	STR.

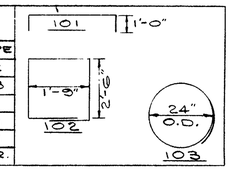

DETAIL "B"

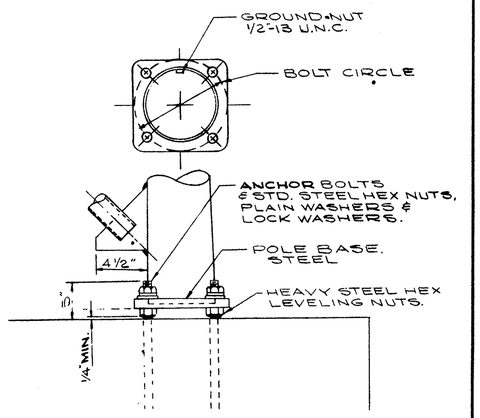

POLE BASE DETAIL

OVERHEAD SIGN SUPPORT
MEDIAN MOUNTING DETAIL

FORM D D A-6

FED. RD.	STATE	PROJECT	
2	OHIO		

290
460

SUM 8 17.63

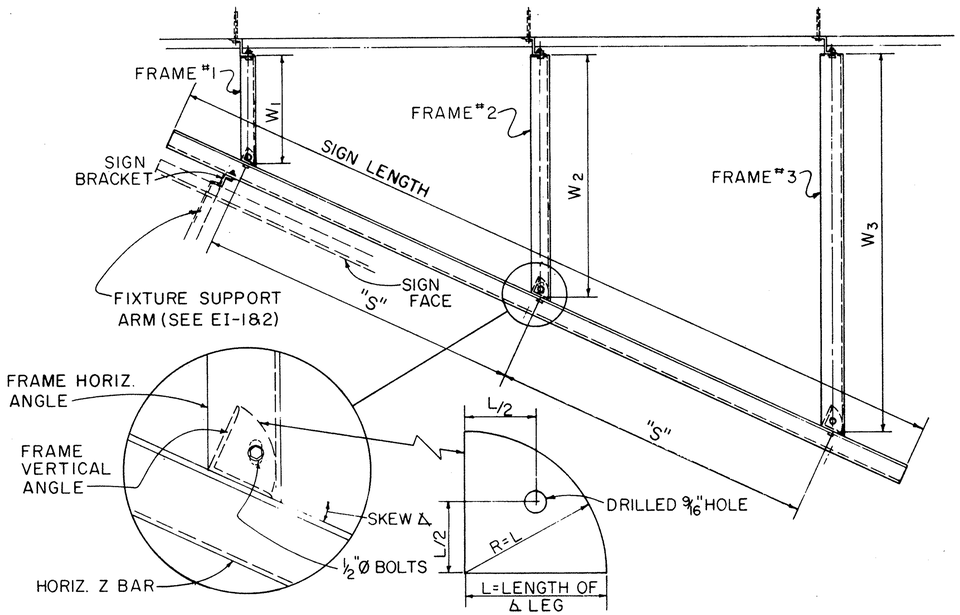

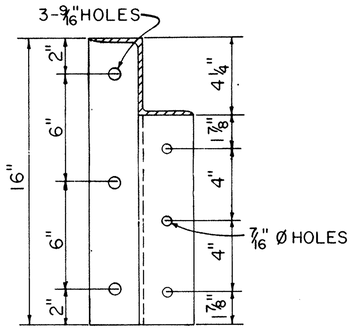

"Z" BAR-A
(4" x 3 1/8" x 5/16")

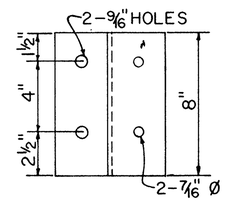

"Z" BAR-B
(4" x 3 1/8" x 5/16")

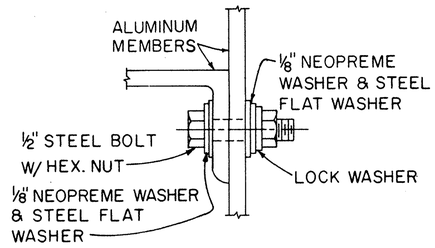

BOLTED CONNECTIONS

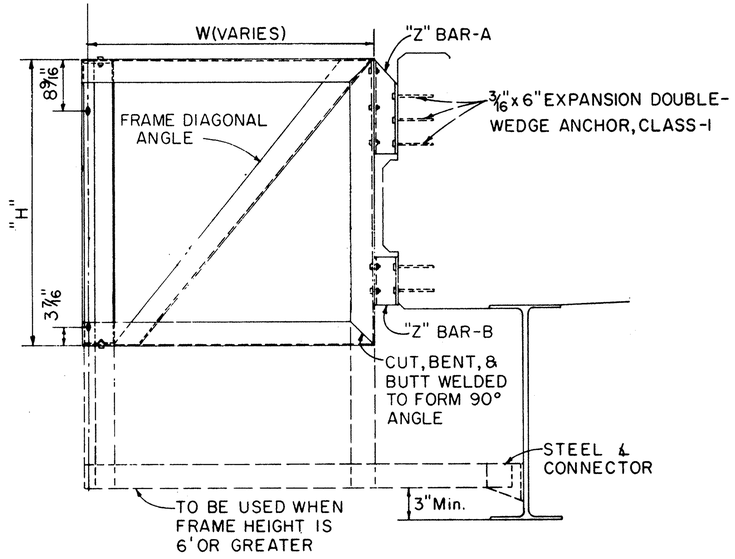

TYPE	DESIGN	BRIDGE SKEW	FRAME SKEW	SIGN LENGTH	No. FRAMES	S	FRAME WIDTH W1	FRAME WIDTH W2	FRAME WIDTH W3	FRAME MEMBER SIZE #1	FRAME MEMBER SIZE #2	FRAME MEMBER SIZE #3
1	1	0°to10°	0°	4'to5'	2	1@4'	SEE 816 S.P.L. DRAWING					
	2	0°to10°	0°	6'to11'	2	1@6'						
	3	0°to10°	0°	12'to19'	3	2@6'						
	4	0°to10°	0°	20'to25	4	3@6'						
40 B A	2	1	11°to20°	15°	4'to5'	2	1@4'	2'-0"	3'-0 1/2"		3"x3"x3/16"	3"x3"x3/16"	
		2	11°to20°	15°	6'to11'	2	1@6'	2'-0"	3'-6 5/8"		3"x3"x3/16"	3"x3"x3/16"	
		3	11°to20°	15°	12'to15'	3	2@6'	2'-0"	3'-6 5/8"	5'-1"	3"x3"x3/16"	3"x3"x3/16"	4"x4"x1/4"
		2 MOD	11°to20°		11'	3	SEE DETAILES	2'-0"	3'-6 5/8"	5'-1"	3"x3"x3/16"	3"x3"x3/16"	4"x4"x1/4"
	3	1	21°to30°	25°	4'to5'	2	1@4'	2'-0"	3'-8 1/4"		3"x3"x3/16"	4"x4"x1/4"	
		2	21°to30°	25°	6'to11'	2	1@6'	2'-0"	4'-6 3/8"		3"x3"x3/16"	4"x4"x1/4"	
		3	21°to30°	25°	12'to15'	3	2@6'	2'-0"	4'-6 3/8"	7'-0 3/4"	3"x3"x3/16"	4"x4"x1/4"	5"x5"x3/8"
	4	1	31°to40°	35°	4'to5'	2	1@4'	2'-0"	4'-3 1/2"		3"x3"x3/16"	4"x4"x1/4"	
		2	31°to40°	35°	6'to11'	2	1@6	2'-0"	5'-5 3/8"		3"x3"x3/16"	5"x5"x3/8"	

FRAME HEIGHT "H"	
SIGN HEIGHT	"H"
4' to 6'-6"	4'-0"
7' to 9'-0"	6'-0"

STRUCTURE MOUNTED SIGN SUPPORT

FORM D D A-8

FED. RD.	STATE	PROJECT	
2	OHIO		

251
460

SUM-8-17.63

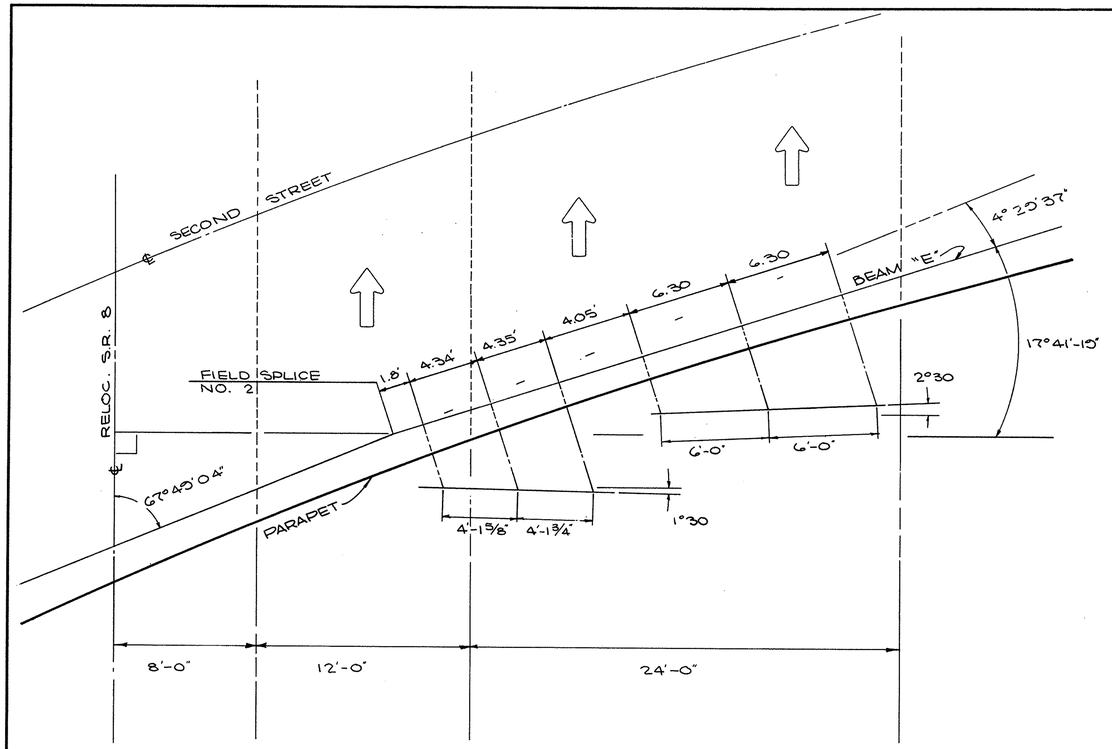

PLAN

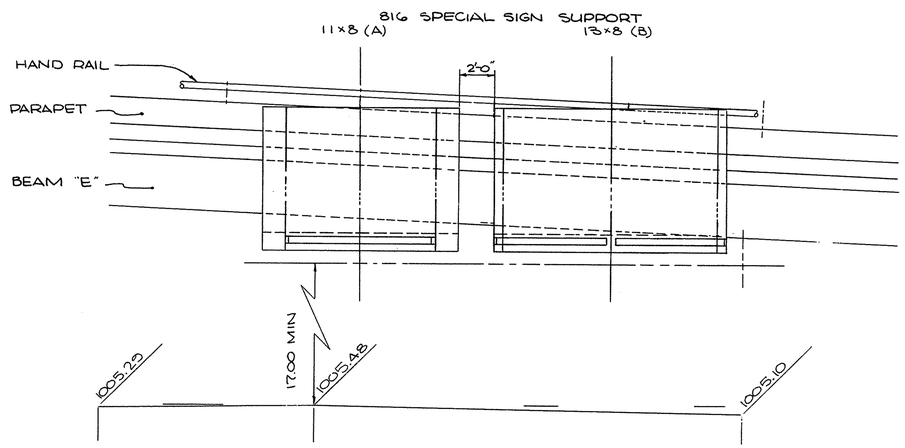

ELEVATION

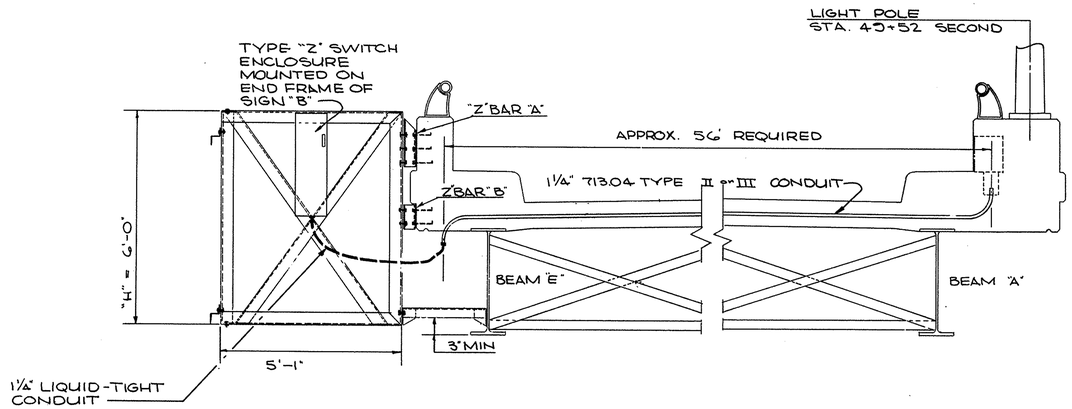

SECTION

GUIDE SIGN Nº 40

SIGN DETAILES

FORM D D A-8

QUANTITY SUMMARY

TRAFFIC SIGNALS

FED.RD.	STATE	PROJECT	
	OHIO		

232
460

SUM-8-17.63

Federal, State & City Code 7221

ITEM	296	297	BID ITEM	BID QUANTITY	BID UNIT	DESCRIPTION
81G		2	81G	2	EACH	SIGNAL SUPPORT POLE 7GA.-12.0"X5.06"X 21'-0"
81G		1	81G	1	EACH	SIGNAL SUPPORT POLE 7GA.-12.0"X 7.87" X 29'-6"
81G		1	81G	1	EACH	SIGNAL SUPPORT ARM 7GA. -9.0"X 4.52"X 32'-0"
81G		2	81G	2	EACH	SIGNAL SUPPORT ARM 7GA. -9.0"X 3.68"X 38'-0"
81G		8.1	81G	8.1	CU.YDS	CONCRETE FOR SIGNAL SUPPORT POLE FOUNDATIONS
G25		6	G25	6	EACH	THREE SECTION SIGNAL (3-12" DIA. LENS)
G25	1		G25	1	EACH	2-PHASE, SOLID STATE, TRAFFIC ACTUATED SIGNAL CONTROLLER
G25		3	G25	3	EACH	GROUND RODS
G25	180		G25	180	LIN.FT.	LOOP DETECTORS PAVEMENT CUTTING
G25	8		G25	8	EACH	PULL BOX, 18" I.D., 713.09 C.M.P.
G25	735		G25	735	LIN.FT.	CONDUIT 3" RIGID FERROUS METAL 713.04 TYPE II OR III
G25	80		G25	80	LIN.FT.	SIGNAL POWER CABLE, Nº 4 AWG, 713.02, I MSA 20-1-1967
G25	410		G25	410	LIN.FT.	SIGNAL CONTROL CABLE, 5/C, Nº 12 AWG, STRANDED, I MSA 20-1-1967
G25	755		G25	755	LIN.FT.	DETECTOR LEAD-IN CABLE, 2/C, Nº 12 AWG, STRANDED & SHIELDED, IMSA 20-4-1967
G25	360		G25	360	LIN.FT.	LOOP WIRE, 1/C, Nº 12 AWG, #12 THW

TRAFFIC SIGNAL SUMMARY

TRAFFIC SIGNAL SPECIFICATIONS

FED. RD.	STATE	PROJECT	
2	OHIO		

SUM-8-17.63

293
460

~~PEDESTRIAN SIGNALS:~~

~~ALTHOUGH CROSSWALKS ARE CLEARLY MARKED, NO ALLOWANCE FOR PEDESTRIAN SIGNALS HAS BEEN MADE. THE CONTROLLER RECOMMENDED FOR USE AT THIS INTERSECTION WILL HAVE PROVISIONS FOR THE ADDITION OF FUTURE PEDESTRIAN TIMING INTERVALS.~~

CONTROLLER:

THE CONTROLLER RECOMMENDED FOR INSTALLATION AT THIS INTER-CHANGE IS A TWO PHASE, FULL VEHICLE ACTUATED. SOLID STATE IN DESIGN, ADDITIONAL FEATURES INCLUDE ALL RED CLEARANCE. FLASHER AND LOCAL FLASHER SWITCH, DOOR-IN DOOR DESIGN FOR SWITCH ACESSABILITY AND DUAL MAXIMUM. THE TIMER WILL BE HOUSED IN A CAST ALUMINUM, WEATHERPROOF CABINET ARRANGED FOR POLE MOUNTING COMPLETE WITH THERMASTATICALLY CONTROLLED VENTILATING FAN. THE SEQUENCE OF OPERATION WILL BE AS SHOWN ON THE PHASING DIAGRAM.

THE INCLUSION OF DUAL MAXIMUM INTO THE TIMER WHICH SHALL BE TIME CLOCK OPERATED. DURING PRE-DETERMINED PERIODS OF PEAK TRAFFIC FLOW, THE TIMECLOCK WILL ENERGIZE AND SHIFT FROM THE OFF-PEAK TO THE PEAK MAXIMUM.

DETECTORS:

LOOP DETECTORS ARE PROPOSED FOR BOTH APPROACHES ON GRAHAM ROAD AND RAMP C. THE GRAHAM ROAD PHASE MAY BE PLACED ON RECALL IN ORDER TO RETURN THE TIMER TO THIS INTERVAL RATHER THAN REST ON THE RAMP C INTERVAL. DETECTORS ARE REQUIRED ON GRAHAM ROAD TO PROVIDE EXTENSIONS OF THE GREEN PERIOD. PARTICULARLY DURING PEAK HOURS.

OPERATION:

THE TIMING AND CONTROL OF EACH VEHICLE PHASE WILL BE ACCOMPLISHED THROUGH THE USE OF TIMING MODULES. A SINGLE MODULE IS USED FOR EACH PHASE REQUIRED. EACH ACTUATED PHASE WILL RESPOND TO VEHICLE OR PEDESTRIAN CALLS FROM ANY TYPE OF VEHICLE DETECTOR OR PUSHBUTTON. ONLY PHASES THAT HAVE REGISTERED CALLS AND/OR PEDESTRIAN CALLS FROM DETECTORS WILL BE INCLUDED IN A CYCLE SEQUENCE. THUS COMPLETE PHASE SKIPABILITY SHALL BE PROVIDED.

EACH PHASE MODULE WILL COMMAND EXTERNAL LOAD SWITCHING DEVICES TO PERMIT DISPLAY OF THE SIGNAL INDICATIONS. THE DURATION OF THE INTERVALS FOR EACH PHASE SHALL BE DETERMINED BY SETTINGS ON THE FRONT PANEL MOUNTED CONTROL ON EACH MODULE. THE MODULES SHALL BE ALIGNED IN THE TIMER TO CLEARLY INDICATE THEIR RELATIONSHIP TO A SPECIFIC PHASE.

ONE PHASE SHALL BE CAPABLE OF TIMING AT ANY GIVEN TIME. THE CONTROLLER SHALL REST IN THE PHASE LAST RECEIVING A CALL WHEN NO OTHER PHASE HAS REGISTERED A CALL. ANY PHASE NOT REGISTERING A CALL WILL BE EXCLUDED FROM THE CYCLE SEQUENCE. IF CALLS ARE RECEIVED ON ALL PHASES, THE CYCLE SEQUENCE WILL CONTAIN ALL PHASES AND TIME IN A PRE-DETERMINED ORDER. THE TIMER SHALL CONTAIN A FRONT PANEL MOUNTED FUSE, FAILURE OF WHICH WILL CAUSE THE SWITCHING DEVICES TO PROVIDE AN ALL RED VEHICLE SIGNAL DISPLAY, THUS PROVIDING FOR SAFE OPERATION.

SOLID STATE FIRE PRE-EMPTORS

GENERAL

THE INTERNAL CIRCUITRY SHALL BE INCORPORATED INTO PRINTED CIRCUIT TYPE BOARD ASSEMBLIES.

ALL COMPONENT PARTS SHALL BE OF HIGH QUALITY MEETING THE MINIMUM ACCEPTABLE STANDARDS OF GOOD ENGINEERING PRACTICES.

THE PRE-EMPTOR SHALL OPERATE SATISFACTORILY AT ANY TEMPERATURE BETWEEN -30°F AND +165°F

POWER

THE PRE-EMPTOR SHALL BE DESIGNED TO OPERATE FROM A 24V D.C. SOURCE OF POWER.

THE PRE-EMPTOR SHALL FUNCTION SATISFACTORILY AT ANY VOLTAGE WITHIN PLUS OR MINUS 10% OF THE NOMINAL RATED VOLTAGE.

MECHANICAL DESIGN - CHASSIS

THE HOUSING SHALL BE OF A CLEAN CUT DESIGN.

THE FRONT OF THE CHASSIS SHALL INCLUDE TWO (2) INDICATOR LIGHTS FOR "STANDBY" AND "OPERATE" ONE (1) KNOB TYPE ADJUSTMENT FOR PRE-EMPT TIMING, AND A FUSE RECEPTACLE.

ELECTRICAL DESIGN

THE ACTUATING DEVICE SHALL BE A SWITCH OR PUSHBUTTON LOCATED AT AN ACCESSIBLE AND CONVENIENT LOCATION IN THE FIRE STATION.

THE INTERCONNECTION SHALL BE TWO (2) WIRES CONNECTING THE PUSHBUTTON TO THE FIRE PRE-EMPTOR UNIT IN THE CONTROLLER CABINET ONE (1) PAIR OF WIRES SHALL BE REQUIRED FOR EACH SYSTEM.

ALL TRANSISTORS AND RELAYS SHALL BE OF THE PLUG-IN TYPE TO FACILITATE MAINTENANCE.

THE PRE-EMPTOR SHALL BE DESIGNED SO THAT THERE IS NO NEED FOR ANY WIRING CHANGES ON BACKPANELS WHATSOEVER, PROVIDED THAT PARAGRAPH 6 OF SECTION F. OF THIS SPECIFICATION HAS ALREADY BEEN ACCOMPLISHED

OPERATION

WHEN THE SIGNAL DISPLAY IS GREEN, THE PRE-EMPTOR SHALL FORCE THE CONTROLLER INTO ITS CLEARANCE INTERVAL, BEFORE GOING TO THE PRE-DETERMINED PRE-EMPTION DISPLAY.

WHEN THE SIGNAL DISPLAY IS AMBER, THE PRE-DETERMINED PRE-EMPTION DISPLAY COMES IN AT THE END OF THE NORMAL SIGNAL CLEARANCE.

WHEN THE SIGNAL DISPLAY IS ALL-RED, THE PRE-DETERMINED PRE-EMPTION DISPLAY COMES IN IMMEDIATELY.

THE DURATION OF THE PRE-EMPTION DISPLAY SHALL BE ADJUSTABLE FROM 0-300 SECONDS.

THE PRE-EMPTOR UNIT SHALL BE DESIGNED SO AS TO PROVIDE ANY PRE-DETERMINED EMERGENCY DISPLAY WITHIN THE CAPABILITIES OF THE LOCAL CONTROLLER.

AT INTERSECTIONS WHICH THE PRE-EMPTOR SIGNAL UNIT IS TO BE INSTALLED, SEPARATE CIRCUITS FOR THE REDS AND GREENS ON OPPOSITE SIDES OF THE SIGNAL FOR STREETS CARRYING THE FIRE RUNS SHALL BE REQUIRED.

THE PRE-EMPTOR UNIT, UPON THE TERMINATION OF THE TIMING OF THE EMERGENCY, SHALL INSURE THAT THE LOCAL CONTROLLER IS IN MAIN STREET GREEN WITH ACTUATIONS SHOWING ON ALL MINOR PHASES.

LOOP VEHICLE DETECTORS

GENERAL

THE INTERNAL CIRCUITRY SHALL BE INCORPORATED INTO PRINTED CIRCUIT BOARD ASSEMBLIES.

ALL COMPONENT PARTS SHALL BE OF HIGH QUALITY MEETING THE MINIMUM ACCEPTABLE STANDARDS OF GOOD ENGINEERING PRACTICES.

THE DETECTOR SHALL OPERATE SATISFACTORILY AT ANY TEMPERATURE BETWEEN -30°F AND +165°F.

POWER

THE DETECTOR SHALL BE DESIGNED TO OPERATE FROM A 115 VOLT, 60 CYCLE SOURCE OF POWER.

THE DETECTOR SHALL FUNCTION SATISFACTORILY AT ANY VOLTAGE WITHIN PLUS OR MINUS 10% OF THE RATED.

MECHANICAL DESIGN - CHASSIS

THE HOUSING SHALL BE NO LARGER THAN 3-1/2" HIGH, 6" WIDE, AND 8-1/2" LONG TO FACILITATE EASE OF MOUNTING IN EXISTING TRAFFIC CONTROL CABINETS.

THE FRONT OF THE CHASSIS SHALL INCLUDE A METER OR TUNING THE LOOPS, THREE MULIT-POSITION SWITCHES FOR COARSE, MEDIUM, AND FINE TURNING. AND AN 11 PIN, OCTAL TYPE CONNECTOR FOR CONNECTING THE DETECTOR TO THE CONTROL PANEL. THERE SHALL ALSO BE A THREE-POSITION METER FUNCTION SWITCH, A PRESENCE CONTROL AND A SENSITIVITY CONTROL.

MECHANICAL DESIGN - PRINTED CIRCUIT BOARDS

ALL PRINTED CIRCUIT BOARDS SHALL BE GLASS EPOXY 2 OZ. COPPER IN COMPOSITION WITH A MINIMUM THICKNESS OF 1/16".

ALL PRINTED CIRCUIT BOARDS SHALL BE COATED WITH A PROTECTIVE FINISH TO COMBAT MILDEW AND FUNGUS FOR ADDED RELIABILITY IN ANY CLIMATE.

ELECTRICAL DESIGN

THE DETECTOR SHALL FUNCTION ON THE PRINCIPLE OF DETECTING THE SHIFT IN PHASE OF TWO HIGH FREQUENCY SINE WAVES.

THE DETECTOR DESIGN SHALL INCLUDE A FIXED FREQUENCY CRYSTAL WHICH WILL GENERATE A SINE WAVE FORM OF SINGAL. THE FREQUENCY OF THIS CRYSTAL SHALL BE SELECTABLE FROM 90KC TO 110KC.

TUNING OF THE DETECTOR SHALL BE ACCOMPLISHED BY MANUALLY ADJUSTING THE TUNING SWITCHES UNTIL THE PARALLEL COMBINATION OF THE LOOP AND A FIXED CAPACITANCE ARE IN REASONANCE.

NO EXTERNAL EQUIPMENT SHALL BE NECESSARY FOR INSTALLATION TURNING OR SENSITIVITY ADJUSTMENTS.

THE DETECTOR SHALL AUTOMATICALLY ADJUST TO VARIOUS ATMOSPHERIC CONDITIONS INCLUDING TEMPERATURE AND HUMIDITY WITHOUT CAUSING DE-TUNING OR REQUIRING READJUSTMENT OF THE CONTROLS.

THE CIRCUITRY OF THE DETECTOR SHALL BE SUCH THAT INFINITE PRESENCE OF A VEHICLE CAN BE DETECTED WHEN SPECIFIED.

THE DETECTOR SHALL INCLUDE A LIMITED PRESENCE FEATURE MANUALLY ADJUSTABLE FROM THE FRONT OF THE UNIT THAT CAN BE SET FOR A PRE-DETERMINED PRESENCE TIME INTERVAL VARIABLE FROM 1/4 SECOND TO 15 MINUTES.

VARIOUS TYPES OF OUTPUTS SHALL BE AVAILABLE SUCH AS A PULSE WHEN SPECIFIED

EACH DETECTOR SHALL BE EQUIPPED WITH A SENSITIVITY CONTROL FOR OBTAINING THE DESIRED PERFORMANCE REGARDLESS OF LOCAL CONDITIONS.

THE OUTPUT STAGE OF THE DETECTOR SHALL INCLUDE A RELAY FOR TRANSMITTING THE DETECTOR INFORMATION TO A TRAFFIC CONTROLLER, COUNTER, PARKING GATE, ETC.

THE RELAY CIRCUIT SHALL BE SUCH THAT A FAILSAFE CONDITION EXISTS. THE RELAY SHALL BE NORMALLY ENERGIZED IN THE NO-VEHICLE STATE THE PRESENCE OF A VEHICLE OVER THE LOOP WILL CAUSE THE RELAY TO BECOME DE-ENERGIZED RESULTING IN A DETECTOR OUTPUT. THIS CIRCUIT DESIGN SHALL INSURE CONTINUOUS DETECTION IN THE EVENT OF A POWER FUSE, OR A CRYSTAL FAILURE.

ALL TRANSISTORS, CRYSTALS, AND RELAYS SHALL BE OF THE PLUG-IN TYPE TO FACILITATE REPLACEMENT.

LOOP

THE DETECTOR SHALL BE CAPABLE OF DRIVING SEVERAL LOOPS OF VARIOUS SIZES AND CONFIGURATIONS FROM A 2' X 6' TO A 10' X 100' LOOP.

THE LOOP MATERIAL SHALL BE A MINIMUM 14 GAUGE HIGH TEMPERATURE WELL INSULATED WIRE INSTALLED IN A 5/16" WIDE-1 1/2" DEEP SAW CUT SLOT IN THE ROAD SURFACE.

THE LOOP SAW CUT SHALL BE A MINIMUM OF 5/16" WIDTH AND MAXIMUM 1 1/2" DEPTH. INTERSECTING SAW CUTS SHALL BE OVERLAPPED TO INSURE FULL CUT DEPTH AT INTERSECTIONS. ALL CORNERS SHALL BE 45° CUTS OFFSET ONE FOOT AT ALL INTERSECTING CORNERS.

DIRECTIONAL DETECTION SHALL BE POSSIBLE.

THE DETECTOR SHALL FUNCTION SATISFACTORILY WITH A LOOP LEAD-IN WIRE UP TO 750 FEET.

THE LOOP SHALL HAVE 2 COILS, WIRES FROM THE LOOP TO THE DETECTOR SHALL HAVE AT LEAST ONE(1) TWIST PER FOOT.

THE LOOP SHALL BE WOUND SO THAT IT WILL HAVE AT LEAST 50 MICROHENRIES OF INDUCTANCE.

SEALANT FOR LOOP DETECTOR, TO BE A PLIABLE, WATERPROOF, LOW-HEAT INSTALLATION SUBSTANCE.

TRAFFIC SIGNAL SPECIFICATIONS

FED. RD.	STATE	PROJECT	
2	OHIO		

234
460

SUM-8-17.63

TRAFFIC CONTROL SIGNAL HEADS

GENERAL

THE SIGNAL SHALL CONFORM TO THE LATEST INSTITUTE OF TRAFFIC ENGINEER'S SPECIFICATIONS

THE SIGNAL, INCLUDING ONE OR MORE LENSES, SHALL BE SECTIONAL IN CONSTRUCTION REQUIRING ONE SECTION FOR EACH LENS.

HOUSING

THE HOUSING FOR THE INDIVIDUAL SECTIONS SHALL BE MADE OF A DIE-CAST, CORROSION-RESISTANT, COPPER-FREE, NONFERROUS METAL WITH A MINIMUM TENSILE STRENGTH OF 17,000 POUNDS PER SQUARE INCH.

ALL PARTS SHALL BE CLEAN SMOOTH AND FREE FROM FLAWS, CRACKS, BLOWHOLES AND OTHER IMPERFECTIONS.

THE TOP AND BOTTOM OF EACH SECTION SHALL HAVE AN INTEGRAL LOCKING RING WITH 72 SERRATIONS TO PERMIT ROTATION OF THE SIGNAL HEAD IN FIVE DEGREE INCREMENTS.

OPENINGS IN THE TOP AND BOTTOM OF THE SIGNAL SHALL ACCOMMODATE STANDARD 1-1/2" BRACKET ARMS.

THE MAIN HOUSING SHALL HAVE INTEGRAL CAST HINGE LUGS LOCATED ON THE LEFT SIDE AND AN INTEGRAL CAST LATCHING BOLT LUG LOCATED ON THE RIGHT SIDE.

TWELVE INCH SECTIONS SHALL HAVE TWO INTEGRAL CAST LATCHING BOLT LUGS LOCATED ON THE RIGHT SIDE OF THE CASTING.

THE BACK OF THE HOUSING SHALL BE FLAT FOR EASE OF MOUNTING ADJACENT TO A FLAT SURFACE

DOOR

THE DOORS FOR EACH SECTION SHALL ALSO BE DIE-CAST UNITS FROM SIMILAR MATERIAL TO THAT USED FOR THE MAIN SECTION HOUSING.

THE RIGHT SIDE OF THE DOOR SHALL HAVE AN INTEGRAL CAST FORK LUG TO ACCOMMODATE THE LATCHING BOLT.

TWELVE INCH DOORS SHALL HAVE TWO INTEGRAL CAST FORK LUGS TO ACCOMMODATE THE LATCHING BOLTS.

THE LEFT SIDE OF THE DOOR SHALL HAVE TWO INTEGRAL CAST HINGE LUGS FOR MATING WITH THE MAIN SIGNAL HOUSING.

THE OUTSIDE OF THE DOOR SHALL HAVE AN INTEGRAL RIM COMPLETELY ENCIRCLING THE LENS OPENING TO PREVENT ANY LIGHT LEAKAGE BETWEEN THE DOOR AND THE LENS.

THE INSIDE OF THE DOOR SHALL HAVE A GROOVE TO ACCOMMODATE A ONE-PIECE AIR CORED NEOPRENE GASKET RESULTING IN A COMPLETELY WEATHERPROOF AND DUSTPROOF ASSEMBLY WHEN THE DOOR IS IN THE CLOSED POSITION.

THE DOOR SHALL BE EQUIPPED WITH FOUR HOLES LOCATED APPROXIMATELY 90° APART FOR THE DUAL PURPOSE OF MOUNTING THE HOODS ON THE OUTSIDE AND THE LENS CLIPS ON THE INSIDE OF THE DOOR.

LENS

LENSES SHALL BE . 12" IN DIAMETER AND SHALL CONFORM TO THE LATEST ITE SPECIFICATIONS.

THE LENS SHALL BE ENCASED IN AND PROTECTED BY A SPECIAL AIR CORED NEOPRENE GASKET WHICH PROVIDES A DUST SEAL BETWEEN THE LENS DOOR AND REFLECTOR.

VISORS

ALL SIGNAL HEADS SHALL HAVE A VISOR FOR EACH INDICATION.

THE VISOR SHALL BE SHEET ALUMINUM WITH A MINIMUM THICKNESS OF .05 INCHES.

THE VISOR SHALL BE DESIGNED TO FIT TIGHTLY AGAINST THE DOOR AND THE CAST RIM COMPLETELY ENCIRCLING THE LENS OPENING. THE VISOR-DOOR ASSEMBLY SHALL NOT PERMIT ANY FILTRATION OF LIGHT BETWEEN THE DOOR AND THE VISOR.

THE VISOR SHALL BE MOUNTED WITH FOUR TRUSS HEAD SCREWS.

REFLECTOR ASSEMBLY

THE REFLECTOR ASSEMBLY SHALL CONSIST OF A REFLECTOR, DIE-CAST RETAINING RING, SOCKET AND SPRING BAIL FOR HOLDING THE ASSEMBLY TOGETHER.

THE REFLECTOR ASSEMBLY SHALL BE DESIGNED SO THAT IT CAN BE SWUNG OUT OF THE HOUSING AND EASILY REMOVED WITHOUT THE USE OF TOOLS.

THE REFLECTOR SHALL BE MADE OF EITHER ALZAK ALUMINUM OR GLASS ACCORDING TO THE LATEST ITE SPECIFICATIONS.

THE REFLECTOR ASSEMBLY SHALL INCLUDE A NEOPRENE GASKET BETWEEN THE REFLECTOR AND REFLECTOR RETAINING RING.

LAMP RECEPTACLE AND WIRING

THE LAMP RECEPTACLE SHALL BE A FIXED FOCUS TYPE POSITIONING THE LAMP FILAMENT AT THE CORRECT FOCAL POINT IN RESPECT TO THE REFLECTOR.

THE LAMP SOCKET SHALL BE HELD IN PLACE BY A WIRE SPRING BAIL SO THAT IT MAY BE REMOVED WITHOUT THE USE OF TOOLS.

THE ASSEMBLY SHALL BE DESIGNED SO THAT THE LAMP SOCKET CAN BE ROTATED THROUGH 360° WITH 8 POSITIONS OF ADJUSTMENT FOR PROPER POSITIONING OF THE LAMP FILAMENT AFTER RELAMPING THE SIGNAL.

THE LAMP SOCKET SHALL BE EQUIPPED WITH COLOR-CODED WIRE EITHER RED YELLOW OR GREEN, DEPENDING UPON THE LENS COLOR OF THE SECTION.

THE SOCKET WIRES SHALL BE A MINIMUM OF 26" LONG, COMPOSED OF WIRE WITH INSULATION DESIGNED TO WITHSTAND 105° CENTIGRADE.

THE WIRING LEADS SHALL BE TERMINATED WITH FASTON CONNECTORS FOR EASE OF CONNECTION TO TERMINAL BLOCK.

THE SOCKET SHALL BE EQUIPPED WITH A GASKET TO INSURE A DUST-TIGHT FIT BETWEEN SOCKET AND REFLECTOR.

COUPLING WASHER

A COUPLING WASHER ASSEMBLY COMPOSED OF TWO WASHERS, THREE CADMIUM-PLATED BOLTS, NUTS AND LOCK WASHERS SHALL LOCK THE INDIVIDUAL SECTIONS TOGETHER. THE HOLE IN THE COUPLING WASHER ASSEMBLY SHALL BE LARGE ENOUGH TO ACCOMMODATE THREE 3/4" CABLES.

COMBINATION SIGNALS

THE DESIGN OF THE 8" AND 12" SECTIONS SHALL PROVIDE FOR MOUNTING A 12" SECTION ON THE TOP OR BOTTOM OF ONE OR SEVERAL 8" SECTIONS TO FORM A COMBINATION ASSEMBLY.

HARDWARE

ALL SCREWS, LATCHING BOLTS AND HINGE PINS SHALL BE 300 SERIES STAINLESS TO PROHIBIT RUST AND CORROSION.

TERMINAL BLOCK

ONE SECTION OF A THREE SECTION ASSEMBLY SHALL BE EQUIPPED WITH A FIVE POSITION TERMINAL BLOCK FOR TERMINATION OF FIELD WIRING.

EACH SECTION SHALL HAVE PROVISION AND SPACE FOR AN EIGHT POSITION TERMINAL BLOCK.

PHYSICAL DIMENSIONS

AN 8" THREE SECTION ASSEMBLY SHALL HAVE AN OVERALL HEIGHT OF 30" AND A WIDTH OF 9-3/4", EXCLUDING THE HINGE AND LATCHING BOLT LUGS.

A 12" THREE SECTION SIGNAL ASSEMBLY SHALL HAVE AN OVERALL HEIGHT OF 40-5/16" AND A WIDTH OF 13-1/4", EXCLUDING THE HINGE AND LATCHING BOLT LUGS.

PAINTING

ALL SIGNALS SHALL BE FINISHED WITH A PRIME COAT OF ZINC CHROMATE FOLLOWED BY A COAT OF GREEN OR YELLOW ENAMEL BAKED AFTER APPLICATION. THE UNDERSIDE OF HOODS SHALL BE PAINTED DULL BLACK.

MODULAR ACTUATED CONTROLLERS

GENERAL

THE CONTROLLER SHALL MEET ALL REQUIREMENTS AS OUTLINED IN THE INSTITUTE OF TRAFFIC ENGINEER'S TECHNICAL REPORT #3 DATED 1958.

ALL COMPONENT PARTS SHALL BE OF HIGH QUALITY MEETING THE MINIMUM ACCEPTABLE STANDARDS OF GOOD ENGINEERING PRACTICES.

THE CONTROLLER SHALL BE DESIGNED TO OPERATE SATISFACTORILY AT ANY TEMPERATURE BETWEEN -30°F AND +160°F.

POWER

THE CONTROLLER SHALL BE DESIGNED TO OPERATE FROM A SINGLE PHASE 60 HERTZ POWER SOURCE.

THE POWER TRANSFORMER PRIMARY SHALL BE PROVIDED WITH THREE VOLTAGE TAPS: 100, 115 AND 125 VOLTS. THE CONTROLLER SHALL OPERATE AT ANY VOLTAGE WITHIN PLUS AND MINUS 15 PER CENT OF THE VOLTAGE TAP USED.

DESIGN - GENERAL

THE INTERNAL CIRCUITRY SHALL BE INCORPORATED INTO GLASS EPOXY 2 OZ. COPPER PRINTED CIRCUIT BOARD ASSEMBLIES.

ALL INTERNAL CIRCUIT COMPONENTS SHALL BE SOLID STATE IN NATURE, AND SHALL NOT EMPLOY VACUUM TUBES, GAS TUBES, RELAYS, STEPPING SWITCHES, AND OTHER ASSEMBLIES WITH MOVING PARTS.

DESIGN - TIMER

THE TIMER SHALL BE MODULAR IN DESIGN AND CONSTRUCTION. THE TIMER CHASSIS SHALL HAVE SUFFICIENT SPACE AND PROVISION FOR SIX FUNCTION MODULES.

TRAFFIC SIGNAL SPECIFICATIONS

FED. RD.	STATE	PROJECT	
2	OHIO		

235
460

SUM-8-17.63

THE TIMER CHASIS SHALL HAVE A SELF-CONTAINED PLUG CONNECTED POWER SUPPLY SUFFICIENT IN CAPACITY TO DRIVE ALL MODULES AS SPECIFIED TO BE INCLUDED WITHIN THE CHASSIS.

THE TIMER CHASSIS SHALL BE NO LARGER THAN 14-1/4" HIGH, 18" WIDE AND 8-1/4" DEEP TO FACILITATE MOUNTING IN A STANDARD TRAFFIC CONTROL CABINET.

THE FRONT OF THE TIMER CHASSIS SHALL INCLUDE TWO FUSES; FUSE HOLDERS AND A 48 PIN MS TYPE CONNECTOR FOR CONNECTING THE TIMER TO THE CONTROLLER PANEL.

THE FRONT OF THE TIMER SHALL INCLUDE AN INDIVIDUAL INCANDESCENT VISUAL INDICATOR FOR INDICATING THE INTERVAL TIMING AND TERMINATION BY MAXIMUM TIMING.

THE TIMER SHALL BE MOUNTED SO THAT IT MAY BE WITHDRAWN FROM THE CABINET FOR INSPECTION AND MAINTENANCE WITHOUT BREAKING ANY ELECTRICAL CONNECTIONS OR INTERRUPTING NORMAL OPERATION OF THE CONTROLLER.

THE TIMER SHALL INCLUDE PROVISION FOR STOP TIMING AND FORCING DURING THE EXTENSION INTERVAL OF EACH PHASE.

DESIGN - MODULES

THE INDIVIDUAL MODULES SHALL CONSIST OF A PRINTED CIRCUIT BOARD WITH ASSOCIATED COMPONENTS AND A FACE PLATE WITH TWO OR MORE CONTROLS PLACED IN A VERTICAL ROW EASILY ACCESSIBLE FROM THE FRONT OF THE UNIT.

THE UNIT SHALL INCLUDE A VISUAL INDICATOR ASSOCIATED WITH EACH CONTROL. ACTUATED MODULES SHALL INCLUDE A VEHICLE CALL INDICATOR, AND MODULES EQUIPPED WITH THE DUAL MAXIMUM FEATURE SHALL INCLUDE MAXIMUM IN EFFECT VISUAL INDICATORS.

EACH VEHICLE ACTUATED PHASE MODULE SHALL INCLUDE CONTROLS FOR A MINIMUM OF FOUR TIMED PERIODS: A CONCENTRIC TYPE FOR THE INITIAL AND EXTENSION, EACH CALIBRATED TWO TO TWELVE SECONDS, A MAXIMUM CALIBRATED TEN TO SIXTY SECONDS AND A YELLOW CLEARANCE CALIBRATED ONE TO TEN SECONDS.

EACH VEHICLE ACTUATED PAHSE MODULE SHALL INCLUDE AN ALL-RED CLEARANCE CONTROL CALIBRATED 0 TO TEN SECONDS. THIS CONTROL SHALL BE CONCENTRIC WITH THE YELLOW CLEARANCE CONTROL. THE ALL-RED CONTROL SET AT THE 0 POSITION SHALL CAUSE THE INTERVAL TO BE OMITTED FROM THE CONTROLLER SEQUENCE.

A HINGED DOOR SHALL BE PROVIDED PERMITTING COMPLETE ACCESS TO THE INTERIOR OF THE CABINET WHEN CLOSED, THE DOOR SHALL FIT TIGHTLY AGAINST GASKETING MATERIAL. THE DOOR SHALL BE PROVIDED WITH A STRONG LOCK AND KEY.

FEATURES - FLASHING

WHEN SPECIFIED, THE CONTROLLER SHALL BE EQUIPPED WITH A SEPARATE MOTOR-DRIVEN FLASHER TO PERMIT SUBSTITUTION OF FLASHING SIGNAL INDICATIONS FOR NORMAL VEHICLE OR PEDESTRAIN ACTUATED OPERATION. FLASHING INDICATIONS SHALL BE AT THE RATE OF 54 FLASHES PER MINUTE WITH APPROXIMATELY 50 PER CENT ON AND 50 PER CENT OFF.

THE FLASHING CONTACTS SHALL BE EQUIPPED WITH AN ADEQUATE RADIO INTERFERENCE FILTER CONSISTING OF AT LEAST ONE CHOKE COIL AND ONE CAPACITOR.

THE FLASHING FEATURE SHALL BE DESIGNED SO THAT THE FLASHING OPERATION MAY BE OBTAINED WHEN THE TIMER IS REMOVED FROM THE CABINET.

FEATURES - POLICE DOOR

WHEN SPECIFIED, THE CONTROLLER SHALL BE EQUIPPED WITH AN AUXILIARY POLICE DOOR MOUNTED ON THE MAIN CONTROLLER DOOR. SWITCHES AS SPECIFIED, SHALL BE MOUNTED BEHIND THE POLICE PANEL DOOR.

FEATURES - INTERCONNECTED COORDINATION

WHEN SPECIFIED, THE CONTROLLER SHALL BE EQUIPPED WITH A SYNCHRONIZER FOR INTERCONNECTION OF THE CONTROLLER TO A SYNCHRONOUS SYSTEM.

ALL MODULES SHALL BE PLUG CONNECTED TO THE MAIN TIMER CHASSIS SO THAT THEY MAY BE REMOVED AND REPLACED WITH A SIMILAR MODULE WITHOUT THE NECESSITY OF DISCONNECTING OR RECONNECTING INDIVIDUAL WIRES.

DESIGN - PANEL

THE CONTROLLER SHALL BE EQUIPPED WITH A PANEL ASSEMBLY MOUNTED ON THE REAR WALL OF THE CABINET.

THE PANEL SHALL BE MADE OF PLATED STEEL.

THE PANEL ASSEMBLY SHALL INCLUDE A FUSE FOR THE LINE SIDE OF THE POWER SUPPLY, AN UNFUSED TERMINAL FOR THE NEUTRAL SIDE OF THE POWER SUPPLY, ONE TERMINAL FOR EACH CONDUCTOR OF THE SIGNAL LIGHT CABLE AND SEVERAL COMMON TERMINALS FOR THE VARIOUS GROUND CIRCUITS.

WHEN SPECIFIED, THE REAR PANEL OF CONTROLLERS OPERATING AS A PART OF AN INTERCONNECTED SYSTEM SHALL BE EQUIPPED WITH A FUSE FOR EACH OF THE CIRCUITS FROM THE MASTER CONTROLLER.

ALL FIELD TERMINALS SHALL BE PERMANENTLY INDENTIFIED. THE OUTGOING SIGNAL CIRCUITS SHALL BE THE SAME POLARITY AS THE LINE SIDE OF THE POWER SUPPLY: THE COMMON RETURN OF THE SIGNAL CIRCUITS SHALL BE OF THE SAME POLARITY AS THE GROUND SIDE OF THE POWER SUPPLY.

THE REAR PANEL ASSEMBLY SHALL INCLUDE ELECTROMECHANICAL SIGNAL LOAD RELAYS. THESE RELAYS SHALL HAVE A MAXIMUM CURRENT CARRYING CAPACITY OF 10 AMPERES INCANDESCENT LAMP LOAD.

THE SIGNAL CIRCUIT WIRING OF THE LOAD RELAYS SHALL BE SUCH THAT A FAIL SAFE CONDITION EXISTS TO PERVENT THE OCCURRENCE OF SIMULTANEOUS GREEN SIGNAL INDICATIONS ON CONFLICTING TRAFFIC MOVEMENTS.

DESIGN - CABINET

THE CONTROLLER SHALL BE FURNISHED COMPLETELY HOUSED IN A CAST ALUMINUM, WEATHERPROOF CABINET, CLEAN CUT IN DESIGN AND APPEARANCE.

THE SIZE OF THE CABINET SHALL BE ADEQUATE TO PROVIDE SPACE FOR HOUSING THE TIMER, PANEL AND ALL ASSOCIATED ELECTRICAL DEVICES WHICH ARE FURNISHED WITH THE CONTROLLER.

625 TESTING AND INSPECTION OF SIGNALS SYSTEM

THE CONTRACTOR SHALL BE RESPONSIBLE FOR FURNISHING ALL PERSONNEL AND EQUIPMENT REQUIRED TO SUCCESSFULLY PERFORM THE FOLLOWING TESTS AND SHALL FURNISH SIX (6) CERTIFIED COPIES OF COMPLETE TEST RECORDS TO THE ENGINEER.

CIRCUIT CONNECTIONS: CIRCUITS ARE PROPERLY CONNECTED; CONTINUOUS AND FREE FROM SHORT CIRCUITS, CROSSES AND UNSPECIFIED GROUNDS, AND CONNECTED IN ACCORDANCE WITH THE WIRING INSTRUCTIONS AND THAT EACH CIRCUIT IS OPERABLE CORRECTLY AND INDEPENDENTLY OF ANY OTHER CIRCUIT.

CIRCUIT TEST: EACH UNDERGROUND CIRCUIT AND SPARE WIRES TERMINATING AT THE TRAFFIC CONTROLLER CABINETS SHALL HAVE A RESISTANCE TO GROUND OF NOT LESS THAN , ONE OHM. THE CONTRACTOR SHALL FURNISH A COMPLETE REPORT OF ALL MEGOHM READINGS FOR EACH CIRCUIT AND SPARE CONDUCTORS IN CABLES APPEARING AT THE CONTROLLER BASE AS STIPULATED.

GROUND TEST: THE RESISTANCE TO GROUND FOR EACH GROUND ROD INSTALLATION AT A TRAFFIC CONTROLLER SHALL NOT EXCEED 15 OHMS. THE RESISTANCE TO GROUND FOR ALL OTHER GROUND ROD INSTALLATIONS SHALL NOT EXCEED 25 OHMS. WHERE THE RESISTANCE EXCEEDS THE REQUIREMENTS SET FORTH ABOVE, ADDITIONAL LENGTHS AND/OR NUMBERS OF RODS SHALL BE INSTALLED PER THE REQUIREMENTS OF SPECIFICATION 625.10 OF THE STATE OF OHIO CONSTRUCTION AND MATERIAL SPECIFICATIONS DATED JANUARY 1, 1969.

THE PERFORMANCE TEST: PRIOR TO ACCEPTANCE, THE CONTRACTOR SHALL OPERATE THE COMPLETED INSTALLATION CONTINUOUSLY FOR SEVEN (7) CONSECUTIVE DAYS WITHOUT INTERRUPTION OR FAILURE ATTRIBUTABLE TO POOR WORKMANSHIP OR DEFECTIVE MATERIAL, AFTER ALL FAULTS HAVE BEEN CORRECTED. THE CONTRACTOR SHALL RECORD EACH FAULT, THE METHOD AND DATE OF CORRECTION OF EACH, AND THE BEGINNING AND END OF THE SEVEN DAY TEST. THE CONTRACTOR SHALL ARRANGE WITH THE SERVICING AGENCY TO PURCHASE ELECTRIC POWER NECESSARY TO CONDUCT THE PERFORMANCE TEST. ALL COSTS OF PERSONNEL, MATERIALS, EQUIPMENT, ELECTRICAL ENERGY, AND INCIDENTALS REQUIRED FOR PERFORMING THE TESTS SHALL BE INCLUDED IN THE CONTRACT UNIT PRICES FOR THE RESPECTIVE ITEMS TESTED.

FED. RD.	STATE	PROJECT	
2	OHIO		

236
460

SUM-8-17.63

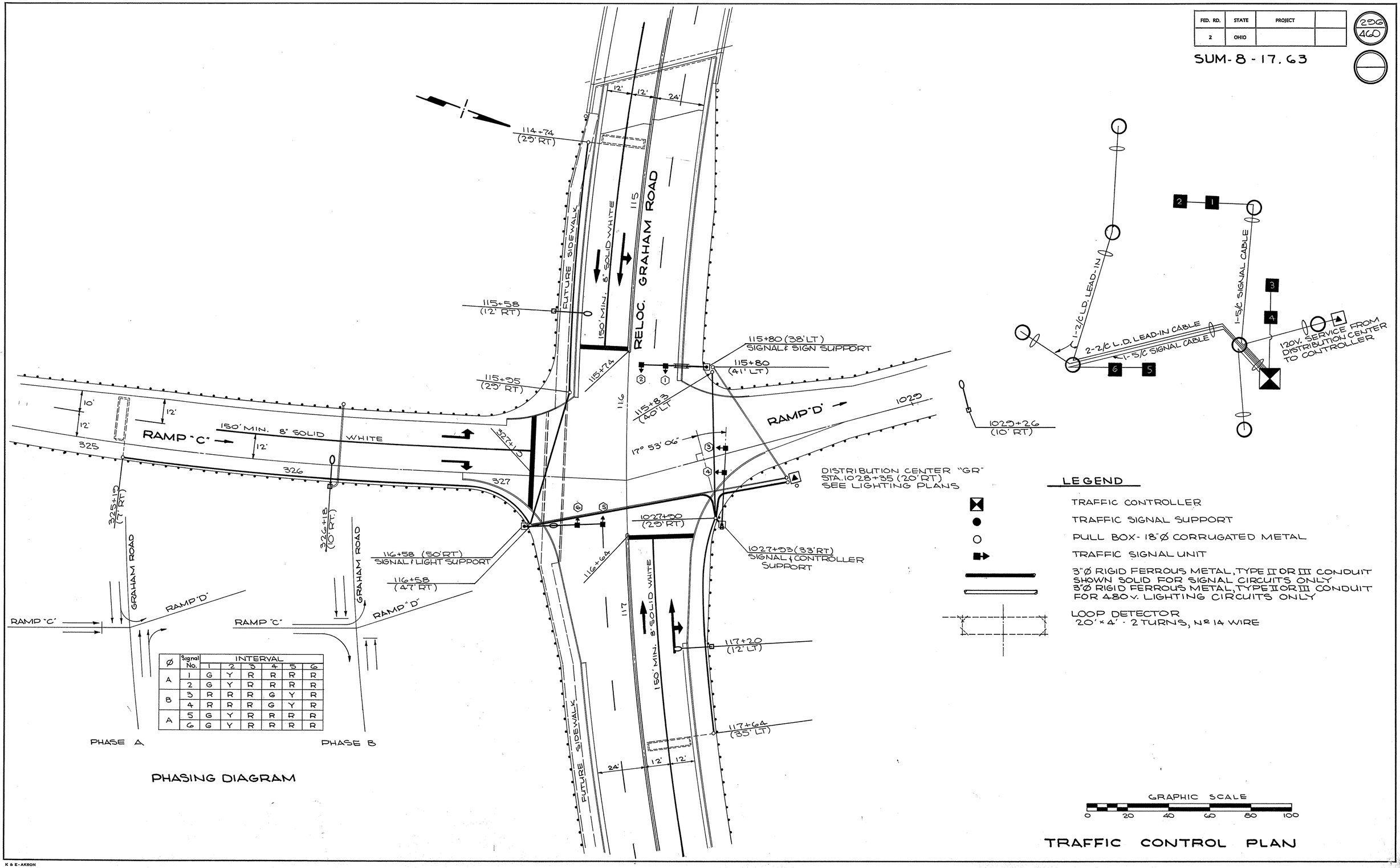

Ø	Signal No.	INTERVAL 1	2	3	4	5	6
A	1	G	Y	R	R	R	R
	2	G	Y	R	R	R	R
B	3	R	R	R	G	Y	R
	4	R	R	R	G	Y	R
A	5	G	Y	R	R	R	R
	6	G	Y	R	R	R	R

PHASE A

PHASE B

PHASING DIAGRAM

LEGEND

- TRAFFIC CONTROLLER
- TRAFFIC SIGNAL SUPPORT
- PULL BOX - 18"Ø CORRUGATED METAL
- TRAFFIC SIGNAL UNIT
- 3"Ø RIGID FERROUS METAL, TYPE II OR III CONDUIT SHOWN SOLID FOR SIGNAL CIRCUITS ONLY
- 3"Ø RIGID FERROUS METAL, TYPE II OR III CONDUIT FOR 480 V. LIGHTING CIRCUITS ONLY
- LOOP DETECTOR 20' × 4' - 2 TURNS, Nº 14 WIRE

GRAPHIC SCALE
0 20 40 60 80 100

TRAFFIC CONTROL PLAN

K & E - AKRON

FED. RD.	STATE	PROJECT	
2	OHIO		

SUM-8-17.63

297
460

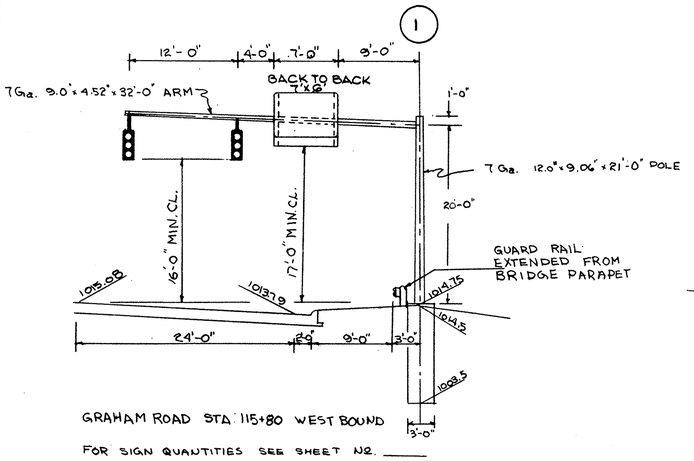

GRAHAM ROAD STA 115+80 WEST BOUND

FOR SIGN QUANTITIES SEE SHEET NO. ____

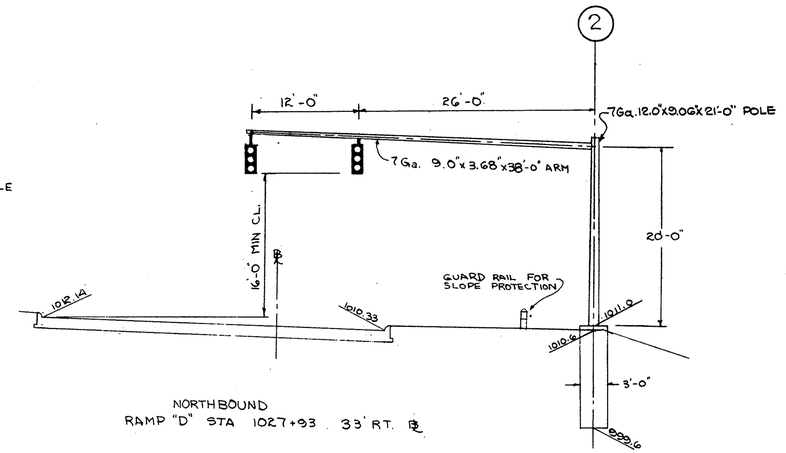

NORTH BOUND
RAMP "D" STA 1027+93 33' RT. ℄

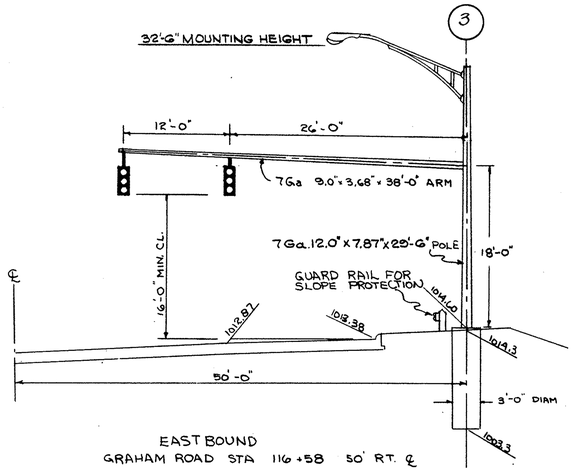

EAST BOUND
GRAHAM ROAD STA 116+58 50' RT. ℄

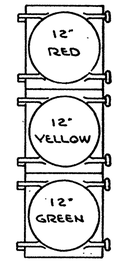

SIGNAL ARRANGEMENT DETAIL

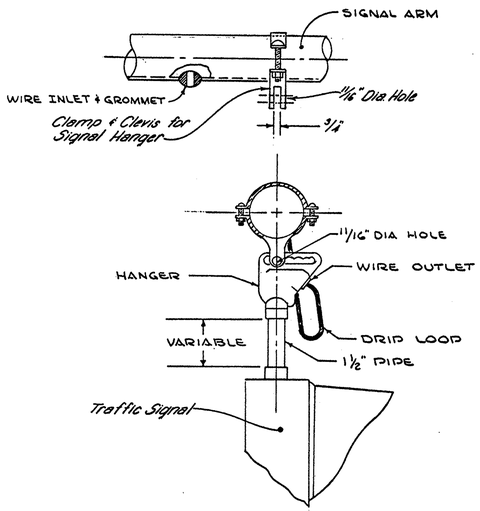

MAST ARM TRAFFIC SIGNAL ATTACHMENT DETAIL

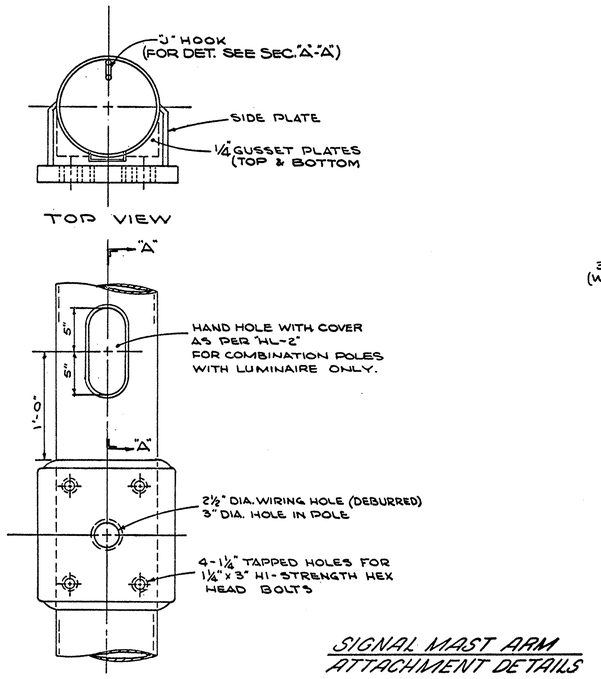

SIGNAL MAST ARM ATTACHMENT DETAILS

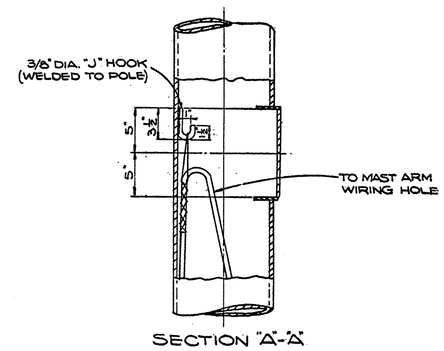

SECTION "A-A"

TRAFFIC SIGNAL DETAILS

FED. RD.	STATE	PROJECT	
2	OHIO		

238
460

SUM-8-17.63

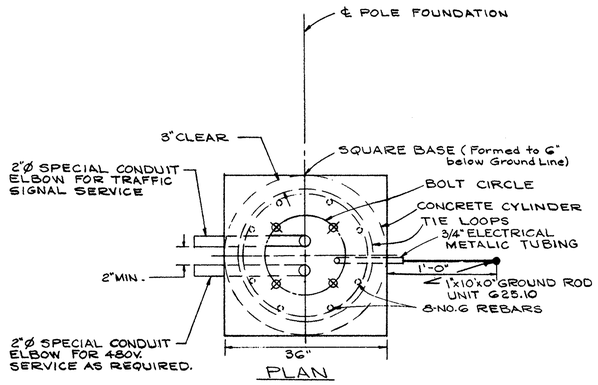

NOTE:
ORIENT CONDUIT AS REQUIRED

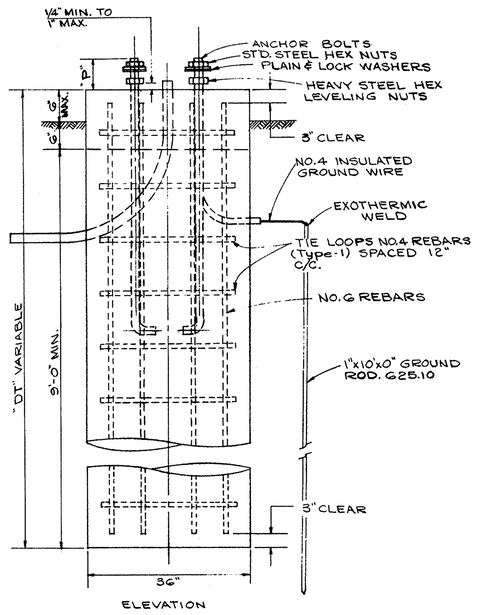

REINFORCEMENT SCHEDULE			
MARK	No.	LENGTH	TYPE
401	12" c/c	8'-11"	1
601	8	DT-6"	ST

2'-6"
TYPE 1

TRAFFIC SIGNAL SUPPORT FOUNDATION DETAIL

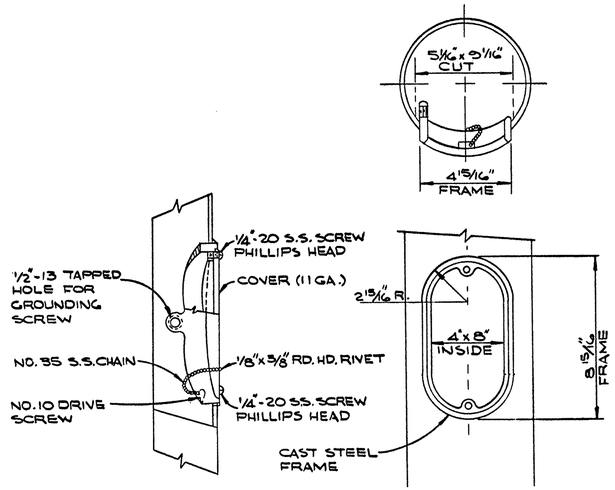

ALTERNATE HAND HOLE DETAIL

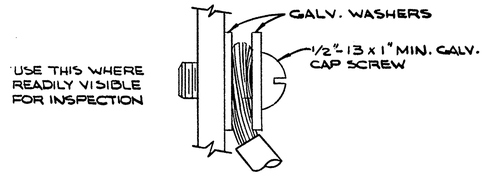

GROUND WIRE TERMINAL
READILY VISIBLE

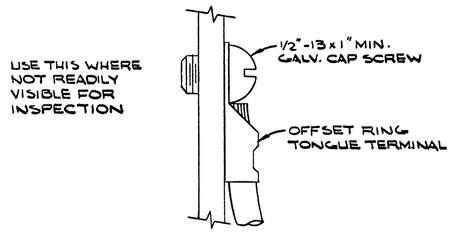

GROUND WIRE TERMINAL
NOT READILY VISIBLE

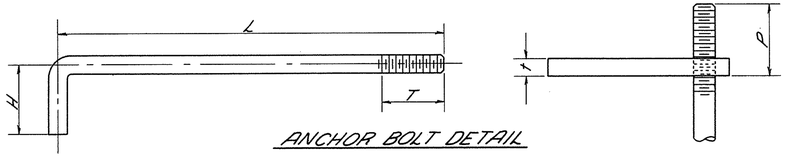

ANCHOR BOLT DETAIL

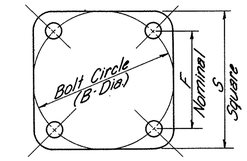

ANCHOR BOLT PLAN

ANCHOR BOLT DATA										
POLE DIA.	POLE GA.	BOLT CIRCLE	"S" SQUARE	"F" NOMINAL	"L"	"H"	"T"	"P"	"t"	ANCHOR BOLTS
12"	7	16"	17"	11 5/16"	54"	6"	5"	6 1/2"	1 5/8"	1 1/2" x 60" LONG

TRAFFIC SIGNAL DETAILS

FED. RD. DIVISION	STATE	PROJECT	
2	OHIO		

SUM-8-17.63

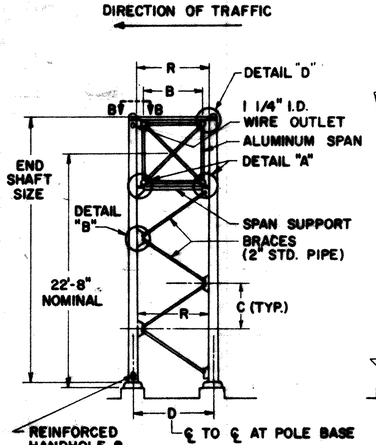

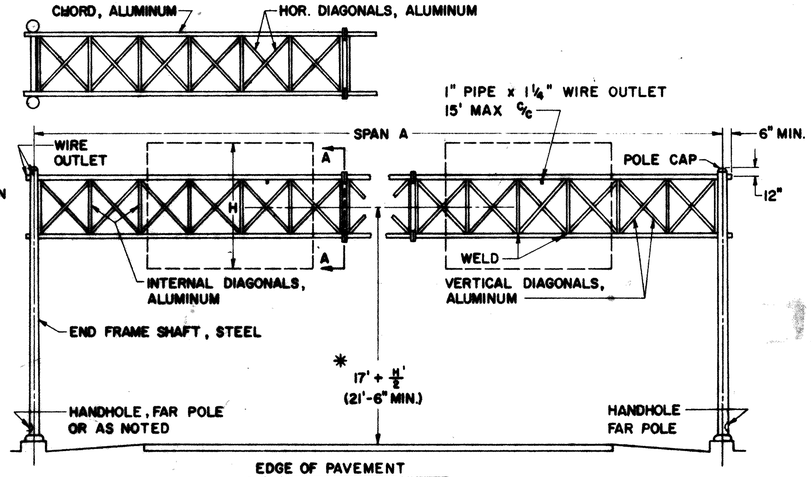

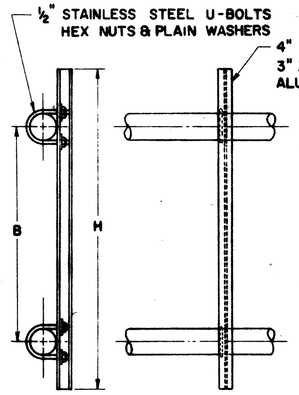

SIGN BRACKET

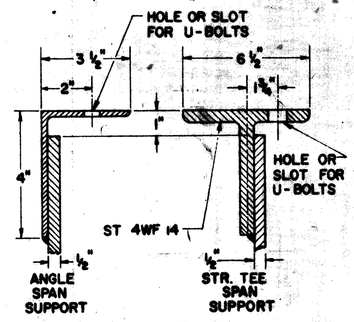

SECTION D-D

NOTES

MATERIALS

THE OVERHEAD SPAN TRUSS SHALL BE ALUMINUM AND THE END FRAMES SHALL BE STEEL.

SPAN TRUSS AND END FRAMES, INCLUDING HARDWARE, SHALL BE IN ACCORDANCE WITH SUPPLEMENTAL SPECIFICATION 816 UNLESS OTHERWISE NOTED.

STEEL POLE BASES AND GUSSETS SHALL CONFORM TO THE REQUIREMENTS OF ASTM SPECIFICATION A-373.

AFTER FABRICATION THE TAPERED POLES SHALL HAVE A MINIMUM YIELD STRENGTH OF 48,000 PSI.

FABRICATION

THE ENTIRE STEEL END FRAME SHALL BE HOT DIP GALVANIZED IN ACCORDANCE WITH SEC. 7H.02 MAXIMUM LENGTH OF SPAN SECTIONS IS 30 FT.

ERECTION

USE A MINIMUM OF 1" CAMBER IN SPAN TRUSS MEMBER FOR A 50' SPAN; ADD ¼" OF CAMBER FOR EACH 5' OF INCREASE IN SPAN OVER 50'.

PAYMENT

PAYMENT FOR THE GALVANIZED CONDUIT SHALL BE INCLUDED IN THE UNIT PRICE BID FOR OVERHEAD SIGN SUPPORTS.

SOILS

THE FOUNDATION DETAILS SHOWN ARE FOR AVERAGE SOIL CONDITIONS (MEDIUM CLAY, CEMENTED SAND AND GRAVEL, SANDY CLAY, OR STIFF CLAY).

FOR POOR SOIL CONDITIONS, INCREASE "D" MIN. BY: 50% IN DRY OR WET SAND, 60% IN SILTY CLAY, 100% IN SOFT CLAY, AND FROM 75% TO 150% IN WET SILT, DEPENDING ON QUICKSAND ACTION.

REINFORCING STEEL

COST OF REINFORCING STEEL SHALL BE INCLUDED IN THE UNIT PRICE FOR ITEM 816 CONCRETE FOR SIGN SUPPORT FOUNDATIONS.

BAR SIZE IS INDICATED IN THE BAR MARK. THE FIRST DIGIT WHERE THREE DIGITS ARE USED AND THE FIRST TWO DIGITS WHERE FOUR ARE USED, INDICATE THE BAR SIZE NUMBER.

***FOUNDATION ELEVATION**

ELEVATION OF TOPS OF FOUNDATIONS SHALL BE BUILT UP SO THAT 17' CLEARANCE IS MAINTAINED OVER ENTIRE WIDTH OF THE PAVEMENT AND SHOULDERS.

DESIGN

THE DESIGN OF OVERHEAD SUPPORTS IS IN ACCORDANCE WITH A.A.S.H.O. SPECIFICATION FOR THE DESIGN AND CONSTRUCTION OF STRUCTURAL SUPPORTS FOR HIGHWAY SIGNS, ADOPTED JUNE 12, 1961.

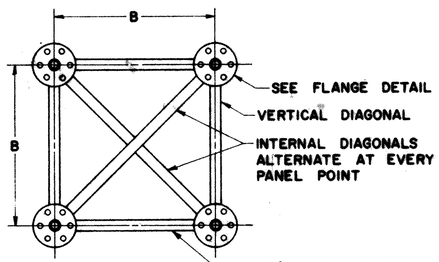

SECTION A-A

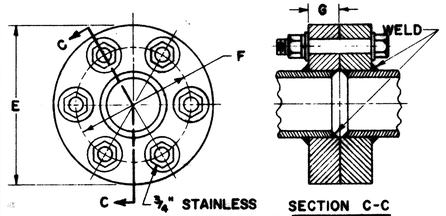

CAST FLANGE, B-26 ALLOY SG 70A-T7 (356-T7)

FLANGE DETAIL

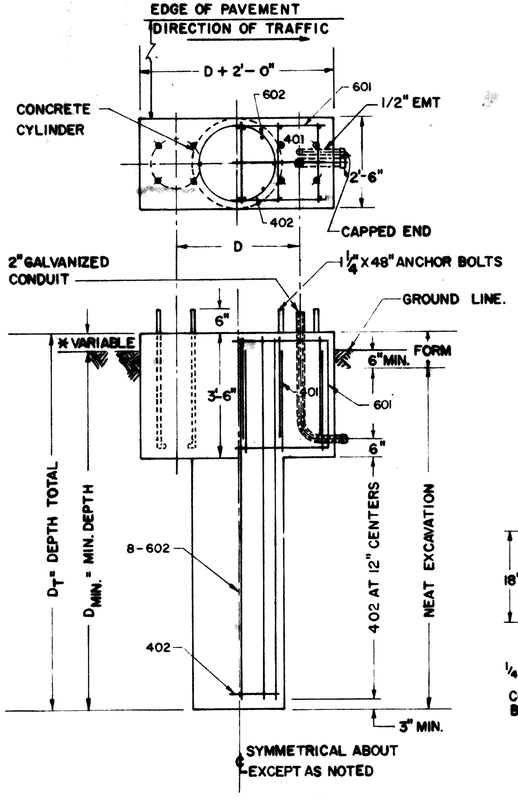

FOUNDATION DETAIL

(RIGHT HAND SHOWN — LEFT HAND OPPOSITE)

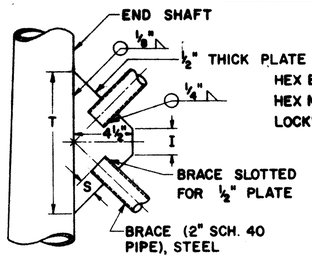

DETAIL "B"

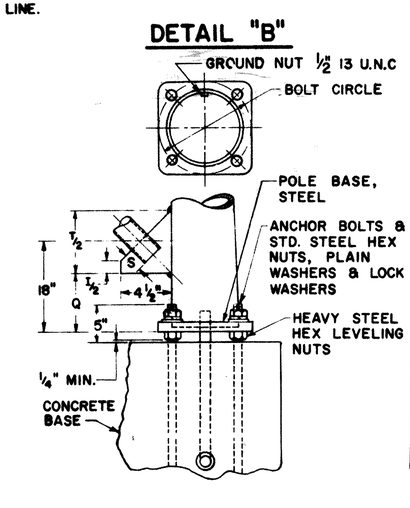

POLE BASE DETAIL

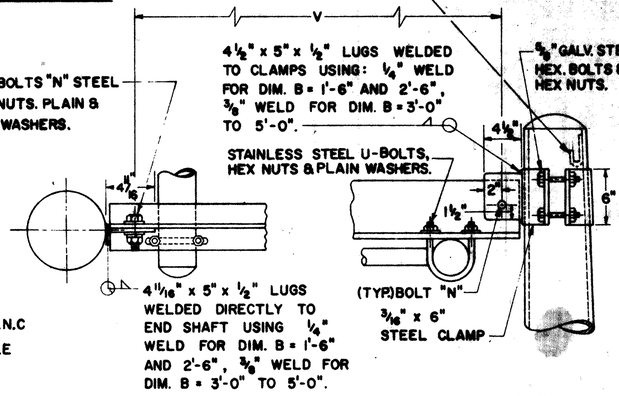

VIEW B-B

DETAIL "D"

UPPER SPAN SUPPORT (ALTERNATE METHODS)

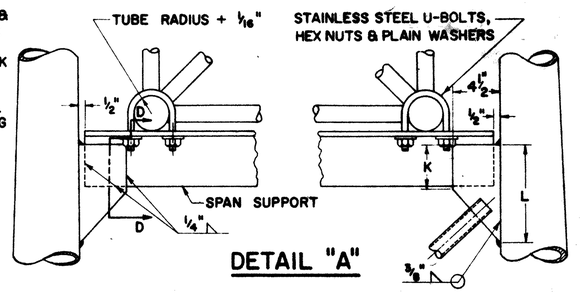

DETAIL "A"

LOWER SPAN SUPPORT

DESIGN NO.	SPAN A	B	C	D	D-MIN.	END SHAFT	BRACE LENGTH	E	F	G	I	K	L	N	P	Q	R	S	T	U BOLTS	V	BOLT CIRCLE	SPAN SUPPORT SECTION D-D	CHORDS	VERTICAL, INTERNAL & HORIZONTAL DIAGONALS
1	50' Thru 70'	2'-6"	5'-1"	3'-10"	9'-0"	7"x 3.54"x 24'-9" 7GA	5'-7 13/16"	7"	5½"	1¼"	3½"	4¾"	7¼"	⅝"	12"	5¼"	3'-3"	1½"	9"	⅝"	2'-9⅝"	10"	⅜" ANGLE x 3'-2"	3½" x .188"	1.660" x .140"
2	71' Thru 85'	3'-0"	4'-11¾"	4'-5"	9'-0"	8"x 4.5"x 25'-0" 3GA	5'-10 13/16"	7"	5½"	1¼"	3½"	4¾"	8"	1"	12"	6⅝"	3'-9"	1½"	10"	⅝"	3'-3⅝"	11"	SPLIT TEE 3'-8"	3½" x .188"	1.660" x .140"
3	86' Thru 105'	4'-0"	4'-10½"	5'-7"	9'-0"	8"x6.22"x25'-6" 3GA	6'-7⅛"	9¼"	7 7/16"	1⅜"	⅝"	4⅜"	7¾"	1"	12"	6¼"	4'-11"	1½"	9½"	⅝"	4'-5⅜"	11"	SPLIT TEE 4'-10"	4¾" x .188"	1.900" x .145"

REINFORCEMENT SCHEDULE			
MARK	NO.	LENGTH	TYPE
401	12"C/C	7'-6"	101
402	12"C/C	7'-6"	103
601	6	2D+9'-6"	102
602	16	D_T-6"	STR.

BUREAU OF TRAFFIC
OHIO DEPARTMENT OF HIGHWAYS

OVERHEAD SIGN SUPPORTS | 816 No. 7.2

DATE
7-25-62
5-5-64
6-20-66

APPROVED _____ ENGINEER OF TRAFFIC

200 SQ. FT. SIGN AREA — OVERHEAD SIGN SUPPORT, 816 NO. 7.2

FED. RD. DIVISION	STATE	PROJECT	
2	OHIO		

SUM-8-17.63

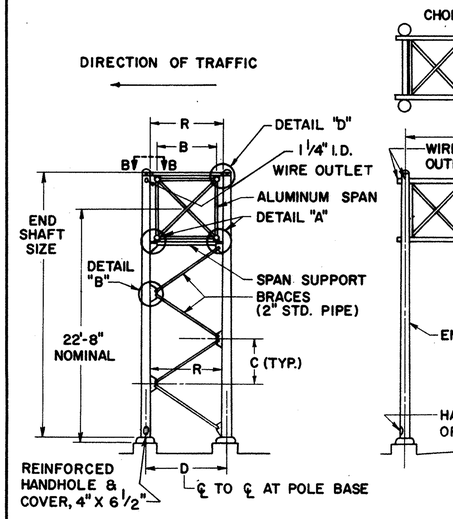

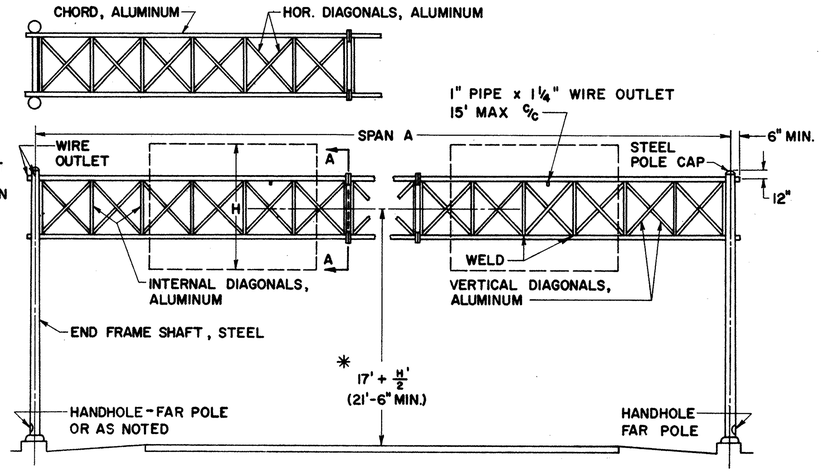

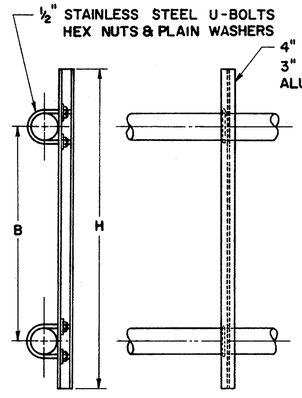

SIGN BRACKET

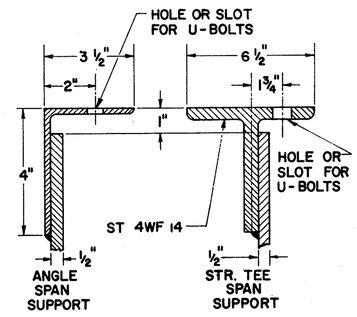

SECTION D-D

NOTES

MATERIALS

THE OVERHEAD SPAN TRUSS SHALL BE ALUMINUM AND THE END FRAMES SHALL BE STEEL.

SPAN TRUSS AND END FRAMES, INCLUDING HARDWARE, SHALL BE IN ACCORDANCE WITH SUPPLEMENTAL SPECIFICATION 816 UNLESS OTHERWISE NOTED.

STEEL POLE BASES AND GUSSETS SHALL CONFORM TO THE REQUIREMENTS OF ASTM SPECIFICATION A-373.

AFTER FABRICATION THE TAPERED POLES SHALL HAVE A MINIMUM YIELD STRENGTH OF 48,000 PSI.

FABRICATION

THE ENTIRE STEEL END FRAME SHALL BE HOT DIP GALVANIZED IN ACCORDANCE WITH SEC. M-7.4(d).

MAXIMUM LENGTH OF SPAN SECTIONS IS 30 FT.

ERECTION

USE A MINIMUM OF 1" CAMBER IN SPAN TRUSS MEMBER FOR A 50' SPAN; ADD 1/4" OF CAMBER FOR EACH 5' OF INCREASE IN SPAN OVER 50'.

PAYMENT

PAYMENT FOR THE GALVANIZED CONDUIT SHALL BE INCLUDED IN THE UNIT PRICE BID FOR OVERHEAD SIGN SUPPORTS.

SOILS

THE FOUNDATION DETAILS SHOWN ARE FOR AVERAGE SOIL CONDITIONS (MEDIUM CLAY, CEMENTED SAND AND GRAVEL, SANDY CLAY, OR STIFF CLAY).

FOR POOR SOIL CONDITIONS, INCREASE "D" MIN. BY: 50% IN DRY OR WET SAND, 60% IN SILTY CLAY, 100% IN SOFT CLAY, AND FROM 75% TO 150% IN WET SILT, DEPENDING ON QUICKSAND ACTION.

REINFORCING STEEL

COST OF REINFORCING STEEL SHALL BE INCLUDED IN THE UNIT PRICE FOR ITEM 816 CONCRETE FOR SIGN SUPPORT FOUNDATIONS.

BAR SIZE IS INDICATED IN THE BAR MARK. THE FIRST DIGIT WHERE THREE DIGITS ARE USED AND THE FIRST TWO DIGITS WHERE FOUR ARE USED, INDICATE THE BAR SIZE NUMBER.

*FOUNDATION ELEVATION

ELEVATION OF TOPS OF FOUNDATIONS SHALL BE BUILT UP SO THAT 17' CLEARANCE IS MAINTAINED OVER THE ENTIRE WIDTH OF THE PAVEMENT AND SHOULDERS.

DESIGN

THE DESIGN OF OVERHEAD SUPPORTS IS IN ACCORDANCE WITH A.A.S.H.O. SPECIFICATION FOR THE DESIGN AND CONSTRUCTION OF STRUCTURAL SUPPORTS FOR HIGHWAY SIGNS, ADOPTED JUNE 12, 1961.

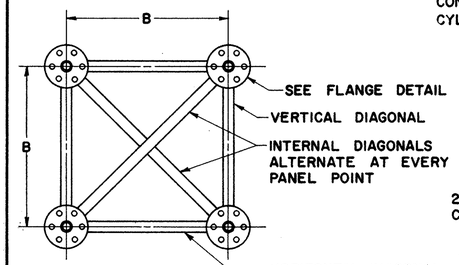

SECTION A-A

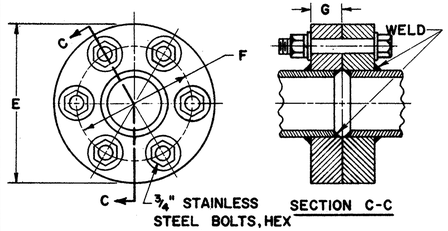

CAST FLANGE, B-26 ALLOY SG 70A-T7 (356-T7)

FLANGE DETAIL

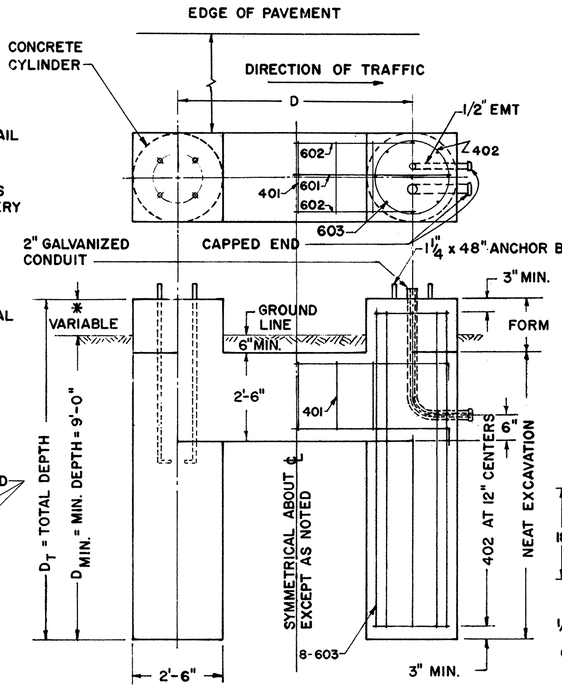

FOUNDATION DETAIL

(RIGHT HAND SHOWN - LEFT HAND OPPOSITE)

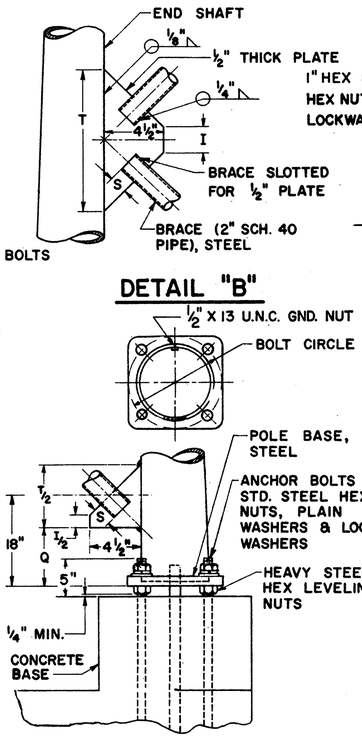

DETAIL "B"

POLE BASE DETAIL

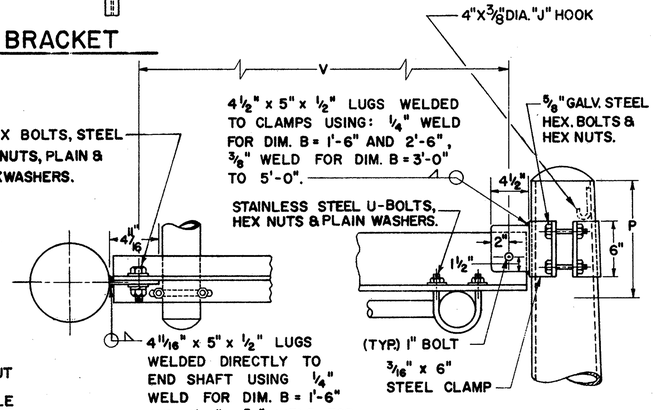

VIEW B-B

DETAIL "D"

UPPER SPAN SUPPORT (ALTERNATE METHODS)

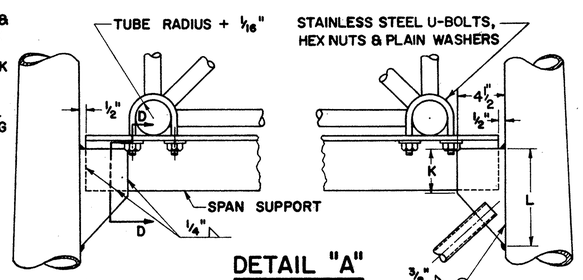

DETAIL "A"

LOWER SPAN SUPPORT

DESIGN NO.	SPAN A	B	C	D	E	END SHAFT	BRACE LENGTH	F	G	I	K	L	P	Q	R	S	T	U BOLTS	V	BOLT CIRCLE	SPAN SUPPORT SECTION D-D	CHORDS	HORIZONTAL AND INTERNAL DIAGONAL	VERTICAL DIAGONAL
1	50'Thru 55'	3'-0"	4'-11 3/4"	4'-5"	7"	8"x 4.5"x 25'-0" 3GA	5'-10 13/16"	5 1/2"	1 1/4"	3 1/2"	4 3/4"	8"	12"	6 5/8"	3'-9"	1 1/2"	10"	5/8"	3'-3 5/8"	11"	SPLIT TEE 3'-8"	3 1/2" x .188"	1.660"x .140"	1.660"x .140"
2	56'Thru 80'	3'-0"	4'-11 3/4"	4'-5"	9 1/4"	8"x 4.5"x 25'-0" 3GA	5'-10 13/16"	7 7/16"	1 3/8"	3 1/2"	4 3/4"	8"	12"	6 5/8"	3'-9"	1 1/2"	10"	5/8"	3'-3 5/8"	11"	SPLIT TEE 3'-8"	4 3/4" x .188"	1.900"x .145"	1.660"x .140"
3	81'Thru 90'	4'-0"	4'-10 1/4"	5'-7"	9 1/4"	8"x6.22"x 25'-6" 3GA	6'-7 1/8"	7 7/16"	1 3/8"	5/8"	4 3/8"	7 3/4"	12"	6 1/4"	4'-11"	1 1/2"	9 1/2"	5/8"	4'-5 5/8"	11"	SPLIT TEE 4'-10"	4 3/4" x .188"	1.900"x .145"	1.900"x .145"
4	91'Thru 105'	4'-0"	4'-10 1/4"	5'-7"	9 1/4"	8"x6.22"x 25'-6" 3GA	6'-7 1/8"	7 7/16"	1 3/8"	5/8"	4 3/8"	7 3/4"	12"	6 1/4"	4'-11"	1 1/2"	9 1/2"	5/8"	4'-5 5/8"	11"	SPLIT TEE 4'-10"	4 3/4" x .188"	2"x .188"	1.900"x .145"

REINFORCEMENT SCHEDULE			
MARK	NO.	LENGTH	TYPE
401	12"C/C	8'-6"	102
402	12"C/C	7'-6"	103
601	4	D+ 4'-0"	101
602	8	D+ 2'-0"	101
603	32	D_T - 6"	STR.

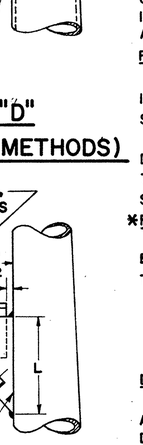

BUREAU OF TRAFFIC
OHIO DEPARTMENT OF HIGHWAYS

OVERHEAD SIGN SUPPORTS

816 No. 7.3

DATE 7-25-62 5-5-64

APPROVED Robert P. Bower
ENGINEER OF TRAFFIC

300 SQ. FT. SIGN AREA OVERHEAD SIGN SUPPORT, 816 NO. 7.3

FED. RD. DIVISION	STATE	PROJECT	
2	OHIO		

301
460

SUM-8-17.63

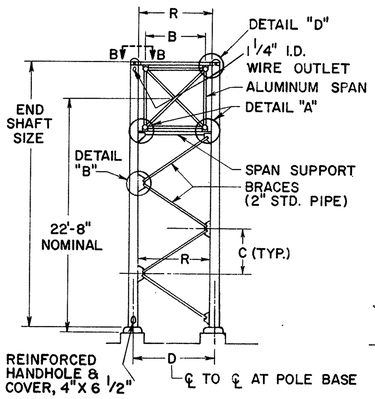

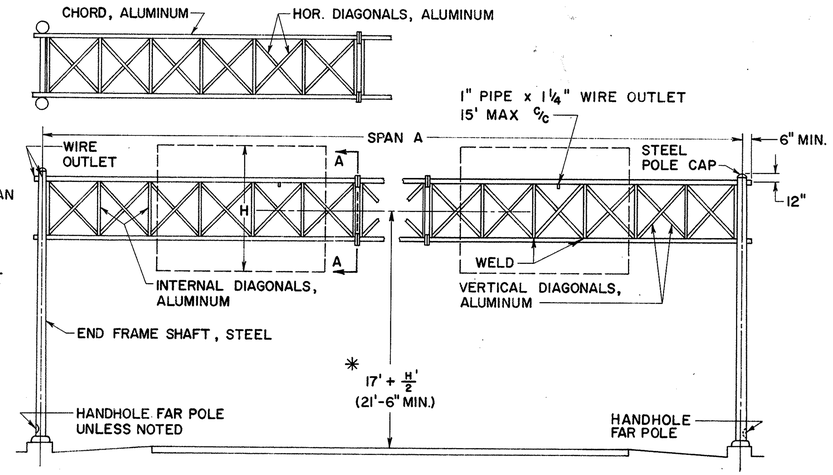

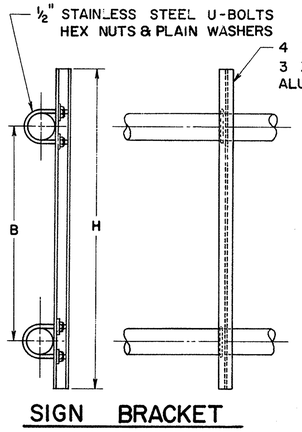

SIGN BRACKET

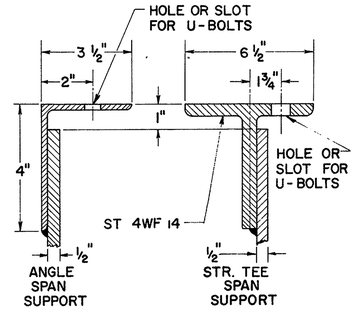

SECTION D-D

NOTES

MATERIALS

THE OVERHEAD SPAN TRUSS SHALL BE ALUMINUM AND THE END FRAMES SHALL BE STEEL.

SPAN TRUSS AND END FRAMES, INCLUDING HARDWARE, SHALL BE IN ACCORDANCE WITH SUPPLEMENTAL SPECIFICATION 816 UNLESS OTHERWISE NOTED.

STEEL POLE BASES AND GUSSETS SHALL CONFORM TO THE REQUIREMENTS OF ASTM SPECIFICATION A-373.

AFTER FABRICATION THE TAPERED POLES SHALL HAVE A MINIMUM YIELD STRENGTH OF 48,000 PSI.

FABRICATION

THE ENTIRE STEEL END FRAME SHALL BE HOT DIP GALVANIZED IN ACCORDANCE WITH SEC. 711.02.

MAXIMUM LENGTH OF SPAN SECTIONS IS 30 FT.

ERECTION

USE A MINIMUM OF 1" CAMBER IN SPAN TRUSS MEMBER FOR A 50' SPAN; ADD 1/4" OF CAMBER FOR EACH 5' OF INCREASE IN SPAN OVER 50'.

PAYMENT

PAYMENT FOR THE GALVANIZED CONDUIT SHALL BE INCLUDED IN THE UNIT PRICE BID FOR OVERHEAD SIGN SUPPORTS.

SOILS

THE FOUNDATION DETAILS SHOWN ARE FOR AVERAGE SOIL CONDITIONS (MEDIUM CLAY, CEMENTED SAND AND GRAVEL, SANDY CLAY, OR STIFF CLAY).

FOR POOR SOIL CONDITIONS, INCREASE "D" MIN. BY: 50% IN DRY OR WET SAND, 60% IN SILTY CLAY, 100% IN SOFT CLAY, AND FROM 75% TO 150% IN WET SILT, DEPENDING ON QUICKSAND ACTION.

REINFORCING STEEL

COST OF REINFORCING STEEL SHALL BE INCLUDED IN THE UNIT PRICE FOR ITEM 816 CONCRETE FOR SIGN SUPPORT FOUNDATIONS. BAR SIZE IS INDICATED IN THE BAR MARK. THE FIRST DIGIT WHERE THREE DIGITS ARE USED AND THE FIRST TWO DIGITS WHERE FOUR ARE USED, INDICATE THE BAR SIZE NUMBER.

*FOUNDATION ELEVATION

ELEVATION OF TOPS OF FOUNDATIONS SHALL BE BUILT UP SO THAT 17' CLEARANCE IS MAINTAINED OVER THE ENTIRE WIDTH OF THE PAVEMENT AND SHOULDERS.

DESIGN

THE DESIGN OF OVERHEAD SUPPORTS IS IN ACCORDANCE WITH A.A.S.H.O. SPECIFICATION FOR THE DESIGN AND CONSTRUCTION OF STRUCTURAL SUPPORTS FOR HIGHWAY SIGNS, ADOPTED JUNE 12, 1961.

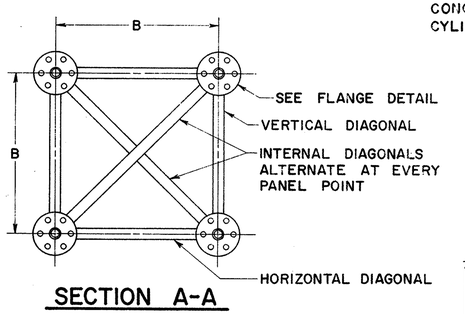

SECTION A-A

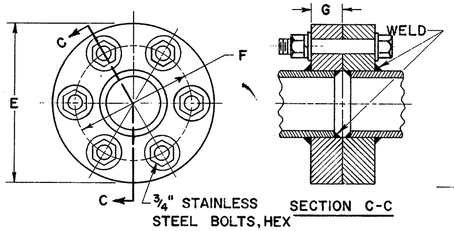

CAST FLANGE, B-26 ALLOY SG 70A-T7 (356-T7)

FLANGE DETAIL

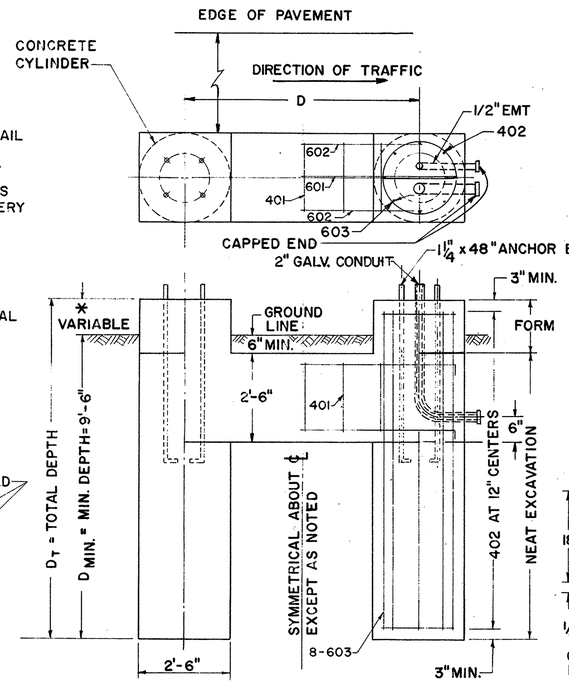

FOUNDATION DETAIL

(RIGHT HAND SHOWN — LEFT HAND OPPOSITE)

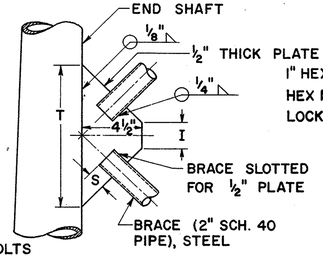

DETAIL "B"

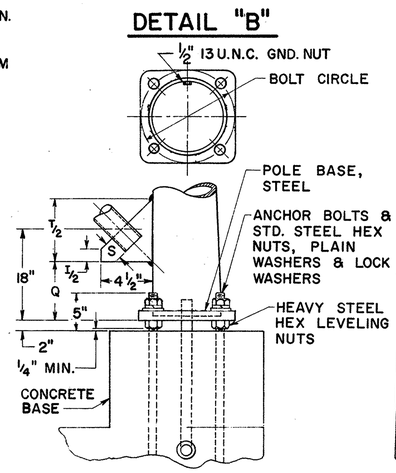

POLE BASE DETAIL

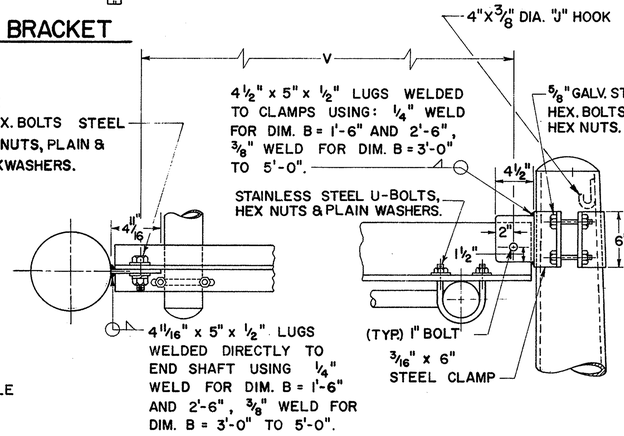

VIEW B-B

DETAIL "D"

UPPER SPAN SUPPORT (ALTERNATE METHODS)

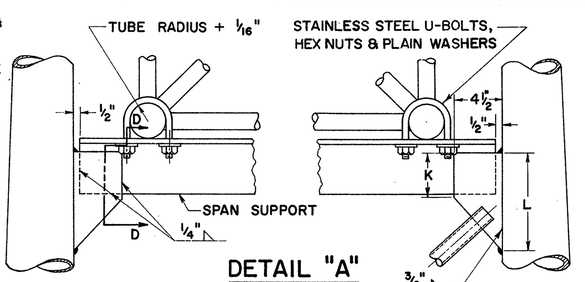

DETAIL "A"

LOWER SPAN SUPPORT

DESIGN NO.	SPAN A	B	C	D	E	END SHAFT	BRACE LENGTH	F	G	I	K	L	P	Q	R	S	T	U BOLTS	V	BOLT CIRCLE	SPAN SUPPORT SECTION D-D	CHORDS	HORIZONTAL AND INTERNAL DIAGONAL	VERTICAL DIAGONAL
1	50' thru 75'	3'-0"	4'-11 3/4"	4'-5"	9 1/4"	8"x4.5"x25'-0", 3 GA.	5'-10 13/16"	7 7/16"	1 3/8"	3 1/2"	4 3/4"	8"	12"	6 5/8"	3'-9"	1 1/2"	10"	5/8"	3'-3 5/8"	11"	SPLIT TEE 3'-8"	4 3/4" x .188"	1.900" x .145"	1.660" x .140"
2	76' thru 85'	4'-0"	4'-10 1/4"	5'-7"	9 1/4"	8"X6.22"x25'-6" 3 GA.	6'-7 1/8"	7 7/16"	1 3/8"	5/8"	4 3/8"	7 3/4"	12"	6 1/4"	4'-10"	1 1/2"	9 1/2"	5/8"	4'-4 5/8"	11"	SPLIT TEE 4'-10"	4 3/4" x .188"	2" x .188"	1.900" x .145"
3	86' thru 90'	4'-0"	4'-10 1/4"	5'-7"	11"	8"X6.22"x25'-6" 3 GA.	6'-7 1/8"	8 1/2"	1 1/2"	5/8"	4 3/8"	7 3/4"	12"	6 1/4"	4'-10"	1 1/2"	9 1/2"	5/8"	4'-4 5/8"	11"	SPLIT TEE 4'-10"	5 1/2" x .250"	2" x .188"	1.900" x .145"
4	91' thru 110'	5'-0"	4'-8 1/2"	6'-7"	11"	8"X6.18"x26'-0", 3 GA.	7'-3 1/4"	8 1/2"	1 1/2"	—	3 1/2"	7 3/4"	12"	7 1/4"	5'-10"	1 3/4"	11 1/4"	3/4"	5'-4 5/8"	11"	SPLIT TEE 5'-10"	5 1/2" x .250"	2 1/2" x .188"	2 1/2" x .188"

REINFORCEMENT SCHEDULE			
MARK	NO.	LENGTH	TYPE
401	12"C/C	8'-6"	102
402	12"C/C	7'-6"	103
601	4	D+ 4'-0"	101
602	8	D+ 2'-0"	101
603	32	D_T - 6"	STR.

BUREAU OF TRAFFIC
OHIO DEPARTMENT OF HIGHWAYS

OVERHEAD SIGN SUPPORTS

816 No. 7.4

DATE
5-2-62
7-25-62
5-6-64
6-20-66

APPROVED Robert E. Comer
ENGINEER OF TRAFFIC

400 SQ. FT. SIGN AREA

OVERHEAD SIGN SUPPORT, 816 NO. 7.4

FED. RD. DIVISION	STATE	PROJECT	
2	OHIO		

SUM-8-17.63

302
460

DIRECTION OF TRAFFIC

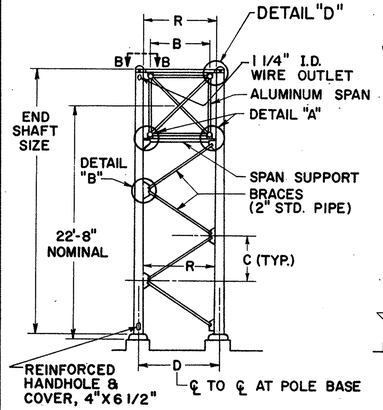

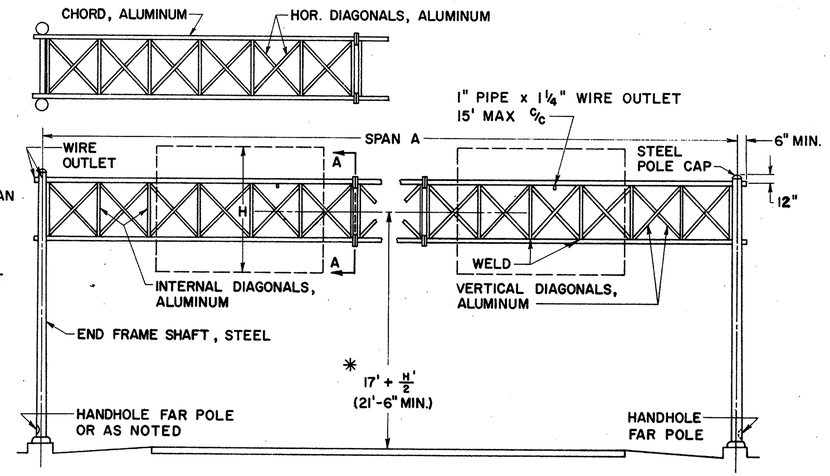

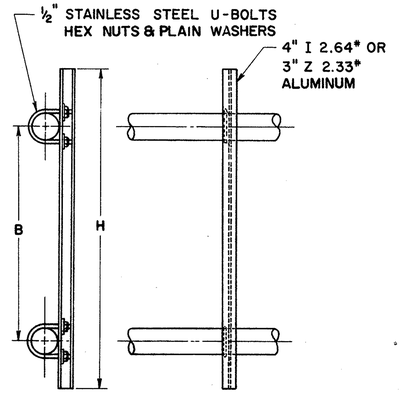

SIGN BRACKET

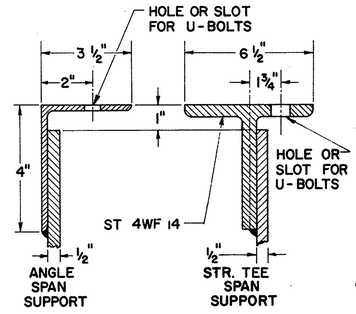

SECTION D-D

NOTES

MATERIALS

THE OVERHEAD SPAN TRUSS SHALL BE ALUMINUM AND THE END FRAMES SHALL BE STEEL.

SPAN TRUSS AND END FRAMES, INCLUDING HARDWARE, SHALL BE IN ACCORDANCE WITH SUPPLEMENTAL SPECIFICATION 816 UNLESS OTHERWISE NOTED.

STEEL POLE BASES AND GUSSETS SHALL CONFORM TO THE REQUIREMENTS OF ASTM SPECIFICATION A-373.

AFTER FABRICATION THE TAPERED POLES SHALL HAVE A MINIMUM YIELD STRENGTH OF 48,000 PSI.

FABRICATION

THE ENTIRE STEEL END FRAME SHALL BE HOT DIP GALVANIZED IN ACCORDANCE WITH SEC. 711.02

MAXIMUM LENGTH OF SPAN SECTIONS IS 30 FT.

ERECTION

USE A MINIMUM OF 1" CAMBER IN SPAN TRUSS MEMBER FOR A 50' SPAN; ADD 1/4" OF CAMBER FOR EACH 5' OF INCREASE IN SPAN OVER 50'.

PAYMENT

PAYMENT FOR THE GALVANIZED CONDUIT SHALL BE INCLUDED IN THE UNIT PRICE BID FOR OVERHEAD SIGN SUPPORTS.

SOILS

THE FOUNDATION DETAILS SHOWN ARE FOR AVERAGE SOIL CONDITIONS (MEDIUM CLAY, CEMENTED SAND AND GRAVEL, SANDY CLAY, OR STIFF CLAY).

FOR POOR SOIL CONDITIONS, INCREASE "D" MIN. BY: 50% IN DRY OR WET SAND, 60% IN SILTY CLAY, 100% IN SOFT CLAY, AND FROM 75% TO 150% IN WET SILT, DEPENDING ON QUICKSAND ACTION.

REINFORCING STEEL

COST OF REINFORCING STEEL SHALL BE INCLUDED IN THE UNIT PRICE FOR ITEM 816 CONCRETE FOR SIGN SUPPORT FOUNDATIONS.

BAR SIZE IS INDICATED IN THE BAR MARK. THE FIRST DIGIT WHERE THREE DIGITS ARE USED AND THE FIRST TWO DIGITS WHERE FOUR ARE USED, INDICATE THE BAR SIZE NUMBER.

*FOUNDATION ELEVATION

ELEVATION OF TOPS OF FOUNDATIONS SHALL BE BUILT UP SO THAT 17' CLEARANCE IS MAINTAINED OVER THE ENTIRE WIDTH OF PAVEMENT AND SHOULDERS.

DESIGN

THE DESIGN OF OVERHEAD SUPPORTS IS IN ACCORDANCE WITH A.A.S.H.O. SPECIFICATION FOR THE DESIGN AND CONSTRUCTION OF STRUCTURAL SUPPORTS FOR HIGHWAY SIGNS, ADOPTED JUNE 12, 1961.

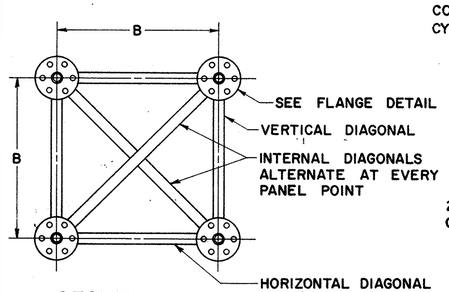

SECTION A-A

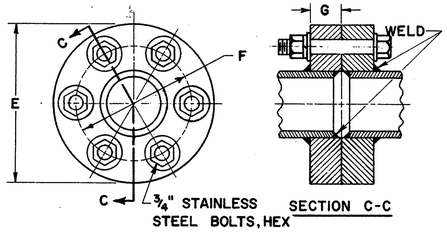

CAST FLANGE, B-26 ALLOY SG 70A-T7 (356-T7)

FLANGE DETAIL

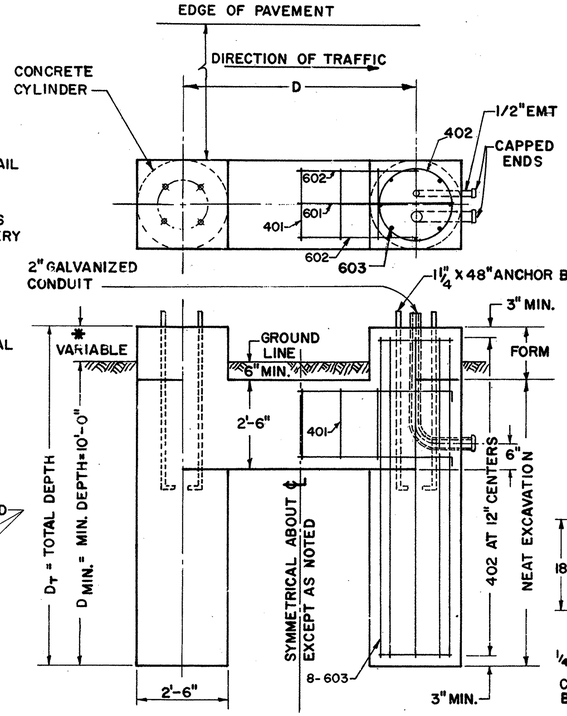

FOUNDATION DETAIL

(RIGHT HAND SHOWN — LEFT HAND OPPOSITE)

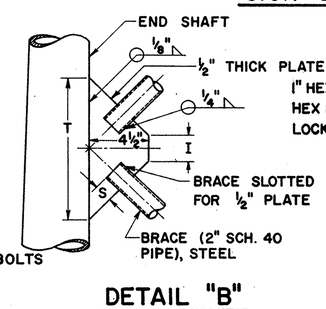

DETAIL "B"

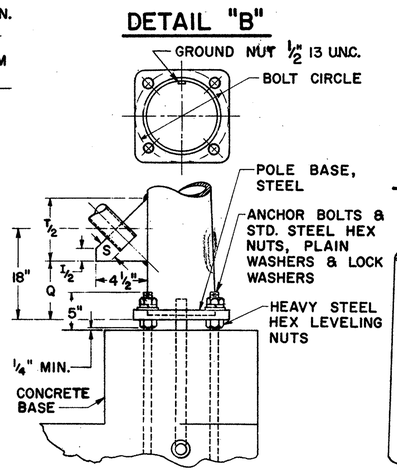

POLE BASE DETAIL

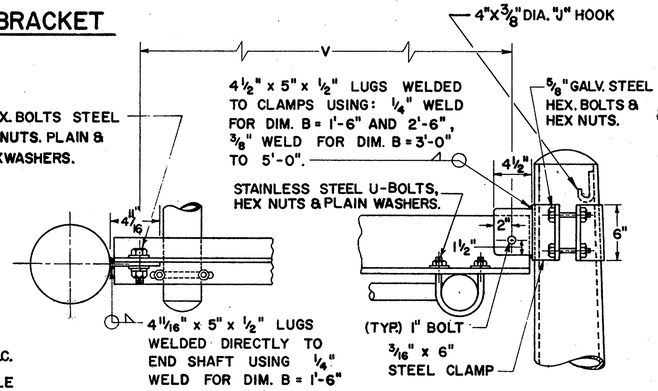

VIEW B-B

DETAIL "D"

UPPER SPAN SUPPORT (ALTERNATE METHODS)

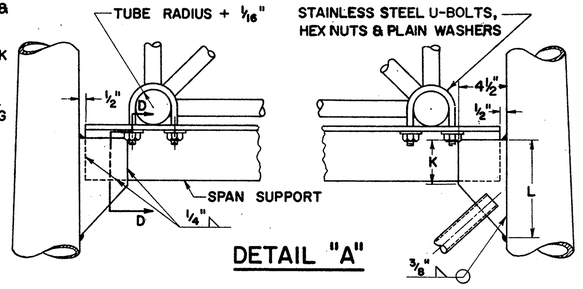

DETAIL "A"

LOWER SPAN SUPPORT

DESIGN NO.	SPAN A	B	C	D	E	END SHAFT	BRACE LENGTH	F	G	I	K	L	P	Q	R	S	T	U BOLTS	V	BOLT CIRCLE	SPAN SUPPORT SECTION D-D	CHORDS	HORIZONTAL AND INTERNAL DIAGONAL	VERTICAL DIAGONAL
1	50' THRU 70'	3'-0"	4'-11 3/4"	4'-5"	9 1/4"	8"X4.5"X25'-0",3GA	5'-10 3/16"	7 7/16"	1 3/8"	3 1/2"	4 3/4"	8"	12"	6 5/8"	3'-9"	1 1/2"	10"	5/8"	3'-3 5/8"	11"	SPLIT TEE 3'-8"	4 3/4"X.188"	1.900"X.145"	1.660"X.140"
2	71' THRU 80'	4'-0"	4'-10 1/4"	5'-7"	9 1/4"	8"X6.22"X25'-6",3GA	6'-7 1/8"	7 7/16"	1 3/8"	5/8"	4 3/8"	7 3/4"	12"	6 1/4"	4'-11"	1 1/2"	9 1/2"	5/8"	4'-5 5/8"	11"	SPLIT TEE 4'-10"	4 3/4"X.188"	2" X .188"	1.900"X.145"
3	81' THRU 86'	4'-0"	4'-10 1/4"	5'-7"	11"	8"X6.22"X25'-6",3GA	6'-7 1/8"	8 1/2"	1 1/2"	5/6"	4 3/8"	7 3/4"	12"	6 1/4"	4'-11"	1 1/2"	9 1/2"	5/8"	4'-5 5/8"	11"	SPLIT TEE 4'-10"	5 1/2"X.250"	2" X .188"	1.900"X.145"
4	86' THRU 110'	5'-0"	4'-8 1/2"	6'-7"	11"	8"X6.18"X26'-0",3GA	7'-3 1/4"	8 1/2"	1 1/2"	—	3 1/2"	7 3/4"	12"	7 1/4"	5'-11"	1 3/4"	11 1/4"	3/4"	5'-5 5/8"	11"	SPLIT TEE 5'-10"	5 1/2"X.250"	2 1/2"X.188"	2 1/2"X.188"

REINFORCEMENT SCHEDULE			
MARK	NO.	LENGTH	TYPE
401	12"C/C	8'-6"	102
402	12"C/C	7'-6"	103
601	4	D+4'-0"	101
602	8	D+2'-0"	101
603	32	Dt - 6"	STR.

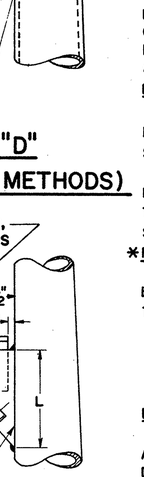

BUREAU OF TRAFFIC
OHIO DEPARTMENT OF HIGHWAYS

OVERHEAD SIGN SUPPORTS | 816 No. 7.5

DATE
5-2-62
7-25-62
4-29-64
6-20-66

APPROVED Robert E. Conner
ENGINEER OF TRAFFIC

500 SQ. FT. SIGN AREA — OVERHEAD SIGN SUPPORT, 816 NO. 7.5

FED. RD. DIVISION	STATE	PROJECT -	
2	OHIO		

SUM-8-17.63

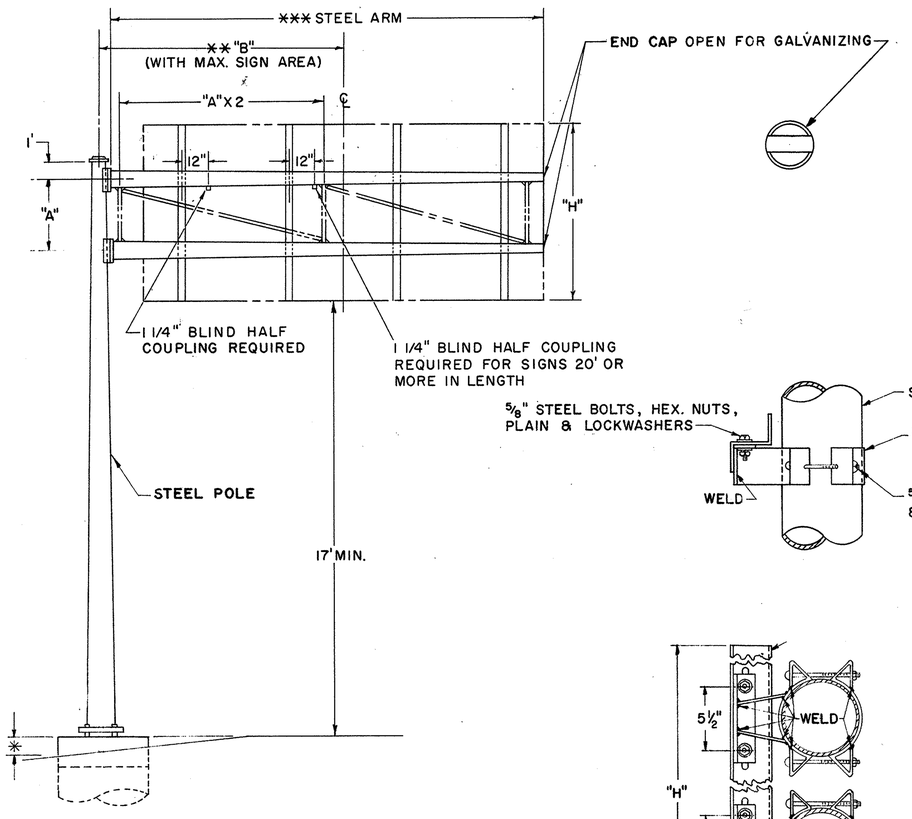

NOTE:
THE 12" DIMENSION SHOWN FOR BLIND HALF COUPLINGS MAY BE INCREASED OR DECREASED WHEN NECESSARY TO TO PREVENT INTERFERENCE WITH OTHER MEMBERS.

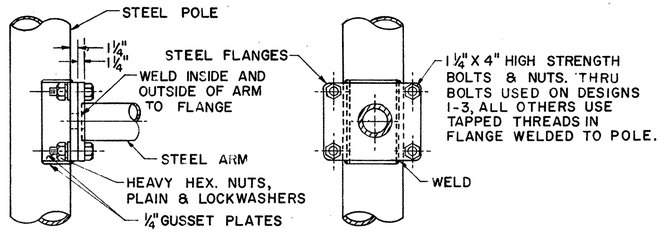

ARM ATTACHMENT

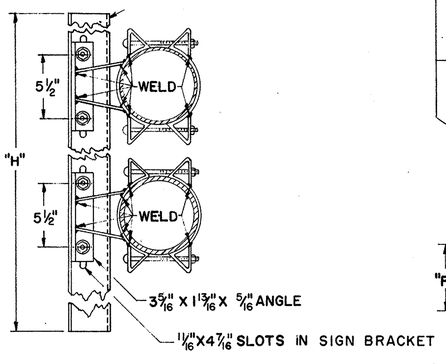

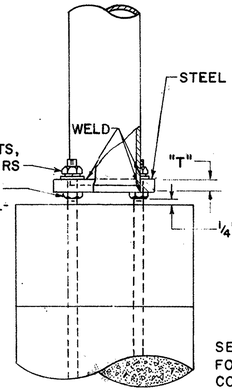

SEE DRAWING NO. ES-3A FOR PLACEMENT OF CONDUIT IN FOUNDATION

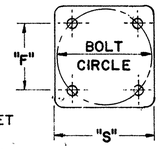

POLE BASE DETAIL

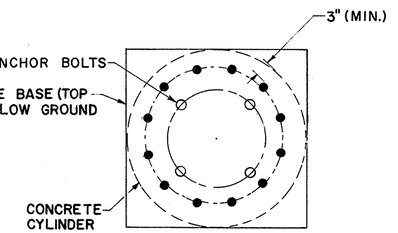

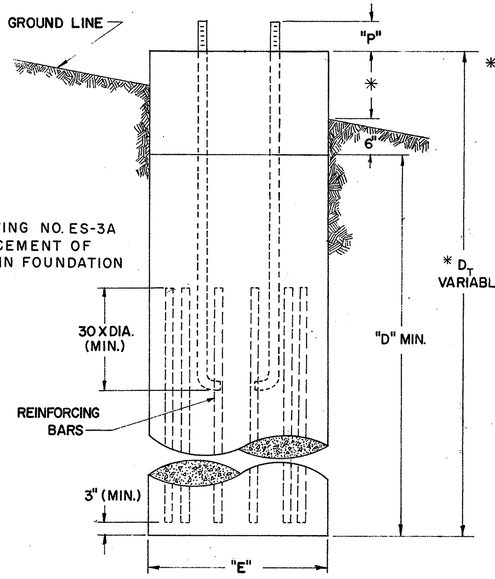

FOUNDATION DETAIL

SIGN ATTACHMENT DETAIL

DESIGN NO.	POLE SIZE	*** ARM SIZE	DIM A	DIM ** B	DIM "D" MIN.	DIM F	DIM F	DIM P	DIM S	DIM T	BOLT CIRCLE	ANCHOR BOLT SIZE	MAX SIGN AREA	REINF. BARS SIZE	REINF. BARS # REQ'D
1	3 Ga, 12" X 8.78" X 23'-0"	7Ga, 6.9" X 4.66" X 16'-0"	4'	12'	9'	3'-0"	11 5/16"	7 3/4"	17"	2"	16"	1 3/4" X 90"	80	3/4"	12
2	3 Ga, 12" X 8.78" X 23'-0"	7 Ga, 8" X 5.2" X 20'-0"	4'	16'	9'	3'-0"	11 5/16"	7 3/4"	17"	2"	16"	1 3/4" X 90"	80	3/4"	12
3	3 Ga, 15" X 11.5" X 25'-0"	7 Ga, 8.3" X 6.06" X 16'-0"	4'	12'	11'	3'-0"	15 1/2"	8 3/8"	23"	2"	22"	2" X 96"	120	1"	12
4	3 Ga, 16" X 12.5" X 25'-0"	3 Ga, 9.2" X 6.40" X 20'-0"	4'	16'	11'	3'-0"	16 5/16"	8 3/8"	24 1/2"	2"	23 1/2"	2" X 96"	120	1"	12
5	0 Ga, 18" X 14.36" X 26'-0"	7 Ga, 11" X 7.92" X 22'-0"	6'	14'	13'	3'-0"	18"	9 3/8"	26 1/2"	2 1/2"	25 1/2"	2 1/4" X 120"	180	1 1/8"	12
6	0 Ga, 18" X 14.36" X 26'-0"	7 Ga, 12.5" X 8.86" X 26'-0"	6'	18'	13'	3'-0"	18"	9 3/8"	26 1/2"	2 1/2"	25 1/2"	2 1/4" X 120"	180	1 1/8"	12
7	2 PLY 7 Ga, 18" X 14.36" X 26'-0"	7 Ga, 12.5" X 9.14" X 24'-0"	6'	14'	15'	3'-0"	18"	9 3/4"	26 1/2"	2 1/2"	25 1/2"	2 1/2" X 144"	240	1 1/4"	12
8	2 PLY 1/4", 18" X 14.36" X 26'-0"	3 Ga, 12.5" X 8.58" X 26'-0"	6'	18'	15'	3'-0"	18"	11 1/4"	26 1/2"	3"	25 1/2"	3" X 144"	240	1 1/4"	12

NOTES

FABRICATION - ALL PORTIONS OF THE SIGN SUPPORT, INCLUDING SIGN ATTACHMENTS, SHALL BE HOT DIP GALVANIZED IN ACCORDANCE WITH THE REQUIREMENTS OF A.S.T.M. DESIGNATIONS A-123 AND A-153. THE CONDUIT SHALL BE GALVANIZED IN ACCORDANCE WITH SEC. 625.13 AND SHALL BE INCLUDED IN THE UNIT PRICE BID FOR OVERHEAD SIGN SUPPORTS FOR PAYMENT.

* FOUNDATION - THE TOP ELEVATION OF FOUNDATIONS SHALL BE VARIED SO AS TO MAINTAIN A MINIMUM CLEARANCE OF 17' BETWEEN THE BOTTOM OF THE SIGN AND THE HIGHWAY CROWN.

** ERECTION - VALUES OF "B" MAY BE EXCEEDED PROVIDED THE PRODUCT OF ACTUAL SIGN AREA TIMES THE DISTANCE FROM ℄ OF POLE TO ℄ OF SIGN DOES NOT EXCEED THE MAX. SIGN AREA TIMES "B".

*** ARMS 20' LONG OR LONGER ARE TO BE TRUSS TYPE WITH 3" X 3" X 3/8" ANGLES WELDED TO GUSSET PLATES.

MATERIAL - STEEL POLE BASES, FLANGES, AND END CAPS SHALL CONFORM TO THE REQUIREMENTS OF ASTM SPECIFICATION A 30 GRADE B. HIGH STRENGTH STEEL BOLTS SHALL CONFORM TO ASTM SPECIFICATION A 193 GRADE B7 AFTER FABRICATION TAPERED POLES AND ARMS SHALL HAVE A MINIMUM YIELD STRENGTH OF 48,000 PSI.

SOILS - THE FOUNDATION DETAILS SHOWN ARE FOR AVERAGE SOIL CONDITIONS (MEDIUM CLAY, CEMENTED SAND AND GRAVEL, SANDY CLAY, OR STIFF CLAY). FOR POOR SOIL CONDITIONS, INCREASE "D" MIN. BY 50% IN DRY OR WET SAND, 60% IN SILTY CLAY, 100% IN SOFT CLAY, AND FROM 75% TO 150% IN WET SILT, DEPENDING ON QUICKSAND ACTION.

REINFORCING STEEL - REINFORCING STEEL AS SHOWN IN TABLE SHALL BE INSTALLED WHEN "D_T" EXCEEDS THE ANCHOR BOLT LENGTH BY MORE THAN 3 FT. THE COST AND PLACEMENT OF REINFORCING STEEL SHALL BE INCLUDED IN THE UNIT PRICE FOR ITEM 816 CONCRETE FOR SIGN SUPPORT FOUNDATIONS.

DESIGN

THE DESIGN OF OVERHEAD SUPPORTS IS IN ACCORDANCE WITH A.A.S.H.O. SPECIFICATIONS FOR THE DESIGN AND CONSTRUCTION OF STRUCTURAL SUPPORTS FOR HIGHWAY SIGNS, ADOPTED JUNE 12, 1961.

BUREAU OF TRAFFIC
OHIO DEPARTMENT OF HIGHWAYS

OVERHEAD SIGN SUPPORT	816 No. 12.24	DATE 8-18-61 4-17-62 4-18-67

APPROVED Robert E. Conner
ENGINEER OF TRAFFIC

FED. RD. DIVISION	STATE	PROJECT	
2	OHIO		

304
460

SUM-8-17.63

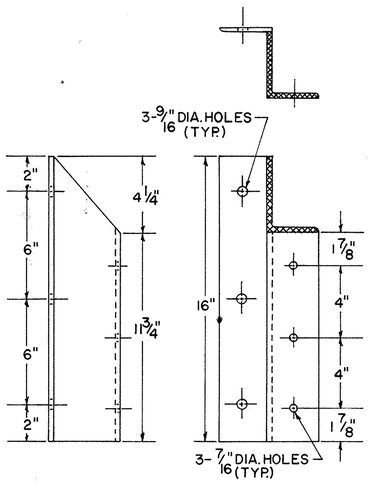

"Z" BAR-A

(4"x3 1/16"x 1/4" @ 2.85 LB.)

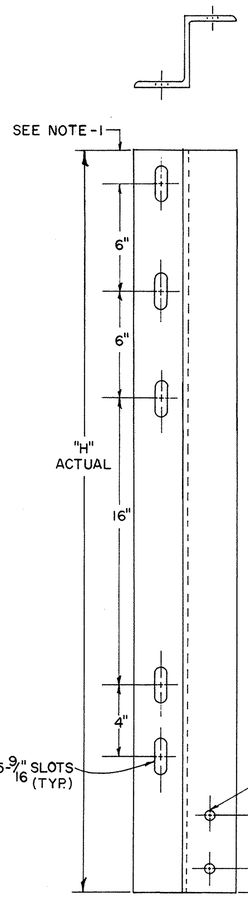

"Z" BAR-C

(4"x3 1/16"x 1/4" @ 2.85 LB.)

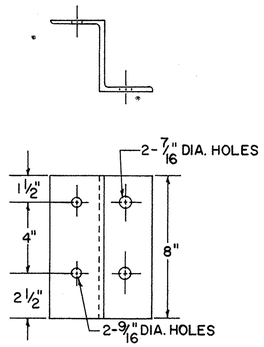

"Z" BAR-B

(4"x3 1/16"x 1/4" @ 2.85 LB.)

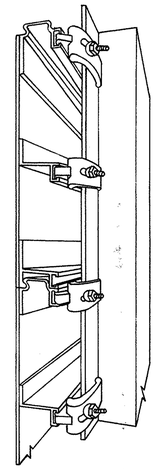

CLAMP ASSEMBLY

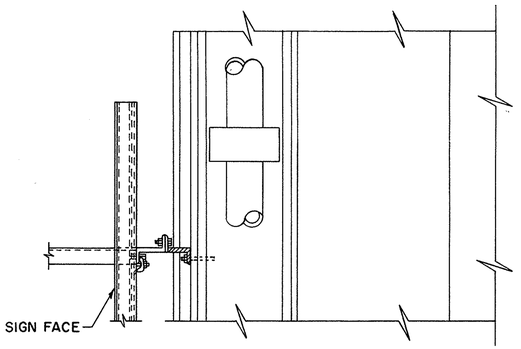

TOP VIEW

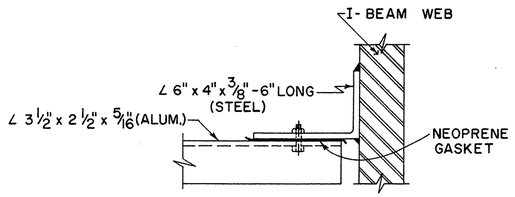

SECTION A-A

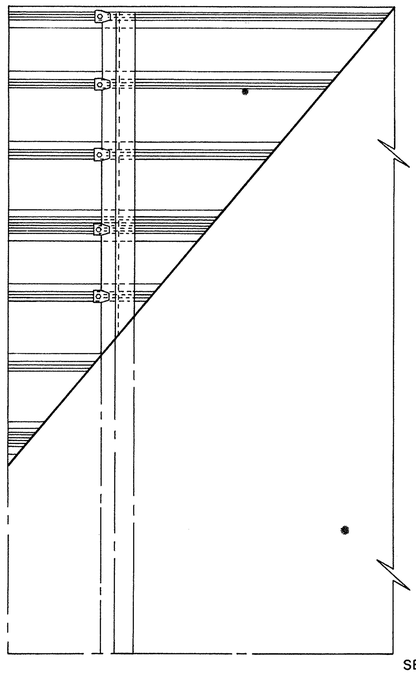

SECTION B-B

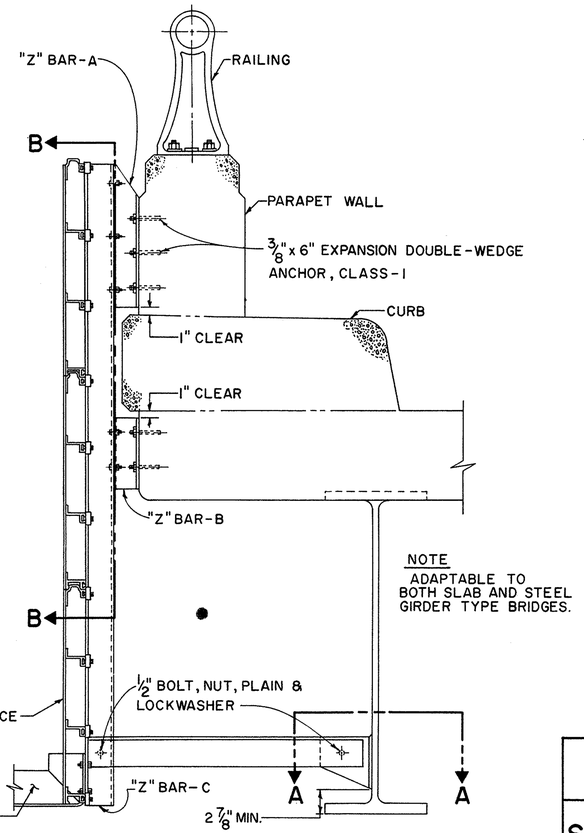

SIDE VIEW BRIDGE MOUNT

NOTES

ALL STRUCTURAL SHAPES TO BE ALUMINUM, EXCEPT AS NOTED.

EXPANSION BOLTS TO BE GALVANIZED STEEL.

(1.) THIS DIMENSION VARIES FOR SIGNS OVER 4'-6" ON SLAB TYPE BRIDGES AND SIGNS OVER 5'-6" ON STEEL GIRDER TYPE BRIDGES.

(2.) FOR ELECTRICAL DETAIL SEE DRAWINGS,
E1-1 PAGE _____.
E1-2 PAGE _____.

(3.) ALL MATERIALS SHALL CONFORM TO THE STATE OF OHIO, CONSTRUCTION & MATERIALS SPECIFICATIONS, AND THE SUPPLEMENTAL SPECIFICATIONS 816, OR AS OTHER-WISE SPECIFIED.

BUREAU OF TRAFFIC
OHIO DEPARTMENT OF HIGHWAYS

SPECIAL SIGN SUPPORT

DATE 1-24-68

SPL-816

APPROVED _____
ENGINEER OF TRAFFIC

FED. RD. DIVISION	STATE	PROJECT	
2	OHIO		

305/460

SUM-8-17.63

12" EXTRUSHEET PANEL

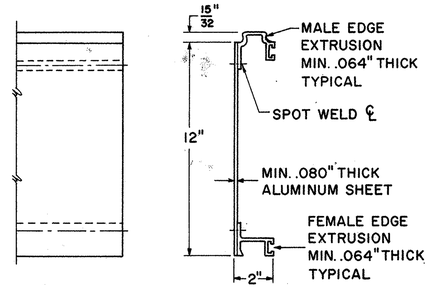

FRONT VIEW SIDE VIEW

18" EXTRUSHEET PANEL

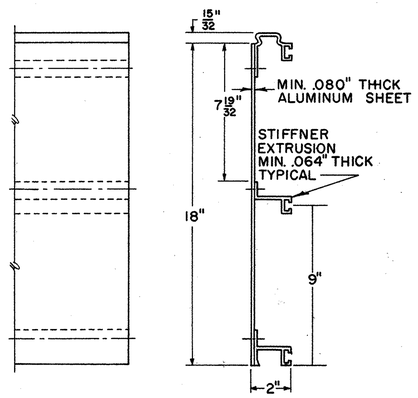

FRONT VIEW SIDE VIEW

24" EXTRUSHEET PANEL

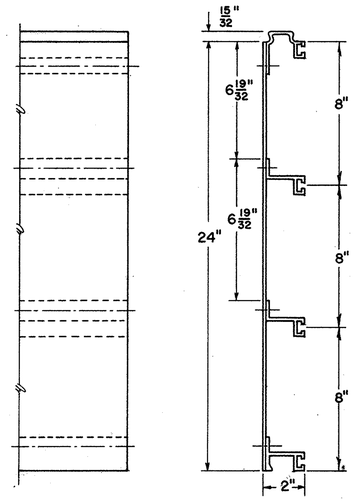

FRONT VIEW SIDE VIEW

NOTES:

EXTRUSHEET PANELS SHALL BE ALUMINUM; SPOT WELDING AND ALL MATERIALS SHALL CONFORM WITH SUPPLEMENTAL SPECIFICATION

COMBINATIONS OF 12", 18", AND 24" PANELS ARE USED TO ATTAIN REQUIRED SIGN HEIGHT.

INDIVIDUAL PANELS SHALL BE THE SAME LENGTH AS THE HORIZONTAL LENGTH OF SIGN WITH NO SPLICES.

PANELS SHALL BE INTERLOCKED AND ERECTED WITH THE MALE EXTRUSION LOCATED AT THE TOP EDGE OF THE SIGN.

EXTRUSHEET PANELS SHALL BE FASTENED TO EACH VERTICAL SUPPORT MEMBER WITH MOUNTING CLIPS; ALTERNATELY AT EACH HORIZONTAL EXTRUSION; BOTH SIDES AT EACH JOINT, AND ON BOTH SIDES AT TOP AND BOTTOM EDGE OF SIGN.

THE PANELS SHALL BE DESIGNED TO WITHSTAND A WIND LOAD OF 35 POUNDS PER SQUARE FOOT, IN ACCORDANCE WITH THE A.A.S.H.O. SPECIFICATION FOR DESIGN AND CONSTRUCTION OF STRUCTURAL SUPPORTS FOR HIGHWAY SIGNS.

THE MAXIMUM SIGN LENGTH FOR TWO SUPPORTS IS 19'-0".
THE MAXIMUM SIGN LENGTH FOR THREE SUPPORTS IS 29'-0".

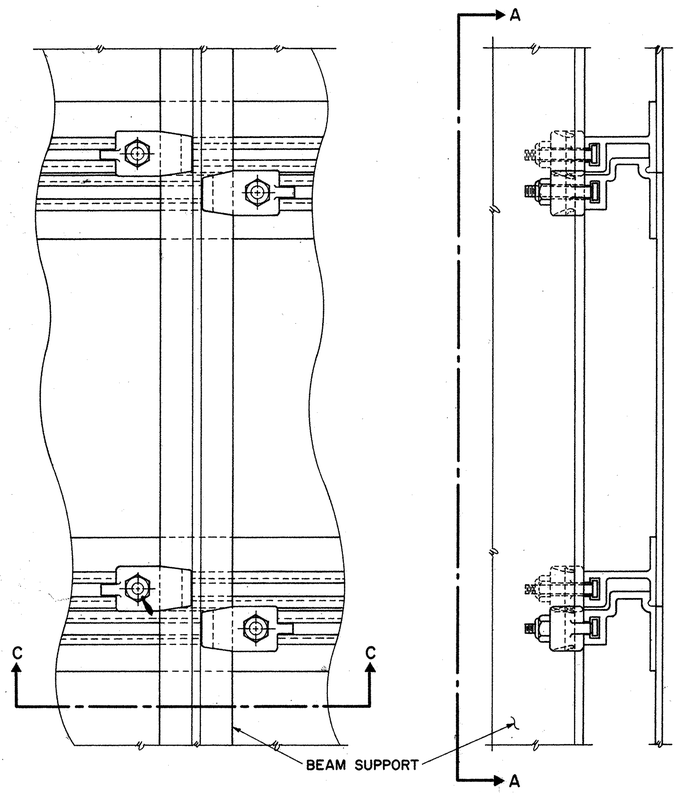

SECTION A-A SECTION B-B

GENERAL ARRANGEMENT

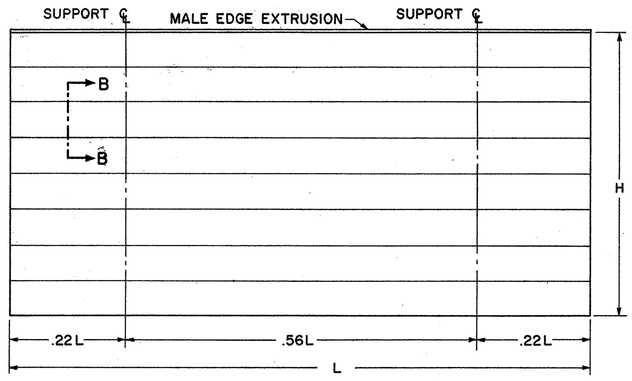

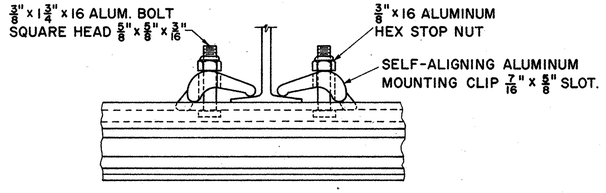

SECTION C-C

CLIP DETAIL

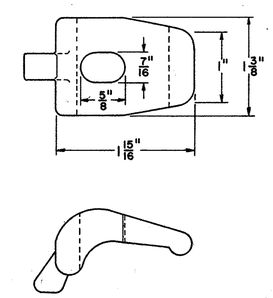

SPOT WELDS

PANEL SIZE	MAXIMUM SPOT WELD SPACING	
	CENTER TO CENTER	BETWN ROWS
12 INCH	4 INCH	10 INCH
18 & 24 INCH	4 INCH	8 INCH

BUREAU OF TRAFFIC
OHIO DEPARTMENT OF HIGHWAYS

ALUMINUM EXTRUSHEET PANEL SIGN

ECD 1

DATE 9-25-63 5-19-64 10-21-65

APPROVED Fred C. Tarbox
ENGINEER OF TRAFFIC

ALUMINUM EXTRUSHEET PANEL SIGN

FED. RD. DIVISION	STATE	PROJECT	
2	OHIO		

306
460

SUM-8-17.63

12" BOLTED-EXTRUSHEET PANEL

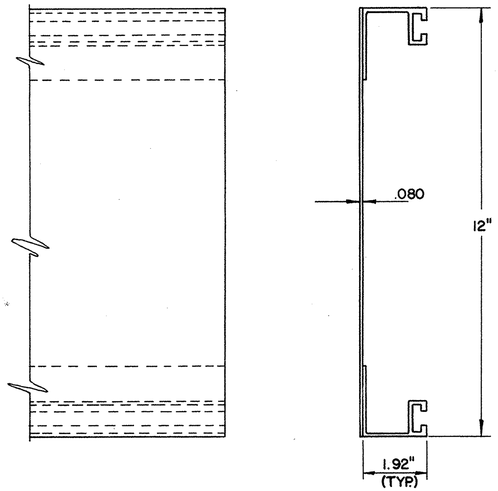

FRONT VIEW

SIDE VIEW

18" BOLTED-EXTRUSHEET PANEL

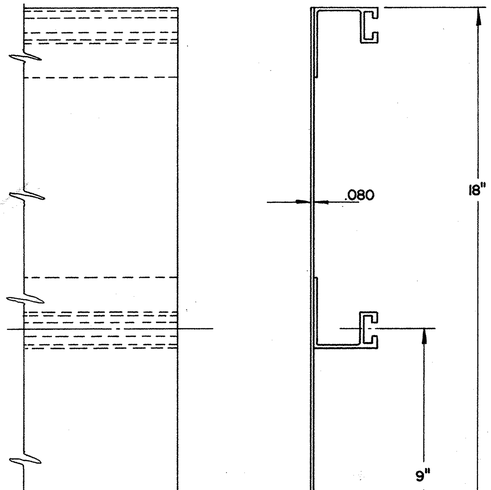

FRONT VIEW

SIDE VIEW

24" BOLTED-EXTRUSHEET PANEL

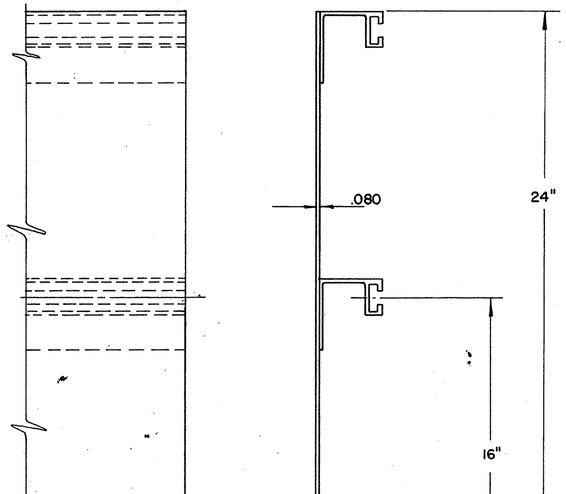

FRONT VIEW

SIDE VIEW

NOTES

EXTRU-SHEET PANELS SHALL BE ALUMINUM; SPOT WELDING, MATERIALS AND HARDWARE SHALL CONFORM WITH SPECIFICATION NO. 815.

COMBINATIONS OF 12", 18" AND 24" PANELS ARE TO BE USED TO ATTAIN REQUIRED SIGN HEIGHT.

INDIVIDUAL PANELS SHALL BE THE SAME LENGTH AS THE HORIZONTAL LENGTH OF SIGN, WITH NO SPLICES.

THE PANELS SHALL BE ERECTED HORIZONTALLY AND BOLTED ON 24" CENTERS.

THE PANELS SHALL BE FASTENED TO EACH VERTICAL SUPPORT MEMBER WITH MOUNTING CLIPS; ALTERNATELY AT EACH HORIZONTAL EXTRUSION; BOTH SIDES AT EACH JOINT, AND BOTH SIDES AT TOP AND BOTTOM EDGES OF SIGN.

THE PANELS SHALL BE DESIGNED IN ACCORDANCE WITH THE A.A.S.H.O SPECIFICATION FOR THE DESIGN AND CONSTRUCTION OF STRUCTURAL SUPPORTS FOR HIGHWAY SIGNS, BASE ON A WIND LOAD OF 35#/SQ.FT.

THE MAXIMUM SIGN LENGTH FOR TWO SUPPORTS IS 19'-0".
THE MAXIMUM SIGN LENGTH FOR THREE SUPPORTS IS 29'-0".

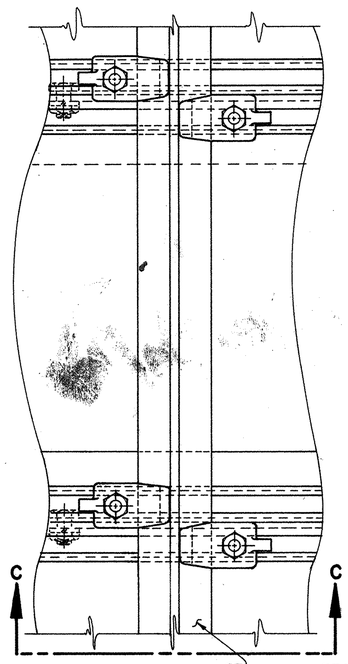

SECTION A-A

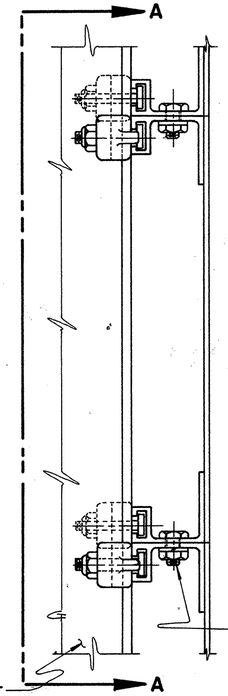

SECTION B-B

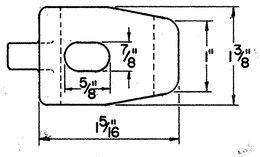

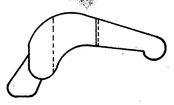

CLIP DETAIL

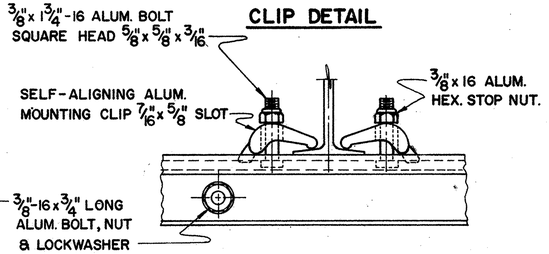

SECTION C-C

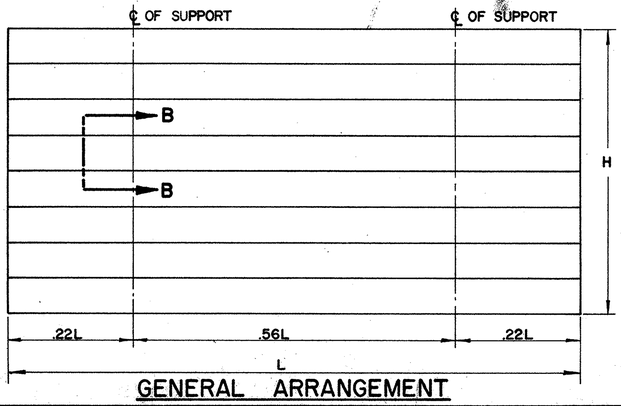

GENERAL ARRANGEMENT

SPOT WELDS

PANEL SIZE	MAXIMUM SPOT WELD SPACING	
	CENTER TO CENTER	BETWN ROWS
12 INCH	4 INCH	10 INCH
18 & 24 INCH	4 INCH	8 INCH

BUREAU OF TRAFFIC
OHIO DEPARTMENT OF HIGHWAYS

ALUMINUM BOLTED EXTRUSHEET PANEL SIGN

ECD 2

DATE 10-14-65

APPROVED Fred C. Talbot
ENGINEER OF TRAFFIC

ALUMINUM BOLTED-EXTRUSHEET PANEL SIGN

FED. RD. DIVISION	STATE	PROJECT	
2	OHIO		

307
460

SUM-8-17.63

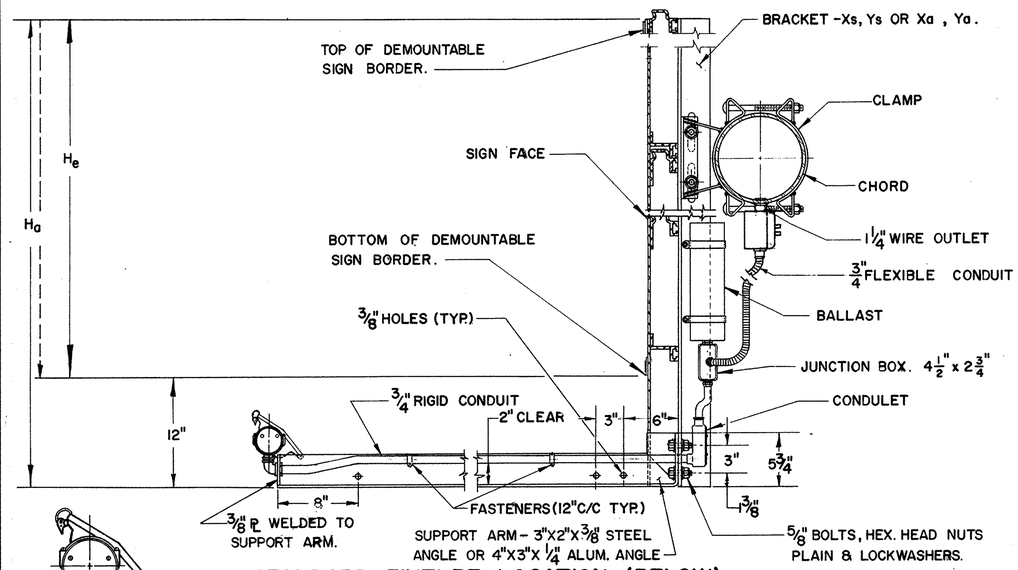

STANDARD FIXTURE LOCATION (BELOW)

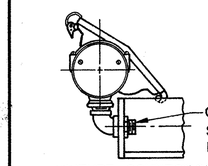

FIXTURE CONNECTION WHERE WIRING CONDUIT IS NOT NEEDED.

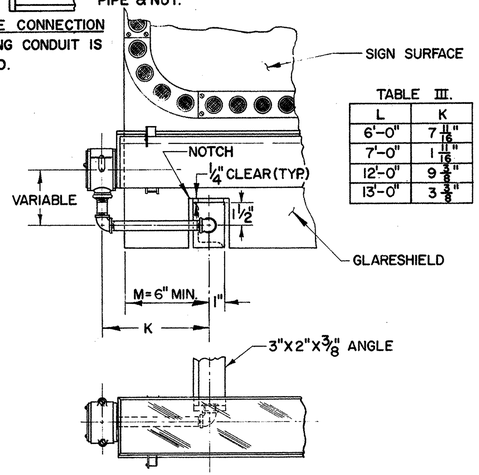

TABLE III.

L	K
6'-0"	7 11/16"
7'-0"	1 11/16"
12'-0"	9 5/8"
13'-0"	3 3/8"

ALTERNATE FIXTURE CONNECTIONS FOR SIGN 6', 7', 12' & 13' IN LENGTH.

DETAIL A.

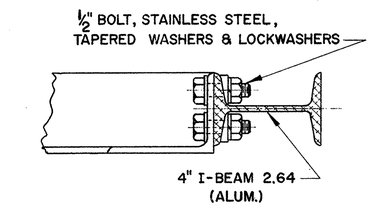

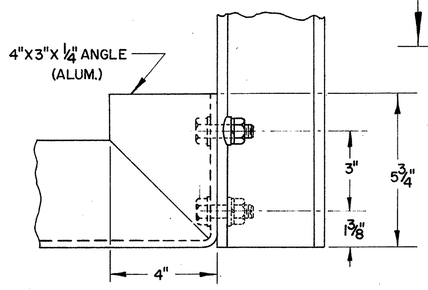

FOR SUPPORTS 7.2-7.6

DETAIL B.

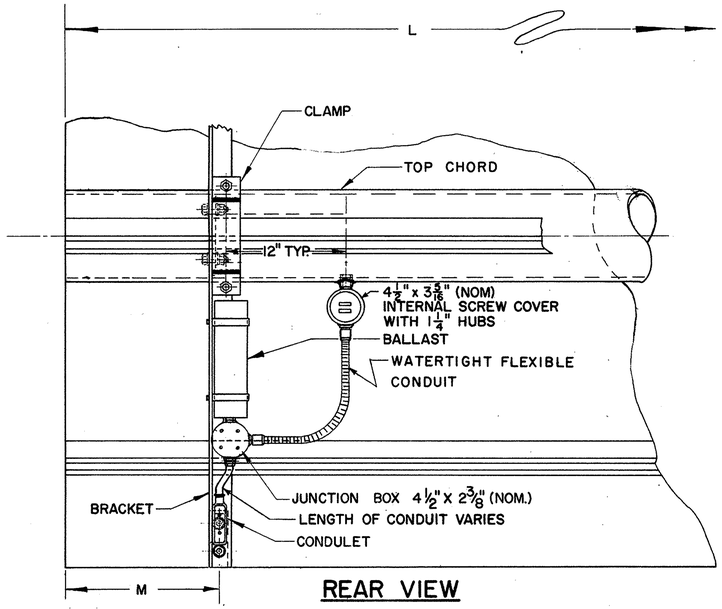

REAR VIEW

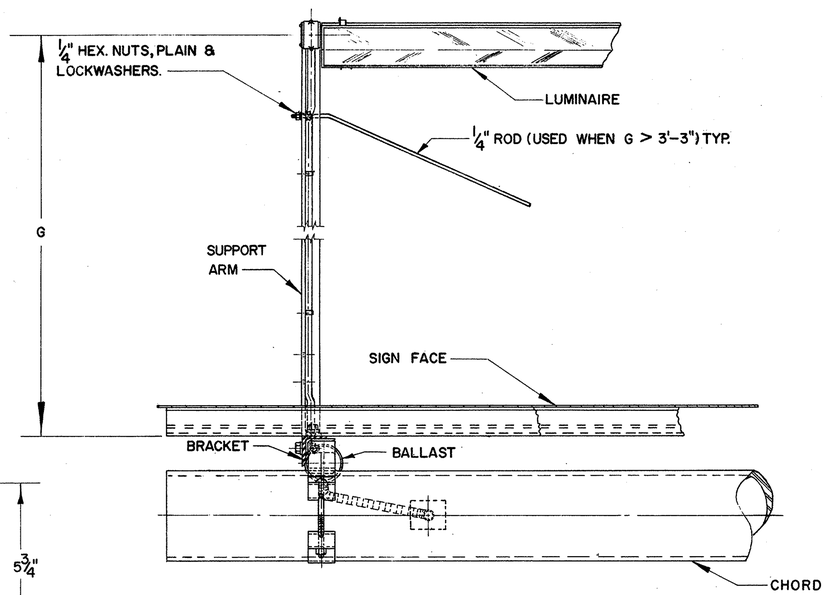

TOP VIEW

FABRICATION — ALL STRUCTURAL COMPONENTS SHOWN ON THIS SHEET SHALL CONFORM TO SUPPLEMENT SPECIFICATIONS 816.

MATERIALS — THE MATERIALS USED IN THE COMPONENTS SHOWN ON THIS SHEET SHALL BE IN CONFORMANCE WITH THE MATERIALS USED IN THE SIGN SUPPORT.

TABLE I.

"L" SIGN LENGTH A	"L" SIGN LENGTH B	NUMBER OF FIXTURES 75 3/8"	NUMBER OF FIXTURES 99 3/8"	"M" EDGE DISTANCE A LT.	"M" EDGE DISTANCE A RT.	"M" EDGE DISTANCE B LT.	"M" EDGE DISTANCE B RT.	NO. BALLAST
6'-0"	7'-0"	1		6"	6"	6"	6"	1
8'-0"	9'-0"	1		10 3/16"	10 1/4"	16 3/16"	16 1/4"	1
10'-0"	11'-0"		1	10 3/16"	10 1/4"	16 3/16"	16 1/4"	1
12'-0"	13'-0"	2		6"	6	6	6	1
14'-0"	15'-0"	2		8 5/16"	8 5/16"	14 5/16"	14 5/16"	1
16'-0"	17'-0"	1	1	8 5/16"	8 5/16"	14 5/16"	14 5/16"	1
18'-0"	19'-0"		2	8 5/16"	8 5/16"	14 5/16"	14 5/16"	1
20'-0"	21'-0"	3		7"	6 7/8"	13	12 7/8"	2
22'-0"	23'-0"	2	1	7"	6 7/8"	13	12 7/8"	2
24'-0"	25'-0"	1	2	7"	6 7/8"	13	12 7/8"	2
26'-0"	27'-0"		3	7"	6 7/8"	13	12 7/8"	2

Sn = Nominal Fixture Length, 72" & 96" respectively.
Sa = Actual Fixture Length, for mounting purposes, 75 3/8" and 99 3/8" respectively. (Slight variation for different manufacturers.)
M = Distance from edge of sign to ℄ of notch, min. 6". When the length of the sign minus 1'-0" is less than the sum of the actual fixture lengths, an offset "K" is used. For additional details see detail A and table III.

TABLE II

MAX. BRACKET SPACING FOR EXTERNALLY ILLUMINATED SIGNS

ACTUAL SIGN HEIGHT "Ha"	SUPPORT TYPES: 9.12, 11.08, 13.2, 7.2 — SINGLE TUBE DOUBLE TUBE LESS 36" C/C	9.24, 10.48, 12.24, 14.5, 15.8, 7.2 to 7.6 — DOUBLE TUBE C/C 36"-42"	C/C 48"-54"	C/C 60"-72"
	MAXIMUM BRACKET SPACING			
to 5'-0"	6'-4" with X 8'-4" with Y	8'-4" with X	8'-4" with X	8'-4" with X
5'-6" to 8'-0"	6'-4" with Y	4'-2" with X 6'-4" with Y	6'-4" with X 8'-4" with Y	8'-4" with X
8'-6" to 10'-0"	3'-2" with X 4'-2" with Y	6'-4" with Y	6'-4" with Y	8'-4" with Y
10'-6" to 12'-0"	———	4'-2" with Y	6'-4" with Y	6'-4" with Y
12'-6" to 14'-0"	———	3'-2" with Y	3'-2" with Y	4'-2" with Y

Ha = ACTUAL SIGN HEIGHT
He = EFFECTIVE SIGN HEIGHT
BRACKET SIZE: Xs = 3½" X 2½" X 5/16" — L @ 6.1 LB. STEEL; Ys = 4" X 3 1/16" X ¼" — Z @ 8.2 LB. STEEL } 9.12, 10.48, 11.08, 12.24, 14.5 & 15.8
Xa = 3" X 2 11/16" X ¼" — Z @ 2.33 LB. ALUM.; Ya = 4" X 2 2/32" X 3/16" — I @ 2.64 LB. ALUM. } 7.2 Thru 7.6

WHEN MAX. ALLOWABLE SPACING IS LESS THAN ACTUAL FIXTURE LENGTHS, Sa, ADDITIONAL STANDARD BRACKETS MUST BE FURNISHED, EQUAL IN HEIGHT TO "Ha".

SUPPORTS 7.2 THROUGH 7.6 SHALL HAVE AN ALUMINUM FIXTURE ARM, 4"X3"X¼" ANGLE. SEE DETAIL B. BOLTS AND ACCESSORIES SHALL BE STAINLESS STEEL.

BUREAU OF TRAFFIC
OHIO DEPARTMENT OF HIGHWAYS

STRUCTURAL DETAILS FOR EXTERNALLY ILLUMINATED SIGNS

EI-1

APPROVED Fred C Talbot
ENGINEER OF TRAFFIC

STRUCTURAL DETAILS FOR EXTERNALLY ILLUMINATED SIGNS

FED. RD. DIVISION	STATE	PROJECT	
2	OHIO		

308
460

SUM-8-17.63

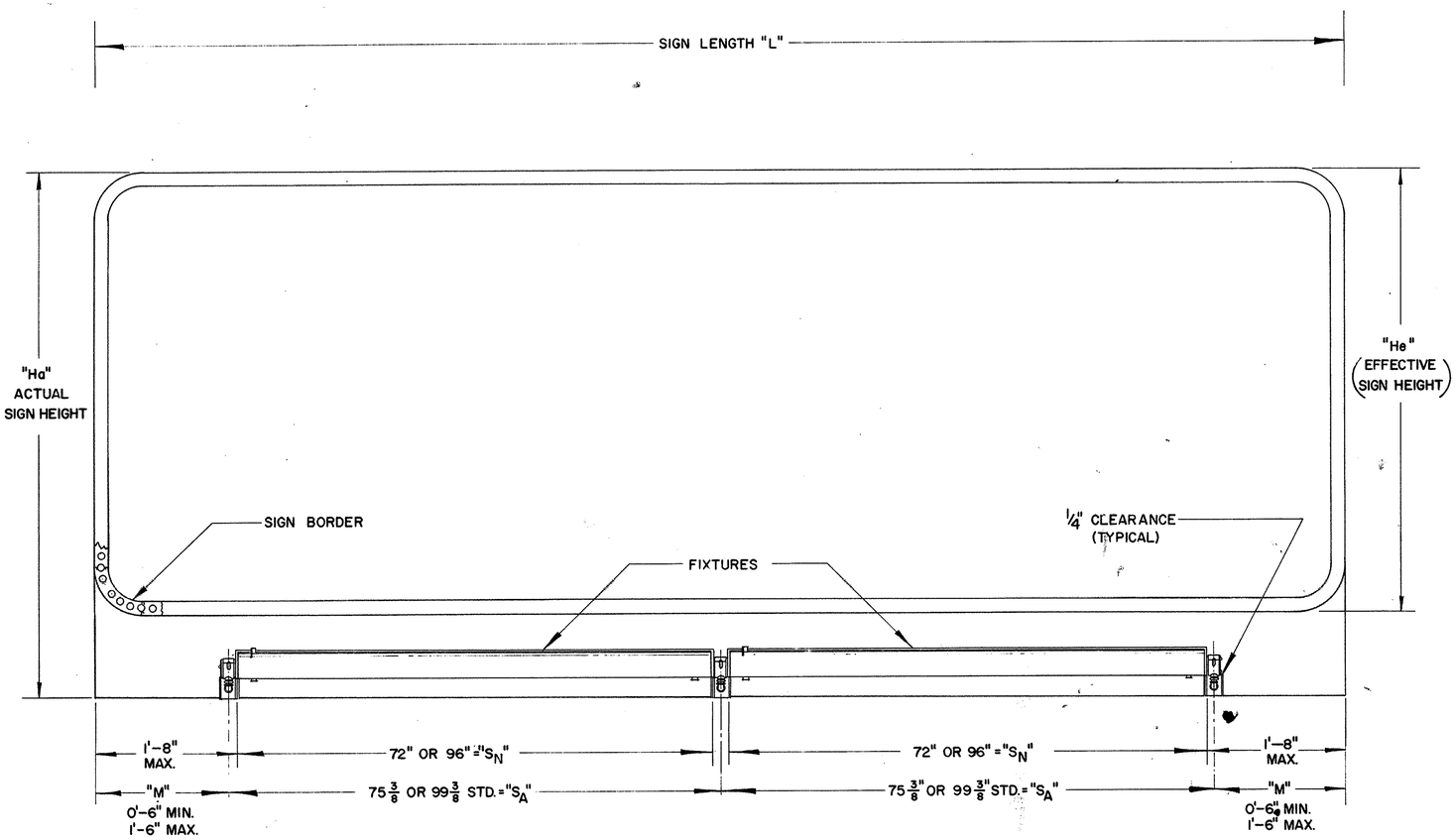

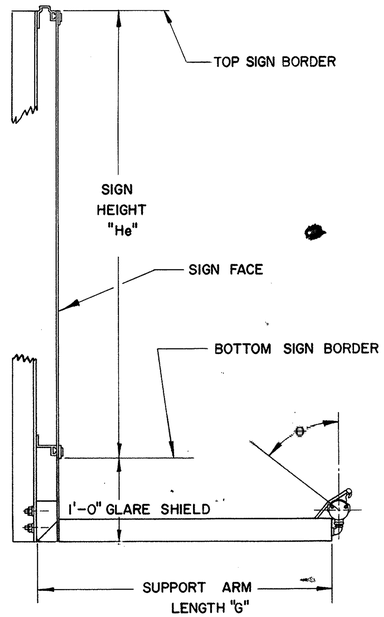

SIGN LIGHTING NOTES

SIGN ILLUMINATION

SIGN ILLUMINATION SHALL BE BY ATTACHED FLUORESCENT FIXTURES AS SHOWN ON ILLUMINATED SIGN DETAIL SHEETS.

LAMPS

LAMPS SHALL BE TYPE F72 OR F96-T12/CW/HO AS MANUFACTURED BY WESTINGHOUSE, GENERAL ELECTRIC OR APPROVED EQUAL FOR SIGNS TO A MAXIMUM HEIGHT OF 6'-6". LAMP TYPE SHALL BE F72 OR F96-T12/CW/SHO AS MANUFACTURED BY WESTINGHOUSE, F72 OR F96-PG17/CW AS MANUFACTURED BY GENERAL ELECTRIC OR APPROVED EQUAL FOR SIGNS THAT ARE 7'-0" OR GREATER IN HEIGHT.

LAMP FIXTURES

LIGHTING FIXTURES SHALL BE CONSTRUCTED OF CORROSION RESISTANT MATERIALS OR WITH HIGH QUALITY CORROSION RESISTANT FINISH. ALL FIXTURES SHALL BE SPECIFICALLY DESIGNED FOR OUTDOOR SIGN LIGHTING SERVICE. MAJOR COMPONENTS SHALL INCLUDE WEATHERPROOF CAST ALUMINUM MOUNTING HUBS DESIGNED TO SECURELY LOCK THE FIXTURES AT ANY ANGLE THROUGH 360 DEGREES. INDICATORS IN 10 DEGREE INCREMENTS SHALL BE STAMPED OR CAST INTO THE HUB TO FACILITATE PROPER AIMING OF THE FIXTURE. FINAL ADJUSTMENT OF FIXTURE SHALL BE DONE AT NIGHT UNDER THE PROJECT ENGINEER'S DIRECTION.

THE BODY DESIGN OF THE FIXTURE SHALL PROVIDE AN ASYMMETRIC SPECULAR ALZAK REFLECTOR TO GIVE A HIGH LEVEL OF UNIFORM ILLUMINATION AND SHALL PROVIDE A WIREWAY FROM END TO END. WHEN ADJACENT FIXTURES ARE WIRED TOGETHER THROUGH THE WIREWAY, WIRE BETWEEN FIXTURES SHALL BE ENTIRELY ENCLOSED.

EXTERIOR FINISH OF THE FIXTURE BODY SHALL BE INTERSTATE GREEN COLOR, HEAT RESISTANT BAKED ENAMEL AS #8950 UNIVERSAL PAINT AND VARNISH INC., OR MIDWESTERN COLOR WORKS, OR APPROVED EQUAL. REFLECTOR, LAMP AND SOCKETS SHALL BE PROTECTED BY A HINGED DOOR OF CLEAR ACRYLIC PLASTIC WITH ALUMINUM OR STAINLESS STEEL FRAME AND NEOPRENE GASKETING.

BALLASTS

BALLASTS FOR FIXTURES SHALL BE WEATHER-PROOF OUTDOOR TYPE FOR A 120 VOLT 60 CYCLE SYSTEM AND SHALL PROVIDE LAMP STARTING AT AN AMBIENT TEMPERATURE OF -20°F. BALLASTS SHALL BE MOUNTED ON SIGN BRACKET ONLY. WIRING SHALL BE ACCOMPLISHED IN SUCH A MANNER THAT THE SIGN MAY BE REMOVED WITHOUT DISTURBING THE ELECTRICAL WIRING.

EFFECTIVE SIGN HEIGHT "H"	SUPPORT ARM LENGTH "G"	APPROX. AIMING ANGLE θ
3'-0" to 5'-0"	2'-9"	25°
5'-0" to 6'-6"	3'-3"	25°
7'-0" to 10'-0"	4'-3"	17°
10'-6" to 13'-0"	5'-9"	23°

"L" SIGN LENGTH	NO. OF FIXTURES			He=3'-0" to 6'-6" LAMP=T12/cw/ho			He=7'-0" to 13'-0" LAMP=T12/cw/sho		
	72	96		BALLAST NO.	BALLAST TYPE	WATTAGE PER SIGN	BALLAST NO.	BALLAST TYPE	WATTAGE PER SIGN
6'-0" to 7'-0"	1			1	A	190	1	C	250
8'-0" to 9'-0"	1			1	A	190	1	C	250
10'-0" to 11'-0"		1		1	A	190	1	C	250
12'-0" to 13'-0"	2			1	B	250	1	D	425
14'-0" to 15'-0"	2			1	B	250	1	D	425
16'-0" to 17'-0"	1	1		1	B	250	1	D	425
18'-0" to 19'-0"		2		1	B	250	1	D	425
20'-0" to 21'-0"	3			2	A&B	440	2	C&D	675
22'-0" to 23'-0"	2	1		2	A&B	440	2	C&D	675
24'-0" to 25'-0"	1	2		2	A&B	440	2	C&D	675
26'-0" to 27'-0"		3		2	A&B	440	2	C&D	675

BALLASTS

TYPE	MANUFACTURERS G.E.	MANUFACTURERS JEFFERSON	WATTAGE
A	GG 3583	257-321	190
B	GG 3535	257-331	250
C	GG 3585	257-361	250
D	GG 3588	257-371	425

BALLASTS SHALL BE GENERAL ELECTRIC, JEFFERSON AS SPECIFIED ABOVE OR EQUAL.

TRANSFORMERS

TYPE	MANUFACTURERS G.E.	MANUFACTURERS JEFFERSON	OUTPUT K.V.A.	SWITCH TRANSFORMER ENCLOSURE
I	9T51Y7	220-241	.25	Y
II	9T51Y8	220-251	.50	Y
III	9T51Y9	220-261	.75	Y
IV	9T51Y10	220-071-100	1.00	Z
V	9T51Y11	220-081-100	1.50	Z
VI	9T51Y12	220-091-100	2.00	Z
VII	9T51Y13	221-102	3.00	Z

BUREAU OF TRAFFIC
OHIO DEPARTMENT OF HIGHWAYS

ELECTRICAL DETAILS FOR EXTERNALLY ILLUMINATED SIGNS

EI-2

DATE
10-31-63
5-6-64
10-29-64
03-29-67

APPROVED Fred O Talbot
ENGINEER OF TRAFFIC

FED. RD. DIVISION	STATE	PROJECT	
2	OHIO		

SUM-8-17.63

309
460

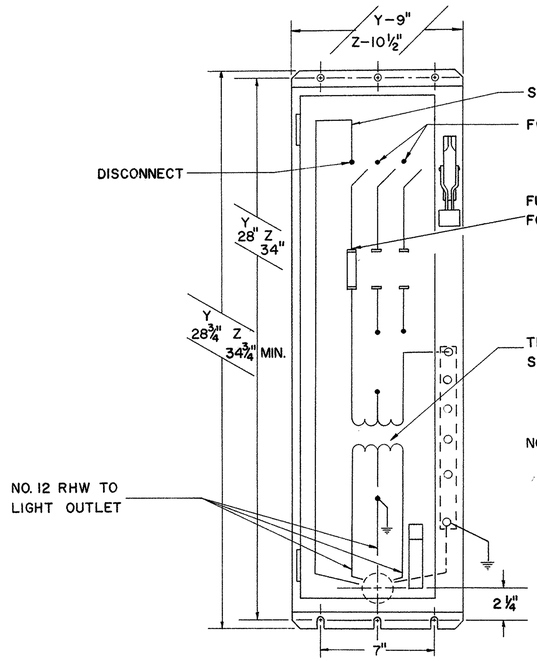

TYPICAL ENCLOSURE DETAIL

480 VOLT SIGN LIGHTING SERVICE

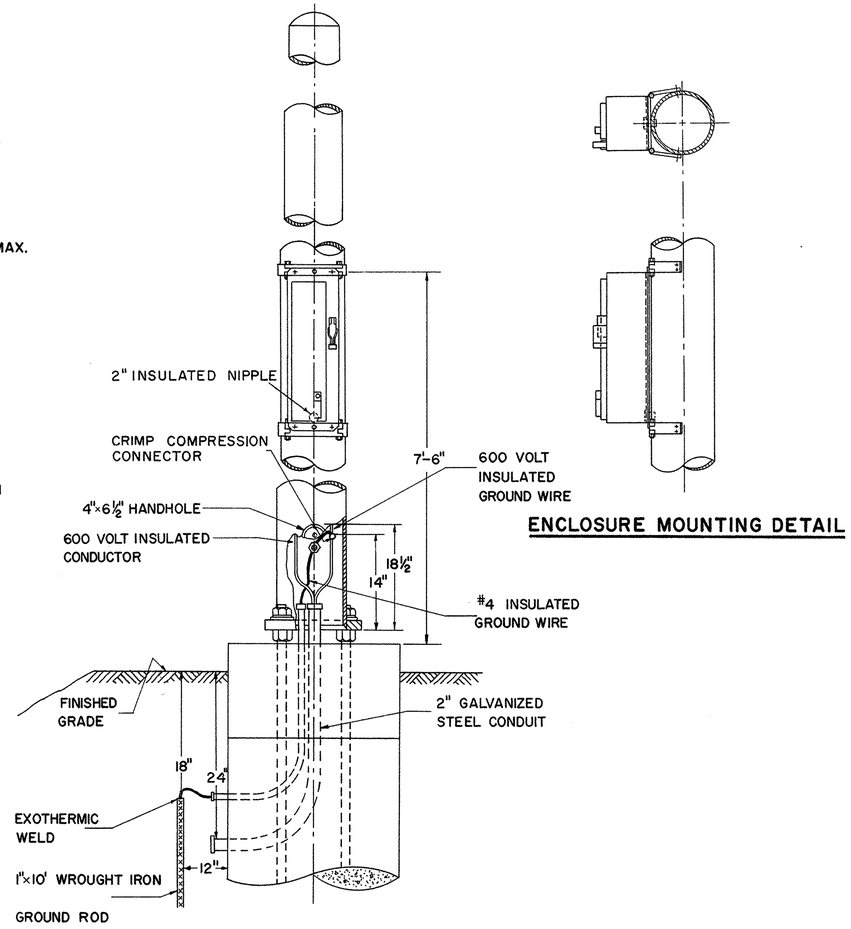

SIGN SUPPORT DETAIL FOR ILLUMINATED SIGNS

ENCLOSURE MOUNTING DETAIL

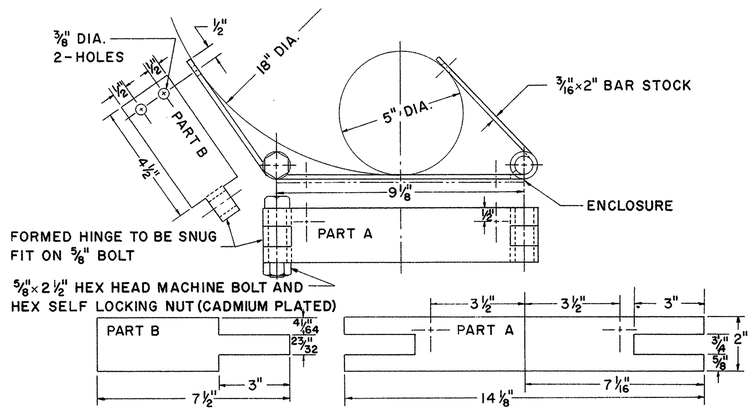

ENCLOSURE MOUNTING BRACKET

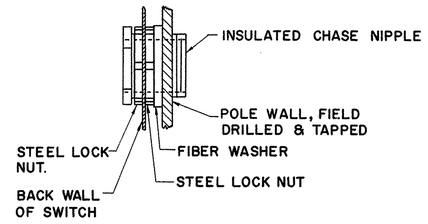

INSULATED CHASE NIPPLE ASSEMBLY

AS MANUFACTURED BY THOMAS BETTS, APPELTON, STEEL CITY OR EQUAL

NOTES

GENERAL

DETAILS OF THIS SHEET SHALL APPLY TO EACH OVERHEAD SIGN STRUCTURE TO SUPPORT EXTERNALLY ILLUMINATED SIGNS.

SERVICE

ELECTRIC SERVICE SHALL ENTER THROUGH A 2" GALVANIZED RIGID STEEL CONDUIT INSTALLED IN STRUCTURE FOUNDATION AS PER DETAIL. SIGN SERVICE OR CIRCUITRY SHALL BE CONTROLLED AS REQUIRED BY THE SYSTEM DESIGN AT THE PRIMARY SOURCE.

SERVICE CONDUCTORS SHALL BE THE SIZE AND TYPE AS SPECIFIED.

COMBINATION SWITCH AND TRANSFORMER

(TYPE Y OR Z ENCLOSURE REQUIRED AS PER SCHEDULE ON THIS SHEET)

THIS COMBINATION SHALL BE A 30 OR 60 AMPERE 600 VOLT SWITCH WITH A .25 TO 3.0 KVA TRANSFORMER. THE COMBINATION AND ENCLOSURE SHALL BE AS SQUARE D CLASS 9421, COLUMBUS ELECTRIC WORKS CLASS 101, PANALS INCORPORATED–CLASS 9400, OR APPROVED EQUAL.

TRANSFORMER

THE TRANSFORMER SHALL BE DRY TYPE SINGLE PHASE 240/480 VOLT PRIMARY 120/240 VOLT SECONDARY, THE TYPE AND CAPACITY AS SPECIFIED IN DETAILED SCHEDULE ON THIS SHEET.

ENCLOSURE

THE ENCLOSURE SHALL BE NEMA #4 WATER TIGHT .063 GAGE STAINLESS STEEL ASTA 302–303. A DISCONNECT HANDLE SHALL BE FLANGE MOUNTED AND CAPABLE OF BEING LOCKED IN EITHER POSITION. THE ENCLOSURE SHALL BE EQUIPPED WITH A DOOR LOCKING MECHANISM WITH A DEFEATER THAT NECESSITATES TWO HANDS TO OPERATE MECHANISM WITH THE SWITCH IN OFF POSITION. SPACE FOR A 2" INSULATED CHASE NIPPLE SHALL BE PROVIDED APPROXIMATELY 2 ¼" ABOVE THE CENTER LINE OF THE LOWER MOUNTING SLOT. THIS ENCLOSURE AND STRUCTURE SHALL BE FIELD DRILLED AND TAPPED FOR THE REQUIRED NIPPLE AS SHOWN ON THE DETAIL ON THIS SHEET.

THIS ENCLOSURE SHALL BE FLANGE MOUNTED ON BRACKETS WITH 5/16–18×¾" HEX HEAD CADMIUM PLATED MACHINE BOLTS. ENCLOSURES SHALL BE TYPE Y OR Z AS SPECIFIED AND DIMENSIONED ON THIS SHEET.

ENCLOSURE MOUNTING BRACKET

THE ENCLOSURE MOUNTING BRACKET SHALL BE FABRICATED THEN GALVANIZED BEFORE ASSEMBLY. THE BRACKET SHALL BE FIELD MOUNTED WITH 5/16 HEX HEAD SELF TAPPING CADMIUM PLATED SCREWS. THE SIGN SUPPORT SHALL BE FIELD DRILLED, AS PER DETAIL.

WIRE AND CABLE

ALL WIRE AND CABLE UP TO AND INCLUDING #4 SHALL COMPLY WITH FAA TYPE A SPECIFICATIONS. #2 OR LARGER WIRE OR CABLE SHALL BE G.E. 58006 OR ANACONDA AP–10711, OR EQUAL. ALL WIRE AND CABLE SHALL BE 600 VOLT.

GROUNDING

EACH SIGN SUPPORT OR STRUCTURE SHALL BE GROUNDED WITH A #4 RUBBER INSULATION AND NEOPRENE JACKETED CONDUCTOR. THE GROUNDING CONDUCTOR SHALL BE CONNECTED TO THE SWITCH THEN TO THE COMPRESSION CONNECTOR IN THE SIGN SUPPORT THEN TO A 1"×10' SOLID WROUGHT IRON GROUND ROD. GROUND CONDUCTOR SHALL BE EXOTHERMICALLY WELDED TO GROUND ROD AND THEN TAPED WITH PLASTIC ELECTRICAL TAPE AT EACH EXPOSED PORTION OF CONDUCTOR. THE WELDED CONNECTION AND TAPED PORTION SHALL BE PAINTED 2 COATS OF INSULATING ENAMEL.

TRANSFORMERS

TYPE	MANUFACTURERS G.E.	MANUFACTURERS JEFFERSON	OUTPUT K.V.A.	SWITCH TRANSFORMER ENCLOSURE
I	9T51Y7	220–241	.25	Y
II	9T51Y8	220–251	.50	Y
III	9T51Y9	220–261	.75	Y
IV	9T51Y10	220–071–100	1.00	Z
V	9T51Y11	220–081–100	1.50	Z
VI	9T51Y12	220–091–100	2.00	Z
VII	9T51Y13	221–102	3.00	Z

BUREAU OF TRAFFIC
OHIO DEPARTMENT OF HIGHWAYS

ELECTRICAL SIGN SERVICE DETAILS 480 VOLT SYSTEM

ES-3A

DATE 6-18-64 9-15

APPROVED _____
ENGINEER OF TRAFFIC

FED. RD. DIVISION	STATE	PROJECT	
2	OHIO		

310
460

SUM - 8 - 17.63

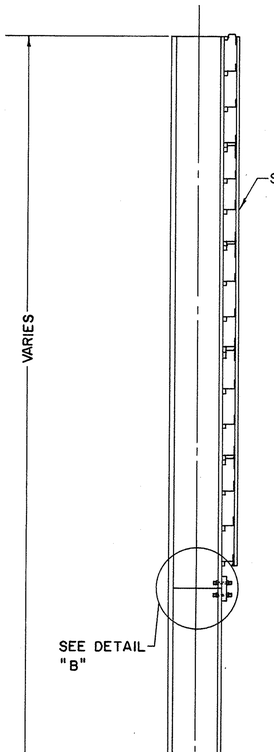

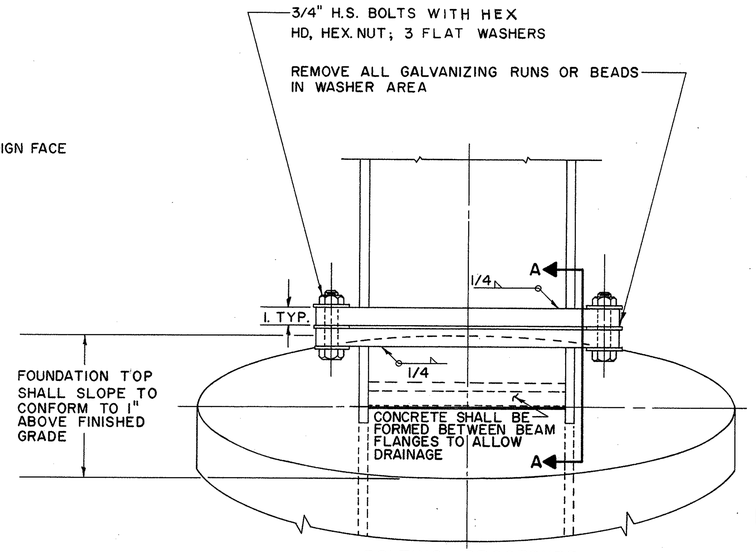

BOLTING PROCEDURE

1. ASSEMBLE POST TO STUB W/BOLTS & ONE FLAT WASHER ON EACH BOLT BETWEEN PLATES.
2. TIGHTEN ALL BOLTS THE MAXIMUM POSSIBLE W/12" TO 15" WRENCH TO BED & TO CLEAN BOLT THREADS. LOOSEN EACH BOLT IN TURN & RETIGHTEN BOLTS IN A SYSTEMATIC ORDER TO THE PRESCRIBED TORQUE OF 750 IN. LBS.
3. BURR THREADS AT JUNCTION W/NUT USING A CENTER PUNCH TO PREVENT NUT LOOSENING.

NOTE: TIGHTEN THE H.S. BOLTS IN THE BASE CONNECTION ONLY TO GIVEN TORQUE DO NOT OVER TIGHTEN

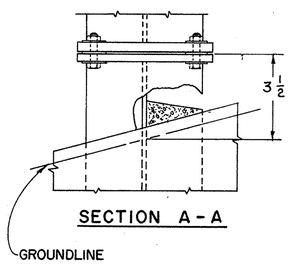

SECTION A-A

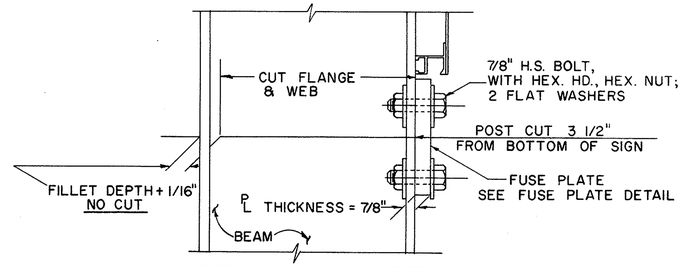

FABRICATOR NOTE: ALL FRICTION FUSE BOLTS SHALL BE TIGHTENED IN THE SHOP FOLLOWING A METHOD APPROVED BY THE ENGINEER. TIGHTENING SHALL BE TO SUCH A DEGREE AS TO OBTAIN MINIMUM RESIDUAL TENSION IN EACH BOLT OF 36,050 LBS.

NOTE: INSTALL FUSE PLATE WITH NOTCHES TOWARD BASE

DETAIL "B"

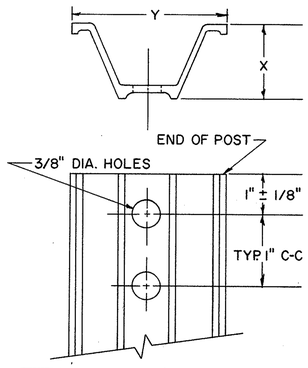

WEIGHT PER FOOT	X ± 3/32"	Y ± 1/8"
2.00 #	1 15/32"	3 1/16"
3.00 #	1 7/8"	3 1/2"
4.00 #	2"	3 5/8"

DRIVE POST DETAIL

NOTE: THE FOUNDATION FOR 4# DRIVE POST IS SIMILAR TO THE FOUNDATION SHOWN FOR 6# & 8# BEAM

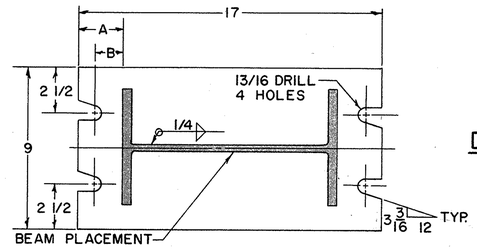

BEAM SIZE	A	B
10 WF 21	3 1/2	2 5/8
12 WF 31	2 1/2	1 5/8

BASE PLATE DETAIL

BEAM SIZE	C	D
10 WF 21	5 3/4	2 3/4
12 WF 31	6 1/2	3 1/2

FUSE PLATE DETAIL

FOUNDATION TABLE	CU. YDS. CONCRETE 2 POSTS	CU. YDS. CONCRETE 3 POSTS
10 WF 21	2.50	3.75
12 WF 31	3.00	4.50

SIDE ELEVATION — FRONT ELEVATION

BREAK-AWAY SUPPORT

FOUNDATION TABLE	CU. YDS. CONCRETE 2 POSTS	CU. YDS. CONCRETE 3 POSTS
10 WF 21	2.50	3.75
12 WF 31	3.00	4.50

FRONT ELEVATION STANDARD SUPPORT

#6 & #8 BEAM DETAIL

NOTES: ALL MATERIALS SHALL CONFORM TO THE STATE OF OHIO, CONSTRUCTION & MATERIALS SPECIFICATIONS OR AS OTHERWISE SPECIFIED

1) 511 FOUNDATIONS
2) 711.01 STRUCTURAL STEEL SHAPES & PLATES
3) 711.09 H.S. STEEL BOLTS, NUTS & WASHERS

ALL DIMENSIONS IN INCHES UNLESS OTERWISE SHOWN

STRUCTURAL SUPPORTS

BUREAU OF TRAFFIC
OHIO DEPARTMENT OF HIGHWAYS

GROUND MOUNTED SIGN SUPPORTS

GMSS

DATE 5-10-68 7-12-68

APPROVED _____
ENGINEER OF TRAFFIC

FED. RD. DIVISION	STATE	PROJECT	
2	OHIO		

311
460

SUM-8-17.63

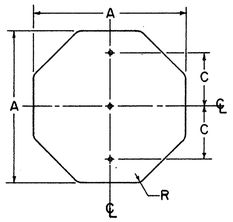

A	C	R	GAUGE
30	8	1 1/2	.080
36	8	1 1/2	.080

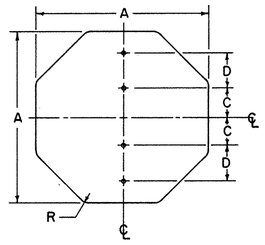

A	C	D	R	GAUGE
48	8	10	1 1/2	.100

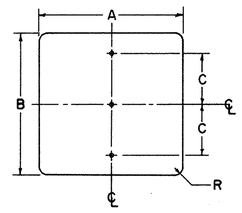

A	B	C	R	GAUGE
30	42	12	1 1/2	.080
36	36	11	1 1/2	.080
36	42	15	1 1/2	.080
36	48	15	1 1/2	.080
48	24	10	3	.100
48	36	13	3	.100

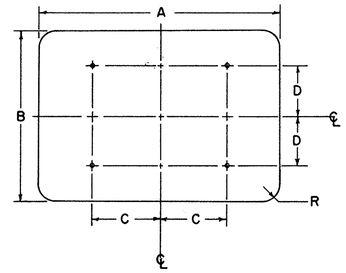

A	B	C	D	R	GAUGE
48	48	22	16	3	.100
48	60	22	22	3	.100

SPEED LIMIT SIGNS ON TWO SUPPORTS

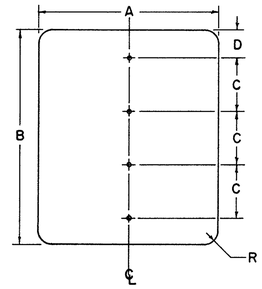

A	B	C	D	R	GAUGE
48	48	12	6	3	.100
48	60	15	7 1/2	3	.100

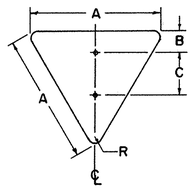

A	B	C	R	GAUGE
36	3	16	2 1/2	.080

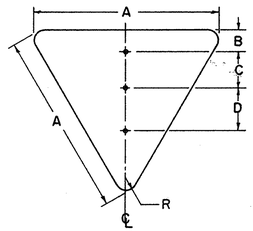

A	B	C	D	R	GAUGE
48	4	10	15	3	.100
60	5	10	15	4	.100

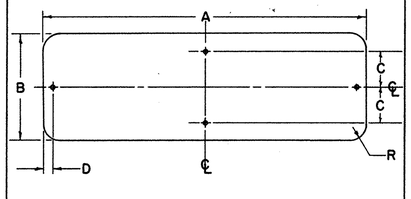

A	B	C	D	R	GAUGE
36	12	4	1	1 1/2	.080

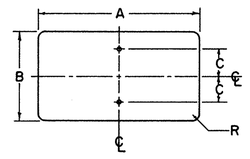

A	B	C	R	GAUGE
12	6	3	1 1/2	.063
20	15	6	1 1/2	.063
24	12	4 1/2	1 1/2	.063
24	18	15	1 1/2	.063
24	30	8	1 1/2	.063
24	48	10	1 1/2	.100
30	36	10 1/2	1 1/2	.080
36	18	7 1/2	1 1/2	.080

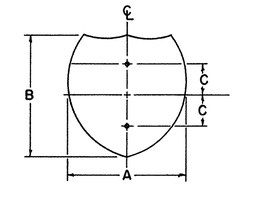

A	B	C	GAUGE
24	24	8	.063
30	24	8	.080

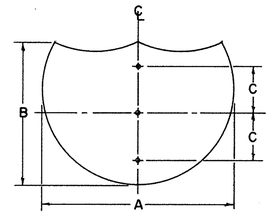

A	B	C	GAUGE
36	36	11	.080
48	36	11	.100

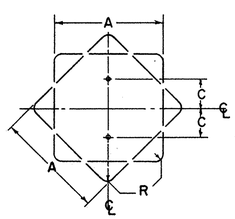

A	C	R	GAUGE
18	7 1/2	1 1/2	.063
24	8	1 1/2	.063
30	8	1 1/2	.080

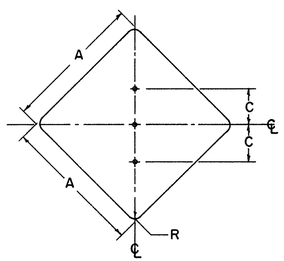

A	C	R	GAUGE
36	12	3	.080
48	14	3	.100

Location of holes on "Demountable Shields" (attached to guide signs)

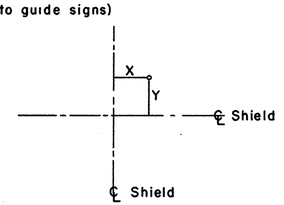

SIZE	NO. HOLES	X	Y
(26) 24X24	4	7	7
30X24	4	8	8
(39) 36X36	4	10	10
		0	10
48X36	6	15	10

For notes on fastening see drawing for miscellaneous "Signing Items" sheet.

NOTES:

ALL DEMENSIONS ARE IN INCHES UNLESS OTHERWISE SHOWN.

MATERIAL

FLAT SIGN BLANKS SHALL BE FURNISHED IN ALUMINUM ALLOY 6061-T6, (ASTM-B209, GS11A-T6) WITH MILL FINISH.

BOLT HOLES

THE BOLT HOLES SHALL BE 3/8" IN DIAMETER, AND MAY BE DRILLED, BLANKED OR PUNCHED TO FINISHED SIZE.

BUREAU OF TRAFFIC
OHIO DEPARTMENT OF HIGHWAYS

SIGN BLANK DETAILS

SBD

DATE 4-14-67

APPROVED_____
ENGINEER OF TRAFFIC

FED. RD. DIVISION	STATE	PROJECT	
2	OHIO		

SUM-8-17.63

312
460

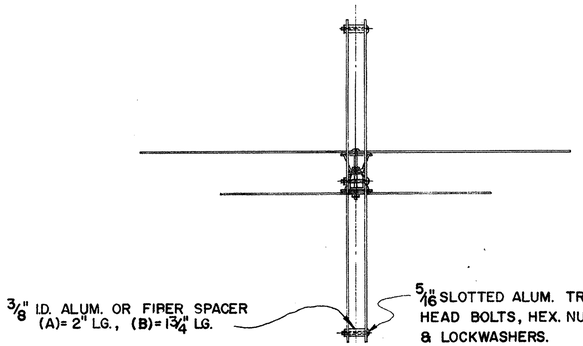

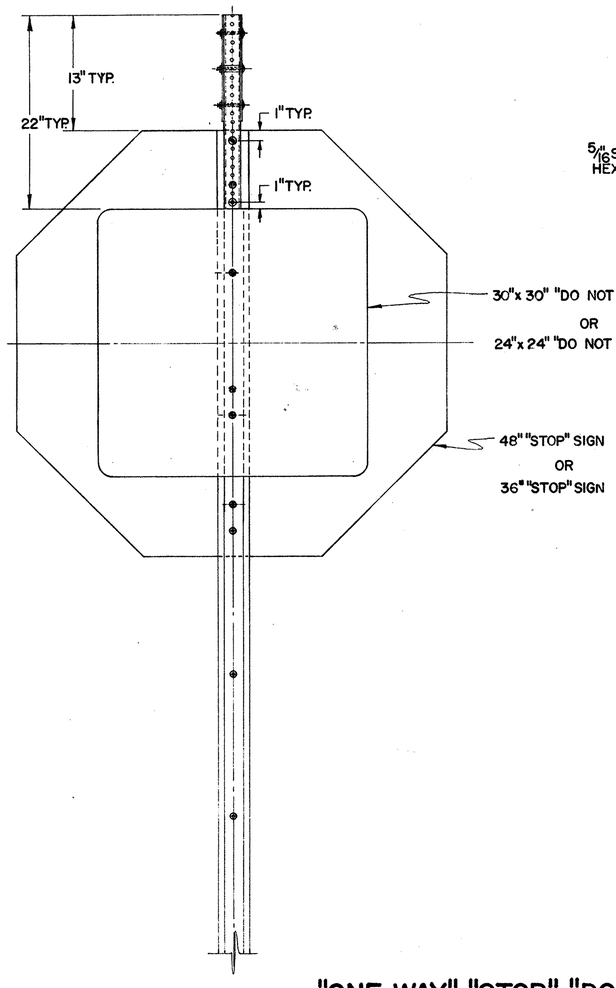

"ONE WAY", "STOP", "DO NOT ENTER",
SIGN INSTALLATION.

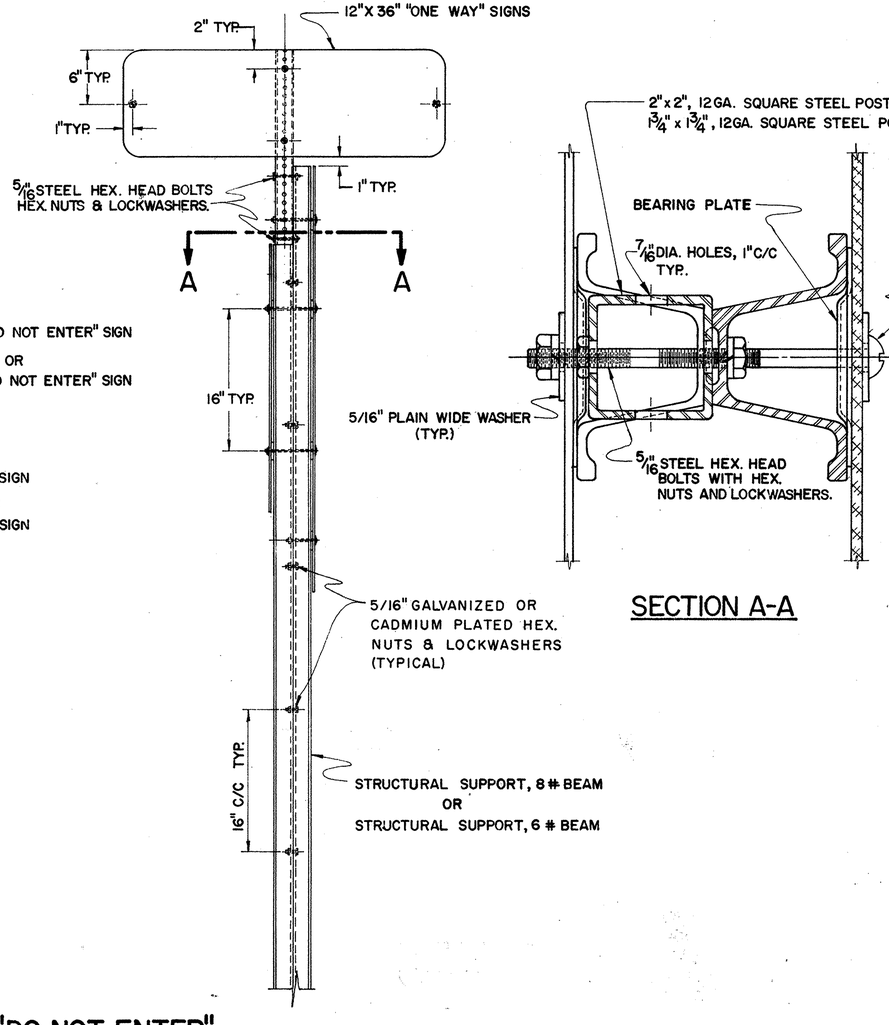

SECTION A-A

NOTES

MATERIALS

ALL SIGN MATERIALS SHALL BE IN ACCORDANCE WITH SUPPLEMENT SPECIFICATION 815.

ALL STRUCTURAL MATERIALS SHALL BE IN ACCORDANCE WITH SUPPLEMENT SPECIFICATION 816.

FOR SPECIFICATIONS FOR THE 2" & 1 3/4" SQUARE STEEL POST SEE GENERAL NOTES, SHEET NO.____.

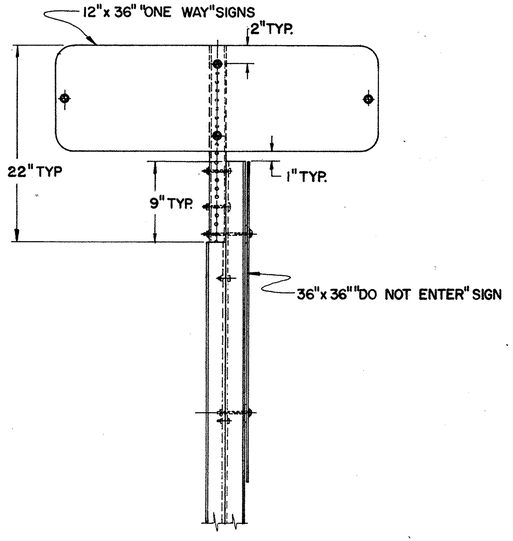

"ONE WAY", "DO NOT ENTER"
SIGN INSTALLATION

BUREAU OF TRAFFIC
OHIO DEPARTMENT OF HIGHWAYS

SPECIAL "ONE WAY" SIGN SUPPORT DETAILS	SOW	DATE 2-7-66 4-18-67
APPROVED_____ ENGINEER OF TRAFFIC		

SPECIAL "ONE WAY" SIGN SUPPORT DETAILS

FED. RD. DIVISION	STATE	PROJECT	
2	OHIO		

312A 460

SUM - 8-17.63

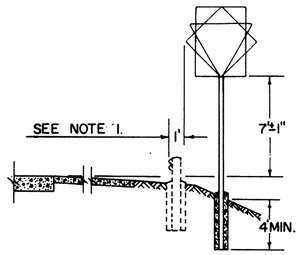

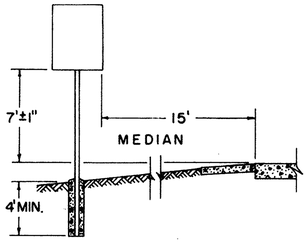

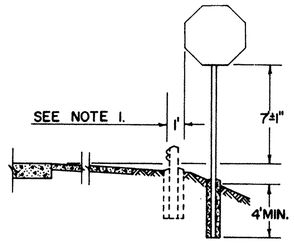

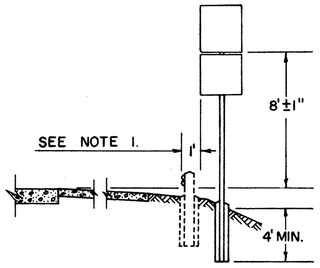

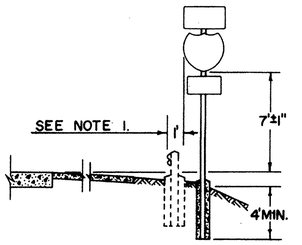

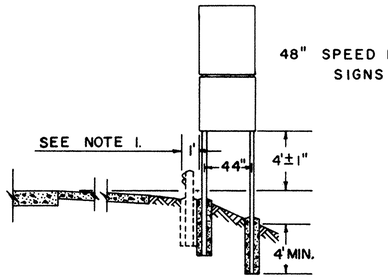

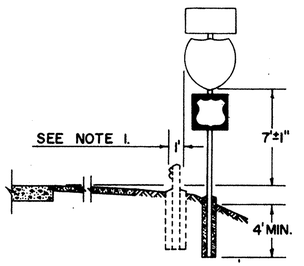

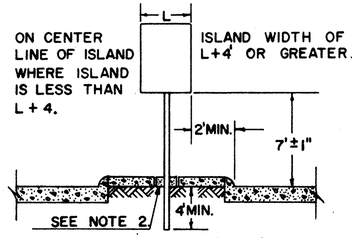

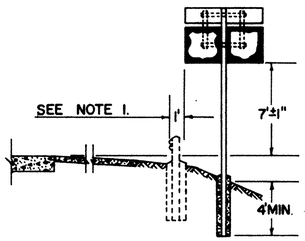

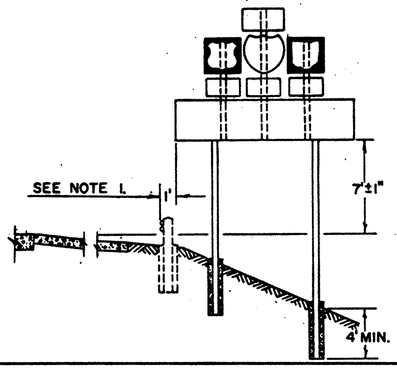

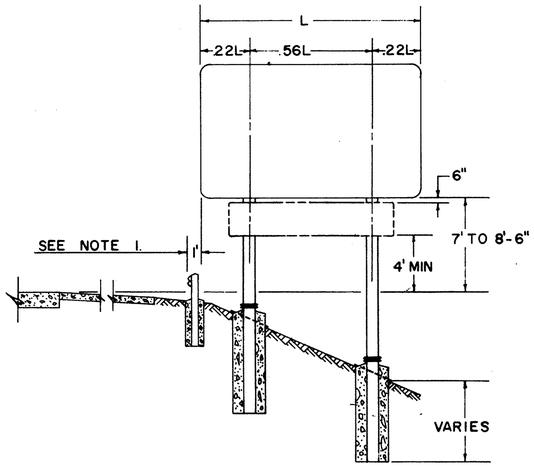

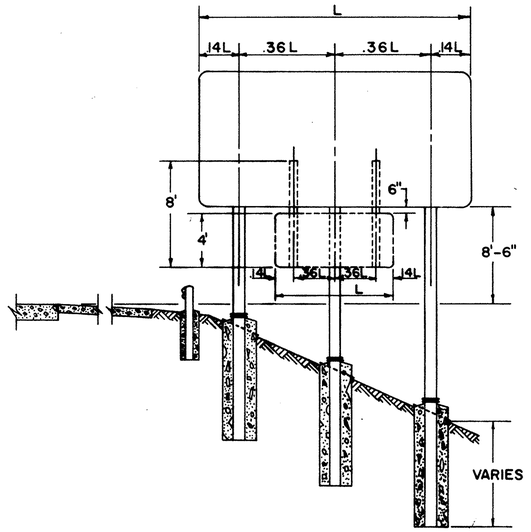

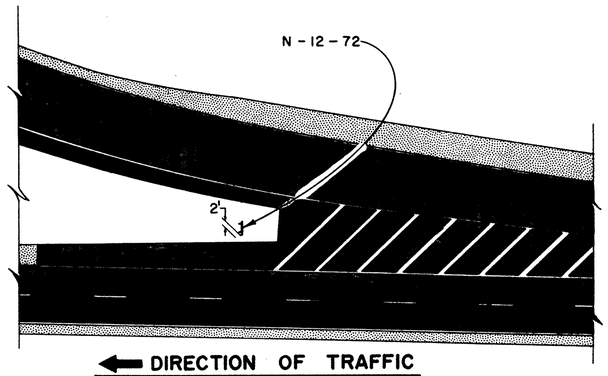

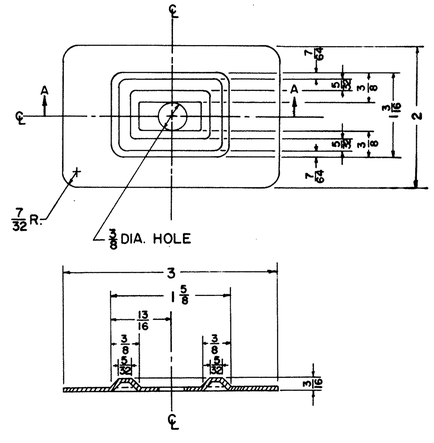

SECTION AA

NOTE:
THE PLATE IS SYMMETRICAL ABOUT EITHER CENTERLINE.
METAL SHALL BE 16 GAUGE STEEL.
ALL DIMENSIONS ARE IN INCHES.

BEARING PLATE DETAIL

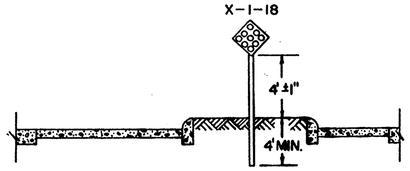

SIGN SUPPORT SPACING

L=FT	2 SUPPORTS .22	2 SUPPORTS .56	3 SUPPORTS .14	3 SUPPORTS .36	L=FT	2 SUPPORTS .22	2 SUPPORTS .56	3 SUPPORTS .14	3 SUPPORTS .36
5.0	1.10	2.80	0.70	1.80	17.0	3.74	9.52	2.38	6.12
6.0	1.32	3.36	0.84	2.16	18.0	3.96	10.08	2.52	6.48
7.0	1.54	3.92	0.98	2.52	19.0	4.18	10.64	2.66	6.84
8.0	1.76	4.48	1.12	2.88	20.0			2.80	7.20
9.0	1.98	5.04	1.26	3.24	21.0			2.94	7.56
10.0	2.20	5.60	1.40	3.60	22.0			3.08	7.92
11.0	2.42	6.16	1.54	3.96	23.0			3.22	8.28
12.0	2.64	6.72	1.68	4.32	24.0			3.36	8.64
13.0	2.86	7.28	1.82	4.68	25.0			3.50	9.00
14.0	3.08	7.84	1.96	5.04	26.0			3.64	9.36
15.0	3.30	8.40	2.10	5.40	27.0			3.78	9.72
16.0	3.52	8.96	2.24	5.76	28.0			3.92	10.08

NOTES

1. THE NEAR EDGE OF ALL MAIN LINE SIGNS, EXCEPT GORE INSTALLATIONS, SHALL BE LOCATED ONE FOOT (1') BACK OF GUARD RAIL FACE. THIS DIMENSION SHALL BE DETERMINED BY ROADWAY TYPICAL SECTION 8 USED WHETHER OR NOT GUARD RAIL IS PRESENT.

ON RAMPS THE NEAR EDGE OF SIGNS SHALL BE LOCATED ONE FOOT (1') BACK OF GUARD RAIL FACE. THIS DIMENSION WILL BE DETERMINED AND USED AS FOR MAIN LINE ABOVE.

ON APPROACHES THE NEAR EDGE OF SIGNS SHALL BE

(A) ONE FOOT (1') BEHIND EXISTING GUARD RAIL

(B) TWO FEET (2') FROM THE EDGE OF PAVED OR TRAVELED SHOULDER WITH A MINIMUM OF 6' FROM EDGE OF ROADWAY PAVEMENT.

2. POSTS PLACED IN CONCRETE MEDIANS SHALL BE INSTALLED BY DRIVING THROUGH A 6" SLEEVE OR CORE DRILLED HOLE. THE HOLE SHALL BE FILLED WITH ASPHALT OR PORTLAND CONCRETE AFTER THE POST IS IN THE PROPER POSITION.

3. HORIZONTAL BACK BRACING SHALL ALWAYS BE MOUNTED ON THE FRONT FLANGE OF THE SUPPORT EXCEPT WHERE SIGNS ARE MOUNTED BACK TO BACK. BACK BRACING SHALL NEVER EXTEND ABOVE TOP EDGE OF UPPERMOST SIGN PLATE AND SHALL BE ATTACHED TO SUPPORTS USING 5/16" GALVANIZED STEEL BOLTS.

4. SCREWS, NUTS, AND WASHERS FOR SIGN ERECTION SHALL BE ALUMINUM EXCEPT AS NOTED ABOVE. 5/16" TRUSS HEAD SLOTTED MACHINE SCREWS WITH HEX. NUTS PLAIN AND LOCKWASHERS SHALL BE USED. PLAIN WASHERS SHALL BE 5/16" "WIDE", USED ON SIGN FACE ONLY

5. SIGN INSTALLATIONS SHALL BE PLACED SO THAT SUPPORTS ARE NOT PLACED IN DRAINAGE DITCHES.

6. HORIZONTAL CLEARANCES SHOWN PERTAIN TO NON-CURBED SECTIONS. SECTIONS WITH UNMOUNTABLE CURB SHALL HAVE A HORIZONTAL CLEARANCE OF 2'-0" MINIMUM FROM THE CURB FACE TO THE SIGN EDGE.

7. VERTICAL AND HORIZONTAL CLEARANCE BETWEEN SIGNS ON ONE ASSEMBLY SHALL BE A MAXIMUM OF 2" AND A MINIMUM OF 1".

8. GALVANIZED STEEL BEARING PLATES SHALL BE INCLUDED BETWEEN ALL SHEET ALUMINUM SIGNS ATTACHED TO VERTICAL SUPPORTS AT EACH SIGN BOLT LOCATION.

BUREAU OF TRAFFIC
OHIO DEPARTMENT OF HIGHWAYS

TYPICAL PLACEMENT OF SIGNS

TPS-1

DATE 9-27-67 7-12-68

APPROVED _____ ENGINEER OF TRAFFIC

VAN DYKE

FED. RD. DIVISION	STATE	PROJECT	
2	OHIO		

312B 4C0

SUM-8-17.63

TYPE A

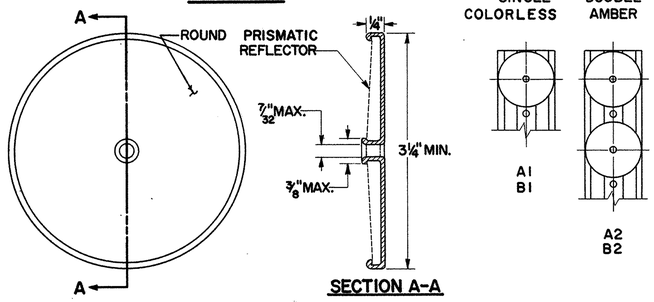

SECTION A-A

TYPE B

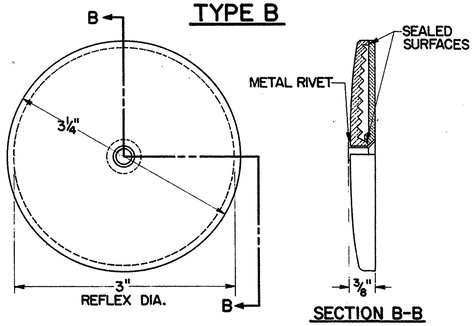

SECTION B-B

NOTE:

(A.) DOUBLE AMBER DELINEATORS SHALL BE PLACED ON ALL RAMPS AS SHOWN. ■

(B.) SINGLE COLORLESS DELINEATORS SHALL BE PLACED ON ALL MAINLINES AS SHOWN. ●

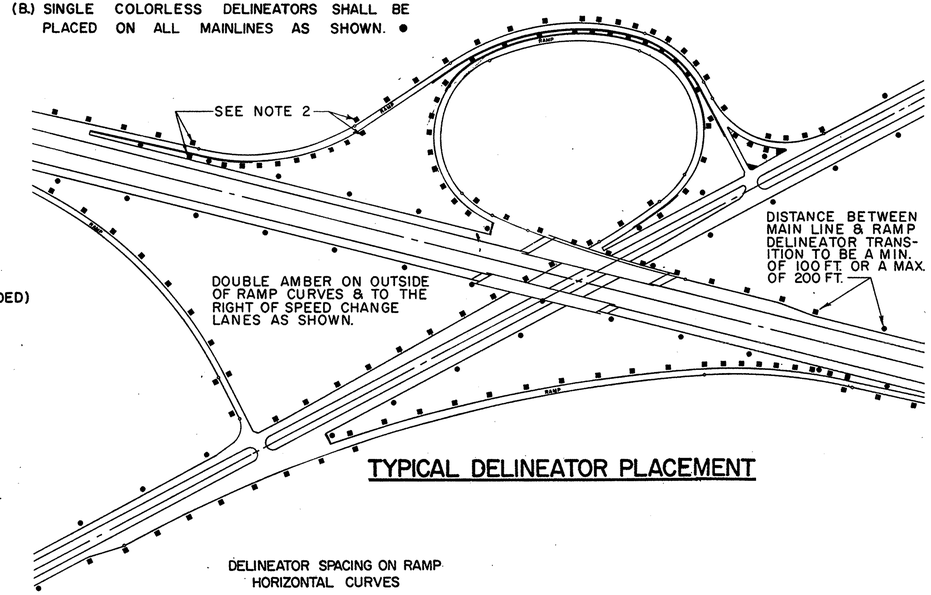

TYPICAL DELINEATOR PLACEMENT

TYPE C

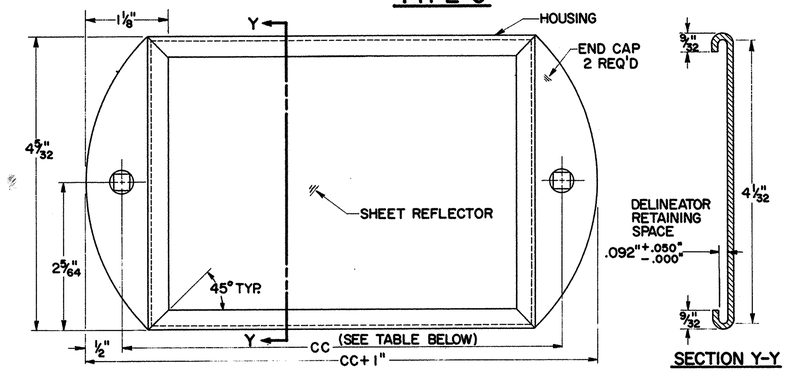

SECTION Y-Y



TYPE	DIM. CC
C1 – SINGLE COLORLESS	6"
C2 – DOUBLE AMBER	11"

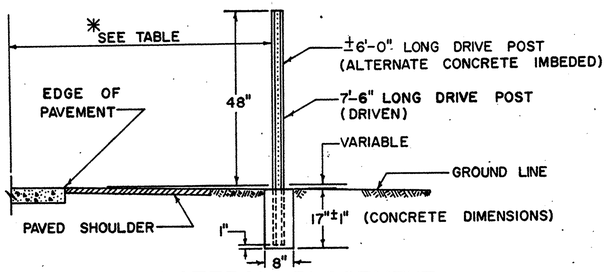

LATERAL PLACEMENT OF DELINEATORS

✱ TABLE

TYPE DELINEATOR	NO GUARDRAIL	GUARDRAIL
SINGLE COLORLESS	12'-6"	6" OUTSIDE
DOUBLE AMBER RIGHT SIDE	✱✱ 8'-6"	6" OUTSIDE
DOUBLE AMBER LEFT SIDE	4'-6"	6" OUTSIDE

✱✱ THIS DIMENSION SHALL VARY ON SPEED CHANGE LANES TO MAINTAIN MINIMUM DISTANCE OF 2'-6" FROM EDGE OF PAVED SHOULDER.

DELINEATOR SPACING ON RAMP HORIZONTAL CURVES

RADII, FT. FROM	RADII, FT. TO	SPACING ON CURVE	✱ TRANSITION SPACING	
TANGENT	1,801	100'	100'	100'
1,800	1,401	80'	100'	100'
1,400	1,001	70'	100'	100'
1,000	751	60'	100'	100'
750	551	50'	80'	100'
550	326	40'	70'	100'
325	———	30'	60'	100'

✱ SUCH AS 40' TO 70' TO 100' OR 100' TO 80' TO 50' OR ANY OTHER COMBINATION SHOWN ABOVE.

NOTES

1. TYPE A1 OR B1 DELINEATORS ON THE RIGHT OF THE THROUGH ROADWAY ARE TO BE SPACED AT 200 FT. INTERVALS THROUGHOUT, REGARDLESS OF CURVES.
2. WHEN CROSSING FROM LEFT TO RIGHT OR FROM RIGHT TO LEFT ON THE RAMPS THE DELINEATORS AT THE POINT OF CROSSOVER ARE TO BE AT THE SAME STATION ON EACH SIDE.
3. NO DELINEATORS ARE TO BE PLACED IN PAVED BERM
4. WHEN RADII OF CURVE ON RAMPS REQUIRE 100' SPACING THE DELINEATORS SHALL BE PLACED ON THE RIGHT IN RELATION TO THE FLOW OF TRAFFIC.

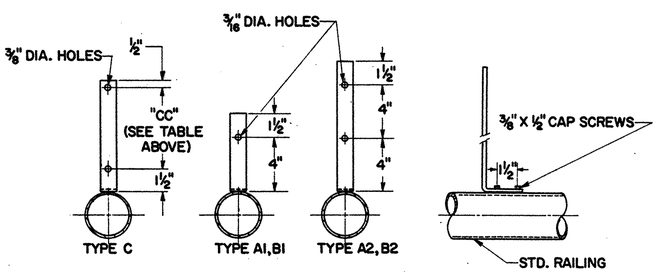

BRIDGE RAIL BRACKET

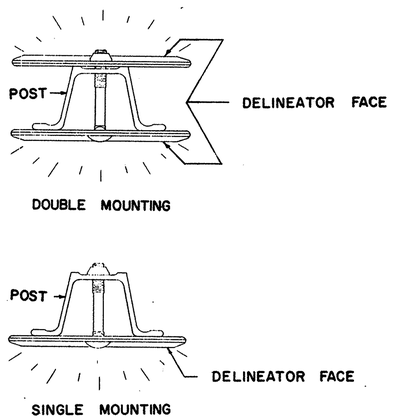

DELINEATOR MOUNTING

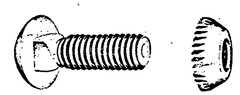

TAMPER RESISTANT FASTENERS SHALL BE USED TO FASTEN DELINEATORS TO POST AS/OR SIMILAR TO ONE SHOWN ABOVE.

TAMPER RESISTANT FASTENERS

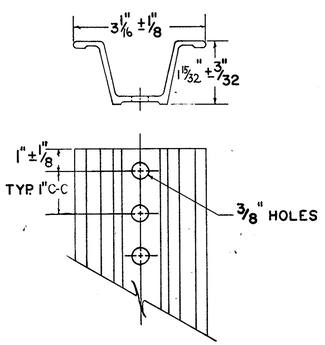

2 LB./FT.

DELINEATOR DRIVE POST

BUREAU OF TRAFFIC
OHIO DEPARTMENT OF HIGHWAYS

DELINEATOR DETAILS

620

DATE
9-25-62
5-24-65
9-12-67

APPROVED Robert L. Comer
ENGINEER OF TRAFFIC

FED. RD. DIVISION	STATE	PROJECT	
2	OHIO		

3120
460

SUM-8-17.63

ENTRANCE TERMINAL - PARALLEL ACCELERATION LANE

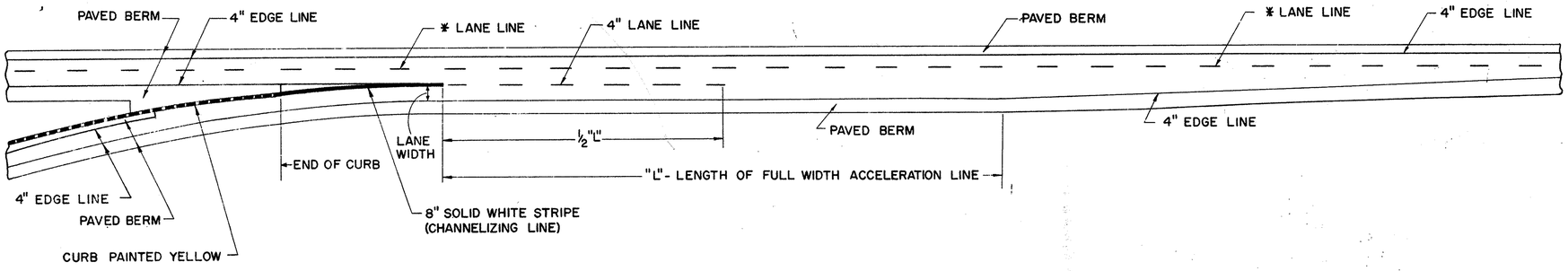

ENTRANCE TERMINAL - TAPERED ACCELERATION LANE

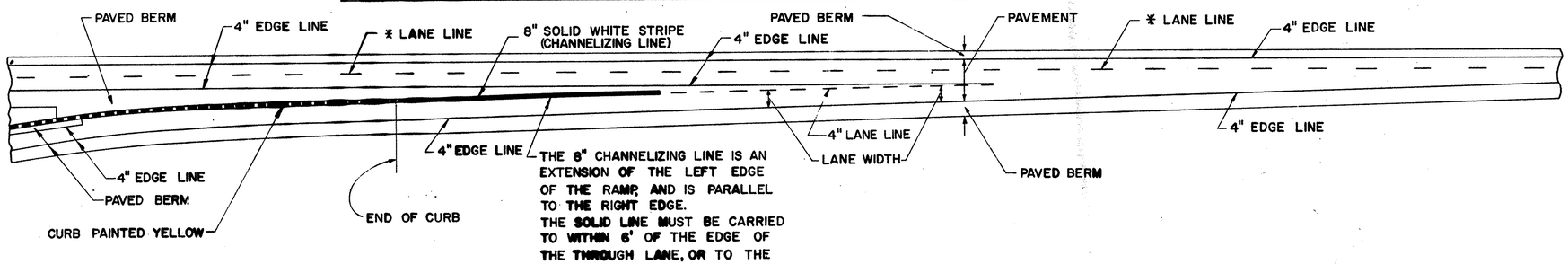

NOTES

DIAGONAL STRIPES AT EXIT RAMPS SHALL BE 24" BROAD TRANSVERSE STRIPES, 62'.11, WITH A 6' SPACE BETWEEN STRIPES.

* 6" LANE LINE ON INTERSTATE HIGHWAYS ONLY.
4" LANE LINE ON ALL OTHER HIGHWAYS.

CURBED EXIT TERMINAL - PARALLEL DECELERATION LANE

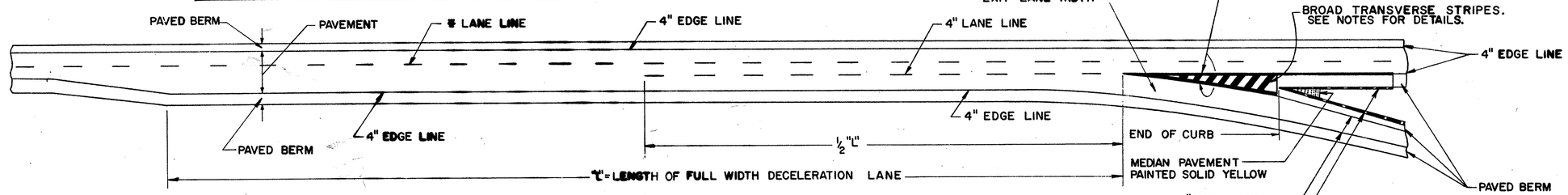

UNCURBED EXIT TERMINAL - PARALLEL DECELERATION LANE

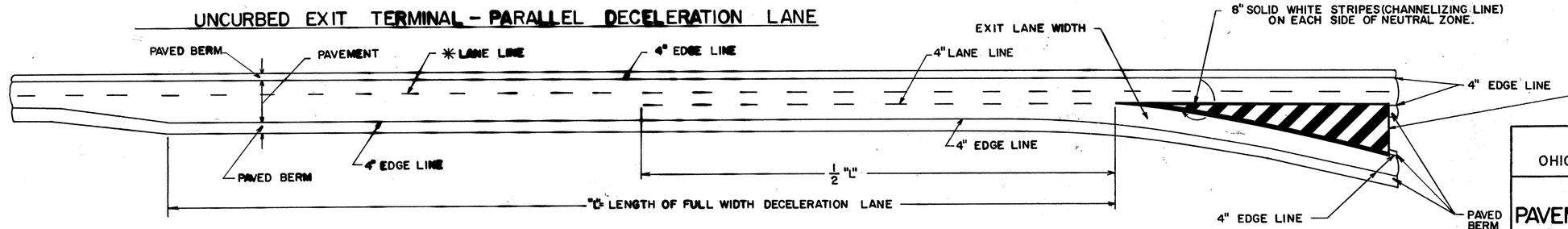

BUREAU OF TRAFFIC
OHIO DEPARTMENT OF HIGHWAYS

PAVEMENT MARKING | 621

DATE
7-17-61
4-6-62
5-24-65
9-2[illegible]-67
4-17-68

APPROVED Robert E. Lower
ENGINEER OF TRAFFIC

FED. RD.	STATE	
2	OHIO	

SUM-8-17.63

STRUCTURAL GENERAL NOTES

DESIGN SPECIFICATIONS (SUM-8-1845, 1950))

THIS STRUCTURE CONFORMS TO THE REQUIREMENTS OF "DESIGN SPECIFICATIONS FOR HIGHWAY STRUCTURES" OF THE STATE OF OHIO, DEPARTMENT OF HIGHWAYS, DATED 9/1/57, TOGETHER WITH CURRENT REVISIONS THEREOF.

CONCRETE CLASS C - UNIT STRESS 1333 P.S.I. FOR SUPERSTRUCTURE
UNIT STRESS 1333 P.S.I. FOR SUBSTRUCTURE

DESIGN SPECIFICATIONS (SUM-8-1772, 1800, 1812, 1825, 1927 & RET. WALL)

THIS STRUCTURE CONFORMS TO "STANDARD SPECIFICATIONS FOR HIGHWAY BRIDGES" ADOPTED BY THE AMERICAN ASSOCIATION OF STATE HIGHWAY OFFICIALS, 1965, INCLUDING THE OHIO "SUPPLEMENT" TO THESE SPECIFICATIONS.

DESIGN DATA

DESIGN LOADING - SEE SITE PLANS.

CONCRETE CLASS C - UNIT STRESS 1200 P.S.I. FOR SUPERSTRUCTURE
UNIT STRESS 1333 P.S.I. FOR SUBSTRUCTURE

STRUCTURAL STEEL - ASTM - UNIT STRESS 20,000 P.S.I.

REINFORCING STEEL - ASTM A615, A616, OR A617, UNIT STRESS 20,000 P.S.I. SPIRAL REINFORCMENT SHALL BE PLAIN, A306 OR A499

WELDS

NON-STRESS CARRYING WELDS ARE INDICATED THUS:
N > 1/4

UTILITY LINES

ALL EXPENSE INVOLVED IN RELOCATING THE AFFECTED UTILITY LINES SHALL BE BORNE BY THE OWNERS. THE CONTRACTOR AND OWNERS ARE REQUESTED TO COOPERATE BY ARRANGING THEIR WORK IN SUCH A MANNER THAT INCONVENIENCE TO EITHER BE HELD TO A MINIMUM.

REFERENCE

FOR ALL BRIDGES REFERENCE SHALL BE MADE TO STANDARD DRAWINGS:		
RB-1-55	REVISED	2/2/59
SD-1-65	SHEETS 1, 2, & 3 DATED	11/8/65
AS-1-67	REVISED	6/12/69
808	SUPPLEMENTAL SPEC. DATED	1/1/69
811	SUPPLEMENTAL SPEC. DATED	1/1/69
825	SUPPLEMENTAL SPEC. DATED	1/1/69
BR-1-65	REVISED	11/24/65
BR-2-67	DATED	11/6/67

JOINT SEALER: ITEM 828 JOINT SEALER INCLUDING BOND BREAKER, SHOWN IN SECTION A-A OF STD. DWG. SD-1-65, SHEET NO. 1, SHALL BE OMITTED.

RAILROAD AERIAL LINES (1927)

RAILROAD AERIAL LINES WILL BE RELOCATED BY THE RAILROAD. THE CONTRACTOR SHALL USE ALL PRECAUTIONS NECESSARY TO SEE THAT THE LINES ARE NOT DISTURBED DURING THE CONSTRUCTION STAGE AND SHALL COOPERATE WITH THE RAILROAD IN THE RELOCATION OF THESE LINES. THE COST OF THE RELOCATION SHALL BE INCLUDED IN THE RAILROAD FORCE ACCOUNT WORK.

CONSTRUCTION CLEARANCE (1927)

CONSTRUCTION CLEARANCE OF 20.00 FEET VERTICALLY ABOVE THE TOP OF THE RAILROAD RAILS AND 8.00 FEET HORIZONTALLY FROM THE CENTER OF TRACKS SHALL BE MAINTAINED AT ALL TIMES.

END DAM PAINTING

PORTIONS OF END DAMS WHICH WILL BE IN CONTACT WITH STEEL OR WITH CONCRETE SHALL NOT BE PAINTED. ALL OTHER PORTIONS SHALL BE CLEANED AND PAINTED IN ACCORDANCE WITH 514.

STAINLESS STEEL FASTENERS SHALL BE PROPERLY PASSIVATED TO REMOVE SURFACE IMPURITIES AND SHALL BE FURNISHED WITH A LUSTROUS FINISH.

SCUPPERS, INCLUDING SUPPORT ANGLES, SHALL BE GALVANIZED IN ACCORDANCE WITH 711.02

FOUNDATION BEARING PRESSURE

FOOTINGS ARE DESIGNED FOR A MAXIMUM BEARING PRESSURE OF "A" TONS PER SQ. FT.

BRIDGE NUMBER		A
SUM-8-1772	ABUTS.	10
	PIER	5
SUM-8-1800	ABUTS	12
	PIERS	12
SUM-8-1812	ABUTS	10
	PIERS	10
SUM-8-1825	ABUT. #1	5.0
	ABUT. #2	5.0
	PIERS	10
SUM-8-1845	ABUTS.	5.0
	PIER	9.1

FOOTINGS

FOOTINGS FOR THE FOLLOWING SUBSTRUCTURES SHALL EXTEND A MINIMUM OF 3" INTO UNDISTURBED ROCK OR TO THE ELEVATION SHOWN, WHICHEVER IS LOWER.

STRUCTURE
SUM-8-1772
SUM-8-1800
SUM-8-1812
SUM-8-1825
SUM-8-1845

FOOTINGS FOR THE RETAINING WALL SHALL EXTEND A MINIMUM OF 12" INTO UNDISTRUBED ROCK OR TO ELEVATION SHOWN, WHICHEVER IS LOWER.

STATE OF OHIO
DEPARTMENT OF HIGHWAYS
BUREAU OF BRIDGES

DALTON • DALTON ASSOCIATES

STRUCTURAL GENERAL NOTES

SUM-8-17.63

SUMMIT COUNTY

DESIGNED	DRAWN	TRACED	CHECKED	REVIEWED	DATE	REVISED
RDH	AH		RDH	RDH	1-2-68	

FED. RD.	STATE	PROJECT	
2	OHIO		

327
460

SUM-8-17.63

CURVE DATA

℄ RELOCATED S.R.-8

Δ = 15°-06'-08 LT.
Dc = 1°-28'-00
R = 3906.53
T = 517.85
Lc = 1029.17
P.I. = STA 240+86.53

EXISTING STRUCTURE DATA

PENNA. R.R. TRESTLE NEAR BAILEY RD.
APPROX. 2200' UPSTREAM
TYPE: STONE ARCH - GOOD CONDITION
SPANS: 32'-32'-32'
HIGH WATER MARK FOUND: EL. 994.29

THE OLD WALSH DAM APPROX 1500' DOWNSTREAM IS A BROADCREST WEIR IN GOOD CONDITION
WIDTH 100.31'

DRAINAGE DATA

DRAINAGE AREA = 318 SQ. MILES
OPENING REQUIRED: 910 SQ. FT.
OPENING PROVIDED: 910 SQ. FT.
EST. 50 YR. HIGH WATER EL. 996.62
EST. 50 YR. FLOOD: 4196 C.F.S.

PROPOSED STRUCTURE

TYPE: CONTINUOUS STEEL BEAMS, WITH REINFORCED CONCRETE DECK AND SUBSTRUCTURE.

SKEW: 60°-00'-00" RT. FWD TO LOC. TAN.
SPANS: 70'-0" - 70'-0" ℄ BRGS.
ALONG LOCAL TANGENT

ROADWAY: 124'-0" F/F PARAPETS
LOAD FREQUENCY: AASHO H520-44

WEARING SURFACE: 1" MONOLITHIC
APPROACH SLABS: 30' LONG (AS-1-67)
ALIGNMENT: 1°-28'-00" CURVE LT.
SUPERELEVATION: .0347'/FT. MAX.
SLOPE PROTECTION: ROCK FILL

(ROADWAY QUANTITY)

TRAFFIC: 66,400 1985 A.D.T.

SECTION A-A

ESTIMATED 50 YR. HIGH WATER EL. 996.62
HIGH WATER EL. 993.88 (3-10-64)
EXISTING WATER EL. 990.0 (8-17-65)
POOL EL. 989.74

960 980 1000

℄ VERTICAL CLEARANCE OVER 50 YR HIGH WATER
2.00' REQ'D; 4.84' ACTUAL

EL. 1011.14 EL. 1010.43 EL. 1009.72 EL. 1009.01 EL. 1008.30 EL. 1007.59 EL. 1006.88 EL. 1006.17 EL. 1005.46 EL. 1004.75 EL. 1004.04 EL. 1003.33

STA. 236+30.71 STA. 237+80.80

BRIDGE LIMITS = 150.09

TYPE-1-RAILING

PT. OF MIN. VERT. CLEARANCE

EL. LT. 1002.03
RT. 1003.40

EL. LT. 1000.34
RT. 1002.42

PROPOSED -0.71% PROFILE GRADE

1000
980
960

APPROX. ROCK LINE

EL. 976.5 EL. 976.5 EL. 976.5

EXISTING WATER EL. 990.0 (8-17-65)
POOL EL. 989.74

HIGH WATER EL. 993.88 (3-10-64)
ESTIMATED 50 YR HIGH WATER EL. 996.62

EXIST. PROFILE AT ℄ S.R.-8

231+00 232+00 233+00 234+00 235+00 236+00 237+00 238+00 239+00 240+00 241+00 242+00

STATE OF OHIO
DEPARTMENT OF HIGHWAYS
BUREAU OF BRIDGES

1/20

DALTON · DALTON ASSOCIATES

SITE PLAN

BRIDGE Nº SUM-8-1772
S.R.-8 OVER CUYAHOGA RIVER
SUMMIT COUNTY
STA. 236+30.71 TO STA. 237+80.80

DESIGNED	DRAWN	TRACED	CHECKED	REVIEWED	DATE	REVISED
BWMc	Kovessy		E.A.H.	RDH	1-31-68	

FED. RD.	STATE	PROJECT	
2	OHIO		

SUM-8-17.63

328
460

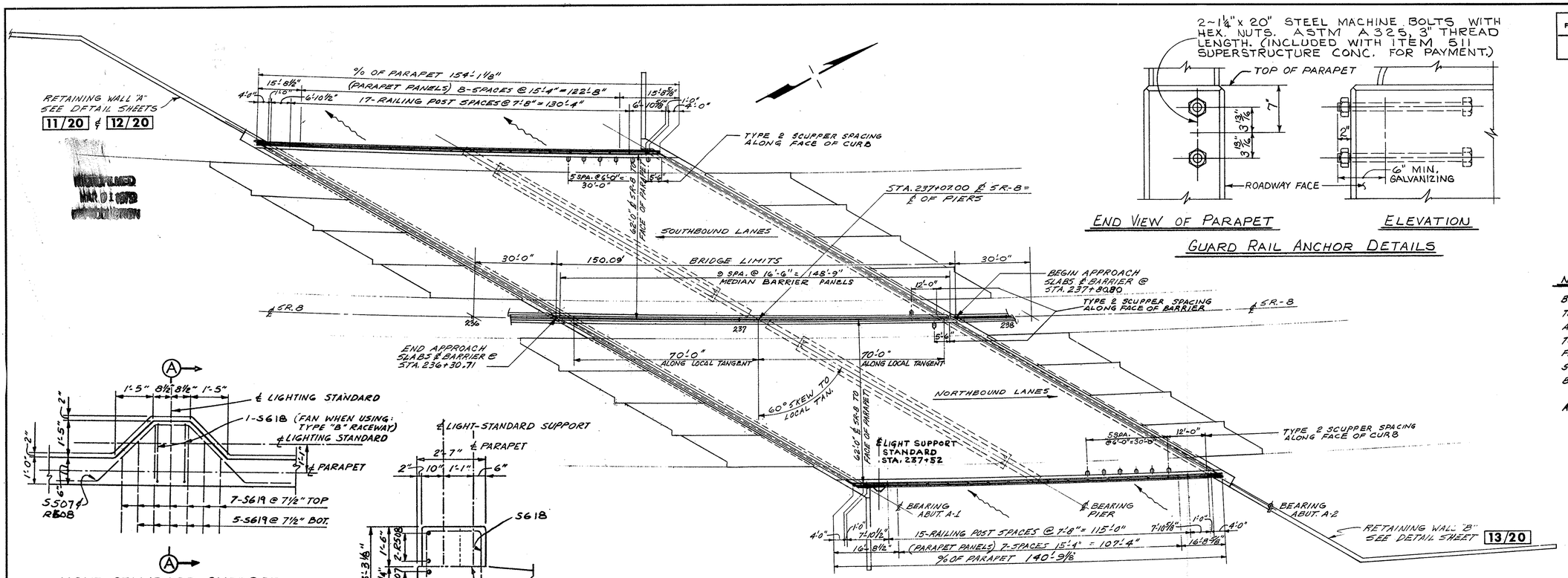

GENERAL PLAN

LIGHT STANDARD SUPPORT DETAIL

FOR DETAILS NOT SHOWN SEE SLAB PLAN & SECTION AND LIGHTING DETAILS

SECTION A-A

END VIEW OF PARAPET ELEVATION

GUARD RAIL ANCHOR DETAILS

NOTES:

BEFORE THE BACKWALL IS CONSTRUCTED THE EMBACKMENT SHALL BE PLACED AND COMPACTED UP TO THE LEVEL OF THE SUBGRADE, WITH A 1:1 SLOPE FROM THE BRIDGE SEAT TO THE SUBGRADE, FOR A DISTANCE OF 200 FEET BACK OF THE ABUTMENTS.

ABBREVIATIONS USED:

N.F. — NEAR FACE
F.F. — FAR FACE
E.F. — EACH FACE

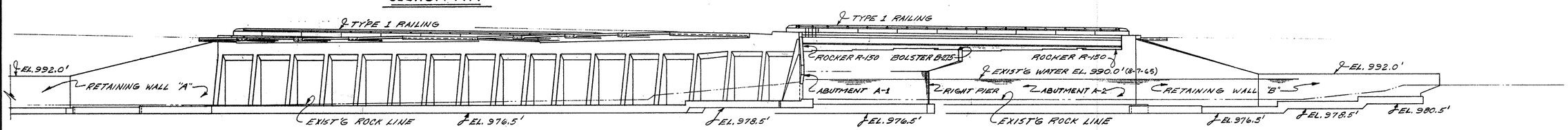

ELEVATION

ESTIMATED QUANTITIES (BRIDGE ONLY)

ITEM	TOTAL	UNIT	DESCRIPTION	SUPER.	ABUT.	PIERS	GEN'L.
503	LUMP	L. SUM.	COFFERDAMS, CRIBS & SHEETING				LUMP
505	1,488	CU. YDS.	ROCK EXCAVATION		1,304	184	
509	469,359	LBS.	REINFORCING STEEL	162,044	268,760	38,538	
511	565	CU. YDS.	CLASS "C" CONC., SUPERSTRUCTURE	565			
511	393	CU. YDS.	CLASS "C" CONC., PIERS ABOVE FOOTING			393	
511	1,053	CU. YDS.	CLASS "C" CONC., FOOTINGS		909	144	
511	1,416	CU. YDS.	CLASS "C" CONC., ABUT. ABOVE FOOTING		1,416		
512	270	LIN. FT.	PREMOLDED SEALING STRIP		270		
513	628,100	LBS.	STRUCTURAL STEEL	628,100			
514	628,100	LBS.	FIELD PAINTING OF STRUCTURAL STEEL	628,100			
516	234	SQ. FT.	1" PREFORMED EXPANSION JOINT FILLER		234		

ITEM	TOTAL	UNIT	DESCRIPTION	SUPER.	ABUT.	PIER	GEN'L
517	294.85	LIN. FT.	RAILING (TYPE 1)	294.85			
518	275	CU. YDS.	POROUS BACKFILL		275		
518	402	LIN. FT.	8" PERFORATED C.M.P. INCLUDING SPECIAL 707.01		402		
518	14	EACH	~~SCUPPERS INCLUDING SUPPORTS~~	14			
625			SEE SHT. 258 FOR LIGHTING SUMMARY				
808	565	UNITS	WATER-RETARDING, SET-RETARDING ADMIXTURE	565			
825	8,296	SQ YDS	CONCRETE SURFACE TREATMENT	2,169	127		

FORM DDA-6

FOR RETAINING WALL "A" QUANTITIES SEE SHEET 11/20
FOR RETAINING WALL "B" QUANTITIES SEE SHEET 13/20
FOR GENERAL NOTES SEE SHEET NO. 326

QUANTITIES CHECKED BY: L.B. 10-30-67

STATE OF OHIO
DEPARTMENT OF HIGHWAYS
BUREAU OF BRIDGES

2/20

DALTON • DALTON ASSOCIATES

GENERAL PLAN & ELEVATION
BRIDGE NO. SUM-8-1772
S.R.-8 OVER CUYAHOGA RIVER
SUMMIT COUNTY
STA. 236+30.71 TO STA. 237+80.80

DESIGNED	DRAWN	TRACED	CHECKED	REVIEWED	DATE	REVISED
B.W.C.	R.J.P.		E.A.H.	R.D.H.	1-31-68	

MICROFILMED
MAR 01 1973
REPRODUCTION

FED. RD.	STATE	PROJECT	
2	OHIO		

329
460

SUM-8-17.63

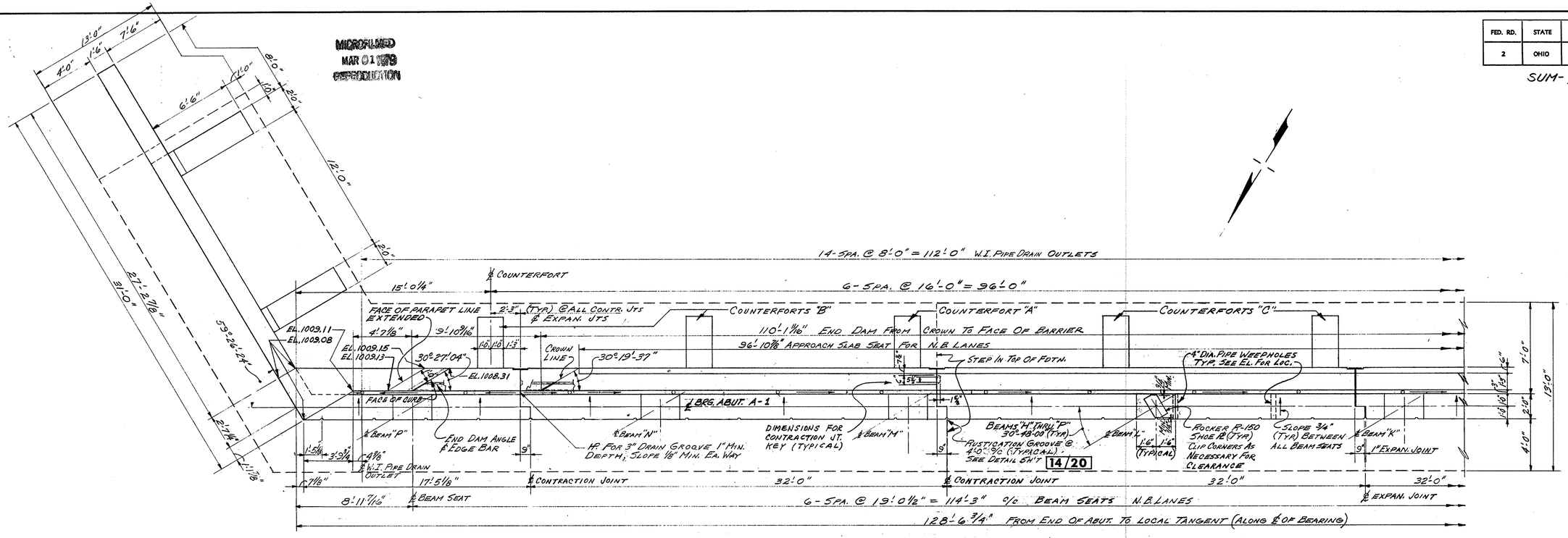

NOTE
REFERENCE TO LOCAL TANGENT REFERS TO THE LOCAL TANGENT LINE @ STA. 237+07.00 EXTENDED TO INTERSECT ℄ ABUT. BEARINGS.

FOR SECTIONS SEE SHEET NO. 9/20 AND 10/20

FOR LIGHTING DETAILS NOT SHOWN SEE LIGHTING PLANS.

STATE OF OHIO
DEPARTMENT OF HIGHWAYS
BUREAU OF BRIDGES

3/20

DALTON · DALTON ASSOCIATES

ABUTMENT A-1 DETAILS

BRIDGE NO. SUM-8-1972
S.R.-8 OVER CUYAHOGA RIVER
SUMMIT COUNTY
STA. 236+30.71 TO STA. 237+80.80

DESIGNED	DRAWN	TRACED	CHECKED	REVIEWED	DATE	REVISED
J.H. E.A.H.	R.J.P.		E.A.H. J.H.	J.H.	1-31-68	

FORM DDA-8

MICROFILMED
MAR 01 1979
REPRODUCTION

FED. RD.	STATE	PROJECT	
2	OHIO		

330
460

SUM-8-17.63

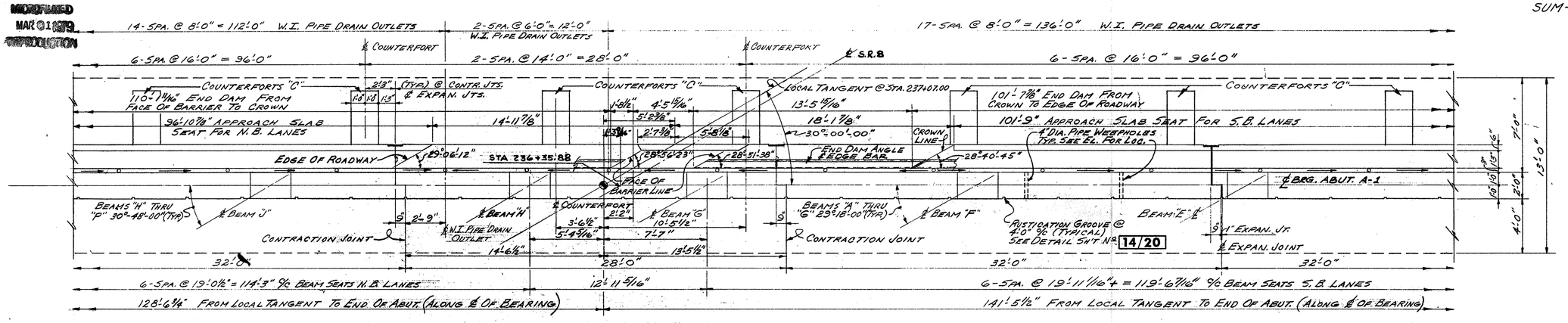

PARTIAL PLAN

FOR CONTINUATION SEE SHT 3/20 & 5/20

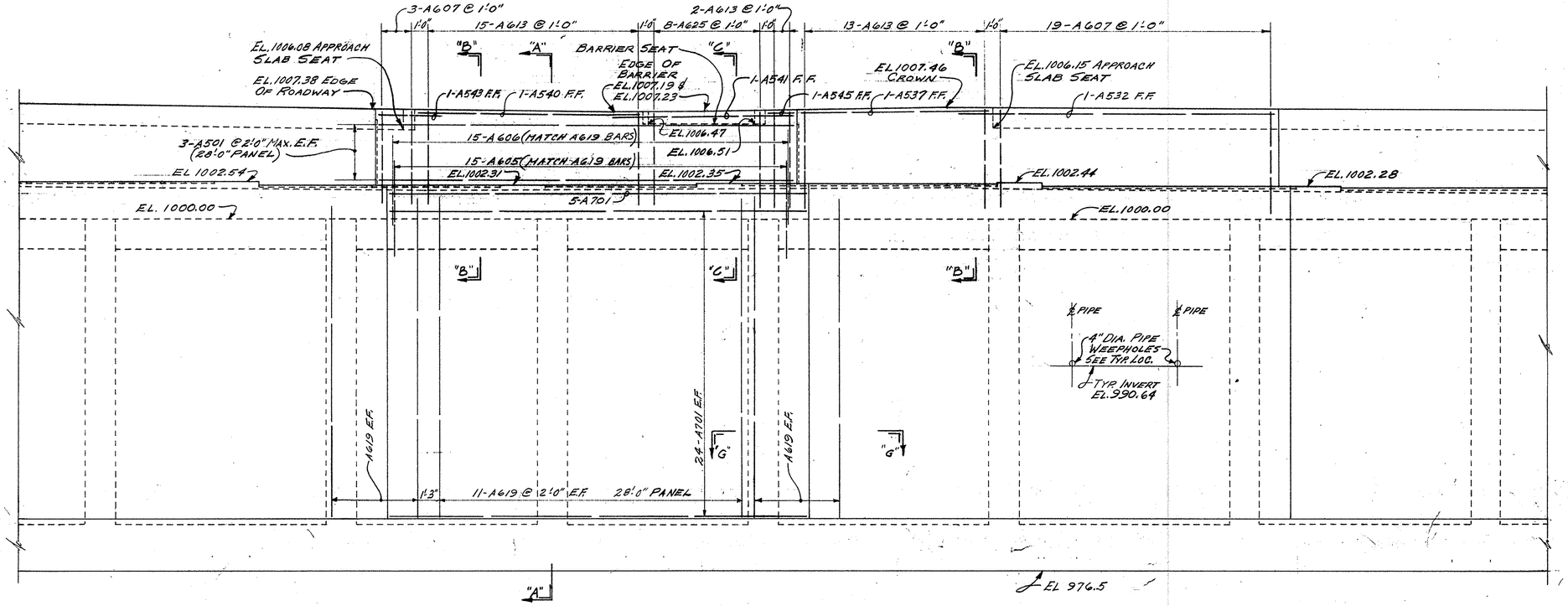

PARTIAL ELEVATION

NOTE:
REFERENCE TO LOCAL TANGENT REFERS TO THE LOCAL TANGENT LINE @ STA. 237+07.00 EXTENDED TO INTERSECT ℄ ABUT. BEARINGS.

FOR SECTIONS SEE SHEET NO. 9/20 AND 10/20

STATE OF OHIO
DEPARTMENT OF HIGHWAYS
BUREAU OF BRIDGES

4/20

DALTON · DALTON ASSOCIATES

ABUTMENT A-1 DETAILS

BRIDGE NO. SUM-8-1772
S.R.-8 OVER CUYAHOGA RIVER
SUMMIT COUNTY
STA. 236+30.71 TO STA. 237+80.80

DESIGNED	DRAWN	TRACED	CHECKED	REVIEWED	DATE	REVISED
J.H E.A.H	R.V.P.		E.A.H J.H	R.D.H	1-31-68	

FORM DDA-6

MICROFILMED
MAR 01 1968
REPRODUCTION

FED. RD.	STATE	PROJECT	
2	OHIO		

331
460

SUM-8-17.63

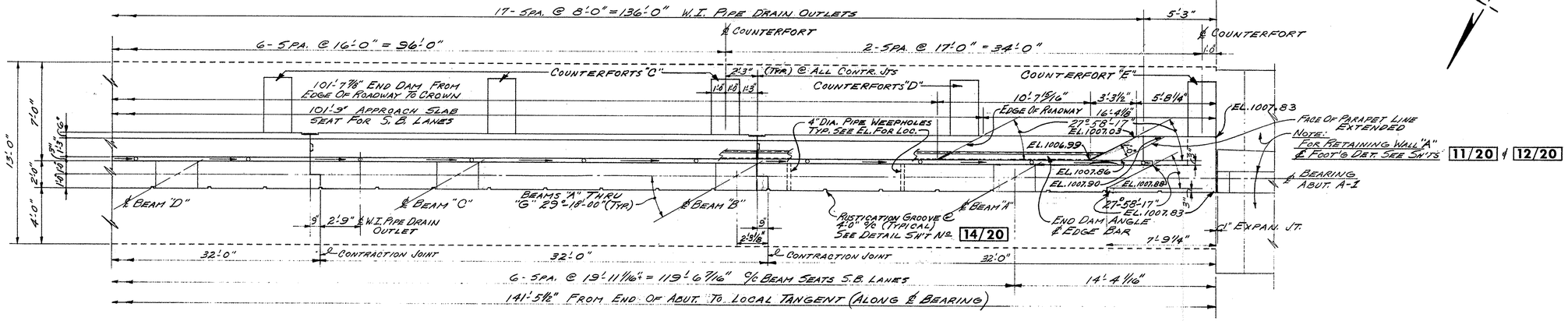

PARTIAL PLAN

FOR CONTINUATION SEE SH'T. 4/20

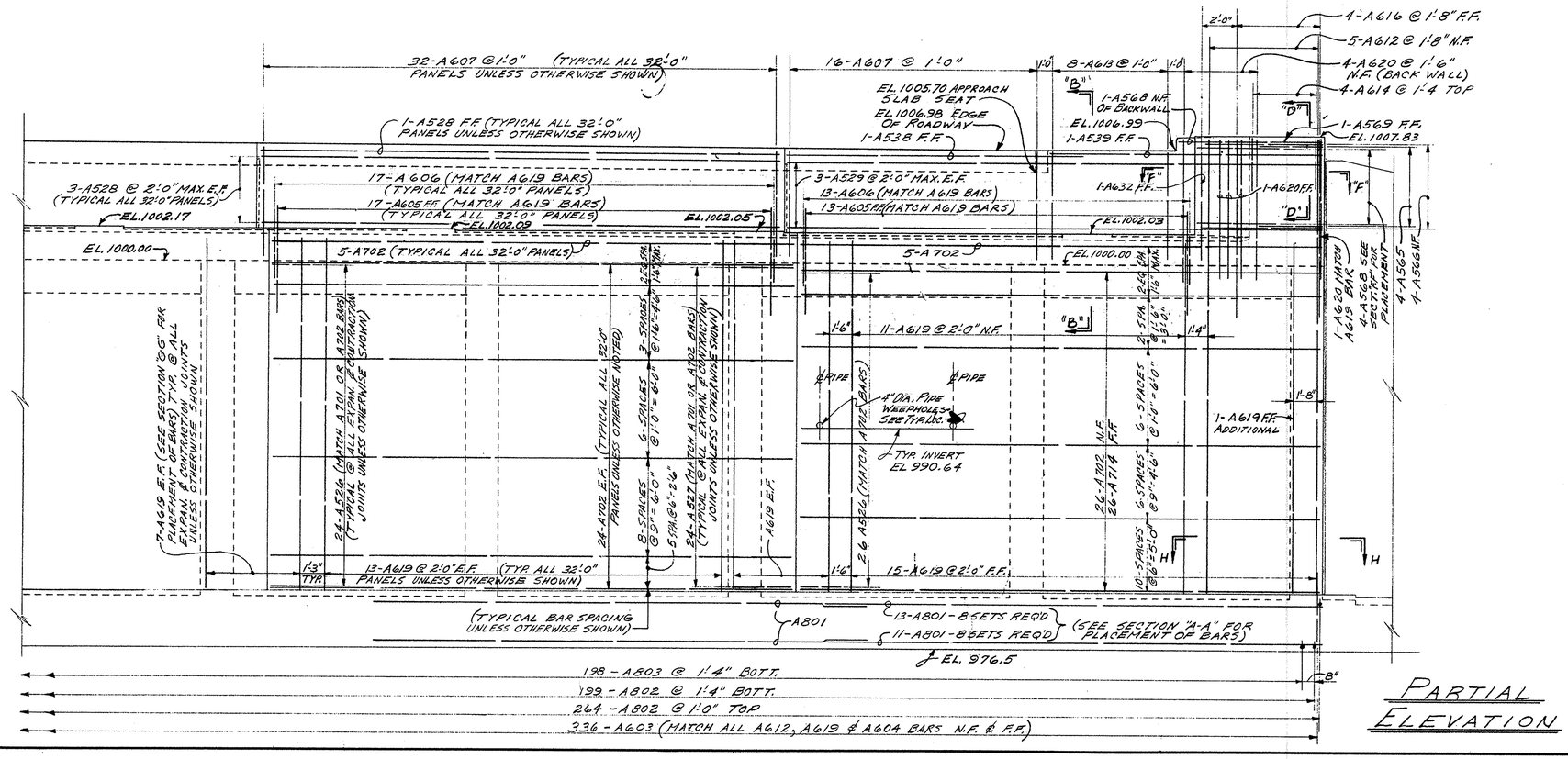

PARTIAL ELEVATION

NOTE:
REFERENCE TO LOCAL TANGENT REFERS TO THE LOCAL TANGENT LINE ℄ STA. 237+07.00 EXTENDED TO INTERSECT ℄ ABUT. BEARINGS.

FOR SECTIONS SEE SHEET NOS 9/20 AND 10/20

STATE OF OHIO
DEPARTMENT OF HIGHWAYS
BUREAU OF BRIDGES

5/20

DALTON • DALTON ASSOCIATES

ABUTMENT A-1 DETAILS

BRIDGE NO. SUM-8-1772
S.R.-8 OVER CUYAHOGA RIVER
SUMMIT COUNTY
STA. 236+30.71 TO STA. 237+80.80

DESIGNED	DRAWN	TRACED	CHECKED	REVIEWED	DATE	REVISED
J.H. E.A.H.	R.J.P.		E.A.H. J.H.	R.D.H.	1-31-68	

FORM DDA-6

RECEIVED
MAR 01 1968
PUBLICATION

FED. RD.	STATE	PROJECT	
2	OHIO		

SUM-8-17.63

332
460

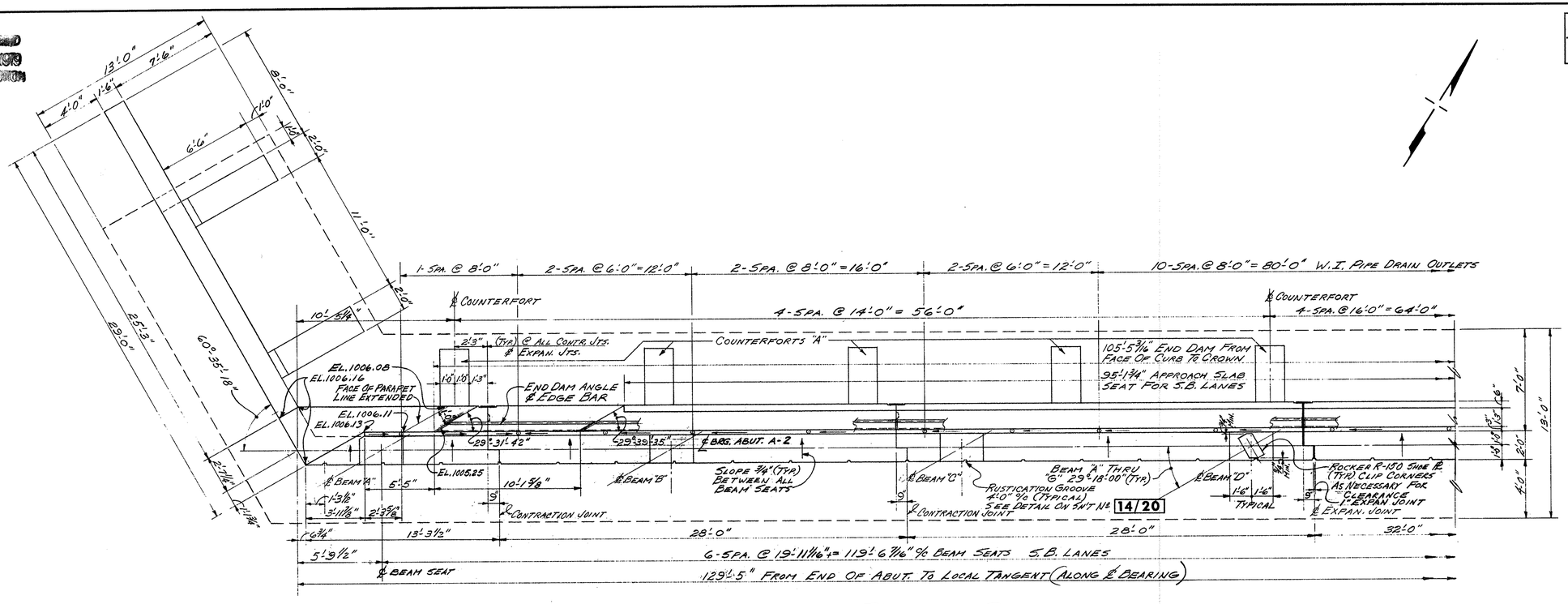

PARTIAL PLAN

SEE SH'T Nº 7/20

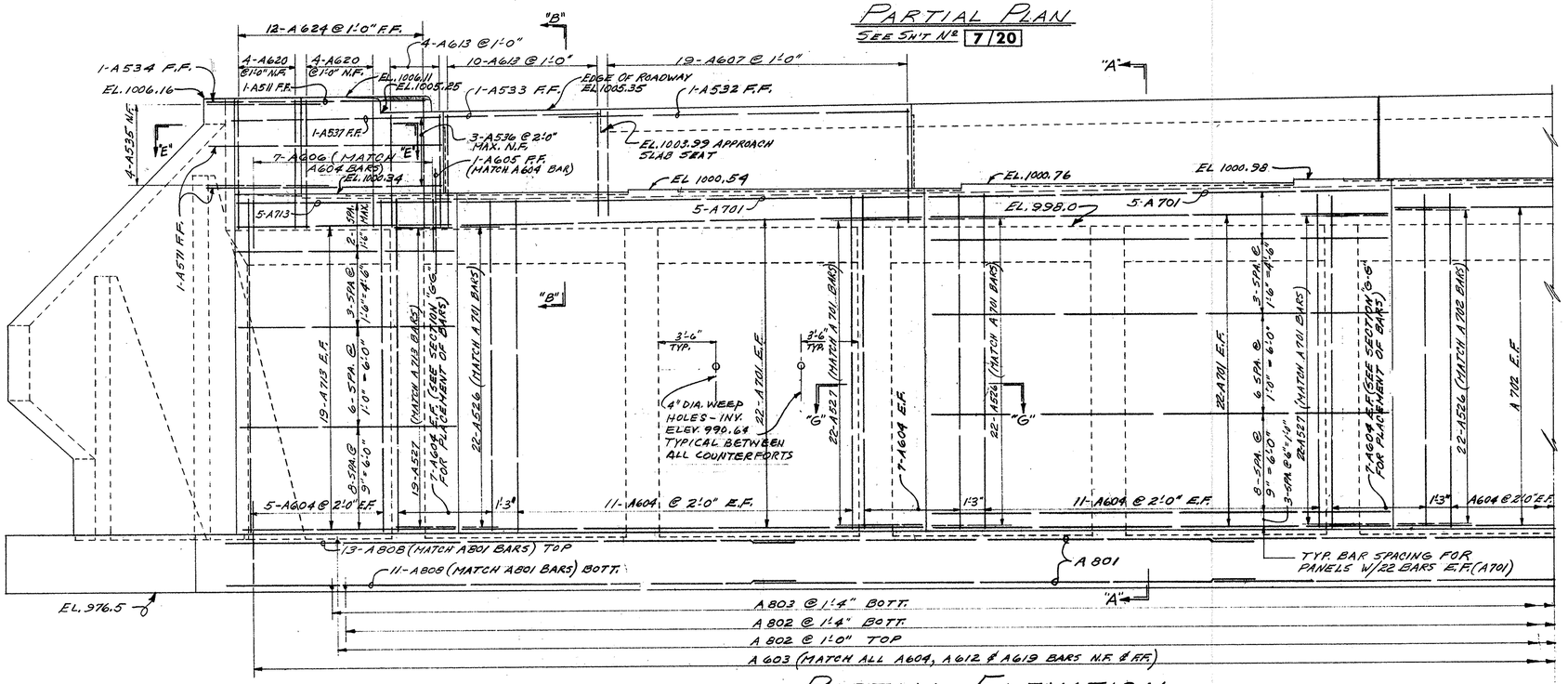

PARTIAL ELEVATION

NOTE:
REFERENCE TO LOCAL TANGENT REFERS TO THE LOCAL TANGENT LINE @ STA. 237+07.00 EXTENDED TO INTERSECT ℄ ABUT. BEARINGS.

FOR SECTIONS SEE SHEET Nº 9/20 AND 10/20

STATE OF OHIO
DEPARTMENT OF HIGHWAYS
BUREAU OF BRIDGES

6/20

DALTON • DALTON ASSOCIATES

ABUTMENT A-2 DETAILS

BRIDGE NO. SUM-8-1772
S.R.-8 OVER CUYAHOGA RIVER
SUMMIT COUNTY
STA. 236+30.71 TO STA. 237+80.80

DESIGNED	DRAWN	TRACED	CHECKED	REVIEWED	DATE	REVISED
J.H. EA.H.	R.J.P.		EA.H. J.H.	R.D.H.	1-31-68	

FORM DDA-6

ARCHIVED
MAR 01 1979
CONSTRUCTION

FED. RD.	STATE	PROJECT	
2	OHIO		

333
460

SUM-8-17.63

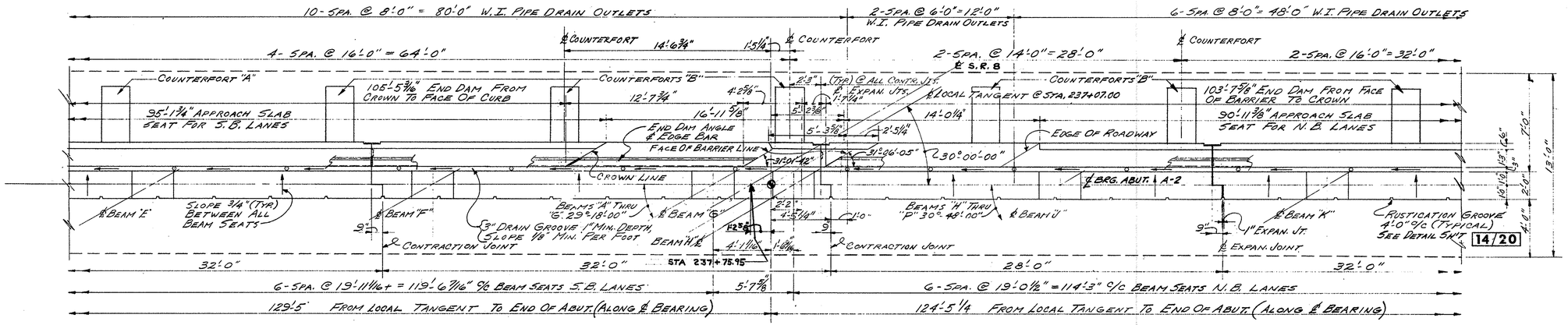

PARTIAL PLAN

FOR CONTINUATION SEE SH'TS 6/20 & 8/20

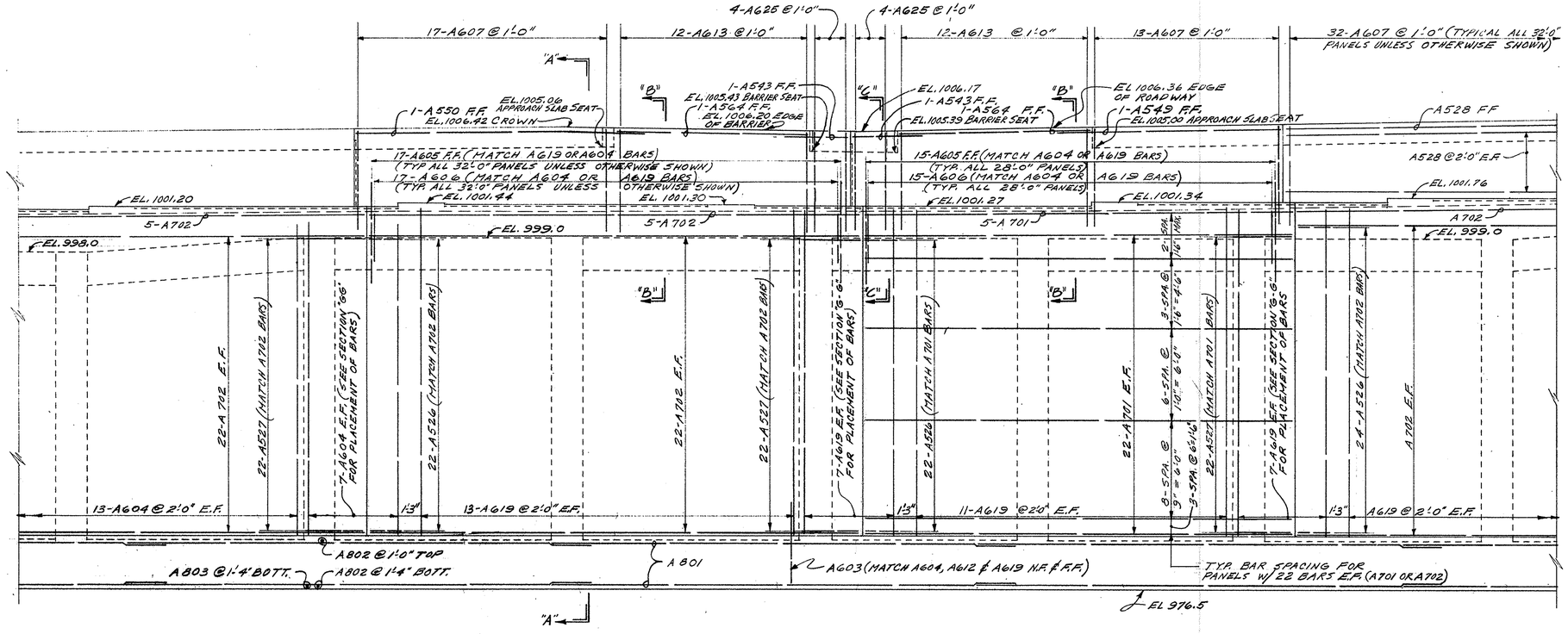

PARTIAL ELEVATION

NOTE:
REFERENCE TO LOCAL TANGENT REFERS TO THE LOCAL TANGENT LINE @ STA. 237+07.00 EXTENDED TO INTERSECT ℄ ABUT. BEARINGS.

FOR SECTIONS SEE SHEET N.S. 9/20 AND 10/20

STATE OF OHIO
DEPARTMENT OF HIGHWAYS
BUREAU OF BRIDGES

7/20

DALTON • DALTON ASSOCIATES

ABUTMENT A-2 DETAILS
BRIDGE NO. SUM-8-17.72
S.R.-8 OVER CUYAHOGA RIVER
SUMMIT COUNTY
STA. 236+30.71 .TO STA. 237+80.80

DESIGNED	DRAWN	TRACED	CHECKED	REVIEWED	DATE	REVISED
J.H. E.A.H.	R.J.P.		E.A.H. J.H.	R.B.H.	1-31-68	

FORM DDA-6

MICROFILMED
MAR 01 1979
REPRODUCTION

FED. RD.	STATE	PROJECT	
2	OHIO		

334
460

SUM-8-17.63

ABUTMENT A-2 — RETAINING WALL "B"

6-SPA. @ 8'-0" = 48'-0" W.I. PIPE DRAIN OUTLETS | 1-SPA. @ 6'-0" | 6-SPA. @ 8'-0" = 48'-0" W.I. PIPE DRAIN OUTLETS | 5'-0"

2-SPA. @ 16'-0" = 32'-0" | 2-SPA. @ 14'-0" = 28'-0" | 2-SPA. @ 17'-0" = 34'-0"

℄ COUNTERFORT | ℄ COUNTERFORT | ℄ COUNTERFORT

COUNTERFORTS "C" | COUNTERFORTS "D" | COUNTERFORT "E"

2'-3" (TYP.) @ ALL CONTR. JTS

103'-7 9/16" END DAM FROM CROWN TO FACE OF BARRIER

90'-11 7/8" APPROACH SLAB SEAT FOR N.B. LANES

END DAM ANGLE ℄ EDGE BAR

DIMENSIONS FOR CONTRACTION JOINT KEY (TYPICAL)

SLOPE 3/4" (TYP.) BETWEEN ALL BEAM SEATS

℄ BEAM "L" | BEAMS "M" THRU "P" 30°-48°-00" | ℄ BEAM "M" | ℄ BEAM "N" | ℄ BEAM "P" EL. 1008.18

CONTRADTION JOINT | CONTRACTION JOINT

HP FOR 3" DRAIN GROOVE 1" MIN. DEPTH, SLOPE 1/8" MIN. EA. WAY

RUSTICATION GROOVE 4'-0" ℄ (TYPICAL) SEE DETAIL ON SH'T №115

32°-23'-27" | 32°-30'-15" | 32°-29'-32"

EL. 1007.32 | EL. 1008.15 | EL. 1008.16 | CROWN LINE

℄ W.I. PIPE DRAIN OUTLET 6'-6 1/8"

1" EXPAN. JOINT

EL. 1008.14

NOTE: FOR RETAINING WALL "B" ℄ FOOT'G DET. SEE SH'T № 13/20

℄ BEARING ℄ ABUT. A-2

32'-0" | 28'-0" | 32'-0"

6-SPA. @ 19'-0 1/2" = 114'-3" ℄ BEAM SEATS N.B. LANES | 8'-7 11/16"

124'-5 1/4" FROM END OF ABUT. TO LOCAL TANGENT (ALONG ℄ BEARING)

PARTIAL PLAN

FOR CONTINUATION SEE SH'T 7/20

A607 @ 1'-0" | 28-A607 @ 1'-0" (TYPICAL ALL 28'-0" PANELS UNLESS OTHERWISE SHOWN) | 19-A607 @ ABOUT 1'-0"

1'-0" (TYP.)

1-A528 F.F. (TYPICAL ALL 32'-0" PANELS UNLESS OTHERWISE SHOWN)

1-A501 F.F. (TYPICAL ALL 28'-0" PANELS UNLESS OTHERWISE SHOWN)

3-A528 @ 2'-0" MAX. E.F. (TYPICAL ALL 32'-0" PANELS UNLESS OTHERWISE SHOWN)

CONTRACTION JOINT KEY (TYPICAL)

3-A501 @ 2'-0" MAX. E.F. (TYPICAL ALL 28'-0" PANELS)

EL. 1002.23

5-A702 EL. 1002.00

5-A701

5-A702 EL. 1000.00

EL. 1006.13 APPROACH SLAB SEAT

EL. 1007.49 CROWN

1-A530 F.F.

EL. 1008.18

EL. 1007.32

1-A568 N.F. (BACK WALL)

1-A570 F.F. EL. 1008.14

2" ℄ CONDUIT

1-A531 F.F.

1-A632 F.F.

3-A529 @ 2'-0" E.F. (SECT. "AA" SIMILAR)

14-A606 (MATCH A619 BARS)

14-A605 F.F. (MATCH A619 BARS)

EL. 1002.47

EL. 1002.42

1-A620 F.F.

1-A620 MATCH A619 BAR SPACING FOR PLACEMENT

4-A565

4-A567 N.F.

4-A616 @ 1'-6" F.F.

4-A612 @ 1'-8" N.F.

4-A620 @ 2'-0" N.F. (BACK WALL)

3-A614 TOP

1-A619 F.F. ADDITIONAL

24-A702 E.F.

24-A527 (MATCH A702 BARS)

7-A619 E.F. (SEE SECTION FOR PLACEMENT OF BARS)

24-A526 (MATCH A701 BARS)

24-A701 E.F.

24-A527 (MATCH A702 BARS)

7-A619 E.F. (SEE SECTION FOR PLACEMENT OF BARS)

24-A702 (MATCH A702 BARS)

26-A702 N.F. F.F.

26-A714

12-A612 @ 2'-0" N.F.

2 SPACES @ 1'-8" = 3'-4"

6 SPACES @ 1'-10" = 10'-0"

8 SPACES @ 2'-0" = 16'-0"

2 SPACES @ 1'-8" = 3'-4"

6 SPACES @ 1'-10" = 10'-0"

6 SPACES @ 2'-4 9/16" = 14'-3 3/8"

10 SPACES @ 6'-5 1/2" = 64'-2"

13-A619 @ 2'-0" E.F.

11-A619 @ 2'-0" E.F.

15-A619 @ 2'-0" F.F.

TYP. BAR SPACING FOR PANELS W/24 BARS E.F. (A-701 OR A-702)

13-A801 - 8 SETS REQ'D TOP (SEE SECTION "AA" FOR PLACEMENT)

11-A801 - 8 SETS REQ'D BOTT. (SEE SECTION "AA" FOR PLACEMENT)

EL. 976.5

186-A803 @ 1'-4" BOTT.

186-A802 @ 1'-4" BOTT.

248-A802 @ 1'-0" TOP

320-A603 (MATCH ALL A604, A612 ℄ A619 BARS N.F. ℄ F.F.)

PARTIAL ELEVATION

NOTE:
REFERENCE TO LOCAL TANGENT REFERS TO THE LOCAL TANGENT LINE ℄ STA. 237+07.00 EXTENDED TO INTERSECT ℄ ABUT. BEARINGS.

FOR SECTIONS SEE SHEET № 9/20 AND 10/20

FOR LIGHTING DETAILS NOT SHOWN SEE LIGHTING PLANS.

STATE OF OHIO
DEPARTMENT OF HIGHWAYS
BUREAU OF BRIDGES

8/20

DALTON • DALTON ASSOCIATES

ABUTMENT A-2 DETAILS

BRIDGE NO. SUM-8-1772
S.R-8 OVER CUYAHOGA RIVER
SUMMIT COUNTY
STA. 236+30.71 TO STA. 237+80.80

DESIGNED	DRAWN	TRACED	CHECKED	REVIEWED	DATE	REVISED
J.H. E.A.H.	R.J.P.		E.A.H. J.H.	R.W.H.	1-31-68	

FORM DDA-6

MICROFILMED
MAR 01 1979
REPRODUCTION

FED. RD.	STATE	PROJECT	
2	OHIO		

335
460

SUM-8-17.63

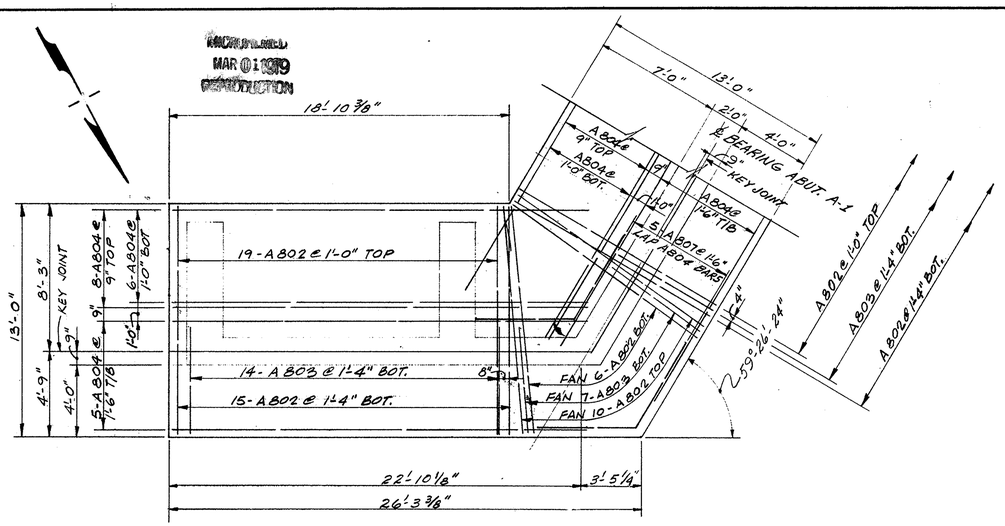

PARTIAL FOUNDATION PLAN
(FOR ABUTMENT A-1 WING WALL)

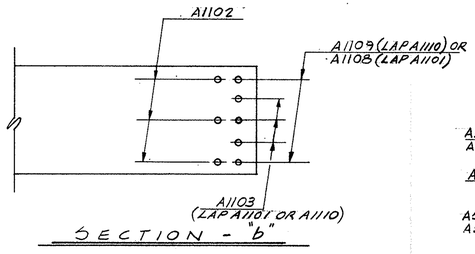

SECTION - "b"

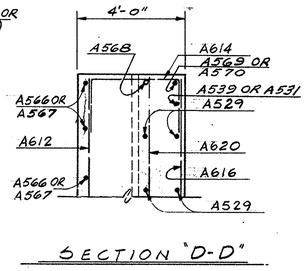

SECTION "D-D"

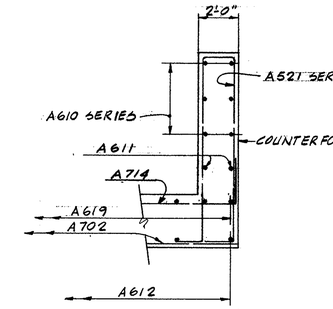

SECTION "H-H"

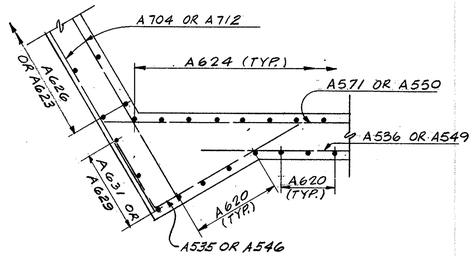

SECTION "E-E"

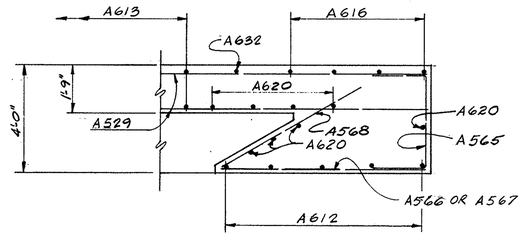

SECTION "F-F"

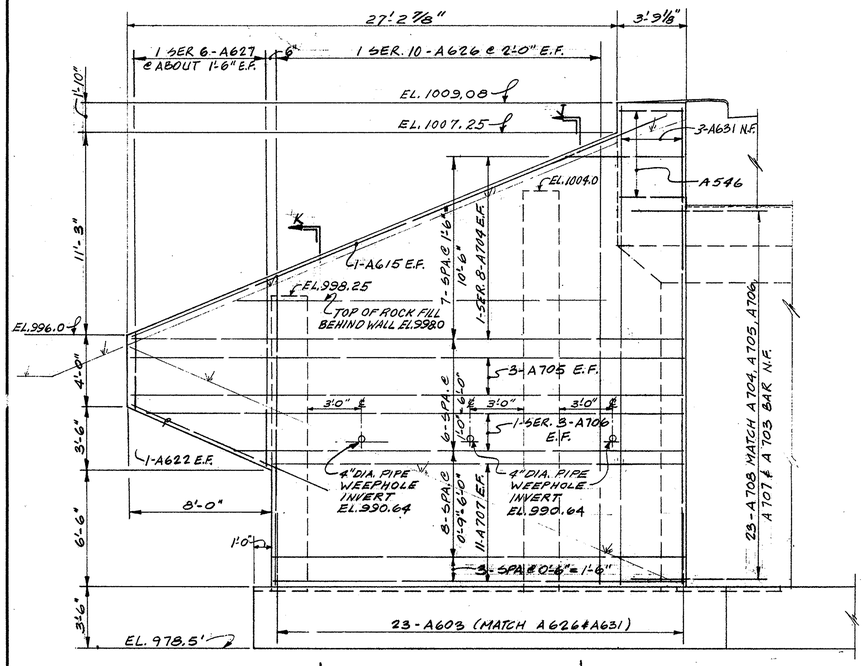

WING WALL ELEVATION
(FOR ABUTMENT A-1 WING WALL)

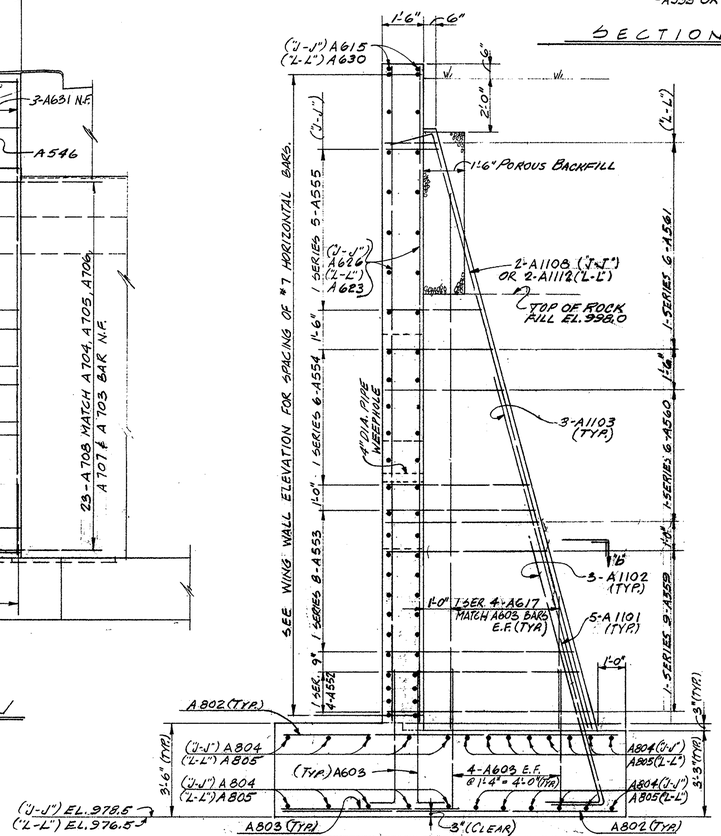

SECTION "J-J" AS SHOWN & NOTED
SECTION "L-L" AS NOTED

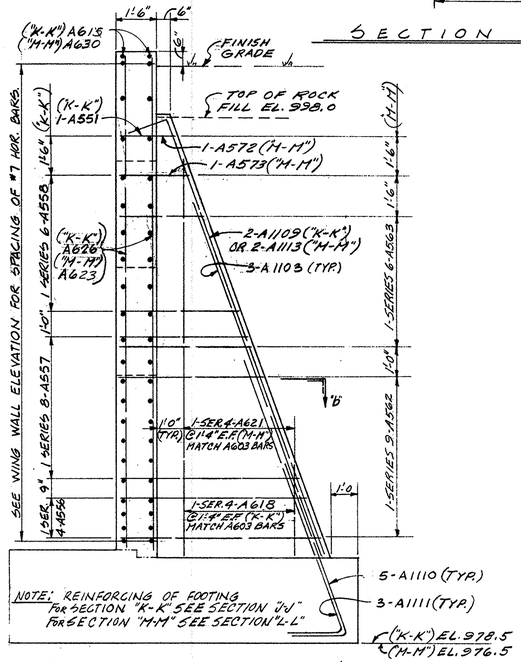

SECTION "K-K" AS SHOWN & NOTED
SECTION "M-M" AS NOTED

STATE OF OHIO
DEPARTMENT OF HIGHWAYS
BUREAU OF BRIDGES

9/20

DALTON · DALTON ASSOCIATES

ABUTMENT & WING WALL SECTIONS & DETAILS

BRIDGE NO. SUM-8-17 1/2

S.R.-8 OVER CUYAHOGA RIVER

SUMMIT COUNTY

STA. 236+30.71 TO STA. 237+80.80

DESIGNED	DRAWN	TRACED	CHECKED	REVIEWED	DATE	REVISED
J.H. E.A.H.	R.W.F. & D.F.D.		E.A.H. J.H.	R.D.H.	1-27-68	

FORM DDA-6

MICROFILMED
MAR 01 1979
OPERATION

MICROFILMED
0 - 1979
OPERATION

FED. RD.	STATE	PROJECT	
2	OHIO		

SUM-8-17.63

336
460

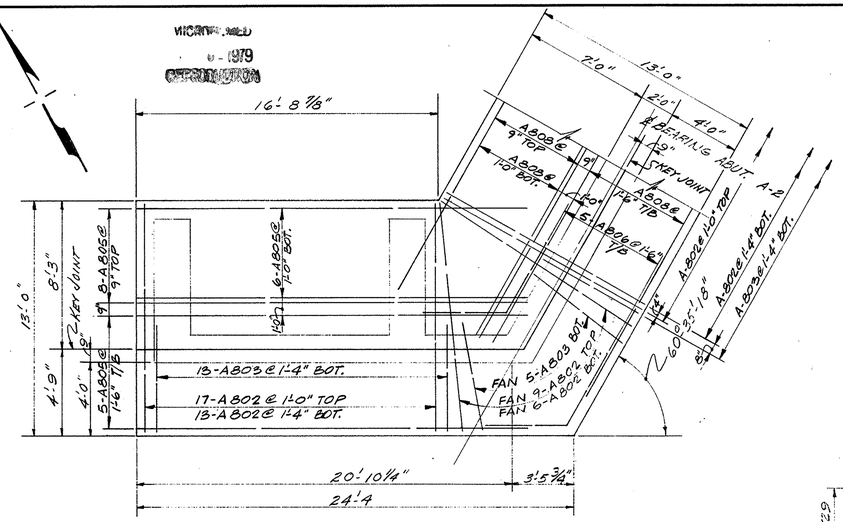

PARTIAL FOUNDATION PLAN
(FOR ABUTMENT A-2 WING WALL)

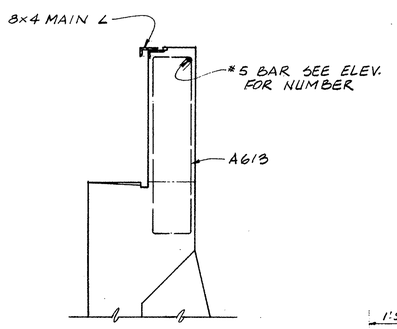

SECTION "B-B"
FOR REINFORCING NOT SHOWN SEE SECTION "A-A".

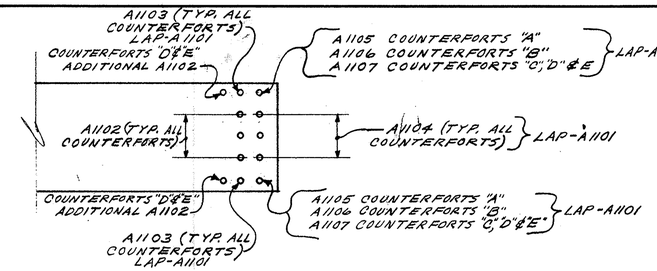

SECTION - "a"

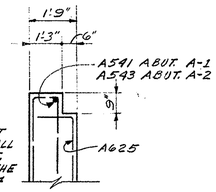

SECTION "C-C"
FOR REINFORCING NOT SHOWN SEE SECTION "A-A"

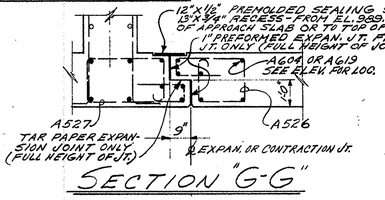

SECTION "G-G"

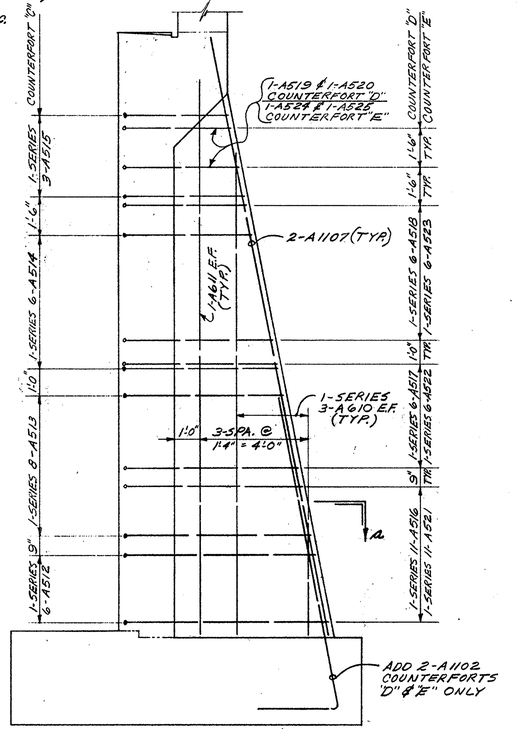

DETAIL COUNTERFORT "C" (AS SHOWN & NOTED)
DETAIL COUNTERFORT "D" & "E" (SIMILAR & NOTED)
REINFORCING NOT SHOWN HERE IS SIMILAR TO COUNTERFORT "A"

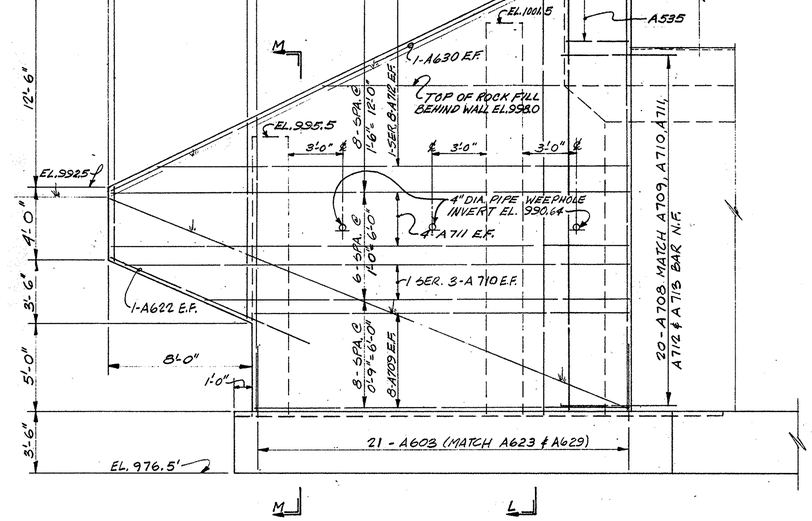

WING WALL ELEVATION
(FOR ABUTMENT A-2 WING WALL)

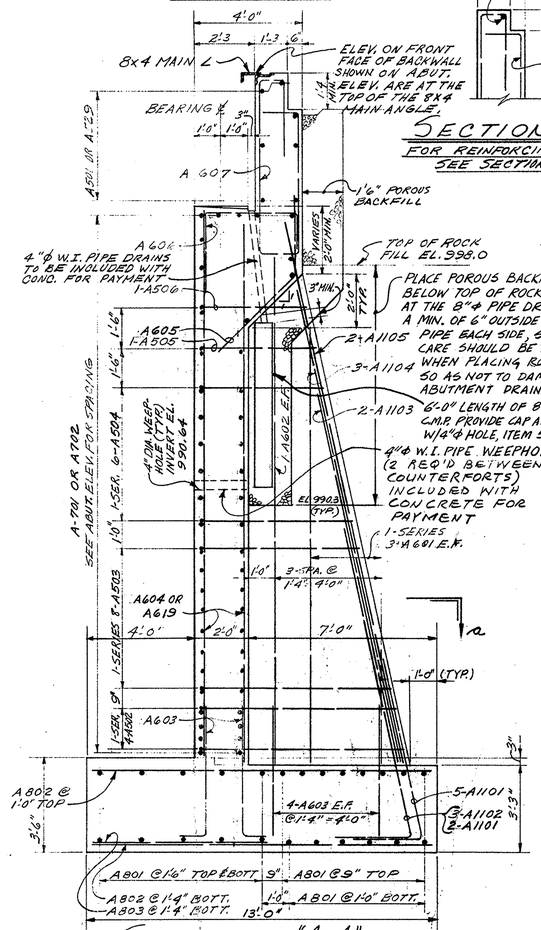

SECTION "A-A"
DETAIL FOR COUNTERFORT "A" AS SHOWN COUNTERFORTS "B", "C", "D" & "E" SIMILAR EXCEPT AS SHOWN IN OTHER DETAILS.

NOTE:
WALL SECTION SIMILAR THROUGHOUT ABUT. A-1 & A-2 EXCEPT FOR WING WALLS.

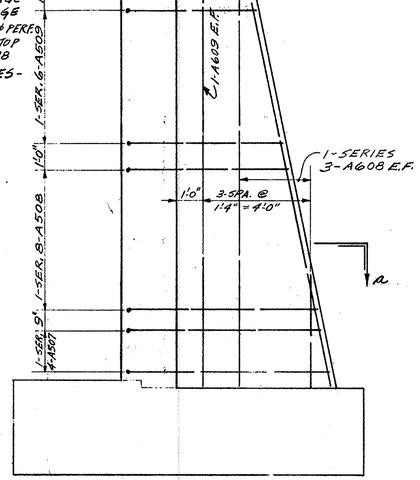

DETAIL COUNTERFORT "B"
REINFORCING NOT SHOWN HERE IS SIMILAR TO COUNTERFORT "A"

STATE OF OHIO
DEPARTMENT OF HIGHWAYS
BUREAU OF BRIDGES

10/20

DALTON • DALTON ASSOCIATES

ABUTMENT & WING WALL SECTIONS & DETAILS
BRIDGE NO. SUM-8-1772
S.R.-8 OVER CUYAHOGA RIVER
SUMMIT COUNTY
STA. 236+30.71 TO STA. 237+80.80

DESIGNED	DRAWN	TRACED	CHECKED	REVIEWED	DATE	REVISED
J.H. E.A.H.	R.J.P.		E.A.H. J.H.	R.D.H	1-31-68	

FORM DDA-6

MICROFILMED MAR 01 1979

FED. RD.	STATE	PROJECT	
2	OHIO		

337/460

SUM.-8-17.63

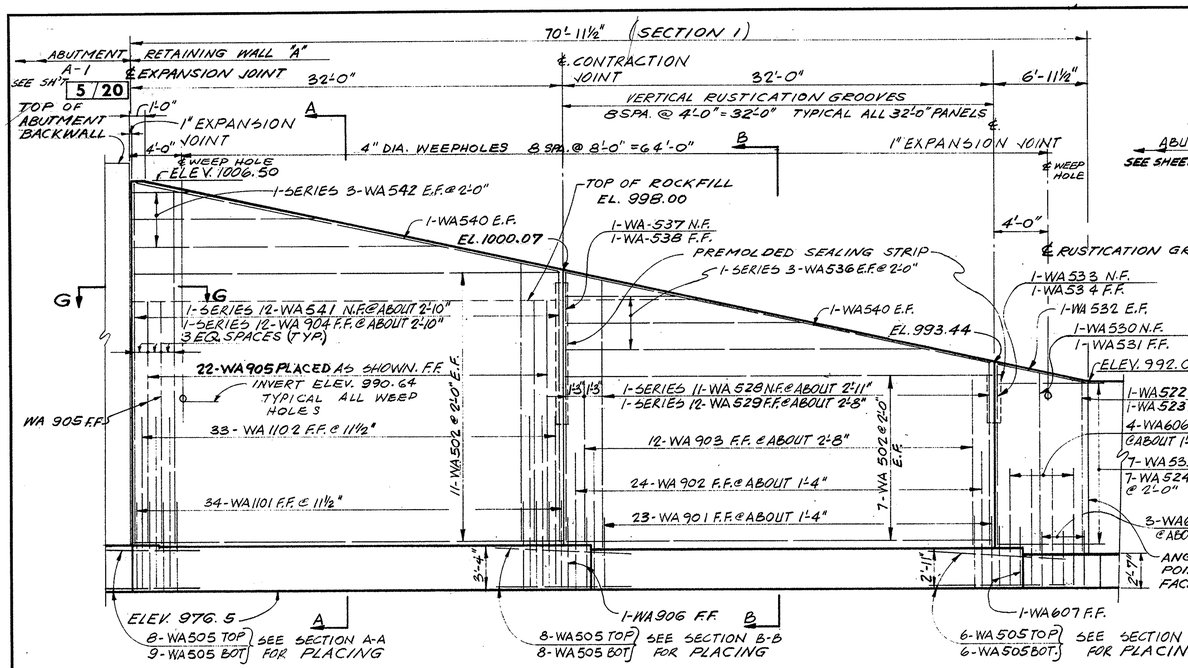

ELEVATION (SECTION 1)

NOTE: FOR ABUTMENT A-1 DETAILS SEE SHEET NO. 9/20

Quantities Carried to Sh. No. 339

WALL A ESTIMATED QUANTITIES

ITEM	TOTAL	UNIT	DESCRIPTION	WALL
503	579	Cu. Yds.	ROCK EXCAVATION	579
509	38,422	LB.	REINFORCING STEEL	38,422
511	400	CU. YDS.	CLASS "C" CONCRETE ABOVE FOOTING	400
511	329	CU. YDS.	CLASS "A" CONCRETE FOOTINGS	329
512	6	SQ. YDS.	TYPE "B" WATERPROOFING	6
512	14	LIN. FT.	PREMOLDED SEALING STRIP	14
516	145	SQ. FT.	1" PREFORMED EXPANSION JOINT FILLER	145
518	5	CU. YDS.	POROUS BACKFILL	5
503	LUMP	L. SUM	COFFERDAMS, CRIBS AND SHEETING	LUMP

QUANTITIES CHECKED BY: L.B. 10-30-67

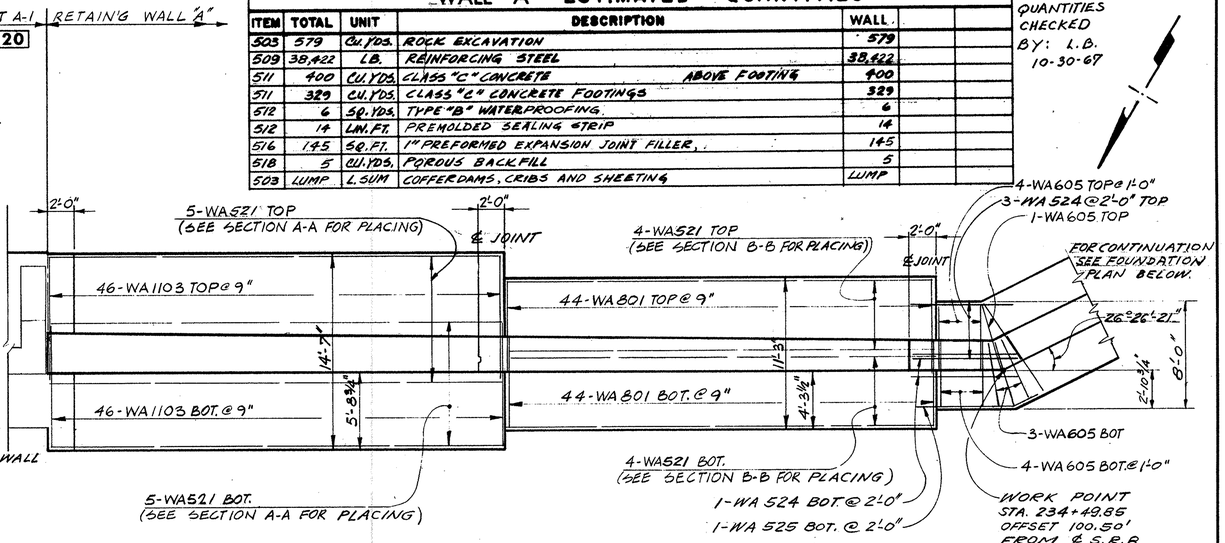

FOUNDATION PLAN (SECTION 1)

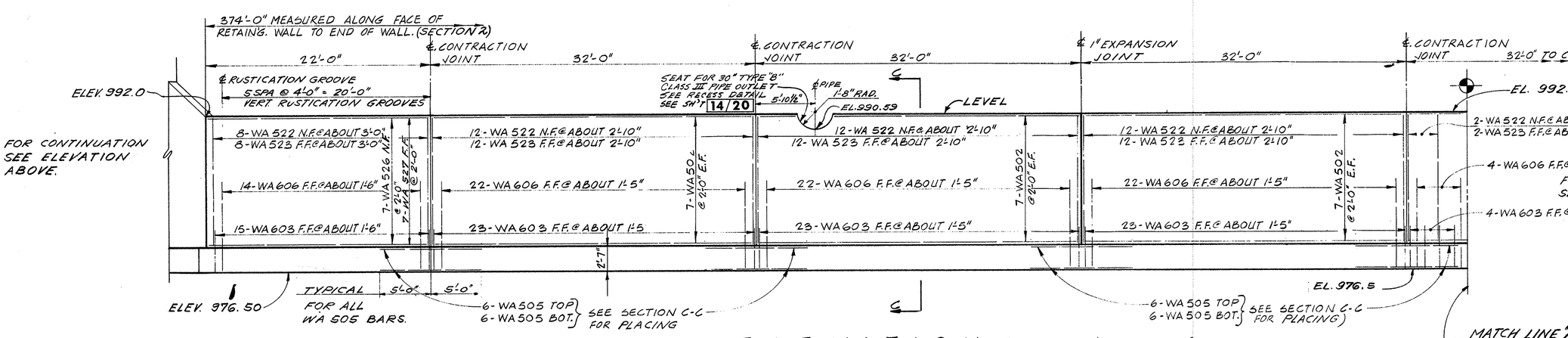

ELEVATION (SECTION 2)

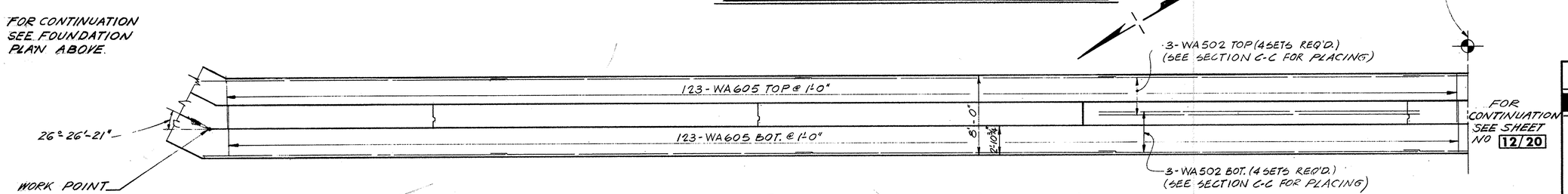

FOUNDATION PLAN (SECTION 2)

STATE OF OHIO
DEPARTMENT OF HIGHWAYS
BUREAU OF BRIDGES
11/20

DALTON · DALTON ASSOCIATES

RETAINING WALL A
BRIDGE NO. SUM-8-1772
S.R.-8 OVER CUYAHOGA RIVER
SUMMIT COUNTY
STA. 236+30.71 TO STA. 237+80.80

DESIGNED	DRAWN	TRACED	CHECKED	REVIEWED	DATE	REVISED
D.F.D.	D.F.D.		E.A.H.	R.D.H.	1-31-68	

FORM DDA-6

UNCONTROLLED
MAR 01 1979
REPRODUCTION

FED. RD.	STATE	PROJECT	
2	OHIO		

338
460

SUM-8-17.63

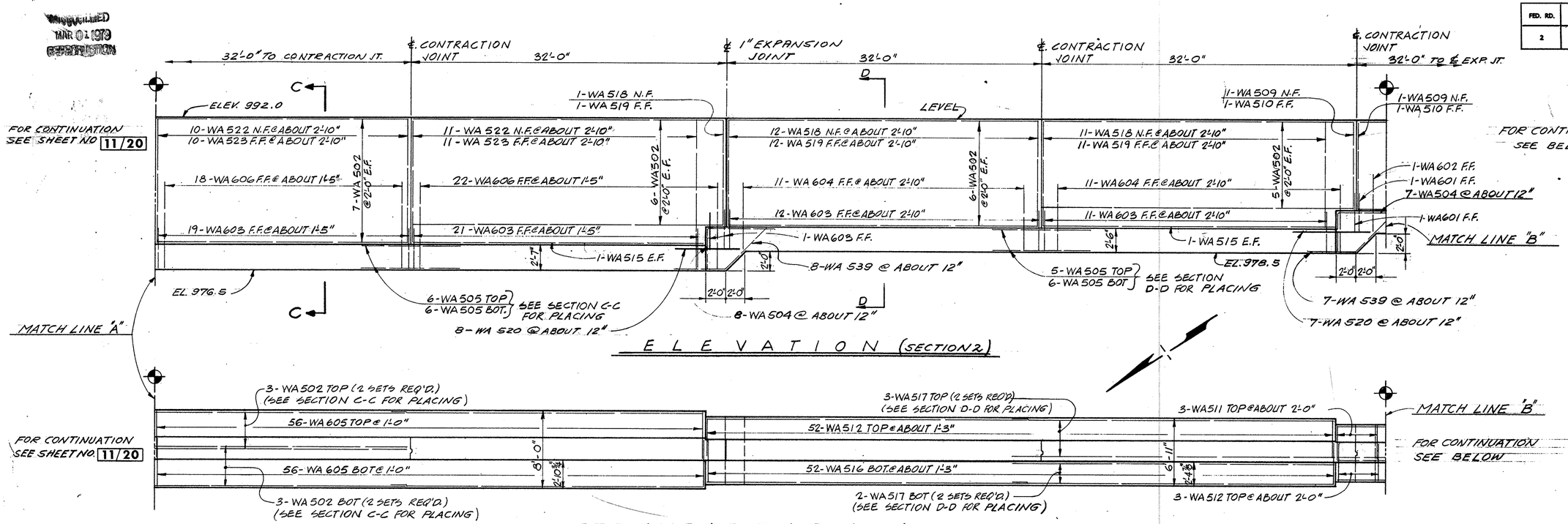

STATE OF OHIO
DEPARTMENT OF HIGHWAYS
BUREAU OF BRIDGES

12/20

DALTON • DALTON ASSOCIATES

RETAINING WALL A

BRIDGE NO. SUM-8-1772
S.R.-8 OVER CUYAHOGA RIVER
SUMMIT COUNTY
STA. 236+30.71 TO STA. 237+80.80

DESIGNED	DRAWN	TRACED	CHECKED	REVIEWED	DATE	REVISED
D.F.D.	D.F.D.		EAH	EAH	1-31-68	

FORM DDA-6

FED. RD.	STATE	PROJECT	
2	OHIO		

339
460

SUM-8-17.63

ABUTMENT A-2 SEE SHEET NO. 8/20

RETAINING WALL 'B'

56'-5½" (SECTION 1)

74'-0¼" (SECTION 2)

32'-0" | 24'-5½" | 10'-0¼" | 32'-0" | 32'-0"

℄ EXPANSION JOINT ℄ CONTR JOINT ℄ EXP. JOINT ℄ CONTR JOINT

EL 1006.5

1'-0" 4'-0"

1 SER 3-WB 503 @ 2'-0" EF
4" DIA. WEEP HOLES, 6 SPA. @ 8'-0" = 48'-0"

1-WB 504 @ 2'-0" EF

ANGLE POINT IN FACE OF WALL

2-WB 511

PREMOLDED SEALING STRIP

1-WB 509 NF

1-WB 510 FF

EL 998.39

1-WB 508 NF & FF

2-WB 512

TOP OF ROCK FILL EL 998.0

11½" TYP

1-SER. 12-WB 902 @ TBT. 2'-10" FF

1-SER. 12-WB 501 @ TBT. 2'-10" NF

INVERT ELEV. 990.64 TYPICAL ALL WEEP HOLES

WB 901 or 22-WB 901 @ FF PLACED AS SHOWN

1-SER. 8-WB 507 @ TBT 3'-0" NF

2-WB 510 @ 2'-0"

1 SER 8-WB 506 @ 2'-8" FF

9-WB 903 @ 2'-8 FF

18-WB 904 DOWELS @ 1'-4" FF

16-WB 905 DOWELS @ 1'-4" FF

1-WB 906 @ 1'-4" FF

10-WB 502 @ 4'-0" EF

33-WB 1102 @ 11½" FF

34-WB 1101 @ 11½" FF

8-WB 505 SEE SECT. 'A-A' FOR PLACING

EL 976.5

3'-4"

9-WB 505 SEE SECT. 'A-A' FOR PLACING

5'-0" TYP FOR WB 505 BARS

8-WB 505 SEE SECT. 'B-B' FOR PLACING

2'-0"

8-WB 505 SEE SECT. 'B-B' FOR PLACING

2'-11"

1-WB 513 N.F.

1-WB 527 F.F.

8-WB 519 @ 1'-0"

GWB 601 @ 1'-6" FF

GWB 602 @ 1'-6" FF

8-WB 525 @ 1'-0"

2'-0"

1-WB 514 @ 2'-0" EF

GWB 515 @ 2'-0" NF
GWB 505 @ 2'-0" FF
3-WB 516 @ 3'-0" N.F.

3-WB 517 @ 3'-0" FF

1-WB 528 FF

1-WB 529 NF

EL 992.0

D D

1-WB 526 FF

1-WB 527 NF

11-WB 528 @ 2'-10" FF

11-WB 529 @ 2'-10" NF

5-WB 502 @ 2'-0" EF

11-WB 604 @ 2'-10" FF

1-WB 523 @ 2'-10" EF

2'-6"

1:1

8-WB 524 @ 1'-0"

EL 978.5

11-WB 603 @ 2'-10" FF

2-WB 603 @ 1'-6" FF

E E

1-SER 3-WB 531 @ 3'-0" EF

3-WB 502 @ 2'-0" EF

9-WB 526 @ 3'-0" FF

9-WB 527 @ 3'-0" NF

2'-0"±

8-WB 606 @ 3'-0" FF

2'-4"

1:1

2'-0"

7-WB 524 @ 1'-0"

1'-0"

1-WB 605 FF

9-WB 605 @ 3'-0" FF

7-WB 525 @ 1'-0"

7-WB 519 @ 1'-0"

EL 992.0

EL 987.0

EL 982.0

EL 980.5

8'-0"

7'-0"

1-WB 532 E.F.

1-WB 533 E.F.

ELEVATION (SECTION 1 & 2)

Fed., State & City Code 7221

RETAINING WALL ESTIMATED QUANTITIES

ITEM	TOTAL	UNIT	DESCRIPTION	WALL B	WALL A Fr: Sh. 337	WALL Fr: Sh. No. 311
503	2,278	CU. YD.	ROCK EXCAVATION	228	579	1471
509	123,944	LBS	REINFORCING STEEL	20,176	38,422	65,346
511	1,061	CU.YD	CLASS "C" CONCRETE, ABOVE FOOTING	139	400	522
511	825	CU.YD	CLASS "C" CONCRETE, FOOTINGS	184	329	372
512	20	SQ.YD	TYPE "B" WATERPROOFING	6	6	8
512	182	LIN.FT	PREMOLDED SEALING STRIP	8	14	160
516	486	SQ.FT	1" PREFORMED EXPANSION JOINT FILLER,	79	145	262
518	344	CU.YD.	POROUS BACKFILL	6	5	333
503	LUMP	L.SUM	COFFERDAMS, CRIBS AND SHEETING	LUMP	"Lump"	
503	748	Cu. Yds.	Unclassified Excavation			748

QUANTITIES CHECKED BY: L.B. 10-30-67

NOTE: FOR SECTIONS SEE SHEET 14/20

ABUTMENT A-2 SEE SHEET No. 8/20

46-WB 1103 @ 9" TOP

5-WB 522 @ 2'-0" TOP

31-WB 801 @ 9" TOP

4-WB 520 @ 2'-0" TOP

1-WB 801 TOP

4'-4"

2'-0"

5'-0¼"

5-WB 522 @ 2'-0" BOT.

46-WB 1103 @ 9" BOT.

32'-0"

℄ WALL EXP. JOINT

RETAINING WALL 'B'

56'-5½" (SECTION 1)

℄ WALL CONTR. JOINT

24'-5½"

1'-3½"

4'-3½"

33°36'-19"

SEE 4-WB 521 @ 2'-0" BOT.

27-WB 801 @ 9" BOT.

1-WB 801 BOT.

4-WB 607 @ 1'-0" TOP

3-WB 536 @ 2'-0" TOP

2'-0"

℄ WALL EXP. JOINT

27-WB 530 @ 1'-3" TOP

3-WB 502 @ 2'-0" TOP

3-WB 535 @ 2'-0" TOP

14-WB 537 @ 2'-0" TOP

27-WB 534 @ 1'-3" BOT.

1'-5⅞"

1'-7⅛"

5'-0"

1'-11½"

2-WB 536 @ 2'-0" BOT.

2-WB 502 @ 2'-0" BOT.

2-WB 535 @ 2'-0" BOT.

8-WB 607 @ 1'-0" BOT

14-WB 530 @ 2'-0" BOT.

1-WB 518 @ 2'-0" BOT

℄ WALL CONTR JOINT

WORK POINT STA. 240+00.00 OFFSET 98.00' FROM ℄ S.R.B

2'-0"

10'-0¼" ℄ WALL EXP. JOINT 32'-0"

32'-0"

74'-0¼" (SECTION 2)

WORK POINT STA. 239+27.78 OFFSET 97.76' FROM ℄ S.R.B.

FOUNDATION PLAN (SECTION 1 & 2)

STATE OF OHIO
DEPARTMENT OF HIGHWAYS
BUREAU OF BRIDGES

13/20

DALTON • DALTON ASSOCIATES

RETAINING WALL B
BRIDGE NO. SUM-8-1772
S.R.-8 OVER CUYAHOGA RIVER
SUMMIT COUNTY
STA. 236+30.71 TO STA. 237+80.80

DESIGNED	DRAWN	TRACED	CHECKED	REVIEWED	DATE	REVISED
W.I.S.	W.I.S.		E.A.H.	R.D.H	1-31-68	

FORM DDA-6

MICROFILMED
MAR 01 1979
REPRODUCTION

FED. RD.	STATE	PROJECT	
2	OHIO		

340
460

SUM - 8 - 17.63

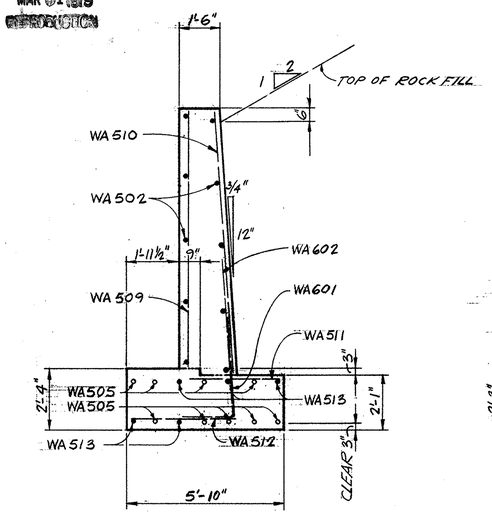

SECTION E-E

WALL "A" AS SHOWN
WALL "B" SIMILAR

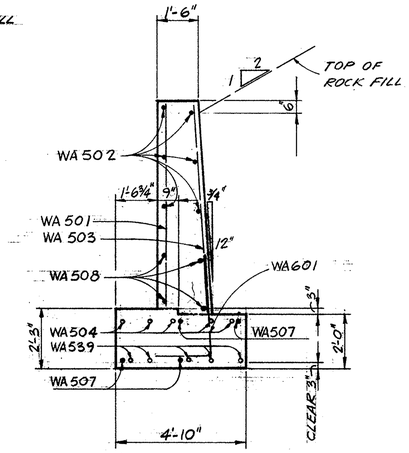

SECTION F-F

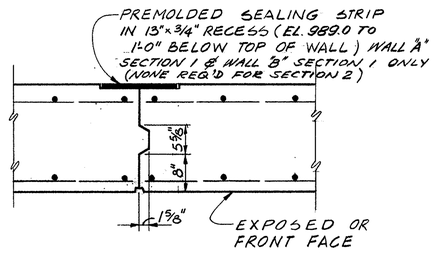

CONTRACTION JOINT DETAIL

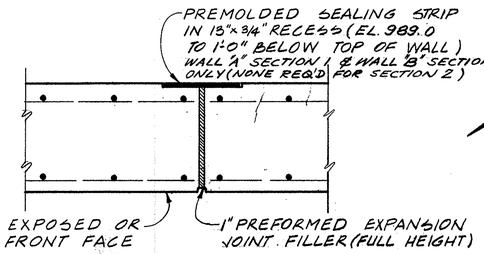

EXPANSION JOINT DETAIL

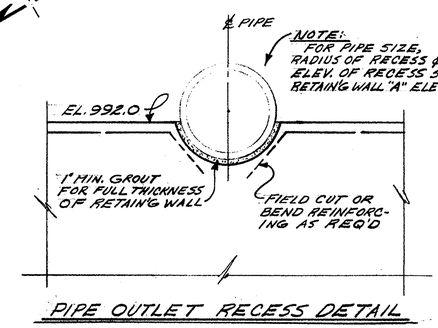

PIPE OUTLET RECESS DETAIL

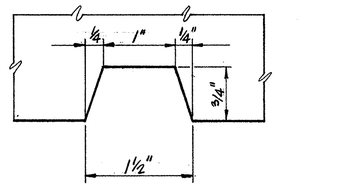

VERTICAL RUSTICATION GROOVE
(SPACED 4'-0" ℄)

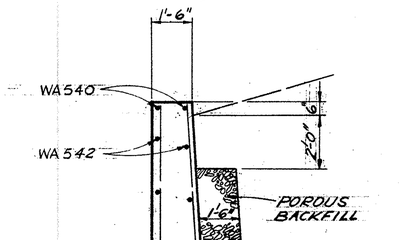

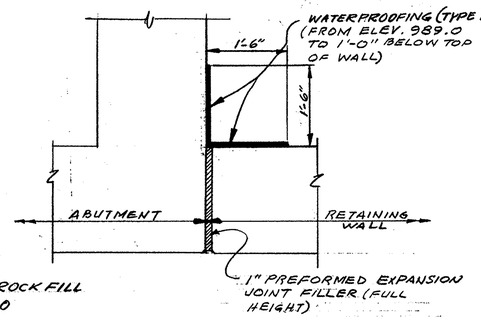

SECTION "G-G"

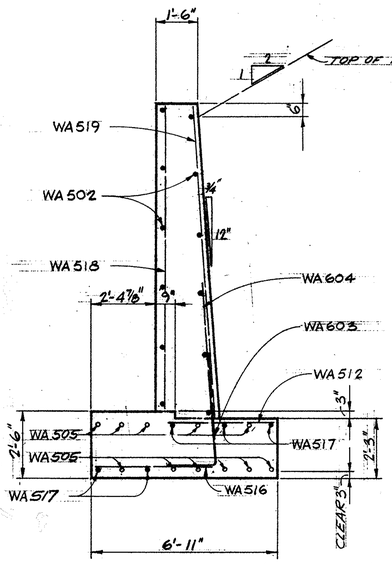

SECTION D-D

WALL "A" AS SHOWN
WALL "B" SIMILAR

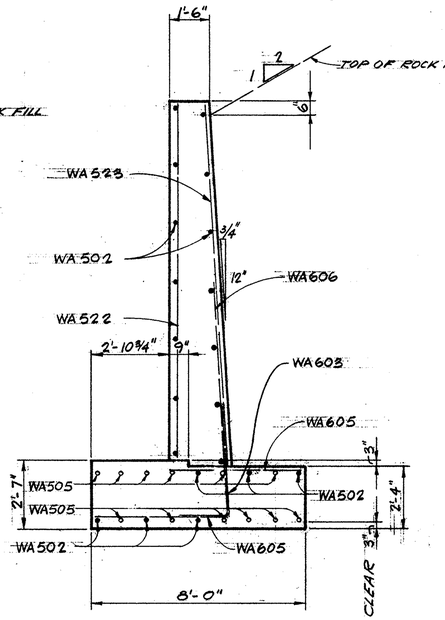

SECTION C-C

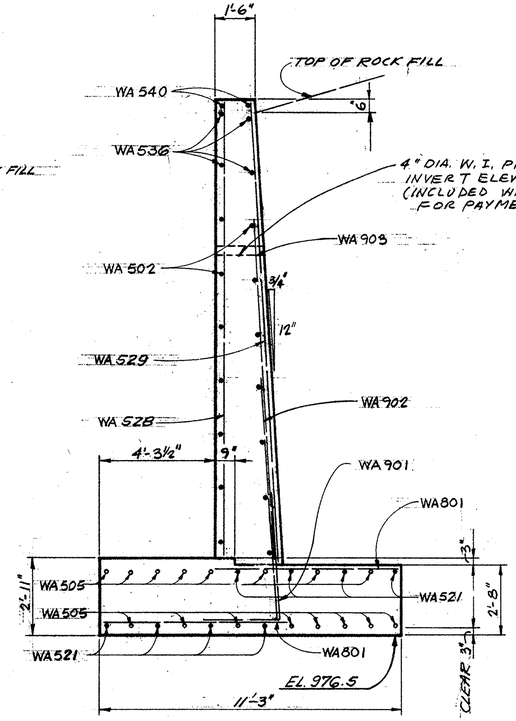

SECTION B-B

WALL "A" AS SHOWN
WALL "B" SIMILAR

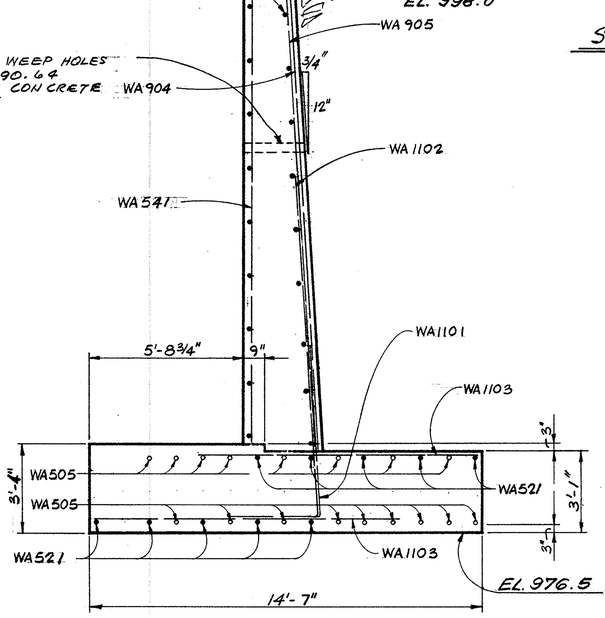

SECTION A-A

WALL "A" AS SHOWN
WALL "B" SIMILAR

NOTE: CONCRETE FOR RETAINING WALLS SHALL BE CLASS "C".

STATE OF OHIO
DEPARTMENT OF HIGHWAYS
BUREAU OF BRIDGES

14/20

DALTON • DALTON ASSOCIATES

RETAINING WALL DETAILS

BRIDGE NO. SUM-8-1772
S.R.-8 OVER CUYAHOGA RIVER
SUMMIT COUNTY
STA. 236+30.71 TO STA. 237+80.80

DESIGNED	DRAWN	TRACED	CHECKED	REVIEWED	DATE	REVISED
D.F.D.	D.F.D.		EAH	RDH	1-31-68	

MICROFILMED
MAR 01 1968
CONSTRUCTION

FED. RD.	STATE	PROJECT	
2	OHIO		

341
460

SUM-8-17.63

123'-0½" (LEFT)
117'-9" (RIGHT)

11'-8¾" (LEFT)
11'-4½" (RIGHT)

5 SPACES @ 19'-11" = 99'-7" (LEFT)
5 SPACES @ 19'-0" = 95'-0" (RIGHT)

11'-8¾" (LEFT)
11'-4½" (RIGHT)

℄ BEAM A (LEFT)
℄ BEAM H (RIGHT)

℄ BEAM B (LEFT)
℄ BEAM J (RIGHT)

℄ BEAM C (LEFT)
℄ BEAM K (RIGHT)

℄ BEAM D (LEFT)
℄ BEAM L (RIGHT)

℄ BEAM E (LEFT)
℄ BEAM M (RIGHT)

℄ BEAM F (LEFT)
℄ BEAM N (RIGHT)

℄ BEAM G (LEFT)
℄ BEAM P (RIGHT)

STA. 237+07.00
℄ S.R.8

3'-0"
1'-6"
1'-6"

30°00'00"

LOCAL TANGENT TO ℄ S.R. 8 @ STA. 237+07.00 (RELATED TO RIGHT PIER)

29°18'00" (TYP. ALL BMS. LEFT)
30°48'00" (TYP. ALL BMS. RIGHT)

LOCAL TANGENT TO ℄ S.R. 8 @ STA. 237+07.00 (RELATED TO LEFT PIER)
30°00'00"

℄ BRG. PIER

STA. 237+07.00
℄ S.R. 8

℄ PIER & BEAM

1'-9"

6 SPACES @ ABOUT 19'-11⅛" = 119'-6⅞" (LEFT)
6 SPACES @ 19'-0½" = 114'-3" (RIGHT)

1'-9"

61'-6¼" (LEFT)
58'-10½" (RIGHT)

61'-6¼" (LEFT)
58'-10½" (RIGHT)

62'-11½" ℄ S.R.8 TO ℄ RIGHT PIER

65'-7¼" ℄ S.R.8 TO ℄ LEFT PIER

PLAN

(LEFT PIER = SOUTHBOUND LANES)
(RIGHT PIER = NORTHBOUND LANES)

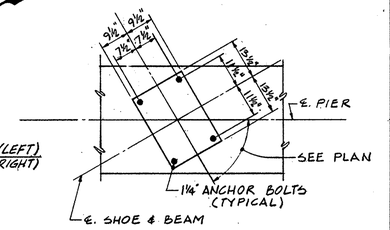

ANCHOR BOLT HOLE PLAN FOR BOLSTERS

ELEV. 1000.63 (LEFT)
ELEV. 1001.29 (RIGHT)

ELEV. 1000.72 (LEFT)
ELEV. 1001.55 (RIGHT)

ELEV. 1000.85 (LEFT)
ELEV. 1001.76 (RIGHT)

ELEV. 1001.02 (LEFT)
ELEV. 1001.99 (RIGHT)

ELEV. 1001.22 (LEFT)
ELEV. 1002.21 (RIGHT)

ELEV. 1001.43 (LEFT)
ELEV. 1002.44 (RIGHT)

ELEV. 1001.37 (LEFT)
ELEV. 1002.44 (RIGHT)

A

1-P604 E.F.

6-P18501

1-P603 E.F. (LEFT)
1-P605 E.F. (RIGHT)

D

6-P18501

1-P604 E.F.

4-P501 @2'-0" E.F. (LEFT)
4-P503 @2'-0" E.F. (RIGHT)

91-P503 @1'-0" (LEFT)
85-P503 @1'-0" (RIGHT)

1-P603 E.F.

4'-0"

A

1-P609 E.F.
1-P608 E.F.
1-P607 E.F.

CONSTRUCTION JOINT

1-P607 E.F.
1-P608 E.F.

4'-0"

1-P502 E.F. (LEFT)
1-P506 E.F. (RIGHT)

9"
14 SPA. @ 1'-0" = 14'-0"
15-P504 TOP
1 SER. 15-P505 BOT.
15'-0" (TYP.)
7-P507 @ 2'-0"

EL. 992.63 (LEFT)
EL. 993.29 (RIGHT)

7-P501 @2'-0" E.F. (LEFT)
7-P508 @2'-0" E.F. (RIGHT)

91-P502 & P602 @ 1'-0" E.F. (LEFT)
85-P506 & P602 @ 1'-0" E.F. (RIGHT)

OPTIONAL CONST. JOINT

B

1-P502 E.F. (LEFT)
1-P506 E.F. (RIGHT)

9"
14 SPA. @ 1'-0" = 14'-0"
15-P504 TOP
1 SER. 15-P505 BOT.
15'-0" (TYP.)

1-P502 @ END (LEFT)
1-P506 @ END (RIGHT)
7-P507 @ 2'-0"

1-P502 @ END (LEFT)
1-P506 @ END (RIGHT)

C

C

1-P602
ELEV. 976.50

3'-6"

ELEV. 976.50'

1-P602
1-P602 E.F.

2-P601 (LEFT)
2-P606 (RIGHT)

{2-P601 (LEFT)
2-P606 (RIGHT)}

1-P602 E.F.

B

D

ELEVATION

(LEFT PIER = SOUTHBOUND LANES)
(RIGHT PIER = NORTHBOUND LANES)

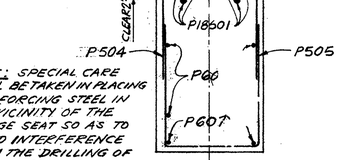

NOTE: SPECIAL CARE SHALL BE TAKEN IN PLACING REINFORCING STEEL IN THE VICINITY OF THE BRIDGE SEAT SO AS TO AVOID INTERFERENCE WITH THE DRILLING OF ANCHOR BOLT HOLES.

SECTION "A-A"

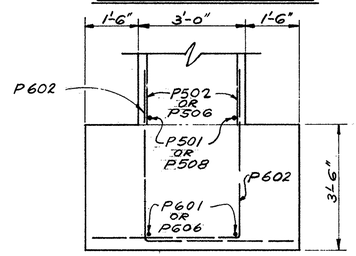

SECTION "B-B"

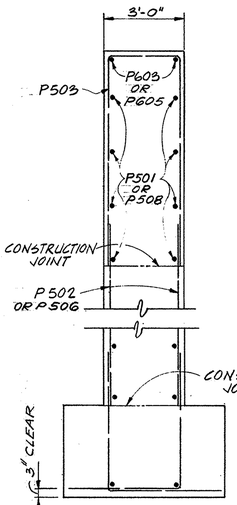

SECTION "D-D"

NOTE:
FOR REMAINDER OF BAR MARKS SEE SECTION "B-B"

93'-0½" (LEFT)
87'-9" (RIGHT)

45'-0¼" (LEFT)
42'-4½" (RIGHT)

45'-0¼ (LEFT)
42'-4½ (RIGHT)

1'-6" 1'-6" 1'-0"

P502 (LEFT)
P506 (RIGHT)

P501 (LEFT)
P508 (RIGHT)

℄ OPTIONAL CONST. JT. ℄ PIER

℄ OPTIONAL CONST. JT.

P507

P502 (LEFT)
P506 (RIGHT)

6'-0"
1'-6"
3'-0"
1'-6"

1'-6" (TYP.)

1½" (TYP.)

℄ BRG. PIER

1'-6" RADIUS (TYP.)

P507

P502 (LEFT)
P506 (RIGHT)

95'-0½" (LEFT)
89'-9" (RIGHT)

SECTION C-C

STATE OF OHIO
DEPARTMENT OF HIGHWAYS
BUREAU OF BRIDGES

15/20

DALTON · DALTON ASSOCIATES

PIER DETAILS

BRIDGE NO. SUM-8-1772
S.R.-8 OVER CUYAHOGA RIVER
SUMMIT COUNTY
STA. 236+30.71 TO STA. 237+80.80

DESIGNED	DRAWN	TRACED	CHECKED	REVIEWED	DATE	REVISED
J.H.	D.F.D.		E.A.H.	R.D.M.	1-31-68	

FORM DDA-R

FED. RD.	STATE	PROJECT	
2	OHIO		

342
460

SUM-8-17.63

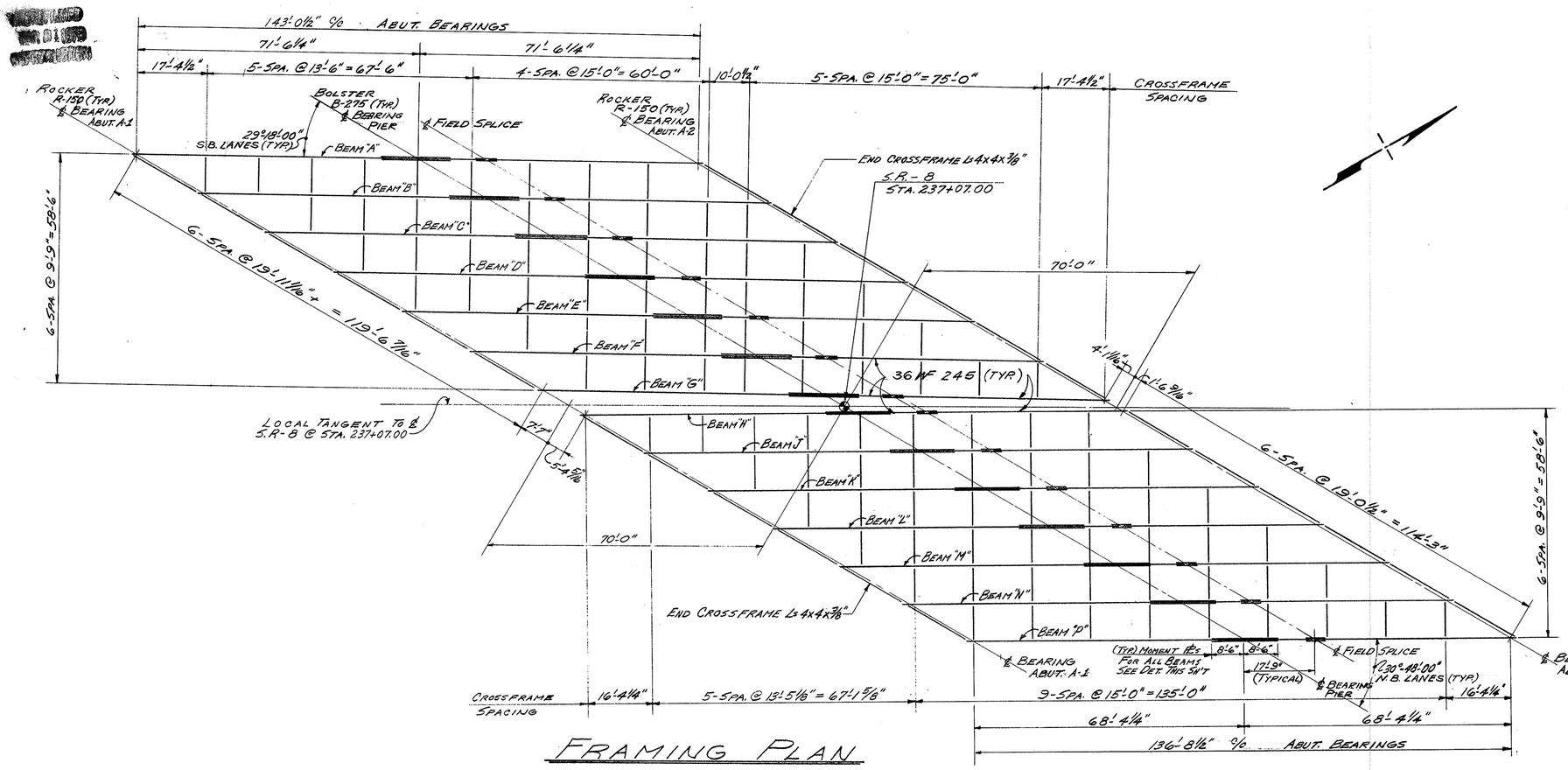

FRAMING PLAN

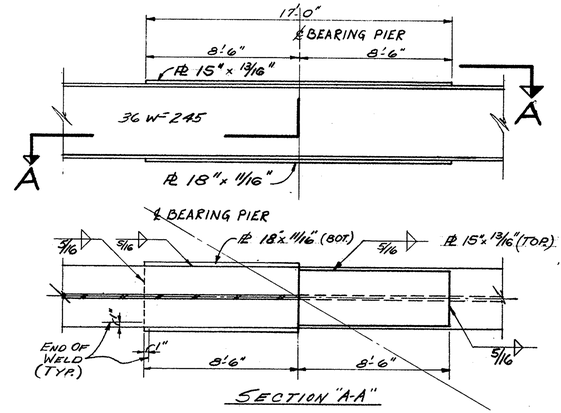

SECTION "A-A"

MOMENT PLATE WELDING DETAILS

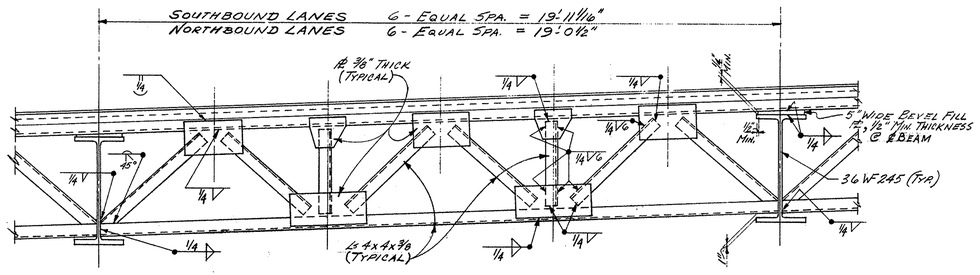

END CROSSFRAME DETAIL

BEAM SPACING MEASURED PARALLEL TO END DIAM

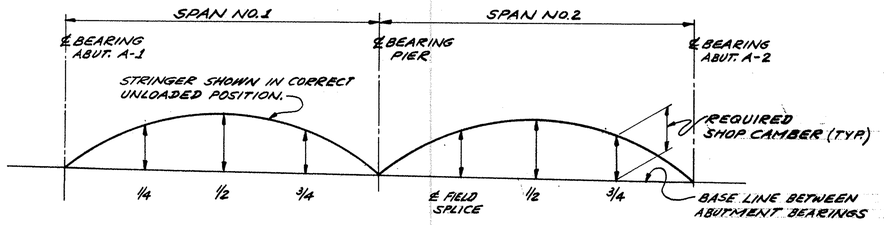

LAYOUT DIAGRAM

NOTE: ALL LENGTHS ARE ALONG ℄ OF BEAM

DEFLECTION AND CAMBER

BEAMS	"B" THROUGH "F" & "J" THROUGH "N"						"A", "G", "H" & "P"					
SPANS	SPAN NO. 1			SPAN NO.2			SPAN NO. 1			SPAN NO.2		
POINT	1/4	1/2	3/4	FIELD SPLICE	1/2	3/4	1/4	1/2	3/4	FIELD SPLICE	1/2	3/4
DEFLECTION DUE TO WEIGHT OF STEEL	.12	.15	.07	.07	.15	.12	.12	.15	.07	.07	.15	.12
DEFLECTION DUE TO REMAINING DEAD LOAD	.55	.65	.30	.30	.66	.55	.41	.47	.21	.20	.42	.34
ADJUSTMENT FOR REQ'D. VERTICAL CURVE	0	0	0	0	0	0	0	0	0	0	0	0
SUM OF DEFLECTION AND ADJUSTMENT	.67	.80	.37	.37	.80	.67	.53	.62	.28	.27	.57	.46
REQUIRED SHOP CAMBER	11/16"	13/16"	3/8"	3/8"	13/16"	11/16"	1/2"	5/8"	1/4"	1/4"	9/16"	7/16"

STATE OF OHIO
DEPARTMENT OF HIGHWAYS
BUREAU OF BRIDGES

16/20

DALTON · DALTON ASSOCIATES

FRAMING PLAN
BRIDGE Nº SUM-8-1772
S.R.-8 OVER CUYAHOGA RIVER
SUMMIT COUNTY
STA. 236+30.71 TO STA. 237+80.80

DESIGNED	DRAWN	TRACED	CHECKED	REVIEWED	DATE	REVISED
B.W.Mc	R.J.P.		D.H.S.	P.D.H	1-31-68	

FORM DDA-6

MICROFILMED MAR 01 1973

FED. RD.	STATE	PROJECT	
2	OHIO		

343/460

SUM-8-17.63

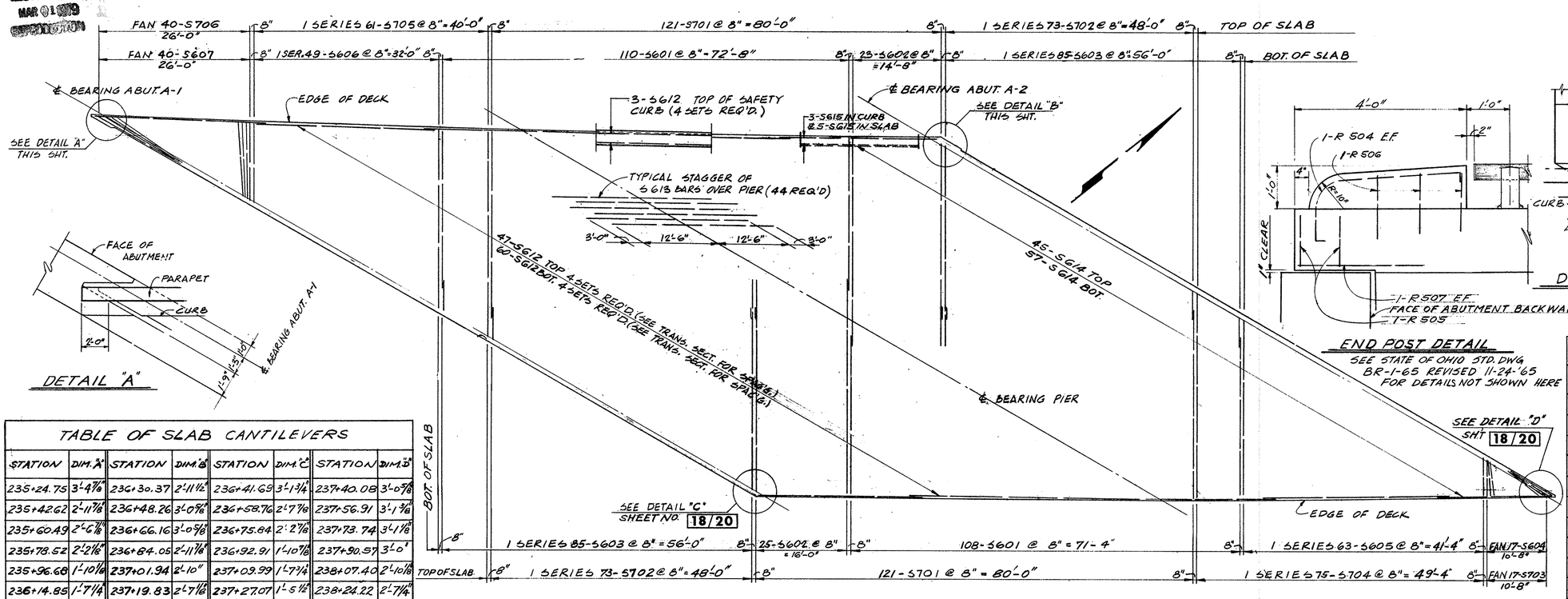

END POST DETAIL

SEE STATE OF OHIO STD. DWG. BR-1-65 REVISED 11-24-'65 FOR DETAILS NOT SHOWN HERE

TABLE OF SLAB CANTILEVERS

STATION	DIM. "A"	STATION	DIM. "B"	STATION	DIM. "C"	STATION	DIM. "D"
235+24.75	3'-4 7/8"	236+30.37	2'-11 1/2"	236+41.69	3'-1 3/4"	237+40.08	3'-0 5/8"
235+42.62	2'-11 7/8"	236+48.26	3'-0 5/8"	236+58.76	2'-7 7/8"	237+56.91	3'-1 3/8"
235+60.49	2'-6 7/8"	236+66.16	3'-0 5/8"	236+75.64	2'-2 7/8"	237+73.74	3'-1 7/8"
235+78.52	2'-2 1/8"	236+84.05	2'-11 7/8"	236+92.91	1'-10 7/8"	237+90.57	3'-0"
235+96.68	1'-10 1/8"	237+01.94	2'-10"	237+09.99	1'-7 3/4"	238+07.40	2'-10 1/8"
236+14.85	1'-7 1/4"	237+19.83	2'-7 1/8"	237+27.07	1'-5 1/2"	238+24.22	2'-7 1/4"
236+33.01	1'-5 1/4"	237+37.72	2'-3 1/4"	237+44.15	1'-4 1/8"	238+41.05	2'-3 1/2"
236+51.18	1'-4 3/8"	237+55.61	1'-10 1/2"	237+61.23	1'-3 5/8"	238+57.87	1'-10 7/8"
236+69.34	1'-4 3/8"	237+73.49	1'-4 3/4"	237+78.32	1'-4 1/8"	238+74.69	1'-5 3/8"

TABLE OF PAVEMENT ELEVATIONS

STATION	PROFILE GRADE	EL. "A"*	EL. "B"*	EL. "C"*	EL. "D"*	EL. "E"*	EL. "F"*
235+50	1007.94	1006.66					
+75	1007.77	1006.34					
236+00	1007.59	1005.98					
+25	1007.41	1005.73	1007.42				
+50	1007.23	1005.48	1007.28	1007.13			
+75	1007.06		1007.08	1006.96	1007.23		
237+00	1006.88		1006.88	1006.78	1007.04		
+25	1006.70		1006.74	1006.59	1006.83		
+50	1006.52		1006.56	1006.43	1006.69	1008.36	1008.26
+75	1006.35			1006.21	1006.51	1008.18	1008.10
238+00	1006.17					1007.97	1007.87
+25	1005.99					1007.82	1007.70
+50	1005.81					1007.65	1007.56
+75	1005.64						1007.35

PLAN - SLAB DECK REINFORCING

(SOUTHBOUND LANES)

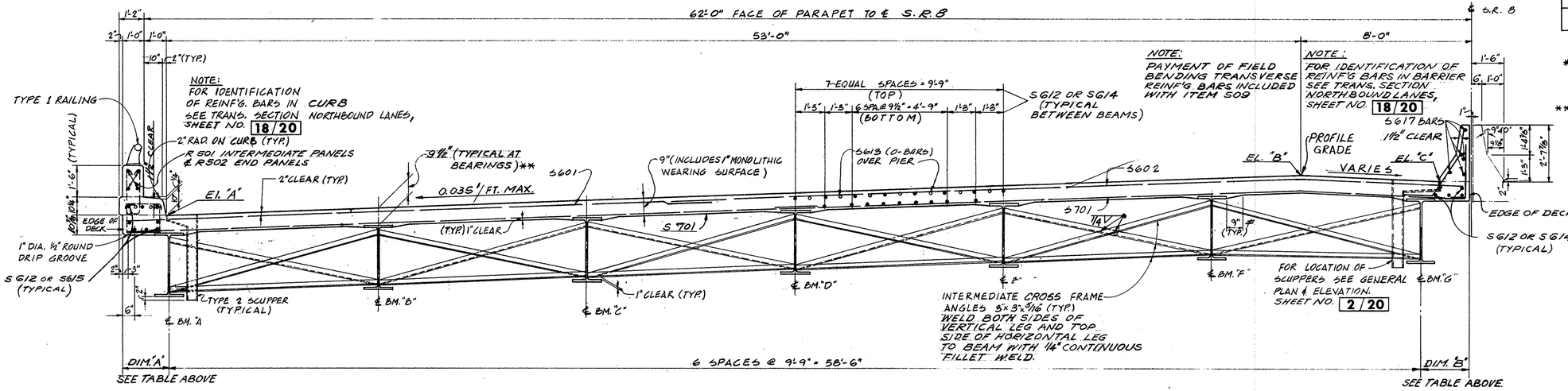

\# DECK SLAB HAUNCH: A TYPICAL HAUNCH WIDTH OF 9" SHALL BE USED FOR COMPUTING QUANTITY OF CONCRETE. HOWEVER THE HAUNCH WIDTH MAY VARY BETWEEN 6" AND 12" PROVIDED THAT THE SLOPE SHALLBE NOT MORE THAN 1:4 FOR A HAUNCH LESS THAN 9" IN WIDTH.

TRANSVERSE SECTION (SOUTHBOUND LANES)

* THESE ELEVATIONS ARE THOSE WHICH ARE REQUIRED BEFORE THE CONCRETE IS PLACED. PROPER ALLOWANCE HAS BEEN MADE FOR DEAD LOAD DEFLECTIONS CAUSED BY THE WEIGHT OF CONCR.

** THIS IS A NOMINAL DIMENSION. THE QUANTITY OF DECK CONCRETE TO BE PAID FOR SHALL BE BASED ON THIS DIMENSION, EVEN THOUGH DEVIATION FROM IT MAY BE NECESSARY BECAUSE THE TOP FLANGE OF THE BEAM MAY NOT HAVE THE EXACT CAMBER OR CONFORMATION REQUIRED TO PLACE IT PARALLEL TO THE FINISHED GRADE.

SCUPPERS including support angles shall be galvanized according to 711.02. The 1/2" x 1/2" lateral support bar shown on SD-1-65 shall be omitted.

STATE OF OHIO
DEPARTMENT OF HIGHWAYS
BUREAU OF BRIDGES

17/20

DALTON • DALTON ASSOCIATES

SLAB PLAN & SECTION
BRIDGE NO. SUM-8-1772
S.R.-8 OVER CUYAHOGA RIVER
SUMMIT COUNTY
STA. 236+30.71 TO STA. 237+80.80

DESIGNED	DRAWN	TRACED	CHECKED	REVIEWED	DATE	REVISED
J.H.	D.F.D.		D.H.S.	R.B.H.	1-31-68	

RECEIVED
MAR 01 1968
CERTIFICATION

FED. RD.	STATE	PROJECT	
2	OHIO		

344/460

SUM-8-17.63

FAN 33-S708 21'-4" | FAN 33 S611 21'-4" | 8" 1 SERIES 60-S709 @ 8" = 39'-4" | 8" 1 SERIES 48-S610 @ 8" = 31'-4" | 119 - S701 @ 8" = 78'-8" | 108 - S601 @ 8" = 71'-4" | 23-S602 @ 8" = 14'-8" | 8" 1 SERIES 73-S702 @ 8" = 48'-0" | 8" 1 SERIES 83-S609 @ 8" = 54'-8" | 8" TOP OF SLAB | 8" BOT OF SLAB

℄ BEARING ABUT. A-1

EDGE OF DECK

SEE DETAIL "C" THIS SHEET

2-S612 TOP
3-S612 BOT.

SEE DETAIL "D" THIS SHEET

TYPICAL STAGGER OF S613 BARS OVER PIER (44 REQ'D)

8'-0" | 12'-6" | 12'-6" | 31'-0"

41-S612 TOP 4 SETS REQ'D (SEE TRANS. SECT. FOR SPACING)
41-S612 BOT 4 SETS REQ'D (SEE TRANS. SECT. FOR SPACING)

45-S616 TOP
57-S616 BOT.

℄ BEARING PIER

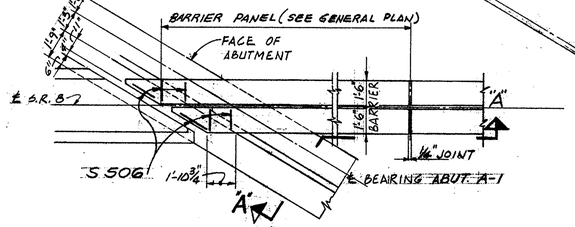

DETAIL "C"

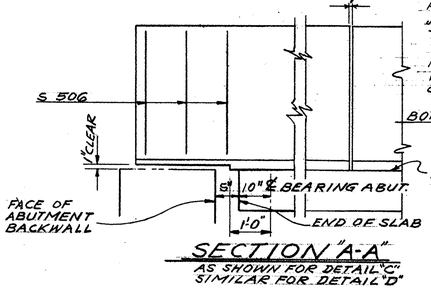

SECTION "A-A"
AS SHOWN FOR DETAIL "C". SIMILAR FOR DETAIL "D"

DETAIL "B" SHT. 17/20 SIMILAR FOR SLAB DECK & PARAPET CONST.

℄ LIGHT SUPPORT STA 237+52

EDGE OF DECK

3-S616 TOP OF SAFETY CURB (1 SET REQ'D)

3-S612 TOP OF SAFETY CURB (4 SETS REQ'D)

DETAIL "A" SHT. 17/20 SIMILAR FOR SLAB DECK & PARAPET CONST.

℄ BEARING ABUT. A-2

BOT. OF SLAB: 8" | 1 SERIES 85-S603 @ 8" = 56'-0" | 8" | 23-S602 @ 8" = 14'-8" | 8" | 106 - S601 @ 8" = 70'-0" | 8" | 1 SERIES 58-S608 @ 8" = 38'-0" | 8" | FAN 17-S604 10'-8"

TOP OF SLAB: 8" | 1 SERIES 73-S702 @ 8" = 48'-0" | 8" | 116 - S701 @ 8" = 76'-8" | 8" | 1 SERIES 71-S707 @ 8" = 46'-8" | 8" | FAN 17-S703 10'-8"

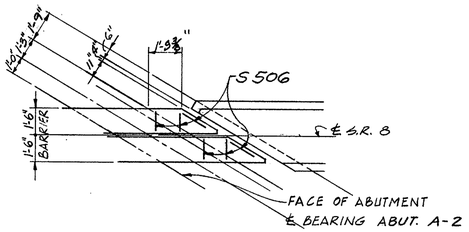

DETAIL "D"
SEE SECTION "A-A" THIS SHEET

PLAN - SLAB DECK REINFORCING
(NORTHBOUND LANES)

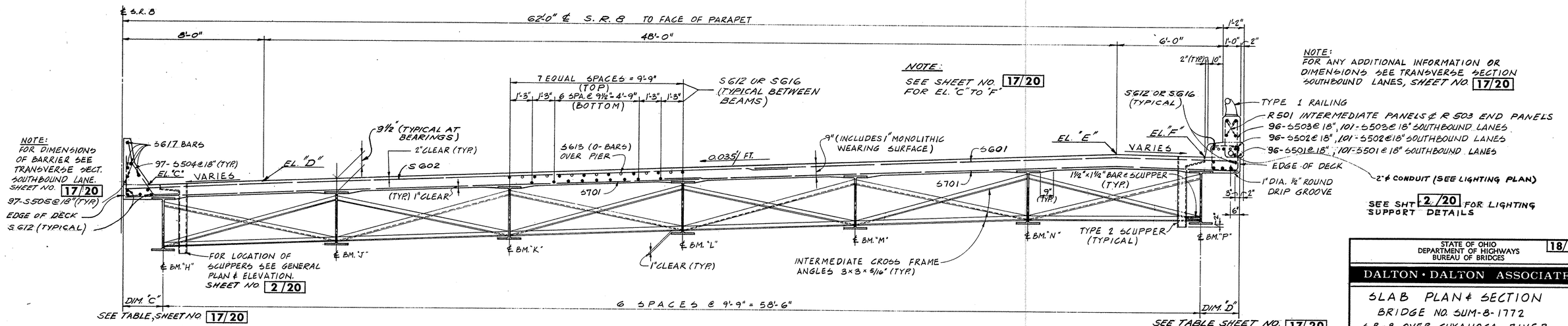

NOTE:
SEE SHEET NO. 17/20 FOR EL. "C" TO "F"

NOTE:
FOR ANY ADDITIONAL INFORMATION OR DIMENSIONS SEE TRANSVERSE SECTION SOUTHBOUND LANES, SHEET NO. 17/20

SEE SHT. 2/20 FOR LIGHTING SUPPORT DETAILS

TRANSVERSE SECTION (NORTHBOUND LANES)

STATE OF OHIO
DEPARTMENT OF HIGHWAYS
BUREAU OF BRIDGES
18/20

DALTON • DALTON ASSOCIATES

SLAB PLAN & SECTION
BRIDGE NO. SUM-8-1772
S.R.-8 OVER CUYAHOGA RIVER
SUMMIT COUNTY
STA. 236+30.71 TO STA. 237+80.80

DESIGNED	DRAWN	TRACED	CHECKED	REVIEWED	DATE	REVISED
J.H.	D.F.D.		D.H.S.	R.D.H.	1-31-68	

FORM DDA-6

FED. RD.	STATE	PROJECT	
2	OHIO		

345
460

SUM-8-17.63

MARK	NO. REQ'D.	LENGTH	TYPE	DIMENSIONS A	B	C	D	SERIES INCR.	WEIGHT LBS.
ABUTMENTS									
A 501	32	27'-8"	STR.						923
A 502	7SER. A	17'-8" 18'-2"	8	1'-0"	1'-8"	7'-3" 7'-6"		2"	523
A 503	7SER. B	15'-0" 17'-4"	8	1'-0"	1'-8"	5'-11" 7'-1"		4"	949
A 504	7SER. G	12'-8" 14'-6"	8	1'-0"	1'-8"	4'-7" 5'-8"		5 3/16"	588
A 505	7	11'-8"	8	1'-0"	1'-8"	4'-3"			85
A 506	7	11'-0"	8	1'-0"	1'-8"	3'-11"			80
A 507	8SER. A	17'-8" 18'-2"	8	1'-0"	1'-8"	7'-3" 7'-6"		2"	598
A 508	8SER. B	15'-0" 17'-4"	8	1'-0"	1'-8"	6'-0" 7'-1"		3 1/16"	1085
A 509	8SER. G	12'-8" 14'-10"	8	1'-0"	1'-8"	4'-8" 5'-10"		5 3/16"	688
A 510	8SER. 3	10'-6" 12'-0"	8	1'-0"	1'-8"	3'-8" 4'-5"		9"	282
A 511	1	8'-10"	12	6'-0"	2'-10"	1'-5"			9
A 512	1SSER. G	17'-8" 18'-2"	8	1'-0"	1'-8"	7'-0" 7'-6"		2 7/16"	1658
A 513	1SSER. B	14'-10" 16'-10"	8	1'-0"	1'-8"	5'-10" 6'-10"		3 1/2"	1982
A 514	1SSER. G	12'-6" 14'-6"	8	1'-0"	1'-8"	4'-8" 5'-8"		4 13/16"	1267
A 515	1SSER. 3	10'-10" 12'-0"	8	1'-0"	1'-8"	3'-10" 4'-5"		7"	536
A 516	2SER. 11	16'-2" 18'-2"	8	1'-0"	1'-8"	6'-6" 7'-6"		2 3/8"	394
A 517	2SER. G	14'-5" 16'-6"	8	1'-0"	1'-8"	5'-8" 6'-5"		3 9/16"	191
A 518	2SER. G	12'-8" 14'-2"	8	1'-0"	1'-8"	4'-6" 5'-6"		4 13/16"	165
A 519	2	11'-6"	8	1'-0"	1'-8"	4'-2"			24
A 520	2	11'-0"	8	1'-0"	1'-8"	3'-11"			23
A 521	2SER. 11	17'-8" 19'-8"	24	1'-7"	1'-8"	6'-6" 7'-6"		2 3/8"	421
A 522	2SER. G	15'-9" 17'-6"	24	1'-7"	1'-8"	5'-8" 6'-5"		3 5/16"	205
A 523	2SER. G	13'-8" 15'-4"	24	1'-7"	1'-8"	4'-6" 5'-6"		4 13/16"	179
A 524	2	12'-8"	24	1'-7"	1'-8"	4'-2"			26
A 525	2	12'-2"	24	1'-7"	1'-8"	3'-11"			25
A 526	376	10'-9"	25	2'-0"	2'-9"	1'-8"			4216
A 527	365	12'-7"	25	2'-11"	3'-8"	1'-8"			4790
A 528	60	31'-8"	STR.						1982
A 529	12	32'-5"	STR.						406
A 530	1	20'-0"	STR.						21
A 531	1	14'-0"	STR.						15
A 532	2	21'-0"	STR.						44
A 533	1	9'-0"	STR.						9
A 534	1	14'-4"	22	1'-8"	1'-2"	11'-8"	5'-9"		15
A 535	4	9'-4"	1	3'-5"	6'-0"				39
A 536	3	10'-0"	STR.						31
A 537	2	12'-6"	STR.						26
A 538	1	18'-0"	STR.						19
A 539	1	16'-0"	STR.						17
A 540	1	15'-0"	STR.						16
A 541	2	12'-0"	STR.						25
A 542	1	29'-0"	STR.						30
A 543	5	4'-0"	STR.						21
A 544	1	17'-0"	STR.						18
A 545	1	2'-0"	STR.						2
A 546	A	9'-4"	1	3'-5"	6'-0"				39
A 547	1	13'-11"	22	1'-8"	1'-2"	11'-3"	5'-9"		15
A 548	1	8'-9"	12	6'-0"	2'-9"	1'-5"			9
A 549	4	14'-6"	STR.						60
A 550	3	18'-6"	STR.						58
A 551	1	7'-2"	8	1'-0"	1'-8"	2'-0"			7
A 552	1SER. A	17'-8" 18'-2"	8	1'-0"	1'-8"	7'-2" 7'-6"		2 11/16"	74
A 553	1SER. B	14'-2" 16'-10"	8	1'-0"	1'-8"	5'-6" 6'-10"		4 3/16"	129
A 554	1SER. G	11'-0" 13'-8"	8	1'-0"	1'-8"	3'-11" 5'-5"		6 3/8"	77
A 555	1SER. 5	7'-0" 10'-2"	8	1'-0"	1'-8"	1'-11" 3'-6"		9 1/2"	45
A 556	1SER. A	16'-10" 17'-10"	24	1'-0"	1'-8"	6'-10" 7'-4"		4"	72
A 557	1SER. B	12'-6" 16'-2"	24	1'-0"	1'-8"	4'-8" 6'-8"		6 1/4"	120
A 558	1SER. G	8'-2" 11'-10"	8	1'-0"	1'-8"	2'-6" 4'-4"		8 13/16"	63
A 559	1SER. 9	14'-10" 18'-2"	8	1'-0"	1'-8"	5'-10" 7'-6"		5"	155
A 560	1SER. G	11'-10" 14'-6"	8	1'-0"	1'-8"	4'-8" 5'-8"		6 7/8"	82
A 561	1SER. G	6'-10" 10'-10"	8	1'-0"	1'-8"	1'-10" 3'-10"		9 5/8"	55
A 562	1SER. 9	15'-6" 17'-10"	24	1'-0"	1'-8"	5'-2" 7'-4"		6 1/16"	147
A 563	1SER. G	9'-0" 12'-6"	8	1'-0"	1'-8"	2'-11" 4'-8"		8 7/8"	67
A 564	2	11'-6"	STR.						24
A 565	8	5'-1"	3	3'-8"	1'-8"				42
A 566	4	7'-5"	STR.						31
A 567	4	6'-2"	STR.						26
A 568	10	5'-8"	STR.						59
A 569	1	7'-9"	12	4'-11"	2'-10"	1'-5"			8
A 570	1	7'-3"	12	4'-8"	2'-7"	1'-5"			8
A 571	2	14'-3"	STR.						30
A 572	1	6'-8"	8	1'-0"	1'-8"	1'-9"			7
A 573	1	7'-8"	8	1'-0"	1'-8"	2'-3"			8

MARK	NO. REQ'D.	LENGTH	TYPE	DIMENSIONS A	B	C	D	SERIES INCR.	WEIGHT LBS.
A 601	14SER. 3	4'-0" 16'-6"	STR.					G-1"	636
A 602	14	19'-0"	STR.						400
A 603	1004	5'-11"	1	5'-3"	10"				8923
A 604	198	20'-0"	STR.						5948
A 605	260	7'-6"	12	4'-6"	3'-0"	2'-1"			2929
A 606	271	8'-7"	4	3'-8"	3'-7"	1'-6"			3494
A 607	382	17'-4"	7	5'-3"	1'-5"	6'-5"	11"		9945
A 608	16SER. 3	4'-5" 17'-0"	STR.					G-4 1/2"	766
A 609	16	20'-0"	STR.						481
A 610	38SER. 3	4'-5" 18'-6"	STR.					6'-9"	1926
A 611	38	21'-0"	STR.						11199
A 612	9	27'-8"	STR.						379
A 613	95	16'-5"	14	6'-5"	1'-5"				2343
A 614	7	7'-4"	3	3'-8"	2'-0"				77
A 615	2	32'-0"	STR.						96
A 616	8	12'-0"	12	7'-6"	4'-6"	3'-3"			144
A 617	4SER. 4	5'-0" 20'-0"	STR.					5'-0"	300
A 618	2SER. A	3'-6" 14'-9"	STR.					3'-9"	110
A 619	449	21'-0"	STR.						14,162
A 620	32	7'-6"	STR.						360
A 621	2SER. A	3'-3" 14'-0"	STR.					3'-7"	109
A 622	4	12'-0"	STR.						72
A 623	2SER. 9	6'-4" 25'-4"	STR.					1'-1 1/2"	563
A 624	24	12'-3"	12	7'-9"	4'-6"	3'-3"			492
A 625	16	17'-11"	7	5'-10"	1'-5"	6'-5"	11"		431
A 626	2SER. 10	17'0" 24'-6"	STR.					9 3/4"	621
A 627	2SER. G	3'-8" 10'-0"	STR.					1'-3 1/8"	123
A 628	2SER. G	3'-8" 10'-10"	STR.					1'-5 1/8"	131
A 629	3	26'-0"	STR.						117
A 630	2	30'-0"	STR.						90
A 631	3	26'-9"	STR.						121
A 632	2	11'-2"	12	6'-8"	4'-6"	3'-3"			34
A 701	283	27'-8"	STR.						14,307
A 702	527	31'-8"	STR.						34111
A 703	49	17'-6"	STR.						1703
A 704	2SER. B	6'-0" 30'-6"	STR.					3'-6"	597
A 705	6	30'-8"	STR.						376
A 706	2SER. 3	24'0" 29'-4"	STR.					2'-6"	331
A 707	22	22'-8"	STR.						1,019
A 708	43	5'-0"	12	2'-6"	2'-6"	2'-2"			439
A 709	16	20'-8"	STR.						676
A 710	2SER. 3	23'-6" 28'-0"	STR.					2'-3"	316
A 711	8	28'-8"	STR.						469
A 712	2SER. 8	4'-3" 26'-3"	STR.					3'-1 7/8"	499
A 713	43	12'-9"	STR.						1121
A 714	52	33'-3"	1	1'-0"	32'-5"				3,534
A 801	408	30'-0"	STR.						32681
A 802	992	12'-8"	STR.						33550
A 803	423	6'-3"	STR.						7059
A 804	48	22'-6"	STR.						2884
A 805	24	21'-6"	STR.						1378
A 806	10	9'-6"	12	5'-0"	4'-6"	3'-11"			254
A 807	10	11'-0"	12	5'-6"	5'-6"	4'-9"			294
A 808	24	34'-0"	STR.						2179
A 809	11	8'-0"	12	5'-0"	3'-0"	2'-1 1/6"			235
A 810	13	6'-10"	1	3'-0"	4'-0"				237
A 1101	248	8'-6"	23	2'-0"	6'-9"	1'-6"			11,200
A 1102	116	13'-6"	23	2'-0"	11'-9"	2'-9"			8,320
A 1103	80	14'-0"	STR.						5,951
A 1104	102	18'-0"	STR.						9,755
A 1105	14	20'-6"	STR.						1,525
A 1106	16	21'-6"	STR.						1828

MARK	NO. REQ'D.	LENGTH	TYPE	DIMENSIONS A	B	C	D	SERIES INCR.	WEIGHT LBS.
A 1107	38	22'-6"	STR.						4,543
A 1108	2	24'-0"	1	22'-9"	1'-6"				255
A 1109	2	18'-3"	1	17'-0"	1'-6"				194
A 1110	10	8'-6"	23	2'-0"	6'-9"	2'-2"			452
A 1111	6	13'-6"	23	2'-0"	11'-9"	4'-0"			430
A 1112	2	23'-3"	1	22'-0"	1'-6"				247
A 1113	2	17'-9"	1	16'-6"	1'-6"				189
								TOTAL ABUTMENTS =	268,760
SUPERSTRUCTURE									
S 501	197	4'-11"	15	1'-6"	1'-9"	7 1/2"			1010
S 502	197	2'-6"	3	1'-6"	7 1/2"				514
S 503	197	5'-7"	6	8"	2'-2"	5"			1147
S 504	194	4'-5"	26	SEE BENDING DIAGRAM					894
S 505	194	3'-6"	1	1'-0"	2'-6"				691
S 506	12	4'-9"	27	SEE BENDING DIAGRAM					59
S 507	2	10'-9"	28	2'-0"	2'-11"	1'-3"	2'-1"		22
S 601	432	28'-6"	STR.						18493
S 602	94	38'-3"	STR.						5400
S 603	3SER. B5	38'-0" 40'-0"	STR.					4 1/2"	8426
S 604	34	7'-0"	STR.						357
S 605	1SER. 63	37'-0" 37'-6"	STR.					4 1/2"	1822
S 606	1SER. 49	14'-6" 32'-0"	STR.					4 1/2"	1711
S 607	40	14'-0"	STR.						841
S 608	1SER. 58	29'-6" 37'-6"	STR.					4 1/2"	1612
S 609	1SER. 83	38'-0" 40'-0"	STR.					4 1/2"	2805
S 610	1SER. 48	12'-6" 30'-0"	STR.					4 1/2"	1532
S 611	33	12'-0"	STR.						595
S 612	885	30'-0"	STR.						39,878
S 613	88	28'-0"	STR.						3701
S 614	102	30'-9"	STR.						4711
S 615	8	36'-0"	STR.						433
S 616	105	24'-9"	STR.						3903
S 617	90	16'-0"	STR.						2163
S 618	2	10'-1"	14	2'-11"	2'-1"	4"			30
S 619	12	6'-0	STR.						108
S 701	477	33'-6"	STR.						32662
S 702	4SER. 73	33'-0" 36'-0"	STR.					4 1/2"	11639
S 703	34	7'-0"	STR.						486
S 704	1SER. 75	35'-6" 37'-6"	STR.					4 1/2"	3296
S 705	1SER. 61	14'-6" 37'-6"	STR.					4 1/2"	3242
S 706	40	14'-0"	STR.						1145
S 707	1SER. 71	34'-0" 37'-6"	STR.					4 1/2"	3011
S 708	33	12'-0"	STR.						809
S 709	1SER. 60	12'-6" 35'-0"	STR.					4 1/2"	2913
								TOTAL SUPERSTRUCTURE =	162,061

SPIRAL REINFORCING SCHEDULE

MARK	NO. REQ'D.	CORE DIA. OF SPIRAL	LENGTH OF SPIRAL	PITCH	NO. OF TURNS	WEIGHT LBS.
					TOTAL SPIRALS	
					GRAND TOTAL	LBS.

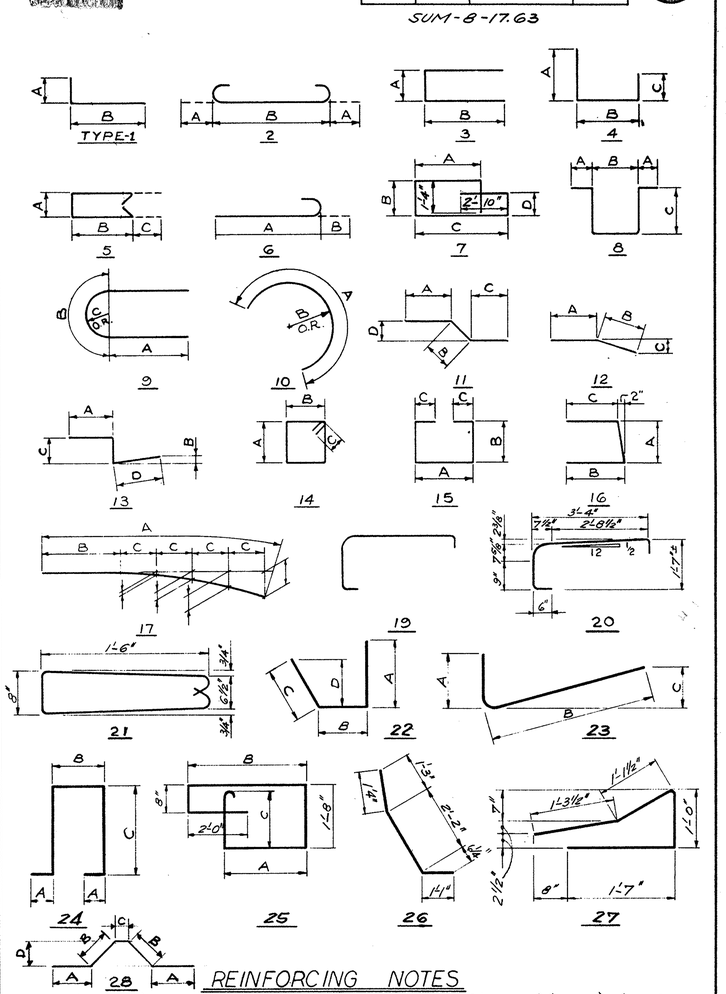

REINFORCING NOTES

THE LENGTH SHOWN IN THE STEEL SCHEDULE FOR THE SPIRAL BARS IS THE DISTANCE FROM THE TOP OF THE FOOTING TO THE BOTTOM OF THE PIER CAP. THE NUMBER OF TURNS SHOWN IN THE STEEL SCHEDULE FOR SPIRAL BARS IS THE LENGTH DIVIDED BY THE PITCH PLUS THREE TURNS (TOTAL NUMBER OF CLOSED COILS) EXPRESSED AS THE NEAREST WHOLE NUMBER. SPIRAL REINFORCING BARS SHALL NOT HAVE DEFORMATIONS, BUT SHALL IN OTHER RESPECTS CONFORM TO ITEM 509. ONE AND ONE HALF CLOSED COILS SHALL BE PROVIDED AT THE ENDS OF EACH SPIRAL UNIT. FOUR (4) STEEL CHANNEL, TEE OR ANGLE SPACERS WEIGHING APPROX. 0.68 LBS. PER LINEAL FT. OF SPACERS SHALL BE PROVIDED FOR EACH SPIRAL UNIT. THEY SHALL BE EQUALLY SPACED ALONG THE PERIPHERY OF EACH COIL. THE NUMBER OF POUNDS OF THESE SPACERS BASED ON 0.68 LBS PER LINEAL FT WILL BE PAID FOR AS REINFORCING STEEL AND IS INCLUDED IN THE TABULATED QUANTITY OF SPIRAL BARS.

BAR SIZE IS INDICATED IN THE BAR MARK. THE FIRST DIGIT WHERE THREE DIDGITS ARE USED AND THE FIRST TWO DIGITS WHERE FOUR DIGITS ARE USED INDICATE THE BAR SIZE NUMBER. A-601 IS A NO. 6 SIZE BAR AND P-1001 IS A NO. 10 SIZE BAR.

⊗RAILING REINFORCEMENT BARS WILL BE INCLUDED AS PART OF ITEM 517 FOR PAYMENT.

STATE OF OHIO
DEPARTMENT OF HIGHWAYS
BUREAU OF BRIDGES

19/20

DALTON • DALTON ASSOCIATES

REINFORCING SCHEDULE

BRIDGE NO SUM-8-1792
S.R-8 OVER CUYAHOGA RIVER
SUMMIT COUNTY
STA. 236+30.71 TO STA. 237+80.80

DESIGNED	DRAWN	TRACED	CHECKED	REVIEWED	DATE	REVISED
R.J.P.	W.S.		L.B.	R.D.H.	1-31-68	

FED. RD.	STATE	PROJECT	
2	OHIO		

346
460

SUM-8-17.63

MARK	NO. REQ'D.	LENGTH	TYPE	DIMENSIONS A	B	C	D	SERIES INCR.	WEIGHT LBS.
RETAINING WALL "A"									
WA 501	10	7'-1"	STR.						74
WA 502	196	31'-8"	STR.						6474
WA 503	10	7'-4"	STR.						76
WA 504	20	10'-4"	1	3'-7"	6'-10"				216
WA 505	134	10'-0"	STR.						1398
WA 506	2SER.3	3'-8"/4'-9"	STR.					6½"	26
WA 507	4	26'-8"	STR.						111
WA 508	4	23'-8"	STR.						99
WA 509	36	9'-0	STR.						338
WA 510	36	9'-3	STR.						347
WA 511	49	3'-4"	STR.						170
WA 512	101	3'-10"	STR.						404
WA 513	15	33'-0"	STR.						516
WA 514	2	11'-0"	STR.						23
WA 515	6	29'-8"	STR.						186
WA 516	52	4'-4"	STR.						235
WA 517	10	32'-8"	STR.						341
WA 518	24	10'-10"	STR.						271
WA 519	24	11'-1"	STR.						277
WA 520	20	6'-0"	STR.						125
WA 521	18	33'-8"	STR.						632
WA 522	68	12'-9"	STR.						904
WA 523	68	13'-0"	STR.						922
WA 524	12	8'-0"	STR.						100
WA 525	1	10'-0"	12	8'-0"	2'-0"	11"			10
WA 526	7	21'-8"	STR.						158
WA 527	7	23'-0"	STR.						168
WA 528	1SER.11	13'-9"/18'-7"	STR.					7"	191
WA 529	1SER.12	13'-9"/19'-7"	STR.					6 3/16"	209
WA 530	1	13'-5"	STR.						14
WA 531	1	13'-8"	STR.						14
WA 532	2	6'-9"	STR.						14
WA 533	1	13'-9"	STR.						14
WA 534	1	14'-0"	STR.						15
WA 535	7	8'-9"	12	2'-0"	6'-9"	11"			64
WA 536	2SER.3	8'-0"/26'-6"	STR.					9'-3"	108
WA 537	1	20'-0"	STR.						21
WA 538	1	20'-3"	STR.						21
WA 539	20	9'-10"	12	5'-0"	4'-10"	3'-5"			205
WA 540	4	32'-3"	STR.						135
WA 541	1SER.12	20'-0"/26'-6"	STR.					7"	290
WA 542	2SER.3	4'-0"/22'-6"	STR.					9'-3"	83
WA 601	54	5'6"	23	1'-11"	3'-9"	3"			446
WA 602	33	7'-6"	23	1'-11"	5'-9"	4"			372
WA 603	156	5'-9"	23	1'-11"	4'-0"	3"			1347
WA 604	22	8'-6"	23	1'-11"	6'-9"	5"			281
WA 605	370	4'-10"	STR.						2686
WA 606	128	10'-6"	23	1'-11"	8'-9"	6½"			2019
WA 607	2	6'-1"	23	1'-11"	4'-4"	3"			18
WA 801	88	6'-9"	STR.						1586
WA 901	23	7'-10"	23	2'-10"	5'-3"	4"			613
WA 902	24	12'-7"	23	2'-10"	10'-0"	7½"			1027
WA 903	12	12'-7"	STR.						513
WA 904	1SER.12	20'-3"/26'-6"	STR.					7"	957
WA 905	22	18'-2"	STR.						1359
WA 906	2	8'-3"	23	2'-10"	5'-8"	4"			56
WA 1101	34	9'-10"	23	3'-6"	6'-7"	5"			1776
WA 1102	33	16'-0"	23	3'-6"	12'-9"	10"			2805
WA 1103	92	9'-4"	STR.						4562
TOTAL RETAINING WALL "A"									38,422

MARK	NO. REQ'D.	LENGTH	TYPE	DIMENSIONS A	B	C	D	SERIES INCR.	WEIGHT LBS.
RETAINING WALL "B"									
WB 501	1SER.12	18'-5"/26'-4"	STR.					8 5/8"	280
WB 502	41	31'-8"	STR.						1354
WB 503	2SER.3	8'-0"/24'-6"	STR.					8'-0"	100
WB 504	2	32'-6"	STR.						68
WB 505	39	10'-0"	STR.						407
WB 506	1SER.8	13'-1"/17'-11"	STR.					8¼"	129
WB 507	1SER.8	12'-5"/17'-8"	STR.					9"	126
WB 508	2	24'-6"	STR.						51
WB 509	1	18'-4"	STR.						19
WB 510	1	18'-7"	STR.						19
WB 511	2	7'-0"	STR.						15
WB 512	2	15'-0"	STR.						31
WB 513	1	9'-9"	12	7'-9"	2'-0"	1'-1"			10
WB 514	14	24'-0"	STR.						350
WB 515	6	11'-9"	12	9'-9"	2'-0"	1'-1"			74
WB 516	3	12'-5"	STR.						39
WB 517	3	12'-8"	STR.						40
WB 518	1	15'-6"	12	13'-6"	2'-0"	1'-1"			16
WB 519	15	6'-0"	STR.						94
WB 520	4	28'-6"	STR.						119
WB 521	1SER.4	23'-0"/28'-0"	STR.					2'-0"	104
WB 522	10	33'-8"	STR.						351
WB 523	2	29'-8"	STR.						62
WB 524	15	10'-6"	1	3'-8"	6'-11"				164
WB 525	15	10'-2"	12	5'-0"	5'-2"	3'-8"			159
WB 526	10	9'-3"	STR.						96
WB 527	11	9'-0"	STR.						103
WB 528	12	11'-1"	STR.						139
WB 529	12	10'-10"	STR.						136
WB 530	41	3'-10"	STR.						164
WB 531	2SER.3	6'-8"/4'-6"	STR.					1'-0"	35
WB 532	2	27'-6"	STR.						57
WB 533	2	23'-8"	STR.						49
WB 534	27	4'-4"	STR.						122
WB 535	5	26'-8"	STR.						139
WB 536	5	11'-0"	STR.						57
WB 537	14	3'-4"	STR.						49
WB 601	6	10'-6"	23	1'-11"	8'-9"	6½"			95
WB 602	5	6'-1"	23	1'-11"	4'-4"	3"			46
WB 603	13	5'-8"	23	1'-11"	3'-11"	3"			111
WB 604	11	8'-6"	23	1'-11"	6'-9"	5"			140
WB 605	10	5'-6"	23	1'-11"	3'-9"	3"			83
WB 606	8	7'-6"	23	1'-11"	5'-9"	4"			90
WB 607	12	4'-10"	STR.						87
WB 801	63	6'-9"	STR.						1135
WB 901	22	18'-2"	STR.						1359
WB 902	1SER.12	18'-6"/26'-1"	STR.					8 5/8"	923
WB 903	9	12'-7"	STR.						386
WB 904	18	12'-7"	23	2'-10"	10'-0"	7½"			770
WB 905	16	7'-10"	23	2'-10"	5'-3"	4"			426
WB 906	2	8'-3	23	2'-10"	5'-8"	4"			56
WB 1101	34	9'-10"	23	3'-6"	6'-7"	5"			1776
WB 1102	33	16'-0"	23	3'-6"	12'-9"	10"			2805
WB 1103	92	9'-4"	STR.						4562
TOTAL RETAINING WALL "B"									20,176

MARK	NO. REQ'D.	LENGTH	TYPE	DIMENSIONS A	B	C	D	SERIES INCR.	WEIGHT LBS.
PIERS									
P 501	66	31'-11"	STR						2140
P 502	188	15'-0"	STR.						2941
P 503	176	18'-1"	3	2'-8"	7'-10"				3320
P 504	60	9'-9"	3	2'-8"	3'-8"				610
P 505	4SER.15	7'-1"/18'-3"	3	2'-8"	2'-8"/8'-5"			7"	699
P 506	176	16'-0"	STR.						2937
P 507	28	7'-2"	9	1'-7"	3'-11¾"	1'-3¼"			209
P 508	66	29'-4"	STR						2019
P 601	6	32'-10"	STR.						296
P 602	364	8'-10"	1	4'-2"	4'-10"				4829
P 603	6	26'-4"	STR.						237
P 604	8	29'-6"	1	3'-8"	26'-0"				354
P 605	6	24'-8"	STR.						222
P 606	6	31'-1"	STR.						280
P 607	8	18'-10"	12	3'-6"	15'-4"	4'-0"			226
P 608	8	11'-0"	STR.						132
P 609	16	18'-6"	STR.						445
P18 501	24	35'-8"	1	3'-3"	33'-0"				11,642
TOTAL PIERS									33,538
RAILING ⊛									
R 501	60	15'-0"	STR.						
R 502	8	15'-4"	STR.						
R 503	8	16'-4"	STR.						
R 504	8	5'-4"	20	SEE BENDING DIAGRAM					
R 505	8	3'-5"	5	8"	1'-1"	5"			
R 506	12	4'-2"	21	SEE BENDING DIAGRAM					
R 507	8	3'-0"	STR.						
R 508	2	10'-9"	28	2'-0"	2'-11"	1'-3"	2'-1"		
REPLACEMENT BARS									
RE-401	—	6'-3"							
RE-501	3	6'-6"							
RE-601	9	7'-0"							
RE-701	6	7'-3"							
RE-801	5	7'-6"							
RE-901	1	7'-10"							
RE-1001	—	8'-3"							
RE-1101	4	8'-9"							
RE-185	1	8'-2"							

SPIRAL REINFORCING SCHEDULE

MARK	NO. REQ'D.	CORE DIA. OF SPIRAL	LENGTH OF SPIRAL	PITCH	NO. OF TURNS	WEIGHT LBS.
TOTAL SPIRALS						

GRAND TOTAL * 522,957 LBS.

* FOR BRIDGE & RETAINING WALLS

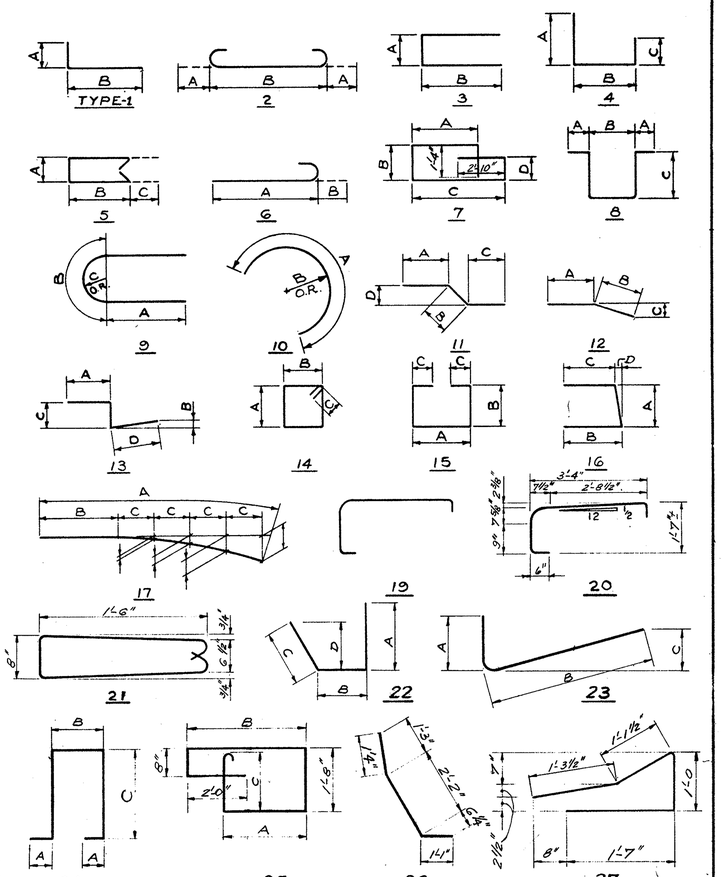

REINFORCING NOTES

THE LENGTH SHOWN IN THE STEEL SCHEDULE FOR THE SPIRAL BARS IS THE DISTANCE FROM THE TOP OF THE FOOTING TO THE BOTTOM OF THE PIER CAP. THE NUMBER OF TURNS SHOWN IN THE STEEL SCHEDULE FOR SPIRAL BARS IS THE LENGTH DIVIDED BY THE PITCH PLUS THREE TURNS (TOTAL NUMBER OF CLOSED COILS) EXPRESSED AS THE NEAREST WHOLE NUMBER.

SPIRAL REINFORCING BARS SHALL NOT HAVE DEFORMATIONS, BUT SHALL IN OTHER RESPECTS CONFORM TO ITEM 509. ONE AND ONE HALF CLOSED COILS SHALL BE PROVIDED AT THE ENDS OF EACH SPIRAL UNIT. FOUR (4) STEEL CHANNEL, TEE OR ANGLE SPACERS WEIGHING APPROX. 0.68 LBS. PER LINEAL FT. OF SPACERS, SHALL BE PROVIDED FOR EACH SPIRAL UNIT. THEY SHALL BE EQUALLY SPACED ALONG THE PERIPHERY OF EACH COIL. THE NUMBER OF POUNDS OF THESE SPACERS BASED ON 0.68 LBS. PER LINEAL FT. WILL BE PAID FOR AS REINFORCING STEEL AND IS INCLUDED IN THE TABULATED QUANTITY OF SPIRAL BARS.

BAR SIZE IS INDICATED IN THE BAR MARK. THE FIRST DIGIT WHERE THREE DIDGITS ARE USED AND THE FIRST TWO DIGITS WHERE FOUR DIGITS ARE USED INDICATE THE BAR SIZE NUMBER. A-601 IS A NO. 6 SIZE BAR AND P-1001 IS A NO. 10 SIZE BAR.

⊛RAILING REINFORCEMENT BARS WILL BE INCLUDED AS PART OF ITEM 517 FOR PAYMENT.

STATE OF OHIO
DEPARTMENT OF HIGHWAYS
BUREAU OF BRIDGES

20/20

DALTON • DALTON ASSOCIATES

REINFORCING SCHEDULE

BRIDGE NO. SUM-8-1772
S.R-8 OVER CUYAHOGA RIVER
SUMMIT COUNTY
STA. 236+30.71 TO STA. 237+80.80

DESIGNED	DRAWN	TRACED	CHECKED	REVIEWED	DATE	REVISED
W.J.S.	W.J.S.		D.H.S.	RDH	1-31-68	

FED. RD.	STATE	PROJECT	
2	OHIO		

347
460

SUM-8 – 17.63

CURVE DATA

℄ RELOCATED S.R.-8

Δ = 15°-06'-08" LT.
Dc = 1°-28'-00"
R = 3906.53'
T = 517.35'
Lc = 1029.70'
P.I. STA. 240 + 86.53

℄ RAMP "L"
CURVE #1

NOSE AND P.C.C. STA. 244+88.61 ℄ RAMP "L"
69' LT. ℄ STA. 244+88.61
Δ = 10°-27'-21"
Dc = 4°-00'-00"
R = 1432.39'
T = 131.06'
Lc = 261.39'

CURVE #2

P.C.C. STA. 247+50.01 ℄ RAMP "L"
Δ = 9°-59'-14"
Dc = 8°-00'-00"
R = 716.20'
T = 62.578'
Lc = 124.840'

PROPOSED STRUCTURE

TYPE: CONTINUOUS WELDED STEEL PLATE GIRDER, WITH REINFORCED CONCRETE DECK AND SUBSTRUCTURE.
SKEW: 60°-52'-20" LT. FWD.
SPANS: 100'-0" - 122'-3" - 117'-3" c/c BRGS.
ROADWAY: 40'-0" F/F 5'-0" SIDEWALKS
LOAD FREQUENCY: AASHO HS 20-44

WEARING SURFACE: 1" MONOLITHIC.
APPROACH SLABS: REAR 20' ℄ FWD. 30' LONG (AS-1-67)
ALIGNMENT: TANGENT
SUPERELEVATION: NONE -X-SLOPE .025'/FT
SLOPE PROTECTION: CRUSHED AGGREGATE

TRAFFIC: 11,102 - 1985 A.D.T.

VERTICAL CLEARANCE:
DESIGN = 15.00'
1. ACTUAL = 15.22'
2. ACTUAL = 15.16'

STATE OF OHIO
DEPARTMENT OF HIGHWAYS
BUREAU OF BRIDGES

1/15

DALTON • DALTON ASSOCIATES

SITE PLAN

BRIDGE NO. SUM-8- 1800
UNDER RELOCATED FRONT ST.
SUMMIT COUNTY CUYAHOGA FALLS EXPRESSWAY
STA. 248+39.76

DESIGNED	DRAWN	TRACED	CHECKED	REVIEWED	DATE	REVISED
E.A.H.	Kennessy		J.H.	RDH	2-2-68	12/18/70

FED. RD.	STATE	PROJECT	
2	OHIO		

348/460

SUM - 8 - 17.63

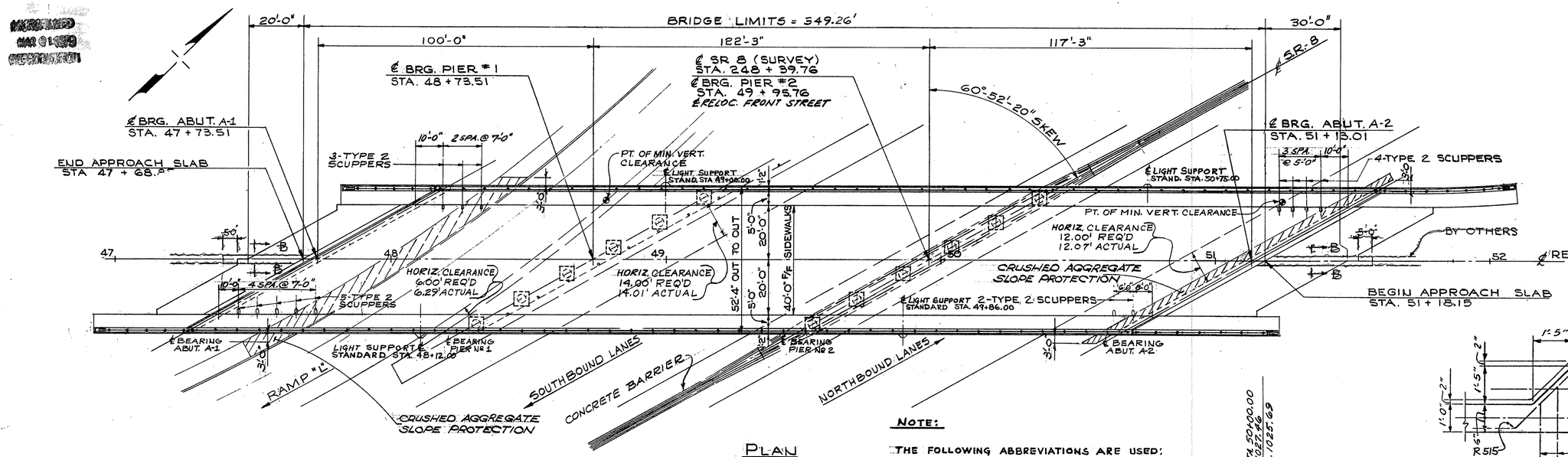

PLAN

NOTE:

THE FOLLOWING ABBREVIATIONS ARE USED:
N.F. - NEAR FACE
F.F. - FAR FACE
E.F. - EACH FACE
FOR ADDITIONAL NOTES SEE SHT. NO. SEE SHEET 4/15 FOR DETAILS OF GAURD RAIL ANCHORS AT END OF PARAPETS.

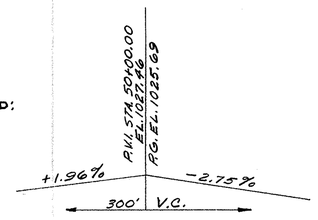

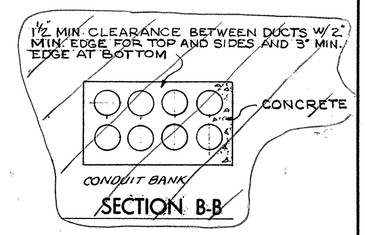

SECTION B-B

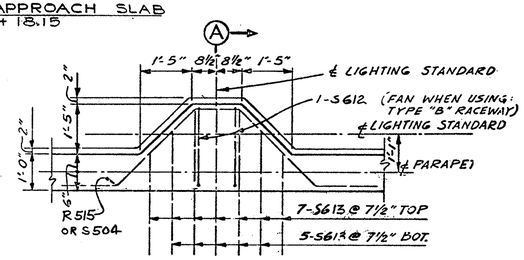

LIGHT STANDARD SUPPORT DETAIL

FOR DETAILS NOT SHOWN SEE SLAB PLAN & SECTION AND LIGHTING DETAILS

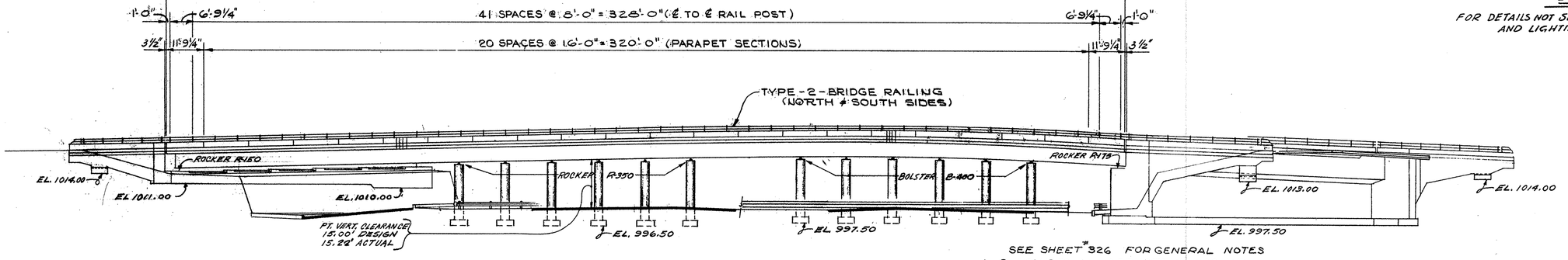

ELEVATION

SEE SHEET 326 FOR GENERAL NOTES
① INCLUDES ALL APPURTENANCES AND SPECIALS NECESSARY FOR THEIR INSTALLATION.
1060 ② ~~4168~~ LIN. FT. 100 % CUYAHOGA FALLS COST
1061 ~~1060~~ LIN. FT. 100 % PROJECT COST
~~③ 42 LIN. FT. 100 % CUYAHOGA FALLS COST~~
~~26 LIN. FT. 100 % PROJECT COST~~

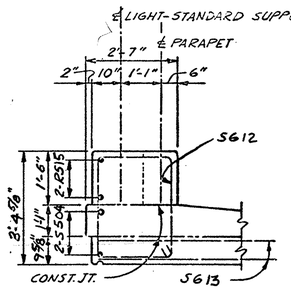

SECTION A-A

20,800 ~~3100~~ 5050 lbs. for pipe sleeves & supports to be paid for by East Ohio Gas.
* INCLUDES ~~2,100~~ LBS FOR DUCT SUPPORTS TO BE PAID FOR BY OHIO BELL TELEPHONE CO. &
~~8600~~ 8,700 LBS. FOR ELECTRIC DUCT SUPPORTS TO BE PAID FOR BY CUYAHOGA FALLS

QUANTITIES CHECKED BY: L.B. 1-15-68.

ESTIMATED QUANTITIES

ITEM	TOTAL	UNIT	DESCRIPTION	SUPER.	ABUT.	PIER	GEN.
503	37	CU. YDS.	UNCLASSIFIED EXCAVATION		37		
503	453	CU. YDS.	ROCK EXCAVATION		411	42	
	219,874				~~50,186~~		
509	~~220,047~~	LBS.	REINFORCING STEEL	154,758	~~52,339~~ 47,116	14,920	
511	524	CU. YDS.	CLASS "C" CONC. SUPERSTRUCTURE	524			
511	59	CU. YDS.	CLASS "C" CONC. PIER ABOVE FOOT'G			59	
511	171	CU. YDS.	CLASS "C" CONC. FOOTINGS		149	22	
511	450	CU. YDS.	CLASS "C" CONC. ABUT. ABOVE FOOT'G		450		
512	127	LIN. FT.	PREMOLDED SEALING STRIP		127		

ITEM	TOTAL	UNIT	DESCRIPTION	SUPER.	ABUT.	PIER	GEN.
	~~706,400~~ 702,350			~~706,400~~ 700,400			
513	~~706,400~~ 702,350	LBS.	STRUCTURAL STEEL *	~~706,400~~ 700,400			
514	~~706,400~~ 702,350	LBS.	FIELD PAINTING OF STRUCTURAL STEEL	~~706,400~~ 700,400			
516	115	SQ. FT.	1" PREFORMED EXPANSION JOINT FILLER		115		
517	855.74	LIN. FT.	RAILING (TYPE-2)	687.08	168.66		
518	240	CU. YDS.	POROUS BACKFILL		240		
518	94	LIN. FT.	6" HEL. PERF. C.M.P., INCLUDING SPECIALS (707.01)		94		
518	103	LIN. FT.	6" HEL. NON PERF. C.M.P. (707.01)		103		
518	66	LIN. FT.	8" PERF. C.M.P. INCL. SPECIALS (707.01)		66		

ITEM	TOTAL	UNIT	DESCRIPTION	SUPER.	ABUT.	PIER	GEN.
518	14	EACH	SCUPPERS INCLUDING SUPPORTS	14			
601	96	SQ. YDS.	CRUSHED AGG. SLOPE PROT.		96		
625	2121		SEE SHT. 258 FOR LIGHT SUMMARY	2037	~~84~~		
625	~~8828~~ ②	LIN. FT.	CONDUIT (S) (713.05 TYPE II) ①	~~2716~~	~~112~~		
~~625~~	~~68~~ ③	LIN. FT.	~~CONDUIT ONLY (713.05 TYPE E, INCLUDING EXCAVATION & CONC.)~~ ③				~~68~~
808	524	UNITS	WATER-REDUCING SET-RETARDG ADMIX.	524			
825	2264	SQ. YDS.	CONCRETE SURFACE TREATMENT	2156	108		

FORM DDA-6

STATE OF OHIO
DEPARTMENT OF HIGHWAYS
BUREAU OF BRIDGES

2/15

DALTON · DALTON ASSOCIATES

GENERAL PLAN & ELEVATION
BRIDGE Nº SUM-8-1800
UNDER RELOCATED FRONT ST.
SUMMIT COUNTY CUYAHOGA FALLS EXPRESSWAY
STA. 248 + 39.76

DESIGNED	DRAWN	TRACED	CHECKED	REVIEWED	DATE	REVISED
E.A.H.	A.L.H. S.U.P.		J.H.	R.D.H.	2-2-68	12/18/70 2-3-71

FED. RD.	STATE	PROJECT	
2	OHIO		

SUM - 8 - 17.63

349
460

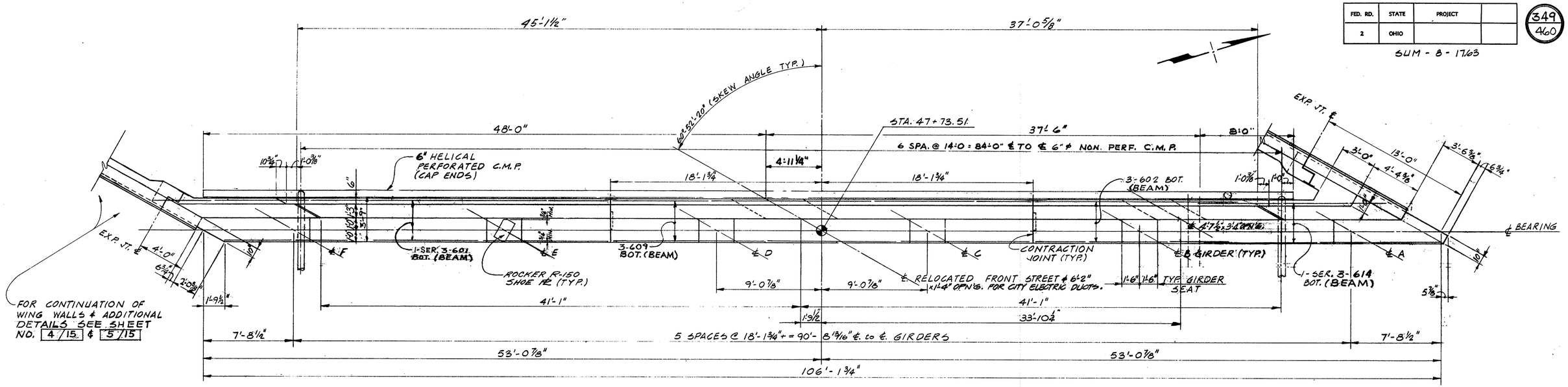

PLAN

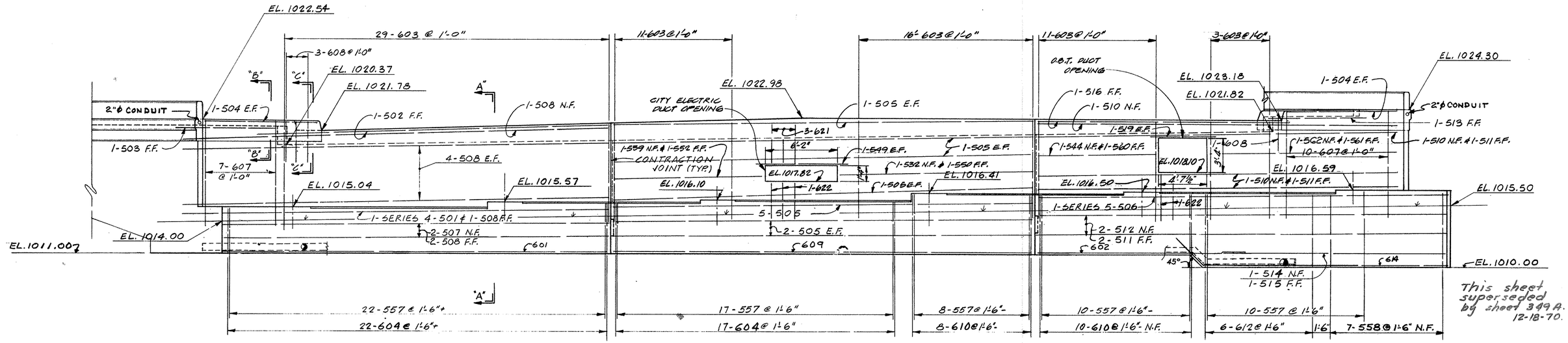

ELEVATION

This sheet superseded by sheet 349A. 12-18-70.

NOTE:
FOR ABUTMENT A-1 POROUS BACKFILL SHALL EXTEND UPWARD TO THE APPROACH SLAB AND TO THE LIMITS AS SHOWN ON THE DETAIL PLANS. EXCAVATION IN EXCESS OF THAT REQUIRED FOR CONSTRUCTION OF THE ABUTMENT SHALL BE CONSIDERED AS PAID FOR IN THE BID PRICE PER CU. YD. FOR POROUS BACKFILL.

NOTES:
THE PREFIX "RA" SHALL BE ADDED TO ALL REINFORCING BAR MARKS IN ABUTMENT A-1

BACKWALL ELEVATIONS ARE GIVEN AS FINAL PAVEMENT ELEVATIONS @ FRONT FACE OF BACKWALL.

FOR EXPANSION AND CONTRACTION JOINT DETAILS & SECTIONS SEE SHEET NO. 5/15

FOR LIGHTING DETAILS NOT SHOWN SEE LIGHTING PLANS.

STATE OF OHIO
DEPARTMENT OF HIGHWAYS
BUREAU OF BRIDGES

3/15

DALTON · DALTON ASSOCIATES

ABUT. A-1 PLAN & ELEVATION

BRIDGE No SUM-8-1800
UNDER RELOCATED FRONT ST.
SUMMIT COUNTY CUYAHOGA FALLS EXPRESSWAY
STA. 248+39.76

DESIGNED	DRAWN	TRACED	CHECKED	REVIEWED	DATE	REVISED
E.A.H.	D.F.D		J.H.	R.B.W.	2-2-68	

RECEIVED
MAR 01 1971
HIGHWAY ENGINEERING

FED. RD.	STATE	PROJECT	
2	OHIO		

SUM - 8 - 17.63

349
460

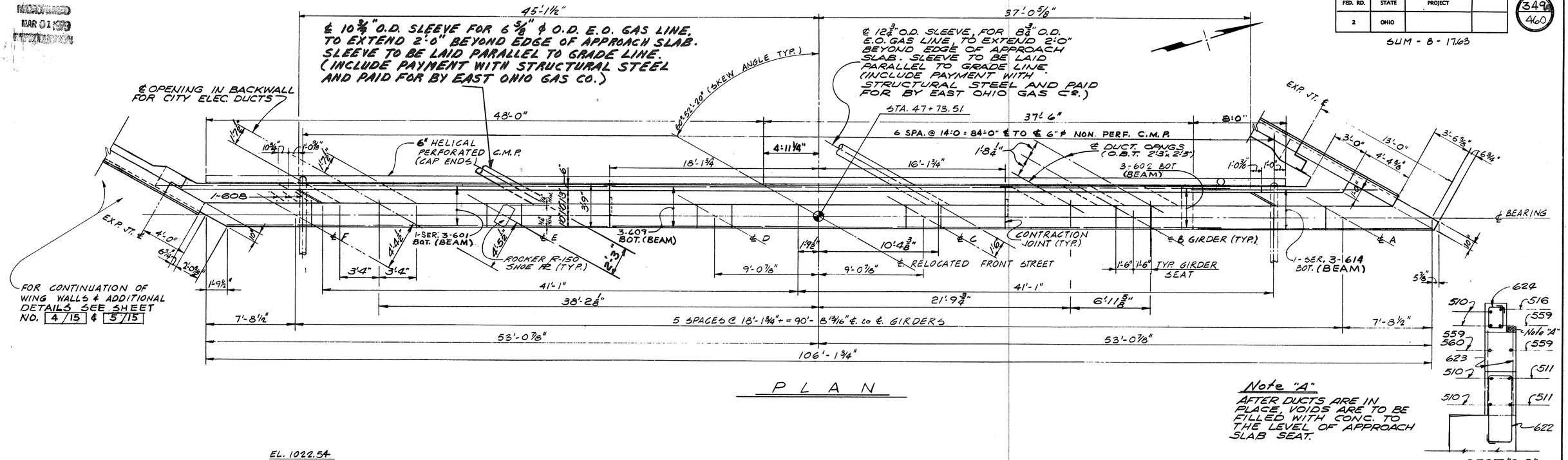

PLAN

SECT. "S-S"

Note "A"
AFTER DUCTS ARE IN PLACE, VOIDS ARE TO BE FILLED WITH CONC. TO THE LEVEL OF APPROACH SLAB SEAT.

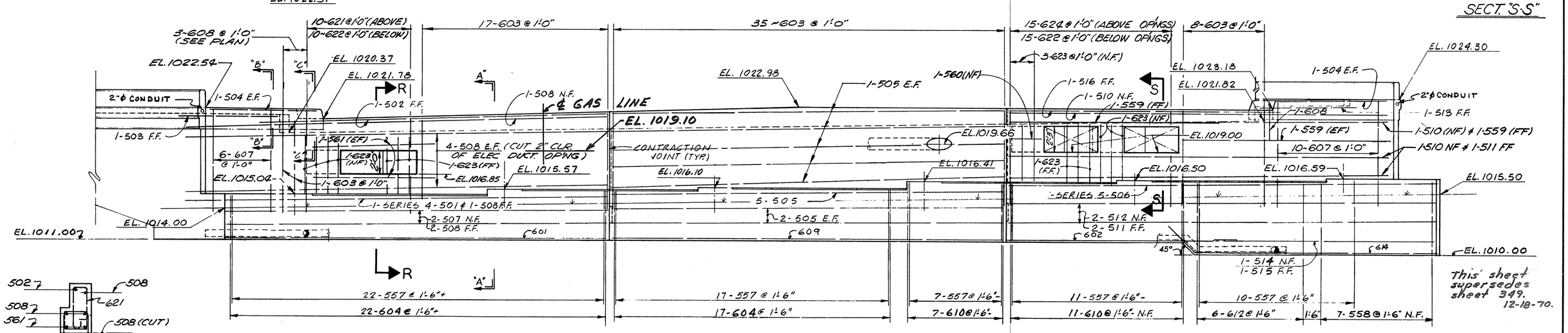

ELEVATION

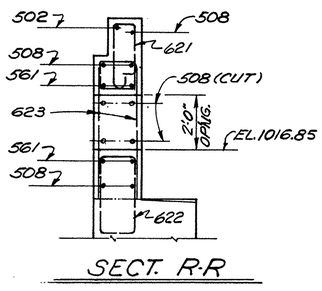

SECT. R-R

NOTE:
FOR ABUTMENT A-1 POROUS BACKFILL SHALL EXTEND UPWARD TO THE APPROACH SLAB AND TO THE LIMITS AS SHOWN ON THE DETAIL PLANS. EXCAVATION IN EXCESS OF THAT REQUIRED FOR CONSTRUCTION OF THE ABUTMENT SHALL BE CONSIDERED AS PAID FOR IN THE BID PRICE PER CU. YD. FOR POROUS BACKFILL.

NOTES:
THE PREFIX "RA" SHALL BE ADDED TO ALL REINFORCING BAR MARKS IN ABUTMENT A-1

BACKWALL ELEVATIONS ARE GIVEN AS FINAL PAVEMENT ELEVATIONS @ FRONT FACE OF BACKWALL.

FOR EXPANSION AND CONTRACTION JOINT DETAILS & SECTIONS SEE SHEET NO. 5/15

FOR LIGHTING DETAILS NOT SHOWN SEE LIGHTING PLANS.

STATE OF OHIO
DEPARTMENT OF HIGHWAYS
BUREAU OF BRIDGES
3/15

DALTON • DALTON ASSOCIATES

ABUT. A-1 PLAN & ELEVATION
BRIDGE NO SUM-8-1800
UNDER RELOCATED FRONT ST.
SUMMIT COUNTY CUYAHOGA FALLS EXPRESSWAY
STA. 248+39.76

DESIGNED	DRAWN	TRACED	CHECKED	REVIEWED	DATE	REVISED
E.A.H.	D.F.D		J.H.	R.D.H	2-2-68	10-9-70 & 3-3-71

This sheet supersedes sheet 349. 12-18-70.

MICROFILMED
MAR 01 1973
CONSERVATION

FED. RD.	STATE	PROJECT	
2	OHIO		

350
460

SUM-8-17.63

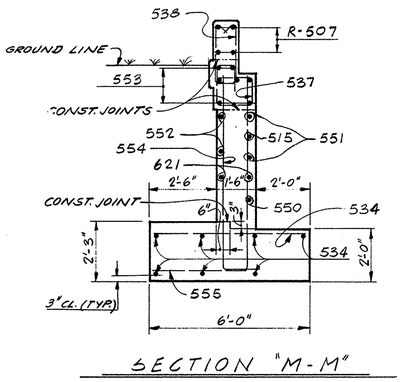

SECTION "M-M"

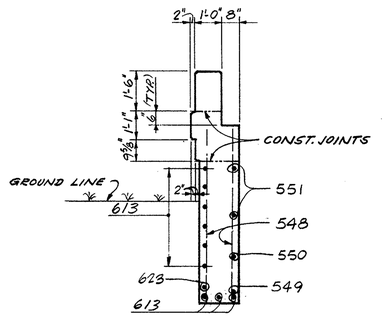

SECTION "N-N"

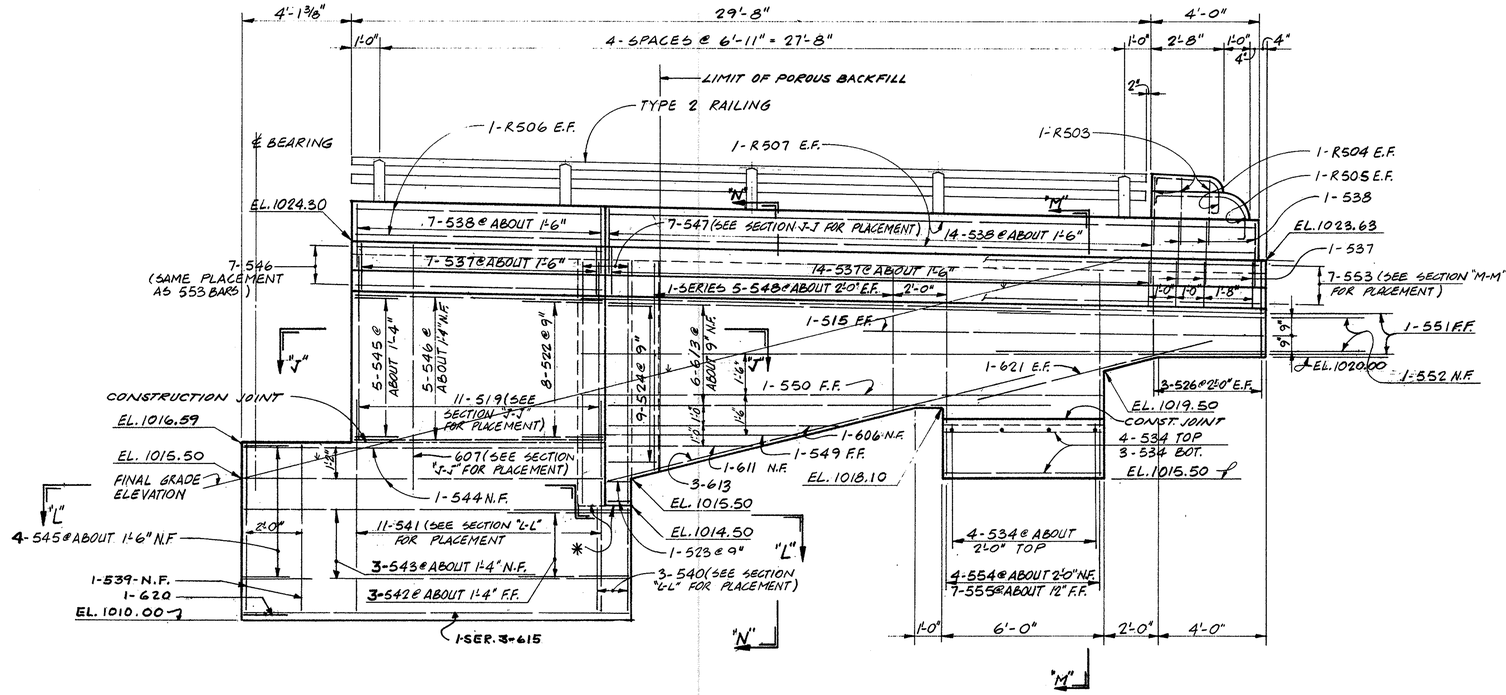

* 2-LAYERS OF 1/16" SHEET ASBESTOS PACKING ON SEAT.

ELEVATION
(NORTH WINGWALL)

1¼" ϕ x 20" GALV. ANCHOR BOLTS WITH HEX NUTS (INCLUDED FOR PAYMENT W/ITEM 517 RAILING (TYPE 2)

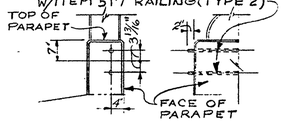

DETAIL "P"
GUARD RAIL-BRIDGE CONNECTION

NOTES:
1) THE PREFIX "RA" SHALL BE ADDED TO ALL REINFORCING BAR MARKS IN THE ABUTMENT A-1 WINGWALL.
* 2) SHEET ASBESTOS PACKING (SPEC. 711.22) AND TAR PAPER SHALL BE INCLUDED WITH "ITEM 511" FOR PAYMENT
3) FOR GUARD-RAIL BRIDGE CONNECTION SEE DETAIL "P" THIS SHEET
4) FOR DETAILS OF LIGHTING CONDUIT THRU WING WALLS SEE STD. DWG. HL-4.

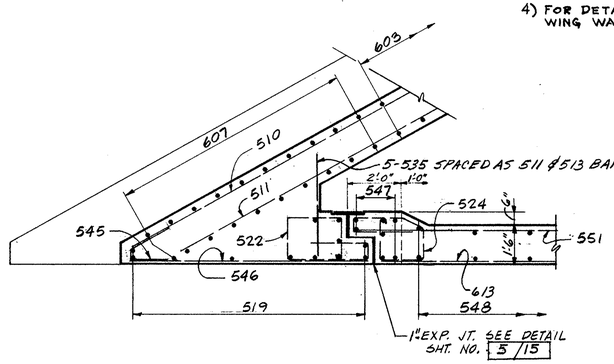

SECTION "J-J"

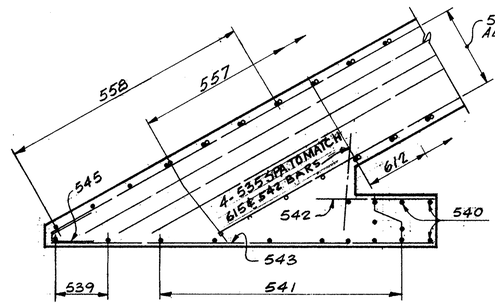

SECTION "L-L"

STATE OF OHIO
DEPARTMENT OF HIGHWAYS
BUREAU OF BRIDGES
4/15

DALTON · DALTON ASSOCIATES

ABUT. A-1 NORTH W/WALL ELEV.
~~BRIDGE NO.~~ SUM-8-1800
UNDER RELOCATED FRONT ST.
SUMMIT COUNTY CUYAHOGA FALLS EXPRESSWAY
STA. 248+39.76

DESIGNED	DRAWN	TRACED	CHECKED	REVIEWED	DATE	REVISED
E.A.H.	D.F.D.		J.H.	RDH	2-2-68	

FORM DDA-6

MICROFILMED
MAR 01 1973

FED. RD.	STATE	PROJECT	
2	OHIO		

351
460

SUM-8-17.63

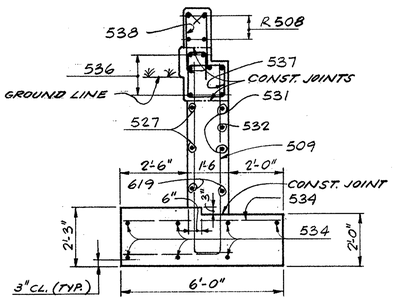

SECTION "G-G"

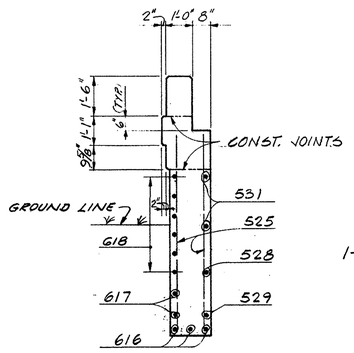

SECTION "H-H"

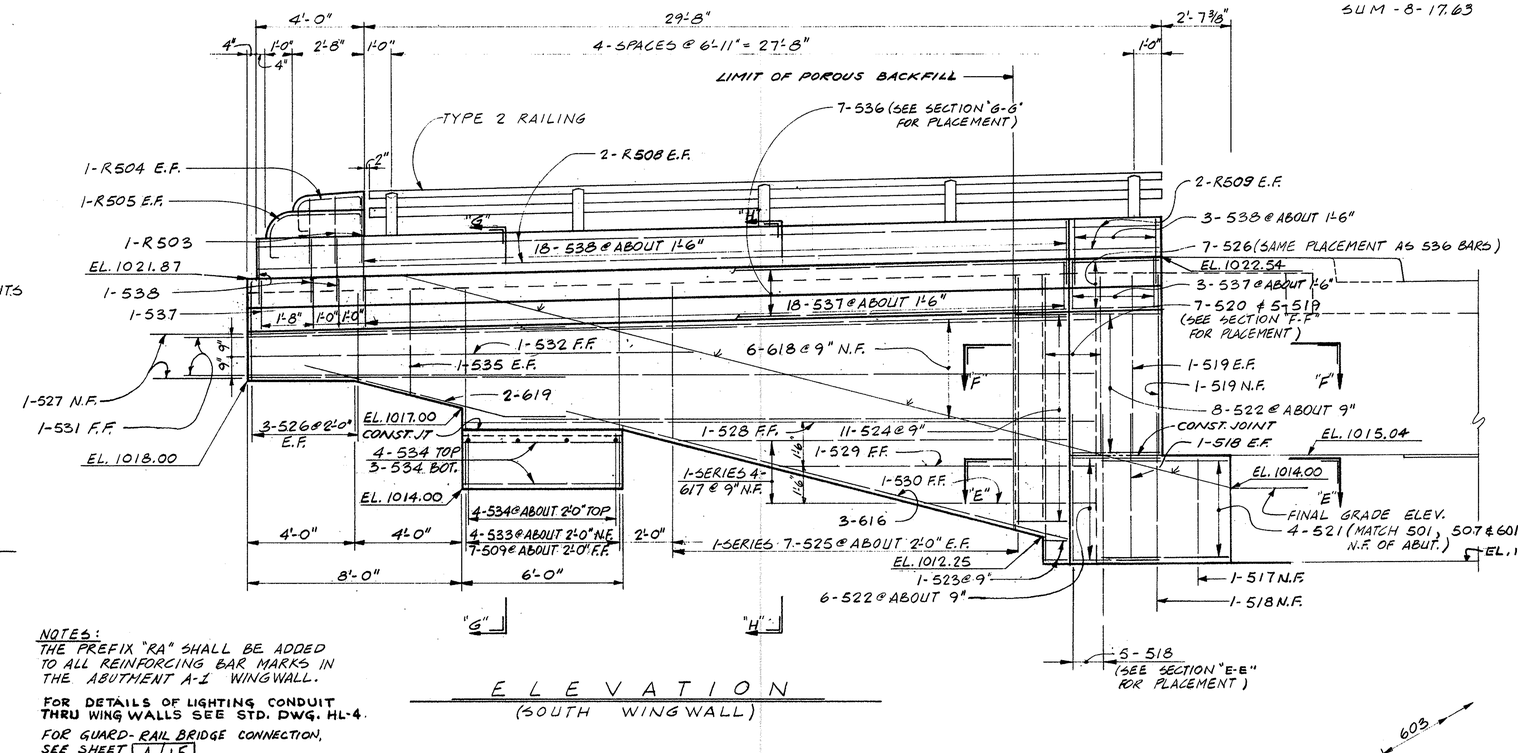

ELEVATION
(SOUTH WINGWALL)

NOTES:
THE PREFIX "RA" SHALL BE ADDED TO ALL REINFORCING BAR MARKS IN THE ABUTMENT A-1 WINGWALL.

FOR DETAILS OF LIGHTING CONDUIT THRU WING WALLS SEE STD. DWG. HL-4.

FOR GUARD-RAIL BRIDGE CONNECTION, SEE SHEET 4/15

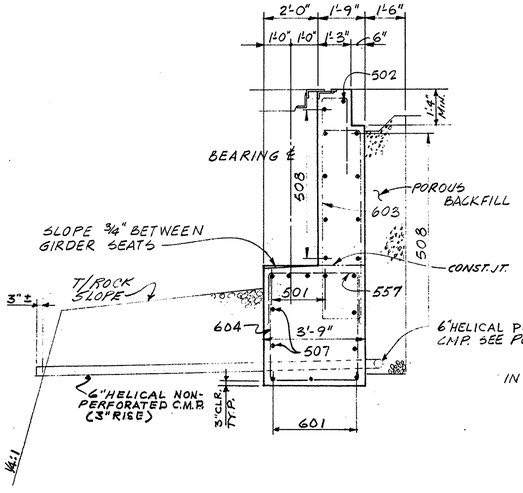

SECTION "A-A"

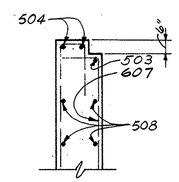

SECTION "B-B"

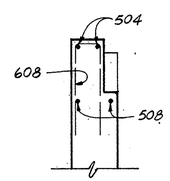

SECTION "C-C"

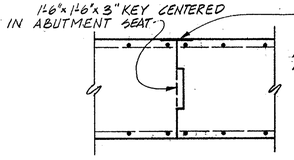

SECTION BELOW BRIDGE SEAT

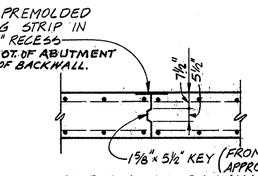

SECTION AT BACKWALL

ABUTMENT CONTRACTION JOINT DETAIL

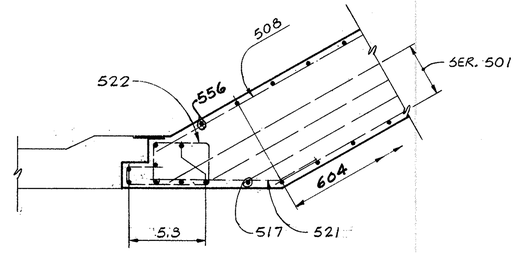

SECTION "E-E"

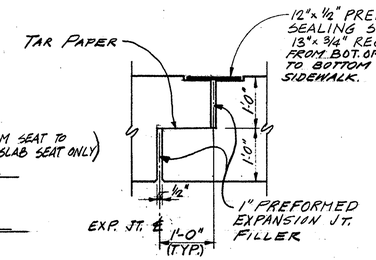

EXP. JOINT DETAIL

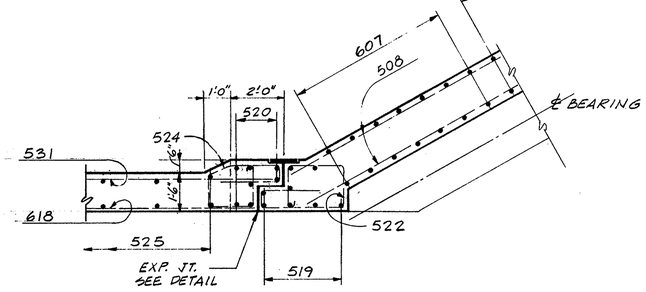

SECTION "F-F"

STATE OF OHIO
DEPARTMENT OF HIGHWAYS
BUREAU OF BRIDGES

5/15

DALTON • DALTON ASSOCIATES

ABUT. A-1 SOUTH W/WALL ELEV.
BRIDGE No. SUM-8-1800
UNDER RELOCATED FRONT ST.
SUMMIT COUNTY CUYAHOGA FALLS EXPRESSWAY
STA. 248+39.76

DESIGNED	DRAWN	TRACED	CHECKED	REVIEWED	DATE	REVISED
E.A.H.	D.F.D.		J.H.	R.D.H.	2-2-68	

FED. RD.	STATE	PROJECT	
2	OHIO		

352
460

SUM-8-17.63

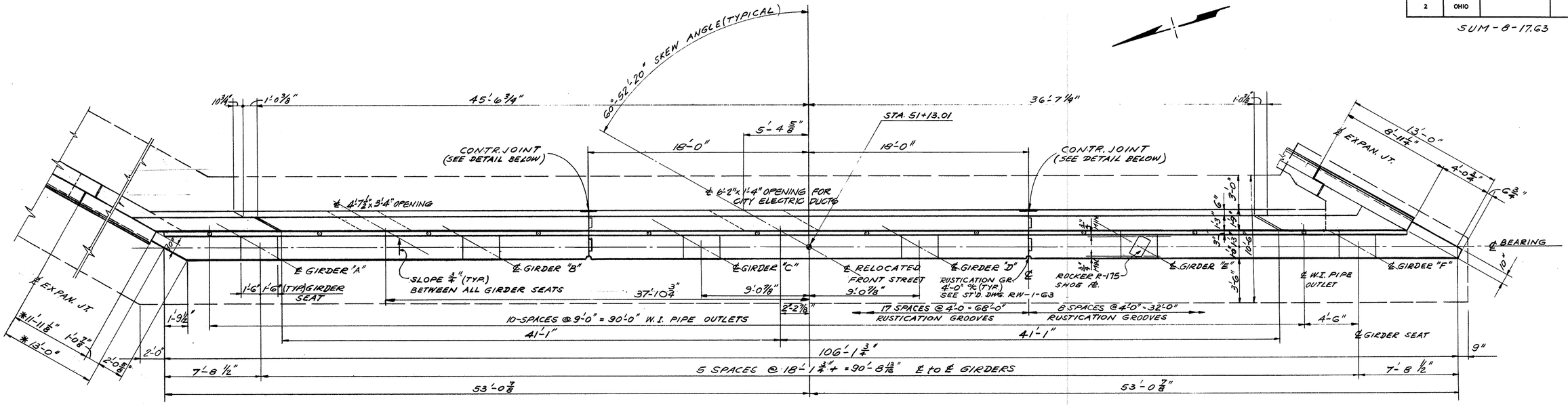

* MEASURED ALONG EXTERIOR FACE OF WING WALL

PLAN

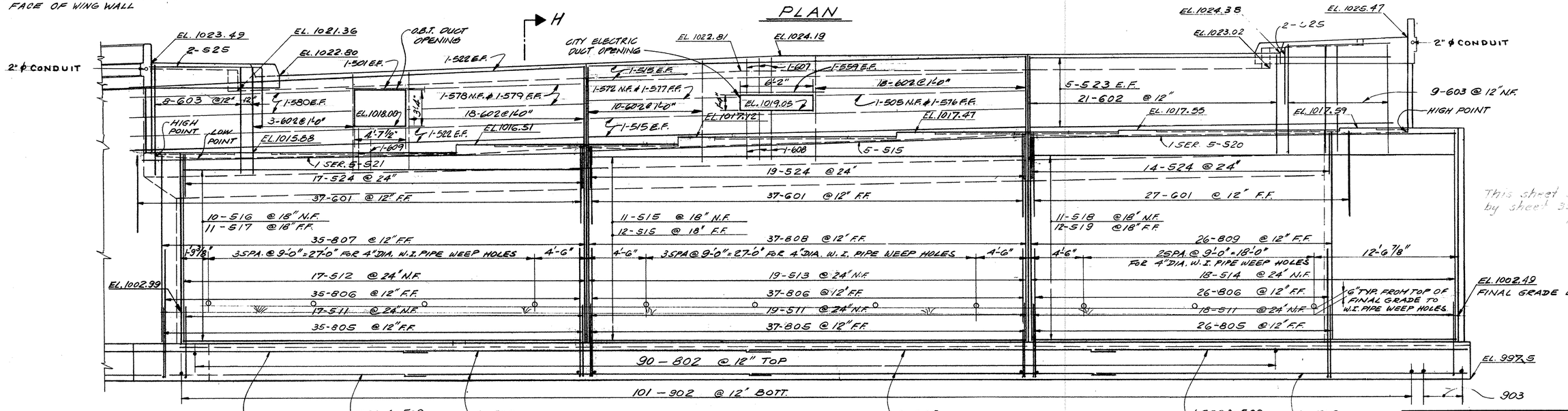

ELEVATION

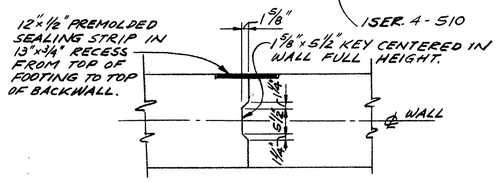

CONTRACTION JOINT DETAIL

NOTES:

FOR ABUTMENT A-2, POROUS BACKFILL, 2 FT. THICK, FULL LENGTH OF ABUTMENT AND THE INDICATED LENGTH OF WINGS SHALL EXTEND UP TO THE UNDERSIDE OF THE APPROACH SLAB OR TO THE FINISHED GROUND SURFACE.

THE PREFIX "FA" SHALL BE ADDED TO ALL BARMARKS IN ABUTMENT A-2

FOR SECTION H-H, SEE SHEET NO. 9/15

FOR LIGHTING DETAILS NOT SHOWN SEE LIGHTING PLANS.

This sheet superseded by sheet 352 A. 12-18-70.

STATE OF OHIO
DEPARTMENT OF HIGHWAYS
BUREAU OF BRIDGES

6/15

DALTON · DALTON ASSOCIATES

ABUT. A-2 PLAN & ELEVATION

BRIDGE No. SUM-8-1800

UNDER RELOCATED FRONT ST.

SUMMIT COUNTY CUYAHOGA FALLS EXPRESSWAY

STA. 248+39.76

DESIGNED	DRAWN	TRACED	CHECKED	REVIEWED	DATE	REVISED
J.H.	W.S.		R.J.P.	RJD/W	2-2-68	

K&B

FED. RD.	STATE	PROJECT	
2	OHIO		

352 A
46

SUM-8-17.63

℄ 10"ϕ SLEEVE FOR 6"ϕ GAS LINE SEE NOTE ON ABUT #1 SHEET 3/15

60°, 52'-20" SKEW ANGLE (TYPICAL)

STA. 51+13.01

℄ DUCT OPENINGS - 2'3" x 2'3" (O.B.T.)

CONTR. JOINT (SEE DETAIL BELOW)

℄ 12"ϕ SLEEVE FOR 3"ϕ GAS LINE SEE NOTE ON ABUT 1 SHT. 3/15

CONTR. JOINT (SEE DETAIL BELOW)

℄ ELEC. DUCT OPENING

EXPAN. JT.

℄ BEARING

GIRDER SEATS (TYP.)

SLOPE 3/4" (TYP BETWEEN ALL GIRDER SEATS)

LEVEL

10-SPACES @ 9'-0" = 90'-0" W.I. PIPE OUTLETS

17 SPACES @ 4'-0" = 68'-0" RUSTICATION GROOVES

8 SPACES @ 4'-0" - 32'-0" RUSTICATION GROOVES

℄ GIRDER "A" ℄ GIRDER "B" ℄ GIRDER "C" ℄ RELOCATED FRONT STREET ℄ GIRDER "D" ROCKER R-175 SHOE PL. ℄ GIRDER "E" ℄ W.I. PIPE OUTLET ℄ GIRDER "F" ℄ GIRDER SEAT

RUSTICATION GR. 4'-0" ℄ (TYP) SEE ST'D. DWG. RW-1-63

5 SPACES @ 18'-1 3/4" + = 90'-8 13/16" ℄ to ℄ GIRDERS

53'-0 7/8" 53'-0 7/8"

106'-1 3/4"

41'-1" 41'-1"

* MEASURED ALONG EXTERIOR FACE OF WING VALL

"R" "S" H

PLAN

℄ GAS LINE

CITY ELEC. DUCT OPENING CUT HORIZ. REBARS TO SUIT IN FIELD

2" ϕ CONDUIT

EL. 1023.49 2-525 7-603 @ 12" 1-576 (EF) HIGH POINT LOW POINT 1-522 (EF) 9-602 @ 12" EL. 1015.88 7-SER-5-521 17-524 @ 24" 37-601 @ 12" F.F. 10-516 @ 18" N.F. 11-517 @ 18" F.F. 35-807 @ 12" F.F. 3 SPA @ 9'-0" = 27'-0" FOR 4" DIA. W.I. PIPE WEEP HOLES 17-512 @ 24" N.F. 35-806 @ 12" F.F. 17-511 @ 24" N.F. 35-805 @ 12" F.F. EL. 1002.99

EL. 1021.36 14-609 @ 12" (ABOVE OP'NGS) 14-608 @ 12" (BELOW OP'NGS) EL. 1022.86 EL. 1019.03 610 (FF) 610 (NF) EL. 1019.32 6-602 @ 12" EL. 1016.51

578 (NF) 577 (FF)

EL. 1022.81 EL. 1020.41 EL. 1017.12 EL. 1016.51 EL. 1024.19 36-602 @ 12" 1-515 (EF) EL. 1021.02 EL. 1017.47 5-515 19-524 @ 24" 37-601 @ 12" F.F. 11-515 @ 18" N.F. 12-515 @ 18" F.F. 37-808 @ 12" F.F. 3 SPA @ 9'-0" = 27'-0" FOR 4" DIA. W.I. PIPE WEEP HOLES 19-513 @ 24" N.F. 37-806 @ 12" F.F. 19-511 @ 24" N.F. 37-805 @ 12" F.F.

EL. 1024.38 EL. 1023.02 2-525 EL. 1025.47 5-523 (EF) 10-607 @ 12" 1-504 (EF) 10-602 @ 12" EL. 1019.25 EL. 1017.55 1-602 EL. 1017.59 9-603 @ 12" N.F. HIGH POINT 14-524 @ 24" 27-601 @ 12" F.F. 11-518 @ 18" N.F. 12-519 @ 18" F.F. 26-809 @ 12" F.F. 25 SPA @ 9'-0" = 18'-0" FOR 4" DIA. W.I. PIPE WEEP HOLES 18-514 @ 24" N.F. 26-806 @ 12" F.F. 18-511 @ 24" N.F. 26-805 @ 12" F.F. 6" TYP. FROM TOP OF FINAL GRADE TO W.I. PIPE WEEP HOLES EL. 1002.49 FINAL GRADE EL. EL. 997.5

90 - 802 @ 12" TOP

101 - 902 @ 12" BOTT.

1 SER. 4-509 4-506 4-506 1 SER. 3-508 & 1-506 3-506 & 1-507 903

ELEVATION

SECT. "R-R"

609 610 608 522 522 OPNG 12.25"

SECT. "S-S"

523 504 607 OPNG 2'-0" 523 (CUT) 523 608

12"x1½" PREMOLDED SEALING STRIP IN 13"x¾" RECESS FROM TOP OF FOOTING TO TOP OF BACKWALL.

1 5/8" 1 5/8" x 5½" KEY CENTERED IN WALL FULL HEIGHT.

1 SER. 4-510

℄ WALL

CONTRACTION JOINT DETAIL

NOTES:

FOR ABUTMENT A-2, POROUS BACKFILL, 2 F.T. THICK, FULL LENGTH OF ABUTMENT AND THE INDICATED LENGTH OF WINGS SHALL EXTEND UP TO THE UNDERSIDE OF THE APPROACH SLAB OR TO THE FINISHED GROUND SURFACE.

THE PREFIX "FA" SHALL BE ADDED TO ALL BARMARKS IN ABUTMENT A-2

FOR SECTION H-H, SEE SHEET NO. 9/15

FOR LIGHTING DETAILS NOT SHOWN SEE LIGHTING PLANS.

This sheet supersedes sheet 352. 12-18-70.

STATE OF OHIO
DEPARTMENT OF HIGHWAYS
BUREAU OF BRIDGES

6/15

DALTON · DALTON ASSOCIATES

ABUT. A-2 PLAN & ELEVATION

BRIDGE No. SUM-8-1800

UNDER RELOCATED FRONT ST.

SUMMIT COUNTY CUYAHOGA FALLS EXPRESSWAY

STA. 248+39.76

DESIGNED	DRAWN	TRACED	CHECKED	REVIEWED	DATE	REVISED
J.H.	W.S.		R.J.P.	RDH	2-2-68	10-19-70 2-5-71

MICROFILMED
MAR 01 1979
RECONSTRUCTION

FED. RD.	STATE	PROJECT	
2	OHIO		

353
460

SUM - 8 - 17.63

NOTE:
FOR DETAILS OF LIGHTING CONDUIT THRU WING WALLS SEE STD. DWG. HL-4

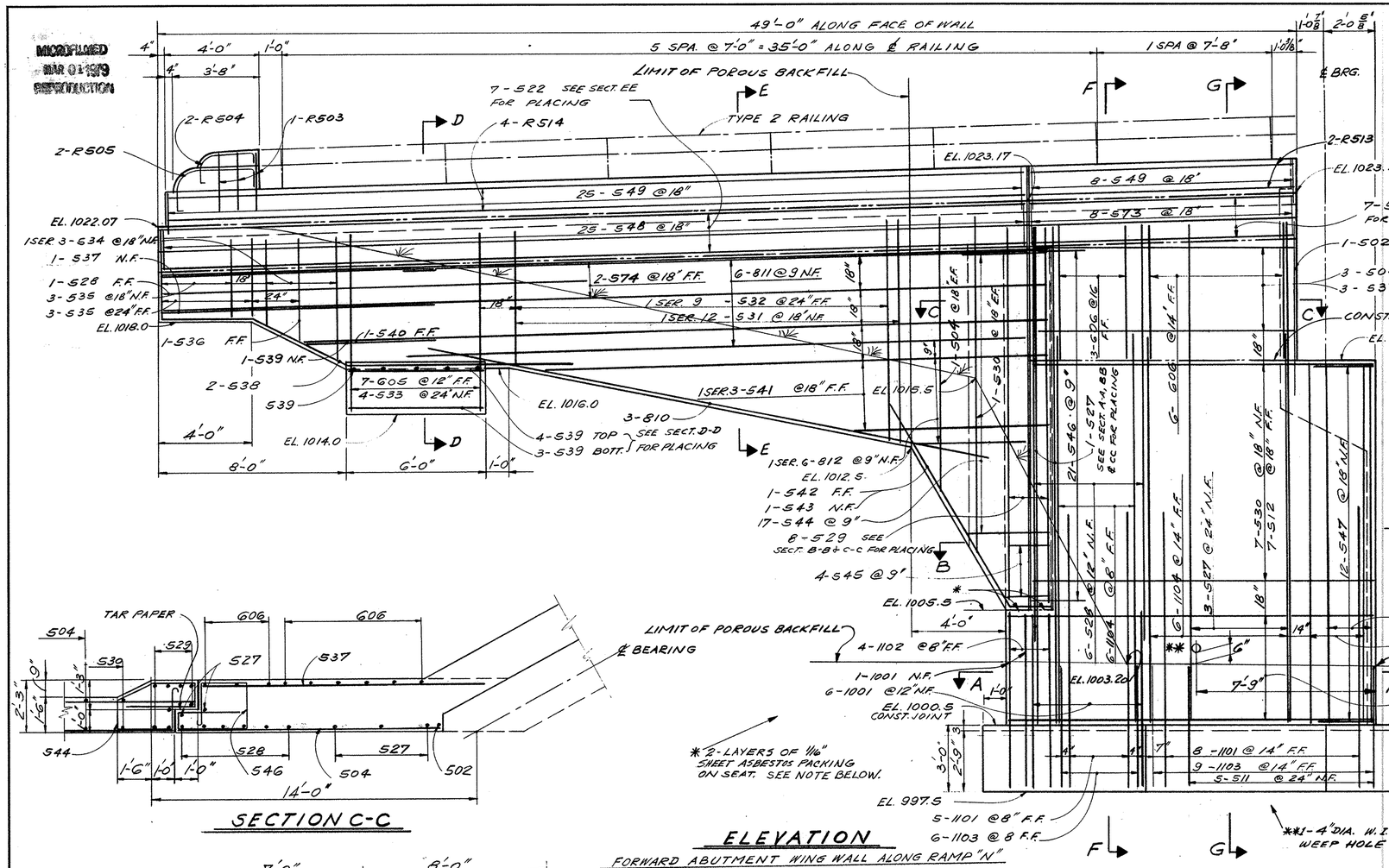

ELEVATION

FORWARD ABUTMENT WING WALL ALONG RAMP "N"

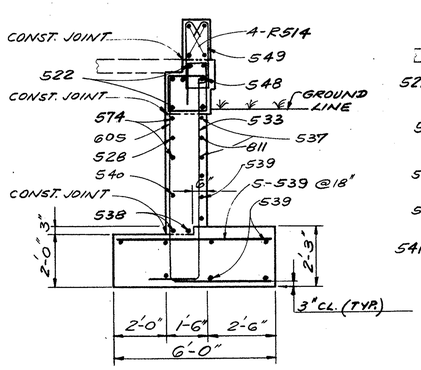

SECTION D-D

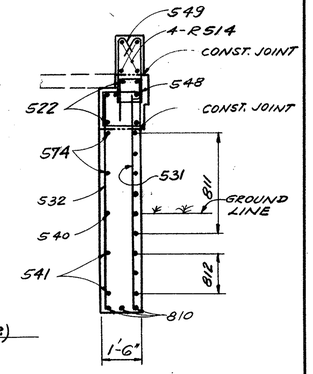

SECTION E-E

SECTION C-C

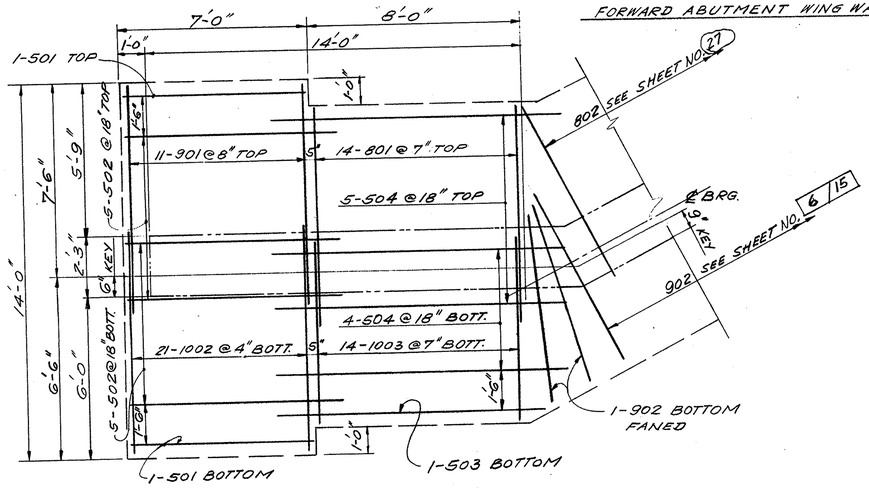

FOUNDATION PLAN

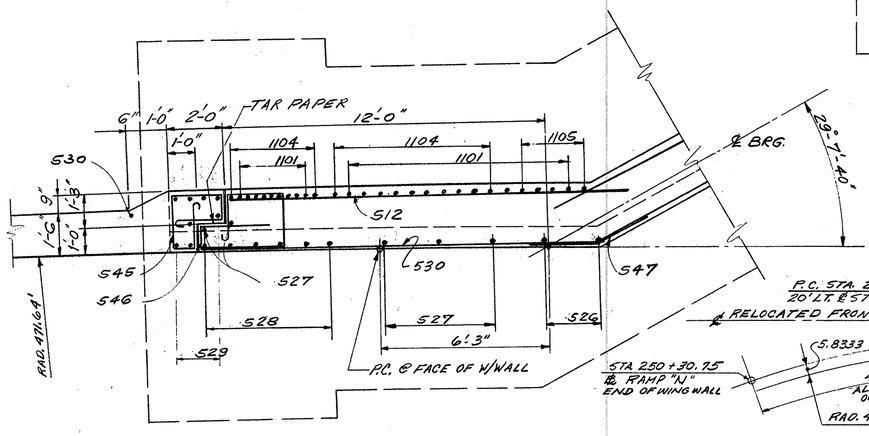

SECTION B-B

WING WALL LAYOUT

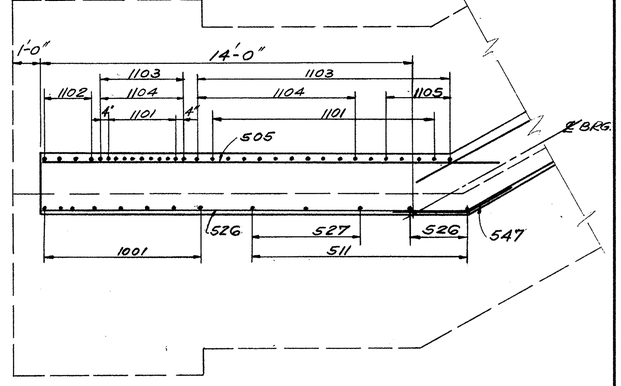

SECTION A-A

1) FOR GUARDRAIL - BRIDGE CONNECTION SEE DETAIL "P" SHEET 4 / 15
2) SHEET ASBESTOS PACKING (SPEC. 711.22) AND TAR PAPER SHALL BE INCLUDED WITH "ITEM 511" FOR PAYMENT.
3) FOR SECTIONS F-F & G-G, SEE SHT. NO. 9 / 15

STATE OF OHIO
DEPARTMENT OF HIGHWAYS
BUREAU OF BRIDGES
7 / 15

DALTON · DALTON ASSOCIATES

ABUT. A-2 NORTH W/WALL ELEV.
BRIDGE № SUM-8-1800
UNDER RELOCATED FRONT ST.
SUMMIT COUNTY CUYAHOGA FALLS EXPRESSWAY
STA. 248+39.76

DESIGNED	DRAWN	TRACED	CHECKED	REVIEWED	DATE	REVISED
E.A.H	W.S.		R.J.P	RJP	2-2-68	

K&E

MICROFILMED
MAR 02 '79
REPRODUCTION

FED. RD.	STATE	PROJECT	
2	OHIO		

354
460

SUM-8-17.63

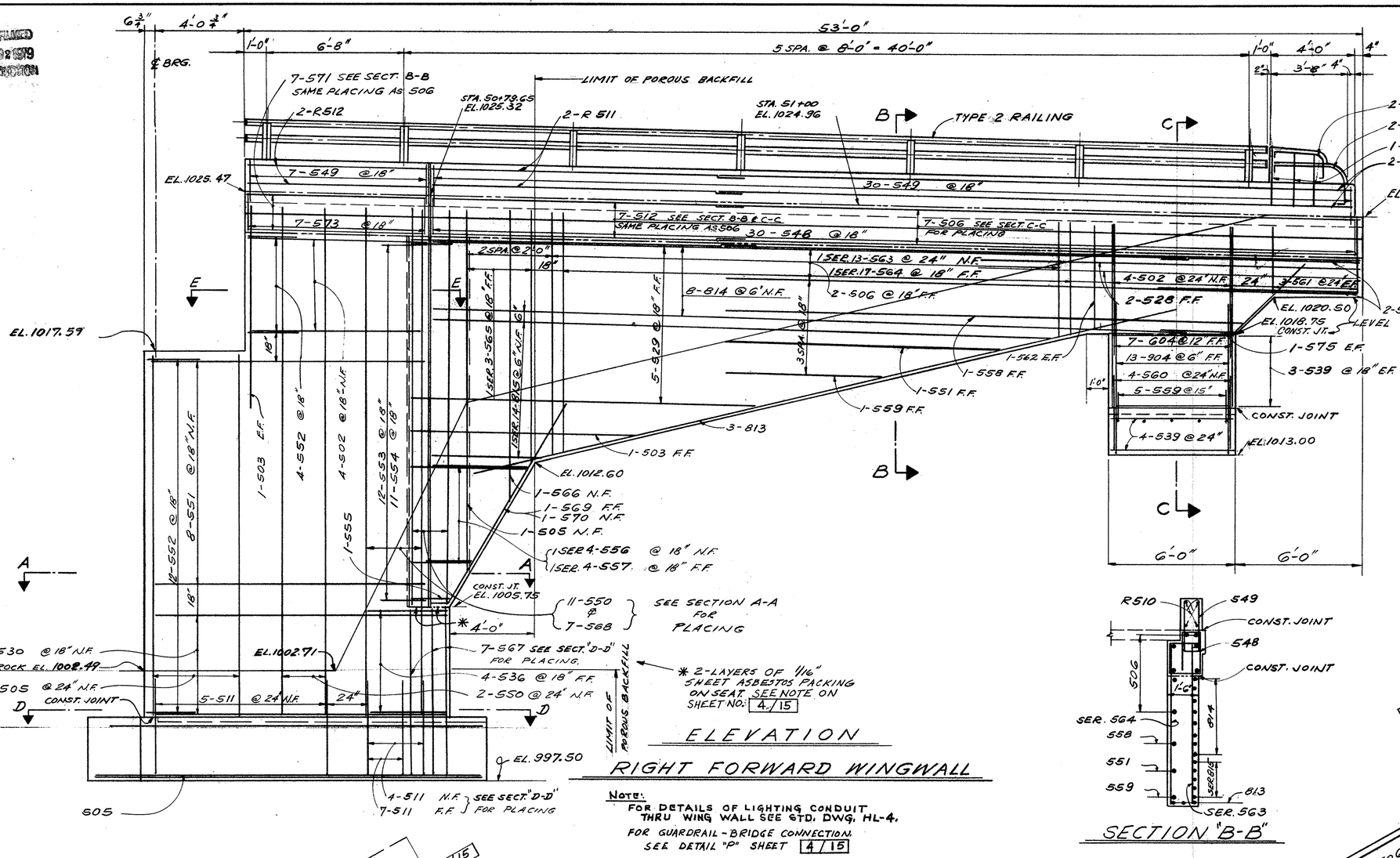

ELEVATION
RIGHT FORWARD WINGWALL

NOTE:
FOR DETAILS OF LIGHTING CONDUIT THRU WING WALL SEE STD. DWG. HL-4.
FOR GUARDRAIL - BRIDGE CONNECTION SEE DETAIL "P" SHEET 4/15

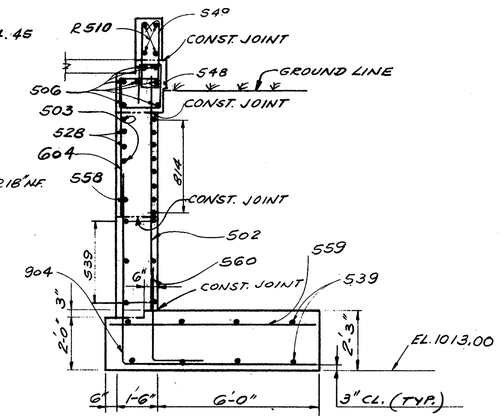

SECTION "C-C"

SECTION "B-B"

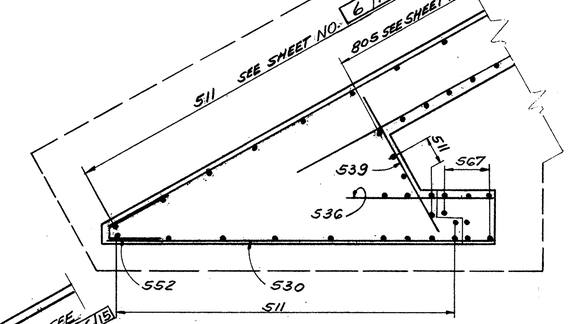

SECTION "D-D"

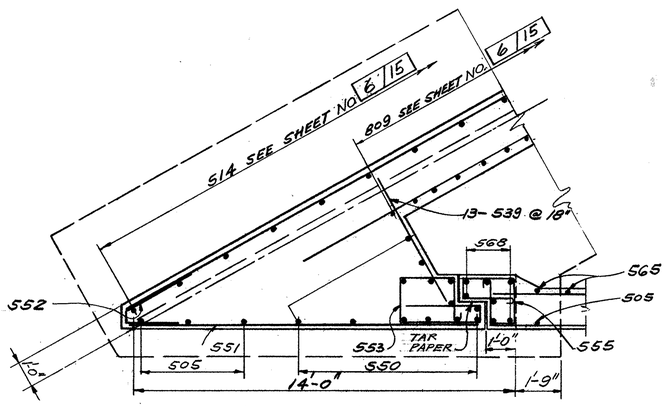

SECTION "A-A"

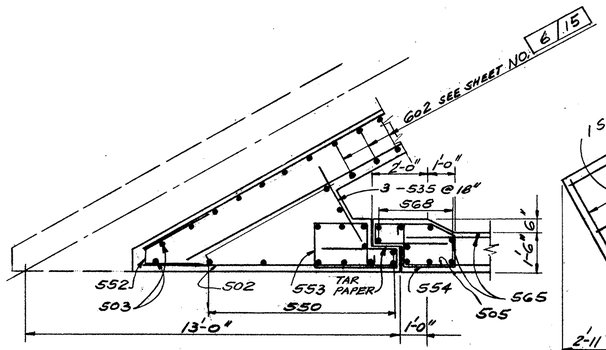

SECTION "E-E"

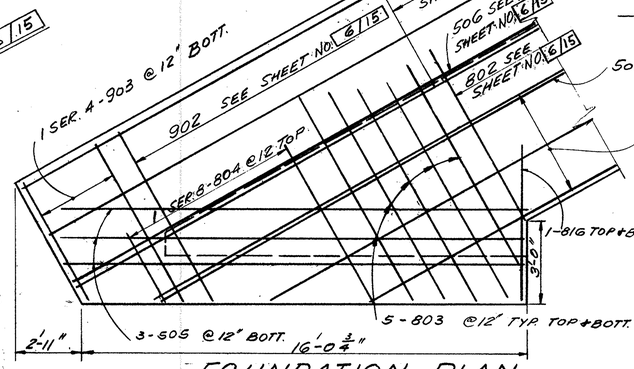

FOUNDATION PLAN

STATE OF OHIO
DEPARTMENT OF HIGHWAYS
BUREAU OF BRIDGES

8/15

DALTON · DALTON ASSOCIATES

ABUT. A-2 SOUTH W/WALL ELEV.
BRIDGE No. SUM-8-1800
UNDER RELOCATED FRONT ST.
SUMMIT COUNTY CUYAHOGA FALLS EXPRESSWAY
STA. 248+32.76

DESIGNED	DRAWN	TRACED	CHECKED	REVIEWED	DATE	REVISED
E.A.H.	W.S.		R.J.P	R.D.N	2-2-68	

FORM DDA-6

MICROFILMED
MAR 02 1979
DOCUMENT CONTROL

FED. RD.	STATE	PROJECT	
2	OHIO		

355
460

SUM-8-17.63

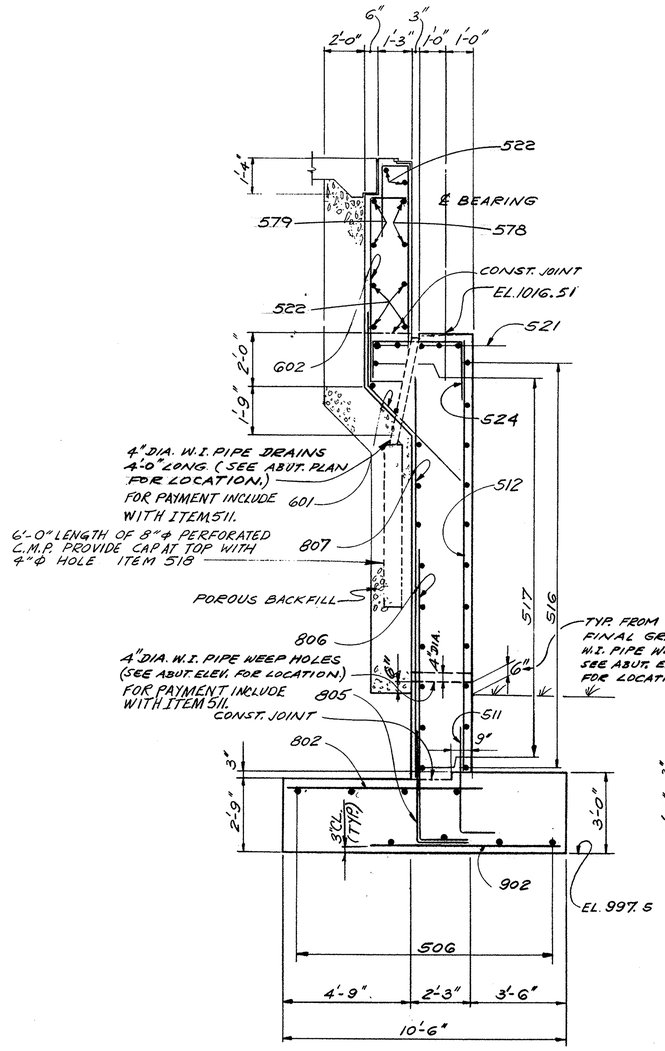

SECTION H-H

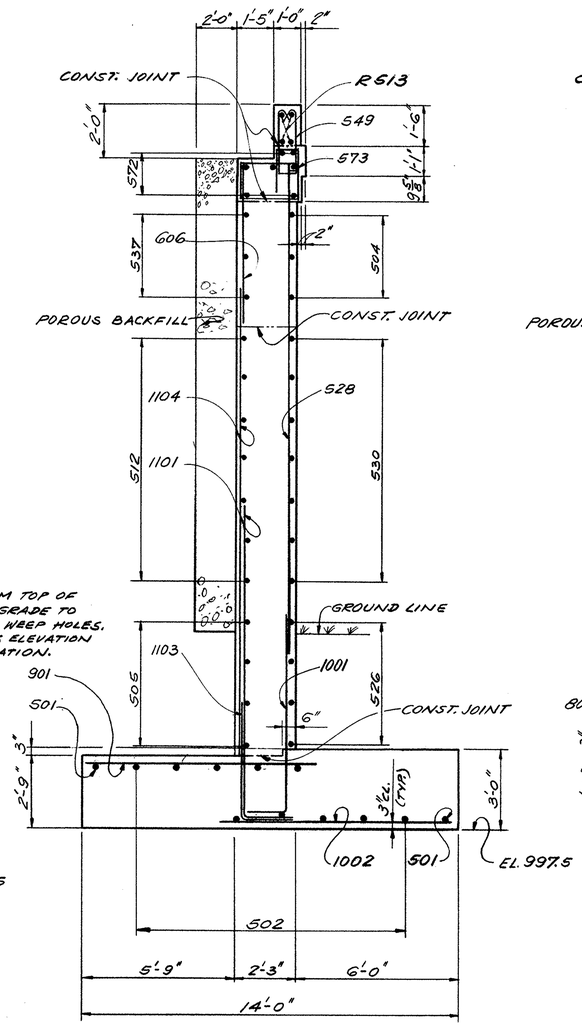

SECTION F-F

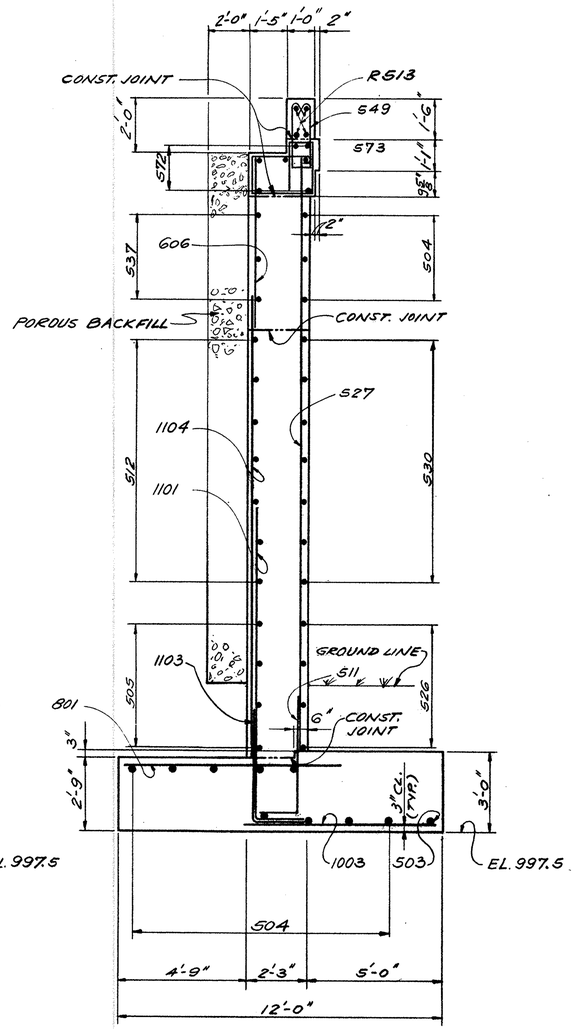

SECTION G-G

WING WALL ALONG RAMP 'N'

STATE OF OHIO
DEPARTMENT OF HIGHWAYS
BUREAU OF BRIDGES

9/15

DALTON · DALTON ASSOCIATES

SECTIONS F-F, G-G & H-H

BRIDGE No. SUM-8-1800
UNDER RELOCATED FRONT ST.
SUMMIT COUNTY CUYAHOGA FALLS EXPRESSWAY
STA. 248+39.76

DESIGNED	DRAWN	TRACED	CHECKED	REVIEWED	DATE	REVISED
E.A.M.	W.S.		R.J.P.	R.D.W.	2-2-68	

MICROFILMED
MAR 02 1979
DOCUMENTATION

FED. RD.	STATE	PROJECT	
2	OHIO		

356
460

SUM-8-17.63

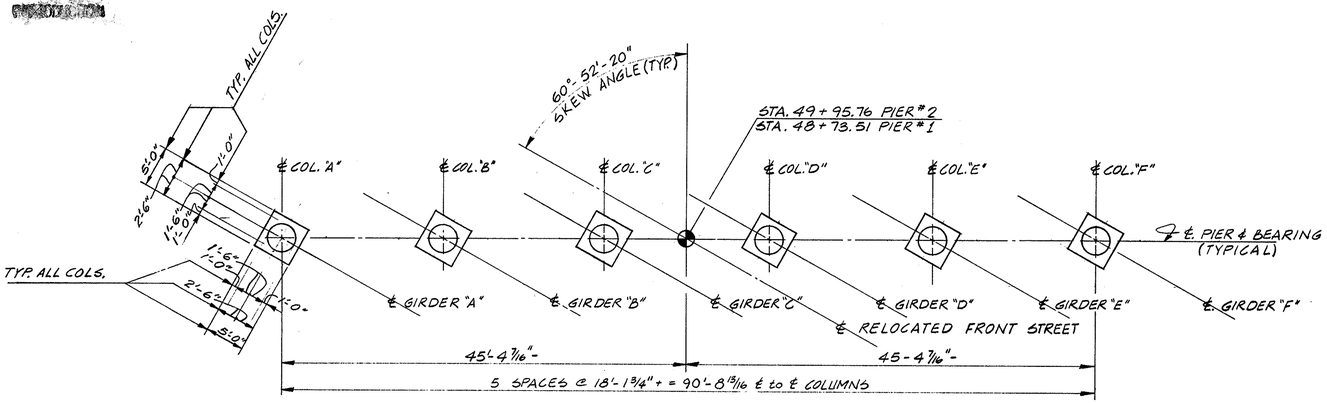

PLAN
(TYPICAL FOR PIERS NO. 1 & 2)

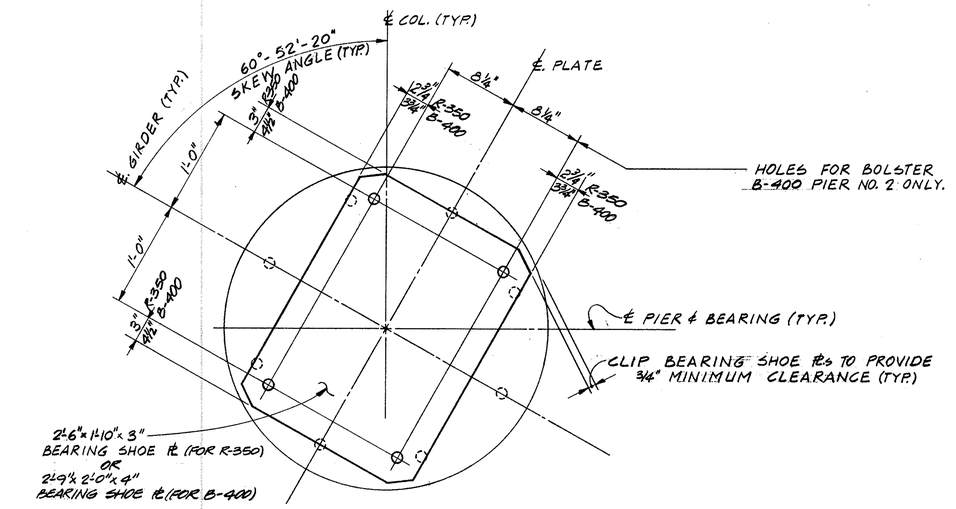

BEARING SHOE PL. CLEARANCE DETAIL

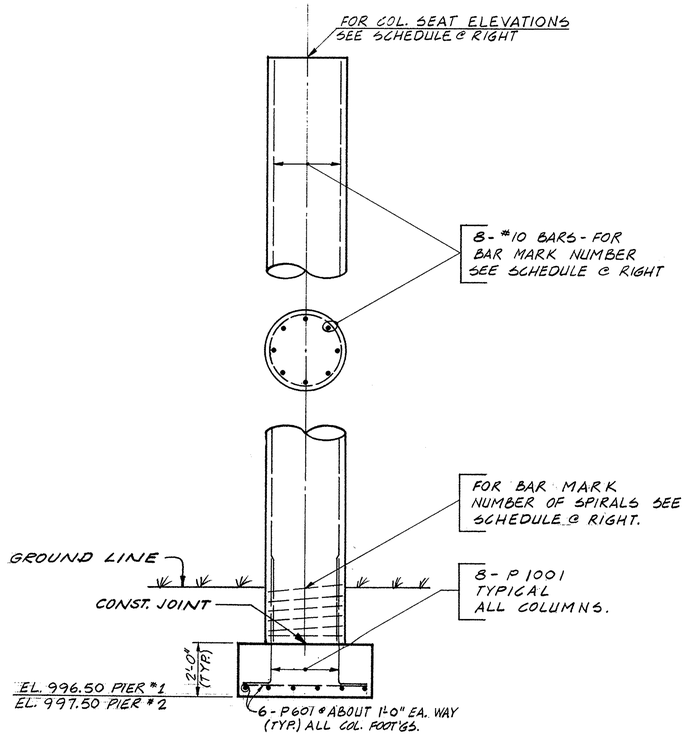

TYPICAL COLUMN ELEVATION

COLUMN AND BAR MARK SCHEDULE				
PIER	COL.	SEAT EL.	VERT. BARS	SPIRALS
NO. 1	A	1017.62	P1002	SP401
	B	1017.67	P1002	SP401
	C	1017.68	P1002	SP401
	D	1017.43	P1003	SP402
	E	1016.91	P1004	SP403
	F	1016.38	P1005	SP404
NO. 2	A	1017.34	P1006	SP405
	B	1017.69	P1004	SP403
	C	1018.01	P1007	SP406
	D	1018.06	P1008	SP407
	E	1017.85	P1009	SP408
	F	1017.60	P1010	SP409

NOTE:

SPECIAL CARE SHALL BE TAKEN IN PLACING REINFORCING STEEL SO AS TO AVOID INTERFERENCE WITH DRILLING OF ANCHOR BOLT HOLES. AT PIER NO. 2.

STATE OF OHIO
DEPARTMENT OF HIGHWAYS
BUREAU OF BRIDGES

10/15

DALTON · DALTON ASSOCIATES

TYPICAL PIER DETAILS

BRIDGE No. SUM-8-1800
UNDER RELOCATED FRONT ST.
SUMMIT COUNTY CUYAHOGA FALLS EXPRESSWAY
STA. 248+39.76

DESIGNED	DRAWN	TRACED	CHECKED	REVIEWED	DATE	REVISED
D.H.S.	D.F.D.		J.H.	RDH	2-2-68	

MICROFILMED
MAR 02 1999
PRESERVATION

FED. RD.	STATE	PROJECT	
2	OHIO		

357
460

SUM-8-17.63

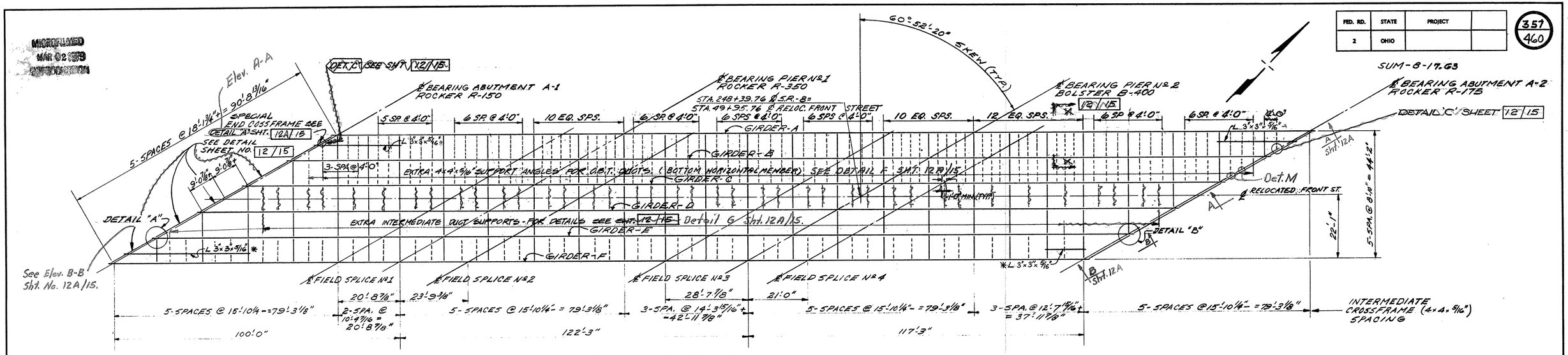

FRAMING PLAN

*INCLUDED WITH SCUPPERS FOR PAYMENT

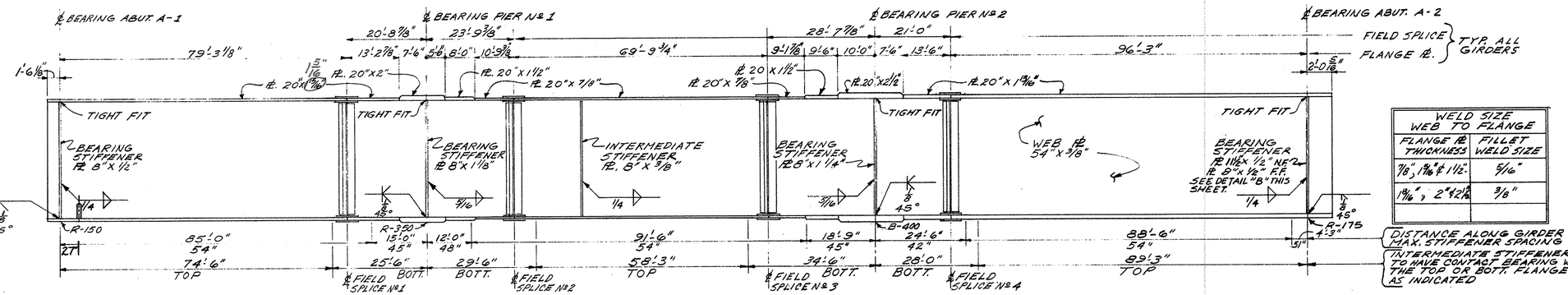

TYPICAL GIRDER ELEVATION

WELD SIZE WEB TO FLANGE	
FLANGE PL THICKNESS	FILLET WELD SIZE
7/8", 1 1/16" & 1 1/2"	5/16"
1 1/16", 2" & 2 1/2"	3/8"

NOTES:

1) CORNERS OF BEARING BASE PLs TO BE CLIPED AS REQUIRED, SEE ABUT. & PIER DETAILS, SHT'S. NO: 3,6,10/15
2) FOR MODIFIED BOLSTER & ROCKER TABLE SEE SHT NO: 12/15
3) TOP & BOTTOM FLANGE PLATES ARE TO BE THE SAME AND SHALL BE SPLICED AT POINTS SHOWN ON THE GIRDER ELEVATION.
4) INTERMEDIATE STIFFNERS SHALL BE PLACED IN PAIRS EQUALLY SPACED BETWEEN FIELD SPLICE ANGLES AND/OR CROSS FRAME STIFFNERS AND/OR BEARING STIFFENERS IN ACCORDANCE WITH MAXIMUM STIFFNER SPACING SHOWN ON THE GIRDER ELEVATION.
5) FOR END CROSSFRAME DETAIL AND FIELD SPLICE DETAILS SEE SHEET NO. 12/15

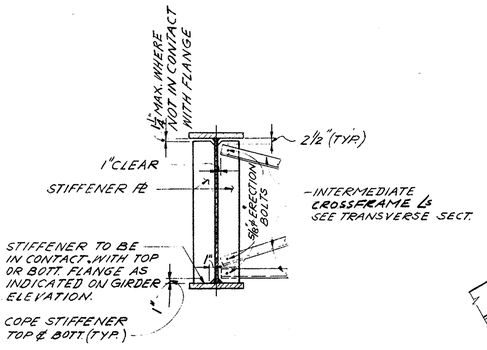

INTERMEDIATE CROSSFRAME & STIFFENER DETAIL

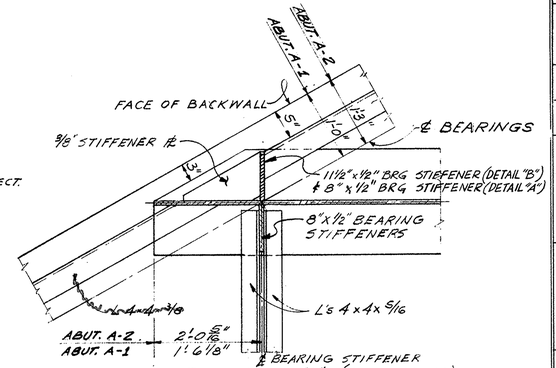

DETAIL "A" (AS SHOWN)

DETAIL "B" OPPOSITE HAND

DEFLECTION & CAMBER TABLE

LOCATION		SPAN #1 ¼	SPAN #1 ½	SPAN #1 ¾	SPAN #1 FIELD SPLICE Nº 1	SPAN #2 FIELD SPLICE Nº 2	SPAN #2 ¼	SPAN #2 ½	SPAN #2 ¾	SPAN #2 FIELD SPLICE Nº 3	SPAN #3 FIELD SPLICE Nº 4	SPAN #3 ¼	SPAN #3 ½	SPAN #3 ¾
DEFLECTION DUE TO WEIGHT OF STEEL	A THRU F	.168	.204	.100	.077	.040	.064	.125	.040	.037	.109	.165	.320	.261
DEFLECTION DUE TO REMAINING DEAD LOAD	A THRU F	.818	.993	.487	.375	.195	.312	.609	.195	.180	.531	.804	1.558	1.271
ADJUSTMENT REQUIRED FOR VERTICAL CURVE	A	.936	1.176	1.440	1.284	2.196	2.628	3.504	2.628	2.580	1.908	2.424	3.240	2.424
	B	.528	1.056	1.116	.996									
	C	.228	.468	.660	.636									
	D	.060	.108	.168	.192									
	E	0	0	0	0	2.196	2.628	3.504	2.628	2.580				
	F	0	0	0	0	2.004	2.460	3.396	2.580	2.520	1.908	2.424	3.240	2.424
SUM OF DEFLECTION & ADJUSTMENT	A	1.922	2.913	2.027	1.736	2.431	3.004	4.238	2.863	2.797	2.548	3.393	5.118	3.956
	B	1.514	2.253	1.703	1.498									
	C	1.214	1.665	1.247	1.088									
	D	1.046	1.305	.755	.644									
	E	.986	1.197	.587	.452	2.431	3.004	4.238	2.863	2.797				
	F	.986	1.197	.587	.452	2.239	2.836	4.130	2.615	2.737	2.548	3.393	5.118	3.956
REQUIRED SHOP CAMBER	A	1 15/16"	2 15/16"	2"	1 3/4"	2 7/16"	3"	4 1/4"	2 7/8"	2 11/16"	2 9/16"	3 3/8"	5 1/8"	3 15/16"
	B	1 1/2"	2 1/4"	1 9/16"	1 7/16"									
	C	1 3/16"	1 7/16"	1 1/4"	1 1/16"									
	D	1 1/16"	1 3/16"	3/4"	5/8"									
	E	1"	1 3/16"	9/16"	7/16"	2 7/16"	3"	4 1/4"	2 7/8"	2 11/16"				
	F	1"	1 7/16"	5/16"	7/16"	2 1/4"	2 13/16"	4 1/8"	2 7/16"	2 3/4"	2 9/16"	3 3/8"	5 1/16"	3 15/16"

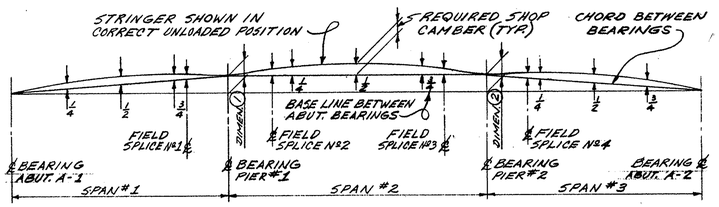

LAYOUT DIAGRAM
(FOR DEFLECTION & CAMBER TABLE)

BLOCKING DIMENSIONS		
BEAM	DIMEN. ①	DIMEN. ②
A	1'-9 5/8"	2'-0 1/16"
B	1'-8 3/4"	1'-11 11/16"
C	1'-7 7/16"	1'-11"
D	1'-5 13/16"	1'-10 3/8"
E	1'-3 7/8"	1'-9 1/4"
F	1'-1 7/8"	1'-8 1/16"

STATE OF OHIO
DEPARTMENT OF HIGHWAYS
BUREAU OF BRIDGES

11/15

DALTON · DALTON ASSOCIATES

FRAMING PLAN & GIRDER ELEV.
BRIDGE Nº SUM-8-1800
UNDER RELOCATED FRONT ST.
SUMMIT COUNTY CUYAHOGA FALLS EXPRESSWAY
STA. 248+39.76

DESIGNED	DRAWN	TRACED	CHECKED	REVIEWED	DATE	REVISED
D.H.S.	R.J.P.		D.H.S.	R.L.V.	2/15/00	

FORM DDA-6

FED. RD.	STATE	PROJECT	
2	OHIO		

358
460

SUM-8-17.63

MODIFIED BOLSTER & ROCKER TABLE

BOLSTER NO.	ROCKER NO.	DIMENSIONS (INCHES) A	B	C	D	F	G	H	K	L	M	R	T	Y	WEIGHT EACH (LB) BOLSTER	ROCKER
	R-350	3½	22	3½	3¼	1	12	20⅛	16	30	27	13½	3	1 1⁵⁄₁₆		1,237
B-400		4½	24	4½	4	⅛	14½	23⅛	17	33	30	14½	4	2⅝	1575	

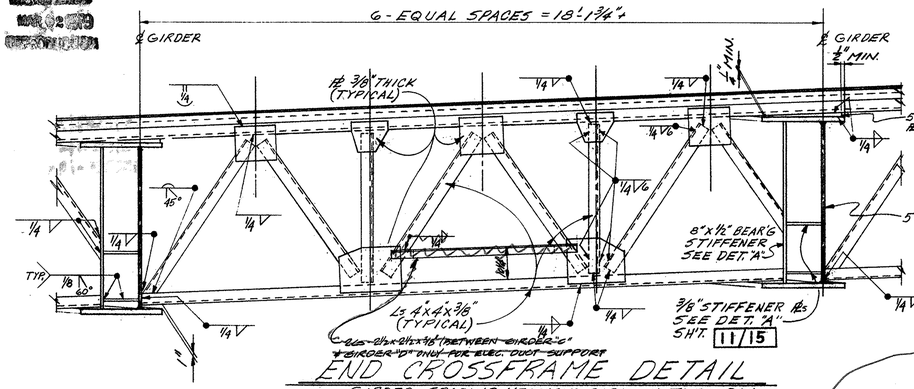

END CROSSFRAME DETAIL

GIRDER SPACING MEASURED PARALLEL TO END DAM
Between Girder "C" & "D" and "D" & "E" only.

NOTE: FOR DETAILS NOT SHOWN, SEE STD. DWG. BR-1-55
FOR FURTHER SHOE ℄ DETAILS, SEE SHEET 10/15

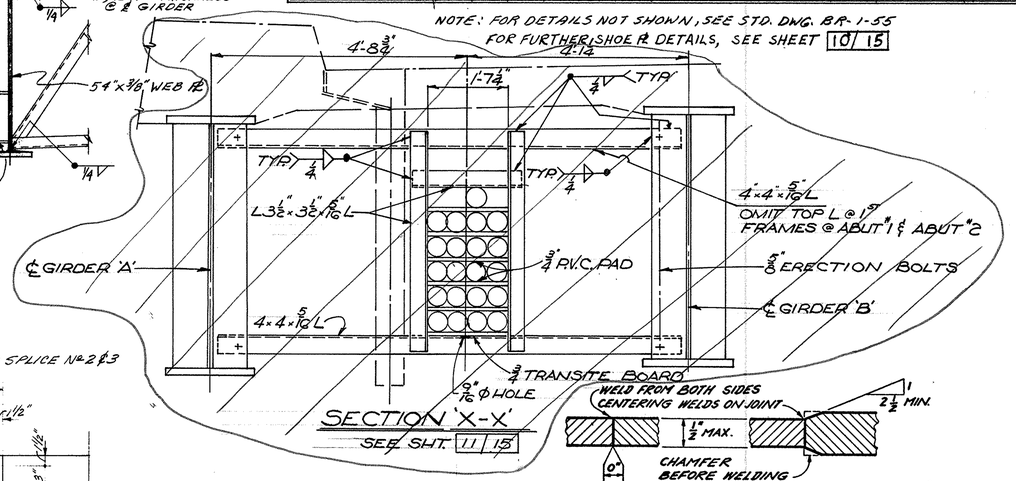

SECTION 'X-X'

SEE SHT. 11/15

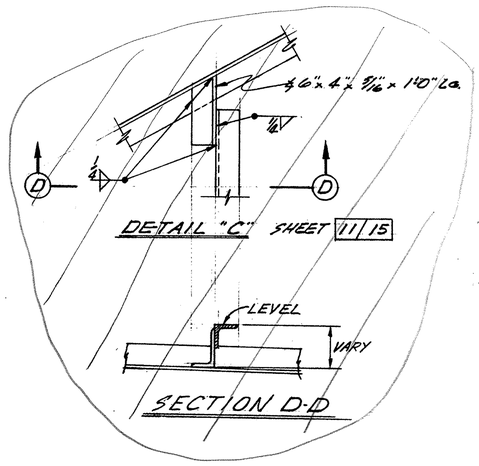

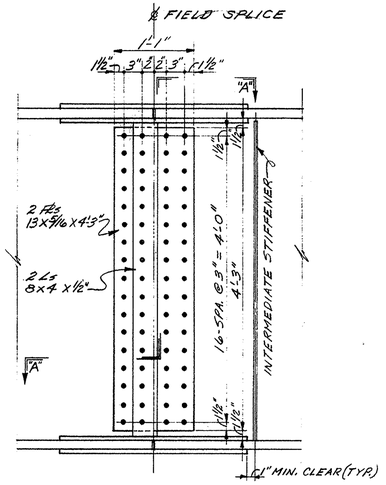

TYPICAL FIELD WEB SPLICE

FIELD SPLICE Nos 1, 2, 3 & 4

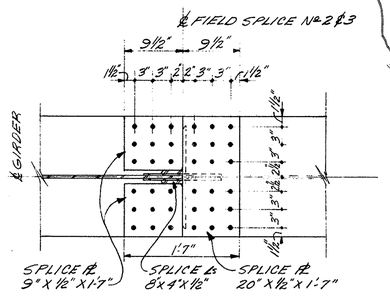

SECTION "A-A" FIELD FLANGE SPLICE No 2 & 3

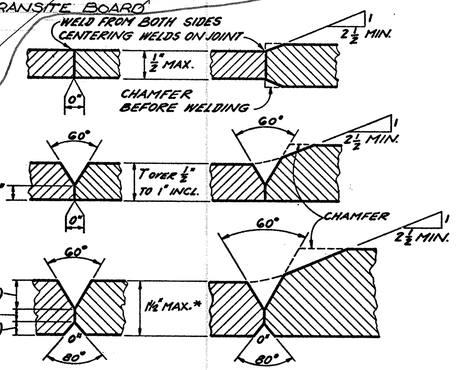

DETAIL

TYPICAL FLANGE WELDS

NOTES:
ALL OF THE ABOVE PENETRATION WELDS SHALL BE BACK-GOUGED AND WELDED AFTER WELDING FAR SIDE.

BUTT WELDS ON GIRDER FLANGE PLATES SHALL BE GROUND FLUSH, THE FINISH GRINDING BEING PARALLEL TO THE DIRECTION OF STRESS.

*FOR PLATE THICKNESS OVER 1-1/2", USE JOINT PREPARATION CONFORMING TO B-U3a-S OR B-U7-S. FIGURE 216. A.W.S. SPECIFICATIONS.

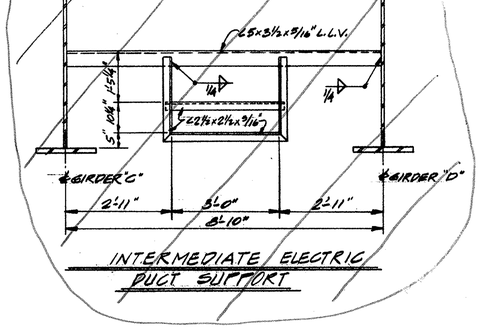

INTERMEDIATE ELECTRIC DUCT SUPPORT

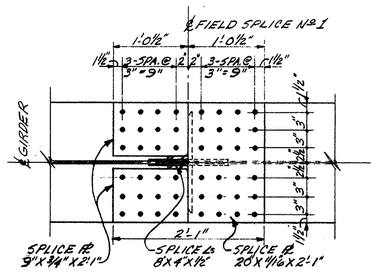

SECTION "A-A" FIELD FLANGE SPLICE No 1

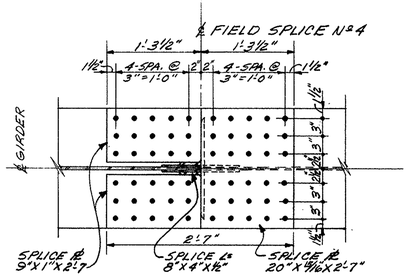

SECTION "A-A" FIELD FLANGE SPLICE No 4

NOTE: ALL GIRDER FIELD SPLICES SHALL BE MADE WITH ⅞" ϕ HIGH STRENGTH STEEL BOLTS. THE BOLTS SHALL BE PLACED WITH THEIR HEADS ON THE OUTSIDE FACE OF EXTERIOR GIRDERS AND ON THE BOTTOM OF ALL FLANGE PLATES.

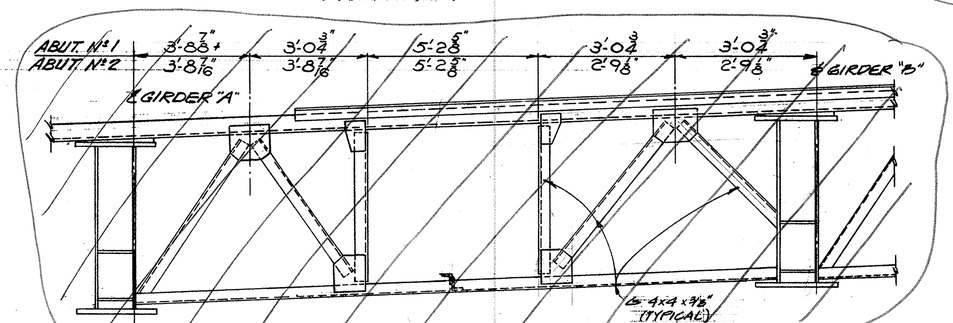

DETAIL "A"

FOR DETAILS NOT SHOWN SEE END CROSSFRAME DETAIL THIS SHEET.

STATE OF OHIO
DEPARTMENT OF HIGHWAYS
BUREAU OF BRIDGES

12/15

DALTON · DALTON ASSOCIATES

CROSSFRAME & SPLICE DETAILS

BRIDGE No SUM-8-1800
UNDER RELOCATED FRONT ST.
SUMMIT COUNTY CUYAHOGA FALLS EXPRESSWAY
STA. 248+39.76

DESIGNED	DRAWN	TRACED	CHECKED	REVIEWED	DATE	REVISED
D.H.S.	R.J.P.		D.H.S.	P.E.H.	2-2-68	12/18/70

FED. RD.	STATE	PROJECT	
2	OHIO		

358A
460

SUM-8-17.63

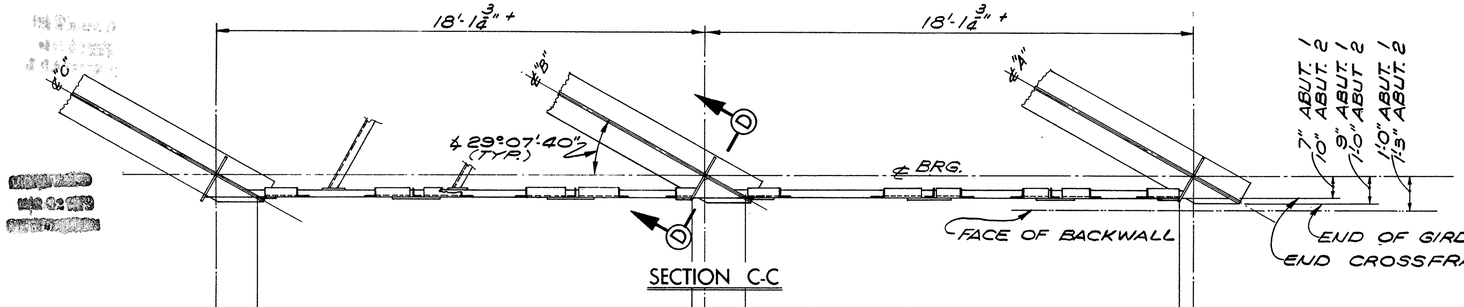

SECTION C-C

ABUT. 2	1'-6"	5 EQUAL SPACES	1'-6"	1'-6"	3'-5 1/2"	3'-5 1/2"	4 EQUAL SPACES	5 9/16"
ABUT. 1	1'-10 9/16"	5 EQUAL SPACES	2'-1 1/8"	1'-10 9/16"	3'-5 1/2"	3'-5 1/2"	4 EQUAL SPACES	3 3/8"

3 3/8" ABUT. 1
5 9/16" ABUT. 2

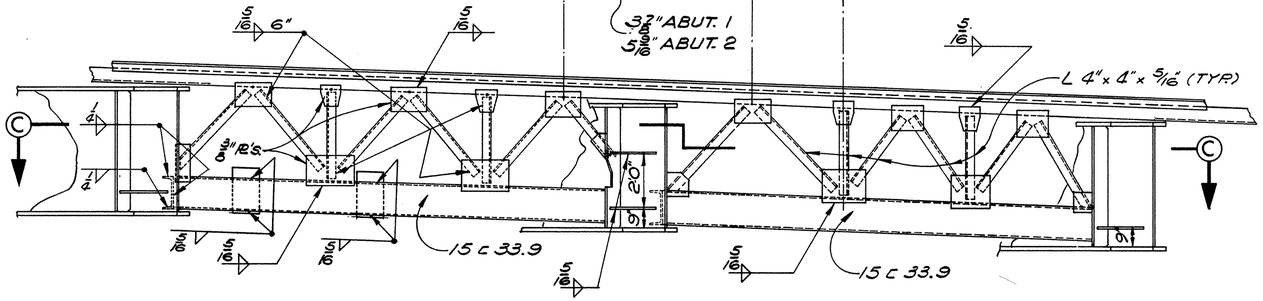

ELEVATION VIEW A-A
(ABUT. A-2 SHOWN, A-1 SIMILAR AS NOTED)

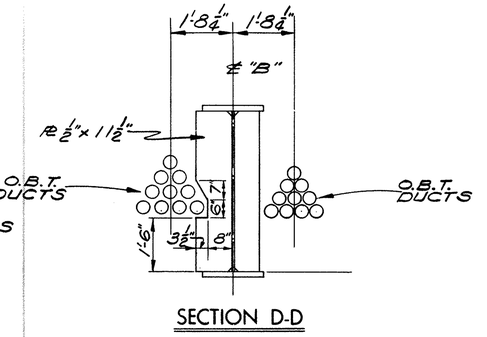

SECTION D-D

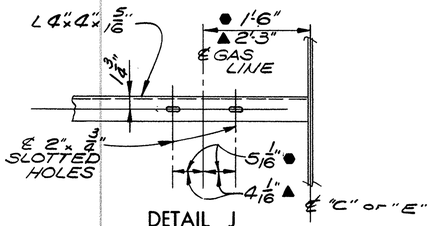

DETAIL J

● DENOTES 8" GAS LINE
▲ DENOTES 6" GAS LINE

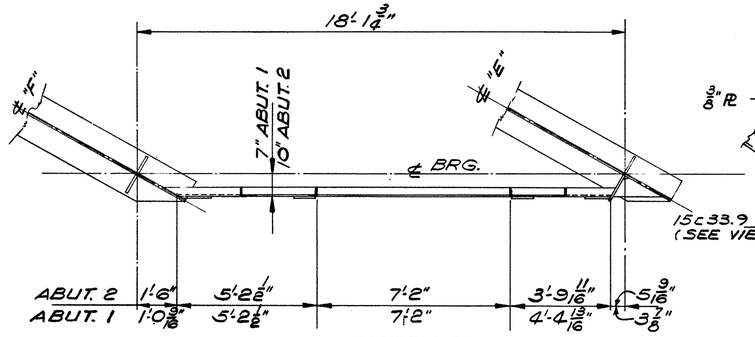

SECTION E-E

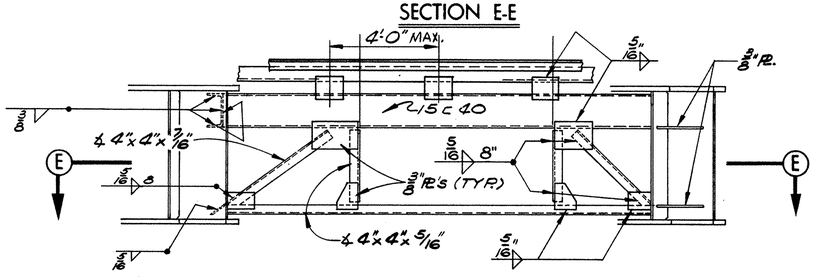

ELEVATION VIEW B-B
(ABUT. A-2 SHOWN, A-1 SIMILAR AS NOTED.)

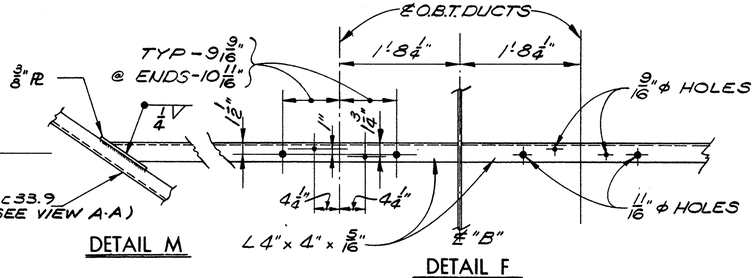

DETAIL M

DETAIL F

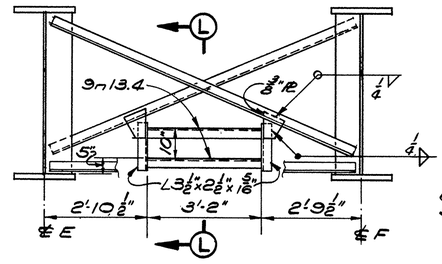

DETAIL K

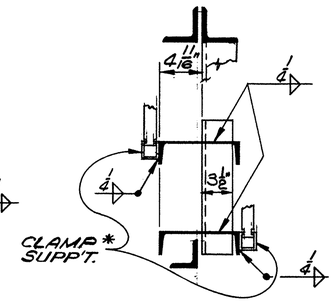

SECTION L-L

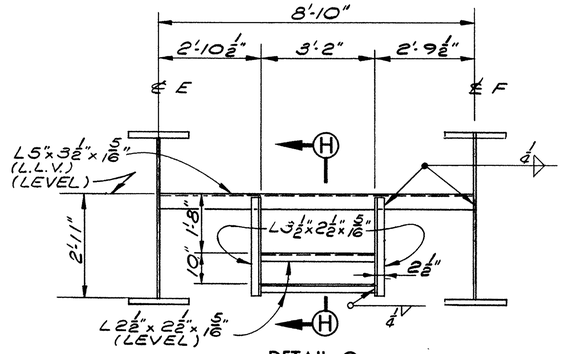

DETAIL G

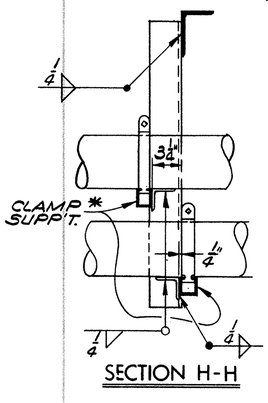

SECTION H-H

*~ CLAMP - UNISTRUT, ALSTRUT KINDORF OR EQUAL. INCLUDE WITH ITEM 625 FOR PAYMENT (INCL. CLAMP SUPPORTS) NOT
NOTE: CLAMP DUCTS AT EVERY DUCT SUPPORT - PROVIDE EXP. COUPLINGS AT EACH ABUT. BACKWALL FOR EA. DUCT.

R/GID ASBESTOS CEMENT PIPE (7/3.05)

This sheet added 12-18-70.

STATE OF OHIO
DEPARTMENT OF HIGHWAYS
BUREAU OF BRIDGES

12-A | 15

DALTON · DALTON ASSOCIATES

STRUCTURAL DETAILS

BRIDGE Nº SUM-8-1800
UNDER RELOCATED FRONT ST.
SUMMIT COUNTY CUYHOGA FALLS EXP.
STA. 248 + 39.76

DESIGNED	DRAWN	TRACED	CHECKED	REVIEWED	DATE	REVISED
JFF	RJH		G.W. 9/23/70	RDH	10-19-70	

FED. RD.	STATE	PROJECT	
2	OHIO		

359
460

SUM-8-17.63

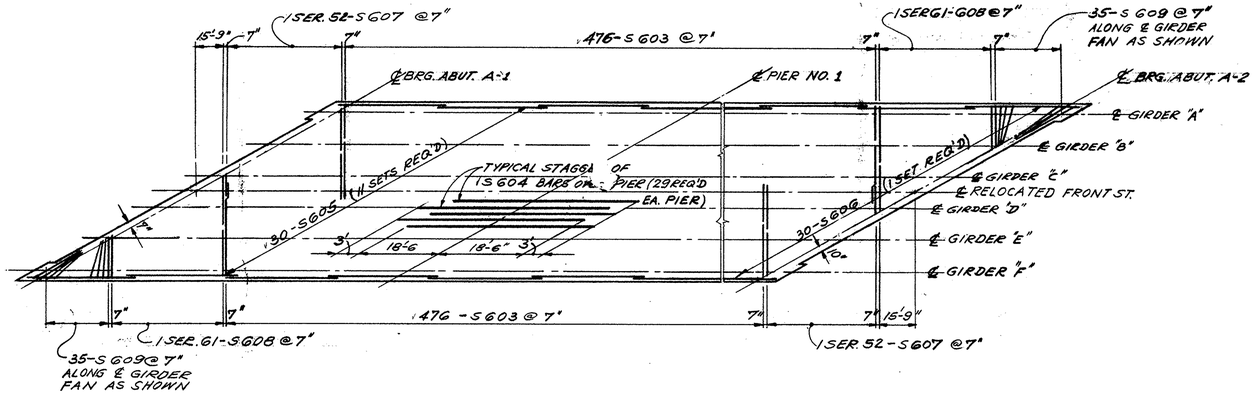

PLAN - TOP DECK SLAB REINFORCING

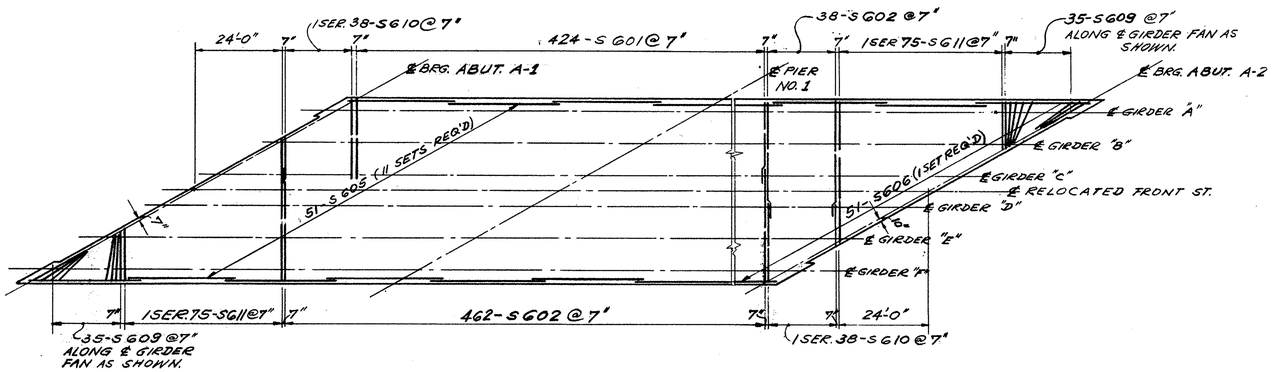

PLAN - BOTTOM DECK SLAB REINFORCING

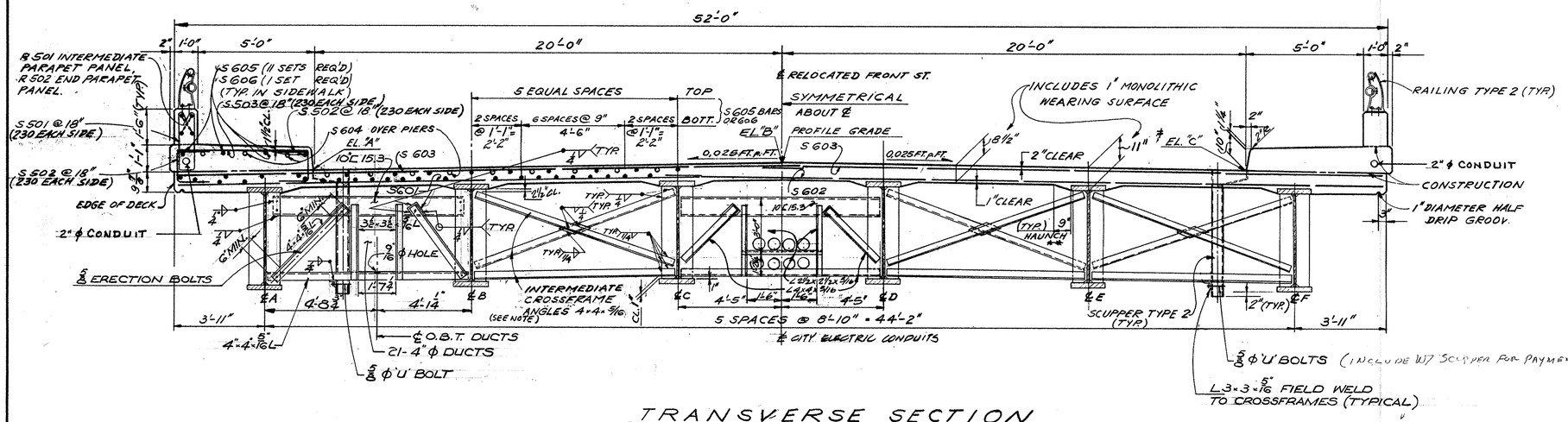

TRANSVERSE SECTION

NOTES:

* THIS IS THE NOMINAL DIMENSION. THE QUANTITY OF DECK CONCRETE TO BE PAID FOR SHALL BE BASED UPON THIS DIMENSION, EVEN THOUGH DEVIATION FROM IT MAY BE NECESSARY BECAUSE THE TOP FLANGE OF THE GIRDER MAY NOT HAVE THE EXACT CAMBER OR CONFORMATION REQUIRED TO PLACE IT PARALLEL TO THE FINISHED GRADE.

** A TYPICAL HAUNCH WIDTH OF 9" SHALL BE USED FOR COMPUTING QUANTITY OF CONCRETE. HOWEVER, THE HAUNCH WIDTH MAY VARY BETWEEN 6" AND 12" PROVIDED THAT THE SLOPE SHALL BE NOT MORE THAN 1:4 FOR A HAUNCH LESS THAN 9" IN WIDTH.

SCUPPERS including support angles shall be galvanized according to 711.02. The 1½×½ lateral support bar shown on SD-1-65 shall be omitted.

TABLE OF PAVEMENT ELEVATIONS

STATION	PROFILE GRADE	EL. "A"*	EL. "B"*	EL. "C"*
47+50	1022.56	——	——	1022.10
+75	1023.05	——	1023.05	1022.63
48+00	1023.54	——	1023.61	1023.11
+25	1024.03	1023.58	1024.11	1023.61
+50	1024.52	1024.10	1024.56	1024.02
+75	1024.96	1024.52	1024.96	1024.50
49+00	1025.30	1024.81	1025.32	1024.85
+25	1025.55	1025.05	1025.60	1025.07
+50	1025.70	1025.24	1025.74	1025.20
+75	1025.74	1025.29	1025.74	1025.27
50+00	1025.69	1025.21	1025.70	1025.29
+25	1025.55	1025.05	1025.62	1025.18
+50	1025.30	1024.84	1025.42	1024.96
+75	1024.96	1024.56	1025.08	1024.47
51+00	1024.51	1024.14	1024.57	——
+25	1023.98	1024.57	——	——

*THESE ELEVATIONS ARE THOSE WHICH ARE REQUIRED BEFORE THE CONCRETE IS PLACED. PROPER ALLOWANCE HAS BEEN MADE FOR DEAD LOAD DEFLECTIONS CAUSED BY THE WEIGHT OF CONCRETE.

FOR LOCATION OF LIGHT SUPPORT STANDARD SEE GENERAL PLAN SHT. 2/15

FOR LIGHTING DETAILS NOT SHOWN SEE LIGHTING PLANS.

SEE SHEET 8/9 SUM-8-1825 FOR CONDUIT DETAILS NOT SHOWN

This sheet superseded by sheet 359A. 12-18-70.

STATE OF OHIO
DEPARTMENT OF HIGHWAYS
BUREAU OF BRIDGES

13/15

DALTON · DALTON ASSOCIATES

SLAB PLAN & TRANSVERSE SECT.
BRIDGE No SUM-8-1800
UNDER RELOCATED FRONT ST.
SUMMIT COUNTY CUYAHOGA FALLS EXPRESSWAY
STA. 248+39.76

DESIGNED	DRAWN	TRACED	CHECKED	REVIEWED	DATE	REVISED
J.H.	M.S.		R.J.P.	RBH	2-2-68	

FORM DDA-8

FED. RD.	STATE	PROJECT	
2	OHIO		

359
460

SUM-8-17.63

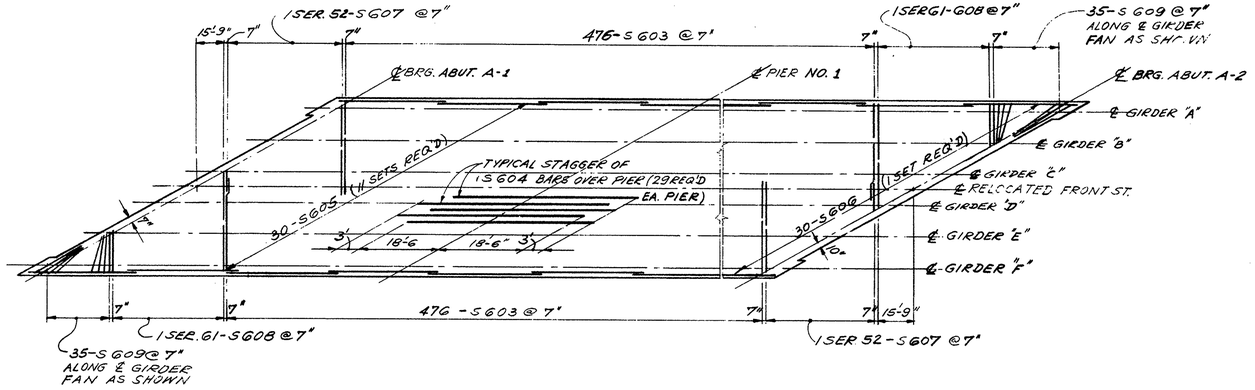

PLAN - TOP DECK SLAB REINFORCING

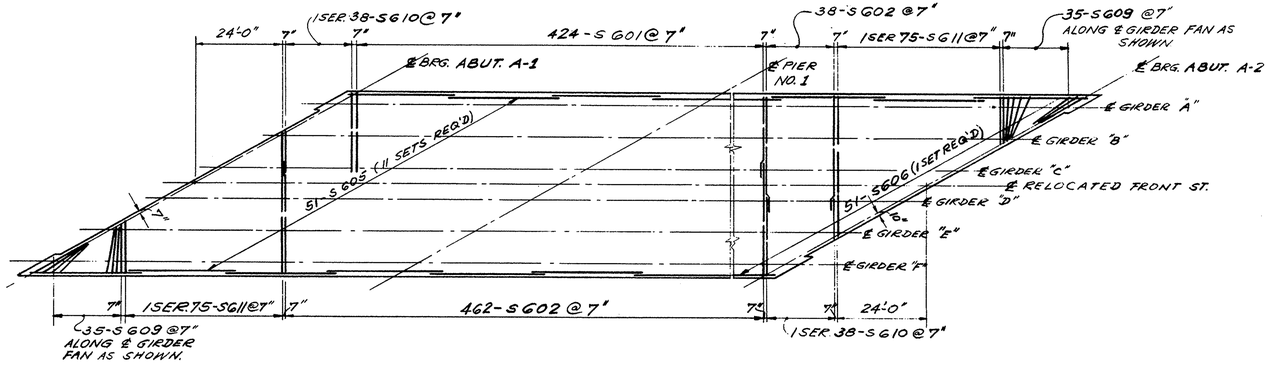

PLAN - BOTTOM DECK SLAB REINFORCING

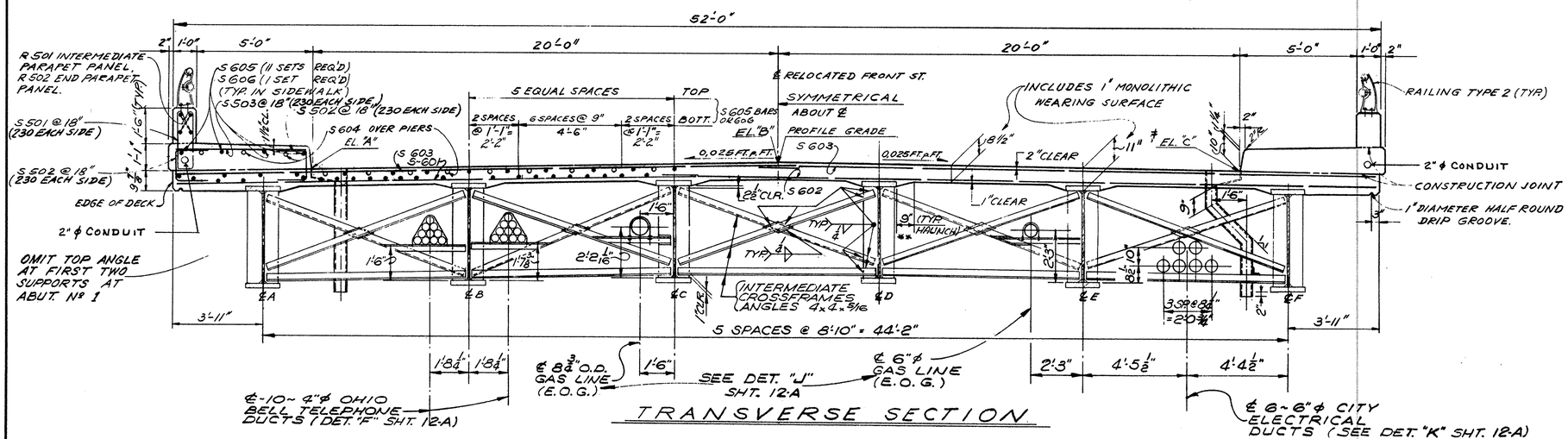

TRANSVERSE SECTION

NOTES:

* THIS IS THE NOMINAL DIMENSION. THE QUANTITY OF DECK CONCRETE TO BE PAID FOR SHALL BE BASED UPON THIS DIMENSION, EVEN THOUGH DEVIATION FROM IT MAY BE NECESSARY BECAUSE THE TOP FLANGE OF THE GIRDER MAY NOT HAVE THE EXACT CAMBER OR CONFORMATION REQUIRED TO PLACE IT PARALLEL TO THE FINISHED GRADE.

** A TYPICAL HAUNCH WIDTH OF 9" SHALL BE USED FOR COMPUTING QUANTITY OF CONCRETE. HOWEVER, THE HAUNCH WIDTH MAY VARY BETWEEN 6" AND 12" PROVIDED THAT THE SLOPE SHALL BE NOT MORE THAN 1:4 FOR A HAUNCH LESS THAN 9" IN WIDTH.

SCUPPERS including support angles shall be galvanized according to 711.02. The 1 1/2 x 1/2 lateral support bar shown on SD-1-65 shall be omitted.

TABLE OF PAVEMENT ELEVATIONS

STATION	PROFILE GRADE	EL. "A"*	EL. "B"*	EL. "C"*
47+50	1022.56	——	——	1022.10
+75	1023.05	——	1023.05	1022.63
48+00	1023.54	——	1023.61	1023.11
+25	1024.03	1023.58	1024.11	1023.61
+50	1024.52	1024.10	1024.56	1024.02
+75	1024.96	1024.52	1024.96	1024.50
49+00	1025.30	1024.81	1025.32	1024.85
+25	1025.55	1025.05	1025.60	1025.07
+50	1025.70	1025.24	1025.74	1025.20
+75	1025.74	1025.29	1025.74	1025.27
50+00	1025.69	1025.21	1025.70	1025.23
+25	1025.55	1025.05	1025.62	1025.18
+50	1025.30	1024.84	1025.42	1024.90
+75	1024.96	1024.56	1025.08	1024.47
51+00	1024.51	1024.14	1024.57	——
+25	1023.98	1024.57	——	——

*THESE ELEVATIONS ARE THOSE WHICH ARE REQUIRED BEFORE THE CONCRETE IS PLACED. PROPER ALLOWANCE HAS BEEN MADE FOR DEAD LOAD DEFLECTIONS CAUSED BY THE WEIGHT OF CONCRETE.

FOR LOCATION OF LIGHT SUPPORT STANDARD SEE GENERAL PLAN SHT. 2/15

FOR LIGHTING DETAILS NOT SHOWN SEE LIGHTING PLANS.

This sheet supersedes sheet 359. 12-18-70.

STATE OF OHIO
DEPARTMENT OF HIGHWAYS
BUREAU OF BRIDGES

13/15

DALTON • DALTON ASSOCIATES

SLAB PLAN & TRANSVERSE SECT.
BRIDGE № SUM-8-1800
UNDER RELOCATED FRONT ST.
SUMMIT COUNTY CUYAHOGA FALLS EXPRESSWAY
STA. 248+39.76

DESIGNED	DRAWN	TRACED	CHECKED	REVIEWED	DATE	REVISED
J.H.	M.S.		R.J.P.	R.B.H.	2-2-67	10-19-70

FED. RD.	STATE	PROJECT	
2	0.110		

360
460

SUM-8-17.63

ABUTMENT A-1

MARK	NO. REQ'D.	LENGTH	TYPE	DIMENSIONS A	B	C	D	SERIES INCR.	WEIGHT LBS.
RA 501	1SER.4	~~32'-8"~~ 36'-5"	STR.					1'-3"	145
RA 502	12	30'-0"	STR.						375
RA 503	1	8'-6"	STR.						9
RA 504	4	9'-6"	STR.						39
RA 505	17	35'-11"	STR.						657
RA 506	1SER. 5	~~29'-5"~~ 34'-9"	STR.					1'-4"	167
RA 507	2	32'-8"	STR.						68
RA 508	12	36'-4"	STR.						455
RA 509	7	10'-5"	1	7'-0"	3'-6"				76
RA 510	4	31'-5"	STR.						131
RA 511	5	29'-9"	STR.						155
RA 512	2	34'-9"	STR.						72
RA 513	1	8'-2"	STR.						9
RA 514	1	19'-8"	STR.						21
RA 515	2	14'-10"	STR.						31
RA 516	1	21'-6"	STR.						22
RA 517	1	4'-5"	1	3'-9"	10"				5
RA 518	6	6'-0"	1	5'-6"	8"				50
RA 519	21	6'-10"	STR.						150
RA 520	7	10'-4"	STR.						75
RA 521	4	6'-3"	12	4'-8"	1'-7"	9 1/4"			26
RA 522	22	11'-3"	23	2'-0"	1'-8"	3'-0"	2'-3"		258
RA 523	4	7'-10"	23	8"	1'-8"	1'-8"	1'-6"		33
RA 524	20	10'-1"	22	1'-0"	8"	1'-8"	6"		210
RA 525	2SER.7	~~5'6"~~ 9'-6"	STR.					7"	106
RA 526	19	3'-0"	STR.						59
RA 527	2	11'-9"	STR.						25
RA 528	1	23'-3"	STR.						24
RA 529	1	11'-7"	STR.						12
RA 530	1	6'-3"	STR.						7
RA 531	2	31'-3"	STR.						65
RA 532	2	16'-6"	STR.						34
RA 533	4	7'-11"	1	7'-0"	1'-0"				33
RA 534	21	5'-8"	STR.						124
RA 535	6	3'-8"	STR.						23
RA 536	7	30'-2"	STR.						220
RA 537	48	6'-10"	23	1'-0"	1'-2"	1'-6"	1'-4"		342
RA 538	48	5'-5"	5	8"	2'-0"	6"			271
RA 539	2	6'-10"	1	6'-2"	10"				14
RA 540	3	4'-9"	1	4'-1"	10"				15
RA 541	11	8'-7"	1	7'-11"	10"				98
RA 542	3	4'-6"	STR.						14
RA 543	3	14'-2"	STR.						44
RA 544	3	13'-1"	STR.						41
RA 545	9	3'-7"	25	1'-7"	8"	1'-7"	9 1/4"		34
RA 546	12	9'-2"	STR.						115
RA 547	7	8'-11"	STR.						65
RA 548	1SER.5	~~5'-2"~~ 9'-1"	STR.					7 1/4"	33
RA 549	3	8'-0"	STR.						26
RA 550	2	19'-2"	STR.						40
RA 551	2	25'-2"	STR.						52
RA 552	3	10'-0"	STR.						31
RA 553	7	24'-2"	STR.						176
RA 554	4	8'-4"	1	7'-5"	1'-0"				35
RA 555	7	10'-10"	1	7'-5"	3'-6"				79
RA 556	1	4'-2"	1	10"	3'-6"				4
RA 557	67	8'-2"	3	3'-5"	2'-6"				571
RA 558	7	6'-2"	1	10"	5'-6"				45
RA 559	1	12'-7"	STR.						13
RA 560	1	10'-5"	STR.						11
RA 561	1	14'-10"	STR.						15
RA 562	1	13'-4"	STR.						14
RA 601	1 SER 3	~~32'8"~~ 36'-4"	STR.					1'-10"	155
RA 602	3	18'-3"	STR.						82
RA 603	70	21'-2"	7	6'-11"	1'-5"	8'-3"	3'-2"		2226
RA 604	39	10'-1"	3	3'-5"	3'-6"				591
RA 605	3	17'-2"	STR.						77
RA 606	1	8'-4"	STR.						13
RA 607	17	22'-9"	7	8'-8"	1'-5"	9'-2"	2'-1"		581
RA 608	4	7'-8"	3	11"	3'-6"				46
RA 609	3	35'-11	STR.						162
RA 610	18	11'-5"	3	3'-5"	4'-2"				309
RA 611	1	5'-4"	STR.						8
RA 612	6	14'-1"	3	3'-5"	5'-6"				127
RA 613	9	16'-4"	STR.						221
RA 614	1SER.3	~~19'-7"~~ 23'-5"	STR.	~~16'-10"~~ 20'-8"	2'-10"	2'-0"		1'-11"	97
RA 615	1SER.3	~~12'-3"~~ 14'-2"	STR.					1'-0"	59
RA 616	3	26'-0"	STR.						90
RA 617	1SER. 4	~~5'-8"~~ 14'-4"	STR.					3'-0"	59
RA 618	6	20'-4"	STR.						183
RA 619	2	10'-0"	12	7'-8"	2'-4"	7"			30
RA 620	1	4'-3"	25	1'-11"	8"	1'-11"	11 1/8"		6
RA 621	3	11'-8"	26	1'-7"	1'-5"	3'-6"	3'-0"		53
RA 622	5	9'-4"	14	3'-3"	1'-5"	6"			70
				TOTAL ABUTMENT A-1					11,304

ABUTMENT A-2

MARK	NO. REQ'D.	LENGTH	TYPE	DIMENSIONS A	B	C	D	SERIES INCR.	WEIGHT LBS.
FA 501	4	6'-8"	STR.						28
FA 502	19	8'-0"	STR.						159
FA 503	6	10'-0"	STR.						63
FA 504	14	11'-0"	STR.						161
FA 505	12	17'-0"	STR.						213
FA 506	21	30'-0"	STR.						657
FA 507	1	27'-6"	STR.						29
FA 508	1SER.3	~~20'-8"~~ 23'-6"	STR.					3'-6"	75
FA 509	1SER.4	~~19'-2"~~ 22'-0"	STR.					1'-0"	88
FA 510	1SER.4	~~16'-3"~~ 21'-3"	STR.					1'-0"	82
FA 511	75	5'-11"	1	4'-4"	1'-9"				463
FA 512	31	15'-3"	STR.						493
FA 513	19	16'-11"	STR.						315
FA 514	18	16'-11"	STR.						318
FA 515	6	35'-8"	STR.						1,339
FA 516	10	32'-11"	STR.						343
FA 517	11	36'-0"	STR.						413
FA 518	11	34'-6"	STR.						396
FA 519	12	29'-6"	STR.						369
FA 520	1SER. 5	~~28'-3"~~ 32'-9"	STR.					1'-6"	166
FA 521	1SER. 5	~~32'-6"~~ 38'-6"	STR.					1'-6"	186
FA 522	13	37'-0"	STR.						502
FA 523	10	30'-0"	STR.						313
FA 524	50	7'-0"	4	2'-0"	3'-8"	1'-7"			365
FA 525	4	13'-11"	1	4'-0"	10'-0"				58
FA 526	6	15'-6"	STR.						97
FA 527	5	21'-6"	STR.						112
FA 528	9	18'-3"	STR.						171
FA 529	13	16'-6"	STR.						224
FA 530	13	14'-2"	STR.						192
FA 531	1SER.12	~~5'-9"~~ 9'-3"	STR.					3 3/4"	94
FA 532	1SER.9	~~5'-9"~~ 9'-3"	STR.					5 1/4"	70
FA 533	4	9'-5"	1	2'-0"	7'-6"				39
FA 534	1SER.3	~~3'-9"~~ 8'-3"	STR.					9"	14
FA 535	9	3'-3"	STR.						31
FA 536	5	4'-3"	STR.						22
FA 537	5	12'-3"	STR.						64
FA 538	2	18'-5"	11	4'-0"	4'-6"	10'-0"	2'-0"		38
FA 539	40	5'-8"	STR.						236
FA 540	1	32'-0"	STR.						33
FA 541	1SER.3	~~2'-6"~~ 5'-6"	STR.					1'-6"	47
FA 542	1	11'-7"	12	10'-0"	1'-8"				12
FA 543	1	10'-7"	12	10'-0"	8"				11
FA 544	17	11'-6"	22	1'-6"	11"	2'-2"	9"		204
FA 545	4	9'-4"	24	8"	1'-11"	1'-8"	11"		39
FA 546	21	12'-5"	23	2'-2"	1'-11"	3'-2"	2'-7"		272
FA 547	12	4'-5"	12	2'-6"	2'-0"	11 5/8"			55
FA 548	55	8'-4"	23	1'-4"	1'-4"	1'-10"	1'-10"		478
FA 549	70	5'-7"	5	8"	2'-2"	5"			408
FA 550	13	24'-0"	STR.						325
FA 551	9	13'-2"	STR.						124
FA 552	16	4'-1"	25	1'-7"	6"	2'-3"	2'-0"		68
FA 553	12	11'-11"	23	2'-2"	1'-8"	3'-2"	2'-7"		149
FA 554	11	10'-0"	22	1'-0"	8"	1'-8"	6"		115
FA 555	1	8'-7"	24	8"	1'-8"	1'-8"	8"		9
FA 556	1SER. 4	~~1'-10"~~ 4'-6"	STR.					10 3/4"	13
FA 557	1SER. 4	~~2'10"~~ 5'-6"	STR.					10 3/4"	17
FA 558	1	25'-0"	STR.						26
FA 559	8	7'-8"	STR.						64
FA 560	4	5'-1"	1	3'-7"	1'-7"				21
FA 561	6	3'-0"	STR.						19
FA 562	2	5'-0"	STR.						10
FA 563	1SER.13	~~5'-3"~~ 11'-6"	STR.					6 3/4"	114
FA 564	1SER.17	~~5'-0"~~ 11'-3"	STR.					4 3/8"	144
FA 565	1SER.3	~~13'-8"~~ 17'-6"	STR.					2'-6"	45
FA 566	1	13'-6"	STR.						14
FA 567	7	9'-9"	1	7'-10"	2'-0"				71
FA 568	7	18'-6"	STR.						135
FA 569	1	12'-7"	12	11'-0"	1'-8"	1'-5 1/4"			13
FA 570	1	11'-7"	12	11'-0"	8"	6 7/8"			12
FA 571	7	8'-8"	STR.						63
FA 572	8	11'-7"	STR.						97
FA 573	15	8'-10"	23	1'-0"	2'-1"	1'-6"	1'-6"		138
FA 574	2	37'-8"	STR.						79
FA 575	2	8'-6"	12	4'-7"	4'-0"	3'-0"			18
FA 576	1	19'-9"	STR.						21
FA 577	1	9'3"	STR.						10
FA 578	2	17'-3"	STR.						36
FA 579	2	20'-1"	STR.						42
FA 580	4	15'-1"	STR.						63
FA 601	101	7'-8"	12	2'-9"	5'-0"	3'-6 7/8"			1163
FA 602	70	20'-9"	7	6'-8"	1'-5"	8'-0"	3'-3"		2182
FA 603	17	23'-3"	7	8'-4"	1'-5"	8'-10"	3'-3"		594
FA 604	7	5'-6"	STR.						58
FA 605	7	11'-0"	1	3'-8"	7'-6"				116
FA 606	9	6'-0"	STR.						81
FA 607	3	11'-6"	26	2'-1"	1'-5"	3'-4"	2'-6"		52
FA 608	3	10'-10"	14	4'-0"	1'-5"	6"			99
FA 609	2	9'-10"	14	3'-6"	1'-5"	6"			30
				ABUTMENT A-2 CONT'D. ON NEXT SHEET					

REPLACEMENT BARS

RE-401									
RE-501									
RE-601									
RE-701									
RE-801									
RE-901									
RE-1001									
RE-1101									

SPIRAL REINFORCING SCHEDULE

MARK	NO. REQ'D.	CORE DIA. OF SPIRAL	LENGTH OF SPIRAL	PITCH	NO. OF TURNS	WEIGHT LBS.

FED. RD.	STATE	PROJECT	
2	0.110		

360
460

SUM-8-17.63

MARK	NO. REQ'D.	LENGTH	TYPE	DIMENSIONS A	B	C	D	SERIES INCR.	WEIGHT LBS.
ABUTMENT A-1									
RA 501	1SER.4	~~35'-8"~~ 36'-5"	STR.					1'-3"	145
RA 502	12	30'-0"	STR.						375
RA 503	1	8'-6"	STR.						9
RA 504	4	9'-6"	STR.						39
RA 505	19	33'-11"	STR.						672
RA 506	1SER.5	~~31'-3~~ 32'-9"	STR.					1'-4"	178
RA 507	2	32'-8"	STR.						68
RA 508	12	36'-4"	STR.						455
RA 509	7	10'-5"	1	7'-0"	3'-6"				76
RA 510	4	33'5	STR.						139
RA 511	4	31'9"	STR.						132
RA 512	2	36'9	STR.						77
RA 513	1	8'2"	STR.						9
RA 514	1	19'8"	STR.						21
RA 515	2	14'-10"	STR.						31
RA 516	1	21'-6"	STR.						22
RA 517	1	4'-5"	1	3'-9"	2'-10"				5
RA 518	8	6'0"	1	5'-6"	8"				50
RA 519	19	6'-10"	STR.						135
RA 520	7	10'-4"	STR.						75
RA 521	4	6'-3"	12	4'-8"	1'-7"	9 7/8			26
RA 522	22	11'-3"	23	2'-0"	1'-8"	3'-0"	2'-3"		258
RA 523	4	7'-10"	23	8"	1'-8"	1'-8"	1'-6"		33
RA 524	20	10'-1"	22	1'-0"	8"	1'-8"	6"		210
RA 525	2SER.7	~~5'6"~~ 9'-6"	STR.					7"	106
RA 526	19	3'-0"	STR.						59
RA 527	2	11'-9"	STR.						25
RA 528	1	23'-3"	STR.						24
RA 529	1	11'-7"	STR.						12
RA 530	1	6'-3"	STR.						7
RA 531	2	31'-3"	STR.						65
RA 532	1	16'-6"	STR.						17
RA 533	4	7'-11"	1	7'-0"	1'-0"				33
RA 534	21	5'-8"	STR.						124
RA 535	6	3'-8"	STR.						23
RA 536	7	30'-2"	STR.						220
RA 537	48	6'-10"	23	1'-0"	1'-2"	1'-6"	1'-4"		342
RA 538	48	5'-5"	5	8"	2'-0"	6"			271
RA 539	2	6'-10"	1	6'-2"	10"				14
RA 540	3	4'-9"	1	4'-1"	10"				15
RA 541	11	8'-7"	1	7'-11"	10"				98
RA 542	3	4'-6"	STR.						14
RA 543	3	14'-2"	STR.						44
RA 544	2	13'-2"	STR.						27
RA 545	9	3'-7"	25	1'-7"	8"	1'-7"	9 1/4"		34
RA 546	12	9'-2"	STR.						115
RA 547	7	8'-11"	STR.						65
RA 548	1SER.5	~~5'2~~ 7'-2"	STR.					7 1/4"	33
RA 549	1	8'-0"	STR.						8
RA 550	1	19'-2"	STR.						20
RA 551	2	25'-2"	STR.						52
RA 552	2	10'-0"	STR.						21
RA 553	7	24'-2"	STR.						176
RA 554	4	8'-4"	1	7'-5"	1'-0"				35
RA 555	7	10'-10"	1	7'-5"	3'-6"				79
RA 556	1	4'-2	1	10"	3'-6				4
RA 557	67	8'-2"	3	3'-5"	2'-6"				571
RA 558	7	6'-2"	1	10"	3'-6"				45
RA 559	14	18'0"	STR.						75
RA 560	1	2'-6"	STR.						3
RA 561	9	10'-9"	STR.						45
RA 601	1 SER 3	~~32'8~~ 34'-4	STR.					1'-10"	155
RA 602	3	20'-3	STR.						91
RA 603	62	21'-2"	7	6'-11"	1'-5"	8'-3"	3'-2"		1971
RA 604	39	10'-1"	3	3'-5"	3'-6"				591
RA 605	3	17'-2"	STR.						77
RA 606	1	8'-4"	STR.						13
RA 607	16	22'-9"	7	8'-8"	1'-5"	9'-2"	2'-1"		547
RA 608	4	7'-8"	3	11"	3'-6"				46
RA 609	3	33'-11"	STR.						153
RA 610	18	11'-5"	3	3'-5"	4'-2"				309
RA 611	1	5'-4"	STR.						8
RA 612	6	14'-1	3	3'-5"	5'-6"				127
RA 613	9	~~16'-4~~ 16'-10"	STR.						221
RA 614	1SER.3	~~19'-7~~ 20'-8"	12	16'-10"	2'-10"	2:0		1:11"	97
RA 615	1SER.3	~~12'-8~~ 14'-2"	STR.					1:0	59
RA 616	3	~~20'-0~~ 20'-0"	STR.						90
RA 617	1SER.4	~~5'-9~~ 5'-6"	STR.					3'-0"	59
RA 618	6	26'-4"	STR.						183
RA 619	2	10'-0"	12	7'-8"	2'-4"	7"			30
RA 620	1	4'3	25	1'-11"	8"	1'-11"	11 1/4"		6
RA 621	10	11'-7"	26	1'0"	1'-5"	2'-6"	2'-0"		174
RA 622	25	11'-9"	14	4'-3"	1'-5"	6"			441
RA 623	16	4'-11"	STR.						118
RA 624	15	4'-9"	14	1'-3"	11"	6"			107
TOTAL ABUTMENT A-1									11834
ABUTMENT A-2									
FA 501	4	6'-8"	STR.						28
FA 502	19	8'-0"	STR.						159
FA 503	6	10'-0"	STR.						63
FA 504	16	11'-0"	STR.						69
FA 505	11	17'-0"	STR.						195
FA 506	21	30'-0"	STR.						657
FA 507	1	27'-6"	STR.						29
FA 508	1SER.3	~~28'-9~~ 29'-6"	STR.					3'-6"	75
FA 509	1SER.4	~~35'-6~~ 36'-6"	STR.					1'-0"	88
FA 510	1SER.4	~~18'-3~~ 19'-3"	STR.					1'-0"	82
FA 511	75	5'-11"	1	4'-4"	1'-9"				463
FA 512	31	15'-3"	STR.						493
FA 513	19	15'-11"	STR.						315
FA 514	18	16'-11"	STR.						318
FA 515	10	35'-8"	STR.						372
FA 516	10	32'-11"	STR.						343
FA 517	11	36'-0"	STR.						413
FA 518	11	34'-6"	STR.						396
FA 519	12	29'-6"	STR.						369
FA 520	1SER.5	~~28'-9~~ 29'-9"	STR.					1'-6"	166
FA 521	1SER.5	~~32'-6~~ 38'-6"	STR.					1'-6"	186
FA 522	15	37'-0"	STR.						579
FA 523	10	30'-0"	STR.						313
FA 524	50	7'-0"	4	2'-0"	3'-8"	1'-7"			365
FA 525	4	13'-11"	1	4'-0"	10'-0"				58
FA 526	6	15'-6"	STR.						97
FA 527	5	21'-6"	STR.						112
FA 528	9	18'-3"	STR.						171
FA 529	13	16'-6"	STR.						224
FA 530	13	14'-2"	STR.						192
FA 531	1SER.12	~~5'-9~~ 9'-3"	STR.					3 1/4"	94
FA 532	1SER.9	~~5'-9~~ 9'-3"	STR.					5 1/4"	70
FA 533	4	9'-5"	1	2'-0"	7'-6"				39
FA 534	1SER.3	~~3'-9~~ 5'-3"	STR.					9"	14
FA 535	9	3'-3"	STR.						31
FA 536	5	4'-3"	STR.						22
FA 537	5	12'-3"	STR.						64
FA 538	2	18'-5"	11	4'-0"	4'-6"	10'-0"	2'-0"		38
FA 539	40	5'-8"	STR.						236
FA 540	1	32'-0"	STR.						33
FA 541	1SER.3	~~8'-6~~ 8'-6"	STR.					1'-6"	47
FA 542	1	11'-7"	12	10'-0"	1'-8"				12
FA 543	1	10'-9"	12	10'-0"	8"				11
FA 544	17	11'-6"	22	1'-6"	11"	2'-2"	9"		204
FA 545	4	9'-4"	24	8"	1'-11"	1'-8"	11"		39
FA 546	21	12'-5"	23	2'-2"	1'-11"	3'-2"	2'-7"		272
FA 547	12	4'-5"	12	2'-6"	2'-0"	11 3/8"			55
FA 548	55	8'-4"	23	1'-4"	1'-4"	1'-10"	1'-10"		478
FA 549	70	5'-7"	5	8"	2'-2"	5"			408
FA 550	13	24'-0"	STR.						325
FA 551	9	13'-2"	STR.						124
FA 552	16	4'-1"	25	1'-7"	6"	2'-3"	2'-0"		68
FA 553	12	11'-11"	23	2'-2"	1'-8"	3'-2"	2'-7"		149
FA 554	11	10'-0"	22	1'-0"	8"	1'-8"	6"		115
FA 555	1	8'-7"	24	8"	1'-8"	1'-8"	8"		9
FA 556	1SER.4	~~1'-10~~ 4'-6"	STR.					10 3/4"	13
FA 557	1SER.4	~~2'-10~~ 5'-6"	STR.					10 3/4"	17
FA 558	1	25'-0"	STR.						216
FA 559	6	7'-8"	STR.						48
FA 560	4	5'-1"	1	3'-7"	1'-7"				21
FA 561	6	3'-0"	STR.						19
FA 562	2	5'-0"	STR.						10
FA 563	1SER.13	~~5'-3~~ 11'-6"	STR.					6 1/4"	114
FA 564	1SER.17	~~5'-0~~ 11'-3"	STR.					4 1/2"	144
FA 565	1SER.3	~~12'-0~~ 17'-6"	STR.					2'-6"	45
FA 566	1	13'-6"	STR.						14
FA 567	7	9'-9"	1	7'-10"	2'-0"				71
FA 568	7	18'-6"	STR						135
FA 569	1	12'-7"	12	11'-0"	1'-8"	1'-5 1/4"			13
FA 570	1	11'-7"	12	11'-0"	8"	6 7/8"			12
FA 571	7	8'-8"	STR.						63
FA 572	7	11'-7"	STR.						85
FA 573	15	8'-10"	23	1'-0"	2'-1"	1'-6"	1'-6"		138
FA 574	2	37'-8"	STR.						79
FA 575	2	8'-6"	12	4'-7"	4'-0"	3'-0"			18
FA 576	2	19'-3"	STR.						90
FA 577	1	5'-2	STR.						5
FA 578	1	7'-6	STR.						8
FA 601	101	7'-8"	12	2'-9"	5'-0"	3'-6 3/8"			1163
FA 602	62	20'-9"	7	6'-8"	1'-5"	8'-0"	3'-3"		1932
FA 603	17	23'-3"	7	8'-4"	1'-5"	8'-10"	3'-3"		594
FA 604	7	5'-6"	STR.						58
FA 605	7	11'-0"	1	3'-8"	7'-6"				116
FA 606	9	6'-0"	STR.						81
FA 607	10	9'-11"	26	1'-1"	1'-5"	2'-9"	2'-6"		169
FA 608	22	10'10"	19	4'0"	1'-5"	6"			391
FA 609	19	9'-10"	14	3'-6"	1'-5"	6"			207
FA 610	9	5'-9"	STR.						78
		ABUTMENT A-2 CONTD. ON NEXT SHEET							

REPLACEMENT BARS

RE-401									
RE-501									
RE-601									
RE-701									
RE-801									
RE-901									
RE-1001									
RE-1101									

SPIRAL REINFORCING SCHEDULE

MARK	NO. REQ'D.	CORE DIA. OF SPIRAL	LENGTH OF SPIRAL	PITCH	NO. OF TURNS	WEIGHT LBS.

MARK	NO. REQ'D.	LENGTH	TYPE	DIMENSIONS A	B	C	D	SERIES INCR.	WEIGHT LBS.
ABUTMENT A-2 CONTINUED									
FA 801	14	8'-0"	STR.						299
FA 802	90	7'-0"	STR.						1,682
FA 803	10	9'-0"	STR.						240
FA 804	ISER.B	3'-0" TO 7'-0"	STR.					7"	107
FA 805	98	6'-7"	1	5'-0"	1'-9"				1,722
FA 806	98	12'-7"	1	11'-0"	1'-9"				3,293
FA 807	35	15'-6"	STR.						1,448
FA 808	37	16'-2"	STR.						1,597
FA 809	26	17'-2"	STR.						1,192
FA 810	3	24'-0"	STR.						192
FA 811	6	27'-0"	STR.						433
FA 812	ISER. G	4'-9" TO 26'-7"	STR.					3'-2"	203
FA 813	3	33'-6"	STR.						268
FA 814	8	36'-0"	STR.						769
FA 815	ISER.I.A	5'-0" TO 28'-5"	STR.					1'-10 5/8"	643
FA 816	2	6'-0"	STR.						32
FA 901	11	8'-6"	STR.						318
FA 902	103	7'-0"	STR.						2451
FA 903	ISER.A	4'-10" TO 6'-6"	STR.					6 3/4"	77
FA 904	13	15'-3"	1	8'-4"	7'-2"				674
FA 1001	8	9'-4"	1	7'-7"	2'-0"				321
FA 1002	21	8'-6"	STR.						768
FA 1003	14	7'-0"	STR.						422
FA 1101	13	12'-9"	1	11'-3"	1'-9"				881
FA 1102	4	9'-3"	1	7'-6"	2'-0"				197
FA 1103	15	7'-9"	1	6'-0"	2'-0"				618
FA 1104	12	15'-9"	STR.						1,004
FA 1105	3	15'-6"	STR.						247
TOTAL ABUTMENT A-2 = ~~39,050~~									38,352
PIERS									
P 601	144	4'-8"	STR.						1009
P 1001	96	5'-8"	1	4'-11"	1'-0"				2341
P 1002	24	18'-11"	STR.						1,954
P 1003	8	18'-9"	STR.						645
P 1004	16	18'-0"	STR.						1,239
P 1005	8	17'-8"	STR.						608
P 1006	8	17'-8"	STR.						608
P 1007	8	18'-4"	STR.						631
P 1008	8	18'-5"	STR.						634
P 1009	8	18'-2"	STR.						625
P1010	8	17'-11"	STR.						617
TOTAL PIERS (LESS SPIRALS) =									10,911

MARK	NO. REQ'D.	LENGTH	TYPE	DIMENSIONS A	B	C	D	SERIES INCR.	WEIGHT LBS.
SUPERSTRUCTURE									
S 501	460	5'-11"	5	8"	2'-4"				2839
S 502	920	3'-6"	3	1'-2"	1'-7"				3,359
S 503	460	5'-6"	STR.						2639
S 504	8	10'-9"	26	2'-0	2'-11"	1'-3"	2'-1"		90
S 601	424	22'-5"	STR.						14,276
S 602	462	31'-3"	STR.						21,685
S 603	952	26'-10"	STR.						38,368
S 604	58	40'-0"	STR.						3,486
S 605	979	30'-0"	STR.						44,114
S 606	89	33'-8"	STR.						4,501
S 607	2SER.52	10'-4" TO 28'-10"	STR.					3 7/8"	2,903
S 608	2SER.61	15'-7" TO 34'-10"	STR.					3 7/8"	4,619
S 609	140	15'-3"	STR.						3207
S 610	2SER.38	10'-8" TO 22'-6"	STR.					3 7/8"	1,874
S 611	2SER.76	15'-7" TO 33'-10"	STR.					3 7/8"	6243
S 612	8	10'-3"	14	3'-0	2'-1	4"			123
S 613	48	6'-0"	STR	—					473
TOTAL SUPERSTRUCTURE									154,758

MARK	NO. REQ'D.	LENGTH	TYPE	DIMENSIONS A	B	C	D	SERIES INCR.	WEIGHT LBS.
RAILING ®									
R 501	160	15'-6"	STR.						
R 502	16	11'-5"	STR.						
R 503	12	6'-1"	21	SEE BENDING DIAGRAM					
R 504	8	4'-2"	20	"	"		"		
R 505	8	5'-5"	19	"	"		"		
R 506	4	9'-2"	STR.						
R 507	4	23'-10"	STR.						
R 508	4	29'-10"	STR.						
R 509	4	3'-0"	STR.						
R. 510	4	30'-0	STR.						
R 511	4	15'-3"	STR.						
R 512	4	8'-8"	STR.						
R 513	4	11'-7"	STR.						
R 514	4	36'-5"	STR.						
R 515	8	10'-9"	26	2'-0	2'-11"	1'-3"	2'-1"		

REPLACEMENT BARS

RE-401	1	6'-3"	10	6'-3"	16"				
RE-501	2	6'-6"							
RE-601	8	7'-0"							
RE-701	—	7'-3"							
RE-801	1	7'-6"							
RE-901	1	7'-10"							
RE-1001	1	8'-3"							
RE-1101	1	8'-9"							

SPIRAL REINFORCING SCHEDULE

MARK	NO. REQ'D.	CORE DIA. OF SPIRAL	LENGTH OF SPIRAL	PITCH	NO. OF TURNS	WEIGHT LBS.
SP 401	3	32"	18'-11"	4 1/2	53	1,033
SP 402	1	32"	18'-9"	4 1/2	53	343
SP 403	2	32"	18'-0"	4 1/2	51	660
SP 404	1	32"	17'-9"	4 1/2	50	324
SP 405	1	32"	17'-8"	4 1/2	50	324
SP 406	1	32"	18'-4"	4 1/2	52	337
SP 407	1	32"	18'-5"	4 1/2	52	337
SP 408	1	32"	18'-2"	4 1/2	51	331
SP 409	1	32"	17'-11"	4 1/2	51	330
TOTAL SPIRALS						4,019
GRAND TOTAL 220,~~347~~ LBS.						

BAR SIZE IS INDICATED IN THE BAR MARK. THE FIRST DIGIT WHERE THREE DIDGITS ARE USED AND THE FIRST TWO DIGITS WHERE FOUR DIGITS ARE USED INDICATE THE BAR SIZE NUMBER. A-601 IS A NO. 6 SIZE BAR AND P-1001 IS A NO. 10 SIZE BAR.

®RAILING REINFORCEMENT BARS WILL BE INCLUDED AS PART OF ITEM 517 FOR PAYMENT.

MICROFILMED
MAR 07 1979
RECEIVED

FED. RD.	STATE	PROJECT	
2	OHIO		

361
460

SUM-8-17.63

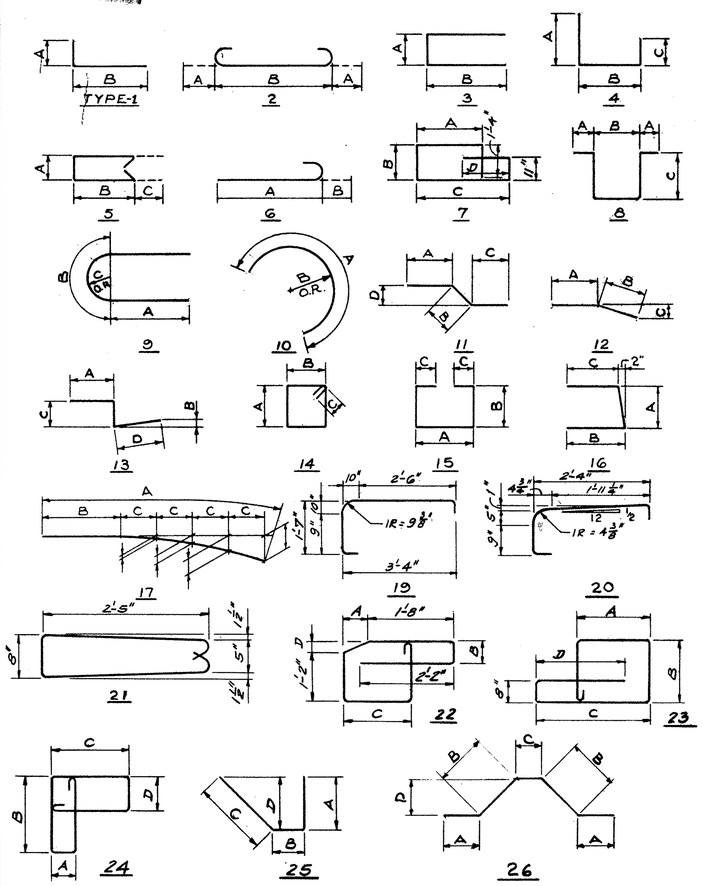

REINFORCING NOTES

THE LENGTH SHOWN IN THE STEEL SCHEDULE FOR THE SPIRAL BARS IS THE DISTANCE, FROM THE TOP OF THE FOOTING TO THE TOP OF THE VERTICAL REINFORCING. THE NUMBER OF TURNS SHOWN IN THE STEEL SCHEDULE FOR SPIRAL BARS IS THE LENGTH DIVIDED BY THE PITCH PLUS THREE TURNS (TOTAL NUMBER OF CLOSED COILS) EXPRESSED AS THE NEAREST WHOLE NUMBER. SPIRAL REINFORCING BARS SHALL NOT HAVE DEFORMATIONS, BUT SHALL IN OTHER RESPECTS CONFORM TO ITEM 509. ONE AND ONE HALF CLOSED COILS SHALL BE PROVIDED AT THE ENDS OF EACH SPIRAL UNIT. FOUR (4) STEEL CHANNEL, TEE OR ANGLE SPACERS WEIGHING APPROX. 0.68 LBS. PER LINEAL FT. OF SPACERS SHALL BE PROVIDED FOR EACH SPIRAL UNIT. THEY SHALL BE EQUALLY SPACED ALONG THE PERIPHERY OF EACH COIL. THE NUMBER OF POUNDS OF THESE SPACERS BASED ON 0.68 LBS. PER LINEAL FT. WILL BE PAID FOR AS REINFORCING STEEL AND IS INCLUDED IN THE TABULATED QUANTITY OF SPIRAL BARS.

STATE OF OHIO
DEPARTMENT OF HIGHWAYS
BUREAU OF BRIDGES

15/15

DALTON · DALTON ASSOCIATES

REINFORCING SCHEDULE

BRIDGE No. SUM-8-1600
UNDER RELOCATED FRONT ST.
SUMMIT COUNTY CUYAHOGA FALLS EXPRESSWAY
STA. 248+39.76

DESIGNED	DRAWN	TRACED	CHECKED	REVIEWED	DATE	REVISED
D.F.D.	M.S.		J.H.	RDW	2-2-69	12/18/70

MICROFILMED
MAR 02 1970
DOCUMENT CONTROL

FED. RD.	STATE	PROJECT	
2	OHIO		

362
460

SUM-8-17.63

STA. 254+89.43 ℄ S.R.-8. =
STA. 48+69.57 ℄ RELOC. SECOND ST.

SPAN #1 ON CHORD = 85'-3"
SPAN #2 ON CHORD = 72'-0"
SPAN #3 ON TAN. = 58'-0"

CONCRETE BARRIER

23°-01'-24" SKEW
66°-58'-36" TO LOC. TAN.
74°-56'-55"

RAMP "P"
RAMP "N"
RAMP "L"

STA. 254+92.49 ℄ S.R.-8.
LOC. TAN.

STA. 49+75.64 ℄ RELOC. SECOND ST. =
STA. 255+18.18 ℄ RAMP "N"

SLOPE PROTECTION

BEGIN ZONE STA. 255.25

16'-6" MIN. VERT. CLEARANCE; 14'-0" REQ'D, 15.12 ACTUAL

16'-6" MIN. VERT. CLEARANCE; 14'-0" REQ'D, 23.22 ACTUAL

℄ RELOC. SECOND ST.
BEGIN APPROACH SLAB
STA. 50+81.98

END APPROACH SLAB
STA. 47+81.13

℄ EXIST. SECOND ST.

P.C. STA. 46+69.00 ℄ RELOC. SECOND ST. =
STA. 253+73.15 ℄ RAMP "L" 28' RT.
℄ EXIST. SECOND ST.

℄ RELOC. SECOND ST.

TYP. 6 SPANS @ 39'-0" = 234'

TYP. 4 SPANS @ 66'-0" = 264'

PT. OF MIN. VERT. CLEARANCE

TYPE-1 RAILING

EXISTING PROFILE ℄ OF RELOC. S.R.-8

EXISTING PROFILE ℄ OF RAMP "L"

EXISTING PROFILE AT ℄ OF RELOC. SECOND ST.

PROPOSED PROFILE GRADE

APPROX. ROCK

EL. 1005.88
EL. 1005.64
EL. 1005.40
EL. 1005.16
EL. 1004.92

256+00
255+00
254+00

EL. 1034.52
EL. 1032.39
EL. 1030.76
EL. 1029.73
EL. 1026.38
EL. 1023.97
EL. 1019.37

PVI STA. 47+50.00
EL. 1036.00
PG EL. 1033.65

PVT STA. 49+25.00
EL. 1027.58

PVC STA. 50+50.00
EL. 1021.57

PVI STA. 52+00.00
EL. 1014.36

+0.56% - 4.81%
350' V.C.

-4.81% +0.28%
300' V.C.

STA. 47+81.13

BRIDGE LIMITS = 220.85'

PT. EL. 1027.1
LT. EL. 1026.5

EL. 1013.0
EL. 1000.0
EL. 1001.0
RT. EL. 1016.2
LT. EL. 1017.6
EL. 1010.0

47+00
48+00
49+00
50+00
51+00

1020
1000

VERTICAL CLEARANCE:
DESIGN = 15.00'
ACTUAL = ⊕1 18.61'
⊕2 15.13'

CURVE DATA

℄ RELOCATED SECOND ST.

Δ = 45°-34'-45" LT.
D_c = 18°-45'-00"
R = 305.577'
T = 128.381'
L_c = 243.088'
P.C. STA. 46+69.00 15' RT.
℄ STA. 46+69.00 EXIST. SECOND ST.

PROPOSED STRUCTURE

TYPE: CONTINUOUS STEEL BEAMS WITH REINFORCED CONCRETE DECK AND SUBSTRUCTURE.
SKEW: 23°01'24" LT. FWD TO LOC. TAN.
SPANS: 85'-3", 72'-0", 58'-0" ℄ BRGS.
ROADWAY: 26'-0" ℄ 2' SAFETY CURBS
LOADING: AASHO H S 20-44
WEARING SURFACE: 1" MONOLITHIC
APPROACH SLABS: 20' REAR ℄ 25' FORWARD (AS-1-67)
ALIGNMENT: 18°45'-00" CURVE RT.
SUPERELEVATION: NONE. X. SLOPE 0.156"/FT.
SLOPE PROTECTION: CRUSHED AGGREGATE AT ABUT. A-2 ONLY, AND BERMS.

TRAFFIC: 17,064 - 1985 A.D.T.

STATE OF OHIO
DEPARTMENT OF HIGHWAYS
BUREAU OF BRIDGES

1/9

DALTON • DALTON ASSOCIATES

SITE PLAN

BRIDGE NO. SUM-8-1812
UNDER RELOCATED SECOND ST.
SUMMIT COUNTY CUYAHOGA FALLS EXPRESSWAY
STA. 254+89.43

DESIGNED	DRAWN	TRACED	CHECKED	REVIEWED	DATE	REVISED
E.A.H.	B.M.R. KENNESSY		D.H.S.		2-1-68	

FED. RD.	STATE	PROJECT	
2	OHIO		

363
460

SUM-8-17.63

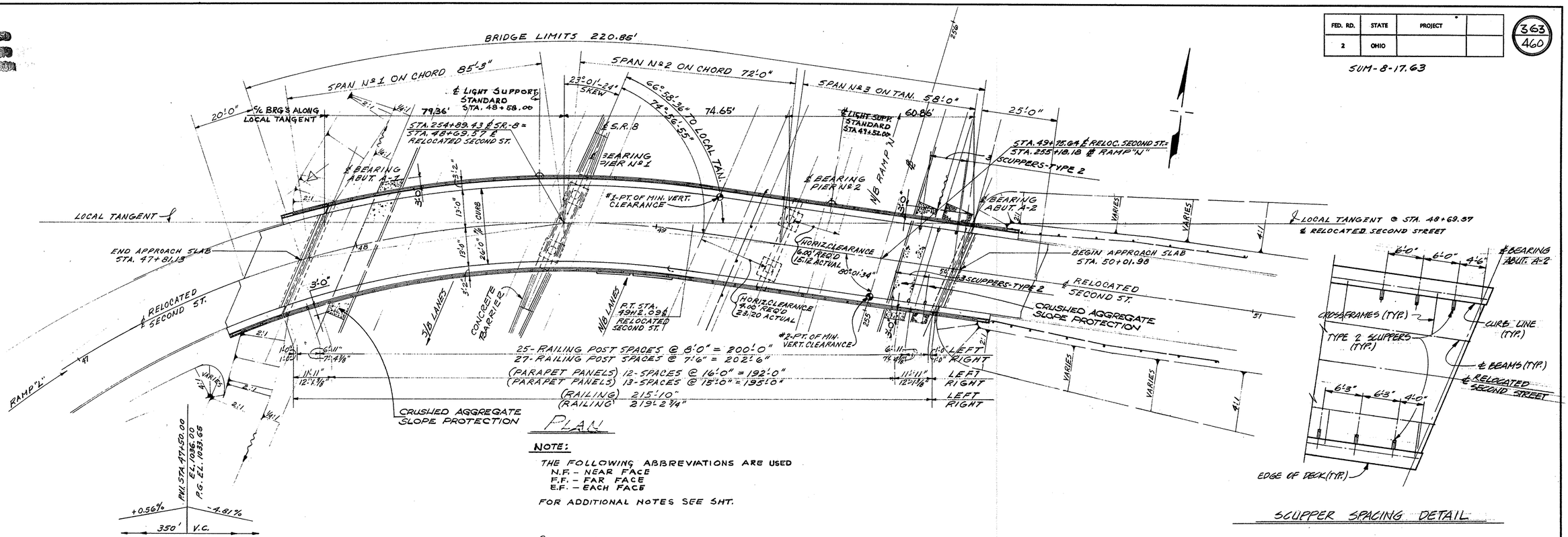

PLAN

NOTE:

THE FOLLOWING ABBREVIATIONS ARE USED
N.F. - NEAR FACE
F.F. - FAR FACE
E.F. - EACH FACE

FOR ADDITIONAL NOTES SEE SHT.

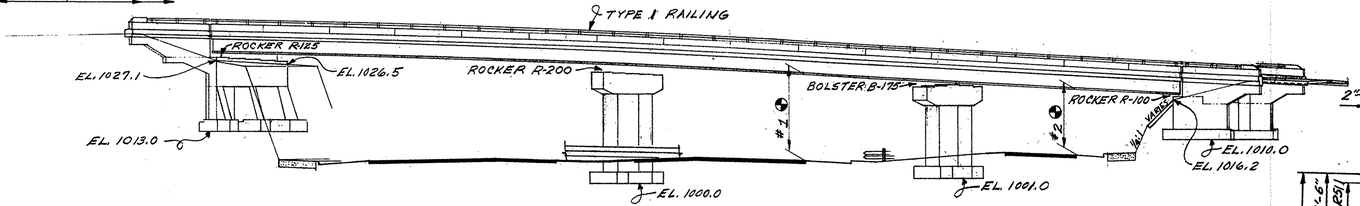

ELEVATION

FOR SIGNING DETAILS NOT SHOWN SEE SIGNING PLANS

*THE CRUSHED AGGREGATE IN THE BERM AREA SHALL BE TAKEN TO THE BOTTOM OF THE ROADWAY EXCAVATION.

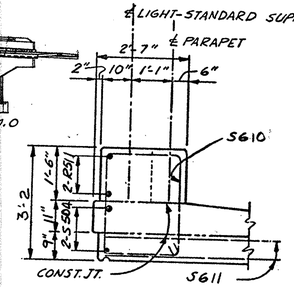

SECTION A-A

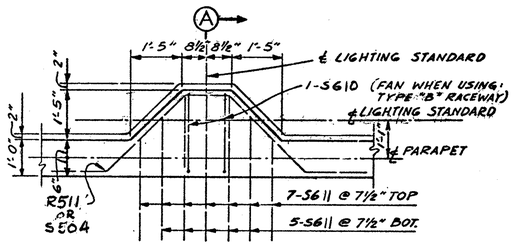

LIGHT STANDARD SUPPORT DETAIL

FOR DETAILS NOT SHOWN SEE SLAB PLAN & SECTION AND LIGHTING DETAILS

SCUPPER SPACING DETAIL

ESTIMATED QUANTITIES

Item	Total	Unit	Description	Super.	Abut.	Piers	Gen'l.
503	60	CU. YDS.	UNCLASSIFIED EXCAVATION		60		
503	173	CU. YDS.	ROCK EXCAVATION		151	22	
509	95,296	LBS.	REINFORCING STEEL	66,535	13,503	15,258	
511	214	CU. YDS.	CLASS "C" CONCRETE, SUPERSTRUCTURE	214			
511	47	CU. YDS.	CLASS "C" CONCRETE, PIERS ABOVE FOOTING			47	
511	50	CU. YDS.	CLASS "C" CONCRETE, FOOTINGS		34	16	
511	135	CU. YDS.	CLASS "C" CONCRETE, ABUTMENTS ABOVE FOOTING		135		
513	306,000	LBS.	STRUCTURAL STEEL	306,000			
514	306,000	LBS.	FIELD PAINTING OF STRUCTURAL STEEL	306,000			
517	501.33	LIN. FT.	RAILING (TYPE 1)	435.06	66.27		
518	22	CU. YDS.	POROUS BACKFILL		22		
518	59	LIN. FT.	6" HELICAL PERFORATED C.M. PIPE INCL. SPECIALS (707.01)		59		
518	51	LIN. FT.	6" HELICAL NON-PERFORATED C.M. PIPE (707.01)		51		
518	2	EACH	TRIPLE SCUPPERS AS PER PLAN	2	"		

Item	Total	Unit	Description	Super	Abut.	Piers	Gen'l.
601	99	SQ. YDS.	CRUSHED AGGREGATE SLOPE PROTECTION *		99		
625			SEE SHT. 258 FOR LIGHTING SUMMARY				
625			SEE SHT. 273 FOR SIGNING SUMMARY				
808	214	UNITS	WATER REDUCING, SET RETARDING ADMIXTURE	214			
825	946	SQ. YDS.	CONCRETE SURFACE TREATMENT	886	60		

SEE SHT. 326 FOR GENERAL NOTES

QUANTITIES CHECKED BY L.B. 1-16-68

STATE OF OHIO
DEPARTMENT OF HIGHWAYS
BUREAU OF BRIDGES

2/9

DALTON · DALTON ASSOCIATES

GENERAL PLAN & ELEVATION
BRIDGE NO. SUM-8-1812
UNDER RELOCATED SECOND ST.
SUMMIT COUNTY CUYAHOGA FALLS EXPRESSWAY
STA. 254+89.43

DESIGNED	DRAWN	TRACED	CHECKED	REVIEWED	DATE	REVISED
E.A.H.	R.J.P.		D.H.S.	EBH	2-1-68	

FORM DDA-6

FED. RD.	STATE	PROJECT	
2	OHIO		

364
460

SUM-8-17.63

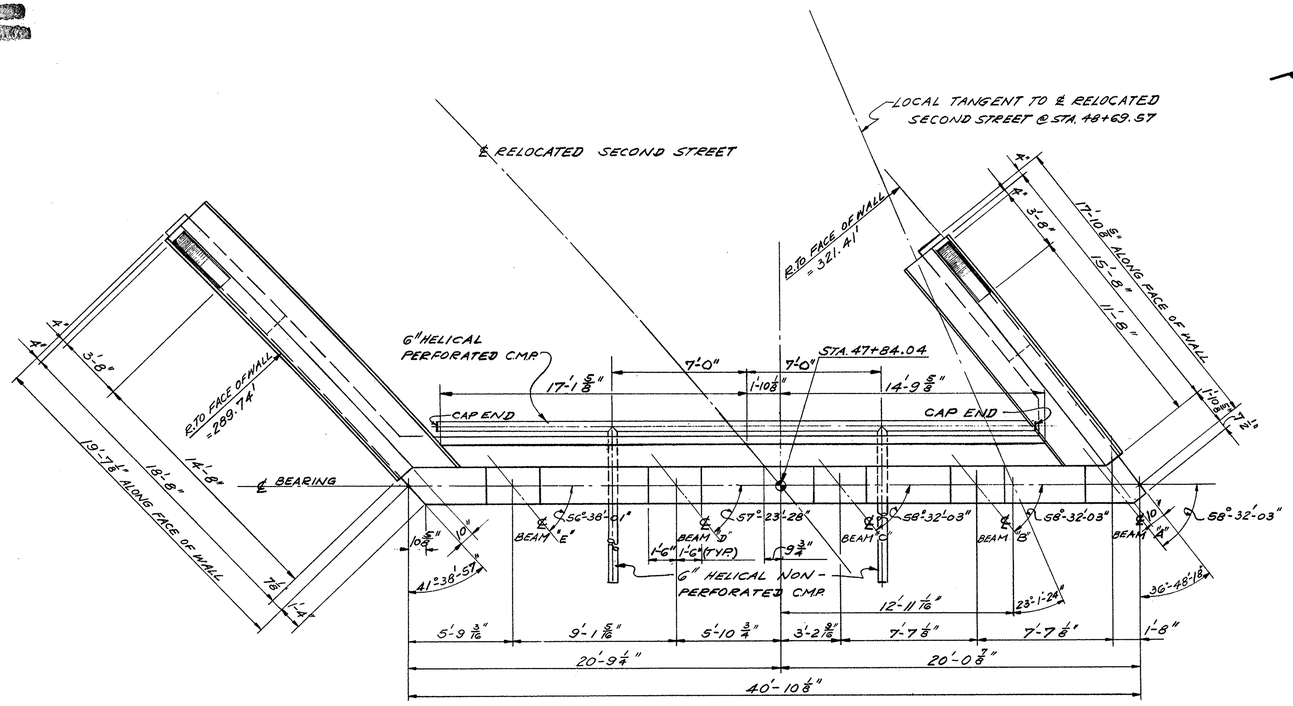

PLAN

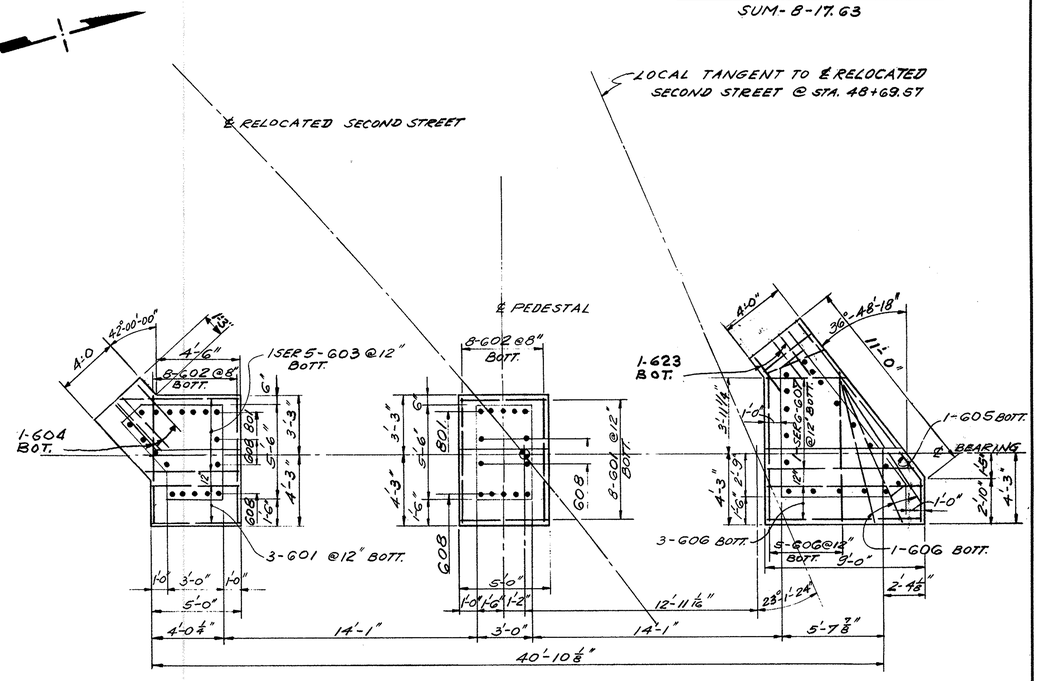

FOUNDATION PLAN

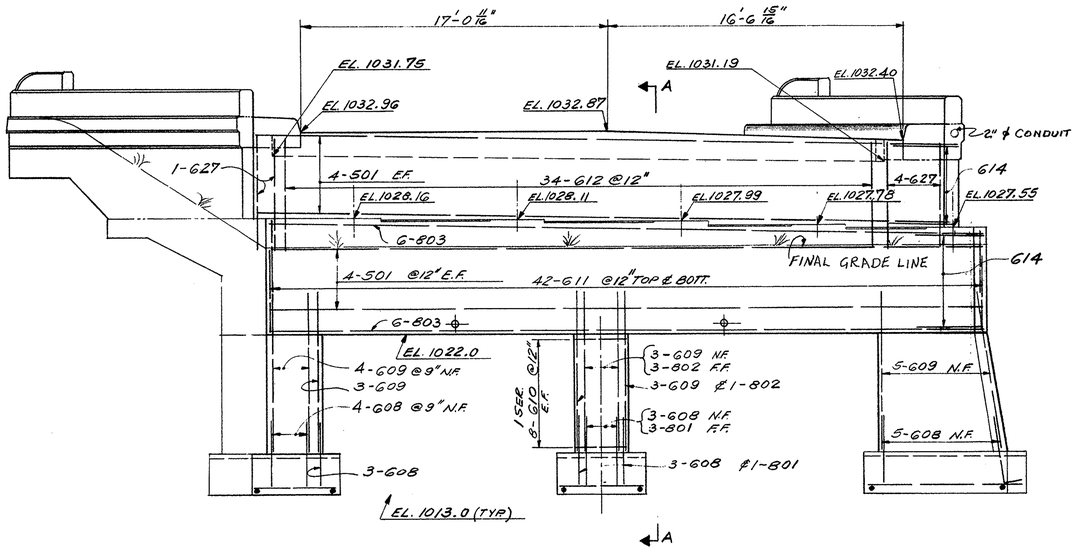

ELEVATION ABUTMENT

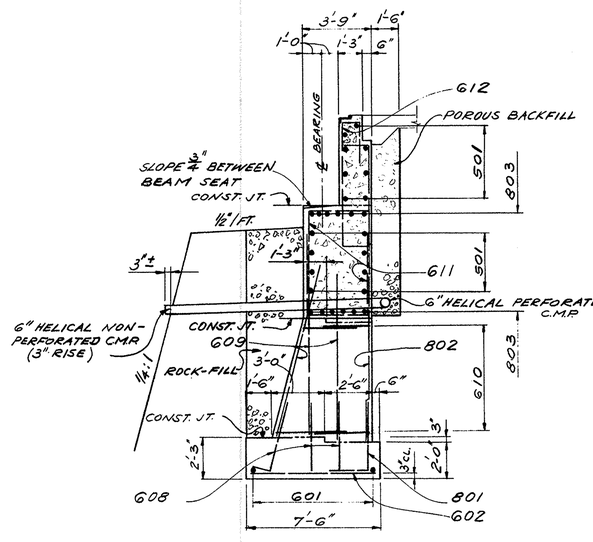

SECTION A-A

NOTES:

- THE PREFIX "RA" SHALL BE ADDED TO ALL BARMARKS ON ABUTMENT A-1.
- POROUS BACKFILL SHALL EXTEND UPWARD TO THE APPROACH SLAB AND OUTWARD TO THE INSIDE FACE OF WINGWALLS. EXCAVATION THEREFORE, IN EXCESS OF THAT REQ'D. FOR CONSTRUCTION OF THE ABUTMENT, SHALL BE CONSIDERED AS PAID FOR IN THE BID PRICE PER CU. YD. PAID FOR POROUS BACKFILL.
- PROCEDURE: AFTER THE PEDESTALS HAVE BEEN CONSTRUCTED THE ROCK FILL SHALL BE PLACED AND COMPACTED UP TO THE BOTTOM OF THE CROSSBEAM, AFTER WHICH THE CROSSBEAM MAY BE CONSTRUCTED.
- BACKWALL ELEVATIONS ARE GIVEN AS FINAL PAVEMENT ELEVATIONS AT FRONT FACE OF BACKWALL.
- FOR LIGHTING DETAILS NOT SHOWN, SEE LIGHTING PLANS
- SPECIAL CARE SHOULD BE TAKEN WHEN PLACING ROCK-FILL SO AS NOT TO DAMAGE ABUTMENT DRAINAGE.

STATE OF OHIO
DEPARTMENT OF HIGHWAYS
BUREAU OF BRIDGES

3/9

DALTON • DALTON ASSOCIATES

ABUTMENT A-1 DETAILS

BRIDGE NO. SUM-8-1812

UNDER RELOCATED SECOND ST.

SUMMIT COUNTY CUYAHOGA FALLS EXPRESSWAY

STA. 254+89.43

DESIGNED	DRAWN	TRACED	CHECKED	REVIEWED	DATE	REVISED
E.A.H.	W.S.		D.H.S.	RDH	2-1-68	

FORM DDA-6

RECEIVED
MAR 02 1970
HIGHWAY COMMISSION

FED. RD.	STATE	PROJECT	
2	OHIO		

365/460

SUM-8-17.63

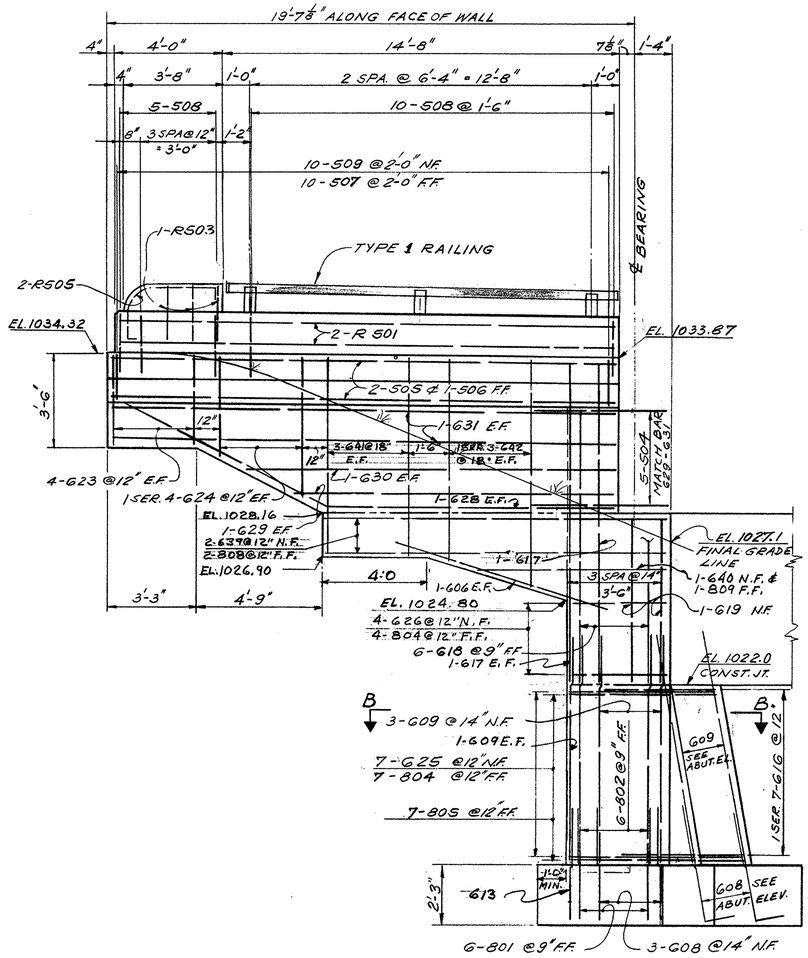

ELEVATION SOUTH WINGWALL

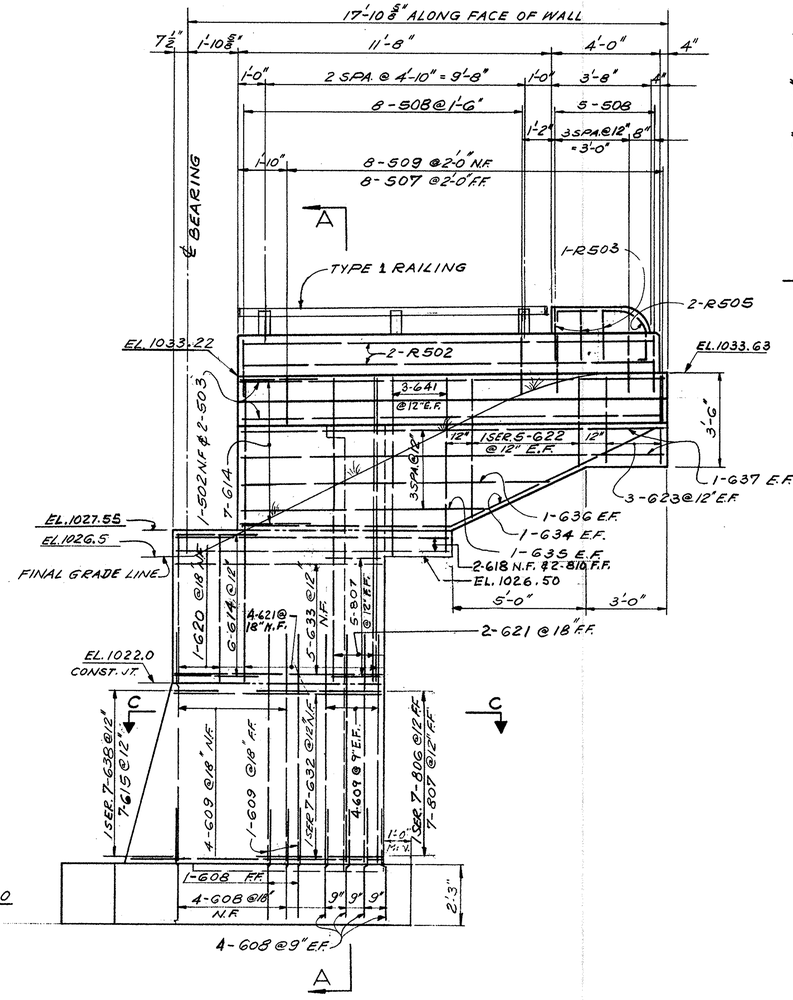

ELEVATION NORTH WINGWALL

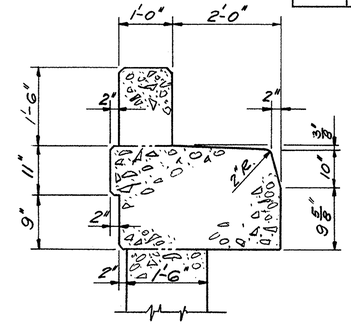
1'-0" 2'-0"
1'-6"
11"
9"
2"
2"
2

RECEIVED
MAR 02 1989
HIGHWAY ENGINEERING

FED. RD.	STATE	PROJECT	
2	OHIO		

366
460

SUM-8-17.63

LOCAL TANGENT TO ℄ RELOCATED SECOND STREET @ STA. 48+69.57

℄ RELOCATED SECOND STREET

SKEW = 15°-03'-04" (TYP.)

STA. 49+99.65

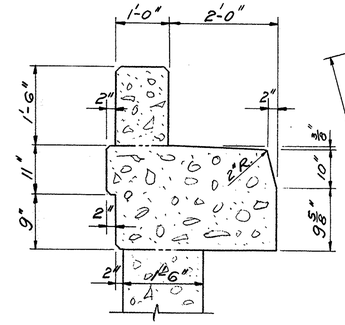

TYPICAL CURB SECTION

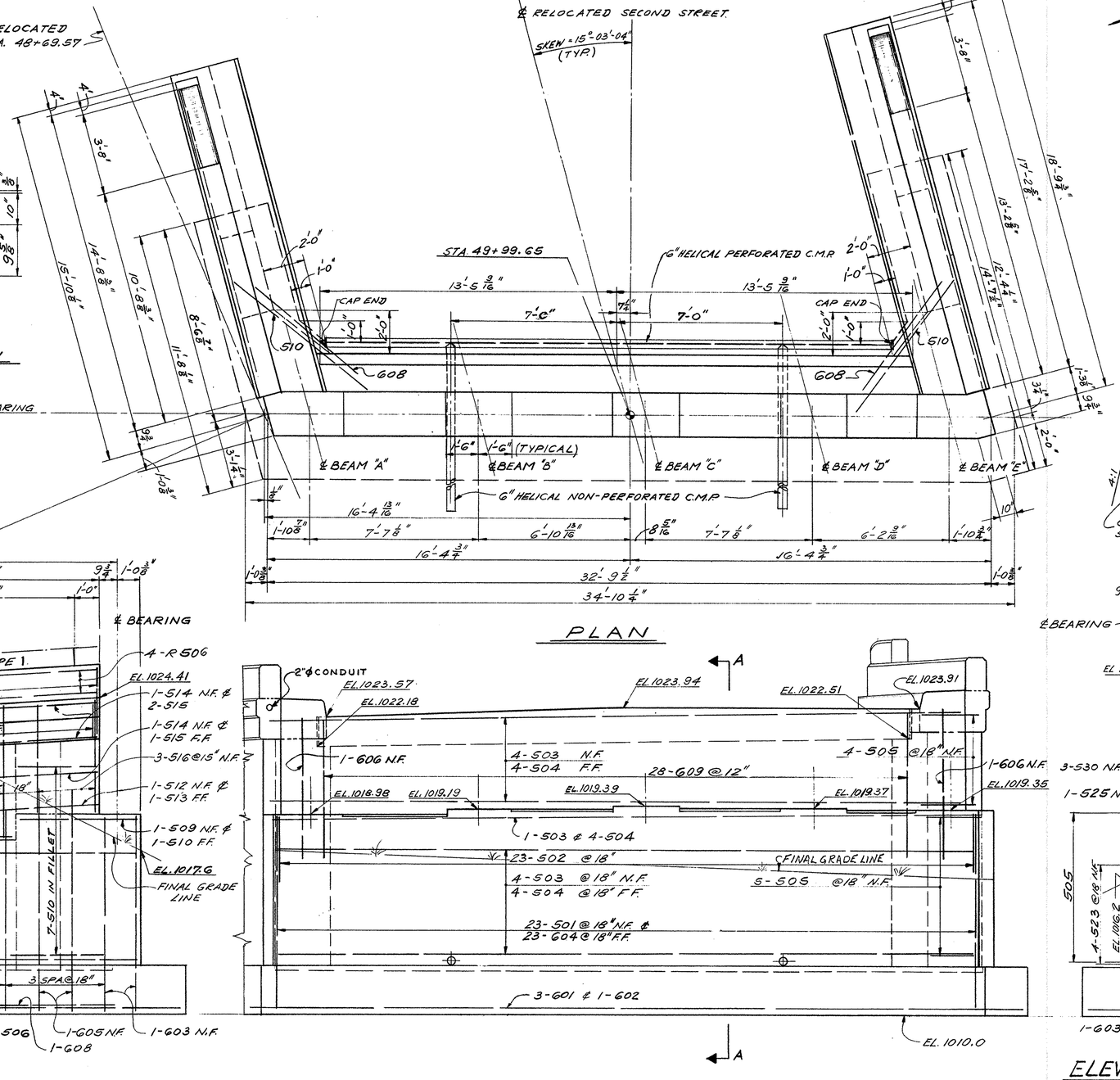

PLAN

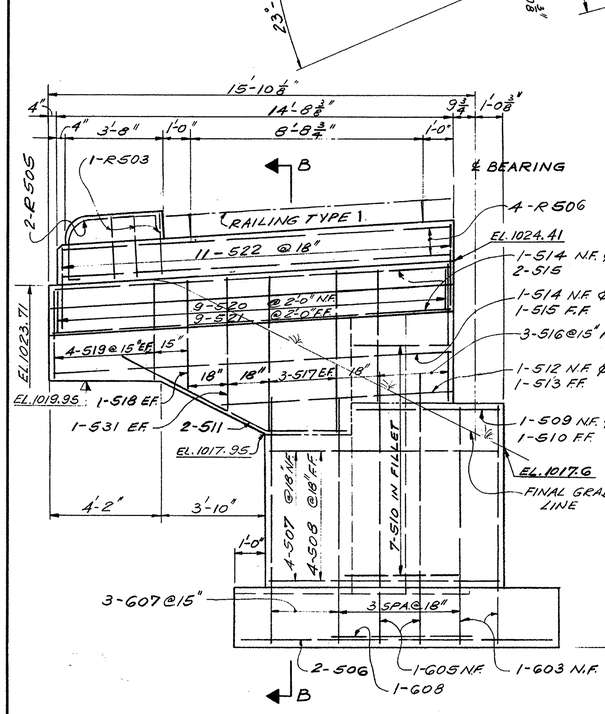

NOTE:
FOR DETAIALS OF LIGHTING CONDUIT THRU NORTH WING WALL SEE STD. DWG. HL-4

ELEVATION-NORTH WINGWALL

ELEVATION-ABUTMENT

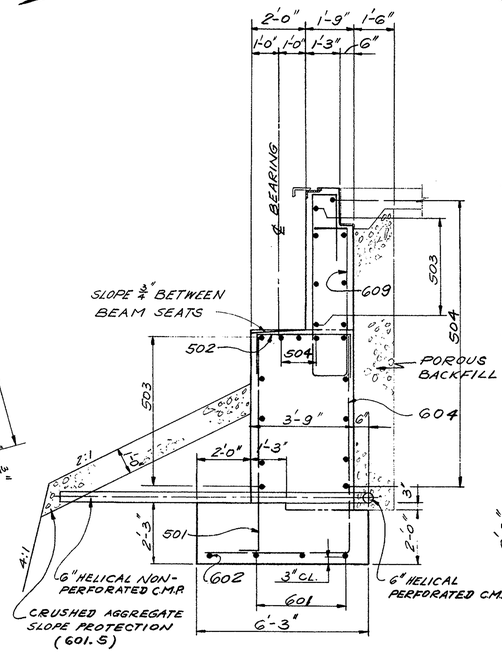

SECTION A-A

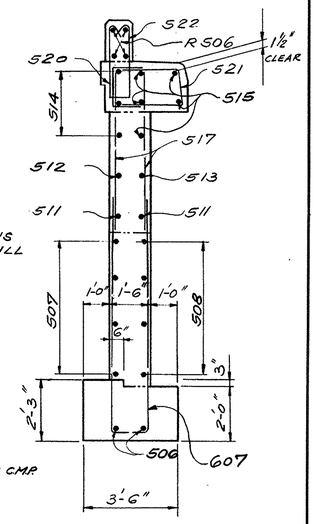

SECTION B-B

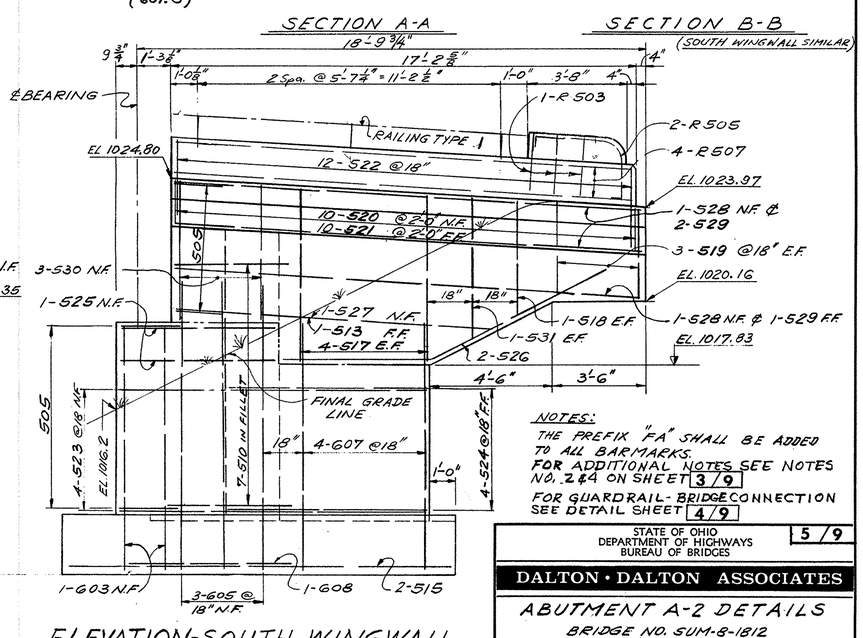

ELEVATION-SOUTH WINGWALL

NOTES:
THE PREFIX "FA" SHALL BE ADDED TO ALL BARMARKS.
FOR ADDITIONAL NOTES SEE NOTES NO. 2&4 ON SHEET 3/9
FOR GUARDRAIL-BRIDGE CONNECTION SEE DETAIL SHEET 4/9

PROCEDURE:
THE EMBANKMENT SHALL BE CONSTRUCTED TO THE LEVEL OF THE SUBGRADE FOR A MINIMUM DISTANCE OF 200 FEET BACK OF THE ABUTMENT. EXCAVATION SHALL THEN BE MADE FOR THE ABUTMENT.

STATE OF OHIO
DEPARTMENT OF HIGHWAYS
BUREAU OF BRIDGES

5/9

DALTON • DALTON ASSOCIATES

ABUTMENT A-2 DETAILS

BRIDGE NO. SUM-8-1812

UNDER RELOCATED SECOND ST.

SUMMIT COUNTY CUYAHOGA FALLS EXPRESSWAY

STA. 254+89.43

DESIGNED	DRAWN	TRACED	CHECKED	REVIEWED	DATE	REVISED
E.A.H.	W.S.		D.H.S.	RDH	2-1-68	

FORM DDA-6

MICROFILMED
MAR 02 1970
DOCUMENT NO.

FED. RD.	STATE	PROJECT	
2	OHIO		

SUM-8-17.63

367
460

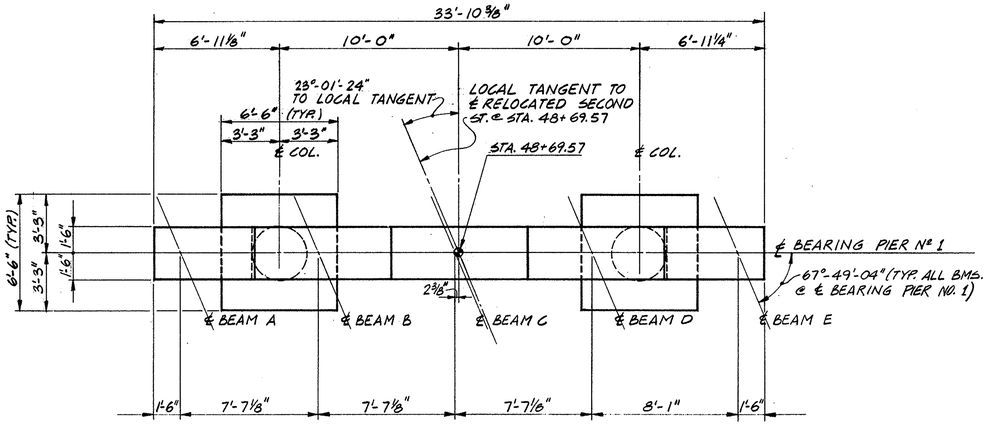

PLAN
(PIER NO. 1)

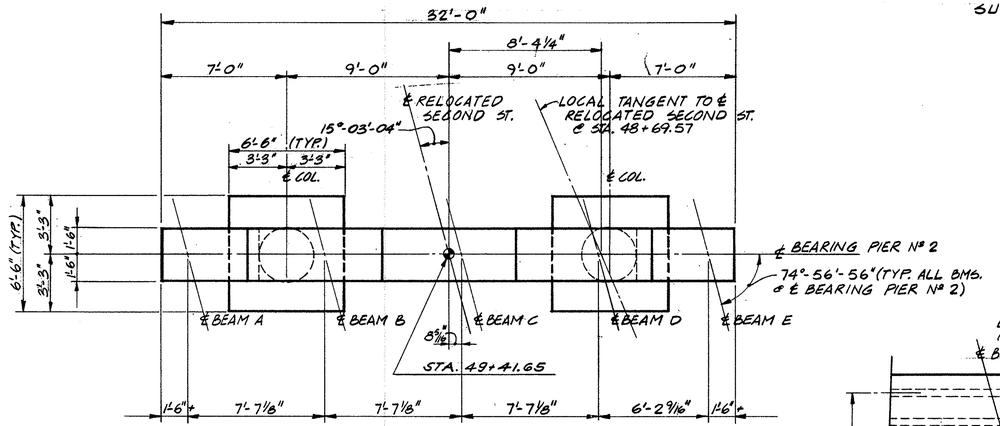

PLAN
(PIER NO. 2)

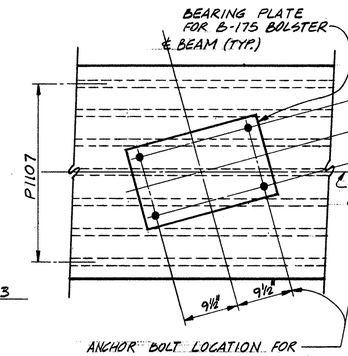

ANCHOR BOLT LOCATION FOR B-175 BOLSTERS @ PIER NO. 2 ONLY (TYPICAL)

BEARING ℄ DETAIL
(PIER NO. 2 ONLY)

NOTE:

BRIDGE SEAT REINFORCING: SPECIAL CARE SHALL BE TAKEN IN PLACING REINFORCING STEEL IN THE VICINITY OF THE BRIDGE SEAT SO AS TO AVOID INTERFERENCE WITH THE DRILLING OF ANCHOR BOLT HOLES ON PIER NO 2.

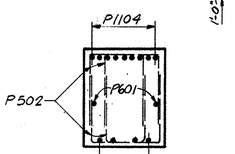

SECTION C-C
(PIER NO. 1)

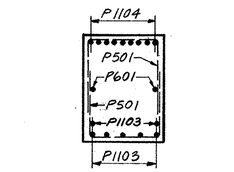

SECTION B-B
(PIER NO. 1)

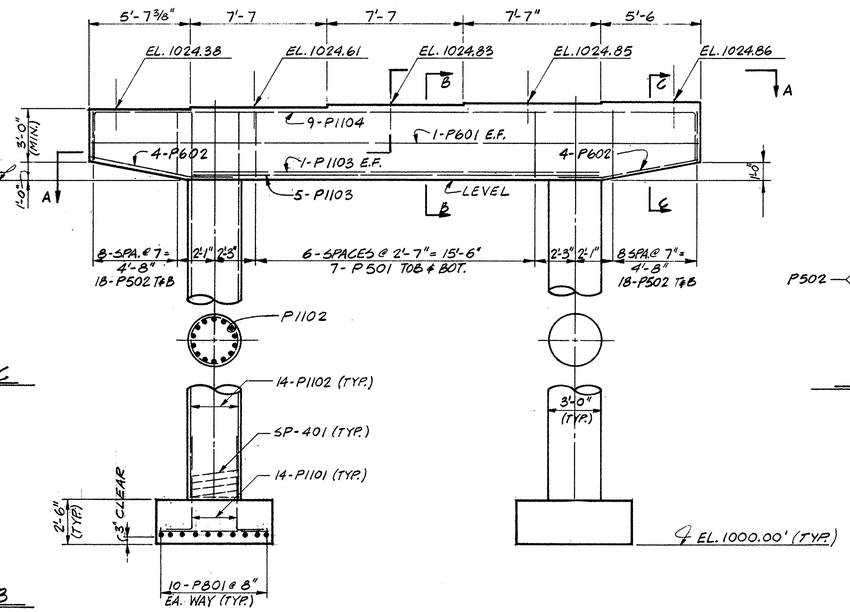

ELEVATION
(PIER NO. 1)

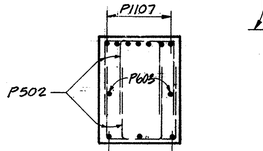

SECTION F-F
(PIER NO. 2)

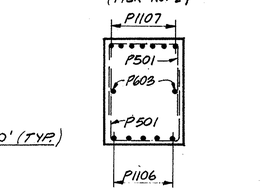

SECTION E-E
(PIER NO. 2)

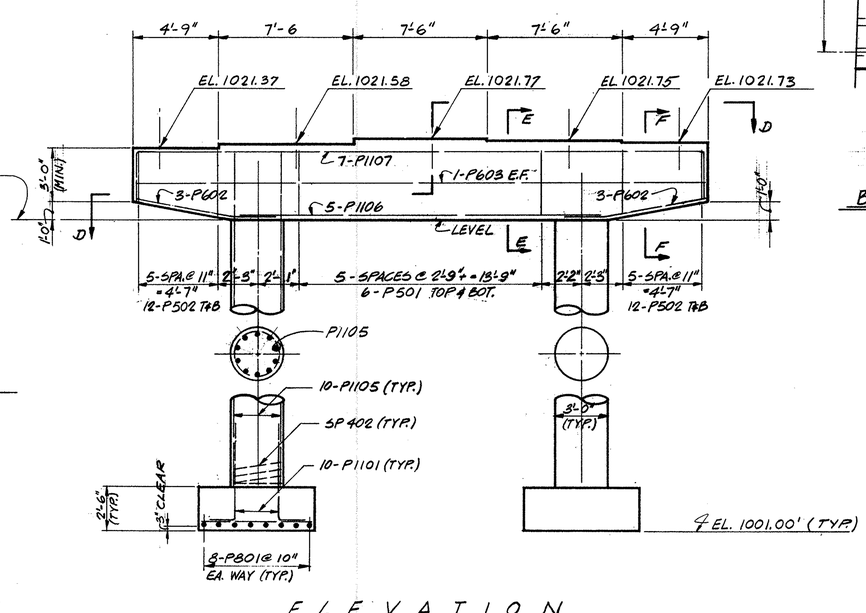

ELEVATION
(PIER NO. 2)

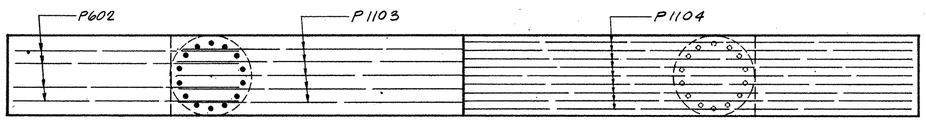

SECTION A-A
(PIER NO. 1)

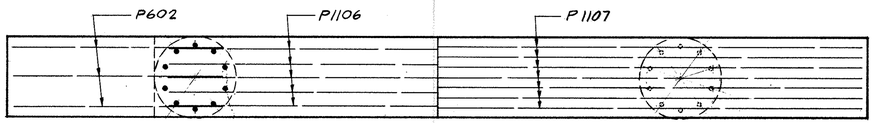

SECTION D-D
(PIER NO. 2)

STATE OF OHIO
DEPARTMENT OF HIGHWAYS
BUREAU OF BRIDGES.

6 / 9

DALTON • DALTON ASSOCIATES

PIER DETAILS
BRIDGE NO. SUM-8-1812
UNDER RELOCATED SECOND ST.
SUMMIT COUNTY CUYAHOGA FALLS EXPRESSWAY
STA. 254+89.43

DESIGNED	DRAWN	TRACED	CHECKED	REVIEWED	DATE	REVISED
E.A.H.	D.F.D.		D.H.S.	RDH	2-1-68	

K&R

FED. RD.	STATE	PROJECT	
2	OHIO		

368
460

SUM-8-17.63

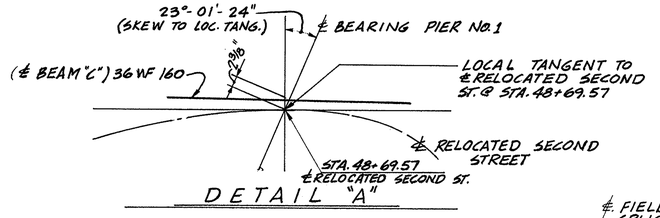

DETAIL "A"

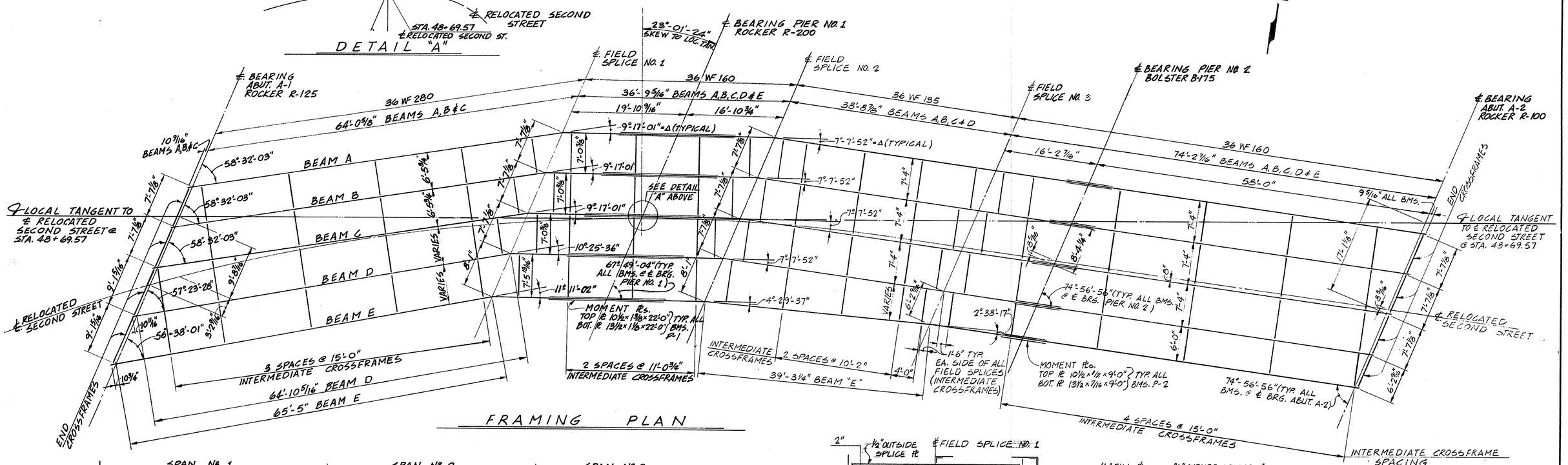

FRAMING PLAN

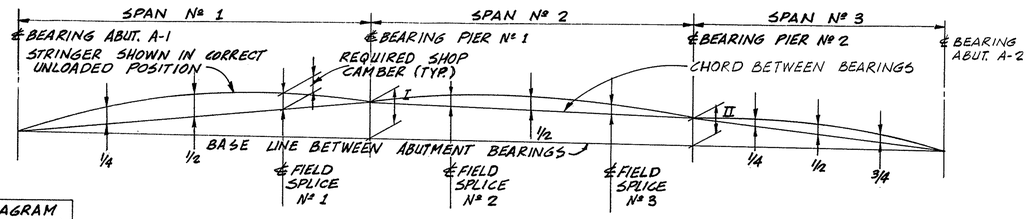

LAYOUT DIAGRAM (VERTICAL OFFSETS)		
BEAM	DIMENSION I	DIMENSION II
A	8⅛"	5⅛"
B	8³/₁₆"	5¹/₁₆"
C	8³/₁₆"	5"
D	8¹/₁₆"	4⁵/₁₆"
E	8¹/₁₆"	4³/₁₆"

LAYOUT DIAGRAM

NOTE: ALL LENGTHS ARE ALONG ℄ OF BEAMS

*THE ADJUSTMENT FOR THE HORIZONTAL CURVE HAS BEEN TAKEN INTO ACCOUNT IN THE HAUNCH HEIGHT (TOP OF SLAB TO TOP OF BEAM) AS SHOWN ON THE TRANSVERSE SECTION, SHEET 8/9

DEFLECTION AND CAMBER *	SPAN № 1			SPAN № 2			SPAN № 3		
LOCATION	¼	½	FIELD SPLICE NO. 1	FIELD SPLICE NO. 2	½	FIELD SPLICE NO. 3	¼	½	¾
DEFLECTION DUE TO WEIGHT OF STEEL	0.262	0.333	0.177	-0.010	0.013	0.007	0.042	0.076	0.061
DEFLECTION DUE TO REMAINING DEAD LOAD	0.925	1.175	0.627	-0.065	0.081	0.047	0.248	0.450	0.360
ADJUSTMENT REQ'D FOR VERTICAL CURVE	1.295	1.652	1.188	0.804	1.069	0.696	0"	0	0
SUM OF DEFLECTION AND ADJUSTMENT	2.482	3.160	1.992	0.729	1.169	0.690	0.290	0.526	0.421
REQUIRED SHOP CAMBER	2 7/16"	3³/₁₆"	2"	3/4"	1³/₁₆"	11/16"	5/16"	½"	7/16"

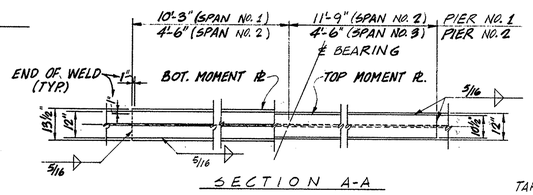

SECTION A-A

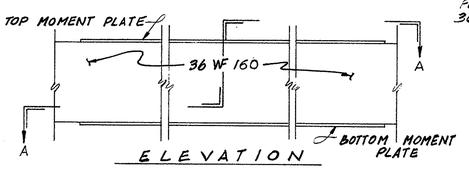

ELEVATION

MOMENT PLATE DETAIL

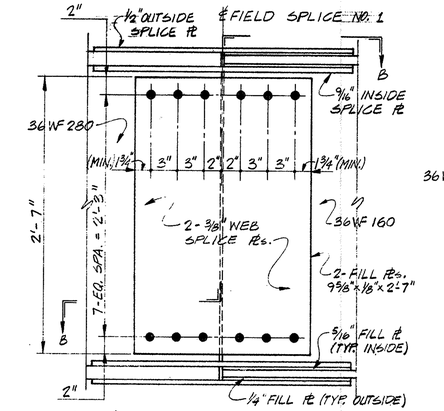

ELEVATION FIELD SPLICE NO. 1

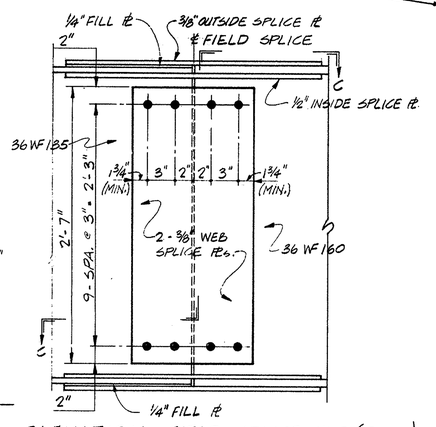

ELEVATION FIELD SPLICE NO. 3 (SHOWN)
FIELD SPLICE NO. 2 (OPP. HAND)

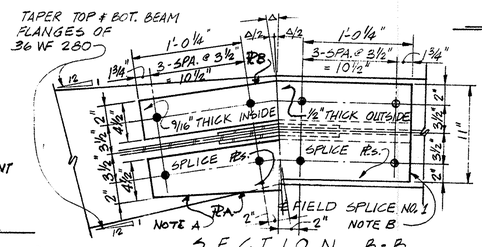

SECTION B-B

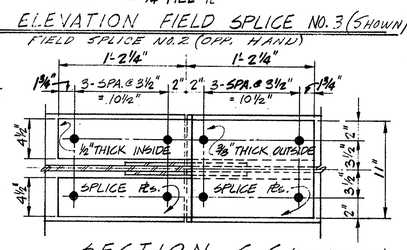

SECTION C-C (SEE NOTE NO. 3)

INTERMEDIATE CROSSFRAME SPACING

NOTES:
1) ALL DIMENSIONS ARE GIVEN ALONG ℄ BEAMS, OR AS SHOWN.
2) FOR BEAM SPLICE LOCATED AT BEND POINT, THE BEAMS CHANGE DIRECTION AT THE CENTERLINE OF FIELD SPLICE.
3) LAYOUT AS SHOWN FOR FIELD SPLICES WITHOUT BEND POINT. LAYOUT FOR FIELD SPLICES WITH BEND POINT SHALL BE SIMILAR TO FIELD SPLICE NO. 1
4) FOR ADDITIONAL FIELD SPLICE DATA SEE STATE OF OHIO STD. DETAIL DRAWING SD-1-65, SHT. 3 OF 3 DATED 11-8-65.

NOTE A:
FLA & OUTSIDE BOTTOM FL's TO BE FABRICATED WITHOUT RE-ENTRANT CORNERS.

NOTE B:
INSIDE & OUTSIDE TOP FLs & FL B TO BE FABRICATED WITH RE-ENTRANT CORNERS HAVING 34" MIN. FILLET RADIUS.

STATE OF OHIO
DEPARTMENT OF HIGHWAYS
BUREAU OF BRIDGES

7/9

DALTON · DALTON ASSOCIATES

FRAMING PLAN
BRIDGE NO. SUM-8-1812
UNDER RELOCATED SECOND ST.
SUMMIT COUNTY CUYAHOGA FALLS EXPRESSWAY
STA. 254+89.43

DESIGNED	DRAWN	TRACED	CHECKED	REVIEWED	DATE	REVISED
D.H.S.	D.F.D.		E.A.H.	R.D.A.	2-1-68	

FORM DDA-6

MICROFILMED
MAR 02 1979
CHIEF ENGINEER

FED. RD.	STATE	PROJECT	
2	OHIO		

SUM-8-17.63

369
460

357 - 5601 @ 7" ALONG NORTH EDGE OF DECK PLACED RADIALLY TOP & BOTTOM

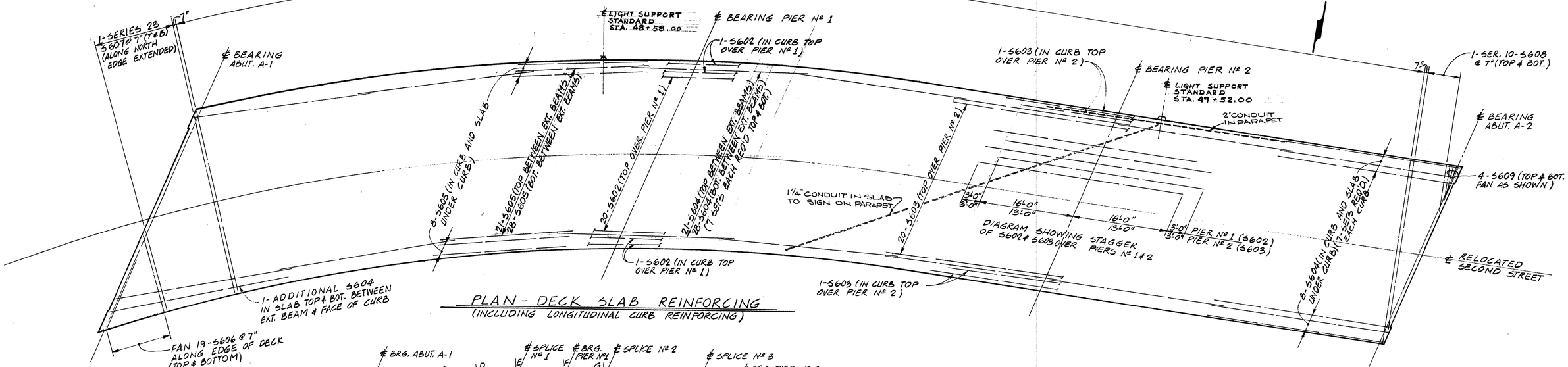

PLAN - DECK SLAB REINFORCING
(INCLUDING LONGITUDINAL CURB REINFORCING)

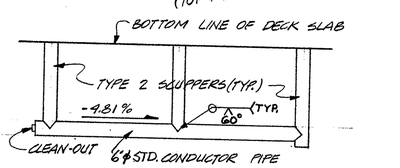

CONDUCTOR PIPE DETAIL

CONDUCTOR PIPE & SPECIALS INCLUDED FOR PAYMENT WITH ITEM 518, TRIPLE SCUPPERS AS PER PLAN.

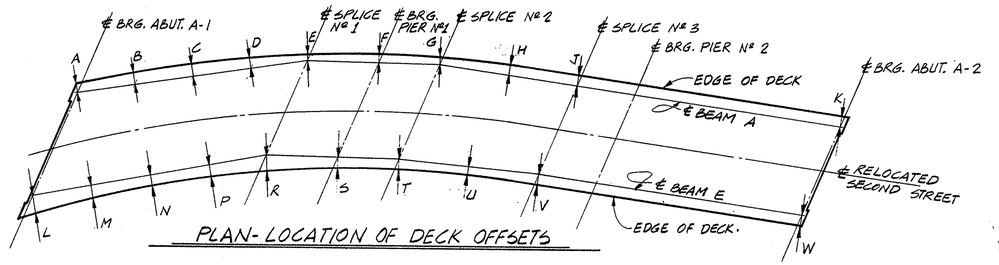

PLAN - LOCATION OF DECK OFFSETS

TABLE OF DECK OFFSETS **					
LOC.	STATION	OFF-SET	LOC.	STATION	OFF-SET
A	47+95.11	1'-6"	L	47+74.21	4'-6"
B	48+10.39	2'-1 3/4"	M	47+91.17	2'-9 3/8"
C	48+25.74	2'-11 3/4"	N	48+08.26	2'-0 1/4"
D	48+41.08	2'-6 1/4"	P	48+25.40	2'-1 3/4"
E	48+56.34	1'-3"	R	48+42.47	3'-2 3/8"
F	48+75.32	1'-9 3/8"	S	48+63.22	1'-9 3/4"
G	48+91.45	1'-3 1/4"	T	48+80.94	1'-8 1/2"
H	49+09.94	1'-11 7/8"	U	49+01.56	1'-3 1/4"
J	49+29.21	2'-0"	V	49+21.68	2'-0"
K	50+08.41	2'-0"	W	49+95.88	2'-0"

TABLE OF PAVEMENT ELEVATIONS					
STA.	PROFILE GRADE ELEV.	EL. A *	EL. B *	EL. C *	
47+75	1033.07	——	——	1032.88	
48+00	1032.40	1032.23	1032.46	1032.29	
+25	31.63	31.53	31.73	31.52	
+50	30.76	30.63	30.81	30.59	
+75	29.80	29.60	29.79	29.59	
49+00	28.7	25.54	28.74	25.55	
+25	27.58	27.39	27.58	27.38	
+50	26.38	26.19	26.39	26.20	
+75	25.18	25.02	25.22	25.02	
50+00	23.9	23.79	——	——	

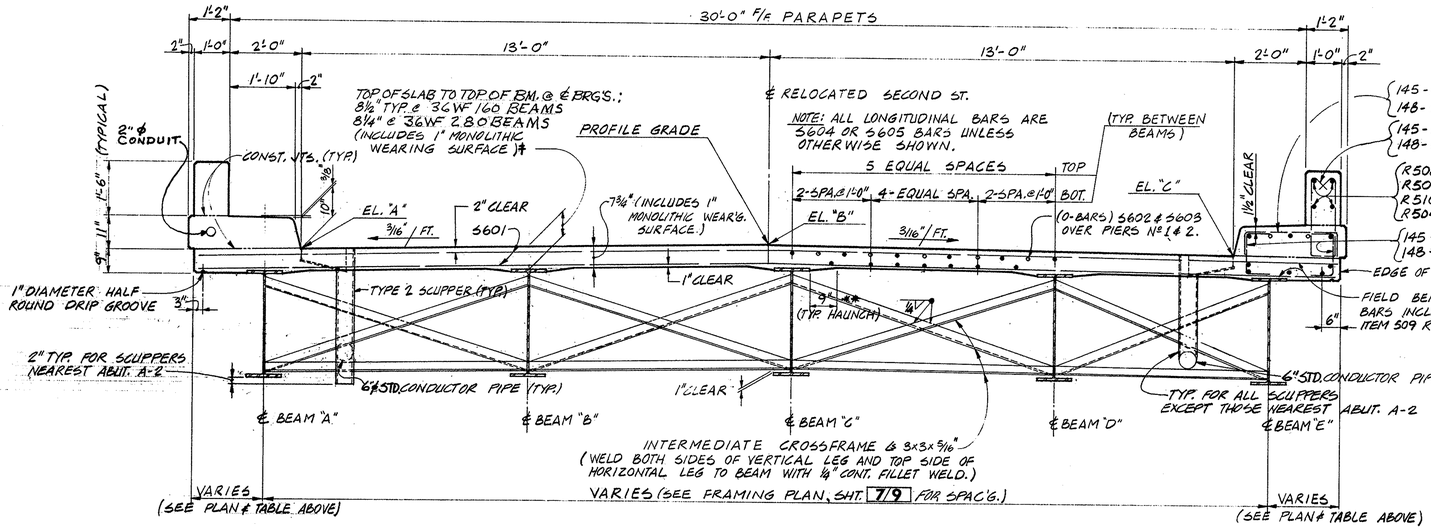

TRANSVERSE SECTION

NOTES:

‡ THIS IS THE NOMINAL DIMENSION. THE QUANTITY OF DECK CONCRETE TO BE PAID FOR SHALL BE BASED UPON THIS DIMENSION, EVEN THOUGH DEVIATION FROM IT MAY BE NECESSARY BECAUSE THE TOP FLANGE OF THE BEAM MAY NOT HAVE THE EXACT CAMBER OR CONFORMATION REQUIRED TO PLACE IT PARALLEL TO THE FINISHED GRADE.

** A TYPICAL HAUNCH WIDTH OF 9" SHALL BE USED FOR COMPUTING QUANTITY OF CONCRETE. HOWEVER, THE HAUNCH WIDTH MAY VARY BETWEEN 6" AND 12" PROVIDED THAT THE SLOPE SHALL BE NOT MORE THAN 1:4. FOR A HAUNCH LESS THAN 9" IN WIDTH.

SCUPPERS including support angles shall be galvanized according to 711.02.

** OFFSETS ARE GIVEN RADIALLY FROM ℄ OUTSIDE BEAMS TO EDGE OF DECK.

* THESE ELEVATIONS ARE THOSE WHICH ARE REQUIRED BEFORE THE CONCRETE IS PLACED. PROPER ALLOWANCE HAS BEEN MADE FOR DEAD LOAD DEFLECTIONS CAUSED BY THE WEIGHT OF CONCRETE.

SEE SHT. 2/9 FOR LIGHT STANDARD SUPPORT DETAIL.

FOR LIGHTING DETAILS NOT SHOWN SEE LIGHTING PLAN.

STATE OF OHIO
DEPARTMENT OF HIGHWAYS
BUREAU OF BRIDGES

8 / 9

DALTON • DALTON ASSOCIATES

SLAB PLAN & SECTION

BRIDGE NO. SUM-8-1812

UNDER RELOCATED SECOND ST.

SUMMIT COUNTY CUYAHOGA FALLS EXPRESSWAY

STA. 254+89.43

DESIGNED	DRAWN	TRACED	CHECKED	REVIEWED	DATE	REVISED
D.H.S.	D.F.D.		E.A.H.	R.D.M.	2-1-68	

FORM DDA-6

FED. RD.	STATE	PROJECT	
2	OHIO		

370
460

SUM-8-17.63

ABUTMENT A-1

MARK	NO. REQ'D.	LENGTH	TYPE	DIMENSIONS A	B	C	D	SERIES INCR.	WEIGHT LBS.
RA 501	16	39'-6"	STR.						659
RA 502	2	16'-8"	STR.						33
RA 503	4	14'-0"	STR.						58
RA 504	5	3'-6"	12	2'-0"	1'-7"	1'-2"			18
RA 505	4	18'-8"	STR.						78
RA 506	2	19'-10"	STR.						41
RA 507	18	5'-5"	16	1'-4"	2'-3"	2'-1"			102
RA 508	28	6'-9"	5	8"	2'-9"	5"			197
RA 509	18	4'-7"	3	1'-4"	1'-9"				86
RA 601	11	4'-8"	STR.						77
RA 602	16	7'-2"	STR.						172
RA 603	ISER. 5	5'-0" / 6'-3"	STR.					3 3/4"	42
RA 604	3	3'-6"	STR.						16
RA 605	1	13'-3"	12	10'-9"	2'-7"	2'-1"			20
RA 606	13	8'-8"	STR.						169
RA 607	ISER. 6	4'-3" / 8'-0"	STR.					9"	55
RA 608	38	4'-10"	1	1'-0"	4'-0"				276
RA 609	40	9'-0"	STR.						541
RA 610	2SER. 8	7'-8" / 9'-6"	3	2'-8"	2'-8" / 3'-7"			3 3/8"	206
RA 611	84	11'-1"	3	3'-5"	4'-0"				1398
RA 612	34	17'-4"	7	5'-0"	1'-5"	6'-5"	3'-1"		885
RA 613	1	8'-10"	3	1'-2"	4'-0"				13
RA 614	13	4'-1"	22	1'-11"	6"	1'-11"	1'-1"		80
RA 615	7	7'-6"	1	1'-11"	5'-9"				79
RA 616	ISER. 7	7'-10" / 10'-1"	23	3'-4" / 5'-5"	3" / 1'-6"	1'-11"	1'-6"	6 8"	99
RA 617	3	11'-10"	STR.						53
RA 618	8	10'-0"	STR.						120
RA 619	2	6'-0"	STR.						18
RA 620	2	5'-4"	STR.						16
RA 621	6	11'-2"	STR.						101
RA 622	2SER 5	3'-3" / 5'-5"	STR.					6"	63
RA 623	17	3'-2"	STR.						81
RA 624	2SER. 4	3'-7" / 5'-6"	STR.					6 5/16"	53
RA 625	7	3'-9"	STR.						39
RA 626	4	6'-1"	12	3'-6"	2'-8"	2'-1"			37
RA 627	6	14'-0"	3	1'-6"	6'-5"				126
RA 628	2	19'-1"	12	10'-8"	8'-6"	4'-0"			57
RA 629	2	11'-10"	STR.						36
RA 630	2	13'-8"	STR.						41
RA 631	4	18'-8"	STR.						112
RA 632	ISER. 7	7'-8" / 9'-5"	STR.					3 1/2"	90
RA 633	5	7'-8	STR.						58
RA 634	2	16'-1"	12	8'-6"	7'-8"	3'-10"			48
RA 635	2	9'-0"	STR.						27
RA 636	2	11'-3"	STR.						34
RA 637	4	15'-8"	STR.						94
RA 638	ISER. 7	4'-5" / 5'-6"	22	1'-11"	6" / 1'-3"	2'-3"	1'-1" / 1'-6"	1 5/16"	50
RA 639	2	15'-2"	12	12'-7"	2'-8"	2'-1"			46
RA 640	1	8'-10"	12	6'-3"	2'-8"	2'-1"			13
RA 641	12	6'-8	STR.						120
RA 642	2SER 3	7'-0" / 8'-0	STR.					6"	68
RA 801	11	5'-2"	1	1'-1"	4'-9"				152
RA 802	11	9'-6"	STR.						279
RA 803	12	39'-5"	STR.						1263
RA 804	11	5'-3"	22	2'-0"	1'-0"	2'-6"	1'-9"		154
RA 805	7	7'-2"	1	4'-10"	2'-6"				134
RA 806	ISER 7	5'-9" / 7'-6"	STR.					3 1/2	124
RA 807	12	5'-3"	22	2'-0	1'-0"	2'-6"	2'-0"		168
RA 808	2	10'-6"	STR.						56
RA 809	1	4'-3"	STR.						11
RA 810	2	5'-0"	STR.						27
						TOTAL ABUT. A-1 =			9,369

ABUTMENT A-2

MARK	NO. REQ'D.	LENGTH	TYPE	DIMENSIONS A	B	C	D	SERIES INCR.	WEIGHT LBS.
FA 501	23	8'-10"	1	6"	8'-6"				212
FA 502	23	7'-9"	3	3'-5"	2'-4"				186
FA 503	9	32'-0"	STR.						300
FA 504	12	32'-5"	STR.						406
FA 505	9	4'-5"	22	2'-0"	7"	2'-0"	7"		41
FA 506	2	11'-3"	STR.						23
FA 507	4	11'-0"	12	8'-6"	2'-6"	2'-5"			46
FA 508	4	6'-0"	STR.						25
FA 509	1	7'-6"	12	5'-0"	2'-6"	2'-5"			8
FA 510	15	5'-0"	STR.						78
FA 511	2	10'-0"	12	3'-0"	7'-0"	3'-3"			21
FA 512	1	9'-5"	1	1'-0"	8'-7"				10
FA 513	2	8'-0"	STR.						17
FA 514	3	15'-6"	1	1'-0"	14'-8"				49
FA 515	7	14'-3"	STR.						104
FA 516	3	4'-10"	STR.						15
FA 517	14	6'-0"	STR.						88
FA 518	4	4'-0"	STR.						17
FA 519	14	3'-3"	STR.						47
FA 520	19	4'-7"	3	1'-4"	1'-9"				91
FA 521	19	5'-5"	16	1'-4"	2'-3"	2'-1"			107
FA 522	23	6'-9"	5	8"	2'-9"	5"			162
FA 523	4	11'-3"	STR.						47
FA 524	4	7'-6"	STR.						31
FA 525	2	5'-8"	STR.						12
FA 526	2	12'-6"	12	5'-6"	7'-0"	3'-4"			26
FA 527	1	11'-9"	STR.						12
FA 528	3	17'-2"	STR.						54
FA 529	5	13'-6"	STR.						70
FA 530	3	4'-10"	STR.						15
FA 531	4	5'-0"	STR.						21
FA 601	3	34'-6"	STR.						156
FA 602	1	33'-3"	STR.						50
FA 603	4	9'-4"	1	1'-0"	8'-6"				56
FA 604	23	13'-9"	1	5'-5"	8'-6"				475
FA 605	5	12'-4"	1	1'-0"	11'-6"				93
FA 606	2	8'-6"	STR.						26
FA 607	7	21'-2"	3	1'-2"	10'-2"				223
FA 608	2	6'-0"	STR.						18
FA 609	28	16'-7"	7	4'-8"	1'-5"	6'-3"	2'-10"		697
						TOTAL ABUT. A-2			4,134

PIERS NO. 1 & 2

MARK	NO. REQ'D.	LENGTH	TYPE	DIMENSIONS A	B	C	D	SERIES INCR.	WEIGHT LBS.
P 501	26	8'-5"	3	2'-8"	3'-0"				228
P 502	120	7'-1"	3	2'-0"	2'-8"				887
P 601	2	33'-6"	STR.						101
P 602	14	7'-11"	12	2'-6"	5'-6"	1'-0"			166
P 603	2	31'-8"	STR.						95
P 801	72	6'-2"	STR.						1186
P 1101	48	6'-11"	1	1'-5 1/2"	5'-9"				1764
P 1102	28	21'-6"	STR.						3198
P 1103	7	23'-0"	STR.						855
P 1104	9	38'-3"	3	33'-6"	2'-8"				1829
P 1105	20	17'-6"	STR.						1860
P 1106	5	21'-0"	STR.						558
P 1107	7	36'-5"	3	31'-8"	2'-8"				1354
						TOTAL PIER 1 & 2 (LESS SPIRALS) =			14,081

SUPERSTRUCTURE

MARK	NO. REQ'D.	LENGTH	TYPE	DIMENSIONS A	B	C	D	SERIES INCR.	WEIGHT LBS.
S 501	293	5'-7"	5	8"	2'-2"	5"			1706
S 502	293	3'-7"	3	2'-6"	8"				1095
S 503	586	2'-4"	3	1'-3"	8"				1426
S 504	4	10'-9"	24	2'-0	2'-11"	1'-3"	2'-1"		45
S 601	714	31'-8"	STR.						33,961
S 602	24	35'-0"	STR.						1262
S 603	24	29'-0"	STR.						1095
S 604	457	30'-0"	STR.						20,592
S 605	65	22'-6"	STR.						2197
S 606	38	13'-0"	STR.						742
S 607	2SER 23	18'-0" / 31'-0"	STR.					9 5/16"	1555
S 608	2SER. 10	8'-0" / 29'-4"	STR.					2'-4 7/16"	501
S 609	8	6'-0"	STR.						72
S 610	4	10'-0"	19	2'-10"	2'-1"	4"			60
S 611	24	6'-0"	STR.						216
						TOTAL SUPERSTRUCTURE =			66,535

RAILING ⊗

MARK	NO. REQ'D.	LENGTH	TYPE	DIMENSIONS A	B	C	D	SERIES INCR.	WEIGHT LBS.
R 501	4	18'-4"	STR.						
R 502	4	15'-4"	STR.						
R 503	12	6'-1"	21	SEE BENDING DIAGRAM					
R 504	8	11'-9"	STR.						
R 505	8	5'-4"	20	SEE BENDING DIAGRAM					
R 506	4	14'-4"	STR.						
R 507	4	16'-10"	STR.						
R 508	48	15'-8"	STR.						
R 509	8	11'-7"	STR.						
R 510	52	14'-8"	STR.						
R 511	4	10'-9"	24	2'-0"	2'-11"	1'-3"	2'-1"		

REPLACEMENT BARS

RE-401	1	6'-3"	10	6'-3"	16"				
RE-501	1	6'-6"							
RE-601	4	7'-0"							
RE-701	——	7'-3"							
RE-801	1	7'-6"							
RE-901	——	7'-10"							
RE-1001	——	8'-3"							
RE-1101	1	8'-9"							

SPIRAL REINFORCING SCHEDULE

MARK	NO. REQ'D.	CORE DIA. OF SPIRAL	LENGTH OF SPIRAL	PITCH	NO. OF TURNS	WEIGHT LBS.
SP 401	2	32"	17'-10 1/2"	4 1/2"	51	660
SP 402	2	32"	13'-10 1/2"	4 1/2"	40	517
				TOTAL SPIRALS		1177

GRAND TOTAL 95,296 LBS.

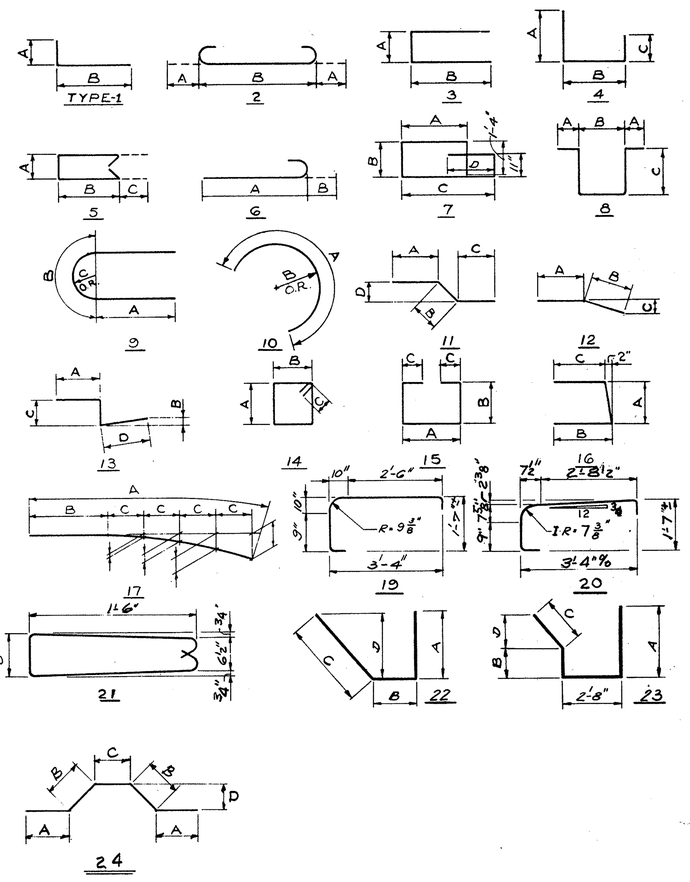

REINFORCING NOTES

THE LENGTH SHOWN IN THE STEEL SCHEDULE FOR THE SPIRAL BARS IS THE DISTANCE FROM THE TOP OF THE FOOTING TO THE BOTTOM OF THE PIER CAP. THE NUMBER OF TURNS SHOWN IN THE STEEL SCHEDULE FOR SPIRAL BARS IS THE LENGTH DIVIDED BY THE PITCH PLUS THREE TURNS (TOTAL NUMBER OF CLOSED COILS) EXPRESSED AS THE NEAREST WHOLE NUMBER. SPIRAL REINFORCING BARS SHALL NOT HAVE DEFORMATIONS, BUT SHALL IN OTHER RESPECTS CONFORM TO ITEM 509. ONE AND ONE HALF CLOSED COILS SHALL BE PROVIDED AT THE ENDS OF EACH SPIRAL UNIT. FOUR (4) STEEL CHANNEL, TEE OR ANGLE SPACERS WEIGHING APPROX. 0.68 LBS. PER LINEAL FT. OF SPACERS SHALL BE PROVIDED FOR EACH SPIRAL UNIT. THEY SHALL BE EQUALLY SPACED ALONG THE PERIPHERY OF EACH COIL. THE NUMBER OF POUNDS OF THESE SPACERS BASED ON 0.68 LBS. PER LINEAL FT. WILL BE PAID FOR AS REINFORCING STEEL AND IS INCLUDED IN THE TABULATED QUANTITY OF SPIRAL BARS.

BAR SIZE IS INDICATED IN THE BAR MARK. THE FIRST DIGIT WHERE THREE DIDGITS ARE USED AND THE FIRST TWO DIGITS WHERE FOUR DIGITS ARE USED INDICATE THE BAR SIZE NUMBER. A-601 IS A NO. 6 SIZE BAR AND P-1001 IS A NO. 10 SIZE BAR.

⊗RAILING REINFORCEMENT BARS WILL BE INCLUDED AS PART OF ITEM 517 FOR PAYMENT.

STATE OF OHIO
DEPARTMENT OF HIGHWAYS
BUREAU OF BRIDGES

9/9

DALTON • DALTON ASSOCIATES

REINFORCING SCHEDULE

BRIDGE NO. SUM-8-1812

UNDER RELOCATED SECOND ST.

SUMMIT COUNTY CUYAHOGA FALLS EXPRESSWAY

STA. 254+89.43

DESIGNED	DRAWN	TRACED	CHECKED	REVIEWED	DATE	REVISED
D.H.S.	W.S.		L.B.	R.B.A.	2-1-68	

FED. RD.	STATE	PROJECT	
2	OHIO		

371
460

SUM 8-17.63

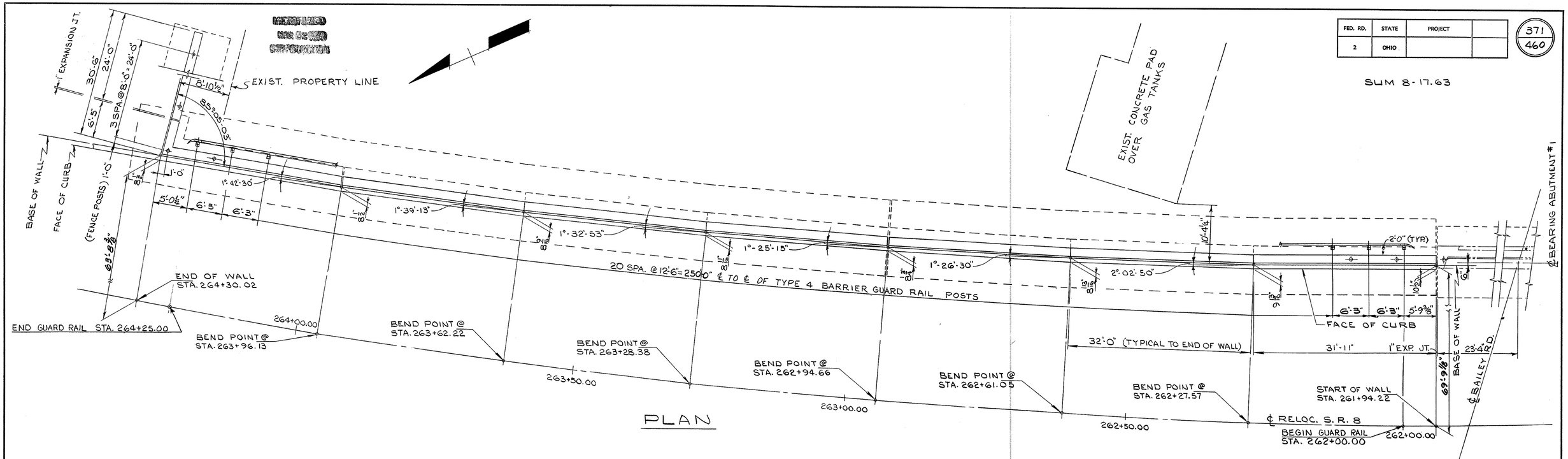

PLAN

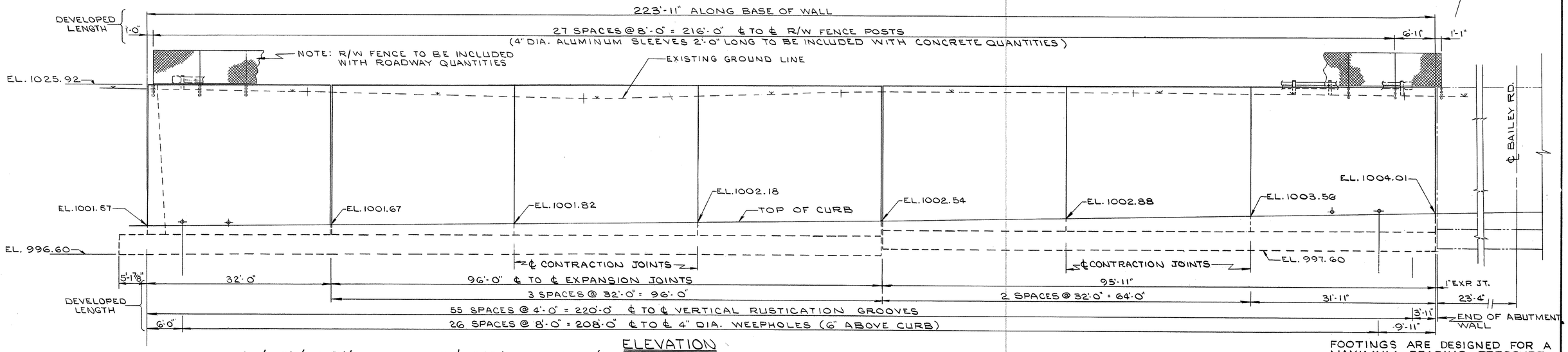

ELEVATION

Fed., State & City Code 7221 Quantities carried to Sh. No. 339

ESTIMATED QUANTITIES

ITEM	TOTAL	UNIT	DESCRIPTION	ITEM	TOTAL	UNIT	DESCRIPTION
503	748	CU. YDS.	UNCLASSIFIED EXCAVATION	512	160	LIN. FT.	PREMOLDED SEALING STRIP
503	1,471	CU. YDS.	ROCK EXCAVATION	512	8	SQ. YDS.	TYPE "B" WATERPROOFING
				516	262	SQ. FT.	1" PREFORMED EXPANSION JT. FILLER
509	65,346	LBS.	REINFORCING STEEL				
				518	333	CU. YDS	POROUS BACKFILL
511	522	CU. YDS.	CLASS "C" CONCRETE ABOVE FOOTINGS				
511	372	CU. YDS.	CLASS "C" CONCRETE FOOTINGS				
				625			SEE SHT Nº 257 FOR LIGHTING SUMMARY

FOOTINGS ARE DESIGNED FOR A MAXIMUM BEARING PRESSURE OF 3.2 TONS PER SQ. FT.

STATE OF OHIO
DEPARTMENT OF HIGHWAYS
BUREAU OF BRIDGES
1 / 3

DALTON • DALTON ASSOCIATES

GENERAL PLAN & ELEVATION
RETAINING WALL

SUMMIT COUNTY

STA. 261+94.22 TO STA. 264+30.02

DESIGNED	DRAWN	TRACED	CHECKED	REVIEWED	DATE	REVISED
RDH.	RW		C.O.W. 11/26/67	RDH 2-5-68		

MICROFILMED
MAR 02 1979
CONSTRUCTION

FED. RD.	STATE	PROJECT	
2	OHIO		

372
460

SUM 8-17.63

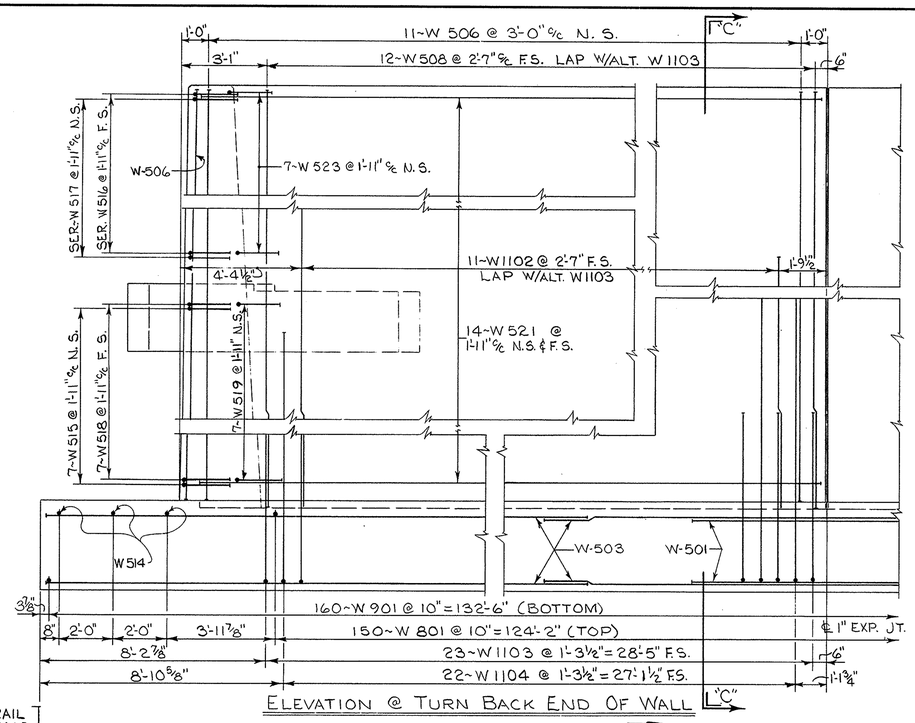

ELEVATION @ TURN BACK END OF WALL

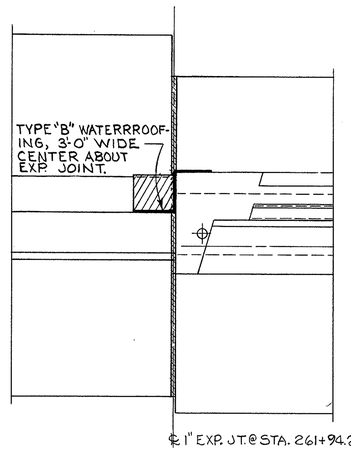

TYPE "B" WATERPROOFING DETAIL

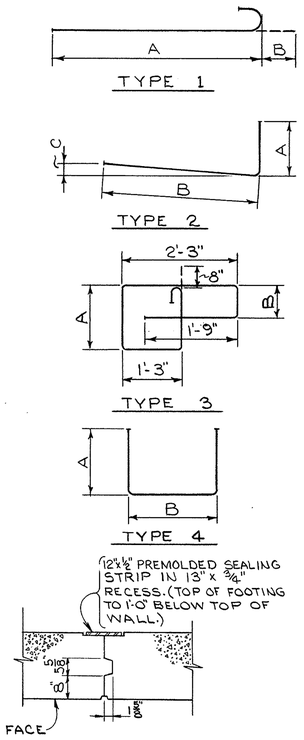

CONTRACTION JOINT DETAIL

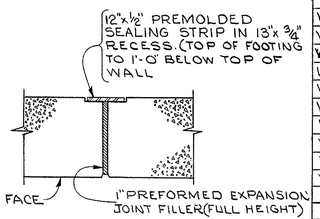

EXPANSION JOINT DETAIL

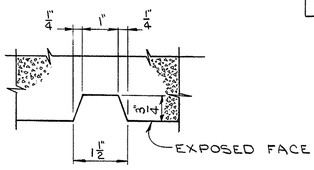

RUSTICATION GROOVE DETAIL

REINFORCING SCHEDULE

MK NO	NO. REQ'D.	LENGTH	TYPE	DIMENSIONS A	B	C	SER. INCR.	WEIGHT LBS.
W-501	80	10'-0"	STR					834
W-502	40	25'-1"	STR					1,046
W-503	50	28'-0"	STR					1,460
W-504	162	31'-8"	STR					5,351
W-505	33	24'-10"	STR					855
W-506	47	25'-10"	STR					1,266
W-507	39	25'-1"	STR					1,020
W-508	51	26'-1"	STR					1,387
W-509	4	12'-10"	STR					54
W-510	14	12'-7"	STR					184
W-511	3	7'-5"	STR					23
W-512	5	6'-9"	STR					35
W-513	4	16'-3"	STR					68
W-514	11	8'-8"	STR					99
W-515	14	6'-4"	2	2'-4"	4'-2"	4"		92
SERIES W-516	1 SET OF 7 BARS	5'-9" TO 6'-6"	2	4'-1" TO 4'-10"	1'-10"	1 7/8"	1½"	45
SERIES W-517	1 SET OF 7 BARS	4'-5" TO 5'-2"	2	2'-7" TO 3'-4"	2'-0"	2"	1½"	35
W-518	7	6'-2"	2	1'-10"	4'-6"	4 1/8"		45
W-519	7	7'-5"	2	1'-7"	6'-1"	6 1/8"		54
W-520	7	24'-8"	STR					180
W-521	28	31'-1"	STR					908
SERIES W-522	1 SET OF 7 BARS	6'-2" TO 7'-0"	4	2'-4"	1'-8 3/8" TO 2'-6 3/8"		1 5/16"	48
W-523	7	6'-1"	2	4'-8"	1'-7"	1 5/8"		44
SERIES W-601	1 SET OF 6 BARS	8'-0" TO 9'-5"	3	1'-1½" TO 1'-10½"	5"		1½"	78
W-602	18	6'-6"	STR					176
SERIES W-603	1 SET OF 9 BARS	9'-7" TO 10'-3½"	3	1'-8⅜" TO 1'-11⅝" @ ⅜" INC.	10½" TO 1'-1" @ 5/16" INC.		1 1/16"	134
SERIES W-604	1 SET OF 4 BARS	9'-0" TO 9'-5½"	3	1'-6" TO 1'-7⅜" @ 5/8" INC.	8⅜" TO 10" @ ½" INC.		1¾"	55
W-605	1	8'-11"	3	1'-5½"	8½"			13
W-606	1	8'-9"	3	1'-5"	7½"			13
W-607	1	8'-5"	3	1'-3½"	6½"			13
W-608	1	8'-0½"	3	1'-2"	5"			12
W-801	271	7'-8"	STR.					5547
W 802	6	8'-0"	2	5'-9"	2'-6"	1½"		128
W 803	5	11'-6"	2	9'-3"	2'-6"	1½"		154
W-901	287	7'-11"	STR.					7725
W 1101	36	19'-0"	STR					3,634
W 1102	47	20'-0"	STR.					4,994
W-1103	173	9'-8"	2	3'-6"	6'-5"	4"		8,885
W-1104	169	17'-6"	2	3'-6"	14'-3"	8⅜"		15,713
W-1105	17	25'-3"	1	23'-8"	1'-7"			2,281
W-1106	3	19'-1"	2	3'-6"	15'-10"	9⅜"		304

REPLACEMENT BARS

RE-501	1	6'-6"	STR					
RE-601	1	7'-0"	STR					
RE-801	1	7'-6"	STR					
RE-901	1	7'-10"	STR					
RE-1101	2	8'-9"	STR					

TOTAL WEIGHT = 64,552 LBS.

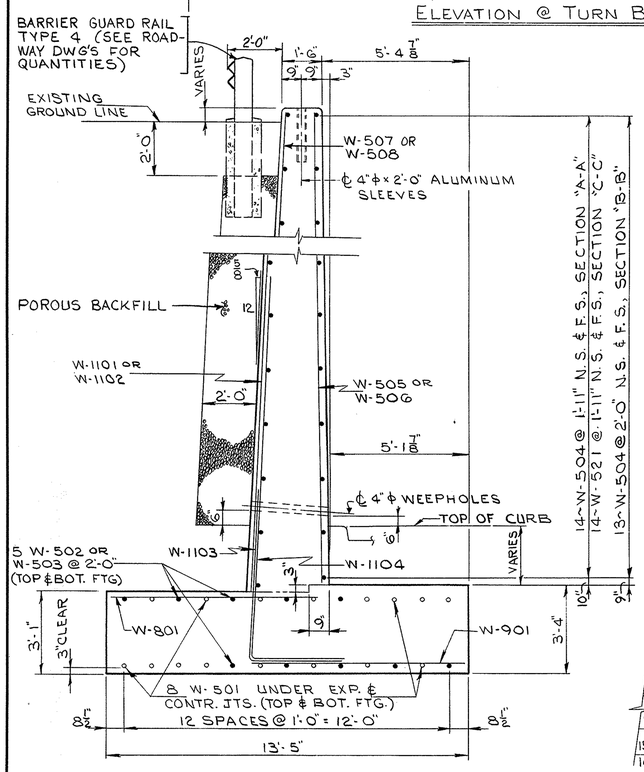

SECTIONS "A-A" & "B-B" & "C-C"

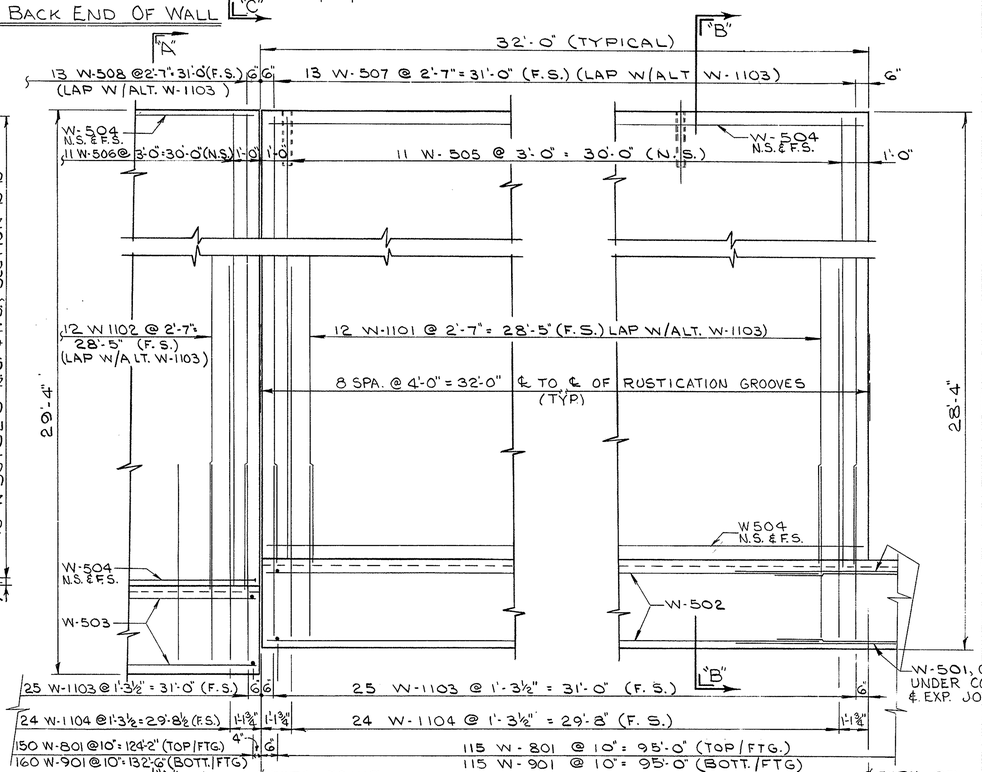

ELEVATION (TYPICAL) EXCEPT AS SHOWN

STATE OF OHIO
DEPARTMENT OF HIGHWAYS
BUREAU OF BRIDGES

2/3

DALTON · DALTON ASSOCIATES

TYPICAL SECTION & PANEL DETAILS
RETAINING WALL
SUMMIT COUNTY
STA. 261+94.22 TO STA. 264+30.02

DESIGNED	DRAWN	TRACED	CHECKED	REVIEWED	DATE	REVISED
RDH	RW		1/20/68	RDH	2-5-68	

RECEIVED
MAR 02 1965
HIGHWAY ENGINEER

FED. RD.	STATE	PROJECT	
2	OHIO		

373
460

SUM-8-17.63

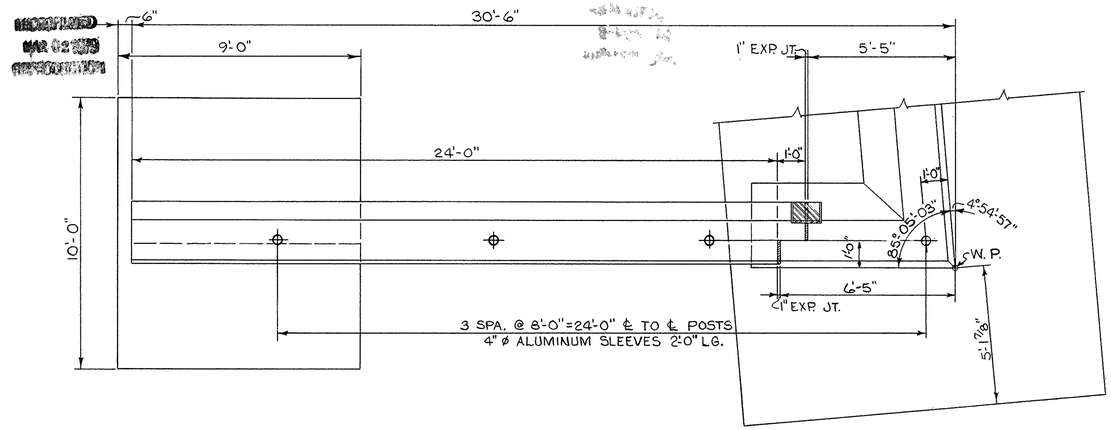

WINGWALL PLAN

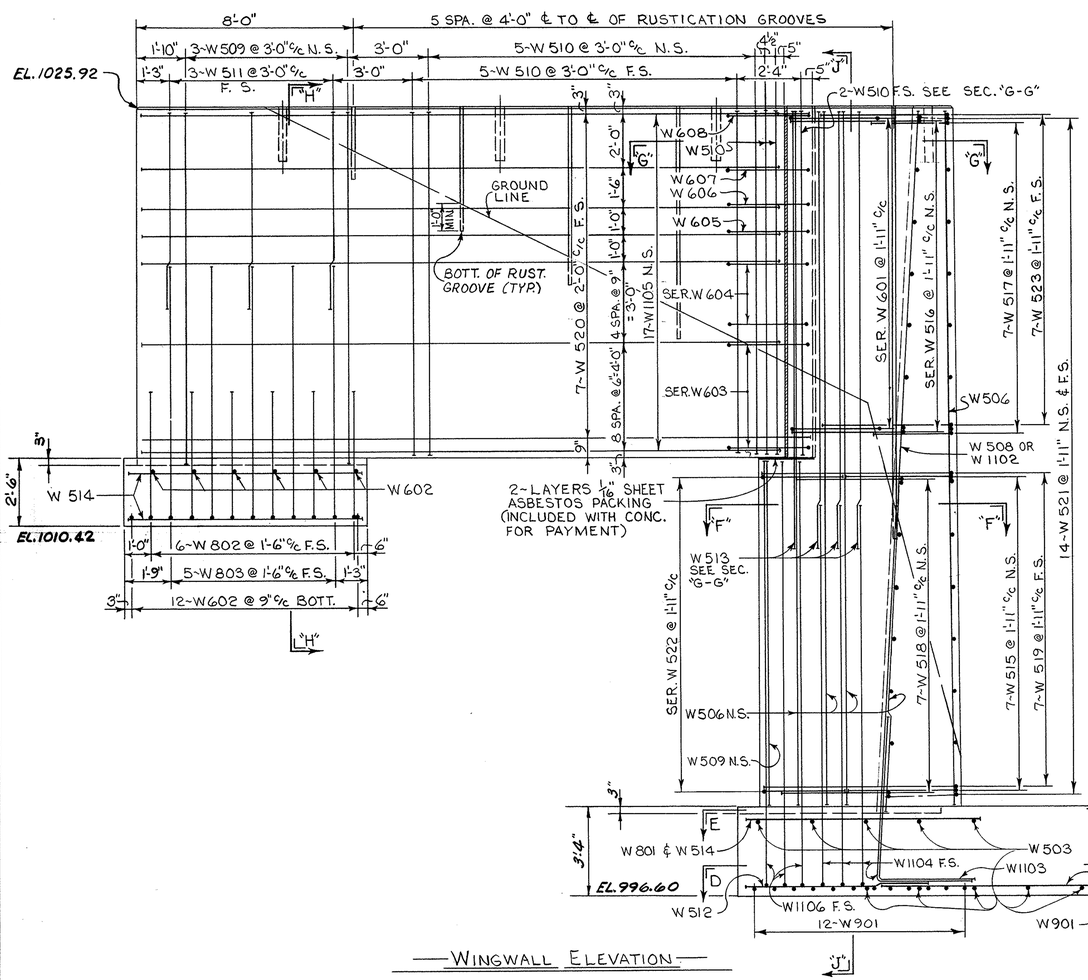

WINGWALL ELEVATION

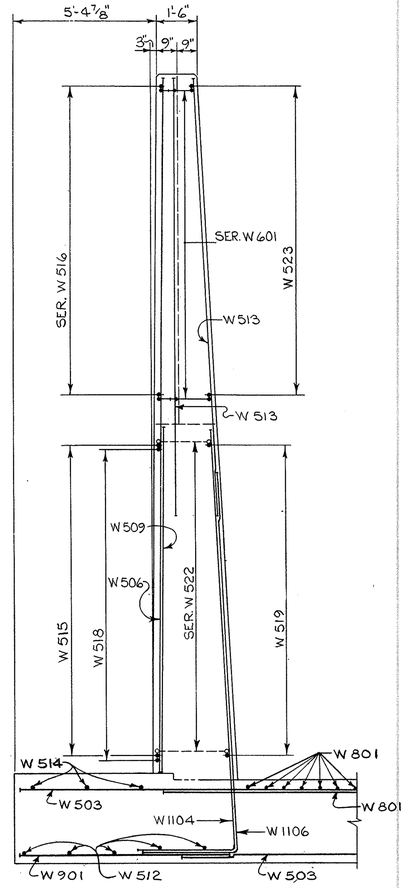

SECTION "J-J"

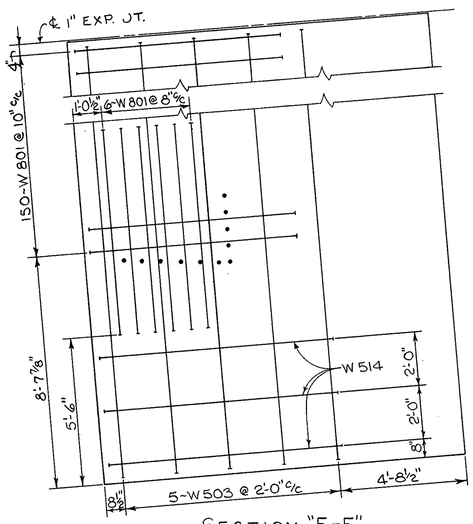

SECTION "E-E"

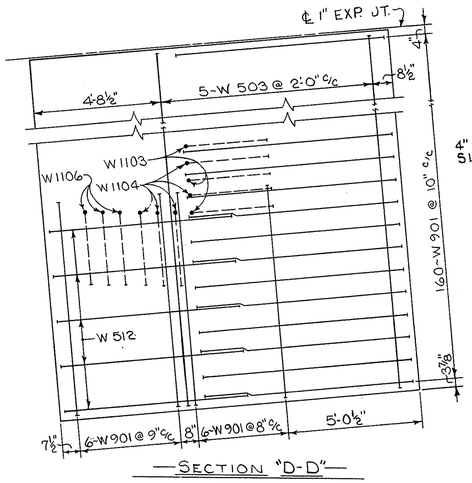

SECTION "D-D"

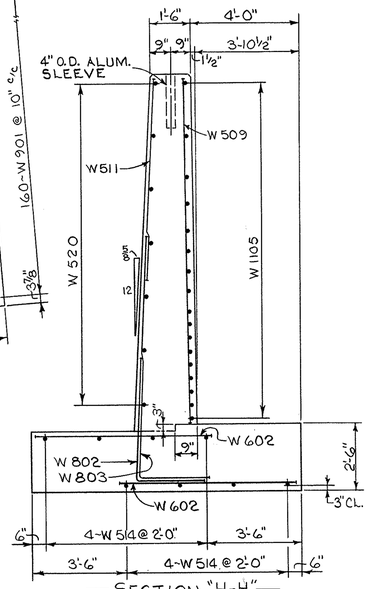

SECTION "H-H"

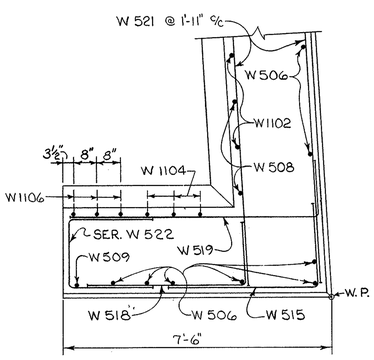

SECTION "F-F"

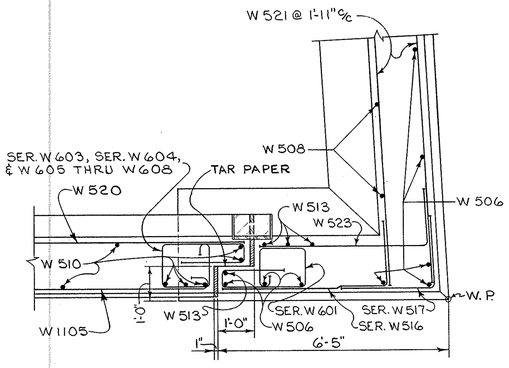

SECTION "G-G"

STATE OF OHIO
DEPARTMENT OF HIGHWAYS
BUREAU OF BRIDGES

3 / 3

DALTON · DALTON ASSOCIATES

WINGWALL PLAN & ELEVATION SECTIONS & DETAILS RETAINING WALL

SUMMIT COUNTY

STA. 261+94.22 TO STA. 264+30.02

DESIGNED	DRAWN	TRACED	CHECKED	REVIEWED	DATE	REVISED
RDH	BR		CW 1/20/67	RDH	2-5-68	

FED. RD.	STATE	PROJECT	
2	OHIO		

374
460

SUM-8-17.63

CURVE DATA

℄ S.R.-8

$\Delta = 28°-46'-09"$ RT.
$D_c = 5°-00'-00"$
$R = 1,145.92'$
T.S. STA. 258+69.71
$L_s = 300'$
$\theta_s = 12°-30'-00"$
$L_T = 334.17'$
$S_T = 167.43'$
$T_s = 545.82$
$E_s = 46.46'$
S.C. STA. 263+69.71

℄ RAMP "N"

PT. STA. 258+69.71 ℄ RAMP "N"
69' RT. ℄ STA. 258+69.71
25/1000' TAPER

℄ RAMP "P"

CURVE #1	CURVE #2
P.C. STA. 260+48.47	P.C.C. STA. 262+99.51
$\Delta = 15°-41'-25"$	$\Delta = 3°-07'-52"$
$D_c = 4°-15'-00"$	$D_c = 1°-15'-00"$
$R = 916.73'$	$R = 4583.66'$
$T = 126.31'$	$T = 125.28'$
$L_c = 251.04'$	$L_c = 250.49'$
NOSE; 23' RT. STA. 262+56.09 ℄ RAMP "P"	PT. STA. 265+50.00 56' LT. ℄ STA. 265+50.00
56' LT. ℄ STA. 262+68.86	
P.I. STA. 261+74.76	
PT. STA. 262+99.49	

PROPOSED STRUCTURE

TYPE: CONTINUOUS STEEL BEAMS WITH REINFORCED CONCRETE DECK AND SUBSTRUCTURE.
SKEW: 14°-56'-39" R.F.
SPANS: 74'-0" - 61'-7" - 69'-5"
ROADWAY: 30'-0" F/F 5'-0" SIDEWALKS.
LOADING HS-20-44

WEARING SURFACE: 1" MONOLITHIC.
APPROACH SLABS: 20' LONG (AS-1-67)
ALIGNMENT: TANGENT
SUPERELEVATION: NONE.
SLOPE PROTECTION: CRUSHED AGGREGATE ABUT^S 2 ONLY AND BERMS.

TRAFFIC: 15,907 - 1985 A.D.T.

STATE OF OHIO
DEPARTMENT OF HIGHWAYS
BUREAU OF BRIDGES

1/9

DALTON • DALTON ASSOCIATES

SITE PLAN

BRIDGE NO SUM-8-1825
UNDER BAILEY ROAD
SUMMIT COUNTY CUYAHOGA FALLS EXPRESSWAY
STA 261+89.82

DESIGNED	DRAWN	TRACED	CHECKED	REVIEWED	DATE	REVISED
RDH	KENESSY		11/1/67	RDH 2-5-68		8-3-70

FED. RD.	STATE	PROJECT	
2	OHIO		

375
460

SUM - 8 - 17.63

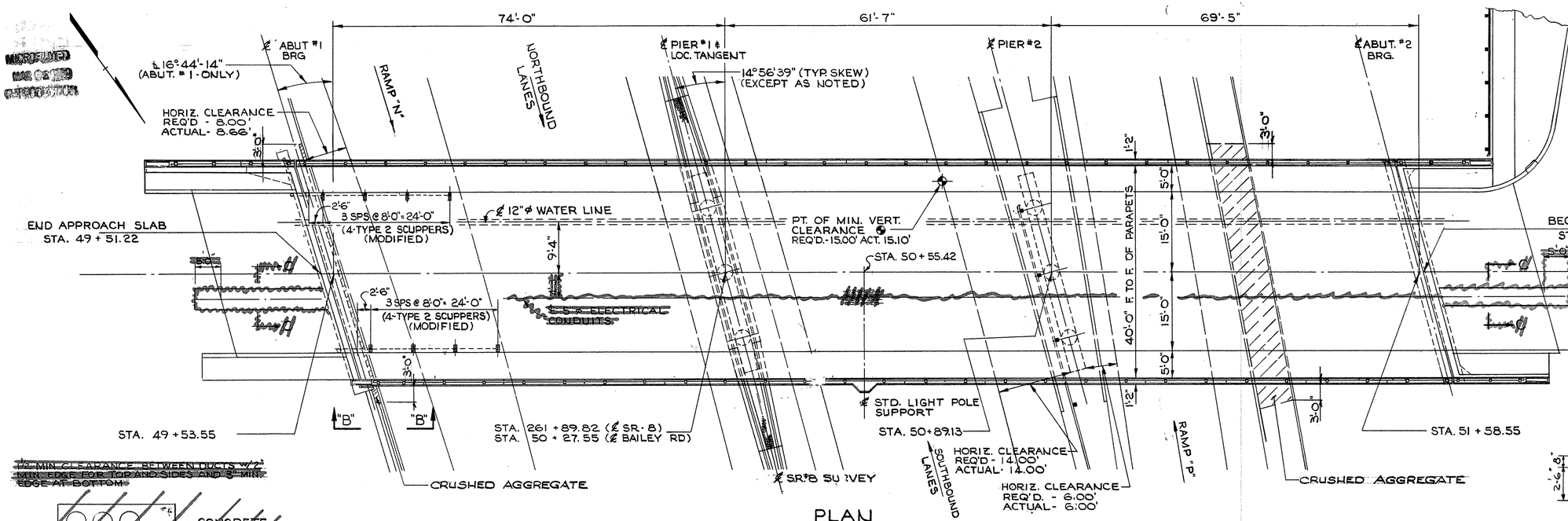

PLAN

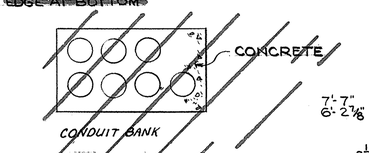

SECTION C-C

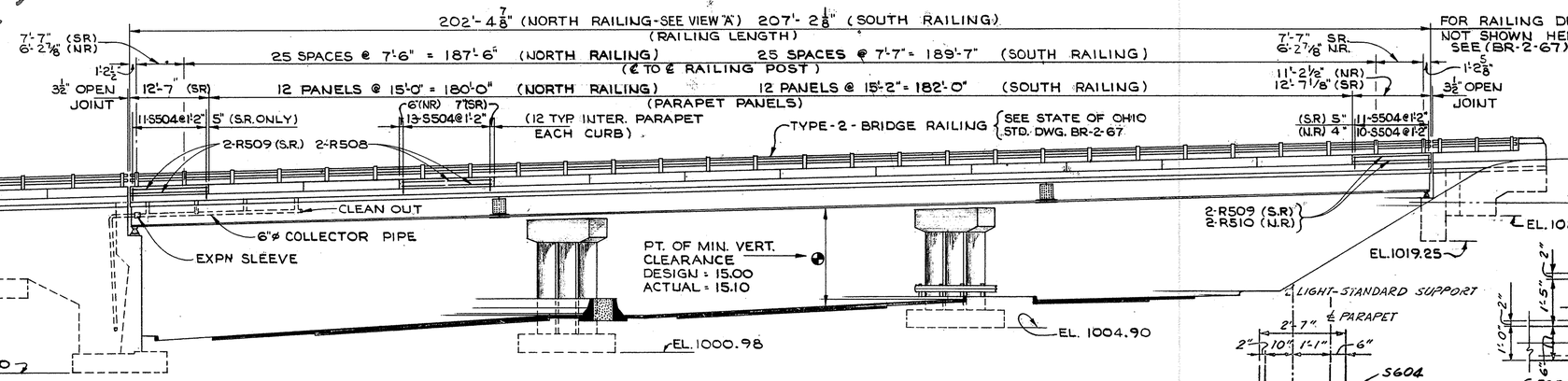

FOR RAILING DET'S NOT SHOWN HERE SEE (BR-2-67)

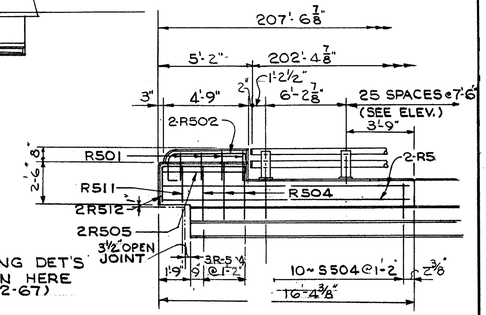

VIEW "B-B"
(NORTH RAIL ONLY)

ELEVATION

NOTE: S.R.- SOUTH RAIL & N.R.- NORTH RAIL
SEE SH. Nº 326 FOR GENERAL NOTES
FOR WATERLINE QUANTITIES AND DETAILS NOT SHOWN SEE UTILITY PLANS.
~~INCLUDES ALL APPURTENANCES AND SPECIALS NECESSARY FOR THEIR INSTALLATION~~

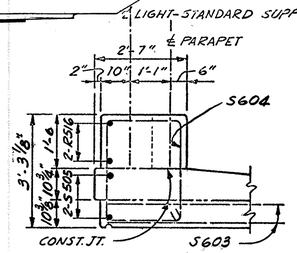

SECTION A-A

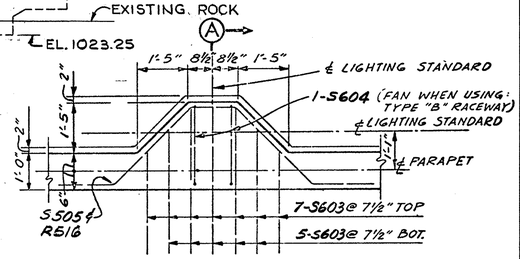

LIGHT STANDARD SUPPORT DETAIL

FOR DETAILS NOT SHOWN SEE SLAB PLAN & SECTION AND LIGHTING DETAILS

296,900

ESTIMATED QUANTITIES

ITEM	TOTAL	UNIT	DESCRIPTION	SUPER	ABUT.	PIERS	GEN.
503	208	CU.YDS.	UNCLASSIFIED EXCAVATION		208		
503	368	CU.YDS.	ROCK EXCAVATION		330	38	
509	119790	LBS.	REINFORCING STEEL	80289	~~21903~~ 21962	17506	
	~~119757~~						
511	321	CU.YDS.	CL."C" CONC. SUPERSTRUCTURE	321			
511	54	CU.YDS.	CL."C" CONC. PIERS ABOVE FTG.			54	
511	113	CU.YDS.	CL."C" CONC. FOOTINGS		85	28	
511	183	CU.YDS.	CL. "C" CONC. ABUTS. ABOVE FTG.		183		

ITEM	TOTAL	UNIT	DESCRIPTION	SUPER	ABUT.	PIERS	GEN.
512	6	SQ.YDS.	TYPE "B" WATERPROOFING		6		
513	301700	LBS.	STRUCTURAL STEEL	301700	~~296,900~~		
516	36	SQ.FT.	1" PREF. EXP. JT FILLER		36		
517	484.17	LIN.FT.	RAILING (TYPE 2)	414.75	69.42		
514	301700	LBS.	FIELD PAINTING STRUCT. STL.	301,700	~~296,900~~		
518	101	CU.YDS.	POROUS BACKFILL		101		
518	35	LIN.FT.	6" HELICAL PERF. CMP (707.01) INCLUDING SPECIALS		35		
518	19	LIN.FT.	6" HELICAL NON-PERF CMP (707.01)		19		
518	8	EA.	SCUPPERS (TYPE "2" MODIFIED) INCLUDING SUPPORTS	8			

ITEM	TOTAL	UNIT	DESCRIPTION	SUPER	ABUT.	PIERS	GEN.
518	135	LIN.FT.	6"ø COLLECTOR PIPES, AND DOWNSPOUTS, W.I., GALV. OR ALLOY STEEL PIPES	57	78		
518	24	LIN.FT.	8"ø PERFORATED C.M.P. W/ CAPS (707.01)		24		
601	39	SQ.YDS.	CRUSHED AGG. SLOPE PROT.		39		
~~625~~	~~1265~~	~~LIN.FT.~~	~~CONDUIT 8" (713.05 TYPE II)~~	~~1265~~			
~~625~~	~~211~~	~~LIN.FT.~~	~~CONDUIT 4" (713.05 TYPE II)~~	~~211~~			
~~625~~	~~50~~	~~LIN.FT.~~	~~CONDUIT 8" (713.05 TYPE I INCL. EXC. CONC.)~~				~~50~~
625		L.S.	SEE SHT. #258 FOR LIGHT SUMMARY				
808	321	UNITS	WATER-RED. SET-RET'D ADMIX	321			
875	1110	SQ.YD.	CONCRETE SURFACE TREATMENT	1070	40		

STATE OF OHIO
DEPARTMENT OF HIGHWAYS
BUREAU OF BRIDGES

2/9

DALTON • DALTON ASSOCIATES

GENERAL PLAN & ELEVATION

BRIDGE Nº SUM-8-1825
S.R. 8 UNDER BAILEY ROAD
SUMMIT COUNTY CUYAHOGA FALLS EXPRESSWAY
STA. 261 + 89.82

DESIGNED	DRAWN	TRACED	CHECKED	REVIEWED	DATE	REVISED
RDH	ALH		C.J.W. 11/1/68	RDH 2-5-68		3-3-70

MICROFILMED
MAR 08 1979
REPRODUCTION

FED. RD.	STATE	PROJECT	
2	OHIO		

376
460

SUM - 8 - 17.63

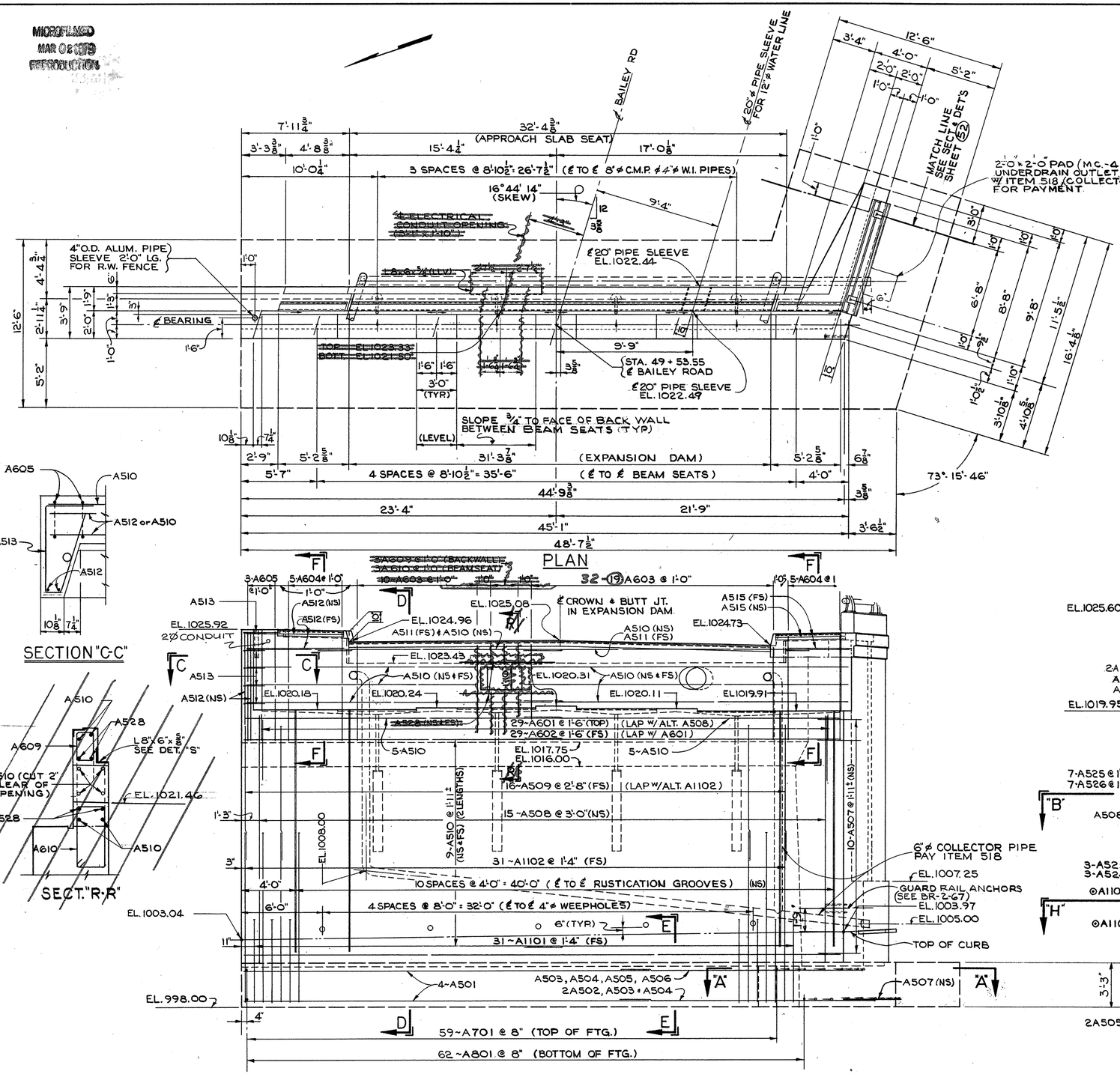

FRONT ELEVATION

SECTION "C-C"

SECT. "R-R"

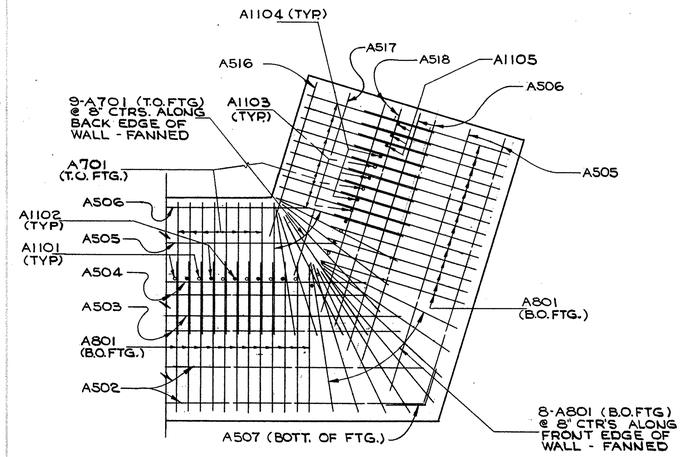

SECTION "A-A"

B.O.FTG. = BOTTOM OF FOOTING
T.O.FTG. = TOP OF FOOTING

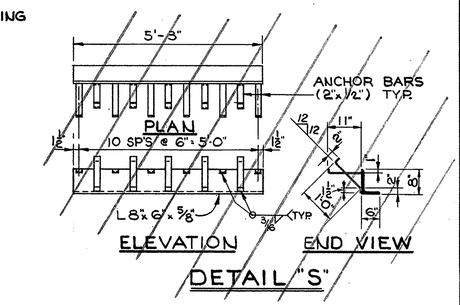

DETAIL "S"

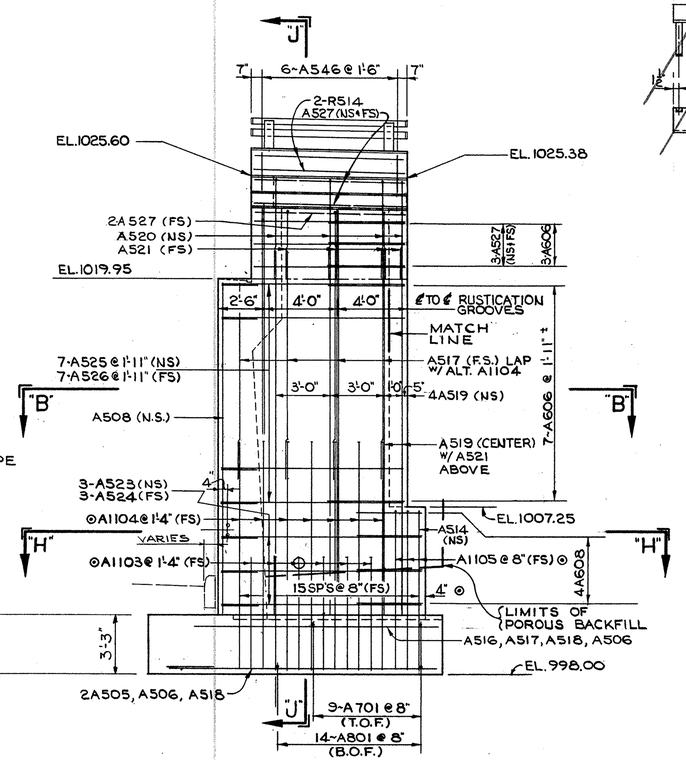

SOUTH WALL ELEVATION

⊙ DENOTES MEASURED ALONG F.S. FACE OF WALL.

POROUS BACKFILL 2 FT THICK FULL LENGTH OF ABUTMENT AND WING WALL SHALL EXTEND UPWARD TO THE UNDERSIDE OF THE APPROACH SLAB & SIDEWALKS

STATE OF OHIO
DEPARTMENT OF HIGHWAYS
BUREAU OF BRIDGES

3/5

DALTON • DALTON ASSOCIATES

ABUTMENT #1 DETAIL

BRIDGE Nº SUM-8-1825
S.R. 8 UNDER BAILEY ROAD
SUMMIT COUNTY - CUYAHOGA FALLS EXPRESSWAY
STA. 261 + 89.82

DESIGNED	DRAWN	TRACED	CHECKED	REVIEWED	DATE	REVISED
RDH	A.L.H.		11/10/68	PDH 2-5-69		9-3-70

FED. RD.	STATE	PROJECT	
2	OHIO		

377
460

SUM-8-17.63

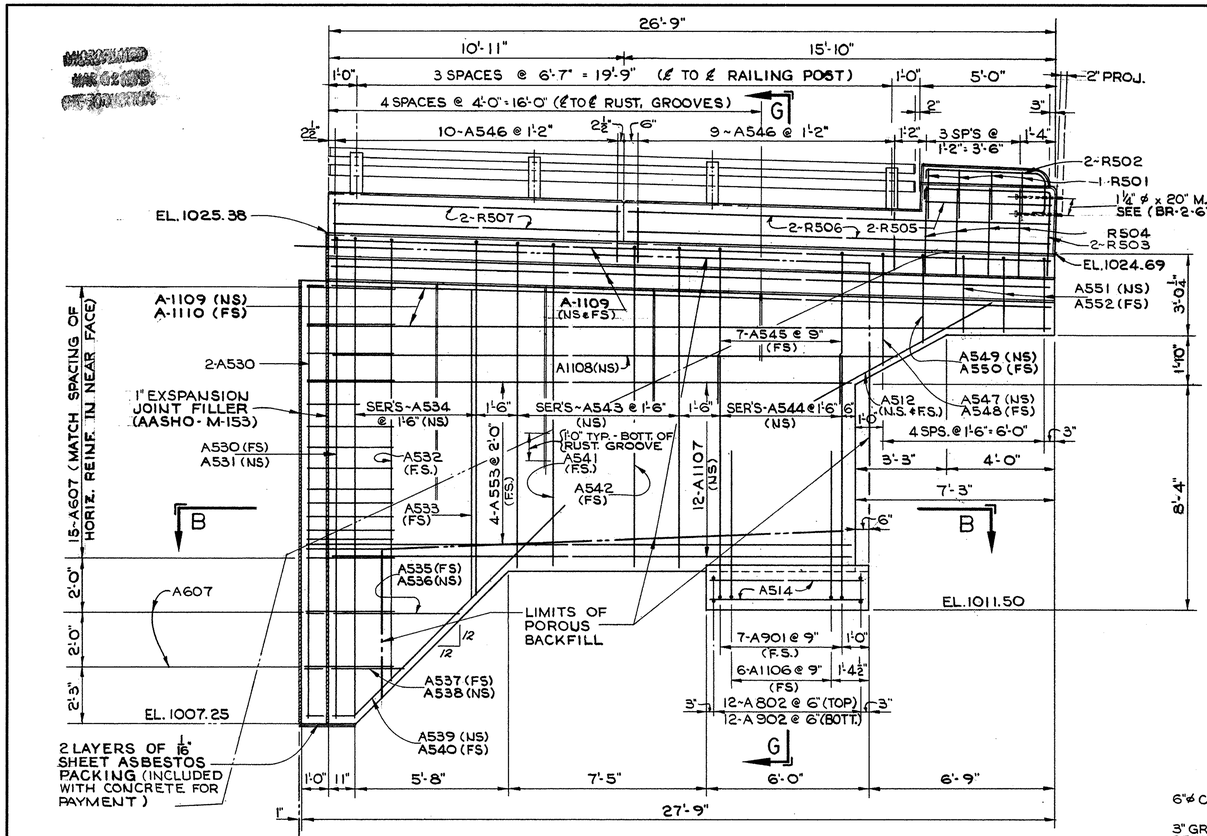

ELEVATION SOUTH-WALL
ABUTMENT NO. 1

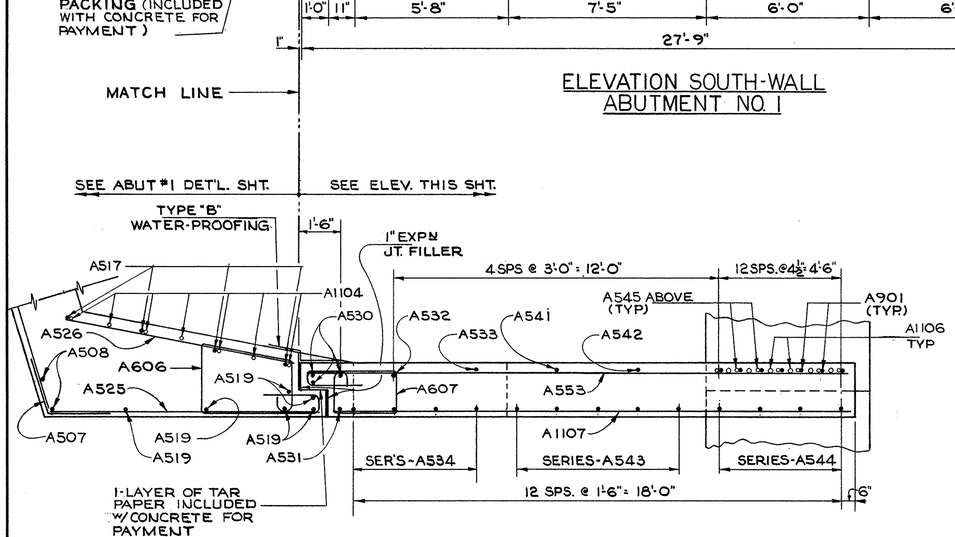

SECTION B-B

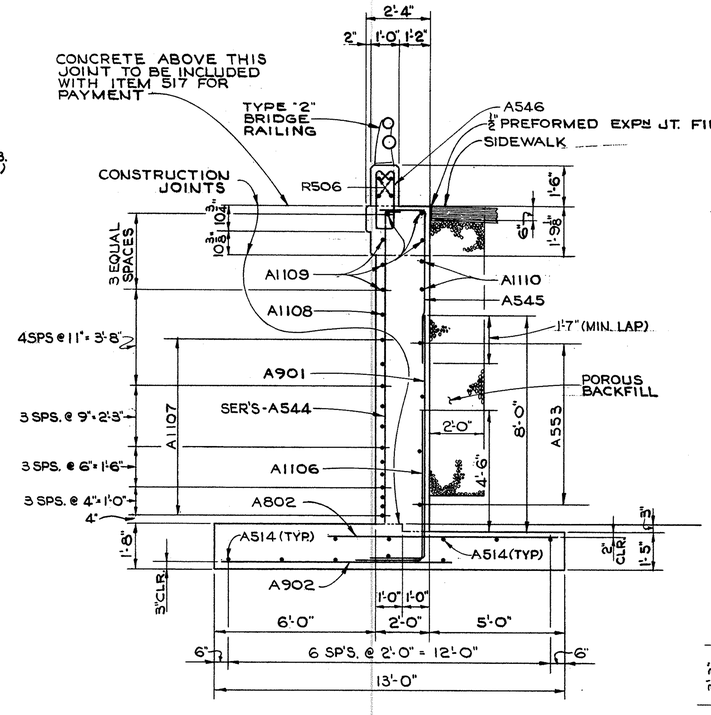

SECTION "G-G"

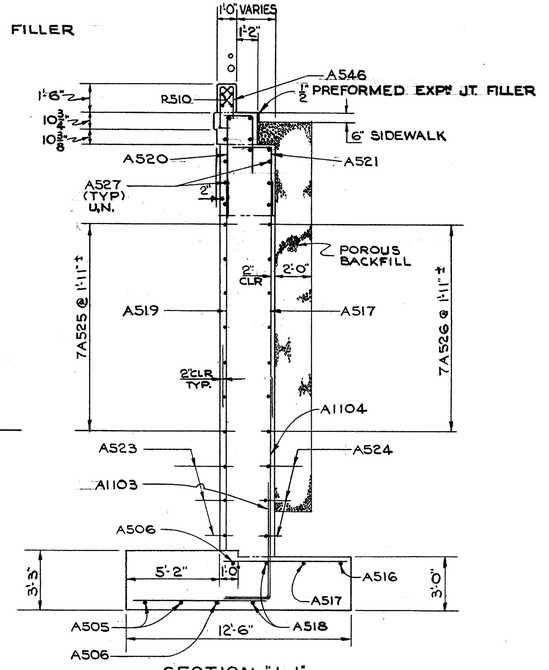

SECTION "J-J"
FOR FOOTING REINF. STL. DIM'S. SEE SECT. "D-D" (SIMILAR)

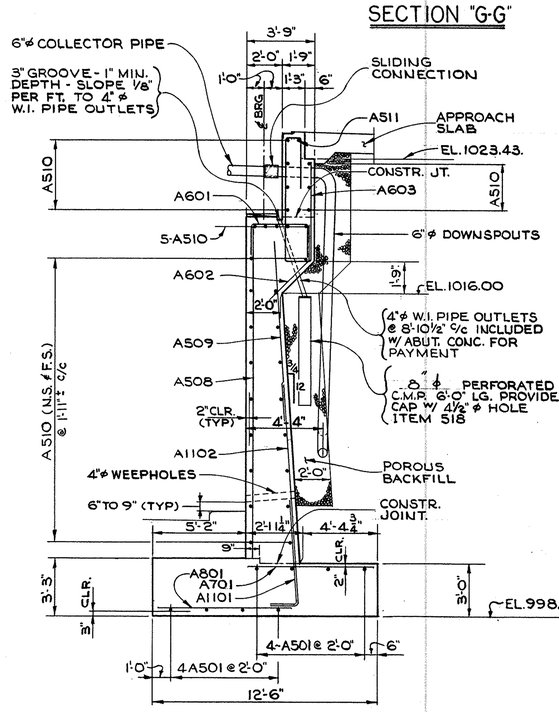

SECTION "D-D"

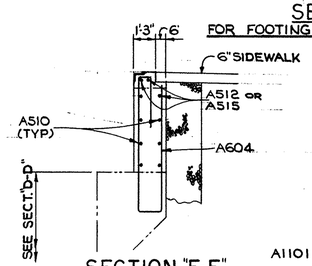

SECTION "F-F"

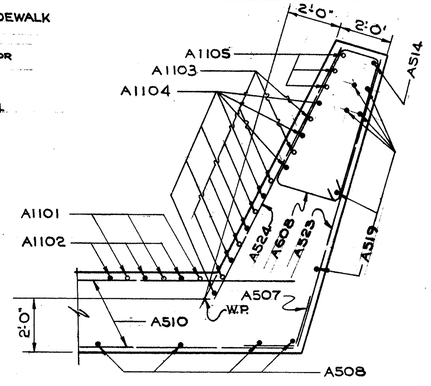

SECTION "H-H"

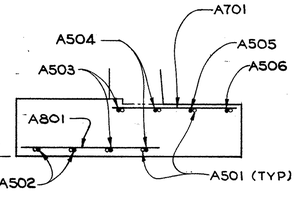

SECTION "E-E"
WORK WITH SECT. "D-D"

STATE OF OHIO
DEPARTMENT OF HIGHWAYS
BUREAU OF BRIDGES

4 / 9

DALTON · DALTON ASSOCIATES

ABUT. #1 SECTIONS & DETAILS

BRIDGE Nº SUM-8-1825
S.R. 8 UNDER BAILEY ROAD
SUMMIT COUNTY - CUYAHOGA FALLS EXPRESSWAY
STA. 261 + 89.82

DESIGNED	DRAWN	TRACED	CHECKED	REVIEWED	DATE	REVISED
RDH	AL H.		C W 1-10-68	RDH	2-5-68	

FED. RD.	STATE	PROJECT	
2	OHIO		

378
460

SUM - 8 - 17.63

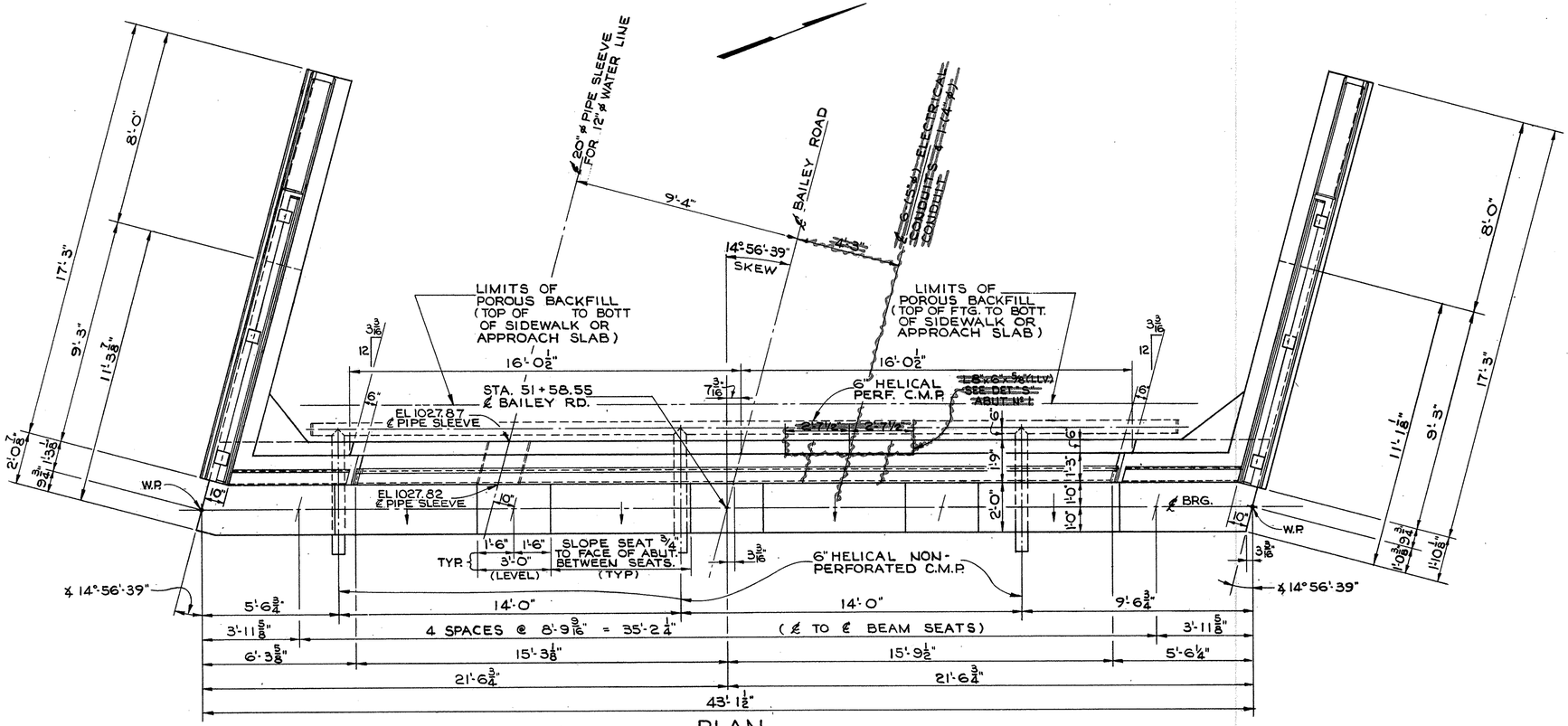

PLAN

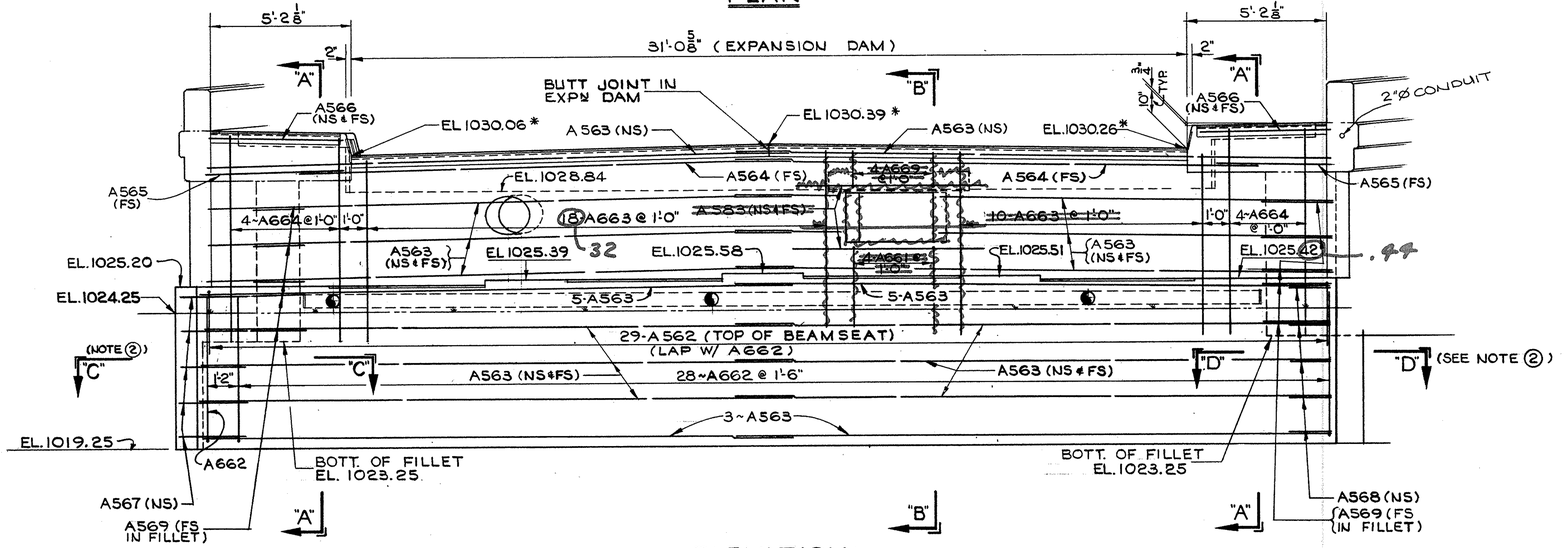

ELEVATION

NOTES: ① * ELEVATION GIVEN IS TO BE FINAL PAVEMENT ELEVATION @ FRONT FACE OF BACKWALL
② FOR SECTIONS "C-C" & "D-D" SEE ABUT. #2 WINGWALL DETAIL SHEET
③ POROUS BACKFILL SHALL EXTEND UPWARD TO THE APPROACH SLAB AND SIDEWALKS AND OUTWARD TO THE INSIDE FACE OF THE WINGWALLS. EXCAVATION THEREFORE IN EXCESS OF THAT REQUIRED FOR CONSTRUCTION OF THE ABUTMENT SHALL BE CONSIDERED AS PAID FOR IN THE BID PRICE PER CUBIC YARDS PAID FOR POROUS BACKFILL.

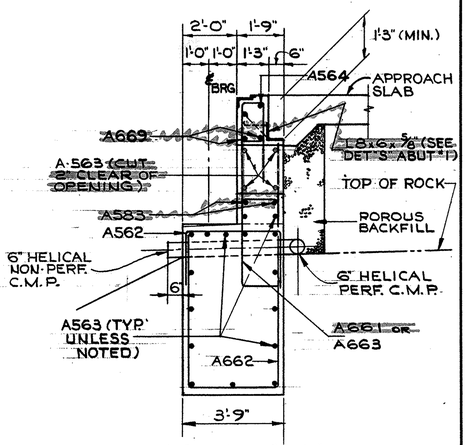

SECTION "B-B"

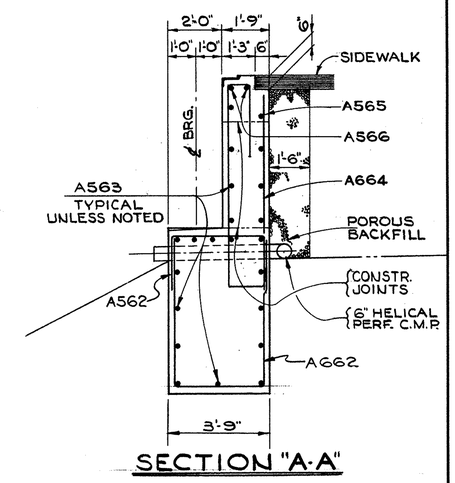

SECTION "A-A"

STATE OF OHIO
DEPARTMENT OF HIGHWAYS
BUREAU OF BRIDGES

5/9

DALTON • DALTON ASSOCIATES

ABUTMENT #2 DETAIL

BRIDGE Nº SUM-8-1825
S.R. 8 UNDER BAILEY ROAD
SUMMIT COUNTY-CUYAHOGA FALLS EXPRESSWAY
STA. 261 + 89.82

DESIGNED	DRAWN	TRACED	CHECKED	REVIEWED	DATE	REVISED
EDH	ALH		CW 1-10-68	RDH	2-5-68	8-3-70

FED. RD.	STATE	PROJECT	
2	OHIO		

379
460

SUM - 8 - 17.63

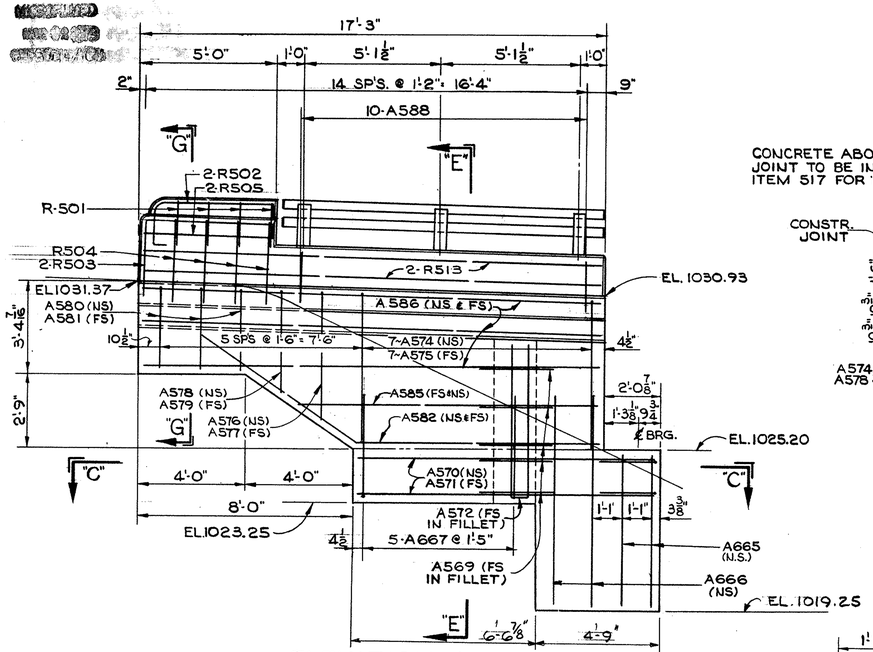

ELEVATION SOUTH WINGWALL
(Abutment #2)

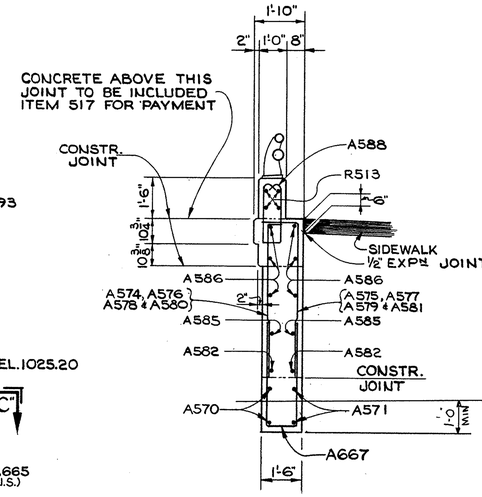

SECT. "E-E"

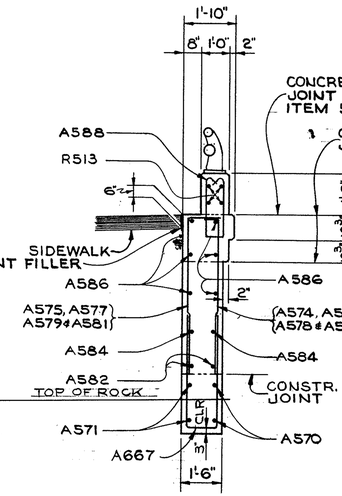

SECT. "F-F"

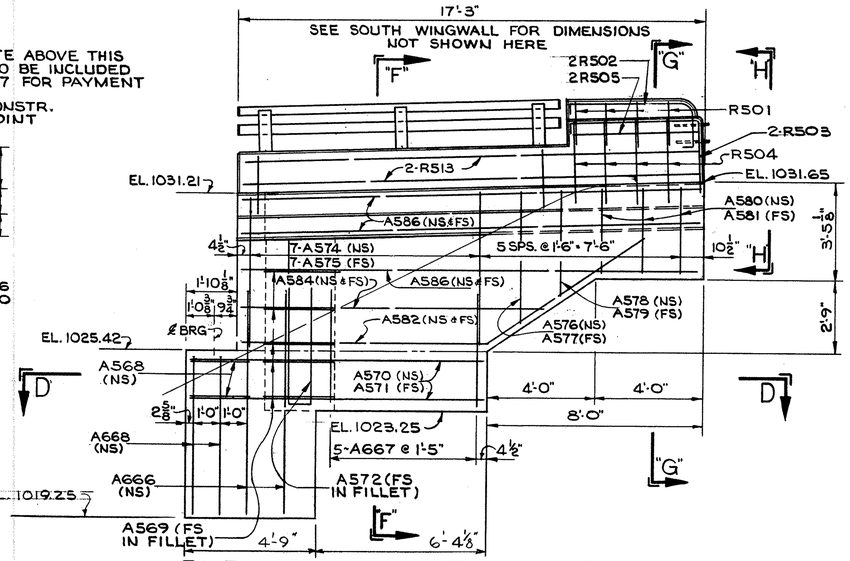

ELEVATION NORTH WINGWALL
(Abutment #2)

SECT. "G-G"

END VIEW "H-H"

SECTION "C-C"

SECTION "D-D"

NOTE:
FOR RAILING DETAILS NOT SHOWN
SEE STATE OF OHIO STD. DWG. BR-2-67.

STATE OF OHIO
DEPARTMENT OF HIGHWAYS
BUREAU OF BRIDGES

6/9

DALTON · DALTON ASSOCIATES

ABUTMENT #2 WINGWALL DET'S.

BRIDGE Nº SUM-8-1825
S.R.8 UNDER BAILEY ROAD
SUMMIT COUNTY - CUYAHOGA FALLS EXPRESSWAY
STA. 261 + 89.82

DESIGNED	DRAWN	TRACED	CHECKED	REVIEWED	DATE	REVISED
RDH	ALH		CW 1-10-68	RBH	2-5-68	

FED. RD.	STATE	PROJECT	
2	OHIO		

380
460

SUM - 8 - 17.63

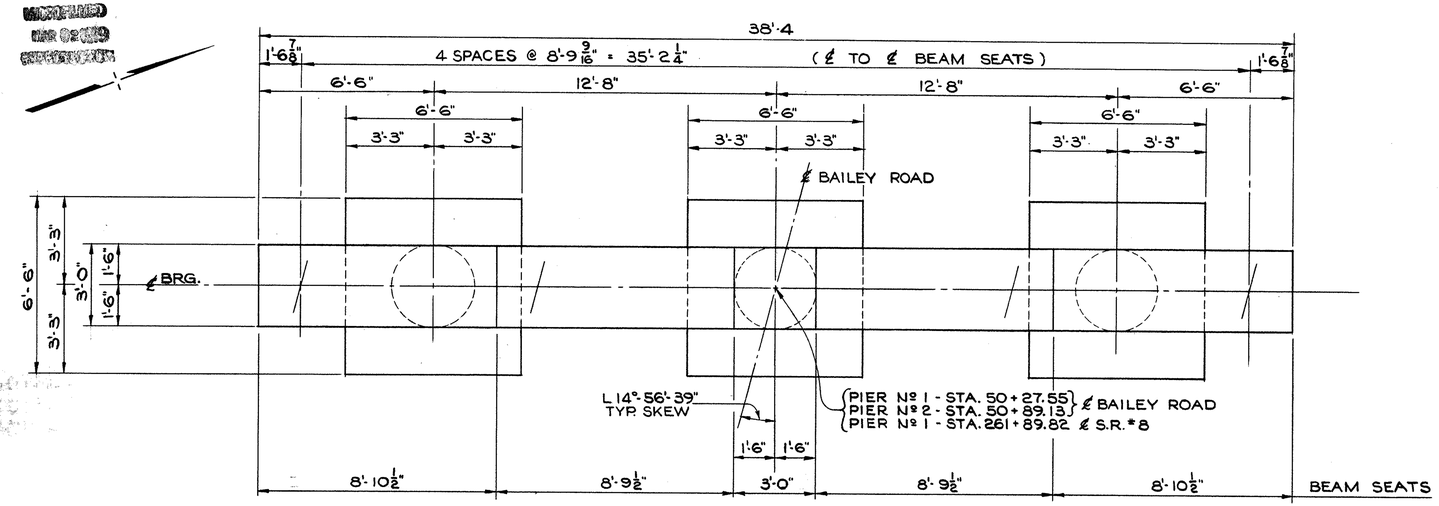

PLAN

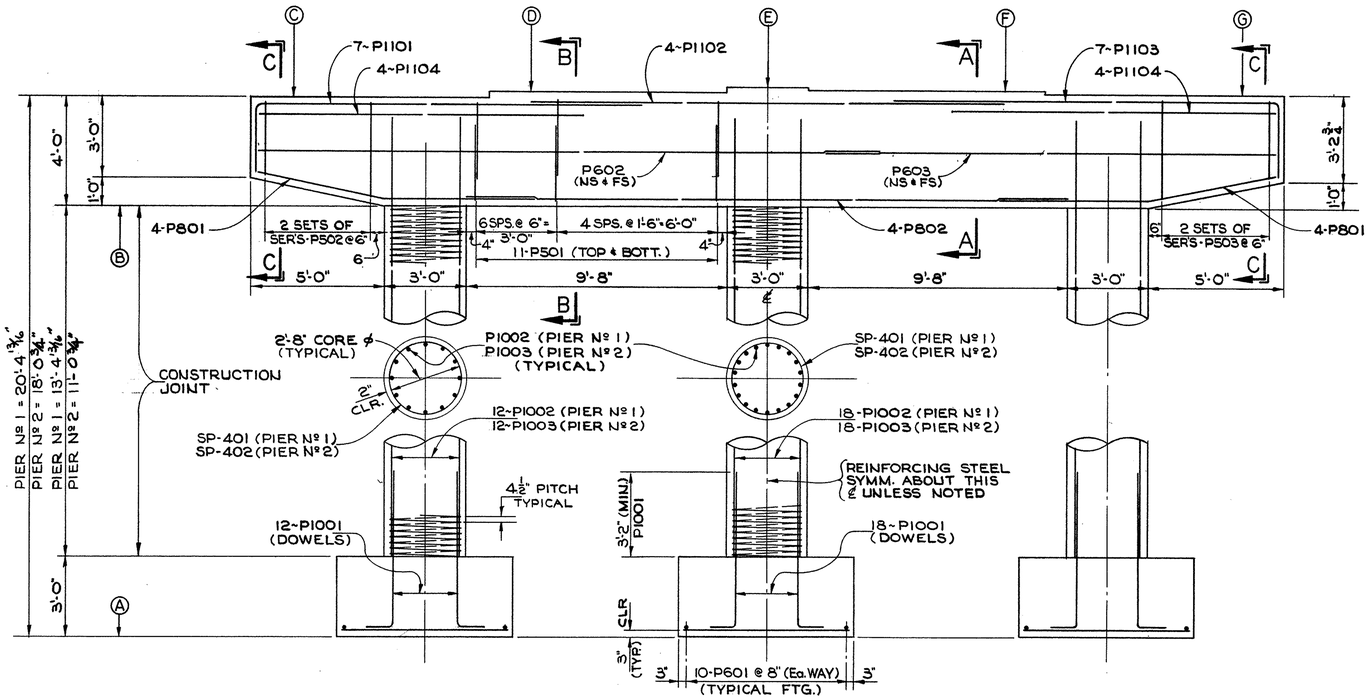

ELEVATION

ELEVATION TABLE							
ELEVATION	A	B	C	D	E	F	G
PIER Nº 1	1000.98	1017.38	1021.38	1021.57	1021.76	1021.69	1021.61
PIER Nº 2	1004.90	1018.96	1022.96	1023.15	1023.34	1023.26	1023.19

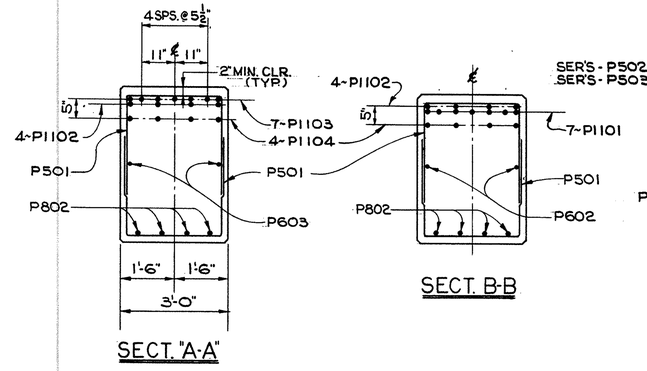

Note:

SPECIAL CARE SHALL BE TAKEN IN PLACING REINFORCING STEEL IN THE VICINITY OF THE BRIDGE SEAT SO AS TO AVOID INTERFERENCE WITH THE DRILLING OF THE ANCHOR BAR HOLES. (PIER Nº 1 ONLY)

STATE OF OHIO
DEPARTMENT OF HIGHWAYS
BUREAU OF BRIDGES

7/9

DALTON • DALTON ASSOCIATES

DETAIL PIERS #1 & #2

BRIDGE Nº SUM-8-1825
S.R. 8 UNDER BAILEY ROAD
SUMMIT COUNTY CUYAHOGA FALLS EXPRESSWAY
STA. 261 + 89.82

DESIGNED	DRAWN	TRACED	CHECKED	REVIEWED	DATE	REVISED
RDH	ALH		CJW 11/10/67	RBH	2-5-68	

FED. RD.	STATE	PROJECT	
2	OHIO		

381/460

SUM-8-17.63

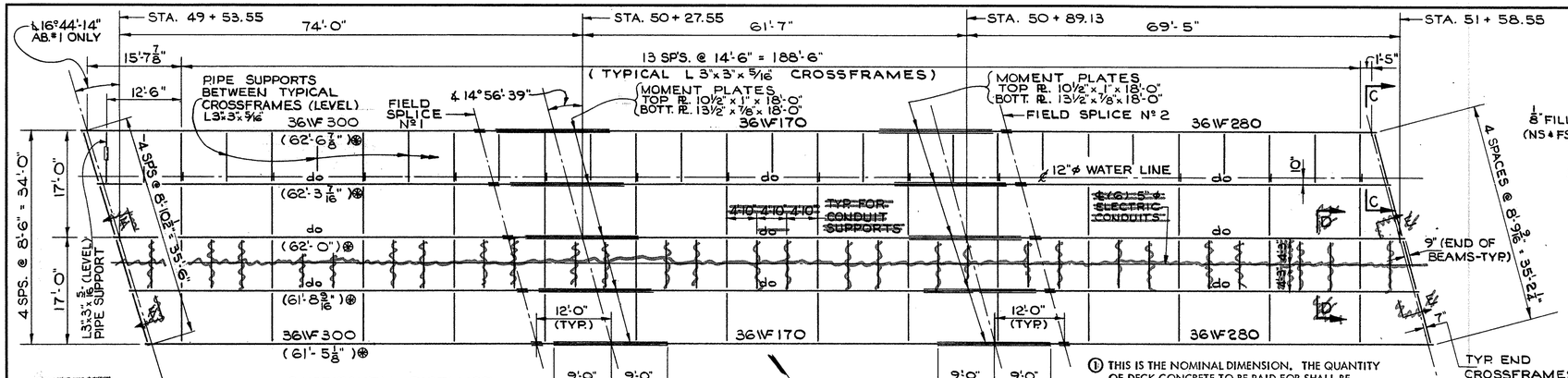

⊛ HORIZONTAL DISTANCE BETWEEN ABUT. BEARING AND ℄ SPLICE.

FRAMING PLAN

① THIS IS THE NOMINAL DIMENSION. THE QUANTITY OF DECK CONCRETE TO BE PAID FOR SHALL BE BASED UPON THIS DIMENSION, EVEN THOUGH DEVIATION FROM IT MAY BE NECESSARY BECAUSE THE TOP FLANGE OF THE BEAM MAY NOT HAVE THE EXACT CAMBER OR CONFORMATION REQUIRED TO PLACE IT PARALLEL TO THE FINISHED GRADE.

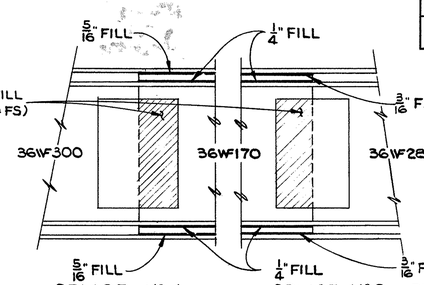

SPLICE Nº 1 SPLICE Nº 2

FILL Ps @ SPLICES

SEE STATE OF OHIO STD. DWG SD-1-65-SHT 3 OF 3 FOR SPLICE DETAILS.

SCUPPERS including support angles shall be galvanized (711.02).

NOTE: SEE STATE OF OHIO STD. DWG - SD-1-65-SHT. 2 OF 3 FOR SUPPORT BOLT & SCUPPER INFORMATION NOT SHOWN BELOW. *LATERAL SUPPORT TO WEB OMITTED.*

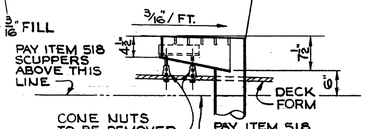

DETAIL "B"

TYPE-2-SCUPPER (MODIFIED)

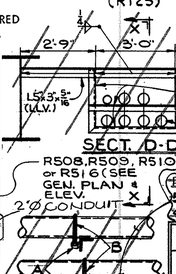

SECT. D-D

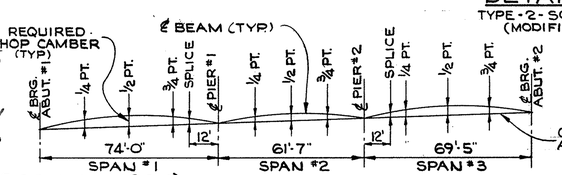

LAYOUT DIAGRAM

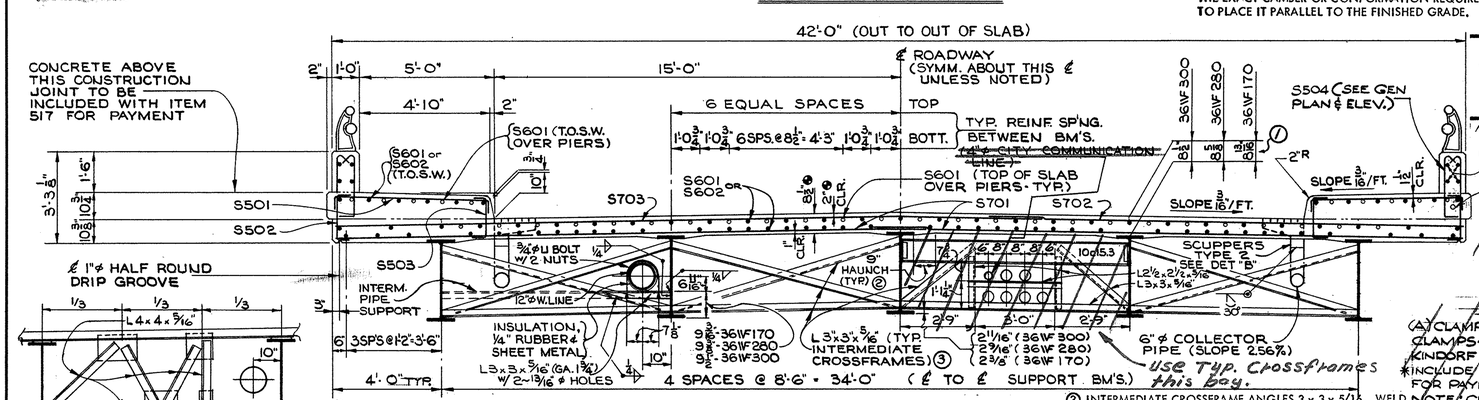

SECTION X-X

(A) CLAMP SUPPORTS & (B) CLAMPS-UNISTRUT, ALSTRUT, KINDORF OR EQUAL.*
*INCLUDE WITH ITEM 625 FOR PAYMENT

NOTE: CLAMP DUCT @ EVERY DUCT SUPPORT. PROVIDE EXPN COUPLINGS @ EACH ABUT. FOR EACH DUCT (4 EXPN COUPLINGS REQD.)

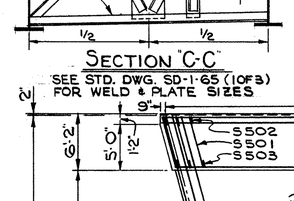

SECTION "C-C"

SEE STD. DWG. SD-1-65 (1OF3) FOR WELD & PLATE SIZES

② A TYPICAL HAUNCH WIDTH OF 9" SHALL BE USED FOR COMPUTING QUANTITY OF CONCRETE. HOWEVER, THE HAUNCH WIDTH MAY VARY BETWEEN 6" AND 12" PROVIDED THAT THE SLOPE SHALL BE NOT MORE THAN 1:4 FOR A HAUNCH LESS THAN 9" IN WIDTH.

TRANSVERSE SECTION

③ INTERMEDIATE CROSSFRAME ANGLES 3 x 3 x 5/16. WELD BOTH SIDES OF VERTICAL LEG AND TOP SIDE OF HORIZONTAL LEG TO BEAM WITH 1/4" CONTINUCUS FILLET WELD.

PARTIAL PLAN~SLAB REINFORCING

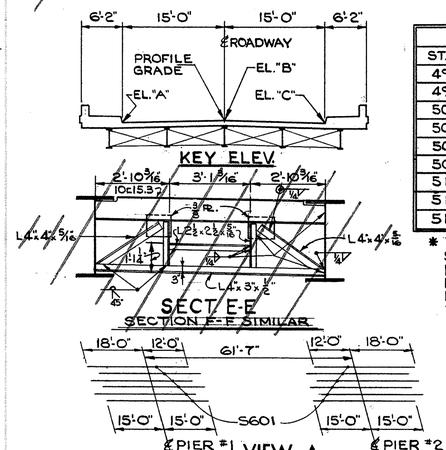

VIEW A

ABBREVIATIONS USED ON THIS SHEET:
T.O.S.W. = TOP OF SIDEWALK
I.E.O.S.W. = INSIDE EDGE OF SIDEWALK
E.O.S.W. = EDGE OF SIDEWALK
E.O.SLAB. = EDGE OF SLAB
T.O.SLAB. = TOP OF SLAB
B.O.SLAB. = BOTTOM OF SLAB

DEFLECTION & CAMBER TABLE

LOCATION	SPAN #1				SPAN #2				SPAN #3			
DESCRIPTION	¼ PT.	½ PT.	¾ PT.	SPLICE	¼ PT.	½ PT.	¾ PT.	SPLICE	¼ PT.	½ PT.	¾ PT.	
DEFLECTION DUE TO WEIGHT OF STEEL	1/8"	3/16"	1/8"	1/16"	-1/16"	-1/16"	-1/16"	1/16"	1/8"	3/16"	1/8"	
DEFLECTION DUE TO REMAINING DEAD LOAD	5/8"	3/4"	7/16"	5/16"	-1/8"	-1/8"	-1/8"	1/4"	7/16"	11/16"	1/2"	
ADJUSTMENT FOR VERTICAL CURVE	0	0	0	0	0	0	0	0	0	0	0	
REQ'D. SHOP CAMBER	3/4"	15/16"	9/16"	3/8"	-3/16"	-3/16"	-3/16"	5/16"	9/16"	7/8"	5/8"	

ELEVATIONS @ 25' INTERVALS

STATION	PROFILE GD.	ELEV. "A"*	ELEV. "B"*	ELEV. "C"*
49 + 50	1025.03	1024.80	—	—
49 + 75	1025.67	1025.50	1025.73	1025.48
50 + 00	1026.31	1026.13	1026.37	1026.13
50 + 25	1026.95	1026.71	1026.95	1026.73
50 + 50	1027.59	1027.34	1027.58	1027.34
50 + 75	1028.23	1027.99	1028.22	1027.99
51 + 00	1028.87	1028.67	1028.89	1028.65
51 + 25	1029.51	1029.33	1029.57	1029.33
51 + 50	1030.15	1029.93	1030.17	1029.95

* THE ELEVATIONS SHOWN ARE THOSE WHICH ARE REQUIRED BEFORE THE CONCRETE DECK IS POURED. PROPER ALLOWANCE HAS BEEN MADE FOR THE DEAD LOAD DEFLECTIONS CAUSED BY THE WEIGHT OF THE CONCRETE

4"ø RIGID ASBESTOS CEMENT PIPE (713.05)
5"- 1265 LIN. FT. REQD.
4"- 211 LIN. FT. REQD.

STATE OF OHIO
DEPARTMENT OF HIGHWAYS
BUREAU OF BRIDGES

8/9

DALTON · DALTON ASSOCIATES

FRAMING PLAN & SLAB DET'LS.

BRIDGE Nº SUM-8-1825

S.R.8 UNDER BAILEY ROAD

SUMMIT COUNTY - CUYAHOGA FALLS EXPRESSWAY

STA. 261 + 89.82

DESIGNED	DRAWN	TRACED	CHECKED	REVIEWED	DATE	REVISED
EDH	ALH		11/10/67	EDH 9-5-68		8-5-74

REINFORCING SCHEDULE

MARK	NO. REQ'D.	LENGTH	TYPE	DIMENSIONS A	B	C	D	SERIES INCR.	WEIGHT LBS.
ABUTMENT NO. 1									
A501	8	30'-0"	ST						250
A502	2	19'-6"	ST						41
A503	2	18'-3"	ST						38
A504	2	16'-9"	ST						35
A505	3	15'-3"	ST						48
A506	3	13'-9"	ST						43
A507	11	3'-9"	20	2'-0"	2'-0"	7"			43
A508	16	18'-5"	ST						307
A509	16	8'-3"	ST						138
A510	60	23'-0"	ST						1439
A511	2	18'-8"	ST						39
A512	7	7'-6"	ST						55
A513	5	9'-0"	21	2'-9"	3'-4"	6"	3'-0"		47
A514	11	5'-8"	ST.						65
A515	3	5'-0"	ST						16
A516	1	9'-3"	ST						10
A517	5	10'-10"	ST						56
A518	2	12'-3"	ST						26
A519	6	20'-7"	ST						129
A520	4	9'-9"	4	5'-3"	1'-7"	3'-2"			41
A521	4	5'-3"	1	1'-10"	3'-6"				22
A522									—
A523	3	11'-0"	ST.						34
A524	3	10'-6"	ST.						33
A525	7	10'-0"	ST.						73
A526	7	9'-6"	ST.						69
A527	12	8'-3"	ST.						103
~~A528~~	~~4~~	~~7'-0"~~	~~ST.~~						~~29~~
A529									—
A530	3	17'-3"	ST.						54
A531	1	17'-9"	1	5"	17'-6"				19
A532	1	17'-6"	1	1'-9"	16'-1"				18
A533	1	14'-5"	1	1'-9"	12'-10"				15
SERIES OF A534	1 SET OF 4 BARS +4 BARS	17'-9" TO 13'-1½"	1	5"	17'-5½" TO 12'-10"			1'-6½"	64
A535	1	5'-9"	ST.						6
A536	1	4'-9"	ST.						5
A537	1	3'-9"	ST.						4
A538	1	2'-9"	ST.						3
A539	1	11'-7"	20	8"	10'-11½"	7'-9"			12
A540	1	12'-7"	20	1'-8"	10'-11½"	7'-9"			13
A541	1	13'-6"	1	1'-9"	11'-11"				14
A542	1	13'-5"	1	1'-9"	11'-10"				14
SERIES OF A543	1 SET OF 5 BARS +5 BARS	12'-2" TO 12'-0"	1	5"	11'-11" TO 11'-9"			1/2"	63
SERIES OF A544	1 SET OF 4 BARS +4 BARS	11'-11½ TO 11'-10"	1	5	11'-8" TO 11'-6½"			1/2"	50
A545	7	7'-3"	1	1'-9"	5'-7"				53
A546	25	5'-7"	5	8"	2'-2"	5"			146
A547	1	4'-4"	1	5"	4'-1"				5
A548	1	5'-8"	1	1'-9"	4'-1"				6
A549	1	3'-5"	1	5"	3'-2"				4
A550	1	4'-9"	1	1'-9"	3'-2"				5
A551	3	2'-11"	1	5"	2'-8"				9
A552	3	4'-3"	1	1'-9"	2'-8"				13
A553	4	19'-2"	ST.						80
A601	29	6'-8"	3	3'-5"	1'-9"				290
A602	29	5'-8"	12	4'-0"	1'-9"	1'-3"			247
A603	~~2932~~ 2932	16'-5"	7	5'-2"	1'-5"	6'-9"	11"	~~788~~ 788	~~715~~ 715
A604	10	19'-0"	7	7'-0"	1'-5"	7'-6"	11"		285
A605	3	15'-10"	3	1'-5"	7'-4"				71
A606	10	15'-7"	22	SEE	BENDING	SCHEDULE			234
A607	17	11'-9"	23	⌀	⌀		⌀		300
A608	4	16'-4"	24	SEE	BENDING	SCHEDULE			98
~~A609~~	~~3~~	~~4'-7"~~	~~12~~	~~1'-4"~~	~~11"~~	~~4"~~			~~21~~
~~A610~~	~~3~~	~~8'-11"~~	~~14~~	~~3'-0"~~	~~1'-4"~~	~~4"~~			~~40~~
A701	77	7'-0"	ST.						1102
A801	84	7'-6"	ST.						1682
A802	12	8'-6"	ST.						272

MARK	NO. REQ'D.	LENGTH	TYPE	DIMENSIONS A	B	C	D	SERIES INCR.	WEIGHT LBS.
ABUT. NO 1 CONTINUED									
A901	7	11'-9"	1	2'-10"	9'-2"				280
A902	12	8'-6"	ST						347
A1101	31	9'-6"	17	3'-6"	6'-3"	4¾"			1565
A1102	31	16'-0"	17	3'-6"	12'-9"	9½"			2635
A1103	6	9'-6"	1	3'-6"	6'-3"				303
A1104	7	16'-0"	1	3'-6"	12'-9"				595
A1105	3	12'-1"	1	3'-6"	8'-10"				193
A1106	6	8'-11"	1	3'-6"	5'-8"				284
A1107	12	19'-2"	ST						1222
A1108	1	21'-3"	ST						113
A1109	6	26'-5"	ST						842
A1110	2	27'-5"	ST						291
TOTAL ABUTMENT NO. 1 (17914) 17,931 LBS.									
ABUTMENT NO. 2									
A561									—
A562	29	7'-8"	3	3'-5"	2'-3"				232
A563	42	22'-2"	ST						971
A564	2	18'-5"	ST						38
A565	2	4'-6"	ST						9
A566	4	5'-3"	ST						22
A567	5	4'-5"	18	2'-0"	7"	2'-0"	6"		23
A568	5	3'-11"	20	2'-0"	2'-0"	6¼"			20
A569	10	5'-9"	ST						60
A570	4	10'-9"	ST						45
A571	4	9'-0"	ST						38
A572	2	11'-9"	3	1'-2"	5'-5"				25
A573									—
A574	14	5'-10"	1	6"	5'-5"				85
A575	14	6'-10"	1	1'-6"	5'-5"				100
A576	2	5'-2"	1	6"	4'-9"				11
A577	2	6'-2"	1	1'-6"	4'-9"				13
A578	2	4'-2"	1	6"	3'-9"				9
A579	2	5'-2"	1	1'-6"	3'-9"				11
A580	6	3'-5"	1	6"	3'-0"				21
A581	6	4'-5	1	1'-6"	3'-0"				28
A582	4	15'-9"	12	8'-10"	7'-0"	5'-6⅜"			66
~~A583~~	~~4~~	~~7'-0"~~	~~ST.~~						~~29~~
A584	2	11'-0"	ST.						23
A585	2	10'-10"	ST.						23
A586	12	16'-11"	ST.						212
A587									—
A588	20	5'-7"	5	8"	2'-2"	5"			117
~~A661~~	~~4~~	~~9'-2"~~	~~14~~	~~3'-0"~~	~~1'-4"~~	~~6½"~~			~~55~~
A662	29	14'-2"	3	3'-5"	5'-6"				617
A663	~~2832~~ 2832	16'-5"	7	5'-2"	1'-5"	6'-9"	11"	~~788~~ 788	~~690~~ 690
A664	8	19'-0"	7	7'-0"	1'-5"	7'-6"	11"		228
A665	2	5'-11"	1	6"	5'-6"				18
A666	4	8'-9"	1	1'-0"	7'-10"				53
A667	10	8'-3"	3	1'-2"	3'-8"				124
A668	2	6'-2"	1	6"	5'-9"				19
~~A669~~	~~4~~	~~5'-0"~~	~~14~~	~~1'-4"~~	~~11"~~	~~6½~~			~~30~~
TOTAL ABUTMENT NO. 2 (4064) 4048 LBS.									
SLAB									
S501	275	6'-4"	3	5'-7"	6"				1817
S502	275	2'-2"	3	1'-5"	6"				621
S503	275	2'-0"	3	1'-3"	6"				574
S504	354	5'-7"	5	8"	2'-2"	5"			2061
S505	2	10'-9"	19						22
S601	649	30'-0"	ST.						29244
S602	83	10'-3"	ST.						1278
S603	12	4'-3"	ST.						77
S604	2	10'-0"	14	2'-11"	2'-1"	4"			30
S701	496	22'-0"	ST.						22304
S702	248	17'-8"	ST.						8955
S703	248	26'-3"	ST.						13306
TOTAL SLAB 80289 LBS									

MARK	NO. REQ'D.	LENGTH	TYPE	DIMENSIONS A	B	C	D	SERIES INCR.	WEIGHT LBS.
PIERS NO. 1 & NO. 2									
P501	88	8'-1"	3	2'-8"	2'-10"				742
SERIES OF P502	4 SETS of 9 BARS = 36 BARS	9'-11" TO 11'-6"	14	2'-8½" TO 3'-6" @ 1 3/16 INCR	2'-0"	5"		2⅜"	402
SERIES OF P503	4 SETS of 9 BARS = 36 BARS	10'-6" TO 12'-1"	14	3'-0" TO 3'-9½" @ 1 3/16 INCR.	2'-0"	5"		2⅜"	424
P601	120	6'-2"	ST.						1111
P602	4	23'-0"	ST.						138
P603	4	17'-0"	ST.						102
P801	16	10'-3"	12	5'-6"	4'-10"	11¼"			438
P802	8	22'-4"	ST						477
P1001	84	6'-8"	1	1'-0"	5'-11"				2410
P1002	42	16'-7"	ST						2997
P1003	42	14'-3"	ST						2575
P1101	14	16'-9"	1	2'-8"	14'-4"				1246
P1102	8	17'-6"	ST						744
P1103	14	17'-0"	1	2'-11"	14'-4"				1264
P1104	16	12'-0"	ST						1020
WEIGHT OF SPIRALS									1416
TOTAL PIERS NO.1 & NO.2 = 17,506 LBS.									
RAILING ❋									
R501	12	3'-3"	9	1'-6"	6½"				
R502	8	6'-7"	16	SEE BENDING SCHEDULE					
R503	6	8'-3"	4	3'-2"	4'-8"	8"			
R504	15	7'-7"	5	8"	3'-2"	5"			
R505	8	4'-8"	ST						
R506	4	15'-6"	ST						
R507	4	10'-6"	ST.						
R508	96	14'-8"	ST.						
R509	8	12'-2"	ST.						
R510	4	11'-4"	ST.						
R511	1	3'-11"	5	8"	2'-2"	5"			
R512	2	7'-3"	4	2'-2"	4'-8"	8"			
R513	4	16'-10"	ST						
R514	4	8'-4"	ST						
R515	4	16'-0"	ST						
R516	2	10'-9"	19						
REPLACEMENT BARS									
RE 401	1	6'-3"	ST.						
RE 501	1	6'-6"	ST.						
RE 601	2	7'-0"	ST.						
RE 701	3	7'-3"	ST.						
RE 801	1	7'-6"	ST.						
RE 901	1	7'-10"	ST.						
RE 1001	1	8'-3"	ST.						
RE 1101	1	8'-9"	ST.						

SPIRAL REINFORCING SCHEDULE

MARK	NO. REQ'D.	CORE DIA. OF SPIRAL	LENGTH OF SPIRAL	PITCH	NO. OF TURNS	WEIGHT IN LBS.
SP 401	3	2'-8"	13'-5"	4½"	39	771
SP 402	3	2'-8"	11'-1"	4½"	33	645
TOTAL FOR SPIRALS						1416

GRAND TOTAL = (119,790) 119,757 LBS

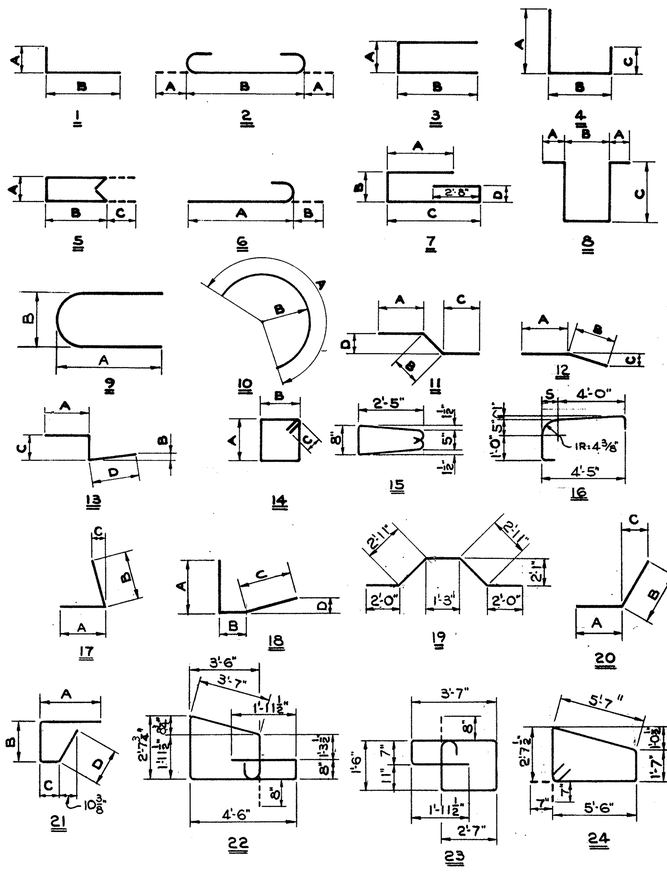

THE LENGTH SHOWN IN THE STEEL SCHEDULE FOR THE SPIRAL BARS IS THE DISTANCE FROM THE TOP OF THE FOOTING TO THE BOTTOM OF THE PIER CAP. THE NUMBER OF TURNS SHOWN IN THE STEEL SCHEDULE FOR SPIRAL BARS IS THE LENGTH DIVIDED BY THE PITCH PLUS THREE TURNS (TOTAL NUMBER OF CLOSED COILS) EXPRESSED AS THE NEAREST WHOLE NUMBER. SPIRAL REINFORCING BARS SHALL NOT HAVE DEFORMATIONS, BUT SHALL IN OTHER RESPECTS CONFORM TO ITEM 509. ONE AND ONE HALF CLOSED COILS SHALL BE PROVIDED AT THE ENDS OF EA. SPIRAL UNIT. FOUR (4) STEEL CHANNEL, TEE OR ANGLE SPACERS WEIGHING APPROX. 0.68 ❋ PER LINEAL FT. OF SPACERS SHALL BE PROVIDED FOR EACH SPIRAL UNIT. THEY SHALL BE EQUALLY SPACED ALONG THE PERIPHERY OF EACH COIL. THE NUMBER OF POUNDS OF THESE SPACERS BASED ON 0.68 LBS. PER LINEAL FT. WILL BE PAID FOR AS REINFORCING STEEL AND IS INCLUDED IN THE TABULATED QUANTITY OF SPIRAL BARS.

BAR SIZE IS INDICATED IN THE BAR MARK. THE FIRST DIGIT WHERE THREE DIGITS ARE USED AND THE FIRST TWO DIGITS WHERE FOUR DIGITS ARE USED INDICATE THE BAR SIZE NUMBER. EXAMPLES: A-601 IS A NUMBER 6 SIZE BAR. P-1001 IS A NUMBER 10 SIZE BAR.

❋ RAILING REINFORCMENT BARS TO BE INCLUDED WITH ITEM 517 FOR PAYMENT

FED. RD.	STATE	PROJECT	
2	OHIO		

392 / 460

SUM-8-17.63

STATE OF OHIO
DEPARTMENT OF HIGHWAYS
BUREAU OF BRIDGES

9/9

DALTON • DALTON ASSOCIATES

REINFORCING SCHEDULE

BRIDGE Nº SUM-8-1825
S.R. 8 UNDER BAILEY ROAD
SUMMIT COUNTY CUYAHOGA FALLS EXPRESSWAY
STA. 261 + 89.82

DESIGNED	DRAWN	TRACED	CHECKED	REVIEWED	DATE	REVISED
RDH	ALH		CW 1/11/68	RDH 2-5-68		8-3-70

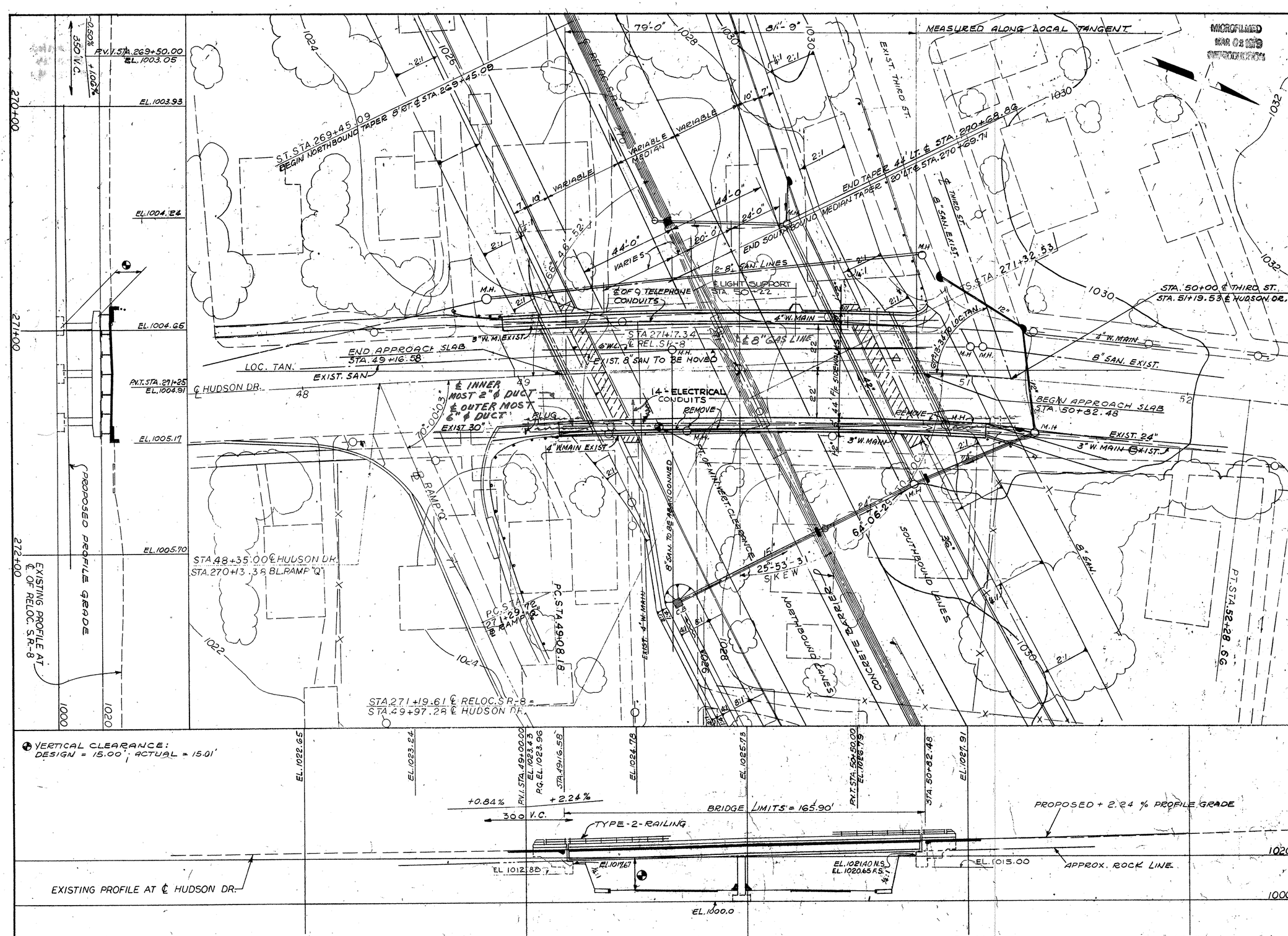

MICROFILMED MAR 08 1979 REPRODUCTION

FED. RD.	STATE	PROJECT	
2	OHIO		

383/460

SUM-8-17.63

CURVE DATA

℄ RELOCATED S.R.-8

T.S. STA. 271+32.53
L_s = 500.00'
θ_s = 12°-30'-00"
LT = 334.17'
ST = 167.43'
T_s = 548.19'

℄ HUDSON DR.

P.C. STA. 49+08.18
Δ = 9°-36'-52"
D_c = 3°-00'-00"
R = 1909.86'
T = 160.62'
L_c = 320.48'

PROPOSED STRUCTURE

TYPE: CONTINUOUS STEEL BEAMS, WITH REINFORCED CONCRETE DECK AND SUBSTRUCTURE.
SKEW: 25°-53'-33" R.F. TO LOC. TAN
SPANS: 79'-0" - 81'-9" C/C BRGS.
ROADWAY: 44'-0" F/F 5'-0" SIDEWALKS.
LOAD FREQUENCY: CF = 400

WEARING SURFACE: 1" MONOLITHIC
APPROACH SLABS: 20' LONG (AS-1-67)
ALIGNMENT: 3°00'-00" RT.
SUPERELEVATION: NONE.
SLOPE PROTECTION: CRUSHED AGGREGATE

TRAFFIC: 2035-1985 A.D.T.

STATE OF OHIO
DEPARTMENT OF HIGHWAYS
BUREAU OF BRIDGES

1/10

DALTON · DALTON ASSOCIATES

SITE PLAN
BRIDGE NO. SUM-8-1845
UNDER HUDSON DR.
SUMMIT COUNTY CUYAHOGA FALLS EXPRESSWAY
STA 271+19.61

DESIGNED	DRAWN	TRACED	CHECKED	REVIEWED	DATE	REVISED
SPG	BMR KENESSY		aw 11/15/67	RDH	2-1-68	

FED. RD.	STATE	PROJECT	
2	OHIO		

384/460

SUM-8-17.63

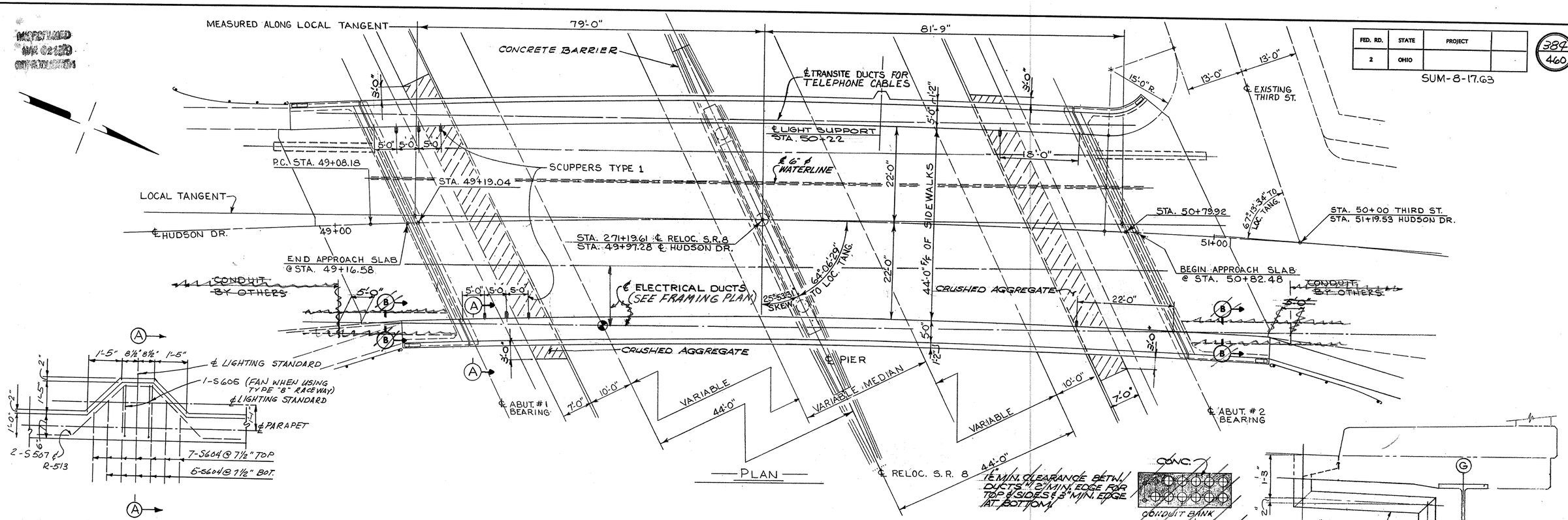

LIGHT STANDARD SUPPORT DETAIL

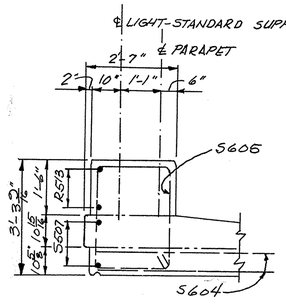

SECTION A-A

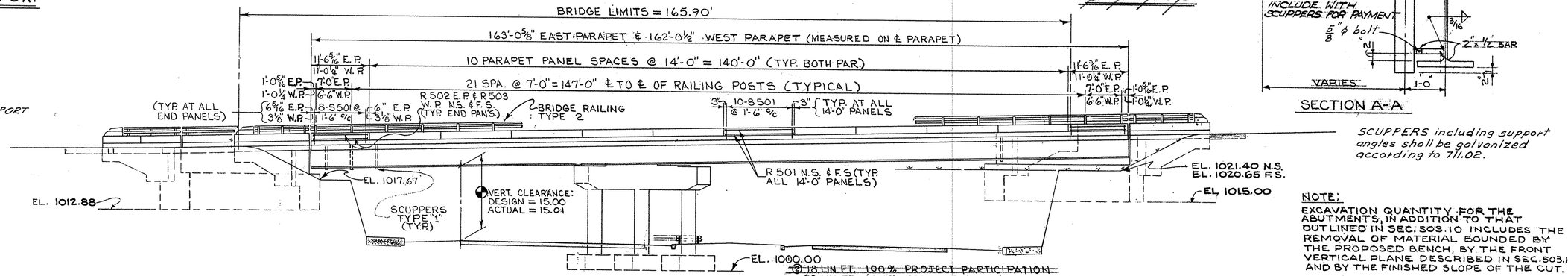

—ELEVATION—

SCUPPERS including support angles shall be galvanized according to 711.02.

NOTE:
EXCAVATION QUANTITY FOR THE ABUTMENTS, IN ADDITION TO THAT OUTLINED IN SEC. 503.10 INCLUDES THE REMOVAL OF MATERIAL BOUNDED BY THE PROPOSED BENCH, BY THE FRONT VERTICAL PLANE DESCRIBED IN SEC. 503.10 AND BY THE FINISHED SLOPE OF THE CUT.

~~② 18 LIN. FT. 100% PROJECT PARTICIPATION~~
~~32 LIN. FT. 100% CITY OF CUYAHOGA FALLS~~
2-③ INCLUDES ALL APPURTENANCES AND SPECIALS NECESSARY FOR THEIR INSTALLATION.
684-(635) LIN. FT. 100% PROJECT PARTICIPATION
1197-(1007) LIN. FT. 100% CITY OF CUYAHOGA FALLS
④ TOTAL 100% CITY OF CUYAHOGA FALLS

① INCLUDES 1900 LBS STRUCTURAL STEEL FOR SUPPORTS OF TELEPHONE CONDUITS (TO BE PAID FOR BY OHIO BELL TELEPHONE COMPANY) AND (4750) LBS. FOR ELECTRICAL DUCT SUPPORT TO BE PAID FOR BY THE CITY OF CUYAHOGA FALLS

SLEEVES AND GAS LINE — 2530 — EAST OHIO GAS COMPANY

SEE SH. No. 326 FOR GENERAL NOTES

FOR WATERLINE QUANTITES AND DETAILS NOT SHOWN SEE UTILITY PLANS

—ESTIMATED QUANTITIES—

ITEM	TOTAL	UNIT	DESCRIPTION	SUPER.	ABUT.	PIER	GEN.
503	61	Cu. Yds.	UNCLASSIFIED EXCAVATION		61		
503	128	Cu. Yds.	ROCK EXCAVATION		103	25	
509	108,748	Lbs.	REINFORCING STEEL	78,901	11,217	18,630	
511	309	Cu. Yds.	CLASS "C" CONCRETE, SUPERSTRUCTURE	309			
511	36	Cu. Yds.	CLASS "C" CONCRETE, PIERS ABOVE FTG.			36	
511	21	Cu. Yds.	CLASS "C" CONCRETE, FOOTINGS			21	
511	182	Cu. Yds.	CLASS "C" CONCRETE, ABUT. ABOVE FT'G.		182		

ITEM	TOTAL	UNIT	DESCRIPTION	SUPER.	ABUT.	PIER	GEN.
512	19	LIN.FT.	PREMOLDED SEALING STRIP		19		
	376,900						
513	570,900	Lbs.	STRUCTURAL STEEL ①	570,900	376,900		
514	370,900	LBS.	FIELD PAINTING OF STRUCTURAL STEEL ①	570,900			
	376,900						
516	63	LIN.FT.	½" PREFORMED EXPANSION JOINT FILLER		63		
517	392.41	LIN.FT.	RAILING (TYPE 2)	325.09	67.32		
						1881	
518	32	Cu. Yds.	POROUS BACKFILL		32	171	
518	8	EACH	SCUPPERS INCLUDING SUPPORTS	8		342	

ITEM	TOTAL	UNIT	DESCRIPTION	SUPER.	ABUT.	PIER	GEN.
518	110	LIN.FT.	6" HELICAL PERF. C.M.P. INCLUDING SPECIALS (707.01)		110		
518	50	LIN.FT.	6" HELICAL NON-PERFORATED C.M.P. (707.01)		50		
601	100	SQ.YDS.	CRUSHED AGGREGATE SLOPE PROTECTION		100		
625		L.S.	SEE SHEET 258 FOR LIGHTING SUMMARY				
808	309	UNITS	WATER-REDUCING, SET-RETARDING ADMIXTURE	309			
825	1138	SQ.YDS.	CONCRETE SURFACE TREATMENT	1082	46		
625	50	LIN.FT.	CONDUIT BANK (TYPE 1, 713.05) (INCL. EXC., CONC., CONDUIT) ⑫				50
625	(1837)	LIN.FT.	CONDUIT 6" (713.05 TYPE II) ③ 2	(1837)	1881		
625	(167)	LIN.FT.	CONDUIT 3" (713.05 TYPE II) ④ 3	(167)	171		
625	(334)	LIN.FT.	CONDUIT 2" (713.05 TYPE II) ④ 3	(334)	342		

STATE OF OHIO
DEPARTMENT OF HIGHWAYS
BUREAU OF BRIDGES

2/10

DALTON · DALTON ASSOCIATES

GENERAL PLAN & ELEVATION

BRIDGE NO. SUM-8-1845
UNDER HUDSON DR.
SUMMIT COUNTY CUYAHOGA FALLS EXPRESSWAY
STA. 271+19.61

DESIGNED	DRAWN	TRACED	CHECKED	REVIEWED	DATE	REVISED
SPG	BMR		11/16/67	RDM	2-5-68	12-18-70

RECEIVED
MAR 02 1970
DIVISION OF

FED. RD.	STATE	PROJECT	
2	OHIO		

SUM-8-17.63

385
460

℄ 12¾" O.D. SLEEVE FOR 8⅝" O.D. EAST OHIO GAS LINE, TO EXTEND 2'-0" BEYOND END OF APPROACH SLAB. SLEEVE TO BE LAID PARALLEL TO GRADE LINE. (INCLUDE PAYMENT WITH STRUCTURAL STEEL AND PAID FOR BY EAST OHIO GAS COMPANY)

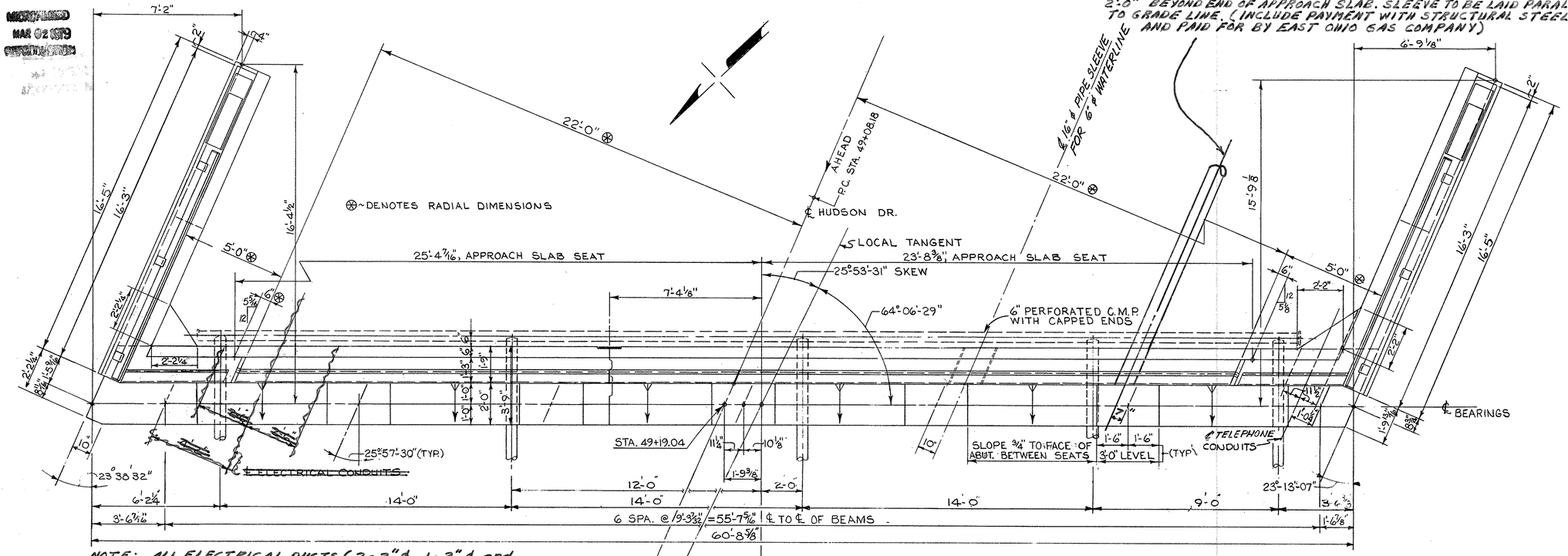

—PLAN—

NOTE: ALL ELECTRICAL DUCTS (2-2"⌀, 1-3"⌀ and 11-6"⌀ DUCTS) TO BE IN PLACE BEFORE ABUTMENT BACKWALL IS POURED. RELOCATE HORIZONTAL AND VERTICAL REINFORCING STEEL TO SUIT. FOR LOCATION SEE TRANSVERSE SECTION.

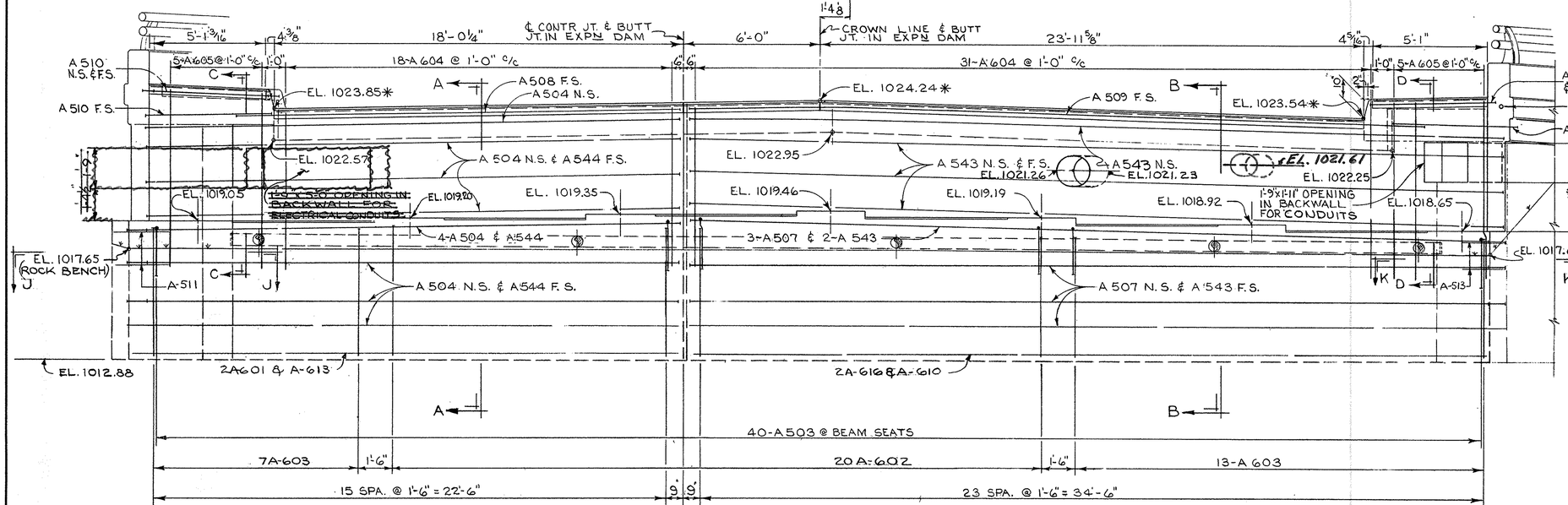

—ELEVATION—

NOTES: * ELEVATION GIVEN IS TO BE FINAL PAVEMENT ELEVATION @ FRONT FACE OF BACKWALL.

POROUS BACKFILL SHALL EXTEND UPWARD TO THE APPROACH SLAB AND SIDEWALKS AND OUTWARD TO THE INSIDE FACE OF THE WINGWALLS. EXCAVATION THEREFORE IN EXCESS OF THAT REQUIRED FOR CONSTRUCTION OF THE ABUTMENT SHALL BE CONSIDERED AS PAID FOR IN THE BID PRICE PER CUBIC YARD PAID FOR POROUS BACKFILL.

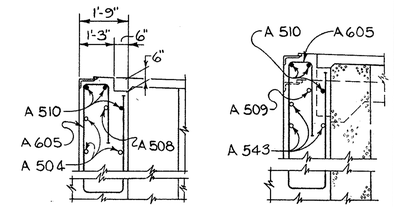

—SECTION "C-C"— —SECTION "D-D"—

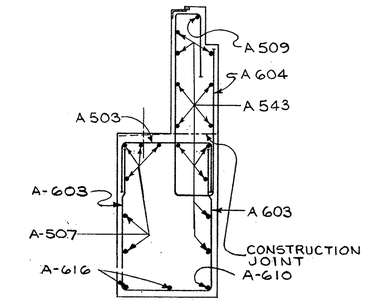

—SECTION "B-B"—
FOR DETAILS NOT SHOWN SEE SEC. "A-A"

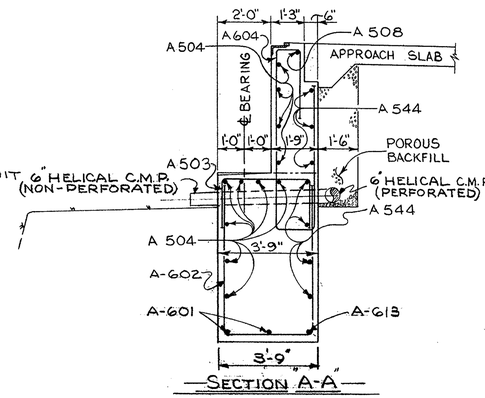

—SECTION A-A—

STATE OF OHIO
DEPARTMENT OF HIGHWAYS
BUREAU OF BRIDGES

3/10

DALTON · DALTON ASSOCIATES

ABUTMENT Nº 1
BRIDGE Nº SUM-8-1845
UNDER HUDSON DRIVE
SUMMIT COUNTY CUYAHOGA FALLS EXPRESSWAY
STA. 271 + 19.61

DESIGNED	DRAWN	TRACED	CHECKED	REVIEWED	DATE	REVISED
SPG	BMR		aw 11/15/67	RDH	2-1-68	12-18-70

FORM DDA-6

⊛ MEASURED ALONG OUTSIDE FACE OF WALL.
⊛ DENOTES RADIAL DIMENSIONS.

FED. RD.	STATE	PROJECT	
2	OHIO		

386
460

SUM-8-17.63

MICROFILMED
MAR 08 1968
CONSTRUCTION

℄ 12¾" O.D. SLEEVE SEE SHEET 3/10 FOR DETAILS NOT SHOWN

℄ 16" ϕ PIPE SLEEVE FOR 6" ϕ WATERLINE

AHEAD

FACE OF 18" WALL

R=9'-2"

52°03'-58"

8'-4"⊛

9'-6⅝"

8'-1¾"

2'-3½"

2'-3⅛"

1'-6⅛"

85°

15°

28°-04'-15"

5'-0"⊛

22'-4⅛" APPROACH SLAB SEAT

22'-0"⊛

28'-10" APPROACH SLAB SEAT

22'-0"⊛

25°-53'-31" SKEW

LOCAL TANGENT ℄ HUDSON DR.

64°-06'-29"

℄ BEAM

STA. 50+79.92

2'-3¼"

6"

12

6⅝"

6"⊛

5'-0"⊛

16'-3⅞"

9'-1⅛6"

2"

17'-10"

18'-0"

2'-3½"

1'-1½"

1'-9⅞"

8⅝"

2'-3¼"

1'-0"

1'-9"

2'-0"

3'-9"

10"

10"

℄ CONDUITS

25°-57'-30" (TYP.)

10'-5⅝"

11¼"

2'-6⅝6"

8'-9⅞"

6'-3⅜6"

SLOPE ¾" TO FACE OF ABUT. BETWEEN SEATS

1'-6"

3'-0" LEVEL

1'-6"

(TYP)

℄ CONDUITS

29°-04'-51"

4⅝"

5'-3⅞"

5'-3⅞6"

4½"

24'-11⅝"

2'-10"

6 SPA. @ 9'-3³²⁄₃₂" = 55'-7 ⁵⁄₇₆" ℄ TO ℄ OF BEAMS

4'-9⅝6"

6'-1"

14'-0"

9'-6"

4'-6"

14'-0"

14'-0"

12'-0"

3'-2¼"

29'-7"

33'-8¼"

NOTE: SEE ABUT. NO. 1 FOR ELECTRICAL DUCTS NOTES AND PROCEDURE.

—PLAN—

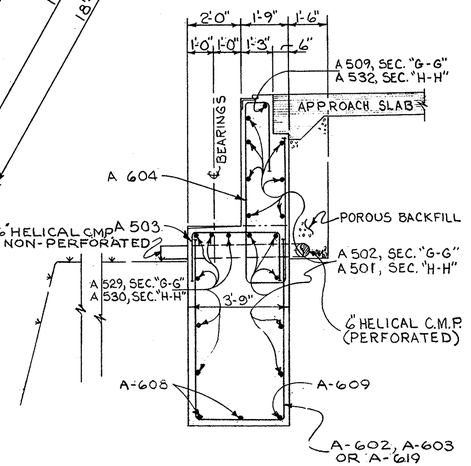

1'-9" x 1'-9" OPENING IN BACKWALL FOR CONDUITS

5-A 605 @ 1'-0"⅝

1'-0"

31-A 604 @ 1'-0" ⅝

EL. 1027.49 *

2 CROWN LINE ℄ BUTT JT. IN EXPN DAM

℄ CONTR. JT. ⅝ BUTT JT. IN EXPN DAM

20-A 604 @ 1'-0" ⅝

1'-0"

5-A 605 @ 1'-0"⅝

A 510 N.S. & F.S.

2"ϕ CONDUIT A 510 F.S.

EL. 1026.67 *

A 509 F.S. "G"

A 502 N.S.

EL. 1024.75

EL. 1025.44

A 502 (N.S. & F.S.)

EL. 1024.47

EL. 1024.50

EL. 1026.26

"H"

EL. 1027.21 *

A 510 N.S. & F.S.

A 510 F.S.

1'-9"

2'-2½"

EL. 1021.76

EL. 1022.06

EL. 1022.36

EL. 1022.66

16"x 16" OPENING IN BACKWALL FOR CONDUITS

A 532 N.S.

A 501 F.S.

A 501 N.S. & F.S.

EL. 1025.99

EL. 1022.60

EL. 1022.49

EL. 1022.39

3-A 529
2-A 502

3-A 530 & 2-A 501

EL. 1021.39

EL. 1020.64

J

A 512

L

J

A 529 N.S. & A 502 F.S.

A 530 N.S.
A 501 FS

K

A 514

L

K

EL. 1015.00

2 A-606 & A-607

"G"

"H"

2 A-608 & A-609

41-A 503 @ BEAM SEATS

7 A-602

1'-6"

12-A-619

1'-6"

6 A-623

9" 9"

8 A-623

1'-6"

8 A-619

40 SPA. @ 1'-6" = 60'-0"

—ELEVATION—

—SECTION "G-G" & SECTION "H-H"—

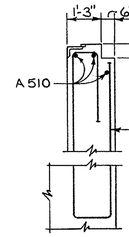

—SECTION "L-L"—

NOTES: SEE ABUTMENT Nº 1 FOR POROUS BACKFILL NOTE.

* DENOTES FINISHED PAVEMENT ELEVATIONS AT FACE OF ABUTMENT BACKWALL.

STATE OF OHIO
DEPARTMENT OF HIGHWAYS
BUREAU OF BRIDGES

4/10

DALTON · DALTON ASSOCIATES

ABUTMENT Nº 2
BRIDGE Nº. SUM-8-1845
UNDER HUDSON DRIVE
SUMMIT COUNTY CUYAHOGA FALLS EXPRESSWAY
STA. 271+19.61

DESIGNED	DRAWN	TRACED	CHECKED	REVIEWED	DATE	REVISED
SPG	BM.R.		O.W.W. 11/15/67	ROH	2-1-68	12-5-70

FORM DDA-6

FED. RD.	STATE	PROJECT	
2	OHIO		

387
460

SUM-8-17.63

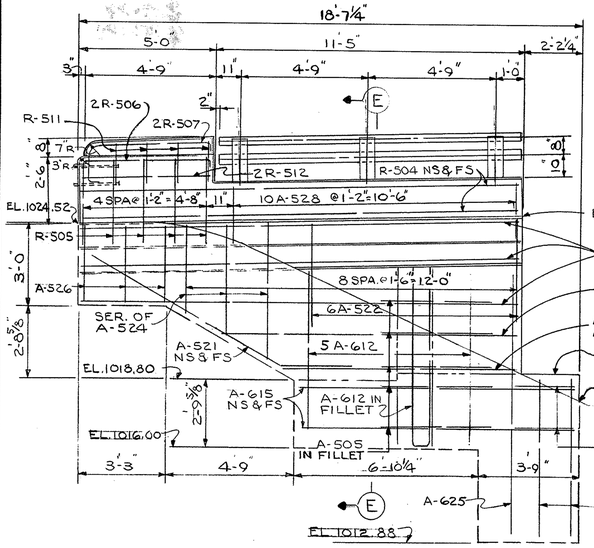

ELEVATION EAST WING WALL ABUTMENT Nº 1

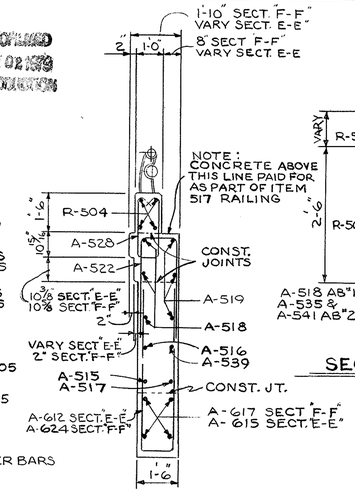

SECTIONS E-E & F-F, SECT. E-E SHOWN
SECTION F-F SIMILAR EXCEPT WHERE NOTED

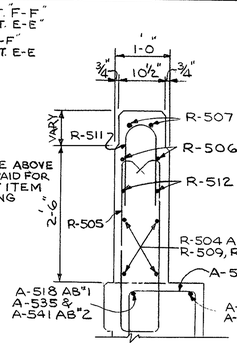

SECTION M-M

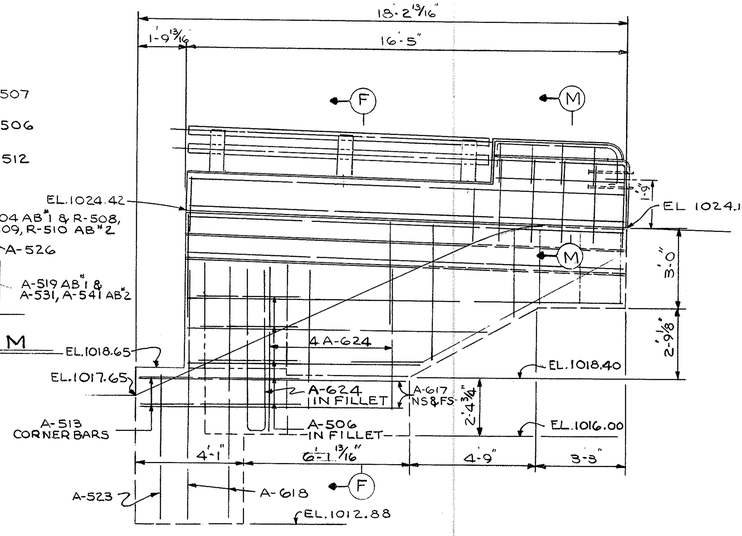

ELEVATION WEST WING WALL ABUTMENT Nº 1
SEE ELEV. EAST WING WALL FOR DETAILS AND DIMENSIONS NOT SHOWN

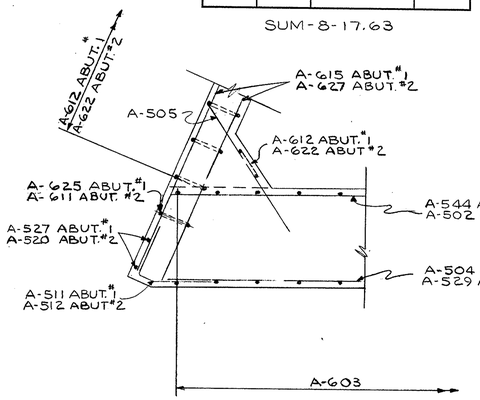

SECTION J-J ABUT. #1 SHOWN SECTION J-J ABUT #2
SIMILAR EXCEPT WHERE NOTED OR SHOWN

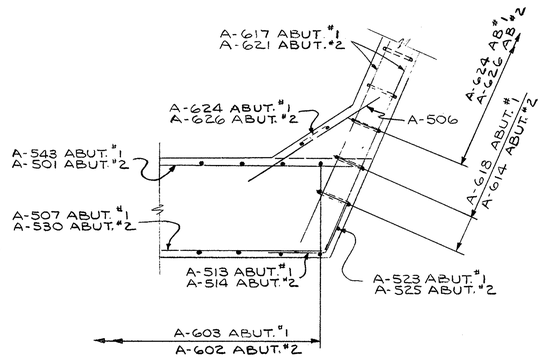

SECTION K-K ABUT. #1 SHOWN SECTION K-K
ABUT #2 SIMILAR EXCEPT WHERE NOTED OR SHOWN

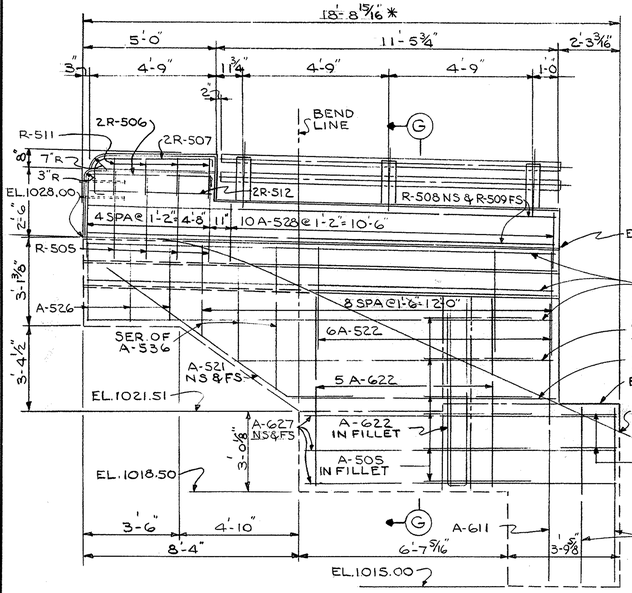

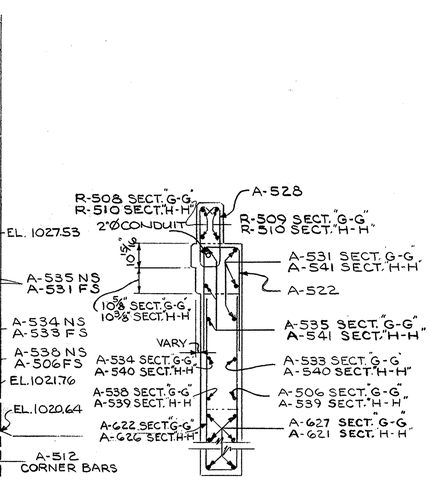

SECTIONS G-G & H-H SECT. G-G SHOWN
SECT. H-H SIMILAR EXCEPT WHERE NOTED
SEE SECT. E-E FOR DETAILS NOT SHOWN

ELEVATION WEST WING WALL ABUTMENT Nº 2
* (DEVELOPED)

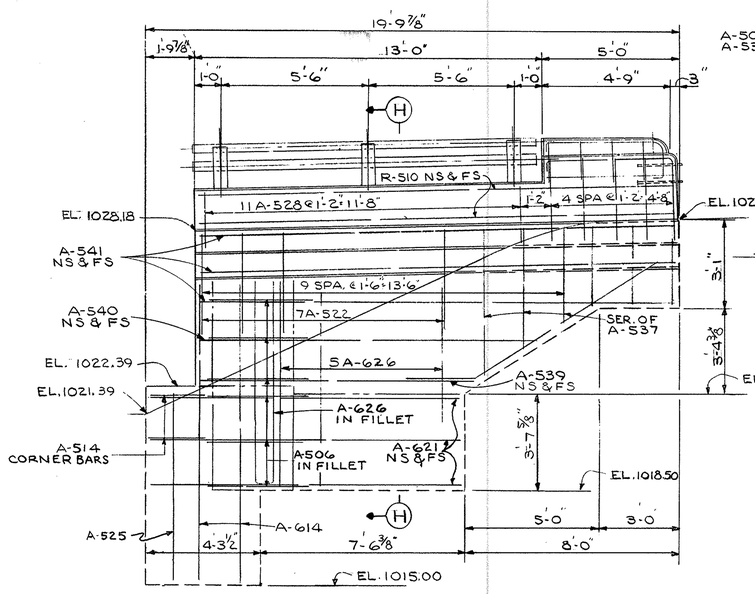

ELEVATION EAST WING WALL ABUTMENT Nº 2
SEE ELEV. WEST WING WALL FOR DETAILS AND DIMENSIONS NOT SHOWN

STATE OF OHIO
DEPARTMENT OF HIGHWAYS
BUREAU OF BRIDGES

5 / 10

DALTON • DALTON ASSOCIATES

ABUTMENT Nº 1 & 2 DETAILS

BRIDGE Nº SUM-8-1845
UNDER HUDSON DRIVE
SUMMIT COUNTY CUYAHOGA FALLS
EXPRESSWAY

DESIGNED	DRAWN	TRACED	CHECKED	REVIEWED	DATE	REVISED
SPG	JLH		dls	DH	2-18-69	

FED. RD.	STATE	PROJECT	
2	OHIO		

388
460

SUM-8-17.63

58'-8"

6'-8" | 22'-8" | 22'-8" | 6'-8"

1'-6⅜" | 6 SPACES @ 9'-3 7/32" = 55'-7 5/16" ℄ TO ℄ OF BEAMS | 1'-6 5/16"

9'-3½" | 9'-3¼" | 9'-3¼" | 3'-0" | 9'-3¼" | 9'-3¼" | 9'-3½"

AHEAD

LOCAL TANGENT

℄ HUDSON DRIVE

8'-0" | 4'-0" | 4'-0"

64°-04'-29" TO LOCAL TANGENT

25°53'-31" SKEW

STA. 271+19.61 ℄ RELOC. S.R. 8
STA. 49+97.28 ℄ HUDSON DR.

1'-6" | 3'-0" | 1'-6" ℄ PIER

26'-10 13/32" | 11¼" | 27'-9 21/32"

—PLAN—

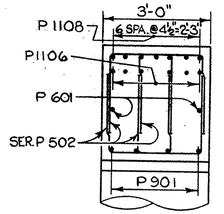

—SECTION "A-A"—

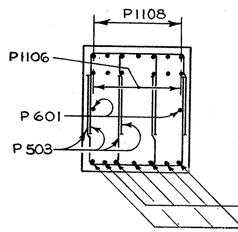

—SECTION "B-B"—

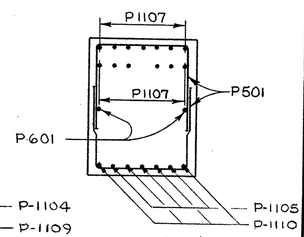

—SECTION "C-C"—

EL. 1019.54 | A | 7-P1108 | B | EL. 1019.83 | EL. 1020.11 | EL. 1020.36 | 7-P1107 | EL. 1020.23 | C | EL. 1020.11 | EL. 1019.99 | 7-P1108

3'-6" | 2'-6" | 1'-0" | 4-P-901 | 6-P1106 | 6-P1107 | 4-P1109 | P601 N.S.&F.S. | 3P-1105 LAP 3P-1104 | 4P-1110 LAP 4P-1109 | 6-P1106 | 4-P901 | 2'-11 3/8" | 3'-11 3/8"

3P-1104

4½" PITCH (TYP.)

SP 401 (TYP.)

13'-0½" (TYP. ALL COLUMNS)

11'-0" INNER RING CUTOFF (TYP. EXT. COL'S.)

8-P 401 @ 1'-6" ℄ (TYP. EXT. COL'S.)

10-P 1102 | 3" CL. | P 401 | 16-P1103

3'-6" EXT. COLUMNS

3" | 16-P 1101 DOWELS, LAP WITH P 1103 (EXTERIOR COLUMNS)

3'-0" (TYP.) | 10-P 1101 DOWELS, LAP WITH P 1102 (EXTERIOR COLUMNS)

13-P 1001 @ 7" ℄ | 3" CLEAR (TYP.)

6" | 13-P1001 @ 7" ℄ (TYP.) | 6"

8'-0" SQUARE

7" | 10 SPA. @ 8"=6'-8" | 8 SPA. @ 1'-0"=8'-0" | 9" | 9" | 5 SPA. @ 6" = 2'-6" | 5"

20-P 501 TOP & BOTT.

12-P 503 TOP & BOTT.

STIRRUPS SYMMETRICAL ABOUT ℄ OF INTERIOR COL.

2-SER. 502 TOP & BOTT.

3" | 9 SPA. @ 6"=4'-6" | 5"

10-P 1003

2" CL. (TYP.) | 2'-8" CORE DIA. (TYP.) | 2" CL. (TYP.)

SP 401

3'-2" INT. COLUMN

10-P1002 DOWELS, LAP WITH P 1003 (INTERIOR COLUMN)

3'-0" DIA. (TYP.)

EL. 1000.00 (TYP.)

—ELEVATION—

NOTE:
BRIDGE SEAT REINFORCING; SPECIAL CARE SHALL BE TAKEN IN PLACING REINFORCING STEEL IN THE VICINITY OF THE BRIDGE SEAT SO AS TO AVOID INTERFERENCE WITH THE DRILLING OF ANCHOR BAR HOLES.

STATE OF OHIO
DEPARTMENT OF HIGHWAYS
BUREAU OF BRIDGES

6/10

DALTON · DALTON ASSOCIATES

PIER DETAILS

BRIDGE Nº SUM-8-1845
UNDER HUDSON DRIVE
SUMMIT COUNTY CUYAHOGA FALLS EXPRESSWAY
STA. 271+19.61

DESIGNED	DRAWN	TRACED	CHECKED	REVIEWED	DATE	REVISED
SPS	BMR		C.W.W. 11/15/67	EDH	2-6-68	

FORM DDA-6

FED. RD.	STATE	PROJECT	
2	OHIO		

389
460

SUM. 8 - 17.63

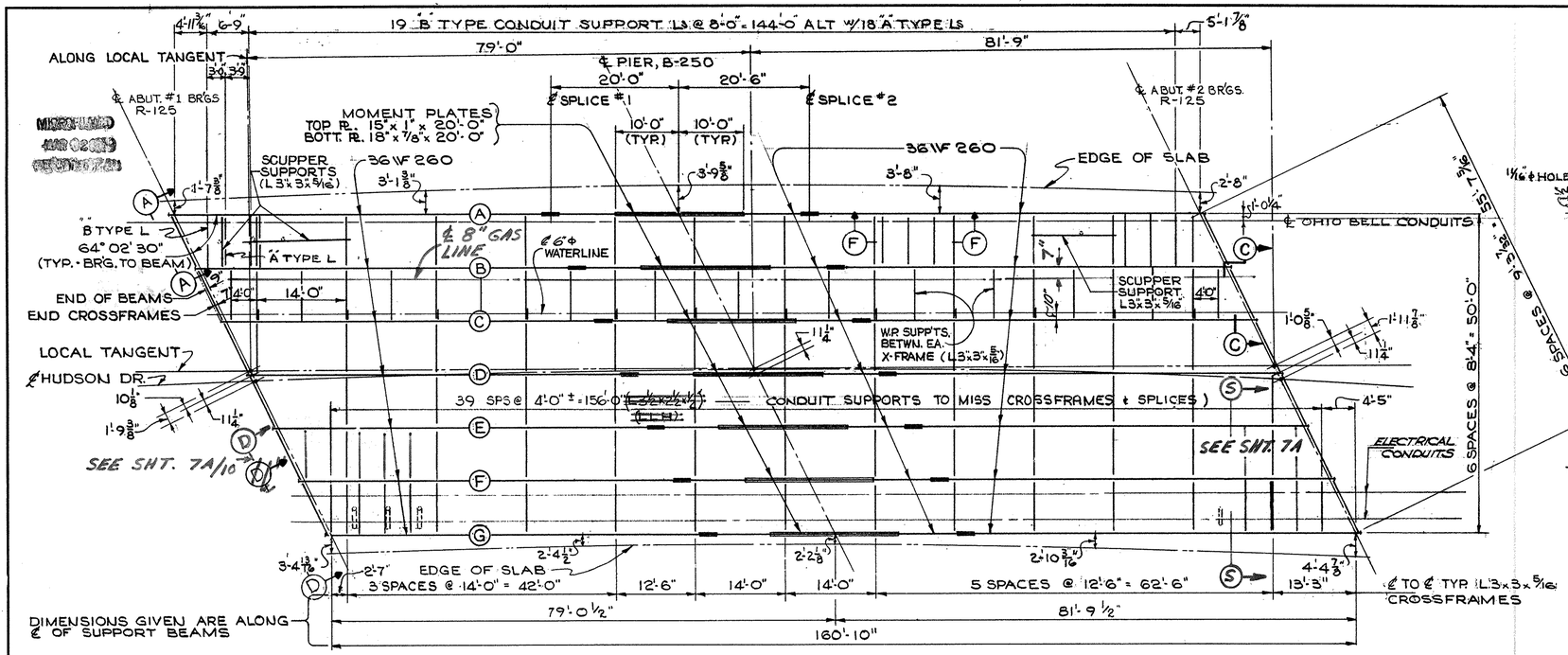

FRAMING PLAN

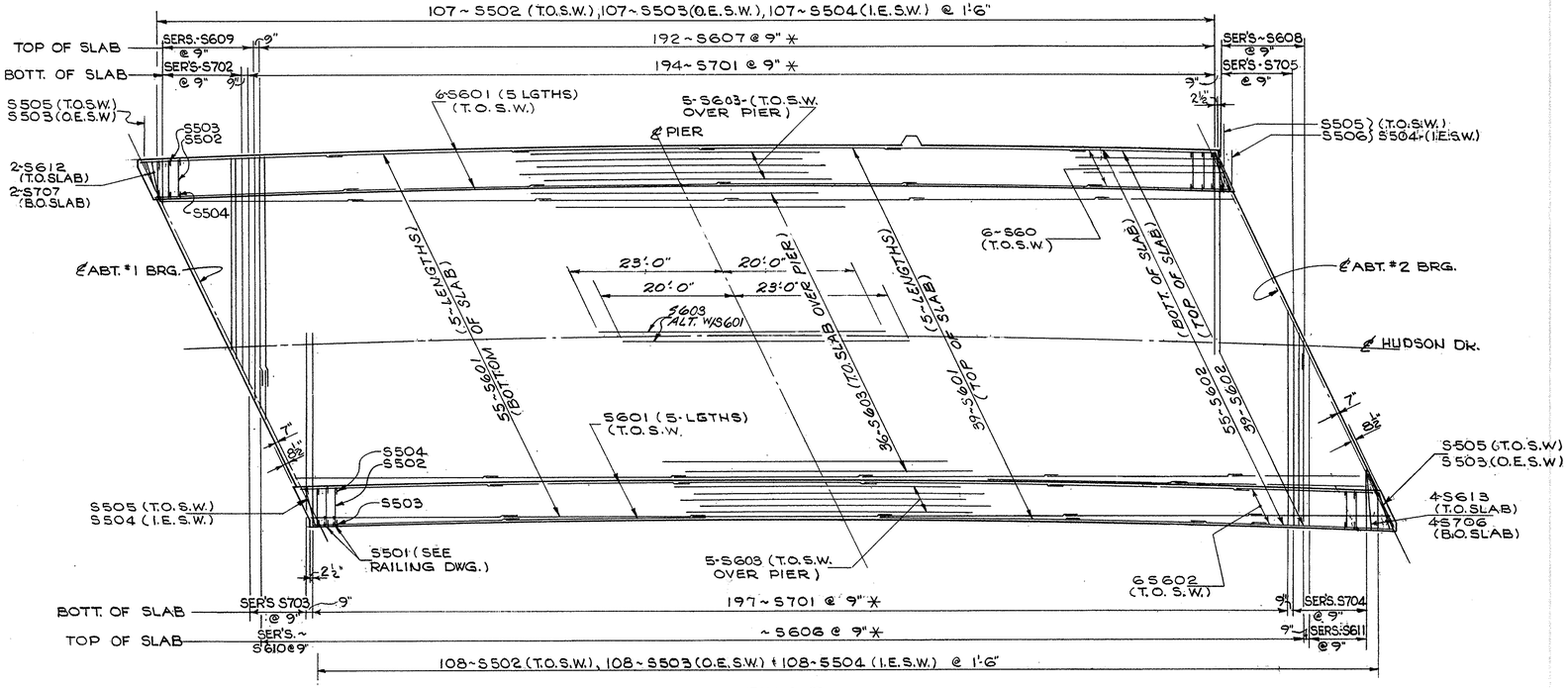

SLAB

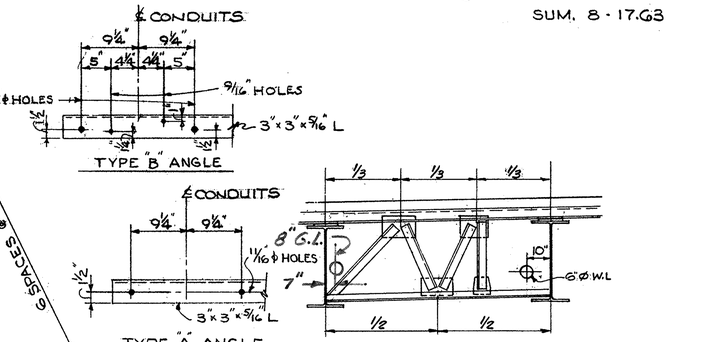

NOTE:
HORIZ. LEG OF TYPE "B" L'S TURNED DOWN STATION.
HORIZ. LEG OF TYPE "A" OPTIONAL

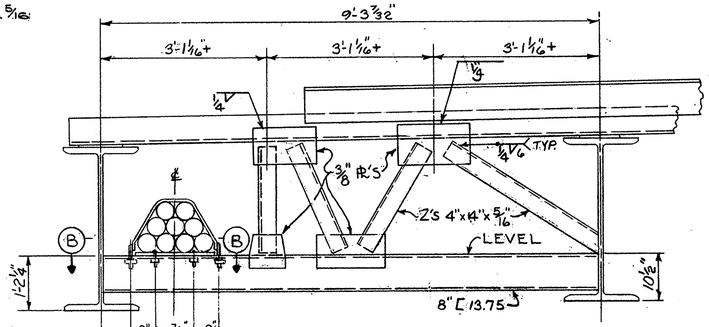



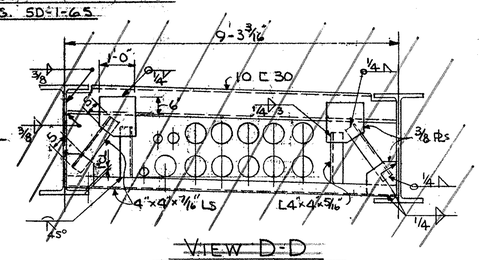

Note
I.E.S.W. = INSIDE EDGE OF SIDEWALK
O.E.S.W. = OUTSIDE EDGE OF SIDEWALK
T.O.S.W. = TOP OF SIDEWALK
B.O. = BOTTOM OF
T.O. = TOP OF
* MEASURED ALONG ℄ OF BRIDGE. BARS TO BE PLACED RADIALLY.

STATE OF OHIO
DEPARTMENT OF HIGHWAYS
BUREAU OF BRIDGES

7 / 10

DALTON · DALTON ASSOCIATES

SLAB & FRAMING PLAN
BRIDGE Nº SUM-8 1845
UNDER HUDSON DRIVE

SUMMIT COUNTY CUYAHOGA FALLS EXPRESSWAY
STA. 271+19.61

DESIGNED	DRAWN	TRACED	CHECKED	REVIEWED	DATE	REVISED
SPS	Hadovan		CW 11/8/67	ROH 2-1-68		12-18-70

FORM DDA-6

FED. RD.	STATE	PROJECT	
2	OHIO		

389A
460

SUM - 8 - 17.63

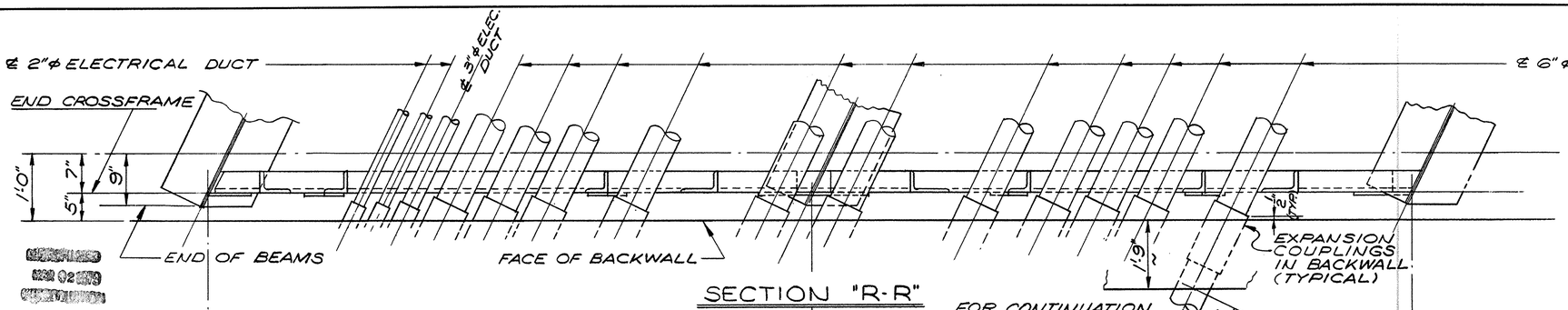

SECTION "R-R"

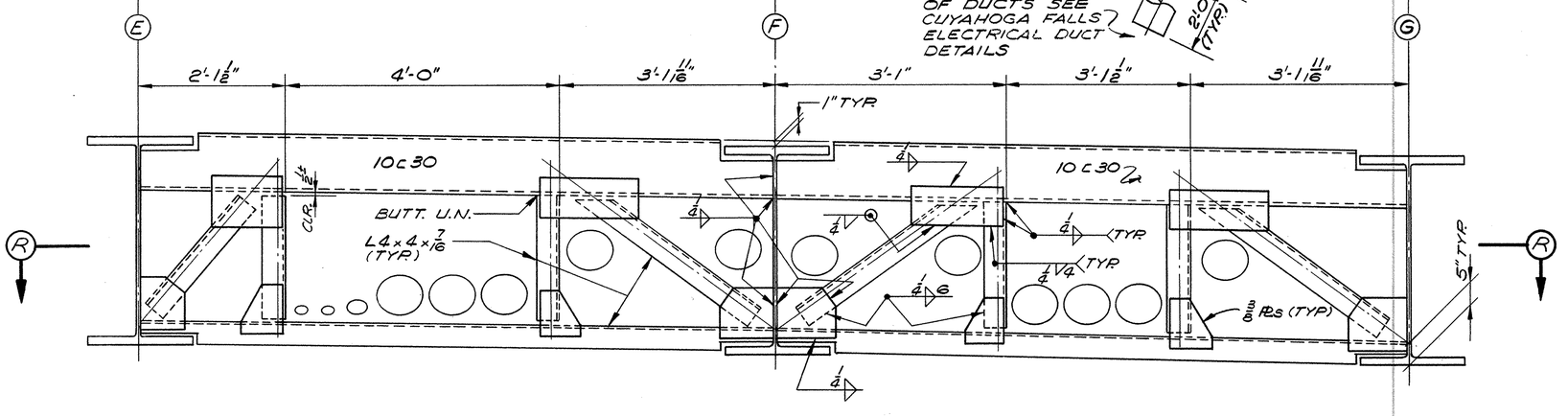

VIEW "D-D"

SEE SHEET Nº 7/10

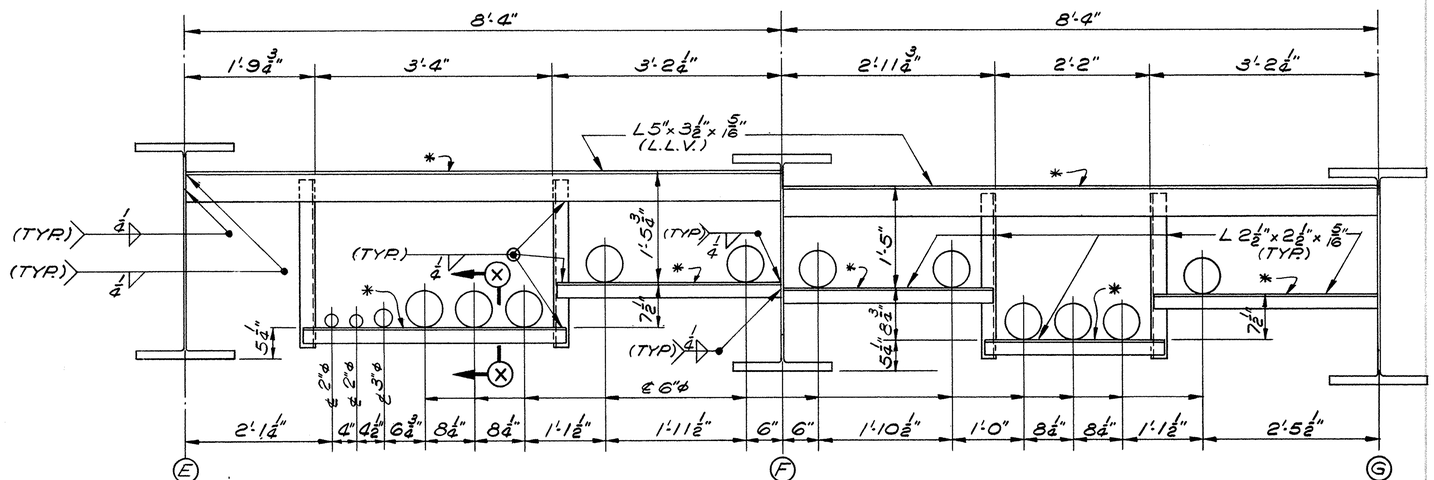

SECTION "S-S"

INTERMEDIATE DUCT SUPPORTS

* DENOTES ℄s TO BE LEVEL

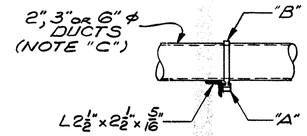

SECTION "X-X"

"A" CLAMP SUPPORTS & "B" CLAMPS TO BE UNISTRUT, ALSTRUT, KINDORF OR EQUAL, (INCLUDE WITH ITEM 625 FOR PAYMENT)

CLAMP DUCTS @ EVERY SUPPORT

"C" RIGID ASBESTOS CEMENT PIPE (713.05, TYPE II)
2" ϕ - 342 LIN. FT. REQ'D
3" ϕ - 171 LIN. FT. REQ'D
6" ϕ - 1881 LIN. FT. REQ'D

PROVIDE EXPANSION COULPLINGS @ EACH ABUTMENT FOR EACH DUCT (28 REQ'D ~ 4~2"ϕ, 2~3"ϕ & 22~6"ϕ) LENGTH 1'-0"

Added 12-18-70

STATE OF OHIO
DEPARTMENT OF HIGHWAYS
BUREAU OF BRIDGES

7-A/10

DALTON • DALTON ASSOCIATES

STRUCTURAL DETAILS

BRIDGE Nº SUM-8-1845
UNDER HUDSON DRIVE
SUMMIT COUNTY CUYAHOGA FALLS EXP'WAY
STA. 271 + 19.61

DESIGNED	DRAWN	TRACED	CHECKED	REVIEWED	DATE	REVISED
J.F.P.	ALH		C.O.W. 10/5/70	R.O.H.	10/9/70	

MICROFILMED
MAR 02 1989
DOCUMENT CONTROL

FED. RD.	STATE	PROJECT	
2	OHIO		

390
460

SUM.-8-17.63

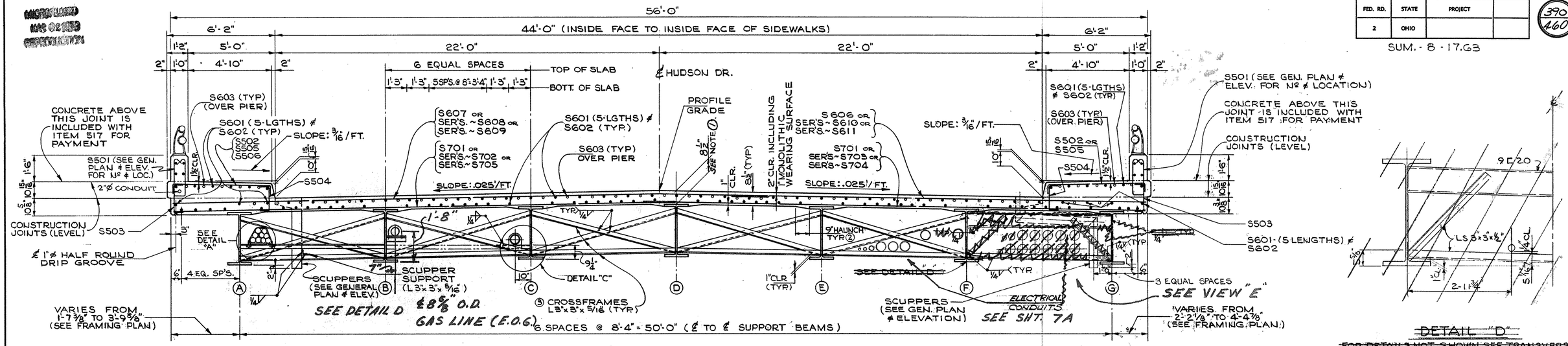

DETAIL "D"

~~FOR DETAILS NOT SHOWN SEE TRANSVERSE SECTION~~

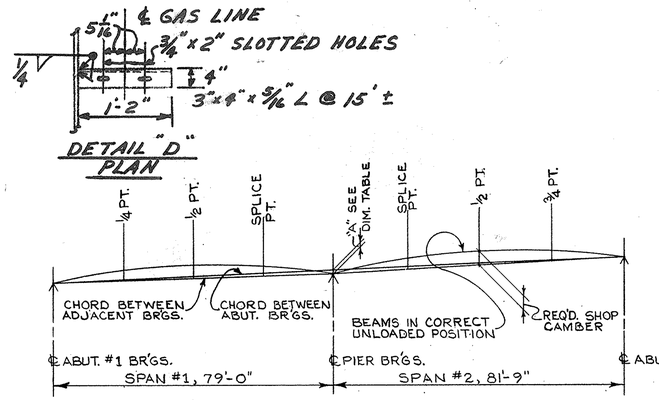

LAYOUT DIAGRAM

TRANSVERSE SECTION

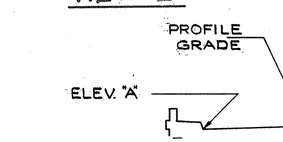

VIEW "E"

DETAIL "C"
(X-FRAMES DELETED FOR CLARITY)

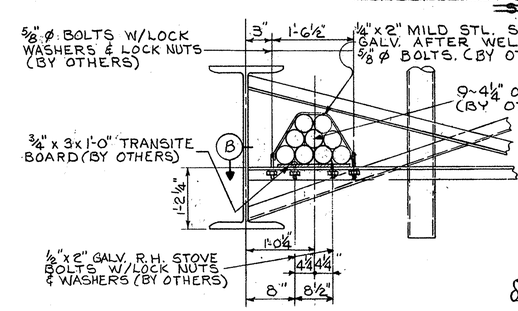

DETAIL "A"

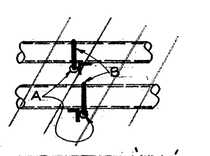

SECTION "X-X"

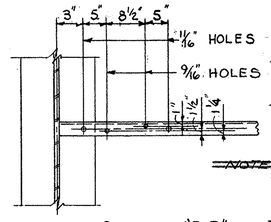

SECTION "B-B"

~~(A) CLAMP SUPPORTS UNISTRUT, ALSTRUT, KINDORF OR EQUAL *~~
~~(B) CLAMPS - UNISTRUT, ALSTRUT KINDORF OR EQUAL *~~
~~* INCLUDE WITH ITEM 625 FOR PAYMENT~~
~~NOTE: CLAMP DUCT @ EVERY DUCT SUPPORT - PROVIDE EXPN. COUPLINGS @ EACH ABUT. FOR EACH DUCT. (28 EXPN. COUPLINGS REQD)~~

~~RIGID ASBESTOS CEMENT PIPE (718.05~~
~~6"ø - 1837 LIN. FT. REQD. TYPE II)~~
~~3"ø - 167 LIN. FT. REQD.~~
~~2"ø - 334 LIN. FT. REQD.~~

DEFLECTION & CAMBER TABLE							
LOCATION		SPAN #1			SPAN #2		
DESCRIPTION		① 1/4 PT	② 1/2 PT.	③ SPLICE PT. #1	④ SPLICE PT. #2	⑤ 1/2 PT.	⑥ 3/4 PT.
DEFLECTION DUE TO WEIGHT OF STEEL		3/16"	1/4"	1/8"	1/8"	1/4"	1/4"
DEFLECTION DUE TO REMAINING DEAD LOAD		1/2"	5/8"	5/16"	5/8"	3/4"	5/8"
ADJUSTMENT REQUIRED FOR VERTICAL CURVE		-5/16"	-7/16"	-5/16"	-3/8"	-1/2"	-3/8"
ADJUSTMENT REQD FOR HORIZONTAL CURVE	BMS. A TO D	—	—	—	—	—	—
	" E,F,G	1/16	1/8	1/16	1/16	1/8	1/16
REQD. SHOP CAMBER	BMS. A TO D	3/8	7/16	1/8	1/8	1/2	1/2
	" E,F,G	7/16	9/16	3/16	3/16	5/8	9/16

DIMENSION TABLE							
BEAMS	A	B	C	D	E	F	G
DIM. "A"	1 1/4"	1 3/16"	1 3/16"	1 1/16"	2 3/16"	2 1/8"	2 1/8"

ELEVATIONS @ 25' INTERVALS				
LOCATION / STATION	ELEV. "A"	ELEV. "B"	ELEV. "C"	PROFILE ELEV.
49 + 25	1023.84	1024.38	—	1024.35
49 + 50	1024.28	1024.83	1024.28	1024.78
49 + 75	1024.70	1025.27	1024.74	1025.24
50 + 00	1025.19	1025.73	1025.19	1025.73
50 + 25	1025.75	1026.28	1025.71	1026.24
50 + 50	1026.29	1026.85	1026.30	1026.79
50 + 75	—	1027.37	1026.85	1027.35

THE ELEVATIONS SHOWN ARE THOSE WHICH ARE REQUIRED BEFORE THE CONCRETE DECK IS POURED.

PROPER ALLOWANCE HAS BEEN MADE FOR THE DEAD LOAD DEFLECTIONS CAUSED BY THE WEIGHT OF THE CONCRETE.

NOTES

① THIS IS THE NOMINAL DIMENSION. THE QUANTITY OF DECK CONCRETE TO BE PAID FOR SHALL BE BASED UPON THIS DIMENSION, EVEN THOUGH DEVIATION FROM IT MAY BE NECESSARY BECAUSE THE TOP FLANGE OF THE BEAM MAY NOT HAVE THE EXACT CAMBER OR CONFORMATION REQUIRED TO PLACE IT PARALLEL TO THE FINISHED GRADE.

② A TYPICAL HAUNCH WIDTH OF 9" SHALL BE USED FOR COMPUTING QUANTITY OF CONCRETE. HOWEVER, THE HAUNCH WIDTH MAY VARY BETWEEN 6" AND 12" PROVIDED THAT THE SLOPE SHALL BE NOT MORE THAN 1:4 FOR A HAUNCH LESS THAN 9" IN WIDTH.

③ INTERMEDIATE CROSSFRAME ANGLES 3 x 3 x 5/16. WELD BOTH SIDES OF VERTICAL LEG AND TOP SIDE OF HORIZONTAL LEG TO BEAM WITH 1/4" CONTINUOUS FILLET WELD.

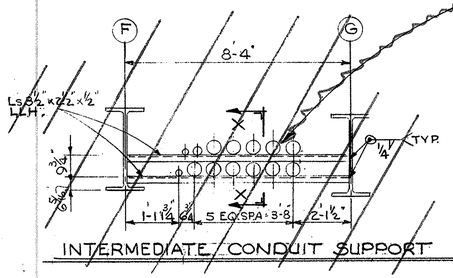

INTERMEDIATE CONDUIT SUPPORT

STATE OF OHIO
DEPARTMENT OF HIGHWAYS
BUREAU OF BRIDGES

8/10

DALTON · DALTON ASSOCIATES

SLAB DETAILS
BRIDGE NO. SUM-8-1845
UNDER HUDSON DRIVE
SUMMIT COUNTY EXPRESSWAY
STA. 271+19.61

DESIGNED	DRAWN	TRACED	CHECKED	REVIEWED	DATE	REVISED
SPG	Hoolovan		CWD 11/15/67	RLH	2-1-68	12-18-70

FORM DDA-6

FED. RD.	STATE	PROJECT	
2	OHIO		

391/460

SUM.- 8-17.63

MARK	NO. REQ'D.	LENGTH	TYPE	DIMENSIONS A	B	C	D	SERIES INCR.	WEIGHT LBS.
PIER									
P401	16	7'-1"	22	7'-1"	11"				76
P501	80	7'-11"	3	2'-8"	2'-9"				661
SERIES OF P502	8 SETS OF 10 =80 BARS	VARIES 6'-0" TO 6'-9"	3	1'-11"	VARIES 2'-2" TO 2'-6½"	@ INCR OF ½"		1"	532
P503	48	7'-0"	3	1'-11"	2'-8"				350
P601	4	30'-2"	ST.						181
P901	8	9'-0"	12	6'-0"	3'-0"	1'-0"			245
P1001	78	7'-6"	ST.						2,517
P1002	10	6'-8"	1	1'-0"	5'-11"				287
P1003	10	16'-0"	ST.						688
P1101	52	6'-11"	1	1'-0"	6'-2"				1,911
P1102	20	11'-0"	ST.						1,169
P1103	32	16'-0"	ST.						2,720
P1104	3	26'-2"	ST.						417
P1105	3	19'-4"	ST.						308
P1106	12	18'-3"	ST.						1,164
P1107	13	30'-0"	ST.						2,072
P1108	14	20'-0"	1	2'-0"	18'-3"				1,488
P1109	4	22'-8"	ST						482
P1110	4	29'-6"	ST						627
								SPIRALS =	735
PIER TOTAL =									18,630 LBS.
SUPERSTRUCTURE									
S501	232	5'-7"	5	8"	2'-2"	5"			1,351
S502	215	6'-3"	3	5'-6"	6"				1,402
S503	217	2'-1"	3	1'-4"	6"				472
S504	218	2'-0"	3	1'-3"	6"				455
S505	4	6'-6"	3	5'-9"	6"				27
S506	1	7'-0"	3	6'-3"	6"				7
S507	2	10'-5"	25						22
S601	530	30'-0"	ST.						28,882
S602	106	22'-7"	ST.						3,596
S603	46	43'-0	ST.						2,971
S604	12	4'-3"	ST.						77
S605	2	10-0"	14	2'-11"	2'-1"	4"			30
S606	203	24'-7"	ST.						7,496
S607	195	33'-0"	ST.						9,665
SERIES OF S608	1 SET OF 18 =18 BARS	7'-0" TO 31'-11"	ST.					+5"	515
SERIES OF S609	1 SET OF 19 =19 BARS	5'-2½" TO 36'-4"	ST.					+8¾"	593
SERIES OF S610	1 SET OF 10 =10 BARS	6'-10½" TO 22'-3"	ST.					+8½"	219
SERIES OF S611	1 SET OF 16 =16 BARS	8'-2" TO 28'-2"	ST.					+4"	437
S612	2	4'-8"	ST.						14
S613	4	5'-10"	ST.						35
S701	391	29'-0"	ST.						23,177
SERIES OF S702	1 SET OF 17 =17 BARS	5'-4" TO 33'-0"	ST.					+1'-8¾"	666
SERIES OF S703	1 SETS OF 12 =12 BARS	7'-9½" TO 26'-7"	ST.					+1'-8½"	422
SERIES OF S704	1 SET OF 19 =19 BARS	8'-3" TO 32'-3"	ST.					+1'-4"	786
SERIES OF S-705	1 SET OF 15 =15 BARS	7'-8" TO 27'-0"	ST.					+1'-5"	524

MARK	NO. REQ'D.	LENGTH	TYPE	DIMENSIONS A	B	C	D	SERIES INCR.	WEIGHT LBS.
CONT. SUPERSTRUCTURE									
S706	4	5'-0"	ST.						41
S707	2	4'-8"	ST.						19
SUPERSTRUCTURE TOTAL 78,901 LBS.									
ABUTMENTS # 1 & #2									
A-501	12	25'-1"	ST						314
A-502	12	36'-7"	ST						458
A-503	81	7'-2"	3	3'-5"	2'-0"				605
A-504	11	23'-9"	ST						272
A-505	11	5'-10"	ST						67
A-506	11	6'-10"	ST						78
A-507	6	35'-2"	ST						220
A-508	1	19'-3"	ST						20
A-509	2	32'-7"	ST						68
A-510	12	5'-6"	ST						69
A-511	2	4'-8"	23	2'-0"	2'-0"	3"	7"		10
A-512	2	4'-8"	23	2'-0"	2'-0"	3½"	7"		10
A-513	2	3'-11"	12	2'-0"	2'-0"	1'-10"			8
A-514	2	3'-11"	12	2'-0"	2'-0"	1'-9"			8
A-515	2	8'-11"	ST						19
A-516	2	11'-0"	ST						23
A-517	2	7'-9"	ST						16
A-518	6	16'-0"	ST.						100
A-519	6	14'-11"	ST						93
A-520	2	7'-3"	1	1'-0"	6'-4"				15
A-521	8	10'-5"	12	8'-0"	2'-6"	1'-3"			87
A-522	25	8'-5"	3	1'-2"	3'-9"				219
A-523	1	6'-4"	1	1'-0"	5'-5"				7
SERIES OF A-524	2 SETS OF 3 6 BARS	VARIES 7'-5 TO 10'-9"	3	1'-2"	VARIES 3'-5 TO 4'-11"			10"	57
A-525	1	7'-10"	1	1'-0"	6'-11"				8
A-526	12	6'-8"	3	1'-2"	2'-8"				78
A-527	2	6'-8"	1	1'-0"	5'-9"				14
A-528	41	5'-7"	5	8"	2'-2"	5"			239
A-529	6	37'-5"	ST						234
A-530	6	24'-0"	ST						150
A-531	3	16'-3"	24	9'-3"	7'-0"	10'-5"			51
A-532	1	21'-9"	ST						23
A-533	1	9'-11"	24	2'-11"	7'-0"	10'-5"			10
A-534	1	10'-8"	24	2'-8"	8'-0"	9'-5"			11
A-535	3	16'-5"	24	8'-5"	8'-0"	9'-5"			51
SERIES OF A-536	1 SET OF 3 3 BARS	VARIES 7'-5 TO 11'-7"	3	1'-2"	VARIES 3'-3 TO 5'-4"			1'-0½"	30
SERIES OF A-537	1 SET OF 3 3 BARS	VARIES 7'-10 TO 11'-10"	3	1'-2"	VARIES 3'-6 TO 5'-6"			1'-0"	31
A-538	1	8'-0"	ST						8
A-539	4	10'-0"	ST						42
A-540	2	12'-6"	ST						26
A-541	6	17'-8"	ST						111
A-542		OPEN							
A-543	12	36'-1"	ST						452
A-544	7	22'-8"	ST						165
A-601	2	23'-9"	ST						71
A-602	27	15'-0"	3	3'-5"	5'-11"				608
A-603	20	13'-10"	3	3'-5"	5'-4"				416
A-604	100	16'-7"	7	5'-4"	1'-5"	6'-9"	11"		2491
A-605	20	19'-4"	7	7'-2"	1'-5"	7'-8"	11"		581
A-606	2	37'-5"	ST						112
A-607	1	36'-7"	ST						55
A-608	2	24'-0"	ST						72
A-609	1	25'-1"	ST						38
A-610	1	36'-1"	ST						54
A-611	1	21'-5"	3	1'-2"	10'-3"				32
A-612	6	13'-9"	3	1'-2"	6'-5"				124
A-613	1	22'-8"	ST						34
A-614	2	22'-9"	3	1'-2"	10'-11"				68

MARK	NO. REQ'D.	LENGTH	TYPE	DIMENSIONS A	B	C	D	SERIES INCR.	WEIGHT LBS.
ABUTMENTS #1 & #2 CONTINUED									
A-615	6	10'-3"	ST						92
A-616	2	35'-2"	ST						106
A-617	6	9'-8"	ST						87
A-618	2	19'-7"	3	1'-2"	9'-4"				59
A-619	20	16'-6"	3	3'-5"	6'-8"				496
A-620	4	11'-5"	3	1'-2"	5'-3"				69
A-621	6	11'-5"	ST						103
A-622	6	14'-11"	3	1'-2"	7'-0"				134
A-623	14	17'-6"	3	3'-5"	7'-2"				368
A-624	5	13'-5"	3	1'-2"	6'-3"				101
A-625	1	20'-5"	3	1'-2"	9'-9"				31
A-626	6	16'-5"	3	1'-2"	7'-9"				148
A-627	6	10'-0"	ST						90
TOTAL ABUTMENTS No 1 & No 2 = 11,217 #									
RAILING ⊛									
R-501	80	13'-8"	ST						
R-502	8	11'-2	ST						
R-505	8	10'-8"	ST						
R-504	8	15'-11"	ST						
R-505	16	7'-7"	5	8"	3'-2"	5"			
R-506	8	8'-5"	19	4'-8"	3'-2"	8"			
R-507	8	6'-7"	20	4'-0"	4'-5"	1'-6"			
R-508	2	16'-2"	24	8'-2"	8'-0"				
R-509	2	16'-10"	24	8'-10"	8'-0"				
R-510	4	17'-6"	ST						
R-511	16	3'-3"	9	1'-6"	6½"				
R-512	8	4'-5"	ST						
R-513	2	10'-9"	25						
REPLACEMENT BARS									
RE-401	1	6'-3"	10						
RE-501	1	6'-6"	ST.						
RE-601	3	7'-0"	ST.						
RE-701	2	7'-3"	ST.						
RE-801	—	7'-6"	—						
RE-901	1	7'-10"	ST.						
RE-1001	1	8'-3"	ST.						
RE-1101	1	8'-9"	ST.						

SPIRAL REINFORCING SCHEDULE

MARK	NO. REQ'D.	CORE DIA. OF SPIRAL	LENGTH OF SPIRAL	PITCH	NO. OF TURNS	WEIGHT LBS.
SP-401	3	2'-8"	13'-0⅝"	4½"	38	735
TOTAL SPIRALS						735

GRAND TOTAL 108,748 LBS.

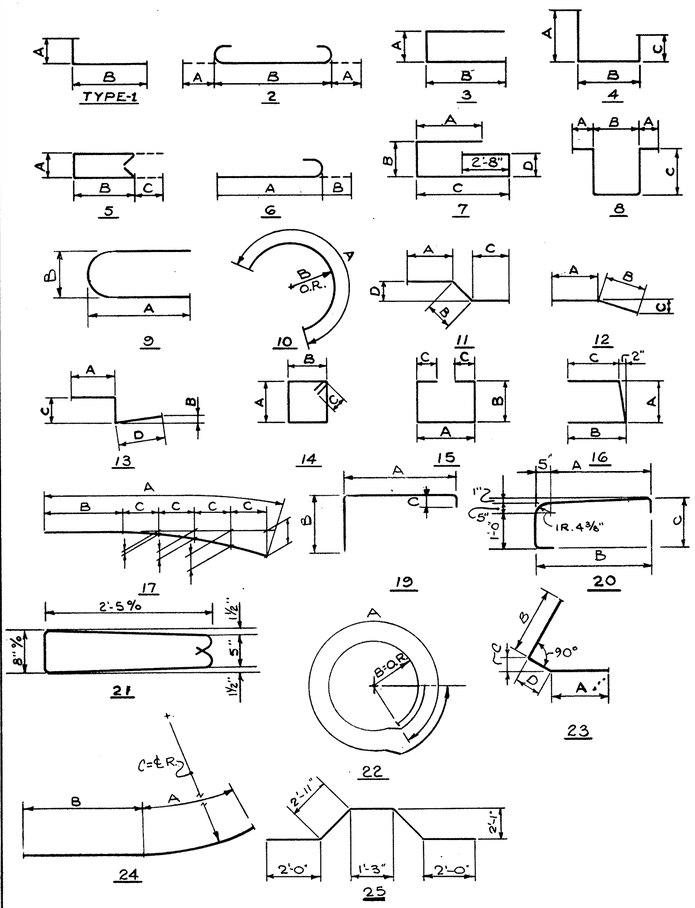

REINFORCING NOTES

THE LENGTH SHOWN IN THE STEEL SCHEDULE FOR THE SPIRAL BARS IS THE DISTANCE FROM THE TOP OF THE FOOTING TO THE BOTTOM OF THE PIER CAP. THE NUMBER OF TURNS SHOWN IN THE STEEL SCHEDULE FOR SPIRAL BARS IS THE LENGTH DIVIDED BY THE PITCH PLUS THREE TURNS (TOTAL NUMBER OF CLOSED COILS) EXPRESSED AS THE NEAREST WHOLE NUMBER. SPIRAL REINFORCING BARS SHALL NOT HAVE DEFORMATIONS, BUT SHALL IN OTHER RESPECTS CONFORM TO ITEM 509. ONE AND ONE HALF CLOSED COILS SHALL BE PROVIDED AT THE ENDS OF EACH SPIRAL UNIT. FOUR (4) STEEL CHANNEL, TEE OR ANGLE SPACERS WEIGHING APPROX. 0.68 LBS. PER LINEAL FT. OF SPACERS SHALL BE PROVIDED FOR EACH SPIRAL UNIT. THEY SHALL BE EQUALLY SPACED ALONG THE PERIPHERY OF EACH COIL. THE NUMBER OF POUNDS OF THESE SPACERS BASED ON 0.68 LBS. PER LINEAL FT. WILL BE PAID FOR AS REINFORCING STEEL AND IS INCLUDED IN THE TABULATED QUANTITY OF SPIRAL BARS.

BAR SIZE IS INDICATED IN THE BAR MARK. THE FIRST DIGIT WHERE THREE DIGITS ARE USED AND THE FIRST TWO DIGITS WHERE FOUR DIGITS ARE USED INDICATE THE BAR SIZE NUMBER. A-601 IS A NO. 6 SIZE BAR AND P-1001 IS A NO. 10 SIZE BAR.

⊛RAILING REINFORCEMENT BARS WILL BE INCLUDED AS PART OF ITEM 517 FOR PAYMENT.

STATE OF OHIO
DEPARTMENT OF HIGHWAYS
BUREAU OF BRIDGES

9/10

DALTON · DALTON ASSOCIATES

REINFORCING SCHEDULE
BRIDGE NO. SUM-8-1845
UNDER HUDSON DRIVE

SUMMIT COUNTY-CUYAHOGA FALLS
EXPRESSWAY
STA. 271+19.61

DESIGNED	DRAWN	TRACED	CHECKED	REVIEWED	DATE	REVISED
SPG	P.E.H.		C.W. 11/13/67	RBH	2-1-68	

FED. RD.	STATE	PROJECT	
2	OHIO		

392
460

SUM 8-17.63

REINFORCING STEEL SCHEDULE

MARK	NO. REQ'D.	LENGTH	TYPE	DIMENSIONS A	B	C	D	SERIES INCR.	WEIGHT
AS-501	30	25'-2"	ST.						
AS-502	2	24'-10"	4	22'-7"	2'-3"	10½"			
AS-503	12	26'-3"	ST.						
AS-504	8	28'-4"	ST						
SERIES AS-505	1 SET OF 8 BARS	23'-10" TO 29'-8"	ST					10"	
AS-506	2	29'-5"	4	27'-4"	2'-2"	1'-0¾"			
AS-801	146	20'-7"	1	19'-6"	1'-1"				
SERIES AS-802	2 SETS OF 4 BARS	19'-7" TO 20'-0¼"	1	18'-6" TO 18'-11¾"	1'-1"			1¾"	
SERIES AS-803	1 SET OF 9 BARS	2'-4" TO 13'-4"	ST					1'-4½"	
SERIES AS-804	1 SET OF 4 BARS	18'-2" TO 18'-8"	2	13'-3" TO 14'-3"	3'-10" TO 3'-4"	1'-1"	14'-9" TO 15'-9" @ 4" INCR.	2"	
AS-805	2	20'-3"	1	19'-2"	1'-1"				
AS-806	2	7'-7"	3	2'-9"	5'-0"				
	105	1" DIA. x 1'-6" DOWELS							

TOTAL (TWO APPROACH SLABS)

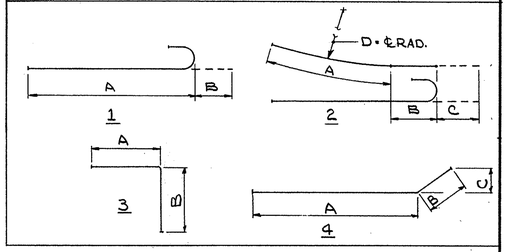

204 SQ. YDS. CONCRETE

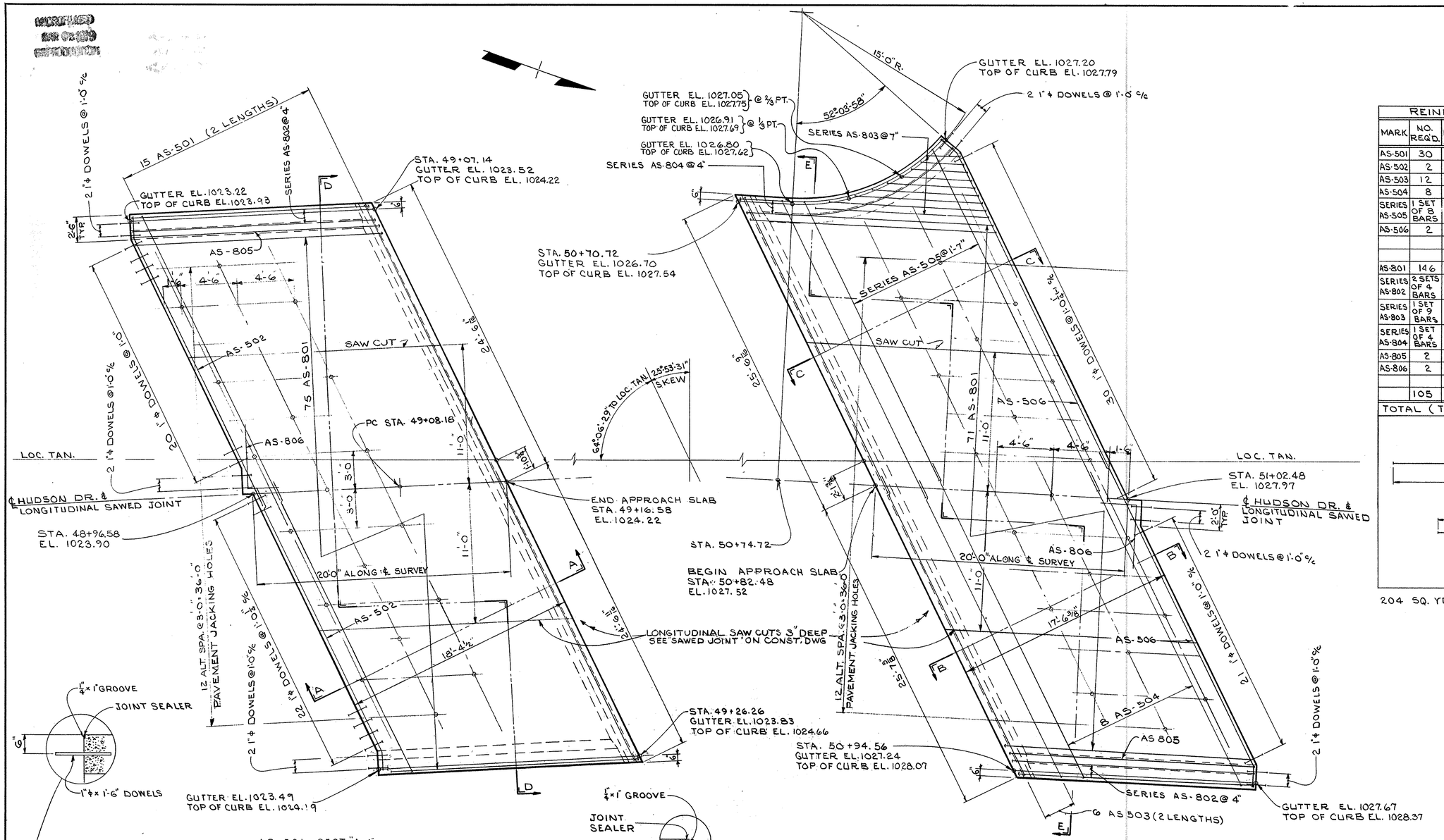

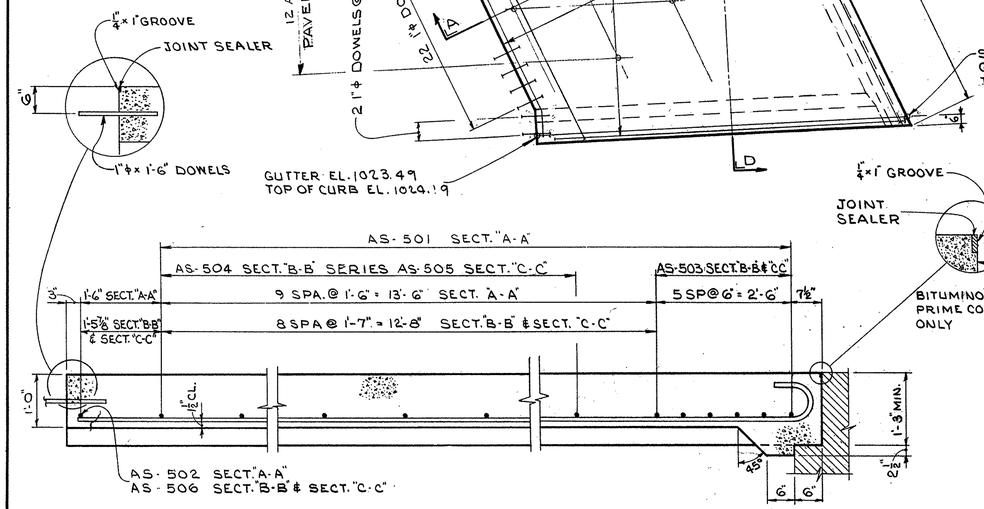

SECTION "A-A", SECTION "B-B" & SECTION "C-C"

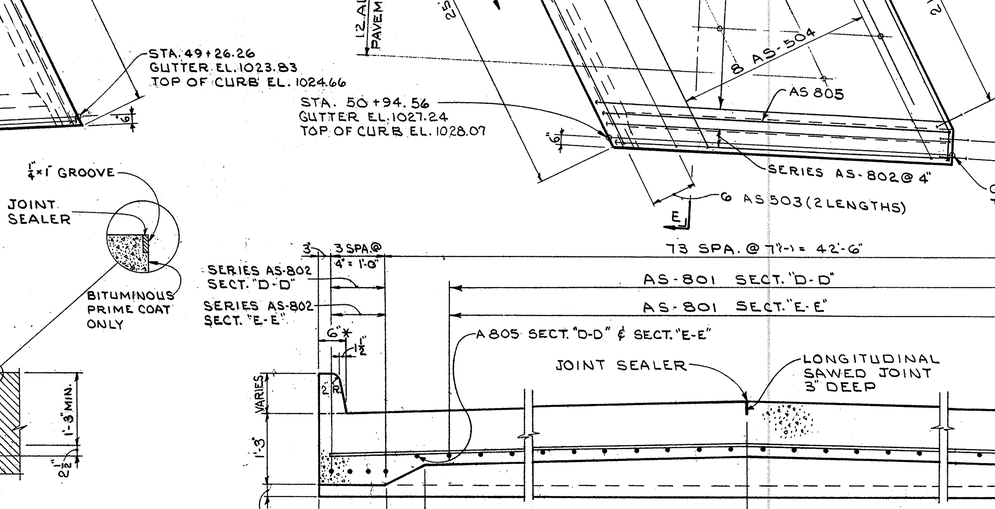

SECTION "D-D" & SECTION "E-E"

NOTES:

* DENOTES RADIAL DIMENSIONS.

FOR DETAILS NOT SHOWN SEE O. S. STD. DWG. AS-1-67

STATE OF OHIO
DEPARTMENT OF HIGHWAYS
BUREAU OF BRIDGES

10/10

DALTON · DALTON ASSOCIATES

APPROACH SLABS

BRIDGE NO. SUM-8-1845

UNDER HUDSON DRIVE

SUMMIT COUNTY CUYAHOGA FALLS EXPRESSWAY

STA. 271+19.61

DESIGNED	DRAWN	TRACED	CHECKED	REVIEWED	DATE	REVISED
SPG.	RW		11/13/67	RDH	2-1-68	

FED. RD.	STATE	PROJECT	
2	OHIO		

523
460

SUM-8-17.63

CURVE DATA

℄ S.R.-8

Δ = 59°-33'-25" LT.
D_c = 3°00'-00"
R = 1909.86'
L_c = 1635.23'
L_s = 350'
θ_s = 5°15'-00"
LT = 233.44'
ST = 116.70'
T_s = 1269.31'
ST. STA. 327+37.64

℄ RELOC. GRAHAM RD.

Δ = 56°-22'-40"
D_c = 5°-00'-00"
R = 1148.92'
T = 614.15'
L_c = 1127.56'
P.C. STA. 107+40.77

PROPOSED STRUCTURE

TYPE: CONTINUOUS STEEL BEAMS, WITH REINFORCED CONCRETE DECK AND SUBSTRUCTURE.
SKEW: 29°-12'-31" R.F. TO LOC. TAN.
SPANS: 63'-0" - 84'-0" - 68'-3" - 49'-3"
ROADWAY: 52'-0" W/ 5'-0" SIDEWALK & 2'CURB
LOAD FREQUENCY: CF = 400

WEARING SURFACE: 1" MONOLITHIC.
APPROACH SLABS: 25' LONG (AS-1-67)
ALIGNMENT: S-00°00" CURVE LT.
SUPER ELEVATION: 0.052'/FT.
SLOPE PROTECTION: CRUSHED AGGREGATE

TRAFFIC: 16,001 - 1985 A.D.T.

VERTICAL CLEARANCE:
DESIGN = 15.00'; ACTUAL = 15.78'

ESTIMATED AVERAGE PAY LENGTHS OF 12"Φ CAST-IN-PLACE CONCRETE PILES
ABUTMENTS = 45'-0
PIERS = 35'-0

STATE OF OHIO
DEPARTMENT OF HIGHWAYS
BUREAU OF BRIDGES

1/12

DALTON · DALTON ASSOCIATES

SITE PLAN

BRIDGE NO SUM-8-1950
UNDER RELOCATED GRAHAM RD.
SUMMIT COUNTY CUYAHOGA FALLS EXPRESSWAY
STA 327+86.45

DESIGNED	DRAWN	TRACED	CHECKED	REVIEWED	DATE	REVISED
SPG	KENNESSY		10/2/67	RBM	2-1-68	

FED. RD.	STATE	PROJECT	
2	OHIO		

394
460

SUM-8-17.63

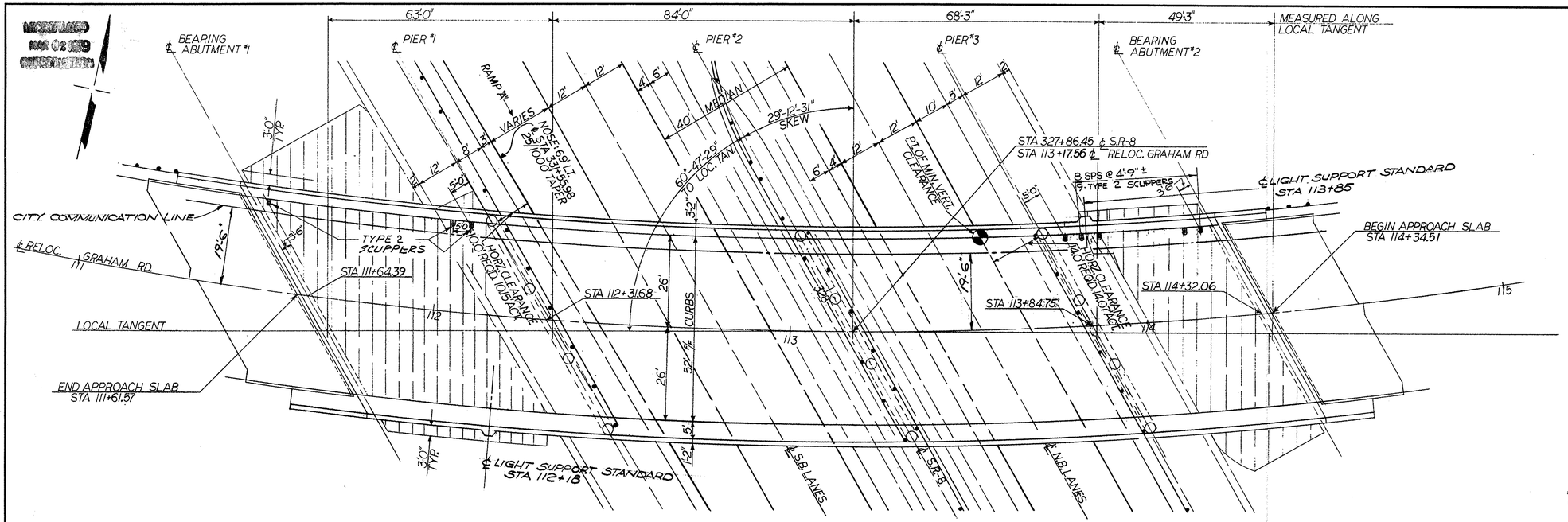

PLAN

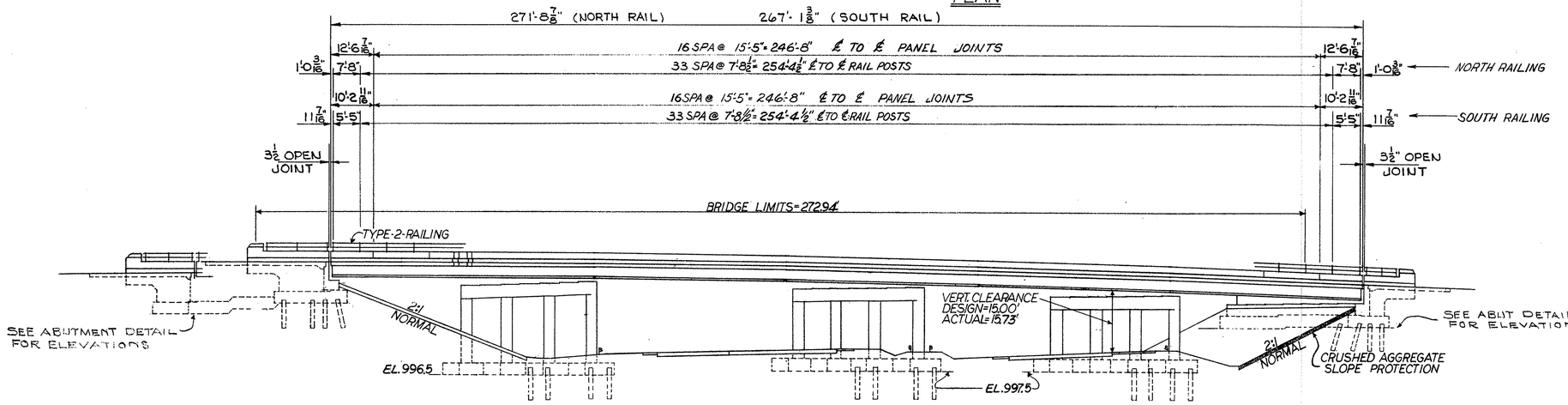

ELEVATION

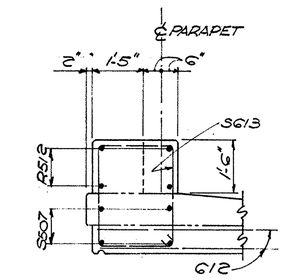

SECTION A-A
FOR SIDEWALK RAIL

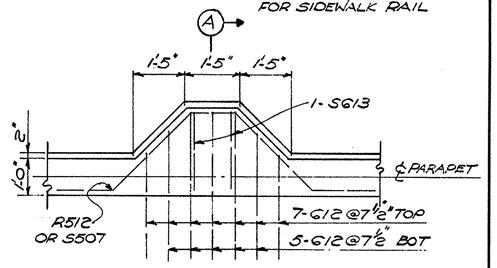

LIGHT SUPPORT STANDARD
DETAIL

FOR DETAIL NOT SHOWN SEE SLAB PLAN & SECTION AND STANDARD CONSTRUCTION DWG HL-4

EXCAVATION QUANTITIES INCLUDES THE REMOVAL OF FILL MATERIAL REQUIRED FOR THE CONSTRUCTION OF THE ABUTMENTS

PILES SHALL BE DRIVEN TO A MINIMUM BEARING CAPACITY OF 40 TONS PER PILE.

SEE SH. No 326 FOR GENERAL NOTES

SEE STD. DWG. BR-2-67 FOR DETAILS OF GUARD RAIL ANCHORS AT END OF PARAPETS

ESTIMATED QUANTITIES

Participation ~ 50% Fed., State & Cuyahoga Falls; 50% Fed. & State

ITEM	TOTAL	UNIT	DESCRIPTION	SUPER	ABUT'S	PIERS	GEN.
503	684	CU.YDS.	UNCLASSIFIED EXCAVATION		399	285	
505	LUMP	SUM	FIRST TEST PILE				LUMP
507	4705	LIN.FT.	12" C.I.P. REINFORCED CONC. PILES		1755	2950	
509	218,841	LBS.	REINFORCING STEEL	141,588	18,383	53,870	
511	537	CU.YDS.	CLASS "C" CONC. SUPERSTRUCTURE	537			
511	158	CU.YDS.	CLASS "C" CONC. ABUTS. ABOVE FTGS.		158		
511	136	CU.YDS.	CLASS "C" CONC. PIERS ABOVE FTGS.			136	

ITEM	TOTAL	UNIT	DESCRIPTION	SUPER	ABUT'S	PIERS	GEN.
511	217	CU.YDS.	CLASS "C" CONC. FOOTINGS		114	103	
512	16	LIN.FT.	PREMOLDED SEALING STRIP		16		
513	471,500	LBS.	STRUCTURAL STEEL	471,500			
514	471,500	LBS.	PAINTING OF STRUCTURAL STEEL	471,500			
517	599.60	LIN.FT.	RAILING (TYPE 2)	538.85	60.75		
518	59	CU.YDS.	POROUS BACKFILL		59		
518	129	LIN.FT.	6' PERF. HELICAL CMP. (707.01) INC. SPECIALS		129		

ITEM	TOTAL	UNIT	DESCRIPTION	SUPER	ABUT'S	PIERS	GEN.
518	110.	LIN.FT.	6' NON-PERF. HELICAL CMP. (707.01)		110.		
518	13	EACH	SCUPPERS - INCLUDING SPECIALS	13			
601	869	SQ.YDS.	CRUSHED AGGREGATE SLOPE PROTECTION				869
625			SEE SHT. 258 FOR LIGHTING SUMMARY				
625	276.	LIN.FT.	CONDUIT 4" (713.05 TYPE II)	276.			
908	537	UNITS	WATER-REDUCING, SET-RETARDING ADMIXTURE	537			
825	2020	SQ.YDS.	CONCRETE SURFACE TREATMENT	1963	57		

STATE OF OHIO
DEPARTMENT OF HIGHWAYS
BUREAU OF BRIDGES

2/12

DALTON · DALTON · ASSOCIATES

GENERAL PLAN & ELEVATION

BRIDGE NO. SUM-8-1950
UNDER RELOCATED GRAHAM RD.
SUMMIT COUNTY CUYAHOGA FALLS EXPRESSWAY
STA 327+86.45

DESIGNED	DRAWN	TRACED	CHECKED	REVIEWED	DATE	REVISED
SPG	RDB		CWJ 11/1/67	RDH	2-1-68	

RECEIVED
MAR 04 1969
HIGHWAY ENGINEERING

FED. RD.	STATE	PROJECT	
2	OHIO		

395
460

SUM-8-17.63

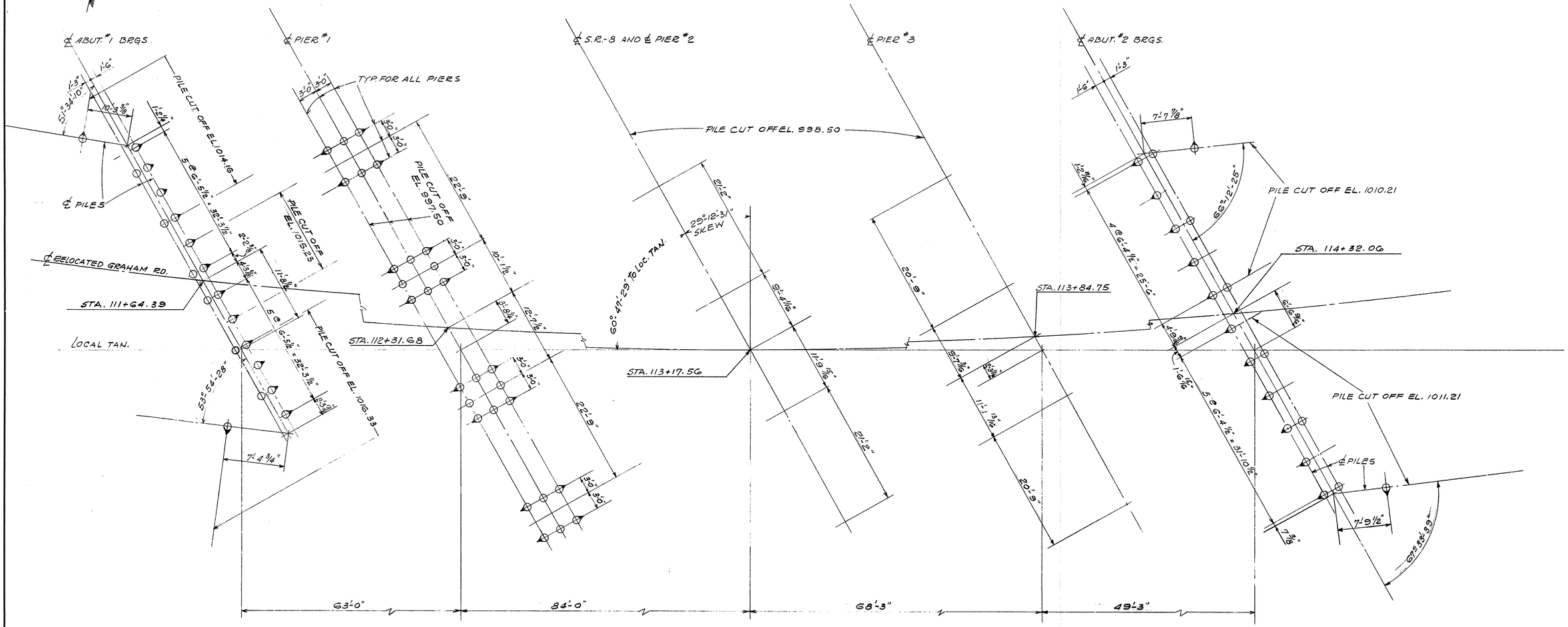

PILING PLAN

NOTE: ALL PILES TO BE 12" ϕ CAST IN PLACE REINFORCED CONCRETE PILES.
◐ INDICATES 1:4 BATTERED PILES.

STATE OF OHIO
DEPARTMENT OF HIGHWAYS
BUREAU OF BRIDGES

3/12

DALTON • DALTON ASSOCIATES

PILING PLAN

BRIDGE NO. SUM-8-1950
UNDER RELOCATED GRAHAM RD
SUMMIT COUNTY CUYAHOGA FALLS EXP'WAY
STA. 327+86.45

DESIGNED	DRAWN	TRACED	CHECKED	REVIEWED	DATE	REVISED
S.P.G.	J.S.K.		C.J.W. 11/2/67	R.D.H.	2-1-68	

FED. RD.	STATE	PROJECT	
2	OHIO		

396
460

SUM-8-17.63

✱ DENOTES RADIAL DIMENSIONS

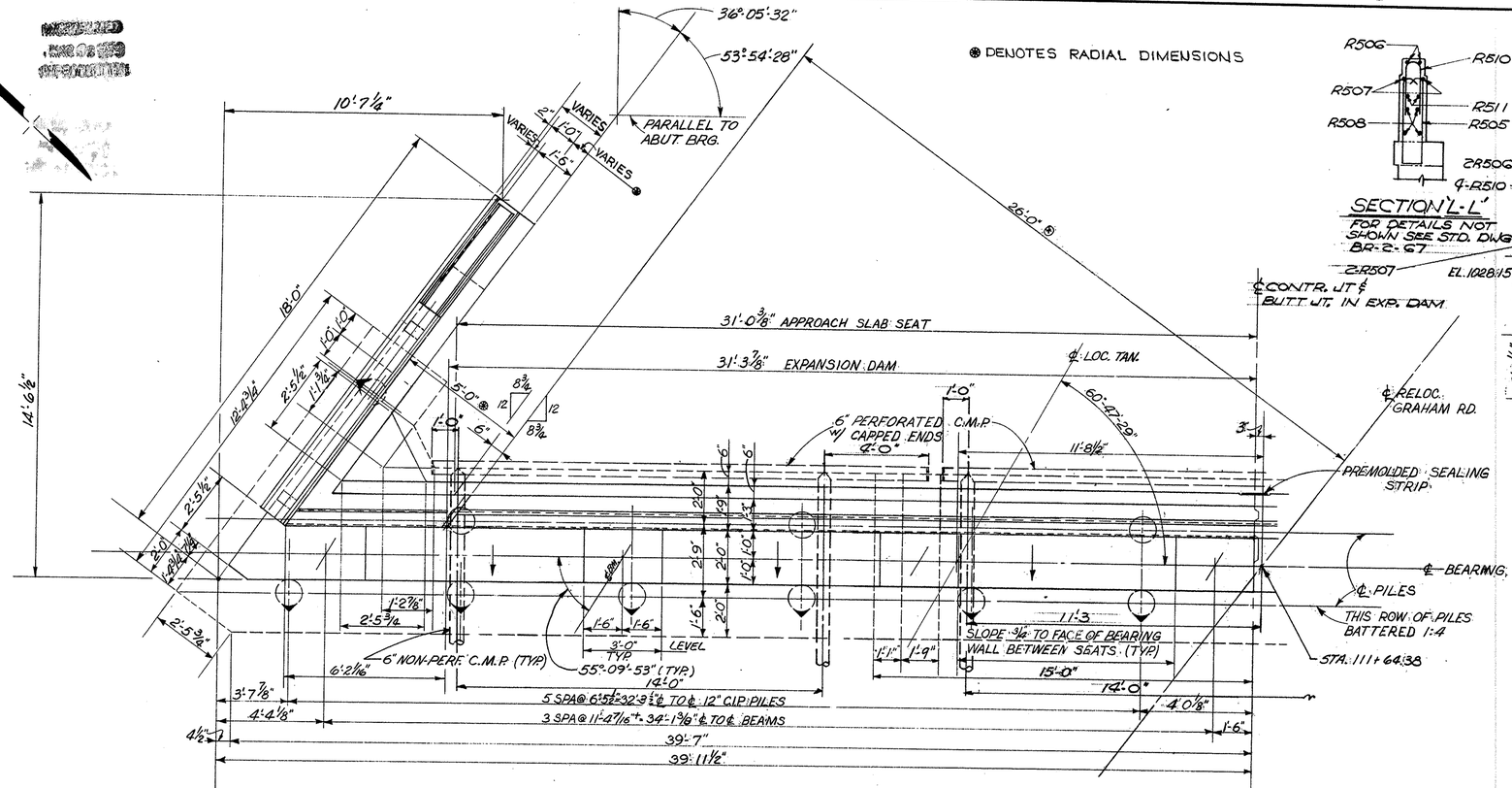

PLAN

SEE SECTION FOR DETAILS NOT SHOWN

SECTION 'L-L'

FOR DETAILS NOT SHOWN SEE STD. DWG. BR-2-67

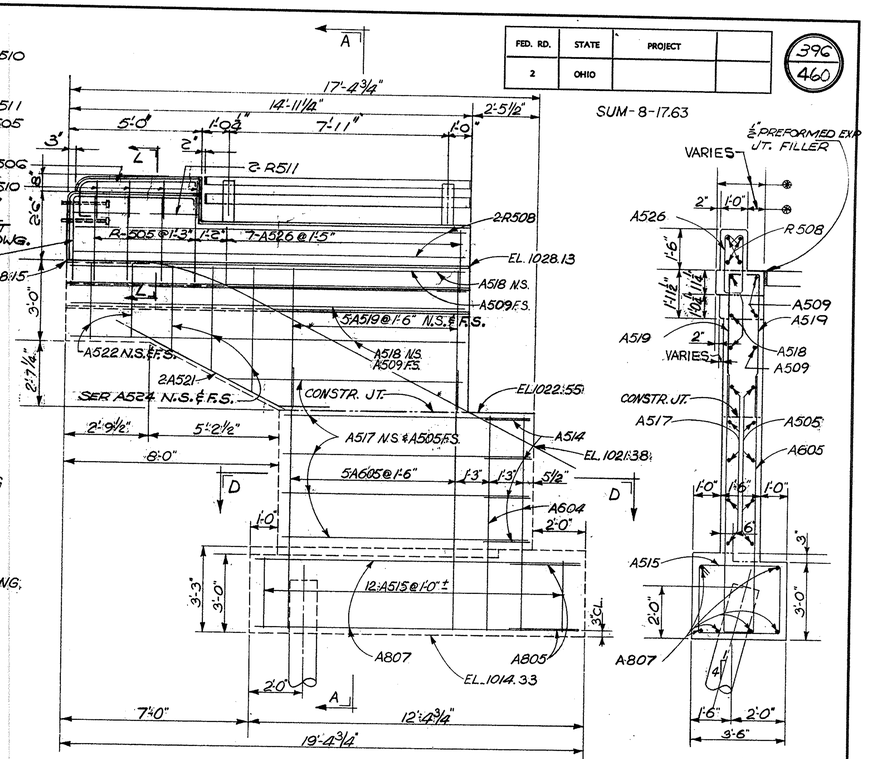

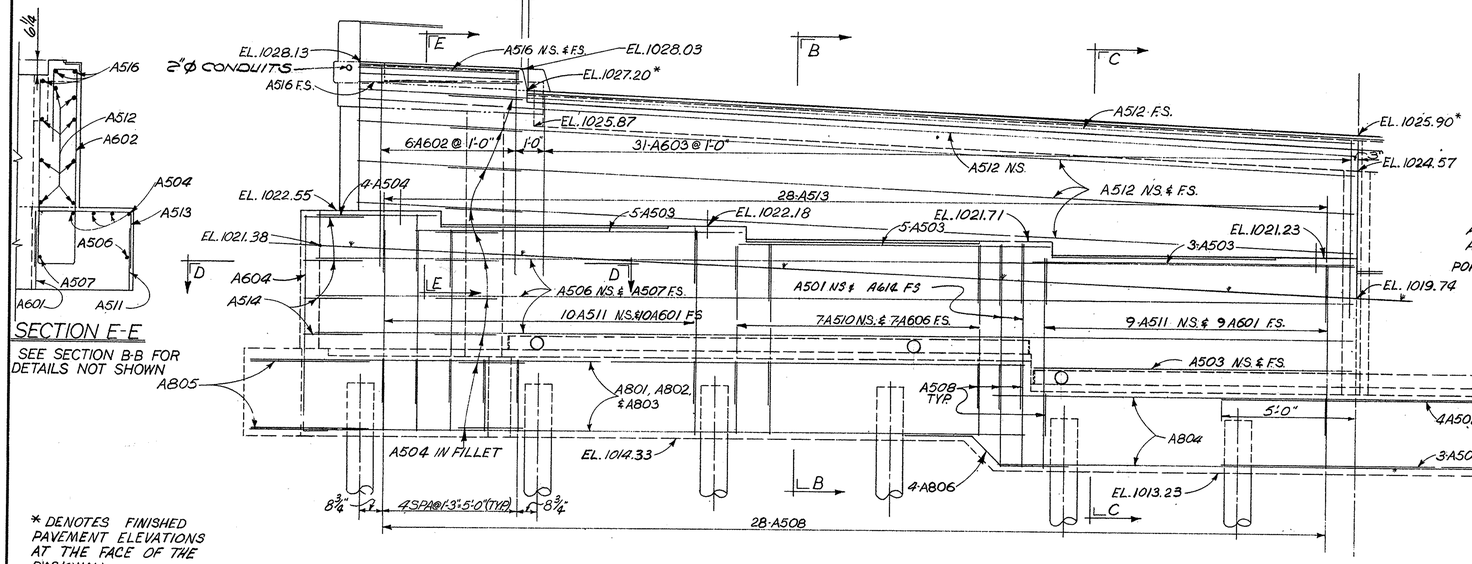

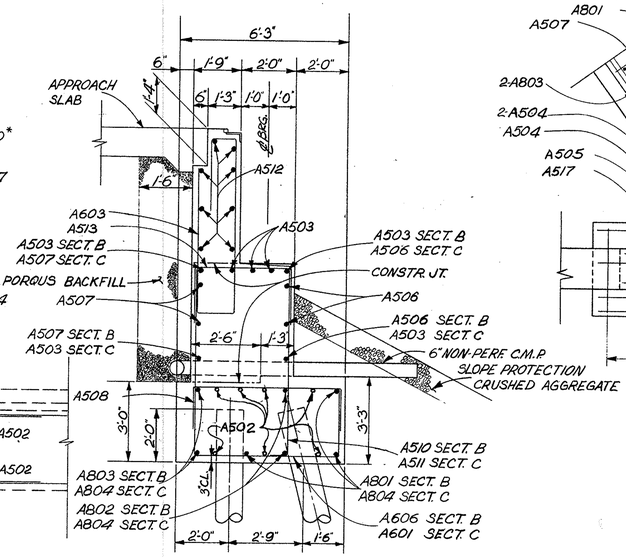

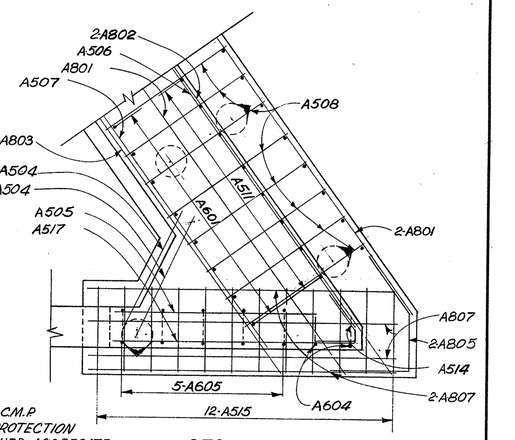

STATE OF OHIO
DEPARTMENT OF HIGHWAYS
BUREAU OF BRIDGES

4/12

DALTON · DALTON ASSOCIATES

ABUTMENT Nº 1 SOUTH HALF

BRIDGE Nº SUM-8-1950
UNDER RELOCATED GRAHAM RD.
SUMMIT COUNTY CUYAHOGA FALLS EXPRESSWAY
STA 327+86.45

DESIGNED	DRAWN	TRACED	CHECKED	REVIEWED	DATE	REVISED
SPG	RDB		CVW 10/2/67	KBH	2-1-68	

FORM DDA-6

FED. RD.	STATE	PROJECT	
2	OHIO		

397
460

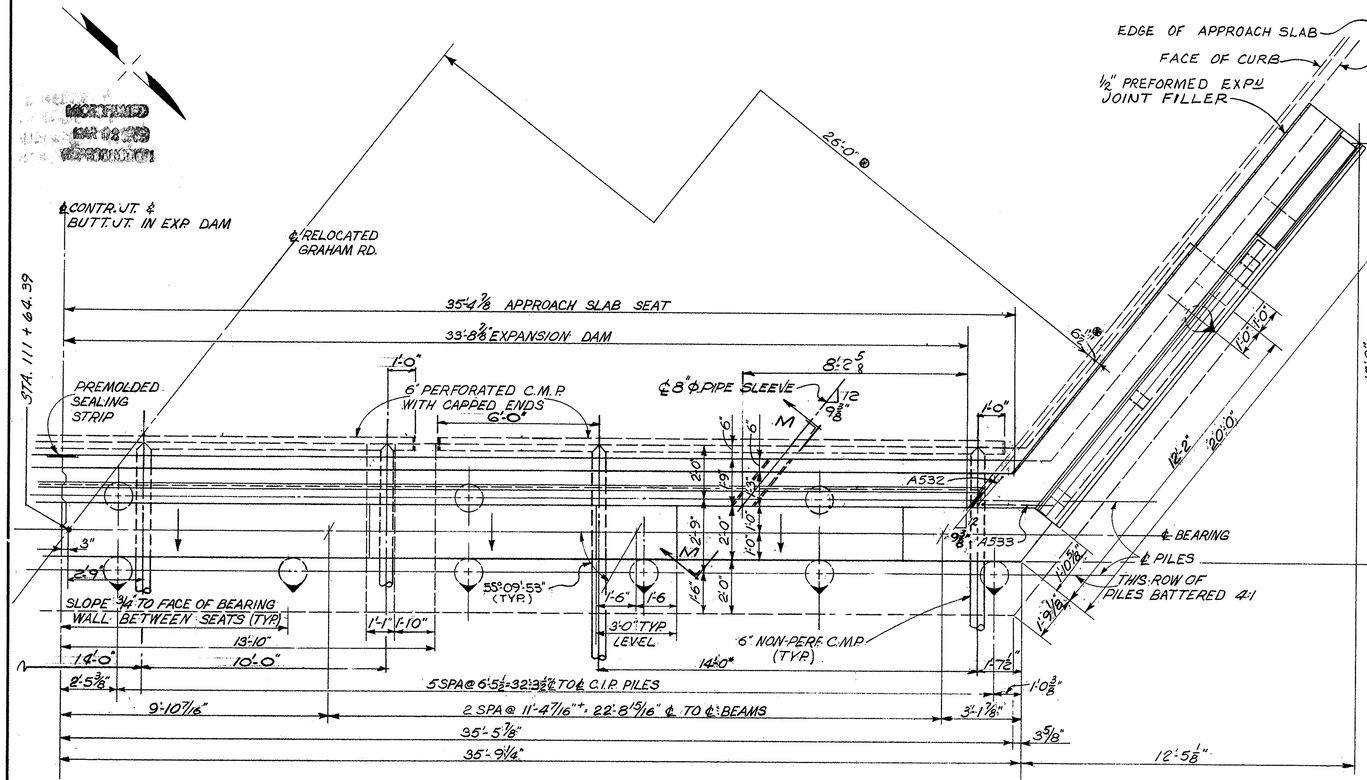

PLAN

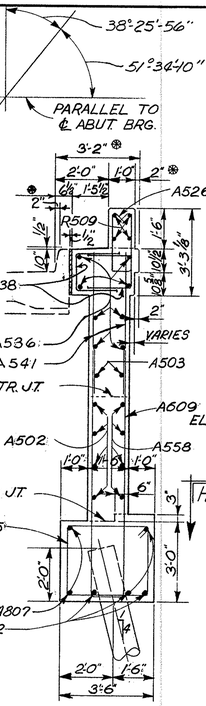

SECTION F-F

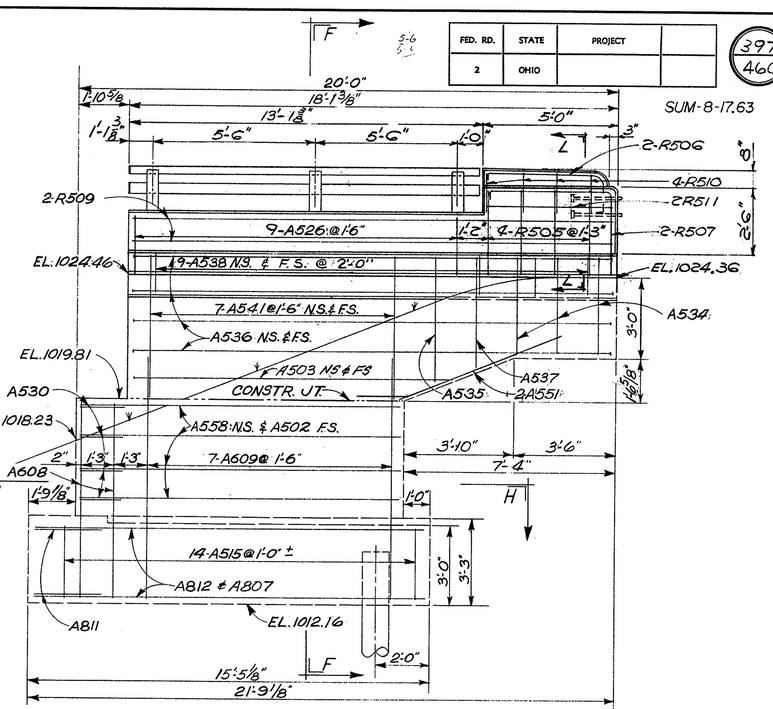

DETAIL NORTH WING WALL ABUTMENT Nº 1

FOR SECTION 'L-L' SEE SHT. 4 / 12

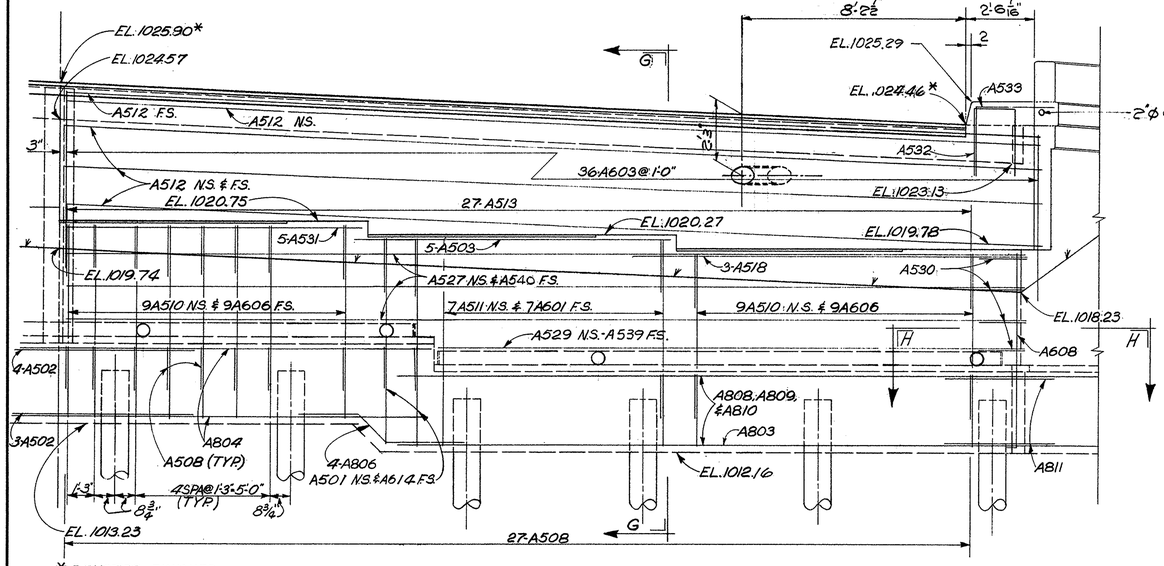

ELEVATION

* DENOTES FINISHED PAVEMENT ELEVATIONS AT THE FACE OF THE BACKWALL

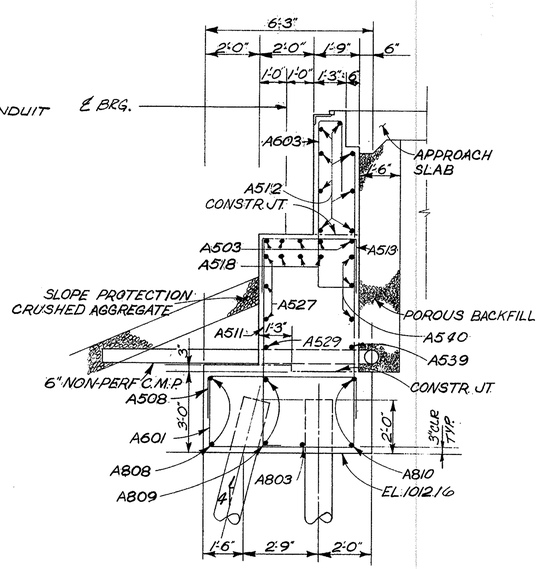

SECTION G-G

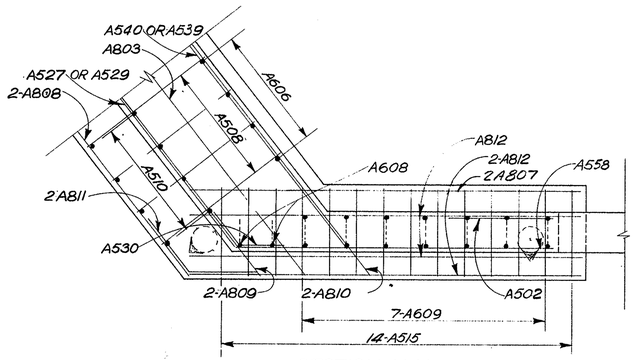

SECTION H-H

FOR SECTION M-M SEE SHT. 7 / 12

℗ DENOTES RADIAL DIMENSION

PROCEDURE: THE EMBANKMENT SHALL BE PLACED AND COMPACTED UP TO THE SUBGRADE FOR A DISTANCE OF 100 FEET BACK OF THE ABUTMENTS, AFTER WHICH EXCAVATION SHALL BE MADE FOR THE ABUTMENTS.

POROUS BACKFILL SHALL EXTEND UPWARD TO THE APPROACH SLAB AND SIDEWALKS AND OUTWARD TO THE INSIDE FACE OF THE WINGWALLS. EXCAVATION THEREFORE IN EXCESS OF THAT REQUIRED FOR CONSTRUCTION OF THE ABUTMENT SHALL BE CONSIDERED AS PAID FOR IN THE BID PRICE PER CUBIC YARD. PAID FOR POROUS BACKFILL

STATE OF OHIO
DEPARTMENT OF HIGHWAYS
BUREAU OF BRIDGES

5 / 12

DALTON · DALTON ASSOCIATES

ABUTMENT Nº1 NORTH HALF

BRIDGE Nº SUM-8-1950
UNDER RELOCATED GRAHAM RD.
SUMMIT COUNTY CUYAHOGA FALLS EXPRESSWAY
STA 327+86.45

DESIGNED	DRAWN	TRACED	CHECKED	REVIEWED	DATE	REVISED
S.P.G.	R.D.B.		E.W.J. 11/2/67	R.B.H. 2-1-68		

FORM DDA-6

FED. RD.	STATE	PROJECT	
2	OHIO		

398
460

SUM-8-17.63

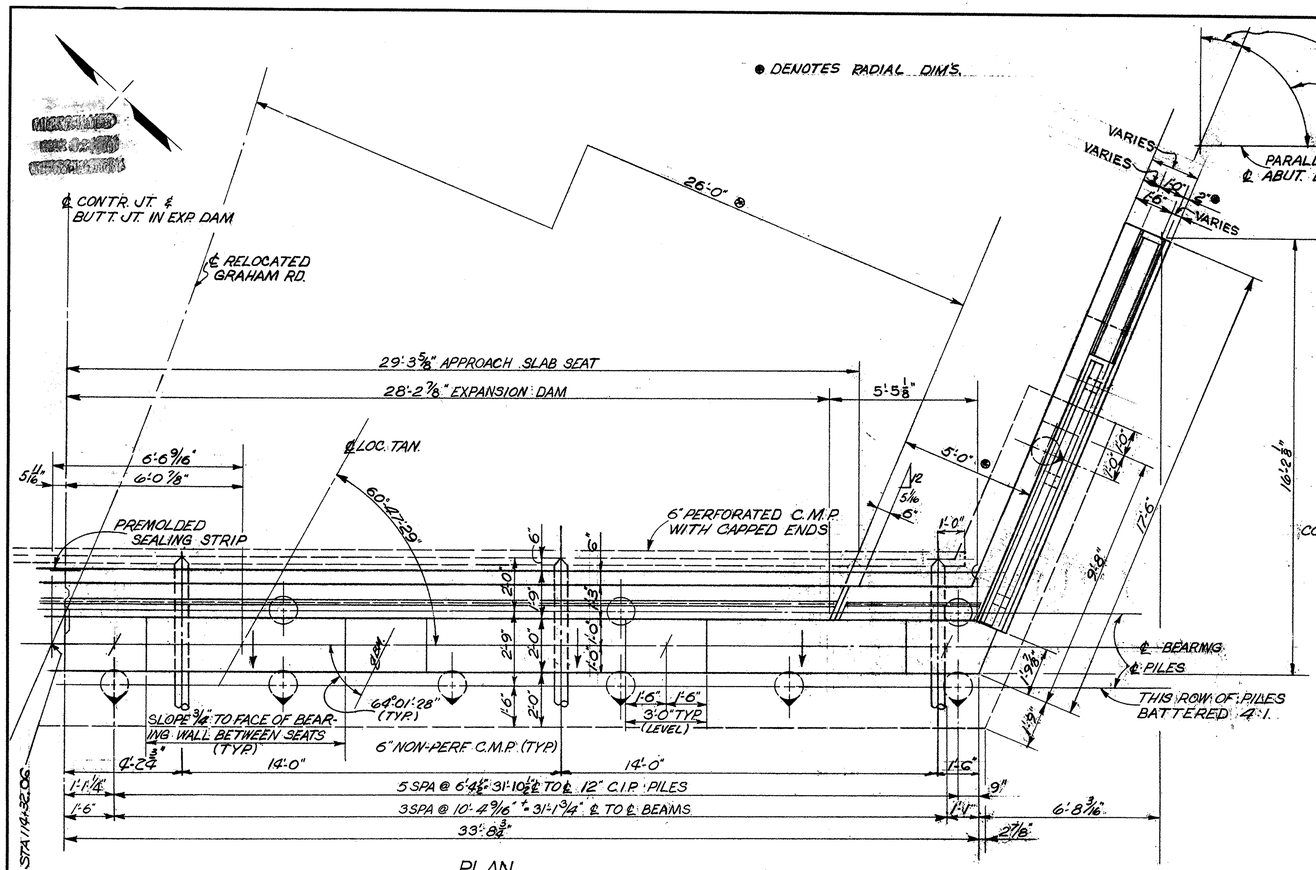

PLAN

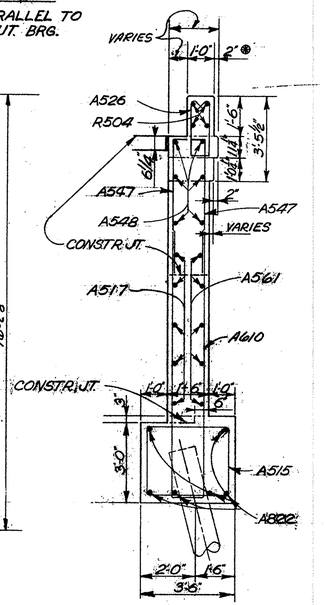

SECTION A-A

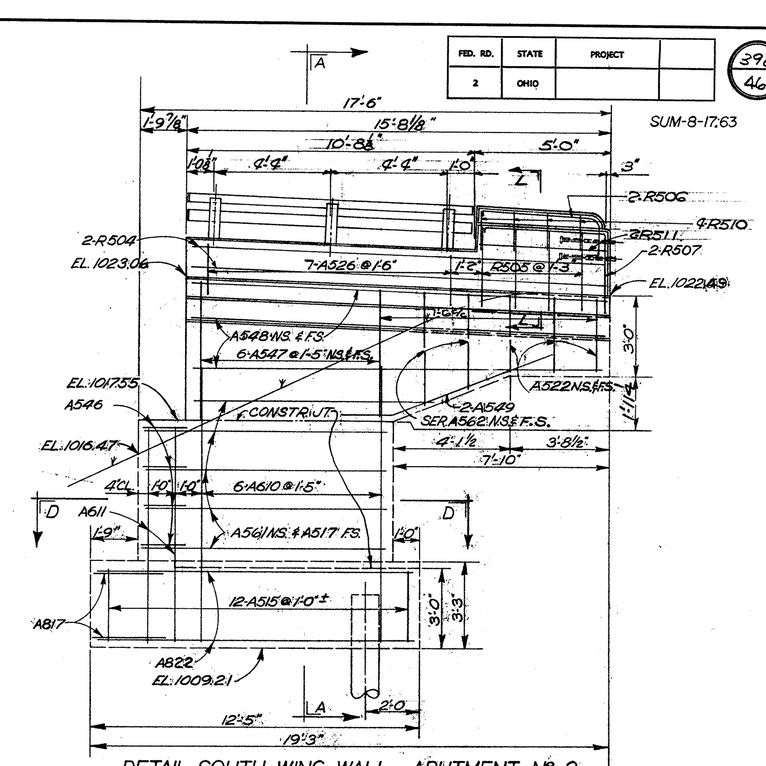

DETAIL SOUTH WING WALL ABUTMENT Nº 2

FOR SECTION 'L-L' SEE SHT 4/12

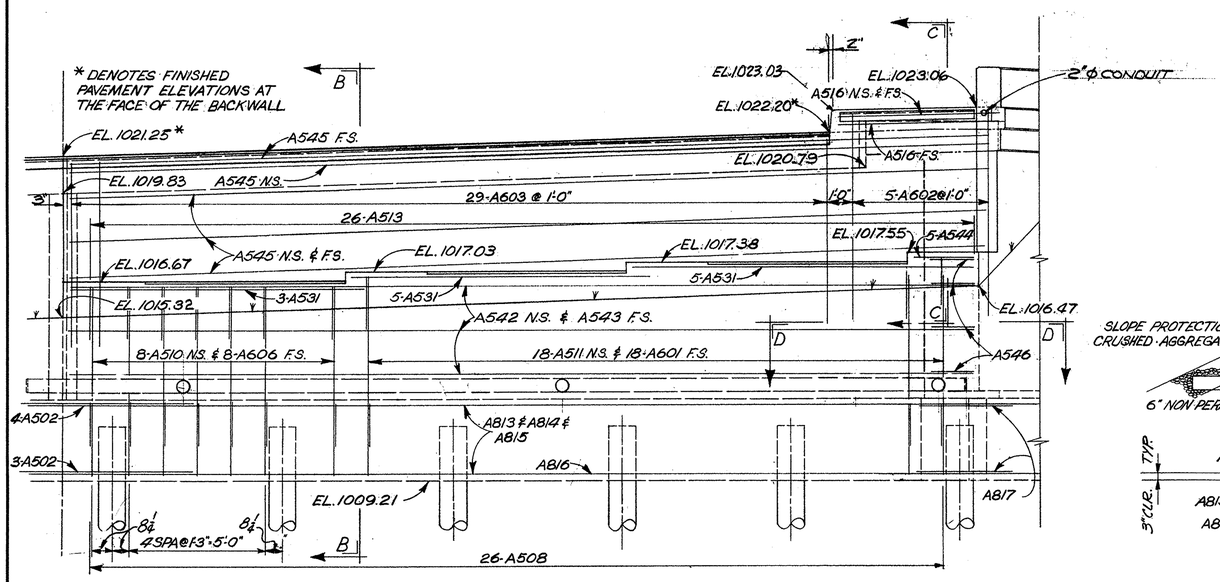

ELEVATION

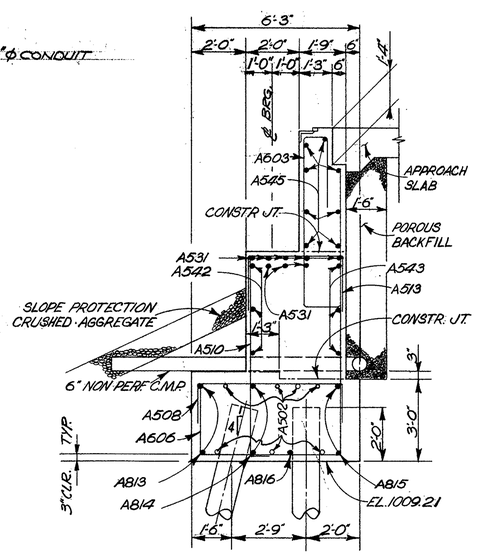

SECTION B-B

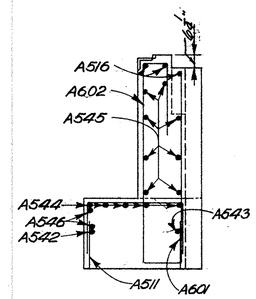

SECTION C-C

SEE SECTION B-B FOR DETAILS NOT SHOWN

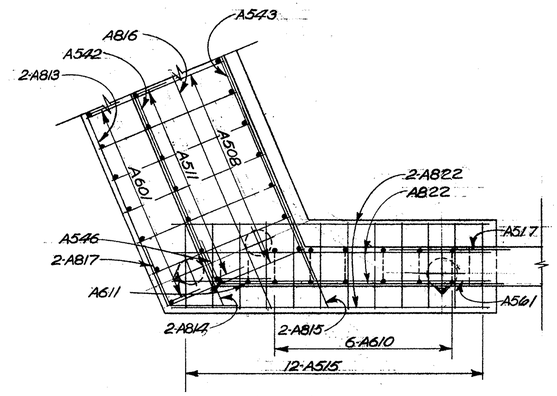

SECTION D-D

STATE OF OHIO
DEPARTMENT OF HIGHWAYS
BUREAU OF BRIDGES

6/12

DALTON · DALTON ASSOCIATES

ABUTMENT Nº2 SOUTH HALF

BRIDGE Nº SUM-8-1950

UNDER RELOCATED GRAHAM RD.

SUMMIT COUNTY CUYAHOGA FALLS EXPRESSWAY

STA 325+86.45

DESIGNED	DRAWN	TRACED	CHECKED	REVIEWED	DATE	REVISED
SPG	R.D.B.		CW 10/2/67	RDH	2-1-68	

MICROFILMED
MAR 02 1970
MICROCOPY

FED. RD.	STATE	PROJECT	
2	OHIO		

399
460

SUM-8-17.63

* DENOTES RADIAL DIMENSIONS

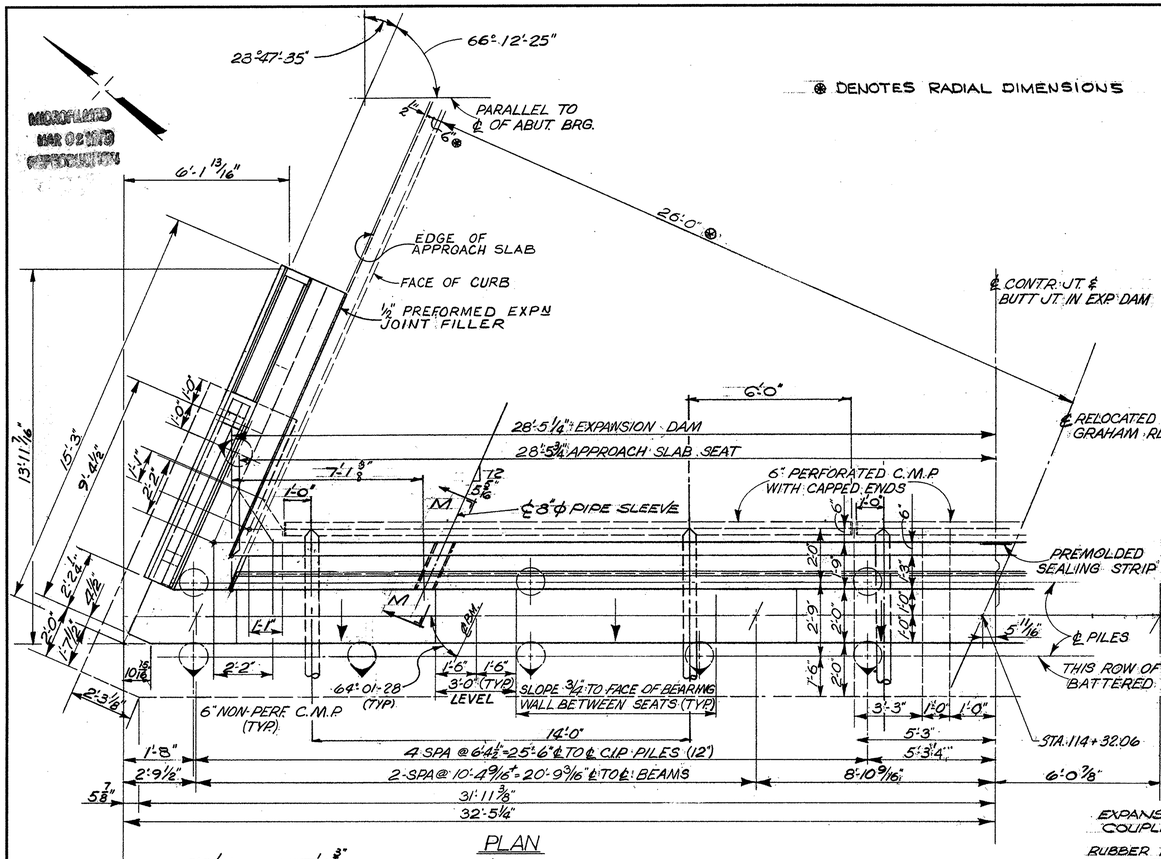

PLAN

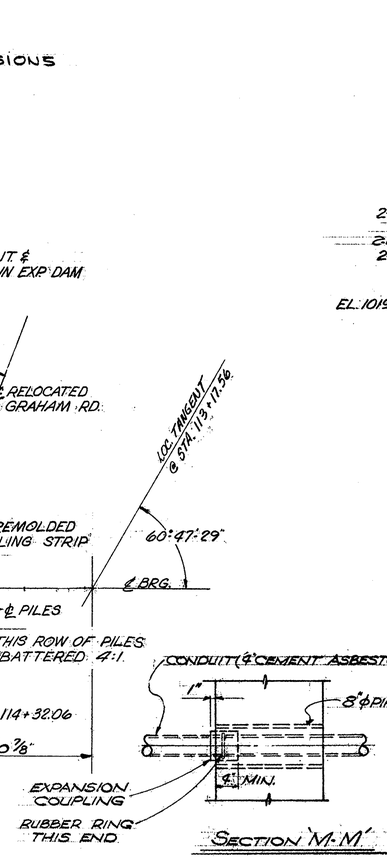

SECTION M-M

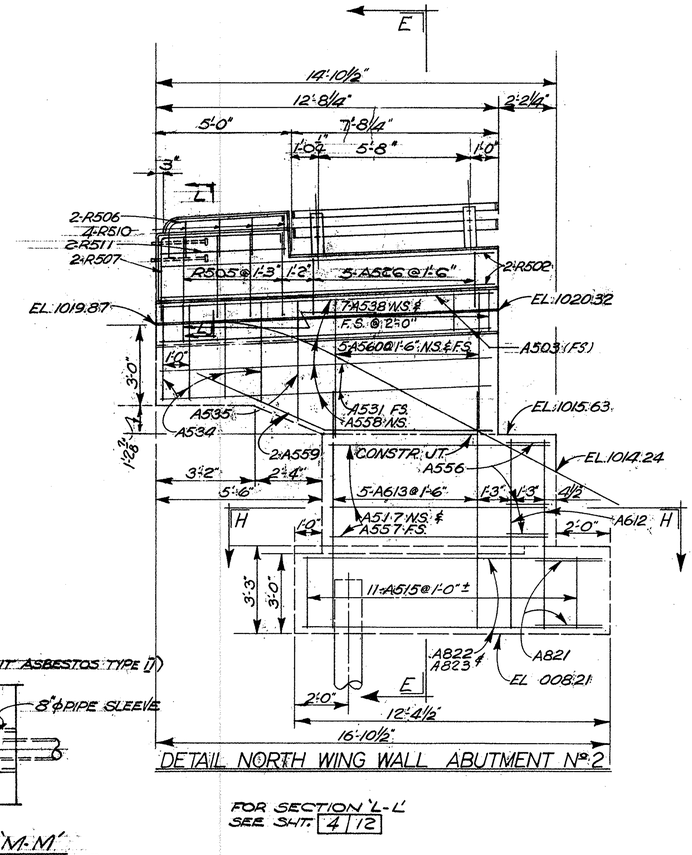

DETAIL NORTH WING WALL ABUTMENT Nº 2

FOR SECTION 'L-L' SEE SHT. 4 12

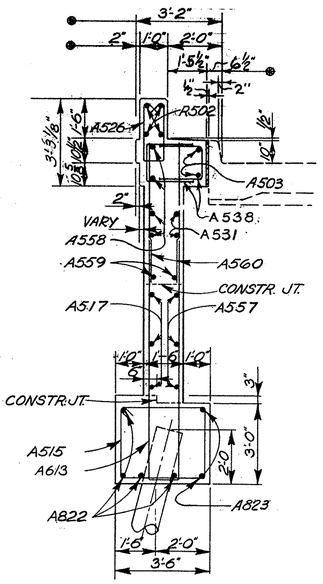

SECTION E-E

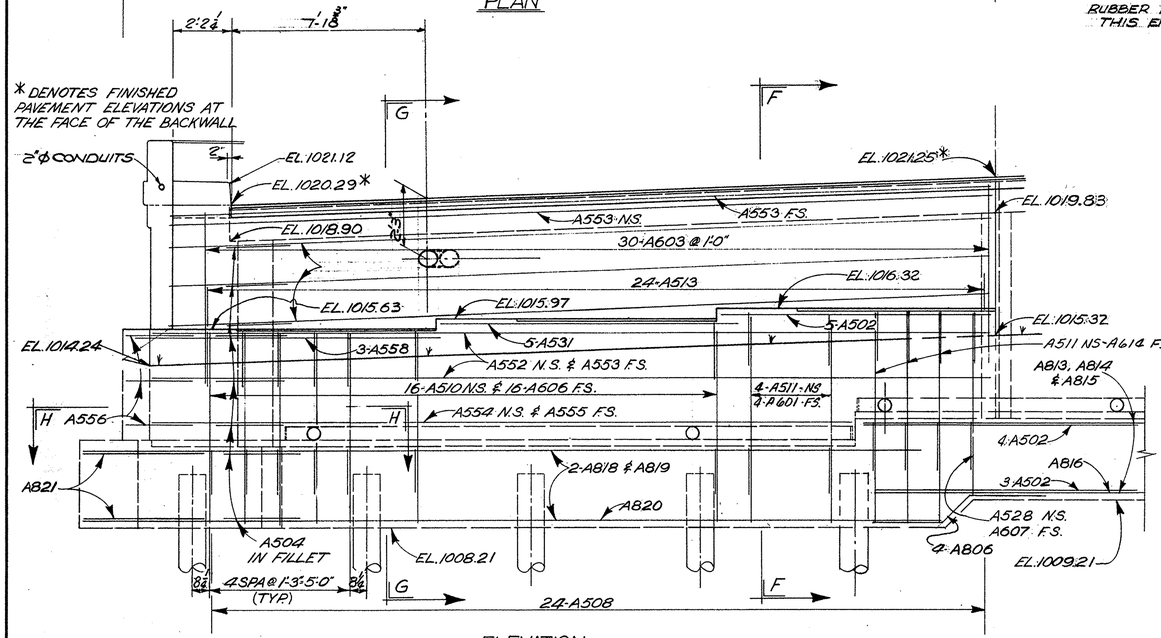

ELEVATION

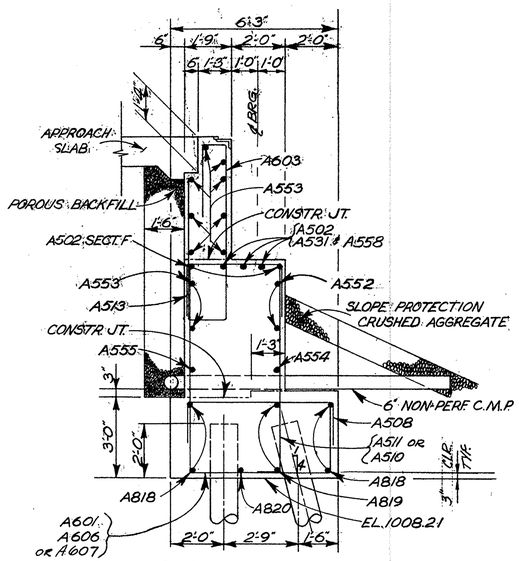

SECTION F-F SHOWN
SECTION G-G SAME EXCEPT AS NOTED

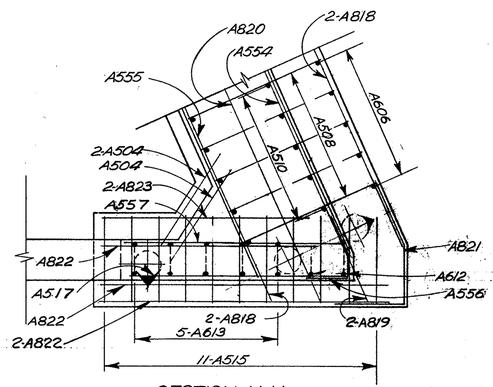

SECTION H-H

STATE OF OHIO
DEPARTMENT OF HIGHWAYS
BUREAU OF BRIDGES

7 12

DALTON · DALTON ASSOCIATES

ABUTMENT Nº 2 NORTH HALF

BRIDGE Nº SUM-8-1950
UNDER RELOCATED GRAHAM RD.
SUMMIT COUNTY CUYAHOGA FALLS EXPRESSWAY
STA 327 + 86.45

DESIGNED	DRAWN	TRACED	CHECKED	REVIEWED	DATE	REVISED
S.P.G.	R.D.B.		C.V.W. 10/24/67	R.D.H.	2-1-68	

FORM DDA-6

FED. RD.	STATE	PROJECT	
2	OHIO		

400
460

SUM-8-17.63

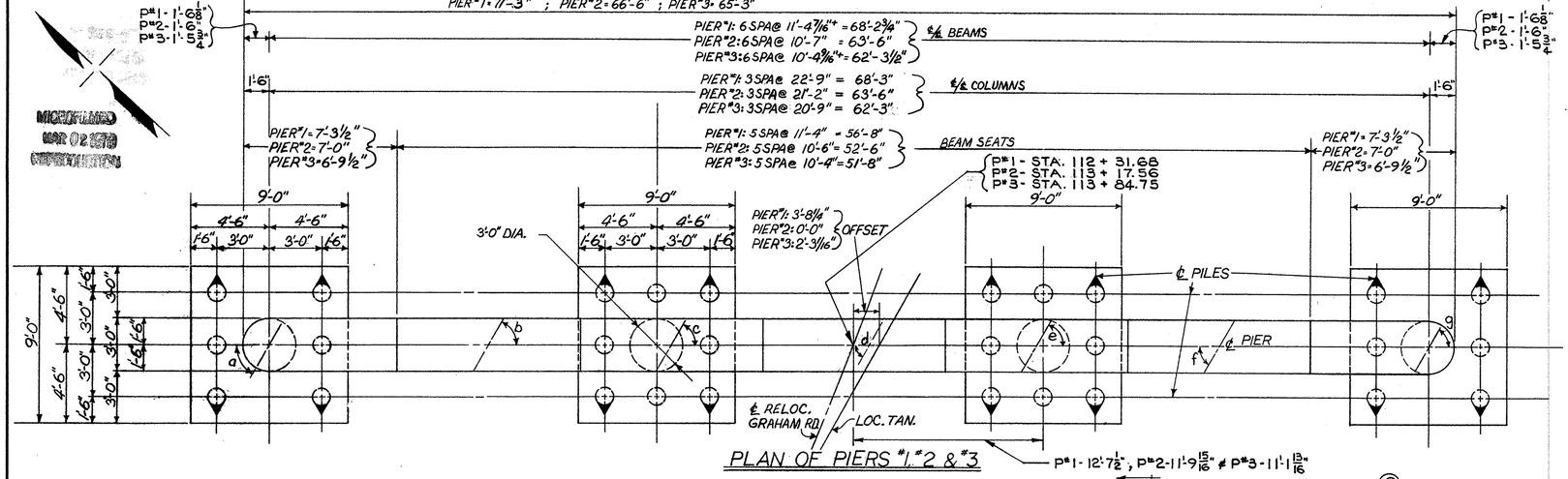

PLAN OF PIERS #1, #2 & #3

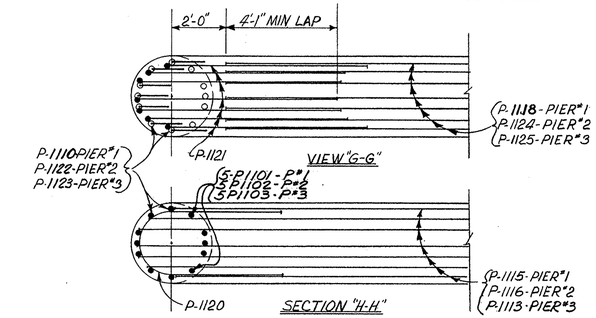

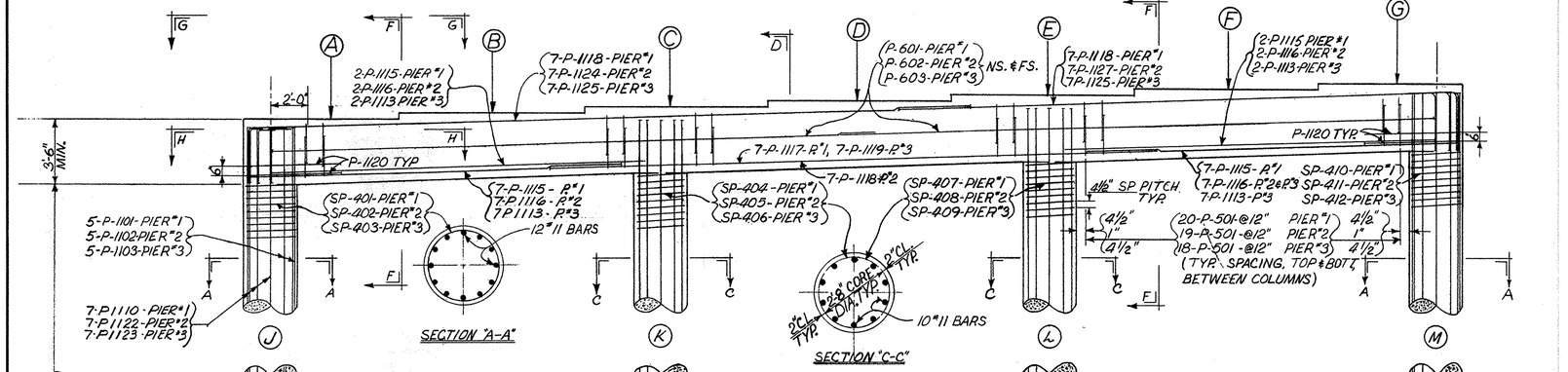

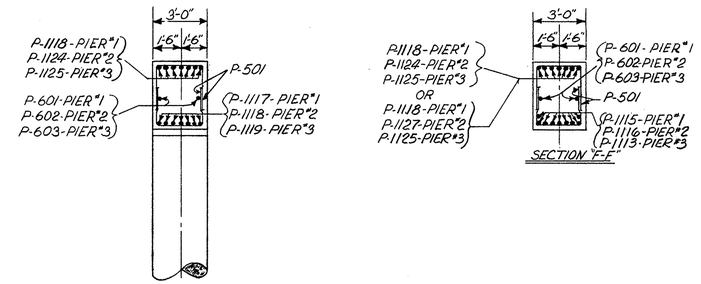

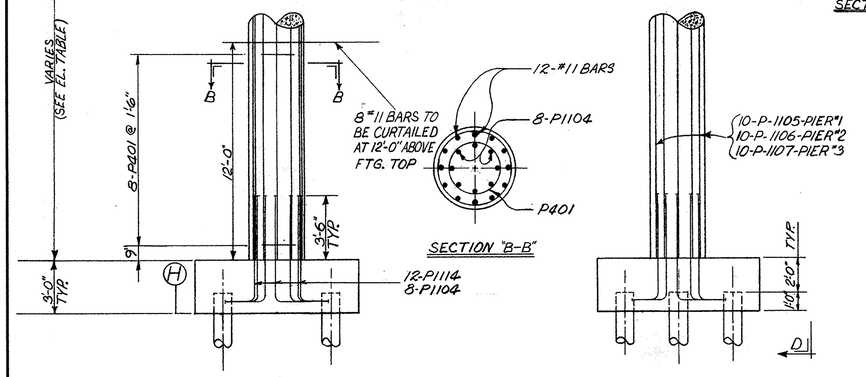

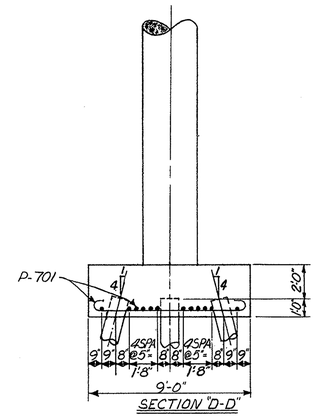

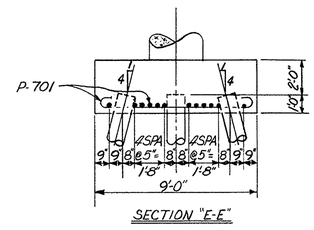

ELEVATION TABLE									COLUMN HEIGHTS			
	A	B	C	D	E	F	G	H	J	K	L	M
PIER#1	1018.96	1019.41	1019.86	1020.30	1020.73	1021.18	1021.48	996.50	15'-8 3/8"	16'-7 1/8"	17'-5 3/4"	18'-4 7/16"
PIER#2	1017.99	1018.37	1018.75	1019.13	1019.51	1019.89	1020.17	997.50	13'-9"	14'-6 1/4"	15'-3 1/2"	16'-0 3/4"
PIER#3	1016.52	1016.88	1017.24	1017.59	1017.95	1018.31	1018.57	997.50	12'-3 7/8"	13'-0 1/4"	13'-8 7/8"	14'-5 1/2"

	a	b	c	d	e	f	g
PIER#1			55°-09'-53" TYPICAL				
PIER#2	57°-50'-39"	58°-23'-26"	58°-56'-47"	59°-30'-22"	60°-04'-20"	60°-38'-52"	61°-13'-37"
PIER#3			64°-01'-28" TYPICAL				

BRIDGE SEAT REINFORCING: SPECIAL CARE SHALL BE TAKEN IN PLACING REINFORCING STEEL IN THE VICINITY OF THE BRIDGE SEAT SO AS TO AVOID INTERFERENCE WITH THE DRILLING OF ANCHOR BAR HOLES (APPLIES TO PIER #2 ONLY)

STATE OF OHIO
DEPARTMENT OF HIGHWAYS
BUREAU OF BRIDGES

8/12

DALTON · DALTON ASSOCIATES

PIER DETAILS

BRIDGE NO. SUM-8-1950
UNDER RELOCATED GRAHAM RD.
SUMMIT COUNTY CUYAHOGA FALLS EXPRESSWAY
STA 327+86.45

DESIGNED	DRAWN	TRACED	CHECKED	REVIEWED	DATE	REVISED
SPG	RDB		11/2/67	RDH 2-1-68		

FED. RD.	STATE	PROJECT	
2	OHIO		

201/460

SUM-8-17.63

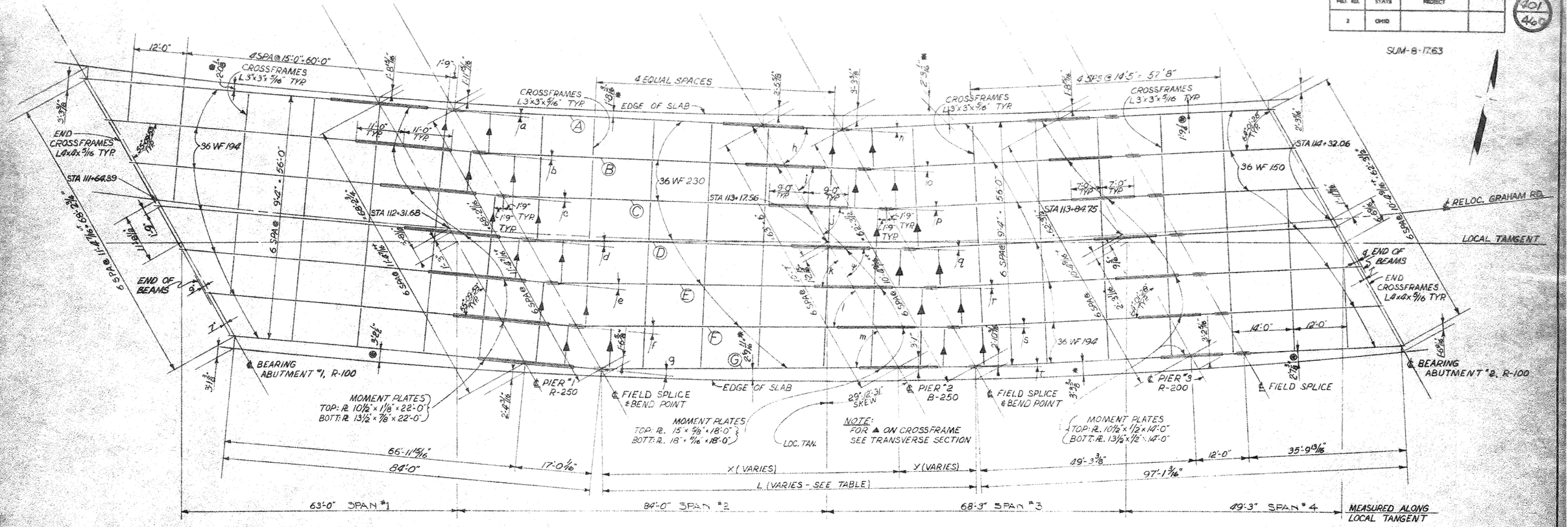

FRAMING PLAN & GEOMETRICS

⊛ OVERHANG MIDPOINT BETWEEN SUPPORTS.
✳ OVERHANG MIDPOINT BETWEEN SUPPORT & SPLICE.

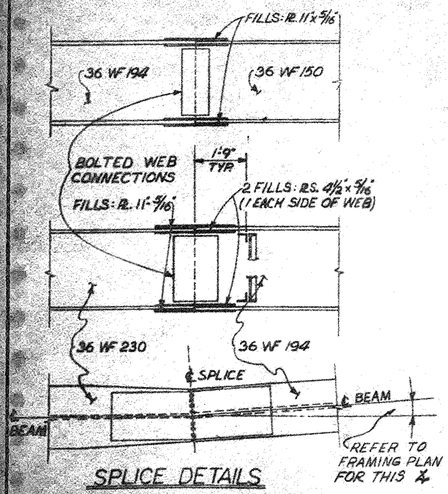

SPLICE DETAILS

(FOR DETAILS & DIM. NOT SHOWN SEE STANDARD DRAWING SD-1-65-SHT. N° 3)

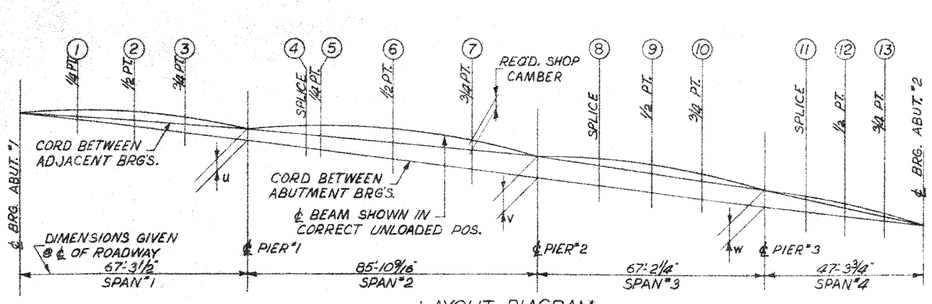

LAYOUT DIAGRAM

BEAM	u	v	w
A	10 9/16"	1'-2 11/16"	8 7/16"
B	10 ½"	1'-2 3/8"	8 3/16"
C	10 ½"	1'-2"	7 15/16"
D	10 7/16"	1'-1 11/16"	7 ¾"
E	10 7/16"	1'-1 3/8"	7 ½"
F	10 3/8"	1'-1"	7 5/16"
G	10 3/8"	1'-0 11/16"	7 1/16"

PT.	ANGLE	PT.	ANGLE
a	2°40'36"	k	60°04'20"
b	3°13'28"	l	60°38'52"
c	3°46'40"	m	61°13'37"
d	4°20'19"	n	6°10'49"
e	4°54'21"	o	5°38'02"
f	5°28'44"	p	5°04'41"
g	6°03'33"	q	4°31'06"
h	57°50'39"	r	3°57'08"
i	58°23'26"	s	3°22'36"
j	58°56'47"	t	2°47'51"
ψ	59°30'22"		

BEAM	X	Y	L
A	70'-1 7/16"	18'-0 3/8"	88'-1 13/16"
B	69'-8 7/16"	17'-11 1/8"	87'-7 9/16"
C	69'-3 9/16"	17'-9 7/8"	87'-1 7/16"
D	68'-10 11/16"	17'-8 5/8"	86'-7 5/16"
E	68'-5 15/16"	17'-7 3/8"	86'-1 5/16"
F	68'-1 5/16"	17'-6 3/16"	85'-7 1/2"
G	67'-8 1/16"	17'-5"	85'-1 1/16"

DEFLECTION & CAMBER

SPAN	SPAN "1			SPAN "2					SPAN "3			SPAN "4		
LOCATION	1/4 PT. (1)	½ PT. (2)	¾ PT. (3)	SPLICE (4)	1/4 PT. (5)	½ PT. (6)	¾ PT. (7)	SPLICE (8)	½ PT. (9)	¾ PT. (10)	SPLICE (11)	½ PT. (12)	¾ PT. (13)	
DEFLECTION DUE TO WEIGHT OF STEEL	1/16"	1/16"	1/16"	1/16"	1/16"	3/16"	1/8"	1/16"	1/16"	1/16"	1/16"	1/16"	1/16"	
DEFLECTION DUE TO REMAINING DEAD LOAD	5/16"	5/16"	1/8"	3/8"	7/16"	11/16"	7/16"	1/16"	3/16"	1/8"	1/16"	3/16"	1/8"	
ADJUSTMENT REQUIRED FOR VERTICAL CURVE	9/16"	13/16"	9/16"	7/8"	1 1/16"	1 3/8"	1 1/16"	1 1/16"	1 5/16"	1 1/16"	5/16"	½"	3/8"	
REQUIRED SHOP CAMBER	15/16"	1 3/16"	¾"	1 5/16"	1 9/16"	2 1/4"	1 5/8"	1 3/16"	1 3/16"	⅞"	7/16"	¾"	9/16"	

SLAB DEPTHS @ ℄ OF BEAMS

BEAM NO	ABUT "1	MID PT SPAN "1	PIER "1	MID PT SPAN "2	PIER "2	MID PT SPAN "3	PIER "3	MID PT SPAN "4	ABUT. "2
A THRU F	8 13/16	8 ½	8 13/16	8 13/16	9 ⅛	8 5/8	8 13/16	9"	9 ⅛
G	8 ½	8 ½	8 ½	8 13/16	8 13/16	8 ½	8 ½	8 13/16	8 13/16

STATE OF OHIO
DEPARTMENT OF HIGHWAYS
BUREAU OF BRIDGES

9/12

DALTON · DALTON ASSOCIATES

FRAMING PLAN & GEOMETRICS
BRIDGE Nº SUM-8-1950
UNDER RELOCATED GRAHAM RD.
SUMMIT COUNTY CUYAHOGA FALLS EXPRESSWAY
STA 327+86.45

DESIGNED	DRAWN	TRACED	CHECKED	REVIEWED	DATE	REVISED
SPG	ROB		10/1/67	EDH	2/1/68	

FED. RD.	STATE	PROJECT	
2	OHIO		

SUM-8-17.63

902
460

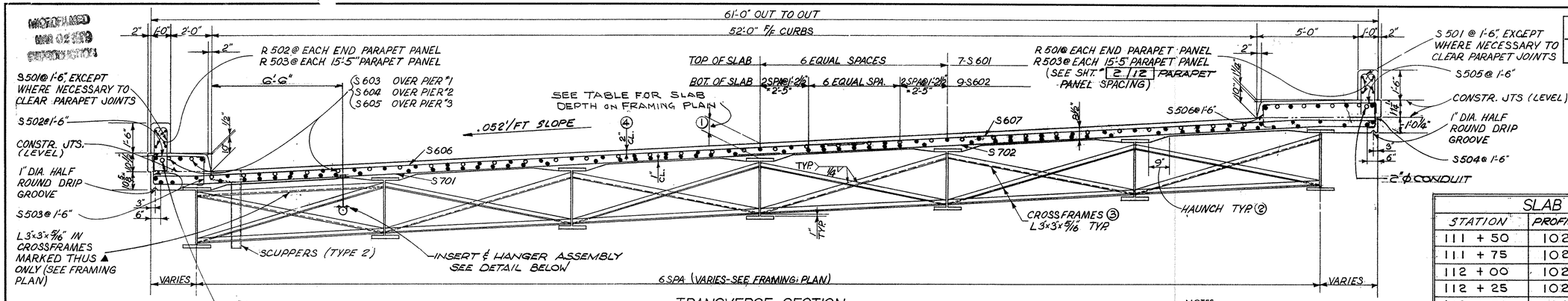

TRANSVERSE SECTION

SCUPPERS including support angles shall be galvanized according to 711.02. The 1½"x½" lateral support bar as shown on SD-1-65 shall be omitted.

NOTES

① THIS IS THE NOMINAL DIMENSION. THE QUANTITY OF DECK CONCRETE TO BE PAID FOR SHALL BE BASED UPON THIS DIMENSION, EVEN THOUGH DEVIATION FROM IT MAY BE NECESSARY BECAUSE THE TOP FLANGE OF THE BEAM MAY NOT HAVE THE EXACT CAMBER OR CONFORMATION REQUIRED TO PLACE IT PARALLEL TO THE FINISHED GRADE.

② A TYPICAL HAUNCH WIDTH OF 9" SHALL BE USED FOR COMPUTING QUANTITY OF CONCRETE. HOWEVER, THE HAUNCH WIDTH MAY VARY BETWEEN 6" AND 12" PROVIDED THAT THE SLOPE SHALL BE NOT MORE THAN 1:4 FOR A HAUNCH LESS THAN 9" IN WIDTH.

③ INTERMEDIATE CROSSFRAME ANGLES 3 x 3 x 5/16. WELD BOTH SIDES OF VERTICAL LEG AND TOP SIDE OF HORIZONTAL LEG TO BEAM WITH 1/4" CONTINUOUS FILLET WELD.

④ CLEARANCE = 2", WHICH INCLUDES 1" FOR MONOLITHIC WEARING SURFACE.

SLAB ELEVATION TABLE

STATION	PROFILE GRADE	ELEV. "A" ■	ELEV. "B" ■
111 + 50	1025.83	1024.49	——
111 + 75	1025.86	1024.54	——
112 + 00	1025.80	1024.45	1027.18
112 + 25	1025.66	1024.32	1027.03
112 + 50	1025.43	1024.14	1026.79
112 + 75	1025.13	1023.82	1026.53
113 + 00	1024.73	1023.38	1026.14
113 + 25	1024.26	1022.92	1025.62
113 + 50	1023.70	1022.36	1025.06
113 + 75	1023.09	1021.71	1024.43
114 + 00	1022.33	1021.00	1023.69
114 + 25	1021.53	——	1022.89

■ THE ELEVATIONS SHOWN ARE THOSE WHICH ARE REQUIRED BEFORE THE CONCRETE DECK IS POURED. PROPER ALLOWANCE HAS BEEN MADE FOR THE DEAD LOAD DEFLECTIONS CAUSED BY THE WEIGHT OF CONCRETE.

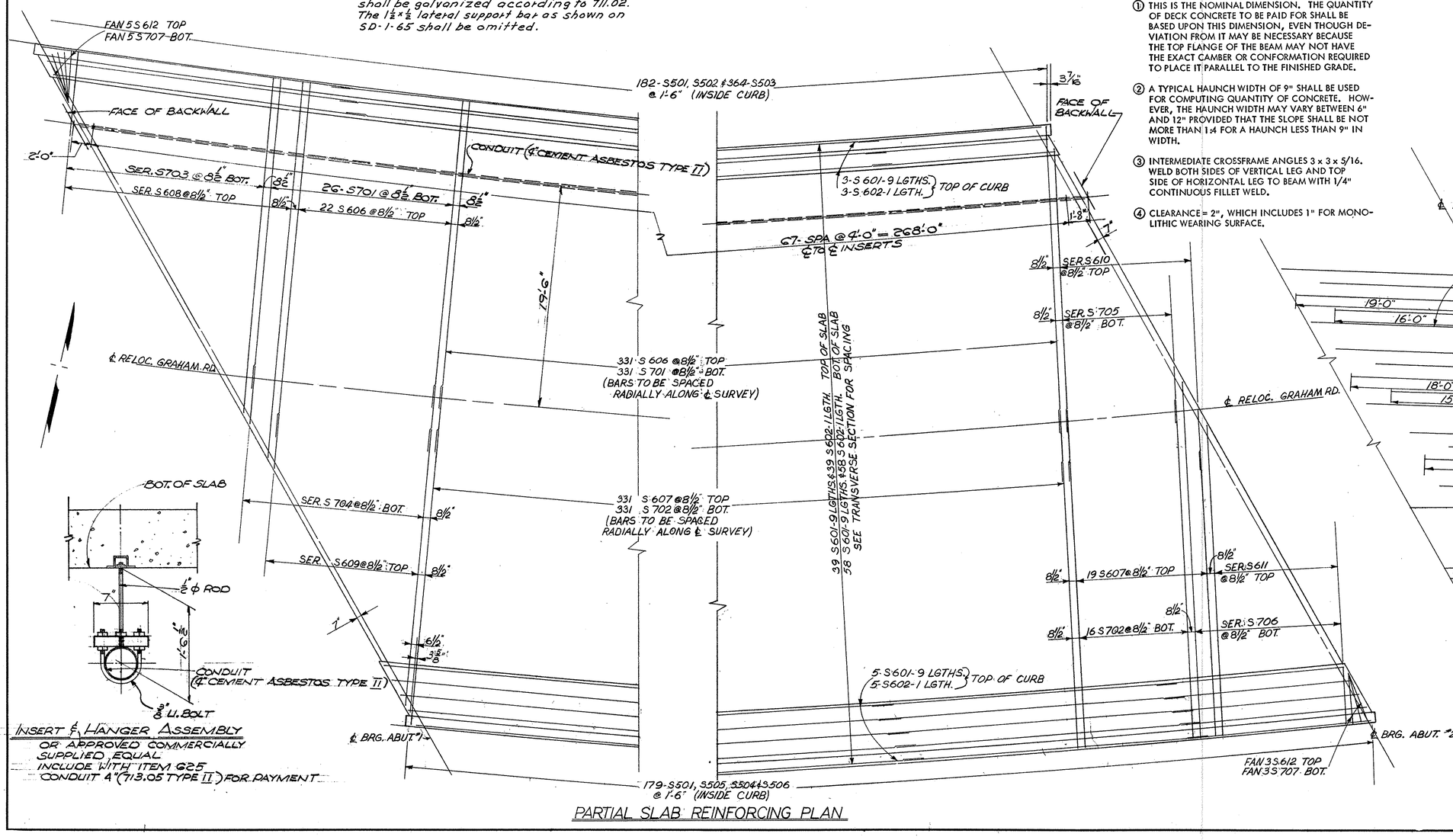

PARTIAL SLAB REINFORCING PLAN

INSERT & HANGER ASSEMBLY
OR APPROVED COMMERCIALLY SUPPLIED EQUAL
INCLUDE WITH ITEM 525 CONDUIT 4" (713.05 TYPE II) FOR PAYMENT

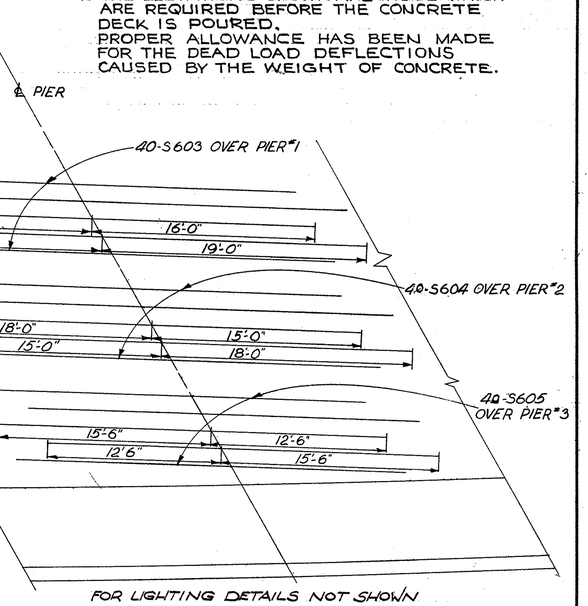

FOR LIGHTING DETAILS NOT SHOWN SEE LIGHTING PLANS

SEE SHT. 2 / 12 FOR LOCATION OF LIGHT SUPPORTS

STATE OF OHIO
DEPARTMENT OF HIGHWAYS
BUREAU OF BRIDGES

10 / 12

DALTON · DALTON ASSOCIATES

SLAB DETAILS

BRIDGE Nº SUM-8-1950
UNDER RELOCATED GRAHAM ROAD
SUMMIT COUNTY CUYAHOGA FALLS EXPRESSWAY
STA 327+86.45

DESIGNED	DRAWN	TRACED	CHECKED	REVIEWED	DATE	REVISED
S PG	RDB		C U W 12/12/67	R B H	2-1-68	

MARK	NO. REQ'D.	LENGTH	TYPE	DIMENSIONS A	B	C	D	SERIES INCR.	WEIGHT LBS.
ABUTMENTS									
A501	4	8'-0"	1	6"	7'-8"				33
A502	30	10'-0"	ST.						313
A503	22	11'-9"	ST.						270
A504	22	4'-0"	ST.						92
A505	4	7'-0"	ST.						29
A506	3	38'-6"	ST.						120
A507	3	36'-6"	ST.						114
A508	105	8'-4"	3	5'-5"	1'-7"				913
A509	3	13'-6"	ST.						42
A510	49	7'-4"	1	6"	6'-11"				375
A511	51	7'-10"	1	6"	7'-5"				417
A512	16	37'-0"	ST.						617
A513	105	7'-2"	3	3'-5	2'-0"				785
A514	4	3'-8"	22	1'-7"	8"	11"			15
A515	49	11'-7"	14	2'-7"	3'-0"	6"			592
A516	6	6'-0"	ST.						38
A517	13	9'-0"	ST.						122
A518	6	14'-6"	ST.						91
A519	10	5'-7"	1	6"	5'-3"				58
A521	2	9'-6"	12	8'-0"	1'-7"	8"			20
A522	10	2'-11"	1	6"	2'-7"				30
SERA524	2OF3	3'-5" / 5'-1"	1	6"	3'-1" / 4'-9"			10"	26
A526	28	5'-7"	5	8"	2'-2"	5"		1.63	163
A527	3	35'-4"	ST.						111
A528	1	7'-0"	1	6"	6'-8"				7
A529									—
A530	4	3'-1"	12	1'-7"	1'-7"	1'-3"			13
A531	23	11'-0"	ST.						264
A532	1	6'-3"	3	1'-2"	2'-8"				7
A533	1	5'-6"	1	2'-8"	3'-0"				6
A534	7	7'-8"	3	1'-2"	3'-5"				56
A535	2	10'-1"	3	1'-2"	4'-7"				21
A536	8	17'-8"	ST.						147
A537	1	8'-11"	3	1'-2"	4'-0"				9
A538	32	4'-10"	3	1'-5"	1'-10"				161
A539	1	24'-2"	ST.						25
A5420	3	38'-0"	ST.						119
A5421	14	5'-3"	ST.						77
A5422	3	33'-4"	ST.						104
A5423	3	34'-6"	ST.						108
A5424	5	2'-3"	ST.						12
A5425	8	34'-0"	ST.						284
A5426	4	3'-0"	12	1'-7"	1'-7"	1'-6"			13
A5427	12	5'-4"	1	6"	5'-0"				66
A5428	6	15'-3"	ST.						95
A5429	2	7'-6"	12	1'-7"	6'-0"	2'-7"			16
A551	2	7'-6"	12	1'-7"	6'-0"	2'-3"			16
A552	2	31'-4"	ST.						65
A553	10	30'-8"	ST.						320
A554	1	26'-1"	ST.						27
A555	1	25'-0"	ST.						26
A556	3	2'-3"	22	1'-7"	8"	8"			7
A557	3	8'-2"	ST.						26
A558	11	12'-3"	ST.						141
A559	2	12'-0"	12	8'-10"	4'-0"	1'-10"			25
A560	10	5'-0"	ST.						52
A561	5	9'-4"	ST.						49
SERA562	2OF2	3'-10" / 4'-6"	1	6	3'-6" / 4'-2"			8"	17
A601	48	15'-2"	4	7'-5	5'-5"	2'-7"			1093
A602	11	20'-0"	7	7'-6"	1'-5"	8'-0"	11"		330
A603	126	17'-2"	7	5'-8"	1'-5"	7'-0"	11"		3249
A604	2	8'-10"	1	1'-2"	7'-9"				27
A605	5	20'-3"	3	1'-2"	9'-8"				152
A606	49	14'-8"	4	6'-11"	5'-5"	2'-7"			1079
A607	1	14'-5"	4	6'-8"	5'-5"	2'-7"			22
A608	2	8'-2"	1	1'-2"	7'-2"				25
A609	7	18'-11"	3	1'-2"	9'-0"				199
A610	6	20'-7"	3	1'-2"	9'-10"				185
A611	2	8'-11"	1	1'-2"	7'-11"				27
A612	2	8'-0"	1	1'-2"	7'-0"				24
A613	5	18'-5"	3	1'-2"	8'-9"				138
A614	7	16'-6"	4	7'-8"	5'-5"	3'-8"			173
AB01	3	26'-10"	ST.						215
AB02	2	28'-3"	ST.						151
AB03	3	25'-6"	ST.						204
AB04	7	27'-0"	ST.						505
AB05	2	7'-11"	22	3'-1"	2'-1"	1'-10"			42
AB06	12	6'-6"	11	2'-6"	1'-8"	2'-6"	1'-2"		208
AB07	8	11'-5"	ST.						244
AB08	2	23'-4"	ST.						125
AB09	2	24'-3"	ST.						129
AB10	2	27'-2"	ST.						145
AB11	2	4'-10"	12	2'-6"	2'-6"	2'-0"			26
AB12	4	14'-6"	ST.						155
AB13	2	38'-10"	ST.						207
AB14	2	39'-8"	ST.						212
AB15	2	41'-0"	ST.						219
AB16	1	40'-3"	ST.						107
AB17	2	4'-10"	12	2'-6"	2'-6"	2'-4"			26
AB18	4	29'-9"	ST.						318
AB19	2	31'-2"	ST.						166
AB20	1	30'-5"	ST.						81
AB21	2	6'-9"	22	2'-6"	2'-0"	1'-0"			36
AB22	10	12'-0"	ST.						320
AB23	2	9'-8"	ST.						52
TOTAL ABUTMENTS									18,383
PIERS									
P401	48	7'-8"	23	7'-8"	1'-0½				246
P501	342	7'-7"	3	2'-8"	2'-7"				2705
P601	4	35'-1"	ST.						211
P602	4	32'-9"	ST.						197
P603	4	32'-2"	ST.						193
P701	288	10'-2"	2	10"	8'-6"				5985
P1101	5	18'-9"	ST.						498
P1102	15	16'-10"	ST.						1342
P1103	5	15'-4"	ST.						407
P1104	48	15'-6"	1	1'-0"	14'-9"				3953
P1105	10	19'-8"	ST.						1045
P1106	15	17'-6"	ST.						1395
P1107	10	16'-1"	ST.						855
P1108	10	20'-3	ST.						1076
P1109	10	18'-4"	ST.						974
P1110	7	19'-11"	1	1'-0"	19'-2"				741
P1111	5	21'-3"	ST.						565
P1112	5	19'-0"	ST.						505
P1113	18	19'-2"	ST.						1833
P1114	132	7'-0"	1	1'-0"	6'-3"				4909
P1115	18	21'-2"	ST.						2024
P1116	18	19'-7"	ST.						1873
P1117	7	35'-5"	ST.						1317
P1118	21	40'-8"	1	3'-4"	37'-6"				3784
P1119	7	33'-5"	ST.						1243
P1120	12	10'-8"	9	3'-6"	3'-8"	1'-2"			680
P1122	7	17'-11"	1	1'-0"	17'-2"				666
P1123	7	16'-6"	1	1'-0"	15'-9"				614
P1124	7	39'-10"	1	3'-4"	36'-9"				1286
P1125	14	37'-7"	1	3'-4"	34'-6"				2300
P1127	7	36'-7"	1	3'-4"	33'-6"				834
P1128	7	20'-0"	1	1'-0"	19'-3"				1057
P1129	7	18'-9"	1	1'-0"	18'-0"				744
SPIRALS TOTAL									697
TOTAL PIERS									3370
									53,870

MARK	NO. REQ'D.	LENGTH	TYPE	DIMENSIONS A	B	C	D	SERIES INCR.	WEIGHT LBS.
SUPERSTRUCTURE									
S501	361	5'-7"	5	8"	2'-2"	5"			2102
S502	182	3'-3"	3	2'-6"	6"				617
S503	364	2'-1"	3	1'-4"	6"				791
S504	179	2'-3"	3	1'-6"	6"				420
S505	179	6'-3"	3	5'-6"	6"				1167
S506	179	2'-0"	3	1'-3"	6"				373
S507	4	10'-9"	24	2'-0"	2'-11"	1'-3"	2'-1"		45
S601	945	30'-0"	ST.						42582
S602	105	18'-8"	ST.						2944
S603	40	35'-0"	ST.						2103
S604	40	33'-0"	ST.						1983
S605	40	28'-0"	ST.						1682
S606	353	35'-10"	ST.						18999
S607	350	26'-9"	ST.						14062
SER S608	1-OF 32	7'-5" / 37'-11"	ST.					11½"	1070
SER S609	1-OF 22	4'-7" / 25'-1"	ST.					1'-0"	498
SER S610	1-OF 19	5'-6" / 34'-0"	ST.					1'-7"	564
SER S611	1-OF 15	6'-3" / 28'-5"	ST.					1'-7"	391
S612	32	6'-3"	ST.						300
S613	4	10'-1"	14	2'-11"	2'-1"	4			61
S701	357	31'-4"	ST.						22864
S702	347	31'-7"	ST.						22401
SER S703	1-OF 28	7'-5" / 33'-11"	ST.					11½"	1167
SER S704	1-OF 26	5'-0" / 30'-0"	ST.					1'-0"	930
SER S705	1-OF 16	5'-9" / 29'-6"	ST.					1'-7"	576
SER S706	1-OF 18	6'-3" / 33'-1"	ST.					1'-7"	724
S707	8	6'-3"	ST.						102
TOTAL SUPERSTRUCTURE									141,588
RAILING ⊗									
R501	8	9'-10"	ST.						
R502	12	12'-2"	ST.						
R503	128	15'-1"	ST.						
R504	4	15'-2"	ST.						
R505	16	7'-7"	5	8"	3'-2"	5"			
R506	8	6'-7"	20						
R507	8	8'-3"	19						
R508	4	14'-5"	ST.						
R509	4	17'-7"	ST.						
R510	16	3'-3"	25						
R511	8	4'-8"	ST.						
R512	4	10'-9"	24	2'-0"	2'-11"	1'-3"	2'-1"		
REPLACEMENT BARS									
RE-401	1	6'-3"	10						407
RE-501	1	6'-6"	ST.						3953
RE-601	5	7'-0"	ST.						1045
RE-701	3	7'-3"	ST.						1395
RE-801	1	7'-6"	ST.						855
RE-901		7'-10"							1076
RE-1001		8'-3"							974
RE-1101	3	8'-9"	ST.						741

SPIRAL REINFORCING SCHEDULE

MARK	NO. REQ'D.	CORE DIA. OF SPIRAL	LENGTH OF SPIRAL	PITCH	NO. OF TURNS	WEIGHT LBS.
SP401	1	2'-8"	15'-8⅜"	4½"	45	290
SP402	1	2'-8"	13'-9"	4½"	40	258
SP403	1	2'-8"	12'-3⅜"	4½"	36	232
SP404	1	2'-8"	16'-7⅛"	4½"	47	304
SP405	1	2'-8"	14'-6¼"	4½"	42	271
SP406	1	2'-8"	13'-0⅛"	4½"	38	245
SP407	1	2'-8"	17'-5⅜"	4½"	50	323
SP408	1	2'-8"	15'-3½"	4½"	44	284
SP409	1	2'-8"	13'-8⅞"	4½"	40	258
SP410	1	2'-8"	18'-4⅞"	4½"	52	337
SP411	1	2'-8"	16'-0⅜"	4½"	46	297
SP412	1	2'-8"	14'-5⅛"	4½"	42	271
TOTAL SPIRALS						3370

GRAND TOTAL 213,841 LBS.

⊗RAILING REINFORCEMENT BARS WILL BE INCLUDED AS PART OF ITEM 517 FOR PAYMENT.

FED. RD.	STATE	PROJECT	
2	OHIO		

403 / 460

SUM-8-17.63

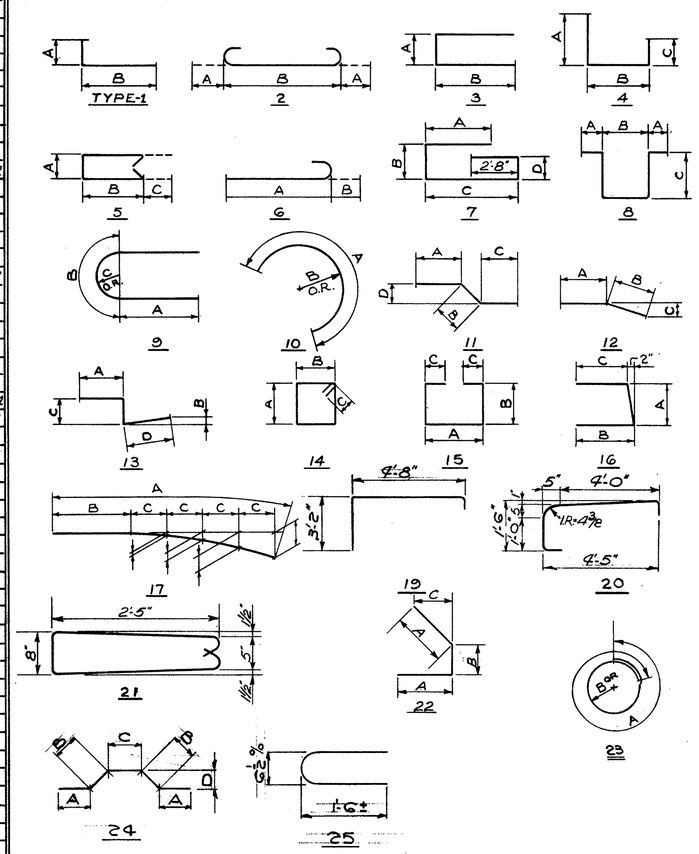

REINFORCING NOTES

THE LENGTH SHOWN IN THE STEEL SCHEDULE FOR THE SPIRAL BARS IS TH. DISTANCE FROM THE TOP OF THE FOOTING TO THE BOTTOM OF THE PIER CAP. THE NUMBER OF TURNS SHOWN IN THE STEEL SCHEDULE FOR SPIRAL BARS IS THE LENGTH DIVIDED BY THE PITCH PLUS THREE TURNS (TOTAL NUMBER OF CLOSED COILS) EXPRESSED AS THE NEAREST WHOLE NUMBER. SPIRAL REINFORCING BARS SHALL NOT HAVE DEFORMATIONS, BUT SHALL IN OTHER RESPECTS CONFORM TO ITEM 509. ONE AND ONE HALF CLOSED COILS SHALL BE PROVIDED AT THE ENDS OF EACH SPIRAL UNIT. FOUR (4) STEEL CHANNEL, TEE OR ANGLE SPACERS WEIGHING APPROX. 0.68 LBS. PER LINEAL FT. OF SPACERS SHALL BE PROVIDED FOR EACH SPIRAL UNIT. THEY SHALL BE EQUALLY SPACED ALONG THE PERIPHERY OF EACH COIL. THE NUMBER OF POUNDS OF THESE SPACERS BASED ON 0.68 LBS. PER LINEAL FT. WILL BE PAID FOR AS REINFORCING STEEL AND IS INCLUDED IN THE TABULATED QUANTITY OF SPIRAL BARS.

BAR SIZE IS INDICATED IN THE BAR MARK. THE FIRST DIGIT WHERE THREE DIGITS ARE USED AND THE FIRST TWO DIGITS WHERE FOUR DIGITS ARE USED INDICATE THE BAR SIZE NUMBER. A-601 IS A NO. 6 SIZE BAR AND P-1001 IS A NO. 10 SIZE BAR.

STATE OF OHIO
DEPARTMENT OF HIGHWAYS
BUREAU OF BRIDGES

11/12

DALTON · DALTON ASSOCIATES

REINFORCING SCHEDULE

BRIDGE Nº SUM-8-1950
UNDER RELOCATED GRAHAM RD.
SUMMIT COUNTY CUYAHOGA FALLS EXPRESSWAY
STA 327+86.45

DESIGNED	DRAWN	TRACED	CHECKED	REVIEWED	DATE	REVISED
SPG	R.D.B.		11/9/67	RDH	2-1-68	

FED. RD.	STATE	PROJECT	
2	OHIO		

404
460

SUM-8-17.63

STA. 111+17.11
GUTT. EL. 1024.32
TOP OF CURB EL. 1024.82

TOP OF CURB EL. 1025.19

SERIES AS 802 @ 4"

STA. 111+41.39
GUTT. EL. 1024.45
TOP OF CURB EL. 1025.29

27 SPA @ 1'-0" = 27'-0"
28 - 1"ϕ x 18" DOWELS

26-AS 801

AS 505

20°

1"ϕ x 18" DOWELS

LB

3-SPA @ 4'-6" = 13'-6" ℄ TO ℄ JACKING HOLES

℄ RELOC. GRAHAM RD.

AS 807

STA. 111+36.57
EL. 1025.79

END APPROACH SLAB
STA. 111+61.57
EL. 1025.86

17-AS 503

120°

29 SPA @ 1'-0" = 29'-0"
30 - 1"ϕ x 18" DOWELS

LOC. TANG.

1C-ALT. SPA @ 3'-0" = 48'-0"
℄ TO ℄ JACKING HOLES

16 AS 501 (℄ LENGTHS)

AS 504

1"ϕ x 18" DOWELS

TOP OF CURB EL. 1028.05

SERIES AS 803

STA. 111+54.98
GUTT. EL. 1027.20
TOP OF CURB EL. 1027.75

BEGIN APPROACH SLAB
STA. 114+34.51
EL. 1021.20

60°-47'-29" TO LOC. TANG.

28°-12'-31" SKEW

LONGITUDINAL SAW CUTS 3" DEEP SEE SAWED JOINT ON CONSTRUCTION DWG. BP-3

STA. 327+86.45 ℄ S.R.8
STA. 113+17.56 ℄ RELOC. GRAHAM RD.
STA. 111+80.61
GUTT. EL. 1027.20
TOP OF CURB EL. 1028.04

℄ ABUT. #1 BRG.

½" PREFORMED EXPANSION JOINT FILLER

STA. 114+22.98
GUTT. EL. 1020.24
TOP OF CURB EL. 1021.07

117'-6½" TYP.

SERIES AS 805 @ 4"

1"ϕ x 18" DOWELS

TOP OF CURB EL. 1020.70

STA. 114+49.52
GUTT. EL. 1019.80
TOP OF CURB EL. 1019.80

25 SPA @ 1'-0" = 25'-0"
26 - 1"ϕ x 18" DOWELS

1C-ALT. SPA @ 3'-0" = 48'-0"
℄ TO ℄ JACKING HOLES

18-AS 502

36-AS 804

114'-5½" (TYP.)

3-SPA @ 4'-6" = 13'-6" ℄ TO ℄ JACKING HOLES

AS 507

STA. 114+59.51
EL 1020.27

1"ϕ x 18" DOWELS

℄ RELOC. GRAHAM RD.

AS 807

AS 506

120°

18 AS 506

22 SPA @ 1'-0" = 22'-0"
23 - 1"ϕ x 18" DOWELS

℄ ABUT. #2 BRG.

TOP OF CURB EL. 1022.38

1"ϕ x 18" DOWELS

SERIES AS 806 @ 4"

STA. 114+69.04
GUTT. EL. 1021.25
TOP OF CURB EL. 1021.75

STA. 114+45.46
GUTT. EL. 1022.15
TOP OF CURB EL. 1022.99

PLAN

REINFORCING STEEL SCHEDULE

MARK	Nº REQ'D.	LENGTH	TYPE	DIMENSIONS A	B	C	D	SERIES INCR	WEIGHT
AS 501	50	30'-0"	ST.						1564
AS 502	18	28'-10"	ST.						541
AS 503	17	10'-2"	ST.						180
AS 504	1	30'-0"	3	27'-7"	2'-6"	1'-6"			31
AS 505	1	30'-0"	3	28'-1"	2'-0"	1'-3"			31
AS 506	1	30'-0"	3	28'-3"	1'-10"	8½"			31
AS 507	1	27'-9	3	25'-3"	2'-7"	1'-0"			29
AS 801	96	25'-7"	1	24'-6"	1'-1"				6558
SERIES AS 802	1 SET OF 7 BARS	24'-0" TO 25'-7½"	1	22'-11" TO 24'-6½"	1'-1"			3¼"	464
SERIES AS 803	1 SET OF 7 BARS	25'-4" TO 26'-10"	1	24'-3" TO 25'-9"	1'-1"			3	487
AS 804	96	25'-5"	1	24'-4"	1'-1"				6515
SERIES AS 805	1 SET OF 7 BARS	25'-9" TO 26'-0"	1	24'-8" TO 25'-5"	1'-1"			1½"	488
SERIES AS 806	1 SET OF 7 BARS	24'-6" TO 25'-3"	1	23'-5" TO 24'-2"	1'-1"			1½"	465
AS 807	2	5'-9"	2	3'-0"	3'-0"				31
	119	1" DIA. x 1'-6" DOWELS							477
TOTAL (TWO APPROACH SLAB)									17892

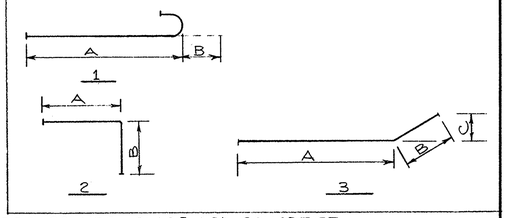

295- SQ YDS CLASS "C" CONCRETE.

NOTE - BAR SIZE IS INDICATED IN THE BAR MARK, THE FIRST DIGIT INDICATES THE BAR SIZE. FOR EXAMPLE AS-801 IS A Nº 8 SIZE BAR.

FOR DETAILS & NOTES NOT SHOWN HERE SEE STD. DWG. AS-1-67

19'-9½" SEC. "AA" & "BB"
23'-0⅝" SEC. "CC" & "DD"

4¼" SEC. "AA" & "BB"
4⅝" SEC. "CC" & "DD"

16 AS 501 SEC. "A-A" & 18 AS 501 SEC. "CC"; 18 AS 502 SEC. "DD"

17 AS 503 SEC. "B-B"

JOINT SEALER
¼" x 1" GROOVE

11 SPA @ 1'-5¾" = 16'-3¼" SEC. "AA" & "BB"
13 SPA @ 1'-6" = 19'-6" SEC. "CC" & "DD"

5 SPA @ 6" = 2'-6"

8"

JOINT SEALER
¼" x 1" GROOVE

BITUMINUS PRIME COAT ONLY

APPROACH PAVEMENT

1"ϕ x 18" DOWELS

AS 504 SEC. "A-A" - AS 505 SEC. "B-B"
AS 506 SEC. "C-C" - AS 507 SEC. "D-D"

1½" CLEAR

45°

6" 6"

SECTION "A-A" - "B-B" - "C-C" & "D-D"

JOINT SEALER
⅛" APPROX

6" 2"
3"
6 SPS @ 4'-2'0"
97 SPA @ 6" = 48'-6"
6 SPS @ 4" - 2'-0"
3"

96 AS 801 SEC. "E-E"
96 AS 804 SEC. "F-F"

SERIES AS 806 "F-F"
SERIES AS 803 "E-E"

JOINT SEALER

2" MIN.
VARIES
1'-4"
2½"

SERIES AS 802 "E-E"
SERIES AS 805 "F-F"

1'-3" 9" 9" 1'-3"

SECTION "E-E" & "F-F"

STATE OF OHIO
DEPARTMENT OF HIGHWAYS
BUREAU OF BRIDGES

12/12

DALTON · DALTON ASSOCIATES

APPROACH SLAB DETAILS
BRIDGE Nº SUM-8-1950

UNDER RELOC. GRAHAM RD.
SUMMIT COUNTY-CUYAHOGA FALLS-EXPRESSWAY
STA.

DESIGNED	DRAWN	TRACED	CHECKED	REVIEWED	DATE	REVISED
S.P.G.	P.E.H.		11/5/67	RDH	2-1-68	

KAE

FED. RD.	STATE	PROJECT	
2	OHIO		

404A / 460

SUM-8-17.63

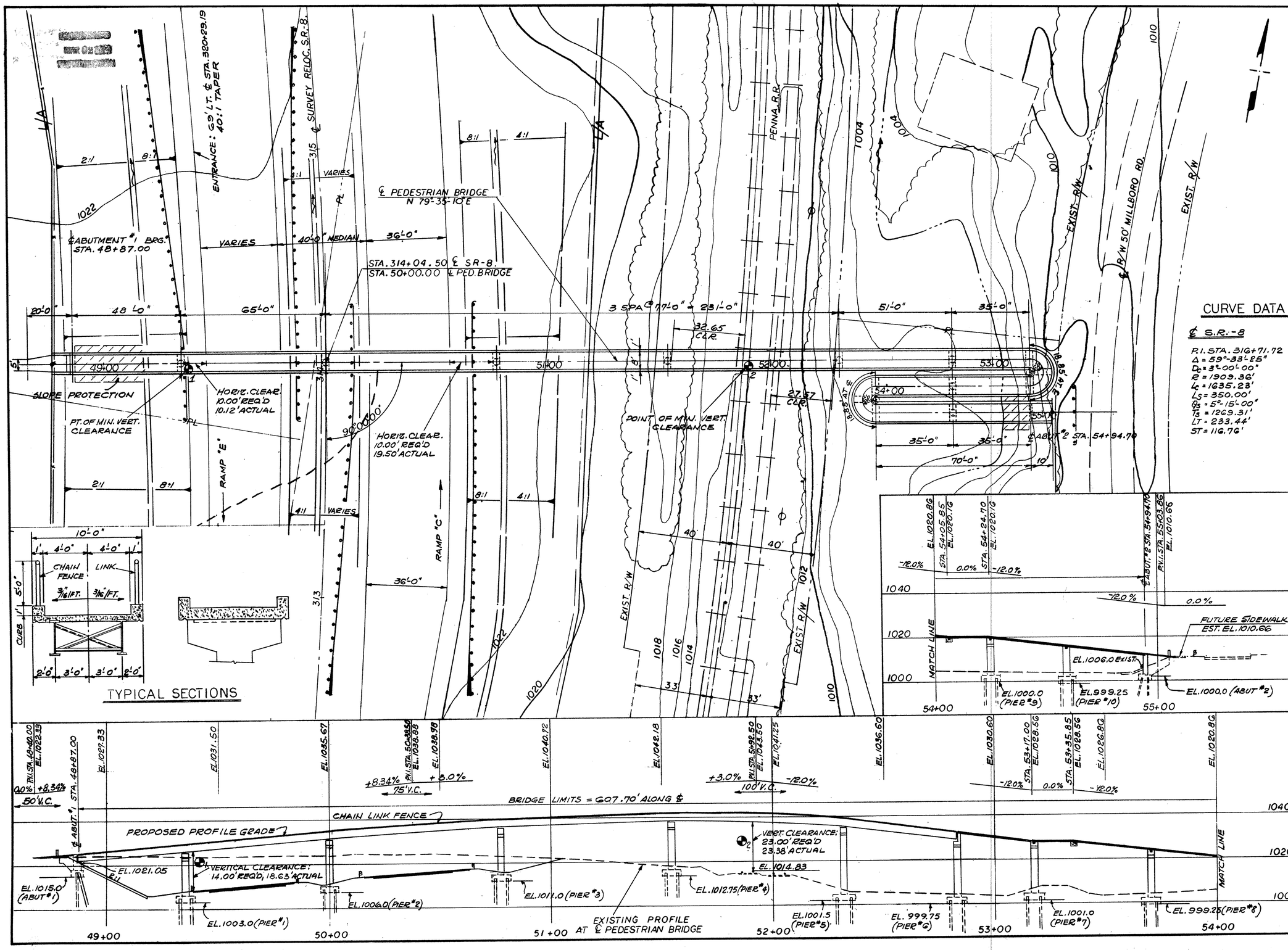

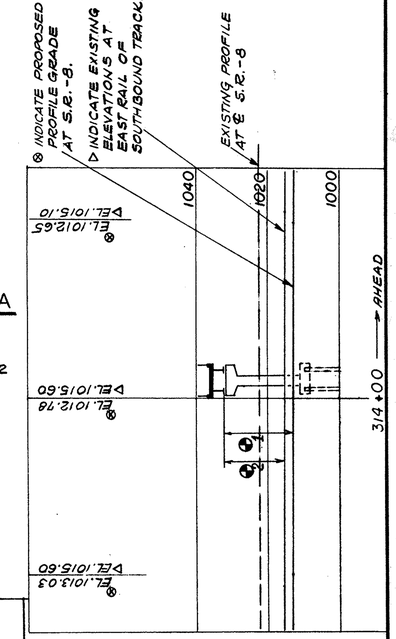

CURVE DATA

℄ S.R.-8

P.I. STA. 316+71.72
Δ = 59°-33'-25"
D_c = 3°-00'-00"
R = 1909.36'
L_c = 1635.23'
L_S = 350.00'
θ_S = 5°-15'-00"
T_S = 1269.31'
LT = 233.44'
ST = 116.76'

PROPOSED STRUCTURE

TYPE: CONTINUOUS STEEL BEAMS, WITH REINFORCED CONCRETE SLAB AND SUBSTRUCTURES.
REINFORCED CONCRETE SLAB RAMP.
SKEW: 0°-00'-00"
SPANS: 48'-0", 65'-0", 3@77'-0" = 231'-0", 51'-0", 35'-0", 18.85
2@35'-0" = 70'-0", 18.85, 2@35'-0" = 70'-0"
ROADWAY: 8'-0" F/F 1'-0" CURBS

LOADING: 85 P.S.F. LIVE LOAD.
WEARING SURFACE: NONE.
APPROACH SLABS: NONE.
ALIGNMENT: TANGENT AND CURVE RT. TAN. CURVE, LT. TANGENT
SUPERELEVATION: NONE.
SLOPE PROTECTION: CRUSHED AGGREGATE.

AVERAGE EST. PAY LENGTH OF 12"ϕ C.I.P. PILES
ABUT #1 — 25'
PIER #1 — 20'
PIER #2, 3, 4, 5, 6, & 8 — 30'
PIER #7 & #9 — 40'
PIER #10 & ABUT #2 — 35'

STATE OF OHIO
DEPARTMENT OF HIGHWAYS
BUREAU OF BRIDGES

1 / 8

DALTON · DALTON ASSOCIATES

SITE PLAN

BRIDGE NO. SUM-8-1927
UNDER PEDESTRIAN BRIDGE
SUMMIT COUNTY, CUYAHOGA FALLS EXPRESSWAY
STA 314+04.50.

DESIGNED	DRAWN	TRACED	CHECKED	REVIEWED	DATE	REVISED
B MC	KENESSY		HGH	RDH	4-4-69	

RECEIVED
MAR 02 1970
HIGHWAY ADMINISTRATION

FED. RD.	STATE	PROJECT	
2	OHIO		

404B
460

SUM-8-17.63

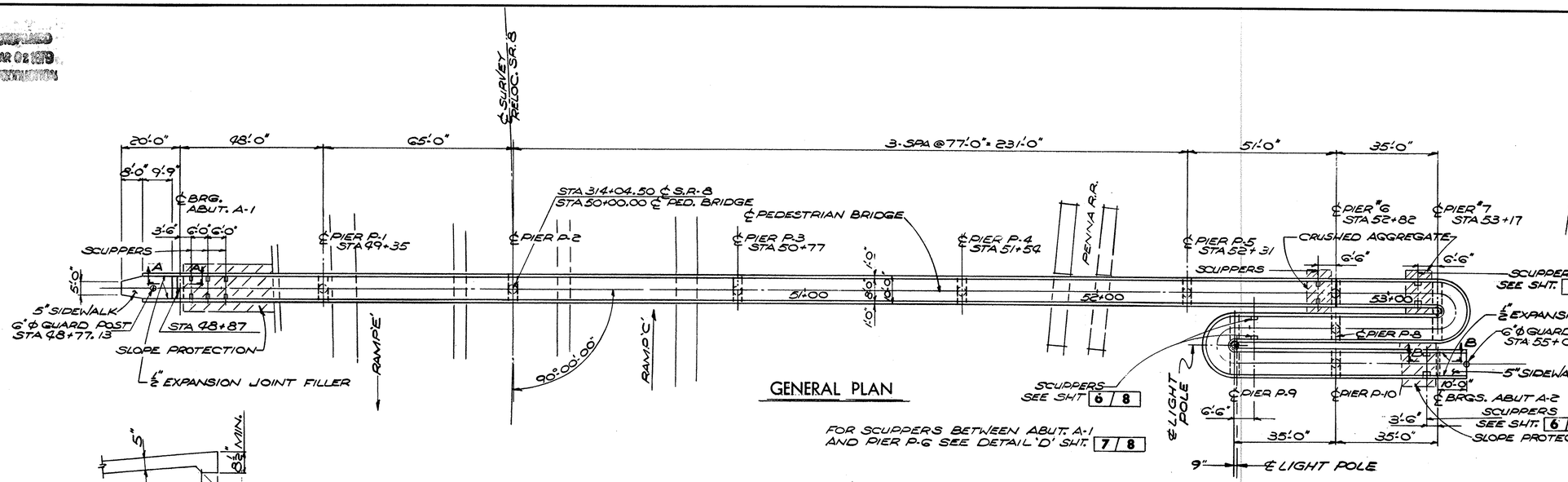

GENERAL PLAN

FOR SCUPPERS BETWEEN ABUT. A-1 AND PIER P-6 SEE DETAIL 'D' SHT. 7 | 8

SECTION 'A-A'

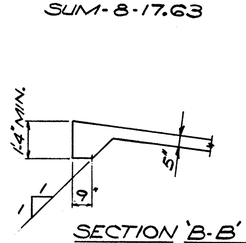

SECTION 'B-B'

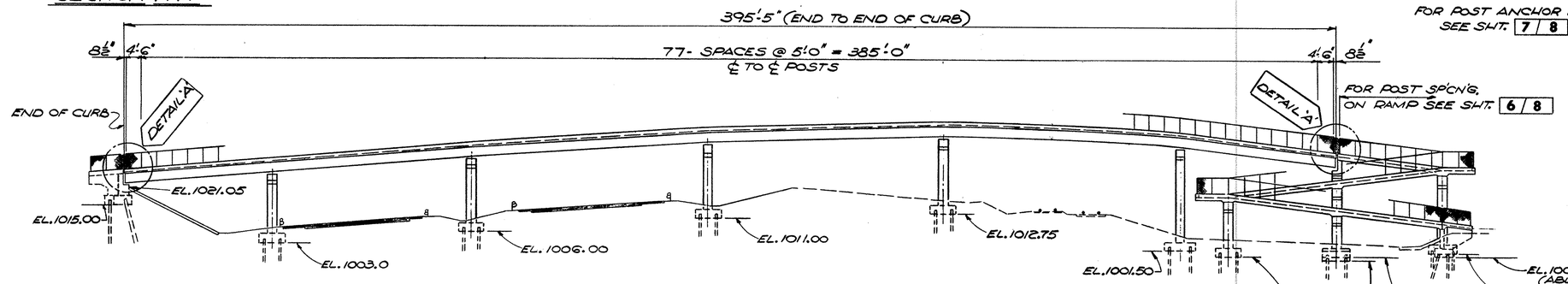

ELEVATION

FOR POST ANCHOR DETAIL SEE SHT. 7 | 8

FOR POST SP'CN'S. ON RAMP SEE SHT. 6 | 8

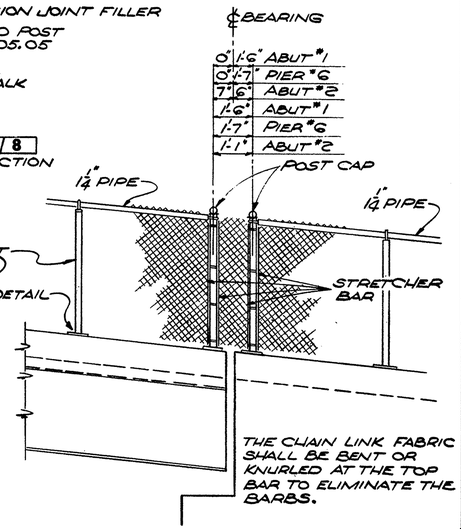

DETAIL A

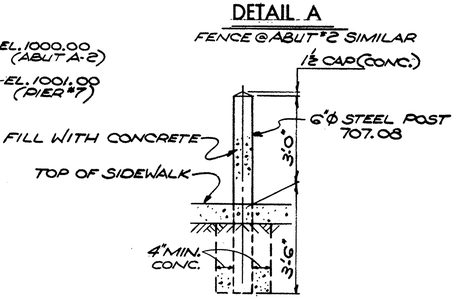

POST DETAIL
LOCATION
STA 48+77.13
STA 55+05.05

ESTIMATED QUANTITIES

ITEM	TOTAL	UNIT	DESCRIPTION	SUPER.	ABUT.	PIER	GEN'L
503	286	CU.YDS.	UNCLASSIFIED EXCAVATION		74	212	
505	LUMP	L.SUM	FIRST TEST PILE				
507	1500	LIN.FT.	12" CAST-IN-PLACE REINFORCED CONCRETE PILES		240	1260	
509	65213	LBS.	REINFORCING STEEL	31891	3808	29514	
511	237	CU.YDS.	CLASS "C" CONCRETE, SUPERSTRUCTURE	237			
511	80	CU.YDS.	CLASS "C" CONCRETE, PIERS ABOVE FOOTING			80	
511	24	CU.YDS.	CLASS "C" CONCRETE, ABUTMENTS ABOVE FOOTING		24		
511	115	CU.YDS.	CLASS "C" CONCRETE FOOTINGS		20	95	
513	116,000	LBS.	STRUCTURAL STEEL	116,000			
514	116,000	LBS.	FIELD PAINTING OF STRUCTURAL STEEL	116,000			
516	14	SQ.FT.	1" PREFORMED EXPANSION JOINT FILLER	14			

ESTIMATED QUANTITIES

ITEM	TOTAL	UNIT	DESCRIPTION	SUPER.	ABUT.	PIER	GEN'L
518	13	CU.YDS.	POROUS BACKFILL		13		
518	8	LIN.FT.	6" HELICAL PERFORATED CMP INCL. SPECIALS 707.01		8		
518	15	LIN.FT.	6" HELICAL NON-PERFORATED CMP, 707.01		15		
518	14	EACH	SCUPPERS INCLUDING SUPPORTS	14			
516	16	SQ.FT.	1/2" PREFORMED EXPANSION JOINT FILLER		16		
518	6	EACH	8 1/4" DRAINS (STEEL TUBE)				
601	104	SQ.YD.	CRUSHED AGGREGATE SLOPE PROTECTION		76	28	
606	2	EACH	6" ℄ PIPE GUARD POSTS				2
607	1260.91	LIN.FT.	FENCE - TYPE CL INCL. SPEC.	1218.41	42.00		
608	210	SQ.FT.	5" SIDEWALK				210
625	LUMP	L.S.	SEE LIGHTING SUMMARY SHT. 258				L.S.
908	237	UNITS	WATER REDUCING SET RETARDING ADMIXTURE	237			

STATE OF OHIO
DEPARTMENT OF HIGHWAYS
BUREAU OF BRIDGES

2 | 8

DALTON • DALTON ASSOCIATES

GENERAL PLAN & ELEVATION

BRIDGE NO. SUM-8-1927
UNDER PEDESTRIAN BRIDGE
SUMMIT COUNTY CUYAHOGA FALLS EXPRESSWAY
STA. 314+04.50

DESIGNED	DRAWN	TRACED	CHECKED	REVIEWED	DATE	REVISED
RMM	JWJ		GJ 4/4/69	RBH	4-4-69	

FED. RD.	STATE	PROJECT	
2	OHIO		

404C
460

SUM-8-17.63

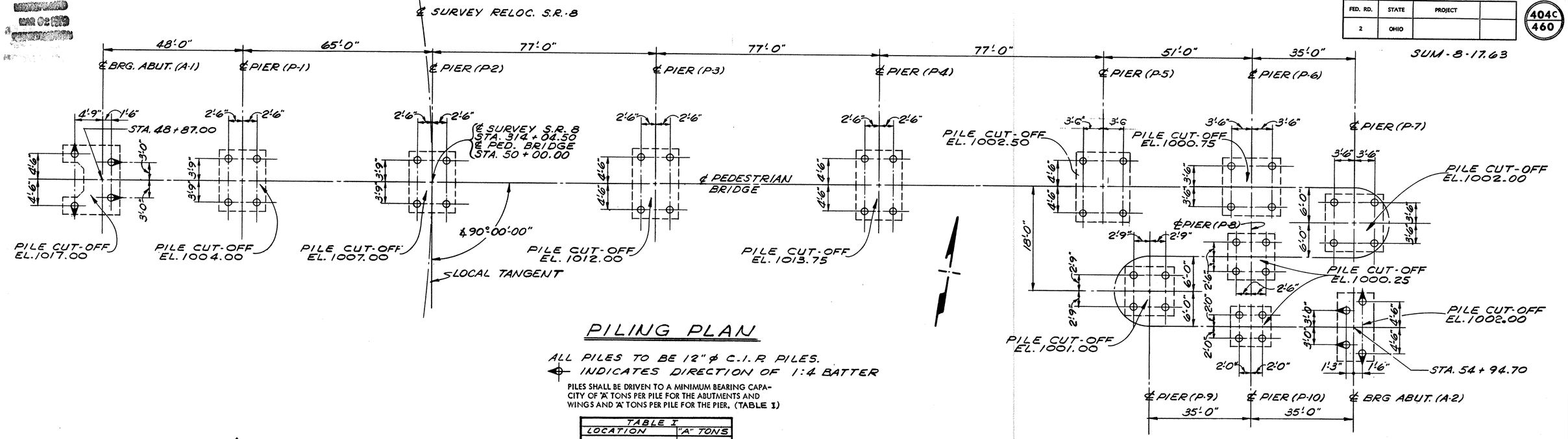

PILING PLAN

ALL PILES TO BE 12" ϕ C.I.P. PILES.
INDICATES DIRECTION OF 1:4 BATTER

PILES SHALL BE DRIVEN TO A MINIMUM BEARING CAPACITY OF "A" TONS PER PILE FOR THE ABUTMENTS AND WINGS AND "A" TONS PER PILE FOR THE PIER. (TABLE I)

TABLE I		
	LOCATION	"A" TONS
	ABUT. (A-1)	25
PIERS	P-1, P-2, P-3 & P-4	35
	P-5	40
	P-6 & P-8	25
	P-7 & P-9	45
	P-10	30
	ABUT. (A-2)	35

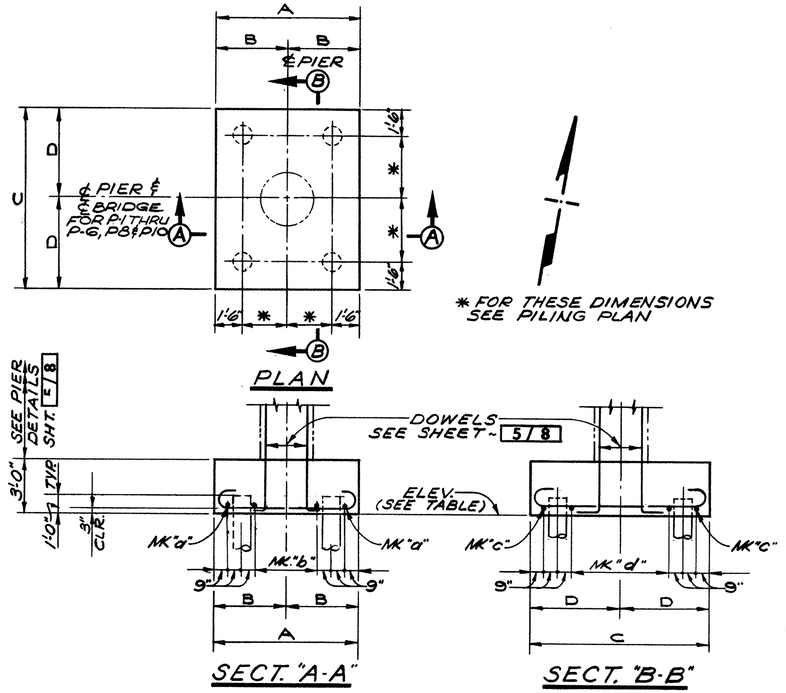

* FOR THESE DIMENSIONS SEE PILING PLAN

TABLE		DIMENSIONS				REINFORCING			
PIER	ELEVATION	"A"	"B"	"C"	"D"	MK "a"	MK "b"	MK "c"	MK "d"
P-1	1003.00	8'-0"	4'-0"	10'-6"	5'-3"	1~509	3~509 @ 1'-9"	1~702	7~702 @ 1'-0"
P-2	1006.00	8'-0"	4'-0"	10'-6"	5'-3"	1~509	3~509 @ 1'-9"	1~702	7~702 @ 1'-0"
P-3	1011.00	8'-0"	4'-0"	12'-0"	6'-0"	1~510	3~510 @ 1'-9"	1~801	8~801 @ 1'-1" (-)
P-4	1012.75	8'-0"	4'-0"	12'-0"	6'-0"	1~510	3~510 @ 1'-9"	1~801	8~801 @ 1'-1" (-)
P-5	1001.50	10'-0"	5'-0"	12'-0"	6'-0"	1~510	7~510 @ 11"	1~802	8~802 @ 1'-1" (-)
P-6	999.75	10'-0"	5'-0"	10'-0"	5'-0"	1~603	3~603 @ 2'-9"	1~603	3~603 @ 2'-9"
P-7	1001.00	10'-0"	5'-0"	10'-0"	5'-0"	1~703	6~703 @ 1'-1" (+)	1~703	6~703 @ 1'-1" (+)
P-8	999.25	8'-0"	4'-0"	8'-0"	4'-0"	1~511	4~511 @ 1'-2"	1~511	4~511 @ 1'-2"
P-9	1000.00	8'-6"	4'-3"	8'-6"	4'-3"	1~604	7~604 @ 8"	1~604	7~604 @ 8"
P-10	999.25	7'-0"	3'-6"	7'-0"	3'-6"	1~605	3~605 @ 1'-3"	1~605	3~605 @ 1'-3"

THE PREFIX "P" SHALL BE ADDED TO ALL REINFORCING BAR MARKS IN THE PIERS.

SEE SHEET 5/8 FOR PIER DETAILS ABOVE TOP OF FOOTINGS.

Detail Pier Footings

STATE OF OHIO
DEPARTMENT OF HIGHWAYS
BUREAU OF BRIDGES

3/8

DALTON · DALTON ASSOCIATES

PILING PLAN & PIER FOOTING DET'S.
BRIDGE NO. SUM-8-1927
UNDER PEDESTRIAN BRIDGE
SUMMIT COUNTY CUYAHOGA FALLS EXPRESSWAY
STA. 314+04.50

DESIGNED	DRAWN	TRACED	CHECKED	REVIEWED	DATE	REVISED
B M S W	Hodgman		C W 4/1/69	EDH	4-4-69	

RECEIVED
MAR 02 1979
HIGHWAY CONSTRUCTION

FED. RD.	STATE	PROJECT	
2	OHIO		

404D
460

SUM-8-17.63

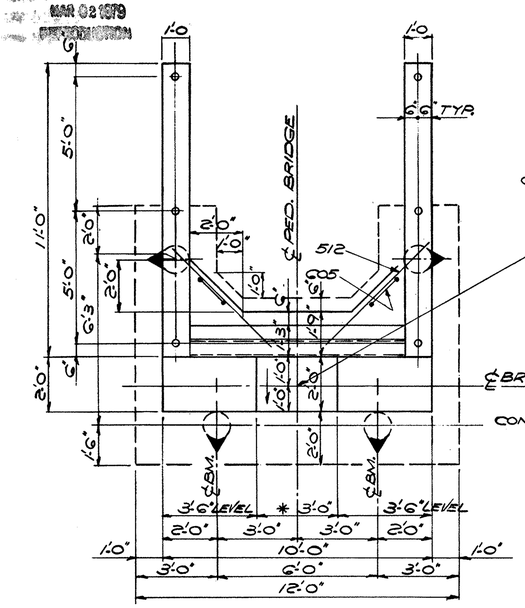

PLAN ABUTMENT A-1

* SLOPE ¾" TO FACE OF ABUT.

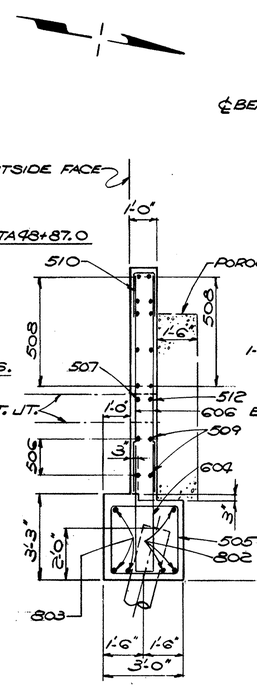

SECTION B-B

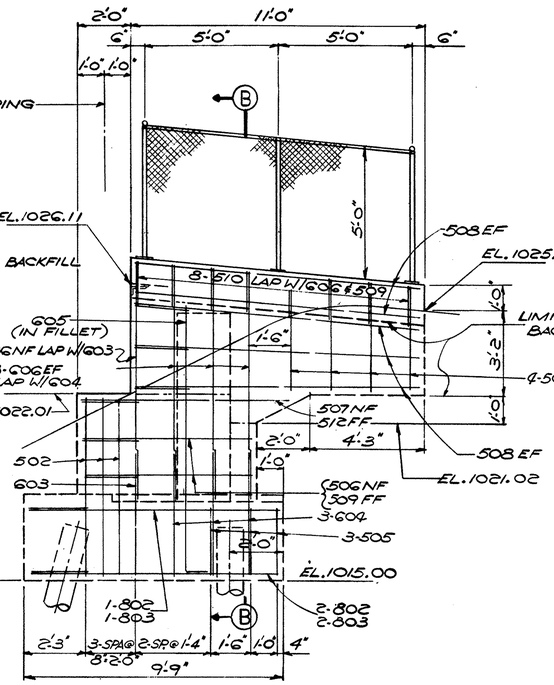

NORTH WINGWALL ABUTMENT A-1 (AS SHOWN)

SOUTH WINGWALL (OPP. HAND)

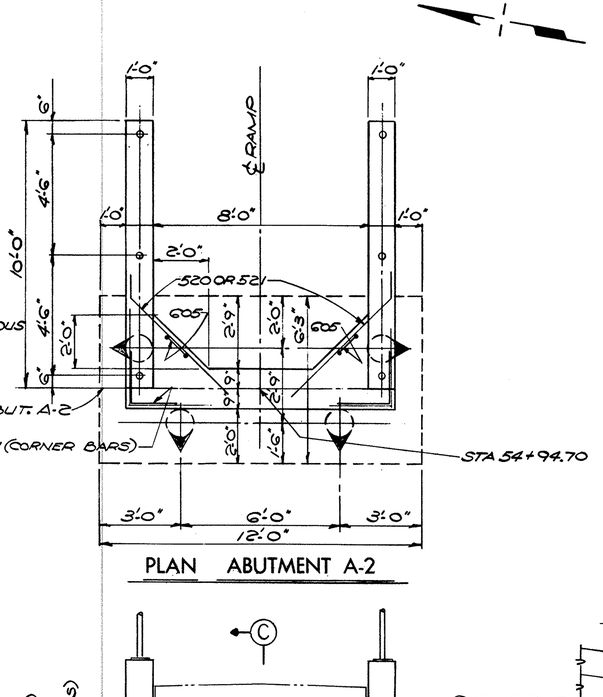

PLAN ABUTMENT A-2

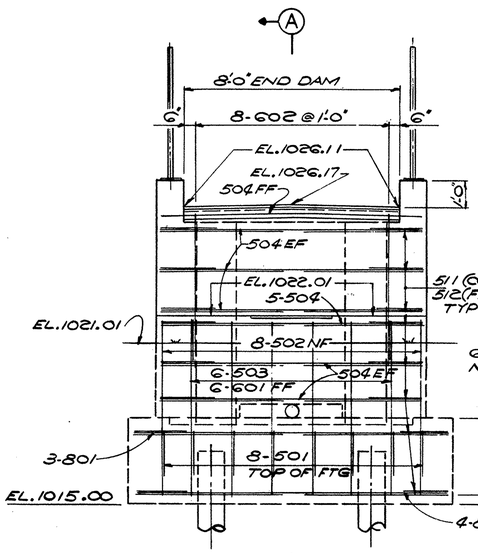

ELEVATION

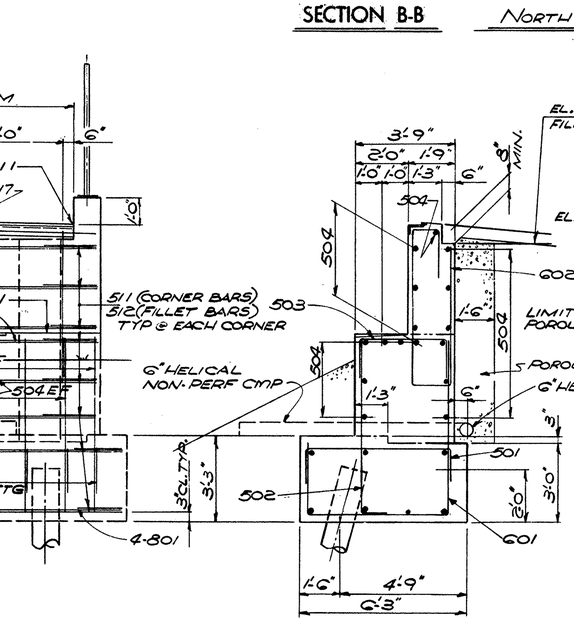

SECTION A-A

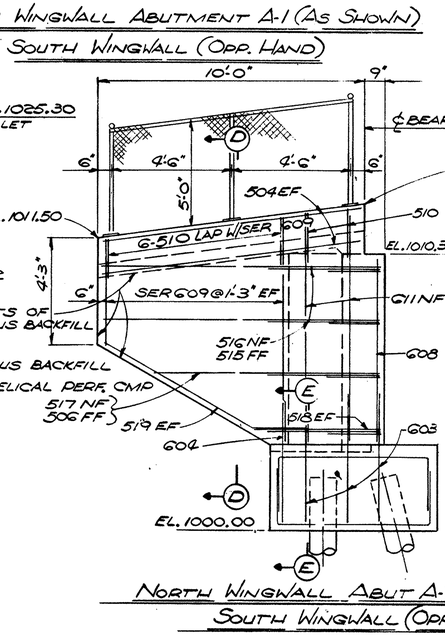

NORTH WINGWALL ABUT A-2 (AS SHOWN)

SOUTH WINGWALL (OPP. HAND)

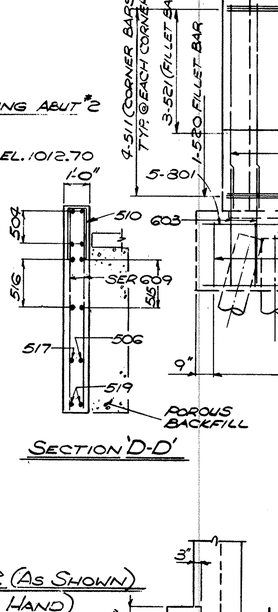

SECTION 'D-D'

ELEVATION

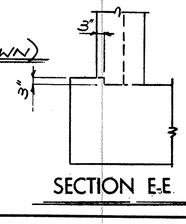

SECTION E-E

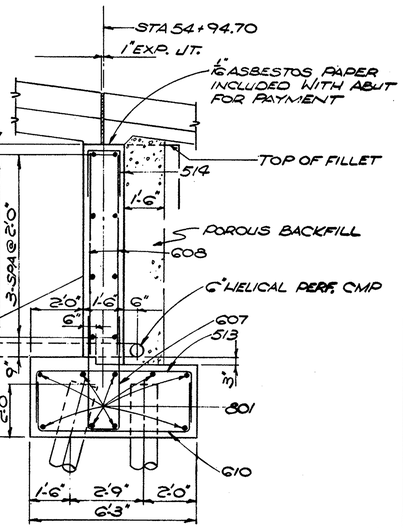

SECTION C-C

FOR DETAIL OF FENCE POST BASE ℄ SEE 7 / 9

NOTES

1. ABBREVIATIONS USED ARE:
   NF-NEAR FACE
   FF-FAR FACE
   EF-EACH FACE
2. BACKWALL ELEVATIONS ARE GIVEN AS FINAL PAVEMENT ELEVATIONS AT FRONT FACE OF BACKWALL.
3. THE PREFIX "A" SHALL BE ADDED TO ALL REINFORCING BAR MARKS IN THE ABUTMENTS UNLESS SHOWN OTHERWISE.
4. POROUS BACKFILL, 1.5 FT. THICK, FULL LENGTH OF ABUTMENT AND WINGS, SHALL EXTEND UP TO THE SUBGRADE OR TO THE FINISHED GROUND SURFACE.

FOR PILING PLAN, SEE SHEET 3 / 8

STATE OF OHIO
DEPARTMENT OF HIGHWAYS
BUREAU OF BRIDGES

4 / 8

DALTON · DALTON ASSOCIATES

ABUTMENT DETAILS

BRIDGE N°. SUM-8-1927
UNDER PEDESTRIAN BRIDGE
SUMMIT COUNTY CUYAHOGA FALLS EXPRESSWAY
STA 314+04.50

DESIGNED	DRAWN	TRACED	CHECKED	REVIEWED	DATE	REVISED
B M W	JWW		CW 1/4/69	RDH 4-4-69		

FED. RD.	STATE	PROJECT	
2	OHIO		

404 E
460

SUM-8-17.63

HIGHWAY DEPARTMENT
MAR 02 1970
CONSTRUCTION

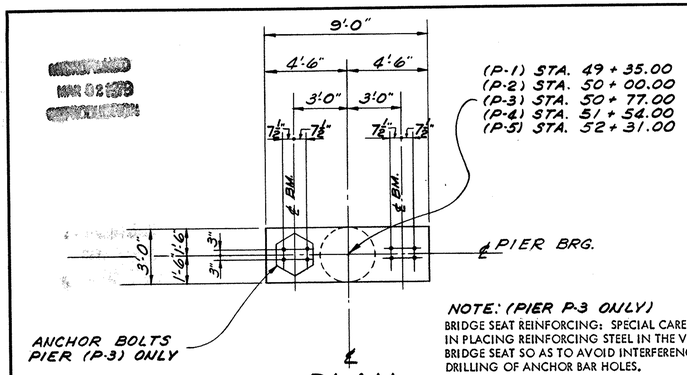

NOTE: (PIER P-3 ONLY)
BRIDGE SEAT REINFORCING: SPECIAL CARE SHALL BE TAKEN IN PLACING REINFORCING STEEL IN THE VICINITY OF THE BRIDGE SEAT SO AS TO AVOID INTERFERENCE WITH THE DRILLING OF ANCHOR BAR HOLES.

PLAN

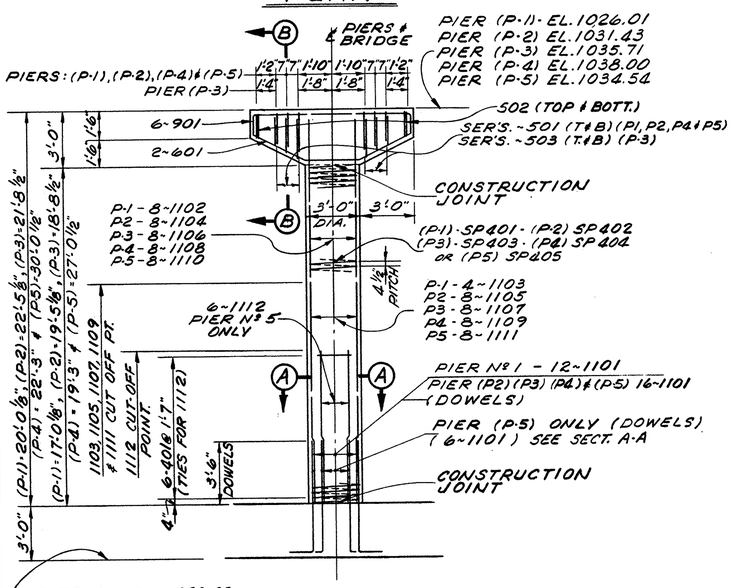

ELEVATION
Piers (P-1 thru P-5)

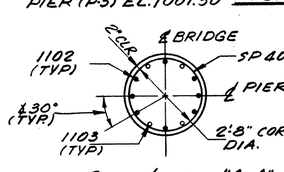

Section "A-A"
(PIER Nº 1)

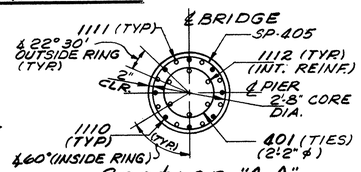

Section "A-A"
(PIER Nº 5)

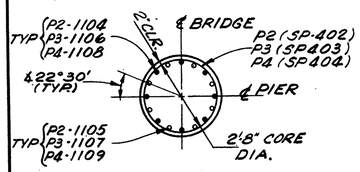

Section "A-A"
(PIER Nº 2, PIER Nº 3 ℄ PIER Nº 4) (NOTED)

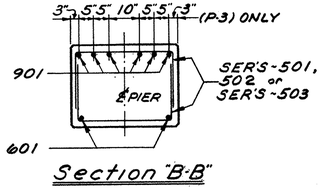

Section "B-B"

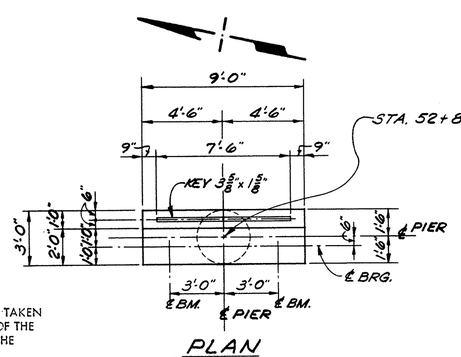

PLAN

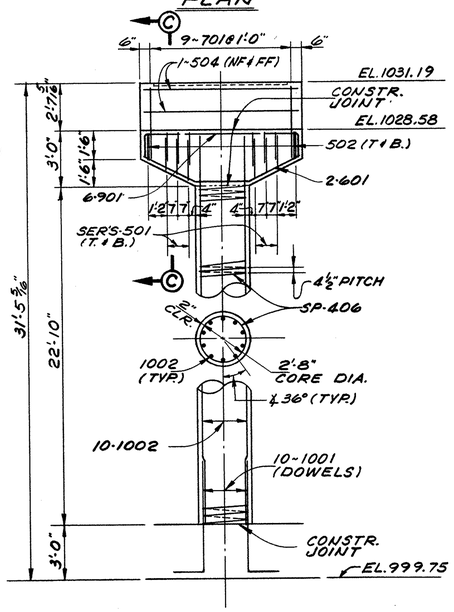

ELEVATION
Pier (P-6)

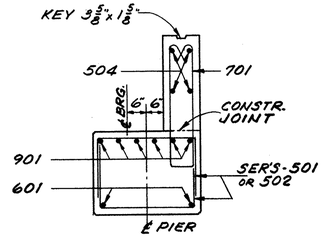

Section "C-C"

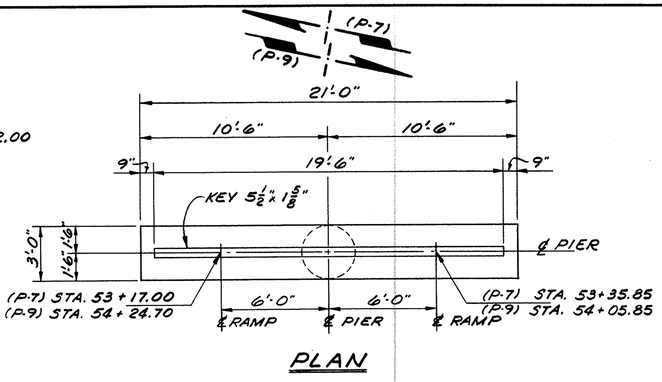

PLAN

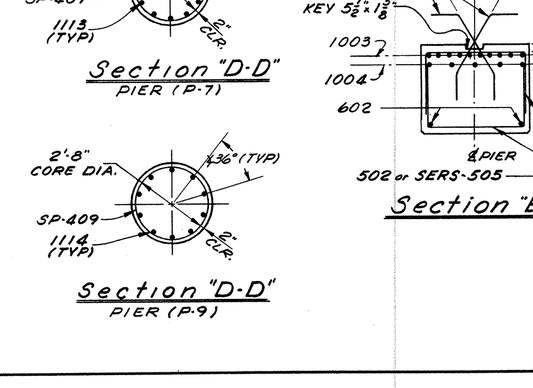

ELEVATION
Piers (P-7 ℄ P-9)

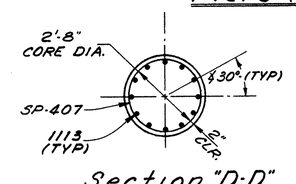

Section "D-D"
PIER (P-7)

Section "D-D"
PIER (P-9)

Section "E-E"

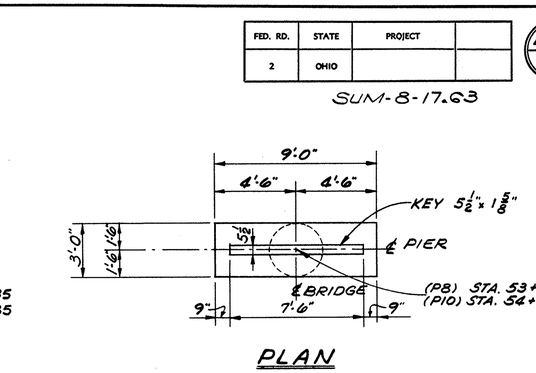

PLAN

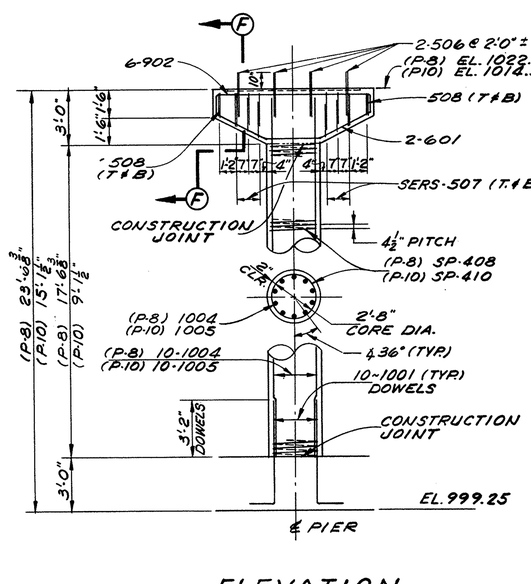

ELEVATION
Piers (P-8 ℄ P-10)

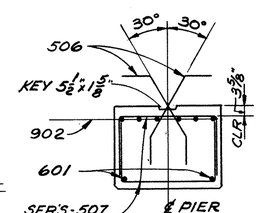

Section "F-F"

Notes:

ABBREVIATIONS USED ARE:
(T ℄ B.) DENOTES TOP AND BOTTOM.
NF-NEAR FACE
FF-FAR FACE

THE PREFIX "P" SHALL BE ADDED TO ALL REINFORCING BAR MARKS IN THE PIER.

FOR PILING PLAN ℄ FOOTING DETAILS SEE SHEET 3/8

STATE OF OHIO
DEPARTMENT OF HIGHWAYS
BUREAU OF BRIDGES

5/8

DALTON · DALTON ASSOCIATES

PIER DETAILS

BRIDGE NO. SUM-8-1927
UNDER PEDESTRIAN BRIDGE
SUMMIT COUNTY CUYAHOGA FALLS EXPRESSWAY
STA. 314+04.50

DESIGNED	DRAWN	TRACED	CHECKED	REVIEWED	DATE	REVISED
BMW	Hoddinott		CJW 4/14/69	RDM 4-4-69		

FED. RD.	STATE	PROJECT	
2	OHIO		

404 F / 460

SUM-8-17.63

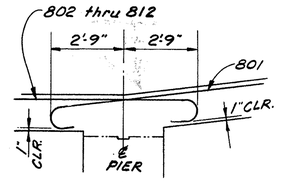

Section "E-E"

SLAB PLAN

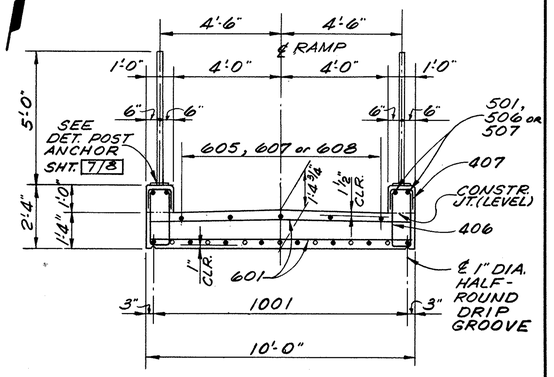

Section "A-A"

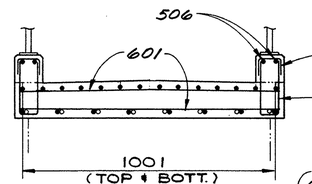

Section "B-B"
(WORK WITH SECT. "A-A")

ANCHOR BOLTS, PIER № 9 ONLY (SEE LIGHTING PLANS)

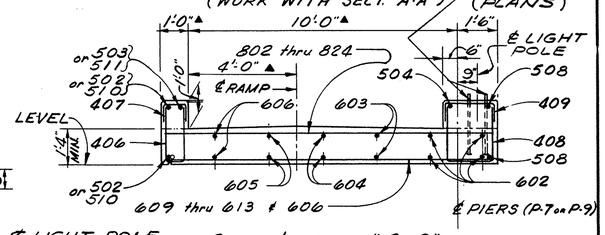

Section "C-C"
▲ DENOTES · RADIAL DIM'S.

Note:

FOR REINFORCING IN CURB & POST SPACING SEE OTHER END

(■) DENOTES : TOP OF SLAB
(□) DENOTES : BOT. OF SLAB
(⊛) DENOTES : TYPICAL DIM. FOR BARS OVER PIERS

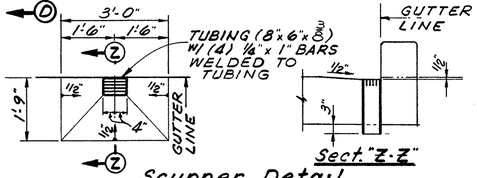

Scupper Detail

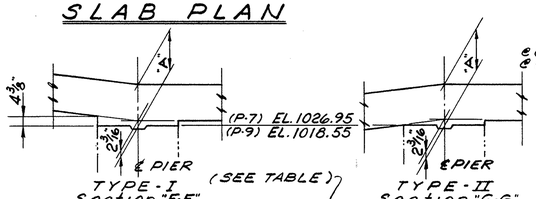

TABLE	DIM.		"A"		
	STATION	TYPE	R.GUT. ℄	℄	L.GUT. ℄
	53+17.00	I	1'-6 13/16"	1'-7 5/16"	1'-7 1/16"
	53+35.85	II	1'-6 9/16"	1'-7 5/16"	1'-6 1/16"
	54+05.85	I	1'-7 1/16"	1'-7 5/16"	1'-6 9/16"
	54+24.70	II	1'-6 1/16"	1'-7 5/16"	1'-6 9/16"

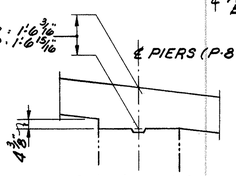

Section "J-J"

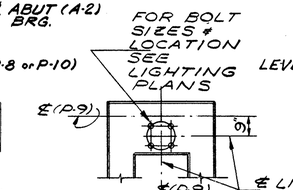

View "W-W"
(PIER № 9 ONLY)

SLOPES:
℄ ENDS
① : LEVEL
② : .254%

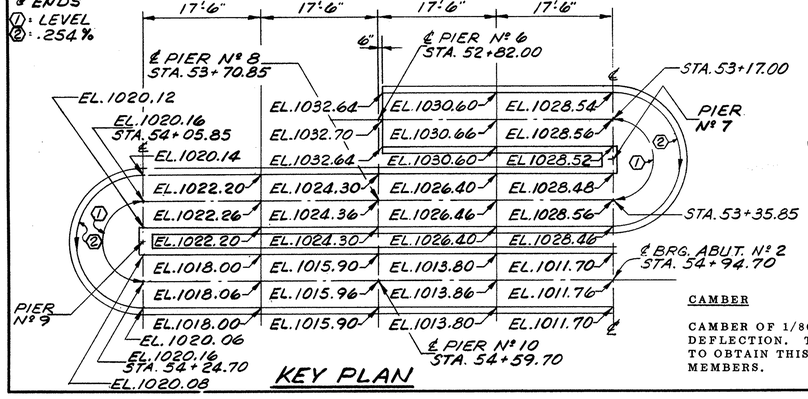

KEY PLAN

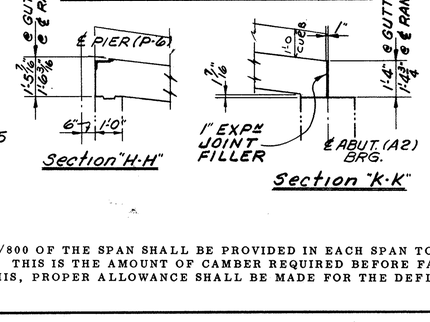

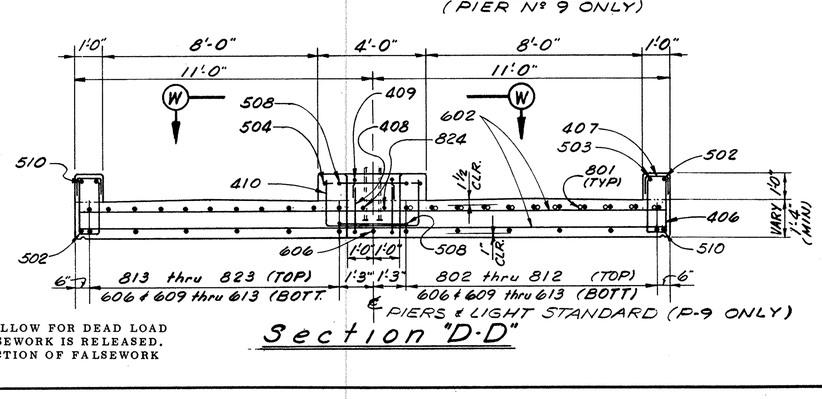

Section "D-D"

CAMBER

CAMBER OF 1/800 OF THE SPAN SHALL BE PROVIDED IN EACH SPAN TO ALLOW FOR DEAD LOAD DEFLECTION. THIS IS THE AMOUNT OF CAMBER REQUIRED BEFORE FALSEWORK IS RELEASED. TO OBTAIN THIS, PROPER ALLOWANCE SHALL BE MADE FOR THE DEFLECTION OF FALSEWORK MEMBERS.

STATE OF OHIO
DEPARTMENT OF HIGHWAYS
BUREAU OF BRIDGES

6 / 8

DALTON · DALTON · DALTON ASSOCIATES

RAMP SLAB PLAN

BRIDGE NO. SUM-8-1927
UNDER PEDESTRIAN BRIDGE
SUMMIT COUNTY CUYAHOGA FALLS EXPRESSWAY
STA. 314+04.50

DESIGNED	DRAWN	TRACED	CHECKED	REVIEWED	DATE	REVISED
B M W	Hedevan		4/4/69	RDH 4-4-69		

FED. RD.	STATE	PROJECT	
2	OHIO		

4046
466

SUM-8-17:63

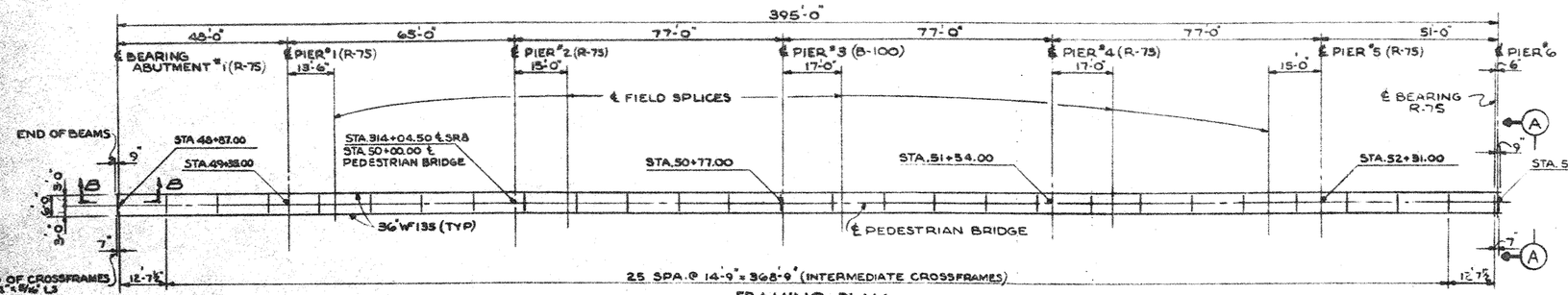

FRAMING PLAN

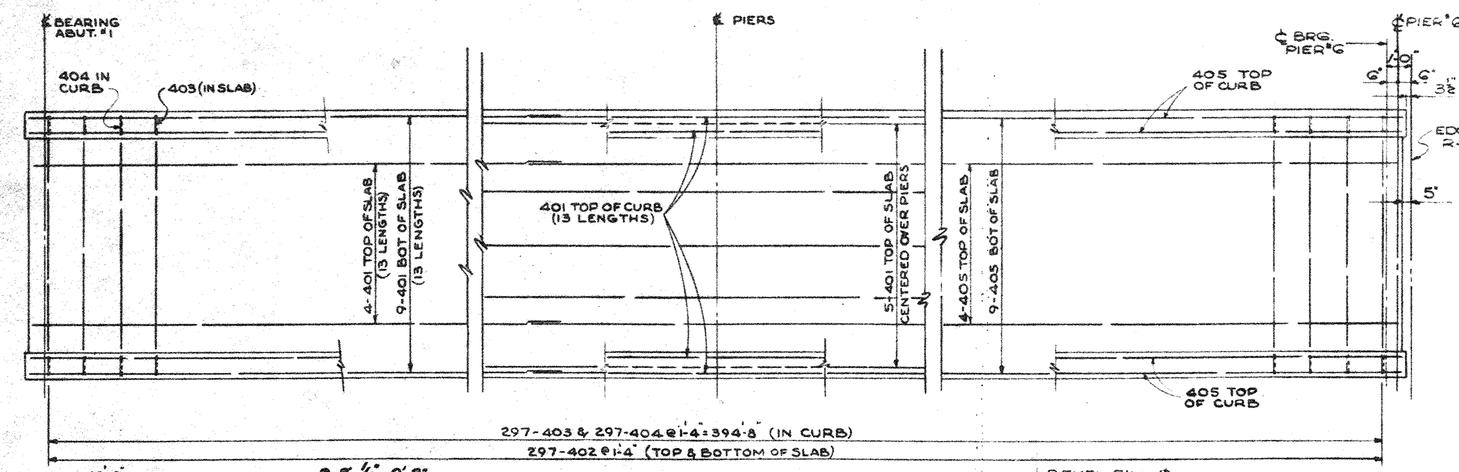

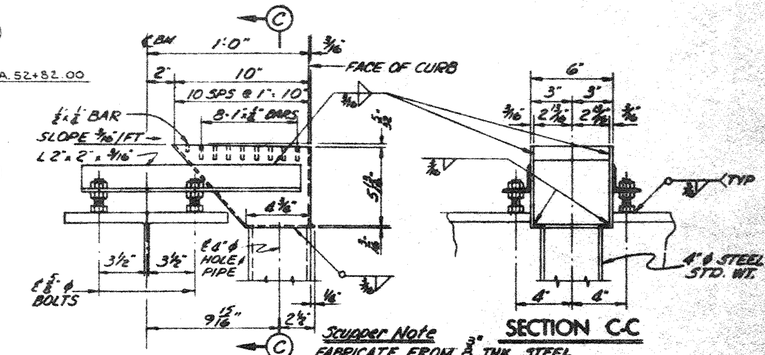

Scupper Note
FABRICATE FROM ⅜" THK. STEEL PLATE UNLESS OTHERWISE NOTED (ALL WELDED CONSTRUCTION)

SCUPPER DETAIL

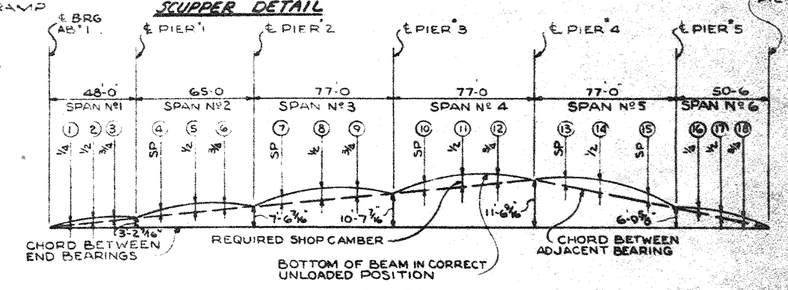

LAYOUT DIAGRAM

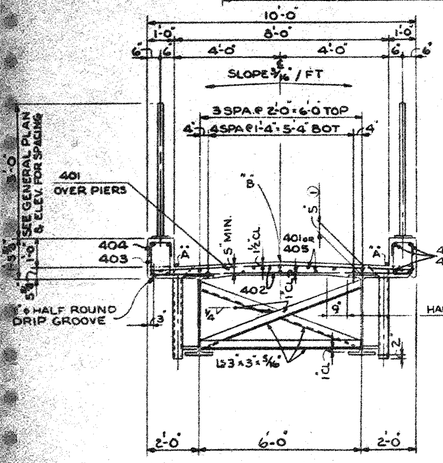

TRANSVERSE SECTION

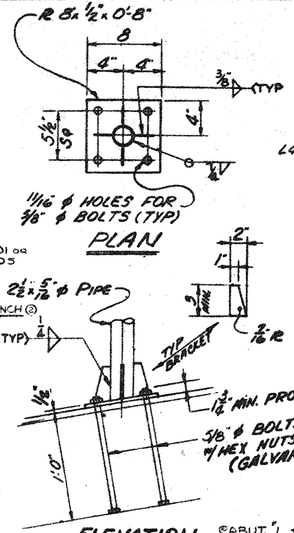

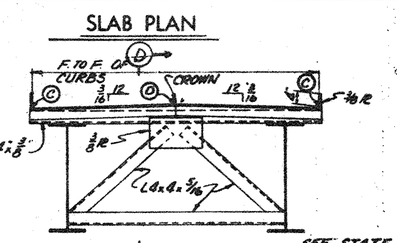

SEE STATE STANDARD DWGS SD-1-65 (1 of 3) FOR DETAILS NOT SHOWN.

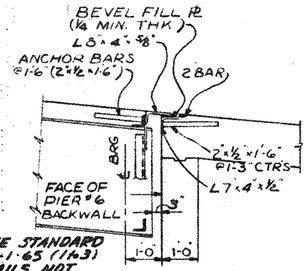

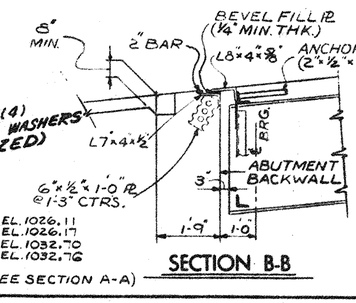

DEFLECTION AND CAMBER

SPANS	SPAN Nº1			SPAN Nº2			SPAN Nº3			SPAN Nº4			SPAN Nº5			SPAN Nº6		
POINTS	①	②	③	④	⑤	⑥	⑦	⑧	⑨	⑩	⑪	⑫	⑬	⑭	⑮	⑯	⑰	⑱
DEFLECTION DUE TO WEIGHT OF STEEL	0	0	0	0	1/16	0	0	1/8	1/16	1/16	1/8	1/16	1/16	1/8	1/8	0	0	0
DEFLECTION DUE TO REMAINING DEAD LOAD	1/8	1/8	1/16	1/16	1/8	1/16	0	11/16	1/4	1/8	5/16	3/16	3/16	7/16	5/16	1/16	1/8	1/16
ADJUSTMENT REQUIRED FOR VERTICAL CURVE	0	0	0	0	0	0	4"	6 5/16	4 3/16	1/4	9/16	7/8	9 3/16	13 5/16	8 3/16	7/8	9/16	5/16
REQUIRED SHOP CAMBER	1/8	1/8	1/16	1/16	3/16	1/16	4"	6 3/8	5 1/16	7/16	1"	1 1/8	9 7/16	13 3/8	8 1/16	15/16	1 1/16	3/8

TABLE OF ELEVATIONS (SEE TRANSVERSE SECTION)

LOCATION	EL "A"*	EL "B"*	LOCATION	EL "A"*	EL "B"*	LOCATION	EL "A"*	EL "B"*
48+37.00	1026.19	1026.25	50+38.50	1038.35	1038.41	51+92.50	1041.60	1041.66
49+10.50	1028.16	1028.22	50+57.75	1039.30	1039.36	52+16.00	1040.12	1040.18
49+35.00	1030.19	1030.25	50+77.00	1039.97	1040.03	52+31.00	1038.72	1038.78
49+48.50	1031.32	1031.38	50+94.00	1040.49	1040.56	52+43.75	1037.29	1037.35
49+67.50	1032.91	1032.97	51+15.50	1041.15	1041.21	52+56.50	1035.76	1035.83
49+83.75	1034.26	1034.32	51+34.75	1041.72	1041.78	52+69.25	1034.23	1034.30
50+00.00	1035.61	1035.67	51+54.00	1042.18	1042.25	52+82.50	1032.64	1032.70
50+15.00	1036.79	1036.85	51+71.00	1042.20	1042.26			

* THESE ELEVATIONS ARE THOSE WHICH ARE REQUIRED BEFORE THE CONCRETE IS PLACED. PROPER ALLOWANCE HAS BEEN MADE FOR DEAD LOAD DEFLECTIONS CAUSED BY THE WEIGHT OF CONCRETE. FOR PAVEMENT ELEVATION TABLE,

NOTES

① THIS IS THE NOMINAL DIMENSION. THE QUANTITY OF DECK CONCRETE TO BE PAID FOR SHALL BE BASED UPON THIS DIMENSION, EVEN THOUGH DEVIATION FROM IT MAY BE NECESSARY BECAUSE THE TOP FLANGE OF THE BEAM MAY NOT HAVE THE EXACT CAMBER OR CONFORMATION REQUIRED TO PLACE IT PARALLEL TO THE FINISHED GRADE.

② A TYPICAL HAUNCH WIDTH OF 9" SHALL BE USED FOR COMPUTING QUANTITY OF CONCRETE. HOWEVER, THE HAUNCH WIDTH MAY VARY BETWEEN 6" AND 12" PROVIDED THAT THE SLOPE SHALL BE NOT MORE THAN 1:4 FOR A HAUNCH LESS THAN 9" IN WIDTH.

③ THE PREFIX "S" SHALL BE ADDED TO ALL REINFORCING BAR MARKS IN THE SUPERSTRUCTURE UNLESS SHOWN OTHERWISE.

STATE OF OHIO
DEPARTMENT OF HIGHWAYS
BUREAU OF BRIDGES

7 | 8

DALTON · DALTON ASSOCIATES

FRAMING PLAN & SLAB DETAILS

BRIDGE NO. SUM-8-1927
UNDER PEDESTRIAN BRIDGE
SUMMIT COUNTY CUYAHOGA FALLS EXPRESSWAY
STA. 314+04.50

DESIGNED	DRAWN	TRACED	CHECKED	REVISED	DATE	REVISED
B N' W	JLH		C W 4-4-69	R.D.H.	4-8-69	

MICROFILMED
MAR 02 1979
REPRODUCTION

FED. RD.	STATE	PROJECT	
2	OHIO		

404 H
460

SUM -8 -17.63

MARK	NO. REQ'D	LENGTH	TYPE	DIMENSIONS A	B	C	D	INCRM.	WEIGHT LBS.
					ABUTMENT				
A 501	8	8- 4	2	1- 7	5- 5				70
A 502	12	7- 6	1	1- 0	6- 7				94
A 503	6	6- 4	2	1- 7	3- 5				40
A 504	32	9- 8	ST						323
A 505	6	11- 0	14	2- 7	2- 8				69
A 506	10	6- 5	ST						67
A 507	2	7- 6	ST						16
A 508	20	10- 8	ST						223
A 509	20	3-10	ST						80
A 510	32	4- 5	2	2- 0	0- 8				147
A 511	24	3-11	1	2- 0	2- 0				98
A 512	18	4- 6	ST						84
A 513	8	8-10	2	1- 7	5-11				74
A 514	4	4- 1	2	1- 7	1- 2				17
A 515	4	7- 2	ST						30
A 516	8	10- 5	ST						87
A 517	2	8- 2	ST						17
A 518	4	4-11	ST						21
A 519	4	9- 5	12	2- 0	7- 6	3-11			39
A 520	2	7- 2	12	5- 3	2- 0	1- 7			15
A 521	6	7- 2	12	5- 3	2- 0	1- 5			45
A 601	6	14- 6	3	6- 7	5- 5	2- 9			131
A 602	8	14-11	8	5- 3	5-11	1- 5	1-11		179
A 603	10	5-10	1	1- 0	4-11				88
A 604	8	10- 3	2	4-11	0- 8				123
A 605	4	20- 3	2	9- 8	1- 2				122
A 606	14	8- 4	ST						175
A 607	4	10- 9	2	4-11	1- 2				65
A 608	12	6-10	ST						123
SERIES	4-SET	4- 2						0	
OF	OF 6=	TO	ST					0-11--	233
A 609	24 BARS	8- 9						0	
A 610	8	10-10	2	2- 7	5-11				130
A 611	4	8-11	ST						54
A 801	16	11- 8	ST						498
A 802	6	9- 5	ST						151
A 803	6	5- 0	ST						80
						TOTAL	ABUTMENT	=	3808
					PIER				
P 401	6	8- 4	10	8- 4	1- 1				33
SERIES	20-SET	5-11		1- 9				0	
OF	OF 3=	TO	2	TO	2- 8			0- 4--	391
P 501	60 BARS	6- 7		2- 1				0	
P 502	32	4-11	2	1- 3	2- 8				164
SERIES	4-SET	6- 1		1-10				0	
OF	OF 3=	TO	2	TO	2- 8			0- 4--	80
P 503	12 BARS	6- 9		2- 2				0	
P 504	4	8- 8	ST						36
SERIES	8-SET	1- 6						0	
OF	OF 5=	TO	ST					0- 4--	76
P 505	40 BARS	2- 2						0	
P 506	56	3- 4	19	0- 9	1- 0	1- 8	0- 9		195
SERIES	8-SET	5- 9		1- 8				0	
OF	OF 3=	TO	2	TO	2- 8			0- 4--	152
P 507	24 BARS	6- 5		2- 0				0	
P 508	8	4- 9	2	1- 2	2- 8				40
P 509	10	11- 4	7	10- 2					118
P 510	19	12-10	7	11- 8					254
P 511	12	8-10	7	7- 8					111
P 601	16	9- 0	25	0- 0	2- 9	3- 0	1- 5		216
P 602	4	20- 8	25	0- 0	8- 9	3- 0	1- 6		124
P 603	10	11- 0	7	9- 8					165
P 604	18	9- 6	7	8- 2					257
P 605	10	8- 0	7	6- 8					120
P 701	9	9- 4	5	0- 8	3-11				172
P 702	18	9- 4	7	7- 8					343
P 703	16	11- 4	7	9- 8					371
P 801	20	7- 8	ST						409
P 802	10	9- 8	ST						258
P 901	36	10- 7	2	1- 2	8- 8				1295
P 902	12	10- 5	2	1- 1	8- 8				425

MARK	NO. REQ'D	LENGTH	TYPE	DIMENSIONS A	B	C	D	INCRM.	WEIGHT LBS.
P1001	30	7- 3	1	1- 6	6- 0				936
P1002	10	25- 6	ST						1097
P1003	20	22- 2	2	1- 0	20- 8				1908
P1004	20	20- 0	ST						1721
P1005	10	11- 7	ST						498
P1101	104	7- 3	1	1- 6	6- 0				4006
P1102	8	19- 6	ST						829
P1103	4	9- 0	ST						191
P1104	8	21-11	ST						932
P1105	8	12- 6	ST						531
P1106	8	21- 2	ST						900
P1107	8	12- 9	ST						542
P1108	8	21- 9	ST						924
P1109	8	13- 9	ST						584
P1110	8	29- 6	ST						1254
P1111	8	21- 3	ST						903
P1112	6	8- 6	ST						271
P1113	12	22- 6	ST						1435
P1114	10	15- 0	ST						797
						TOTAL	PIER	=	26064

SPIRAL REINFORCING SCHEDULE

MARK	NO. REQ'D.	CORE DIA. OF SPIRAL	LENGTH OF SPIRAL	PITCH INS.	WEIGHT LBS.
		SPIRALS-PIER			
SP401	1	2- 8	17- 0	4.50	321
SP402	1	2- 8	19- 5	4.50	364
SP403	1	2- 8	18- 9	4.50	352
SP404	1	2- 8	19- 3	4.50	361
SP405	1	2- 8	27- 1	4.50	501
SP406	1	2- 8	22-10	4.50	425
SP407	1	2- 8	19-11	4.50	373
SP408	1	2- 8	17- 6	4.50	330
SP409	1	2- 8	12- 7	4.50	242
SP410	1	2- 8	9- 2	4.50	181
			TOTAL SPIRALS-PIER	=	3450

FOUR ANGLE SPACERS WEIGHING APPROX. 0.80 LBS. PER LINEAL FT. OF SPACER SHALL BE PROVIDED FOR EACH SPIRAL UNIT LISTED ABOVE. THEY SHALL BE EQUALLY SPACED ALONG THE PERIPHERY OF EACH COIL. THE NUMBER OF POUNDS OF THESE SPACERS WILL BE PAID FOR AS REINFORCING STEEL AND IS INCLUDED IN THE TABULATED SPIRAL WEIGHT.

SPIRAL REINFORCING BARS SHALL NOT HAVE DEFORMATIONS BUT SHALL IN OTHER RESPECTS CONFORM TO ITEM 509. THE LENGTH SHOWN IN THE STEEL SCHEDULE FOR THE SPIRAL BARS IS THE DISTANCE FROM THE TOP OF THE FOOTING TO THE TOP OF THE COLUMN INCLUDING THREE (3) CLOSED COILS (ONE AND ONE HALF CLOSED COILS AT THE ENDS OF EACH SPIRAL UNIT).

MARK	NO. REQ'D	LENGTH	TYPE	DIMENSIONS A	B	C	D	INCRM.	WEIGHT LBS.
				SUPERSTRUCTURE					
S 401	246	30- 0	ST						4930
S 402	594	9- 8	ST						3836
S 403	594	2-10	2	1- 2	0- 8				1124
S 404	594	1- 6	2	0- 6	0- 8				595
S 405	17	21- 4	ST						242
S 406	312	4- 6	2	2- 0	0- 8				938
S 407	312	2- 0	2	0- 9	0- 8				417
S 408	4	5- 6	2	2- 0	1- 8				15
S 409	4	3- 0	2	0- 9	1- 8				8
S 410	2	7- 6	2	2- 0	3- 8				10
S 501	4	31- 5	ST						131
S 502	4	22- 3	26	3- 9	18- 6	10- 9	0- 5		93
S 503	2	21- 5	26	3- 9	17- 8	10- 3	0- 5		45
S 504	4	6- 8	1	4- 1	2- 8				28
S 505	2	4- 0	ST						8
S 506	20	23- 2	ST						483
S 507	4	25- 1	ST						105
S 508	8	4- 8	1	2- 6	2- 3				39
S 509	2	8- 2	ST						17
S 510	4	22- 3	27	3- 9	18- 6	10- 9	0- 5		93
S 511	2	21- 5	27	3- 9	17- 8	10- 3	0- 5		45
S 512	6	6- 2	ST						39
S 601	166	9- 8	ST						2410
S 602	8	21- 7	ST						259
S 603	4	20- 9	ST						125
S 604	4	19- 2	ST						115
S 605	19	16- 6	ST						471
S 606	10	12- 0	ST						180
S 607	5	28- 9	ST						216
S 608	5	21-11	ST						165
S 609	4	4- 1	ST						25
S 610	4	7- 5	ST						45
S 611	4	9- 6	ST						57
S 612	4	10-10	ST						65
S 613	4	11- 8	ST						70
S 801	22	11- 7	6	10- 6					680
S 802	2	6- 8	6	5- 7					36
S 803	2	8- 1	6	7- 0					43
S 804	2	9-10	6	8- 9					53
S 805	2	11- 1	6	10- 0					59
S 806	2	12- 0	6	10-11					64
S 807	2	12- 9	6	11- 8					68
S 808	2	13- 4	6	12- 3					71
S 809	2	13-10	6	12- 9					74
S 810	2	14- 2	6	13- 1					76
S 811	2	14- 5	6	13- 4					77
S 812	2	14- 7	6	13- 6					78
S 813	2	10- 8	12	2-10	7-10	0-11			57
S 814	2	12- 1	12	4- 3	7-10	0-11			65
S 815	2	13-10	12	6- 0	7-10	0-11			74
S 816	2	15- 1	12	7- 3	7-10	0-11			81
S 817	2	16- 0	12	8- 2	7-10	0-11			85
S 818	2	16- 9	12	8-11	7-10	0-11			89
S 819	2	17- 4	12	9- 6	7-10	0-11			93
S 820	2	17-10	12	10- 0	7-10	0-11			95
S 821	2	18- 2	12	10- 4	7-10	0-11			97
S 822	2	18- 5	12	10- 7	7-10	0-11			98
S 823	2	18- 7	12	10- 9	7-10	0-11			99
S 824	4	12- 2	ST						130
S1001	93	30- 0	ST						12005
					TOTAL	SUPERSTRUCTURE		=	31891
			REPLACEMENT BARS						
RE 401	1	6- 3	10	6- 3	1- 4				
RE 501	1	6- 7	ST						
RE 601	1	6-11	ST						
RE 701	1	7- 2	ST						
RE 801	1	7- 6	ST						
RE 901	1	7-10	ST						
RE1001	1	8- 0	ST						
RE1101	1	8- 6	ST						
				GRAND	TOTAL	FOR BRIDGE		=	65,213

BAR SIZE IS INDICATED IN THE BAR MARK. THE FIRST DIGIT WHERE THREE DIGITS ARE USED, AND THE FIRST TWO DIGITS WHERE FOUR DIGITS ARE USED, INDICATE THE BAR SIZE NUMBER. FOR EXAMPLE, A 700 IS A NO. 7 SIZE BAR AND A1014 IS A NO. 10 SIZE BAR.

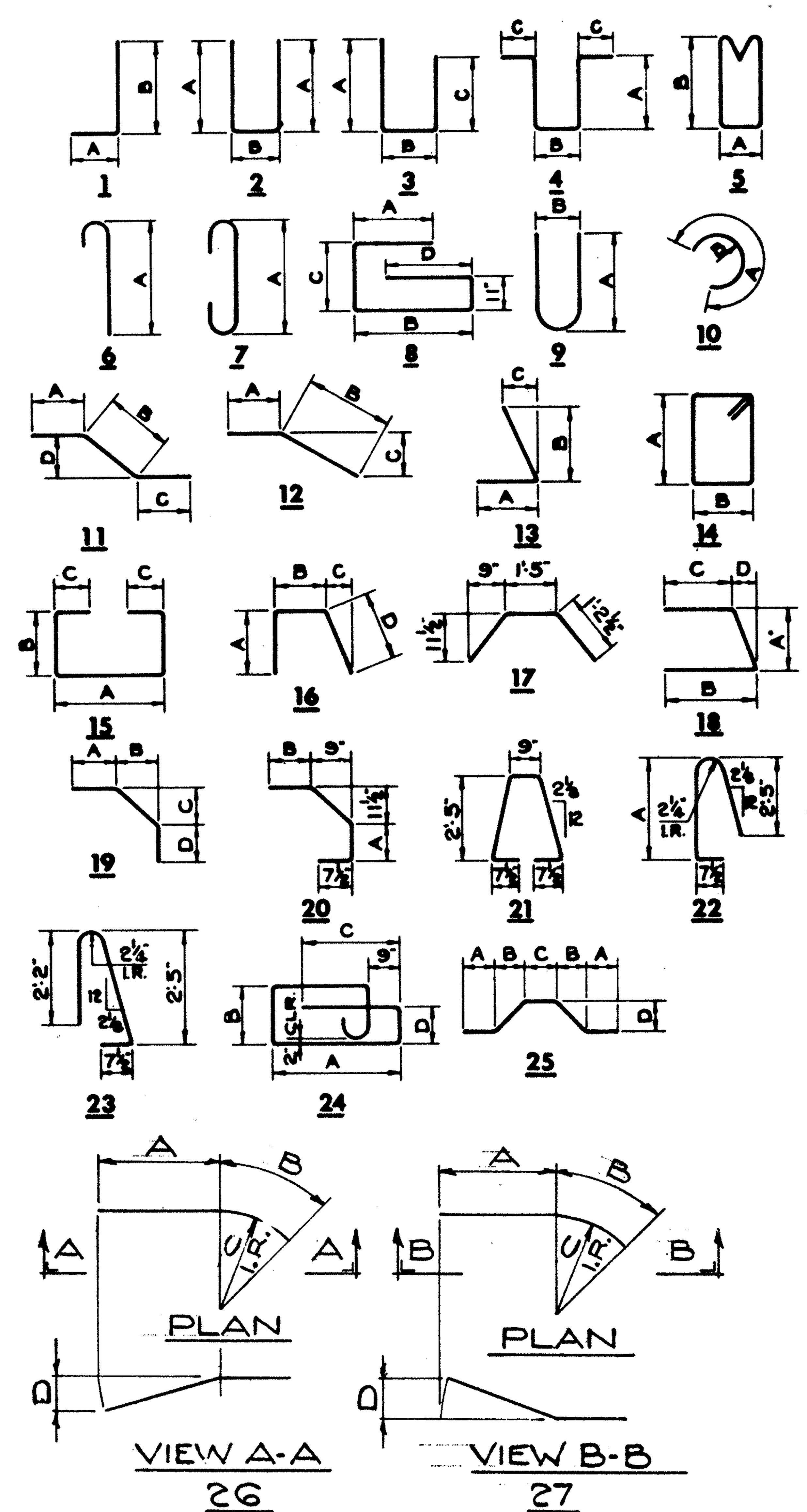

STATE OF OHIO
DEPARTMENT OF HIGHWAYS
BUREAU OF BRIDGES

8 / 8

DALTON · DALTON ASSOCIATES

REINFORCING SCHEDULE

BRIDGE Nº SUM-8-1927
UNDER PEDESTRIAN BRIDGE
SUMMIT CO. CUYAHOGA FALLS EXPY.
STA 314+04.50

DESIGNED	DRAWN	TRACED	CHECKED	REVIEWED	DATE	REVISED
BWMc	JWW		CW 4/4/69	RDH	4-4-69	

612053 X

LIMITED ACCESS

THIS IMPROVEMENT HAS BEEN DECLARED A LIMITED ACCESS HIGHWAY FROM STATION 229+00.00 TO STATION 1043+44.20 BY ACTION OF THE DIRECTOR OF HIGHWAYS AND RECORDED IN VOLUME 44, PAGE 944, OF THE DIRECTORS JOURNAL PURSUANT TO LAW FIRST HEARING 10-15-59; RECORDED 11-6-59
SECOND HEARING 10-16-62 VOL. 47 PAGE 1209; RECORDED 11-8-62

INDEXED

CENTERLINE SURVEY PLAT

SUMMIT - 8 - 17.63
SUMMIT COUNTY, OHIO
CITY OF CUYAHOGA FALLS
ORIGINAL STOW TOWNSHIP T-3N R-10W

NOTE: THIS PLAT SUPERSEDES CENTERLINE PLAT RECORDED IN PLAT VOL.-70, PGS. 54 & 55 SUMMIT COUNTY RECORD OF PLATS AND IS RE-RECORDED FOR THE PURPOSE OF SHOWING ADDITIONAL MONUMENTS

GRAPHIC SCALE
0 200 400 600 800

T.N.N. R.N. Jr. 5-1-72

FED. RD.	STATE	PROJECT	
2	OHIO	U19 (12)	

405 / 440

SUM-8-17.63

RIGHT-OF-WAY SHEET 1 / 56

6348

TRANSFER NOT NECESSARY SEC. 319.202 REV. CODE COMPLIED WITH EXEMPT
G. L. BOWER, County Auditor, By: [illegible], Deputy

THU 6-15-67

612053
RECEIVED FOR RECORD
MAY - 1 1972
8:10 o'clock A.M.
Recorded MAY 4 - 1972
Vol. 81 Page 52-53-54-55
Roy R. Ruff, Recorder, Summit County, Ohio
By: R. Clay II, Deputy $35.30

470257
RECEIVED FOR RECORD
JUN 15 1967
3:05 o'clock P.M.
Recorded JUN 19 1967
Vol. 70 Page 54-55-56-57
Roy R. Ruff, Recorder, Summit County, Ohio $17.40
By: Carol Dunlap, Dep. Recorder

VOL 81 PAGE 53

CONSTRUCTION CENTERLINE SURVEY CURVE DATA
Δ = 21° 25' 06" RT.
Dc = 1° 28' 00"
R = 3,906.53'
T = 738.79'
Lc = 1,460.34'
E = 69.25'
P.I. STA. 223+31.98

CONSTRUCTION CENTERLINE SURVEY CURVE DATA
Δ = 15° 06' 08" LT
Dc = 1° 28' 00"
R = 3906.53'
T = 517.85'
Lc = 1029.70'
E = 34.17'
P.I. STA. 240+86.53

RELOC SECOND ST. CURVE DATA
Δ = 45° 34' 45" RT.	Δ = 45° 33' 40" LT.
Dc = 18° 45' 00"	Dc = 18° 30' 00"
R = 305.58'	R = 309.71'
Lc = 243.09'	Lc = 246.28'
T = 128.39'	T = 130.06'
E = 25.881	E = 26.20'
P.I. STA. 47+57.39	P.I. STA. 53+07.11

CONSTRUCTION CENTERLINE SURVEY CURVE DATA
Δ = 28°46'09" RT.
Dc = 5°00'00"
R = 1145.92'
Lc = 500.00'
D = 12° 30' 00"
Θs = 2°30'00"
Ts = 345.82'
Es = 46.46'
Ls = 75.38'
Lc = 334.17'
S.T. = 167.43'
Δc = 3°46'09"
Tc = 37.71'
Ec = 0.62'
P.I. STA. 264+15.53

SUBSTITUTE CURVE DATA FOR RIGHT OF WAY
Δ = 12°30'00" RT.
Dc = 3°44'52"
R = 1528.79'
T = 167.43'
Lc = 333.53'
P.I. #1 STA. 262+03.88
P.I. #2 STA. 266+12.52

HUDSON DR. CURVE DATA
Δ = 9°36'52" RT.
Dc = 3°00'
R = 1909.86'
T = 160.62'
Lc = 320.48'
E = 6.74'
P.I. STA. 50+68.80

ASHLAND - RUDOLPH CONNECTOR CURVE DATA
℄ CURVE N°1
Δ = 67°00' LT.
R = 39.92
T = 26.43
Lc = 46.68
PC. = 47+85.57
P.T. = 48+32.25

℄ CURVE N°2
Δ = 11°01'18" RT.
D = 10°00'00"
R = 572.96'
T = 55.28'
Lc = 110.22
E = 2.66
PC. = 48+70.54
P.T. = 49+80.76

℄ CURVE N°3
Δ = 21°57'21" Lt.
R = 87.64'
T = 17.00'
Lc = 33.58'
E = 1.63
PC. = 50+73.75
P.C.C. = 51+07.33

℄ CURVE N°4
Δ = 90°00' LT.
R = 38.00'
T = 38.00'
Lc = 59.69'
P.C.C. = 51+07.33
P.T. = 51+67.02

RUDOLPH AVE.

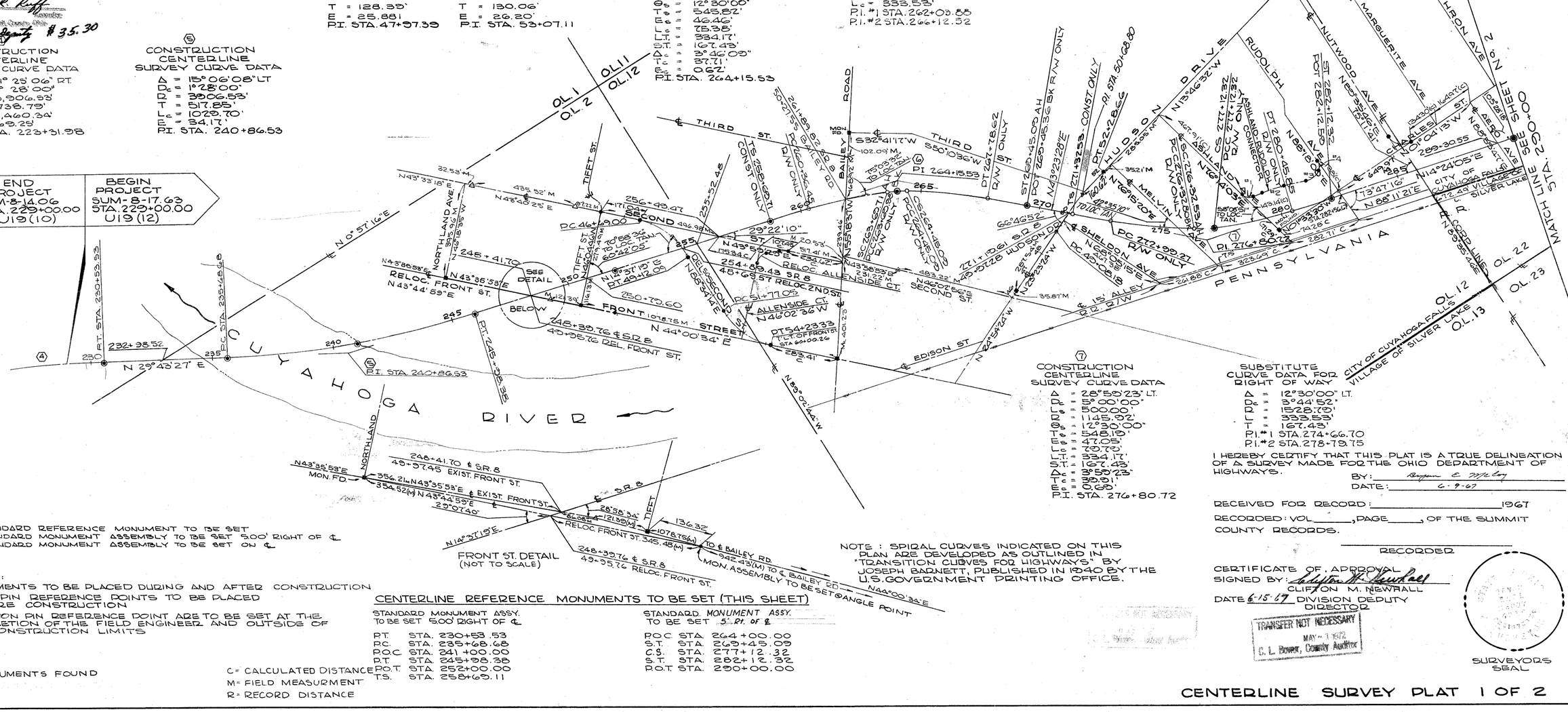
END PROJECT SUM-8-14.06 STA. 229+00.00 U19(10)
BEGIN PROJECT SUM-8-17.63 STA. 229+00.00 U19(12)
N 0° 57' 16" E
N 29° 43' 27" E
N 43° 33' 18" E
N 43° 38' 58" E
RELOC. FRONT ST. N 43° 44' 59" E
N 43° 38' 58" E
N 44° 00' 34" E
N 46° 02' 34" W
N 24° 54' 24" W
N 14° 24' 05" E
N 14° 37' 19" E
N 44° 00' 34" E
N 85° 02' 44" W
S 32° 41' 17" W
S 50° 10' 36" W
N 43° 23' 28" E
N 13° 26' 32" W
N 14° 24' 05" E
N 86° 11' 21" E
N 04° 04' 13" W
N 85° 18' 10" E
N 43° 38' 58" E
N 44° 00' 34" E
N 44° 00' 34" E
N 24° 54' 24" W
N 43° 38' 58" E
N 43° 38' 58" E
N 44° 00' 34" E
N 44° 00' 34" E
N 24° 54' 24" W

LIMITED ACCESS
THIS IMPROVEMENT HAS BEEN DECLARED A LIMITED ACCESS HIGHWAY FROM STATION 229+00.00 TO STATION 1043+44.20 BY ACTION OF THE DIRECTOR OF HIGHWAYS AND RECORDED IN VOLUME 44, PAGE 344, OF THE DIRECTORS JOURNAL PURSUANT TO LAW.
FIRST HEARING 10-15-59; RECORDED 11-6-59
SECOND HEARING 10-16-62 VOL. 47 PAGE 1208; RECORDED 11-8-62

NOTE: THIS PLAT SUPERSEDES CENTERLINE PLAT RECORDED IN PLAT VOL.-70, PGS. 56 & 57 SUMMIT COUNTY RECORD OF PLATS AND IS RE-RECORDED FOR THE PURPOSE OF SHOWING ADDITIONAL MONUMENTS

CENTERLINE SURVEY PLAT

SUMMIT - 8 - 17.63
SUMMIT COUNTY, OHIO
CITY OF CUYAHOGA FALLS
ORIGINAL STOW TOWNSHIP T-3 N R-10 W

(INDEXED)

FED. RD.	STATE	PROJECT	
2	OHIO	U19 (12)	

406/460

SUM-8-17.63

RIGHT-OF-WAY SHEET 2/56

VOL. 81 PAGE 55

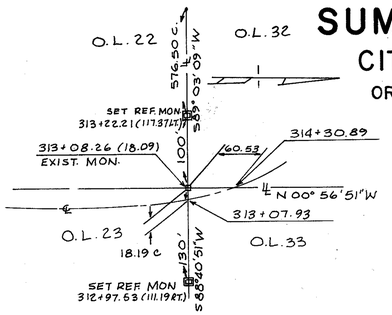

GRAPHIC SCALE
0 200 400 600 800

⑧ CONSTRUCTION CENTERLINE SURVEY CURVE DATA
Δ = 50°33'25"
Dc = 3°00'00"
Ls = 350.00'
D = 1909.86'
θs = 5°15'00"
Ts = 1260.31'
Es = 203.64'
Lc = 1635.73'
LT. = 233.44'
S.T. = 116.76'
Δs = 49°03'25"
Tc = 871.52'
Ec = 180.45'
P.I. STA. 316+71.72

SUBSTITUTE CURVE DATA FOR RIGHT OF WAY
Δ = 5°15'00" LT.
Dc = 2° 14' 59"
D = 2549.73'
Lc = 233.36'
T = 116.76'
P.I. #1 STA 306+35.83
P.I. #2 STA 325+04.40

EXIST. GRAHAM RD. CURVE DATA
Δ = 28°57'00"
Dc = 9°00'00"
T = 164.34'
Lc = 321.67'
P.I. STA. 110+09.45

RELOCATED GRAHAM RD. CURVE DATA
Δ = 56°22'40"
Dc = 5°00'
R = 1145.92'
T = 614.15'
Lc = 1127.56'
E = 154.20'
P.I. STA. 113+54.92

EXIST. GRAHAM RD. CURVE DATA
Δ = 27°25'40"
Dc = 12°00'00"
T = 116.52'
Lc = 228.56'
P.I. STA. 116+26.96

GRAHAM RD CURVE DATA
Δ = 27° 17' 25"
Dc = 5° 00'
T = 278.18'
Lc = 545.81'
R = 1145.92'
P.I STA. 124+17.92

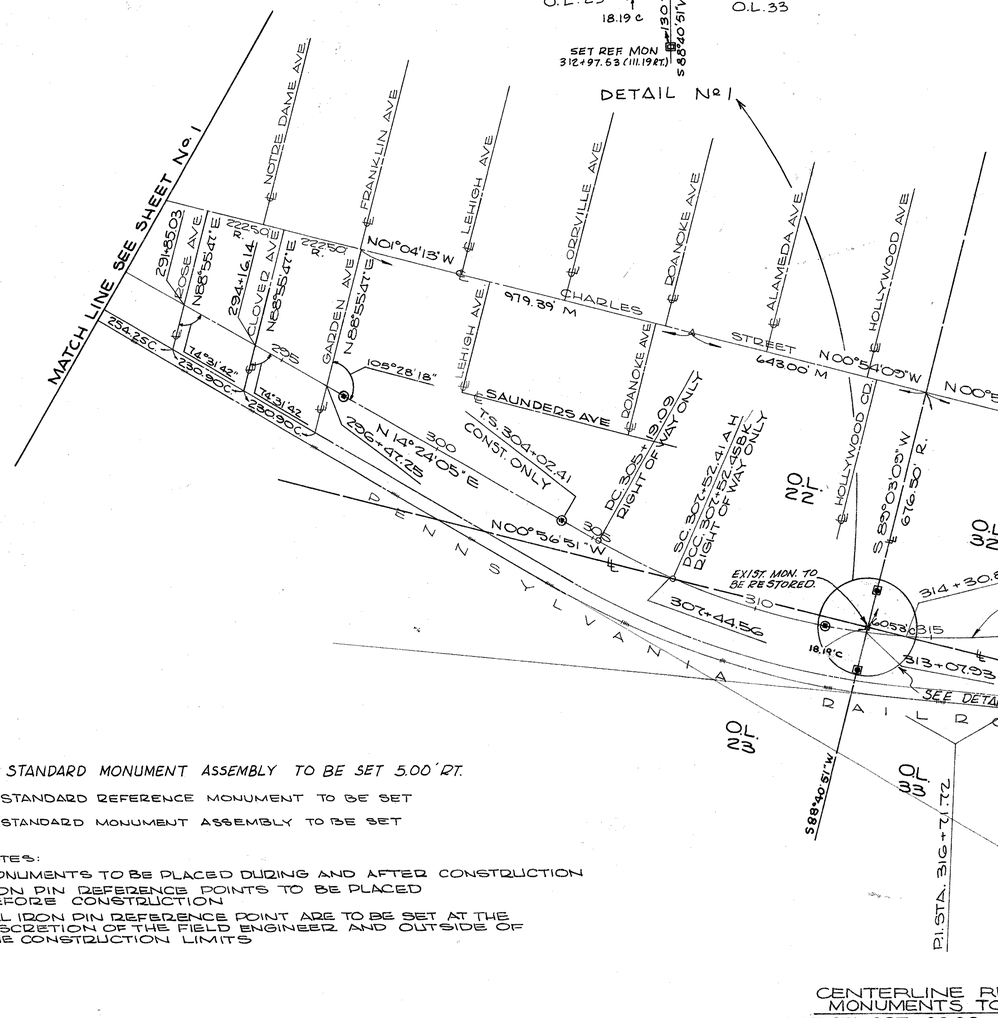

- ● STANDARD MONUMENT ASSEMBLY TO BE SET 5.00' RT.
- ▣ STANDARD REFERENCE MONUMENT TO BE SET
- • STANDARD MONUMENT ASSEMBLY TO BE SET

NOTES:
MONUMENTS TO BE PLACED DURING AND AFTER CONSTRUCTION
IRON PIN REFERENCE POINTS TO BE PLACED BEFORE CONSTRUCTION
ALL IRON PIN REFERENCE POINT ARE TO BE SET AT THE DISCRETION OF THE FIELD ENGINEER AND OUTSIDE OF THE CONSTRUCTION LIMITS

■ MONUMENTS FOUND

C= CALCULATED DISTANCE
M= FIELD MEASURMENT
R= RECORD DISTANCE

CENTERLINE REFERENCE MONUMENTS TO BE SET 5' RT. OF ℄

P.O.T. STA. 297+00.00	P.O.C. STA. 320+00.00
T.S. STA. 304+02.41	S.T. STA. 327+37.64
P.O.C. STA. 312+00.00	P.O.T. STA. 333+50.00

NOTE: SPIRAL CURVES INDICATED ON THIS PLAN ARE DEVELODED AS OUTLINED IN "TRANSITION CURVES FOR HIGHWAYS" BY JOSEPH BARNETT, PUBLISHED IN 1940 BY THE U.S. GOVERNMENT PRINTING OFFICE.

I HEREBY CERTIFY THAT THIS PLAT IS A TRUE DELINEATION OF A SURVEY MADE FOR THE OHIO DEPARTMENT OF HIGHWAYS
BY: Roger E McCoy
DATE: 6-9-67

RECEIVED FOR RECORD: _____ 196 ____
RECORDED: VOL. _____, PAGE _____, OF THE SUMMIT COUNTY RECORDS.
_____ RECORDER

CERTIFICATE OF APPROVAL
SIGNED BY: Clifton M. Newhall
CLIFTON M. NEWHALL
DATE 6-15-67 DIVISION DEPUTY DIRECTOR

SURVEYORS SEAL

CENTERLINE SURVEY PLAT 2 OF 2

VOL. 81 PAGE 54

AUG 27 1968

K & E - AKRON

PROPERTY MAP

SUMMIT - 8 - 17.63

SUMMIT COUNTY, OHIO

CITY OF CUYAHOGA FALLS

ORIGINAL STOW TOWNSHIP T-3N R-10W

FED. RD.	STATE	PROJECT	
2	OHIO	U19(12)	

407/460

SUM-8-17.63

RIGHT-OF-WAY SHEET 3/56

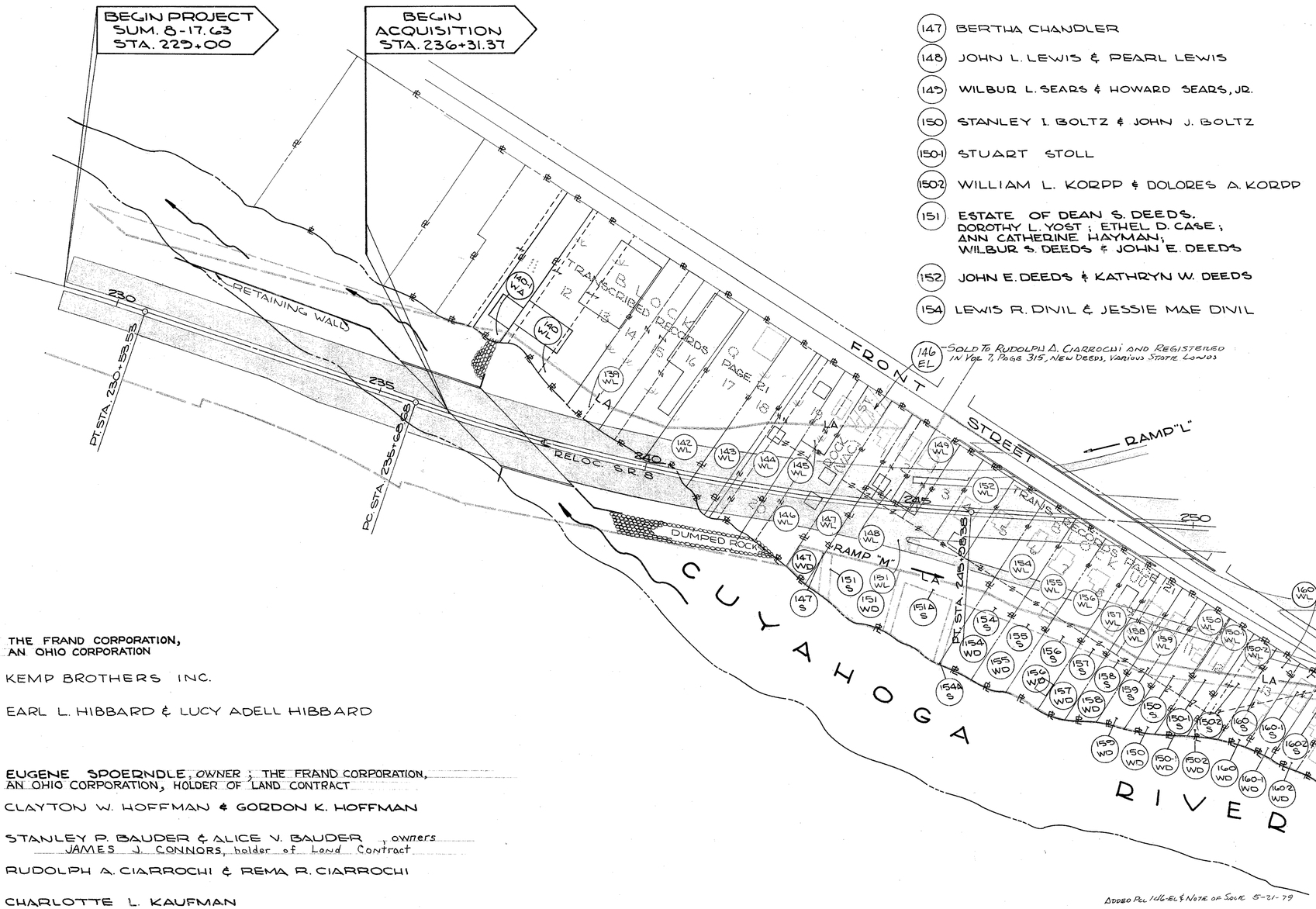

(147) BERTHA CHANDLER

(148) JOHN L. LEWIS & PEARL LEWIS

(149) WILBUR L. SEARS & HOWARD SEARS, JR.

(150) STANLEY I. BOLTZ & JOHN J. BOLTZ

(150-1) STUART STOLL

(150-2) WILLIAM L. KORPP & DOLORES A. KORPP

(151) ESTATE OF DEAN S. DEEDS. DOROTHY L. YOST; ETHEL D. CASE; ANN CATHERINE HAYMAN; WILBUR S. DEEDS & JOHN E. DEEDS

(152) JOHN E. DEEDS & KATHRYN W. DEEDS

(154) LEWIS R. DIVIL & JESSIE MAE DIVIL

(146 EL) – SOLD TO RUDOLPH A. CIARROCHI AND REGISTERED IN VOL. 7, PAGE 315, NEW DEEDS, VARIOUS STATE LANDS

(155) CORRINE E. PATTERSON

(156) JAMES V. CAPRIOLA & HELEN E. CAPRIOLA

(157) LORETTA COULSON & SHIRLEY ELAINE COSTICK

(158) LEOTA D. WRIGHT

(159) RICHARD F. MILLER & LUELLA B. MILLER

(160) MARY A. HAYNES f.k.a. MARY A. CARUSO

(160-1) MARTHA JARRETT

(160-2) FREDRICK O. NOBLE & HELEN B. NOBLE

(160-3) ALAN E. EDERER & ROBERT E. NORRIS

(160-6) CHARLES ROBERT LOWE & ALICE V. LOWE

(160-7) MERCEDES MOORE

(139) THE FRAND CORPORATION, AN OHIO CORPORATION

(140) KEMP BROTHERS INC.

(140-1) EARL L. HIBBARD & LUCY ADELL HIBBARD

(142) EUGENE SPOERNDLE, OWNER; THE FRAND CORPORATION, AN OHIO CORPORATION, HOLDER OF LAND CONTRACT

(143) CLAYTON W. HOFFMAN & GORDON K. HOFFMAN

(144) STANLEY P. BAUDER & ALICE V. BAUDER, owners
JAMES J. CONNORS, holder of Land Contract

(145) RUDOLPH A. CIARROCHI & REMA R. CIARROCHI

(146) CHARLOTTE L. KAUFMAN

AFFECTED UTILITY COMPANIES

OHIO BELL TELEPHONE COMPANY
50 WEST BOWERY STREET
AKRON, OHIO

EAST OHIO GAS COMPANY
1717 EAST NINTH STREET
CLEVELAND, OHIO

OHIO EDISON COMPANY
47 NORTH MAIN STREET
AKRON, OHIO

CITY OF CUYAHOGA FALLS
WATER UTILITIES DEPARTMENT
2310 SECOND STREET
CUYAHOGA FALLS, OHIO

CITY OF CUYAHOGA FALLS
MUNICIPAL ELECTRIC SERVICE
2310 SECOND STREET
CUYAHOGA FALLS, OHIO

ADDED PCL 160-6EL & NOTE OF SOLE 5-21-79

Deleted Pcl. 160-3WD and 160-3LA. Revised area of 160-3WL to included 160-3WD. 7-17-69 White

DELETED PCL 160-7LA: REV. 160-7WD TO PCL 160-7WL - 12-23-74

PRELIMINARY SUBMITTAL DATE
RIGHT OF WAY COMPLETION DATE

NO	REVISIONS	MADE BY	DATE
1	ADDED RR SYMBOLS	E.V.	8-16-68
2	DELETED PCL. 141 & COMBINED AREA WITH PCL. 139. (New Owner)	L.B.	8-28-68
3.	Revised Name Pcl 144	EW	12-3-68
4.	Revised Name Pcl. 142-WL	Lee	2-25-69
5.	Revised Name Pcl. 160-WL	Lee	3-25-69

PROPERTY MAP – SHEET NO. 1 OF 5

AUG 27 1968

K & E-AKRON

PROPERTY MAP

SUMMIT - 8 - 17.63

SUMMIT COUNTY, OHIO

CITY OF CUYAHOGA FALLS

ORIGINAL STOW TOWNSHIP T-3N R-10W

FED. RD.	STATE	PROJECT	
2	OHIO	U19(12)	

408/460

SUM-8-17.63

RIGHT-OF-WAY SHEET 4/56

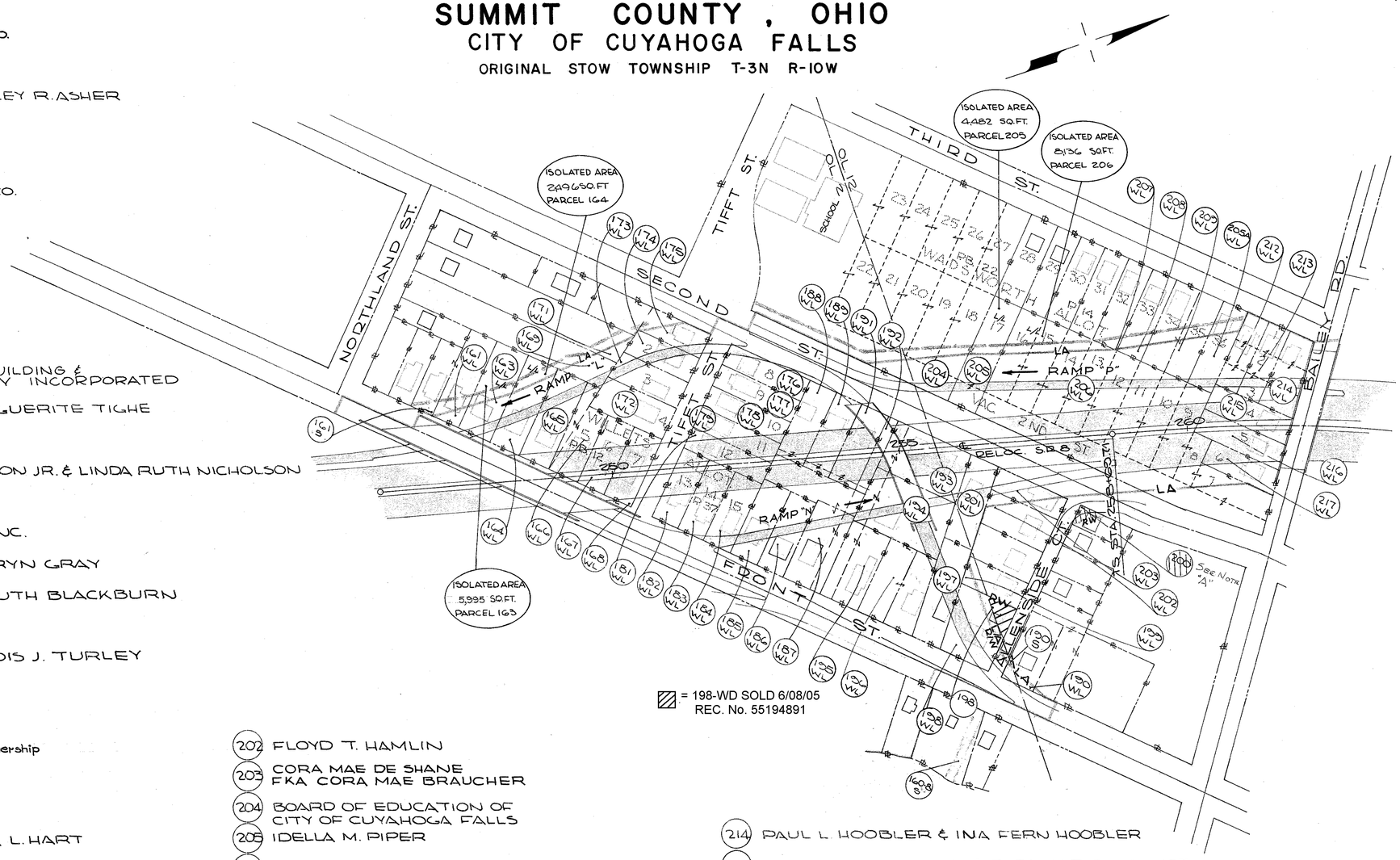

161 ELLIS T. MILLS & MARGARET BARKER MILLS
163 HARRY L. CARDER & HAZEL CARDER
164 EDITH L. SOUERS
165 W.C. KEENAN REALTY CO.
166 EDWARD R. PORTER
167 DEWITT ASHER & SHIRLEY R. ASHER
168 SECURITY REALTY CO.
169 CHARLES E. WOLF
171 THE WAYNE AGENCY CO.
172 JAMES H. SAUSAMAN
173 RUTH M. WOLF
174 EMMA M. SCHAFFER
175 WAYNE H. KOONS AKA WAYNE KOONS
176 THOMAS R. WARREN
177 GILLESPIE-PILCHER BUILDING & INVESTMENT COMPANY INCORPORATED
178 JOHN P. TIGHE & MARGUERITE TIGHE
179 RICHARD L. MILLER
181 ALVA JARED NICHOLSON JR. & LINDA RUTH NICHOLSON
182 RUTH A. LUTZ
183 HAROLD G. RHODES INC.
184 KARL L. GRAY & KATHRYN GRAY
185 L.G. BLACKBURN & RUTH BLACKBURN
186 KATHRYN J. FOWLS
187 JOHN J. TURLEY & LOIS J. TURLEY
188 MARGARET D. COPE
189 ELEANOR H. BACKUS
190 THE ALMAR CO., A Partnership
191 VIVIAN L. KLUGHART
192 LLOYD F. BENDER
193 JOHN C. HART & ARTA L. HART
194 HUGH T. RINEHART & INEZ K. RINEHART
195 *Akron National Bank AND Trust Co. ETAL.*
196 ANNA M. WISE
197 LELAND COX AKA LELAND S. COX
198 ELEANOR M. NIHOUSEN
199 DAVID K. FIRM & DOROTHY K. FIRM
200 FRANK J. MANSFIELD & JEANNE MANSFIELD
201 PAUL PFOUTS & KATHRYN PFOUTS
202 FLOYD T. HAMLIN
203 CORA MAE DE SHANE FKA CORA MAE BRAUCHER
204 BOARD OF EDUCATION OF CITY OF CUYAHOGA FALLS
205 IDELLA M. PIPER
206 THE FRED W. ALBRECHT GROCERY CO.
207 JOHN DING & DAISY T. DING
208 HERBERT R. NORRIS & MARTHA NORRIS
209 W. KENT SLUTZ
205A SEE PARCEL 205
212 EDWARD G. WEBER & JOANNE M. WEBER
213 EMERALD C. HINKLE & GLADYS V. HINKLE
214 PAUL L. HOOBLER & INA FERN HOOBLER
215 RAYMOND I. FRANCE & ELEANOR D. FRANCE
216 JACK MARSILLO & SYLVIA MARSILLO
217 WENDELL W. ARMSTRONG & IRENE A. ARMSTRONG
1608 HAROLD SOMMERS

NOTE "A" PCL 200 CONVEYED TO THE CITY OF CUYAHOGA FALLS BY DIRECTOR'S DEED RECORDED IN VOL. 6589, PGS. 486-489

810-82 CROSS-HATCHED PCL 200 TO SHOW CONVEYANCE TO CITY OF CUYAHOGA FALLS

* STATE-FEDERAL PARTICIPATION ONLY

QUANTITY SUMMARY TYPE CL FENCE	
SHEET Nº	LIN. FT.
18	457
19	609
20	1015
21	434
22	575
23	528
24	1224
25	400
26	835
27	0
28	0
29	1026
30	1070
31	1108 /**
34	1141
35	1005
36	1105
37	1105
38	1105
39	1105
40	1020
41	1000
42	1010
43	750
45	365
*46	* 445
47	240
*48	* 367
*49	* 295
*50	* 290
*51	* 580
*52	* 869
*53	BY OTHERS
*54	* 195
55	455
56	184
TOTAL	20,471
	* 3,041
	**1 GATE

GRAPHIC SCALE
0 100 200 300 400

PRELIMINARY SUBMITTAL DATE RIGHT OF WAY COMPLETION DATE			
Nº	REVISIONS	MADE BY	DATE
1	IDENTIFIED SCHOOL	E.V.	8-16-68
2	DELETED PCL. 162 & COMPINED AREA TO PCI 161	L.B.	8-28-68
3	CHANGED NAME PCL. 208	L.B.	10-2-68
4	FENCE QUANTITIES	D.D.A.	10-16-68
5	L/L AREA CORR. PCL. 163	L.B.	11-5-68
6	NAME CHANGE PCL. 190.	LEE	4-7-69
7	Sold parcel 198-WD	DJH	4/02/06

PROPERTY MAP - SHEET Nº 2 OF 5

AUG 27 1969

K & E - AKRON

PROPERTY MAP

SUMMIT - 8 - 17.63
SUMMIT COUNTY, OHIO
CITY OF CUYAHOGA FALLS
ORIGINAL STOW TOWNSHIP T-3N R-10W

FED. RD.	STATE	PROJECT	
2	OHIO	U19(12)	

409/460

SUM-8-17.63

RIGHT-OF-WAY SHEET 5/56

218 HUMBLE OIL & REFINING COMPANY
219 FIRST NATIONAL BANK OF AKRON, TRUSTEE
221 FALLS SUPERSONIC CAR WASH INC.
222 HENRY A. KREINBERG
223 LAURA B. CONRAD
224 ROBERT J. LEWIS
225 WILLIAM L. PIERSON & JUNE M. PIERSON
226 MOLLIE CASE
227 R.F. COOK MANFACTURING COMPANY
228 PROGRESSIVE MOLD AND MACHINE CO.
229 OLGA V. GOOD

244 ROBERT J. HARTER & LURETTA B. HARTER
245 LUCILLE I. MITROVICH

248 W.L. TUCKER COAL & SUPPLY CO.
249 JOSEPH S. DAYTON JR. & DARLENE IRENE DAYTON
250 V.B. & R.E. SIMONS
251 ELIZABETH ANN HURLEY
252 MILDRED CATHERINE WOOD

253 GERTRUDE J. GEBHART FKA GERTRUDE J. ELLSWORTH
254 CELINA E. KIMES
255 OHIO EDISON CO.
256 ROY HOLLAND
285 CORA A. CUNNINGHAM

265 MILDRED A. HATFIELD
266 ANTHONY FALCONE & RUTH L. FALCONE
267 JAMES P. JEFFERY & JENNIE LEE JEFFERY
268 ODA W. GOUGH & LEAH GOUGH
269 HAZEL M. BURDICK
271 BENNIE HARMON & GLAYDIES HARMON
272 MAMIE HARTER
273 CALVIN HARTER

297 MARY VINCZELLER
298 RANDALL A. WEITZEL & IRENE S. WEITZEL
299 JASON F. BURLEY & JEANNETTE S. BURLEY
301 VILA M. MOORE
263 BETTY J. FARRIS

231 IRENE W. JORDAN NKA IRENE W. QUAINTANCE
232 MARGUERITE M. STRONG

234 THE GENERAL TIRE & RUBBER CO.
235 JIMMIE WILHELM & MARLYN JOYCE WILHELM
236 BEN E. FORBES
237 ANTHONY GAYLAN
238 IRENE SENN

240 BERTHA KODISH
241 MART SMITH & EFFIE SMITH
239A VICTOR A. McFARLAND
243 GEORGE SCHRIBER

254 MART S. SMITH & EFFIE M. SMITH
255 C. SHELDON McKENZIE
256 MACK W. BRISLINGER
257 BONNIE M. BARNARD
258 EDWARD J. DEIBEL & ADA L. DEIBEL
259 GILBERT J. KOHUT
261 THOMAS S. BOWMAN
262 TRUMP PLASTICS INC.
264 VIVIAN E. WHITTAKER

260 REICHHOLD CHEMICALS, Inc.

274 LEHR M. DAVIS & MARY P. DAVIS
275 RICHARD IRVIN WILLIAMS & HELEN ROSALIE WILLIAMS
276 EVA. KLING
277 THOMAS E. COAKLEY & VIOLA MAE COAKLEY
278 MABEL M. BROLLIER
281 JOSEPH A. REED & TOLA B. REED
282 LAURA I. MACHAMER & STERLING S. MACHAMER
283 ROGER WILSON FRANTZ & CATHERINE A. FRANTZ
284 HARRIETT GRAFMILLER
285 CHARLES H. SAMPSON & GEORGE R. SAMPSON, JR.
286 HELEN M. SHOAF
287 DOLLIE LOUISE GIPSON NKA DOLLIE L. BITTNER
288 BEATRICE A. ENSWORTH

Changed Pcl 281 WD to a Standard Highway Easement. white 10-16-69
Name Changed Pcl. 228WL white 9-8-69

ISOLATED AREA 5542 SQ.FT. PARCEL 264
ISOLATED AREA 2217 SQ.FT. PARCEL 265
ISOLATED AREA 2852 SQ.FT. PARCEL 288
ISOLATED AREA 6941 SQ.FT. PARCEL 241

CHANGED PCL 328B-T TO A SEWER EASEMENT 5-12-71
ADDED P.R.O. TO PARCEL 238WL 11-4-70
PCL 239-WL Deleted, PCL 234-WL Revised 10-23-69

GRAPHIC SCALE
0 100 200 300 400

5 Added 293-PR J.R.T. 8-14-69

PRELIMINARY SUBMITTAL DATE:
RIGHT-OF-WAY COMPLETION DATE:

No	REVISIONS	MADE BY	DATE
1	Revised Name Pcl. 260 Revised Parcel 221	LB. ECS	10-2-68 10-11-68
2	ADDED WEST LINES TO LOTS 15-16-817 OF IDEAL ALLOTMENT.	J.R.T.	12-18-68
3	Revised name per outside Pcl 224	J.R.S.	1-6-69
4	Revised Name Pcl. 264	Lee	1-27-69

PROPERTY MAP - SHEET No. 3 OF 5

Revised Name Pcl. 232-WL Lee 2-11-69

AUG 27 1969

K & E - AKRON

PROPERTY MAP

SUMMIT - 8 - 17.63

SUMMIT COUNTY, OHIO

CITY OF CUYAHOGA FALLS

ORIGINAL STOW TOWNSHIP T-3N R-10W

FED. RD.	STATE	PROJECT	
2	OHIO	U19(12)	

410
460

SUM-8-17.63

RIGHT-OF-WAY SHEET 6/56

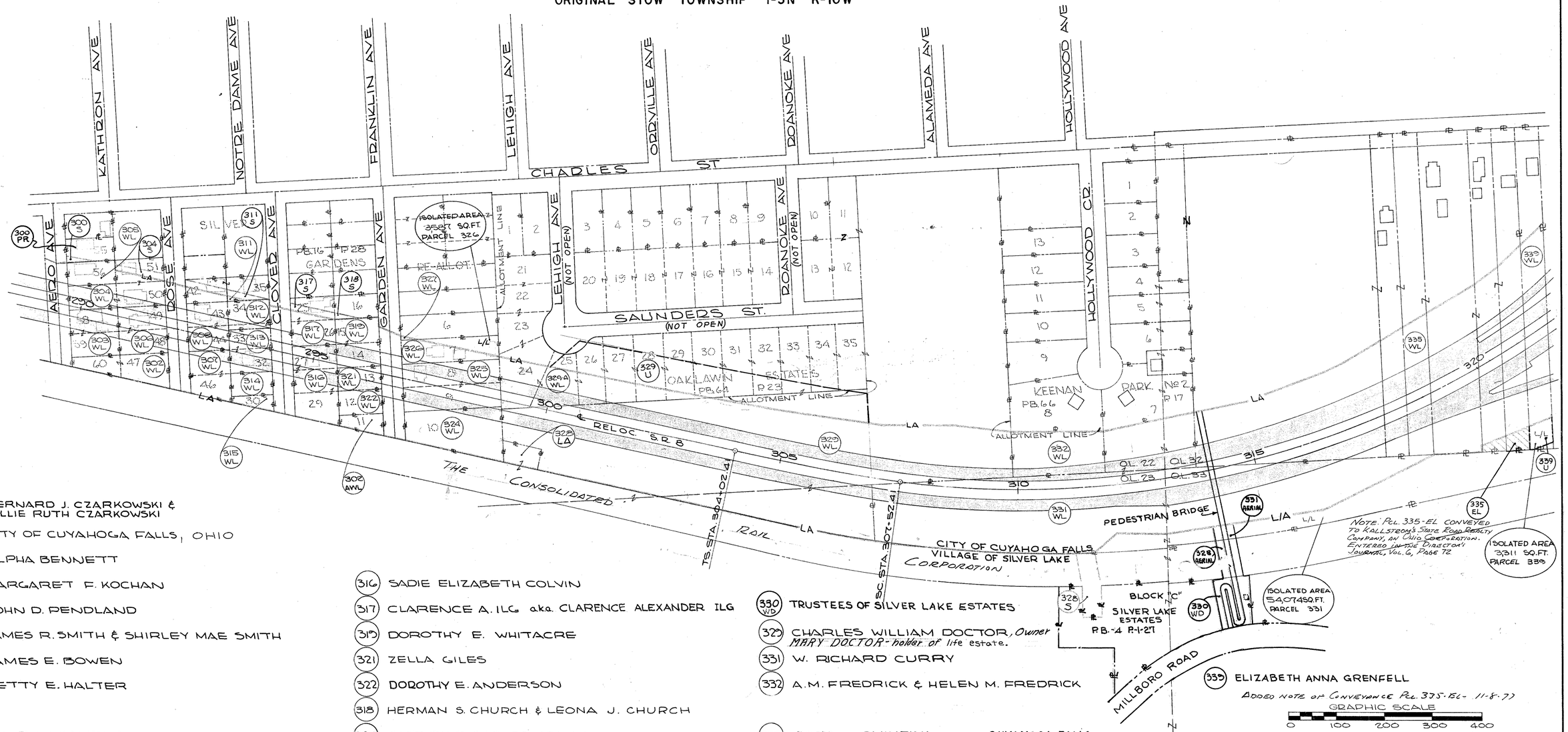

(300) BERNARD J. CZARKOWSKI & BILLIE RUTH CZARKOWSKI

(302) CITY OF CUYAHOGA FALLS, OHIO

(303) ALPHA BENNETT

(304) MARGARET F. KOCHAN

(305) JOHN D. PENDLAND

(306) JAMES R. SMITH & SHIRLEY MAE SMITH

(307) JAMES E. BOWEN

(308) BETTY E. HALTER

(311) DAVID W. KAUFMAN

(312) GEORGE LUCAS & MICHAEL M. SIMMS

(313) ARTHUR R. MOORE JR.

(314) ABNER D. ZOOK

(315) RUTH HARRIET ROGERS NKA RUTH ROGERS WILSON

(316) SADIE ELIZABETH COLVIN

(317) CLARENCE A. ILG aka. CLARENCE ALEXANDER ILG

(319) DOROTHY E. WHITACRE

(321) ZELLA GILES

(322) DOROTHY E. ANDERSON

(318) HERMAN S. CHURCH & LEONA J. CHURCH

(324) EAST OHIO GAS COMPANY

(325) NORA I. HALBLAUB, ESTATE OF

(326) ROBERT L. FREEMAN & MELBA F. FREEMAN

(327) ROBERT J. WINFIELD

(328) *THE CONSOLIDATED RAIL CORPORATION*

(330 WD) TRUSTEES OF SILVER LAKE ESTATES

(329) CHARLES WILLIAM DOCTOR, *Owner*
MARY DOCTOR- holder of life estate.

(331) W. RICHARD CURRY

(332) A.M. FREDRICK & HELEN M. FREDRICK

(335) *BOARD OF EDUCATION OF THE CUYAHOGA FALLS CITY SCHOOL DISTRICT*

(339) ELIZABETH ANNA GRENFELL

Added note of Conveyance Pcl. 335-EL- 11-8-77

Changed Pcl. 328T to A Sewer Ease. 5-12-71
Changed Pcl. 328 WL To 328LA & Revised Name 3-24-71
Added Parcels 329U & 339U L.S. 10-15-70
Added 335-EL per S.A.E. 8-17-70 Sands
Changed 330WD to Esmt-Per D.O.C. H.Eckert - white 8-26-69
Revised south R-335WL Per outsale white 8-19-69
Added 300-PR M.K.M. 8-18-69
DELETED PCL. 334 & COMBINED AREA WITH PCL. 335-WL PER OUTSALE LEE 9/26/69

Pcl. 330 Converted back to Pcl. 330WD - 10-31-69
Revised Name Pcl "329 9/16/69 Solomon
Removed Fr. Shed and 1/2 Sty Fr Hse from Pcl 312WL. White 4-17-69
DELETED PCLS. 337-WL & 338-WL COMBINED AREA WITH PCL. 335-WL PER OUTSALE. 4/15/69
ADDED PARCEL 328-AERIAL 330-WD AND 331-AERIAL FOR PEDEST. BRIDGE. CONSULTANT 4-14-69
REVISED NAME PCL. 317 LEE 1-13-69
Revised Name Pcl 327. 11-4-69 white
Revised Name Pcl 328 5-9-77

GRAPHIC SCALE
0 100 200 300 400

PRELIMINARY SUBMITTAL DATE: RIGHT-OF-WAY COMPLETION DATE:			
Nº	REVISIONS	MADE BY	DATE
1	ADDED LOTS 1-22 OAKLAWN EST. DELETED PCLS. 335 1/2 WL & 336 WL &	E.V.	8-16-68
2	COMBINED WITH 335 WL. NAME CHANGE ON TITLE	J.R.B.	9/18/68
3.	Combined Pcl 309 with Pcl 311. Pcls Now include 311 WL, 311 WA 311-S. New owner aquired 309.	E.W.	12-3-68
4	REVISED OWNER-PCL 338-PER OUTSALE	SANDS	2-10-69

PROPERTY MAP — SHEET Nº 4 OF 5

AUG 27 1969
LODGED
K & E-AKRON

PROPERTY MAP

SUMMIT - 8 - 17.63
SUMMIT COUNTY, OHIO
CITY OF CUYAHOGA FALLS
ORIGINAL STOW TOWNSHIP T-3N R-10W

FED. RD.	STATE	PROJECT	
2	OHIO	U19(12)	

SUM-8-17.63

RIGHT-OF-WAY SHEET 7/56

411/406

NOTE: ▨ = AREA CONVEYED TO THE CITY OF CUYAHOGA FALLS BY DIRECTOR'S DEED, VOLUME ____, PAGE ____. ENTERED IN THE JOURNAL OF THE DIRECTOR OF TRANSPORTATION, VOLUME 2, PAGE 531, ON 12-4-1975

ISOLATED AREA 4236 SQ.FT. PARCEL 341

ISOLATED AREA 17351 SQ. FT. PARCEL 343

ISOLATED AREA 6883 SQ.FT. PARCEL 342

ISOLATED AREA 14,980 SQ.FT. PARCEL 353

ISOLATED AREA 2482 SQ FT PARCEL 204A

CRYSTAL LAKE SUB PB 44 PGS. 33 ALL'T VAC. COM. PLEAS CT. 199325-1955

CRYSTAL LAKE DR. (VAC. ORD 14-1955)

FAIRWAY DR (VAC. ORD 14-1955)

BROOKVALE RD (VAC. ORD. 14-1955)

CURTIS ST.

CITY SILVER LAKE CUYAHOGA FALLS PENNSYLVANIA

CITY OF STOW

CORP LINE

GRAHAM RD

CITY OF CUYAHOGA FALLS

RAMP "C"

RAMP "A"

RAMP "B"

RAMP "D"

TEMPORARY RUN AROUND

& PROP. REL. GRAHAM RD. & EXIST. GRAHAM RD.

RELOC. S.R. 8

CS STA 323+57.64

ST STA 321+37.64

BK STA 333+79.30 AH STA 10+95.00 OD

END PROJECT SUM-8-17.63 STA 1043+44.20 U19(12)

BEGIN PROJECT SUM-8-17.63 STA 1043+44.20 U19(14)

25' UTILITY EASEMENT

25' SEWER E.

30' SEWER EASEMENT

L/A

RW

(I.L.)

Presently (I.L.)

HUDSON DR.

RAILROAD

CORP. LINE SILVER LAKE VILLAGE

CITY OF STOW

ALLOTMENT LINES

BLOCK A

OL 32 OL 33 OL 32 OL 42

348 HERBERT L. BULLARD & CATHERINE P. BULLARD

341 THOMAS EDWARD SAMPSON & ANNA ELIZABETH SAMPSON

342 RICHARD E. HISSEM & HELEN L. HISSEM

343 ELIZABETH ANNIE GRENFELL a.k.a. ELIZABETH A. GRENFELL

344 RICHARD J. McCOWIN

345 PATSY CARDONE & BETTIE CARDONE

346 EDWARD P. FIOCCA & JUDITH ANN FIOCCA

347 JOANNA MAY HAAS

349 RAY E. BECKWITH & MARGARET L. BECKWITH

348-1 JAMES N. CHADWELL

349-2 MARJORIE MERRILL

349-3 KENNETH S. SHUMAN

349-4 FRANK M. JOHNSON & NINA G. JOHNSON

349-5 ORIE E. & JOANN E. GRAFTON

349-6 CLIFFORD B. & VIRGINIA E. RHOADS

349-7 CARL A. & BERTHA M. RODGERS

350 CRYSTAL PARK DEVELOPMENT CORP.

351 THE CARTER-JONES LUMBER CO.

352 JOHN H. COWLEY JR. & ALMEDA L. COWLEY

353 MARGARET L. PEARCH

354 HAROLD R. BAILEY & ELIZABETH M. BAILEY

354-1 MARGUERITE DICKINSON

354-2 FRANK J. & ELIZABETH HUMBERT

204 A BOARD OF EDUCATION, CITY OF CUYAHOGA FALLS

356 WARD SIGLER, MAUD R. MOTZ, KATHRYN M. HUNTER JEAN LUTZ & CLAREENE WHARRY

357 JAMES C. CASSIDY

358 AUDRIA McCUNE

359 BRYAN F. CARPENTER

350-1 SILVER LAKE COUNTRY CLUB

348-1 JOAN LOEFFLER (NOT EFFECTED)

340 WILLIAM G. DALTON & MARY A. DALTON (NOT EFFECTED)

360 RAY W. GOODWIN

358 A AUDRIA McCUNE

359 A LESLIE W. JACKSON & MAXINE V. JACKSON

359 B OHIO EDISON COMPANY, an OHIO CORPORATION

0 100 200 300 400

PRELIMINARY SUBMITTAL DATE: RIGHT OF WAY COMPLETION DATE:			
Nº	REVISIONS	MADE BY	DATE
1	CORR. I.D. LOCATIONS AND SYMBOLS	E.V.	8-16-68
2	ADDED EASEMENTS	E.V.	8-16-68
3	PARCEL NOS 340 & 348-1 NOT EFFECTED	J.M.	8-16-68
4	CRYSTAL LAKE SUB. ADDED	J.M.	8-23-68
5	NAME CHANGE PCL. 358	LEE	4/8/69
6	NAME CHANGE PCLS 348, 356, 357 PCL. 358	LEE JUE T.	4/24/69

ADDED PCLS 358 AWL, 359 AWL AT & 339 BWL 2-14-74
Changed PCL 349 WD to Homeland Highway Easement 8-11-69 M.K.M.
Added Note For Conveyance of Sewer Rd. 12-18-70

ADDED PARCELS 342-U & 343-U L.S. 10-15-70
Changed 344-WD to Easement - White 9-8-69
ADDED PCL. 359 BWD 10-10-74

PROPERTY MAP - SHEET Nº 5 OF 5

FED. RD.	STATE	PROJECT	
2	OHIO	U 19(12)	

412/460

SUM-8-17.63

RIGHT-OF-WAY SHEET 8/56

SUMMARY OF RIGHT OF WAY REQUIRED

TOTAL NUMBER OF OWNERS WITH STRUCTURES TO BE TAKEN 145

TOTAL NUMBER AFFECTED OWNERS 215

PARCEL Nº	OWNER	DEED RECORD BOOK	DEED RECORD PAGE	DEED AREA TOTAL SQ. FT.	DEED AREA SQ. FT. CORR.	TOTAL P.R.O.	TO BE ACQUIRED SQ. FT. TOTAL TAKE	P.R.O. IN TAKE	NET TAKE	BLDGS.	NET RESIDUE LEFT	NET RESIDUE RIGHT	TYPE FUNDS U	TYPE FUNDS STATE		SHEET Nº	REMARKS
139 WL 139 WA	THE FRAND CORPORATION, AN OHIO CORPORATION	4748	417		55,453	—	9,311	—	9,311	NO	46,142	—	9,311			20 20	THOMPSON PONTIAC INC. LEASEE RELOC. DRAIN PIPE
140WL	KEMP BROTHERS INC. (AN OHIO CORPORATION)	4066 4066 4066 4066	317 328 331 334		46,726	—	5,223	—	5,223	NO	41,503	—	5,223			19-20	
140-1 WA	EARL L. HIBBARD & LUCY ADELL HIBBARD	3498	221													19	GRADING
142 WL	EUGENE SPOERNDLE, OWNER; THE FRAND CORPORATION, AN OHIO CORPORATION, HOLDER OF LAND CONTRACT	1606 2884 2956 3182	107 215 49 532		28,778	—	8,892	—	8,892	NO	19,886	—	8,892			20	
143 WL	CLAYTON W. HOFFMAN & GORDON K. HOFFMAN	2969	211		17,988	—	8,754	—	8,754	NO	9,234	—	8,754			20	
144 WL	STANLEY P. BAUDER & ALICE V. BAUDER, owners; JAMES J. CONNORS, holder of Land Contract	4135	58		24,871	—	16,187	—	16,187	YES	8,684	—	16,187			20	
145 WL	RUDOLPH A. CIARROCHI & REMA R. CIARROCHI	3902	595		7,250	—	1,949	—	1,949		5,301	—	1,949			20	
146 WL 146-EL	CHARLOTTE L. KAUFMAN	3394 3633	466 189		27,609	—	27,609	—	27,609	YES	—	—	23,681	3,928		20,21 21	Pcl 146-EL Sold To Rudolph A. Ciarrochi, Sr. and Richstared in Vol 7, Page 315, New Deeds, Various State Lands Area Conveyed 39105 S.F.
147 WL 147 WD 147 S	RAY E. CHANDLER, JR.	4637	563		16,521	—	13,858 2,663 26	— —	13,858 2,663 26	YES	— —	— —	13,858 2,663 26			20,21,22 20 20	2,331 SY FORMERELY STATE FUNDS STORM SEWER
148 WL	JOHN L. LEWIS & PEARL LEWIS	2389	515		7,500	—	7,500	—	7,500	YES	—	—	7,500			21	
149 WL	WILBUR L. SEARS & HOWARD SEARS JR.	4345	62		7,500	—	7,500	—	7,500	YES	—	—	7,500			21,22	
150 WL 150 WD 150 S	STANLEY I. BOLTZ & JOHN J. BOLTZ AKA JOHN S. BOLTZ	4351	5	10,324	12,800	—	5,799 7,001 880	— —	5,799 7,001 880	YES	— —	— —	5,799 7,001 880			24,27 27 24,27	RELOC. SANITARY SEWER
150-1 WL 150-1 WD 150-1 S	STUART STOLL	3917	67		11,525	—	4,831 6,694 811	— —	4,831 6,694 811	YES	— —	— —	4,831 6,694 811			24,27 27 24,27	RELOC. SANITARY SEWER
150-2 WL 150-2 WD 150-2 S	WILLIAM L. KORPP & DOLORES A. KORPP	3060 3060	290 293	8,843	10,250	—	3,694 6,556 910	— —	3,694 6,556 910	YES	— —	— —	3,694 6,556 910			24,27 27 24,27	RELOC. SANITARY SEWER
151 WL 151 WD 151 S 151 AS	DOROTHY D. YOST, ETHYL D. CASE, ANN CATHERINE HAYMAN, WILBUR S. DEEDS, JOHN E. DEEDS	2545 4661	587 251		74,949	—	43,750 31,199 1,126 7,708	— —	43,750 31,199 1,126 7,708	YES	— —	— —	43,750 31,199 1,126 7,708			21,22 20,22 20,22 22	RELOC. SANITARY & STORM SEWER RELOC. SANITARY & STORM SEWER
152 WL	KATHRYN W. DEEDS & JOHN E. DEEDS	2559 2822 3313	495 343 458		10,890	—	10,890	—	10,890	YES	—	—	10,890			21,22	
153	NOT USED																
154 WL 154 WD 154 S 154 AS	LEWIS R. DIVIL & JESSIE MAE DIVIL	3119	679		26,553	—	12,915 13,638 2,495 71	— —	12,915 13,638 2,495 71	YES	— —	— —	12,915 13,638 2,495 71			21,22 22 22 22	RELOCATED SANITARY SEWER
155 WL 155 WD 155 S	CORRINE E. PATTERSON	2892 3257	504 9		22,144	—	11,757 10,387 2,445	— —	11,757 10,387 2,445	YES	— —	— —	11,757 2,445	10,387		22 22 22	RELOC. SANITARY SEWER
156 WL 156 WD 156 S	JAMES V. CAPRIOLA & HELEN E. CAPRIOLA	3684	310		21,643	—	10,599 11,044 2,406	— —	10,599 11,044 2,406	YES	— —	— —	10,599 11,044 2,406			22 22 22	RELOC. SANITARY SEWER
157 WL 157 WD 157 S	LORETTA COULSON	4739 3633	9 576		15,935	—	7,391 8,544 1,562	— —	7,391 8,544 1,562	YES	— —	— —	7,391 8,544 1,562			22,24 22 22	RELOC. SANITARY SEWER
158 WL 158 WD 158 S	LEOTA D. WRIGHT	1851 3773 3773	298 511 519	14,375	15,183	—	7,140 8,043 1,117	— —	7,140 8,043 1,117	YES	— —	— —	7,140 8,043 1,117			22,24 22 22	RELOC. SANITARY SEWER

(L) DENOTES LANDLOCKING

ADDED PCL 146-EL AND NOTE OF SALE 5-21-69

REVISED FUNDING PCLS. 147, 150, 150-1, 150-2, 151, 154, 156, 157, & 158 PER B.P.R. LETTER 11/9/60. J.R.B. 4/15/69.
REVISED PCL. 146 TO A TOTAL TAKE PER I.O.O. S.A. GUZIAK 3/21/69. J.R.B. 4/14/69.

DATE OF PREPARATION REV	DATE	DESCRIPTION
1	8-28-68	(1) Revised Areas-Pcls 149, 152 (2) Deleted 141 WL WD & combined with 139 WL WD (3) Revised NAMES & Vol-Pages Pcls 151 & 157 - Sands
2	9-9-68	(1) Revised Name-Pcl 147 (2) Added Vol & Page: 152
3	12-3-68	Revised Name Pcl 144 White
4	2-25-69	Revised Name Pcl. 142-WL Lee

AUG 27 1968

SUMMARY OF RIGHT OF WAY REQUIRED

FED. RD.	STATE	PROJECT	
2	OHIO	U 19 (12)	

413/460

SUM-8-17.63

RIGHT-OF-WAY SHEET 9/56

PARCEL Nº	OWNER	DEED RECORD BOOK	DEED RECORD PAGE	DEED AREA TOTAL SQ. FT.	DEED AREA SQ. FT. CORR.	TOTAL P.R.O.	TO BE ACQUIRED SQ. FT. TOTAL TAKE	P.R.O. IN TAKE	NET TAKE	BLDGS.	NET RESIDUE LEFT	NET RESIDUE RIGHT	TYPE FUNDS U	TYPE FUNDS STATE		SHEET Nº	REMARKS
159 WL 159 WD 159 S	RICHARD F. MILLER & LUELLA B. MILLER	3248	45	12,807	14,106	—	6,613 7,493 948	— —	6,613 7,493 948	YES	— —	— —	6,613 7,493 948			24,27 24,27 24,27	RELOC. SANITARY SEWER
160 WL 160 WD 160 S	MARY A. HAYNES f.k.a. MARY A. CARUSO	2375 3481	135 545	8,147	9,400	—	2,556 6,844 1,010	— —	2,556 6,844 1,010	YES	— —	— —	2,556 6,844 1,010			24,27 24,27 24,27	RELOC. SANITARY SEWER
160-1 WL 160-1 WD 160-1 S	MARTHA JARRETT	3059	643		8,900	—	1,419 7,481 1,109	— —	1,419 7,481 1,109	YES	— —	— —	1,419 7,481 1,109			24,27 24,27 24,27	RELOC. SANITARY SEWER
160-2 WL 160-2 WD 160-2 S	FREDRICK O. NOBLE & HELEN B. NOBLE	3919	605	7,318	8,550	—	675 7,875 815	— —	675 7,875 815	YES	— —	— —	675 7,875 815			24,27 24,27 24,27	RELOC. SANITARY SEWER
160-3 WL	ALAN E. EDERER & ROBERT E. NORRIS, A PARTNERSHIP	4706 4708 4711	87 19 90		24,125	—	24,125	— —	24,125	YES	— —	— —	24,125			24,27	
160-6 WD 160-6 LA	CHARLES ROBERT LOWE & ALICE V. LOWE	3109	479		8,861	—	8,861 NO TAKE	—	8,861 NO TAKE	YES	—	—	8,861			27,28	LIMITATION OF ACCESS (B.P.R. PARTIC. ONLY)
160-7 WL	MERCEDES MOORE	4676 3626	644 362		6,120	—	6,120	—	6,120	YES	—	—	6,120			27,28	(B.P.R. PARTIC.
160-8 S	HAROLD SOMMERS	4209	355		13,157	—	1,943	—	1,943	NO	—	13,157	1,943			28	STORM SEWER
161 WL 161 S 161 WA	ELLIS T. MILLS & MARGARET BARKER MILLS	2101 4791	302 82		13,247	—	1,021 1,602	—	1021 1,602	YES	12,226	—				21 21 21	RELOC. SANITARY SEWER BUILDING REMOVAL
163 WL 163 S 163 WA	HARRY L. CARDER & HAZEL CARDER	3888	242		9933	—	3938 1,298	—	3938 1,298	YES	5995 (L)	—				21 21 21	RELOC. SANITARY SEWER BUILDING REMOVAL
164 WL 164 S	EDITH L. SOUERS	2434	593	10,019	9,545	—	7,049 1,247	—	7,049 1,247	YES	2,496(L)	—				21,23 21,23	RELOC. SANITARY SEWER
165 WL	W.C. KEENAN REALTY COMPANY	1991	276	10,019	9,545	—	9,545	—	9,545	YES	—	—				21,23	
166 WL	EDWARD R. PORTER	4401	249		7,895	—	7,895	—	7,895	YES	—	—				21,23,24	
167 WL	DEWITT ASHER & SHIRLEY R. ASHER	3251 3251	603 605		6,633	—	6,633	—	6,633	YES	—	—				23,24	
168 WL	SECURITY REALTY COMPANY (AN OHIO CORPORATION)	3961	472		6,491	—	6,491	—	6,491	YES						23,24	
169 WL 169 S	CHARLES E. WOLF	2621 2045	267 372	14,810	22,250	—	3,965 1,385	—	3,965 1,385	NO	18,285	—				23 23	RELOC. SANITARY SEWER
170	NOT USED																
171 WL 171 S	URBAN IMPERIAL BUILDING & RENTAL CORPORTION, (AN OHIO CORPORATION)	4672	268	21,780	21,943	—	1,019 1,071	—	1,019 1,071	NO	20,924	—				23 23	RELOC. SANITARY SEWER
172 WL	JAMES H. SAUSAMAN	3505	79		7,072	—	7,072	—	7,072	YES	—	—				23	
173 WL	RUTH M. WOLF	1609	218		4,841	—	4,841	—	4,841	YES	—	—				23	
174 WL	EMMA M. SCHAFFER	1176	564		6,439	—	6,439	—	6,439	YES	—	—				23	
175 WL 175 S	WAYNE H. KOONS AKA WAYNE KOONS	3778 2820	287 516		10,184	—	3,663 1,157	—	3,663 1,157	YES	6,521	—				23 23 23	RELOC. SANITARY SEWER
176 WL	THOMAS R. WARREN	2630	257		5,597	—	5,597	—	5,597	YES	—	—				23	
177 WL	GILLESPIE-PILCHER BLDG. & INV. CO. (AN OHIO CORPORATION)	4629	585		5,646	—	5,646	—	5,646	YES	—	—				23	
178 WL	JOHN P. TIGHE & MARGUERITE TIGHE	2558	466		5,711	—	5,711	—	5,711	YES	—	—				23	
179 WL	RICHARD L. MILLER	4135	383		5,745	—	5,745	—	5,745	YES	—	—				23	
180	NOT USED																
181 WL	ALVA JARED NICHOLSON JR. & LINDA RUTH NICHOLSON	3702	530		5,811	—	5,811	—	5,811	YES	—	—				23,24	

TYPE FUNDS

(L) DENOTES LANDLOCKING

REVISED FUNDING PCLS. 159, 160, 160-1, 160-2, 160-3, 160-6, & 160-7 PER B.P.R. LETTER 11/8/68. J.R.B. 9/15/69.

DELETED PCL 160-7LA - REV. PCL 160-7WD TO PCL 160-7WL-12-23-74
Deleted Pcls 160-3WD & 160-3LA. Revised area of Pcl 160-3WL to include area of 160-3WD 7-17-69 WW PW

REV	DATE	DESCRIPTION
		DATE OF PREPARATION
1	8-27-68	160-2LA DELETED 160-6LA REVISED AREAS FOR PCLS 166, 167, 168, 172, 174, 176, 177, 178, 179, 181 - SHAPE
2	8-28-68	Deleted Pcl. 162 Combined Area with Pcl 162. Lee
3	9-9-68	Revised Vols-Pcls 160-2, 160-7 Revised Pages-Pcls 160-2, 160-6, 160-7
4	11/5/68	AREA CORR. PCL 162 & 163 Lee
5	3/25/69	Revised Name Pcl. 160 Lee

AUG 27 1969

SUMMARY OF RIGHT OF WAY REQUIRED

FED. RD.	STATE	PROJECT	
2	OHIO	U 19 (12)	

414/460

SUM-8-17.63

RIGHT-OF-WAY SHEET

10/56

PARCEL Nº	OWNER	DEED RECORD BOOK	DEED RECORD PAGE	DEED AREA TOTAL SQ. FT.	DEED AREA SQ. FT. CORR.	TOTAL P.R.O.	TO BE ACQUIRED SQ. FT. TOTAL TAKE	P.R.O. IN TAKE	NET TAKE	BLDGS.	NET RESIDUE LEFT	NET RESIDUE RIGHT	TYPE FUNDS			SHEET Nº	REMARKS
182 WL	RUTH A. LUTZ.	1821	628		6,493	—	6,493	—	6,493	YES	—	—				23,24	
183 WL	HAROLD G. RHODES INC. (AN OHIO CORPORATION)	3822	433		6,493	—	6,493	—	6,493	YES	—	—				23,24	
184 WL	KARL L. GRAY & KATHRYN GRAY	2984	526		6,233	—	6,233	—	6,233	YES	—	—				24	
185 WL	L.G. BLACKBURN & RUTH BLACKBURN	3952	432	7,013	6,990	—	6,990	—	6,990	YES	—	—				24	
186 WL	KATHRYN J. FOWLS	2319	205	7,013	6,986	—	6,986	—	6,986	YES	—	—				24	
187 WL	JOHN J. TURLEY & LOIS J. TURLEY	2651	497		18,270	—	18,270	—	18,270	YES	—	—				24	
188 WL	MARGARET D. COPE	3637 2556	260 487		7,015	—	7,015	—	7,015	YES	—	—				23,24	
189 WL	ELEANOR H. BACKUS	2549	213		7,015	—	7,015	—	7,015	YES	—	—				23,24	
190 WL 190 S 190 LA	THE ALMAR CO, A Partnership	4671 4671	289 291		33,786	—	1,215 239	—	1,215 239	NO	—	32,571				26,28 26,28 26,28	BURGER CHEF SYSTEMS INC. LEASEE STORM SEWER LIMITATION OF ACCESS
191 WL	VIVIAN L. BUECHLER f.k.a. VIVIAN L. KLUGHART	3511	665		7,015	—	7,015	—	7,015	YES	—	—				23,24	
192 WL	LLOYD F. BENDER	2389	574		2,806	—	2,806	—	2,806	NO	—	—				23,24,25,26	
193 WL	JOHN C. HART & ARTA L. HART	3787	91		13,505	—	13,505	—	13,505	YES	—	—				25,26	
194 WL	HUGH T. RINEHART & INEZ K. RINEHART	2461 2518	286 296	15,812	15,812	—	15,812	—	15,812	YES	—	—				24,26	
195 WL	Akron National Bank AND Trust Co. ETAL	4941	20	9,801	9,785	—	9,785	—	9,785	YES	—	—				24,26	
196 WL	ANNA M. WISE	2966 2965 4351	96 169 463	14,026	14,042	—	14,042	—	14,042	YES	—	—				24,26	
197 WL	LELAND COX AKA LELAND S. COX	2979 4559	468 709	11,326	9,592	—	9,592	—	9,592	YES	—	—				26	
198 WL 198 WD	ELEANOR M. NIHOUSEN	4636 4517	276 578		11,696	—	8,576 3,120	—	8,576 3,120	YES	—	—				26 26	
199 WL 199 T	DAVID K. FIRM & DOROTHY K. FIRM	4597	237		5,408	—	501 353	—	501 353	YES	—	4,907				26 26	BUILDING REMOVAL
200 WD 200 WA	FRANK J. MANSFIELD & JEANNE MANSFIELD	4008	441		3,947	—	715	—	715	YES	—	3,232				26 26	BUILDING REMOVAL
201 WL	PAUL PFOUTS & KATHRYN PFOUTS	3182	545	7,841	7,883	—	7,883	—	7,883	YES	—	—				26	
202 WL 202 WA	FLOYD T. HAMLIN	3920	496		7,356	—	1,271	—	1,271	YES	—	6,085				26 26	BUILDING REMOVAL
202-1 WA	MARLIN A. NEILL W. REGINA NEILL	3785	448	—	—	—	NO TAKE	—	NO TAKE	NO	—	—				26	DRIVEWAY CONSTRUCTION
203 WL 203 WA	CORA MAE DE SHANE Fka CORA MAE BRAUCHER,	1545	580	5,227	5,156	—	3,795	—	3,795	YES	—	1,361				26 26	BUILDING REMOVAL
204 WL 204 S 204 AWL 204 LA	BOARD OF EDUCATION OF THE CITY OF CUYAHOGA FALLS	1163 3303 3303 3303	36 360 361 363	250,818	152,532 259,105	— 16,520	7,512 5,964 98,246	— 356	7,512 5,964 97,890	NO NO	145,020 120,211	— 24,484 (L)				25 23,25 51-52 23	RELOC. SANITARY SEWER LIMITATION OF ACCESS
205 WL 205 S 205 AWL 205 AS 205 AWA	IDELLA M. PIPER	3415 1360 1693	581 13 704		9,033 6,988	— —	4,551 755 4,736 638	— —	4,551 755 4,736 638	NO YES	4,482(L) 2,252	— —				25 25 29 29 29	RELOC. SANITARY SEWER RELOC. SANITARY SEWER BUILDING REMOVAL
206 WL 206 S	FRED W. ALBRECHT GROCERY CO. (AN OHIO CORPORATION)	3255	540		91,218	—	71,378 2,762	—	71,378 2,762	NO	8,136(L)	11,704				25,29 25,29	RELOC. SANITARY SEWER
207 S	JOHN DING & DAISY T. DING	1372	204		6,982		242		242							29	RELOC. SANITARY SEWER
208 WL 208 S	HERBERT R. NORRIS & MARTHA NORRIS	4740	696		6,988	—	677 638	—	677 638	NO	6,311	—				29 29	RELOC. SANITARY SEWER

FUNDS

TYPE

(L) DENOTES LANDLOCKING

NAME CHANGE PCL. 190. 4-7-69 LEE
Name Change Pcl. 195WL 3-5-69
Revised Name Pcl 203. White 12-3-68
Revised Name Pcl 208 Lee. 10-2-68
8 9-10-68 Revised 199WA to 199-T. Per IDC-FH STRAHL. DATED 9-9-68 R.S.
7 9-9-68 Revised Util Assess. Rols 183/188/198 SANDS

REV	DATE	DESCRIPTION	
		DATE OF PREPARATION	
1	8-13-68	ADDED PARCEL Nº 190LA.	CONSULTANT
2	8-13-68	ADDED PARCEL Nº 202-1 WA.	" " "
3	8-13-68	ADDED PARCEL Nº 204-LA	" " "
4	8-13-68	PARCEL 206 WL-AREA CORR.	" " "
5	8-13-68	PARCEL 204A AREA CORR.	" " "
6	8-28-68	REVISED AREAS: 183/184/185/188/189/191/192/193/194	RLH

Vol-Page to Pcl 205 - SANDS

SUMMARY OF RIGHT OF WAY REQUIRED

FED. RD.	STATE	PROJECT	
2	OHIO	U 19 (12)	

415/460

SUM-8-17.63

RIGHT-OF-WAY SHEET

111/56

PARCEL Nº	OWNER	DEED RECORD BOOK	DEED RECORD PAGE	DEED AREA TOTAL SQ. FT.	DEED AREA SQ. FT. CORR.	TOTAL P.R.O.	TO BE ACQUIRED SQ. FT. TOTAL TAKE	P.R.O. IN TAKE	NET TAKE	BLDGS.	NET RESIDUE LEFT	NET RESIDUE RIGHT	TYPE FUNDS			SHEET Nº	REMARKS
209 WL 209 S 209 WA	W. KENT SLUTZ	1858 910	610 544		13,973	—	5,410 1,276	—	5,410 1,276	YES	8,563	—				29 29 29	RELOC. SANITARY SEWER BUILDING REMOVAL
210	NOT USED																
211	NOT USED																
212 WL	EDWARD G. WEBER & JOANNE M. WEBER	3301	617		5,524	—	5,524	—	5,524	YES	—	—				29	
213 WL	EMERALD C. HINKLE & GLADYS V. HINKLE	2218 2645	643 472		5,524	—	5,524	—	5,524	YES	—	—				29	
214 WL	PAUL L. HOOBLER & INA FERN HOOBLER a.k.a. IMA FERN HOOBLER	1990 2644	413 161		7,709	—	7,709	—	7,709	YES	—	—				29	
215 WL	RAYMOND I. FRANCE & ELEANOR D. FRANCE	2884	93		6,675	—	6,675	—	6,675	YES	—	—				29	
216 WL	JACK MARSILLO & SYLVIA MARSILLO	4067	237		6,984	—	6,984	—	6,984	YES	—	—				29	
217 WL	WENDELL W. ARMSTRONG & IRENE A. ARMSTRONG	3322	548		5,516	—	5,516	—	5,516	YES	—	—				29	
218 WL	HUMBLE OIL & REFINING COMPANY	4009	442	20,517	20,725	—	620	—	620	NO	—	20,105				29	
219 WL	FIRST NATIONAL BANK OF AKRON, TRUSTEE	4554	277	25,047	24,934	—	24,934	—	24,934	NO	—	—				29,30	
220	NOT USED																
221 WL 221 SPEC.	FALLS SUPERSONIC CAR-WASH INC. (AN OHIO CORPORATION)	4353	381	19,340	19,586	—	1,889 607	—	1,889 607	NO	—	17,697 607				29,30	FOOTER EASEMENT
222 WL	HENRY A. KREINBERG	3054 3055 3055	193 377 379		10,224	—	10,224	—	10,224	YES	—					29	
223 WL 223 S 223 WA	LAURA B. CONRAD	3173 3106	484 102		9,318	—	1,472 130	—	1,472 130	YES	7,846	—				29 29 29	RELOC. STORM SEWER BUILDING REMOVAL
224 WL	ROBERT J. LEWIS	4818	354		9,078	—	3,625	—	3,625	NO	5,453	—				29,30	
225 WL	WILLIAM L. PIERSON & JUNE M. PIERSON	3780	407		7,273	—	2,764	—	2,764	NO	4,509	—				30	
226 WL	MOLLIE CASE	4591	308		7,045	—	2,794	—	2,794	NO	4,251	—				30	
227 WL 227 WA	R.F. COOK MANUFACTURING COMPANY (AN OHIO CORPORATION)	4396	133		31,358	—	12,143	—	12,143	YES	—	19,215				30	BUILDING REMOVAL
228 WL	PROGRESSIVE MOLD AND MACHINE CO.	4678	583	35,414	35,474	—	10,735	—	10,735	NO	—	24,739				30	
229 WL	OLGA V. GOOD	1855 1855 2725	359 361 550		6,653	—	2,853	—	2,853	YES	3,800	—				30	
230	NOT USED																
231 WL	IRENE W. QUAINTANCE FKA IRENE W. JORDAN	3067 2254	640 34		6,261	—	2,883	—	2,883	YES	3,378	—				30	
232 WL	MARGUERITE M. STRONG	4677 1835	381 407		5,870	—	2,866	—	2,866	YES	3,004	—				30	
233	NOT USED																
234 WL 234-LA	THE GENERAL TIRE & RUBBER COMPANY(AN OHIO CORPORATION)	3315 2102 2955	132 214 373		85,085	—	15,288	—	15,288	NO	—	69,797				30 31	LIMITATION OF ACCESS
235 WL	JIMMIE WILHELM & MARLYN JOYCE WILHELM	4308	188		7,649	—	4,005	—	4,005	NO	3,644	—				30	
236 WL 236 WA	BEN E. FORBES	3581	153		7,451	—	4,304	—	4,304	YES	3,147	—				30 30	BUILDING REMOVAL
237 WL 237 WA	ANTHONY GAYLAN	4270	636		13,646	—	9,799	—	9,799	YES	3,847	—				30 30	BUILDING REMOVAL

TYPE FUNDS

(L) DENOTES LANDLOCKING

Revised 234-WL, ADDED 234-LA 10-23-69

REV	DATE	DESCRIPTION
		DATE OF PREPARATION
1	8-29-68	(1) Revised Areas: Pcls 219,222 SANDS
2	9-9-68	(1) Revised Name: 234WL (2) Revised Wl Rgt. R/W 222,224,23
3	10-7-68	Revised Pcls 221 - Added Parcel 221 Spec
4	1-6-69	Revised Name: Pcl 224 - SANDS
5	2-11-69	Revised Name Pcl. 232-WL Lee
6	9-8-69	Name Changed Pcl. 228 WL. White

Ohio Department of Highways
RIGHT-OF-WAY DIVISION
AUG 27 1968
LOCATED

SUMMARY OF RIGHT OF WAY REQUIRED

FED. RD.	STATE	PROJECT	
2	OHIO	U 19(12)	

416/460

SUM-8-17.63

RIGHT-OF-WAY SHEET 12/56

PARCEL Nº	OWNER	DEED RECORD BOOK	DEED RECORD PAGE	DEED AREA TOTAL SQ.FT.	DEED AREA SQ.FT. CORR.	TOTAL P.R.O.	TO BE ACQUIRED SQ. FT. TOTAL TAKE	P.R.O. IN TAKE	NET TAKE	BLDGS.	NET RESIDUE LEFT	NET RESIDUE RIGHT	TYPE FUNDS			SHEET Nº	REMARKS
238 WL	IRENE SENN	4330 4330 4330 4330 4329	191 192 194 195 481	24,180 S.F.	24,180 S.F.	1,616 S.F.	24,180 S.F.	1,616 S.F.	22,564 S.F.	YES	—	—				30,31	
239 A WL	VICTOR A. McFARLAND (239AWL ACQUIRED AS 242WL)	1875	542		5,750	—	5,750	—	5,750	NO	—	—				30,	239AWL ACQUIRED AS PARCEL 242WL
240 WL	BERTHA KODISH	4331	419		1,616	—	1,616	—	1,616	NO	—	—				31	
241 WL	MART SMITH & EFFIE SMITH	3504	615		5,750	—	5,750	—	5,750	YES	—	—				30	SEE PARCEL 254
242 WL	NOT USED (SEE 239AWL)																
243 WL	GEORGE SHRIBER	4308	190		3,630	—	3,630	—	3,630	YES	—	—				31	
244 WL	ROBERT J. HARTER & LURETTA B. HARTER	2956	160		6,533	—	6,533	—	6,533	YES	—	—				31	
245 WL	LUCILLE MITROVICH R.K.A. LUCILLE I. MITROVICH AKA LUCILLE IRENE MITROVICH FKA LUCILLE I. WHITTINGTON	4738 2904 3104 3052	565 280 108 174		18,414	—	18,414	—	18,414	YES	—	—				30,31	
246	NOT USED																
247	NOT USED																
248 WL	W.L. TUCKER COAL & SUPPLY COMPANY (AN OHIO CORPORATION)	1163	191		7,125	—	6,269	—	6,269	YES	—	856				31	
249 WL	JOSEPH S. DAYTON JR. & DARLENE IRENE DAYTON	3952	521		5,821	—	5,821	—	5,821	YES	—	—				31	
250 WL 250 LA	VERNE P. SIMONS & RUTH E. SIMONS	3185 3250	563 198		7,500	—	75	—	75	NO	—	7,425				31 31	LIMITATION OF ACCESS
251 WL 251 A WL 251 WA	ELISABETH ANN HURLEY	3963	82		50,513	—	6,310 461	— —	6,310 461	YES NO	—	43,742				31 31 31	BUILDING REMOVAL
252 WL	MILDRED CATHERINE WOOD	1929	109		6,064	—	6,064	—	6,064	YES	—	—				31	
253 WL	MILDRED ALICE HATFIELD FKA MILDRED ALICE FISHEL	2652 1997	193 206		6,421	—	6,421	—	6,421	YES	—	—				31	SEE PARCEL 265
254 WL 254 S	MART S. SMITH & EFFIE M. SMITH	2451	517		13,876	— —	4,454 2,013	— —	4,454 2,013	NO	9,422	—				31 31	SEE PARCEL 241 RELOC. SANITARY SEWER
255 WL	C.S. McKENZIE AKA C. SHELDON McKENZIE AKA CLEMENT SHELDON McKENZIE	1357 2060 2655	118 89 591		15,509	—	15,509	—	15,509	YES	—	—				31	
256 WL	MACK W. BRISLINGER	2329	421		7,299	—	7,299	—	7,299	YES	—	—				31	
257 WL	BONNIE M. BARNARD	3921 4427	148 645		4,113	—	4,113	—	4,113	YES	—	—				34	
258 WL	EDWARD J. DEIBEL & ADA L. DEIBEL	3959	351		5,999	—	5,999	—	5,999	YES	—	—				31,34	
259 WL	GILBERT J. KOHUT	3408	333		6,728	—	6,728	—	6,728	YES	—	—				31,34	
260 T	REICHHOLD CHEMICALS, Inc.	4789	666	99,317	——	—	1,363	—	1,363	NO	—	—				33	RELOC. WATER LINE
261 WL	THOMAS S. BOWMAN	2164	7		11,235	—	4,294	—	4,294	NO	—	6,941(L)				34	
262 WL	TRUMP PLASTICS INC. (AN OHIO CORPORATION)	2875 4544	163 435		26,510	—	26,510	—	26,510	YES	—	—				31,34	PROPERTY RIGHTS
263 S 263 PR	BETTY J. FARRIS	3490	336		7,204	—	330	—	330	NO	7,204					34	RELOC. SANITARY SEWER
264 WL 264 S 264 WA	VIVIAN E. WHITTAKER	3770	280		7,205	—	1,663 1,617	— —	1,663 1,617	YES	5,542(L)	—				34 34 34	RELOC. SANITARY SEWER BUILDING REMOVAL
265 WL 265 S	MILDRED A. HATFIELD	4029	402		7,205	—	4,988 1,548	—	4,988 1,548	YES	2,217(L)	—				34 34	SEE PARCEL 253 RELOC. SANITARY SEWER
266 WL	ANTHONY FALCONE & RUTH L. FALCONE	3067	167		7,206	—	7,206	—	7,206	YES	—	—				34	

FUNDS

TYPE U

(L) DENOTES LANDLOCKING

Added P.R.O. To Parcel 238WL 11-4-70
Deleted Pcl's 239-WL & 239-LA 10-23-69
Revised Name Pcl. 264 Lee 1-27-69
Revised Name Pcl. 260 Lee 10-2-68
9 9-9-68 (R)Revised Name-245 (R)Revised Wd/Pg: Pcl 245, 260, 263, 265 Added

REV	DATE OF PREPARATION DATE	DESCRIPTION
1	8-13-68	PAR. 239WL-OWNERS NAME CORR.
2	8-13-68	PAR. 243WL-OWNERS NAME CORR.
3	8-13-68	PAR. 245WL-OWNERS NAME CORR.
4	8-13-68	PAR. 254S-AREA CORR.
5	8-13-68	PAR. 255WL-OWNERS NAME CORR.
6	8-13-68	PAR. 257WL-SHEET Nº CORR.
7	8-13-68	PAR. 263PR-ADDED.
8	8-28-68	ADDED REMARKS 239AWL & 242WL - SMRS

RIGHT-OF-WAY ENGINEER & ADMIN. SECTION
AUG 27 1968
LA 13

SUMMARY OF RIGHT OF WAY REQUIRED

FED. RD.	STATE	PROJECT	
2	OHIO	U 19 (12)	

417/460

SUM-8-17.63

RIGHT-OF-WAY SHEET

13/56

PARCEL Nº	OWNER	DEED RECORD BOOK	DEED RECORD PAGE	DEED AREA TOTAL SQ.FT.	DEED AREA SQ.FT. CORR.	TOTAL P.R.O.	TO BE ACQUIRED SQ. FT. TOTAL TAKE	P.R.O. IN TAKE	NET TAKE	BLDGS.	NET RESIDUE LEFT	NET RESIDUE RIGHT	TYPE FUNDS			SHEET Nº	REMARKS
267 WL	JAMES P. JEFFERY & JENNIE LEE JEFFERY	2159 2159 2159	406 409 412		7,206	—	7,206	—	7,206	YES	—	—				34	
268 WL	ODA W. GOUGH & THE ESTATE OF LEAH GOUGH A.K.A. OLIVE L. GOUGH, DECEASED	1790	691		7,207	—	7,207	—	7,207	YES	—	—				34	
269 WL	HAZEL M. BURDICK	~~3256~~ 4018 ~~3256~~ 3256 2647	~~535~~ 422 ~~534~~ 534 558		7,314	—	7,314	—	7,314	YES	—	—				34	
270	NOT USED																
271 WL	BENNIE HARMON & GLAYDES HARMON	2222	572		8207	—	8,207	—	8207	YES	—	—				34	
272 WL	MAMIE HARTER	3894 3894 2222	53,54 56,58,60 569		7,208	—	7,208	—	7,208	YES	—	—				34	
273 WL	CALVIN HARTER	4335 3918	592 458		7,208	—	7,208	—	7,208	YES	—	—				34	
274 WL	LEHR M. DAVIS & MARY P. DAVIS	3112	462		7,208	—	7,208	—	7,208	YES	—	—				34	
275 WL 275 S	RICHARD IRVIN WILLIAMS & HELEN ROSALIE WILLIAMS	4300	539		6,005	—	1,700 1,130	—	1,700 1,130		4,305	—				34 34	RELOC. SANITARY SEWER
276 S	EVA KLING	3670	631		8,406	—	531	—	531							34	RELOC. SANITARY SEWER
277 WD 277 T	THOMAS E. COAKLEY & VIOLA MAE COAKLEY	1820	616		7,200	—	458 322	—	458 322	NO	6,742	—				34 34	
278 WL 278 WD 278 T	MABLE M. BROLLIER	4071	88		7,200	—	2,733 3,136 432	— —	2,733 3,136 432	YES	1,331	— —				34,35 34,35 34,35	
279	NOT USED																
280	NOT USED																
281 281 T	JOSEPH A. REED & TOLA B. REED	2091	47		6,380	—	1,512 1,039	—	1,512 1,039	YES YES	4,868	—				35 35	
282 WL 282 WD	STERLING S. MACHAMER & LAURA I. MACHAMER	2901 2901	510 512		12,833	—	12,739 94	— —	12,739 94	YES	— —	— —				34,35 34,35	
283 WL 283 WD	ROGER WILSON FRANTZ & CATHERINE A. FRANTZ	3496	530		5,994	—	2,451 3,543	— —	2,451 3,543	YES	— —	— —				35 35	
284 WL	HARRIET GRAFMILLER	3637 2167	502 95		7,804	—	7,804	—	7,804	YES	—	—				35	
285 WL	CHARLES H. SAMPSON & THE ESTATE OF GEORGE R. SAMPSON JR., DECEASED	2650	520		5,558	—	5,558	—	5,558	YES	—	—				35	
286 WL	HELEN M. SHOAF	1999 2638	110 561		11,278	—	11,278	—	11,278	YES	—	—				35	
287 WL	DOLLIE L. BITTNER FKA DOLLIE LOUISE GIPSON	1791	594	19,166	16,227	—	16,227	—	16,227	YES	—	—				35	
288 WL 288 S 288 WA	BEATRICE A. ENSWORTH	4012	430		5,704	—	2,852 2,281	— —	2,852 2,281	YES	2,852(L)	—				35 35 35	RELOC. SANITARY SEWER BUILDING REMOVAL
289 S	CORA A. CUNNINGHAM	3185	426		5,704	—	396	—	396	NO	5,704					35	RELOC. SANITARY SEWER
290	NOT USED																
291	NOT USED																
292	NOT USED																
293 S. 293 PR	GERTRUDE J. GEBHART FKA GERTRUDE J. ELLSWORTH	3478	201		5,340	—	800	—	800	NO	5,340					35	RELOC. SANITARY SEWER
294 WL	CELINA E. KIMES	~~3487~~ 3487	~~530~~ 534		33,762	—	33,762	—	33,762	YES	—	—				35,36	
295 WL 295 WD	OHIO EDISON COMPANY	1352 431	439 407	7,362 59,670	6,530 —	— —	6,530 308	— —	6,530 308	NO NO	59362 59,362	— —				36 36	
296 WL	ROY HOLLAND	4271	45		15,634	—	15,634	—	15,634	YES	—	—				36	
297 WL 297 WA	MARY VINCZELLER	~~1114~~ 2159 3779	~~468~~ 635 683		34,189	—	29,770	—	29,770	YES	4,419	—				36 36	BUILDING REMOVAL
298 WL 298 WA	RANDALL A. WEITZEL & IRENE S. WEITZEL	4073	545		4,350	—	2,741	—	2,741	YES	1,609	—				36 36	BUILDING REMOVAL

TYPE FUNDS

(L) DENOTES LANDLOCKING

Changed Pcl 281 WD to a Standard Highway Easement. white 10-16-69

REV	DATE OF PREPARATION DATE	DESCRIPTION
1	8-13-68	PAR. 271 WL-OWNERS NAME CORR.
2	8-13-68	PAR. 276 S - OWNERS NAME CORR.
3	8-13-68	PAR. 287 WL - OWNERS NAME CORR.
4	8-13-68	PAR. 295 - AREA CORR.
5	9-9-68	① REVISED OWNER - Pcl 268, 271, 285 ② Revised Vol-Page Pcls 269, 272, 278, 283, 284, 287 - SMOS
6	8-14-69	ADD 293-PR

RWY ENGR. DEPT. DR. (HIGHWAY DIV.) SEC.
AUG 27 1968
CHKD

SUMMARY OF RIGHT OF WAY REQUIRED

FED. RD.	STATE	PROJECT	
2	OHIO	U 19(12)	

418/460

SUM-8-17.63

RIGHT-OF-WAY SHEET 14/56

PARCEL Nº	OWNER	DEED RECORD BOOK	DEED RECORD PAGE	DEED AREA TOTAL SQ.FT.	DEED AREA SQ.FT. CORR.	TOTAL P.R.O.	TO BE ACQUIRED SQ. FT. TOTAL TAKE	P.R.O. IN TAKE	NET TAKE	BLDGS.	NET RESIDUE LEFT	NET RESIDUE RIGHT	TYPE FUNDS			SHEET Nº	REMARKS
299 WL	JASON F. BURLEY & JEANNETTE S. BURLEY	4073	544		4,350	—	4,350	—	4,350	YES	—	—				36	
300 S 300 PR.	BERNARD J. CZARKOWSKI & BILLIE RUTH CZARKOWSKI	4030	376		5,000	—	478 No TAKE	—	478 No TAKE	NO	—	—				36	RELOC. SANITARY SEWER ACCESS RIGHTS (DRIVEWAY)
301 WL	VILA M. MOORE	2897 1745	646 403		12,126	—	12,126	—	12,126	YES	—	—				36	
302 WL	THE CITY OF CUYAHOGA FALLS, OHIO	3404 3415	352 143		8,331	—	8,331	—	8,331	NO	—	—				36	
302 AWL		3404	355		2,686	—	2,686	—	2,686	NO	—	—				38	
303 WL	ALPHA BENNETT	1999	100		10,000	—	10,000	—	10,000	YES	—	—				36,37	
304 WL 304 S 304 WA	MARGARET F. KOCHAN	3578 2380	140 244		15,000	—	11,250 1,546	— —	11,250 1,546	YES	3,750	—				36,37 36,37 36,37	RELOC. SANITARY SEWER BUILDING REMOVAL
305 WL	JOHN D. PENDLAND	2454	626		5,000	—	5,000	—	5,000	YES	—	—				36	
306 WL	JAMES R. SMITH & SHIRLEY MAE SMITH	4032	91		10,000	—	10,000	—	10,000	YES	—	—				37	
307 WL	JAMES E. BOWEN	3586	196		8,362	—	8,362	—	8,362	NO	—	—				37	
308 WL	BETTY E. HALTER	4163	474		8,875	—	8,875	—	8,875	YES	—	—				37	
309	Not Used																
310	NOT USED																
311 WL 311 S 311 WA	DAVID W. KAUFMAN	4338 4642	633 617		8,876	—	2,072 2,331	— —	2,072 2,331	YES	6,804	—					Reloc. Sanitary Sewer Building Removal
312 WL	GEORGE LUCAS & MICHAEL M. SIMMS	4331 4331	152 156		5,325	—	5,325	—	5,325	NO	—	—				37	
313 WL	ARTHUR R. MOORE JR.	4264	179		7,988	—	7,988	—	7,988	YES	—	—				37	
314 WL	ABNER D. ZOOK	3510	471		4,438	—	4,438	—	4,438	NO	—	—				37	
315 WL	RUTH ROGERS WILSON FKA RUTH HARRIET ROGERS	1652	222		1,680	—	1,680	—	1,680	NO	—	—				37	
316 WL	SADIE ELIZABETH COLVIN	3678	295		13,839	—	13,839	—	13,839	YES	—	—				37	
317 WL 317 S 317 WA	CLARENCE A. ILG a.k.a. CLARENCE ALEXANDER ILG	3414 4678	616 658		8,875	—	5,439 1,374	— —	5,439 1,374	YES	3,436	—				37 37 37	RELOC. SANITARY SEWER BUILDING REMOVAL
318 S	HERMAN S. & LEONA J. CHURCH	2460	565		8,875	—	471	—	471	NO						37	RELOC. SANITARY SEWER
319 WL	DOROTHY E. WHITACRE	4135	478		8,875	—	8,875	—	8,875	NO	—	—				37,33	
320	NOT USED																
321 WL	ZELLA GILES	1876	335		4,438	—	4,438	—	4,438	NO	—	—				37,38	
322 WL	DOROTHY E. ANDERSON	4469	210		4,438	—	4,438	—	4,438	NO	—	—				37,38	
323	NOT USED																
324 WL	THE EAST OHIO GAS COMPANY (AN OHIO CORPORATION)	577	313		16,527	—	16,527	—	16,527	NO	—	—				38	
325 WL	MILDRED A HATFIELD & KENNETH E. HALBLAUB	4641	352		20,000	—	20,000	—	20,000	YES	—	—				38	
326 WL 326 WA	ROBERT L. FREEMAN & MELBA F. FREEMAN	4304 4304	41 42		10,000	—	6,413	—	6,413	YES	3,587(L)	—				38 38	BUILDING REMOVAL
327 WL	ROBERT J. WINFIELD	4958 4953	349 360		10,000	—	211	—	211	NO	9,789	—				38	
* 328 CT 328 LA 328 S 328 AT 328 BS	THE CONSOLIDATED RAIL CORPORATION	1136	290	3,205	3,218	—	2,194 3,218 5,245 3,570 2,014	— — —	2,194 3,218 5,245 3,570 2,014	NO NO NO NO NO	— — — —	— — — —				54 38 40 54 32	
329 WL 329 AWL 329 W	CHARLES WILLIAM DOCTOR-OWNER MARY DOCTOR, holder of life Estate	2550 4309	159 531		357,452 200,573	— —	175,836 23,584 39,670	— —	175,836 23,584 39,670	NO NO	137,319	181,616 —				38,39 38,39	OAKLAWN ESTATES
330-WD	TRUSTEES OF SILVER LAKE ESTATES	857	255-260	52,272		—	6,863	—	6,863	YES	—	45,409				41-A	BLOCK "C" - SILVER LAKE ESTATES VILLAGE OF SILVER LAKE
* 328-AERIAL 328 328-1	THE CONSOLIDATED RAIL CORPORATION						3,215 154 47	— — —	3,215 154 47	NO NO NO						41A, 41B 41A, 41B 41A, 41B	

(L) DENOTES LANDLOCKING

FUNDS

TYPE

CHANGED NAME PCL 328 SERIES 5-9-77

5-12-71
CHANGED PCLS. 328-T & B-T TO SEWER EASEMENTS

CHANGED PCL. 328 WL TO 328 LA & REVISED NAME
-ADDED PCL. 329-U 10-15-70 3-24-71

REVISED NAME PCL 327 WL. White 11-4-69
PCL 330 CONVERTED BACK TO PCL. 330WD-10-31-69
Revised name Pcl # 329 9/16/69 Solomon
Changed 330WD TO Easement- Per L.O.C. HEGERT-DATED 8-26-69 White 8-28-69
Added 300 PR 8-18-69 M.K.M.
Corrected deed area Pcl 300-S. White 8-8-69
Removed Fr. Shed and 1½ Sty Fr. Hse. from Pcl 312 WL. White 4-17-69
PCL #328-AERIAL, 328-WD & 330-WD ADDED. CONSULTANT 4-14-69
REVISED NAME PCL 317. LEE 1-13-69

REV	DATE OF PREPARATION DATE	DESCRIPTION
1	8-13-68	PAR. 305 WL-OWNERS NAME CORR.
2.	8-13-68	PAR. 328 - AREA CORR.
3	9-9-68	Revised Name: 325 to 329 Revised Plat Acc. Pc. 301 to 330
4	12-3-68	Combined Pcl 309 with Pcl 311.
		Pcls Now Include 311 WL, 311 WA, 311-S
		New Owner aquired Pcl 309. White

SUMMARY OF RIGHT OF WAY REQUIRED

FED. RD.	STATE	PROJECT	
2	OHIO	U 19(12)	

419/460

SUM-8-17.63

RIGHT-OF-WAY SHEET

15/56

PARCEL Nº	OWNER	DEED RECORD BOOK	DEED RECORD PAGE	DEED AREA TOTAL SQ FT	DEED AREA DEED AREA SQ FT CORR	TOTAL P.R.O.	TO BE ACQUIRED SQ. FT. TOTAL TAKE	P.R.O. IN TAKE	NET TAKE	BLDGS	NET RESIDUE LEFT	NET RESIDUE RIGHT	TYPE FUNDS			SHEET Nº	REMARKS
331-WL 331-AERIAL 331-T	W. RICHARD CURRY	3780	56		214,061	—	159,987 1,201 1,201		159,987 1,201 1,201	NO	—	54,074(L)				39,40,41,42 41-A 41-A	AERIAL EASEMENT OVER LANDLOCKED RESIDUE. TEMP. EASEMENT FOR CONST. UNDER AERIAL EASE.
332 WL	A.M. FREDRICK & HELEN M. FREDRICK	3700	437		18,150	—	18,150	—	18,150	NO	—					40	
333	NOT USED																
335 WL 335-WA	BOARD OF EDUCATION OF THE CUYAHOGA FALLS CITY SCHOOL DISTRICT	4701 4671 4745 4736 4750 4903	430 684 200 371 64 584		487,685	28,650	163,981	—	163,981	YES	297,206					41,42,43 41	NOTE: PART OF THE DEED AREA ACQUIRED BY "BOARD OF EDUCATION" FROM "THE ESTATE OF ALECK MUSYT, ET.AL." (FORMERLY PCL. 334-WL - 270,600 S.F.) BY RECORDED JOURNAL ENTRY, VOL. 610 PAGE 333, DATED 2/6/65, CASE NO. 295812, SUMMIT COUNTY COURT OF COMMON PLEAS. CONSTRUCT PEDESTRIAN BRIDGE
335-EL	" " " " "						3848		3848								EXCESS LAND (FORMERLY LANDLOCKED RIGHT RESIDUE FROM 335-WL)
339-WL 339-U	ELIZABETH ANNA GRENFELL	1900	297	33,672	33,825	1,500	19,664 3133	—	19,664 3133	NO	9,350	331 (L)				42,43,44	
340	WILLIAM G. & MARY A. DALTON	4198	468		36,140	2,700	—	—	—	NO	—	—				44	NOT EFFECTED
341 WL 341 WD	THOMAS EDWARD SAMPSON & ANNA ELIZABETH SAMPSON	2551	5	33,803	33,825	1,500	21,346 2,750	— 1,500	21,346 1,250	YES NO	5,493	4,236(L)				42,43,44 44	
342 WL 342 WD 342 U	RICHARD E. HISSEM & HELEN L. HISSEM	3417	669	43,942	43,973	1,950	30,722 6,362 4158	— 1,950	30,722 4,412 4158	YES YES	—	6889 (L)				42,43,44 43,44 42-A	
343 WL 343 343 U	ELIZABETH ANNIE GRENFELL a.k.a. ELIZABETH A. GRENFELL	1602 4826	131 683		91,328	4,050	72,327 363 8251	3,050 —	69,277 363 8251	YES NO	—	17,638 (L)				42,43,44 43,45 42-A	
344 WL 344 344 T	RICHARD J. MCCOWIN	4261 4261	614 616		144,464	10,632	74,554 5,514 2,345	7,867 2,765 —	66,686 2,749 2,345	YES YES YES	—	64,397				43,46,54 54 54	BUILDING REMOVAL
345 WL	PATSY CARDONE & BETTIE CARDONE	1508	540	43,560	44,365	4,844	44,365	4,844	39,521	YES	—	—				43,46,54	
346 WL	EDWARD P. FIOCCA & JUDITH ANN FIOCCA	3898	64	18,818	18,593	3,270	18,593	3,270	15,323	YES	—	—				43,45,46	
347 WL	JOANNA MAY HAAS	3178 4349	159 88	23,522	23,673	7,963	23,673	7,963	15,710	YES	—	—				45,46	
348 WL	HERBERT L. BULLARD & CATHERINE P. BULLARD	3511	135		26,084	2,400	5,200	2,123	3,077	NO	20,607	—				45	
348-I	JOAN LOEFFLER	3965	680		9,503	1,500	—	—	—	—	—	—				44	NOT EFFECTED
349 WL	RAY E. BECKWITH & MARGARET L. BECKWITH	3058	91	62,517	62,483	15,426	62,483	15,426	47,057	NO	—	—				45,47	
349-1 WL 349-1 WD 349-1 T	JAMES N. CHADWELL	1691	539	139,392	147,241	10,030	22,616 10,862 2,837	10,030 — —	12,586 10,862 2,837	NO NO	113,763	—				47,55 47,55 47,55	RELOC. DRIVE
349-2 WL 349-2 WD 349-2 T	MARJORIE MERRILL	3183	662	51,401	51,318	3,483	3,978 4,009 2,818	3,483 — —	495 4,009 2,818	NO NO	43,331	—				55 55 55	
349-3 WL 349-3 WD 349-3 T	KENNETH S. SHUMAN	3159 2888	27 613	43,996	43,235	2,710	2,982 3,096 1,119	2,710 — —	272 3,096 1,119	NO NO	37,157	—				55 55 55	
349-4 WL 349-4 WD 349-4 T	FRANK M. JOHNSON & NINA G. JOHNSON	3162	252	61,028	61,529	3,611	3,973 4,285 1,930	3,611 — —	362 4,285 1,930	NO NO	53,271	—				55,56 55,56 55,56	
349-5 WL 349-5 WD 349-5 T	ORIE E. GRAFTON & JOANN E. GRAFTON	4351	143	61,768	61,749	3,603	2,066 3,252 1,189	1,870 1,733 —	196 1,519 1,189	NO NO	50,431					56 56 56	
349-6 WD 349-6 T	CLIFFORD B. RHOADS & VIRGINIA E. RHOADS	2978	106	49,005	49,120	3,594	6800 105	3,594 —	3206 105	NO NO	42,320	—				56 56	

TYPE FUNDS

(L) DENOTES LANDLOCKING

NOTE: PCL. 335-EL CONVEYED TO KALLSTROM'S STATE ROAD REALTY COMPANY, AN OHIO CORPORATION. ENTERED IN DIRECTOR'S JOURNAL, VOL. 6, PAGE 72.

ADDED NOTE OF CONVEYANCE PCL. 335-EL 11-8-71

REVISED RESIDUES PCLS. 339-342-&343 11-16-70

11. Added 335 EL PER S.A. GUZIAK 8-17-70 (Sandy)
10. Revised Area - Pcl 335 Per Outsale - White 11/18/69
9. Changed 344-WA to 344-T, Changed 344-WD to Easement 8-18-69 White
ADDED PARCELS 339 U, 342 U & 343 U L.S. 10-15-70
8 Changed Pcl. 343 WD to Standard Highway Easement 8-6-69 M.K.M.
7 4/28/69 DELETED PCL 334-WL & COMBINED AREA WITH PCL 335-WL PER OUTSALE. LEE
6 4/24/69 NAME CHANGE PARCEL 343. LEE

DATE OF PREPARATION		
REV.	DATE	DESCRIPTION
1	8-13-68	PARS. 340, 342, 344, 345 & 347 THRU 349-6 AREAS CORR.
2	9-24-68	Pcls. 335 & 336, DELETED, AREA COMBINED WITH PCL 335. Lee
3	2-10-69	Revised owner 338-WL Per Outsale R.S.
4	4-14-69	PCLS. 331-AERIAL & 331-T ADDED
5	4/15/69	DELETED PCLS. 337-WL & 338-WL & COMBINED AREA WITH PCL. 335-WL PER OUTSALE. LEE

SUMMARY OF RIGHT OF WAY REQUIRED

FED. RD.	STATE	PROJECT	
2	OHIO	U 19(12)	

420 / 460

SUM-8-17.63

RIGHT-OF-WAY SHEET

16 / 56

PARCEL Nº	OWNER	DEED RECORD BOOK	DEED RECORD PAGE	DEED AREA TOTAL SQ FT	DEED AREA SQ FT CORR.	TOTAL P.R.O.	TO BE ACQUIRED SQ. FT. TOTAL TAKE	P.R.O. IN TAKE	NET TAKE	BLDGS.	NET RESIDUE LEFT	NET RESIDUE RIGHT	TYPE FUNDS			SHEET Nº	REMARKS
349-7 WD	CARL A. RODGERS & BERTHA M. RODGERS	3101	651	37,200	37,156	3,600	3,790	3,600	190	NO	33,366	—	TYPE U FUNDS			56	
350 WD	CRYSTAL PARK DEVELOPMENT CORPORATION	3265	26	1,774,158	1,743,208	—	5,868	—	5,868	NO	—	1,743,340				54	
350 AWD				5,516003	5473,000	8,298	13,164	8,298	4,866	NO	—	5,459,135				54	SILVER LAKE COUNTRY CLUB LEASEE
350 T							1,032	—	1,032	NO	—	—				54	RE-BUILD DRIVE
350 AT						—	1,492	—	1,492	NO	—	—					
350-1 WD	SILVER LAKE COUNTRY CLUB	3638	493	392,039	392,314	1003	1,593	1,003	590	NO		390,721					
		3637	107														
351 WL	THE CARTER JONES LUMBER COMPANY	3308	635	1,584,408	1,590,607	40,709	525,779	37,363	488,416	YES						45-52	
351 WD		3384	515				11,780	3,346	8,434	YES	——	1,053,138				54	
351 X		3508	323				450	—	450							48	
351 T		3679	48				18,119	——	18,119							46,54	TEMPORARY RUNAROUND
352 WL	JOHN H. COWLEY JR. & ALMEDA L. COWLEY	2871	648	49,589	49,592	4,044	49,592	4,044	45,548	YES	—	—				49,51	
353 WL	MARGARET L. PEARCH	2558	693	72,492	72,514	3,601			53,975	YES	14,938 (L)	—				49	
353 T							57,576	3,601	2,556							49	TEMPORARY RUNAROUND
353 WA							1254		1254							49	BUILDING REMOVAL
354 WL	HAROLD R. BAILEY & ELIZABETH M. BAILEY	2392	456		107,578	5,400	5,998	3,807	2,191	NO	94,896	—				49,56	
354 AWL		3113	340				4,549	——	4,549	NO						51,52	
354 WD							2,135	1,593	542	NO						49,56	
354 T							7,556	——	7,556	NO						49,56	RELOC. DRIVE & TEMP. RUNAROUND
354-1 WD	MARGUERITE DICKINSON & H.	2766	647	35,507	35,542	1,800	2,400	1,800	600	NO	33,142	—				56	
354-2 WD	FRANK J. HUMBERT & ELIZABETH HUMBERT	2618	200		53,014	2,700	5,600	2,700	900	NO	49,414	—				56	
		3103	125														
355	NOT USED																NKA 204 A WL
356 WL	WARD SIGLER, MAUD R. MOTZ, KATHRYM M. HUNTER, JEAN LUTZ & CLAREENE WHARRY	2459	439	17,903	17,905	1,837	17,905	1,837	16,068	NO	—	—				52,53	
		4751	360														
357 WL	JAMES C. CASSIDY &	2208	274	68,120	74,249	14,252	35,060	7,220	27,845	NO	32,148	—				52,53	
		4803	668														
		4303	673														
358 WL	AUDRIA McCUNE	2331	443	110,555	111,438	15,056	66,803	14,190	52,613	YES	—	43,769 (L)				53	
358 WA		2387	665,667				904		904	YES						53	BUILDING REMOVAL
359 WL	BRYAN F. CARPENTER	3893	501		9,124	2,100	9,124	2,100	7,024	YES	—	——				53	DEED AREA CORRECTED
360 PR	RAY W. GOODWIN	3967	501				NO TAKE		NO TAKE	NO						53	PROPERTY RIGHTS
		3967	502														
		3967	503														
358 AWL	AUDRIA McCUNE	2331	443		43,769	——	6,850	——	6,850	NO	——	36,918 (L)				53A	DEED AREA PRESENTLY LANDLOCKED
		2387	665,667														
359 AWL	LESLIE W. JACKSON & MAXINE V. JACKSON	5028	651		66,224	442	13,336	442	12,894	NO	——	52,888				53A	
		2900	298														
359 AT		3579	82				6,225	——	6,225								RELOCATE DRIVE
359 BWL	OHIO EDISON COMPANY, an OHIO CORPORATION	1352	439		83,200	12,593	4,554	3,233	1,321	NO	——	66,573				53A	
359 BWD							4,485	1,772	2,713	NO						53A	

(L) DENOTES LANDLOCKING

10-10-74 ADDED PCL. 359 B-WD - 359 BWD - Corrected Residue 10-17-74
8-19-74 CORRECTED NET T.B.A. & P.R.O. IN TAKE PCL. 359 BWL
ADDED PCLS. 358 AWL, 359 AWL, AT & 359 BWL 8-14-74
Revised Pcl. 353-T-1 to WA 8-18-70
7 2-19-70 Converted 358T to 358WA
6 -12-18-69 REVISED 353-WA TO 353-T-1

REV	DATE OF PREPARATION DATE	DESCRIPTION
1	8-20-68	ALL AREAS CORRECTED
2	8-20-68	PCL# 360 PR ADDED
3	4/8/69	NAME CHANGE PCL. 358 LEE
4	4/24/69	NAME CHANGE PCLS. 356 & 357 LEE
5	9-3-69	Changed Pcl. 358 WA to 358-T & White
		Name Change for Pcl. 358 WL-T

FED. RD.	STATE	PROJECT	
2	OHIO	U19(12)	

421/460

SUM-8-17.63

RIGHT-OF-WAY SHEET 17/56

KEY MAP

SUMMIT - 8 - 17.63
SUMMIT COUNTY, OHIO

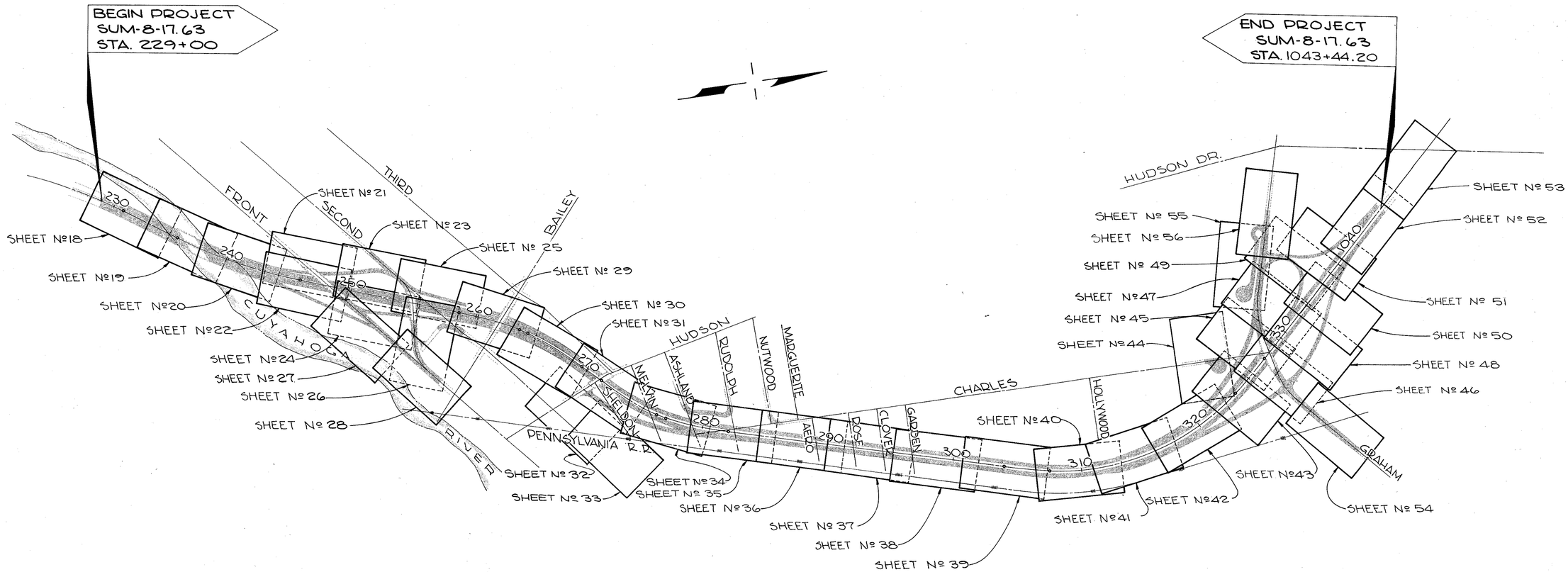

GRAPHIC SCALE

0 400 800 1200 1600

PRELIMINARY SUBMITTAL DATE: RIGHT-OF-WAY COMPLETION DATE:			
Nº	REVISIONS	MADE BY	DATE

KEY MAP

K & E-AKRON

SUMMIT COUNTY, CITY OF CUYAHOGA FALLS
ORIG. STOW TOWNSHIP, O.L.1, O.L.2, T-3N, R-10W

FED. RD.	STATE	PROJECT	
2	OHIO	U19(12)	

422/460

SUM-8-17.63

RIGHT OF WAY SHEET 18/56

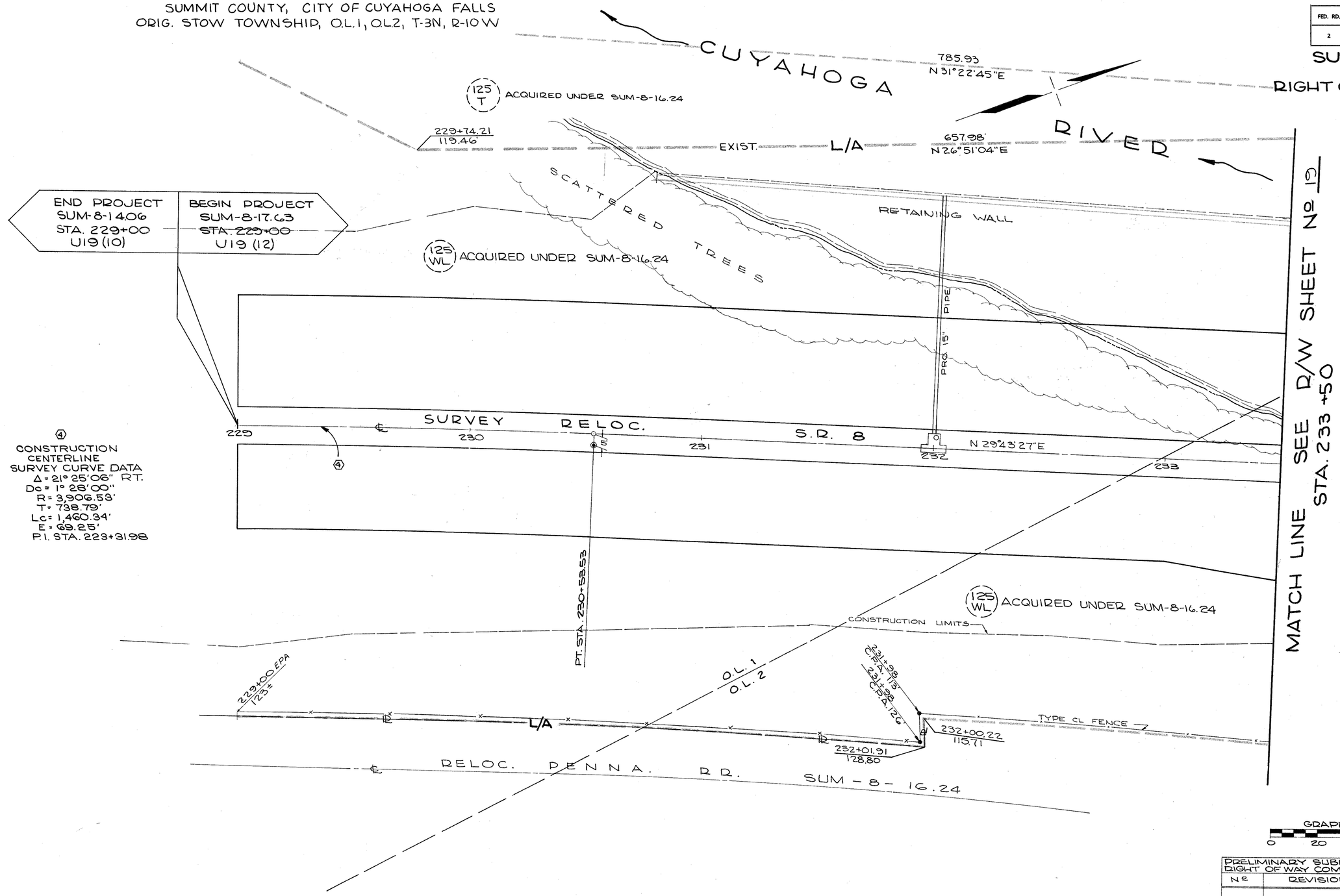

PRELIMINARY SUBMITTAL DATE: RIGHT OF WAY COMPLETION DATE:			
No	REVISIONS	MADE BY	DATE

STA. 229+00 TO STA. 233+50

K & E-AKRON

AUG 27 1968
LOGGED

15

FED. RD.	STATE	PROJECT	
2	OHIO	U 19 (12)	

423/460

SUM-8-17.63

RIGHT OF WAY SHEET 19/56

SUMMIT COUNTY, CITY OF CUYAHOGA FALLS
ORIG. STOW TOWNSHIP, O.L.1, O.L.2, T-3N, R-10W

SR 8 CURVE DATA Nº 5
Δ = 15°06'08" LT.
Dc = 1°28'00"
R = 3906.53'
T = 517.85'
Lc = 1029.70'
E = 34.17'
PI. STA. = 240+86.53

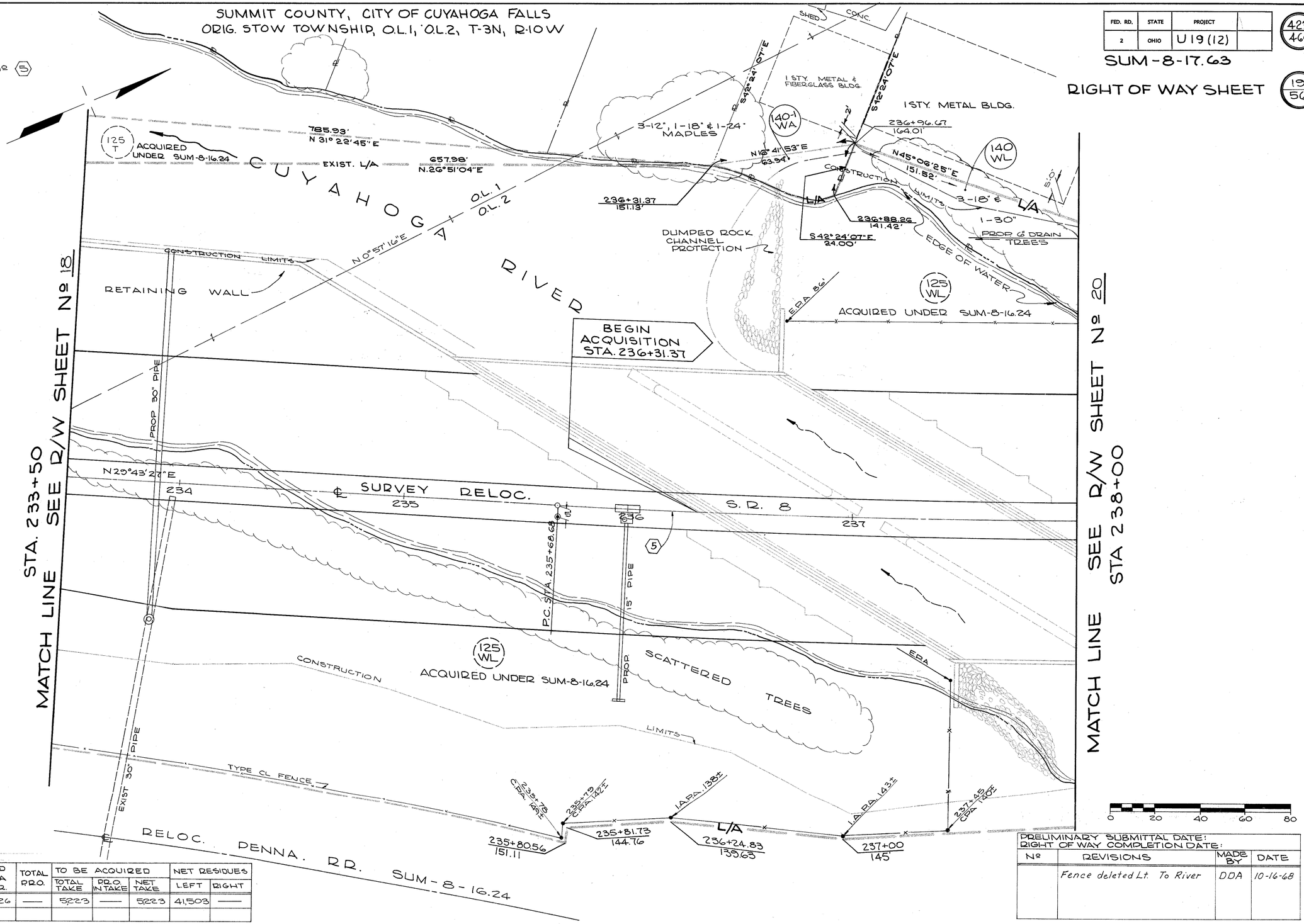

TYPE U FUNDS

PARCEL Nº	OWNER	DEED AREA CORR.	TOTAL P.R.O.	TO BE ACQUIRED TOTAL TAKE	TO BE ACQUIRED P.R.O. IN TAKE	TO BE ACQUIRED NET TAKE	NET RESIDUES LEFT	NET RESIDUES RIGHT
140WL	KEMP BROTHERS INC. (AN OHIO CORPORATION)	46,726	—	5,223	—	5,223	41,503	—
140-1WA	EARL L. HIBBARD & LUCY ADELL HIBBARD							

PRELIMINARY SUBMITTAL DATE:
RIGHT OF WAY COMPLETION DATE:

Nº	REVISIONS	MADE BY	DATE
	Fence deleted Lt. To River	DDA	10-16-68

STA. 233+50 TO STA. 238+00

K & E - AKRON

SUMMIT COUNTY, CITY OF CUYAHOGA FALLS
ORIG. STOW TOWNSHIP, O.L.2, T-3N, R-10W

FED. RD.	STATE	PROJECT	
2	OHIO	U19 (12)	

424/460

SUM - 8-17.63

RIGHT OF WAY SHEET 20/56

PARCEL Nº	OWNER	DEED AREA CORR.	TOTAL PRO	TO BE ACQUIRED SQ. FT. TOTAL TAKE	PRO IN TAKE	NET TAKE	NET RESIDUES LEFT	RIGHT
135WL	THE FRAND CORPORATION, AN OHIO CORPORATION	55,453	—	9,311	—	9,311	—	—
140WL	KEMP BROTHERS INC. (AN OHIO CORPORATION)	46,726	—	5223	—	5223	41503	—
142WL	EUGENE SPOENDLE, Owner; THE FRAND CORP., AN OHIO CORP., HOLDER L.C.	28,778	—	8852	—	8852	19,886	—
143WL	GORDON V. HOFFMAN & VIOLET M. HOFFMAN	17,988	—	8754	—	8754	9234	—
144WL	STANLEY V. BAUDER & ALICE V. BAUDER, owners	24,871	—	16,187	—	16,187	8684	—
JAMES J. CONNORS, holder of Land Contract								

OTHER PARCELS TYPE U FUNDS

PARCEL Nº	OWNER	DEED AREA CORR.	TOTAL PRO	TO BE ACQUIRED SQ. FT. TOTAL TAKE	PRO IN TAKE	NET TAKE	NET RESIDUES LEFT	RIGHT
145VWL	RUDOLPH A. CIARROCCHI & REMA R. CIARROCCHI	7250	—	1945	—	1945	5301	—
146WL	CHARLOTTE L. KAUFMAN	27,609	—	27,609	—	27,609	—	—
147WL	BERTHA CHANDLER, OWNER	16,521	—	13,858	—	13,858	—	—
147WD	EDWIN CHANDLER, LIFE ESTATE		—	2,663	—	2,663	—	—
151WL	DOROTHY D. VOSTETHYL D. CASE, ANN CATHERINE HAYMAN, WILBUR S. DEEDS, JOHN E. DEEDS	74,949	—	43,760	—	43,760	—	—
151WD			—	31,189	—	31,189	—	—
151S			—	11,224	—	11,224	—	—
151AS			—	7708	—	7708	—	—

SR 8 CURVE DATA Nº (5)
Δ = 15°06'08" LT.
Dº = 1°28'00"
R = 3906.53'
T = 517.85'
Lc = 1029.70'
E = 34.17'
PI. STA = 240+86.53

STA. 238+00 SEE R/W SHEET Nº 19

MATCH LINE

STA. 238+00 TO STA. 243+50

SEE R/W SHEET Nº 21 & 22

MATCH LINE - STA. 243+50

BLACKTOP PARKING AREA

1-STY CONC. BLK. BLDG THOMPSON PONTIAC INC.

2 STY CONC. BLK.

OWNER OF PARCEL 143-WL HOLDER OF A 10' EASEMENT OVER THE SOUTHERLY 10' OF PARCEL 144-WL, FOR ROAD OR DRIVEWAY PUROSES & RECORED IN VOLUME 155, PAGE 197.

BLOCK

CINDER PARKING AREA

6" STORM

2½ STY FR. HSE #2477

2 STY FR. HSE #2481

24" MAPLE

18" MAPLE

50'

20'

10'

98'

2 - CAR FR. GAR.

2 - 30" TREES

72.00' N 6°02'01" E

109.22' N 12°52'59" E

TYPE CL FENCE

CONSTRUCTION LIMITS

L/A

1APA 58'±

1APA 81'±

1APA 85'±

1APA 116'±

1APA 117'±

239+14.28 87.16

238+50.76 BEAT

238+45.85 116.25

238+28.71 44.51

238+95.36 43.51

239+91.27 164.0'

239+39.16

239+03.66 119.33'

242+81.92 111.51'

243+41.02 121.18'

76.01' N 21°27'50" E

242+71.47 94.38'

243+17.96 13.63'

N 14°33'27" E

50.00' FND

S 43°35'53" W

S 46°24'07" E

S 42°24'07" E

200.00'

125.00'

222.00'

N 45°06'25" E 151.52'

72.50' N 48°20'01" E

45.00'

48.00'

18" & 4-30" TREES

EDGE OF WATER

TELE POLE GUARDED

4" TILE FROM WASH RACK

PROP 6" PIPE

PROP 15" PIPE

4'D WASTE OIL STORAGE TANK

BRUSH

(NO EASEMENT)

WALL

SURVEY RELOC. S.R. 8

241+15

240+82.77

241+42.63

240+77.19 11.79

N 29°43'27" E

N 14°35'15" E

241+13.67 59.62

241+92.51 86.15

E.P.A.

C.P.A. 86' 30' FROM EDG. PVT.

TYPE 'CL' FENCE (HOLD 30' FROM EDGE OF PAVEMENT)

RETAINING WALL

DUMPED ROCK CHANNEL PROTECTION

CONSTRUCTION LIMITS

ACQUIRED UNDER SUM-8-16.24

SCATTERED TREES

EXIST. L/A

DAMP "M"

PC STA. 242+33.12

40 - 18" & 4 - 30" TREES

CONSTRUCTION L/A

243+00.37 98.83'

243+47.43 104.44'

243+42.70 103.85'

48.61'

N 25°16'44" W

S 25°16'44" E

243+42.63 118.68'

16.44' S 42°38'43" W

243+42.72 114.11'

N 25°16'44" W 113.6'

S 64°24'07" E

242+77.05 131.38'

243+19.05 167.19'

MATCH AT LEFT

MATCH AT RIGHT

146 EL

NOTE: Pcl 146-EL sold to Rudolph D. Ciarrocchi, Sr. and Rehistered in Vol 7, Page 315 New Deeds, Various State Lands.

147 WL

147 S

147 WD

151 WD

151 WL

146 WL

125 WL

142 WL

143 WL

144 WL

145 WL

139 WA

140 WL

139 WL

Added Pcl 146-EL and Note of Sale 5-21-79

REVISED FUNDING PCLS. 147 & 151 PER B.P.R. LETTER 11/8/68. J.R.B. 4/15/69.
REVISED PCL. 146WL TO A TOTAL TAKE PER I.O.C. S.A. GU2/AK 3/21/69. J.R.B. 4/29/69.
REVISED NAME OF PCL. 142-WL, 2-25-69 Lee

PRELIMINARY SUBMITTAL DATE:
RIGHT OF WAY COMPLETION DATE:

Nº	REVISIONS	MADE BY	DATE
1.	ADDED DIST. L/A TO BLDG. -PARCEL 144 & 142	J.M.	7-12-68
2	ADDED PAR. 141WA & 140WA TO SUB SUMMARY	J.M.	7-19-68
3.	ADDED NAMES TO PAR. 147	J.M.	7-19-68
4.	REMOVED DIST. SW & ALONG RESIDUE	J.M.	7-19-68
5.	ADDED OWNERSHIP HOOKS & ℄ - PARS. 143-147	E.V.	8-16-68
6	DELETED 141-COMBINED WITH 139-NEW OWNER	E.S.	8-26-68
7	REVISED NAME - 151	E.S.	8-29-68
8	Revised Name - Pcl 144	E.W.	12-3-68
9.	ADDED 10' EASEMENT PCL'S. 144 & 143 LEE		12/12/68

0 20 40 60 80

STA. 238+00 TO STA. 243+50

K & E - AKRON

SUMMIT COUNTY, CITY OF CUYAHOGA FALLS
ORIG. STOW TOWNSHIP, QL.2, T-3N, R-10W

FED. RD.	STATE	PROJECT	
2	OHIO	U19(12)	

425/460

SUM-8-17.63

RIGHT OF WAY SHEET 21/56

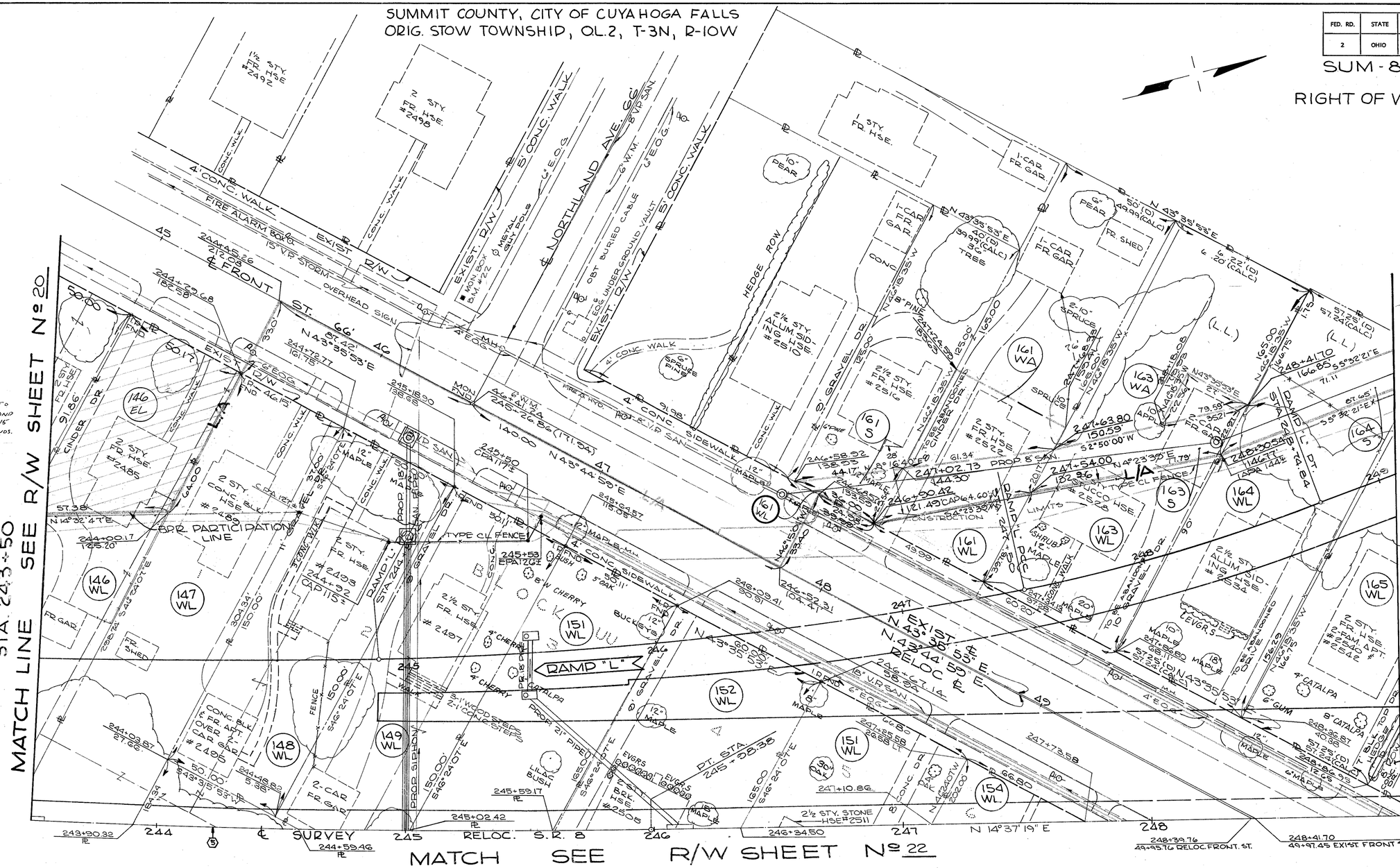

SUMMIT COUNTY, CITY OF CUYAHOGA FALLS
ORIG. STOW TOWNSHIP, QL. 2, T-3N, R-10W

FED. RD.	STATE	PROJECT	
2	OHIO	U-19(12)	

426
460

SUM-8-17.63
RIGHT OF WAY SHEET

22
56

MATCH LINE — SEE R/W SHEET Nº 20 — STA. 243+50

MATCH LINE — SEE R/W SHEET Nº 24 & 27 — STA. 249+00

MATCH SEE R/W SHEET Nº 21

SURVEY ℄ RELOC. S.R. 8

P.T. 245+98.38

243+90.32 ℞ | 244 | 244+59.46 ℞ | 244+93.36 | 17.45' | 245 | 245+02.42 ℞ | 245+59.11 ℞ | 246 | 246+34.50 | PROP. 21" PIPE | 247 | 247+10.86 | 247+73.58 | 248 | 248+39.76 | 49+95.76 | 248+41.70 | 49+97.45

N 14° 37' 19" E

147 WL | 149 WL | 151 WL | 151 WD | 151 S | 151-A S | 152 WL | 154 WL | 154 WD | 154 S | 154-A S | 155 WL | 155 WD | 155 S | 156 WL | 156 WD | 156 S | 157 WL | 157 WD | 157 S | 158 WL | 158 WD | 158 S

- 2 CAR FR. GAR.
- 1-8" CHERRY, 1-6" APPLE, 1-8" W. CHERRY
- 2-5" TREES BRK.
- # 2505
- 2 CAR FR. GAR.
- NOSE: 246+86.53, 24' RT. OF ℄
- 23° LT. RAMP "M" STA. 244+30.78
- DOSE TRAILER
- 245+30.41 54.03'
- 1½ CAR FR. GAR.
- POND
- 1½ STY. FR. HSE. # 2511
- CONC.
- 20" MAPLE, 10" MAPLE, 2-6" CHERRY, 8" CEDAR BUSH
- PROP 15" PIPE
- CONC. WK.
- 8" MAPLE
- 5' CONC. WALK
- CONC. RET. WALL
- 247+84.02 5.78
- 18" VD SAN
- EXIST. R/W 66.8' ± R/W
- 12" MAPLE
- 248+42.46 38.11'
- 249+00.90 10.50'
- 1½ STY. FR. HSE. # 2521
- 2½ - STY. FR. HSE. # 2527
- 2½ - STY. FR. HSE. # 2533
- 2½ - STY. FR. HSE. # 2539
- 3" CEDAR
- 2-8" PINES
- 1-8" PINE, 2-6" PINE, 1-12" MAPLE
- 15" BRK. 5125 PLACE
- 2-8" PINES & DOGWOOD CLASH
- 12" LOCUST
- 12" OAK
- 10" MAPLE
- 18" MAPLE
- 8" CATALPA
- SHRUB
- HEDGE
- 15" MAPLE
- 10" MAPLE
- 8" MAPLE
- 8" PEAR
- 8" WALNUT
- 8" MAPLE
- 2 CAR FR. GAR.
- STORAGE SHED
- GRAVEL AREA
- CONC. WALK
- 248 WOOD FENCE
- 2-STY FR. HSE.
- 1½ - STY. FR. HSE.
- 1-24" CHERRY, 1-24" OAK, 1-8" W.CH., 1-24" MAPLE, 1-16" MAPLE, 1-30" ELM
- 8" WILD CHERRY
- 1-15" WILD CHERRY, 2-18" OAKS, 1-15" OAK, 20-8" TO 12" TREES
- 1-15" TREE
- 2-18" OAKS
- 1-15" OAK
- 20-8" TO 12" TREES

RAMP "M"

PROP. SIPHON

PROP 18" SANITARY SEWER

PROP 6" W.M. TO SIPHON

ALLOTMENT LINE

CONSTRUCTION LIMITS

L/A TYPE C½ FENCE

L/A 69.01'

L/A 50.32'

L/A 201.73'

L/A 248+28.23

EXIST. 66' R/W

EXIST. 80' R/W

EXIST. 60' R/W

EXIST. 50' R/W

PROP. 66' R/W

PROP. 80' R/W

EXIST. 50' R/W

SUMMIT COUNTY, CITY OF CUYAHOGA FALLS
ORIG. STOW TOWNSHIP, O.L.2, T-3N R-10W

FED. RD.	STATE	PROJECT	
2	OHIO	U 19 (12)	

427/460

SUM-8-17.63

RIGHT OF WAY SHEET 23/56

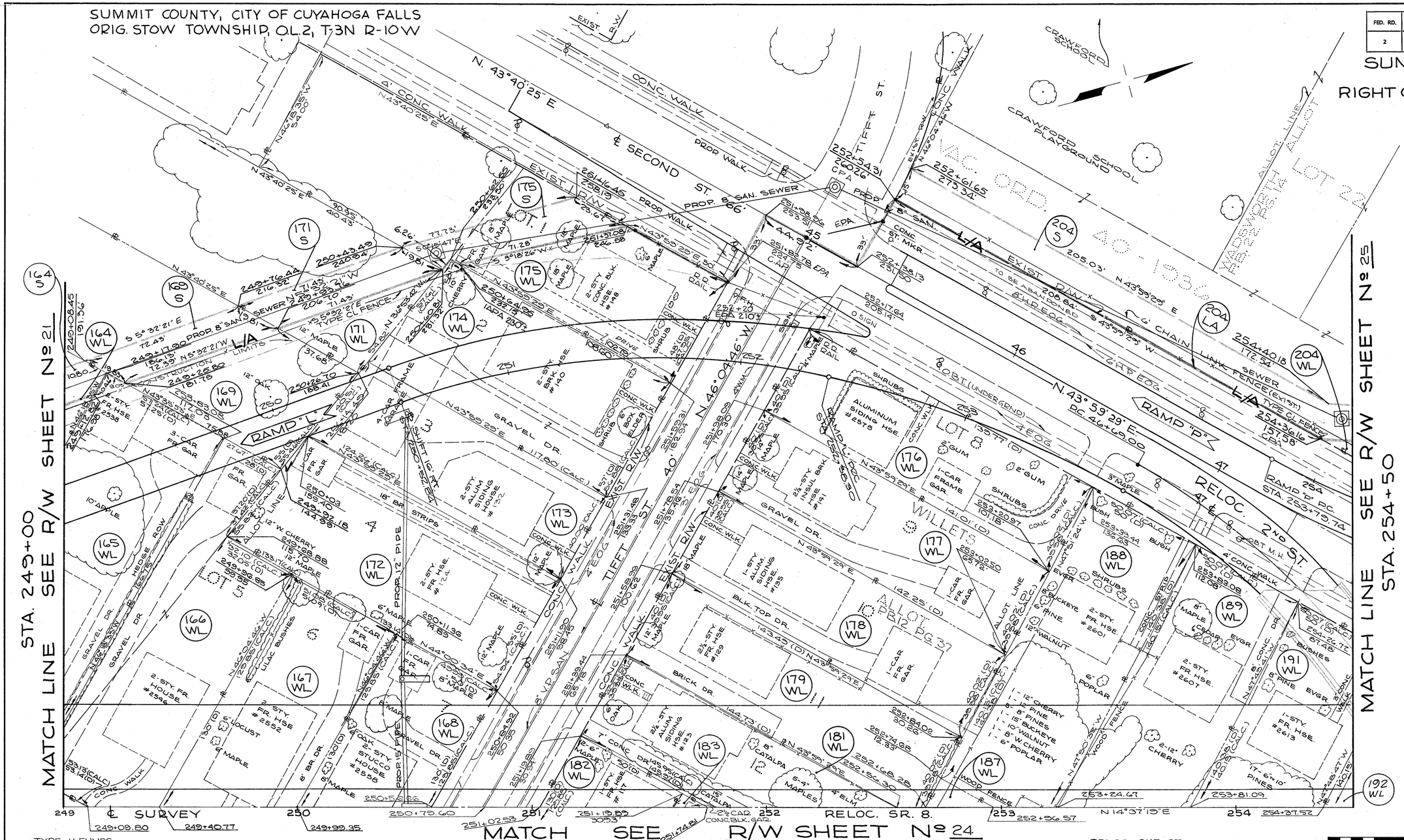

SUMMIT COUNTY, CITY OF CUYAHOGA FALLS
ORIG. STOW TOWNSHIP, O.L. 2, T-3N, R-10W

FED. RD.	STATE	PROJECT	
2	OHIO	U19 (12)	

428/460

SUM-8-17.63

24/56

RIGHT OF WAY SHEET

MATCH SEE R/W SHEET Nº 23

SEE R/W SHEET Nº 22

STA. 249+00 MATCH LINE

SEE R/W SHEET Nº 26

STA. 254+50 MATCH LINE

TYPE U FUNDS

PARCEL Nº	OWNER	DEED AREA CORR.	TO BE ACQUIRED TOTAL TAKE	TO BE ACQUIRED NET TAKE	NET RESIDUE LEFT	NET RESIDUE RIGHT
181WL	ALVA JABED NICHOLSON JR.* LINDA RUTH NICHOLSON		5809	5809		
182WL	RUTH A LUTZ		6493	6493		
183WL	KAROLOS G. BLOOES, INC. (AN OHIO CORPORATION)		6492	6492		
184WL	KARL L. GRAY * KATHRYN GRAY		6231	6231		
185WL	LUCY BALDWIN		6986	6986		
186WL	KATHRYN J. FOWLS		6986	6986		
187WL	JOHN J. TURLEY * LOIS J. TURLEY		18,270	18,270		
188WL	MARGARET O. COPE		7015	7015		
189WL	ELEANOR H. BACKUS		7015	7015		
191WL	VIVIAN L. BUECHLER &c.a. LILLIAN L. KLUEHART		7015	7015		
192WL	LLOYD F. BENDER		2806	2806		
194WL	HUGH T. PINEHART * INEZ V. PINEHART		15,834	15,834		
195WL	RAMP "N" TO FROM E. FRONT ST.		9785	9785		

PARCEL Nº	OWNER	DEED AREA CORR.	TO BE ACQUIRED TOTAL TAKE	TO BE ACQUIRED NET TAKE	NET RESIDUE LEFT	NET RESIDUE RIGHT	TYPE FUNDS
150WL	STANLEY I BOLTZ *		5799	5799			U
150WD	JOHN J BOLTZ AKA	12,800	7001	7001			U
150 S	JOHN S BOLTZ		880	880			U
150-1WL	STUART STOLL		4831	4831			U
150-1WD		11,525	6694	6694			U
150-1 S			811	811			U
150-2WL	WILLIAM L. KORPP *		3694	3694			U
150-2WD	DOLORES A. KORPP	10,250	6556	6556			U
150-2 S			910	910			U
157WL	LORETTA COULSON		7391	7391			U
157WD		15,935	8544	8544			U
157 S			1542	1542			U
158WL			7140	7140			U
158WD	LEOTA D. WRIGHT	15,183	8043	8043			U
158 S			1117	1117			U
159WL	RICHARD F. MILLER *		6613	6613			U
159WD	LUELLA B. MILLER	14,106	7493	7493			U
159 S			948	948			U
160WL	MARY A. HAYNES &c.a.		2556	2556			U
160WD	MARY A. CARUSO	9400	6844	6844			U
160 S			1010	1010			U
160-1WL			1419	1419			U
160-1WD	MARTHA JARRETT	8,900	7481	7481			U
160-1 S			1109	1109			U

PARCEL Nº	OWNER	DEED AREA CORR.	TO BE ACQUIRED TOTAL TAKE	TO BE ACQUIRED NET TAKE	NET RESIDUE LEFT	NET RESIDUE RIGHT	TYPE FUNDS
160-2WL	FREDRICK O. NOBLE *		675	675			U
160-2WD	HELEN B. NOBLE	8580	7875	7875			U
160-2 S			815	815			U
160-3WL	ALAN E. EDERER * ROBERT E. NORRIS (A PARTNERSHIP)	24,125	24,125	24,125			U
166WL	EDWARD P. PORTER		7845	7845			U
167WL	DEWITT ASHER * SHIRLEY R. ASHER		6633	6633			U
168WL	SECURITY REALTY COMPANY (AN OHIO CORPORATION)	6491	6491	6491			U

Deleted Pcls. 160-3WD and 160-3LA.
Revised area of Pcl 160-3WL to include area of 160-3WD. 7-17-68 White

0 20 40 60 80

Name Change Pcl. 195WL

PRELIMINARY SUBMITTAL DATE:
RIGHT-OF-WAY COMPLETION DATE:

Nº	REVISIONS	MADE BY	DATE
1.	ADDED STA. & OFFSET SW COR. TIFFT & FRANKE	J.M.	7-22-68
2.	ADDED BRG. TO S/A	J.M.	7-22-68
3.	ADDED "HSE" - PADS. -150 & 160	E.V.	8-16-68
4	CONST. LIMITS - NO. SIDE FRONT ST. CORR.	E.V.	8-16-68
5.	1) REVISED NAME 157 & 191 AND 2) REVISED BEARS: 164, 163, 168, 188, 189 & 192	R.S.	8-28-68
6.	FENCE ADDED FRONT ST & RAMP "N"	D.D.A.	10-16-68
7	Revised Name Pcl. 160-WL	LEE	3-25-69

FOR INFORMATION IN THIS AREA SEE R/W SHEET 27

STA. 249+00 TO STA. 254+50 RT OF ℄

8. REVISED FUNDING PCLS. 150, 150-1, 150-2, 157, 158, 159, 160, 160-1, 160-2, & 160-3 PER B.P.R. LETTER 11/8/68. J.R.B. 4/15/69.

K & E - AKRON

APR 27 1988

PARCEL Nº	OWNER	DEED AREA CORR.	TOTAL PRO.	TO BE ACQUIRED			NET RESIDUES	
				TOTAL TAKE	PRO INTAKE	NET TAKE	LEFT	RIGHT
193 WL	JOHN C. HART & ARTA L. HART	13,505	——	13,505	——	13,505	——	——
204 WL 204 S	BOARD OF EDUCATION OF CITY OF CUYAHOGA FALLS	152,532	——	7512 5964	——	7512 5964	145,020	——
205 WL 205 S	IDELLA M. DIPER	9,033	——	4651 755	——	4651 755	4,482(L)	——
206 WL 206 S	F.W. ALBRECHT GROCERY CO. (AN OHIO CORPORATION)	91,218	——	71,378 2762	——	71,378 2762	8,136(L)	11,704

13,505

TYPE U FUNDS

RELOC. SECOND ST.
CURVE DATA
Δ = 45° 34' 45" RT.
Dc = 18° 45' 00"
R = 305.58'
Lc = 243.09'
T = 128.39'
E = 25.88'
P.T. STA. 47+97.39

SUMMIT COUNTY, CITY OF CUYAHOGA FALLS
ORIG. STOW TOWNSHIP, O.L.2, O.L.12, T-3N, R-10W

FED. RD.	STATE	PROJECT	
2	OHIO	U19 (12)	

429
460

SUM-8-17.63

RIGHT OF WAY SHEET 25/56

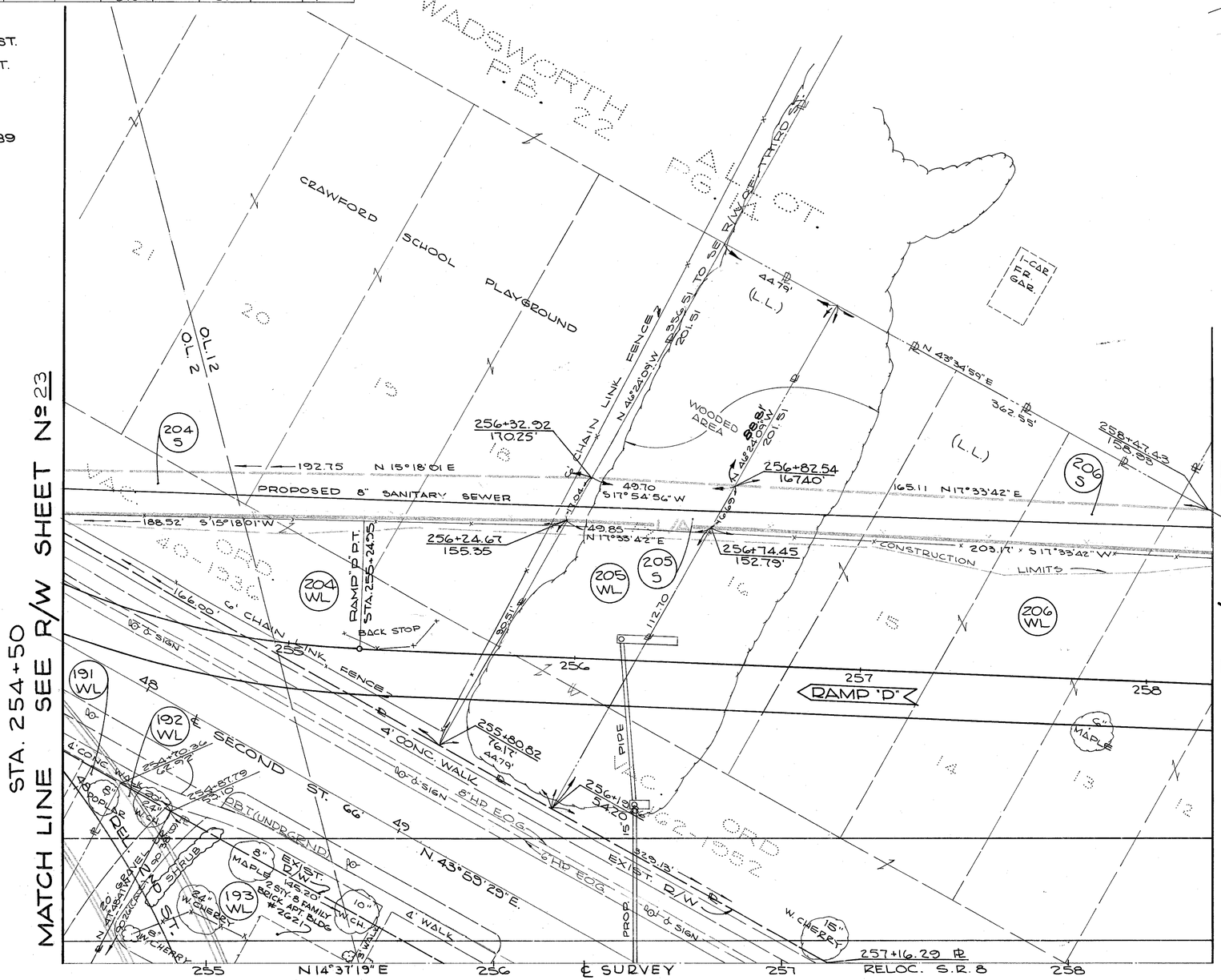

0 20 40 60 80

PRELIMINARY SUBMITTAL DATE: RIGHT-OF-WAY COMPLETION DATE:			
Nº	REVISIONS	MADE BY	DATE
1.	PAR. 206 - RESIDUE AREA CORR.	J.M.	7-22-68
2.	LABELED BLDG. - PAR 193 WL	E.V.	8-16-68
3.	REVISED AREAS: 193	R.S.	8-28-68

STA 254+50 TO STA 258+50 LT. OF ℄

AUG 27 1968

K & E - AKRON

22

MATCH LINE SEE R/W SHEET Nº 29

SUMMIT COUNTY, CITY OF CUYAHOGA FALLS
ORIG. STOW TOWNSHIP, O.L.2, O.L.12, T-3N, R-10W

FED. RD.	STATE	PROJECT	
2	OHIO	U19(12)	

430/460

SUM. 8-17.63

RIGHT OF WAY SHEET 26/56

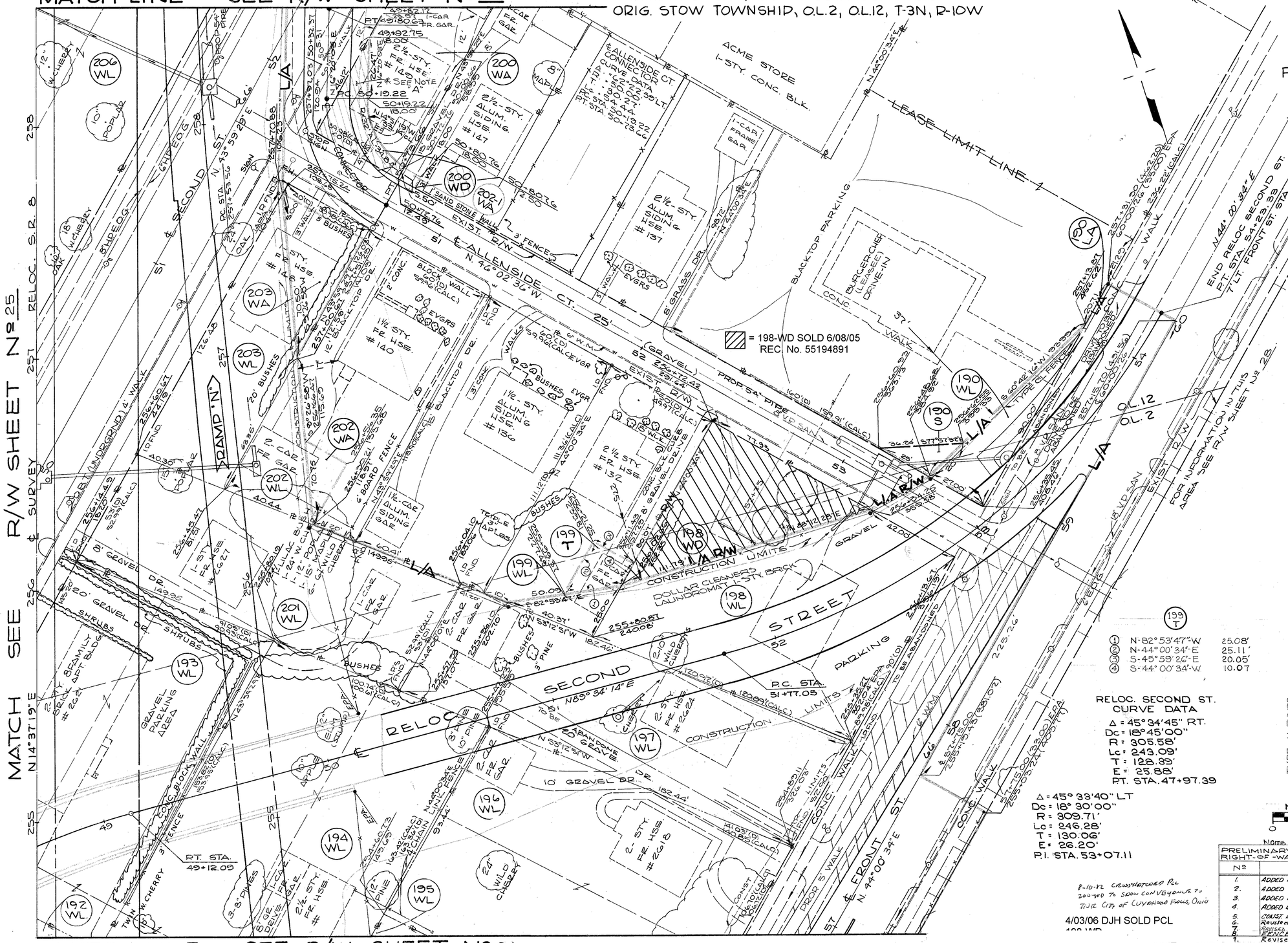

= AREA CONVEYED

NOTE "A" PCL. 200-WD
PCL. 200-WD VACATED AND CONVEYED TO THE CITY OF CUYAHOGA FALLS BY DIRECTOR'S DEED RECORDED IN VOL. 6590, PAGES 486-489 SUMMIT COUNTY RECORDS

TYPE U FUNDS									
PARCEL Nº	OWNER	DEED AREA CORR.	TOTAL P.R.O.	TO BE ACQUIRED TOTAL TAKE	TO BE ACQUIRED PRO. IN TAKE	TO BE ACQUIRED NET TAKE	NET RESIDUE LEFT	NET RESIDUE RIGHT
190WL 190 S 190 LA	THE ALMAR CO., A PARTNERSHIP	33,786	—	1,215 239	—	1,215 239	—	32,571
193WL	JOHN C. HART & ARTA L. HART	13,505	—	13,505	—	13,505	—	—
194WL	HUGH T. RINEHART & INEZ K. RINEHART	13,812	—	15,812	—	15,812	—	—
195WL	AKRON National Bank and Trust Co. ETAL.	9,785	—	9,785	—	9,785	—	—
196WL	ANNA M. WISE	14,042	—	14,042	—	14,042	—	—
197WL	LELAND COX AKA LELAND S. COX	9592	—	9592	—	9592	—	—
198WL	ELEANOR M. NIHOUSEN	11,696	—	8576	—	8576	—	—
198WD		—	—	3120	—	3120	—	—
199WL 199 T	DAVID K. FIRM & DOROTHY K. FIRM	5408	—	501 353	—	501 353	—	4907
200WA 200WD	FRANK J. MANSFIELD & JEANNE MANSFIELD	3947	—	715	—	715	—	3232
201WL	PAUL PFOUTS & KATHRYN PFOUTS	7883	—	7883	—	7883	—	—
202WL 202WA	FLOYD T. HAMLIN	7356	—	1271	—	1271	—	6085
203WL	CORA MAE DE SHANE FKA CORA MAE BRANCHER	5156	—	3795	—	3795	—	1361
202-1WA	MARLIN A. NEILL & W. REGINA NEILL	—	—	—	—	—	—	—

199 T

① N-82°53'47"-W 25.08'
② N-44°00'34"-E 25.11'
③ S-45°59'26"-E 20.05'
④ S-44°00'34"-W 10.07

RELOC. SECOND ST. CURVE DATA
Δ = 45°34'45" RT.
Dc = 18°45'00"
R = 305.58'
Lc = 243.09'
T = 128.39'
E = 25.88'
P.T. STA. 47+97.39

Δ = 45°33'40" LT
Dc = 18°30'00"
R = 309.71'
Lc = 246.28'
T = 130.06'
E = 26.20'
P.I. STA. 53+07.11

NAME CHANGE PCL 190 LEE 4-7-68

0 20 40 60 80

Name Change. Pcl. 195WL 3-5-69

PRELIMINARY SUBMITTAL DATE:
RIGHT-OF-WAY COMPLETION DATE:

Nº	REVISIONS	MADE BY	DATE
1.	ADDED PAR'S 190LA. & 202-1WA	J.M.	7-22-68
2.	ADDED DIST L/A TO BLDG PAR 190	J.M.	7-22-68
3.	ADDED STA & OFFSET-NE COR. PAR. 196	J.M.	7-22-68
4.	ADDED BRG'S. -SECOND, & RELOC. SECOND ST.	E.V.	8-16-68
5.	CONST. LIMITS. FRONT ST. CORR. & CONNECTOR.	E.V.	8-16-68
6.	Revised Areas: 193 & 194	R.C.	8-26-68
7.	REVISED 199WA TO 199-T PER I.D.C.-STRAHL-dated 9-9-68	R.S.	9-10-68
8.	FENCE ADDED ALONG RAMP "N"	D.D.A.	10-16-68
9.	Revised Name Pcl 203	E.W.	12-3-68

8-10-82 CROSSHATCHED PCL 200-WD TO SHOW CONVEYANCE TO THE CITY OF CUYAHOGA FALLS, OHIO

4/03/06 DJH SOLD PCL 198 WD

MATCH LINE SEE R/W SHEET Nº 24

STA 254+50 TO STA 258+50 RT. OF ℄

K & E - AKRON

SUMMIT COUNTY, CITY OF CUYAHOGA FALLS
ORIG. STOW TOWNSHIP, O.L. 2, T-3N, R-10W

FED. RD.	STATE	PROJECT	
2	OHIO	U19 (12)	

431/460

SUM - 8 - 17.63

27/56

RIGHT OF WAY SHEET

TIFFT ST.
8"V.P.SAN.
4"W.M.
3'E.O.G.
4'E.O.G.
CONC. WALK
8"V.P.SAN.
FIRE HYD.
8"W.M.
EXIST. ℄ N43°35'53"E
END RELOC FRONT ST.
STA. 53+41.24
FRONT ST. 66'
N 44°00'34" E
12"V.P. SAN.
POINT OF PEDESTRIAN ACCESS PER B.P.R. PARTICIPATION
POINT OF PEDESTRIAN ACCESS PER B.P.R. PARTICIPATION
RELOC. ℄ N43°44'59"E
52
53
54
55
56
57
249+88.22
119.68'
250+31.88
144.27'
250+75.45
168.81'
251+19.01
193.34'
251+62.58
217.88'
252+06.15
242.42'
252+49.17
266.95'
252+93.28
291.49'
253+36.84
316.02'
C.P.A.
160-6 LA
FOR B.P.R. PARTICIPATION ONLY
B.P.R. PARTICIPATION
EXIST. R/W
18"V.P. SAN.
6" E.O.G.
CONC. WALK
GRAVEL DR.
8" CHERRY
15" MAPLE
12" MAPLE
24" MAPLE
2 MAPLE
MAPLE
SPRUCE
RAMP "M"
2½-STY. FR. HSE. #2549
2½-STY. FR. HSE. #2553
2-STY. FR. HSE. #2559
2½-STY. FR. HSE. #2567
2-STY. FRAME HSE.
#2579 2-STY. FRAME HSE.
#2585 2-STY. FRAME HSE.
#2589 2-STY. BRICK STUCCO HSE.
#2595 1½-STY. FRAME HSE.
#2613 2½-STY. FRAME HSE.
#2619 1½-STY. FRAME HSE.
#2573 2-STY. CONC. BLK. HSE.
#2587 1-STY. BRICK HSE.
2-CAR GAR.
FR. GAR.
BRICK DR.
LA
LA SUBD.
CONC.
24" STORM
GD. DRIVE
FIRE HYDRANT
BLACK TOP DR.
RAMP "M"
CONSTRUCTION LIMITS
1APA 279'
1APA 250'
1APA 261'
1APA 261'
1APA 261

SUMMIT COUNTY, CITY OF CUYAHOGA FALLS
ORIG. STOW TOWNSHIP, O.L.2, O.L.12, T-3N, R10W

FED. RD.	STATE	PROJECT	
2	OHIO	U19 (12)	

432/460

SUM - 8 - 17.63

RIGHT OF WAY SHEET 28/56

RELOC. 2ND ST CURVE DATA
Δ. = 45° 33' 40" LT.
Dc. = 18° 30' 00"
R. = 309.71'
T. = 130.06'
Lc. = 246.28'
E. = 26.20'
P.I. STA. 53+07.11

SHEET Nº 27

MATCH LINE SEE R/W SHEET Nº 27

N 44° 00' 34" E

R/W ℄ 80.07

25.00

255+80.87 (240.08)

N 53° 21' 34" W

120.92

N 80° 12' 28" E

111.78

CONSTRUCTION LIMITS

198 WD

52+75

ALLENSIDE CT.

N 46° 02' 36" W

77.93

256+72.42 251.64

BURGER CHEF (LEASEE) DRIVE-IN

37'

256+60.93 363.18

BLACKTOP PARKING

190 S

256+48.68 384.92

256+62.55 398.55

190 WL

N 40° 42' 16" W

198 WL

197 WL

RELOC. SECOND ST.

DOLLAR CLEANERS LAUNDROMAT 1-STY. BRICK

LIMITS

120.83 (CALC.)

42.00'

256+13.67 392.19

255+39.27 352.04

89.98 CALC.

90° (R)

5299'

53

80.00

TYPE CL FENCE

93.99'

190 LA

FOR INFORMATION IN THIS AREA SEE R/W SHEET. Nº 26

257+13.81 432.62

257+31.90 (462.70) 60+00.26 (38.00) EPA

20.11'

21.29'

236.22 (CALC.)

132.57 (CALC.)

EXIST R/W

ACME 1-STY BRICK

℄ BAILEY RD

T-8" VP SAN

DRIVE WAY TO BE ABANDONED

256+35.45 408.42'

6" W.M.

54

257+15.70 (491.56) ℄ 60+00.26

℄ FRONT ST.

283.41' (℄ Plat)

N 44° 00' 34" E

58 ℄ 57+75.00 255+18.43 (381.07) FOR B.P.R. PARTICIPATION 57+75.00 (38.00) 255+03.24 (409.77)

225.26

59

60

61

62

O.L. 12

O.L. 2

L/A

18" VP SAN

6" E.D.G.

6" MAPLE

EXIST R/W

98.00'

13.0'

104.00'

255+14.63 416.17

8" MAPLE

WALK

6" MAPLE

255+32.18 469.88

256+05.25 467.21

8" MAPLE

GRAVEL DR.

#2667 1-STY. CONC. BLK

#2669 2-STY. BRICK

1-STY. BEAUTY SHOP

BLACK TOP

#2679 MARATHON SERV. STATION

#2625 2-STY. FR. HSE.

SLAG DRIVE

S 58° 07' 26" E

150.00'

#2643 1-STY. FR. HSE. INSUL BR. SIDING

DRIVE NOT OPEN

SCATTERED MAPLES

#2649 2-STY. FR. HSE.

#2655 2-STY. CONC. BLK.

#2661 1½ STY FR. HSE. INSUL BR. SIDING

GRAVEL DR.

GRAVEL DR.

GRAVEL DR.

160-7 WL

160-8 S

128.00' S 46° 02' 36" E

PROP 54" STORM PIPE

130.00' S 46° 02' 34" E

WALL

254+22.82 614.79

EDGE OF WATER

254+67.30 551.86

255+23.47 571.43

1330' S 55° 19' 02" W

CUYAHOGA RIVER

0 20 40 60 80

PARCEL Nº	OWNER	DEED AREA CORR.	TOTAL P.R.O.	TO BE ACQUIRED TOTAL TAKE	TO BE ACQUIRED P.R.O. IN TAKE	TO BE ACQUIRED NET TAKE	NET RESIDUES LEFT	NET RESIDUES RIGHT	TYPE FUNDS
160-8S	HAROLD SOMMERS	13,157	——	1,943	——	1,943	——	13,157	U
190 WL	THE ALMAR CO.,	33,786	——	1,215	——	1,215	——	32,571	U
190 S	A Partnership			239	——	239	——	——	U
198 WL	ELEANOR M. NIHOUSEN	11,696	——	8,576	——	8,576	——	——	U
198WD				3,120	——	3,120	——	——	U
160-7WL	MERCEDES MOORE	6,120	——	6,120	——	6,120	——	——	U
									U

PRELIMINARY SUBMITTAL DATE:
RIGHT-OF-WAY COMPLETION DATE:

Nº	REVISIONS	MADE BY	DATE
1.	ADDED DIST. L/A TO BLDG. PAR. 190	J.M.	7-22-68
2.	ADDED WORK LIMITS-PAR. 198 WD.	E.V.	8-16-68
3.	ADDED L/A-R/W	E.V.	8-16-68
4	NAME CHANGE, PCL. 190	L.B	4-7-69
5	REVISED FUNDING PCL 160-7 PER B.P.R. LETTER 11/8/68.	J.R.B.	4/15/69
6	ADD SUFFIX WL TO PCL 106-TWD Delete 160-7 LA	JRT	12-23-74

FRONT ST. STA. 57+50 TO STA. 62+00

AUG 27 1968
DEPT. OF HIGHWAY ENGR. & ADMIN. SERV.
SUMMIT COUNTY, OHIO
K & E - AKRON

SUMMIT COUNTY, CITY OF CUYAHOGA FALLS
ORIG. STOW TOWNSHIP, O.L.12, T-3N, R-10W

FED. RD.	STATE	PROJECT	
2	OHIO	U19(12)	

433/460

SUM - 8 - 17.63

RIGHT OF WAY SHEET 29/56

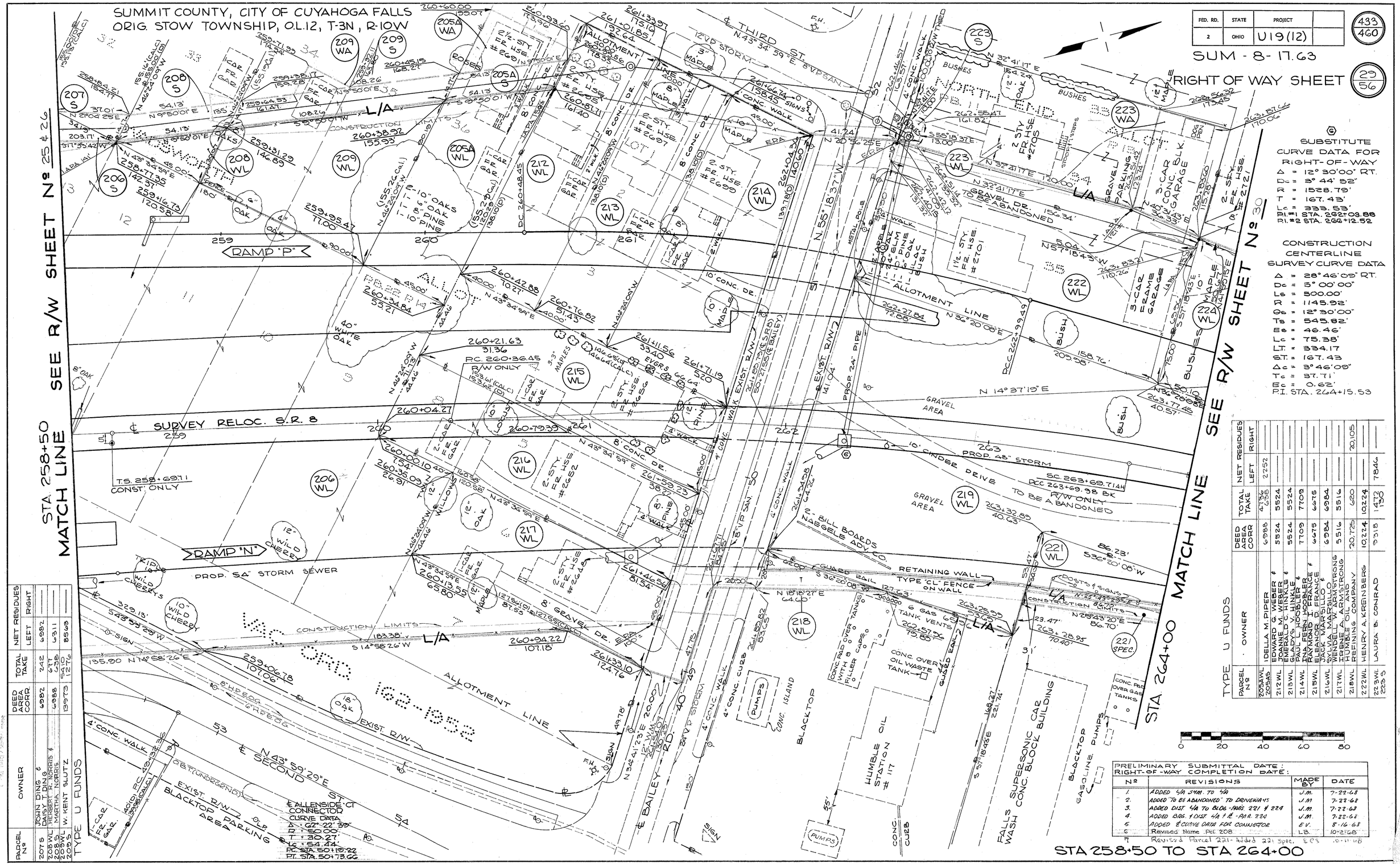

SUBSTITUTE CURVE DATA FOR RIGHT-OF-WAY

Δ = 12° 30' 00" RT.
Dc = 3° 44' 52"
R = 1528.79'
T = 167.43'
Lc = 333.53'
P.I. #1 STA. 262+03.88
P.I. #2 STA. 266+12.52

CONSTRUCTION CENTERLINE SURVEY CURVE DATA

Δ = 28° 46' 09" RT.
Dc = 5° 00' 00"
Ls = 500.00'
R = 1145.92'
Qs = 12° 30' 00"
Ts = 545.82'
Es = 46.46'
Lc = 75.38'
LT. = 334.17
ST. = 167.43
Δc = 3° 46' 09"
Tc = 37.71'
Ec = 0.62'
P.I. STA. 264+15.53

TYPE U FUNDS

PARCEL Nº	OWNER	DEED AREA CORR.	TOTAL TAKE	NET RESIDUES LEFT	NET RESIDUES RIGHT
205AWL 205AS	IDELLA M. PIPER	6988	4736 638	2252	—
212WL	EDWARD G. WEBER & JOANNE M. WEBER	5524	5524	—	—
213WL	EMERALD C. HINKLE & GLADYS V. HINKLE	5524	5524	—	—
214WL	PAUL L. HOOBLER & INA FERN HOOBLER	7709	7709	—	—
215WL	RAYMOND I. FRANCE & ELEANOR D. FRANCE	6675	6675	—	—
216WL	JACK MARSILLO & SYLVIA MARSILLO	6984	6984	—	—
217WL	WENDELL W. ARMSTRONG & IRENE A. ARMSTRONG	5516	5516	—	—
218WL	HUMBLE OIL AND REFINING COMPANY	20,725	620	—	20,105
222WL	HENRY A. KREINBERG	10,224	10,224	—	—
223WL 223S	LAURA B. CONRAD	9318	1472 130	7846	—

TYPE U FUNDS

PARCEL Nº	OWNER	DEED AREA CORR.	TOTAL TAKE	NET RESIDUES LEFT	NET RESIDUES RIGHT
207S	JOHN DING & DAISY T. DING	6982	242	6982	—
208WL 208S	HERBERT R. NORRIS & MARTHA NORRIS	6988	677 638	6311	—
209WL 209S	W. KENT SLUTZ	13973	5410 1276	8563	—

PRELIMINARY SUBMITTAL DATE:
RIGHT-OF-WAY COMPLETION DATE:

Nº	REVISIONS	MADE BY	DATE
1.	ADDED L/A SYM. TO L/A	J.M.	7-22-68
2.	ADDED "TO BE ABANDONED" TO DRIVEWAYS	J.M.	7-22-68
3.	ADDED DIST. L/A TO BLDG.-PARS. 221 & 224	J.M.	7-22-68
4.	ADDED BRG. & DIST. L/A & ℄ - PAR. 224	J.M.	7-22-68
5.	ADDED ℄ CURVE DATA FOR CONNECTOR	E.V.	8-16-68
6.	Revised Name Pcl. 208	L.B.	10-2-68
7.	Revised Parcel 221 - Added 221 Spec.	E.C.S.	10-11-68

STA 258+50 TO STA 264+00

K & E - AKRON

SUMMIT COUNTY, CITY OF CUYAHOGA FALLS
ORIG. STOW TOWNSHIP, O.L.12, T-3N, R-10W

FED. RD.	STATE	PROJECT	
2	OHIO	U19(12)	

434/460

SUM - 8-17.63

RIGHT OF WAY SHEET 30/56

STA. 264+00 SEE R/W SHEET № 29

SEE R/W SHEET № 31

MATCH LINE

MATCH LINE

STA 269+00

℄ THIRD ST. S 50° 10' 36" W 40'

4' W.M.

4" ∅ FIRE HYD.

8" V.P. SAN.

4' CONC. SIDEWALK

EXIST R/W LINE

ALLOTMENT LINE

CONSTRUCTION LIMITS

RELOC. S.R. 8

PROP. 42" PIPE

℄ S.R. 8

℄ EXIST R/W

SECOND ST. 66'

BLACKTOP DRIVE & PARKING AREA

PARKING LOT

GRAVEL & DIRT PARKING LOT

GRAVEL PARKING LOT

BLACKTOP

RAMP "P"

BOARD FENCE

TYPE CL FENCE

CONC. PARKING AREA

CONC. PAD OVER GAS TANK

ASPHALT SURFACE

BUSHES

BRUSH

TREES

LILAC BUSH

18" POPLAR
3-3" MAPLES
2-24" POPLAR
3-6" CHERRY

1 CAR FR. GAR.

2 STY FR. HSE. #2721

2½ STY. FR. HSE. #2725

1½ STY. FR. HSE. #2731

2½ STY. FR. HSE. #2735

2½ STY. FR. HSE. #2739

1½ STY. FR. HSE. #2743

2 STY. FR. HSE. #2747

2-STY. 2-FAMILY FR. APARTMENT #2753 & #2757

2 STY. 6 FAMILY BRICK APARTMENT #2759 TO #2769

2 STY. 4 FAMILY APARTMENT #2771

1-STY BRICK CONC. BLK METAL BUILDING PROGRESSIVE MOLD & MACHINE COMPANY #2742

1-STY BRICK & CONC. BLK BLDG #2732

1-STY BRK CONC. BLK. ADDITION

1-STY BRICK, CONC. BLOCK & TILE BLDG.

2-CAR FR. GARAGE

3-CAR FR. GARAGE

7-CAR BRICK & BLK. GARAGE

3 CAR FR. GARAGE

2-CAR FR. GARAGE

6'x8' FR. SHED

CORR. METAL BLDG.

15' MAPLE
8" MAPLE
10" MAPLES
36" MAPLE
2-36" MAPLE
4" OAK
12" MAPLE
10" MAPLE
15" MAPLE
20" MAPLE
15" BEECH
12" MAPLE
15" OAK
12" OAK
24" ELM
TWIN 10" WALNUT
3-12" OAK
10" OAK
10" OAK
12" OAK
10" W. CHERRY
16" WALNUT
18" ELM
10-3" W. CHERRY
APPLE

PB 11
PB 13

P.C. 264+45.09
P.C.C. 264+45.09
R/W ONLY
RETAINING WALL

P.T. 267+78.62
R/W ONLY

CPA 76'±
CPA 86'±
CPA 94'±
CPA 97'±

CONSTRUCTION LIMITS

GRAVEL & DIRT PARKING LOT

SHIPPING DOOR

2'

TYPE U FUNDS

PARCEL №	OWNER	DEED AREA CORR.	TOTAL PRO	TO BE ACQUIRED TOTAL TAKE	PRO IN TAKE	NET TAKE	NET RESIDUES LEFT	RIGHT
219WL	FIRST NATIONAL BANK OF AKRON (TRUSTEE)	24,934		24,934		24,934		
221 SPL 221 WL	FALLS SUPERSONIC CAR WASH	13,586		1,883		1,883	11,697	
224WL	ROBERT J. LEWIS	9078		3625		3625	5453	
225WL	WILLIAM & THEODORA M. BERGSON	7273		2764		2764	4509	
226WL	MOLLIE CASE	7045		2754		2754	4291	
227 WL 227 WA	R.F. COOK MANUFACTURING CORPORATION	31,358		12,143		12,143	19,215	
228WL	PROGRESSIVE MOLD AND MACHINE CO.	35,474		10,735		10,735		24,739

PARCEL №	OWNER	DEED AREA CORR.	TOTAL P.R.O.	TO BE ACQUIRED TOTAL TAKE	PRO IN TAKE	NET TAKE	NET RESIDUES LEFT	RIGHT
229WL	OLGA V. GOOD	6455		2853		2853	3602	
231WL	IRENE W. QUANTANCE FKA MARGUERITE M. STRONG	12,041		2883		2883	3478	
232WL	THE GENERAL TIRE & RUBBER COMPANY	5870		2866		2866	3004	
234WL	MARLYN JOYCE WILHELM	85,085		15,288		15,288	69,797	
235WL	BEN E. FORBES	7645		4005		4005	3644	
236 WL 236 WA	ANTHONY GAYLAN	7451		4304		4304	3147	
237WA	IRENE SENN	13,646		9799		9799	3847	
238WL		24,180	1616	22,564				
	VICTOR A. MEFARLAND (#2594 WL) REQUIRED AS REMNANT	5,750				5,750		
239AWL	MARY SMITH & ESTATE	5,750				5,750		
241WL	LUCILLE I. MITROVICH AKA LUCILLE IRENE MITROVICH FKA LUCILLE I. WHITTINGTON	18,414					18,414	
245WL			1616	24,180				

TO BE ACQUIRED	NET RESIDUES
TOTAL PROJECT TAKE	NET LEFT	RIGHT
2853	3800	
2883	3478	
2866	3004	
15,288	69,797	
4005	3644	
4304	3147	
9799	3847	
22,564		
5750		
5,750		
	18,414	
24,180		

1616

0 20 40 60 80

SUBSTITUTE CURVE DATA FOR RIGHT OF WAY
Δ = 12° 30' 00" RT.
D_a = 3° 44' 52"
R = 1528.79'
T = 167.43'
L = 333.53'
P.I. #1 STA. 262+03.88
P.I. #2 STA. 266+12.52

CONSTRUCTION CENTERLINE SURVEY CURVE DATA
Δ = 28° 46' 09" RT.
D_a = 5° 00' 00"
L_a = 500.00'
R = 1145.92'
Θ_s = 12° 30' 00"
T_s = 548.82'
E_s = 46.46'
L_c = 75.38
LT = 334.17'
ST = 167.43'
Δ_c = 3° 46' 09"
T_c = 37.71'
E_c = 0.62'
P.T. STA. 264+15.53

PRELIMINARY SUBMITTAL DATE:
RIGHT-OF-WAY COMPLETION DATE:

№	REVISIONS	MADE BY	DATE
1.	LABELED RETAINING WALL	J.M.	7-22-68
2.	ADDED 227 WA, 236 WA & 237 WA TO TABLE	J.M.	7-22-68
3	ADDED DIST-4A TO BLG ANG; 225, 226, 229, 231, 235, 238, 234 & 239	J.M.	7-22-68
4	ADDED ORIG. & PROJ 232-245	J.M.	7-22-68
5	REVISED AREAS 2, 9 WL (2) ADD NOTE: 234 WL	R.C.	8-23-68
6	REVISED PCL 221 - ADDED PCL 221 SPEC.	RCS	10-1-68
7	FENCE CORNERS CALLED OUT	DPA	10-16-68
8	REVISED NAME: PCL 224	J.R.S.	1-6-69

STA 264+00 TO STA 269+00

ADDED P.R.O. PARCEL 238WL 11-4-70

Revised Name Pcl. 232-WL. Lee 2/11/69

Deleted 239-WL, Revised 234-WL 10-27-69

Name Changed Pcl. 228 WL. white 9-8-69

K & E - AKRON

FED. RD.	STATE	PROJECT	
2	OHIO	U19(12)	

435/460

SUM -8- 17.63

RIGHT OF WAY SHEET 31/56

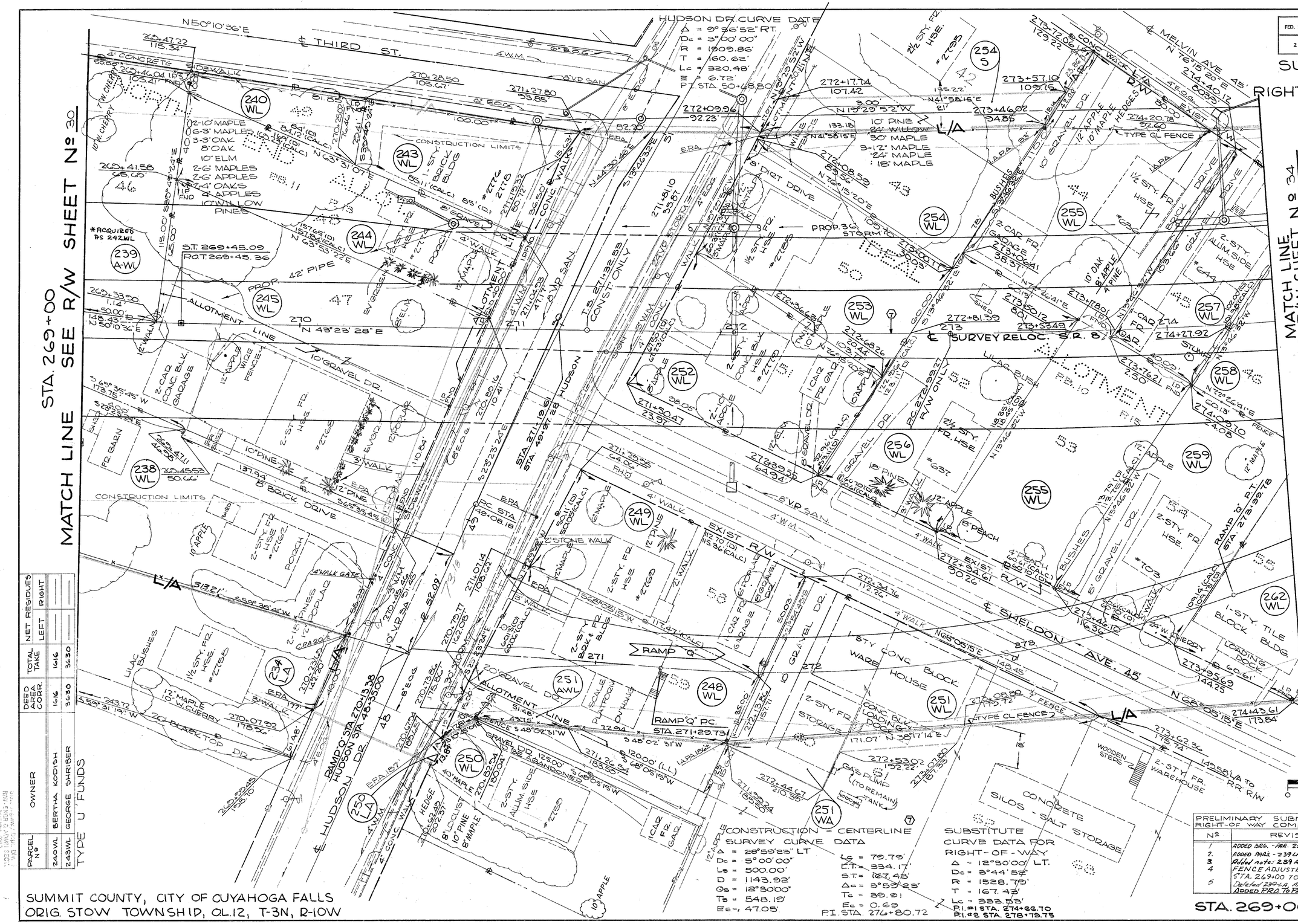

PARCEL Nº	OWNER	DEED AREA CORR.	TOTAL TAKE	NET RESIDUES LEFT	NET RESIDUES RIGHT
240WL	BERTHA KODISH	1616	1616		
243WL	GEORGE SHRIBER	3630	3630		

TYPE U FUNDS

PARCEL Nº	OWNER	DEED AREA CORR.	TOTAL TAKE	NET RESIDUES LEFT	NET RESIDUES RIGHT
244WL	ROBERT J. HARTER & LURETTA B. HARTER	6533	6533		
234LA	GENERAL TIRE & RUBBER COMPANY AN OHIO CORPORATION				
248WL	W.L. TUCKER COAL AND SUPPLY COMPANY	7125	6269		856
249WL	JOSEPH S. DAYTON JR. & DARLENE IRENE DAYTON	5821	5821		
250WL	VERNE P. SIMONS & RUTH E. SIMONS	7500	75		7425
250LA	ELIZABETH ANN HURLEY	50513	6310		43742
251WL					
252WL	MILDRED CATHERINE WOOD	6064	6064		
253WL	MILDRED ALICE HATFIELD FNA MILDRED ALICE FISHEL	6421	6421		
254WL	MARK S. SMITH & EFFIE M. SMITH	13,876	4454		
254S			2013		
255WL	CLEMENT SHELDON McKENZIE	15,509	15,509		
256WL	MACK W. BRISLINGER	7299	7299		
259WL	GILBERT J. KOHUT	6728	6728		

TYPE U FUNDS

RAMP "Q" CURVE DATA
Δ = 22°57'17" LT.
Dc = 8°30'00"
R = 674.07'
T = 136.86'
Lc = 270.06'
E = 13.75'

0 20 40 60 80

CONSTRUCTION - CENTERLINE SURVEY CURVE DATA
Δ = 28°59'23" LT
Dc = 5°00'00"
Ls = 500.00'
D = 1143.92'
Qs = 12°30'00"
Ts = 548.19'
Es = 47.05'
Lc = 79.79'
L.T. = 334.17'
S.T. = 167.48'
Δc = 3°59'23"
Tc = 39.91
Ec = 0.69
P.I. STA. 276+80.72

SUBSTITUTE CURVE DATA FOR RIGHT-OF-WAY
Δ = 12°30'00" LT.
Dc = 3°44'52"
R = 1528.79'
T = 167.43'
Lc = 333.53'
P.I. #1 STA. 274+66.70
P.I. #2 STA. 278+79.75

PRELIMINARY SUBMITTAL DATE:
RIGHT-OF WAY COMPLETION DATE:

Nº	REVISIONS	MADE BY	DATE
1	ADDED BRG. - PAR. 254S	J.M.	7-22-68
2.	ADDED PARS. - 239 LA & 250 LA TO TABLE	J.M.	7-22-68
3	Added note: 239 AWL	R.S.	8-28-68
4	FENCE ADJUSTED & GATE ADDED STA. 269+00 TO HUDSON	D.D.A.	10-16-68
5	Deleted 239-LA, ADDED PCL 234-LA ADDED P.R.O. TO PARCEL 238WL	G.J.F. L.S.	10-23-69 11-4-70

STA. 269+00 TO STA. 274+50

SUMMIT COUNTY, CITY OF CUYAHOGA FALLS
ORIG. STOW TOWNSHIP, OL.12, T-3N, R-10W

K & E - AKRON

SUMMIT COUNTY, CITY OF CUYAHOGA FALLS
ORIG. STOW TOWNSHIP, O.L.12, T-3N, R-10W

FED. RD.	STATE	PROJECT	
2	OHIO	U19(12)	

436 / 460

SUM 8 17.63

RIGHT OF WAY SHEET 32 / 56

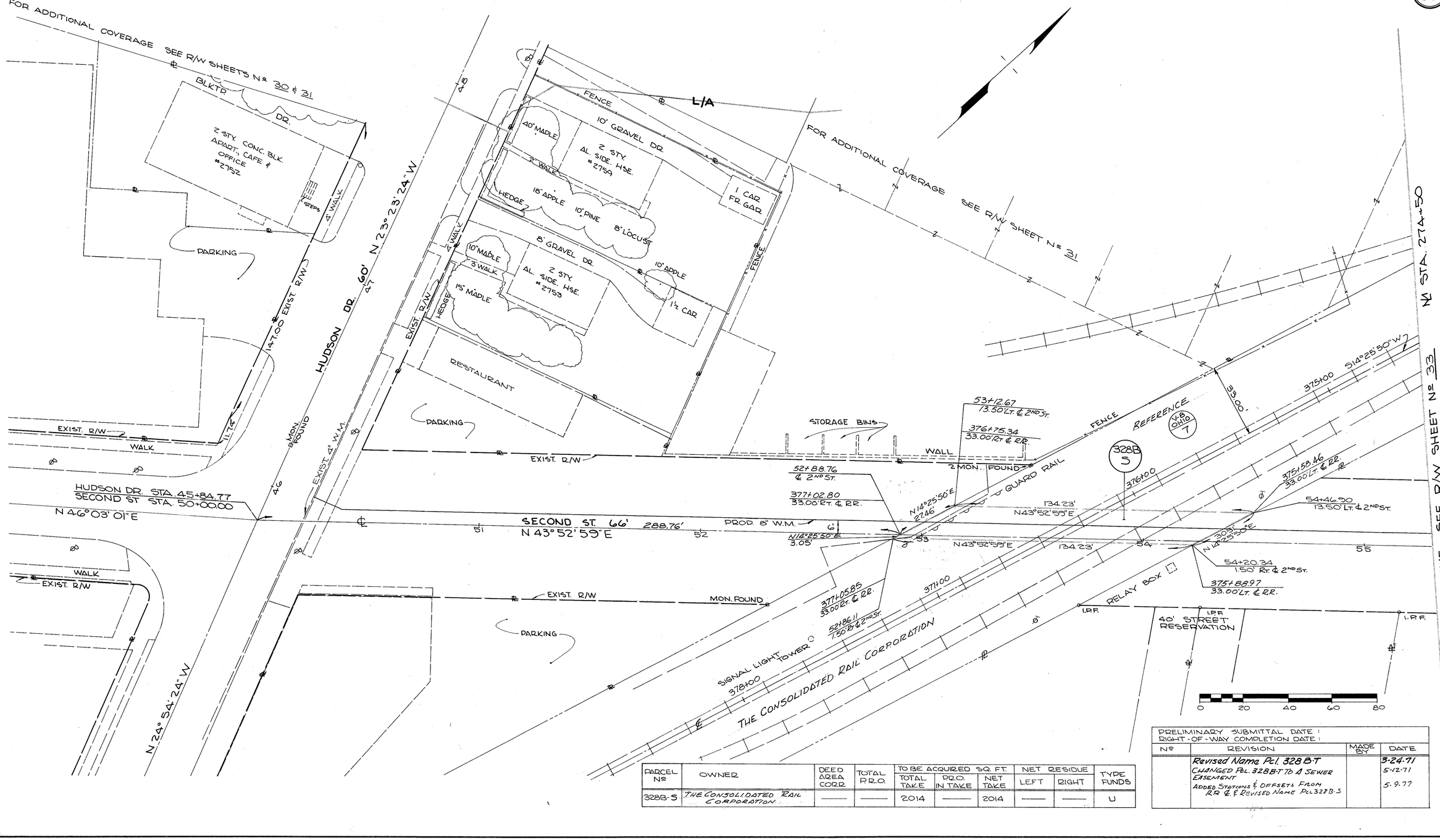

PARCEL Nº	OWNER	DEED AREA CORR.	TOTAL P.R.O.	TO BE ACQUIRED SQ. FT. TOTAL TAKE	P.R.O. IN TAKE	NET TAKE	NET RESIDUE LEFT	NET RESIDUE RIGHT	TYPE FUNDS
328B-S	THE CONSOLIDATED RAIL CORPORATION	——	——	2014	——	2014	——	——	U

PRELIMINARY SUBMITTAL DATE :
RIGHT-OF-WAY COMPLETION DATE :

Nº	REVISION	MADE BY	DATE
	Revised Name Pcl 328B-T		3-24-71
	CHANGED PCL. 328B-T TO A SEWER EASEMENT		5-12-71
	ADDED STATIONS & OFFSETS FROM RR ℄ & REVISED NAME PCL 328B-S		5-9-77

FORM DDA-8

SUMMIT COUNTY, CITY OF CUYAHOGA FALLS
ORIG. STOW TOWNSHIP, O.L.12, T-3N, R-10W

FED. RD.	STATE	PROJECT	
2	OHIO	U19(12)	

437/460

SUM 8 17.63

RIGHT OF WAY SHEET 33/56

PARCEL NO	OWNER	DEED AREA CORR.	TOTAL P.T.O.	TO BE ACQUIRED SQ. FT. TOTAL TAKE	TO BE ACQUIRED SQ. FT. P.T.O. IN TAKE	TO BE ACQUIRED SQ. FT. NET TAKE	NET RESIDUE LEFT	NET RESIDUE RIGHT	TYDE FUNDS
260-T	REICHHOLD CHEMICALS, Inc.	99,317	——	1,363	——	1,363	——	——	U

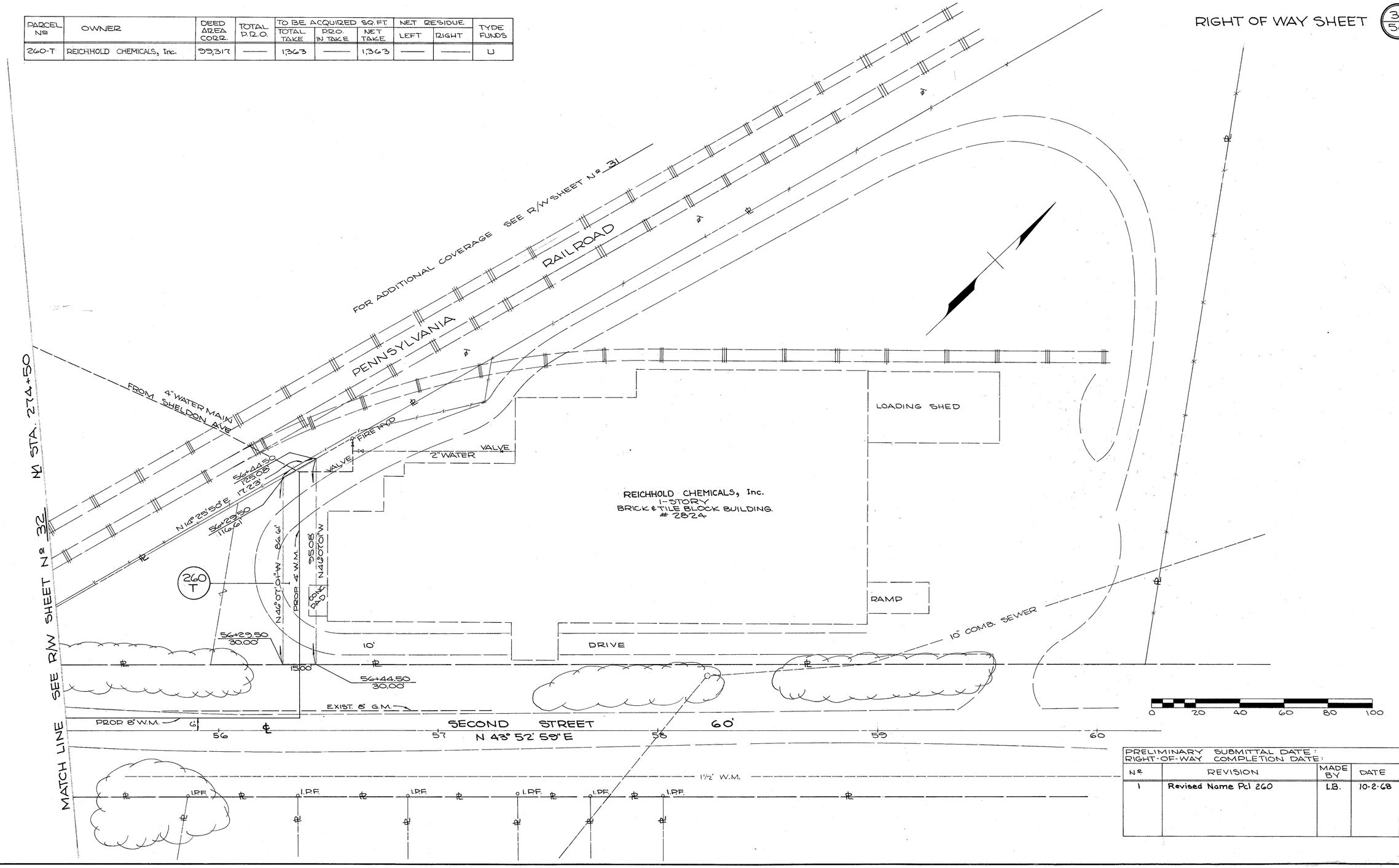

PRELIMINARY SUBMITTAL DATE: RIGHT-OF-WAY COMPLETION DATE:			
No	REVISION	MADE BY	DATE
1	Revised Name Pcl 260	L.B.	10-2-68

STATE HIGHWAY DEPT. OHIO
R/W ENGR. & PLANS SECT.
APPROVED
AUG 27 1968
DATE

FORM D D A-6

SUMMIT COUNTY, CITY OF CUYAHOGA FALLS
ORIG. STOW TOWNSHIP, O.L.12, T-3N, R-10W

FED. RD.	STATE	PROJECT	
2	OHIO	U19(12)	

438/460

SUM-8-17.63

RIGHT OF WAY SHEET 34/56

⑦ SUBSTITUTE CURVE
DATA FOR RIGHT-OF-WAY
Δ = 12°30'00" LT.
Dc = 3°44'52"
R = 1528.79
Lc = 333.53
T = 167.43
P.I. #1 STA. 274+66.70
P.I. #2 STA. 278+79.75
CONSTRUCTION
CENTERLINE SURVEY
CURVE DATA
Δ = 28°59'23" LT.
Dc = 5°00'00"
Ls = 500.00'
R = 1145.92'
Θs = 12°30'00"
Ts = 548.19'
Es = 47.05'
Lc = 79.79'
L.T. = 334.17'
S.T. = 167.43'
Δc = 3°59'23"
Tc = 39.91'
Ec = 0.69'
P.I. STA. 276+80.72

℄ CURVE #1
Δ = 67° LT.
R = 39.92'
T = 26.43'
Lc = 46.68'

℄ CURVE #2
Δ = 11°01'18" RT.
Dc = 10°
R = 572.96'
T = 55.28'
Lc = 110.22
E = 2.66'

⑦
R = 585.46'
CH = 4.84'
BRG = N9°28'15"E
Lc = 4.84'

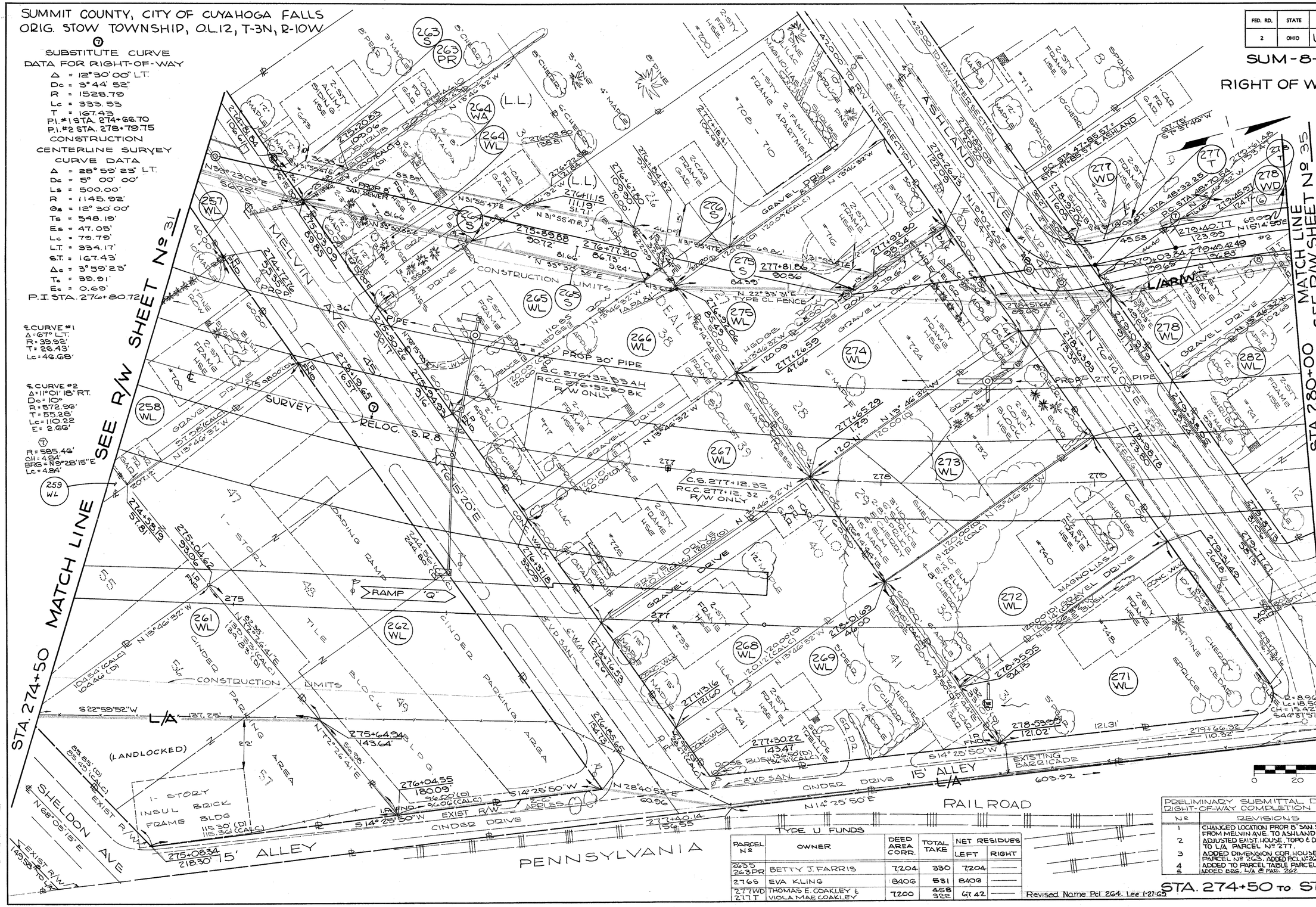

TYPE U FUNDS

PARCEL Nº	OWNER	DEED AREA CORR.	TOTAL TAKE	NET RESIDUES LEFT	NET RESIDUES RIGHT
263S 263PR	BETTY J. FARRIS	7,204	330	7,204	—
276S	EVA KLING	8406	531	8406	—
277WD 277T	THOMAS E. COAKLEY & VIOLA MAE COAKLEY	7,200	458 322	6742	—

TYPE U FUNDS

PARCEL Nº	OWNER	DEED AREA CORR.	TOTAL TAKE	NET RESIDUES LEFT	NET RESIDUES RIGHT
257WL	BONNIE M. BARNARD	4113	4113	—	—
258WL	EDWARD J. DEIBEL & ADA L. DEIBEL	5999	5999	—	—
261WL	THOMAS S. BOWMAN	11,235	4294	—	6941
262WL	TRUMP PLASTICS, INC. PETER J. BONNELL, PRES.	26,510	26,510	—	—
264WL 264S 264WA	VIVIAN E. WHITTAKER	7205	1663 1617	5542(L)	—
265WL 265S	MILDRED A. HATFIELD	7205	4988 1548	2217(L)	—
266WL	ANTHONY FALCONE & RUTH L. FALCONE	7206	7206	—	—

PARCEL Nº	OWNER	DEED AREA CORR.	TOTAL TAKE	NET RESIDUES LEFT	NET RESIDUES RIGHT
267WL	JAMES P. JEFFERY & JENNIE LEE JEFFERY	7206	7206	—	—
268WL	ODA W. GOUGH & LEAH GOUGH	7207	7207	—	—
269WL	HAZEL M. BURDICK	7314	7314	—	—
271WL	BENNIE HARMON & GLADIES HARMON	8207	8207	—	—
272WL	MAMIE HARTER	7208	7208	—	—
273WL	CALVIN HARTER	7208	7208	—	—
274WL	LEHR M. DAVIS MARY P. DAVIS	7208	7208	—	—
275WL 275S	RICHARD IRVIN WILLIAMS HELEN ROSALIE WILLIAMS	6005	1700 1130	4305	—

PRELIMINARY SUBMITTAL DATE:
RIGHT-OF-WAY COMPLETION DATE:

Nº	REVISIONS	MADE BY	DATE
1	CHANGED LOCATION PROP. 8" SAN. SEWER FROM MELVIN AVE. TO ASHLAND AVE.	C.D.B.	8-13-68
2	ADJUSTED EXIST. HOUSE, TOPO & DIMENSION TO L/A PARCEL Nº 277.	C.D.B.	8-13-68
3	ADDED DIMENSION COR. HOUSE TO L/A PARCEL Nº 263. ADDED P.C.L. Nº 263PR TO TAB	C.D.B.	8-13-68
4	ADDED TO PARCEL TABLE PARCEL Nº 264WA	C.D.B.	8-13-68
5	ADDED BRG. L/A @ PAR. 262	J.M.	8-13-68

Revised Name Pcl 264. Lee 1-27-69

STA. 274+50 TO STA. 280+00

AUG 27 1968
LOGGED

K & E - AKRON

SUMMIT COUNTY, CITY OF CUYAHOGA FALLS
ORIG. STOW TOWNSHIP, O.L.12, T-3N, R-10W

FED. RD.	STATE	PROJECT	
2	OHIO	U19 (12)	

439/460

SUM-8-17.63

RIGHT OF WAY SHEET 35/56

⑦ SUBSTITUTE CURVE DATA FOR RIGHT-OF-WAY

Δ = 12°30'00" LT
Dc = 3°44'52"
R = 1528.79
Lc = 333.53'
T = 167.43'
P.I.#1 STA. 274+66.70
P.I.#2 STA. 278+79.75

CONSTRUCTION CENTERLINE SURVEY CURVE DATA

Δ = 28°59'23" LT
Dc = 5°00'00"
Ls = 500.00'
R = 1145.92'
Qs = 12°30'00"
Ts = 548.19'
Es = 47.05'
Lc = 79.79'
L.T. = 334.17'
S.T. = 167.43'
Δc = 3°59'23"
Tc = 39.91'
Ec = 0.69'
P.I. STA. 276+80.72

℄ CURVE #2
Δ = 11°01'18" RT.
Dc = 10°
R = 572.96'
T = 55.28'
Lc = 110.22'
E = 2.66'

℄ CURVE #3
Δ = 21°57'21" LT.
R = 87.64'
T = 17'
Lc = 33.58'
E = 1.63'

℄ CURVE #4
Δ = 90° LT.
R = 38'
T = 38'
Lc = 59.69'

ASHLAND-RUDOLPH CONNECTOR
RW CURVE DATA ⑤
R = 585.46'
Ch = 24.72'
N 19°02'46" E
Lc = 24.72'

RW CURVE DATA ⑥
R = 585.46'
Ch = 83.00'
N 13°46'20" E
Lc = 83.07'

RW CURVE DATA ⑦
R = 585.46'
Ch = 4.84'
N 9°28'15" E
Lc = 4.84'

RW CURVE DATA ⑧
R = 557.96'
Ch = 80.24'
N 13°21'28" E
Lc = 80.31'

RW CURVE DATA ⑨
R = 557.96'
Ch = 20.55'
N 18°32'11" E
Lc = 20.55

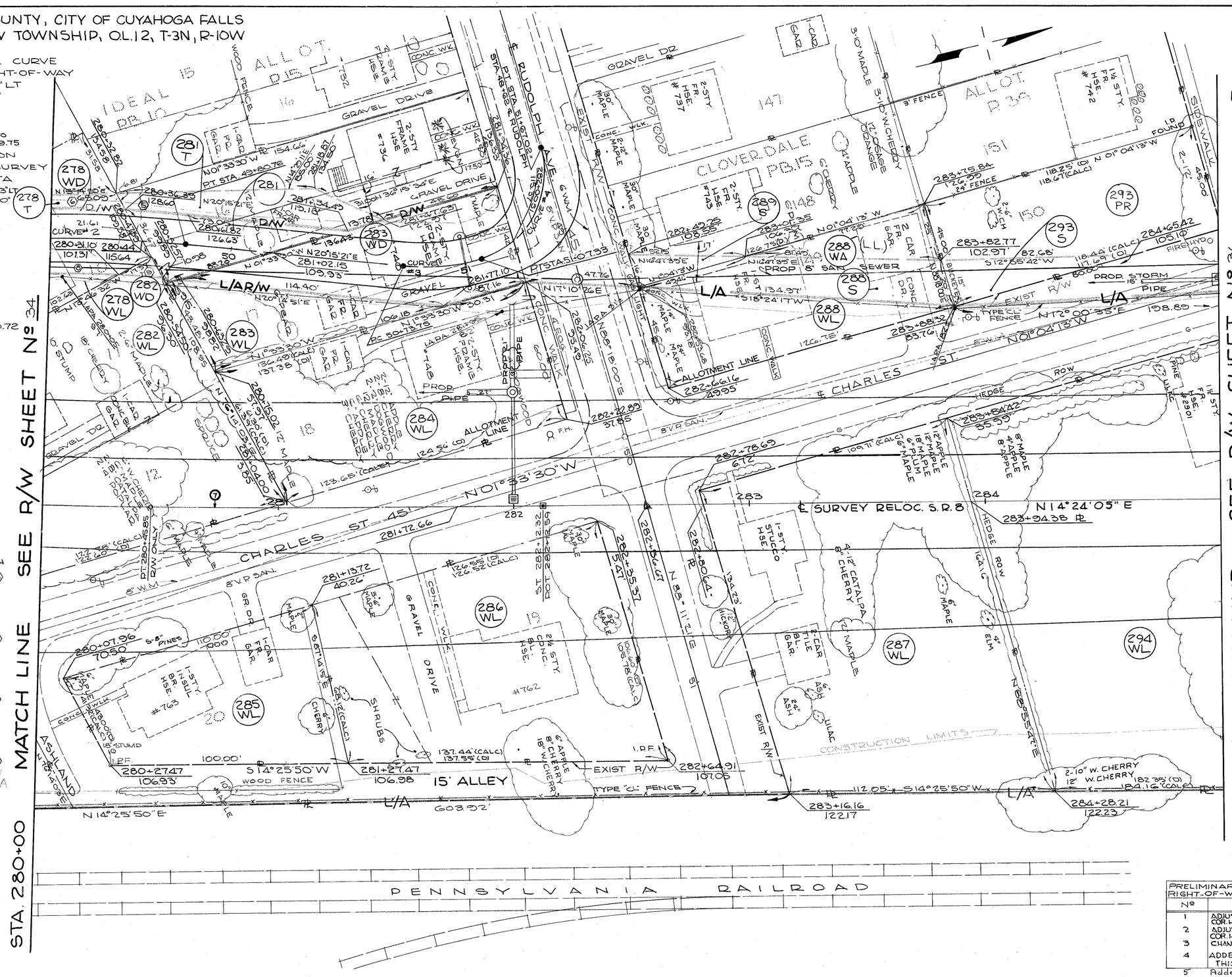

PARCEL Nº	OWNER	DEED AREA CORR.	TOTAL P.R.O.	TO BE ACQUIRED: TOTAL TAKE	TO BE ACQUIRED: P.R.O. IN TAKE	TO BE ACQUIRED: NET TAKE	NET RESIDUES: LEFT	NET RESIDUES: RIGHT
278WL	MABEL M. BROLLIER	7200		2733		2733		
278WD	JOSEPH A. REED & TOLA B. REED	6380		3136		3136	1331	
281 T	STERLING S. MACHAMER & LAURA I. MACHAMER	12,833		1512		1512	4868	
282WL	ROGER WILSON FRANTZ & CATHERINE A. FRANTZ	5994		1039		1039		
282WD	HARRIET GRAFMILLER	7804		12739		12739		
283WL	CHARLES H. SAMPSON & GEORGE R. SAMPSON JR.	5558		94		94		
283WD	HELEN M. SHOAF	11,278		2451		2451		
284WL	DOLLIE L. BITTNER FKA DOLLIE LOUISE GIPSON	16,227		3543		3543		
285WL	BEATRICE A. ENSWORTH	5704		7804		7804		
286WL	CORA A. CUNNINGHAM	5704		5558		5558		
287WL	GERTRUDE J. GEBHART FNA GERTRUDE J. ELLSWORTH	5340		11,278		11,278		
288WL	CELINA E. KIMES	33,762		16,227		16,227		
288S	SEE ABOVE PARCEL 278			2852		2852	2852(L)	
289S				2281		2281		
293S				396		396	5704	
293S				800		800	5340	
294WL				33,762		33,762		
278T				432		432		

0 20 40 60 80

PRELIMINARY SUBMITTAL DATE:
RIGHT-OF-WAY COMPLETION DATE:

Nº	REVISIONS	MADE BY	DATE
1	ADJUSTED TOPO EXIST. HOUSE & ADDED DIMENS. COR. HOUSE TO L/A PARCEL Nº 281.	C.D.B.	8-13-68
2	ADJUSTED TOPO EXIST. HOUSE & ADDED DIMENS. COR. HOUSE TO L/A PARCEL Nº 285.	C.D.B.	8-13-68
3	CHANGED AREAS - TABLE Nº 287.	C.D.B.	8-13-68
4	ADDED WEST LOT LINES TO LOTS 16 & 17 - THIS SHEET.	J.R.T.	12-18-68
5	Added 293-PR	J.R.T.	8-14-69

Changed Pcl. 281WD to a Standard Highway Easement. White 10-16-69

STA. 280+00 TO STA. 285+00

K & E - AKRON

SUMMIT COUNTY, CITY OF CUYAHOGA FALLS

ORIG. STOW TOWNSHIP, QL 12, QL 22, T3N, R10W

FED. RD.	STATE	PROJECT	
2	OHIO	U19(12)	

440/460

SUM-8-17.63

RIGHT OF WAY SHEET 36/56

SEE R/W SHEET Nº 35

SEE R/W SHEET Nº 37

STA. 285+00 MATCH LINE

STA. 290+50 MATCH LINE

NUTWOOD CONNECTOR CURVE DATA
R = 60.00'
Δ = 90°39'59"
Lt = 93.55
T = 60.10

PARCEL Nº	OWNER	DEED AREA COND.	TOTAL DED.	TO BE ACQUIRED TOTAL TAKE	NET	NET RESIDUES LEFT	RIGHT
294WL	CELINA E. KIMES	33,762	—	33,762	—	—	—
295WL	OHIO EDISON COMPANY	6,530	—	6,530	6,530	—	—
295WD		EST.	—	308	308	EST.	—
296WL	ROY HOLLAND	15,634	—	15,634	15,634	—	—
297 WL	MARY VINCZELLAR	29,189	—	29,770	29,770	4419	—
297WA	RANDALL A. WEITZEL + IRENE S. WEITZEL	4,350	—	2,741	2,741	1809	—
298WA	JASON F. BUDLEY + JEANNETTE J. BUDLEY	4,350	—	4,350	4,350	—	—
299WL	CHARLES F. BUDLEY + ANNA M. CZARKOWSKI	5,000	—	478	478	—	—
300 PR		EST.	—	12,126	12,126	—	—
300 S	BILLIE RUTH CZARKOWSKI	12,126	—	12,126	12,126	—	—
301WL	VILA M. MOORE	8,331	—	8,331	8,331	—	—
302WL	THE CITY OF CUYAHOGA FALLS	10,000	—	10,000	10,000	—	—
303WL	ALPHA BENNETT	10,000	—	10,000	10,000	—	—
304WL	MARGARET F. KOCHAN	15,000	—	11,250	11,250	3750	—
304S			—	1,546	1,546	—	—
304WA			—				
305WL	JOHN D. PENDLAND	5000	—	5000	5000	—	—

Nº	REVISIONS	MADE BY	DATE
1	ADDED STATION & OFFSET COR. PCL 295.	C.D.B.	8-13-68
2	ADDED DIMENSION COR. HSE. TO L/A PCL 300.	C.D.B.	8-13-68
3	CHANGED AREAS-TABLE-PCL 295.	C.D.B.	8-13-68
4	ADDED TO TABLE PCL. Nºs 297WA, 298WA & 304WA.	C.D.B.	8-13-68
5.	Relocated guard rail, Added turnaround, and revised L/A Line between the North and South R/W Lines of Acro Ave.	white	8-8-69

PRELIMINARY SUBMITTAL DATE:
RIGHT-OF-WAY COMPLETION DATE:

Changed west ℄ and corrected deed area Pcl. 300-S. White 8-8-69.
Added 300PR 8-18-69 M.K.M.

STA. 285+00 to STA. 290+50

CITY OF CUYAHOGA FALLS — VILLAGE OF SILVER LAKE

K & E - AKRON

31

SUMMIT COUNTY, CITY OF CUYAHOGA FALLS
ORIG. STOW TOWNSHIP, OL. 22, T-3N, R-10W

FED. RD.	STATE	PROJECT	
2	OHIO	U19 (12)	

441/460

SUM-8-17.63

RIGHT OF WAY SHEET 37/56

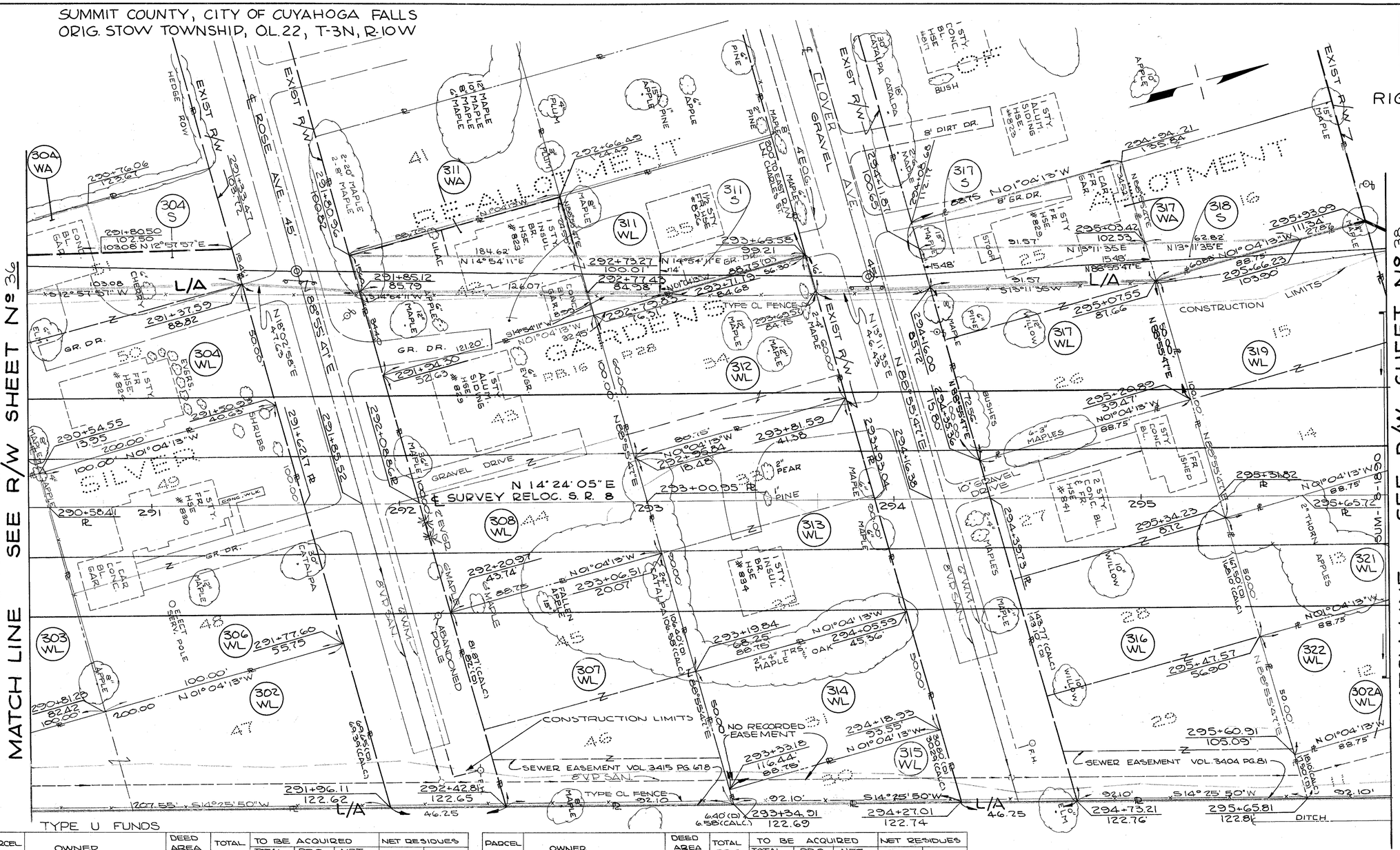

TYPE U FUNDS

PARCEL Nº	OWNER	DEED AREA CORR.	TOTAL R.O.W.	TO BE ACQUIRED TOTAL TAKE	TO BE ACQUIRED R.O.W. IN TAKE	TO BE ACQUIRED NET TAKE	NET RESIDUES LEFT	NET RESIDUES RIGHT
302WL	THE CITY OF CUYAHOGA FALLS, OHIO	8,331	———	8,331	———	8331	———	———
304WL	MARGARET F. KOCHAN	15,000	———	11,250	———	11,250	3750	———
304S			———	1,546	———	1,546		
304WA								
306WL	JAMES R. SMITH & SHIRLEY MAE SMITH	10,000	———	10,000	———	10,000	———	———
307WL	JAMES E. BOWEN	8,362	———	8,362	———	8362	———	———
308WL	BETTY E. HALTER	8,875	———	8,875	———	8,875	———	———
311WA	DAVID W. KAUFMAN	8,876	———	2,072	———	2072	6804	———
311WL			———	2,331	———	2,331		———
311S			———	2,331	———	2,331		———
312WL	GEORGE LUCAS & MICHAEL M. SIMMS	5,325	———	5,325	———	5,325	———	———

PARCEL Nº	OWNER	DEED AREA CORR.	TOTAL R.O.W.	TO BE ACQUIRED TOTAL TAKE	TO BE ACQUIRED R.O.W. IN TAKE	TO BE ACQUIRED NET TAKE	NET RESIDUES LEFT	NET RESIDUES RIGHT
313WL	ARTHUR R. MOORE, JR.	7,988	———	7,988	———	7,988	———	———
314WL	ABNER D. ZOOK	4,438	———	4,438	———	4,438	———	———
315WL	RUTH ROGERS WILSON FKA RUTH HARRIET ROGERS	1,680	———	1,680	———	1,680	———	———
316WL	SADIE ELIZABETH COLVIN	13,833	———	13,833	———	13,833	———	———
317WL	CLARENCE A. ILG aka. CLARENCE ALEXANDER ILG	8,875	———	5439	———	5439	3,436	———
317S			———	1,374	———	1,374		———
317WA								
318S	HERMAN S. CHURCH & LEONA J. CHURCH	8875	———	471	———	471	8875	———
319WL	DOROTHY E. WHITACRE	8,875	———	8,875	———	8,875	———	———
321WL	ZELLA GILES	4,438	———	4,438	———	4,438	———	———
322WL	DOROTHY E. ANDERSON	4,438	———	4,438	———	4,438	———	———
302AWL	THE CITY OF CUYAHOGA FALLS, OHIO	2,686	———	2,686	———	2,686	———	———
303WL	ALPHA BENNETT	10,000	———	10,000	———	10,000	———	———

0 20 40 60 80

PRELIMINARY SUBMITTAL DATE: RIGHT-OF-WAY COMPLETION DATE:			
Nº	REVISIONS	MADE BY	DATE
1	ADJUSTED TOPO, HOUSE & CHANGED DIMENSION HOUSE TO L/A PCL 311	C.D.B.	8-13-68
2	ADDED TO TABLE PCL NOS 304WA, 303WA, 317WA & 303WL	C.D.B.	8-13-68
3.	Combined Pcl 309 with Pcl 311. Pcls. Now include 311 WL, 311 WA 311-S. New owner acquired Pcl 309.	E.W.	12-3-68

Removed Fr. Shed and 1½ Sty Fr Hse. from Pcl 312 WL. EW 4-17-69
Revised Name Pcl. 317. Lee 1-13-69

STA. 290+50 to STA. 296+00

K & E - AKRON

32

SUMMIT COUNTY, CITY OF CUYAHOGA FALLS
ORIG. STOW TOWNSHIP, O.L.22, T-3N, R-10W

SILVER GARDENS RE-ALLOT

PB-16 PG 28

FED. RD.	STATE	PROJECT	
2	OHIO	U19(12)	

442 / 460

SUM.-8-17.63

RIGHT OF WAY SHEET 38 / 56

MATCH LINE SEE R/W SHEET Nº 37

MATCH LINE SEE R/W SHEET Nº 39

STA. 296+00

STA. 301+50

CHANGED PCL 328 WL TO 328 LA & REVISED NAME 3-24-71

EXIST R/W N 40°22'A2"E 6006

289.20 TO EAST R/W LN CHARLES ST.

GARDEN AVE. GRAVEL

ALLOTMENT LINE

LEHIGH AVE

SAUNDERS ST. NOT CONSTRUCTED

OAKLAWN ESTATES PB-64 PGS. 22 & 23

N14°24'05"E 146.04'

T.B.A. 39,670 S.F.

329 U

N42°35'55"W 17.34'

NOTE: 329AWL AREA IN OAKLAWN ESTATES

296+47.07 85'

296+87.54 85'

297+83.22 111.68'

298+54.59 85'

301+50 85'

327 WL

326 WA LANDLORDED

6" MAPLES

TO BE ABANDONED

10' GR. DR.

F.R. SHED

S 14°24'05" W 333.40'

296+43.95 74.59'

326 WL

1 STY. ALUM. SIDING HSE. #8415

4" MAPLE

2 CAR. FR. GAR.

N88°55'47"E 5.44'

298+56.04 79.76'

L/A

TYPE CL FENCE 6-10" ELM

CONSTRUCTION LIMITS

S 14°24'05" W 295.41

N 01°04'13" W 200.00'

7- 12" TO 18" ELM

7-12" ELM

5-18" TO 20" OAK

5-30" OAK

30-8" TO 12" ELM

329 AWL

24

25

26

27

7

8

9

325 WL

2-10" ELM

4-24" ELM

34" ELM

60.00'

100.00'

113.04'

319 WL

296+19.76 14.06'

N01°04'13"W 100.00'

6" APPLE

296+63.29 26.41'

20" ELM

1 CAR FR. GAR.

297

298

298+78.12

299

300

301

N 14°24'05" E

SURVEY RELOC S.R. 8

3-24" ELM

103.25'

56.62'

N01°04'13"W 487.79'

ALLOTMENT LINE

45' C.M.P.

321 WL

296+23.90 EXIST R/W #8

N01°04'13"W 89.75'

296+33.10 33.23'

296+47.25 14.15'

296+70.60 23.35'

N88°55'47"E 100.00'

15" V.P. SAN.

SUM-8-18.00

6" BEECH

8' GR. DR.

36" OAK.

3-12" BEECH

59.83'

298+80.74 23.54'

298+82.72 16.62'

N.D. FND.

OUT IN USE 2"

322 WL

296+46.44 81.42'

N01°04'13"W 89.75'

8" V.P. SAN.

4" APPLE

4-6" APPLE

200.00' N01°04'13"W

296+89.96 69.97'

10" THORN APPLE

USGS MON. PK. W-351

324 WL

4"-6" ELMS

N88°55'47"E 110.37' (CALC.)

349+05.98 13.00' Rt. ℄ R.R.

299+01.08 82.98' Rt. SR8 85.84'(D)

299+87.08 83.03' Rt. SR8

8599' (CALC.) N14°25'50"E WIDTH UNSPECIFIED

348+20.00 75.00' Rt. ℄ R.R.

20" H.P. E.O.G. PIPE LINE EASEMENT (VOL. 450 PG. 505) (WIDTH UNSPECIFIED)

CLEARING

PROP 15" PIPE

15- 10" TO 12" ELM

3-15" ELM

328 LA

12" DEAD ELM

ALLOTMENT LINE WIDTH UNSPECIFIED

3'x3' CONC. BASE 7'x7' CONC. BASE

S25°34'10"E 400.00'

299+12.16 122.35' Rt. SR8

299+87.06 123.03' Rt. SR8

302A WL

297+04.61 122.88'

S14°25'50"W 92.10'

296+57.91 122.86'

L/A

207.55'

S14°25'50"W

TYPE CL FENCE

12" DEAD ELM 74.90'

S14°25'50"W

478.60'

46.25'

NO CULVERT

DITCH

2-3" OAKS

2-3" OAKS

348+94.90 33.00' Rt. ℄ R.R.

348+20.00 33.00' Rt. ℄ R.R.

REFERENCE

V.B. OHIO 7

33.00'

PIPE LINE OF VENT

S14°25'50"W

352+00 351+00 350+00 349+00 348+00 347+00

THE CONSOLIDATED RAIL CORPORATION

0 20 40 60 80

PARCEL Nº	OWNER	TO BE ACQUIRED TOTAL TAKE	TO BE ACQUIRED PROX. IN TAKE	NET RESIDUES LEFT	NET RESIDUES RIGHT
	DEED AREA CORR.	8875			
	TOTAL P.R.O.	8875			
319WL	DOROTHY E. WHITACRE	8875			
321 WL	ZELLA GILES	4435			
322WL	DOROTHY E. ANDERSON	4438			
302AWL	THE CITY OF CUYAHOGA FALLS, OHIO GAS COMPANY (AN OHIO CORPORATION)	2686			
324WL	THE CONSOLIDATED RAIL CORPORATION	16527			
325WL	NORA I. HALBLAUB, DECEASED	20000			
326WL	ROBERT L. FREEMAN & MELBA F. FREEMAN	10000	6413	3587(L)	
327WL	ROBERT J. WINFIELD	10000	211	9789	
328LA	The Consolidated Rail Corporation	3218	3218		181,616
329WL	CHARLES WILLIAM DOCTOR	357452	175,836		176,280
323AWL	MARY DOCTOR - Holder of Life Estate	200578	23,384		

NOTE: TYPE U FUNDS

PRELIMINARY SUBMITTAL DATE: RIGHT-OF-WAY COMPLETION DATE:			
Nº	REVISIONS	MADE BY	DATE
1	ADDED DIMENSION CORNER OF EXIST. SHED TO L/A PCL 326	C.D.B.	8-13-68
2	ADDED TO TABLE PCL 325A WL	C.D.B.	8-14-68
3	ADDED "OAKLAWN ESTATES"	J.M.	8-14-68
4	ADDED BRG. - DIM. 328	J.M.	8-14-68
5	Revised Name Pcl #329	R.A.S.	9-16-69
6.	Revised Name Pcl 327.	white	11-4-69

REVISED NAME PCL. 328-LA
ADDED STATIONS & OFFSETS FROM R.R.℄ - PCL. 328-LA
5-9-77

ADDED PARCEL 329 U L.S. 10-15-70

STA. 296+00 TO STA. 301+50

K & E - AKRON

SUMMIT COUNTY, CITY OF CUYAHOGA FALLS
ORIG. STOW TOWNSHIP, O.L. 22, O.L. 23, T.3N, R.10W

FED. RD.	STATE	PROJECT	
2	OHIO	U19 (12)	

443/460

SUM - 8 - 17.63

RIGHT OF WAY SHEET 39/56

CONSTRUCTION CENTERLINE SURVEY CURVE DATA (8)

Δ = 59°33'25" LT.
Dc = 3° 00'00"
Ls = 350.00
R = 1909.86'
Θs = 5° 15'00"
Ts = 1269.31'
Es = 293.64'
Lc = 1635.23'
L.T. = 233.44'
S.T. = 116.76'
Δc = 49°03'25"
Tc = 871.52'
Ec = 189.45'
P.I. STA. 316+71.72

SUBSTITUTE CURVE DATA FOR RIGHT OF WAY

Δ = 5°15'00" LT.
Dc = 2°14'59"
R = 2546.73'
T = 233.36'
Lc = 116.76'
P.I. #1 STA. 306+35.83
P.I. #2 STA. 325+04.40

OAKLAWN ESTATES PB. 64 PGS. 22 & 23

N11°32'20"E 197.36'
N12°42'26"E 170.34'
N09°04'05"E 98.51'
N89°00'43"E 607'
3-12" To 15" BEECH
4-15" ELMS
3-10" BEECH
PIPE LINE
T.B.A. 39,670 S.F.
ALLOTMENT LINE
329 U
29
30
31
32
3-15" OAKS
301+50 85'
303+06.62 62.85
303+50 95'
305+19.09 100
307+00 110'
S 11°32'20"W 156.82'
S 11°32'20"W 10-12" MAPLES
43.43 15-12" ELMS
L/A
12" OAK
169.12
S12°42'26"E
S 9°04'05"W 173.70'
3-15" MAPLES
4-12" OAKS
2-12" BEECH
18" BEECH
IAPA. 108'
6'-24" POPLAR
TYPE CL FENCE
12 - 18" To 20" POPLAR.
CONSTRUCTION LIMITS
CLEARING (WIDTH UNSPECIFIED)
329 AWL
329 WL
N01°04'13"E 431.74'
EASEMENT
20" HP E.O.G. PIPE LINE
24" MAPLE
12" OAK
302
303
304
305
306
N14°24'05"E
℄ SURVEY
RELOC. S.R. 8
SUM 8 1907
T.S. STA. 304+02.41
P.C. STA. 305+19.09 FOR R/W
5-10" To 12" POPLAR
10 - 12" ELMS
303 (CALC) 304 (D) N00°59'58"W 503.34'
I.P. FND.
306+64.80 15.80
36" ELM
S 8°10'40" W 408.10'
S89°00'43"W
331 WL
24" POPLAR
O.L. 22
O.L. 23
2-10" BEECH
7-10" To 12" ELMS
24" ELM
9-12" ELMS
3-10" OAKS
2" ELM
24" ELM
12" POPLAR
3-12" ELMS
304+65.65 123.27'
305+93.43 122.21'
306+86.50 121.86
3-10" BEECH
3-10" OAKS
478.60'
S14°25'50"W
CH=131.35 N 13°26'36"E, Lc=131.36
R=3811.80
6"-10" ELMS
CH=97.52' N11°28'53"E, Lc=97.53'
R=2851.03'
THE CONSOLIDATED RAIL CORPORATION

STA. 301+50 SEE R/W SHEET № 38

MATCH LINE SEE R/W SHEET № 40 STA. 307+00

TYPE U FUNDS	PARCEL №	OWNER	DEED AREA CORR.	TOTAL TO BE ACQUIRED TOTAL P.R.O. TAKE	TOTAL TO BE ACQUIRED NET P.R.O. TAKE	NET RESIDUES LEFT	NET RESIDUES RIGHT	
	329WL	Charles William Doctor, Owner	351,452	175,836	175,836	——	181,616	54,074(A)
	329AWL	Mary Doctor, holder of life estate	200,573	——	23,584	176,989	——	
	331WL	W. RICHARD CURRY	214,061		159,987			159,987

№	REVISIONS	MADE BY	DATE
1	ADDED STATION & OFFSET @ LOT 30 PCL 329.	C.D.B.	8-14-68
2	ADDED TO TABLE PCL 329A WL.	C.D.B.	8-14-68
3	Revised Name PCL. # 329. Added Parcel 329 U. Revised Name R.R.	R.B.S. L.S.	9-16-69 10-15-70 5-24-71

PRELIMINARY SUBMITTAL DATE:
RIGHT-OF-WAY COMPLETION DATE:

0 20 40 60 80

STA. 301+50 to STA. 307+00

FRANK E. SCHORR & ASSOC. SHEET
AUG 27 1968
LOGGED
SURVEY PARTY CHIEF

K & E - AKRON

37

SUMMIT COUNTY, CITY OF CUYAHOGA FALLS
ORIG. STOW TOWNSHIP, O.L.22, O.L.23, T-3N, R-10W

FED. RD.	STATE	PROJECT	
2	OHIO	U19 (12)	

444 / 460

SUM-8-17.63

RIGHT OF WAY SHEET 40 / 56

CONSTRUCTION CENTERLINE SURVEY CURVE DATA (8)

Δ = 59°33'25" LT.
Dc = 3° 00' 00"
Ls = 350.00'
R = 1909.86'
Θs = 5° 15' 00"
Ts = 1269.31'
Es = 293.64'
Lc = 1635.23'
L.T. = 233.44'
S.T. = 116.76'
Δc = 49°03'25"
Tc = 871.52'
Ec = 189.45'
P.I. STA. 316+71.72

SUBSTITUTE CURVE DATE FOR RIGHT OF WAY

Δ = 5°15'00" L.T.
Dc = 2° 14' 59"
R = 2546.73'
T = 233.36'
Lc = 116.76'
P.I. #1 STA. 306+35.83
P.I. #2 STA. 325+04.40

PARCEL Nº	OWNER	DEED AREA CORR.	TOTAL PRO.	TO BE ACQUIRED TOTAL TAKE	TO BE ACQUIRED PRO. IN TAKE	TO BE ACQUIRED NET TAKE	NET RESIDUES LEFT	NET RESIDUES RIGHT
	THE CONSOLIDATED RAIL	—	—	5245	—	5245	—	—
328 S	CHARLES WILLIAM DOCTOR	357,452	—	175,834	—	175,834	—	181,618
325 WL	MARY DOCTOR-Widow of Will Contract	250,575	—	25,884	—	25,884	176,969	54,691 (L.)
331 WL	W. RICHARD CURRY	214,061	—	159,087	—	159,087	—	—
332 WL	AMERICA FIRE BRICK	18,190	—	18,190	—	18,150	—	—
	TYPE U FUNDS							

SEE R/W SHEET Nº 39

MATCH LINE STA. 307+00

SEE R/W SHEET Nº 41

MATCH LINE STA. 312+00

E.O.G. 20" H.P. GAS PIPE LINE (WIDTH UNSPECIFIED)

3-8" W. CHERRY

METAL SHED

SCATTERED 3" W. CHERRY & 3" POPLAR

KEENAN PARK NO. 2 PB. 66 P. 17

EXIST. R/W HOLLYWOOD CR.

CONC. WALK

BLACKTOP DRIVE

#842

1½ STY. SIDE BRK. & ALU. 2-FAMILY HSE.

#844

PATIO

PATIO

CONC. WALK

25' STREET DESIGNATION

591.50' ℄ INTER. OF HOLLYWOOD AND CHARLES ST.

25' STREET DESIGNATION

25 25

307+00 110'

142.94' S 6° 26' 02" E

308+50 132'

309+59.82 123.39'

102.82' N 9° 22' 38" E

L/A

IAPA 10.8'

IAPA 13.0'

24" ELM

IAPA 12.1'

3-12" DEAD ELM

MON END

TYPE CL FENCE

200.33 ALLOTMENT LINE

S 2° 20' 36" W

311+73.32 114.24'

202.97 S 9° 09' 41" E

IAPA 11.2'

CONSTRUCTION LIMITS

S 8° 03' 09" W 96.50'

PROP 18" Ø CMP PIPE

S 8° 03' 09" W

329 WL

332 WL

331 WL

BRUSH

30" ELM

309+66.44 27.10'

O.L. 22 200.00' O.L. 23 N 00° 56' 51" W

311+69.52 29.32'

307+44.53 LOT LINE & ℄

304'(D) 30334' (CALC) N 00° 56' 51" W 503.34'

308 ℄ SURVEY 309 RELOC. S.R. 8 310 311

24" ELM

S.C. STA. 307+52.41
P.C.C. STA. 307+52.45 FOR R/W

6-12" POPLAR

PROP. 15" PIPE

331 WL

8-10" POPLAR

10-8" TO 10" POPLAR

CONSTRUCTION LIMITS

CH. 492.42' N 5° 32' 31" E Lc 493.06'

R = 2851.03'

5-10" OAK

6-12' ELM

2-10" POPLAR

TYPE CL FENCE

BRUSH

L/A

STREAM CROSSING TYPE 2

311+50 134.09 Rt SR8

335+94.67 33.00' Rt & RR.

311+12.66 132.16 Rt SR8

336+34.66 33.00' Rt & RR.

337+00

336+00

53.00'

54.13'

THE CONSOLIDATED RAIL CORPORATION

SEE DETAIL OF PARCEL 328-S THIS SHEET

328 S

DETAIL OF PARCEL 328-S

STREAM CROSSING CONSTRUCTION TYPE 2

CRA 132.4'

63.07' N 36° 14' 28" W

LIMITS

L/A

336+34.66 33.00' Rt & RR.

311+12.66 132.16 Rt SR8

C11 N 05° 35' 31" E 39.99 ARC 39.99 R 2851.03

311+50 134.09 Rt SR8

335+94.67 33.00' Rt & RR.

S 78° 29' 44" W 63.23'

PROP 36" PIPE

335+78.73 33.00 Lt. & RR.

EXIST. R/W

24"

PIPE REFERENCE

V8 OHIO 6

328 S

N 85° 22' 49" W 65.00'

S 85° 22' 49" E 65.00'

336+18.73 33.00 Lt & RR

311+25.96 136.96 Rt SR8

S 0° 37' 36" W 40.00'

336+19.44 98.24' Lt. & RR.

311+22.69 263.89' Rt. SR8

EXIST. R/W

336+79.44 98.68' Lt & RR

311+57.77 266.06' Rt. SR8

311+25.96 136.96 Rt SR8

336+18.73 33.00 Lt & RR

IAPA 9.8'

312+00 100'

CRA 132.4'

63.07' N 36° 14' 28" W

(L.L.)

STREAM CROSSING TYPE 2

311+50 134.09 Rt SR8

335+94.67 33.00' Rt & RR.

311+12.66 132.16 Rt SR8

336+34.66 33.00 Rt & RR.

336+00

54.13'

328 S

STA. 307+00 to STA. 312+00

② R = 2885.02'
Arc L = 131.84'
Chd L = 131.82'
Chd Brg. = S 03° 07' 03" E

REVISED NAME & ADDED STATIONS & OFFSETS FROM I.R & RCC 328-S 5-9-77

0 20 40 60 80

PRELIMINARY SUBMITTAL DATE :
RIGHT-OF-WAY COMPLETION DATE:

Nº	REVISIONS	MADE BY	DATE
1	ADDED TO TABLE PCL. 325AWL.	C.O.B.	8-14-68
2.	ADDED 331 WL CALLOUT	E.N.	8-16-68
3.	STREAM CROSSING ADDED TYPE 2	D.D.A.	10-16-68
4.	Revised Name Pcl. # 329	R.R.S.	9-16-69
5.	REVISED NAME PCL. 328-T		3-24-71
6.	CHANGED PCL 328-T TO A SEWER EASEMENT		5-12-71

DRAWN: Ralph Rhine
R/W ENGR. R. ADAMS SEDT.
AUG 27 1968
LOCATED
ENGR.

K & E - AKRON

35

SUMMIT COUNTY, CITY OF CUYAHOGA FALLS
ORIG. STOW TOWNSHIP, OL.22, OL23, OL32, OL33, T-3N, R-10W

FED. RD.	STATE	PROJECT	
2	OHIO	U19 (12)	

445/460

SUM - 8 - 17.63

RIGHT OF WAY SHEET 41/56

CONSTRUCTION CENTERLINE SURVEY CURVE DATA
Δ = 59° 33' 25" LT.
Dc = 3° 00'
Ls = 350.00'
R = 1909.86'
Θs = 5° 15' 00"
Ts = 1269.31'
Es = 293.64'
Lc = 1685.23'
LT = 233.44'
ST = 116.76'
Δc = 49° 03' 25"
Tc = 871.52'
Ec = 189.45'
P.I. STA. 316+71.72

SUBSTITUTE CURVE DATA FOR RIGHT OF WAY
Δ = 5°15'00" LT.
Dc = 2° 14' 59"
R = 2546.73'
Lc = 233.36'
T = 116.76'
P.I.#1 STA. 306+35.83
P.I.#2 STA. 325+04.40

BLACK TOP DRIVE
1-STY. #843 BRK. & ALU. 2-FAMILY HSE.
#841
12" POPLAR
KEENAN PARK NO. 2 PB66 P 17
313+53.34 (℄) 150.00'
314+30 150.00'
314+30 122.50'
335 WA
332.37' TO EAST LINE CHARLES ST. R/W
316+50 127.00' 140.08'
315+00 120.00'
202.07' S 3°09'41" E
L/A
ALLOTMENT LINE
MON FND.
104.26' N 10°02'18" W
140.44' N 18°22'52" W
N 25°20'50" W
313+88.69 122.51'
CONSTRUCTION LIMITS
PATH
CDA 118'
CDA 125'
113.87' S 89°03'09" W
N 79°35'10" E
335 WL
FENCE REMOVED POSTS REMAIN
24" W. CHERRY
OL.22 313+08.26 18.09'
OL.32
OL.23
OL.33
MONUMENT TO BE RESET
313+06.20 LOT LINE
313+70.80 10.36
AXLE END
314+33.57 LOT LINE & ℄
RELOC. S.R. 8
SURVEY
314+04.50
BRIDGE NO SUM-8-1527
315
316
400.00' N 00°56'51" W
6" W. CHERRY
24" W. CHERRY
N 88°40'51" E
SEE R/W SHEET Nº 40
MATCH LINE STA. 312+00
SEE R/W SHEET Nº 42
MATCH LINE STA. 317+00
PEDESTRIAN BRIDGE
331 WL
196.21'
LAPA 33'
LAPA 113'
312+00 100'
106.68' N 2°18'20" W
313+00 115'
CONSTRUCTION LIMITS
320.67' N 7°19'08" W
CDA 198'
256.77' N 23°23'13" W
316+00 140.00'
L.L.
CORPORATION LINE
CITY OF CUYAHOGA FALLS
VILLAGE OF SILVER LAKE
BRUSH
BRUSH & 2" W. CHERRY TREES
THE CONSOLIDATED RAIL CORPORATION
3341+54.86 ERR
@ = L = 2885.02'
Dec L: 131.84'
Chd L: 131.82'
Chd Brg: S03°07'03"E
SEE SHT. Nº 41A FOR PEDESTRIAN BRIDGE R/W

0 20 40 60 80

TYPE U FUNDS

PARCEL Nº	OWNER	DEED AREA CORR.	TOTAL PRO.	TOTAL TAKE	PRO. IN TAKE	NET TAKE	NET RESIDUES LEFT	NET RESIDUES RIGHT	
331 WL	W. RICHARD CURRY	2.14 Ac	22,650	153,381	——	150,887	——	5,497.40	
335 WL 335 WA	BOARD OF EDUCATION OF THE CUYAHOGA FALLS CITY SCHOOL DISTRICT	487,685	——	163,381	——	163,381	297,206	3,848(L)	

Nº	REVISIONS	MADE BY	DATE
1	ADDED MONUMENT TO BE RESET @ 313+10 - 17.87' LT. ℄ .	C.D.B.	8-14-68
2	CORR. EXISTING MON. LOCATION @ 313-00.26 - ADDED PEDESTRIAN BRIDGE	CONSU.	4-14-69
3	DELETE PCL. 334-WL & COMBINED AREA WITH PCL. 335-WL PER OUTSALE	LEE	4/28/69
4	REVISED AREAS 335 PER OUTSALE	WHITE	7-19-69

PRELIMINARY SUBMITTAL DATE:
RIGHT-OF-WAY COMPLETION DATE:

STA. 312+00 TO STA. 317+00

STATE HIGHWAY DEPT. OF OHIO
R/W ENGR'S ASSN. SECT.
AUG 27 1968
LOGGED
CHECKED

K & E - AKRON

SUMMIT COUNTY, CITY OF CUYAHOGA FALLS
ORIG. STOW TOWNSHIP, O.L. 22, O.L. 23, O.L. 32, O.L. 33, T-3N, R-10 W

FED. RD.	STATE	PROJECT	
2	OHIO	U19 (12)	

445A / 460

SUM - 8 - 17.63

RIGHT OF WAY SHEET 41A / 56

CONSTRUCTION CENTERLINE SURVEY CURVE DATA
Δ = 59° 33' 25" LT.
D_c = 3° 00'
L_S = 350.00'
R = 1909.86'
Θ = 5° 15' 00"
T_S = 1269.31'
E_S = 293.64'
L_c = 1635.23'
L.T. = 233.44'
S.T. = 116.76'
Δ_c = 49° 03' 25"
T_c = 871.52'
E_c = 189.45'
P.I. STA. 316+71.72

SUBSTITUTE CURVE DATA FOR RIGHT OF WAY
Δ = 5° 15' 00" LT.
D_c = 2° 14' 59"
R = 2546.73'
L_c = 233.36'
T = 116.76'
P.I. #1 STA. 306+35.83
P.I. #2 STA. 325+04.40

CUYAHOGA FALLS BOARD OF EDUCATION

P.C. = 331+41.66

335 WL

335 WA

331 WL

331 AERIAL

331 T

328

328 AERIAL

328-1

330 WD

315 RELOC. S.R. 8

L/A

140.44' N 18° 22' 52" W

315+00 / 100.00'

314+30 / 122.50'

104.26' N 10° 02' 18" W

314+30 / 150.00'

12" POPLAR

532 LINE 34' TO EAST R/W CHARLES ST.

313+93.34 (P) / 150.00'

313+88.65 / 122.51'

S 89° 03' 09" W 113.87'

313+70.80 / 10.36'

AXLE FND

MON FND

N 89° 03' 09" E

KENNAN PARK NO. 2 PB. 33 P. 17

ALLOTMENT LINE

L/A

BRICK & ALUM. 2 FAMILY HSE. #843

#841 BRICK & ALUM. 1 STY 2 FAMILY HSE.

BLACKTOP DRIVE

PATH 2

CONSTRUCTION LIMITS

202.07' S 3° 05' 41" E

O.L. 32

O.L. 22

O.L. 23

O.L. 33

313

313+08.26 / 18.00

MONUMENT TO BE RESET

89° 37' 42"

313+01.89 LOT LINE

156.19'

BRIDGE No. SUM-8-1527

314+33.57 LOT LINE

STA. 314+04.50 ℄ S.R. 8
STA. 50+00.00 ℄ PED. BRIDGE

℄ PEDESTRIAN BRIDGE N 79° 35' 10" E 51.00

45+00

314+23.33 / 119.13'

N 79° 35' 10" E 30.84'

AERIAL EASEMENT LINE

S 79° 35' 10" W 23.10'

N 7° 15' 08" W 40.02'

S 11° 54' ℄ PIER #4

S 11° 54' ℄ PIER #5

52+31 ℄ PIER #5

CH. BRG. S 4° 51' 15" E
CH. = 40.13' ARC = 40.13'
R = 2,845.02'

333+27.66
S1+85.18

52+00

53+00

54.00

55.00

CH. BRG. N 4° 51' 28" W
CH. = 73.26' ARC. = 73.27'
R = 2525.02'

103.47'

R/W S 79° 35' 10" W

313+85.45 / 116.57'

313+86.22 - 146.07' / 333+51.54 - 40.00'

313+86.62 - 236.49 / 333+43.05 - 40.00'

313+65.12 / 224.31'

313+64.24 / 321.77'

25' 25'

P.C.

39.17' (PLAT)

I.P. FND & USED

BLOCK "C" TRUSTEES OF SILVER LAKE ESTATES

SILVER LAKE PB-4 P-4-27

N 88° 40' 31" E

CONSTRUCTION LIMITS

L/A

N 2° 18' 20" W 106.68'

W. RICHARD CURRY

L. L.

CORPORATION LINE

334+54.96

335

33'

W RICHARD CURRY

320.67' N 7° 15' 08" W

L. L.

CORPORATION LINE

BRUSH & 2" W CHERRY TREES

EXIST R/W

314+23.04 - 149.57' / 333+11.18 - 40.00

40' 40'

332

THE CONSOLIDATED RAIL CORPORATION

314+22.35 - 230.28 / 333+04.06 - 40.00'

314+30.30 - 231.15' / 332+98.23 - 40.00'

I.P. FND & USED

SEE SHT. № 41B FOR R.R. R/W

POWER SERVICE LINE

POWER LINES (AERIAL)

330.90'

STR SHED

2 STY. FR. HSE.

H. R. & M. L. MORGAN LOT 309

STATES

EXIST R/W

℄ R/W 50' MILLBORO ROAD

N R/W N 85° 15' 52" E

I.P. FND & USED

314+30.73 / 330.44'

EXIST R/W

CH. BRG. S 7° 35' 54" E
CH. = 63.11' ARC = 63.17'
R = 450.00'

MILLBORO ROAD ℄ CURVE DATA
Δ = 70° 40' 35"
R = 425.00'
T = 301.34'
Lc = 524.25'
CH = 491.64'

0 20 40 60 80

PENNSYLVANIA RAILROAD ℄ CURVE DATA
P.I. STA. 336+73.6
Δ = 21° 07' 23"
D = 1° 59' 12"
R = 2885.02'
T = 537.52'
L = 1,063.6

PARCEL №	OWNER	DEED AREA CORR	TOTAL P.R.O.	TO BE ACQUIRED TOTAL TAKE	PRO. IN TAKE	NET TAKE	NET RESIDUES LEFT	RIGHT
328 AERIAL	THE CONSOLIDATED RAIL CORPORATION	—	—	3,215	—	3,215		
328				154		154		
328-1				47	—	47		
330	TRUSTEES OF SILVER LAKE ESTATES	52,272	—	6,863	—	6,863	—	45,409
331 W/L	W. RICHARD CURRY	214,061	—	159,987	—	159,987	—	54,074(1)
331 AERIAL				1,201	—	1,201		
331-T				1,201	—	1,201		

FORM D D A-8

PRELIMINARY SUBMITTAL DATE : RIGHT-OF-WAY COMPLETION DATE :			
№	REVISIONS	MADE BY	DATE
1	Changed 330-WD to Easement per I.O.C. Eckert 4th. 8-26-69	White	8-28-69
2	Converted back Pcl. 330 to 330WD	J.R.T.	10-31-69
	Revised Name Pcl 328 Series		3-24-71

PEDESTRIAN BRIDGE R/W

State Highway Dept. Div. 4
R/W - ENGR & ADMIN SECT.
APR 11 1973
LOGGED
Crds. BM Bk.

FED. RD.	STATE	PROJECT	
2	OHIO	U19(12)	

445B / 460

SUM - 8 - 17.63

RIGHT OF WAY SHEET 41B / 56

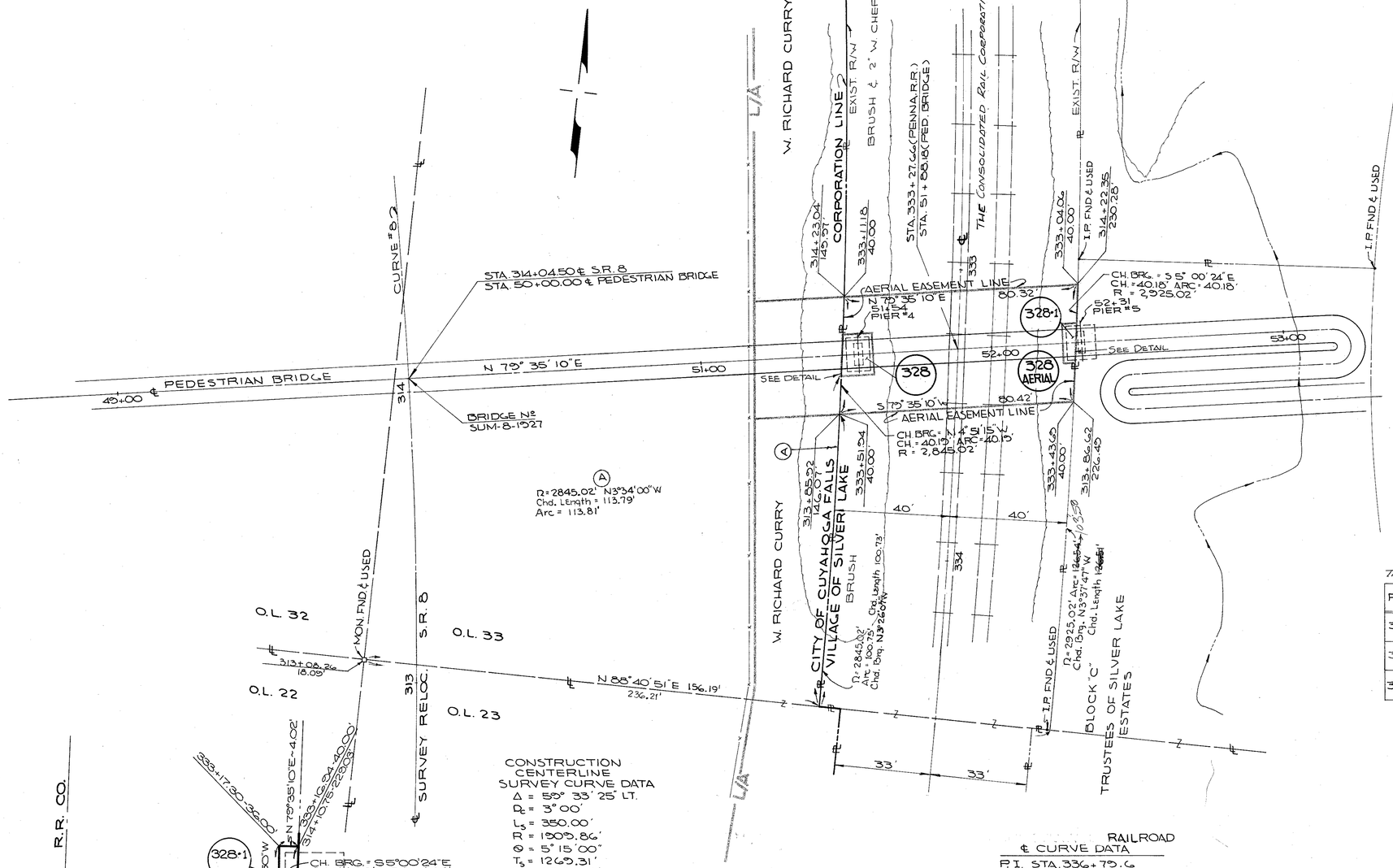

PIER FOOTER PARCELS

CONSTRUCTION CENTERLINE SURVEY CURVE DATA
- Δ = 55° 33' 25" LT.
- D_p = 3° 00'
- L_s = 350.00'
- R = 1909.86'
- Ø = 5° 15' 00"
- T_s = 1269.31'
- E_s = 293.64'
- L_c = 1635.23'
- LT. = 233.44'
- S.T. = 116.76'
- Δ_c = 49° 03' 25"
- T_c = 871.52'
- E_c = 189.45'
- P.I. STA. 316+71.72

SUBSTITUTE CURVE DATA FOR RIGHT OF WAY
- Δ = 5° 15' 00" LT.
- D_p = 2° 14' 55"
- R = 2546.73'
- L_c = 233.36'
- T = 116.76'
- P.I. #1 STA. 306+35.83
- P.I. #2 STA. 325+04.40

RAILROAD ℄ CURVE DATA
- P.I. STA. 336+79.6
- Δ = 21° 07' 23"
- D = 1° 55' 12"
- R = 2,885.02'
- T = 537.92'
- L = 1063.6'

THE CONSOLIDATED RAIL CORPORATION

PARCEL NO.	PURCHASE REQUIRED	AREA-SQ.FT.
328 AERIAL	AERIAL EASEMENT	3,215
328	WARRANTY DEED	154
328-1	WARRANTY DEED	47

RAILROAD VALUATION MAP — V8 OHIO 6

GRAPHIC SCALE
0 20 40 60 80

PRELIMINARY SUBMITTAL DATE : RIGHT-OF-WAY COMPLETION DATE :			
Nº	REVISIONS	MADE BY	DATE
	REVISED NAME PCL 328 SERIES		3-24-71

PENNSYLVANIA RAILROAD RIGHT-OF-WAY PLAT

State Highway Dept. Div. R/W - ENGR & ADMIN SECT.
APR 11 1969
LOGGED
Cnte. Bill Bk.

FORM D D A-9

SUMMIT COUNTY, CITY OF CUYAHOGA FALLS
ORIG. STOW TOWNSHIP, OL.32, T-3N, R-10W

FED. RD.	STATE	PROJECT	
2	OHIO	U19 (12)	

446/460

SUM-8-17.63

RIGHT OF WAY SHEET 42/56

(8) SUBSTITUTE CURVE DATA FOR RIGHT-OF-WAY
Δ = 5°15'00" LT.
Dc = 2°14'59"
R = 2546.73'
Lc = 233.36'
T = 116.76'
P.I.#1 STA. 306+35.83
P.I.#2 STA. 325+04.40

CONSTRUCTION CENTERLINE SURVEY CURVE DATA
Δ = 59°33'25" LT.
Dc = 3°00'00"
Ls = 350.00'
R = 1909.86'
Qs = 5°15'00"
Ts = 1269.31'
Es = 293.64'
Lc = 1635.23'
L.T. = 233.44'
S.T. = 116.76'
Δc = 49°03'25"
Tc = 871.52'
Ec = 189.45'
P.I. STA. 316+71.72

SEE R/W SHEET Nº 41

MATCH LINE STA. 317+00

SEE R/W SHEET Nº 43

MATCH LINE STA. 322+00

STA. 317+00 TO 322+00

318+00 / 140.00
318+43.62 / 1495.18
319+05.47 / 150.51'
319+67.65 / 154.75'
320+32.51 / 156.93'
321+54.98 / 154.68'
140.08' N 23°20'56" W
40.70'
57.34'
57.34'
114.65'
57.34'
67.94'
N 30°14'53" W
N 30°14'53" W
N 30°14'53" W
N 30°14'53" W
N 30°14'53" W
S 49°33'41" E
TYPE CL FENCE
CONSTRUCTION LIMITS
L/A
APA. 153'±
372.24' TO ℄ CHARLES ST.
370.18' TO ℄ CHARLES ST.
338.24' TO ℄ CHARLES ST.
426.20' TO ℄ CHARLES ST.
286.00' TO ℄ CHARLES
HEDGE ROW
20' E.O.G. TDL (WIDTH UNSPECIFIED)
3" PINE
12" APPLE
8" APPLE
6" APPLE
2-18" APPLE
335 WL
FR. SHED
PROP. 30" PIPE
RAMP "E"
8" APPLE
SCATTERED 3"-4" W. CHERRY
2-8" W. CHERRY
30" W. CHERRY
12" W. CHERRY
10" MAPLE
8" APPLE
255.20' S 89°03'09" W
278.22' S 89°03'09" W
304.32' S 89°03'09" W
362.44' S 89°03'09" W
352.01' S 89°03'09" W
375.52' S 89°03'09" W
318
317+83.46
℄ SURVEY RELOC. S.R. 8
318+37.25
319
318+91.67
320
320+02.71
321
320+59.85 PT
321+76.37
10" APPLE
30" W. CHERRY
PROP. 15" PIPE
317+47.47 P.C. STA.
400.00' ℄ N 00°56'51" W
317+51.55 / 88.08'
50.00'
N 00°56'51" W
50.00'
317+99.11 / 105.56'
CONSTRUCTION LIMITS
L/A
256.77' ⊼ 23°23'13" E
(LANDLOCKED)
331 WL
335 WL
339 WL
341 WL
342 WL
343 WL
RAMP "C"
10" W. CHERRY
FR. SHED
SCATTERED 3" W. CHERRY
5' BOARD FENCE
12-3" TO 4" PINES
5'± APART
407.03' S 89°03'09" W
36-4" APPLES
10" DIE
SCATTERED 4 POPLAR 53.31' S 21°14'33" E
53.31' S 21°14'33" E
SCATTERED 3" W. CHERRY
53.31' S 21°14'33" E
L/A
69.30 TYPE CL FENCE S 21°14'33" E
APA. 130'±
100.00' N 00°56'51" W
50.00'
N 00°56'51" W
50.00'
S 89°03'09" W
56.98'
319+32.89 / 146.44'
319+82.10 / 152.35'
320+31.00 / 159.08'
321+27.70 / 176.51'
320+79.55 / 167.12'
321+89.59 / 150.67'
319+39.89 / 124.17'
319+24.95 / 124.84'
APA. 144'±
APA. 127'±
PT. STA. 321+02.61
(LANDLOCKED)
(LANDLOCKED)
(LANDLOCKED)
(L.L.)
339 U
342 U
343 WL
343 U
See Sheet 42-A
See Sheet 42-A
See Sheet 42-A
See Sheet 42-A

NOTE: PCL. 335-EL CONVEYED TO WALLSTROM'S STATE ROAD REALTY COMPANY, AN OHIO CORPORATION. ENTERED IN DIRECTOR'S JOURNAL, VOL. 6, PAGE 72

0 20 40 60 80

TYPE U FUNDS			NET RESIDUES	
PARCEL Nº	OWNER	DEED AREA CORR.	TOTAL TO BE ACQUIRED: TOTAL PRO TAKE	TOTAL TO BE ACQUIRED: PRO IN TAKE	TOTAL TO BE ACQUIRED: NET TAKE	LEFT	RIGHT
335 WL	BOARD OF EDUCATION OF THE CUYAHOGA FALLS CITY SCHOOL DISTRICT		163,981	—	163,981	291,206	
335 EL	BOARD OF EDUCATION OF THE CUYAHOGA FALLS CITY SCHOOL DISTRICT		3,848		3,848		
339 WL	ELIZABETH ANN GRENFELL	33,825	19,464	—	19,464	9,350	3,311 (L)
341 WL	EDWARD E. SAMPSON	33,825	21,345	—	21,345	2,753	4,236 (L)
342 WL	ANNABEL JOSEPH SAMPSON	33,825	30,772	15.00	30,772	5,493	4,236 (L)
342 WD	RICHARD E. HISSEM	43,073	6,362	1950	4,412	—	6885 (L)
	HELEN L. HISSEM						

PRELIMINARY SUBMITTAL DATE:
RIGHT-OF-WAY COMPLETION DATE:

Nº	REVISIONS	MADE BY	DATE
1	ADJUSTED AREAS PCL NOS 335 WL, 342 WL & 342 WD	C.D.D.	6-15-68
2	ADDED PL. PARA. 343 - 343 WL & 343 WL & DELETED PCLS. 335 WL & 335 WL	E.N.	8-16-68
3	CHANGE 335 WL TO 335 WL & ADDED PARCELS 339U, 342U & 343U	J.P.B.	9/18/68
4	DELETED PCLS. 335 WL & 339 WL & COMBINED AREA WITH PCL 335 WL PER OUTSALE. LEE 4/15/69	L.S.	10-14-70

ADDED NOTE OF CONVEYANCE PCL. 335-EL 11-8-77

5 DELETED PCL 334-WL & COMBINED AREA WITH PCL 335 WL PER OUTSALE. LEE 4/29/69

6 REVISED RCEM - 335 WL PER OUTSALE. WL 14 & E.P. 69

2 CURVED LANDLOCKED RIGHT RESIDUE OF 335 WL

Scale: 1 inch = 40 feet
Horiz. Datum: NAD 83 (1986) Adjustment
Vert. Datum: NGVD 29
Grid Factor: 0.99996
Combined Factor: 0.99996
Units: U.S. Survey Feet
Coordinates shown are grid values.
Bearings are based on the Ohio State Plane Coordinate System, North Zone.
Distances are horizontal ground.

Surveyed Under the Supervision of Robert A. Ecker, P.S. 7200
Date of Survey: 1-15-68
Robert A. Ecker
Registered Surveyor
Summit County Engineer's Office
Akron, Ohio
RW. ENGR. & ADMIN. SECT.
AUG 27 1968
LOCKED

K & E - AKRON

FED. RD. DIVISION	STATE	PROJECT	
2	OHIO	U 19-(12)	

446-A / 460

SUM-8-17.63
RIGHT OF WAY SHEET

42-A / 56

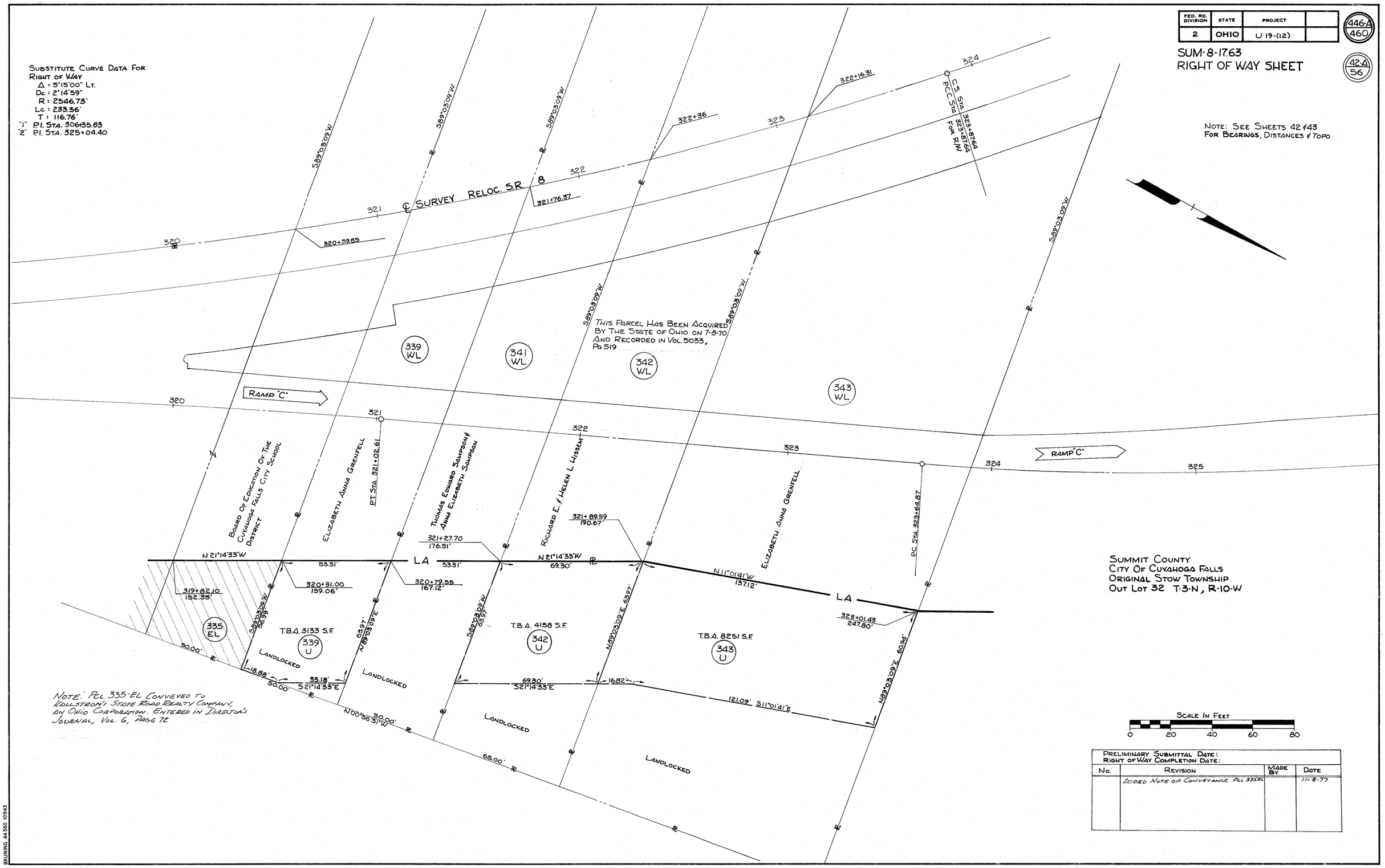

Preliminary Submittal Date: Right of Way Completion Date:			
No.	Revision	Made By	Date
	Added Note of Conveyance Pcl 335EL		11-8-77

BRUNING 44-560 10943

STA. 325+50 — MATCH LINE SEE R/W SHEET Nº 45 & 46

SUMMIT COUNTY, CITY OF CUYAHOGA FALLS
ORIG. STOW TOWNSHIP, O.L.32, T-3N, R-10W

FED. RD.	STATE	PROJECT	
2	OHIO	U19(12)	

447/460

SUM-8-17.63

RIGHT-OF-WAY SHEET 43/56

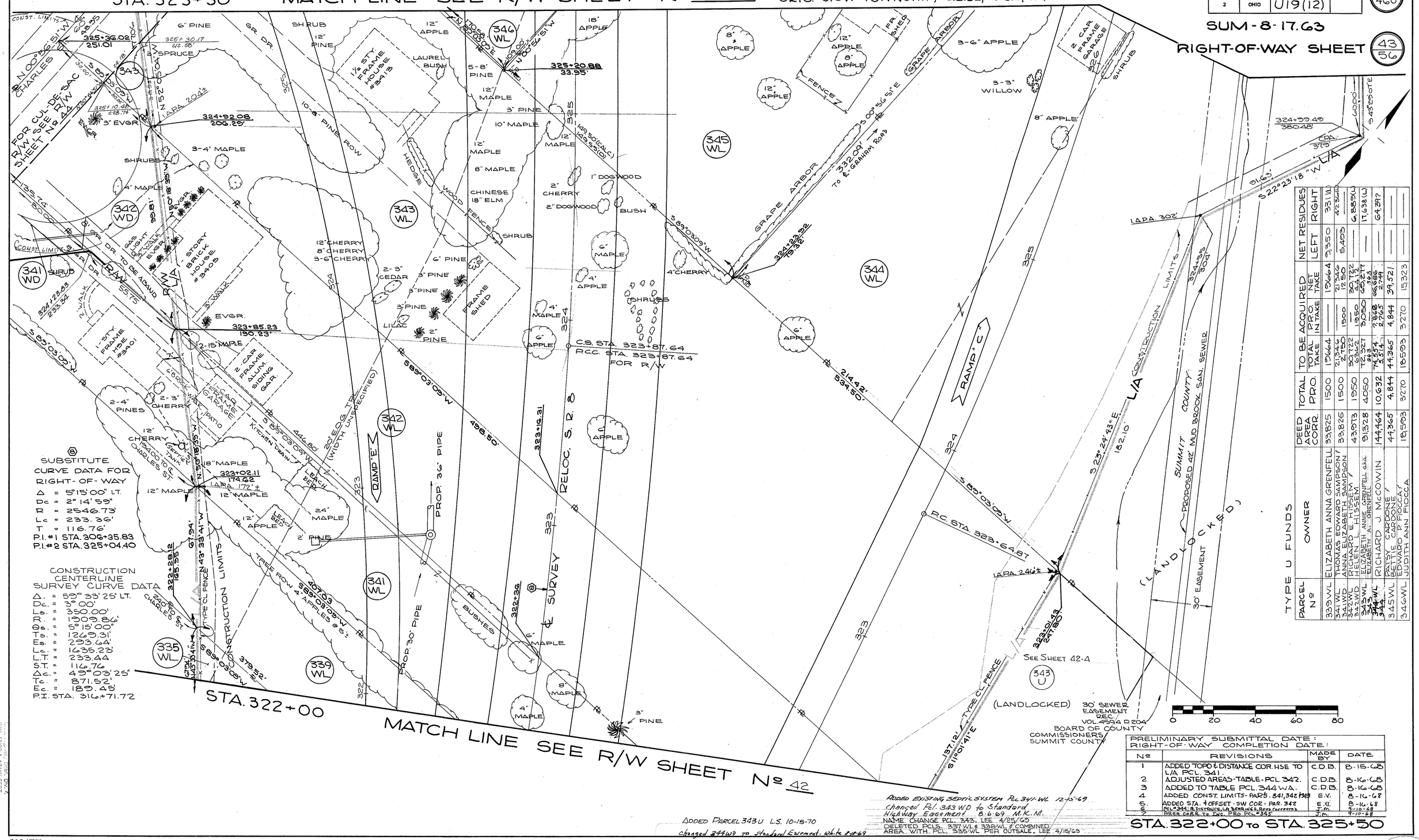

⑧ SUBSTITUTE CURVE DATA FOR RIGHT-OF-WAY

Δ = 5°15'00" LT.
Dc = 2° 14' 59"
R = 2546.73'
Lc = 233.36'
T = 116.76'
P.I. #1 STA. 306+35.83
P.I. #2 STA. 325+04.40

CONSTRUCTION CENTERLINE SURVEY CURVE DATA

Δ. = 59° 33' 25" LT.
Dc. = 3° 00'
Ls. = 350.00'
R. = 1909.86'
Θs. = 5° 15' 00"
Ts. = 1269.31'
Es. = 293.64'
Lc. = 1635.23'
L.T. = 233.44
S.T. = 116.76
Δc. = 45° 03' 25"
Tc. = 871.52'
Ec. = 189.45'
P.I. STA. 316+71.72

TYPE U FUNDS

PARCEL Nº	OWNER	DEED AREA CORR.	TOTAL PRO.	TO BE ACQUIRED TOTAL TAKE	TO BE ACQUIRED PRO. IN TAKE	NET RESIDUES LEFT	NET RESIDUES RIGHT
339 WL	ELIZABETH ANNA GRENFELL	33,625	1500	1.0664	——	2,350	331 W.L.
341 WL	THOMAS EDWARD SAMPSON †	33,825	1500	2.1346	1500	5,425	42,324 D
342 WD	ANNA ELIZABETH SAMPSON	43,973	1950	2.1722	1950	——	6,889 (L)
342 WD	HELEN L. HISSEM /			2.3662	1,350	——	——
343 WL	ELIZABETH ANNIE GRENFELL a.k.a.	91,328	4050	16.3271	3,050	65,277	17,638 (L)
344 WL	ELIZABETH A. GRENFELL	144,464	10,632	7.4144	7,368	66,366	64,317
345 WL	RICHARD J. McCOWIN	44,365	4,844	3.5174	2,265	2,744	——
	PATSY CARDONE /						
	BETTIE CARDONE †						
346 WL	EDWARD EWING †	18,593	3270	4.4365	4,844	39,521	15323
346 WL	JUDITH ANN FICCA				3,270		

PRELIMINARY SUBMITTAL DATE:
RIGHT-OF-WAY COMPLETION DATE:

Nº	REVISIONS	MADE BY	DATE
1	ADDED TOPO & DISTANCE COR. HSE TO L/A PCL 341	C.D.B.	8-15-68
2	ADJUSTED AREAS-TABLE-PCL 342.	C.D.B.	8-16-68
3	ADDED TO TABLE PCL 344 W.A.	C.D.B.	8-16-68
4	ADDED CONST. LIMITS-PARS. 341, 342, 343	E.V.	8-16-68
5	ADDED STA. & OFFSET-SW COR-PAR. 342	E.V.	8-16-68
6	PCL #344; & DISTANCE, LA BEARINGS, Area Corrected	J.M.	9-10-68
7	AREA CORR. TO INC. PRO PCL #345	J.M.	9-10-68

STA. 322+00 TO STA. 325+50

ADDED EXISTING SEPTIC SYSTEM PCL 341-WL 12-15-69
Changed Pcl. 343 WD to Standard
Highway Easement 8-6-69 M.K.M.
NAME CHANGE PCL 343. LEE 4/25/69
DELETED PCLS. 337-WL & 338-WL & COMBINED AREA WITH PCL. 335-WL PER OUTSALE. LEE 4/18/69

ADDED PARCEL 343 U L.S. 10-15-70
Changed 344 WD to Standard Easement. white 8-4-69

K & E-AKRON

RW-ENGR & ADMIN SECT. TAXPAYER FURN.
AUG 27 1969
LOGGED
Est. Sht.

SUMMIT COUNTY, CITY OF CUYAHOGA FALLS
ORIG. STOW TOWNSHIP, QL. 32, T-3N, R-10W

MATCH LINE SEE R/W SHEET Nº 45 Nl STA. 325+50

MATCH LINE SEE R/W SHEET Nº 45 CHARLES ST. STA. 46+58.

FED. RD.	STATE	PROJECT	
2	OHIO	U19(12)	

448/460

SUM-8-17.63

44/56

RIGHT OF WAY SHEET

COVERAGE SEE R/W SHEETS Nº 42 & 43 Nl STA. 322+00

FOR ADDITIONAL

25' EASEMENT CITY OF CUYAHOGA FALLS VOL. 4550 PG. 375

48" STORM SEWER

I.P.F.

1-STORY FR. ALUM. SIDE. HOUSE # 3410

348-1

EV. GR.

11' GRAVEL DR.

10" MAPLE

8' GRAVEL DR.

1-STORY BRICK HSE. # 3400

10' CONC. DR.

GAS LIGHT

12" MAPLE

340

2-10" MAPLES 2-6" PINES

17' GRAVEL DR.

1½-STORY FRAME HOUSE #3394

GAS LIGHT

30" MAPLE

12" WILD CHERRY

SHRUB ROW

12' ASPHALT DRIVE

12" APPLE 6" PINE 12" APPLE 30" MAPLE

2½ STORY BRICK HOUSE #3390

20" MAPLE

FRAME SHED

STUCCO GARAGE

FRAME SHED

12' ASPHALT DRIVE

15" MAPLE

30" MAPLE

18" MAPLE

CHARLES STREET

325+51.04
238.63'

325+30.17
212.58'

325+10.48
228.76'

30.00' R.P.
S 89°03'09"W

326+36.07
251.02'

324+81.70
254.25'

324+32.61
331.06'

324+38.46
326.78'

324+16.52
363.75'

N 52°00'00" W
324+20.08

343 WL

343

3-SPRUCE

3-4" MAPLES

12" CHERRY

8" CHERRY

324

342 WD

EV. GR.

4" MAPLE

342 WL

1-STORY BRICK HOUSE # 3405

EV. GR.

GAS LIGHT

3' WALK

N 50° 18' 39" W

EV. GR.

3233.85
150.23

2-CAR FRAME ALUM. SIDE GARAGE

15" MAPLE

498.50'
TO L/A LINE

3-6" CHERRY

20' E.O.G. TPL (WIDTH UNSPECIFIED)

RAMP "E" 323

TO BE ABANDONED

8' GRAVEL DR.

125.74 S 89°03'09" W

60.00'

8' GRAVEL DR.

446.80' S 89°03'09" W

TO L/A LINE

KITCHEN DRAIN

1-CAR FRAME GARAGE

6' BRICK WALK

PATIO

LEACH BED

24" MAPLE

18" MAPLE

341 WL

2-3" CHERRY

341 WD

CONSTRUCTION LIMITS

70.71' R/W

N 45° 00' 00" E

SPRUCE

2' WALK

1-STORY FRAME HOUSE # 3401

2042.36
233.36'

LEACH BED

2" PINE

2-4" PINES

SEPTIC TANK

L/A 1-3

407.08

S 88°03'09" W

TO L/A LINE

30.00

I.P.F.

PINE TREES

S 88°03'09" W

184.00

12" CHERRY

323+62.11
174.62'

TREE ROW 4"-APPLES @ 5'±

12" MAPLE

1-STORY FRAME HSE. # 3395

8' GRAVEL DR.

12" MAPLE

L/A 1-4

N 43° 32' 41" W

67.04'

379.52

339 WL

240.00'

S 88°03'09" W

TO L/A LINE

322+28.12
165.05

8" PINE

1½ STY. FRAME HOUSE # 3391

6" C.O.R.

N 43° 32' 41" W

COR. 165

852.01'

TO L/A LINE

8' GRAVEL DR 286.00

I.P.F.

S 89°03'09" W

321+54.98
154.68

335 WL

8' GRAVEL DR.

1½ STORY FRAME HOUSE # 3387

1-CAR FRAME GARAGE

N 20° 14' 58" W

314.07'

S 88°03'09" W

8"-12" PINES

320+96.31
156.93

36" OAK

50' DEED RESERVATION

8' GRAVEL DR.

50 MAPLE

2-CAR FRAME GARAGE

0 20 40 60 80 100

7. ADDED EXISTING SEPTIC SYSTEM PCL 341-WL 12-15-69 FRY

6. Changed Ent 343WD to Stand Highway Esmt. M.K.M. 8-16-69

PRELIMINARY SUBMITTAL DATE:
RIGHT-OF-WAY COMPLETION DATE:

Nº	REVISIONS	MADE BY	DATE
1	ADDED TOPO PCL'S. 341 & 342	C.D.B.	8-16-68
2	ADDED DIMENSION COR. 11 SE. TO L/A PCL 341	C.D.B.	8-16-68
3	ADJUSTED STATIONS & OFFSETS ALONG & CHARLES & ADDED NOTE; "GO DEED RESERVATION."	C.D.B.	8-16-68
4.	ADDED STA. & OFFSETS-PAT. 341 CORS.	E.V.	8-16-68
5	NAME CHANGE PCL. 343	LEE	4-25-69

PARCEL NO.	OWNER	DEED AREA COR.	TOTAL P.R.O.	TO BE ACQUIRED SQ. FT. TOTAL TAKE	P.R.O. IN TAKE	NET TAKE	NET RESIDUE LEFT	NET RESIDUE RIGHT	TYPE FUNDS
* 340	WILLIAM G. DALTON & MARY A. DALTON	36,140	2,700						
341 WL 341 WD	THOMAS E. SAMPSON & ANNA ELIZABETH SAMPSON	33,825	1,500	21,346 2,750	1,500	21,346 1,250	5403	4,236 (L)	U U
342 WL 342 WD	RICHARD E. HISSEM & HELEN L. HISSEM	43,573	1,950	30,722 6,362	1,950	30,722 4412	—	6,885 (L)	U U
343 WL 343	ELIZABETH ANNIE GRENFELL ELIZABETH A. GRENFELL	91,328	4050	72,327 363	3,050 —	69,277 363	—	17,638 (L)	U U
* 3481	JOAN LOEFFLER	9503	1,500						

* NOT EFFECTED

CITY OF CUYAHOGA FALLS KEENAN PARK

CHARLES ST. STA. 43+00 to STA. 46+58.97

FORM D D A-5

AUG 27 1968

LOGGED

Eff Co.

SUMMIT COUNTY, CITY OF CUYAHOGA FALLS, CITY OF STOW
ORIG. STOW TOWNSHIP, O.L.32, T-3N, R-10W

FED. RD.	STATE	PROJECT	
2	OHIO	U19 (12)	

443 / 460

SUM 8-17.63

RIGHT OF WAY SHEET 45 / 56

EXIST. GRAHAM ROAD CURVE DATA
Δ = 28° 57' 00" LT.
Dc = 9° 00'
T. = 164.34'
Lc = 321.67'
R = 636.62'
P.I. STA. 110+05.45

S. 88° 25' 33" W.
CHORD = 303.26'
ARC = 306.51'
R = 606.62'

STA. 111+00 MATCH LINE

SEE R/W STA. 329+00 SHEET Nº 47

S. 88° 25' 33" W.
CHORD = 318.03'
ARC = 321.96'
R = 636.62'

STA. 111+44.05 RELOC. GRAHAM

EXIST. R/W

SIGN

42" STORM

PT STA. 111+66.78 = 328+72.34 SRB
EXIST. GRAHAM 127.32' LT.

(60') COUNTY HIGHWAY EASEMENT

CORE LINE EXIST. GRAHAM

GRAHAM RD. CUYAHOGA FALLS STOW RD.

WOOD FENCE

N 45° 09' 20" W

RELOC. R/W SHEET Nº 46

STA. 328+01.48 = S.R.B.
STA. 113+17.45 EXIST. GRAHAM

STA. 327+86.45 = S.R.B.
STA. 113+17.56 RELOC. GRAHAM

RELOC. GRAHAM RD. CURVE DATA
Δ = 56° 22' 40" LT.
Dc = 5° 00'
R. = 1145.92'
T. = 614.15'
Lc = 1127.56'
E. = 154.20
P.I. STA. 113+54.92

CONSTRUCTION SR-8 CENTERLINE SURVEY CURVE DATA
Δ = 59° 33' 25" LT.
Dc = 3° 00'
R = 350.00'
T = 1909.86'
Lc = 5° 15' 00"
E = 1269.31'
P.I. = 283.64'
S.T. = 1635.23'
Δ = 233.44'
Δ = 116.76'
Δ = 49° 03' 25"
Δ = 871.52'
E = 189.45'
P.I. STA. 316+71.72

PARCEL Nº	OWNER	DEED AREA CORR.	TOTAL P.R.O.	TO BE ACQUIRED TOTAL TAKE	TO BE ACQUIRED P.R.O. IN TAKE	TO BE ACQUIRED NET TAKE	NET RESIDUE LEFT	NET RESIDUE RIGHT
345WL	ELIZABETH ANNE GRENFELL	51,328	4,050	72,327	3,950	69,277	----	17,638 (L)
346WL	ELIZABETH A. GRENFELL & JUDITH ANN FIOCCA	18,593	3,270	18,593	3,270	15,323	----	----
347WL	JOANNA MAY HAAS	23,075	1,263	23,075	1,263	15,710	----	----
348WL	HERBERT L. BULLARD & CATHERINE P. BULLARD	26,084	2,400	5,200	2,128	3,077	----	20,607
349WL	RAY E. BECKWITH & MARGARET L. BECKWITH	6,248	1,542	15,426	1,542	4,705	----	----
351WD	CUYAHOGA FALLS, CITY OF	1,950,687	40,700	5,257,719	37,343	4,884,446	1,053,138	
351WD	COUNTY OF OHIO (FEE & EASEMENT)			1,780		1,780		

TYPE U FUNDS

0 20 40 60 80

PRELIMINARY SUBMITTAL DATE:
RIGHT-OF-WAY COMPLETION DATE:

Nº	REVISIONS	MADE BY	DATE
1	CHARLES ST. R/W-ADDED NOTE; "GO DEED RESERVATION."	C.D.B.	8-16-68
2.	MATCHLINE CORRECTED 325+50	D.D.A.	10-16-68
3.	NAME CHANGE PCL. 343.	LEE	4/25/69
4.	8" SANITARY ADDED PCL 343 & 348	D.D.A.	7/17/69
5	changed R/W 343WD to Stand Hwy Easmt.	M.R.M.	8-6-69

STA. 325+50 MATCH LINE SEE R/W SHEET Nº 43

STA. 325+50 TO STA. 329+00 LEFT OF ℄

K & E - AKRON

SUMMIT COUNTY
CITY OF STOW
O.L.32, T-3N R-10W
ORIG. STOW TWP.

FED. RD.	STATE	PROJECT	
2	OHIO	U19 (12)	

450/460

SUM - 8 - 17.63

RIGHT OF WAY SHEET 46/56

SUBSTITUTE CURVE DATA FOR RIGHT-OF-WAY
Δ = 5°15'00" LT.
Dc = 2°14'59"
R = 2546.73'
Lc = 233.36'
T = 116.76'
P.I. #1 STA. 306+35.83
P.I. #2 STA. 325+04.40

CONSTRUCTION CENTERLINE SURVEY CURVE DATA
Δ = 59°33'25" LT.
Dc = 3°00'
Ls = 350.00'
R = 1909.86'
θs = 5°15'00"
Ts = 1269.31'
Es = 293.64'
Lc = 1635.23'
L.T. = 233.44'
S.T. = 116.76'
Δc = 49°03'25"
Tc = 871.52'
Ec = 189.45'
P.I. STA. 316+71.72

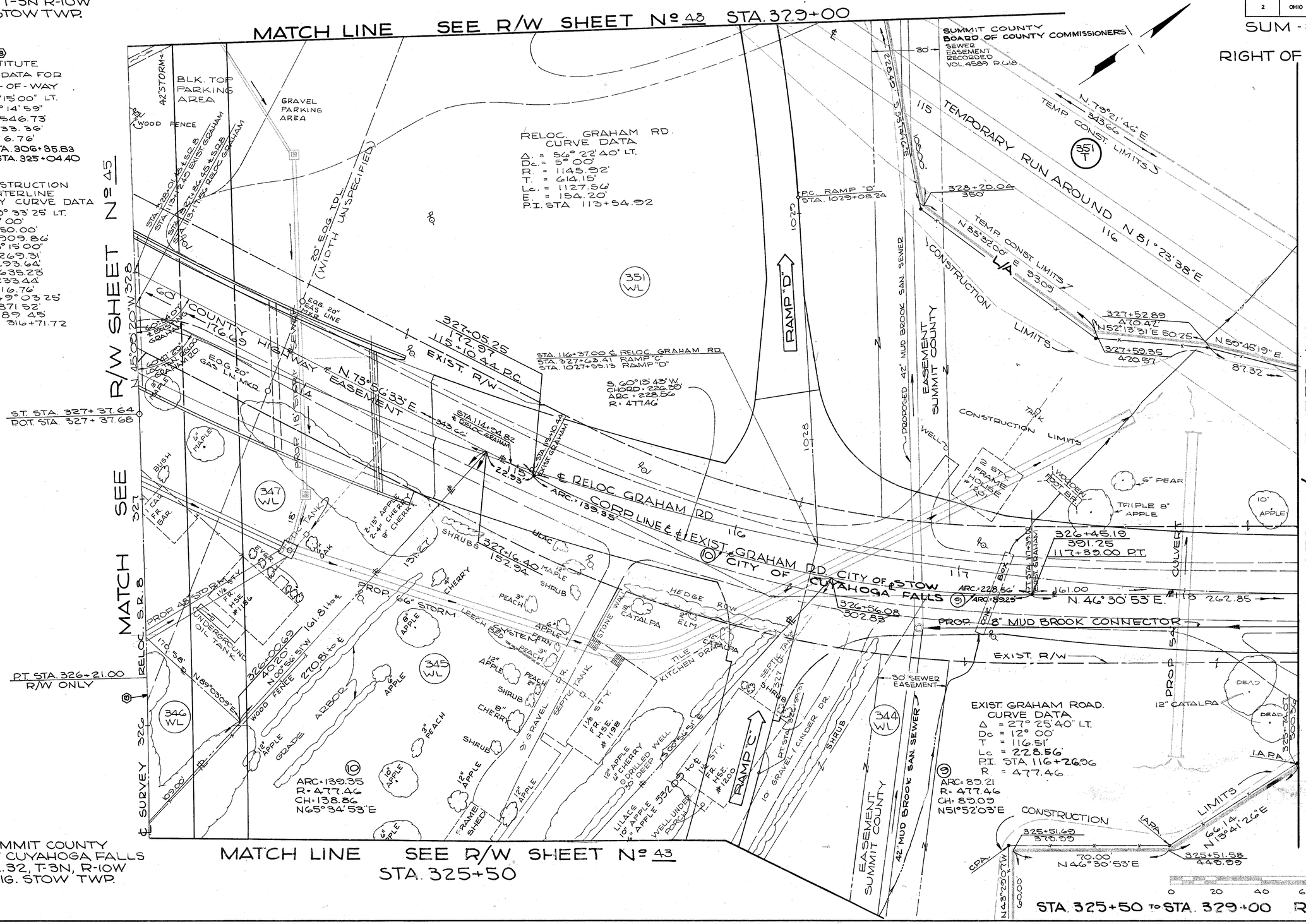

SUMMIT COUNTY
CITY OF CUYAHOGA FALLS
O.L.32, T-3N, R-10W
ORIG. STOW TWP.

PARCEL Nº	OWNER	DEED AREA CORR.	TOTAL P.R.O.	TO BE ACQUIRED TOTAL TAKE	TO BE ACQUIRED P.R.O. IN TAKE	TO BE ACQUIRED NET TAKE	NET RESIDUE LEFT	NET RESIDUE RIGHT	TYPE FUNDS
344	RICHARD J. McCOWIN	144,464	10,632	5,514	2,765	2,749	—	64,397	U
344 WL				74,554	7,867	66,686			
345 WL	PATSY CARDONE, BETTIE CARDONE	44,365	4,487	44,365	4,487	39,878	—	—	U
346 WL	EDWARD P. FIOCCA, JUDITH ANN FIOCCA	18,593	3,270	18,593	3,270	15,323	—	—	U
347 WL	JOANNA MAY HAAS	23,673	7,963	23,673	7,963	15,710	—	—	U
351 WL	THE CARTER-JONES LUMBER COMPANY	1,500,657	40,700	525,779	37,363	488,416	—	1,053,138	U
351 WD				11,780	3,346	8,434			
351 T				18,119		18,119			

PRELIMINARY SUBMITTAL DATE:
RIGHT OF WAY COMPLEATION DATE:

Nº	REVISIONS	BY	DATE
1	CHANGED AREAS TO INC. PRO	J.M.	9-9-68
2	℄ DISTANCES TO ℄ GRAHAM	J.M.	9-9-68
3	CHANGED 344WD TO EASEMENT	WHITE	8-18-69

K & E-AKRON

FED. RD.	STATE	PROJECT	
2	OHIO	U19 (12)	

451
460

SUM - 8-17.63

RIGHT OF WAY SHEET 47/56

STA. 332+50 MATCH LINE SEE R/W SHEET Nº 49

R/W SHEET Nº 48

NOTE. ▨ = AREA CONVEYED TO THE CITY OF CUYAHOGA FALLS BY DIRECTOR'S DEED, VOLUME ____, PAGE ____. ENTERED IN THE JOURNAL OF THE DIRECTOR OF TRANSPORTATION, VOLUME 4, PAGE 551, ON 12-4-1975

EXIST. GRAHAM RD. CURVE DATA
Δ. = 28° 57' 00" LT.
Dc. = 9° 00'
T. = 1644.34'
Lc. = 321.67'
P.I. STA. 110+09.45
R. = 636.62

RELOC. GRAHAM RD. CURVE DATA
Δ. = 56° 22' 40" LT.
Dc. = 5° 00'
R. = 1145.92'
T. = 6014.15'
Lc. = 1127.56'
E. = 154.20'
P.I. STA. 113+54.92

SUMMIT COUNTY
CITY OF CUYAHOGA FALLS
O.L.32, T-3N, R-10W
ORIG. STOW TWP.

SUMMIT COUNTY
CITY OF STOW
O.L.32, T-3N, R-10W
ORIG. STOW TWP.

MATCH LINE SEE R/W SHEET Nº 55

N 77°06'21" W 104.34'

107+40 TT RELOC. GRAHAM

107+40 TT EXIST. GRAHAM

PC STA. 107+40 TT

330.67 TO 330.70

108+45.11 PC.

RELOC. GRAHAM RD.

#1 CORP. LINE & EXIST. CITY OF CUYAHOGA FALLS #1 CORP. LINE & EXIST. GRAHAM RD.

60'-COUNTY HIGHWAY EASEMENT

N 83°04'51" W ARC 132.14' CHORD 132.10' R 6636.62'

EXIST R/W

108+00 75 RT.

1 APA. 73' RT.

PT STA 331+20.24 38° RT & GRAHAM RD. STA. 108+30

N 72.45' N 41° 54' 36" W

N 40° 22' 45" E 42.18'

108+38.40 80.21

18" ELM TREE

TO BE ABANDONED

349-1 WL

10' GRAVEL DR.

N 12° 53' 39" E 42.44'

20" TREE

108+33.69 142.23

12" MAP

MAPLE

DRILLED WELL

GEN. USE

2 STY. FR. HSE #1124

2-CAR FR. GAR.

18" MAPLE

15" MAPLE

15" APPLE

1 STY. FR. HSE STORAGE

SEPTIC TANK

30" MAPLE

109+00 85'

329+08.84 109+79.81 352.91 120.01

S 00° 56' 35" E 118.63'

96" WILLOW

OUTLET 4" TILE FROM SPRING

L/A TYPE 4 RIP-RAP S 69° 38' 17" E

349 WL

351 WL

329+91.95 272.03

S 88° 25' 03" W CHORD 318.26' ARC 321.67' R 636.62'

110

30'

40'

329+82.10 270.45

329+27.50 226.27' STOW

N 13° 56' 35" E 251.20'

OUTLET 12" VC PIPE

RAMP "E"

329

330

331

332

60-6" to 8" W. CHERRY 8" APPLE

TEMPORARY RUN AROUND 109

N 81° 23' 38" E

RAMP "A"

TEMP. CONST. LIMITS

RAMP "A" NOSE 69' LT. Nº STA. 331+55.98

9" W. CHERRY

6" APPLE

N 45° 09' 20" W

SEE SHEET Nº 55 FOR RESIDUE PARCEL 349-1

PARCEL Nº	OWNER	DEED AREA CORR.	TOTAL R/W	TO BE ACQUIRED TOTAL TAKE	TO BE ACQUIRED IN PART TAKE	NET RESIDUE LEFT	NET RESIDUE RIGHT
349-WL	RAY E. BECKWITH & MARGARET L. BECKWITH	62,483	15,426	62,483	15,426	47,057	———
349-1-WL	JAMES N. CHADWELL	147,241	10,080	12,586	10,080	115,763	———
349-1-T				2,832	2,832	———	———
351 WL	CARTER-JONES LUMBER CO. (AN OHIO CORPORATION)	1,500,697	407,050	488,416	317,363	———	1053,138
351-WD				3,346	3,346	8,434	———

SEE SHEET Nº 45 STA. 329+00

MATCH LINE STA. 111+00 SEE R/W SHEET Nº 45

SURVEY ℄ RELOC. S.R. 8

GR. DR.

1 STY. BLDG. JONES CO.

CONC. BL. CARTER LUMBER #1161

BLK. TOP PARKING AREA

WOOD FENCE

0 20 40 60 80

PRELIMINARY SUBMITTAL DATE:
RIGHT-OF-WAY COMPLETION DATE:

Nº	REVISIONS	MADE BY	DATE
	ADDED NOTE FOR CONVEYANCE OF SERVICE RD.		12-18-75

STA. 329+00 TO 332+50 LEFT OF ℄

K & E - AKRON

SUMMIT COUNTY, CITY OF STOW
ORIG. STOW TOWNSHIP, O.L.32, T-3N, R10W

FED. RD.	STATE	PROJECT	
2	OHIO	U19 (12)	

452
460

SUM-8-17.63

RIGHT OF WAY SHEET 48/56

STA. 332+50
MATCH LINE SEE R/W SHEET Nº 50

R/W SHEET Nº 47

MATCH SEE RELOC. S.R. 8

℄ SURVEY

N 45°09'20" W

332
331
330

GR DR

TEMPORARY
111

1 STY. CONC. BLOCK BLDG.
CARTER-JONES LUMBER
#1161

RUN AROUND
112

BLK. TOP DR.

STORAGE

1 STY. LUMBER

ROOF FR. CANOPY

N 81° 23' 38" E
112

STORAGE ROOF FR.
1 STY. LUMBER CANOPY

PROP. 18" CULVERT

6" SAN. PIPE

SEPTIC TANK

DRILLED WELL

90

GRAVEL PARKING AREA

BLK. TOP PARKING AREA

EXIST. 42" STORM

OPEN FIELD

114

1030

10' GR. DR.

351 WL

1033

EASEMENT WIDTH UNRECORDED

20' E.O.G. TIP

CONSTRUCTION LIMITS

L/A

RAMP "D"

1032

P.T. RAMP D
STA. 1031+80.47

L/A
148.68' N 69°55'45" W

351 X

330+45
310'

1500 N 21°09'25" E
330+51.03
323.74'

IAPA 308'

329+21.03
329.01'

1500 S 21°09'25" W

330+15
315.33'

L/A
222.69' N 5°54'41" W

329+23.42
331.62'

N 78°21'41" E
105.00'

351 T

SCATTERED BRUSH & 4" CRABAPPLE & 4" & 6" ELM

IAPA 240'

321.99' ST
127.21' N 54°12'04" W

30' SEWER EASEMENT RECORDED VOL. 4589 D618

SCATTERED BRUSH

PROPOSED 42" MUD BROOK SAN. SEWER

SWAMP (PEAT)

BOARD OF COMMISSIONERS SUMMIT COUNTY

0 20 40 60 80

TYPE U FUNDS

PARCEL Nº	OWNER	DEED AREA CORR.	TOTAL P.R.O.	TO BE ACQUIRED P.R.O. IN TAKE	TO BE ACQUIRED NET TAKE	NET RESIDUES LEFT	NET RESIDUES RIGHT
351WL	THE CARTER-JONES LUMBER COMPANY	1,530,657	40,709	37,343	488416		1,053,138
351 X				—	450	—	
351WD			11,760	3,346	8,434		

PRELIMINARY SUBMITTAL DATE:
RIGHT-OF-WAY COMPLETION DATE:

Nº	REVISIONS	MADE BY	DATE

STA. 329+00 to STA. 332+50 RT. of ℄

MATCH LINE SEE R/W SHEET Nº 46 STA. 329+00

K & E - AKRON

FED. RD.	STATE	PROJECT	
2	OHIO	U19 (12)	

453
460

SUM-8-17.63

RIGHT OF WAY SHEET 49/56

SUMMIT COUNTY
CITY OF STOW
O.L. 32, T-3N, R-10W
ORIG. STOW TWP.

MATCH LINE SEE R/W SHEET Nº 56

MATCH LINE SEE R/W SHEET Nº 51

MATCH LINE SEE R/W SHEET Nº 50

MATCH SEE R/W SHEET Nº 47&55

STA 332+50 MATCH LINE SEE R/W SHEET Nº 47

STA. 332+50 TO STA. 1036+50 LEFT OF ℄

A-A 1037+36.65 348.75

354 WL
354 T
353 WA
353 T
353 WL
352 WL
351 WL
351 WD

RAMP "B" P.C. STA. 1035+78.80
RAMP "B" STA. 1038+12.45
RAMP "B" STA. 1040+60.95
RAMP "A" P.C.C. STA. 336+37.05
RAMP "A" P.C.C. STA. 338+34.91
RAMP "A" S.C. STA 333+55.58
BEGIN RAMP "A" STA 333+24.89 36' LT. ℄ GRAHAM RD. STA. 106+77.42

℄ GRAHAM RD.
℄ BLACK TOP DR.
10' GRAVEL DR
POPULAR'S 60' ST. (CAL)
60' COUNTY HIGHWAY EASEMENT CITY OF CUYAHOGA FALLS TO CITY OF STOW CORPORATION LINE 1275.55
TEMPORARY RUN AROUND
TEMP. CONST. LIMITS
CONSTRUCTION LIMITS
TO BE ABANDONED
EXIST. ℄ GRAHAM RD. 12000'
EXIST. R/W 12" C.M. PIPE
16" C.M. PIPE
6" SIGN
SCATTERED 4"-16" W. CHERRY
60-6"to8" W. CHERRY
W. PROP. 21" PIPE
EQUATION 333+79.30 BACK = 1035+00 AHEAD

#1073 1 STORY FR. HSE
#1087 1 STY. FR. HSE
2-CAR GAR.
SEPTIC TANK
DRILLED WELL
6" CEDAR WELL
SHRUB
SWAMP
HIGH GRASS
BRUSH

N 00°18' E TE.
N 00°54'51" W 1350.53'
N 81°23'38" E 108
N 45°09'20" W
N 16°49'21" E 41.51'
N 77°34'41" E 52.28'
N 72°16'34" E 52.80'
N 18°14'18" E 52.96'
N 77°06'27" W 121.80'
N 05°15'20" E
N 00°54'51" W
N 45°09'20" W
TEMP. CONST. LIMITS
TEMPORARY RUN AROUND
N 81°23'38" E 108
425.00(D)
856.66 TO L/A
201.61'
332+62.82
464.61'
1036+02.05
600.51'
1035+00.23
537.41'

TYPE U FUNDS

PARCEL Nº	OWNER	DEED AREA CORR.	TOTAL P.R.O.	TO BE ACQUIRED TOTAL TAKE	TO BE ACQUIRED P.R.O. IN TAKE	TO BE ACQUIRED NET TAKE	NET RESIDUES LEFT	NET RESIDUES RIGHT
354 WL 354 T	HAROLD R. BAILEY ELIZABETH M. BAILEY	107,578	5,400	5505 7,556	3,863	2,135 7,556	82,856	——
353 WL 353 T	MARGARET L. PEARCH	72,514	3601	57,576	3,601	53,975 2,556	14,038(L)	——
352 WL	JOHN H. COWLEY JR. ALMEDA L. COWLEY	45,502	4,044	45,502	4,044	45,548	——	——
351 WL 351 WD	CARTER-JONES LUMBER CO.	1,580,687	40,703	525,779 11,780	37,363 3,346	488,416 8434	——	1053,138
353-WA	MARGARET L. PEARCH			1,254	—	1,254		

0 20 40 60 80

SEE SHEET Nº 56 FOR RESIDUE PARCEL 354

PRELIMINARY SUBMITTAL DATE:
RIGHT OF WAY COMPLETION DATE:

Nº	REVISIONS	MADE BY	DATE
1	REVISED 353 WA TO 353-T-1	G.J.F	12-18-69
2	CONVERT 353 T-1 TO WA	J.H.T	8-18-70

K & E - AKRON

SUMMIT COUNTY, CITY OF STOW
ORIG. STOW TOWNSHIP O.L.32, T-3N, R-10W

FED. RD.	STATE	PROJECT	
2	OHIO	U19(12)	

454/460

SUM - 8 - 17.63

RIGHT OF WAY SHEET 50/56

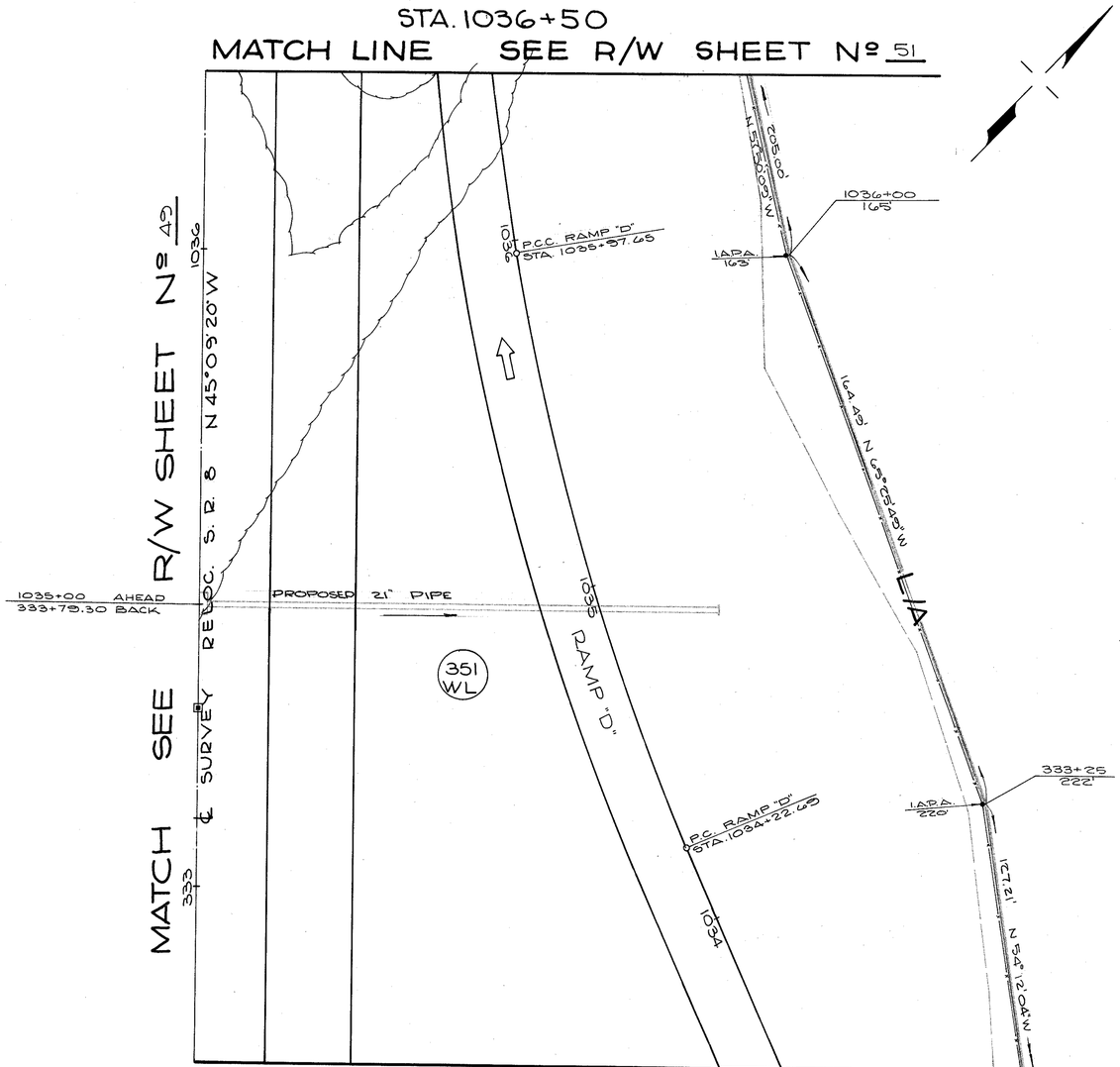

TYPE U FUNDS

PARCEL Nº	OWNER	DEED AREA CORR.	TOTAL P.R.O.	TO BE ACQUIRED			NET RESIDUES	
				TOTAL TAKE	P.R.O. IN TAKE	NET TAKE	LEFT	RIGHT
351WL 351WD	THE CARTER JONES LUMBER COMPANY	1,500,687	40,709	525,779 11,780	37,363 3,346	488,416 8,434	—	1058,138

0 20 40 60 80

PRELIMINARY SUBMITTAL DATE:
RIGHT-OF-WAY COMPLETION DATE:

Nº	REVISIONS	MADE BY	DATE

STA. 332+50 TO STA. 1036+50 RT. OF ℄

K & E - AKRON

SUMMIT COUNTY, CITY OF STOW
ORIG. STOW TOWNSHIP, O.L.32, T-3N, R-10W

FED. RD.	STATE	PROJECT	
2	OHIO	U19(12)	

455/460

SUM - 8 - 17.63

RIGHT OF WAY SHEET 51/56

STA.1039+50 MATCH LINE SEE R/W SHEET Nº 52

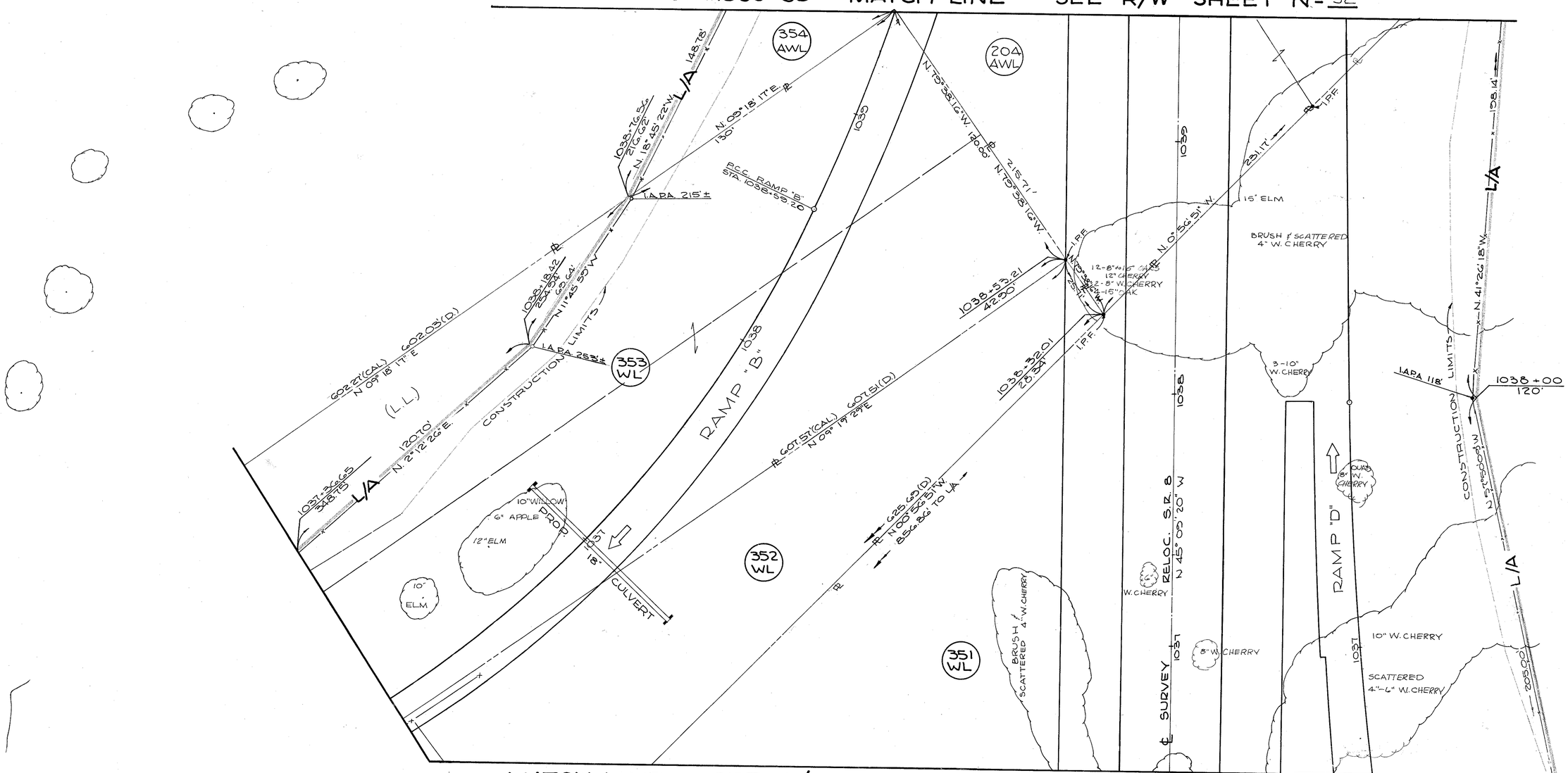

MATCH LINE SEE R/W SHEET Nº 49 & 50 STA.1036+50

TYPE U FUNDS

PARCEL Nº	OWNER	DEED AREA CORR	TOTAL P.R.O.	TO BE ACQUIRED TOTAL TAKE	TO BE ACQUIRED P.R.O. IN TAKE	TO BE ACQUIRED NET TAKE	NET RESIDUES LEFT	NET RESIDUES RIGHT
351 WL 351 WD	THE CARTER JONES LUMBER COMPANY	1,590,697	40,709	525,779 11,780	37,363 3,346	488,416 8,434	—	1,053,138
352 WL	JOHN H. COWLEY JR. & ALMEDA L. COWLEY	49,592	4,044	49,592	4,044	45,548	—	—
353 WL	MARGARET L. PEARCH	72,514	3,601	57,576	3,601	53,975	14,938	—
354 AWL	HAROLD R. BAILEY & ELIZABETH M. BAILEY	—	—	4,549	—	4,549	→	→

SEE SHEET Nº 56 FOR RESIDUES PARCEL 35A

0 20 40 60 80

PRELIMINARY SUBMITTAL DATE:
RIGHT-OF-WAY COMPLETION DATE:

Nº	REVISIONS	MADE BY	DATE
1	ALL AREAS CORRECTED	J.M.	8-20-68

STA.1036+50 TO STA.1039+50

K & E - AKRON

SUMMIT COUNTY, CITY OF STOW
ORIG. STOW TOWNSHIP, O.L.32, T-3N, R-10W

FED. RD.	STATE	PROJECT	
2	OHIO	U19(12)	

456/460

SUM-8-17.63

RIGHT OF WAY SHEET 52/56

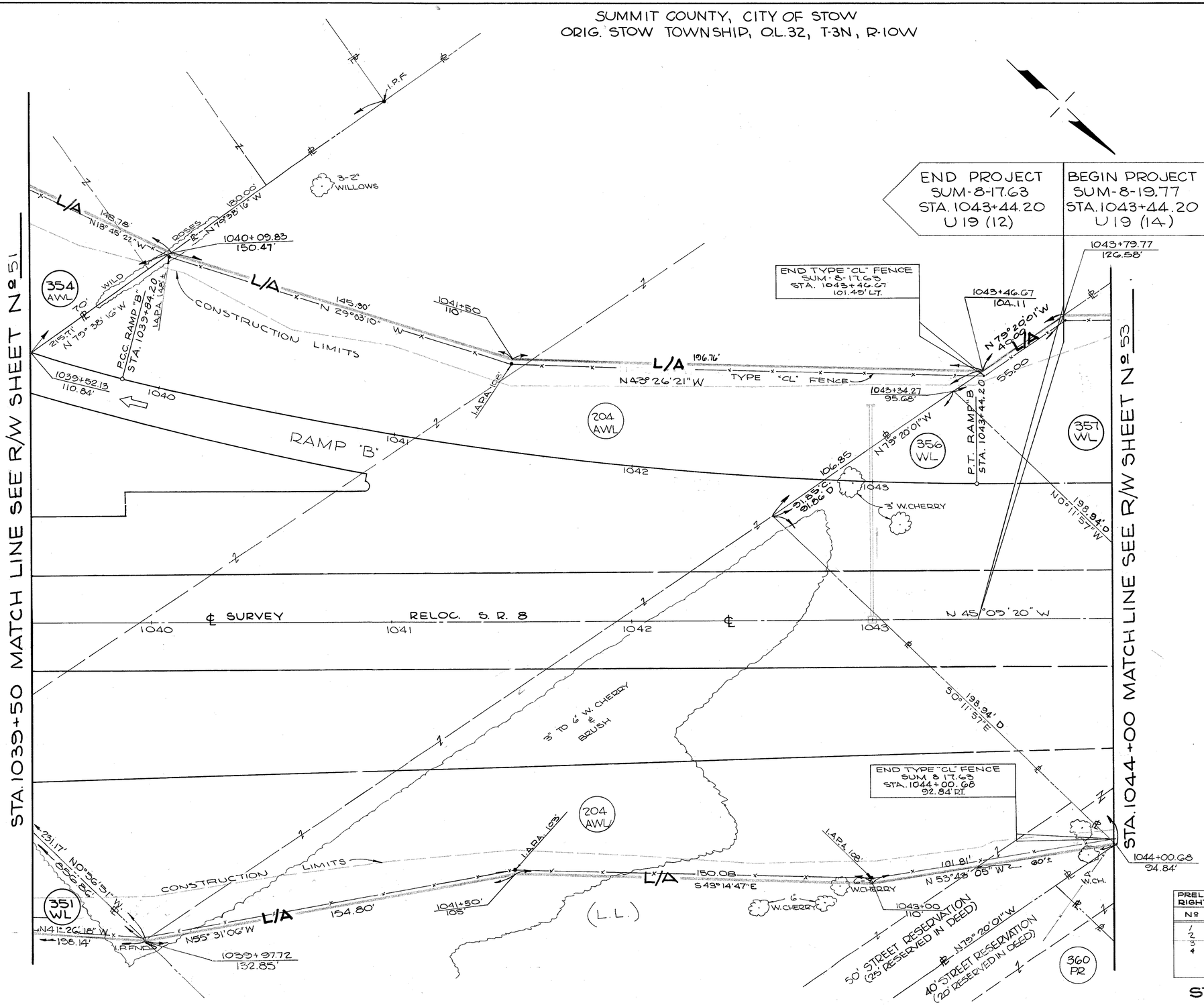

SEE SHEET Nº 45 FOR RESIDUES PARCEL 351
SEE SHEET Nº 56 FOR RESIDUES PARCEL 354

TYPE U FUNDS

PARCEL Nº	OWNER	DEED AREA CORR.	TOTAL P.R.O.	TO BE ACQUIRED TOTAL TAKE	TO BE ACQUIRED P.R.O. IN TAKE	TO BE ACQUIRED NET TAKE	NET RESIDUES LEFT	NET RESIDUES RIGHT
351WL	THE CARTER - JONES LUMBER COMPANY	1,590,697	40,709	525,779	37,363	488,416	—	—
354AWL	HAROLD R. BAILEY & ELIZABETH M. BAILEY	107,578	5,400	5,998 4,549	3,807	2,191 4,549	—	—
204AWL	BOARD OF EDUCATION CITY OF CUYAHOGA FALLS	259,105	16,520	98,246	356	97,890	120,211	24,484(L)
356WL	WARD SIGLER, ET AL.	17,905	1,837	17,905	1,837	16,068	—	—
357WL	JAMES C. CASSIDY	74,249	14,252	35,069	7,220	27,849	32,148	—
360PR	RAY W. GOODWIN	NO TAKE - PROPERTY RIGHTS						

0 20 40 60 80

PRELIMINARY SUBMITTAL DATE:
RIGHT OF WAY COMPLETION DATE:

Nº	REVISIONS	MADE BY	DATE
1	PROP. LINES & LIM. ACC. LINE REDRAFTED	E.V.	8-20-68
2	ALL AREAS CORRECTED	J.M.	8-20-68
3	REVISED NAME PCLS. 356 & 357	LEE	4/25/69
4	Added distance through reservation 360PR	R.S.	8/12/69

STA. 1039+50 TO STA. 1044+00

K & E - AKRON

SUMMIT COUNTY, CITY OF STOW
ORIG. STOW TOWNSHIP, QL.32, T-3N, R-10W

FED. RD.	STATE	PROJECT	
2	OHIO	U19(12)	

457
460

SUM-8-17.63

RIGHT OF WAY SHEET

53
56

STA. 1044+00 MATCH LINE SEE R/W SHEET Nº 52

DEED AREA CORRECTED PCL. 359 WL 8-14-74

N 79° 20' 01" W ℄

1-ST. CONC. BLK. HOUSE #3537

OUT HOUSE

2-CAR CONC. BLK. GAR.

18" MAPLE

DRILLED WELL

10' GRAVEL DRIVE

35'

349.08'

L/A

N45° 23' 20" W

357 WL

TWIN 6" PEAR

12" APPLE

50' STREET RESERVATION (25' RESERVED IN DEED)

8' GRAVEL & CINDER DRIVE TO BE ABANDONED

40' STREET RESERVATION (20' RESERVED IN DEED)

304.82

98.94'

N 0° 51' 51" W

8' DIRT DRIVE

6" POPLAR

1045

1046 ℄ SURVEY RELOC. S.R. 8 N 45° 09' 20" W 1047 1048

N 75° 20' 01" W 455.75'

1044+76.67
43.24'

356 WL

40' STREET RESERVATION (20' RESERVED IN DEED)

91.85'

4" TILE EASEMENT DRAIN

10" ASH

SHRUB

2 MAPLE

30" WILLOW

TWIN 12" MAPLE

APPLE

1-ST. FR. HOUSE #3545

358 WL

11-4" & 6" PLUMS

SEPTIC TANK

48.00'

S 45° 09' 20" E

35'±

1044+00.68

94.84'

151.32'

N 45° 06' 36" W

1045+52.00
95'

S 8° 58' 06" W
38.25'

(L.L.)

358 WR

CONCRETE 2.6'

WELL

CATALPA

2-CAR FR. GAR.

N 44° 50' 40" E
12.50'

1046+00
95'

1046+00
167.50

S 81° 03' 11" E
31.57'

358 AWL

L/A

N 0° 51' 51" W ℄

12" PLUM

18" APPLE

170.14'

N 35° 13' 46" W

1047+67.59
124.33'

O.L. 32

O.L. 42

FRAME FR. GAR.

1-STY FR HSE #3581

92.40'

N 65° 34' 37" W

32.90'

1048+00
130'

359 AWL

(L.L.)

NOTE: SEE SHEET 53A FOR PCLS. 358AWL, 359AWL, AT ℄ 359 BWL.

END AQUISITION
SUM-8-17.63
STA. 1048+94.27

1047+77.72
(61.19)

HUDSON DR.

N 8° 58' 33" E

70

EXIST. R/W

60' STREET RESERVATION COUNTY HIGHWAY EASEMENT

EXIST. R/W

30'

30'

60

60

EXIST. 12" CULVERT OUTLET BURIED

1048+92.43
2.51'

1048+85.08

I.P.F.

1048+34.27
T1+49.76

100.49' ℄ T2

1049+33.49
54.25'

I.P.F. & USED

N 85° 23' 39" E
177.59'

DRIVE

GRAVEL

APPLE 18"

QUAD 8" W.CH.

N 85° 21' 10" E
99.53'

I.P.F.

1048+87.66
100.80

0 20 40 60 80

359 WL

12" MAPLE

2"

18" W.CH.

18" APPLE

STA. 1044+00 to STA. 1049+00

PARCEL Nº	OWNER	DEED AREA CORR.	TOTAL PRO.	TOTAL TAKE	TO BE AQUIRED PRO. IN TAKE	TO BE AQUIRED NET TAKE	NET RESIDUES LEFT	NET RESIDUES RIGHT
356 WL	WADD SIGLER, ET AL. SEE SUMMARY SHEET	17,905	1,837	17,905	1,837	16,068	——	——
357 WL	JAMES C. CASSIDY	74,249	14,252	35,069	7220	27,849	32,148	——
358 WL	AUDRIA MCCUNE	111,436	15,056	66,803	14,190	52,613	——	43,769(L)
359 WL	BRYAN E. CARPENTER	9,124	2,100	9,124	2,100	7,024	——	——
358 WA	See Parcel 358-WL			904		904	——	——

PRELIMINARY SUBMITTAL DATE:
RIGHT OF WAY COMPLETION DATE:

Nº	REVISION	MADE BY	DATE
1	PROP. LINES & LIM. ACC. LINE REDRAFTED	E.V.	8-15-68
2	ALL AREAS CORRECTED	J.M	8-20-68
3	NAME CHANGE PCL. 358	LEE	4/8/69
4	NAME CHANGE PCL. 356 & 357	LEE	4/25/69
5	Changed Pcl. 358 WA to 358-T & also Name Change	WHITE	9-3-69
6	Converted 358T to 358WA	Signed	2-19-70

FORM DDA-5

FED. RD. DIVISION	STATE	PROJECT	
2	OHIO	U-19(12)	

SUM 8-17.63

457A / 460

53A / 56

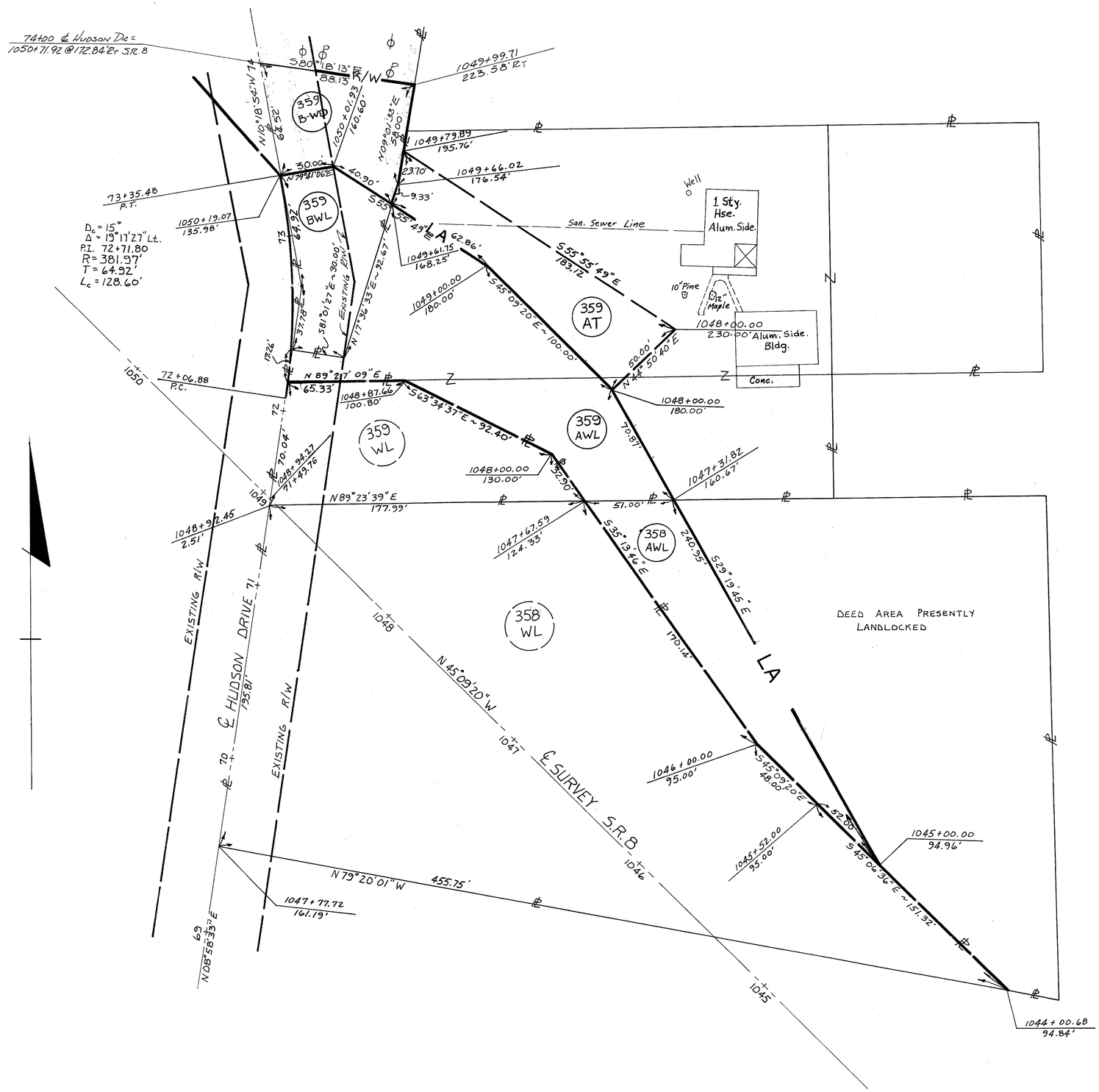

PARCEL NO.	OWNER	DEED AREA CORR.	TOTAL P.R.O.	TO BE ACQUIRED			NET RESIDUES	
				TOTAL TAKE	P.R.O. IN TAKE	NET TAKE	LEFT	RIGHT
358 AWL	AUDRIA McCUNE	43,769	——	6,850	——	6,850	——	36,919
359 AWL	LESLIE W. JACKSON &	66,224	442	13,336	442	12,894	——	52,888
359 AT	MAXINE V. JACKSON			6,225	——	6,225		
359 BWL	OHIO EDISON COMPANY, an OHIO CORPORATION	83,200	12,593	4,554	3,233	1,321	——	66,673
359 BWD				4,485	1,772	2,713		

15'/100' = X/20

DATE	REVISION
8-19-74	CORRECTED NET T.B.A.'S P.R.O. IN TAKE PCL. 359 BWL
8-21-74	ADDED TOPO PCL. 359 AWL
10-10-74	ADDED PCL. 359 B-WD

FED. RD.	STATE	PROJECT	
2	OHIO	U19 (12)	

458
460

SUM - 8 - 17.63

RIGHT OF WAY SHEET 54 56

SEE R/W SHEET Nº 46

MATCH LINE

SUMMIT COUNTY
CITY OF STOW
O.L. 32 T-3N R-10W
ORIG. STOW TWP.

SUMMIT COUNTY
VILLAGE OF SILVER LAKE
O.L. 32, O.L. 33
T-3N, R-10W
ORIG. STOW TWP.

TEMPORARY RUNAROUND
CURVE DATA
Δ = 34° 52' 45" LT.
D = 20° 00' 00"
R = 286.48'
T = 89.39'
L = 174.40'
E = 13.80'
P.C. STA. = 117+66.31
P.T. STA. = 119+40.71 =
STA. 120+74.39 GRAHAM ROAD

CITY OF STOW
SILVER LAKE
CORPORATION LINE
REFERENCE
O.L. 32
O.L. 33
R.R. SIGNALS
PRIVATE POWER LINE TO SILVER LAKE COUNTRY CLUB
SILVER LAKE COUNTRY CLUB (LEASEE)
ASPHALT PARKING AREA
FAIRWAY DRIVE
VACATED ORD. 14-1955
ALLOTMENT LINE
CONSTRUCTION LIMITS
EXIST. R/W
R/W
TEMP
RUN AROUND
PROP. 12" PIPE
SEPTIC TANK
PUMP HOUSE
1 STY FR. HSE #1221
1 STY FR. HSE #1224
2 CAR FR. GAR.
24" VCP VERTICAL CISTERN
2 - APPLES
8" LILAC
8" MAPLE
12" PEAR
12" POPLAR
18" CATALPA
2 - WILLOWS
8" WILLOW
30" ELM
GUMS
POPLAR
ELMS
CONC. HEADWALL
12" CMP
18" CMP
12" C.M.P.
STOW CORP. SIGN
SILVER LAKE CORP. SIGN
R.R. SIGN
SIGNAL LIGHT
TELEPHONE BOX
FR. SHED
PUMP HOUSE
SEPTIC TANK
KITCHEN
WELL
DRIVE
WD. RAIL FENCE
2" SPRUCE PINES
ELM
BLACKTOP DR.
CRYSTAL LAKE SUBDIVISION
PLAT BOOK 44 PAGE 87-93
ALLOTMENT VACATED BY
COMMON PLEAS COURT 199325-1955
CRYSTAL LAKE DRIVE
VACATED ORD. 14-1955
THE CONSOLIDATED RAIL CORPORATION
CITY OF CUYAHOGA FALLS
SILVER LAKE
CITY OF CUYAHOGA FALLS
VILLAGE OF SILVER LAKE
PROP. 8" MUD BROOK CONNECTOR
(60' COUNTY HIGHWAY EASEMENT) 262.85
CORP. LINE & GRAHAM RD. STOW
CITY OF CUYAHOGA FALLS
SEPTIC TANK TO BE ABANDONED
SEPTIC TANK

N79°21'46"E 343.66
N59°45'19"E 87.32
L/A
327+30.42 (554.80)
119+00 (300')
60.00
N 46°30'53"E
159.93'
119+60
90
120+59.93
50.00 ℄ GRAHAM
SHED
316+95.70
40' Rt. ℄ RR
N80°43'56"E 80.02
316+97.63
40' Rt. ℄ RR
317+46.11
40' Rt. ℄ RR
120+21.24
50.00 ℄ GRAHAM
N10°38'55"E 10.71'
N10°38'55"W
℄ R.R.
N46°30'53"E 17.85'
MON. FND.
95.21
N46°30'53"E
121+16.42
30' ℄ GRAHAM
121+46.40
30' ℄ GRAHAM
P.C. STA. 121+39.74
ARC = 272.97' R = 1145.92' CH = 272.33
122
121
42.68' (CAL.)
13.34' (CAL.)
120+97.06
119+00.00
30.00
S 43°29'07"E 30.00'
326+40.46 (552.18)
101.85 CITY OF
N 46° 30' 53" E
120+01.85
262.85
119+82.49
30' ℄ Graham
SILVER LAKE SIGN
R.R. SIGNAL
SAN. M.H.
6" SAN.
8" SAN.
121+39.74
30
3/7+86.89
40 Rt. ℄ R.R.
120+77.70
30 ℄ Graham
N46°30'53"E
62.04
121+39.74
45
71.72'
N46°30'53"E
120+68.02
121+39.74
45 ℄ Extension Rd
S 43°29'07"E 30.00'
3/8+04.74
40 Rt. ℄ R.R.
N10°38'55"W
106.81
112+62.42
61.09 ℄ Graham
N35°51'07"E
120
N 4.7°10'48"E
CH = 27.65
ARC = 27.65
R = 1150.92
121+38.74
45
121+66.55
45
121+97.06
83.06
N 89°03'
CH = 78.98
N43°44'39"E
CH = 78.98
ARC = 78.94 R = 1150.92
122+42.31
45
ARC = 320.77 R = 1150.92 CH = 319.81
CONSTRUCTION LIMITS
EXIST. R/W
N 58°33'41"E
124+75
45
ALLOTMENT LINE
N53°20'20"E
335.26
N61°43'14"E CH = 63.91
ARC = 63.92 R = 1150.92
124+12.71
124
124+20
50
124+50
50
124+75
30
N26°43'20"W
125
STA.
ARC = 326.48 R = 1118.92 CH = 325.32 N 54° 53' 47" E
MON. FOUND
EXIST. R/W
ARC = 322.10 R = 1110.92
CH = 320.95 N 54° 53' 47" E
121+30.67
45'
121+61.14
74.81
N47°47'16"E
48.32
R = 1110.92
N10°38'55"W
40.89
N10°38'55"W
121+90.06
45'
124+75
45'
CURVE DATA EXIST. GRAHAM RD
Δ = 27° 17' 25" RT.
D = 5° 00'
T = 278.18'
L = 545.81
R = 1145.92
E = 34.28
P.I. STA. 124+17.92

PARCEL Nº	OWNER	DEED AREA	TOTAL PRO.	TO BE ACQUIRED TOTAL TAKE	TO BE ACQUIRED PRO IN TAKE	TO BE ACQUIRED NET TAKE	NET RESIDUES LEFT	NET RESIDUES RIGHT
328AT	THE CONSOLIDATED RAIL CORPORATION	——	——	5570	——	5570	——	——
328CT		——	——	21924	——	21924	——	——
344WL	RICHARD J. McCOWIN	144,464	10,632	74,534	7868	66686	——	64,397
344				5514	2765	2749		
344T				2345	——	2345		
350WD	CRYSTAL PARK DEVELOPMENT CORPORATION	1,749,208	——	5,868	——	5,868	——	1,743,340
350T				1,032	——	1,032	——	——
350AWD		5,473,099	8,298	13,164	8,298	4,866	——	5,459,935
350AT				1,492	——	1,492	——	——
350-1WD	SILVER LAKE COUNTRY CLUB	392,314	1,003	1,593	1,003	590	——	390,721
351 WL	THE CARTER-JONES LUMBER COMPANY	1,550,637	40,703	525,779	37,363	488,416	——	1,053,138
351 WD				11,780	3,346	8434		
351 T				18,119	——	18,119		

0 20 40 60 80

REVISED NAME PARCEL 328 SERIES 3-24-71
PRELIMINARY SUBMITTAL DATE:
RIGHT-OF-WAY COMPLETION DATE:

Nº	REVISIONS	MADE BY	DATE
1	CHANGED AREAS TO INC. PRO.	J.M.	9-6-68
2	CORR. STATION & OFFSETS	J.M.	9-6-68
3	R. DISTANCES TO ℄ GRAHAM	J.M.	9-6-68
4	ADDED PCL# 328 CT	J.M.	9-10-68
5	ADDED CRYSTAL LAKE SUB.	J.M.	9-10-68
6	Changed 344WD TO ESMT & changed 344WA To 344-T	white	8-18-69

REVISED NAMES, ADDED STATIONS & OFFSETS FROM R/W & PLS 328A-T & 328 C-T 5-9-77

STA. 118+50 to STA. 125+00 GRAHAM RD & PENN R.R.

K & E - AKRON

FED. RD.	STATE	PROJECT	
2	OHIO	U19(12)	

459 / 460

SUM-8-17.63

55 / 56

RIGHT OF WAY SHEET

ACCESS APPROVED BY DIRECTORS JOURNAL
VOL. 22 PG. 275, AUG 26, 1993 (COUNTY RECORDERS VOL 1961 PG 952 & 953)
ACCESS RIGHT OF STA. 104+90.88 105+27.69 ℄
58' WIDE, PERMISSIBLE PAVEMENT 50'

MATCH LINE SEE R/W SHEET Nº 49 & 47

104+37.69 ℄ — 105 ℄ — 106+43.44 ℄ 332+67.82 NT 464.61'

CITY OF STOW — CITY OF CUY. FALLS

GRAHAM ROAD (60' COUNTY HIGHWAY EASEMEMT)

115.75' 106 CORP. LINE

201.67'

N 77°06'27" W 300.00

105+35.02 33'

105+80.00 35.00'

106+52.57 37.06

44.98

72.68

N 73°54'12" W

88.34

L/A N 73°54'12" W

107+40 42'

372.49 N 47°04'36" W

N 65°30'27" W.

N 77°06'27" W

PROP 8" SAN. SEWER

PROP 4" WATER MAIN

91.42 N 77°06'27" W

7.66 CONSTRUCTION 94.78 N 70°12'02" W

104+51.16 70.00

105+42.58 70.00

104+52.47 78.53

104+64.05 81.57

121.15 N 19°04'45" W

104+46.08 71.60

106+46.63 94.18

105+47.87 90.78

LIMITS 118.81

N 77°29'44" W

107+80.51 115.50

CH=600' N 43°59'02" E
Lc=600'
D=9°50.00'

42.18
140°29'45"

N 32°36'27" W 130.47

107+10.98

R/W

51.66

N 77°06'27" W 300.00

107+77.41 TO 56

N 64°57' W

N 64°57' W

N 0°53'41" E

N 0°13'39" E

N 0°10'21" E

N 0°21'45" E

N 0°51'51" W

N 0°51'51" W

EXISTING 12" V.P. SANITARY SEWER

EXISTING 16" WATER MAIN

25' EASEMENT DV 3681 PG. 405

CITY OF CUYAHOGA FALLS

MATCH LINE SEE R/W SHEET Nº 56

MATCH LINE SEE R/W SHEET Nº 47

349-1 WL
349-2 WL
349-3 WL
349-4 WL
349-1 WD
349-2 WD
349-3 WD
349-4 WD
349-1 T
349-2 T
349-3 T
349-4 T

℄ SERVICE ROAD

PROP 4" WATER MAIN

PROP 8" SAN. SEWER

EXIST 15" STORM SEWER

12" GRAVEL DR

12' BLACK TOP DR

10' BLACK TOP DR

P.T. STA. 103+75.06

P.C. STA. 104+46.63

P.C. STA. 4+00

P.T. STA. 6+00

SEPTIC TANK

LAMP POST

GAS METER

GAS VALVE

GAS LIGHT

ELEC. LIGHT

WELL

SHRUBS

TILE FAN OUTLET

4" TILE CONTINUAL SUMP PUMP

6" VC PIPE

SHOULDER CROSS SLOPE

TYPE CL FENCE

1-STY. FR. HSE. #1070

DRILLED WELL 44' DEEP

1-STY. FR. HSE #1088

1-STY. FR. HSE. #1098

HEDGE

PATIO

SEPTIC TANK

SEPTIC TANK

3" EVERGREENS

EVERGREENS

MAPLE

POPLAR

15" - 24" - 24" MAPLES

18" MAPLE

16" MAPLE

18" MAPLE

15" - 15" MAPLES

12" CMP

10" CMP

8" CMP

16" WM

SUMMIT COUNTY, CITY OF CUYAHOGA FALLS
ORIG. STOW TOWNSHIP
OL 32 T-3N R-10W

NOTE: ▨ = AREA CONVEYED TO THE CITY OF CUYAHOGA FALLS BY DIRECTOR'S DEED, VOLUME, ____, PAGE ____, ENTERED IN THE JOURNAL OF THE DIRECTOR OF TRANSPORTATION VOLUME 4, PAGE 551, ON 12-4-1975

SERVICE ROAD CURVE DATA

③ CURVE DATA

Δ = 32° 45' 50" RT.
R = 110.00'
T = 32.337'
Lc = 62.904'
PCC. STA. 1+68.88
P.T. STA. 2+31.78

④ CURVE DATA

Δ = 7° 30' 00" RT
Dc = 3° 45' 00"
R = 1527.887'
Lc = 200.00'
T = 100.143
P.C. STA. 4+00
P.T. STA. 6+00

SERVICE ROAD RIGHT OF WAY

⑪ CURVE DATA

CH = 44.97
N 89°03'15" E
Lc = 45.41
R = 94.00
PCC = 103+31.40 - 77.75 RT
PT = 103+75.06 - 67.00 RT

⑫ CURVE DATA

CH = 118.59
N 74°53'10" W
Lc = 118.62
R = 1511.89
PC = 105+42.58 - 70.00 RT
PT = 106+61.08 - 71.60 RT

⑬ CURVE DATA

CH = 82.41
N 88°06'27" W
Lc = 96.87
R = 50.00
PC = 107+03.61 - 130.47 RT
PT = 107+80.51 - 116.50 RT

PARCEL Nº	OWNER	DEED AREA CORR.	TOTAL P.R.O.	TO BE ACQUIRED TOTAL TAKE	TO BE ACQUIRED P.R.O. IN TAKE	TO BE ACQUIRED NET TAKE	NET RESIDUES LEFT	NET RESIDUES RIGHT
349-1 WL 349-1 WD	JAMES N. CHADWELL	147,241	10,030	22,616 10,862	10,030	12,586 10,862	113,763	——
349-2 WL 349-2 WD 349-2 T	MARJORIE MERRILL	51,318	3,483	3,078 4009 2818	3,483	495 4009 2818	43,331	——
349-3 WL 349-3 WD 349-3 T	KENNETH S. SHUMAN	43,235	2,710	2082 3096 1119	2,710	276 3096 1119	37,157	——
349-4 WL 349-4 WD 349-4 T	FRANK M. JOHNSON & NINA G. JOHNSON	61,529	3,611	3,973 4285 1930	3,611	362 4285 1930	53,271	——

0 20 40 60 80

PRELIMINARY SUBMITTAL DATE: RIGHT-OF-WAY COMPLETION DATE:			
Nº	REVISIONS	MADE BY	DATE
	ADDED NOTE FOR CONVEYANCE OF SERVICE RD. ADD. ACCESS POINT PCL 249-3 WL		12-18-95 1-11-99

RIGHT OF ℄ STA. 103+50 to 108+00 GRAHAM RD.

FORM D D A-8

FED. RD.	STATE	PROJECT	
2	OHIO	U19(12)	

460 / 460

SUM - 8- 17.63

RIGHT OF WAY SHEET 56 / 56

SUMMIT COUNTY
CITY OF STOW
O.L. 32, T-3N, R-10W
ORIG. STOW TWP.

SUMMIT COUNTY
CITY OF CUYAHOGA FALLS
O.L. 32, T-3N, R-10W
ORIG. STOW TWP.

CARL A. RODGERS
BERTHA M. RODGERS
Vol. 3101 Pg. 651

NOTE * AREA CONVEYED TO THE CITY OF CUYAHOGA FALLS BY DIRECTOR'S DEED VOLUME , PAGE . ENTERED IN THE JOURNAL OF THE DIRECTOR OF TRANSPORTATION, VOLUME 4, PAGE 551, ON 12-4-1975

TEMPORARY RUNAROUND
CURVE DATA
Δ = 21°29'55" LT.
Dc = 11°00'00"
R = 520.87
T = 98.88
Lc = 195.44
E = 9.30
PC STA. = 101+01.12
PT STA. = 102+96.56

TYPE U FUNDS

PARCEL Nº	OWNER	DEED AREA CORR.	TOTAL P.R.O.	TO BE ACQUIRED TOTAL TAKE	TO BE ACQUIRED P.R.O. IN TAKE	TO BE ACQUIRED NET TAKE	NET RESIDUES LEFT	NET RESIDUES RIGHT
349-4WL 349-4WD 349-4T	FRANK M. JOHNSON & NINA G. JOHNSON	61,529	3,611	3973 42.85 1930	3611 —— ——	362 4285 1930	53,271	——
349-5WL 349-5WD 349-5T	ORIE E. GRAFTON & JOANN E. GRAFTON	61,749	3,603	2066 9,252 1189	1,870 1,733 ——	196 7,519 1189	50,431	——
349-6WD 349-6T	CLIFFORD B. RHOADS & VIRGINIA E. RHOADS	49,120	3,594	6800 105	3,594 ——	3,206 105	42,320	——
349-7WD	CARL A. RODGERS & BERTHA M. RODGERS	37,156	3600	3790	3600	190	33666	——
354WD 354WL 354AWL	HAROLD R. BAILEY & ELIZABETH M. BAILEY	107,578	5400	2135 5008 4548	1,598 3807 ——	542 2,135 4548	94,896	——
354-1WD	MARGUERITE H. DICKINSON	35542	1800	2400	1800	600	33,142	——
354-2WD	FRANK J. HUMBERT & ELIZABETH HUMBERT	63,014	2700	3,600	2,700	900	49,414	——
354 T	SEE ABOVE PARCEL 354A	——	——	7,556	——	7,556	——	——

SERVICE ROAD RIGHT OF WAY

Ⓖ CURVE DATA
CH = 54.04'
N 45°06'54"W
Lc = 56.95
R = 51.00
POC = 102+10.17 ~ 73.37 RT
PCC = 102+56.00 ~ 102.00 RT

⑦ CURVE DATA
CH = 71.07
N 86°30'38"E
Lc = 72.05
R = 126.00
POC = 102+56.00 ~ 102.00 RT
POC = 103+24.19 ~ 81.95 RT

⑧ CURVE DATA
CH = 8.35
N 72°40'25"E
Lc = 8.35
R = 94.00
PRC = 103+24.19 ~ 81.95
POC = 103+31.40 ~ 77.75

⑨ CURVE DATA
CH = 45.92
N 54°36'37"W
Lc = 47.12
R = 60.00
POC = 102+13.58 ~ 93.43
PCC = 102+56.00 ~ 111.00

⑩ CURVE DATA
CH = 76.15
N 86°30'38"E
Lc = 77.20
R = 135.00'
POC = 102+56.0 ~ 111.RT
PT = 103+29.06 ~ 89.52 RT

SERVICE ROAD CURVE DATA

① CURVE DATA
Δ = 90°00'00" RT.
R = 35.00'
T = 35.00'
Lc = 54.98'
PC STA. 0+61.00
PCC STA. 1+05.98

②③ CURVE DATA
Δ = 32°45'50" RT. & LT.
R = 110'
T = 32.337
Lc = 62.904
PCC STA. 1+05.98
PRC STA. 1+68.88
PT STA. 2+31.78

0 20 40 60 80

PRELIMINARY SUBMITTAL DATE: RIGHT-OF-WAY COMPLETION DATE:			
Nº	REVISIONS	MADE BY	DATE
1	CHANGED AREAS TO INC. P.R.O.	J.M.	9-6-68
2	CORRECTED ℄ BEARINGS	J.M.	9-6-68
3	CORRECTED STATIONS + OFFSETS	J.M.	9-6-68
4	℄ DISTANCES TO ℄ GRAHAM	J.M.	9-6-68
	ADDED NOTE FOR SERVICE RD		12-18-75

STA. 100+00 TO 103+50 GRAHAM RD.

SEE R/W SHEET Nº 49 & 55

MATCH LINE

K & E - AKRON

FED. RD.	STATE	PROJECT	
2	OHIO	U-19(12)	

1/460

SUMMIT COUNTY
SUM - 8 - 17.63

STATE OF OHIO
DEPARTMENT OF HIGHWAYS
SUM-8-17.63
CITY OF CUYAHOGA FALLS
CITY OF STOW
VILLAGE OF SILVER LAKE
SUMMIT COUNTY

U-19 (12)
SUM-8-17 63
LIMITED ACCESS
1967 SPECIFICATIONS

LIMITED ACCESS

This improvement is especially designed for through traffic and has been declared a Limited Access or Freeway by action of the Director of Highways in accordance with the provisions of Section 5511.02 of the Revised Code of Ohio.

CONVENTIONAL SIGNS

Water Line
Gas Line
Storm Sewer
Sanitary Sewer
Center Line
Corporation Line
Fence Line
Guard Rail (existing)
Guard Rail (proposed)
Railroad
Power Poles
Telephone Poles
Trees or Stumps (existing)
Limited Access
Right of Way
Limited Access & Right of Way
Property Line

INDEX

1-2	CENTERLINE SURVEY PLATS
3-4-5-6-7	PROPERTY MAPS
8-9-10-11-12-13-14-15-16	SUMMARY SHEETS
17	KEY MAP
18	STA. 229 + 00 TO 233 + 50
19	STA. 233 + 50 TO 238 + 00
20	STA. 238 + 00 TO 243 + 50
21	STA. 243 + 50 TO 249 + 00 LEFT
22	STA. 243 + 50 TO 249 + 00 RIGHT
23	STA. 249 + 00 TO 254 + 50 LEFT
24	STA. 249 + 00 TO 254 + 50 RIGHT
25	STA. 254 + 50 TO 258 + 50 LEFT
26	STA. 254 + 50 TO 258 + 50 RIGHT
27	FRONT STREET STA. 52 + 00 TO 57 + 50
28	FRONT STREET STA. 57 + 50 TO 62 + 00
29	STA. 258 + 50 TO 264 + 00
30	STA. 264 + 00 TO 269 + 00
31	STA. 269 + 00 TO 274 + 50
32	SECOND STREET STA. 50 + 00 TO 55 + 50
33	SECOND STREET STA. 55 + 50 TO 60 + 00
34	STA. 274 + 50 TO 280 + 00
35	STA. 280 + 00 TO 285 + 00
36	STA. 285 + 00 TO 290 + 50
37	STA. 290 + 50 TO 296 + 00
38	STA. 296 + 00 TO 301 + 50
39	STA. 301 + 50 TO 307 + 00
40	STA. 307 + 00 TO 312 + 00
41	STA. 312 + 00 TO 317 + 00
42	STA. 317 + 00 TO 322 + 00
43	STA. 322 + 00 TO 325 + 50
44	CHARLES STREET STA. 43 + 00 TO 46 + 58.97
45	STA. 325 + 50 TO 329 + 00 LEFT
46	STA. 325 + 50 TO 329 + 00 RIGHT
47	STA. 329 + 00 TO 332 + 50 LEFT
48	STA. 329 + 00 TO 332 + 50 RIGHT
49	STA. 332 + 50 TO 1036 + 50 LEFT
50	STA. 332 + 50 TO 1036 + 50 RIGHT
51	STA. 1036 + 50 TO 1039 + 50
52	STA. 1039 + 50 TO 1044 + 00
53	STA. 1044 + 00 TO 1049 + 00
54	GRAHAM ROAD STA. 118 + 50 TO 125 + 00
55	GRAHAM ROAD STA. 103 + 50 TO 108 + 00 RIGHT
56	GRAHAM ROAD STA. 100 + 00 TO 103 + 50

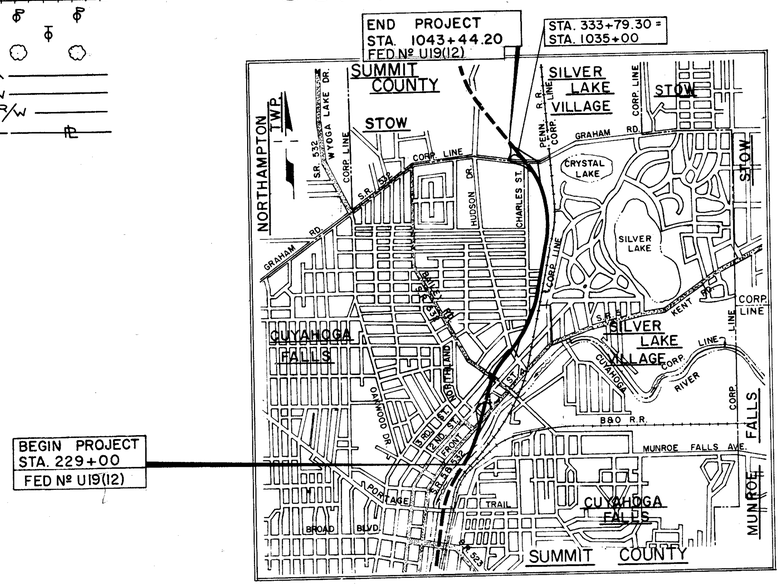

LOCATION MAP
SCALE 0 1/2 1 OF MILES

Portion to be improved
State Roads
Other Roads

PREPARED AND RECOMMENDED BY
DALTON-DALTON ASSOCIATES,
CONSULTING ENGINEERS
AKRON OHIO CLEVELAND

DEPARTMENT OF TRANSPORTATION
FEDERAL HIGHWAY ADMINISTRATION
BUREAU OF PUBLIC ROADS

APPROVED:

DIVISION ENGINEER DATE

File Nº	Summit County - Sum-8-17.68
	Date of Letting _____ 19___
	Contract Nº _____

AUG 27 1968

612053 X

LIMITED ACCESS

THIS IMPROVEMENT HAS BEEN DECLARED A LIMITED ACCESS HIGHWAY FROM STATION 229+00.00 TO STATION 1043+44.20 BY ACTION OF THE DIRECTOR OF HIGHWAYS AND RECORDED IN VOLUME 44, PAGE 944, OF THE DIRECTORS JOURNAL PURSUANT TO LAW FIRST HEARING 10-15-59; RECORDED 11-6-59
SECOND HEARING 10-16-62 VOL. 47 PAGE 1209; RECORDED 11-8-62

INDEXED

CENTERLINE SURVEY PLAT

SUMMIT - 8 - 17.63
SUMMIT COUNTY, OHIO
CITY OF CUYAHOGA FALLS
ORIGINAL STOW TOWNSHIP T-3N R-10W

NOTE: THIS PLAT SUPERSEDES CENTERLINE PLAT RECORDED IN PLAT VOL.-70, PGS. 54 & 55 SUMMIT COUNTY RECORD OF PLATS AND IS RE-RECORDED FOR THE PURPOSE OF SHOWING ADDITIONAL MONUMENTS

GRAPHIC SCALE
0 200 400 600 800

T.N.N. R.N. Jr. 5-1-72

FED. RD.	STATE	PROJECT	
2	OHIO	U19 (12)	

405 / 440

SUM-8-17.63

RIGHT-OF-WAY SHEET 1 / 56

6348

TRANSFER NOT NECESSARY SEC. 319.202 REV. CODE COMPLIED WITH EXEMPT
G. L. BOWER, County Auditor, By: [illegible], Deputy

THU 6-15-67

612053
RECEIVED FOR RECORD
MAY - 1 1972
8:10 o'clock A.M.
Recorded MAY 4 - 1972
Vol. 81 Page 52-53-54-55
Roy R. Ruff, Recorder, Summit County, Ohio
By: R. Clay II, Deputy $35.30

470257
RECEIVED FOR RECORD
JUN 15 1967
3:05 o'clock P.M.
Recorded JUN 19 1967
Vol. 70 Page 54-55-56-57
Roy R. Ruff, Recorder, Summit County, Ohio $17.40
By: Carol Dunlap, Dep. Recorder

VOL 81 PAGE 53

CONSTRUCTION CENTERLINE SURVEY CURVE DATA
Δ = 21° 25' 06" RT.
Dc = 1° 28' 00"
R = 3,906.53'
T = 738.79'
Lc = 1,460.34'
E = 69.25'
P.I. STA. 223+31.98

CONSTRUCTION CENTERLINE SURVEY CURVE DATA
Δ = 15° 06' 08" LT
Dc = 1° 28' 00"
R = 3906.53'
T = 517.85'
Lc = 1029.70'
E = 34.17'
P.I. STA. 240+86.53

RELOC SECOND ST. CURVE DATA
Δ = 45° 34' 45" RT.	Δ = 45° 33' 40" LT.
Dc = 18° 45' 00"	Dc = 18° 30' 00"
R = 305.58'	R = 309.71'
Lc = 243.09'	Lc = 246.28'
T = 128.39'	T = 130.06'
E = 25.881	E = 26.20'
P.I. STA. 47+57.39	P.I. STA. 53+07.11

CONSTRUCTION CENTERLINE SURVEY CURVE DATA
Δ = 28°46'09" RT.
Dc = 5°00'00"
R = 1145.92'
Lc = 500.00'
D = 12° 30' 00"
Θs = 2°30'00"
Ts = 345.82'
Es = 46.46'
Ls = 75.38'
Lc = 334.17'
S.T. = 167.43'
Δc = 3°46'09"
Tc = 37.71'
Ec = 0.62'
P.I. STA. 264+15.53

SUBSTITUTE CURVE DATA FOR RIGHT OF WAY
Δ = 12°30'00" RT.
Dc = 3°44'52"
R = 1528.79'
T = 167.43'
Lc = 333.53'
P.I. #1 STA. 262+03.88
P.I. #2 STA. 266+12.52

HUDSON DR. CURVE DATA
Δ = 9°36'52" RT.
Dc = 3°00'
R = 1909.86'
T = 160.62'
Lc = 320.48'
E = 6.74'
P.I. STA. 50+68.80

ASHLAND - RUDOLPH CONNECTOR CURVE DATA
℄ CURVE N°1
Δ = 67°00' LT.
R = 39.92
T = 26.43
Lc = 46.68
PC. = 47+85.57
P.T. = 48+32.25

℄ CURVE N°2
Δ = 11°01'18" RT.
D = 10°00'00"
R = 572.96'
T = 55.28'
Lc = 110.22
E = 2.66
PC. = 48+70.54
P.T. = 49+80.76

℄ CURVE N°3
Δ = 21°57'21" Lt.
R = 87.64'
T = 17.00'
Lc = 33.58'
E = 1.63
PC. = 50+73.75
P.C.C. = 51+07.33

℄ CURVE N°4
Δ = 90°00' LT.
R = 38.00'
T = 38.00'
Lc = 59.69'
P.C.C. = 51+07.33
P.T. = 51+67.02

RUDOLPH AVE.

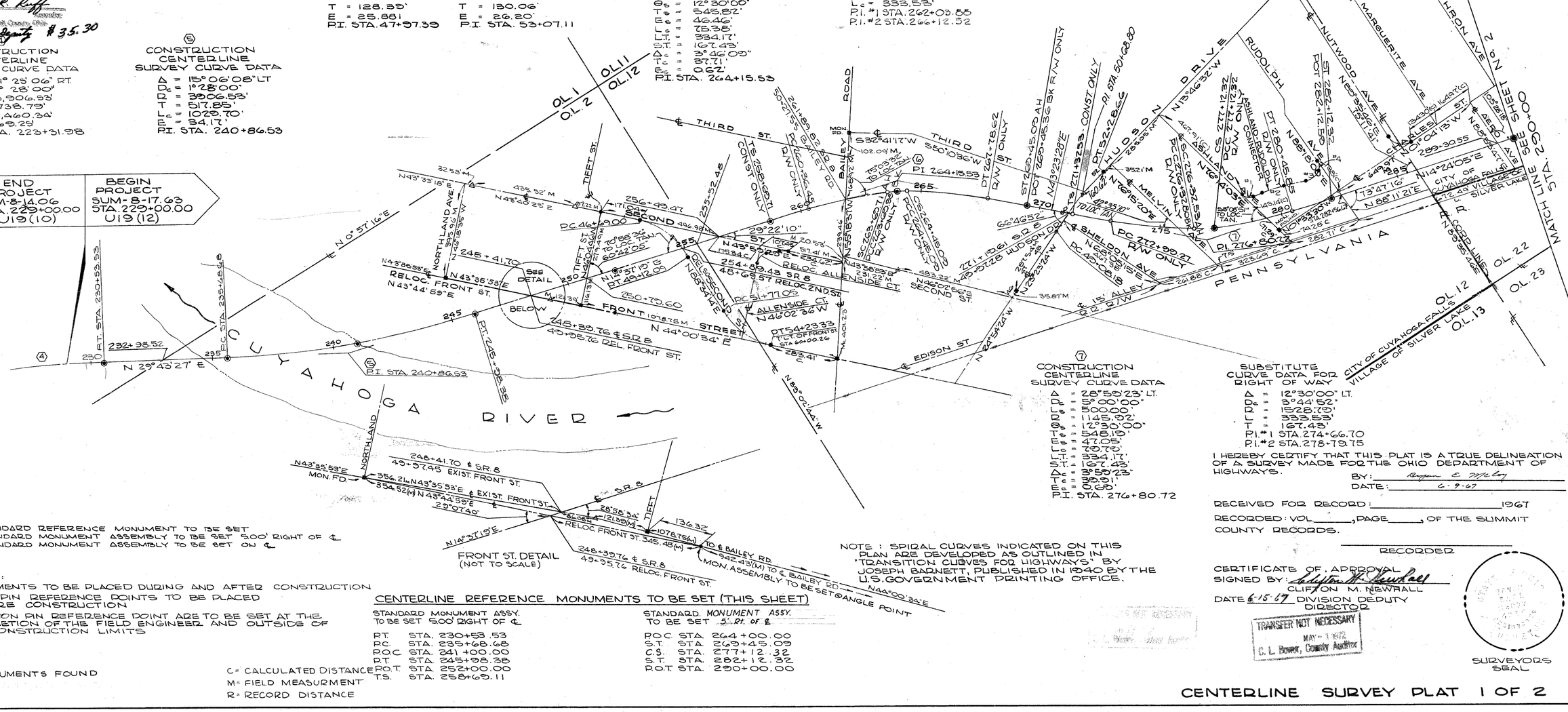
END PROJECT SUM-8-14.06 STA. 229+00.00 U19(10)
BEGIN PROJECT SUM-8-17.63 STA. 229+00.00 U19(12)
N 0° 57' 16" E
N 29° 43' 27" E
N 43° 33' 18" E
N 43° 38' 58" E
RELOC. FRONT ST. N 43° 44' 59" E
N 43° 38' 58" E
N 44° 00' 34" E
N 46° 02' 34" W
N 24° 54' 24" W
N 14° 24' 05" E
N 14° 37' 19" E
N 44° 00' 34" E
N 85° 02' 44" W
S 32° 41' 17" W
S 50° 10' 36" W
N 43° 23' 28" E
N 13° 26' 32" W
N 14° 24' 05" E
N 86° 11' 21" E
N 04° 04' 13" W
N 85° 18' 10" E
N 43° 38' 58" E
N 44° 00' 34" E
N 44° 00' 34" E
N 24° 54' 24" W
N 43° 38' 58" E
N 43° 38' 58" E
N 44° 00' 34" E
N 44° 00' 34" E
N 24° 54' 24" W

LIMITED ACCESS
THIS IMPROVEMENT HAS BEEN DECLARED A LIMITED ACCESS HIGHWAY FROM STATION 229+00.00 TO STATION 1043+44.20 BY ACTION OF THE DIRECTOR OF HIGHWAYS AND RECORDED IN VOLUME 44, PAGE 344, OF THE DIRECTORS JOURNAL PURSUANT TO LAW.
FIRST HEARING 10-15-59; RECORDED 11-6-59
SECOND HEARING 10-16-62 VOL. 47 PAGE 1208; RECORDED 11-8-62

NOTE: THIS PLAT SUPERSEDES CENTERLINE PLAT RECORDED IN PLAT VOL.-70, PGS. 56 & 57 SUMMIT COUNTY RECORD OF PLATS AND IS RE-RECORDED FOR THE PURPOSE OF SHOWING ADDITIONAL MONUMENTS

CENTERLINE SURVEY PLAT

SUMMIT - 8 - 17.63
SUMMIT COUNTY, OHIO
CITY OF CUYAHOGA FALLS
ORIGINAL STOW TOWNSHIP T-3 N R-10 W

(INDEXED)

FED. RD.	STATE	PROJECT	
2	OHIO	U19 (12)	

406/460

SUM-8-17.63

RIGHT-OF-WAY SHEET 2/56

VOL. 81 PAGE 55

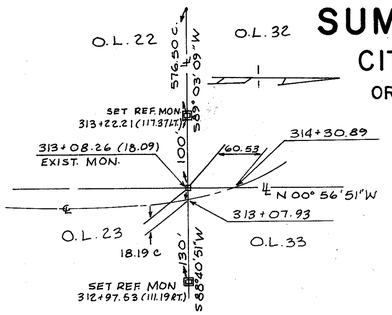

GRAPHIC SCALE
0 200 400 600 800

⑧ CONSTRUCTION CENTERLINE SURVEY CURVE DATA
Δ = 50°33'25"
Dc = 3°00'00"
Ls = 350.00'
D = 1909.86'
θs = 5°15'00"
Ts = 1260.31'
Es = 203.64'
Lc = 1635.73'
LT. = 233.44'
S.T. = 116.76'
Δs = 49°03'25"
Tc = 871.52'
Ec = 180.45'
P.I. STA. 316+71.72

SUBSTITUTE CURVE DATA FOR RIGHT OF WAY
Δ = 5°15'00" LT.
Dc = 2° 14' 59"
D = 2549.73'
Lc = 233.36'
T = 116.76'
P.I. #1 STA 306+35.83
P.I. #2 STA 325+04.40

EXIST. GRAHAM RD. CURVE DATA
Δ = 28°57'00"
Dc = 9°00'00"
T = 164.34'
Lc = 321.67'
P.I. STA. 110+09.45

RELOCATED GRAHAM RD. CURVE DATA
Δ = 56°22'40"
Dc = 5°00'
R = 1145.92'
T = 614.15'
Lc = 1127.56'
E = 154.20'
P.I. STA. 113+54.92

EXIST. GRAHAM RD. CURVE DATA
Δ = 27°25'40"
Dc = 12°00'00"
T = 116.52'
Lc = 228.56'
P.I. STA. 116+26.96

GRAHAM RD CURVE DATA
Δ = 27° 17' 25"
Dc = 5° 00'
T = 278.18'
Lc = 545.81'
R = 1145.92'
P.I STA. 124+17.92

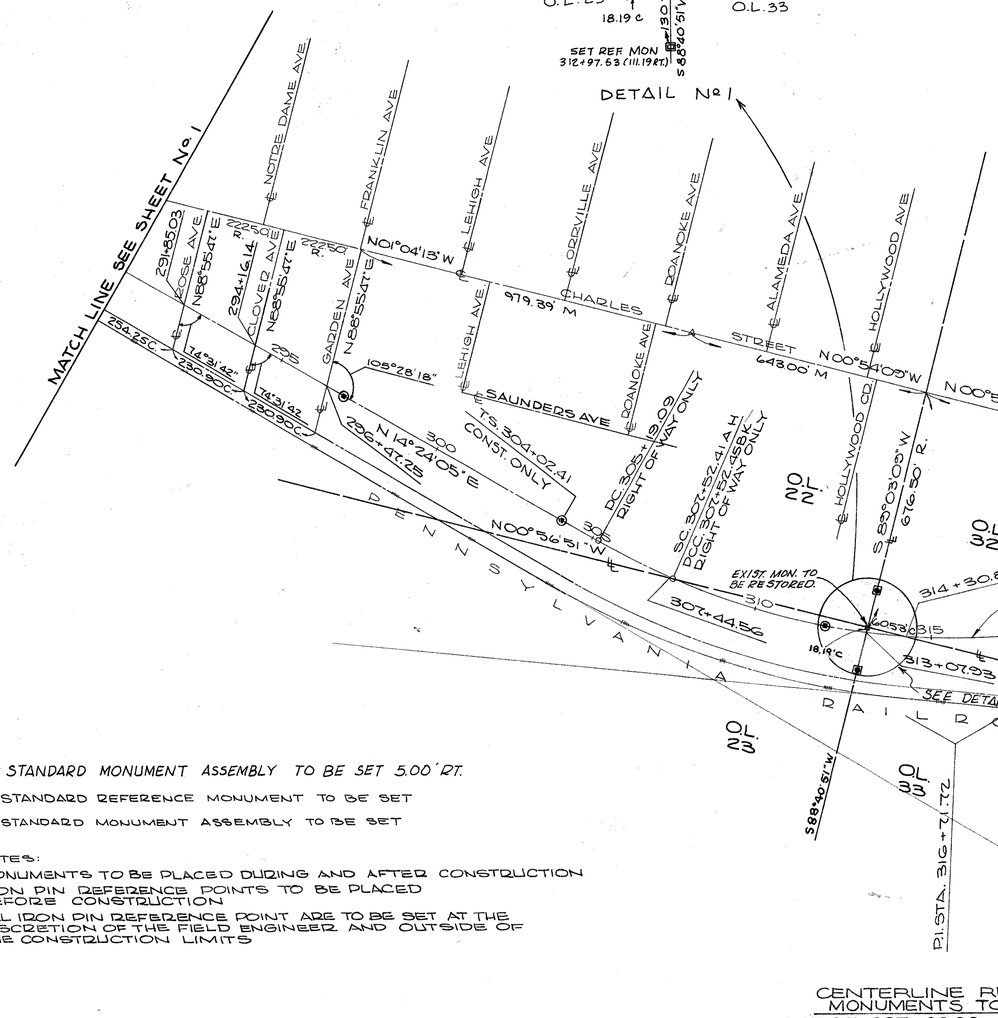

- ● STANDARD MONUMENT ASSEMBLY TO BE SET 5.00' RT.
- ▣ STANDARD REFERENCE MONUMENT TO BE SET
- • STANDARD MONUMENT ASSEMBLY TO BE SET

NOTES:
MONUMENTS TO BE PLACED DURING AND AFTER CONSTRUCTION
IRON PIN REFERENCE POINTS TO BE PLACED BEFORE CONSTRUCTION
ALL IRON PIN REFERENCE POINT ARE TO BE SET AT THE DISCRETION OF THE FIELD ENGINEER AND OUTSIDE OF THE CONSTRUCTION LIMITS

■ MONUMENTS FOUND

C= CALCULATED DISTANCE
M= FIELD MEASURMENT
R= RECORD DISTANCE

CENTERLINE REFERENCE MONUMENTS TO BE SET 5' RT. OF ℄

P.O.T. STA. 297+00.00	P.O.C. STA. 320+00.00
T.S. STA. 304+02.41	S.T. STA. 327+37.64
P.O.C. STA. 312+00.00	P.O.T. STA. 333+50.00

NOTE: SPIRAL CURVES INDICATED ON THIS PLAN ARE DEVELODED AS OUTLINED IN "TRANSITION CURVES FOR HIGHWAYS" BY JOSEPH BARNETT, PUBLISHED IN 1940 BY THE U.S. GOVERNMENT PRINTING OFFICE.

I HEREBY CERTIFY THAT THIS PLAT IS A TRUE DELINEATION OF A SURVEY MADE FOR THE OHIO DEPARTMENT OF HIGHWAYS
BY: Roger E McCoy
DATE: 6-9-67

RECEIVED FOR RECORD: _____ 196 ____
RECORDED: VOL. _____, PAGE _____, OF THE SUMMIT COUNTY RECORDS.
_____ RECORDER

CERTIFICATE OF APPROVAL
SIGNED BY: Clifton M. Newhall
CLIFTON M. NEWHALL
DATE 6-15-67 DIVISION DEPUTY DIRECTOR

SURVEYORS SEAL

CENTERLINE SURVEY PLAT 2 OF 2

VOL. 81 PAGE 54

AUG 27 1968

K & E - AKRON

PROPERTY MAP

SUMMIT - 8 - 17.63

SUMMIT COUNTY, OHIO

CITY OF CUYAHOGA FALLS

ORIGINAL STOW TOWNSHIP T-3N R-10W

FED. RD.	STATE	PROJECT	
2	OHIO	U19(12)	

407/460

SUM-8-17.63

RIGHT-OF-WAY SHEET 3/56

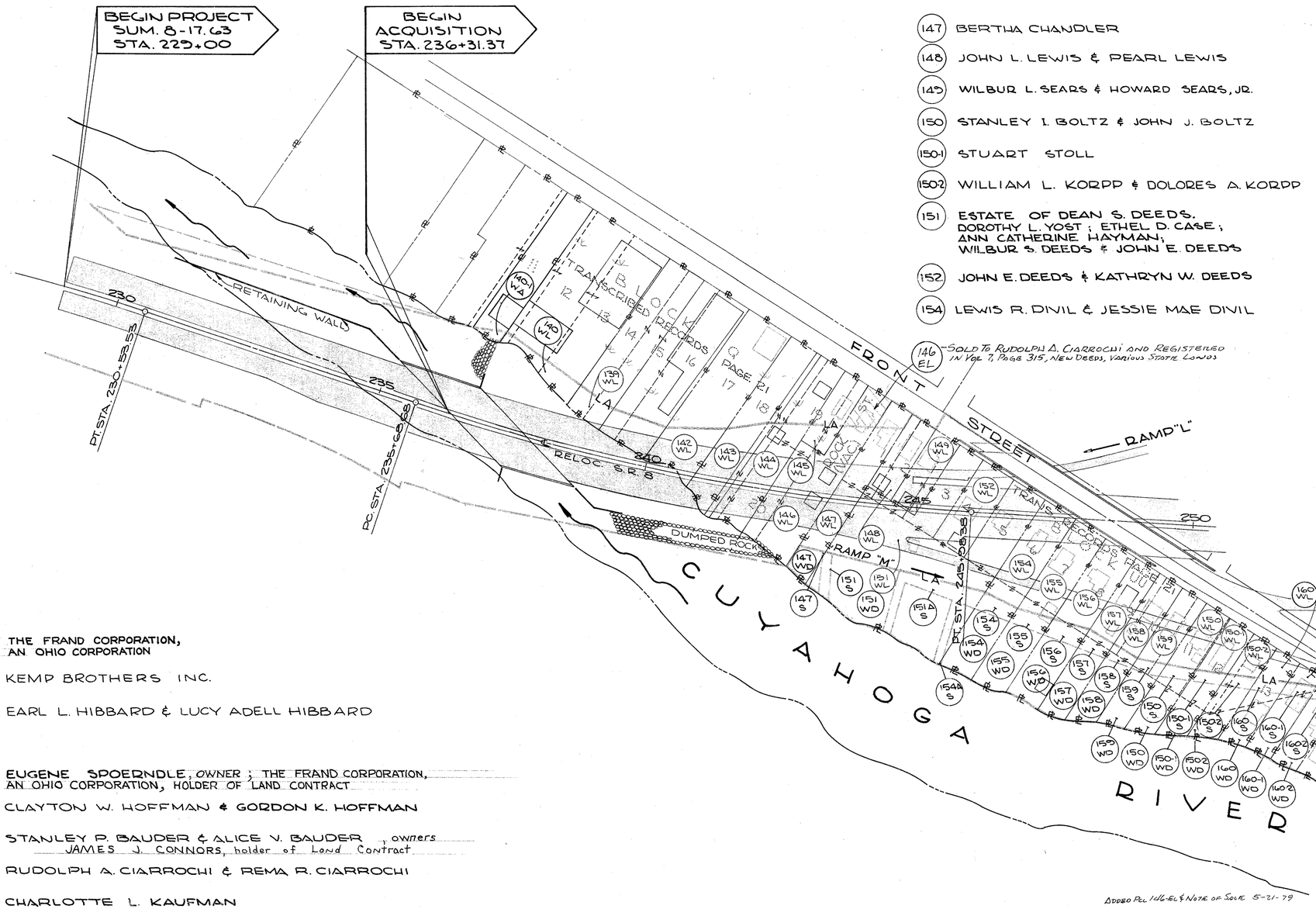

(147) BERTHA CHANDLER

(148) JOHN L. LEWIS & PEARL LEWIS

(149) WILBUR L. SEARS & HOWARD SEARS, JR.

(150) STANLEY I. BOLTZ & JOHN J. BOLTZ

(150-1) STUART STOLL

(150-2) WILLIAM L. KORPP & DOLORES A. KORPP

(151) ESTATE OF DEAN S. DEEDS. DOROTHY L. YOST; ETHEL D. CASE; ANN CATHERINE HAYMAN; WILBUR S. DEEDS & JOHN E. DEEDS

(152) JOHN E. DEEDS & KATHRYN W. DEEDS

(154) LEWIS R. DIVIL & JESSIE MAE DIVIL

(146 EL) – SOLD TO RUDOLPH A. CIARROCHI AND REGISTERED IN VOL. 7, PAGE 315, NEW DEEDS, VARIOUS STATE LANDS

(155) CORRINE E. PATTERSON

(156) JAMES V. CAPRIOLA & HELEN E. CAPRIOLA

(157) LORETTA COULSON & SHIRLEY ELAINE COSTICK

(158) LEOTA D. WRIGHT

(159) RICHARD F. MILLER & LUELLA B. MILLER

(160) MARY A. HAYNES f.k.a. MARY A. CARUSO

(160-1) MARTHA JARRETT

(160-2) FREDRICK O. NOBLE & HELEN B. NOBLE

(160-3) ALAN E. EDERER & ROBERT E. NORRIS

(160-6) CHARLES ROBERT LOWE & ALICE V. LOWE

(160-7) MERCEDES MOORE

(139) THE FRAND CORPORATION, AN OHIO CORPORATION

(140) KEMP BROTHERS INC.

(140-1) EARL L. HIBBARD & LUCY ADELL HIBBARD

(142) EUGENE SPOERNDLE, OWNER; THE FRAND CORPORATION, AN OHIO CORPORATION, HOLDER OF LAND CONTRACT

(143) CLAYTON W. HOFFMAN & GORDON K. HOFFMAN

(144) STANLEY P. BAUDER & ALICE V. BAUDER, owners
JAMES J. CONNORS, holder of Land Contract

(145) RUDOLPH A. CIARROCHI & REMA R. CIARROCHI

(146) CHARLOTTE L. KAUFMAN

AFFECTED UTILITY COMPANIES

OHIO BELL TELEPHONE COMPANY
50 WEST BOWERY STREET
AKRON, OHIO

EAST OHIO GAS COMPANY
1717 EAST NINTH STREET
CLEVELAND, OHIO

OHIO EDISON COMPANY
47 NORTH MAIN STREET
AKRON, OHIO

CITY OF CUYAHOGA FALLS
WATER UTILITIES DEPARTMENT
2310 SECOND STREET
CUYAHOGA FALLS, OHIO

CITY OF CUYAHOGA FALLS
MUNICIPAL ELECTRIC SERVICE
2310 SECOND STREET
CUYAHOGA FALLS, OHIO

ADDED PCL 160-6EL & NOTE OF SOLE 5-21-79

Deleted Pcl. 160-3WD and 160-3LA. Revised area of 160-3WL to included 160-3WD. 7-17-69 White

DELETED PCL 160-7LA: REV. 160-7WD TO PCL 160-7WL - 12-23-74

PRELIMINARY SUBMITTAL DATE
RIGHT OF WAY COMPLETION DATE

NO	REVISIONS	MADE BY	DATE
1	ADDED RR SYMBOLS	E.V.	8-16-68
2	DELETED PCL. 141 & COMBINED AREA WITH PCL. 139. (New Owner)	L.B.	8-28-68
3.	Revised Name Pcl 144	EW	12-3-68
4.	Revised Name Pcl. 142-WL	Lee	2-25-69
5.	Revised Name Pcl. 160-WL	Lee	3-25-69

PROPERTY MAP – SHEET NO. 1 OF 5

AUG 27 1968

K & E-AKRON

PROPERTY MAP

SUMMIT - 8 - 17.63

SUMMIT COUNTY, OHIO

CITY OF CUYAHOGA FALLS

ORIGINAL STOW TOWNSHIP T-3N R-10W

FED. RD.	STATE	PROJECT	
2	OHIO	U19(12)	

408/460

SUM-8-17.63

RIGHT-OF-WAY SHEET 4/56

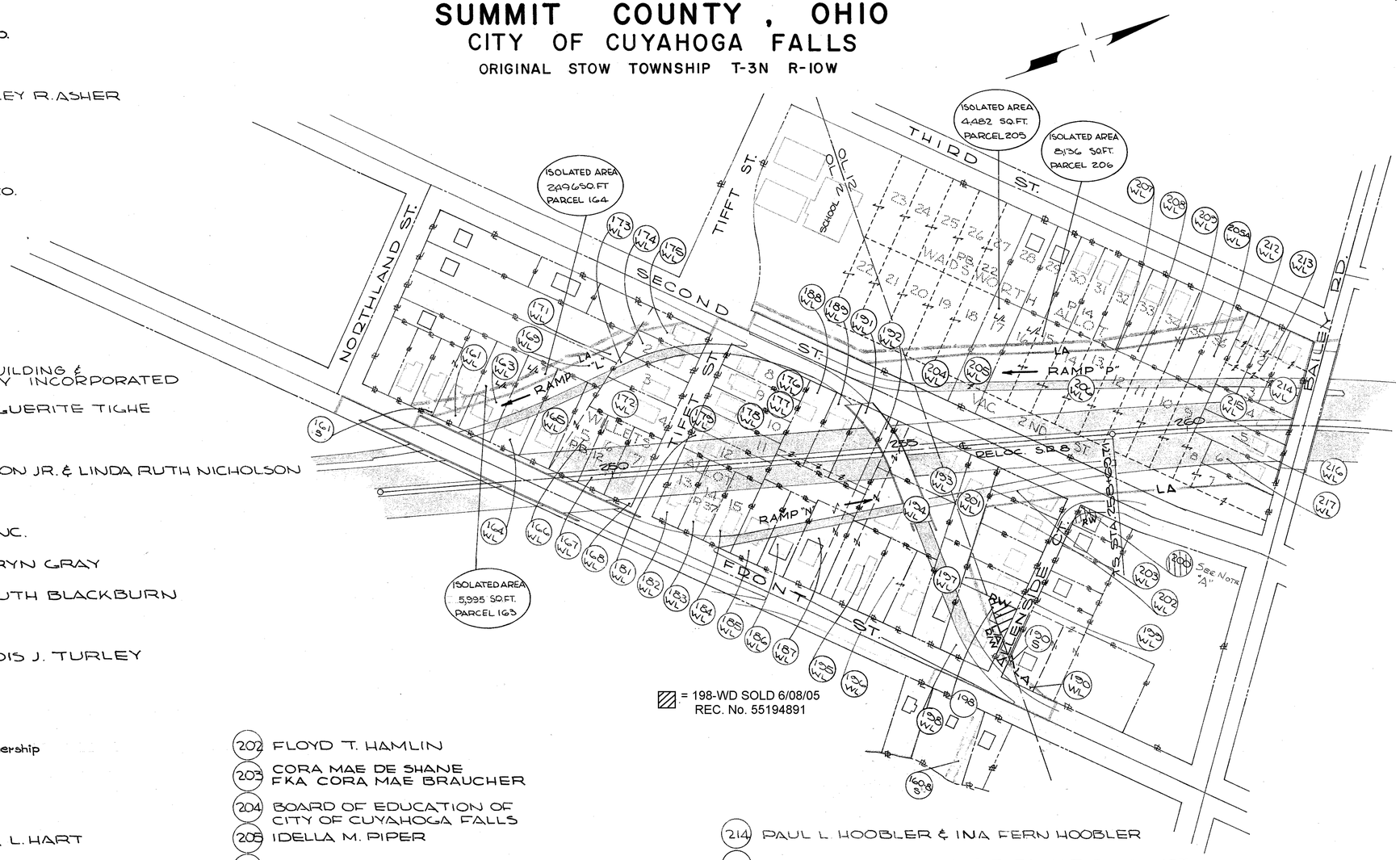

161 ELLIS T. MILLS & MARGARET BARKER MILLS
163 HARRY L. CARDER & HAZEL CARDER
164 EDITH L. SOUERS
165 W.C. KEENAN REALTY CO.
166 EDWARD R. PORTER
167 DEWITT ASHER & SHIRLEY R. ASHER
168 SECURITY REALTY CO.
169 CHARLES E. WOLF
171 THE WAYNE AGENCY CO.
172 JAMES H. SAUSAMAN
173 RUTH M. WOLF
174 EMMA M. SCHAFFER
175 WAYNE H. KOONS AKA WAYNE KOONS
176 THOMAS R. WARREN
177 GILLESPIE-PILCHER BUILDING & INVESTMENT COMPANY INCORPORATED
178 JOHN P. TIGHE & MARGUERITE TIGHE
179 RICHARD L. MILLER
181 ALVA JARED NICHOLSON JR. & LINDA RUTH NICHOLSON
182 RUTH A. LUTZ
183 HAROLD G. RHODES INC.
184 KARL L. GRAY & KATHRYN GRAY
185 L.G. BLACKBURN & RUTH BLACKBURN
186 KATHRYN J. FOWLS
187 JOHN J. TURLEY & LOIS J. TURLEY
188 MARGARET D. COPE
189 ELEANOR H. BACKUS
190 THE ALMAR CO., A Partnership
191 VIVIAN L. KLUGHART
192 LLOYD F. BENDER
193 JOHN C. HART & ARTA L. HART
194 HUGH T. RINEHART & INEZ K. RINEHART
195 *Akron National Bank AND Trust Co. ETAL.*
196 ANNA M. WISE
197 LELAND COX AKA LELAND S. COX
198 ELEANOR M. NIHOUSEN
199 DAVID K. FIRM & DOROTHY K. FIRM
200 FRANK J. MANSFIELD & JEANNE MANSFIELD
201 PAUL PFOUTS & KATHRYN PFOUTS
202 FLOYD T. HAMLIN
203 CORA MAE DE SHANE FKA CORA MAE BRAUCHER
204 BOARD OF EDUCATION OF CITY OF CUYAHOGA FALLS
205 IDELLA M. PIPER
206 THE FRED W. ALBRECHT GROCERY CO.
207 JOHN DING & DAISY T. DING
208 HERBERT R. NORRIS & MARTHA NORRIS
209 W. KENT SLUTZ
205A SEE PARCEL 205
212 EDWARD G. WEBER & JOANNE M. WEBER
213 EMERALD C. HINKLE & GLADYS V. HINKLE
214 PAUL L. HOOBLER & INA FERN HOOBLER
215 RAYMOND I. FRANCE & ELEANOR D. FRANCE
216 JACK MARSILLO & SYLVIA MARSILLO
217 WENDELL W. ARMSTRONG & IRENE A. ARMSTRONG
1608 HAROLD SOMMERS

NOTE "A" PCL 200 CONVEYED TO THE CITY OF CUYAHOGA FALLS BY DIRECTOR'S DEED RECORDED IN VOL. 6589, PGS. 486-489

810-82 CROSS-HATCHED PCL 200 TO SHOW CONVEYANCE TO CITY OF CUYAHOGA FALLS

* STATE-FEDERAL PARTICIPATION ONLY

QUANTITY SUMMARY TYPE CL FENCE	
SHEET Nº	LIN. FT.
18	457
19	609
20	1015
21	434
22	575
23	528
24	1224
25	400
26	835
27	0
28	0
29	1026
30	1070
31	1108 /**
34	1141
35	1005
36	1105
37	1105
38	1105
39	1105
40	1020
41	1000
42	1010
43	750
45	365
*46	* 445
47	240
*48	* 367
*49	* 295
*50	* 290
*51	* 580
*52	* 869
*53	BY OTHERS
*54	* 195
55	455
56	184
TOTAL	20,471
	* 3,041
	**1 GATE

GRAPHIC SCALE
0 100 200 300 400

PRELIMINARY SUBMITTAL DATE RIGHT OF WAY COMPLETION DATE			
Nº	REVISIONS	MADE BY	DATE
1	IDENTIFIED SCHOOL	E.V.	8-16-68
2	DELETED PCL. 162 & COMPINED AREA TO PCI 161	L.B.	8-28-68
3	CHANGED NAME PCL. 208	L.B.	10-2-68
4	FENCE QUANTITIES	D.D.A.	10-16-68
5	L/L AREA CORR. PCL. 163	L.B.	11-5-68
6	NAME CHANGE PCL. 190.	LEE	4-7-69
7	Sold parcel 198-WD	DJH	4/02/06

PROPERTY MAP - SHEET Nº 2 OF 5

AUG 27 1969

K & E - AKRON

PROPERTY MAP

SUMMIT - 8 - 17.63
SUMMIT COUNTY, OHIO
CITY OF CUYAHOGA FALLS
ORIGINAL STOW TOWNSHIP T-3N R-10W

FED. RD.	STATE	PROJECT	
2	OHIO	U19(12)	

409/460

SUM-8-17.63

RIGHT-OF-WAY SHEET 5/56

218 HUMBLE OIL & REFINING COMPANY
219 FIRST NATIONAL BANK OF AKRON, TRUSTEE
221 FALLS SUPERSONIC CAR WASH INC.
222 HENRY A. KREINBERG
223 LAURA B. CONRAD
224 ROBERT J. LEWIS
225 WILLIAM L. PIERSON & JUNE M. PIERSON
226 MOLLIE CASE
227 R.F. COOK MANFACTURING COMPANY
228 PROGRESSIVE MOLD AND MACHINE CO.
229 OLGA V. GOOD

244 ROBERT J. HARTER & LURETTA B. HARTER
245 LUCILLE I. MITROVICH

248 W.L. TUCKER COAL & SUPPLY CO.
249 JOSEPH S. DAYTON JR. & DARLENE IRENE DAYTON
250 V.B. & R.E. SIMONS
251 ELIZABETH ANN HURLEY
252 MILDRED CATHERINE WOOD

253 GERTRUDE J. GEBHART FKA GERTRUDE J. ELLSWORTH
254 CELINA E. KIMES
255 OHIO EDISON CO.
256 ROY HOLLAND
285 CORA A. CUNNINGHAM

265 MILDRED A. HATFIELD
266 ANTHONY FALCONE & RUTH L. FALCONE
267 JAMES P. JEFFERY & JENNIE LEE JEFFERY
268 ODA W. GOUGH & LEAH GOUGH
269 HAZEL M. BURDICK
271 BENNIE HARMON & GLAYDIES HARMON
272 MAMIE HARTER
273 CALVIN HARTER

297 MARY VINCZELLER
298 RANDALL A. WEITZEL & IRENE S. WEITZEL
299 JASON F. BURLEY & JEANNETTE S. BURLEY
301 VILA M. MOORE
263 BETTY J. FARRIS

231 IRENE W. JORDAN NKA IRENE W. QUAINTANCE
232 MARGUERITE M. STRONG

234 THE GENERAL TIRE & RUBBER CO.
235 JIMMIE WILHELM & MARLYN JOYCE WILHELM
236 BEN E. FORBES
237 ANTHONY GAYLAN
238 IRENE SENN

240 BERTHA KODISH
241 MART SMITH & EFFIE SMITH
239A VICTOR A. McFARLAND
243 GEORGE SCHRIBER

254 MART S. SMITH & EFFIE M. SMITH
255 C. SHELDON McKENZIE
256 MACK W. BRISLINGER
257 BONNIE M. BARNARD
258 EDWARD J. DEIBEL & ADA L. DEIBEL
259 GILBERT J. KOHUT
261 THOMAS S. BOWMAN
262 TRUMP PLASTICS INC.
264 VIVIAN E. WHITTAKER

260 REICHHOLD CHEMICALS, Inc.

274 LEHR M. DAVIS & MARY P. DAVIS
275 RICHARD IRVIN WILLIAMS & HELEN ROSALIE WILLIAMS
276 EVA. KLING
277 THOMAS E. COAKLEY & VIOLA MAE COAKLEY
278 MABEL M. BROLLIER
281 JOSEPH A. REED & TOLA B. REED
282 LAURA I. MACHAMER & STERLING S. MACHAMER
283 ROGER WILSON FRANTZ & CATHERINE A. FRANTZ
284 HARRIETT GRAFMILLER
285 CHARLES H. SAMPSON & GEORGE R. SAMPSON, JR.
286 HELEN M. SHOAF
287 DOLLIE LOUISE GIPSON NKA DOLLIE L. BITTNER
288 BEATRICE A. ENSWORTH

Changed Pcl 281 WD to a Standard Highway Easement. white 10-16-69
Name Changed Pcl. 228WL white 9-8-69

ISOLATED AREA 5542 SQ.FT. PARCEL 264
ISOLATED AREA 2217 SQ.FT. PARCEL 265
ISOLATED AREA 2852 SQ.FT. PARCEL 288
ISOLATED AREA 6941 SQ.FT. PARCEL 241

CHANGED PCL 328B-T TO A SEWER EASEMENT 5-12-71
ADDED P.R.O. TO PARCEL 238WL 11-4-70
PCL 239-WL Deleted, PCL 234-WL Revised 10-23-69

GRAPHIC SCALE
0 100 200 300 400

5 Added 293-PR J.R.T. 8-14-69

PRELIMINARY SUBMITTAL DATE:
RIGHT-OF-WAY COMPLETION DATE:

No	REVISIONS	MADE BY	DATE
1	Revised Name Pcl. 260 Revised Parcel 221	LB. ECS	10-2-68 10-11-68
2	ADDED WEST LINES TO LOTS 15-16-817 OF IDEAL ALLOTMENT.	J.R.T.	12-18-68
3	Revised name per outside Pcl 224	J.R.S.	1-6-69
4	Revised Name Pcl. 264	Lee	1-27-69

PROPERTY MAP - SHEET No. 3 OF 5

Revised Name Pcl. 232-WL Lee 2-11-69

AUG 27 1969

K & E - AKRON

PROPERTY MAP

SUMMIT - 8 - 17.63

SUMMIT COUNTY, OHIO

CITY OF CUYAHOGA FALLS

ORIGINAL STOW TOWNSHIP T-3N R-10W

FED. RD.	STATE	PROJECT	
2	OHIO	U19(12)	

410
460

SUM-8-17.63

RIGHT-OF-WAY SHEET 6/56

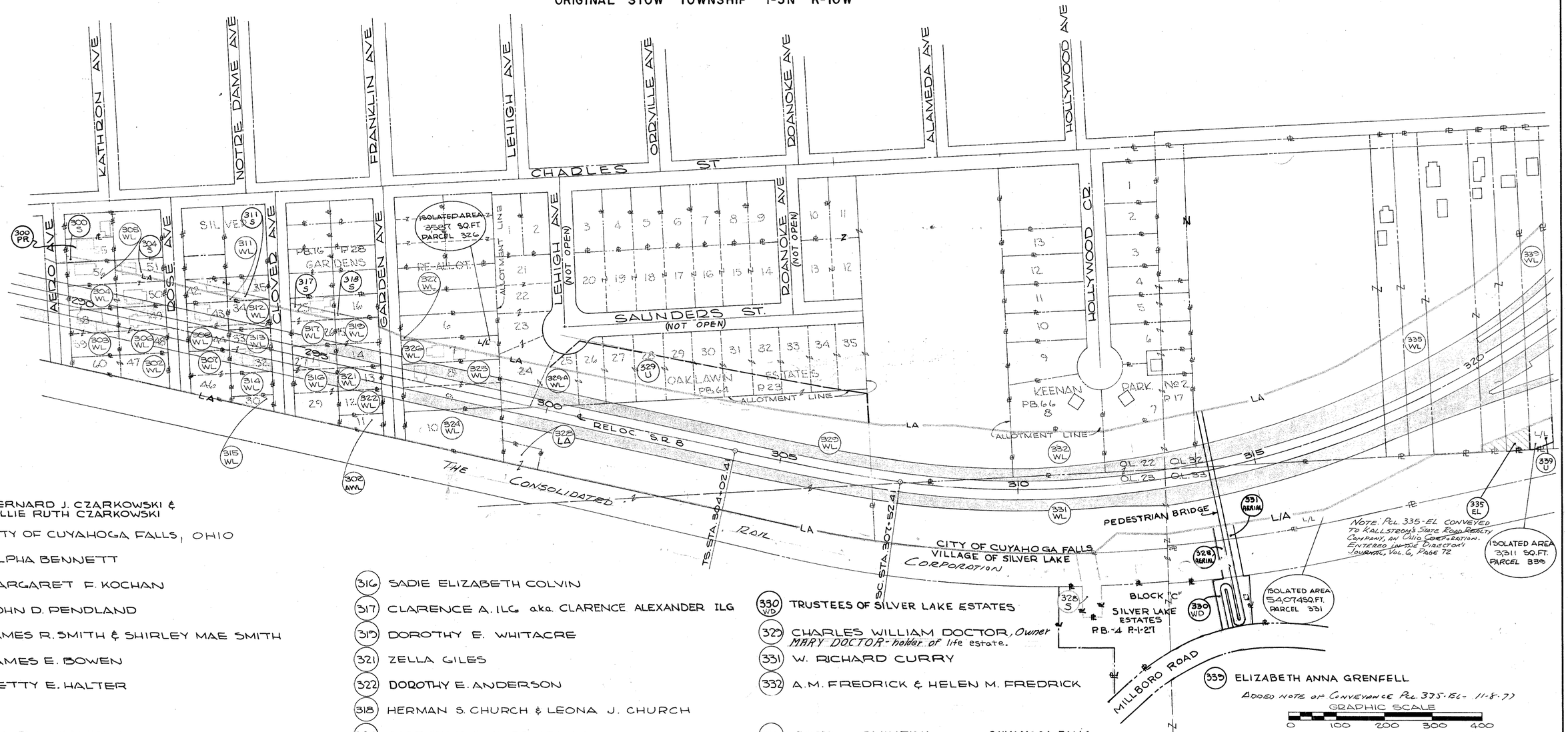

(300) BERNARD J. CZARKOWSKI & BILLIE RUTH CZARKOWSKI

(302) CITY OF CUYAHOGA FALLS, OHIO

(303) ALPHA BENNETT

(304) MARGARET F. KOCHAN

(305) JOHN D. PENDLAND

(306) JAMES R. SMITH & SHIRLEY MAE SMITH

(307) JAMES E. BOWEN

(308) BETTY E. HALTER

(311) DAVID W. KAUFMAN

(312) GEORGE LUCAS & MICHAEL M. SIMMS

(313) ARTHUR R. MOORE JR.

(314) ABNER D. ZOOK

(315) RUTH HARRIET ROGERS NKA RUTH ROGERS WILSON

(316) SADIE ELIZABETH COLVIN

(317) CLARENCE A. ILG aka. CLARENCE ALEXANDER ILG

(319) DOROTHY E. WHITACRE

(321) ZELLA GILES

(322) DOROTHY E. ANDERSON

(318) HERMAN S. CHURCH & LEONA J. CHURCH

(324) EAST OHIO GAS COMPANY

(325) NORA I. HALBLAUB, ESTATE OF

(326) ROBERT L. FREEMAN & MELBA F. FREEMAN

(327) ROBERT J. WINFIELD

(328) *THE CONSOLIDATED RAIL CORPORATION*

(330 WD) TRUSTEES OF SILVER LAKE ESTATES

(329) CHARLES WILLIAM DOCTOR, *Owner*
MARY DOCTOR- holder of life estate.

(331) W. RICHARD CURRY

(332) A.M. FREDRICK & HELEN M. FREDRICK

(335) *BOARD OF EDUCATION OF THE CUYAHOGA FALLS CITY SCHOOL DISTRICT*

(339) ELIZABETH ANNA GRENFELL

Added note of Conveyance Pcl. 335-EL- 11-8-77

Changed Pcl. 328T to A Sewer Ease. 5-12-71
Changed Pcl. 328 WL To 328LA & Revised Name 3-24-71
Added Parcels 329U & 339U L.S. 10-15-70
Added 335-EL per S.A.E. 8-17-70 Sands
Changed 330WD to Esmt-Per D.O.C. H.Eckert - white 8-26-69
Revised south R-335WL Per outsale white 8-19-69
Added 300-PR M.K.M. 8-18-69
DELETED PCL. 334 & COMBINED AREA WITH PCL. 335-WL PER OUTSALE LEE 9/26/69

Pcl. 330 Converted back to Pcl. 330WD - 10-31-69
Revised Name Pcl "329 9/16/69 Solomon
Removed Fr. Shed and 1/2 Sty Fr Hse from Pcl 312WL. White 4-17-69
DELETED PCLS. 337-WL & 338-WL COMBINED AREA WITH PCL. 335-WL PER OUTSALE. 4/15/69
ADDED PARCEL 328-AERIAL 330-WD AND 331-AERIAL FOR PEDEST. BRIDGE. CONSULTANT 4-14-69
REVISED NAME PCL. 317 LEE 1-13-69
Revised Name Pcl 327. 11-4-69 white
Revised Name Pcl 328 5-9-77

GRAPHIC SCALE
0 100 200 300 400

PRELIMINARY SUBMITTAL DATE: RIGHT-OF-WAY COMPLETION DATE:			
Nº	REVISIONS	MADE BY	DATE
1	ADDED LOTS 1-22 OAKLAWN EST. DELETED PCLS. 335 1/2 WL & 336 WL &	E.V.	8-16-68
2	COMBINED WITH 335 WL. NAME CHANGE ON TITLE	J.R.B.	9/18/68
3.	Combined Pcl 309 with Pcl 311. Pcls Now include 311 WL, 311 WA 311-S. New owner aquired 309.	E.W.	12-3-68
4	REVISED OWNER-PCL 338-PER OUTSALE	SANDS	2-10-69

PROPERTY MAP — SHEET Nº 4 OF 5

AUG 27 1969
LODGED
K & E-AKRON

PROPERTY MAP

SUMMIT - 8 - 17.63
SUMMIT COUNTY, OHIO
CITY OF CUYAHOGA FALLS
ORIGINAL STOW TOWNSHIP T-3N R-10W

FED. RD.	STATE	PROJECT	
2	OHIO	U19(12)	

SUM-8-17.63

RIGHT-OF-WAY SHEET 7/56

411/406

NOTE: ▨ = AREA CONVEYED TO THE CITY OF CUYAHOGA FALLS BY DIRECTOR'S DEED, VOLUME ____, PAGE ____. ENTERED IN THE JOURNAL OF THE DIRECTOR OF TRANSPORTATION, VOLUME 2, PAGE 531, ON 12-4-1975

ISOLATED AREA 4236 SQ.FT. PARCEL 341

ISOLATED AREA 17351 SQ. FT. PARCEL 343

ISOLATED AREA 6883 SQ.FT. PARCEL 342

ISOLATED AREA 14,980 SQ.FT. PARCEL 353

ISOLATED AREA 2482 SQ FT PARCEL 204A

CRYSTAL LAKE SUB PB 44 PGS. 33 ALL'T VAC. COM. PLEAS CT. 199325-1955

CRYSTAL LAKE DR. (VAC. ORD 14-1955)

FAIRWAY DR (VAC. ORD 14-1955)

BROOKVALE RD (VAC. ORD. 14-1955)

CURTIS ST.

CITY SILVER LAKE CUYAHOGA FALLS PENNSYLVANIA

CITY OF STOW

CORP LINE

GRAHAM RD

CITY OF CUYAHOGA FALLS

RAMP "C"

RAMP "A"

RAMP "B"

RAMP "D"

TEMPORARY RUN AROUND

& PROP. REL. GRAHAM RD. & EXIST. GRAHAM RD.

RELOC. S.R. 8

CS STA 323+57.64

ST STA 321+37.64

BK STA 333+79.30 AH STA 10+95.00 OD

END PROJECT SUM-8-17.63 STA 1043+44.20 U19(12)

BEGIN PROJECT SUM-8-17.63 STA 1043+44.20 U19(14)

25' UTILITY EASEMENT

25' SEWER E.

30' SEWER EASEMENT

L/A

RW

(I.L.)

Presently (I.L.)

HUDSON DR.

RAILROAD

CORP. LINE SILVER LAKE VILLAGE

CITY OF STOW

ALLOTMENT LINES

BLOCK A

OL 32 OL 33 OL 32 OL 42

348 HERBERT L. BULLARD & CATHERINE P. BULLARD

341 THOMAS EDWARD SAMPSON & ANNA ELIZABETH SAMPSON

342 RICHARD E. HISSEM & HELEN L. HISSEM

343 ELIZABETH ANNIE GRENFELL a.k.a. ELIZABETH A. GRENFELL

344 RICHARD J. McCOWIN

345 PATSY CARDONE & BETTIE CARDONE

346 EDWARD P. FIOCCA & JUDITH ANN FIOCCA

347 JOANNA MAY HAAS

349 RAY E. BECKWITH & MARGARET L. BECKWITH

348-1 JAMES N. CHADWELL

349-2 MARJORIE MERRILL

349-3 KENNETH S. SHUMAN

349-4 FRANK M. JOHNSON & NINA G. JOHNSON

349-5 ORIE E. & JOANN E. GRAFTON

349-6 CLIFFORD B. & VIRGINIA E. RHOADS

349-7 CARL A. & BERTHA M. RODGERS

350 CRYSTAL PARK DEVELOPMENT CORP.

351 THE CARTER-JONES LUMBER CO.

352 JOHN H. COWLEY JR. & ALMEDA L. COWLEY

353 MARGARET L. PEARCH

354 HAROLD R. BAILEY & ELIZABETH M. BAILEY

354-1 MARGUERITE DICKINSON

354-2 FRANK J. & ELIZABETH HUMBERT

204 A BOARD OF EDUCATION, CITY OF CUYAHOGA FALLS

356 WARD SIGLER, MAUD R. MOTZ, KATHRYN M. HUNTER JEAN LUTZ & CLAREENE WHARRY

357 JAMES C. CASSIDY

358 AUDRIA McCUNE

359 BRYAN F. CARPENTER

350-1 SILVER LAKE COUNTRY CLUB

348-1 JOAN LOEFFLER (NOT EFFECTED)

340 WILLIAM G. DALTON & MARY A. DALTON (NOT EFFECTED)

360 RAY W. GOODWIN

358 A AUDRIA McCUNE

359 A LESLIE W. JACKSON & MAXINE V. JACKSON

359 B OHIO EDISON COMPANY, an OHIO CORPORATION

0 100 200 300 400

PRELIMINARY SUBMITTAL DATE: RIGHT OF WAY COMPLETION DATE:			
Nº	REVISIONS	MADE BY	DATE
1	CORR. I.D. LOCATIONS AND SYMBOLS	E.V.	8-16-68
2	ADDED EASEMENTS	E.V.	8-16-68
3	PARCEL NOS 340 & 348-1 NOT EFFECTED	J.M.	8-16-68
4	CRYSTAL LAKE SUB. ADDED	J.M.	8-23-68
5	NAME CHANGE PCL. 358	LEE	4/8/69
6	NAME CHANGE PCLS 348, 356, 357 PCL. 358	LEE JUE T.	4/24/69

ADDED PCLS 358 AWL, 359 AWL AT & 339 BWL 2-14-74
Changed PCL 349 WD to Homeland Highway Easement 8-11-69 M.K.M.
Added Note For Conveyance of Sewer Rd. 12-18-70

ADDED PARCELS 342-U & 343-U L.S. 10-15-70
Changed 344-WD to Easement - White 9-8-69
ADDED PCL. 359 BWD 10-10-74

PROPERTY MAP - SHEET Nº 5 OF 5

FED. RD.	STATE	PROJECT	
2	OHIO	U 19(12)	

412/460

SUM-8-17.63

RIGHT-OF-WAY SHEET 8/56

SUMMARY OF RIGHT OF WAY REQUIRED

TOTAL NUMBER OF OWNERS WITH STRUCTURES TO BE TAKEN 145

TOTAL NUMBER AFFECTED OWNERS 215

PARCEL Nº	OWNER	DEED RECORD BOOK	DEED RECORD PAGE	DEED AREA TOTAL SQ. FT.	DEED AREA SQ. FT. CORR.	TOTAL P.R.O.	TO BE ACQUIRED SQ. FT. TOTAL TAKE	P.R.O. IN TAKE	NET TAKE	BLDGS.	NET RESIDUE LEFT	NET RESIDUE RIGHT	TYPE FUNDS U	TYPE FUNDS STATE		SHEET Nº	REMARKS
139 WL 139 WA	THE FRAND CORPORATION, AN OHIO CORPORATION	4748	417		55,453	—	9,311	—	9,311	NO	46,142	—	9,311			20 20	THOMPSON PONTIAC INC. LEASEE RELOC. DRAIN PIPE
140WL	KEMP BROTHERS INC. (AN OHIO CORPORATION)	4066 4066 4066 4066	317 328 331 334		46,726	—	5,223	—	5,223	NO	41,503	—	5,223			19-20	
140-1 WA	EARL L. HIBBARD & LUCY ADELL HIBBARD	3498	221													19	GRADING
142 WL	EUGENE SPOERNDLE, OWNER; THE FRAND CORPORATION, AN OHIO CORPORATION, HOLDER OF LAND CONTRACT	1606 2884 2956 3182	107 215 49 532		28,778	—	8,892	—	8,892	NO	19,886	—	8,892			20	
143 WL	CLAYTON W. HOFFMAN & GORDON K. HOFFMAN	2969	211		17,988	—	8,754	—	8,754	NO	9,234	—	8,754			20	
144 WL	STANLEY P. BAUDER & ALICE V. BAUDER, owners; JAMES J. CONNORS, holder of Land Contract	4135	58		24,871	—	16,187	—	16,187	YES	8,684	—	16,187			20	
145 WL	RUDOLPH A. CIARROCHI & REMA R. CIARROCHI	3902	595		7,250	—	1,949	—	1,949		5,301	—	1,949			20	
146 WL 146-EL	CHARLOTTE L. KAUFMAN	3394 3633	466 189		27,609	—	27,609	—	27,609	YES	—	—	23,681	3,928		20,21 21	Pcl 146-EL Sold To Rudolph A. Ciarrochi, Sr. and Richstared in Vol 7, Page 315, New Deeds, Various State Lands Area Conveyed 39105 S.F.
147 WL 147 WD 147 S	RAY E. CHANDLER, JR.	4637	563		16,521	—	13,858 2,663 26	— —	13,858 2,663 26	YES	— —	— —	13,858 2,663 26			20,21,22 20 20	2,331 SY FORMERELY STATE FUNDS STORM SEWER
148 WL	JOHN L. LEWIS & PEARL LEWIS	2389	515		7,500	—	7,500	—	7,500	YES	—	—	7,500			21	
149 WL	WILBUR L. SEARS & HOWARD SEARS JR.	4345	62		7,500	—	7,500	—	7,500	YES	—	—	7,500			21,22	
150 WL 150 WD 150 S	STANLEY I. BOLTZ & JOHN J. BOLTZ AKA JOHN S. BOLTZ	4351	5	10,324	12,800	—	5,799 7,001 880	— —	5,799 7,001 880	YES	— —	— —	5,799 7,001 880			24,27 27 24,27	RELOC. SANITARY SEWER
150-1 WL 150-1 WD 150-1 S	STUART STOLL	3917	67		11,525	—	4,831 6,694 811	— —	4,831 6,694 811	YES	— —	— —	4,831 6,694 811			24,27 27 24,27	RELOC. SANITARY SEWER
150-2 WL 150-2 WD 150-2 S	WILLIAM L. KORPP & DOLORES A. KORPP	3060 3060	290 293	8,843	10,250	—	3,694 6,556 910	— —	3,694 6,556 910	YES	— —	— —	3,694 6,556 910			24,27 27 24,27	RELOC. SANITARY SEWER
151 WL 151 WD 151 S 151 AS	DOROTHY D. YOST, ETHYL D. CASE, ANN CATHERINE HAYMAN, WILBUR S. DEEDS, JOHN E. DEEDS	2545 4661	587 251		74,949	—	43,750 31,199 1,126 7,708	— —	43,750 31,199 1,126 7,708	YES	— —	— —	43,750 31,199 1,126 7,708			21,22 20,22 20,22 22	RELOC. SANITARY & STORM SEWER RELOC. SANITARY & STORM SEWER
152 WL	KATHRYN W. DEEDS & JOHN E. DEEDS	2559 2822 3313	495 343 458		10,890	—	10,890	—	10,890	YES	—	—	10,890			21,22	
153	NOT USED																
154 WL 154 WD 154 S 154 AS	LEWIS R. DIVIL & JESSIE MAE DIVIL	3119	679		26,553	—	12,915 13,638 2,495 71	— —	12,915 13,638 2,495 71	YES	— —	— —	12,915 13,638 2,495 71			21,22 22 22 22	RELOCATED SANITARY SEWER
155 WL 155 WD 155 S	CORRINE E. PATTERSON	2892 3257	504 9		22,144	—	11,757 10,387 2,445	— —	11,757 10,387 2,445	YES	— —	— —	11,757 2,445	10,387		22 22 22	RELOC. SANITARY SEWER
156 WL 156 WD 156 S	JAMES V. CAPRIOLA & HELEN E. CAPRIOLA	3684	310		21,643	—	10,599 11,044 2,406	— —	10,599 11,044 2,406	YES	— —	— —	10,599 11,044 2,406			22 22 22	RELOC. SANITARY SEWER
157 WL 157 WD 157 S	LORETTA COULSON	4739 3633	9 576		15,935	—	7,391 8,544 1,562	— —	7,391 8,544 1,562	YES	— —	— —	7,391 8,544 1,562			22,24 22 22	RELOC. SANITARY SEWER
158 WL 158 WD 158 S	LEOTA D. WRIGHT	1851 3773 3773	298 511 519	14,375	15,183	—	7,140 8,043 1,117	— —	7,140 8,043 1,117	YES	— —	— —	7,140 8,043 1,117			22,24 22 22	RELOC. SANITARY SEWER

(L) DENOTES LANDLOCKING

ADDED PCL 146-EL AND NOTE OF SALE 5-21-69

REVISED FUNDING PCLS. 147, 150, 150-1, 150-2, 151, 154, 156, 157, & 158 PER B.P.R. LETTER 11/9/60. J.R.B. 4/15/69.
REVISED PCL. 146 TO A TOTAL TAKE PER I.O.O. S.A. GUZIAK 3/21/69. J.R.B. 4/14/69.

DATE OF PREPARATION REV	DATE	DESCRIPTION
1	8-28-68	(1) Revised Areas-Pcls 149, 152 (2) Deleted 141 WL WD & combined with 139 WL WD (3) Revised NAMES & Vol-Pages Pcls 151 & 157 - Sands
2	9-9-68	(1) Revised Name-Pcl 147 (2) Added Vol & Page: 152
3	12-3-68	Revised Name Pcl 144 White
4	2-25-69	Revised Name Pcl. 142-WL Lee

AUG 27 1968

SUMMARY OF RIGHT OF WAY REQUIRED

FED. RD.	STATE	PROJECT	
2	OHIO	U 19 (12)	

413/460

SUM-8-17.63

RIGHT-OF-WAY SHEET 9/56

PARCEL Nº	OWNER	DEED RECORD BOOK	DEED RECORD PAGE	DEED AREA TOTAL SQ. FT.	DEED AREA SQ. FT. CORR.	TOTAL P.R.O.	TO BE ACQUIRED SQ. FT. TOTAL TAKE	P.R.O. IN TAKE	NET TAKE	BLDGS.	NET RESIDUE LEFT	NET RESIDUE RIGHT	TYPE FUNDS U	TYPE FUNDS STATE		SHEET Nº	REMARKS
159 WL 159 WD 159 S	RICHARD F. MILLER & LUELLA B. MILLER	3248	45	12,807	14,106	—	6,613 7,493 948	— —	6,613 7,493 948	YES	— —	— —	6,613 7,493 948			24,27 24,27 24,27	RELOC. SANITARY SEWER
160 WL 160 WD 160 S	MARY A. HAYNES f.k.a. MARY A. CARUSO	2375 3481	135 545	8,147	9,400	—	2,556 6,844 1,010	— —	2,556 6,844 1,010	YES	— —	— —	2,556 6,844 1,010			24,27 24,27 24,27	RELOC. SANITARY SEWER
160-1 WL 160-1 WD 160-1 S	MARTHA JARRETT	3059	643		8,900	—	1,419 7,481 1,109	— —	1,419 7,481 1,109	YES	— —	— —	1,419 7,481 1,109			24,27 24,27 24,27	RELOC. SANITARY SEWER
160-2 WL 160-2 WD 160-2 S	FREDRICK O. NOBLE & HELEN B. NOBLE	3919	605	7,318	8,550	—	675 7,875 815	— —	675 7,875 815	YES	— —	— —	675 7,875 815			24,27 24,27 24,27	RELOC. SANITARY SEWER
160-3 WL	ALAN E. EDERER & ROBERT E. NORRIS, A PARTNERSHIP	4706 4708 4711	87 19 90		24,125	—	24,125	— —	24,125	YES	— —	— —	24,125			24,27	
160-6 WD 160-6 LA	CHARLES ROBERT LOWE & ALICE V. LOWE	3109	479		8,861	—	8,861 NO TAKE	—	8,861 NO TAKE	YES	—	—	8,861			27,28	LIMITATION OF ACCESS (B.P.R. PARTIC. ONLY)
160-7 WL	MERCEDES MOORE	4676 3626	644 362		6,120	—	6,120	—	6,120	YES	—	—	6,120			27,28	(B.P.R. PARTIC.
160-8 S	HAROLD SOMMERS	4209	355		13,157	—	1,943	—	1,943	NO	—	13,157	1,943			28	STORM SEWER
161 WL 161 S 161 WA	ELLIS T. MILLS & MARGARET BARKER MILLS	2101 4791	302 82		13,247	—	1,021 1,602	—	1021 1,602	YES	12,226	—				21 21 21	RELOC. SANITARY SEWER BUILDING REMOVAL
163 WL 163 S 163 WA	HARRY L. CARDER & HAZEL CARDER	3888	242		9933	—	3938 1,298	—	3938 1,298	YES	5995 (L)	—				21 21 21	RELOC. SANITARY SEWER BUILDING REMOVAL
164 WL 164 S	EDITH L. SOUERS	2434	593	10,019	9,545	—	7,049 1,247	—	7,049 1,247	YES	2,496(L)	—				21,23 21,23	RELOC. SANITARY SEWER
165 WL	W.C. KEENAN REALTY COMPANY	1991	276	10,019	9,545	—	9,545	—	9,545	YES	—	—				21,23	
166 WL	EDWARD R. PORTER	4401	249		7,895	—	7,895	—	7,895	YES	—	—				21,23,24	
167 WL	DEWITT ASHER & SHIRLEY R. ASHER	3251 3251	603 605		6,633	—	6,633	—	6,633	YES	—	—				23,24	
168 WL	SECURITY REALTY COMPANY (AN OHIO CORPORATION)	3961	472		6,491	—	6,491	—	6,491	YES						23,24	
169 WL 169 S	CHARLES E. WOLF	2621 2045	267 372	14,810	22,250	—	3,965 1,385	—	3,965 1,385	NO	18,285	—				23 23	RELOC. SANITARY SEWER
170	NOT USED																
171 WL 171 S	URBAN IMPERIAL BUILDING & RENTAL CORPORTION, (AN OHIO CORPORATION)	4672	268	21,780	21,943	—	1,019 1,071	—	1,019 1,071	NO	20,924	—				23 23	RELOC. SANITARY SEWER
172 WL	JAMES H. SAUSAMAN	3505	79		7,072	—	7,072	—	7,072	YES	—	—				23	
173 WL	RUTH M. WOLF	1609	218		4,841	—	4,841	—	4,841	YES	—	—				23	
174 WL	EMMA M. SCHAFFER	1176	564		6,439	—	6,439	—	6,439	YES	—	—				23	
175 WL 175 S	WAYNE H. KOONS AKA WAYNE KOONS	3778 2820	287 516		10,184	—	3,663 1,157	—	3,663 1,157	YES	6,521	—				23 23 23	RELOC. SANITARY SEWER
176 WL	THOMAS R. WARREN	2630	257		5,597	—	5,597	—	5,597	YES	—	—				23	
177 WL	GILLESPIE-PILCHER BLDG. & INV. CO. (AN OHIO CORPORATION)	4629	585		5,646	—	5,646	—	5,646	YES	—	—				23	
178 WL	JOHN P. TIGHE & MARGUERITE TIGHE	2558	466		5,711	—	5,711	—	5,711	YES	—	—				23	
179 WL	RICHARD L. MILLER	4135	383		5,745	—	5,745	—	5,745	YES	—	—				23	
180	NOT USED																
181 WL	ALVA JARED NICHOLSON JR. & LINDA RUTH NICHOLSON	3702	530		5,811	—	5,811	—	5,811	YES	—	—				23,24	

TYPE FUNDS

(L) DENOTES LANDLOCKING

REVISED FUNDING PCLS. 159, 160, 160-1, 160-2, 160-3, 160-6, & 160-7 PER B.P.R. LETTER 11/8/68. J.R.B. 9/15/69.

DELETED PCL 160-7LA - REV. PCL 160-7WD TO PCL 160-7WL-12-23-74
Deleted Pcls 160-3WD & 160-3LA. Revised area of Pcl 160-3WL to include area of 160-3WD 7-17-69 WW PW

REV	DATE	DESCRIPTION
		DATE OF PREPARATION
1	8-27-68	160-2LA DELETED 160-6LA REVISED AREAS FOR PCLS 166, 167, 168, 172, 174, 176, 177, 178, 179, 181 - SHAPE
2	8-28-68	Deleted Pcl. 162 Combined Area with Pcl 162. Lee
3	9-9-68	Revised Vols-Pcls 160-2, 160-7 Revised Pages-Pcls 160-2, 160-6, 160-7
4	11/5/68	AREA CORR. PCL 162 & 163 Lee
5	3/25/69	Revised Name Pcl. 160 Lee

AUG 27 1969

SUMMARY OF RIGHT OF WAY REQUIRED

FED. RD.	STATE	PROJECT	
2	OHIO	U 19 (12)	

414/460

SUM-8-17.63

RIGHT-OF-WAY SHEET

10/56

PARCEL Nº	OWNER	DEED RECORD BOOK	DEED RECORD PAGE	DEED AREA TOTAL SQ. FT.	DEED AREA SQ. FT. CORR.	TOTAL P.R.O.	TO BE ACQUIRED SQ. FT. TOTAL TAKE	P.R.O. IN TAKE	NET TAKE	BLDGS.	NET RESIDUE LEFT	NET RESIDUE RIGHT	TYPE FUNDS			SHEET Nº	REMARKS
182 WL	RUTH A. LUTZ.	1821	628		6,493	—	6,493	—	6,493	YES	—	—				23,24	
183 WL	HAROLD G. RHODES INC. (AN OHIO CORPORATION)	3822	433		6,493	—	6,493	—	6,493	YES	—	—				23,24	
184 WL	KARL L. GRAY & KATHRYN GRAY	2984	526		6,233	—	6,233	—	6,233	YES	—	—				24	
185 WL	L.G. BLACKBURN & RUTH BLACKBURN	3952	432	7,013	6,990	—	6,990	—	6,990	YES	—	—				24	
186 WL	KATHRYN J. FOWLS	2319	205	7,013	6,986	—	6,986	—	6,986	YES	—	—				24	
187 WL	JOHN J. TURLEY & LOIS J. TURLEY	2651	497		18,270	—	18,270	—	18,270	YES	—	—				24	
188 WL	MARGARET D. COPE	3637 2556	260 487		7,015	—	7,015	—	7,015	YES	—	—				23,24	
189 WL	ELEANOR H. BACKUS	2549	213		7,015	—	7,015	—	7,015	YES	—	—				23,24	
190 WL 190 S 190 LA	THE ALMAR CO, A Partnership	4671 4671	289 291		33,786	—	1,215 239	—	1,215 239	NO	—	32,571				26,28 26,28 26,28	BURGER CHEF SYSTEMS INC. LEASEE STORM SEWER LIMITATION OF ACCESS
191 WL	VIVIAN L. BUECHLER f.k.a. VIVIAN L. KLUGHART	3511	665		7,015	—	7,015	—	7,015	YES	—	—				23,24	
192 WL	LLOYD F. BENDER	2389	574		2,806	—	2,806	—	2,806	NO	—	—				23,24,25,26	
193 WL	JOHN C. HART & ARTA L. HART	3787	91		13,505	—	13,505	—	13,505	YES	—	—				25,26	
194 WL	HUGH T. RINEHART & INEZ K. RINEHART	2461 2518	286 296	15,812	15,812	—	15,812	—	15,812	YES	—	—				24,26	
195 WL	Akron National Bank AND Trust Co. ETAL	4941	20	9,801	9,785	—	9,785	—	9,785	YES	—	—				24,26	
196 WL	ANNA M. WISE	2966 2965 4351	96 169 463	14,026	14,042	—	14,042	—	14,042	YES	—	—				24,26	
197 WL	LELAND COX AKA LELAND S. COX	2979 4559	468 709	11,326	9,592	—	9,592	—	9,592	YES	—	—				26	
198 WL 198 WD	ELEANOR M. NIHOUSEN	4636 4517	276 578		11,696	—	8,576 3,120	—	8,576 3,120	YES	—	—				26 26	
199 WL 199 T	DAVID K. FIRM & DOROTHY K. FIRM	4597	237		5,408	—	501 353	—	501 353	YES	—	4,907				26 26	BUILDING REMOVAL
200 WD 200 WA	FRANK J. MANSFIELD & JEANNE MANSFIELD	4008	441		3,947	—	715	—	715	YES	—	3,232				26 26	BUILDING REMOVAL
201 WL	PAUL PFOUTS & KATHRYN PFOUTS	3182	545	7,841	7,883	—	7,883	—	7,883	YES	—	—				26	
202 WL 202 WA	FLOYD T. HAMLIN	3920	496		7,356	—	1,271	—	1,271	YES	—	6,085				26 26	BUILDING REMOVAL
202-1 WA	MARLIN A. NEILL W. REGINA NEILL	3785	448	—	—	—	NO TAKE	—	NO TAKE	NO	—	—				26	DRIVEWAY CONSTRUCTION
203 WL 203 WA	CORA MAE DE SHANE Fka CORA MAE BRAUCHER,	1545	580	5,227	5,156	—	3,795	—	3,795	YES	—	1,361				26 26	BUILDING REMOVAL
204 WL 204 S 204 AWL 204 LA	BOARD OF EDUCATION OF THE CITY OF CUYAHOGA FALLS	1163 3303 3303 3303	36 360 361 363	250,818	152,532 259,105	— 16,520	7,512 5,964 98,246	— 356	7,512 5,964 97,890	NO NO	145,020 120,211	— 24,484 (L)				25 23,25 51-52 23	RELOC. SANITARY SEWER LIMITATION OF ACCESS
205 WL 205 S 205 AWL 205 AS 205 AWA	IDELLA M. PIPER	3415 1360 1693	581 13 704		9,033 6,988	— —	4,551 755 4,736 638	— —	4,551 755 4,736 638	NO YES	4,482(L) 2,252	— —				25 25 29 29 29	RELOC. SANITARY SEWER RELOC. SANITARY SEWER BUILDING REMOVAL
206 WL 206 S	FRED W. ALBRECHT GROCERY CO. (AN OHIO CORPORATION)	3255	540		91,218	—	71,378 2,762	—	71,378 2,762	NO	8,136(L)	11,704				25,29 25,29	RELOC. SANITARY SEWER
207 S	JOHN DING & DAISY T. DING	1372	204		6,982		242		242							29	RELOC. SANITARY SEWER
208 WL 208 S	HERBERT R. NORRIS & MARTHA NORRIS	4740	696		6,988	—	677 638	—	677 638	NO	6,311	—				29 29	RELOC. SANITARY SEWER

FUNDS

TYPE

(L) DENOTES LANDLOCKING

NAME CHANGE PCL. 190. 4-7-69 LEE
Name Change Pcl. 195WL 3-5-69
Revised Name Pcl 203. White 12-3-68
Revised Name Pcl 208 Lee. 10-2-68
8 9-10-68 Revised 199WA to 199-T. Per IDC-FH STRAHL. DATED 9-9-68 R.S.
7 9-9-68 Revised Util Assess. Rols 183/188/198 SANDS

REV	DATE	DESCRIPTION	
		DATE OF PREPARATION	
1	8-13-68	ADDED PARCEL Nº 190LA.	CONSULTANT
2	8-13-68	ADDED PARCEL Nº 202-1 WA.	" " "
3	8-13-68	ADDED PARCEL Nº 204-LA	" " "
4	8-13-68	PARCEL 206 WL-AREA CORR.	" " "
5	8-13-68	PARCEL 204A AREA CORR.	" " "
6	8-28-68	REVISED AREAS: 183/184/185/188/189/191/192/193/194	RLH

Vol-Page to Pcl 205 - SANDS

SUMMARY OF RIGHT OF WAY REQUIRED

FED. RD.	STATE	PROJECT	
2	OHIO	U 19 (12)	

415/460

SUM-8-17.63

RIGHT-OF-WAY SHEET

111/56

PARCEL Nº	OWNER	DEED RECORD BOOK	DEED RECORD PAGE	DEED AREA TOTAL SQ. FT.	DEED AREA SQ. FT. CORR.	TOTAL P.R.O.	TO BE ACQUIRED SQ. FT. TOTAL TAKE	P.R.O. IN TAKE	NET TAKE	BLDGS.	NET RESIDUE LEFT	NET RESIDUE RIGHT	TYPE FUNDS			SHEET Nº	REMARKS
209 WL 209 S 209 WA	W. KENT SLUTZ	1858 910	610 544		13,973	—	5,410 1,276	—	5,410 1,276	YES	8,563	—				29 29 29	RELOC. SANITARY SEWER BUILDING REMOVAL
210	NOT USED																
211	NOT USED																
212 WL	EDWARD G. WEBER & JOANNE M. WEBER	3301	617		5,524	—	5,524	—	5,524	YES	—	—				29	
213 WL	EMERALD C. HINKLE & GLADYS V. HINKLE	2218 2645	643 472		5,524	—	5,524	—	5,524	YES	—	—				29	
214 WL	PAUL L. HOOBLER & INA FERN HOOBLER a.k.a. IMA FERN HOOBLER	1990 2644	413 161		7,709	—	7,709	—	7,709	YES	—	—				29	
215 WL	RAYMOND I. FRANCE & ELEANOR D. FRANCE	2884	93		6,675	—	6,675	—	6,675	YES	—	—				29	
216 WL	JACK MARSILLO & SYLVIA MARSILLO	4067	237		6,984	—	6,984	—	6,984	YES	—	—				29	
217 WL	WENDELL W. ARMSTRONG & IRENE A. ARMSTRONG	3322	548		5,516	—	5,516	—	5,516	YES	—	—				29	
218 WL	HUMBLE OIL & REFINING COMPANY	4009	442	20,517	20,725	—	620	—	620	NO	—	20,105				29	
219 WL	FIRST NATIONAL BANK OF AKRON, TRUSTEE	4554	277	25,047	24,934	—	24,934	—	24,934	NO	—	—				29,30	
220	NOT USED																
221 WL 221 SPEC.	FALLS SUPERSONIC CAR-WASH INC. (AN OHIO CORPORATION)	4353	381	19,340	19,586	—	1,889 607	—	1,889 607	NO	—	17,697 607				29,30	FOOTER EASEMENT
222 WL	HENRY A. KREINBERG	3054 3055 3055	193 377 379		10,224	—	10,224	—	10,224	YES	—					29	
223 WL 223 S 223 WA	LAURA B. CONRAD	3173 3106	484 102		9,318	—	1,472 130	—	1,472 130	YES	7,846	—				29 29 29	RELOC. STORM SEWER BUILDING REMOVAL
224 WL	ROBERT J. LEWIS	4818	354		9,078	—	3,625	—	3,625	NO	5,453	—				29,30	
225 WL	WILLIAM L. PIERSON & JUNE M. PIERSON	3780	407		7,273	—	2,764	—	2,764	NO	4,509	—				30	
226 WL	MOLLIE CASE	4591	308		7,045	—	2,794	—	2,794	NO	4,251	—				30	
227 WL 227 WA	R.F. COOK MANUFACTURING COMPANY (AN OHIO CORPORATION)	4396	133		31,358	—	12,143	—	12,143	YES	—	19,215				30	BUILDING REMOVAL
228 WL	PROGRESSIVE MOLD AND MACHINE CO.	4678	583	35,414	35,474	—	10,735	—	10,735	NO	—	24,739				30	
229 WL	OLGA V. GOOD	1855 1855 2725	359 361 550		6,653	—	2,853	—	2,853	YES	3,800	—				30	
230	NOT USED																
231 WL	IRENE W. QUAINTANCE FKA IRENE W. JORDAN	3067 2254	640 34		6,261	—	2,883	—	2,883	YES	3,378	—				30	
232 WL	MARGUERITE M. STRONG	4677 1835	381 407		5,870	—	2,866	—	2,866	YES	3,004	—				30	
233	NOT USED																
234 WL 234-LA	THE GENERAL TIRE & RUBBER COMPANY(AN OHIO CORPORATION)	3315 2102 2955	132 214 373		85,085	—	15,288	—	15,288	NO	—	69,797				30 31	LIMITATION OF ACCESS
235 WL	JIMMIE WILHELM & MARLYN JOYCE WILHELM	4308	188		7,649	—	4,005	—	4,005	NO	3,644	—				30	
236 WL 236 WA	BEN E. FORBES	3581	153		7,451	—	4,304	—	4,304	YES	3,147	—				30 30	BUILDING REMOVAL
237 WL 237 WA	ANTHONY GAYLAN	4270	636		13,646	—	9,799	—	9,799	YES	3,847	—				30 30	BUILDING REMOVAL

TYPE FUNDS

(L) DENOTES LANDLOCKING

Revised 234-WL, ADDED 234-LA 10-23-69

REV	DATE	DESCRIPTION
		DATE OF PREPARATION
1	8-29-68	(1) Revised Areas: Pcls 219,222 SANDS
2	9-9-68	(1) Revised Name: 234WL (2) Revised Wl Rgt. R/W 222,224,23
3	10-7-68	Revised Pcls 221 - Added Parcel 221 Spec
4	1-6-69	Revised Name: Pcl 224 - SANDS
5	2-11-69	Revised Name Pcl. 232-WL Lee
6	9-8-69	Name Changed Pcl. 228 WL. White

Ohio Department of Highways
RIGHT-OF-WAY DIVISION
AUG 27 1968
LOCATED

SUMMARY OF RIGHT OF WAY REQUIRED

FED. RD.	STATE	PROJECT	
2	OHIO	U 19(12)	

416/460

SUM-8-17.63

RIGHT-OF-WAY SHEET 12/56

PARCEL Nº	OWNER	DEED RECORD BOOK	DEED RECORD PAGE	DEED AREA TOTAL SQ.FT.	DEED AREA SQ.FT. CORR.	TOTAL P.R.O.	TO BE ACQUIRED SQ. FT. TOTAL TAKE	P.R.O. IN TAKE	NET TAKE	BLDGS.	NET RESIDUE LEFT	NET RESIDUE RIGHT	TYPE FUNDS			SHEET Nº	REMARKS
238 WL	IRENE SENN	4330 4330 4330 4330 4329	191 192 194 195 481	24,180 S.F.	24,180 S.F.	1,616 S.F.	24,180 S.F.	1,616 S.F.	22,564 S.F.	YES	—	—				30,31	
239 A WL	VICTOR A. McFARLAND (239AWL ACQUIRED AS 242WL)	1875	542		5,750	—	5,750	—	5,750	NO	—	—				30,	239AWL ACQUIRED AS PARCEL 242WL
240 WL	BERTHA KODISH	4331	419		1,616	—	1,616	—	1,616	NO	—	—				31	
241 WL	MART SMITH & EFFIE SMITH	3504	615		5,750	—	5,750	—	5,750	YES	—	—				30	SEE PARCEL 254
242 WL	NOT USED (SEE 239AWL)																
243 WL	GEORGE SHRIBER	4308	190		3,630	—	3,630	—	3,630	YES	—	—				31	
244 WL	ROBERT J. HARTER & LURETTA B. HARTER	2956	160		6,533	—	6,533	—	6,533	YES	—	—				31	
245 WL	LUCILLE MITROVICH R.K.A. LUCILLE I. MITROVICH AKA LUCILLE IRENE MITROVICH FKA LUCILLE I. WHITTINGTON	4738 2904 3104 3052	565 280 108 174		18,414	—	18,414	—	18,414	YES	—	—				30,31	
246	NOT USED																
247	NOT USED																
248 WL	W.L. TUCKER COAL & SUPPLY COMPANY (AN OHIO CORPORATION)	1163	191		7,125	—	6,269	—	6,269	YES	—	856				31	
249 WL	JOSEPH S. DAYTON JR. & DARLENE IRENE DAYTON	3952	521		5,821	—	5,821	—	5,821	YES	—	—				31	
250 WL 250 LA	VERNE P. SIMONS & RUTH E. SIMONS	3185 3250	563 198		7,500	—	75	—	75	NO	—	7,425				31 31	LIMITATION OF ACCESS
251 WL 251 A WL 251 WA	ELISABETH ANN HURLEY	3963	82		50,513	—	6,310 461	— —	6,310 461	YES NO	—	43,742				31 31 31	BUILDING REMOVAL
252 WL	MILDRED CATHERINE WOOD	1929	109		6,064	—	6,064	—	6,064	YES	—	—				31	
253 WL	MILDRED ALICE HATFIELD FKA MILDRED ALICE FISHEL	2652 1997	193 206		6,421	—	6,421	—	6,421	YES	—	—				31	SEE PARCEL 265
254 WL 254 S	MART S. SMITH & EFFIE M. SMITH	2451	517		13,876	— —	4,454 2,013	— —	4,454 2,013	NO	9,422	—				31 31	SEE PARCEL 241 RELOC. SANITARY SEWER
255 WL	C.S. McKENZIE AKA C. SHELDON McKENZIE AKA CLEMENT SHELDON McKENZIE	1357 2060 2655	118 89 591		15,509	—	15,509	—	15,509	YES	—	—				31	
256 WL	MACK W. BRISLINGER	2329	421		7,299	—	7,299	—	7,299	YES	—	—				31	
257 WL	BONNIE M. BARNARD	3921 4427	148 645		4,113	—	4,113	—	4,113	YES	—	—				34	
258 WL	EDWARD J. DEIBEL & ADA L. DEIBEL	3959	351		5,999	—	5,999	—	5,999	YES	—	—				31,34	
259 WL	GILBERT J. KOHUT	3408	333		6,728	—	6,728	—	6,728	YES	—	—				31,34	
260 T	REICHHOLD CHEMICALS, Inc.	4789	666	99,317	——	—	1,363	—	1,363	NO	—	—				33	RELOC. WATER LINE
261 WL	THOMAS S. BOWMAN	2164	7		11,235	—	4,294	—	4,294	NO	—	6,941(L)				34	
262 WL	TRUMP PLASTICS INC. (AN OHIO CORPORATION)	2875 4544	163 435		26,510	—	26,510	—	26,510	YES	—	—				31,34	PROPERTY RIGHTS
263 S 263 PR	BETTY J. FARRIS	3490	336		7,204	—	330	—	330	NO	7,204					34	RELOC. SANITARY SEWER
264 WL 264 S 264 WA	VIVIAN E. WHITTAKER	3770	280		7,205	—	1,663 1,617	— —	1,663 1,617	YES	5,542(L)	—				34 34 34	RELOC. SANITARY SEWER BUILDING REMOVAL
265 WL 265 S	MILDRED A. HATFIELD	4029	402		7,205	—	4,988 1,548	—	4,988 1,548	YES	2,217(L)	—				34 34	SEE PARCEL 253 RELOC. SANITARY SEWER
266 WL	ANTHONY FALCONE & RUTH L. FALCONE	3067	167		7,206	—	7,206	—	7,206	YES	—	—				34	

FUNDS

TYPE U

(L) DENOTES LANDLOCKING

Added P.R.O. To Parcel 238WL 11-4-70
Deleted Pcl's 239-WL & 239-LA 10-23-69
Revised Name Pcl. 264 Lee 1-27-69
Revised Name Pcl. 260 Lee 10-2-68
9 9-9-68 (R)Revised Name-245 (R)Revised Wd/Pg: Pcl 245, 260, 263, 265 Added

REV	DATE OF PREPARATION DATE	DESCRIPTION
1	8-13-68	PAR. 239WL-OWNERS NAME CORR.
2	8-13-68	PAR. 243WL-OWNERS NAME CORR.
3	8-13-68	PAR. 245WL-OWNERS NAME CORR.
4	8-13-68	PAR. 254S-AREA CORR.
5	8-13-68	PAR. 255WL-OWNERS NAME CORR.
6	8-13-68	PAR. 257WL-SHEET Nº CORR.
7	8-13-68	PAR. 263PR-ADDED.
8	8-28-68	ADDED REMARKS 239AWL & 242WL - SMRS

RIGHT-OF-WAY ENGINEER & ADMIN. SECTION
AUG 27 1968
LA 13

SUMMARY OF RIGHT OF WAY REQUIRED

FED. RD.	STATE	PROJECT	
2	OHIO	U 19 (12)	

417/460

SUM-8-17.63

RIGHT-OF-WAY SHEET

13/56

PARCEL Nº	OWNER	DEED RECORD BOOK	DEED RECORD PAGE	DEED AREA TOTAL SQ.FT.	DEED AREA SQ.FT. CORR.	TOTAL P.R.O.	TO BE ACQUIRED SQ. FT. TOTAL TAKE	P.R.O. IN TAKE	NET TAKE	BLDGS.	NET RESIDUE LEFT	NET RESIDUE RIGHT	TYPE FUNDS			SHEET Nº	REMARKS
267 WL	JAMES P. JEFFERY & JENNIE LEE JEFFERY	2159 2159 2159	406 409 412		7,206	—	7,206	—	7,206	YES	—	—				34	
268 WL	ODA W. GOUGH & THE ESTATE OF LEAH GOUGH A.K.A. OLIVE L. GOUGH, DECEASED	1790	691		7,207	—	7,207	—	7,207	YES	—	—				34	
269 WL	HAZEL M. BURDICK	~~3256~~ 4018 ~~3256~~ 3256 2647	~~535~~ 422 ~~534~~ 534 558		7,314	—	7,314	—	7,314	YES	—	—				34	
270	NOT USED																
271 WL	BENNIE HARMON & GLAYDES HARMON	2222	572		8207	—	8,207	—	8207	YES	—	—				34	
272 WL	MAMIE HARTER	3894 3894 2222	53,54 56,58,60 569		7,208	—	7,208	—	7,208	YES	—	—				34	
273 WL	CALVIN HARTER	4335 3918	592 458		7,208	—	7,208	—	7,208	YES	—	—				34	
274 WL	LEHR M. DAVIS & MARY P. DAVIS	3112	462		7,208	—	7,208	—	7,208	YES	—	—				34	
275 WL 275 S	RICHARD IRVIN WILLIAMS & HELEN ROSALIE WILLIAMS	4300	539		6,005	—	1,700 1,130	—	1,700 1,130		4,305	—				34 34	RELOC. SANITARY SEWER
276 S	EVA KLING	3670	631		8,406	—	531	—	531							34	RELOC. SANITARY SEWER
277 WD 277 T	THOMAS E. COAKLEY & VIOLA MAE COAKLEY	1820	616		7,200	—	458 322	—	458 322	NO	6,742	—				34 34	
278 WL 278 WD 278 T	MABLE M. BROLLIER	4071	88		7,200	—	2,733 3,136 432	— —	2,733 3,136 432	YES	1,331	— —				34,35 34,35 34,35	
279	NOT USED																
280	NOT USED																
281 281 T	JOSEPH A. REED & TOLA B. REED	2091	47		6,380	—	1,512 1,039	—	1,512 1,039	YES YES	4,868	—				35 35	
282 WL 282 WD	STERLING S. MACHAMER & LAURA I. MACHAMER	2901 2901	510 512		12,833	—	12,739 94	— —	12,739 94	YES	— —	— —				34,35 34,35	
283 WL 283 WD	ROGER WILSON FRANTZ & CATHERINE A. FRANTZ	3496	530		5,994	—	2,451 3,543	— —	2,451 3,543	YES	— —	— —				35 35	
284 WL	HARRIET GRAFMILLER	3637 2167	502 95		7,804	—	7,804	—	7,804	YES	—	—				35	
285 WL	CHARLES H. SAMPSON & THE ESTATE OF GEORGE R. SAMPSON JR., DECEASED	2650	520		5,558	—	5,558	—	5,558	YES	—	—				35	
286 WL	HELEN M. SHOAF	1999 2638	110 561		11,278	—	11,278	—	11,278	YES	—	—				35	
287 WL	DOLLIE L. BITTNER FKA DOLLIE LOUISE GIPSON	1791	594	19,166	16,227	—	16,227	—	16,227	YES	—	—				35	
288 WL 288 S 288 WA	BEATRICE A. ENSWORTH	4012	430		5,704	—	2,852 2,281	— —	2,852 2,281	YES	2,852(L)	—				35 35 35	RELOC. SANITARY SEWER BUILDING REMOVAL
289 S	CORA A. CUNNINGHAM	3185	426		5,704	—	396	—	396	NO	5,704					35	RELOC. SANITARY SEWER
290	NOT USED																
291	NOT USED																
292	NOT USED																
293 S. 293 PR	GERTRUDE J. GEBHART FKA GERTRUDE J. ELLSWORTH	3478	201		5,340	—	800	—	800	NO	5,340					35	RELOC. SANITARY SEWER
294 WL	CELINA E. KIMES	~~3487~~ 3487	~~530~~ 534		33,762	—	33,762	—	33,762	YES	—	—				35,36	
295 WL 295 WD	OHIO EDISON COMPANY	1352 431	439 407	7,362 59,670	6,530 —	— —	6,530 308	— —	6,530 308	NO NO	59362 59,362	— —				36 36	
296 WL	ROY HOLLAND	4271	45		15,634	—	15,634	—	15,634	YES	—	—				36	
297 WL 297 WA	MARY VINCZELLER	~~1114~~ 2159 3779	~~468~~ 635 683		34,189	—	29,770	—	29,770	YES	4,419	—				36 36	BUILDING REMOVAL
298 WL 298 WA	RANDALL A. WEITZEL & IRENE S. WEITZEL	4073	545		4,350	—	2,741	—	2,741	YES	1,609	—				36 36	BUILDING REMOVAL

TYPE FUNDS

(L) DENOTES LANDLOCKING

Changed Pcl 281 WD to a Standard Highway Easement. white 10-16-69

REV	DATE OF PREPARATION DATE	DESCRIPTION
1	8-13-68	PAR. 271 WL-OWNERS NAME CORR.
2	8-13-68	PAR. 276 S - OWNERS NAME CORR.
3	8-13-68	PAR. 287 WL - OWNERS NAME CORR.
4	8-13-68	PAR. 295 - AREA CORR.
5	9-9-68	① REVISED OWNER - Pcl 268, 271, 285 ② Revised Vol-Page Pcls 269, 272, 278, 283, 284, 287 - SMOS
6	8-14-69	ADD 293-PR

RWY ENGR. DEPT. DR. (HIGHWAY DIV.) SEC.
AUG 27 1968
CHKD

SUMMARY OF RIGHT OF WAY REQUIRED

FED. RD.	STATE	PROJECT	
2	OHIO	U 19(12)	

418/460

SUM-8-17.63

RIGHT-OF-WAY SHEET 14/56

PARCEL Nº	OWNER	DEED RECORD BOOK	DEED RECORD PAGE	DEED AREA TOTAL SQ.FT.	DEED AREA SQ.FT. CORR.	TOTAL P.R.O.	TO BE ACQUIRED SQ. FT. TOTAL TAKE	P.R.O. IN TAKE	NET TAKE	BLDGS.	NET RESIDUE LEFT	NET RESIDUE RIGHT	TYPE FUNDS			SHEET Nº	REMARKS
299 WL	JASON F. BURLEY & JEANNETTE S. BURLEY	4073	544		4,350	—	4,350	—	4,350	YES	—	—				36	
300 S 300 PR.	BERNARD J. CZARKOWSKI & BILLIE RUTH CZARKOWSKI	4030	376		5,000	—	478 No TAKE	—	478 No TAKE	NO	—	—				36	RELOC. SANITARY SEWER ACCESS RIGHTS (DRIVEWAY)
301 WL	VILA M. MOORE	2897 1745	646 403		12,126	—	12,126	—	12,126	YES	—	—				36	
302 WL	THE CITY OF CUYAHOGA FALLS, OHIO	3404 3415	352 143		8,331	—	8,331	—	8,331	NO	—	—				36	
302 AWL		3404	355		2,686	—	2,686	—	2,686	NO	—	—				38	
303 WL	ALPHA BENNETT	1999	100		10,000	—	10,000	—	10,000	YES	—	—				36,37	
304 WL 304 S 304 WA	MARGARET F. KOCHAN	3578 2380	140 244		15,000	—	11,250 1,546	— —	11,250 1,546	YES	3,750	—				36,37 36,37 36,37	RELOC. SANITARY SEWER BUILDING REMOVAL
305 WL	JOHN D. PENDLAND	2454	626		5,000	—	5,000	—	5,000	YES	—	—				36	
306 WL	JAMES R. SMITH & SHIRLEY MAE SMITH	4032	91		10,000	—	10,000	—	10,000	YES	—	—				37	
307 WL	JAMES E. BOWEN	3586	196		8,362	—	8,362	—	8,362	NO	—	—				37	
308 WL	BETTY E. HALTER	4163	474		8,875	—	8,875	—	8,875	YES	—	—				37	
309	Not Used																
310	NOT USED																
311 WL 311 S 311 WA	DAVID W. KAUFMAN	4338 4642	633 617		8,876	—	2,072 2,331	— —	2,072 2,331	YES	6,804	—					Reloc. Sanitary Sewer Building Removal
312 WL	GEORGE LUCAS & MICHAEL M. SIMMS	4331 4331	152 156		5,325	—	5,325	—	5,325	NO	—	—				37	
313 WL	ARTHUR R. MOORE JR.	4264	179		7,988	—	7,988	—	7,988	YES	—	—				37	
314 WL	ABNER D. ZOOK	3510	471		4,438	—	4,438	—	4,438	NO	—	—				37	
315 WL	RUTH ROGERS WILSON FKA RUTH HARRIET ROGERS	1652	222		1,680	—	1,680	—	1,680	NO	—	—				37	
316 WL	SADIE ELIZABETH COLVIN	3678	295		13,839	—	13,839	—	13,839	YES	—	—				37	
317 WL 317 S 317 WA	CLARENCE A. ILG a.k.a. CLARENCE ALEXANDER ILG	3414 4678	616 658		8,875	—	5,439 1,374	— —	5,439 1,374	YES	3,436	—				37 37 37	RELOC. SANITARY SEWER BUILDING REMOVAL
318 S	HERMAN S. & LEONA J. CHURCH	2460	565		8,875	—	471	—	471	NO						37	RELOC. SANITARY SEWER
319 WL	DOROTHY E. WHITACRE	4135	478		8,875	—	8,875	—	8,875	NO	—	—				37,33	
320	NOT USED																
321 WL	ZELLA GILES	1876	335		4,438	—	4,438	—	4,438	NO	—	—				37,38	
322 WL	DOROTHY E. ANDERSON	4469	210		4,438	—	4,438	—	4,438	NO	—	—				37,38	
323	NOT USED																
324 WL	THE EAST OHIO GAS COMPANY (AN OHIO CORPORATION)	577	313		16,527	—	16,527	—	16,527	NO	—	—				38	
325 WL	MILDRED A HATFIELD & KENNETH E. HALBLAUB	4641	352		20,000	—	20,000	—	20,000	YES	—	—				38	
326 WL 326 WA	ROBERT L. FREEMAN & MELBA F. FREEMAN	4304 4304	41 42		10,000	—	6,413	—	6,413	YES	3,587(L)	—				38 38	BUILDING REMOVAL
327 WL	ROBERT J. WINFIELD	4958 4953	349 360		10,000	—	211	—	211	NO	9,789	—				38	
* 328 CT 328 LA 328 S 328 AT 328 BS	THE CONSOLIDATED RAIL CORPORATION	1136	290	3,205	3,218	—	2,194 3,218 5,245 3,570 2,014	— — —	2,194 3,218 5,245 3,570 2,014	NO NO NO NO NO	— — — —	— — — —				54 38 40 54 32	
329 WL 329 AWL 329 W	CHARLES WILLIAM DOCTOR-OWNER MARY DOCTOR, holder of life Estate	2550 4309	159 531		357,452 200,573	— —	175,836 23,584 39,670	— —	175,836 23,584 39,670	NO NO	137,319	181,616 —				38,39 38,39	OAKLAWN ESTATES
330-WD	TRUSTEES OF SILVER LAKE ESTATES	857	255-260	52,272		—	6,863	—	6,863	YES	—	45,409				41-A	BLOCK "C" - SILVER LAKE ESTATES VILLAGE OF SILVER LAKE
* 328-AERIAL 328 328-1	THE CONSOLIDATED RAIL CORPORATION						3,215 154 47	— — —	3,215 154 47	NO NO NO						41A, 41B 41A, 41B 41A, 41B	

(L) DENOTES LANDLOCKING

FUNDS

TYPE

CHANGED NAME PCL 328 SERIES 5-9-77

5-12-71
CHANGED PCLS. 328-T & B-T TO SEWER EASEMENTS

CHANGED PCL. 328 WL TO 328 LA & REVISED NAME
-ADDED PCL. 329-U 10-15-70 3-24-71

REVISED NAME PCL 327 WL. White 11-4-69
PCL 330 CONVERTED BACK TO PCL. 330WD-10-31-69
Revised name Pcl # 329 9/16/69 Solomon
Changed 330WD TO Easement- Per L.O.C. HEGERT-DATED 8-26-69 White 8-28-69
Added 300 PR 8-18-69 M.K.M.
Corrected deed area Pcl 300-S. White 8-8-69
Removed Fr. Shed and 1½ Sty Fr. Hse. from Pcl 312 WL. White 4-17-69
PCL #328-AERIAL, 328-WD & 330-WD ADDED. CONSULTANT 4-14-69
REVISED NAME PCL 317. LEE 1-13-69

REV	DATE OF PREPARATION DATE	DESCRIPTION
1	8-13-68	PAR. 305 WL-OWNERS NAME CORR.
2.	8-13-68	PAR. 328 - AREA CORR.
3	9-9-68	Revised Name: 325 to 329 Revised Plat Acc. Pc. 301 to 330
4	12-3-68	Combined Pcl 309 with Pcl 311.
		Pcls Now Include 311 WL, 311 WA, 311-S
		New Owner aquired Pcl 309. White

SUMMARY OF RIGHT OF WAY REQUIRED

FED. RD.	STATE	PROJECT	
2	OHIO	U 19(12)	

419/460

SUM-8-17.63

RIGHT-OF-WAY SHEET

15/56

PARCEL Nº	OWNER	DEED RECORD BOOK	DEED RECORD PAGE	DEED AREA TOTAL SQ FT	DEED AREA DEED AREA SQ FT CORR	TOTAL P.R.O.	TO BE ACQUIRED SQ. FT. TOTAL TAKE	P.R.O. IN TAKE	NET TAKE	BLDGS	NET RESIDUE LEFT	NET RESIDUE RIGHT	TYPE FUNDS			SHEET Nº	REMARKS
331-WL 331-AERIAL 331-T	W. RICHARD CURRY	3780	56		214,061	—	159,987 1,201 1,201		159,987 1,201 1,201	NO	—	54,074(L)				39,40,41,42 41-A 41-A	AERIAL EASEMENT OVER LANDLOCKED RESIDUE. TEMP. EASEMENT FOR CONST. UNDER AERIAL EASE.
332 WL	A.M. FREDRICK & HELEN M. FREDRICK	3700	437		18,150	—	18,150	—	18,150	NO	—					40	
333	NOT USED																
335 WL 335-WA	BOARD OF EDUCATION OF THE CUYAHOGA FALLS CITY SCHOOL DISTRICT	4701 4671 4745 4736 4750 4903	430 684 200 371 64 584		487,685	28,650	163,981	—	163,981	YES	297,206					41,42,43 41	NOTE: PART OF THE DEED AREA ACQUIRED BY "BOARD OF EDUCATION" FROM "THE ESTATE OF ALECK MUSYT, ET.AL." (FORMERLY PCL. 334-WL - 270,600 S.F.) BY RECORDED JOURNAL ENTRY, VOL. 610 PAGE 333, DATED 2/6/65, CASE NO. 295812, SUMMIT COUNTY COURT OF COMMON PLEAS. CONSTRUCT PEDESTRIAN BRIDGE
335-EL	" " " " "						3848		3848								EXCESS LAND (FORMERLY LANDLOCKED RIGHT RESIDUE FROM 335-WL)
339-WL 339-U	ELIZABETH ANNA GRENFELL	1900	297	33,672	33,825	1,500	19,664 3133	—	19,664 3133	NO	9,350	331 (L)				42,43,44	
340	WILLIAM G. & MARY A. DALTON	4198	468		36,140	2,700	—	—	—	NO	—	—				44	NOT EFFECTED
341 WL 341 WD	THOMAS EDWARD SAMPSON & ANNA ELIZABETH SAMPSON	2551	5	33,803	33,825	1,500	21,346 2,750	— 1,500	21,346 1,250	YES NO	5,493	4,236(L)				42,43,44 44	
342 WL 342 WD 342 U	RICHARD E. HISSEM & HELEN L. HISSEM	3417	669	43,942	43,973	1,950	30,722 6,362 4158	— 1,950	30,722 4,412 4158	YES YES	—	6889 (L)				42,43,44 43,44 42-A	
343 WL 343 343 U	ELIZABETH ANNIE GRENFELL a.k.a. ELIZABETH A. GRENFELL	1602 4826	131 683		91,328	4,050	72,327 363 8251	3,050 —	69,277 363 8251	YES NO	—	17,638 (L)				42,43,44 43,45 42-A	
344 WL 344 344 T	RICHARD J. MCCOWIN	4261 4261	614 616		144,464	10,632	74,554 5,514 2,345	7,867 2,765 —	66,686 2,749 2,345	YES YES YES	—	64,397				43,46,54 54 54	BUILDING REMOVAL
345 WL	PATSY CARDONE & BETTIE CARDONE	1508	540	43,560	44,365	4,844	44,365	4,844	39,521	YES	—	—				43,46,54	
346 WL	EDWARD P. FIOCCA & JUDITH ANN FIOCCA	3898	64	18,818	18,593	3,270	18,593	3,270	15,323	YES	—	—				43,45,46	
347 WL	JOANNA MAY HAAS	3178 4349	159 88	23,522	23,673	7,963	23,673	7,963	15,710	YES	—	—				45,46	
348 WL	HERBERT L. BULLARD & CATHERINE P. BULLARD	3511	135		26,084	2,400	5,200	2,123	3,077	NO	20,607	—				45	
348-I	JOAN LOEFFLER	3965	680		9,503	1,500	—	—	—	—	—	—				44	NOT EFFECTED
349 WL	RAY E. BECKWITH & MARGARET L. BECKWITH	3058	91	62,517	62,483	15,426	62,483	15,426	47,057	NO	—	—				45,47	
349-1 WL 349-1 WD 349-1 T	JAMES N. CHADWELL	1691	539	139,392	147,241	10,030	22,616 10,862 2,837	10,030 — —	12,586 10,862 2,837	NO NO	113,763	—				47,55 47,55 47,55	RELOC. DRIVE
349-2 WL 349-2 WD 349-2 T	MARJORIE MERRILL	3183	662	51,401	51,318	3,483	3,978 4,009 2,818	3,483 — —	495 4,009 2,818	NO NO	43,331	—				55 55 55	
349-3 WL 349-3 WD 349-3 T	KENNETH S. SHUMAN	3159 2888	27 613	43,996	43,235	2,710	2,982 3,096 1,119	2,710 — —	272 3,096 1,119	NO NO	37,157	—				55 55 55	
349-4 WL 349-4 WD 349-4 T	FRANK M. JOHNSON & NINA G. JOHNSON	3162	252	61,028	61,529	3,611	3,973 4,285 1,930	3,611 — —	362 4,285 1,930	NO NO	53,271	—				55,56 55,56 55,56	
349-5 WL 349-5 WD 349-5 T	ORIE E. GRAFTON & JOANN E. GRAFTON	4351	143	61,768	61,749	3,603	2,066 3,252 1,189	1,870 1,733 —	196 1,519 1,189	NO NO	50,431					56 56 56	
349-6 WD 349-6 T	CLIFFORD B. RHOADS & VIRGINIA E. RHOADS	2978	106	49,005	49,120	3,594	6800 105	3,594 —	3206 105	NO NO	42,320	—				56 56	

TYPE FUNDS

(L) DENOTES LANDLOCKING

NOTE: PCL. 335-EL CONVEYED TO KALLSTROM'S STATE ROAD REALTY COMPANY, AN OHIO CORPORATION. ENTERED IN DIRECTOR'S JOURNAL, VOL. 6, PAGE 72.

ADDED NOTE OF CONVEYANCE PCL. 335-EL 11-8-71

REVISED RESIDUES PCLS. 339-342-&343 11-16-70

11. Added 335 EL PER S.A. GUZIAK 8-17-70 (Sandy)
10. Revised Area - Pcl 335 Per Outsale - White 11/18/69
9. Changed 344-WA to 344-T, Changed 344-WD to Easement 8-18-69 White
ADDED PARCELS 339 U, 342 U & 343 U L.S. 10-15-70
8 Changed Pcl. 343 WD to Standard Highway Easement 8-6-69 M.K.M.
7 4/28/69 DELETED PCL 334-WL & COMBINED AREA WITH PCL 335-WL PER OUTSALE. LEE
6 4/24/69 NAME CHANGE PARCEL 343. LEE

DATE OF PREPARATION		
REV.	DATE	DESCRIPTION
1	8-13-68	PARS. 340, 342, 344, 345 & 347 THRU 349-6 AREAS CORR.
2	9-24-68	Pcls. 335 & 336, DELETED, AREA COMBINED WITH PCL 335. Lee
3	2-10-69	Revised owner 338-WL Per Outsale R.S.
4	4-14-69	PCLS. 331-AERIAL & 331-T ADDED
5	4/15/69	DELETED PCLS. 337-WL & 338-WL & COMBINED AREA WITH PCL. 335-WL PER OUTSALE. LEE

SUMMARY OF RIGHT OF WAY REQUIRED

FED. RD.	STATE	PROJECT	
2	OHIO	U 19(12)	

420 / 460

SUM-8-17.63

RIGHT-OF-WAY SHEET

16 / 56

PARCEL Nº	OWNER	DEED RECORD BOOK	DEED RECORD PAGE	DEED AREA TOTAL SQ FT	DEED AREA SQ FT CORR.	TOTAL P.R.O.	TO BE ACQUIRED SQ. FT. TOTAL TAKE	P.R.O. IN TAKE	NET TAKE	BLDGS.	NET RESIDUE LEFT	NET RESIDUE RIGHT	TYPE FUNDS			SHEET Nº	REMARKS
349-7 WD	CARL A. RODGERS & BERTHA M. RODGERS	3101	651	37,200	37,156	3,600	3,790	3,600	190	NO	33,366	—	TYPE U FUNDS			56	
350 WD	CRYSTAL PARK DEVELOPMENT CORPORATION	3265	26	1,774,158	1,743,208	—	5,868	—	5,868	NO	—	1,743,340				54	
350 AWD				5,516003	5473,000	8,298	13,164	8,298	4,866	NO	—	5,459,135				54	SILVER LAKE COUNTRY CLUB LEASEE
350 T							1,032	—	1,032	NO	—	—				54	RE-BUILD DRIVE
350 AT						—	1,492	—	1,492	NO	—	—					
350-1 WD	SILVER LAKE COUNTRY CLUB	3638	493	392,039	392,314	1003	1,593	1,003	590	NO		390,721					
		3637	107														
351 WL	THE CARTER JONES LUMBER COMPANY	3308	635	1,584,408	1,590,607	40,709	525,779	37,363	488,416	YES						45-52	
351 WD		3384	515				11,780	3,346	8,434	YES	——	1,053,138				54	
351 X		3508	323				450	—	450							48	
351 T		3679	48				18,119	——	18,119							46,54	TEMPORARY RUNAROUND
352 WL	JOHN H. COWLEY JR. & ALMEDA L. COWLEY	2871	648	49,589	49,592	4,044	49,592	4,044	45,548	YES	—	—				49,51	
353 WL	MARGARET L. PEARCH	2558	693	72,492	72,514	3,601			53,975	YES	14,938 (L)	—				49	
353 T							57,576	3,601	2,556							49	TEMPORARY RUNAROUND
353 WA							1254		1254							49	BUILDING REMOVAL
354 WL	HAROLD R. BAILEY & ELIZABETH M. BAILEY	2392	456		107,578	5,400	5,998	3,807	2,191	NO	94,896	—				49,56	
354 AWL		3113	340				4,549	——	4,549	NO						51,52	
354 WD							2,135	1,593	542	NO						49,56	
354 T							7,556	——	7,556	NO						49,56	RELOC. DRIVE & TEMP. RUNAROUND
354-1 WD	MARGUERITE DICKINSON & H.	2766	647	35,507	35,542	1,800	2,400	1,800	600	NO	33,142	—				56	
354-2 WD	FRANK J. HUMBERT & ELIZABETH HUMBERT	2618	200		53,014	2,700	5,600	2,700	900	NO	49,414	—				56	
		3103	125														
355	NOT USED																NKA 204 A WL
356 WL	WARD SIGLER, MAUD R. MOTZ, KATHRYM M. HUNTER, JEAN LUTZ & CLAREENE WHARRY	2459	439	17,903	17,905	1,837	17,905	1,837	16,068	NO	—	—				52,53	
		4751	360														
357 WL	JAMES C. CASSIDY &	2208	274	68,120	74,249	14,252	35,060	7,220	27,845	NO	32,148	—				52,53	
		4803	668														
		4303	673														
358 WL	AUDRIA McCUNE	2331	443	110,555	111,438	15,056	66,803	14,190	52,613	YES	—	43,769 (L)				53	
358 WA		2387	665,667				904		904	YES						53	BUILDING REMOVAL
359 WL	BRYAN F. CARPENTER	3893	501		9,124	2,100	9,124	2,100	7,024	YES	—	——				53	DEED AREA CORRECTED
360 PR	RAY W. GOODWIN	3967	501				NO TAKE		NO TAKE	NO						53	PROPERTY RIGHTS
		3967	502														
		3967	503														
358 AWL	AUDRIA McCUNE	2331	443		43,769	——	6,850	——	6,850	NO	——	36,918 (L)				53A	DEED AREA PRESENTLY LANDLOCKED
		2387	665,667														
359 AWL	LESLIE W. JACKSON & MAXINE V. JACKSON	5028	651		66,224	442	13,336	442	12,894	NO	——	52,888				53A	
		2900	298														
359 AT		3579	82				6,225	——	6,225								RELOCATE DRIVE
359 BWL	OHIO EDISON COMPANY, an OHIO CORPORATION	1352	439		83,200	12,593	4,554	3,233	1,321	NO	——	66,573				53A	
359 BWD							4,485	1,772	2,713	NO						53A	

(L) DENOTES LANDLOCKING

10-10-74 ADDED PCL. 359 B-WD - 359 BWD - Corrected Residue 10-17-74
8-19-74 CORRECTED NET T.B.A. & P.R.O. IN TAKE PCL. 359 BWL
ADDED PCLS. 358 AWL, 359 AWL, AT & 359 BWL 8-14-74
Revised Pcl. 353-T-1 to WA 8-18-70
7 2-19-70 Converted 358T to 358WA
6 -12-18-69 REVISED 353-WA TO 353-T-1

REV	DATE OF PREPARATION DATE	DESCRIPTION
1	8-20-68	ALL AREAS CORRECTED
2	8-20-68	PCL# 360 PR ADDED
3	4/8/69	NAME CHANGE PCL. 358 LEE
4	4/24/69	NAME CHANGE PCLS. 356 & 357 LEE
5	9-3-69	Changed Pcl. 358 WA to 358-T & White
		Name Change for Pcl. 358 WL-T

FED. RD.	STATE	PROJECT	
2	OHIO	U19(12)	

421/460

SUM-8-17.63

RIGHT-OF-WAY SHEET 17/56

KEY MAP

SUMMIT - 8 - 17.63
SUMMIT COUNTY, OHIO

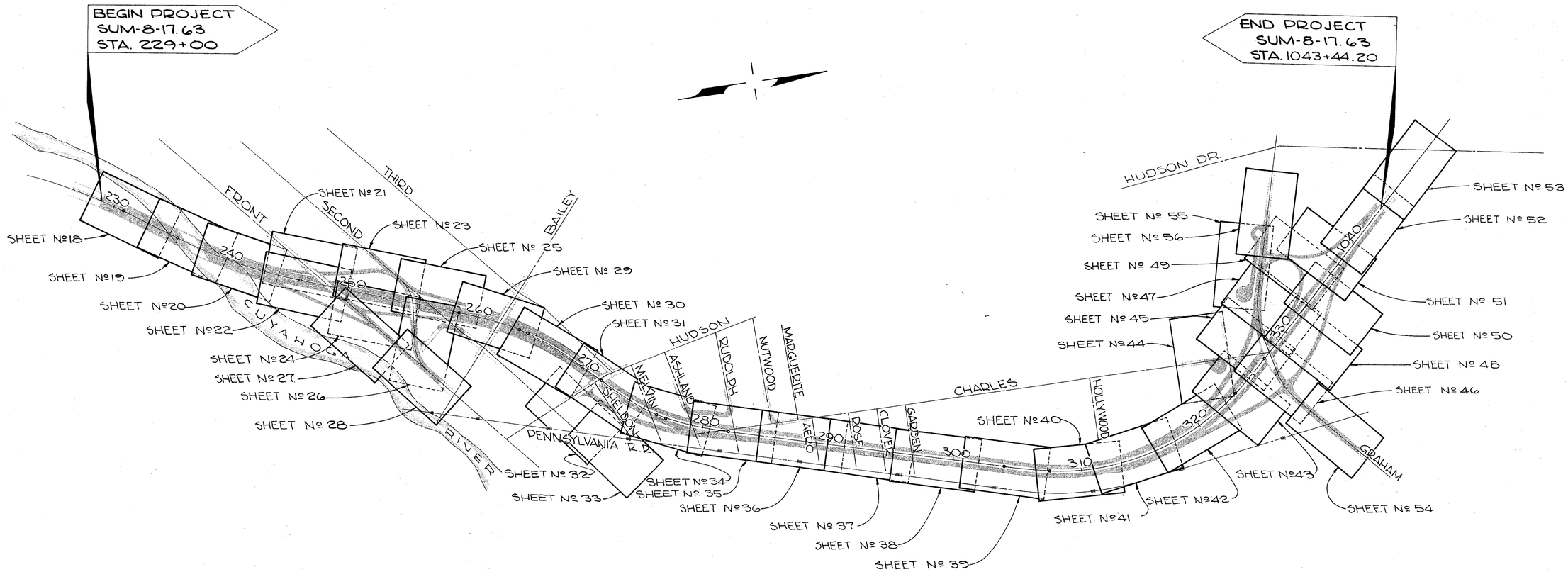

GRAPHIC SCALE

0 400 800 1200 1600

PRELIMINARY SUBMITTAL DATE: RIGHT-OF-WAY COMPLETION DATE:			
Nº	REVISIONS	MADE BY	DATE

KEY MAP

K & E-AKRON

SUMMIT COUNTY, CITY OF CUYAHOGA FALLS
ORIG. STOW TOWNSHIP, O.L.1, O.L.2, T-3N, R-10W

FED. RD.	STATE	PROJECT	
2	OHIO	U19(12)	

422/460

SUM-8-17.63

RIGHT OF WAY SHEET 18/56

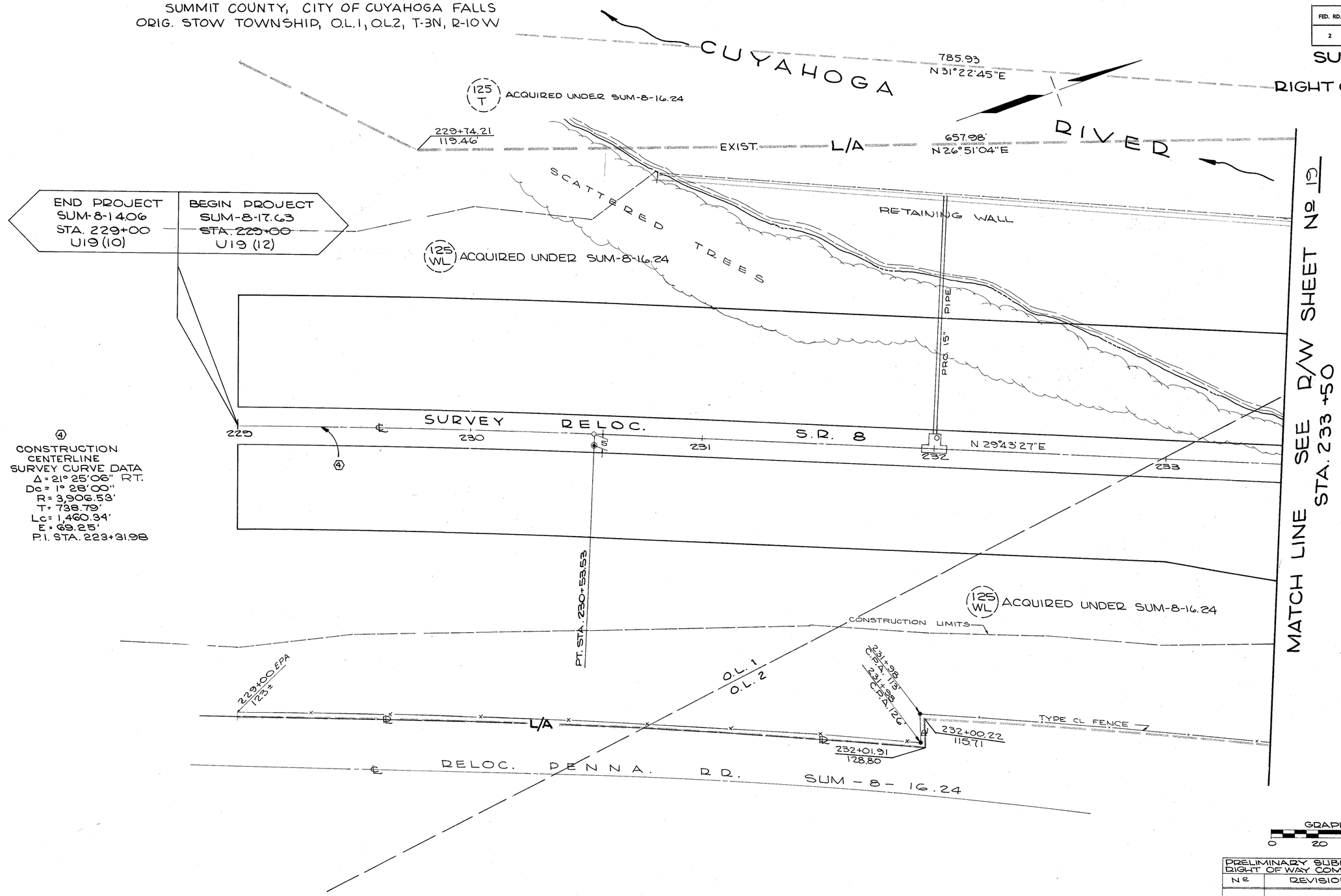

PRELIMINARY SUBMITTAL DATE: RIGHT OF WAY COMPLETION DATE:			
No	REVISIONS	MADE BY	DATE

STA. 229+00 TO STA. 233+50

K & E-AKRON

AUG 27 1968
LOGGED

15

FED. RD.	STATE	PROJECT	
2	OHIO	U 19 (12)	

423/460

SUM-8-17.63

RIGHT OF WAY SHEET 19/56

SUMMIT COUNTY, CITY OF CUYAHOGA FALLS
ORIG. STOW TOWNSHIP, O.L.1, O.L.2, T-3N, R-10W

SR 8 CURVE DATA Nº 5
Δ = 15°06'08" LT.
Dc = 1°28'00"
R = 3906.53'
T = 517.85'
Lc = 1029.70'
E = 34.17'
PI. STA. = 240+86.53

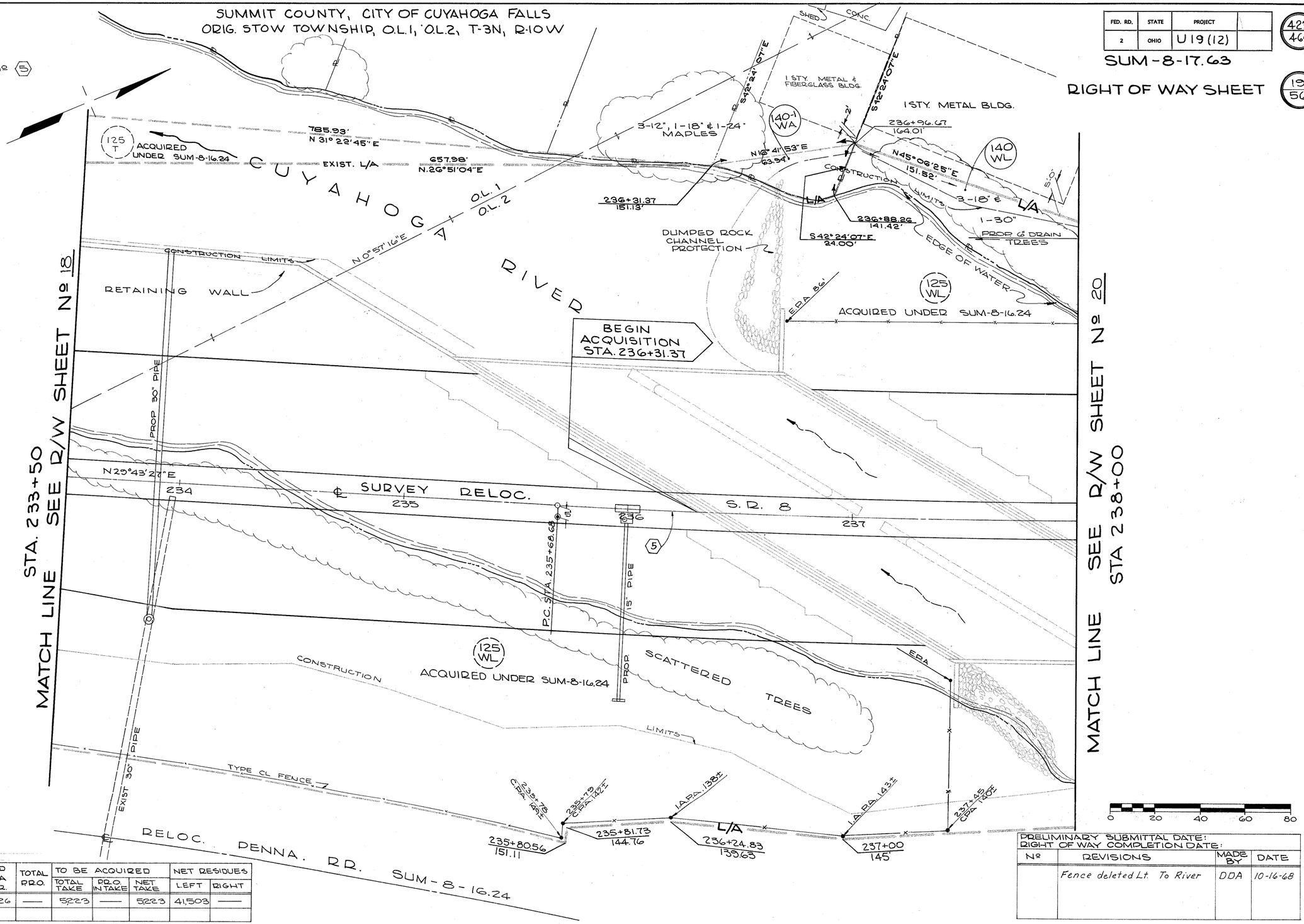

TYPE U FUNDS

PARCEL Nº	OWNER	DEED AREA CORR.	TOTAL P.R.O.	TO BE ACQUIRED TOTAL TAKE	TO BE ACQUIRED P.R.O. IN TAKE	TO BE ACQUIRED NET TAKE	NET RESIDUES LEFT	NET RESIDUES RIGHT
140WL	KEMP BROTHERS INC. (AN OHIO CORPORATION)	46,726	—	5,223	—	5,223	41,503	—
140-1WA	EARL L. HIBBARD & LUCY ADELL HIBBARD							

PRELIMINARY SUBMITTAL DATE:
RIGHT OF WAY COMPLETION DATE:

Nº	REVISIONS	MADE BY	DATE
	Fence deleted Lt. To River	DDA	10-16-68

STA. 233+50 TO STA. 238+00

K & E - AKRON

SUMMIT COUNTY, CITY OF CUYAHOGA FALLS
ORIG. STOW TOWNSHIP, O.L.2, T-3N, R-10W

FED. RD.	STATE	PROJECT	
2	OHIO	U19 (12)	

424/460

SUM - 8-17.63

RIGHT OF WAY SHEET 20/56

PARCEL Nº	OWNER	DEED AREA CORR.	TOTAL PRO	TO BE ACQUIRED SQ. FT. TOTAL TAKE	PRO IN TAKE	NET TAKE	NET RESIDUES LEFT	RIGHT
135WL	THE FRAND CORPORATION, AN OHIO CORPORATION	55,453	—	9,311	—	9,311	—	—
140WL	KEMP BROTHERS INC. (AN OHIO CORPORATION)	46,726	—	5223	—	5223	41503	—
142WL	EUGENE SPOENDLE, Owner; THE FRAND CORP., AN OHIO CORP., HOLDER L.C.	28,778	—	8852	—	8852	19,886	—
143WL	GORDON V. HOFFMAN & VIOLET M. HOFFMAN	17,988	—	8754	—	8754	9234	—
144WL	STANLEY V. BAUDER & ALICE V. BAUDER, owners	24,871	—	16,187	—	16,187	8684	—
JAMES J. CONNORS, holder of Land Contract								

OTHER PARCELS TYPE U FUNDS

PARCEL Nº	OWNER	DEED AREA CORR.	TOTAL PRO	TO BE ACQUIRED SQ. FT. TOTAL TAKE	PRO IN TAKE	NET TAKE	NET RESIDUES LEFT	RIGHT
145VWL	RUDOLPH A. CIARROCCHI & REMA R. CIARROCCHI	7250	—	1945	—	1945	5301	—
146WL	CHARLOTTE L. KAUFMAN	27,609	—	27,609	—	27,609	—	—
147WL	BERTHA CHANDLER, OWNER	16,521	—	13,858	—	13,858	—	—
147WD	EDWIN CHANDLER, LIFE ESTATE		—	2,663	—	2,663	—	—
151WL	DOROTHY D. VOSTETHYL D. CASE, ANN CATHERINE HAYMAN, WILBUR S. DEEDS, JOHN E. DEEDS	74,949	—	43,760	—	43,760	—	—
151WD			—	31,189	—	31,189	—	—
151S			—	11,224	—	11,224	—	—
151AS			—	7708	—	7708	—	—

SR 8 CURVE DATA Nº (5)
Δ = 15°06'08" LT.
Dº = 1°28'00"
R = 3906.53'
T = 517.85'
Lc = 1029.70'
E = 34.17'
PI. STA = 240+86.53

STA. 238+00 SEE R/W SHEET Nº 19

MATCH LINE

STA. 238+00 TO STA. 243+50

SEE R/W SHEET Nº 21 & 22

MATCH LINE - STA. 243+50

BLACKTOP PARKING AREA

1-STY CONC. BLK. BLDG THOMPSON PONTIAC INC.

2 STY CONC. BLK.

OWNER OF PARCEL 143-WL HOLDER OF A 10' EASEMENT OVER THE SOUTHERLY 10' OF PARCEL 144-WL, FOR ROAD OR DRIVEWAY PUROSES & RECORED IN VOLUME 155, PAGE 197.

BLOCK

CINDER PARKING AREA

6" STORM

2½ STY FR. HSE #2477

2 STY FR. HSE #2481

24" MAPLE

18" MAPLE

50'

20'

10'

98'

2 - CAR FR. GAR.

2 - 30" TREES

72.00' N 6°02'01" E

109.22' N 12°52'59" E

TYPE CL FENCE

CONSTRUCTION LIMITS

L/A

1APA 58'±

1APA 81'±

1APA 85'±

1APA 116'±

1APA 117'±

239+14.28 87.16

238+50.76 BEAT

238+45.85 116.25

238+28.71 44.51

238+95.36 43.51

239+91.27 164.0'

239+39.16

239+03.66 119.33'

242+81.92 111.51'

243+41.02 121.18'

76.01' N 21°27'50" E

242+71.47 94.38'

243+17.96 13.63'

N 14°33'27" E

50.00' FND

S 43°35'53" W

S 46°24'07" E

S 42°24'07" E

200.00'

125.00'

222.00'

N 45°06'25" E 151.52'

72.50' N 48°20'01" E

45.00'

48.00'

18" & 4-30" TREES

EDGE OF WATER

TELE POLE GUARDED

4" TILE FROM WASH RACK

PROP 6" PIPE

PROP 15" PIPE

4'D WASTE OIL STORAGE TANK

BRUSH

(NO EASEMENT)

WALL

SURVEY RELOC. S.R. 8

241+15

240+82.77

241+42.63

240+77.19 11.79

N 29°43'27" E

N 14°35'15" E

241+13.67 59.62

241+92.51 86.15

E.P.A.

C.P.A. 86' 30' FROM EDG. PVT.

TYPE 'CL' FENCE (HOLD 30' FROM EDGE OF PAVEMENT)

RETAINING WALL

DUMPED ROCK CHANNEL PROTECTION

CONSTRUCTION LIMITS

ACQUIRED UNDER SUM-8-16.24

SCATTERED TREES

EXIST. L/A

DAMP "M"

PC STA. 242+33.12

40 - 18" & 4 - 30" TREES

CONSTRUCTION L/A

243+00.37 98.83'

243+47.43 104.44'

243+42.70 103.85'

48.61'

N 25°16'44" W

S 25°16'44" E

243+42.63 118.68'

16.44' S 42°38'43" W

243+42.72 114.11'

N 25°16'44" W 113.6'

S 64°24'07" E

242+77.05 131.38'

243+19.05 167.19'

MATCH AT LEFT

MATCH AT RIGHT

146 EL

NOTE: Pcl 146-EL sold to Rudolph D. Ciarrocchi, Sr. and Rehistered in Vol 7, Page 315 New Deeds, Various State Lands.

147 WL

147 S

147 WD

151 WD

151 WL

146 WL

125 WL

142 WL

143 WL

144 WL

145 WL

139 WA

140 WL

139 WL

Added Pcl 146-EL and Note of Sale 5-21-79

REVISED FUNDING PCLS. 147 & 151 PER B.P.R. LETTER 11/8/68. J.R.B. 4/15/69.
REVISED PCL. 146WL TO A TOTAL TAKE PER I.O.C. S.A. GU2/AK 3/21/69. J.R.B. 4/29/69.
REVISED NAME OF PCL. 142-WL, 2-25-69 Lee

PRELIMINARY SUBMITTAL DATE:
RIGHT OF WAY COMPLETION DATE:

Nº	REVISIONS	MADE BY	DATE
1.	ADDED DIST. L/A TO BLDG. -PARCEL 144 & 142	J.M.	7-12-68
2	ADDED PAR. 141WA & 140WA TO SUB SUMMARY	J.M.	7-19-68
3.	ADDED NAMES TO PAR. 147	J.M.	7-19-68
4.	REMOVED DIST. SW & ALONG RESIDUE	J.M.	7-19-68
5.	ADDED OWNERSHIP HOOKS & ℄ - PARS. 143-147	E.V.	8-16-68
6	DELETED 141-COMBINED WITH 139-NEW OWNER	E.S.	8-26-68
7	REVISED NAME - 151	E.S.	8-29-68
8	Revised Name - Pcl 144	E.W.	12-3-68
9.	ADDED 10' EASEMENT PCL'S. 144 & 143 LEE		12/12/68

0 20 40 60 80

STA. 238+00 TO STA. 243+50

K & E - AKRON

SUMMIT COUNTY, CITY OF CUYAHOGA FALLS
ORIG. STOW TOWNSHIP, QL.2, T-3N, R-10W

FED. RD.	STATE	PROJECT	
2	OHIO	U19(12)	

425/460

SUM-8-17.63

RIGHT OF WAY SHEET 21/56

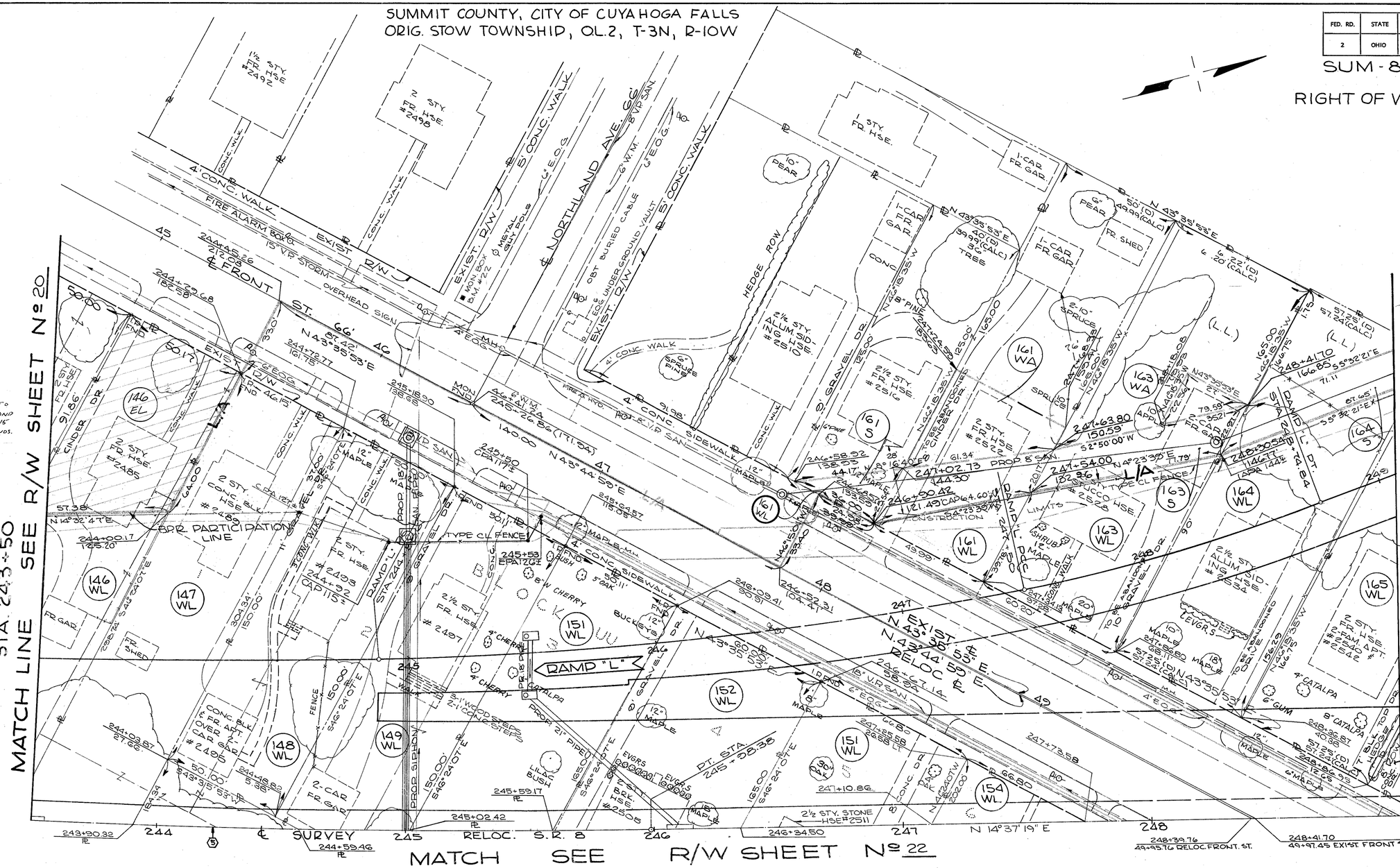

SUMMIT COUNTY, CITY OF CUYAHOGA FALLS
ORIG. STOW TOWNSHIP, QL. 2, T-3N, R-10W

FED. RD.	STATE	PROJECT	
2	OHIO	U-19(12)	

426
460

SUM-8-17.63
RIGHT OF WAY SHEET

22
56

MATCH LINE — SEE R/W SHEET Nº 20 — STA. 243+50

MATCH LINE — SEE R/W SHEET Nº 24 & 27 — STA. 249+00

MATCH SEE R/W SHEET Nº 21

SURVEY ℄ RELOC. S.R. 8

P.T. 245+98.38

243+90.32 ℞ | 244 | 244+59.46 ℞ | 244+93.36 | 17.45' | 245 | 245+02.42 ℞ | 245+59.11 ℞ | 246 | 246+34.50 | PROP. 21" PIPE | 247 | 247+10.86 | 247+73.58 | 248 | 248+39.76 | 49+95.76 | 248+41.70 | 49+97.45

N 14° 37' 19" E

147 WL | 149 WL | 151 WL | 151 WD | 151 S | 151-A S | 152 WL | 154 WL | 154 WD | 154 S | 154-A S | 155 WL | 155 WD | 155 S | 156 WL | 156 WD | 156 S | 157 WL | 157 WD | 157 S | 158 WL | 158 WD | 158 S

- 2 CAR FR. GAR.
- 1-8" CHERRY, 1-6" APPLE, 1-8" W. CHERRY
- 2-5" TREES BRK.
- # 2505
- 2 CAR FR. GAR.
- NOSE: 246+86.53, 24' RT. OF ℄
- 23° LT. RAMP "M" STA. 244+30.78
- DOSE TRAILER
- 245+30.41 54.03'
- 1½ CAR FR. GAR.
- POND
- 1½ STY. FR. HSE. # 2511
- CONC.
- 20" MAPLE, 10" MAPLE, 2-6" CHERRY, 8" CEDAR BUSH
- PROP 15" PIPE
- CONC. WK.
- 8" MAPLE
- 5' CONC. WALK
- CONC. RET. WALL
- 247+84.02 5.78
- 18" VD SAN
- EXIST. R/W 66.8' ± R/W
- 12" MAPLE
- 248+42.46 38.11'
- 249+00.90 10.50'
- 1½ STY. FR. HSE. # 2521
- 2½ - STY. FR. HSE. # 2527
- 2½ - STY. FR. HSE. # 2533
- 2½ - STY. FR. HSE. # 2539
- 3" CEDAR
- 2-8" PINES
- 1-8" PINE, 2-6" PINE, 1-12" MAPLE
- 15" BRK. 5125 PLACE
- 2-8" PINES & DOGWOOD CLASH
- 12" LOCUST
- 12" OAK
- 10" MAPLE
- 18" MAPLE
- 8" CATALPA
- SHRUB
- HEDGE
- 15" MAPLE
- 10" MAPLE
- 8" MAPLE
- 8" PEAR
- 8" WALNUT
- 8" MAPLE
- 2 CAR FR. GAR.
- STORAGE SHED
- GRAVEL AREA
- CONC. WALK
- 248 WOOD FENCE
- 2-STY FR. HSE.
- 1½ - STY. FR. HSE.
- 1-24" CHERRY, 1-24" OAK, 1-8" W.CH., 1-24" MAPLE, 1-16" MAPLE, 1-30" ELM
- 8" WILD CHERRY
- 1-15" WILD CHERRY, 2-18" OAKS, 1-15" OAK, 20-8" TO 12" TREES
- 1-15" TREE
- 2-18" OAKS
- 1-15" OAK
- 20-8" TO 12" TREES

RAMP "M"

PROP. SIPHON

PROP 18" SANITARY SEWER

PROP 6" W.M. TO SIPHON

ALLOTMENT LINE

CONSTRUCTION LIMITS

L/A TYPE C½ FENCE

L/A 69.01'

L/A 50.32'

L/A 201.73'

L/A 248+28.23

EXIST. 66' R/W

EXIST. 80' R/W

EXIST. 60' R/W

EXIST. 50' R/W

PROP. 66' R/W

PROP. 80' R/W

EXIST. 50' R/W

SUMMIT COUNTY, CITY OF CUYAHOGA FALLS
ORIG. STOW TOWNSHIP, O.L.2, T-3N R-10W

FED. RD.	STATE	PROJECT	
2	OHIO	U 19 (12)	

427/460

SUM-8-17.63

RIGHT OF WAY SHEET 23/56

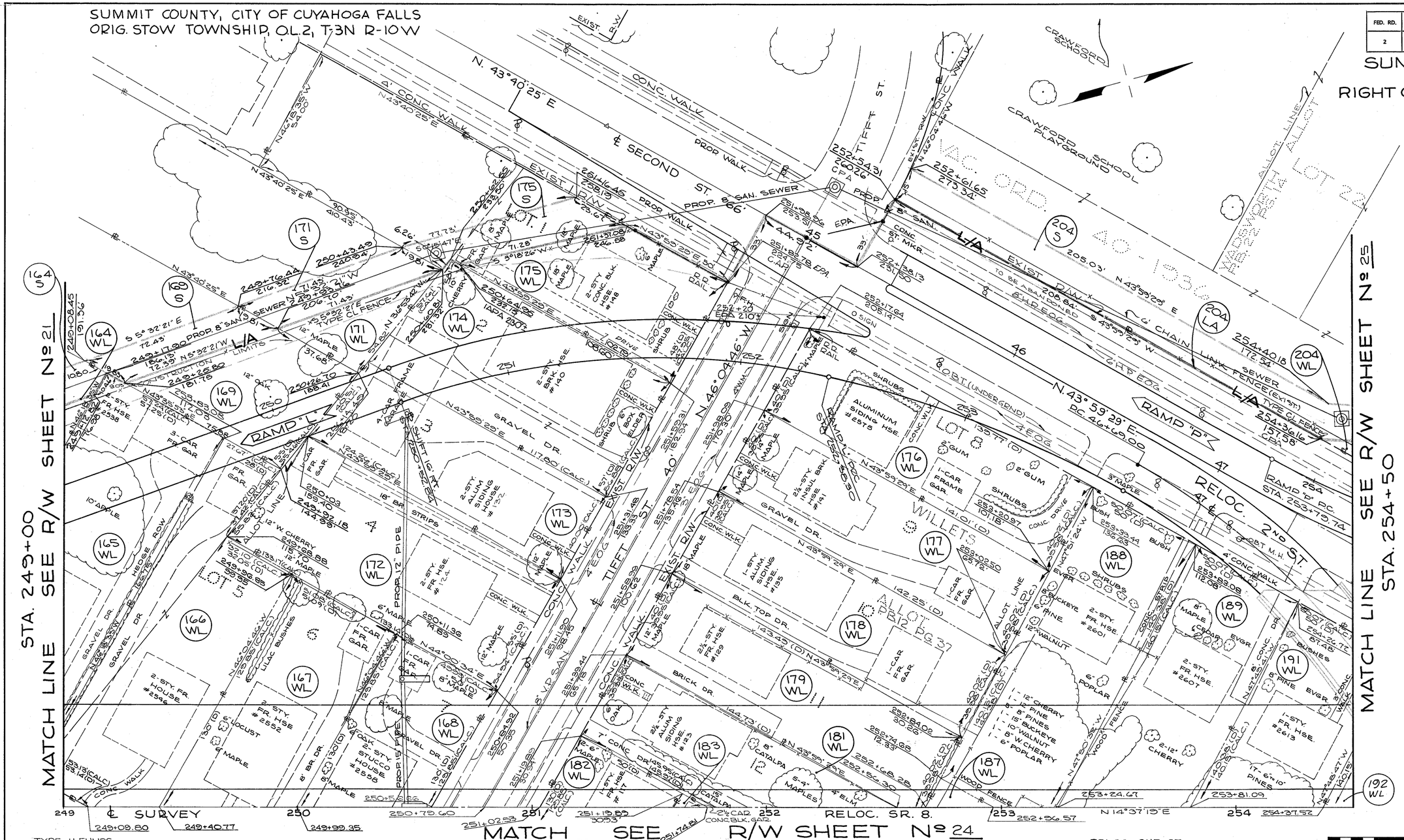

SUMMIT COUNTY, CITY OF CUYAHOGA FALLS
ORIG. STOW TOWNSHIP, O.L. 2, T-3N, R-10W

FED. RD.	STATE	PROJECT	
2	OHIO	U19 (12)	

428/460

SUM-8-17.63

24/56

RIGHT OF WAY SHEET

MATCH SEE R/W SHEET Nº 23

SEE R/W SHEET Nº 22

STA. 249+00 MATCH LINE

SEE R/W SHEET Nº 26

STA. 254+50 MATCH LINE

TYPE U FUNDS

PARCEL Nº	OWNER	DEED AREA CORR.	TO BE ACQUIRED TOTAL TAKE	TO BE ACQUIRED NET TAKE	NET RESIDUE LEFT	NET RESIDUE RIGHT
181WL	ALVA JABED NICHOLSON JR.* LINDA RUTH NICHOLSON		5809	5809		
182WL	RUTH A LUTZ		6493	6493		
183WL	KAROLOS G. BLOOES, INC. (AN OHIO CORPORATION)		6492	6492		
184WL	KARL L. GRAY * KATHRYN GRAY		6231	6231		
185WL	LUCY BALDWIN		6986	6986		
186WL	KATHRYN J. FOWLS		6986	6986		
187WL	JOHN J. TURLEY * LOIS J. TURLEY		18,270	18,270		
188WL	MARGARET O. COPE		7015	7015		
189WL	ELEANOR H. BACKUS		7015	7015		
191WL	VIVIAN L. BUECHLER &c.a. LILLIAN L. KLUEHART		7015	7015		
192WL	LLOYD F. BENDER		2806	2806		
194WL	HUGH T. PINEHART * INEZ V. PINEHART		15,834	15,834		
195WL	RAMP "N" TO FROM E. FRONT ST.		9785	9785		

PARCEL Nº	OWNER	DEED AREA CORR.	TO BE ACQUIRED TOTAL TAKE	TO BE ACQUIRED NET TAKE	NET RESIDUE LEFT	NET RESIDUE RIGHT	TYPE FUNDS
150WL	STANLEY I BOLTZ *		5799	5799			U
150WD	JOHN J BOLTZ AKA	12,800	7001	7001			U
150 S	JOHN S BOLTZ		880	880			U
150-1WL	STUART STOLL		4831	4831			U
150-1WD		11,525	6694	6694			U
150-1 S			811	811			U
150-2WL	WILLIAM L. KORPP *		3694	3694			U
150-2WD	DOLORES A. KORPP	10,250	6556	6556			U
150-2 S			910	910			U
157WL	LORETTA COULSON		7391	7391			U
157WD		15,935	8544	8544			U
157 S			1542	1542			U
158WL			7140	7140			U
158WD	LEOTA D. WRIGHT	15,183	8043	8043			U
158 S			1117	1117			U
159WL	RICHARD F. MILLER *		6613	6613			U
159WD	LUELLA B. MILLER	14,106	7493	7493			U
159 S			948	948			U
160WL	MARY A. HAYNES &c.a.		2556	2556			U
160WD	MARY A. CARUSO	9400	6844	6844			U
160 S			1010	1010			U
160-1WL			1419	1419			U
160-1WD	MARTHA JARRETT	8,900	7481	7481			U
160-1 S			1109	1109			U

PARCEL Nº	OWNER	DEED AREA CORR.	TO BE ACQUIRED TOTAL TAKE	TO BE ACQUIRED NET TAKE	NET RESIDUE LEFT	NET RESIDUE RIGHT	TYPE FUNDS
160-2WL	FREDRICK O. NOBLE *		675	675			U
160-2WD	HELEN B. NOBLE	8580	7875	7875			U
160-2 S			815	815			U
160-3WL	ALAN E. EDERER * ROBERT E. NORRIS (A PARTNERSHIP)	24,125	24,125	24,125			U
166WL	EDWARD P. PORTER		7845	7845			U
167WL	DEWITT ASHER * SHIRLEY R. ASHER		6633	6633			U
168WL	SECURITY REALTY COMPANY (AN OHIO CORPORATION)	6491	6491	6491			U

Deleted Pcls. 160-3WD and 160-3LA.
Revised area of Pcl 160-3WL to include area of 160-3WD. 7-17-68 White

0 20 40 60 80

Name Change Pcl. 195WL

PRELIMINARY SUBMITTAL DATE:
RIGHT-OF-WAY COMPLETION DATE:

Nº	REVISIONS	MADE BY	DATE
1.	ADDED STA. & OFFSET SW COR. TIFFT & FRANKE	J.M.	7-22-68
2.	ADDED BRG. TO S/A	J.M.	7-22-68
3.	ADDED "HSE" - PADS. -150 & 160	E.V.	8-16-68
4	CONST. LIMITS - NO. SIDE FRONT ST. CORR.	E.V.	8-16-68
5.	1) REVISED NAME 157 & 191 AND 2) REVISED BEARS: 164, 163, 168, 188, 189 & 192	R.S.	8-28-68
6.	FENCE ADDED FRONT ST & RAMP "N"	D.D.A.	10-16-68
7	Revised Name Pcl. 160-WL	LEE	3-25-69

FOR INFORMATION IN THIS AREA SEE R/W SHEET 27

STA. 249+00 TO STA. 254+50 RT OF ℄

8. REVISED FUNDING PCLS. 150, 150-1, 150-2, 157, 158, 159, 160, 160-1, 160-2, & 160-3 PER B.P.R. LETTER 11/8/68. J.R.B. 4/15/69.

K & E - AKRON

APR 27 1988

PARCEL Nº	OWNER	DEED AREA CORR.	TOTAL PRO.	TO BE ACQUIRED			NET RESIDUES	
				TOTAL TAKE	PRO INTAKE	NET TAKE	LEFT	RIGHT
193 WL	JOHN C. HART & ARTA L. HART	13,505	——	13,505	——	13,505	——	——
204 WL 204 S	BOARD OF EDUCATION OF CITY OF CUYAHOGA FALLS	152,532	——	7512 5964	——	7512 5964	145,020	——
205 WL 205 S	IDELLA M. DIPER	9,033	——	4651 755	——	4651 755	4,482(L)	——
206 WL 206 S	F.W. ALBRECHT GROCERY CO. (AN OHIO CORPORATION)	91,218	——	71,378 2762	——	71,378 2762	8,136(L)	11,704

13,505

TYPE U FUNDS

RELOC. SECOND ST.
CURVE DATA
Δ = 45° 34' 45" RT.
Dc = 18° 45' 00"
R = 305.58'
Lc = 243.09'
T = 128.39'
E = 25.88'
P.T. STA. 47+97.39

SUMMIT COUNTY, CITY OF CUYAHOGA FALLS
ORIG. STOW TOWNSHIP, O.L.2, O.L.12, T-3N, R-10W

FED. RD.	STATE	PROJECT	
2	OHIO	U19 (12)	

429
460

SUM-8-17.63

RIGHT OF WAY SHEET 25/56

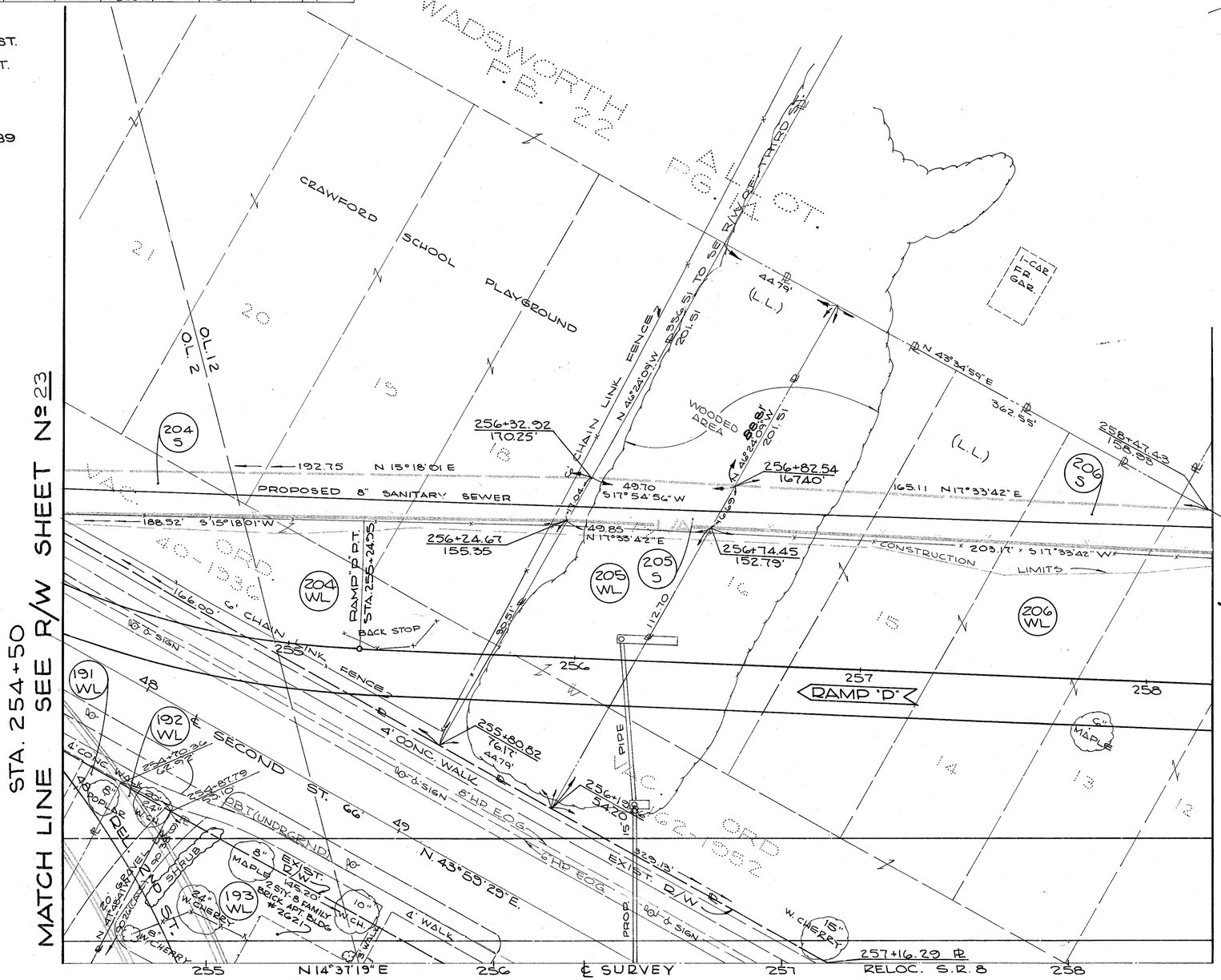

0 20 40 60 80

PRELIMINARY SUBMITTAL DATE: RIGHT-OF-WAY COMPLETION DATE:			
Nº	REVISIONS	MADE BY	DATE
1.	PAR. 206 - RESIDUE AREA CORR.	J.M.	7-22-68
2.	LABELED BLDG. - PAR 193 WL	E.V.	8-16-68
3.	REVISED AREAS: 193	R.S.	8-28-68

STA 254+50 TO STA 258+50 LT. OF ℄

AUG 27 1968

K & E - AKRON

22

MATCH LINE SEE R/W SHEET Nº 25

MATCH LINE SEE R/W SHEET Nº 24

SUMMIT COUNTY, CITY OF CUYAHOGA FALLS
ORIG. STOW TOWNSHIP, O.L.2, O.L.12, T-3N, R-10W

FED. RD.	STATE	PROJECT	
2	OHIO	U19(12)	

430/460

SUM.-8-17.63

RIGHT OF WAY SHEET 26/56

▨ = AREA CONVEYED

NOTE "A" PCL. 200 WD
PCL. 200-WD VACATED AND CONVEYED TO THE CITY OF CUYAHOGA FALLS BY DIRECTOR'S DEED RECORDED IN VOL. 6590, PAGES 486-489 SUMMIT COUNTY RECORDS

▨ = 198-WD SOLD 6/08/05
REC. No. 55194891

TYPE U FUNDS	PARCEL Nº	OWNER	DEED AREA COD'D.	TOTAL P2.0	TO BE ACQUIRED TOTAL TAKE	NET PRO. IN TAKE	NET RESIDUE LEFT	NET RESIDUE RIGHT
	190 WL	THE ALMAR CO., A PARTNERSHIP	33,786	—	1215	—	—	32,571
	190 LA				239			
	193 WL	JOHN C. HART &	13,505	—	13,505	—	—	—
	194 WL	HUGH T. RINEHART & INEZ K. RINEHART	13,812	—	13,812	—	—	—
	195 WL	FIRST National Bank and Trust Co. ETAL.	9,785	—	9,785	—	—	—
	196 WL	ANNA M. WISE	14,042	—	14,042	—	—	—
	197 WL	LELAND COX AKA LEELAND S. COX	9592	—	9592	—	—	—
	198 WD	ELEANOR M. NIHOUSEN	11,696	—	8576	—	—	3120
	199 WL	DAVID K. FIRM & DOROTHY K. FIRM	5408	—	501	—	4907	
	199 T				353			
	200 WA	FRANK J. MANSFIELD & JEANNE MANSFIELD	3947	—	715	—	3232	
	200 WD	PATRICK OPEN, ETUX.	7883	—	7883	—	—	—
	201 WL	PATRICK OPEN, ETUX.	7883	—	1271	—	6085	
	202 WL	FLOYD T. HAMLIN	7356	—	1271	—	6085	
	202 WA	CORA MAE DE SHANE F/K/A CORA MAE SANDHEE	5136	—	3795	—	3795	13.61
	203 WL	MARTIN A. NEILL & W. REGINA NEILL	—	—	—	—	—	—
	202 WA							

RELOC. SECOND ST.
CURVE DATA
Δ = 45° 34' 45" RT.
Dc = 18° 45' 00"
R = 305.58'
Lc = 243.09'
T = 128.39'
E = 25.88'
PT. STA. 47+97.39

Δ = 45° 33' 40" LT
Dc = 18° 30' 00"
R = 309.71'
Lc = 246.28'
T = 130.06'
E = 26.20'
P.I. STA. 53+07.11

(199 T)
① N-82° 53' 47"-W 25.08'
② N-44° 00' 34"-E 25.11'
③ S-45° 59' 26"-E 20.05'
④ S-44° 00' 34"-W 10.07

NAME CHANGE PCL 190 LEE 4-7-08
0 20 40 60 80

Name Change, Pcl. 195 WL 3-5-69

PRELIMINARY SUBMITTAL DATE:
RIGHT-OF-WAY COMPLETION DATE:

Nº	REVISIONS	MADE BY	DATE
1.	ADDED PARS 190 LA. & 202-1 WA	J.M.	7-22-68
2.	ADDED DIST 4/A TO BLDG PAR 190	J.M.	7-22-68
3.	ADDED STA & OFFSET-NE COR. PAR. 196	J.M.	7-22-68
4.	ADDED BRG'S. -SECOND, & RELOC. SECOND ST.	E.V.	8-16-68
5.	CONST. LIMITS, FRONT ST. CORR. & CONNECTOR.	E.V.	8-16-68
6.	Revised Area: 195 WL	D.C.	8-26-68
7.	REVISED 199 WL & 199 T PER DOC. DATED 8/29/68	E.V.	9-12-68
8.	FENCE ADDED ALONG RAMP "N"	D.D.A.	10-16-68
9.	Revised Name Pcl. 203	E.V.	12-3-68

8-10-82 CROSSHATCHED PCL 200-WD TO SHOW CONVEYANCE TO THE CITY OF CUYAHOGA FALLS, OHIO

4/03/06 DJH SOLD PCL

STA 254+50 TO STA 258+50 RT. OF ℄

K & E - AKRON

SUMMIT COUNTY, CITY OF CUYAHOGA FALLS
ORIG. STOW TOWNSHIP, O.L. 2, T-3N, R-10W

FED. RD.	STATE	PROJECT	
2	OHIO	U19 (12)	

431/460

SUM - 8 - 17.63

27/56

RIGHT OF WAY SHEET

TIFFT ST.
8"V.P.SAN.
4"W.M.
3'E.O.G.
4'E.O.G.
CONC. WALK
8"V.P.SAN.
FIRE HYD.
8"W.M.
EXIST. ℄ N43°35'53"E
END RELOC FRONT ST.
STA. 53+41.24
FRONT ST. 66'
N 44°00'34" E
12"V.P. SAN.
POINT OF PEDESTRIAN ACCESS PER B.P.R. PARTICIPATION
POINT OF PEDESTRIAN ACCESS PER B.P.R. PARTICIPATION
RELOC. ℄ N43°44'59"E
52
53
54
55
56
57
249+88.22
119.68'
250+31.88
144.27'
250+75.45
168.81'
251+19.01
193.34'
251+62.58
217.88'
252+06.15
242.42'
252+49.17
266.95'
252+93.28
291.49'
253+36.84
316.02'
C.P.A.
160-6 LA
FOR B.P.R. PARTICIPATION ONLY
B.P.R. PARTICIPATION
EXIST. R/W
18"V.P. SAN.
6" E.O.G.
CONC. WALK
GRAVEL DR.
8" CHERRY
15" MAPLE
12" MAPLE
24" MAPLE
2 MAPLE
MAPLE
SPRUCE
RAMP "M"
2½-STY. FR. HSE. #2549
2½-STY. FR. HSE. #2553
2-STY. FR. HSE. #2559
2½-STY. FR. HSE. #2567
2-STY. FRAME HSE.
#2579 2-STY. FRAME HSE.
#2585 2-STY. FRAME HSE.
#2589 2-STY. BRICK STUCCO HSE.
#2595 1½-STY. FRAME HSE.
#2613 2½-STY. FRAME HSE.
#2619 1½-STY. FRAME HSE.
#2573 2-STY. CONC. BLK. HSE.
#2587 1-STY. BRICK HSE.
2-CAR GAR.
FR. GAR.
BRICK DR.
LA
LA SUBD.
CONC.
24" STORM
GD. DRIVE
FIRE HYDRANT
BLACK TOP DR.
RAMP "M"
CONSTRUCTION LIMITS
1APA 279'
1APA 250'
1APA 261'
1APA 261'
1APA 261

SUMMIT COUNTY, CITY OF CUYAHOGA FALLS
ORIG. STOW TOWNSHIP, O.L.2, O.L.12, T-3N, R10W

FED. RD.	STATE	PROJECT	
2	OHIO	U19 (12)	

432/460

SUM - 8 - 17.63

RIGHT OF WAY SHEET 28/56

RELOC. 2ND ST CURVE DATA
Δ. = 45° 33' 40" LT.
Dc. = 18° 30' 00"
R. = 309.71'
T. = 130.06'
Lc. = 246.28'
E. = 26.20'
P.I. STA. 53+07.11

SHEET Nº 27

MATCH LINE SEE R/W SHEET Nº 27

N 44° 00' 34" E

R/W ℄ 80.07

25.00

255+80.87 (240.08)

N 53° 21' 34" W

120.92

N 80° 12' 28" E

111.78

CONSTRUCTION LIMITS

198 WD

52+75

ALLENSIDE CT.

N 46° 02' 36" W

77.93

256+72.42 251.64

BURGER CHEF (LEASEE) DRIVE-IN

37'

256+60.93 363.18

BLACKTOP PARKING

190 S

256+48.68 384.92

256+62.55 398.55

190 WL

N 40° 42' 16" W

198 WL

197 WL

RELOC. SECOND ST.

DOLLAR CLEANERS LAUNDROMAT 1-STY. BRICK

LIMITS

120.83 (CALC.)

42.00'

256+13.67 392.19

255+39.27 352.04

89.98 CALC.

90° (R)

5299'

53

80.00

TYPE CL FENCE

93.99'

190 LA

FOR INFORMATION IN THIS AREA SEE R/W SHEET. Nº 26

257+13.81 432.62

257+31.90 (462.70) 60+00.26 (38.00) EPA

20.11'

21.29'

236.22 (CALC.)

132.57 (CALC.)

EXIST R/W

ACME 1-STY BRICK

℄ BAILEY RD

T-8" VP SAN

DRIVE WAY TO BE ABANDONED

256+35.45 408.42'

6" W.M.

54

257+15.70 (491.56) ℄ 60+00.26

℄ FRONT ST.

283.41' (℄ Plat)

N 44° 00' 34" E

58 ℄ 57+75.00 255+18.43 (381.07) FOR B.P.R. PARTICIPATION 57+75.00 (38.00) 255+03.24 (409.77)

225.26

59

60

61

62

O.L. 12

O.L. 2

L/A

18" VP SAN

6" E.D.G.

6" MAPLE

EXIST R/W

98.00'

13.0'

104.00'

255+14.63 416.17

8" MAPLE

WALK

6" MAPLE

255+32.18 469.88

256+05.25 467.21

8" MAPLE

GRAVEL DR.

#2667 1-STY. CONC. BLK

#2669 2-STY. BRICK

1-STY. BEAUTY SHOP

BLACK TOP

#2679 MARATHON SERV. STATION

#2625 2-STY. FR. HSE.

SLAG DRIVE

S 58° 07' 26" E

150.00'

#2643 1-STY. FR. HSE. INSUL BR. SIDING

DRIVE NOT OPEN

SCATTERED MAPLES

#2649 2-STY. FR. HSE.

#2655 2-STY. CONC. BLK.

#2661 1½ STY FR. HSE. INSUL BR. SIDING

GRAVEL DR.

GRAVEL DR.

GRAVEL DR.

160-7 WL

160-8 S

128.00' S 46° 02' 36" E

PROP 54" STORM PIPE

130.00' S 46° 02' 34" E

WALL

254+22.82 614.79

EDGE OF WATER

254+67.30 551.86

255+23.47 571.43

1330' S 55° 19' 02" W

CUYAHOGA RIVER

0 20 40 60 80

PARCEL Nº	OWNER	DEED AREA CORR.	TOTAL P.R.O.	TO BE ACQUIRED TOTAL TAKE	TO BE ACQUIRED P.R.O. IN TAKE	TO BE ACQUIRED NET TAKE	NET RESIDUES LEFT	NET RESIDUES RIGHT	TYPE FUNDS
160-8S	HAROLD SOMMERS	13,157	——	1,943	——	1,943	——	13,157	U
190 WL	THE ALMAR CO.,	33,786	——	1,215	——	1,215	——	32,571	U
190 S	A Partnership			239	——	239	——	——	U
198 WL	ELEANOR M. NIHOUSEN	11,696	——	8,576	——	8,576	——	——	U
198WD				3,120	——	3,120	——	——	U
160-7WL	MERCEDES MOORE	6,120	——	6,120	——	6,120	——	——	U
									U

PRELIMINARY SUBMITTAL DATE:
RIGHT-OF-WAY COMPLETION DATE:

Nº	REVISIONS	MADE BY	DATE
1.	ADDED DIST. L/A TO BLDG. PAR. 190	J.M.	7-22-68
2.	ADDED WORK LIMITS-PAR. 198 WD.	E.V.	8-16-68
3.	ADDED L/A-R/W	E.V.	8-16-68
4	NAME CHANGE, PCL. 190	L.B	4-7-69
5	REVISED FUNDING PCL 160-7 PER B.P.R. LETTER 11/8/68.	J.R.B.	4/15/69
6	ADD SUFFIX WL TO PCL 106-TWD Delete 160-7 LA	JRT	12-23-74

FRONT ST. STA. 57+50 TO STA. 62+00

AUG 27 1968
DEPT. OF HIGHWAY ENGR. & ADMIN. SERV.
SUMMIT COUNTY, OHIO
K & E - AKRON

SUMMIT COUNTY, CITY OF CUYAHOGA FALLS
ORIG. STOW TOWNSHIP, O.L.12, T-3N, R-10W

FED. RD.	STATE	PROJECT	
2	OHIO	U19(12)	

433/460

SUM - 8 - 17.63

RIGHT OF WAY SHEET 29/56

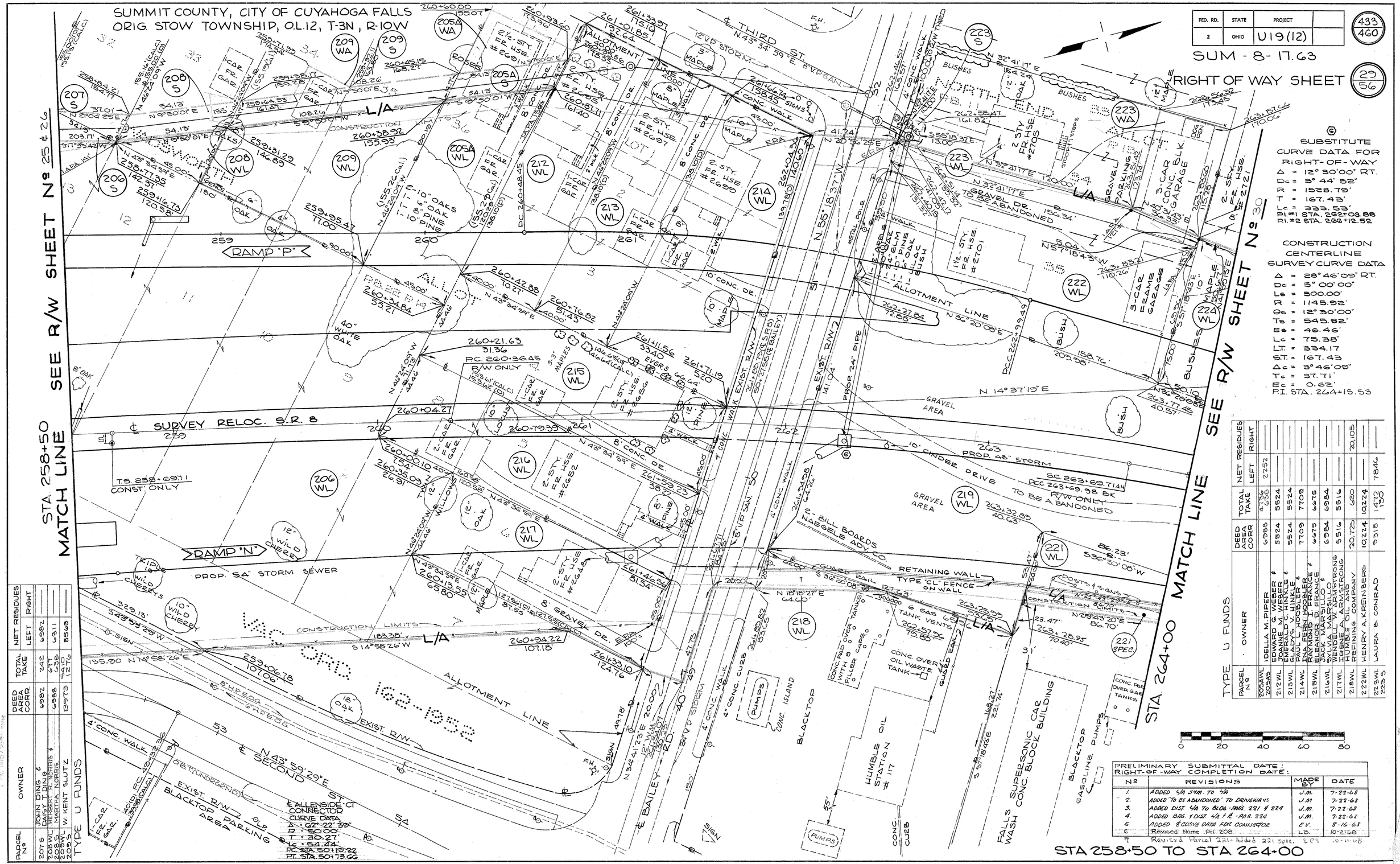

SUBSTITUTE CURVE DATA FOR RIGHT-OF-WAY

Δ = 12° 30' 00" RT.
Dc = 3° 44' 52"
R = 1528.79'
T = 167.43'
Lc = 333.53'
P.I. #1 STA. 262+03.88
P.I. #2 STA. 266+12.52

CONSTRUCTION CENTERLINE SURVEY CURVE DATA

Δ = 28° 46' 09" RT.
Dc = 5° 00' 00"
Ls = 500.00'
R = 1145.92'
Qs = 12° 30' 00"
Ts = 545.82'
Es = 46.46'
Lc = 75.38'
LT. = 334.17
ST. = 167.43
Δc = 3° 46' 09"
Tc = 37.71'
Ec = 0.62'
P.I. STA. 264+15.53

TYPE U FUNDS

PARCEL Nº	OWNER	DEED AREA CORR.	TOTAL TAKE	NET RESIDUES LEFT	NET RESIDUES RIGHT
205AWL 205AS	IDELLA M. PIPER	6988	4736 638	2252	—
212WL	EDWARD G. WEBER & JOANNE M. WEBER	5524	5524	—	—
213WL	EMERALD C. HINKLE & GLADYS V. HINKLE	5524	5524	—	—
214WL	PAUL L. HOOBLER & INA FERN HOOBLER	7709	7709	—	—
215WL	RAYMOND I. FRANCE & ELEANOR D. FRANCE	6675	6675	—	—
216WL	JACK MARSILLO & SYLVIA MARSILLO	6984	6984	—	—
217WL	WENDELL W. ARMSTRONG & IRENE A. ARMSTRONG	5516	5516	—	—
218WL	HUMBLE OIL AND REFINING COMPANY	20,725	620	—	20,105
222WL	HENRY A. KREINBERG	10,224	10,224	—	—
223WL 223S	LAURA B. CONRAD	9318	1472 130	7846	—

TYPE U FUNDS

PARCEL Nº	OWNER	DEED AREA CORR.	TOTAL TAKE	NET RESIDUES LEFT	NET RESIDUES RIGHT
207S	JOHN DING & DAISY T. DING	6982	242	6982	—
208WL 208S	HERBERT R. NORRIS & MARTHA NORRIS	6988	677 638	6311	—
209WL 209S	W. KENT SLUTZ	13973	5410 1276	8563	—

PRELIMINARY SUBMITTAL DATE:
RIGHT-OF-WAY COMPLETION DATE:

Nº	REVISIONS	MADE BY	DATE
1.	ADDED L/A SYM. TO L/A	J.M.	7-22-68
2.	ADDED "TO BE ABANDONED" TO DRIVEWAYS	J.M.	7-22-68
3.	ADDED DIST. L/A TO BLDG.-PARS. 221 & 224	J.M.	7-22-68
4.	ADDED BRG. & DIST. L/A & ℄ - PAR. 224	J.M.	7-22-68
5.	ADDED ℄ CURVE DATA FOR CONNECTOR	E.V.	8-16-68
6.	Revised Name Pcl. 208	L.B.	10-2-68
7.	Revised Parcel 221 - Added 221 Spec.	E.C.S.	10-11-68

STA 258+50 TO STA 264+00

K & E - AKRON

SUMMIT COUNTY, CITY OF CUYAHOGA FALLS
ORIG. STOW TOWNSHIP, O.L.12, T-3N, R-10W

FED. RD.	STATE	PROJECT	
2	OHIO	U19(12)	

434/460

SUM - 8-17.63

RIGHT OF WAY SHEET 30/56

STA. 264+00 SEE R/W SHEET № 29

SEE R/W SHEET № 31

MATCH LINE

MATCH LINE

STA 269+00

℄ THIRD ST. S 50° 10' 36" W 40'

4' W.M.

4" ∅ FIRE HYD.

8" V.P. SAN.

4' CONC. SIDEWALK

EXIST R/W LINE

ALLOTMENT LINE

CONSTRUCTION LIMITS

RELOC. S.R. 8

PROP. 42" PIPE

℄ S.R. 8

℄ EXIST R/W

SECOND ST. 66'

BLACKTOP DRIVE & PARKING AREA

PARKING LOT

GRAVEL & DIRT PARKING LOT

GRAVEL PARKING LOT

BLACKTOP

RAMP "P"

BOARD FENCE

TYPE CL FENCE

CONC. PARKING AREA

CONC. PAD OVER GAS TANK

ASPHALT SURFACE

BUSHES

BRUSH

TREES

LILAC BUSH

18" POPLAR
3-3" MAPLES
2-24" POPLAR
3-6" CHERRY

1 CAR FR. GAR.

2 STY FR. HSE. #2721

2½ STY. FR. HSE. #2725

1½ STY. FR. HSE. #2731

2½ STY. FR. HSE. #2735

2½ STY. FR. HSE. #2739

1½ STY. FR. HSE. #2743

2 STY. FR. HSE. #2747

2-STY. 2-FAMILY FR. APARTMENT #2753 & #2757

2 STY. 6 FAMILY BRICK APARTMENT #2759 TO #2769

2 STY. 4 FAMILY APARTMENT #2771

1-STY BRICK CONC. BLK METAL BUILDING PROGRESSIVE MOLD & MACHINE COMPANY #2742

1-STY BRICK & CONC. BLK BLDG #2732

1-STY BRK CONC. BLK. ADDITION

1-STY BRICK, CONC. BLOCK & TILE BLDG.

2-CAR FR. GARAGE

3-CAR FR. GARAGE

7-CAR BRICK & BLK. GARAGE

3 CAR FR. GARAGE

2-CAR FR. GARAGE

6'x8' FR. SHED

CORR. METAL BLDG.

15' MAPLE
8" MAPLE
10" MAPLES
36" MAPLE
2-36" MAPLE
4" OAK
12" MAPLE
10" MAPLE
15" MAPLE
20" MAPLE
15" BEECH
12" MAPLE
15" OAK
12" OAK
24" ELM
TWIN 10" WALNUT
3-12" OAK
10" OAK
10" OAK
12" OAK
10" W. CHERRY
16" WALNUT
18" ELM
10-3" W. CHERRY
APPLE

PB 11
PB 13

P.C. 264+45.09
P.C.C. 264+45.09
R/W ONLY
RETAINING WALL

P.T. 267+78.62
R/W ONLY

CPA 76'±
CPA 86'±
CPA 94'±
CPA 97'±

CONSTRUCTION LIMITS

GRAVEL & DIRT PARKING LOT

SHIPPING DOOR

2'

TYPE U FUNDS

PARCEL №	OWNER	DEED AREA CORR.	TOTAL PRO	TO BE ACQUIRED TOTAL TAKE	PRO IN TAKE	NET TAKE	NET RESIDUES LEFT	RIGHT
219WL	FIRST NATIONAL BANK OF AKRON (TRUSTEE)	24,934		24,934		24,934		
221 SPL 221 WL	FALLS SUPERSONIC CAR WASH	13,586		1,883		1,883	11,697	
224WL	ROBERT J. LEWIS	9078		3625		3625	5453	
225WL	WILLIAM & THEODORA M. BERGSON	7273		2764		2764	4509	
226WL	MOLLIE CASE	7045		2754		2754	4291	
227 WL 227 WA	R.F. COOK MANUFACTURING CORPORATION	31,358		12,143		12,143	19,215	
228WL	PROGRESSIVE MOLD AND MACHINE CO.	35,474		10,735		10,735		24,739

PARCEL №	OWNER	DEED AREA CORR.	TOTAL P.R.O.	TO BE ACQUIRED TOTAL TAKE	PRO IN TAKE	NET TAKE	NET RESIDUES LEFT	RIGHT
229WL	OLGA V. GOOD	6455		2853		2853	3602	
231WL	IRENE W. QUANTANCE FKA MARGUERITE M. STRONG	12,041		2883		2883	3478	
232WL	THE GENERAL TIRE & RUBBER COMPANY	5870		2866		2866	3004	
234WL	MARLYN JOYCE WILHELM	85,085		15,288		15,288	69,797	
235WL	BEN E. FORBES	7645		4005		4005	3644	
236 WL 236 WA	ANTHONY GAYLAN	7451		4304		4304	3147	
237WA	IRENE SENN	13,646		9799		9799	3847	
238WL		24,180	1616	22,564				
	VICTOR A. MEFARLAND (#2594 WL) REQUIRED AS REMNANT	5,750				5,750		
239AWL	MARY SMITH & ESTATE	5,750				5,750		
241WL	LUCILLE I. MITROVICH AKA LUCILLE IRENE MITROVICH FKA LUCILLE I. WHITTINGTON	18,414					18,414	
245WL			1616	24,180				

TO BE ACQUIRED	NET RESIDUES
TOTAL PROJECT TAKE	NET LEFT	RIGHT
2853	3800	
2883	3478	
2866	3004	
15,288	69,797	
4005	3644	
4304	3147	
9799	3847	
22,564		
5750		
5,750		
	18,414	
24,180		

1616

0 20 40 60 80

SUBSTITUTE CURVE DATA FOR RIGHT OF WAY
Δ = 12° 30' 00" RT.
D_a = 3° 44' 52"
R = 1528.79'
T = 167.43'
L = 333.53'
P.I. #1 STA. 262+03.88
P.I. #2 STA. 266+12.52

CONSTRUCTION CENTERLINE SURVEY CURVE DATA
Δ = 28° 46' 09" RT.
D_a = 5° 00' 00"
L_a = 500.00'
R = 1145.92'
Θ_s = 12° 30' 00"
T_s = 548.82'
E_s = 46.46'
L_c = 75.38
LT = 334.17'
ST = 167.43'
Δ_c = 3° 46' 09"
T_c = 37.71'
E_c = 0.62'
P.T. STA. 264+15.53

PRELIMINARY SUBMITTAL DATE:
RIGHT-OF-WAY COMPLETION DATE:

№	REVISIONS	MADE BY	DATE
1.	LABELED RETAINING WALL	J.M.	7-22-68
2.	ADDED 227 WA, 236 WA & 237 WA TO TABLE	J.M.	7-22-68
3	ADDED DIST-4A TO BLG ANG; 225, 226, 229, 231, 235, 238, 234 & 239	J.M.	7-22-68
4	ADDED ORIG. & PROJ 232-245	J.M.	7-22-68
5	REVISED AREAS 2, 9 WL (2) ADD NOTE: 234 WL	R.C.	8-23-68
6	REVISED PCL 221 - ADDED PCL 221 SPEC.	RCS	10-1-68
7	FENCE CORNERS CALLED OUT	DPA	10-16-68
8	REVISED NAME: PCL 224	J.R.S.	1-6-69

STA 264+00 TO STA 269+00

ADDED P.R.O. PARCEL 238WL 11-4-70

Revised Name Pcl. 232-WL. Lee 2/11/69

Deleted 239-WL, Revised 234-WL 10-27-69

Name Changed Pcl. 228 WL. white 9-8-69

K & E - AKRON

FED. RD.	STATE	PROJECT	
2	OHIO	U19(12)	

435/460

SUM -8- 17.63

RIGHT OF WAY SHEET 31/56

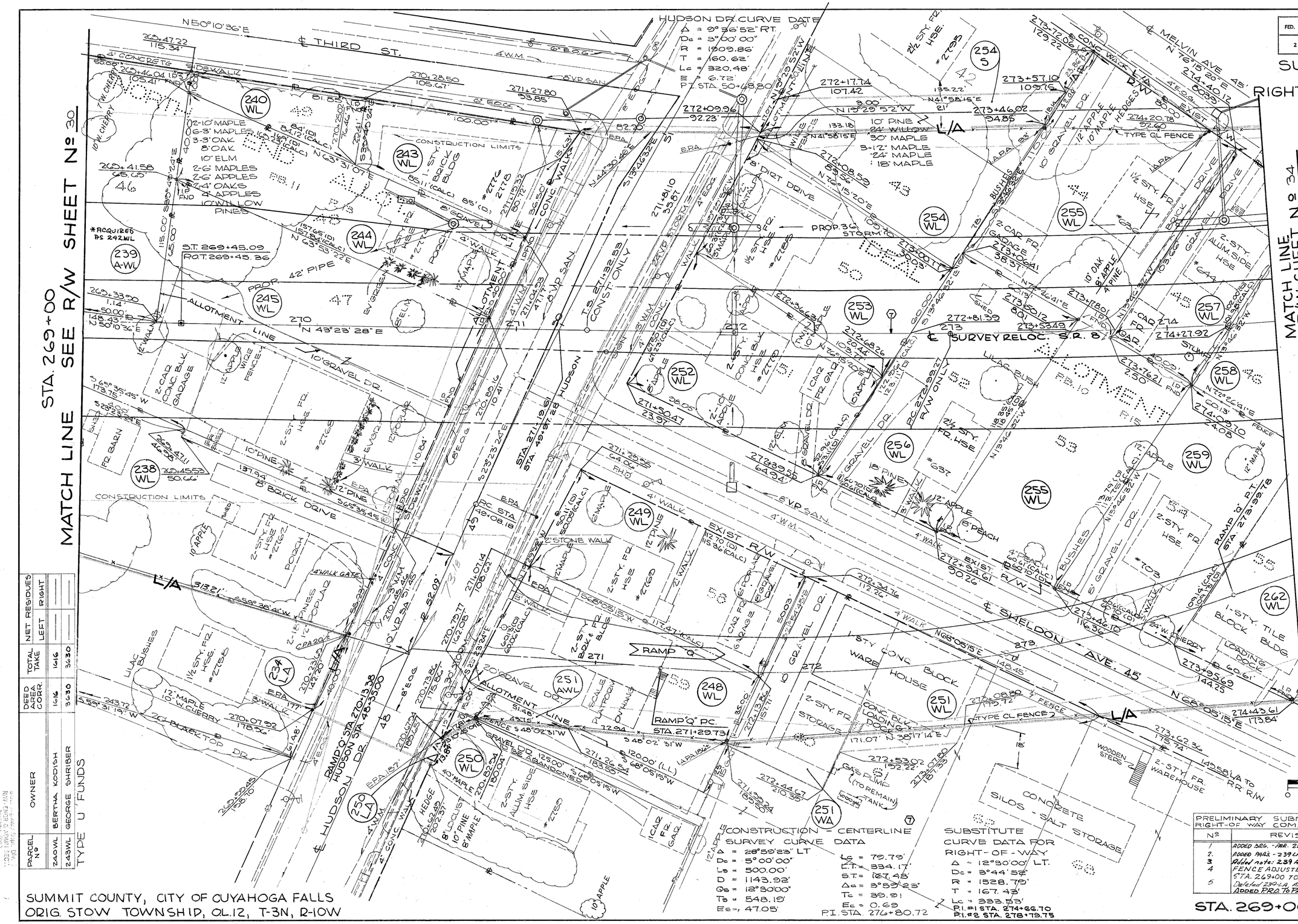

PARCEL Nº	OWNER	DEED AREA CORR.	TOTAL TAKE	NET RESIDUES LEFT	NET RESIDUES RIGHT
240WL	BERTHA KODISH	1616	1616		
243WL	GEORGE SHRIBER	3630	3630		

TYPE U FUNDS

PARCEL Nº	OWNER	DEED AREA CORR.	TOTAL TAKE	NET RESIDUES LEFT	NET RESIDUES RIGHT
244WL	ROBERT J. HARTER & LURETTA B. HARTER	6533	6533		
234LA	GENERAL TIRE & RUBBER COMPANY AN OHIO CORPORATION				
248WL	W.L. TUCKER COAL AND SUPPLY COMPANY	7125	6269		856
249WL	JOSEPH S. DAYTON JR. & DARLENE IRENE DAYTON	5821	5821		
250WL	VERNE P. SIMONS & RUTH E. SIMONS	7500	75		7425
250LA	ELIZABETH ANN HURLEY	50513	6310		43742
251WL					
252WL	MILDRED CATHERINE WOOD	6064	6064		
253WL	MILDRED ALICE HATFIELD FNA MILDRED ALICE FISHEL	6421	6421		
254WL	MARK S. SMITH & EFFIE M. SMITH	13,876	4454		
254S			2013		
255WL	CLEMENT SHELDON McKENZIE	15,509	15,509		
256WL	MACK W. BRISLINGER	7299	7299		
259WL	GILBERT J. KOHUT	6728	6728		

TYPE U FUNDS

RAMP "Q" CURVE DATA
Δ = 22°57'17" LT.
Dc = 8°30'00"
R = 674.07'
T = 136.86'
Lc = 270.06'
E = 13.75'

0 20 40 60 80

CONSTRUCTION - CENTERLINE SURVEY CURVE DATA
Δ = 28°59'23" LT
Dc = 5°00'00"
Ls = 500.00'
D = 1143.92'
Qs = 12°30'00"
Ts = 548.19'
Es = 47.05'
Lc = 79.79'
L.T. = 334.17'
S.T. = 167.48'
Δc = 3°59'23"
Tc = 39.91
Ec = 0.69
P.I. STA. 276+80.72

SUBSTITUTE CURVE DATA FOR RIGHT-OF-WAY
Δ = 12°30'00" LT.
Dc = 3°44'52"
R = 1528.79'
T = 167.43'
Lc = 333.53'
P.I. #1 STA. 274+66.70
P.I. #2 STA. 278+79.75

PRELIMINARY SUBMITTAL DATE:
RIGHT-OF WAY COMPLETION DATE:

Nº	REVISIONS	MADE BY	DATE
1	ADDED BRG. - PAR. 254S	J.M.	7-22-68
2.	ADDED PARS. - 239 LA & 250 LA TO TABLE	J.M.	7-22-68
3	Added note: 239 AWL	R.S.	8-28-68
4	FENCE ADJUSTED & GATE ADDED STA. 269+00 TO HUDSON	D.D.A.	10-16-68
5	Deleted 239-LA, ADDED PCL 234-LA ADDED P.R.O. TO PARCEL 238WL	G.J.F. L.S.	10-23-69 11-4-70

STA. 269+00 TO STA. 274+50

SUMMIT COUNTY, CITY OF CUYAHOGA FALLS
ORIG. STOW TOWNSHIP, OL.12, T-3N, R-10W

K & E - AKRON

SUMMIT COUNTY, CITY OF CUYAHOGA FALLS
ORIG. STOW TOWNSHIP, O.L.12, T-3N, R-10W

FED. RD.	STATE	PROJECT	
2	OHIO	U19(12)	

436 / 460

SUM 8 17.63

RIGHT OF WAY SHEET 32 / 56

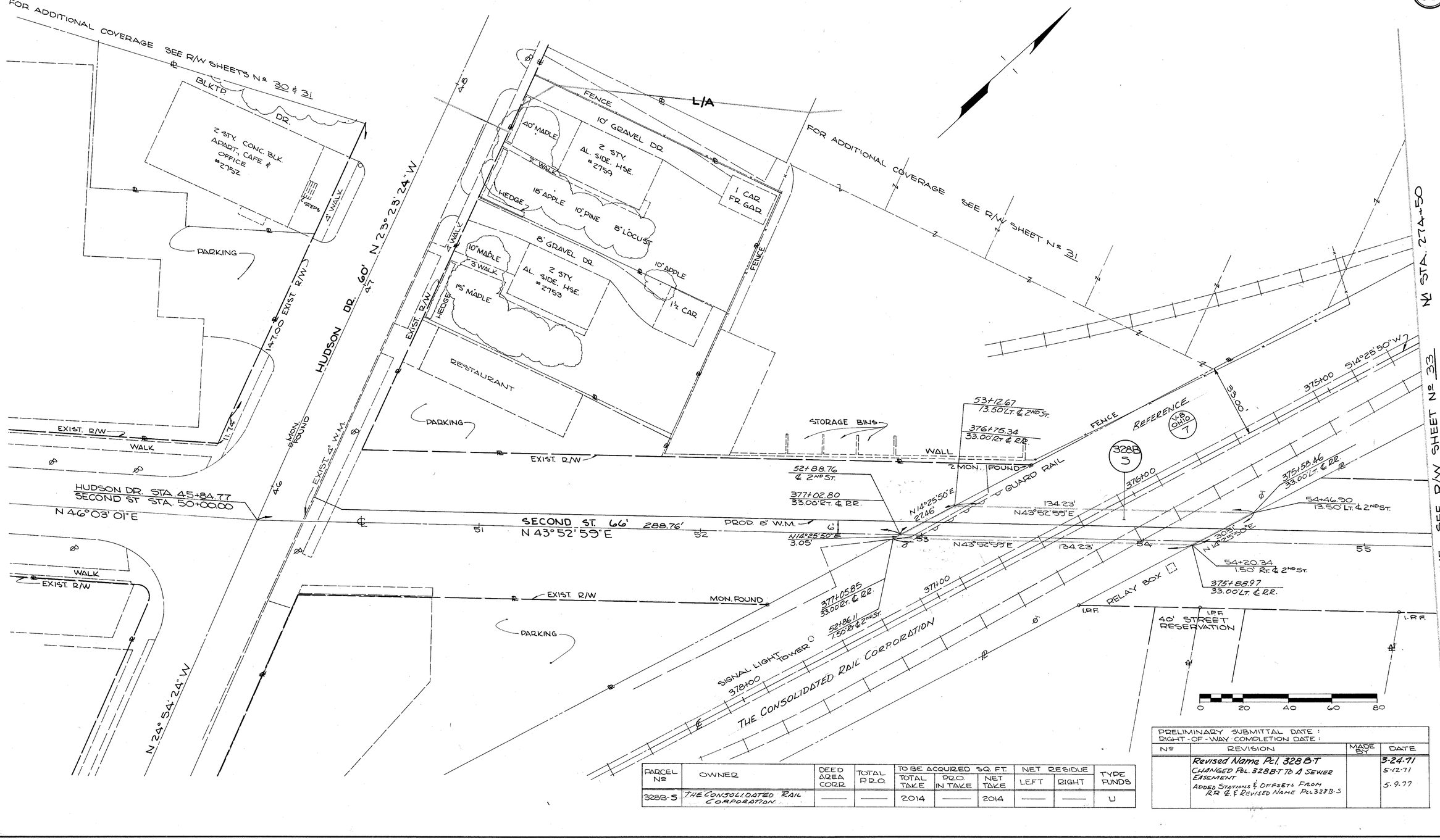

PARCEL Nº	OWNER	DEED AREA CORR.	TOTAL P.R.O.	TO BE ACQUIRED SQ. FT. TOTAL TAKE	P.R.O. IN TAKE	NET TAKE	NET RESIDUE LEFT	NET RESIDUE RIGHT	TYPE FUNDS
328B-S	THE CONSOLIDATED RAIL CORPORATION	——	——	2014	——	2014	——	——	U

PRELIMINARY SUBMITTAL DATE :
RIGHT-OF-WAY COMPLETION DATE :

Nº	REVISION	MADE BY	DATE
	Revised Name Pcl 328B-T		3-24-71
	CHANGED PCL. 328B-T TO A SEWER EASEMENT		5-12-71
	ADDED STATIONS & OFFSETS FROM RR ℄ & REVISED NAME PCL 328B-S		5-9-77

FORM DDA-8

SUMMIT COUNTY, CITY OF CUYAHOGA FALLS
ORIG. STOW TOWNSHIP, O.L.12, T-3N, R-10W

FED. RD.	STATE	PROJECT	
2	OHIO	U19 (12)	

437/460

SUM 8 17.63

RIGHT OF WAY SHEET 33/56

PARCEL Nº	OWNER	DEED AREA CORR.	TOTAL P.R.O.	TO BE ACQUIRED SQ. FT. TOTAL TAKE	PRO. IN TAKE	NET TAKE	NET RESIDUE LEFT	RIGHT	TYPE FUNDS
260-T	REICHHOLD CHEMICALS, Inc.	99,317	—	1,363	—	1,363	—	—	U

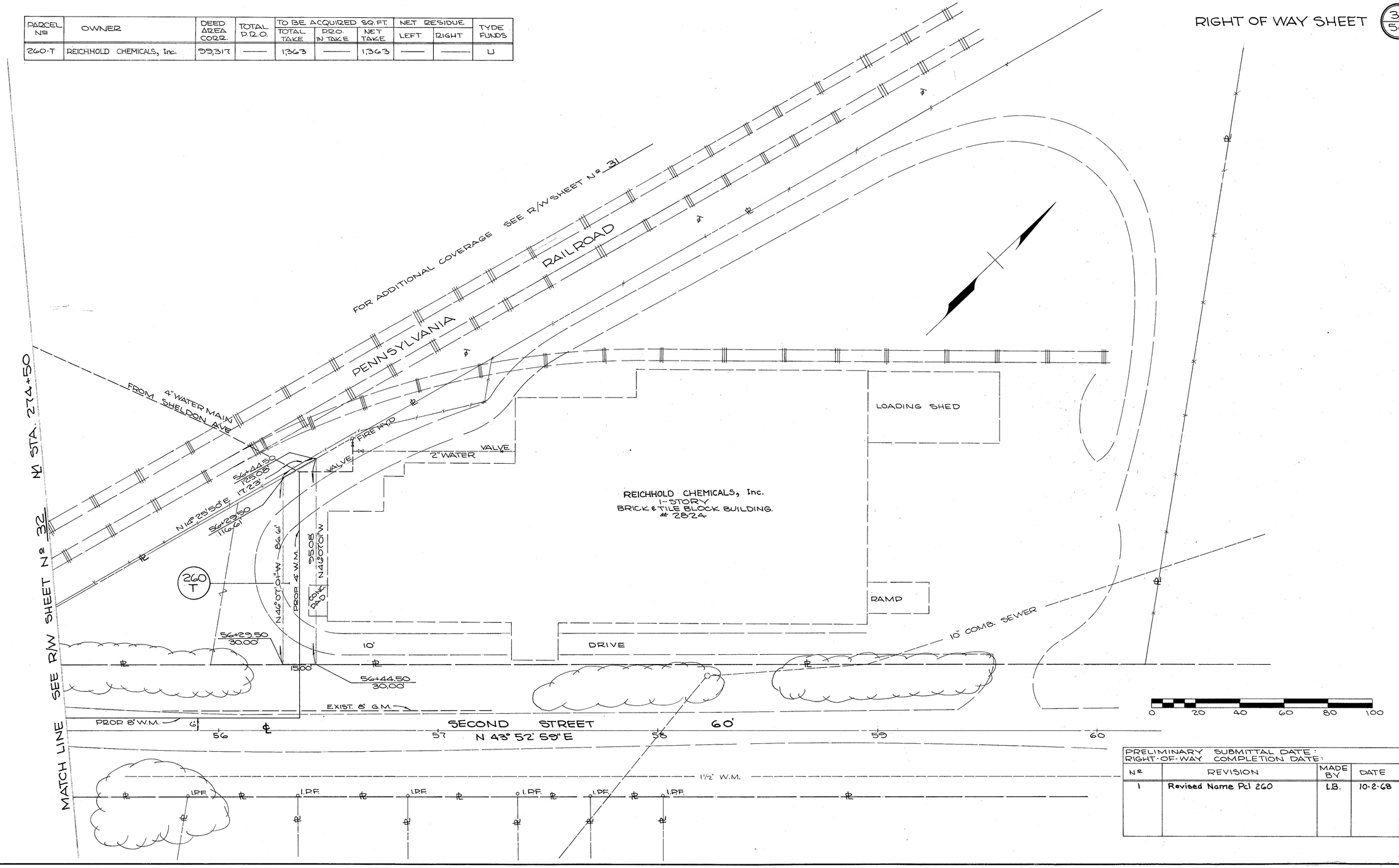

PRELIMINARY SUBMITTAL DATE: RIGHT-OF-WAY COMPLETION DATE:			
Nº	REVISION	MADE BY	DATE
1	Revised Name Pcl 260	L.B.	10-2-68

FORM D D A-8

R/W ENGR. & ADMIN. SECT.
AUG 27 1968
LOGGED

SUMMIT COUNTY, CITY OF CUYAHOGA FALLS
ORIG. STOW TOWNSHIP, O.L.12, T-3N, R-10W

FED. RD.	STATE	PROJECT	
2	OHIO	U19(12)	

438/460

SUM-8-17.63

RIGHT OF WAY SHEET 34/56

⑦ SUBSTITUTE CURVE DATA FOR RIGHT-OF-WAY

Δ = 12°30'00" LT.
Dc = 3°44'52"
R = 1528.79
Lc = 333.53
T = 167.43
P.I. #1 STA. 274+66.70
P.I. #2 STA. 278+79.75

CONSTRUCTION CENTERLINE SURVEY CURVE DATA

Δ = 28°59'23" LT.
Dc = 5°00'00"
Ls = 500.00'
R = 1145.92'
Θs = 12°30'00"
Ts = 548.19'
Es = 47.05'
Lc = 79.79'
L.T. = 334.17'
S.T. = 167.43'
Δc = 3°59'23"
Tc = 39.91'
Ec = 0.69'
P.I. STA. 276+80.72

℄ CURVE #1
Δ = 67° LT.
R = 39.92'
T = 26.43'
Lc = 46.68'

℄ CURVE #2
Δ = 11°01'18" RT.
Dc = 10°
R = 572.96'
T = 55.28'
Lc = 110.22
E = 2.66'

⑦
R = 585.46'
CH = 4.84'
BRG = N9°28'15"E
Lc = 4.84'

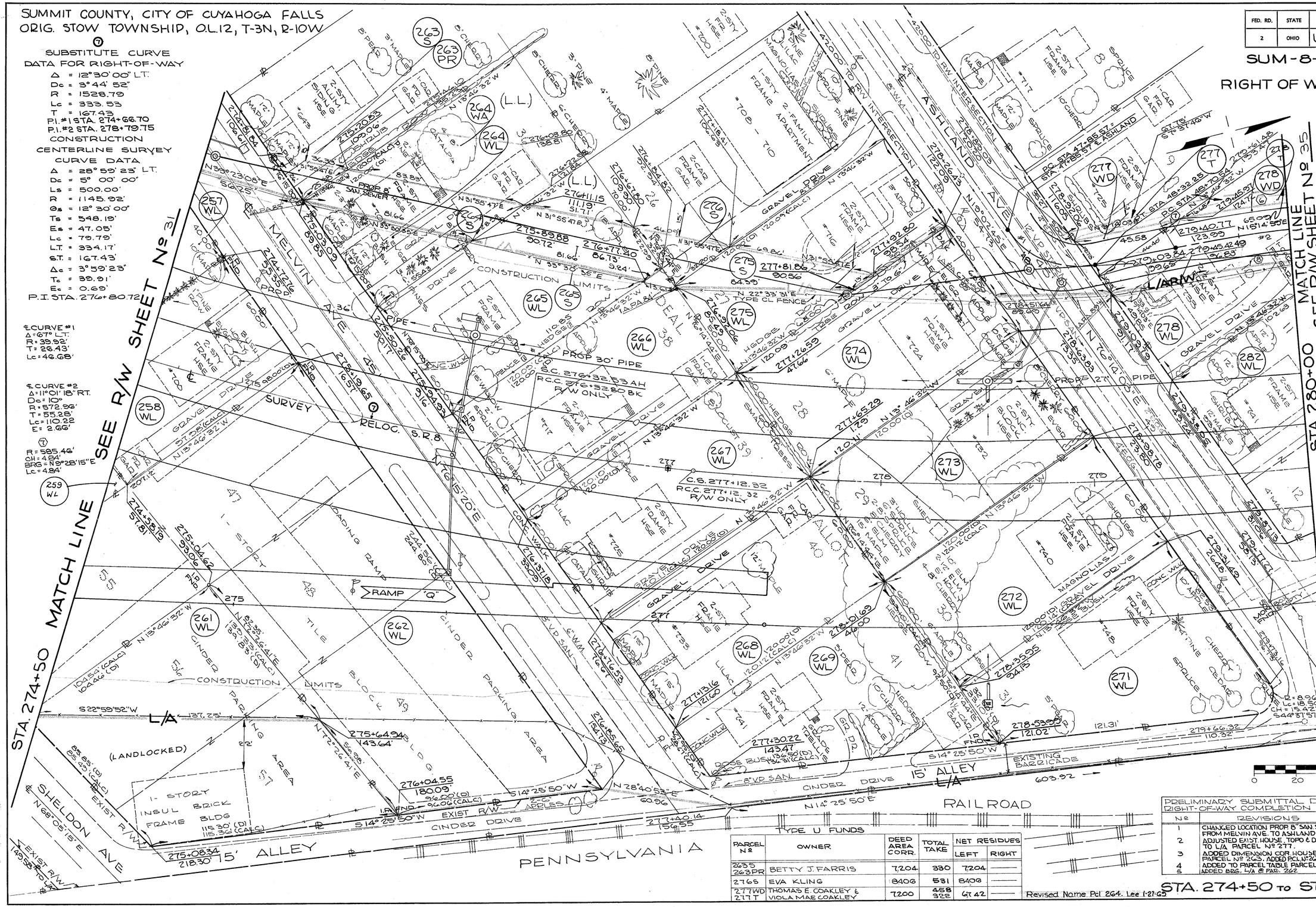

TYPE U FUNDS

PARCEL Nº	OWNER	DEED AREA CORR.	TOTAL TAKE	NET RESIDUES LEFT	NET RESIDUES RIGHT
263S 263PR	BETTY J. FARRIS	7,204	330	7,204	—
276S	EVA KLING	8406	531	8406	—
277WD 277T	THOMAS E. COAKLEY & VIOLA MAE COAKLEY	7200	458 322	6742	—

TYPE U FUNDS

PARCEL Nº	OWNER	DEED AREA CORR.	TOTAL TAKE	NET RESIDUES LEFT	NET RESIDUES RIGHT
257WL	BONNIE M. BARNARD	4113	4113	—	—
258WL	EDWARD J. DEIBEL & ADA L. DEIBEL	5999	5999	—	—
261WL	THOMAS S. BOWMAN	11,235	4294	—	6941
262WL	TRUMP PLASTICS, INC. PETER J. BONNELL, PRES.	26,510	26,510	—	—
264WL 264S 264WA	VIVIAN E. WHITTAKER	7205	1663 1617	5542(L)	—
265WL 265S	MILDRED A. HATFIELD	7205	4988 1548	2217(L)	—
266WL	ANTHONY FALCONE & RUTH L. FALCONE	7206	7206	—	—

PARCEL Nº	OWNER	DEED AREA CORR.	TOTAL TAKE	NET RESIDUES LEFT	NET RESIDUES RIGHT
267WL	JAMES P. JEFFERY & JENNIE LEE JEFFERY	7206	7206	—	—
268WL	ODA W. GOUGH & LEAH GOUGH	7207	7207	—	—
269WL	HAZEL M. BURDICK	7314	7314	—	—
271WL	BENNIE HARMON & GLADIES HARMON	8207	8207	—	—
272WL	MAMIE HARTER	7208	7208	—	—
273WL	CALVIN HARTER	7208	7208	—	—
274WL	LEHR M. DAVIS MARY P. DAVIS	7208	7208	—	—
275WL 275S	RICHARD IRVIN WILLIAMS HELEN ROSALIE WILLIAMS	6005	1700 1130	4305	—

PARCEL Nº	OWNER	DEED AREA CORR.	TOTAL TAKE	NET RESIDUES LEFT	NET RESIDUES RIGHT
277WD 277T	THOMAS E. COAKLEY & VIOLA MAE COAKLEY	7200	458 322	6742	—
276S	EVA KLING	8406	531	8406	—
275S	RICHARD IRVIN WILLIAMS HELEN ROSALIE WILLIAMS	6005	1700 1130	4305	—

PRELIMINARY SUBMITTAL DATE:
RIGHT-OF-WAY COMPLETION DATE:

Nº	REVISIONS	MADE BY	DATE
1	CHANGED LOCATION PROP. 8" SAN. SEWER FROM MELVIN AVE. TO ASHLAND AVE.	C.D.B.	8-13-68
2	ADJUSTED EXIST. HOUSE, TOPO & DIMENSION TO L/A PARCEL Nº 277.	C.D.B.	8-13-68
3	ADDED DIMENSION COR. HOUSE TO L/A PARCEL Nº 263. ADDED P.C.L. Nº 263PR TO TAB	C.D.B.	8-13-68
4	ADDED TO PARCEL TABLE PARCEL Nº 264WA	C.D.B.	8-13-68
5	ADDED BRG. L/A @ PAR. 262	J.M.	8-13-68

Revised Name Pcl 264. Lee 1-27-69

STA. 274+50 TO STA. 280+00

K & E - AKRON

29

SUMMIT COUNTY, CITY OF CUYAHOGA FALLS
ORIG. STOW TOWNSHIP, O.L.12, T-3N, R-10W

FED. RD.	STATE	PROJECT	
2	OHIO	U19 (12)	

439/460

SUM-8-17.63

RIGHT OF WAY SHEET 35/56

⑦ SUBSTITUTE CURVE DATA FOR RIGHT-OF-WAY

Δ = 12°30'00" LT
Dc = 3°44'52"
R = 1528.79
Lc = 333.53'
T = 167.43'
P.I.#1 STA. 274+66.70
P.I.#2 STA. 278+79.75

CONSTRUCTION CENTERLINE SURVEY CURVE DATA

Δ = 28°59'23" LT
Dc = 5°00'00"
Ls = 500.00'
R = 1145.92'
Qs = 12°30'00"
Ts = 548.19'
Es = 47.05'
Lc = 79.79'
L.T. = 334.17'
S.T. = 167.43'
Δc = 3°59'23"
Tc = 39.91'
Ec = 0.69'
P.I. STA. 276+80.72

℄ CURVE #2
Δ = 11°01'18" RT.
Dc = 10°
R = 572.96'
T = 55.28'
Lc = 110.22'
E = 2.66'

℄ CURVE #3
Δ = 21°57'21" LT.
R = 87.64'
T = 17'
Lc = 33.58'
E = 1.63'

℄ CURVE #4
Δ = 90° LT.
R = 38'
T = 38'
Lc = 59.69'

ASHLAND-RUDOLPH CONNECTOR
RW CURVE DATA ⑤
R = 585.46'
Ch = 24.72'
N 19°02'46" E
Lc = 24.72'

RW CURVE DATA ⑥
R = 585.46'
Ch = 83.00'
N 13°46'20" E
Lc = 83.07'

RW CURVE DATA ⑦
R = 585.46'
Ch = 4.84'
N 9°28'15" E
Lc = 4.84'

RW CURVE DATA ⑧
R = 557.96'
Ch = 80.24'
N 13°21'28" E
Lc = 80.31'

RW CURVE DATA ⑨
R = 557.96'
Ch = 20.55'
N 18°32'11" E
Lc = 20.55

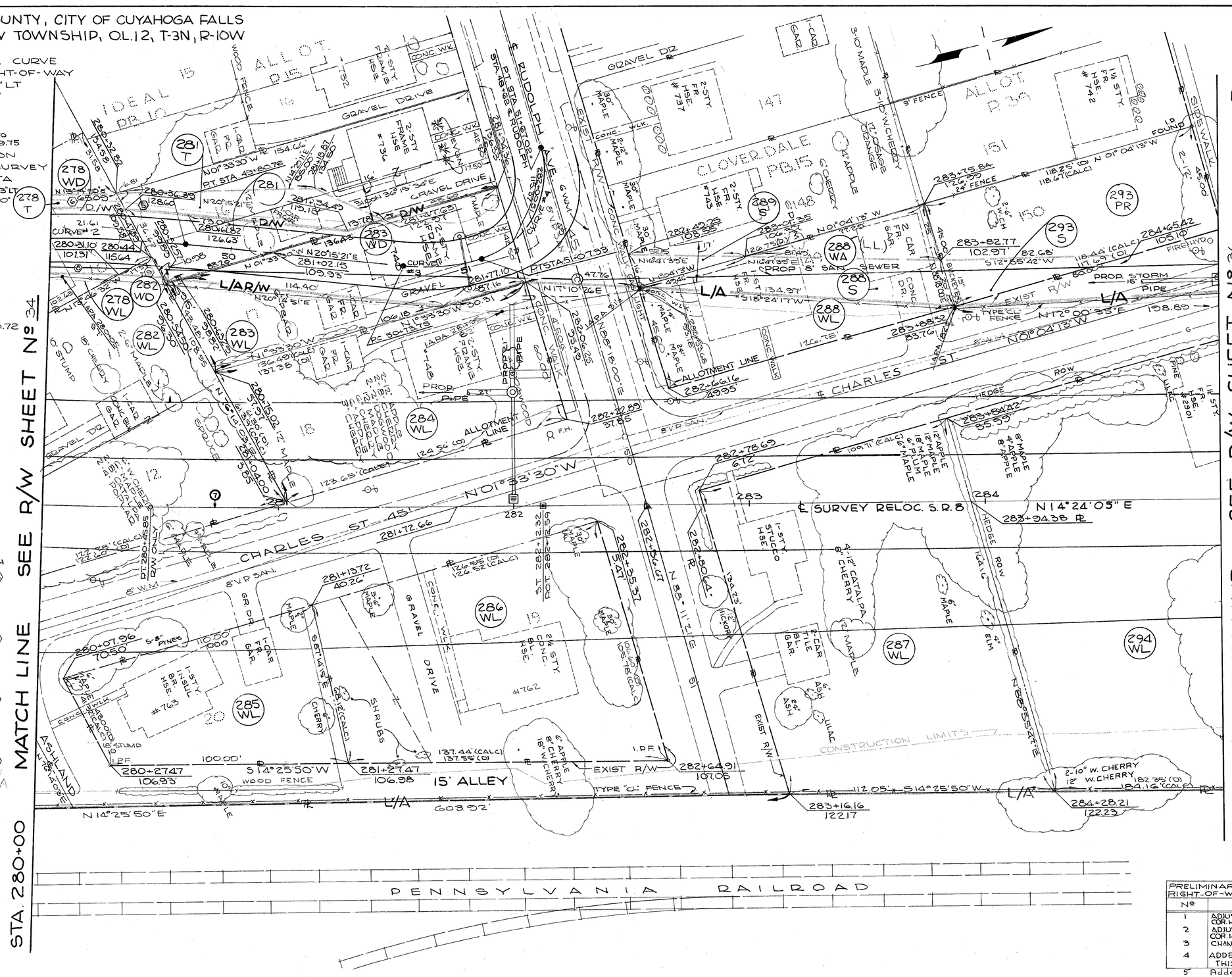

PARCEL Nº	OWNER	DEED AREA CORR.	TOTAL P.R.O.	TO BE ACQUIRED: TOTAL TAKE	PR.O. IN TAKE	NET TAKE	NET RESIDUES: LEFT	RIGHT
278WL	MABEL M. BROLLIER	7200		2733		2733	1331	
278WD	JOSEPH A. REED & TOLA B. REED	6380		3136		3136		
281 T	STERLING S. MACHAMER & LAURA I. MACHAMER	12,833		1512		1512	4868	
282WL	ROGER WILSON FRANTZ & CATHERINE A. FRANTZ	5994		1039		1039		
282WD	HARRIET GRAFMILLER	7804		12739		12739		
283WL	CHARLES H. SAMPSON & GEORGE R. SAMPSON JR.	5558		94		94		
283WD				2451		2451		
284WL				3543		3543		
285WL				7804		7804		
286WL	HELEN M. SHOAF	11,278		5558		5558		
287WL	DOLLIE L. BITTNER FKA DOLLIE LOUISE GIPSON	16,227		11,278		11,278		
288WL	BEATRICE A. ENSWORTH	5704		16,227		16,227		
288S				2852		2852	2852(L)	
289S	CORA A. CUNNINGHAM	5704		2281		2281		
293S	GERTRUDE J. GEBHART FNA GERTRUDE J. ELLSWORTH	5340		396		396	5704	
294WL	CELINA E. KIMES	33,762		800		800	5340	
278T	SEE ABOVE PARCEL 278			33,762		33,762		
				432		432		

TYPE U FUNDS

0 20 40 60 80

PRELIMINARY SUBMITTAL DATE:
RIGHT-OF-WAY COMPLETION DATE:

Nº	REVISIONS	MADE BY	DATE
1	ADJUSTED TOPO EXIST. HOUSE & ADDED DIMENS. COR. HOUSE TO L/A PARCEL Nº 281.	C.D.B.	8-13-68
2	ADJUSTED TOPO EXIST. HOUSE & ADDED DIMENS. COR. HOUSE TO L/A PARCEL Nº 285.	C.D.B.	8-13-68
3	CHANGED AREAS - TABLE Nº 287.	C.D.B.	8-13-68
4	ADDED WEST LOT LINES TO LOTS 16 & 17 - THIS SHEET.	J.R.T.	12-18-68
5	Added 293-PR	J.R.T.	8-14-69

Changed Pcl. 281WD to a Standard Highway Easement. white 10-16-69

STA. 280+00 TO STA. 285+00

K & E - AKRON

SUMMIT COUNTY, CITY OF CUYAHOGA FALLS

ORIG. STOW TOWNSHIP, QL 12, QL 22, T3N, R10W

FED. RD.	STATE	PROJECT	
2	OHIO	U19(12)	

440/460

SUM-8-17.63

RIGHT OF WAY SHEET 36/56

SEE R/W SHEET Nº 35

SEE R/W SHEET Nº 37

STA. 285+00 MATCH LINE

STA. 290+50 MATCH LINE

NUTWOOD CONNECTOR CURVE DATA
R = 60.00'
Δ = 90°39'59"
Lt = 93.55
T = 60.10

PARCEL Nº	OWNER	DEED AREA COND.	TOTAL DED.	TO BE ACQUIRED TOTAL TAKE	NET	NET RESIDUES LEFT	RIGHT
294WL	CELINA E. KIMES	33,762	—	33,762	—	—	—
295WL	OHIO EDISON COMPANY	6,530	—	6,530	6,530	—	—
295WD		EST.	—	308	308	EST.	—
296WL	ROY HOLLAND	15,634	—	15,634	15,634	—	—
297 WL	MARY VINCZELLAR	29,189	—	29,770	29,770	4419	—
297WA	RANDALL A. WEITZEL + IRENE S. WEITZEL	4,350	—	2,741	2,741	1809	—
298WA	JASON F. BUDLEY + JEANNETTE J. BUDLEY	4,350	—	4,350	4,350	—	—
299WL	CHARLES F. BUDLEY + ANNA M. CZARKOWSKI	5,000	—	478	478	—	—
300 PR		EST.	—	12,126	12,126	—	—
300 S	BILLIE RUTH CZARKOWSKI	12,126	—	12,126	12,126	—	—
301WL	VILA M. MOORE	8,331	—	8,331	8,331	—	—
302WL	THE CITY OF CUYAHOGA FALLS	10,000	—	10,000	10,000	—	—
303WL	ALPHA BENNETT	15,000	—	11,250	11,250	3750	—
304WL	MARGARET F. KOCHAN	—	—	1,546	1,546	—	—
304S 304WA	JOHN D. PENDLAND	5000	—	5000	5000	—	—
305WL							

PRELIMINARY SUBMITTAL DATE:
RIGHT-OF-WAY COMPLETION DATE:

Nº	REVISIONS	MADE BY	DATE
1	ADDED STATION & OFFSET COR. PCL 295.	C.D.B.	8-13-68
2	ADDED DIMENSION COR. HSE. TO L/A PCL 300.	C.D.B.	8-13-68
3	CHANGED AREAS-TABLE-PCL 295.	C.D.B.	8-13-68
4	ADDED TO TABLE PCL. Nºs 297WA, 298WA & 304WA.	C.D.B.	8-13-68
5.	Relocated guard rail, Added turnaround, and revised L/A Line between the North and South R/W Lines of Acro Ave.	white	8-8-69

Changed west ℄ and corrected deed area Pcl. 300-S. White 8-8-69.
Added 300PR 8-18-69 M.K.M.

STA. 285+00 to STA. 290+50

CITY OF CUYAHOGA FALLS — VILLAGE OF SILVER LAKE

K & E-AKRON

31

SUMMIT COUNTY, CITY OF CUYAHOGA FALLS
ORIG. STOW TOWNSHIP, OL. 22, T-3N, R-10W

FED. RD.	STATE	PROJECT	
2	OHIO	U19 (12)	

441/460

SUM-8-17.63

RIGHT OF WAY SHEET 37/56

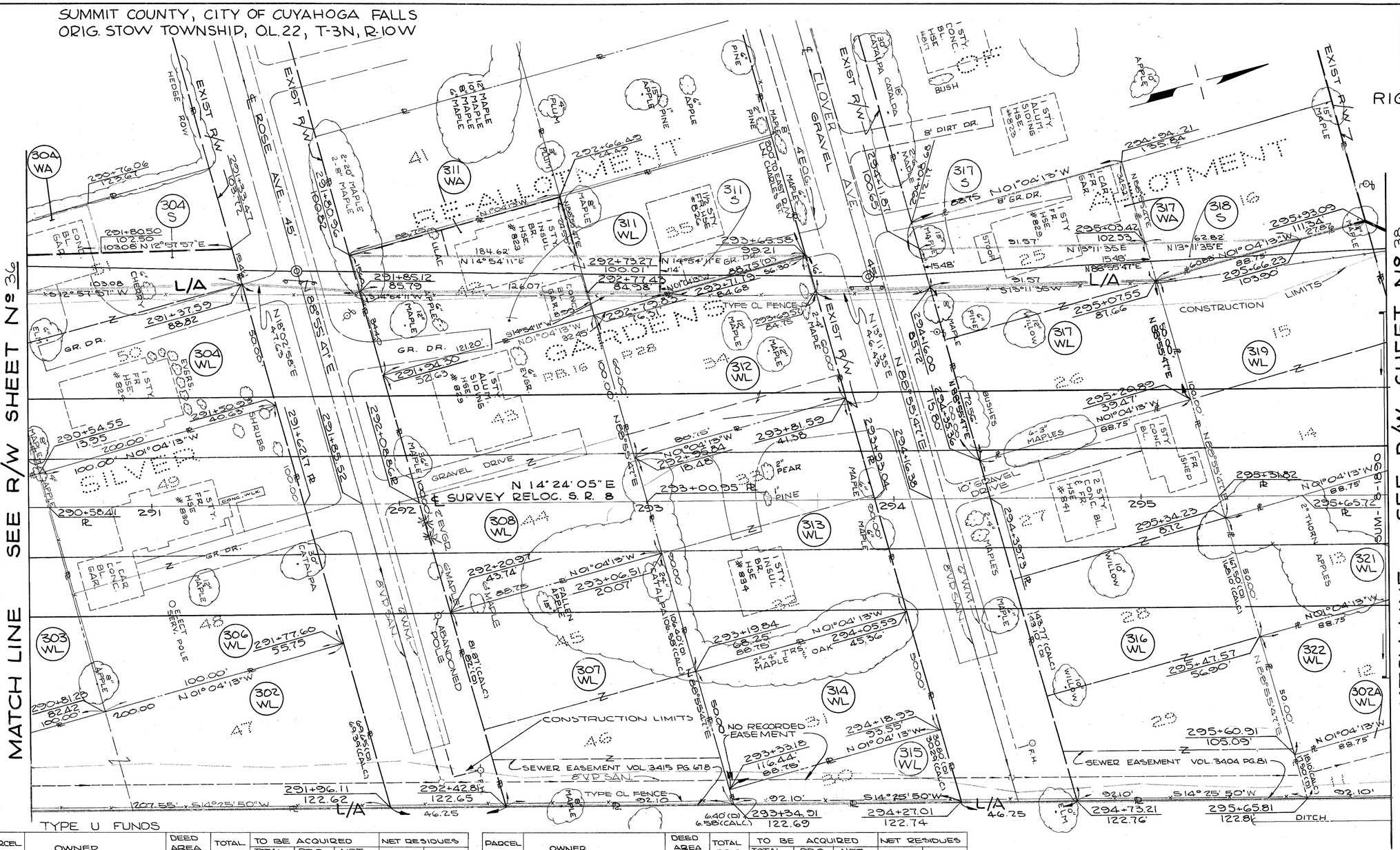

TYPE U FUNDS

PARCEL Nº	OWNER	DEED AREA CORR.	TOTAL R.O.W.	TO BE ACQUIRED TOTAL TAKE	TO BE ACQUIRED R.O.W. IN TAKE	TO BE ACQUIRED NET TAKE	NET RESIDUES LEFT	NET RESIDUES RIGHT
302WL	THE CITY OF CUYAHOGA FALLS, OHIO	8,331	———	8,331	———	8331	———	———
304WL	MARGARET F. KOCHAN	15,000	———	11,250	———	11,250	3750	———
304S			———	1,546	———	1,546		
304WA								
306WL	JAMES R. SMITH & SHIRLEY MAE SMITH	10,000	———	10,000	———	10,000	———	———
307WL	JAMES E. BOWEN	8,362	———	8,362	———	8362	———	———
308WL	BETTY E. HALTER	8,875	———	8,875	———	8,875	———	———
311WA	DAVID W. KAUFMAN	8,876	———	2,072	———	2072	6804	———
311WL			———	2,331	———	2,331		———
311S			———	2,331	———	2,331		———
312WL	GEORGE LUCAS & MICHAEL M. SIMMS	5,325	———	5,325	———	5,325	———	———

PARCEL Nº	OWNER	DEED AREA CORR.	TOTAL R.O.W.	TO BE ACQUIRED TOTAL TAKE	TO BE ACQUIRED R.O.W. IN TAKE	TO BE ACQUIRED NET TAKE	NET RESIDUES LEFT	NET RESIDUES RIGHT
313WL	ARTHUR R. MOORE, JR.	7,988	———	7,988	———	7,988	———	———
314WL	ABNER D. ZOOK	4,438	———	4,438	———	4,438	———	———
315WL	RUTH ROGERS WILSON FKA RUTH HARRIET ROGERS	1,680	———	1,680	———	1,680	———	———
316WL	SADIE ELIZABETH COLVIN	13,833	———	13,833	———	13,833	———	———
317WL	CLARENCE A. ILG aka. CLARENCE ALEXANDER ILG	8,875	———	5439	———	5439	3,436	———
317S			———	1,374	———	1,374		———
317WA								
318S	HERMAN S. CHURCH & LEONA J. CHURCH	8875	———	471	———	471	8875	———
319WL	DOROTHY E. WHITACRE	8,875	———	8,875	———	8,875	———	———
321WL	ZELLA GILES	4,438	———	4,438	———	4,438	———	———
322WL	DOROTHY E. ANDERSON	4,438	———	4,438	———	4,438	———	———
302AWL	THE CITY OF CUYAHOGA FALLS, OHIO	2,686	———	2,686	———	2,686	———	———
303WL	ALPHA BENNETT	10,000	———	10,000	———	10,000	———	———

0 20 40 60 80

PRELIMINARY SUBMITTAL DATE: RIGHT-OF-WAY COMPLETION DATE:			
Nº	REVISIONS	MADE BY	DATE
1	ADJUSTED TOPO, HOUSE & CHANGED DIMENSION HOUSE TO L/A PCL 311	C.D.B.	8-13-68
2	ADDED TO TABLE PCL NOS 304WA, 303WA, 317WA & 303WL	C.D.B.	8-13-68
3.	Combined Pcl 309 with Pcl 311. Pcls. Now include 311 WL, 311 WA 311-S. New owner acquired Pcl 309.	E.W.	12-3-68

Removed Fr. Shed and 1½ Sty Fr Hse. from Pcl 312 WL. EW 4-17-69
Revised Name Pcl. 317. Lee 1-13-69

STA. 290+50 to STA. 296+00

K & E - AKRON

32

SUMMIT COUNTY, CITY OF CUYAHOGA FALLS
ORIG. STOW TOWNSHIP, O.L.22, T-3N, R-10W

SILVER GARDENS RE-ALLOT

PB-16 PG 28

FED. RD.	STATE	PROJECT	
2	OHIO	U19(12)	

442 / 460

SUM.-8-17.63

RIGHT OF WAY SHEET 38 / 56

MATCH LINE SEE R/W SHEET Nº 37

MATCH LINE SEE R/W SHEET Nº 39

STA. 296+00

STA. 301+50

CHANGED PCL 328 WL TO 328 LA & REVISED NAME 3-24-71

EXIST R/W N 40°22'A2"E 6006

289.20 TO EAST R/W LN CHARLES ST.

GARDEN AVE. GRAVEL

ALLOTMENT LINE

LEHIGH AVE

SAUNDERS ST. NOT CONSTRUCTED

OAKLAWN ESTATES PB-64 PGS. 22 & 23

N14°24'05"E 146.04'

T.B.A. 39,670 S.F.

329 U

N42°35'55"W 17.34'

NOTE: 329AWL AREA IN OAKLAWN ESTATES

296+47.07 85'

296+87.54 85'

297+83.22 111.68'

298+54.59 85'

301+50 85'

327 WL

326 WA LANDLORDED

6" MAPLES

TO BE ABANDONED

10' GR. DR.

F.R. SHED

S 14°24'05" W 333.40'

296+43.95 74.59'

326 WL

1 STY. ALUM. SIDING HSE. #8415

4" MAPLE

2 CAR. FR. GAR.

N88°55'47"E 5.44'

298+56.04 79.76'

L/A

TYPE CL FENCE 6-10" ELM

CONSTRUCTION LIMITS

S 14°24'05" W 295.41

N 01°04'13" W 200.00'

7- 12" TO 18" ELM

7-12" ELM

5-18" TO 20" OAK

5-30" OAK

30-8" TO 12" ELM

329 AWL

24

25

26

27

7

8

9

325 WL

2-10" ELM

4-24" ELM

34" ELM

60.00'

100.00'

113.04'

319 WL

296+19.76 14.06'

N01°04'13"W 100.00'

6" APPLE

296+63.29 26.41'

20" ELM

1 CAR FR. GAR.

297

298

298+78.12

299

300

301

N 14°24'05" E

SURVEY RELOC S.R. 8

3-24" ELM

103.25'

56.62'

N01°04'13"W 487.79'

ALLOTMENT LINE

45' C.M.P.

321 WL

296+23.90 EXIST R/W #8

N01°04'13"W 89.75'

296+33.10 33.23'

296+47.25 14.15'

296+70.60 23.35'

N88°55'47"E 100.00'

15" V.P. SAN.

SUM-8-18.00

6" BEECH

8' GR. DR.

36" OAK.

3-12" BEECH

59.83'

298+80.74 23.54'

298+82.72 16.62'

N.D. FND.

OUT IN USE 2"

322 WL

296+46.44 81.42'

N01°04'13"W 89.75'

8" V.P. SAN.

4" APPLE

4-6" APPLE

200.00' N01°04'13"W

296+89.96 69.97'

10" THORN APPLE

USGS MON. PK. W-351

324 WL

4"-6" ELMS

N88°55'47"E 110.37' (CALC.)

349+05.98 13.00' Rt. ℄ R.R.

299+01.08 82.98' Rt. SR8 85.84'(D)

299+87.08 83.03' Rt. SR8

8599' (CALC.) N14°25'50"E WIDTH UNSPECIFIED

348+20.00 75.00' Rt. ℄ R.R.

20" H.P. E.O.G. PIPE LINE EASEMENT (VOL. 450 PG. 505) (WIDTH UNSPECIFIED)

CLEARING

PROP 15" PIPE

15- 10" TO 12" ELM

3-15" ELM

328 LA

12" DEAD ELM

ALLOTMENT LINE WIDTH UNSPECIFIED

3'x3' CONC. BASE 7'x7' CONC. BASE

S25°34'10"E 400.00'

299+12.16 122.35' Rt. SR8

299+87.06 123.03' Rt. SR8

302A WL

297+04.61 122.88'

S14°25'50"W 92.10'

296+57.91 122.86'

L/A

207.55'

S14°25'50"W

TYPE CL FENCE

12" DEAD ELM 74.90'

S14°25'50"W

478.60'

46.25'

NO CULVERT

DITCH

2-3" OAKS

2-3" OAKS

348+94.90 33.00' Rt. ℄ R.R.

348+20.00 33.00' Rt. ℄ R.R.

REFERENCE

V.B. OHIO 7

33.00'

PIPE LINE OF VENT

S14°25'50"W

352+00 351+00 350+00 349+00 348+00 347+00

THE CONSOLIDATED RAIL CORPORATION

0 20 40 60 80

PARCEL Nº	OWNER	TO BE ACQUIRED TOTAL TAKE	TO BE ACQUIRED PROX. IN TAKE	NET RESIDUES LEFT	NET RESIDUES RIGHT
	DEED AREA CORR.	8875			
	TOTAL P.R.O.	8875			
319WL	DOROTHY E. WHITACRE	8875			
321 WL	ZELLA GILES	4435			
322WL	DOROTHY E. ANDERSON	4438			
302AWL	THE CITY OF CUYAHOGA FALLS, OHIO GAS COMPANY (AN OHIO CORPORATION)	2686			
324WL	THE CONSOLIDATED RAIL CORPORATION	16527			
325WL	NORA I. HALBLAUB, DECEASED	20000			
326WL	ROBERT L. FREEMAN & MELBA F. FREEMAN	10000	6413	3587(L)	
327WL	ROBERT J. WINFIELD	10000	211	9789	
328LA	The Consolidated Rail Corporation	3218	3218		181,616
329WL	CHARLES WILLIAM DOCTOR	357452	175,836		176,280
323AWL	MARY DOCTOR - Holder of Life Estate	200578	23,384		

NOTE: TYPE U FUNDS

PRELIMINARY SUBMITTAL DATE: RIGHT-OF-WAY COMPLETION DATE:			
Nº	REVISIONS	MADE BY	DATE
1	ADDED DIMENSION CORNER OF EXIST. SHED TO L/A PCL 326	C.D.B.	8-13-68
2	ADDED TO TABLE PCL 325A WL	C.D.B.	8-14-68
3	ADDED "OAKLAWN ESTATES"	J.M.	8-14-68
4	ADDED BRG. - DIM. 328	J.M.	8-14-68
5	Revised Name Pcl #329	R.A.S.	9-16-69
6.	Revised Name Pcl 327.	white	11-4-69

REVISED NAME PCL. 328-LA
ADDED STATIONS & OFFSETS FROM R.R.℄ - PCL. 328-LA
5-9-77

ADDED PARCEL 329 U L.S. 10-15-70

STA. 296+00 TO STA. 301+50

K & E - AKRON

SUMMIT COUNTY, CITY OF CUYAHOGA FALLS
ORIG. STOW TOWNSHIP, O.L. 22, O.L. 23, T.3N, R.10W

FED. RD.	STATE	PROJECT	
2	OHIO	U19 (12)	

443/460

SUM - 8 - 17.63

RIGHT OF WAY SHEET 39/56

CONSTRUCTION CENTERLINE SURVEY CURVE DATA (8)

Δ = 59°33'25" LT.
Dc = 3° 00'00"
Ls = 350.00
R = 1909.86'
Θs = 5° 15'00"
Ts = 1269.31'
Es = 293.64'
Lc = 1635.23'
L.T. = 233.44'
S.T. = 116.76'
Δc = 49°03'25"
Tc = 871.52'
Ec = 189.45'
P.I. STA. 316+71.72

SUBSTITUTE CURVE DATA FOR RIGHT OF WAY

Δ = 5°15'00" LT.
Dc = 2°14'59"
R = 2546.73'
T = 233.36'
Lc = 116.76'
P.I. #1 STA. 306+35.83
P.I. #2 STA. 325+04.40

OAKLAWN ESTATES PB. 64 PGS. 22 & 23

N11°32'20"E 197.36'
N12°42'26"E 170.34'
N09°04'05"E 98.51'
N89°00'43"E 607'
3-12" To 15" BEECH
4-15" ELMS
3-10" BEECH
PIPE LINE
T.B.A. 39,670 S.F.
ALLOTMENT LINE
329 U
29
30
31
32
3-15" OAKS
301+50 85'
303+06.62 62.85
303+50 95'
305+19.09 100
307+00 110'
S 11°32'20"W 156.82'
S 11°32'20"W 10-12" MAPLES
43.43 15-12" ELMS
L/A
12" OAK
169.12
S12°42'26"E
S 9°04'05"W 173.70'
3-15" MAPLES
4-12" OAKS
2-12" BEECH
18" BEECH
IAPA. 108'
6'-24" POPLAR
TYPE CL FENCE
12 - 18" To 20" POPLAR.
CONSTRUCTION LIMITS
CLEARING (WIDTH UNSPECIFIED)
329 AWL
329 WL
N01°04'13"E 431.74'
EASEMENT
20" HP E.O.G. PIPE LINE
24" MAPLE
12" OAK
302
303
304
305
306
N14°24'05"E
℄ SURVEY
RELOC. S.R. 8
SUM 8 1907
T.S. STA. 304+02.41
P.C. STA. 305+19.09 FOR R/W
5-10" To 12" POPLAR
10 - 12" ELMS
303 (TYP.) 304 (TYP.) N00°59'58"W 503.34'
I.P. FND.
306+64.80 15.80
36" ELM
S 8°10'40" W 108.40'
S89°00'43"W
331 WL
24" POPLAR
O.L. 22
O.L. 23
2-10" BEECH
7-10" To 12" ELMS
24" ELM
9-12" ELMS
3-10" OAKS
2" ELM
24" ELM
12" POPLAR
3-12" ELMS
304+65.65 123.27'
305+93.43 122.21'
306+86.50 121.86
3-10" BEECH
3-10" OAKS
478.60'
S14°25'50"W
CH=131.35 N 13°26'36"E, Lc=131.36
R=3811.80
6"-10" ELMS
CH=97.52' N11°28'53"E, Lc=97.53'
R=2851.03'

STA. 301+50 SEE R/W SHEET № 38

MATCH LINE

MATCH LINE SEE R/W SHEET № 40 STA. 307+00

THE CONSOLIDATED RAIL CORPORATION

0 20 40 60 80

TYPE U FUNDS PARCEL №	OWNER	DEED AREA CORR.	TOTAL TO BE ACQUIRED TOTAL P.R.O.	TOTAL TO BE ACQUIRED NET TAKE	TOTAL TO BE ACQUIRED PRO. INTAKE	NET RESIDUES LEFT	NET RESIDUES RIGHT	
329WL	Charles William Doctor Owner	351,452	———	175,836	———	———	181,616	54,074(A)
329AWL	Mary Doctor, holder of life estate	200,573	———	23,584	———	176,989	———	
331WL	W. RICHARD CURRY	214,061		199,397				199,397

№	REVISIONS	MADE BY	DATE
1	ADDED STATION & OFFSET @ LOT 30 PCL 329.	C.D.B.	8-14-68
2	ADDED TO TABLE PCL 329A WL.	C.D.B.	8-14-68
3	Revised Name PCL. # 329 ADDED PARCEL 329 U Revised NAME R.R.	R.B.S. L.S.	9-16-69 10-15-70 5-24-71

PRELIMINARY SUBMITTAL DATE:
RIGHT-OF-WAY COMPLETION DATE:

STA. 301+50 to STA. 307+00

FRANK E. SCHORR & ASSOC. SHEET
AUG 27 1968
ASSIGNED

K & E - AKRON

37

SUMMIT COUNTY, CITY OF CUYAHOGA FALLS
ORIG. STOW TOWNSHIP, O.L.22, O.L.23, T-3N, R-10W

FED. RD.	STATE	PROJECT	
2	OHIO	U19 (12)	

444 / 460

SUM-8-17.63

RIGHT OF WAY SHEET 40 / 56

CONSTRUCTION CENTERLINE SURVEY CURVE DATA (8)

Δ = 59°33'25" LT.
Dc = 3° 00' 00"
Ls = 350.00'
R = 1909.86'
Θs = 5° 15' 00"
Ts = 1269.31'
Es = 293.64'
Lc = 1635.23'
L.T. = 233.44'
S.T. = 116.76'
Δc = 49°03'25"
Tc = 871.52'
Ec = 189.45'
P.I. STA. 316+71.72

SUBSTITUTE CURVE DATE FOR RIGHT OF WAY

Δ = 5°15'00" L.T.
Dc = 2° 14' 59"
R = 2546.73'
T = 233.36'
Lc = 116.76'
P.I. #1 STA. 306+35.83
P.I. #2 STA. 325+04.40

PARCEL Nº	OWNER	DEED AREA CORR.	TOTAL PRO.	TO BE ACQUIRED TOTAL TAKE	TO BE ACQUIRED PRO. IN TAKE	TO BE ACQUIRED NET TAKE	NET RESIDUES LEFT	NET RESIDUES RIGHT
	THE CONSOLIDATED RAIL	—	—	5245	—	5245	—	—
328 S	CHARLES WILLIAM DOCTOR	357,452	—	175,834	—	175,834	—	181,618
325 WL	MARY DOCTOR-Widow of Will Contract	250,575	—	25,884	—	25,884	176,969	54,691 (L.)
331 WL	W. RICHARD CURRY	214,061	—	159,087	—	159,087	—	—
332 WL	AMERICA FIRE BRICK	18,190	—	18,190	—	18,150	—	—
	TYPE U FUNDS							

SEE R/W SHEET Nº 39

MATCH LINE STA. 307+00

SEE R/W SHEET Nº 41

MATCH LINE STA. 312+00

E.O.G. 20" H.P. GAS PIPE LINE (WIDTH UNSPECIFIED)

3-8" W. CHERRY

METAL SHED

SCATTERED 3" W. CHERRY & 3" POPLAR

KEENAN PARK NO. 2 PB. 66 P. 17

EXIST. R/W HOLLYWOOD CR.

CONC. WALK

BLACKTOP DRIVE

#842

1½ STY. SIDE BRK. & ALU. 2-FAMILY HSE.

#844

PATIO

PATIO

CONC. WALK

25' STREET DESIGNATION

591.50' ℄ INTER. OF HOLLYWOOD AND CHARLES ST.

25' STREET DESIGNATION

25 25

307+00 110'

142.94' S 6° 26' 02" E

308+50 132'

309+59.82 123.39'

102.82' N 9° 22' 38" E

L/A

IAPA 10.8'

IAPA 13.0'

24" ELM

IAPA 12.1'

3-12" DEAD ELM

MON END

TYPE CL FENCE

200.33 ALLOTMENT LINE

S 2° 20' 36" W

311+73.32 114.24'

202.97 S 9° 09' 41" E

IAPA 11.2'

CONSTRUCTION LIMITS

S 8° 03' 09" W 96.50'

PROP 18" Ø CMP PIPE

S 8° 03' 09" W

329 WL

332 WL

331 WL

BRUSH

30" ELM

309+66.44 27.10'

O.L. 22 200.00' O.L. 23 N 00° 56' 51" W

311+69.52 29.32'

307+44.53 LOT LINE & ℄

304'(D) 30334' (CALC) N 00° 56' 51" W 503.34'

308 ℄ SURVEY 309 RELOC. S.R. 8 310 311

24" ELM

S.C. STA. 307+52.41
P.C.C. STA. 307+52.45 FOR R/W

6-12" POPLAR

PROP. 15" PIPE

331 WL

8-10" POPLAR

10-8" TO 10" POPLAR

CONSTRUCTION LIMITS

CH. 492.42' N 5° 32' 31" E Lc 493.06'

R = 2851.03'

5-10" OAK

6-12' ELM

2-10" POPLAR

TYPE CL FENCE

BRUSH

L/A

STREAM CROSSING TYPE 2

311+50 134.09 Rt SR8

335+94.67 33.00' Rt & RR.

311+12.66 132.16 Rt SR8

336+34.66 33.00' Rt & RR.

337+00

336+00

53.00'

54.13'

THE CONSOLIDATED RAIL CORPORATION

SEE DETAIL OF PARCEL 328-S THIS SHEET

328 S

DETAIL OF PARCEL 328-S

STREAM CROSSING CONSTRUCTION TYPE 2

CRA 132.4'

63.07' N 36° 14' 28" W

LIMITS

L/A

336+34.66 33.00' Rt & RR.

311+12.66 132.16 Rt SR8

C11 N 05° 35' 31" E 39.99 ARC 39.99 R 2851.03

311+50 134.09 Rt SR8

335+94.67 33.00' Rt & RR.

S 78° 29' 44" W 63.23'

PROP 36" PIPE

335+78.73 33.00 Lt. & RR.

EXIST. R/W

24"

PIPE REFERENCE

V8 OHIO 6

328 S

N 85° 22' 49" W 45.00'

S 85° 22' 49" E 45.00'

336+18.73 33.00 Lt & RR

311+25.96 198.36 Rt SR8

S 0° 37' 36" W 40.00'

EXIST. R/W

336+19.44 98.24' Lt. & RR.

311+22.69 263.89' Rt. SR8

336+79.44 98.68' Lt & RR

311+57.77 266.06' Rt. SR8

335+18.73 33.00 Lt & RR

311+25.96 198.36 Rt SR8

L/A

IAPA 9.8'

312+00 100'

63.07' N 36° 14' 28" W

CRA 132.4'

(L.L.)

STREAM CROSSING TYPE 2

311+50 134.09 Rt SR8

335+94.67 33.00' Rt & RR.

311+12.66 132.16 Rt SR8

336+34.66 33.00 Rt & RR.

336+00

328 S

⑧: R = 2885.02'
Arc L = 131.84'
Chd L = 131.82'
Chd. Brg. = S 03° 07' 03" E

REVISED NAME & ADDED STATIONS & OFFSETS FROM I.R & RC 328-S 5-9-77

0 20 40 60 80

PRELIMINARY SUBMITTAL DATE :
RIGHT-OF-WAY COMPLETION DATE:

Nº	REVISIONS	MADE BY	DATE
1	ADDED TO TABLE PCL. 325 A WL.	C.O.B.	8-14-68
2.	ADDED 331 WL CALLOUT	E.N.	8-16-68
3.	STREAM CROSSING ADDED TYPE 2	D.O.A.	10-16-68
4.	Revised Name Pcl. # 329	R.R.S.	9-16-69
5.	REVISED NAME PCL. 328-T		3-24-71
6.	CHANGED PCL 328-T TO A SEWER EASEMENT		5-12-71

STA. 307+00 to STA. 312+00

DRWN. ENGR. R. ADAMS SEPT.
TRACED
CHKD.
AUG 27 1968
LOGGED
CHKD.

K & E - AKRON

35

SUMMIT COUNTY, CITY OF CUYAHOGA FALLS
ORIG. STOW TOWNSHIP, O.L. 22, O.L. 23, O.L. 32, O.L. 33, T-3N, R-10 W

FED. RD.	STATE	PROJECT	
2	OHIO	U19 (12)	

445A / 460

SUM - 8 - 17.63

RIGHT OF WAY SHEET 41A / 56

CONSTRUCTION CENTERLINE SURVEY CURVE DATA
Δ = 59° 33' 25" LT.
D_c = 3° 00'
L_S = 350.00'
R = 1909.86'
Θ = 5° 15' 00"
T_S = 1269.31'
E_S = 293.64'
L_c = 1635.23'
L.T. = 233.44'
S.T. = 116.76'
Δ_c = 49° 03' 25"
T_c = 871.52'
E_c = 189.45'
P.I. STA. 316+71.72

SUBSTITUTE CURVE DATA FOR RIGHT OF WAY
Δ = 5° 15' 00" LT.
D_c = 2° 14' 59"
R = 2546.73'
L_c = 233.36'
T = 116.76'
P.I. #1 STA. 306+35.83
P.I. #2 STA. 325+04.40

CUYAHOGA FALLS BOARD OF EDUCATION

P.C. = 331+41.66

335 WL

335 WA

331 WL

331 AERIAL

331 T

328

328 AERIAL

328-1

330 WD

315 RELOC. S.R. 8

L/A

140.44' N 18° 22' 52" W

315+00 / 100.00'

314+30 / 122.50'

104.26' N 10° 02' 18" W

314+30 / 150.00'

12" POPLAR

532 LINE 34' TO EAST R/W CHARLES ST.

313+93.34 (P) / 150.00'

313+88.65 / 122.51'

S 89° 03' 09" W 113.87'

313+70.80 / 10.36'

AXLE FND

MON FND

N 89° 03' 09" E

KENNAN PARK NO. 2 PB. 33 P. 17

ALLOTMENT LINE

L/A

BRICK & ALUM. 2 FAMILY HSE. #843

#841 BRICK & ALUM. 1 STY 2 FAMILY HSE.

BLACKTOP DRIVE

PATH 2

CONSTRUCTION LIMITS

202.07' S 3° 05' 41" E

O.L. 32

O.L. 22

O.L. 23

O.L. 33

313

313+08.26 / 18.00

MONUMENT TO BE RESET

89° 37' 42"

313+01.89 LOT LINE

156.19'

BRIDGE No. SUM-8-1527

314+33.57 LOT LINE

STA. 314+04.50 ℄ S.R. 8
STA. 50+00.00 ℄ PED. BRIDGE

℄ PEDESTRIAN BRIDGE N 79° 35' 10" E 51.00

45+00

314+23.33 / 119.13'

N 79° 35' 10" E 30.84'

AERIAL EASEMENT LINE

S 79° 35' 10" W 23.10'

N 7° 15' 08" W 40.02'

S 11° 54' ℄ PIER #4

S 11° 54' ℄ PIER #5

52+31 ℄ PIER #5

CH. BRG. S 4° 51' 15" E
CH. = 40.13' ARC = 40.13'
R = 2,845.02'

333+27.66
S1+85.18

52+00

53+00

54.00

55.00

CH. BRG. N 4° 51' 28" W
CH. = 73.26' ARC. = 73.27'
R = 2525.02'

103.47'

R/W S 79° 35' 10" W

313+85.45 / 116.57'

313+86.22 - 146.07' / 333+51.54 - 40.00'

313+86.62 - 236.49 / 333+43.05 - 40.00'

313+65.12 / 224.31'

313+64.24 / 321.77'

25' 25'

P.C.

39.17' (PLAT)

I.P. FND & USED

BLOCK "C" TRUSTEES OF SILVER LAKE ESTATES

SILVER LAKE PB-4 P-4-27

N 88° 40' 31" E

CONSTRUCTION LIMITS

L/A

N 2° 18' 20" W 106.68'

W. RICHARD CURRY

L. L.

CORPORATION LINE

334+54.96

335

33'

W RICHARD CURRY

320.67' N 7° 15' 08" W

L. L.

CORPORATION LINE

BRUSH & 2" W CHERRY TREES

EXIST R/W

314+23.04 - 149.57' / 333+11.18 - 40.00

40' 40'

332

THE CONSOLIDATED RAIL CORPORATION

314+22.35 - 230.28 / 333+04.06 - 40.00'

314+30.30 - 231.15' / 332+98.23 - 40.00'

I.P. FND & USED

SEE SHT. № 41B FOR R.R. R/W

POWER SERVICE LINE

POWER LINES (AERIAL)

330.90'

STR SHED

2 STY. FR. HSE.

H. R. & M. L. MORGAN LOT 309

STATES

EXIST R/W

℄ R/W 50' MILLBORO ROAD

N R/W N 85° 15' 52" E

I.P. FND & USED

314+30.73 / 330.44'

EXIST R/W

CH. BRG. S 7° 35' 54" E
CH. = 63.11' ARC = 63.17'
R = 450.00'

MILLBORO ROAD ℄ CURVE DATA
Δ = 70° 40' 35"
R = 425.00'
T = 301.34'
Lc = 524.25'
CH = 491.64'

0 20 40 60 80

PENNSYLVANIA RAILROAD ℄ CURVE DATA
P.I. STA. 336+73.6
Δ = 21° 07' 23"
D = 1° 59' 12"
R = 2885.02'
T = 537.52'
L = 1,063.6

PARCEL №	OWNER	DEED AREA CORR	TOTAL P.R.O.	TO BE ACQUIRED TOTAL TAKE	PRO. IN TAKE	NET TAKE	NET RESIDUES LEFT	RIGHT
328 AERIAL	THE CONSOLIDATED RAIL CORPORATION	—	—	3,215	—	3,215		
328				154		154		
328-1				47	—	47		
330	TRUSTEES OF SILVER LAKE ESTATES	52,272	—	6,863	—	6,863	—	45,409
331 W/L	W. RICHARD CURRY	214,061	—	159,987	—	159,987	—	54,074(1)
331 AERIAL				1,201	—	1,201		
331-T				1,201	—	1,201		

FORM D D A-8

PRELIMINARY SUBMITTAL DATE : RIGHT-OF-WAY COMPLETION DATE :			
№	REVISIONS	MADE BY	DATE
1	Changed 330-WD to Easement per I.O.C. Eckert 4th. 8-26-69	White	8-28-69
2	Converted back Pcl. 330 to 330WD	J.R.T.	10-31-69
	Revised Name Pcl 328 Series		3-24-71

PEDESTRIAN BRIDGE R/W

State Highway Dept. Div. 4
R/W - ENGR & ADMIN SECT.
APR 11 1973
LOGGED
Crds. BM Bk.

FED. RD.	STATE	PROJECT	
2	OHIO	U19(12)	

445B / 460

SUM - 8 - 17.63

RIGHT OF WAY SHEET 41B / 56

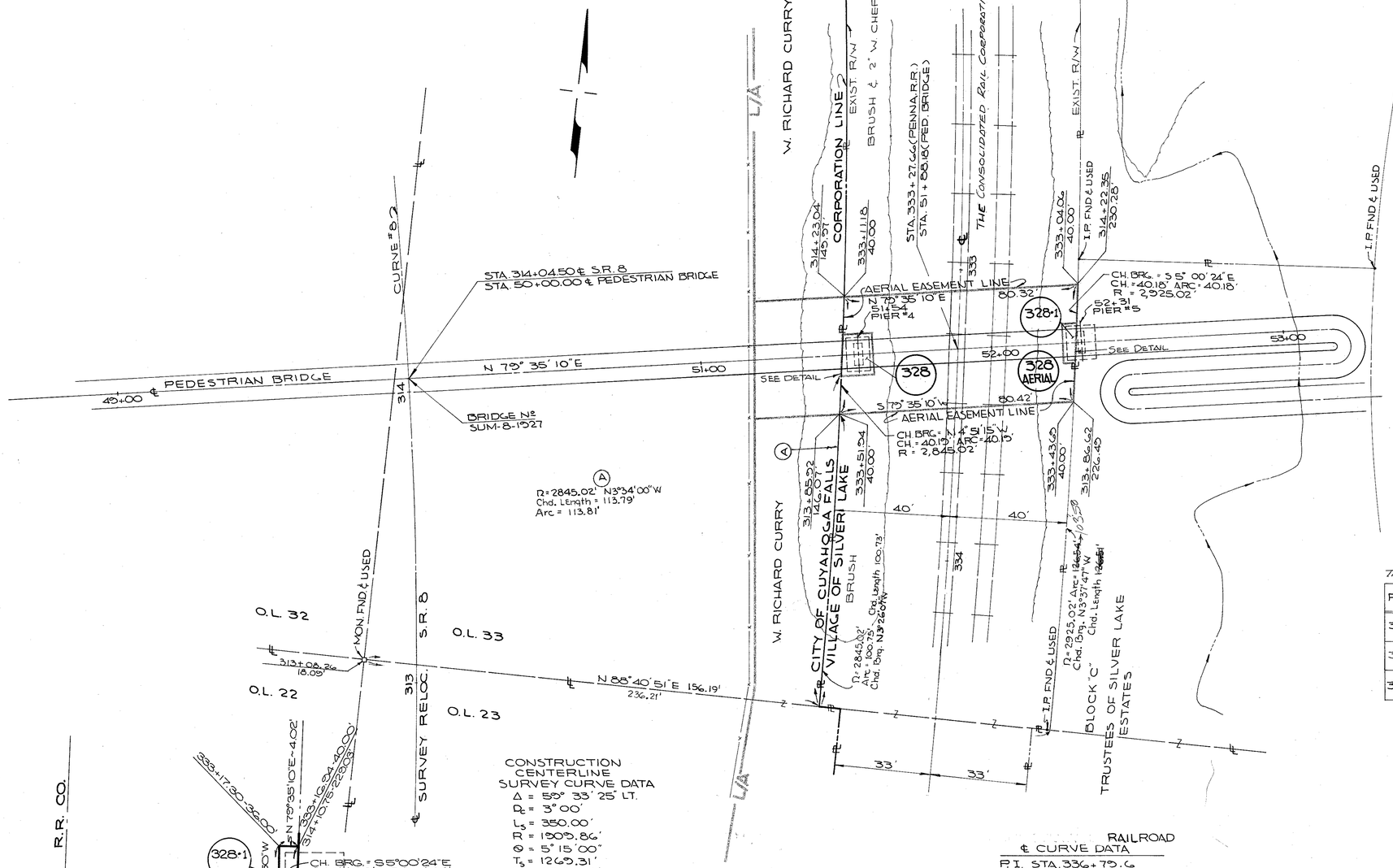

PIER FOOTER PARCELS

CONSTRUCTION CENTERLINE SURVEY CURVE DATA
- Δ = 55° 33' 25" LT.
- D_p = 3° 00'
- L_s = 350.00'
- R = 1909.86'
- Ø = 5° 15' 00"
- T_s = 1269.31'
- E_s = 293.64'
- L_c = 1635.23'
- LT. = 233.44'
- S.T. = 116.76'
- Δ_c = 49° 03' 25"
- T_c = 871.52'
- E_c = 189.45'
- P.I. STA. 316+71.72

SUBSTITUTE CURVE DATA FOR RIGHT OF WAY
- Δ = 5° 15' 00" LT.
- D_p = 2° 14' 55"
- R = 2546.73'
- L_c = 233.36'
- T = 116.76'
- P.I. #1 STA. 306+35.83
- P.I. #2 STA. 325+04.40

RAILROAD ℄ CURVE DATA
- P.I. STA. 336+79.6
- Δ = 21° 07' 23"
- D = 1° 55' 12"
- R = 2,885.02'
- T = 537.92'
- L = 1063.6'

THE CONSOLIDATED RAIL CORPORATION

PARCEL NO.	PURCHASE REQUIRED	AREA-SQ.FT.
328 AERIAL	AERIAL EASEMENT	3,215
328	WARRANTY DEED	154
328-1	WARRANTY DEED	47

RAILROAD VALUATION MAP — V8 OHIO 6

GRAPHIC SCALE
0 20 40 60 80

PRELIMINARY SUBMITTAL DATE : RIGHT-OF-WAY COMPLETION DATE :			
Nº	REVISIONS	MADE BY	DATE
	REVISED NAME PCL 328 SERIES		3-24-71

PENNSYLVANIA RAILROAD RIGHT-OF-WAY PLAT

State Highway Dept. Div. R/W - ENGR & ADMIN SECT.
APR 11 1969
LOGGED
Cnte. Bill Bk.

FORM D D A-9

SUMMIT COUNTY, CITY OF CUYAHOGA FALLS
ORIG. STOW TOWNSHIP, OL.22, OL23, OL32, OL33, T-3N, R-10W

FED. RD.	STATE	PROJECT	
2	OHIO	U19 (12)	

445/460

SUM - 8 - 17.63

RIGHT OF WAY SHEET 41/56

CONSTRUCTION CENTERLINE SURVEY CURVE DATA
Δ = 59° 33' 25" LT.
Dc = 3° 00'
Ls = 350.00'
R = 1909.86'
Θs = 5° 15' 00"
Ts = 1269.31'
Es = 293.64'
Lc = 1685.23'
LT = 233.44'
ST = 116.76'
Δc = 49° 03' 25"
Tc = 871.52'
Ec = 189.45'
P.I. STA. 316+71.72

SUBSTITUTE CURVE DATA FOR RIGHT OF WAY
Δ = 5°15'00" LT.
Dc = 2° 14' 59"
R = 2546.73'
Lc = 233.36'
T = 116.76'
P.I.#1 STA. 306+35.83
P.I.#2 STA. 325+04.40

BLACK TOP DRIVE
1-STY. #843 BRK. & ALU. 2-FAMILY HSE.
#841
12" POPLAR
KEENAN PARK NO. 2 PB66 P 17
313+53.34 (℄) 150.00'
314+30 150.00'
314+30 122.50'
335 WA
332.37' TO EAST LINE CHARLES ST. R/W
316+50 127.00' 140.08'
315+00 120.00'
202.07' S 3°09'41" E
L/A
ALLOTMENT LINE
MON FND.
104.26' N 10°02'18" W
140.44' N 18°22'52" W
N 25°20'50" W
313+88.69 122.51'
CONSTRUCTION LIMITS
PATH
CDA 118'
CDA 125'
113.87' S 89°03'09" W
N 79°35'10" E
335 WL
FENCE REMOVED POSTS REMAIN
24" W. CHERRY
OL.22 313+08.26 18.09'
OL.32
OL.23
OL.33
MONUMENT TO BE RESET
313+06.20 LOT LINE
313+70.80 10.36
AXLE END
314+33.57 LOT LINE & ℄
RELOC. S.R. 8
SURVEY
314+04.50
BRIDGE NO SUM-8-1527
315
316
400.00' N 00°56'51" W
6" W. CHERRY
24" W. CHERRY
N 88°40'51" E
SEE R/W SHEET Nº 40
MATCH LINE STA. 312+00
SEE R/W SHEET Nº 42
MATCH LINE STA. 317+00
PEDESTRIAN BRIDGE
331 WL
196.21'
LAPA 33'
LAPA 113'
312+00 100'
106.68' N 2°18'20" W
313+00 115'
CONSTRUCTION LIMITS
320.67' N 7°19'08" W
CDA 198'
256.77' N 23°23'13" W
316+00 140.00'
L.L.
CORPORATION LINE
CITY OF CUYAHOGA FALLS
VILLAGE OF SILVER LAKE
BRUSH
BRUSH & 2" W. CHERRY TREES
THE CONSOLIDATED RAIL CORPORATION
3341+54.86 ERR
@ = L = 2885.02'
Dec L: 131.84'
Chd L: 131.82'
Chd Brg: S03°07'03"E
SEE SHT. Nº 41A FOR PEDESTRIAN BRIDGE R/W

0 20 40 60 80

TYPE U FUNDS

PARCEL Nº	OWNER	DEED AREA CORR.	TOTAL PRO.	TOTAL TAKE	PRO. IN TAKE	NET TAKE	NET RESIDUES LEFT	NET RESIDUES RIGHT	
331 WL	W. RICHARD CURRY	2.14 Ac	22,650	153,381	——	150,887	——	5,497.40	
335 WL 335 WA	BOARD OF EDUCATION OF THE CUYAHOGA FALLS CITY SCHOOL DISTRICT	487,685	——	163,381	——	163,381	297,206	3,848(L)	

Nº	REVISIONS	MADE BY	DATE
1	ADDED MONUMENT TO BE RESET @ 313+10 - 17.87' LT. ℄ .	C.D.B.	8-14-68
2	CORR. EXISTING MON. LOCATION @ 313-00.26 - ADDED PEDESTRIAN BRIDGE	CONSU.	4-14-69
3	DELETE PCL. 334-WL & COMBINED AREA WITH PCL. 335-WL PER OUTSALE	LEE	4/28/69
4	REVISED AREAS 335 PER OUTSALE	WHITE	7-19-69

PRELIMINARY SUBMITTAL DATE:
RIGHT-OF-WAY COMPLETION DATE:

STA. 312+00 TO STA. 317+00

STATE HIGHWAY DEPT. OF OHIO
R/W ENGR'S ASSN. SECT.
AUG 27 1968
LOGGED
CHECKED

K & E - AKRON

FED. RD. DIVISION	STATE	PROJECT	
2	OHIO	U 19-(12)	

446-A / 460

SUM-8-17.63
RIGHT OF WAY SHEET

42-A / 56

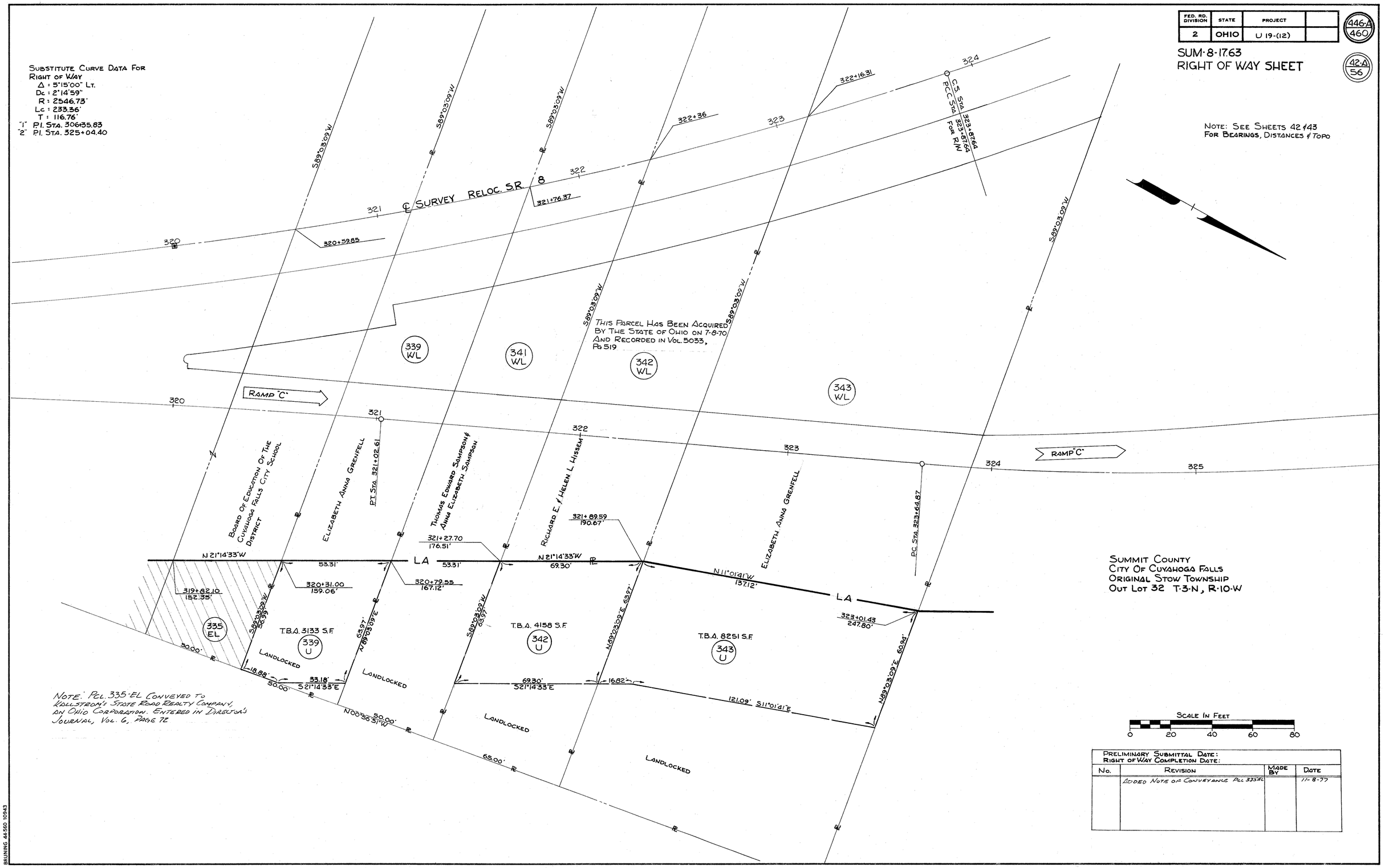

Preliminary Submittal Date: Right of Way Completion Date:			
No.	Revision	Made By	Date
	Added Note of Conveyance Pcl 335EL		11-8-77

BRUNING 44-560 10943

SUMMIT COUNTY, CITY OF CUYAHOGA FALLS
ORIG. STOW TOWNSHIP, OL.32, T-3N, R-10W

FED. RD.	STATE	PROJECT	
2	OHIO	U19 (12)	

446/460

SUM-8-17.63

RIGHT OF WAY SHEET 42/56

(8) SUBSTITUTE CURVE DATA FOR RIGHT-OF-WAY
Δ = 5°15'00" LT.
Dc = 2°14'59"
R = 2546.73'
Lc = 233.36'
T = 116.76'
P.I.#1 STA. 306+35.83
P.I.#2 STA. 325+04.40

CONSTRUCTION CENTERLINE SURVEY CURVE DATA
Δ = 59°33'25" LT.
Dc = 3°00'00"
Ls = 350.00'
R = 1909.86'
Qs = 5°15'00"
Ts = 1269.31'
Es = 293.64'
Lc = 1635.23'
L.T. = 233.44'
S.T. = 116.76'
Δc = 49°03'25"
Tc = 871.52'
Ec = 189.45'
P.I. STA. 316+71.72

SEE R/W SHEET Nº 41

MATCH LINE

STA. 317+00

STA. 322+00

MATCH LINE

SEE R/W SHEET Nº 43

318+00 / 140.00

318+43.62 / 145.18

319+05.47 / 150.51'

319+67.65 / 154.75

320+32.51 / 156.93'

321+54.98 / 154.68'

140.08' N 23°20'56" W

40.70'

57.34'

57.34'

114.65'

57.34'

67.94'

N 30°14'53" W

N 30°14'53" W

N 30°14'53" W

N 30°14'53" W

N 30°14'53" W

S 49°33'41" E

426.20' TO ℄ CHARLES ST.

338.24' TO ℄ CHARLES ST.

370.18' TO ℄ CHARLES ST.

324.07' TO ℄ CHARLES ST.

286.00' TO ℄ CHARLES

20' E.O.G. T.D.E. (WIDTH UNSPECIFIED)

3" PINE

HEDGE ROW

TYPE CL FENCE

CONSTRUCTION LIMITS

L/A

APA. 153'±

335 WL

12" APPLE

6" APPLE

8" APPLE

2-18" APPLE

FR. SHED

PROP. 30" PIPE

RAMP "E"

SCATTERED 3"-4" W. CHERRY

2-8" W. CHERRY

30" W. CHERRY

12" W. CHERRY

10" MAPLE

8" APPLE

318

319

320

321

℄ SURVEY RELOC. S.R. 8

317+83.46

318+37.25

318+91.67

320+02.71

320+59.85 PT

321+76.37

10" APPLE

30" W. CHERRY

400.00' ℄ N00°56'51"W

317+47.47 P.C. STA.

PROP. 15" PIPE

317+51.55 / 88.08'

50.00'

N 00°56'51" W

50.00'

317+39.47 / 105.55'

CONSTRUCTION LIMITS

L/A

256.77' ⊙ 23°23'13" E

(LANDLOCKED)

APA. 127'

100.00'

N 00°56'51" W

318+39.89 / 124.17'

319+24.95 / 131.84'

50.00

N 00°56'51" W

S 89°03'09" W 56.98'

(LANDLOCKED)

339 U See Sheet 42-A

NOTE: PCL. 335-EL CONVEYED TO WALLSTROM'S STATE ROAD REALTY COMPANY, AN OHIO CORPORATION. ENTERED IN DIRECTOR'S JOURNAL, VOL. 6, PAGE 72

10" W. CHERRY

FR. SHED

SCATTERED 3" W. CHERRY

5' BOARD FENCE

APA. 144'±

319+32.89 / 146.44'

SCATTERED 4 POPLAR 53.31'

S 21°14'33" E

53.31'

S 21°14'33" E

SCATTERED 3" W. CHERRY

319+82.10 / 152.35'

320+31.00 / 159.06'

L/A

53.31'

S 21°14'33" E

320+79.55 / 167.12'

(LANDLOCKED)

335 EL

339 WL

339 U

342 U

343 WL

343 (L.L.)

C 343 See Sheet 42-A

(LANDLOCKED) See Sheet 42-A

(LANDLOCKED) See Sheet 42-A

P.T. STA. 321+02.61

S 89°03'09" W

36'-4" APPLES

5'± APART

407.03'

S 89°03'09" W

12-3" To 4" PINES

10" DIE

RAMP "C"

321+27.70 / 176.51'

53.31'

S 21°14'33" E

321+89.59 / 150.67'

69.30

TYPE CL FENCE

S 21°14'33" E

APA. 130'±

STA. 317+00 TO 322+00

0 20 40 60 80

ADDED NOTE OF CONVEYANCE PCL. 335-EL 11-8-67

5 DELETED PCL 334-WL & COMBINED AREA WITH PCL 335-WL PER OUTSALE: LEE 4/24/68

6 REVISED PCLS. 335-WL, 342-WL & 343-WL PER OUTSALE: LEE 4/15/69

2. CURVED LANDLOCKED RIGHT RESIDUE OF 335-WL

PRELIMINARY SUBMITTAL DATE:
RIGHT-OF-WAY COMPLETION DATE:

Nº	REVISIONS	MADE BY	DATE
1	ADJUSTED AREAS PCL NOS 335WL, 342WL & 342-ND	C.D.D.	6-15-68
2	ADDED PCL PARS 342-WL & 343-WL	E.N.	8-16-68
3	CHANGE 335-WL TO NONE	J.P.B.	9/18/68
4	DELETED PCLS. 335WL & 342WL & COMBINED AREA WITH PCL 335-WL PER OUTSALE: LEE	L.S.	10-14-70

PARCEL Nº	OWNER	DEED AREA CORR.	TOTAL PRO.	TO BE ACQUIRED TOTAL TAKE	TO BE ACQUIRED PRO INTAKE	TO BE ACQUIRED NET TAKE	NET RESIDUES LEFT	NET RESIDUES RIGHT
335 WL	BOARD OF EDUCATION OF THE CUYAHOGA FALLS CITY SCHOOL DISTRICT							
335 EL	BOARD OF EDUCATION OF THE CUYAHOGA FALLS CITY SCHOOL DISTRICT	487685	22650	163981	—	163981	292206	
339 WL	ELIZABETH ANN AGRENFELL	33,825	1500	19,464	—	19,464	9,350	3,311 (L)
339 WL	EDWARD E. SAMPSON	33,825	1500	21,345	—	21,345	5,453	4,236 (L)
341 WD	ANNABELLE SAMPSON			21,750	15.00	30,772		6855 (L)
342 WL	RICHARD E. HISSEM	43,973	1950	6,362	1950	4,412		
342 WD	HELEN L. HISSEM							

TYPE U FUNDS

Surveyed, Drawn & Checked by R/W ENGR. & ADMIN. SECT.

AUG 27 1968

LOCKED

K & E - AKRON

STA. 325+50 — MATCH LINE SEE R/W SHEET Nº 45 & 46

SUMMIT COUNTY, CITY OF CUYAHOGA FALLS
ORIG. STOW TOWNSHIP, O.L.32, T-3N, R-10W

FED. RD.	STATE	PROJECT	
2	OHIO	U19(12)	

447/460

SUM-8-17.63

RIGHT-OF-WAY SHEET 43/56

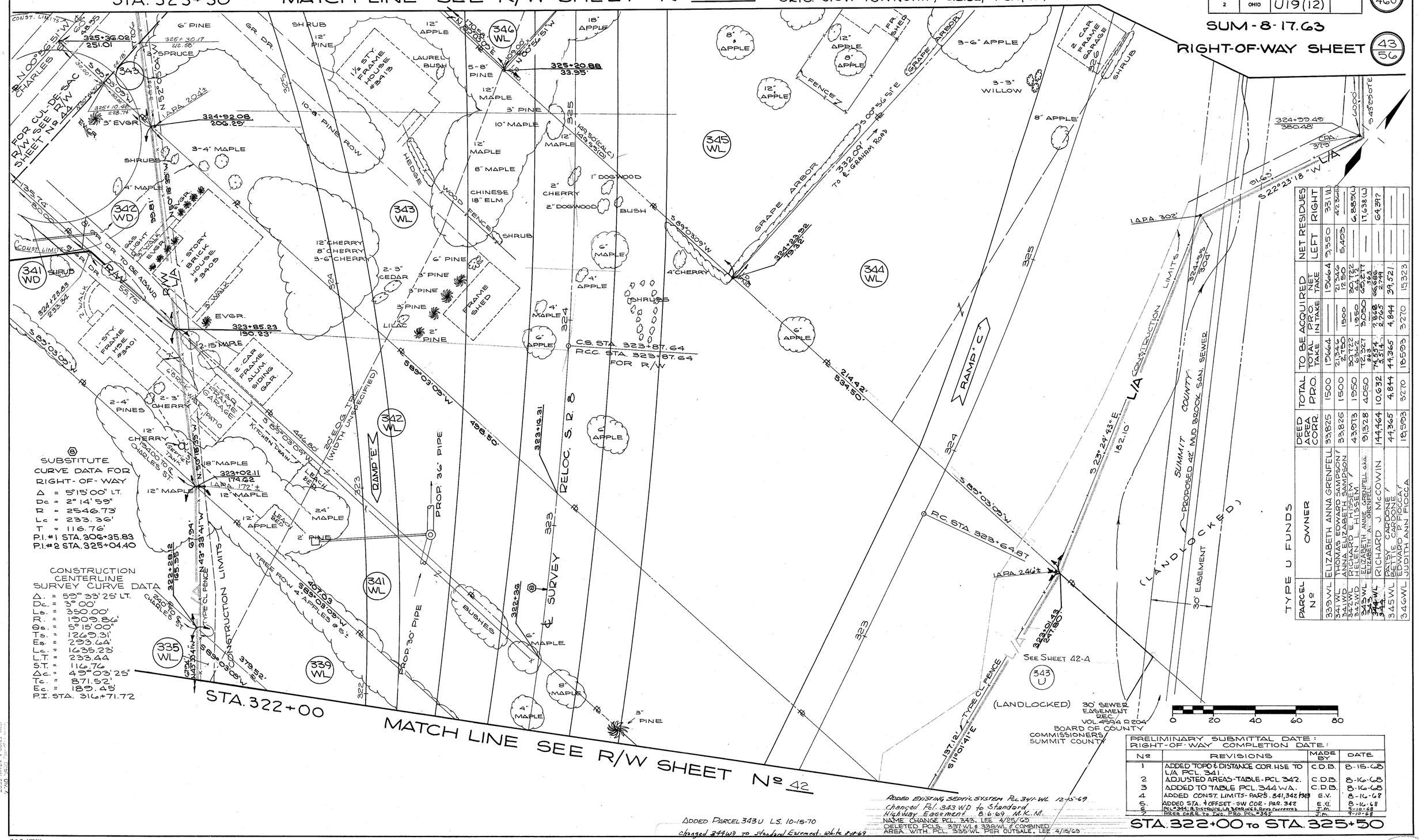

⑧ SUBSTITUTE CURVE DATA FOR RIGHT-OF-WAY

Δ = 5°15'00" LT.
Dc = 2° 14' 59"
R = 2546.73'
Lc = 233.36'
T = 116.76'
P.I. #1 STA. 306+35.83
P.I. #2 STA. 325+04.40

CONSTRUCTION CENTERLINE SURVEY CURVE DATA

Δ. = 59° 33' 25" LT.
Dc. = 3° 00'
Ls. = 350.00'
R. = 1909.86'
Θs. = 5° 15' 00"
Ts. = 1269.31'
Es. = 293.64'
Lc. = 1635.23'
L.T. = 233.44
S.T. = 116.76
Δc. = 45° 03' 25"
Tc. = 871.52'
Ec. = 189.45'
P.I. STA. 316+71.72

TYPE U FUNDS

PARCEL Nº	OWNER	DEED AREA CORR.	TOTAL PRO.	TO BE ACQUIRED TOTAL TAKE	TO BE ACQUIRED PRO. IN TAKE	NET RESIDUES LEFT	NET RESIDUES RIGHT
339 WL	ELIZABETH ANNA GRENFELL	33,625	1500	1.0664	——	2,350	331 W.L.
341 WL	THOMAS EDWARD SAMPSON †	33,825	1500	2.1346	1500	5,425	42,324 D
342 WD	ANNA ELIZABETH SAMPSON	43,973	1950	2.1722	1950	——	6,889 (L)
342 WD	HELEN L. HISSEM /			2.3662	1,350	——	——
343 WL	ELIZABETH ANNIE GRENFELL a.k.a.	91,328	4050	16.3271	3,050	65,277	17,638 (L)
344 WL	ELIZABETH A. GRENFELL	144,464	10,632	7.4144	7,368	66,366	64,317
345 WL	RICHARD J. McCOWIN	44,365	4,844	3.5174	2,265	2,744	——
	PATSY CARDONE /						
	BETTIE CARDONE †						
346 WL	EDWARD EWING †	18,593	3270	4.4365	4,844	39,521	15323
346 WL	JUDITH ANN FICCA				3,270		

PRELIMINARY SUBMITTAL DATE:
RIGHT-OF-WAY COMPLETION DATE:

Nº	REVISIONS	MADE BY	DATE
1	ADDED TOPO & DISTANCE COR. HSE TO L/A PCL 341	C.D.B.	8-15-68
2	ADJUSTED AREAS-TABLE-PCL 342.	C.D.B.	8-16-68
3	ADDED TO TABLE PCL 344 W.A.	C.D.B.	8-16-68
4	ADDED CONST. LIMITS-PARS. 341, 342, 343	E.V.	8-16-68
5	ADDED STA. & OFFSET-SW COR-PAR. 342	E.V.	8-16-68
6	PCL #344; & DISTANCE, LA BEARINGS, Area Corrected	J.M.	9-10-68
7	AREA CORR. TO INC. PRO PCL #345	J.M.	9-10-68

STA. 322+00 TO STA. 325+50

ADDED EXISTING SEPTIC SYSTEM PCL 341-WL 12-15-69
Changed Pcl. 343 WD to Standard
Highway Easement 8-6-69 M.K.M.
NAME CHANGE PCL 343. LEE 4/25/69
DELETED PCLS. 337-WL & 338-WL & COMBINED AREA WITH PCL. 335-WL PER OUTSALE. LEE 4/18/69

ADDED PARCEL 343 U L.S. 10-15-70
Changed 344 WD to Standard Easement. white 8-4-69

K & E-AKRON

RW-ENGR & ADMIN SECT. TAXPAYER FURN.
AUG 27 1969
LOGGED
Est. Sht.

SUMMIT COUNTY, CITY OF CUYAHOGA FALLS
ORIG. STOW TOWNSHIP, QL. 32, T-3N, R-10W

MATCH LINE SEE R/W SHEET Nº 45 Nl STA. 325+50

MATCH LINE SEE R/W SHEET Nº 45 CHARLES ST. STA. 46+58.

FED. RD.	STATE	PROJECT	
2	OHIO	U19(12)	

448/460

SUM-8-17.63

44/56

RIGHT OF WAY SHEET

COVERAGE SEE R/W SHEETS Nº 42 & 43 Nl STA. 322+00

FOR ADDITIONAL

25' EASEMENT CITY OF CUYAHOGA FALLS VOL. 4550 PG. 375

48" STORM SEWER

I.P.F.

1-STORY FR. ALUM. SIDE. HOUSE # 3410

348-1

EV. GR.

11' GRAVEL DR.

10" MAPLE

8' GRAVEL DR.

1-STORY BRICK HSE. # 3400

10' CONC. DR.

GAS LIGHT

12" MAPLE

340

2-10" MAPLES 2-6" PINES

17' GRAVEL DR.

1½-STORY FRAME HOUSE #3394

GAS LIGHT

30" MAPLE

12" WILD CHERRY

SHRUB ROW

12' ASPHALT DRIVE

12" APPLE 6" PINE 12" APPLE 30" MAPLE

2½ STORY BRICK HOUSE #3390

20" MAPLE

FRAME SHED

STUCCO GARAGE

FRAME SHED

12' ASPHALT DRIVE

15" MAPLE

30" MAPLE

18" MAPLE

CHARLES STREET

325+51.04
238.63'

325+30.17
212.58'

325+10.48
228.76'

30.00' R.P.
S 89°03'09"W

326+36.07
251.02'

324+81.70
254.25'

324+32.61
331.06'

324+38.46
326.78'

324+16.52
363.75'

N 52°00'00" W
324+20.08

343 WL

343

3-SPRUCE

3-4" MAPLES

12" CHERRY

8" CHERRY

324

342 WD

EV. GR.

4" MAPLE

342 WL

1-STORY BRICK HOUSE # 3405

EV. GR.

GAS LIGHT

3' WALK

N 50° 18' 39" W

EV. GR.

3233.85
150.23

2-CAR FRAME ALUM. SIDE GARAGE

15" MAPLE

498.50'
TO L/A LINE

3-6" CHERRY

20' E.O.G. TPL (WIDTH UNSPECIFIED)

RAMP "E" 323

TO BE ABANDONED

8' GRAVEL DR.

125.74 S 89°03'09" W

60.00'

8' GRAVEL DR.

446.80' S 89°03'09" W

TO L/A LINE

KITCHEN DRAIN

1-CAR FRAME GARAGE

6' BRICK WALK

PATIO

LEACH BED

24" MAPLE

18" MAPLE

341 WL

2-3" CHERRY

341 WD

CONSTRUCTION LIMITS

70.71' R/W

N 45° 00' 00" E

SPRUCE

2' WALK

1-STORY FRAME HOUSE # 3401

2042.36
233.36'

LEACH BED

2" PINE

2-4" PINES

SEPTIC TANK

L/A 1-3

407.08

S 88°03'09" W

TO L/A LINE

30.00

I.P.F.

PINE TREES

S 88°03'09" W

184.00

12" CHERRY

323+62.11
174.62'

TREE ROW 4"-APPLES @ 5'±

12" MAPLE

1-STORY FRAME HSE. # 3395

8' GRAVEL DR.

12" MAPLE

L/A 1-4

N 43° 32' 41" W

67.04'

379.52

339 WL

240.00'

S 88°03'09" W

TO L/A LINE

322+28.12
165.05

8" PINE

1½ STY. FRAME HOUSE # 3391

6" C.O.R.

N 43° 32' 41" W

COR. 165

852.01'

TO L/A LINE

8' GRAVEL DR 286.00

I.P.F.

S 89°03'09" W

321+54.98
154.68

335 WL

8' GRAVEL DR.

1½ STORY FRAME HOUSE # 3387

1-CAR FRAME GARAGE

N 20° 14' 58" W

314.07'

S 88°03'09" W

8"-12" PINES

320+96.31
156.93

36" OAK

50' DEED RESERVATION

8' GRAVEL DR.

50 MAPLE

2-CAR FRAME GARAGE

0 20 40 60 80 100

7. ADDED EXISTING SEPTIC SYSTEM PCL 341-WL 12-15-69 FRY

6. Changed Ent 343WD to Stand Highway Esmt. M.K.M. 8-16-69

PRELIMINARY SUBMITTAL DATE:
RIGHT-OF-WAY COMPLETION DATE:

Nº	REVISIONS	MADE BY	DATE
1	ADDED TOPO PCL'S. 341 & 342	C.D.B.	8-16-68
2	ADDED DIMENSION COR. 11 SE. TO L/A PCL 341	C.D.B.	8-16-68
3	ADJUSTED STATIONS & OFFSETS ALONG & CHARLES & ADDED NOTE; "GO DEED RESERVATION."	C.D.B.	8-16-68
4.	ADDED STA. & OFFSETS-PAT. 341 CORS.	E.V.	8-16-68
5	NAME CHANGE PCL. 343	LEE	4-25-69

PARCEL NO.	OWNER	DEED AREA COR.	TOTAL P.R.O.	TO BE ACQUIRED SQ. FT. TOTAL TAKE	P.R.O. IN TAKE	NET TAKE	NET RESIDUE LEFT	NET RESIDUE RIGHT	TYPE FUNDS
* 340	WILLIAM G. DALTON & MARY A. DALTON	36,140	2,700						
341 WL 341 WD	THOMAS E. SAMPSON & ANNA ELIZABETH SAMPSON	33,825	1,500	21,346 2,750	1,500	21,346 1,250	5403	4,236 (L)	U U
342 WL 342 WD	RICHARD E. HISSEM & HELEN L. HISSEM	43,573	1,950	30,722 6,362	1,950	30,722 4412	—	6,885 (L)	U U
343 WL 343	ELIZABETH ANNIE GRENFELL ELIZABETH A. GRENFELL	91,328	4050	72,327 363	3,050 —	69,277 363	—	17,638 (L)	U U
* 3481	JOAN LOEFFLER	9503	1,500						

* NOT EFFECTED

CITY OF CUYAHOGA FALLS KEENAN PARK

CHARLES ST. STA. 43+00 to STA. 46+58.97

FORM D D A-5

AUG 27 1968

LOGGED

Eff Co.

SUMMIT COUNTY, CITY OF CUYAHOGA FALLS, CITY OF STOW
ORIG. STOW TOWNSHIP, O.L.32, T-3N, R-10W

FED. RD.	STATE	PROJECT	
2	OHIO	U19 (12)	

443 / 460

SUM 8-17.63

RIGHT OF WAY SHEET 45 / 56

EXIST. GRAHAM ROAD CURVE DATA
Δ = 28° 57' 00" LT.
Dc = 9° 00'
T. = 164.34'
Lc = 321.67'
R = 636.62'
P.I. STA. 110+05.45

S. 88° 25' 33" W.
CHORD = 303.26'
ARC = 306.51'
R = 606.62'

STA. 111+00 MATCH LINE

SEE R/W STA. 329+00 SHEET Nº 47

S. 88° 25' 33" W.
CHORD = 318.03'
ARC = 321.96'
R = 636.62'

STA. 111+44.05 RELOC. GRAHAM

EXIST. R/W

SIGN

42" STORM

PT STA. 111+66.78 = 328+72.34 SRB
EXIST. GRAHAM 127.32' LT.

(60') COUNTY HIGHWAY EASEMENT

CORE LINE EXIST. GRAHAM

GRAHAM RD. CUYAHOGA FALLS STOW RD.

WOOD FENCE

N 45° 09' 20" W

RELOC. R/W SHEET Nº 46

STA. 328+01.48 = S.R.B.
STA. 113+17.45 EXIST. GRAHAM

STA. 327+86.45 = S.R.B.
STA. 113+17.56 RELOC. GRAHAM

RELOC. GRAHAM RD. CURVE DATA
Δ = 56° 22' 40" LT.
Dc = 5° 00'
R. = 1145.92'
T. = 614.15'
Lc = 1127.56'
E. = 154.20
P.I. STA. 113+54.92

CONSTRUCTION SR-8 CENTERLINE SURVEY CURVE DATA
Δ = 59° 33' 25" LT.
Dc = 3° 00'
R = 350.00'
T = 1909.86'
Lc = 5° 15' 00"
E = 1269.31'
P.I. = 283.64'
S.T. = 1635.23'
Δ = 233.44'
Δ = 116.76'
Δ = 49° 03' 25"
Δ = 871.52'
E = 189.45'
P.I. STA. 316+71.72

PARCEL Nº	OWNER	DEED AREA CORR.	TOTAL P.R.O.	TO BE ACQUIRED TOTAL TAKE	TO BE ACQUIRED P.R.O. IN TAKE	TO BE ACQUIRED NET TAKE	NET RESIDUE LEFT	NET RESIDUE RIGHT
345WL	ELIZABETH ANNE GRENFELL	51,328	4,050	72,327	3,950	69,277	----	17,638 (L)
346WL	ELIZABETH A. GRENFELL & JUDITH ANN FIOCCA	18,593	3,270	18,593	3,270	15,323	----	----
347WL	JOANNA MAY HAAS	23,075	1,263	23,075	1,263	15,710	----	----
348WL	HERBERT L. BULLARD & CATHERINE P. BULLARD	26,084	2,400	5,200	2,128	3,077	----	20,607
349WL	RAY E. BECKWITH & MARGARET L. BECKWITH	6,248	1,542	15,426	1,542	4,705	----	----
351WD	CUYAHOGA FALLS, CITY OF	1,950,687	40,700	5,257,719	37,343	4,884,446	1,053,138	
351WD	COUNTY OF OHIO (FEE & EASEMENT)			1,780		1,780		

TYPE U FUNDS

0 20 40 60 80

PRELIMINARY SUBMITTAL DATE:
RIGHT-OF-WAY COMPLETION DATE:

Nº	REVISIONS	MADE BY	DATE
1	CHARLES ST. R/W-ADDED NOTE; "GO DEED RESERVATION."	C.D.B.	8-16-68
2.	MATCHLINE CORRECTED 325+50	D.D.A.	10-16-68
3.	NAME CHANGE PCL. 343.	LEE	4/25/69
4.	8" SANITARY ADDED PCL 343 & 348	D.D.A.	7/17/69
5	changed R/W 343WD to Stand Hwy Easmt.	M.R.M.	8-6-69

STA. 325+50 MATCH LINE SEE R/W SHEET Nº 43

STA. 325+50 TO STA. 329+00 LEFT OF ℄

K & E - AKRON

SUMMIT COUNTY
CITY OF STOW
O.L. 32, T-3N R-10W
ORIG. STOW TWP.

FED. RD.	STATE	PROJECT	
2	OHIO	U19 (12)	

450/460

SUM - 8 - 17.63

RIGHT OF WAY SHEET 46/56

(8) SUBSTITUTE CURVE DATA FOR RIGHT-OF-WAY
Δ = 5°15'00" LT.
Dc = 2°14'59"
R = 2546.73'
Lc = 233.36'
T = 116.76'
P.I. #1 STA. 306+35.83
P.I. #2 STA. 325+04.40

CONSTRUCTION CENTERLINE SURVEY CURVE DATA
Δ = 59°33'25" LT.
Dc = 3°00'
Ls = 350.00'
R = 1909.86'
θs = 5°15'00"
Ts = 1269.31'
Es = 293.64'
Lc = 1635.23'
LT = 233.44'
S.T. = 116.76'
Δc = 49°03'25"
Tc = 871.52'
Ec = 189.45'
P.I. STA. 316+71.72

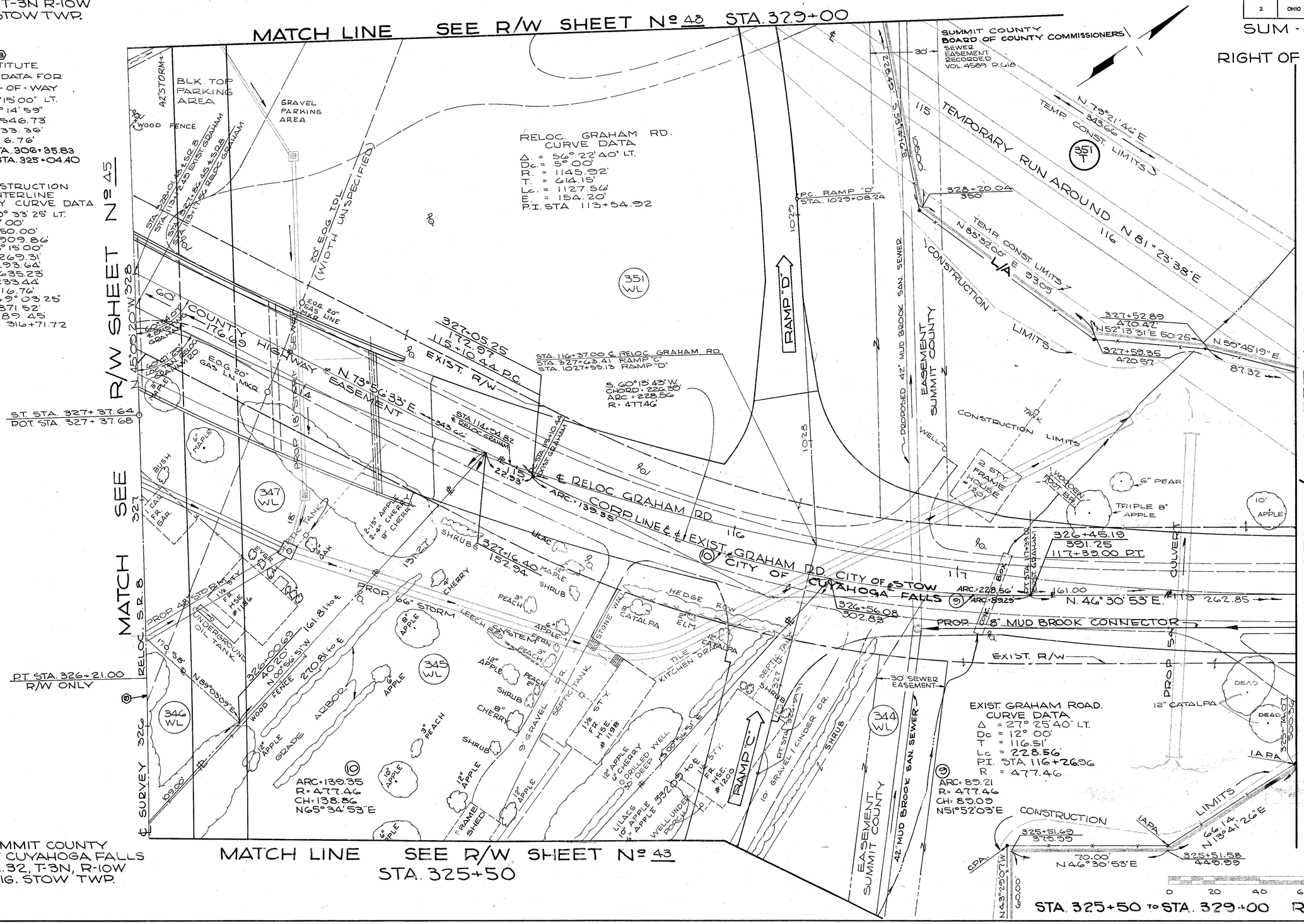

SUMMIT COUNTY
CITY OF CUYAHOGA FALLS
O.L. 32, T-3N, R-10W
ORIG. STOW TWP.

PARCEL Nº	OWNER	DEED AREA CORR.	TOTAL P.R.O.	TO BE ACQUIRED TOTAL TAKE	NET P.R.O. TAKE	NET RESIDUE LEFT	NET RESIDUE RIGHT	TYPE FUNDS
344 WL	RICHARD J. McCOWIN	144,464	10,632	5,514	2,765	2,749	—	64,397	U
345 WL	PATSY CARDONE BETTIE CARDONE	44,365	4,487	44,365	4,487	39,878	—	—	U
346 WL	EDWARD P. FIOCCA JUDITH ANN FIOCCA	18,593	3,270	18,593	3,270	15,323	—	—	U
347 WL	JOANNA MAY HAAS	23,673	7,963	23,673	7,963	15,710	—	—	U
351 WL 351 WD 351 T	THE CARTER-JONES LUMBER COMPANY	1,500,657	40,700	525,779 11,780 18,119	37,363 9,342	488,416 8,434 18,119	—	1,053,138	U

PRELIMINARY SUBMITTAL DATE:
RIGHT OF WAY COMPLETION DATE:

Nº	REVISIONS	BY	DATE
1	CHANGED AREAS TO INC. PRO	J.M.	9-9-68
2	CHANGED 344WD TO EASEMENT	J.M. WHITE	8-18-69

K & E - AKRON

FED. RD.	STATE	PROJECT	
2	OHIO	U19 (12)	

451
460

SUM - 8-17.63

RIGHT OF WAY SHEET 47/56

STA. 332+50 MATCH LINE SEE R/W SHEET Nº 49

R/W SHEET Nº 48

NOTE. ▨ = AREA CONVEYED TO THE CITY OF CUYAHOGA FALLS BY DIRECTOR'S DEED, VOLUME ____, PAGE ____. ENTERED IN THE JOURNAL OF THE DIRECTOR OF TRANSPORTATION, VOLUME 4, PAGE 551, ON 12-4-1975

EXIST. GRAHAM RD. CURVE DATA
Δ. = 28° 57' 00" LT.
Dc. = 9° 00'
T. = 1644.34'
Lc. = 321.67'
P.I. STA. 110+09.45
R. = 636.62

RELOC. GRAHAM RD. CURVE DATA
Δ. = 56° 22' 40" LT.
Dc. = 5° 00'
R. = 1145.92'
T. = 6014.15'
Lc. = 1127.56'
E. = 154.20'
P.I. STA. 113+54.92

SUMMIT COUNTY
CITY OF CUYAHOGA FALLS
O.L.32, T-3N, R-10W
ORIG. STOW TWP.

SUMMIT COUNTY
CITY OF STOW
O.L.32, T-3N, R-10W
ORIG. STOW TWP.

MATCH LINE SEE R/W SHEET Nº 55

N 77°06'21" W 104.34'

107+40 TT RELOC. GRAHAM

107+40 TT EXIST. GRAHAM

PC STA. 107+40 TT

330.67 TO 330.70

108+45.11 PC.

RELOC. GRAHAM RD.

#1 CORP. LINE & EXIST. CITY OF CUYAHOGA FALLS #1 CORP. LINE & EXIST. GRAHAM RD.

60'-COUNTY HIGHWAY EASEMENT

N 83°04'51" W ARC 132.14' CHORD 132.10' R 6636.62'

EXIST R/W

108+00 75 RT.

1 APA. 73' RT.

PT STA 331+20.24 38° RT & GRAHAM RD. STA. 108+30

N 72.45' N 41° 54' 36" W

N 40° 22' 45" E 42.18'

108+38.40 80.21

18" ELM TREE

TO BE ABANDONED

349-1 WL

10' GRAVEL DR.

N 12° 53' 39" E 42.44'

20" TREE

108+33.69 142.23

12" MAP

MAPLE

DRILLED WELL

GEN. USE

2 STY. FR. HSE #1124

2-CAR FR. GAR.

18" MAPLE

15" MAPLE

15" APPLE

1 STY. FR. HSE STORAGE

SEPTIC TANK

30" MAPLE

109+00 85'

COA

329+08.84 109+79.81 352.91 120.01

S 00° 56' 35" E 118.63

96" WILLOW

OUTLET 4" TILE FROM SPRING

L/A

TYPE 4 RINGED S.G.S. CURB & GUTTER

349 WL

351 WL

329+91.95 272.03

S. 88° 25' 03" W. CHORD = 318.26' ARC = 321.67' R = 636.62'

110

30'

40'

329+82.10 272.05

N 13° 56' 33" E 251.20'

OUTLET 12" VC. PIPE

RAMP "E"

329

329+27.50 226.27' STOW

CITY OF CUYAHOGA FALLS

N 83° 34' 42" E 1903.42'

N 83° 34' 42" E 1903.42'

60-6" to 8" W. CHERRY 8" APPLE

TEMPORARY RUN AROUND

109

N 81° 23' 38" E

TEMP. CONST. LIMITS

RAMP "A"

RAMP "A" NOSE 69' LT. Nº STA. 331+55.98

332

331

N 45° 09' 20" W

9" W. CHERRY

6" APPLE

SEE SHEET Nº 55 FOR RESIDUE PARCEL 349-1

PARCEL Nº	OWNER	DEED AREA CORR.	TOTAL R/W	TO BE ACQUIRED NET TAKE	NET RESIDUE LEFT	NET RESIDUE RIGHT
349WL	RAY E. BECKWITH & MARGARET L. BECKWITH	62,483	15,426	62,483	41,057	———
349-1WL		141,241	10,080	12,586	115,763	———
349-1T	JAMES N. CHADWELL			2,837	———	1053,138
351 WL	CARTER-JONES LUMBER CO. (AN OHIO CORPORATION)	1,500,697	407,050	317,363	488,416	———
351 WD				3346	8,434	———

1 STY. BLDG. JONES CO. CONC. BL. CARTER LUMBER #1161

GR. DR.

BLK. TOP PARKING AREA

WOOD FENCE

RELOC. S.R. 8

SURVEY

330

SEE MATCH LINE

SHEET Nº 45 STA. 329+00

MATCH LINE STA. 111+00 SEE R/W

0 20 40 60 80

PRELIMINARY SUBMITTAL DATE:
RIGHT-OF-WAY COMPLETION DATE:

Nº	REVISIONS	MADE BY	DATE
	ADDED NOTE FOR CONVEYANCE OF SERVICE RD.		12-18-75

STA. 329+00 TO 332+50 LEFT OF ℄

K & E - AKRON

SUMMIT COUNTY, CITY OF STOW
ORIG. STOW TOWNSHIP, O.L.32, T-3N, R10W

FED. RD.	STATE	PROJECT	
2	OHIO	U19 (12)	

452
460

SUM-8-17.63

RIGHT OF WAY SHEET 48/56

STA. 332+50
MATCH LINE SEE R/W SHEET Nº 50

R/W SHEET Nº 47

MATCH SEE RELOC. S.R. 8

℄ SURVEY

N 45°09'20" W

332
331
330

GR DR

TEMPORARY
111

1 STY. CONC. BLOCK BLDG.
CARTER-JONES LUMBER
#1161

RUN AROUND
112

BLK. TOP DR.

STORAGE

1 STY. LUMBER

ROOF FR. CANOPY

N 81° 23' 38" E
112

STORAGE ROOF FR.
1 STY. LUMBER CANOPY

PROP. 18" CULVERT

6" SAN. PIPE

SEPTIC TANK

DRILLED WELL

90

GRAVEL PARKING AREA

BLK. TOP PARKING AREA

EXIST. 42" STORM

OPEN FIELD

114

1030

10' GR. DR.

351 WL

1033

EASEMENT WIDTH UNRECORDED

20' E.O.G. TIP

CONSTRUCTION LIMITS

L/A

RAMP "D"

1032

P.T. RAMP D
STA. 1031+80.47

L/A
148.68' N 69°55'45" W

351 X

330+45
310'

1500 N 21°09'25" E
330+51.03
323.74'

IAPA 308'

329+21.03
329.01'

1500 S 21°09'25" W

330+15
315.33'

L/A
222.69' N 5°54'41" W

329+23.42
331.62'

N 78°21'41" E
105.00'

351 T

SCATTERED BRUSH & 4" CRABAPPLE & 4" & 6" ELM

IAPA 240'

321.99' ST
127.21' N 54°12'04" W

30' SEWER EASEMENT RECORDED VOL. 4589 D618

SCATTERED BRUSH

PROPOSED 42" MUD BROOK SAN. SEWER

SWAMP (PEAT)

BOARD OF COMMISSIONERS SUMMIT COUNTY

0 20 40 60 80

TYPE U FUNDS

PARCEL Nº	OWNER	DEED AREA CORR.	TOTAL P.R.O.	TO BE ACQUIRED P.R.O. IN TAKE	TO BE ACQUIRED NET TAKE	NET RESIDUES LEFT	NET RESIDUES RIGHT
351WL	THE CARTER-JONES LUMBER COMPANY	1,530,657	40,709	37,343	488416		1,053,138
351 X				—	450	—	
351WD			11,760	3,346	8,434		

PRELIMINARY SUBMITTAL DATE:
RIGHT-OF-WAY COMPLETION DATE:

Nº	REVISIONS	MADE BY	DATE

STA. 329+00 to STA. 332+50 RT. of ℄

MATCH LINE SEE R/W SHEET Nº 46 STA. 329+00

K & E - AKRON

FED. RD.	STATE	PROJECT	
2	OHIO	U19 (12)	

453
460

SUM-8-17.63

RIGHT OF WAY SHEET 49/56

SUMMIT COUNTY
CITY OF STOW
O.L. 32, T-3N, R-10W
ORIG. STOW TWP.

MATCH LINE SEE R/W SHEET Nº 56

MATCH LINE SEE R/W SHEET Nº 51

MATCH LINE SEE R/W SHEET Nº 50

MATCH SEE R/W SHEET Nº 47&55

STA 332+50 MATCH LINE SEE R/W SHEET Nº 47

STA. 332+50 TO STA. 1036+50 LEFT OF ℄

A-A 1037+36.65 348.75

354 WL
354 T
353 WA
353 T
353 WL
352 WL
351 WL
351 WD

RAMP "B" P.C. STA. 1035+78.80
RAMP "B" STA. 1038+12.45
RAMP "B" STA. 1040+60.95
RAMP "A" P.C.C. STA. 336+37.05
RAMP "A" P.C.C. STA. 338+34.91
RAMP "A" S.C. STA 333+55.58
BEGIN RAMP "A" STA 333+24.89 36' LT. ℄ GRAHAM RD. STA. 106+77.42

℄ GRAHAM RD.
℄ BLACK TOP DR.
10' GRAVEL DR
POPULAR'S 60' ST. (CAL)
60' COUNTY HIGHWAY EASEMENT CITY OF CUYAHOGA FALLS TO CITY OF STOW CORPORATION LINE 1275.55
TEMPORARY RUN AROUND
TEMP. CONST. LIMITS
CONSTRUCTION LIMITS
TO BE ABANDONED
EXIST. ℄ GRAHAM RD. 12000'
EXIST. R/W 12" C.M. PIPE
16" C.M. PIPE
6" SIGN
SCATTERED 4"-16" W. CHERRY
60-6"to8" W. CHERRY
W. PROP. 21" PIPE
EQUATION 333+79.30 BACK = 1035+00 AHEAD

#1073 1 STORY FR. HSE
#1087 STY. FR. HSE
2-CAR GAR.
SEPTIC TANK
DRILLED WELL
6" CEDAR WELL
SHRUB
SWAMP
HIGH GRASS
BRUSH
8" ELM
10" MAPLE
15" MAPLE
12" MAPLE
6" OAK
8" PINE
8" APPLE
LEECH BED

N 00°18' E.
N 00°54'51" W 1350.53'
N 81°23'38" E 108
N 45°09'20" W
N 16°49'21" E
N 17°06'27" W 121.80'
N 17°34'41" E
N 72°16'34" E
N 18°14'18" E
1036+02.05 600.03'
1036+39.41 GO2.00'(CAL) GO2.00'(D)
1036+83.30 4.55+44
1036+90.84 47.60
1036+90.84 52.80
1036+90.84 55.60
1036+40.60 41.51'
1036+91.26 51.60
1037+57.40 445.11'
1038+62.12 45.90
1039+62.12 50.00'
1039+62.12 52.80
1039+62.12 55.60
1039+62.12 124.80
1039+62.12 127.80
1039+83.30 4.55+44
1039+90.84 47.60
1039+90.84 52.80
1039+90.84 55.60
1040+60.95 GO.51'(D)
1040+60.95 GO.51'(CAL)
1041+11.45 GO.51'(D)
1041+11.45 GO.51'(CAL)
1041+11.45 GO.51'(D)
1041+11.45 GO.51'(CAL)
1042+11.45 GO.51'(D)
1042+11.45 GO.51'(CAL)
1043+11.45 GO.51'(D)
1043+11.45 GO.51'(CAL)
1044+11.45 GO.51'(D)
1044+11.45 GO.51'(CAL)
1045+11.45 GO.51'(D)
1045+11.45 GO.51'(CAL)
1046+11.45 GO.51'(D)
1046+11.45 GO.51'(CAL)
1047+11.45 GO.51'(D)
1047+11.45 GO.51'(CAL)
1048+11.45 GO.51'(D)
1048+11.45 GO.51'(CAL)
1049+11.45 GO.51'(D)
1049+11.45 GO.51'(CAL)
1050+11.45 GO.51'(D)
1050+11.45 GO.51'(CAL)

SUMMIT COUNTY, CITY OF STOW
ORIG. STOW TOWNSHIP O.L.32, T-3N, R-10W

FED. RD.	STATE	PROJECT	
2	OHIO	U19(12)	

454/460

SUM - 8 - 17.63

RIGHT OF WAY SHEET 50/56

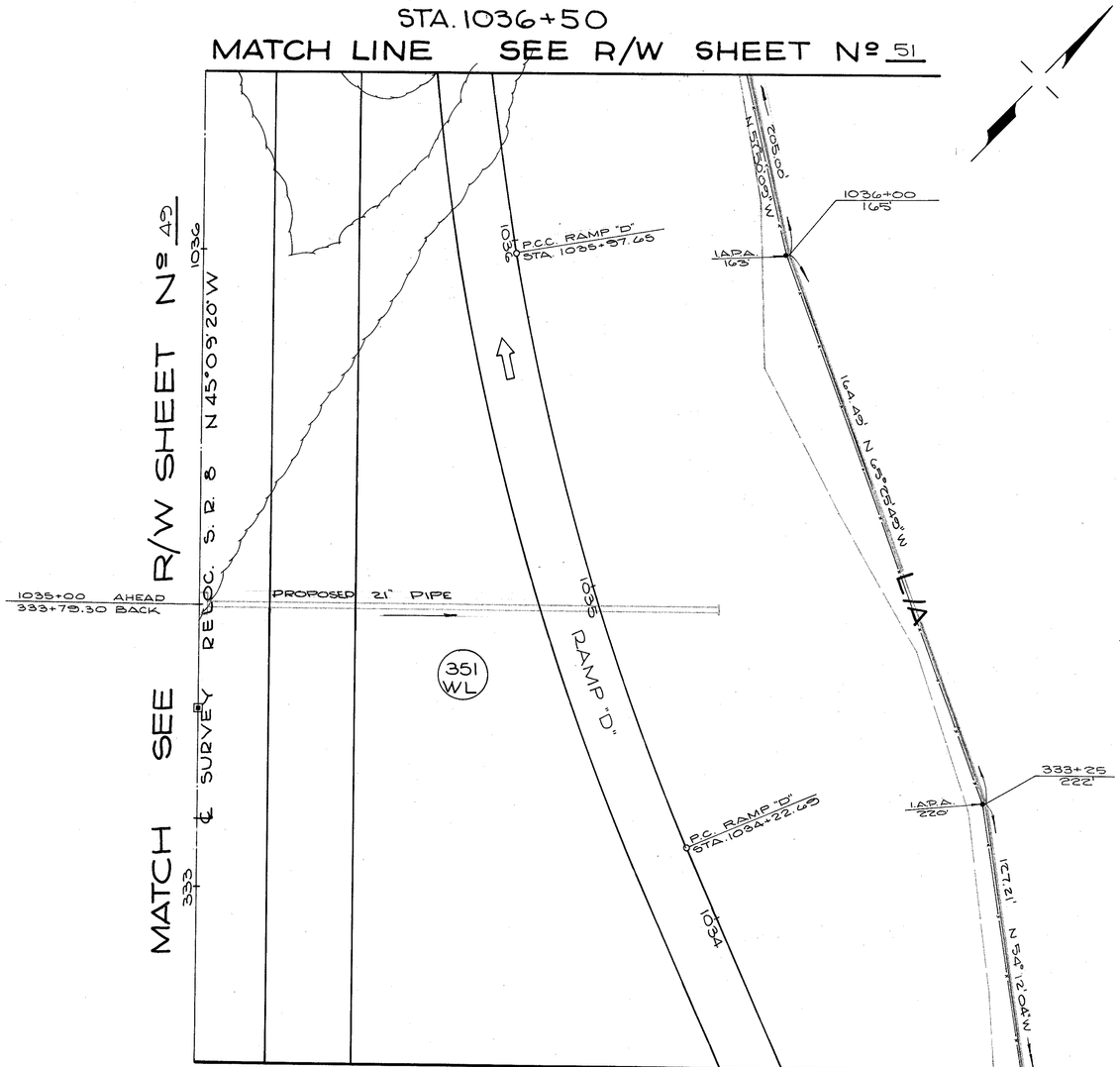

TYPE U FUNDS

PARCEL Nº	OWNER	DEED AREA CORR.	TOTAL P.R.O.	TO BE ACQUIRED			NET RESIDUES	
				TOTAL TAKE	P.R.O. IN TAKE	NET TAKE	LEFT	RIGHT
351WL 351WD	THE CARTER JONES LUMBER COMPANY	1,500,687	40,709	525,779 11,780	37,363 3,346	488,416 8,434	—	1058,138

0 20 40 60 80

PRELIMINARY SUBMITTAL DATE:
RIGHT-OF-WAY COMPLETION DATE:

Nº	REVISIONS	MADE BY	DATE

STA. 332+50 TO STA. 1036+50 RT. OF ℄

K & E - AKRON

SUMMIT COUNTY, CITY OF STOW
ORIG. STOW TOWNSHIP, O.L.32, T-3N, R-10W

FED. RD.	STATE	PROJECT	
2	OHIO	U19(12)	

455/460

SUM - 8 - 17.63

RIGHT OF WAY SHEET 51/56

STA.1039+50 MATCH LINE SEE R/W SHEET Nº 52

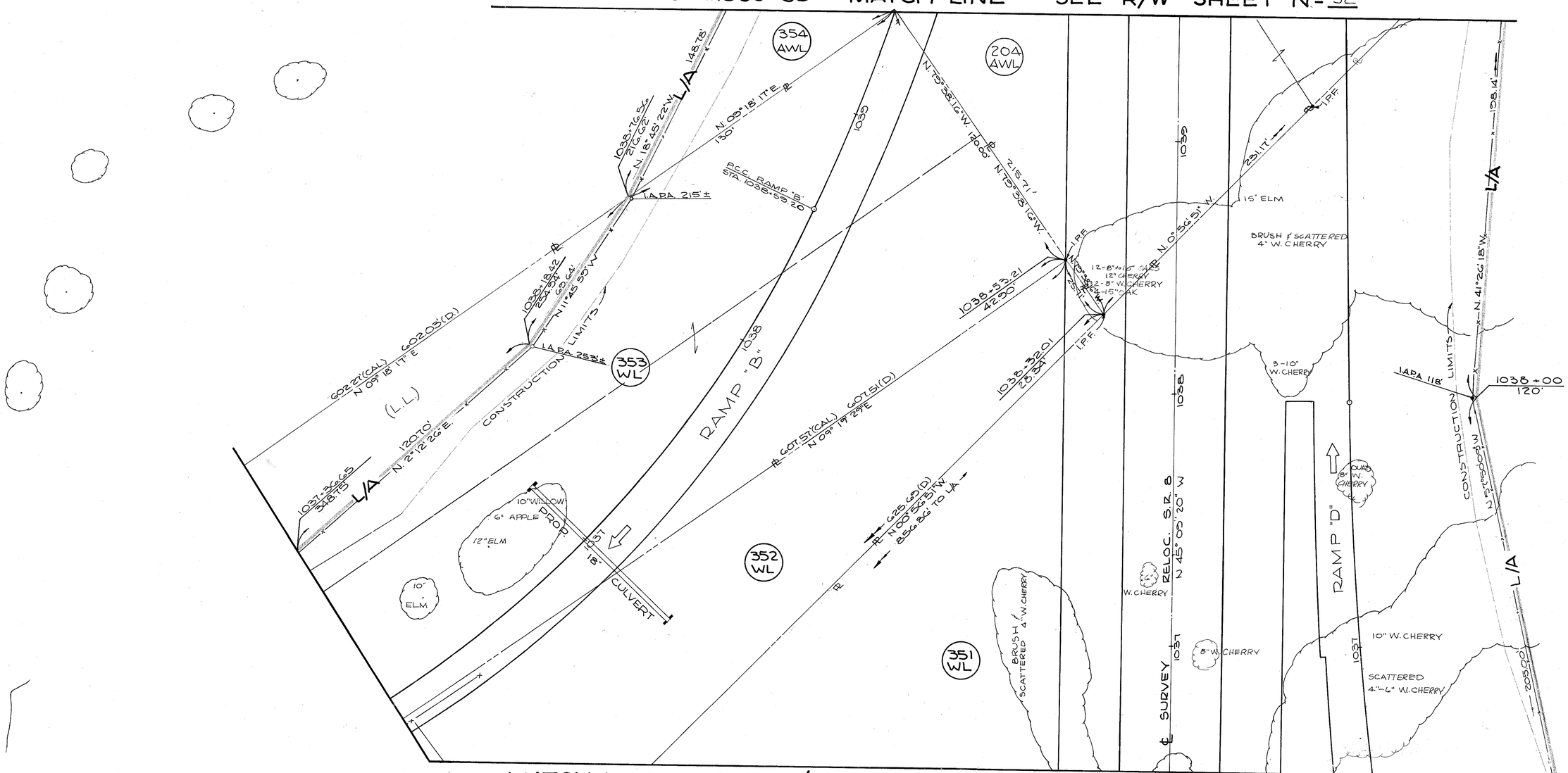

MATCH LINE SEE R/W SHEET Nº 49 & 50 STA.1036+50

TYPE U FUNDS

PARCEL Nº	OWNER	DEED AREA CORR	TOTAL P.R.O.	TO BE ACQUIRED TOTAL TAKE	TO BE ACQUIRED P.R.O. IN TAKE	TO BE ACQUIRED NET TAKE	NET RESIDUES LEFT	NET RESIDUES RIGHT
351 WL 351 WD	THE CARTER JONES LUMBER COMPANY	1,590,697	40,709	525,779 11,780	37,363 3,346	488,416 8,434	—	1,053,138
352 WL	JOHN H. COWLEY JR. & ALMEDA L. COWLEY	49,592	4,044	49,592	4,044	45,548	—	—
353 WL	MARGARET L. PEARCH	72,514	3,601	57,576	3,601	53,975	14,938	—
354 AWL	HAROLD R. BAILEY & ELIZABETH M. BAILEY	—	—	4,549	—	4,549	→	→

SEE SHEET Nº 56 FOR RESIDUES PARCEL 35A

0 20 40 60 80

PRELIMINARY SUBMITTAL DATE:
RIGHT-OF-WAY COMPLETION DATE:

Nº	REVISIONS	MADE BY	DATE
1	ALL AREAS CORRECTED	J.M.	8-20-68

STA.1036+50 TO STA.1039+50

K & E - AKRON

SUMMIT COUNTY, CITY OF STOW
ORIG. STOW TOWNSHIP, O.L.32, T-3N, R-10W

FED. RD.	STATE	PROJECT	
2	OHIO	U19(12)	

456/460

SUM-8-17.63

RIGHT OF WAY SHEET 52/56

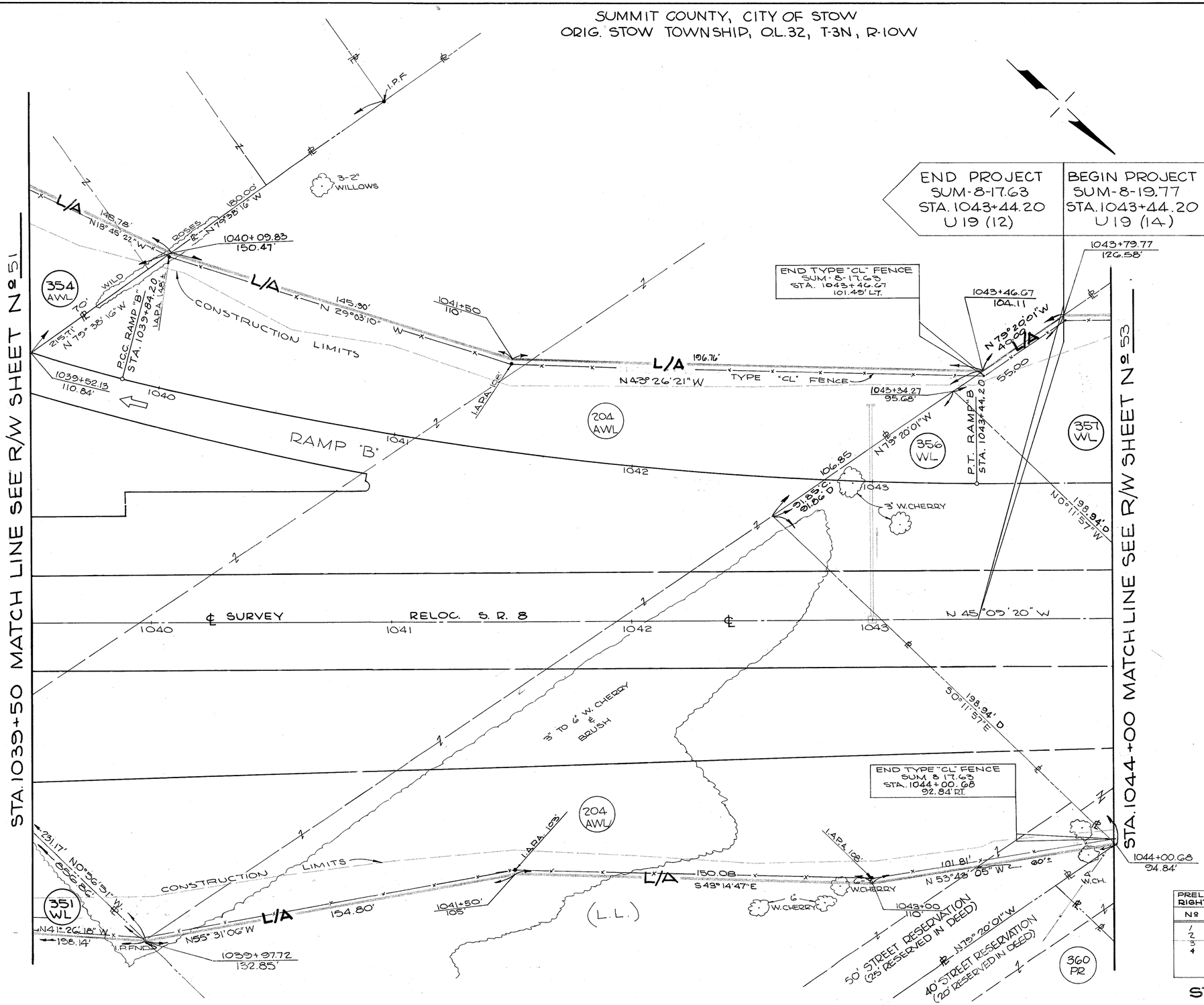

SEE SHEET Nº 45 FOR RESIDUES PARCEL 351
SEE SHEET Nº 56 FOR RESIDUES PARCEL 354

TYPE U FUNDS

PARCEL Nº	OWNER	DEED AREA CORR.	TOTAL P.R.O.	TO BE ACQUIRED TOTAL TAKE	TO BE ACQUIRED P.R.O. IN TAKE	TO BE ACQUIRED NET TAKE	NET RESIDUES LEFT	NET RESIDUES RIGHT
351WL	THE CARTER - JONES LUMBER COMPANY	1,590,697	40,709	525,779	37,363	488,416	—	—
354AWL	HAROLD R. BAILEY & ELIZABETH M. BAILEY	107,578	5,400	5,998 4,549	3,807	2,191 4,549	—	—
204AWL	BOARD OF EDUCATION CITY OF CUYAHOGA FALLS	259,105	16,520	98,246	356	97,890	120,211	24,484(L)
356WL	WARD SIGLER, ET AL.	17,905	1,837	17,905	1,837	16,068	—	—
357WL	JAMES C. CASSIDY	74,249	14,252	35,069	7,220	27,849	32,148	—
360PR	RAY W. GOODWIN	NO TAKE - PROPERTY RIGHTS						

0 20 40 60 80

PRELIMINARY SUBMITTAL DATE:
RIGHT OF WAY COMPLETION DATE:

Nº	REVISIONS	MADE BY	DATE
1	PROP. LINES & LIM. ACC. LINE REDRAFTED	E.V.	8-20-68
2	ALL AREAS CORRECTED	J.M.	8-20-68
3	REVISED NAME PCLS. 356 & 357	LEE	4/25/69
4	Added distance through reservation 360PR	R.S.	8/12/69

STA. 1039+50 TO STA. 1044+00

K & E - AKRON

FED. RD. DIVISION	STATE	PROJECT	
2	OHIO	U-19(12)	

SUM 8-17.63

457A / 460

53A / 56

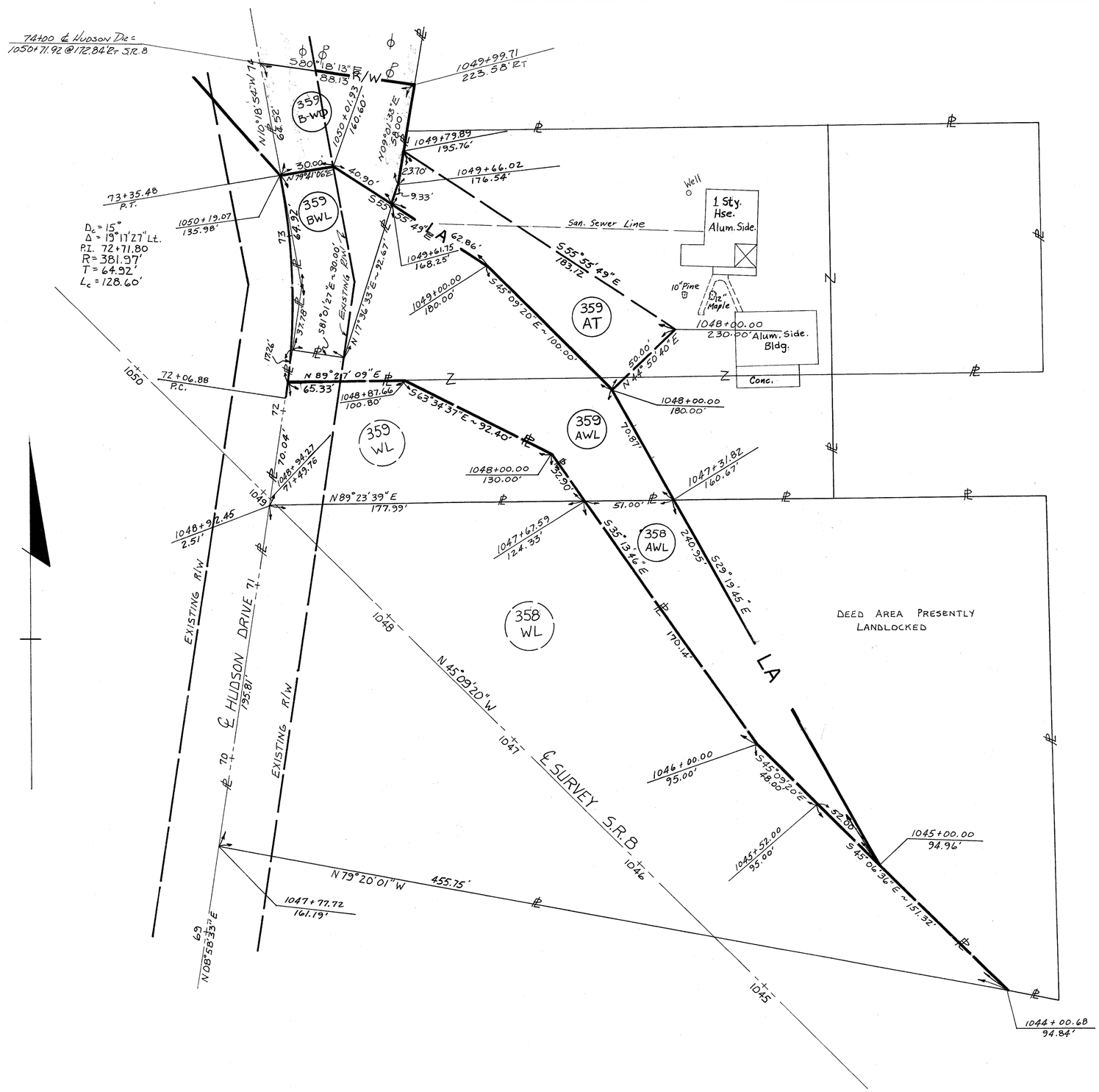

PARCEL NO.	OWNER	DEED AREA CORR.	TOTAL P.R.O.	TO BE ACQUIRED			NET RESIDUES	
				TOTAL TAKE	P.R.O. IN TAKE	NET TAKE	LEFT	RIGHT
358 AWL	AUDRIA McCUNE	43,769	——	6,850	——	6,850	——	36,919
359 AWL	LESLIE W. JACKSON &	66,224	442	13,336	442	12,894	——	52,888
359 AT	MAXINE V. JACKSON			6,225	——	6,225		
359 BWL	OHIO EDISON COMPANY, an OHIO CORPORATION	83,200	12,593	4,554	3,233	1,321	——	66,673
359 BWD				4,485	1,772	2,713		

15'/100' = X/20

DATE	REVISION
8-19-74	CORRECTED NET T.B.A.'S P.R.O. IN TAKE PCL. 359 BWL
8-21-74	ADDED TOPO PCL. 359 AWL
10-10-74	ADDED PCL. 359 B-WD

SUMMIT COUNTY, CITY OF STOW
ORIG. STOW TOWNSHIP, QL.32, T-3N, R-10W

FED. RD.	STATE	PROJECT	
2	OHIO	U19(12)	

457
460

SUM-8-17.63

RIGHT OF WAY SHEET

53
56

STA. 1044+00 MATCH LINE SEE R/W SHEET Nº 52

DEED AREA CORRECTED PCL. 359 WL 8-14-74

N 79° 20' 01" W ℄

1-ST. CONC. BLK. HOUSE #3537

OUT HOUSE

2-CAR CONC. BLK. GAR.

18" MAPLE

DRILLED WELL

10' GRAVEL DRIVE

35'

349.08'

L/A

N45° 23' 20" W

357 WL

TWIN 6" PEAR

12" APPLE

50' STREET RESERVATION (25' RESERVED IN DEED)

8' GRAVEL & CINDER DRIVE TO BE ABANDONED

40' STREET RESERVATION (20' RESERVED IN DEED)

304.82

98.94'

N 0° 51' 51" W

8' DIRT DRIVE

6" POPLAR

1045

1046 ℄ SURVEY RELOC. S.R. 8 N 45° 09' 20" W 1047 1048

N 75° 20' 01" W 455.75'

1044+76.67
43.24'

356 WL

40' STREET RESERVATION (20' RESERVED IN DEED)

91.85'

4" TILE EASEMENT DRAIN

10" ASH

SHRUB

2 MAPLE

30" WILLOW

TWIN 12" MAPLE

APPLE

1-ST. FR. HOUSE #3545

358 WL

11-4" & 6" PLUMS

SEPTIC TANK

48.00'

S 45° 09' 20" E

35'±

1044+00.68

94.84'

151.32'

N 45° 06' 36" W

1045+52.00
95'

S 8° 58' 06" W
38.25'

(L.L.)

358 WR

CONCRETE 2.6'

WELL

CATALPA

2-CAR FR. GAR.

N 44° 50' 40" E
12.50'

1046+00
95'

1046+00
167.50

S 81° 03' 11" E
31.57'

358 AWL

L/A

N 0° 51' 51" W ℄

12" PLUM

18" APPLE

170.14'

N 35° 13' 46" W

1047+67.59
124.33'

O.L. 32

O.L. 42

FRAME FR. GAR.

1-STY FR HSE #3581

92.40'

N 65° 34' 37" W

32.90'

1048+00
130'

359 AWL

(L.L.)

NOTE: SEE SHEET 53A FOR PCLS. 358AWL, 359AWL, AT ℄ 359 BWL.

END AQUISITION
SUM-8-17.63
STA. 1048+94.27

1047+77.72
(61.19)

HUDSON DR.

N 8° 58' 33" E

70

EXIST. R/W

60' STREET RESERVATION COUNTY HIGHWAY EASEMENT

EXIST. R/W

30'

30'

60

60

EXIST. 12" CULVERT OUTLET BURIED

1048+92.43
2.51'

1048+85.08

I.P.F.

1048+34.27
T1+49.76

100.49' ℄ T2

1049+33.49
54.25'

I.P.F. & USED

N 85° 23' 39" E
177.59'

DRIVE

GRAVEL

APPLE 18"

QUAD 8" W.CH.

N 85° 21' 10" E
99.53'

I.P.F.

1048+87.66
100.80

0 20 40 60 80

359 WL

12" MAPLE

2"

18" W.CH.

18" APPLE

STA. 1044+00 to STA. 1049+00

PARCEL Nº	OWNER	DEED AREA CORR.	TOTAL PRO.	TOTAL TAKE	TO BE AQUIRED PRO. IN TAKE	TO BE AQUIRED NET TAKE	NET RESIDUES LEFT	NET RESIDUES RIGHT
356 WL	WADD SIGLER, ET AL. SEE SUMMARY SHEET	17,905	1,837	17,905	1,837	16,068	——	——
357 WL	JAMES C. CASSIDY	74,249	14,252	35,069	7220	27,849	32,148	——
358 WL	AUDRIA MCCUNE	111,436	15,056	66,803	14,190	52,613	——	43,769(L)
359 WL	BRYAN E. CARPENTER	9,124	2,100	9,124	2,100	7,024	——	——
358 WA	See Parcel 358-WL			904		904	——	——

PRELIMINARY SUBMITTAL DATE:
RIGHT OF WAY COMPLETION DATE:

Nº	REVISION	MADE BY	DATE
1	PROP. LINES & LIM. ACC. LINE REDRAFTED	E.V.	8-15-68
2	ALL AREAS CORRECTED	J.M	8-20-68
3	NAME CHANGE PCL. 358	LEE	4/8/69
4	NAME CHANGE PCL. 356 & 357	LEE	4/25/69
5	Changed Pcl. 358 WA to 358-T & also Name Change	WHITE	9-3-69
6	Converted 358T to 358WA	Signed	2-19-70

FORM DDA-5

FED. RD.	STATE	PROJECT	
2	OHIO	U19 (12)	

458
460

SUM - 8 - 17.63

RIGHT OF WAY SHEET 54 56

SEE R/W SHEET Nº 46

MATCH LINE

SUMMIT COUNTY
CITY OF STOW
O.L. 32 T-3N R-10W
ORIG. STOW TWP.

SUMMIT COUNTY
VILLAGE OF SILVER LAKE
O.L. 32, O.L. 33
T-3N, R-10W
ORIG. STOW TWP.

TEMPORARY RUNAROUND
CURVE DATA
Δ = 34° 52' 45" LT.
D = 20° 00' 00"
R = 286.48'
T = 89.39'
L = 174.40'
E = 13.80'
P.C. STA. = 117+66.31
P.T. STA. = 119+40.71 =
STA. 120+74.39 GRAHAM ROAD

CITY OF STOW
SILVER LAKE
CORPORATION LINE
REFERENCE
O.L. 32
O.L. 33
R.R. SIGNALS
PRIVATE POWER LINE TO SILVER LAKE COUNTRY CLUB
SILVER LAKE COUNTRY CLUB (LEASEE)
ASPHALT PARKING AREA
FAIRWAY DRIVE
VACATED ORD. 14-1955
ALLOTMENT LINE
CONSTRUCTION LIMITS
EXIST. R/W
R/W
TEMP
RUN AROUND
PROP. 12" PIPE
SEPTIC TANK
PUMP HOUSE
1 STY FR. HSE #1221
1 STY FR. HSE #1224
2 CAR FR. GAR.
24" VCP VERTICAL CISTERN
2 - APPLES
8" LILAC
8" MAPLE
12" PEAR
12" POPLAR
18" CATALPA
2 - WILLOWS
8" WILLOW
30" ELM
GUMS
POPLAR
ELMS
CONC. HEADWALL
12" CMP
18" CMP
12" C.M.P.
STOW CORP. SIGN
SILVER LAKE CORP. SIGN
R.R. SIGN
SIGNAL LIGHT
TELEPHONE BOX
FR. SHED
PUMP HOUSE
SEPTIC TANK
KITCHEN
WELL
DRIVE
WD. RAIL FENCE
2" SPRUCE PINES
ELM
BLACKTOP DR.
CRYSTAL LAKE SUBDIVISION
PLAT BOOK 44 PAGE 87-93
ALLOTMENT VACATED BY
COMMON PLEAS COURT 199325-1955
CRYSTAL LAKE DRIVE
VACATED ORD. 14-1955
THE CONSOLIDATED RAIL CORPORATION
CITY OF CUYAHOGA FALLS
SILVER LAKE
CITY OF CUYAHOGA FALLS
VILLAGE OF SILVER LAKE
PROP. 8" MUD BROOK CONNECTOR
(60' COUNTY HIGHWAY EASEMENT) 262.85
CORP. LINE & GRAHAM RD. STOW
CITY OF CUYAHOGA FALLS
SEPTIC TANK TO BE ABANDONED
SEPTIC TANK

N79°21'46"E 343.66
N59°45'19"E 87.32
L/A
327+30.42 (554.80)
119+00 (300')
60.00
N 46°30'53"E
159.93'
119+60
90
120+59.93
50.00 ℄ GRAHAM
SHED
316+95.70
40' Rt. ℄ RR
N80°43'56"E 80.02
316+97.63
40' Rt. ℄ RR
317+46.11
40' Rt. ℄ RR
120+21.24
50.00 ℄ GRAHAM
N10°38'55"E 10.71'
N10°38'55"W
℄ R.R.
N46°30'53"E 17.85'
MON. FND.
95.21
N46°30'53"E
121+16.42
30' ℄ GRAHAM
121+46.40
30' ℄ GRAHAM
P.C. STA. 121+39.74
ARC = 272.97' R = 1145.92' CH = 272.33
122
121
42.68' (CAL.)
13.34' (CAL.)
120+97.06
119+00.00
30.00
S 43°29'07"E 30.00'
326+40.46 (552.18)
101.85 CITY OF
N 46° 30' 53" E
120+01.85
262.85
119+82.49
30' ℄ Graham
SILVER LAKE SIGN
R.R. SIGNAL
SAN. M.H.
6" SAN.
8" SAN.
121+39.74
30
3/7+86.89
40 Rt. ℄ R.R.
120+77.70
30 ℄ Graham
N46°30'53"E
62.04
121+39.74
45
71.72'
N46°30'53"E
120+68.02
121+39.74
45 ℄ Extension Rd
S 43°29'07"E 30.00'
3/8+04.74
40 Rt. ℄ R.R.
N10°38'55"W
106.81
112+62.42
61.09 ℄ Graham
N35°51'07"E
120
N 4.7°10'48"E
CH = 27.65
ARC = 27.65
R = 1150.92
121+38.74
45
121+66.55
45
121+97.06
83.06
N 89°03'
CH = 78.98
N43°44'39"E
CH = 78.98
ARC = 78.94 R = 1150.92
122+42.31
45
ARC = 320.77 R = 1150.92 CH = 319.81
CONSTRUCTION LIMITS
EXIST. R/W
N 58°33'41"E
124+75
45
ALLOTMENT LINE
N53°20'20"E
335.26
N61°43'14"E CH = 63.91
ARC = 63.92 R = 1150.92
124+12.71
124
124+20
50
124+50
50
124+75
30
N26°43'20"W
125
STA.
ARC = 326.48 R = 1118.92 CH = 325.32 N 54° 53' 47" E
MON. FOUND
EXIST. R/W
ARC = 322.10 R = 1110.92
CH = 320.95 N 54° 53' 47" E
121+30.67
45'
121+61.14
74.81
N47°47'16"E
48.32
R = 1110.92
N10°38'55"W
40.89
N10°38'55"W
121+90.06
45'
124+75
45'
CURVE DATA EXIST. GRAHAM RD
Δ = 27° 17' 25" RT.
D = 5° 00'
T = 278.18'
L = 545.81
R = 1145.92
E = 34.28
P.I. STA. 124+17.92

PARCEL Nº	OWNER	DEED AREA	TOTAL PRO.	TO BE ACQUIRED TOTAL TAKE	TO BE ACQUIRED PRO IN TAKE	TO BE ACQUIRED NET TAKE	NET RESIDUES LEFT	NET RESIDUES RIGHT
328AT	THE CONSOLIDATED RAIL CORPORATION	——	——	5570	——	5570	——	——
328CT		——	——	21924	——	21924	——	——
344WL	RICHARD J. McCOWIN	144,464	10,632	74,534	7868	66686	——	64,397
344				5514	2765	2749		
344T				2345	——	2345		
350WD	CRYSTAL PARK DEVELOPMENT CORPORATION	1,749,208	——	5,868	——	5,868	——	1,743,340
350T				1,032	——	1,032	——	——
350AWD		5,473,099	8,298	13,164	8,298	4,866	——	5,459,935
350AT				1,492	——	1,492	——	——
350-1WD	SILVER LAKE COUNTRY CLUB	392,314	1,003	1,593	1,003	590	——	390,721
351 WL	THE CARTER-JONES LUMBER COMPANY	1,550,637	40,703	525,779	37,363	488,416	——	1,053,138
351 WD				11,780	3,346	8434		
351 T				18,119	——	18,119		

0 20 40 60 80

REVISED NAME PARCEL 328 SERIES 3-24-71
PRELIMINARY SUBMITTAL DATE:
RIGHT-OF-WAY COMPLETION DATE:

Nº	REVISIONS	MADE BY	DATE
1	CHANGED AREAS TO INC. PRO.	J.M.	9-6-68
2	CORR. STATION & OFFSETS	J.M.	9-6-68
3	R. DISTANCES TO ℄ GRAHAM	J.M.	9-6-68
4	ADDED PCL# 328 CT	J.M.	9-10-68
5	ADDED CRYSTAL LAKE SUB.	J.M.	9-10-68
6	Changed 344WD TO ESMT & changed 344WA To 344-T	white	8-18-69

REVISED NAMES, ADDED STATIONS & OFFSETS FROM R/W & PLS 328A-T & 328 C-T 5-9-77

STA. 118+50 to STA. 125+00 GRAHAM RD & PENN R.R.

K & E - AKRON

FED. RD.	STATE	PROJECT	
2	OHIO	U19(12)	

459 / 460

SUM-8-17.63

55 / 56

RIGHT OF WAY SHEET

ACCESS APPROVED BY DIRECTORS JOURNAL
VOL. 22 PG. 275, AUG 26, 1993 (COUNTY RECORDERS VOL 1961 PG 952 & 953)
ACCESS RIGHT OF STA. 104+90.88 105+27.69 ℄
58' WIDE, PERMISSIBLE PAVEMENT 50'

MATCH LINE SEE R/W SHEET Nº 49 & 47

104+37.69 ℄ — 105 ℄ — 106+43.44 ℄ 332+67.82 NT 464.61'

CITY OF STOW — CITY OF CUY. FALLS

GRAHAM ROAD (60' COUNTY HIGHWAY EASEMEMT)

115.75' 106 CORP. LINE

201.67'

N 77°06'27" W 300.00

105+35.02 33'

105+80.00 35.00'

106+52.57 37.06

44.98

72.68

N 73°54'12" W

88.34

L/A N 73°54'12" W

107+40 42'

372.49 N 47°04'36" W

N 65°30'27" W.

N 77°06'27" W

PROP 8" SAN. SEWER

PROP 4" WATER MAIN

91.42 N 77°06'27" W

7.66 CONSTRUCTION 94.78 N 70°12'02" W

104+51.16 70.00

105+42.58 70.00

104+52.47 78.53

104+64.05 81.57

121.15 N 19°04'45" W

104+46.08 71.60

106+46.63 94.18

105+47.87 90.78

LIMITS 118.81

N 77°29'44" W

107+80.51 115.50

CH=600' N 43°59'02" E
Lc=600'
D=9°50.00'

42.18
140°29'45"

N 32°36'27" W 130.47

107+10.98

R/W

51.66

N 77°06'27" W 300.00

107+77.41 TO 56

N 64°57' W

N 64°57' W

N 0°53'41" E

N 0°13'39" E

N 0°10'21" E

N 0°21'45" E

N 0°51'51" W

N 0°51'51" W

EXISTING 12" V.P. SANITARY SEWER

EXISTING 16" WATER MAIN

25' EASEMENT DV 3681 PG. 405

CITY OF CUYAHOGA FALLS

MATCH LINE SEE R/W SHEET Nº 56

MATCH LINE SEE R/W SHEET Nº 47

349-1 WL
349-2 WL
349-3 WL
349-4 WL
349-1 WD
349-2 WD
349-3 WD
349-4 WD
349-1 T
349-2 T
349-3 T
349-4 T

℄ SERVICE ROAD

PROP 4" WATER MAIN

PROP 8" SAN. SEWER

EXIST 15" STORM SEWER

12" GRAVEL DR

12' BLACK TOP DR

10' BLACK TOP DR

P.T. STA. 103+75.06

P.C. STA. 104+46.63

P.C. STA. 4+00

P.T. STA. 6+00

SEPTIC TANK

LAMP POST

GAS METER

GAS VALVE

GAS LIGHT

ELEC. LIGHT

WELL

SHRUBS

TILE FAN OUTLET

4" TILE CONTINUAL SUMP PUMP

6" VC PIPE

SHOULDER CROSS SLOPE

TYPE CL FENCE

1-STY. FR. HSE. #1070

DRILLED WELL 44' DEEP

1-STY. FR. HSE #1088

1-STY. FR. HSE. #1098

HEDGE

PATIO

SEPTIC TANK

SEPTIC TANK

3" EVERGREENS

EVERGREENS

MAPLE

POPLAR

15" - 24" - 24" MAPLES

18" MAPLE

16" MAPLE

18" MAPLE

15" - 15" MAPLES

12" CMP

10" CMP

8" CMP

16" WM

SUMMIT COUNTY, CITY OF CUYAHOGA FALLS
ORIG. STOW TOWNSHIP
OL 32 T-3N R-10W

NOTE: ▨ = AREA CONVEYED TO THE CITY OF CUYAHOGA FALLS BY DIRECTOR'S DEED, VOLUME, ____, PAGE ____, ENTERED IN THE JOURNAL OF THE DIRECTOR OF TRANSPORTATION VOLUME 4, PAGE 551, ON 12-4-1975

SERVICE ROAD CURVE DATA

③ CURVE DATA

Δ = 32° 45' 50" RT.
R = 110.00'
T = 32.337'
Lc = 62.904'
PCC. STA. 1+68.88
P.T. STA. 2+31.78

④ CURVE DATA

Δ = 7° 30' 00" RT
Dc = 3° 45' 00"
R = 1527.887'
Lc = 200.00'
T = 100.143
P.C. STA. 4+00
P.T. STA. 6+00

SERVICE ROAD RIGHT OF WAY

⑪ CURVE DATA

CH = 44.97
N 89°03'15" E
Lc = 45.41
R = 94.00
PCC = 103+31.40 - 77.75 RT
PT = 103+75.06 - 67.00 RT

⑫ CURVE DATA

CH = 118.59
N 74°53'10" W
Lc = 118.62
R = 1511.89
PC = 105+42.58 - 70.00 RT
PT = 106+61.08 - 71.60 RT

⑬ CURVE DATA

CH = 82.41
N 88°06'27" W
Lc = 96.87
R = 50.00
PC = 107+03.61 - 130.47 RT
PT = 107+80.51 - 116.50 RT

PARCEL Nº	OWNER	DEED AREA CORR.	TOTAL P.R.O.	TO BE ACQUIRED TOTAL TAKE	TO BE ACQUIRED P.R.O. IN TAKE	TO BE ACQUIRED NET TAKE	NET RESIDUES LEFT	NET RESIDUES RIGHT
349-1 WL 349-1 WD	JAMES N. CHADWELL	147,241	10,030	22,616 10,862	10,030	12,586 10,862	113,763	——
349-2 WL 349-2 WD 349-2 T	MARJORIE MERRILL	51,318	3,483	3,078 4009 2818	3,483	495 4009 2818	43,331	——
349-3 WL 349-3 WD 349-3 T	KENNETH S. SHUMAN	43,235	2,710	2082 3096 1119	2,710	276 3096 1119	37,157	——
349-4 WL 349-4 WD 349-4 T	FRANK M. JOHNSON & NINA G. JOHNSON	61,529	3,611	3,973 4285 1930	3,611	362 4285 1930	53,271	——

0 20 40 60 80

PRELIMINARY SUBMITTAL DATE: RIGHT-OF-WAY COMPLETION DATE:			
Nº	REVISIONS	MADE BY	DATE
	ADDED NOTE FOR CONVEYANCE OF SERVICE RD. ADD. ACCESS POINT PCL 249-3 WL		12-18-95 1-11-99

RIGHT OF ℄ STA. 103+50 to 108+00 GRAHAM RD.

FORM D D A-8

FED. RD.	STATE	PROJECT	
2	OHIO	U19(12)	

460 / 460

SUM - 8- 17.63

RIGHT OF WAY SHEET 56 / 56

SUMMIT COUNTY
CITY OF STOW
O.L. 32, T-3N, R-10W
ORIG. STOW TWP.

SUMMIT COUNTY
CITY OF CUYAHOGA FALLS
O.L. 32, T-3N, R-10W
ORIG. STOW TWP.

CARL A. RODGERS
BERTHA M. RODGERS
Vol. 3101 Pg. 651

NOTE * AREA CONVEYED TO THE CITY OF CUYAHOGA FALLS BY DIRECTOR'S DEED VOLUME , PAGE . ENTERED IN THE JOURNAL OF THE DIRECTOR OF TRANSPORTATION, VOLUME 4, PAGE 551, ON 12-4-1975

TEMPORARY RUNAROUND
CURVE DATA
Δ = 21°29'55" LT.
Dc = 11°00'00"
R = 520.87
T = 98.88
Lc = 195.44
E = 9.30
PC STA. = 101+01.12
PT STA. = 102+96.56

TYPE U FUNDS

PARCEL Nº	OWNER	DEED AREA CORR.	TOTAL P.R.O.	TO BE ACQUIRED TOTAL TAKE	TO BE ACQUIRED P.R.O. IN TAKE	TO BE ACQUIRED NET TAKE	NET RESIDUES LEFT	NET RESIDUES RIGHT
349-4WL 349-4WD 349-4T	FRANK M. JOHNSON & NINA G. JOHNSON	61,529	3,611	3973 42.85 1930	3611 —— ——	362 4285 1930	53,271	——
349-5WL 349-5WD 349-5T	ORIE E. GRAFTON & JOANN E. GRAFTON	61,749	3,603	2066 9,252 1189	1,870 1,733 ——	196 7,519 1189	50,431	——
349-6WD 349-6T	CLIFFORD B. RHOADS & VIRGINIA E. RHOADS	49,120	3,594	6800 105	3,594 ——	3,206 105	42,320	——
349-7WD	CARL A. RODGERS & BERTHA M. RODGERS	37,156	3600	3790	3600	190	33666	——
354WD 354WL 354AWL	HAROLD R. BAILEY & ELIZABETH M. BAILEY	107,578	5400	2135 5008 4548	1,598 3807 ——	542 2,135 4548	94,896	——
354-1WD	MARGUERITE H. DICKINSON	35542	1800	2400	1800	600	33,142	——
354-2WD	FRANK J. HUMBERT & ELIZABETH HUMBERT	63,014	2700	3,600	2,700	900	49,414	——
354 T	SEE ABOVE PARCEL 354A	——	——	7,556	——	7,556	——	——

SERVICE ROAD RIGHT OF WAY

Ⓖ CURVE DATA
CH = 54.04'
N 45°06'54"W
Lc = 56.95
R = 51.00
POC = 102+10.17 ~ 73.37 RT
PCC = 102+56.00 ~ 102.00 RT

⑦ CURVE DATA
CH = 71.07
N 86°30'38"E
Lc = 72.05
R = 126.00
POC = 102+56.00 ~ 102.00 RT
POC = 103+24.19 ~ 81.95 RT

⑧ CURVE DATA
CH = 8.35
N 72°40'25"E
Lc = 8.35
R = 94.00
PRC = 103+24.19 ~ 81.95
POC = 103+31.40 ~ 77.75

⑨ CURVE DATA
CH = 45.92
N 54°36'37"W
Lc = 47.12
R = 60.00
POC = 102+13.58 ~ 93.43
PCC = 102+56.00 ~ 111.00

⑩ CURVE DATA
CH = 76.15
N 86°30'38"E
Lc = 77.20
R = 135.00'
POC = 102+56.0 ~ 111.RT
PT = 103+29.06 ~ 89.52 RT

SERVICE ROAD CURVE DATA

① CURVE DATA
Δ = 90°00'00" RT.
R = 35.00'
T = 35.00'
Lc = 54.98'
PC STA. 0+61.00
PCC STA. 1+05.98

②③ CURVE DATA
Δ = 32°45'50" RT. & LT.
R = 110'
T = 32.337
Lc = 62.904
PCC STA. 1+05.98
PRC STA. 1+68.88
PT STA. 2+31.78

0 20 40 60 80

PRELIMINARY SUBMITTAL DATE: RIGHT-OF-WAY COMPLETION DATE:			
Nº	REVISIONS	MADE BY	DATE
1	CHANGED AREAS TO INC. P.R.O.	J.M.	9-6-68
2	CORRECTED ℄ BEARINGS	J.M.	9-6-68
3	CORRECTED STATIONS + OFFSETS	J.M.	9-6-68
4	℄ DISTANCES TO ℄ GRAHAM	J.M.	9-6-68
	ADDED NOTE FOR SERVICE RD		12-18-75

STA. 100+00 TO 103+50 GRAHAM RD.

SEE R/W SHEET Nº 49 & 55

MATCH LINE

K & E - AKRON

TE-85
400-1-63

GENERAL INFORMATION

INTRODUCTION

The project consists of the construction of 1.6 miles of SR 8, located in Cuyahoga Falls, beginning 400 feet southwest of the Front Street - Tifft Street intersection, extending northward and terminating 600 feet northwest of the Graham Road - Charles Street intersection.

Proposed grade indicates maximum 28 foot cuts and maximum 5 foot fill embankments.

GEOLOGY OF THE PROJECT

The alignment traverses a portion of the glaciated, moderately rolling Allegheny Plateau, in an area where thin to moderately deep glacial drift overlies sandstone conglomerate of the Sharon formation, Pennsylvanian age.

EXPLORATION

Exploratory borings were made by means of truck-mounted mechanical soil auger, between January 3 and 6, 1966. Included in this report are logs of borings made for the structure foundation investigations on this project.

INVESTIGATIONAL FINDINGS

Materials encountered immediately below proposed grade are predominantly comprised of sandstone conglomerate and sandstone bedrock, with occasional sandy gravels (A-1-b and A-2-4), sandy silts (A-4a and A-4b), and silt clays (A-6a), generally having low moisture contents and moisture contents in the lower portions of the plastic range.

Sandstone conglomerate and sandstone bedrock are anticipated at grade and in the ditches and backslope in the excavation area between SR 8 stations 246+00 and 283+00.

Frost susceptible silt was encountered within three feet below proposed grade at SR 8 station 317+50.

Materials encountered in the embankment foundation areas were predominantly comprised of sandy silts (A-4a), silt clays (A-6a), and clays (A-7-6), generally having low moisture contents and moisture contents in the lower portions of the plastic range.

Wet materials were encountered at SR 8 stations 306+85 and 317+50.

Random fill material consisting of soil, cinders, and glass was encountered at SR 8 station 328+35.

LEGEND FOR PROJECT AVERAGE RESULTS OF TESTS — 44 SAMPLES TESTED

DESCRIPTION	H.R.B. CLASS	OHIO CLASS	% AGG.	% C. SAND	% F. SAND	% SILT	% CLAY	LIQUID LIMIT	PLASTICITY INDEX	WATER CONTENT	SAMPLES TESTED
Gravel with sand	A-1-b(0)	A-1-b	30	28	26	-	16 -	NP	NP	13	8
Coarse and fine sand	-------	A-3a	37	9	43	6	5	NP	NP	10	1
Gravel with sand and silt	A-2-4(0)	A-2-4	30	24	15	16	15	25	7	14	3
Sandy silt	A-4(0)	A-4a	11	9	28	31	21	23	5	17	12
Silt	A-4(8)	A-4b	0	1	9	68	22	NP	NP	21	4
Silt and clay	A-6(8)	A-6a	8	6	10	35	41	29	11	17	9
Silty clay	A-6(9)	A-6b	15	8	7	32	38	38	16	29	2
Clay	A-7-6(8)	A-7-6	3	3	3	21	70	45	20	23	5
Weathered Sandstone			VISUAL CLASSIFICATION								
Sandstone			VISUAL CLASSIFICATION								
Random fill			VISUAL CLASSIFICATION								

Topsoil=X'= Approximate depth.

Auger boring-plan view.

Drive sample and/or core boring-plan view.

Auger boring plotted to vertical scale only.

Drive sample and/or core boring plotted to vertical scale only.

NOTE: Figures beside borings indicate water content in percent, e.g. 15

● Water content nearly equal to or greater than liquid limit.

⊖ Indicates a non-plastic material with a high water content.

—W— Free water.

Number of blows for "Standard Penetration" test.
X=number of blows for first 6 inches.
Y=number of blows for second 6 inches.

SOIL PROFILE

SUMMIT COUNTY
SUM-8-17.63

1/37

1/7

OHIO STATE HIGHWAY TESTING LABORATORY
1620 W. BROAD ST. COLUMBUS 23, OHIO

NOTE: INFORMATION SHOWN BY THIS SUBGRADE PROFILE WAS OBTAINED SOLELY FOR USE IN ESTABLISHING DESIGN CONTROLS FOR THE PROJECT. THE STATE OF OHIO DOES NOT GUARANTEE THE ACCURACY OF THIS DATA AND IT IS NOT TO BE CONSTRUED AS A PART OF THE PLANS GOVERNING CONSTRUCTION OF THE PROJECT.

FED. NO. U-19(12)

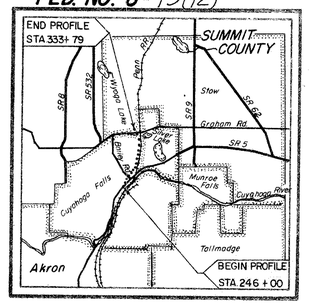

LOCATION MAP

Recon - J.S.M. - 12/20/65 - 12/22/65
Drilling - Auger - T.R.S. - 1/3/66 - 1/4/66
Drafting - A.D.B. - 2/14/66

SUMMARY OF SOIL TEST DATA

NOTE: NP shown in Liquid Limit and Plasticity Index columns indicates that the material is non-plastic.
*Denotes sample taken at or near grade.

STATION & OFFSET		DEPTH FROM - TO	% AGG.	% C.S.	% F.S.	% SILT	% CLAY	L.L.	P.I.	% W.C.	SHTL CLASS.
258+00	CL	0.0-5.0	13	6	26	30	25	22	7	11	A-4a
271+50	30'Rt	0.0-5.0	7	8	28	30	21	22	6	16	A-4a
		5.0-9.0	5	4	34	36	21	19	5	15	A-4a
276+00	10'Rt	0.0-5.0	18	10	19	28	25	24	7	17	A-4a
		5.0-9.0	(5	7	50	23	15	NP	NP	10)	
		Brown Weathered Sandstone									Visual
282+00	10'Rt	0.0-6.0	11	12	38	20	19	22	5	18	A-4a
		6.0-8.0	(37	6	43	6	5	NP	NP	10)	
		Brown Weathered Sandstone									Visual*
289+45	CL	0.0-5.0	55	10	16	10	9	23	5	14	A-1-b*
		5.0-9.0	18	8	21	37	16	22	9	16	A-4a
294+00	CL	0.0-6.0	5	11	15	41	28	27	6	23	A-4a
		6.0-7.0	0	2	7	74	17	NP	NP	20	A-4b
		7.0-10.0	8	13	33	29	17	NP	NP	18	A-4a
297+50	50'Rt	0.8-6.0	17	8	6	10	50	47	21	21	A-7-6
		6.0-11.0	0	4	3	29	64	40	18	25	A-7-6
		11.0-15.0	0	0	0	47	53	32	13	23	A-6a
303+00	CL	0.0-5.0	0	0	3	14	83	55	27	24	A-7-6 *
		5.0-9.0	0	0	0	26	74	42	15	21	A-7-6
		9.0-12.0	0	0	1	43	56	37	16	22	A-6b
306+85	CL	0.0-4.0	0	16	39	27	21	27	10	15	A-4a *
		4.0-7.0	0	7	23	41	29	21	4	18	A-4a
		7.0-12.0	0	1	3	17	79	42	16	23	A-7-6
311+00	CL	0.0-5.0	36	14	14	19	17	28	10	15	A-4a *
		5.0-8.0	30	17	13	17	14	22	6	16	A-2-4 *
		8.0-14.0	0	5	5	36	54	28	11	21	A-6a
315+00	CL	0.0-4.0	35	21	13	18	13	27	8	12	A-2-4
		4.0-8.0	17	34	18	14	17	22	8	20	A-2-4
		8.0-10.0	0	5	15	35	45	24	11	18	A-6a
		10.0-15.0	42	25	16	- 17 -		NP	NP	6	A-1-b *
		15.0-20.0	37	26	22	- 15 -		NP	NP	10	A-1-b
317+50	CL	0.0-6.0	0	3	13	42	42	27	11	21	A-6a
		6.0-8.0	0	1	27	62	10	NP	NP	22	A-4b *
		8.0-13.0	0	1	1	69	29	NP	NP	16	A-4b *
		13.0-18.0	0	0	1	68	31	22	9	24	A-4b
321+50	CL	0.0-6.0	23	26	27	10	12	22	5	10	A-1-b
		6.0-9.0	10	40	35	- 15 -		NP	NP	20	A-1-b
		9.0-15.0	5	5	0	36	43	20	11	16	A-6a
		15.0-20.0	8	9	14	34	35	27	11	16	A-6a *
328+35	25'Rt	0.0-6.0	30	10	14	21	16	30	11	11	A-6a *
		6.0-11.0	(31	16	13	21	19	30	16	37)	
		Brownish-Gray Silty Clay W/Cinders, Glass and Gravel									Visual
		11.0-16.0	20	6	11	29	34	33	12	17	A-6a
		16.0-21.0	25	36	27	- 9 -		NP	NP	17	A-1-b
		21.0-26.0	13	40	36	- 11 -		NP	NP	16	A-1-b
332+00	CL	0.0-6.0	6	5	11	37	41	28	11	13	A-6a *
		6.0-12.0	34	16	26	- 22 -		NP	NP	8	A-1-b

DRIVE SAMPLE SOIL TEST DATA

STATION & OFFSET		DEPTH FROM - TO	% AGG.	% C.S.	% F.S.	% SILT	% CLAY	L.L.	P.I.	% W.C.	SHTL CLASS.
246+30	180'Lt	2.5-3.5	0	8	43	25	24	NP	NP	17	A-4a
264+45	CL	2.5-3.5	21	13	25	22	19	23	8	23	A-4a
		5.0-6.0	27	9	22	24	18	19	5	16	A-4a
264+94	71'Rt	2.5-3.5	0	7	33	38	27	22	8	16	A-4a
		5.0-6.0	0	4	25	42	29	23	8	15	A-4a
265+20	CL	2.5-6.0	0	8	32	31	29	24	6	16	A-4a
		5.0-6.0	23	6	29	21	21	20	5	12	A-4a

REVISED 12/21/67

SOIL PROFILE
SUMMIT COUNTY
SUM-8-17.63
OHIO STATE HIGHWAY TESTING LABORATORY
1620 W. BROAD ST. COLUMBUS 23. OHIO

(2/37) (2/7)

SUMMARY OF SOIL TEST DATA

NOTE: NP SHOWN IN LIQUID LIMIT AND PLASTICITY INDEX COLUMNS INDICATES THAT THE MATERIAL IS NON-PLASTIC.
*DENOTES SAMPLE TAKEN AT OR NEAR GRADE.

STATION & OFFSET	DEPTH FROM	TO	% AGG.	% C.S.	% F.S.	% SILT	% CLAY	L.L.	P.I.	% W.C.	SHTL CLASS.
				SR 8							
1036+00 CL	0.0-5.0		7	13	22	34	24	23	5	2	A-4a
	5.0-9.0		15	5	9	38	33	30	11	13	A-6a *
	9.0-15.0		9	6	13	31	41	24	11	13	A-6a *
	15.0-19.5		6	5	12	58	19	26	8	15	A-4b
	19.5-23.0		0	13	64	12	11	NP	NP	6	A-3a
1036+00 45'Rt	0.0-5.0		23	27	19	8	23	30	12	9	A-2-6
	5.0-11.0		27	41	20	5	7	NP	NP	11	A-1-b
	11.0-16.0		6	7	12	31	44	27	11	9	A-6a *
	16.0-22.0		7	6	9	44	34	25	11	18	A-6a
	22.0-25.0		5	12	70	5	8	NP	NP	13	A-3a
1036+50 150'Lt	0.9-4.0		0	1	4	49	46	31	11	21	A-6a
	4.0-10.0		17	4	9	38	32	25	11	18	A-6a
1036+50 90'Lt	0.0-5.0		0	9	20	49	22	83	50	74	A-7-5
	5.0-11.0	GRAY SILTY SEDIMENTARY PEAT								97	VISUAL
	11.0-14.0		0	2	5	65	28	NP	NP	20	A-4b
	14.0-19.0		7	5	10	41	37	26	11	20	A-6a
1037+50 150'Lt	0.0-6.0	DARK-BROWN AND GRAY SILTY [illegible]									VISUAL
	6.0-11.0		8	48	19	16	9	NP	NP	25	A-1-b
1040+00 CL	0.0-3.0		6	24	33	6	31	42	22	11	A-7-6 *
	3.0-8.0		11	7	13	34	35	27	11	24	A-6a *
	8.0-12.0		0	6	12	41	41	26	11	15	A-6a
1045+00 CL	0.0-5.0		6	12	24	20	36	26	9	18	A-4a
	5.0-8.0		19	16	20	22	23	27	11	12	A-6a
	8.0-11.0		0	1	3	21	75	42	20	20	A-7-6
	11.0-14.0		9	8	28	21	35	19	3	25	A-4a
1051+00 CL	0.4-4.0		35	2	11	31	21	33	15	17	A-6a
	4.0-9.0		47	20	18	9	6	NP	NP	19	A-1-b
	9.0-14.0		49	28	11	16	4	NP	NP	13	A-1-b
	14.0-20.0		47	7	9	22	15	20	6	14	A-4a
	20.0-23.0		15	7	13	31	34	22	11	16	A-6a
1052+00 75'Lt	0.4-4.0		0	5	26	48	21	NP	NP	17	A-4a
	4.0-6.0		19	9	34	24	14	NP	NP	12	A-4a
	6.0-11.0		0	1	11	49	39	25	11	23	A-6a
	11.0-15.0		20	9	17	33	21	17	3	13	A-4a
	15.0-19.0		0	10	12	38	40	24	11	18	A-6a
1052+00 10'Rt	0.0-2.0		0	4	20	43	33	139	97	78	A-7-5 *
	2.0-5.0	GRAYISH-BROWN SILTY SEDIMENTARY PEAT								63	VISUAL
	5.0-7.0		0	2	26	36	36	NP	NP	12	A-4a
	7.0-13.0		46	35	12	7	6	NP	NP	15	A-1-b
	13.0-18.0		54	32	9	-	5 -	NP	NP	11	A-1-a
	18.0-20.0		0	3	12	61	24	NP	NP	18	A-4b
	20.0-23.0		50	30	11	-	9 -	NP	NP	12	A-1-a
1052+00 75'Rt	0.0-3.0		0	6	18	47	29	223	136	123	A-7-5
	3.0-8.0	GRAY SILTY SEDIMENTARY PEAT								118	VISUAL
	8.0-14.0		0	5	26	38	31	54	26	66	A-7-6
	14.0-18.0		65	14	8	7	6	NP	NP	16	A-1-a
	18.0-21.0		12	6	12	39	31	22	11	14	A-6a
1052+00 100'Rt	0.4-3.0		36	7	23	18	16	27	10	13	A-2-4
	3.0-10.0		63	18	10	-	9 -	NP	NP	12	A-1-a
	10.0-17.0		61	19	14	-	6 -	NP	NP	12	A-1-a
1053+85 CL	0.0-3.0		36	10	9	28	17	25	7	14	A-4a
	3.0-9.0		0	6	6	47	45	36	17	28	A-6b
	9.0-14.0		0	28	9	39	33	24	8	20	A-4a
	14.0-19.0		0	2	3	57	33	21	4	15	A-4b
	19.0-23.0		21	8	12	32	27	22	6	14	A-4a
1054+50 75'Lt	0.0-4.0		0	1	1	59	39	32	15	32	A-6a
	4.0-9.0		27	7	15	33	18	22	6	21	A-4a
	9.0-14.0		22	8	10	30	30	24	11	17	A-6a
	14.0-18.0		14	5	9	34	58	26	11	16	A-6a
1054+50 CL	0.0-3.5	GRAY SILTY MARLY SEDIMENTARY PEAT								102	VISUAL
	3.5-9.0		0	7	9	48	36	31	14	23	A-6a
	9.0-13.0		34	10	10	27	19	21	7	19	A-4a
	13.0-18.0		0	4	63	16	17	NP	NP	23	A-3a
	18.0-24.0		0	12	46	34	8	NP	NP	20	A-4a
	24.0-30.0		0	1	3	72	24	NP	NP	29	A-4b
1054+50 50'Rt	0.0-4.0		0	11	14	46	29	72	44	48	A-7-6
	4.0-8.0		0	18	6	31	45	35	14	28	A-6a
	8.0-13.0		0	6	9	39	46	26	11	18	A-6a
	13.0-19.0		0	7	15	40	39	26	11	23	A-6a
	19.0-25.0		21	7	15	32	25	22	8	21	A-4a
	25.0-27.0		0	1	95	2	2	NP	NP	19	A-3
	27.0-30.0		0	2	82	4	11	NP	NP	21	A-3a
1055+00 CL	0.0-4.0		0	1	1	51	47	46	28	24	A-7-6
	4.0-9.0		0	5	14	40	41	23	11	15	A-6a
	9.0-12.0		0	5	40	33	22	16	4	20	A-4a
	12.0-18.0		0	12	7	76	5	NP	NP	22	A-4b
	18.0-24.0		0	1	76	17	6	NP	NP	20	A-3a
	24.0-28.0		0	1	2	60	37	24	8	18	A-4b
1059+00 CL	0.0-5.0		16	5	10	32	37	26	11	14	A-6a
	5.0-10.0		14	6	10	37	33	24	7	15	A-4a *
	10.0-15.0		11	4	9	29	47	25	12	14	A-6a
	15.0-18.0		18	8	23	32	19	19	4	12	A-4a

STATION & OFFSET	DEPTH FROM	TO	% AGG.	% C.S.	% F.S.	% SILT	% CLAY	L.L.	P.I.	% W.C.	SHTL CLASS.
1063+50 CL	0.0-6.0		13	2	7	33	45	31	11	17	A-6a
	6.0-12.0		18	3	6	31	42	33	14	19	A-6a *
	12.0-15.0		19	5	26	29	21	17	5	11	A-4a
	15.0-17.0		17	5	35	25	18	NP	NP	10	A-4a
	17.0-18.0		0	3	4	74	19	NP	NP	18	A-4b
1068+00 CL	1.0-2.0		0	1	1	47	51	45	21	25	A-7-6
	2.0-7.0		0	4	10	50	36	23	7	16	A-4b
	7.0-12.0		0	0	5	55	38	22	5	20	A-4b
	12.0-15.0		29	6	13	26	26	22	7	13	A-4a
1068+00 150'Rt	0.0-3.0		0	1	4	19	76	64	35	31	A-7-6
	3.0-6.0		0	2	7	39	52	55	22	40	A-7-5
	6.0-10.0		0	3	7	41	49	27	11	23	A-6a
1069+00 150'Lt	0.0-3.0		0	1	1	23	75	68	33	36	A-7-5
	3.0-9.0	GRAY SILTY MARLY SEDIMENTARY PEAT								85	VISUAL
	9.0-11.0		0	4	5	51	40	77	41	71	A-7-5
	11.0-14.0		0	6	15	49	30	42	17	36	A-7-6
	14.0-20.0		0	1	6	50	43	26	8	17	A-4b
1069+00 75'Lt	0.0-3.0		0	1	5	33	61	114	70	78	A-7-5
	3.0-9.0	GRAY SILTY MARLY SEDIMENTARY PEAT								112	VISUAL
	9.0-11.0		19	7	15	29	30	31	11	22	A-6a *
	11.0-16.0		26	4	10	28	32	25	11	16	A-6a
1069+00 CL	0.0-4.0		0	6	16	10	66	70	42	15	A-7-6
	4.0-7.0	BROWNISH-GRAY SILTY MARLY SEDIMENTARY PEAT								98	VISUAL
	7.0-10.0		0	3	19	54	24	21	5	20	A-4b
	10.0-16.0		0	2	14	38	41	26	11	16	A-6a
	16.0-22.0		0	6	27	48	25	17	2	13	A-4a
1069+00 75'Rt	0.0-4.0		0	1	3	23	73	104	74	47	A-7-5
	4.0-7.0	DARK-BROWN FINE-TEXTURED PEAT								140	VISUAL
	7.0-11.0	BROWN SILTY MARLY SEDIMENTARY PEAT								172	VISUAL
	11.0-16.0		0	9	5	51	35	76	34	77	A-7-5
	16.0-21.0		0	3	11	50	36	23	8	17	A-4b
1069+00 150'Rt	1.0-7.0	DARK-BROWN FINE-TEXTURED PEAT								128	VISUAL
	7.0-12.0	GRAY SILTY MARLY SEDIMENTARY PEAT								205	VISUAL
	12.0-14.0		0	6	13	46	35	25	11	20	A-6a
	14.0-20.0		0	7	20	37	36	20	5	16	A-4a
1075+00 CL	0.0-5.0		13	2	6	38	41	33	14	15	A-6a
	5.0-11.0		0	7	15	6	72	36	14	16	A-6a
	11.0-16.0		17	6	25	42	10	18	3	12	A-4a
	16.0-20.0		0	6	31	33	30	18	3	11	A-4a
	20.0-22.0		0	1	68	21	10	NP	NP	10	A-3a *
1149+00 60'Lt	0.0-3.0		42	1	2	14	41	72	42	44	A-7-5
	3.0-8.0		22	1	4	31	42	50	29	22	A-7-6
	8.0-14.0		14	8	36	23	19	31	11	31	A-4a
	14.0-20.0		7	3	7	29	54	33	11	17	A-6a
1149+00 45'Rt	0.0-6.0		23	8	15	24	30	23	6	12	A-4a
	6.0-12.0		8	9	25	35	23	18	4	10	A-4a
	12.0-18.0		12	6	26	39	17	16	3	10	A-4a
	18.0-22.0		7	11	36	14	27	11	16	A-6a
	22.0-28.0		9	19	64	-	14 -	NP	NP	16	A-3a
	28.0-30.0		5	5	57	-	33 -	NP	NP	15	A-3a
1149+70 CL	0.0-5.0		16	6	10	32	36	33	11	12	A-6a
	5.0-10.0		0	11	11	60	18	NP	NP	9	A-4b
	10.0-15.0		34	12	40	14	-	NP	NP	14	A-3a
	15.0-16.0		0	2	8	65	25	NP	NP	25	A-4b
1150+43 152'Lt	0.0-7.0	DARK-BROWN FINE-TEXTURED PEAT								310	VISUAL
	7.0-14.0	GRAY SILTY SEDIMENTARY PEAT								200	VISUAL
	14.0-19.0		0	6	12	32	50	28	11	19	A-6a
1150+43 77'Lt	0.0-4.0	DARK-BROWN FINE-TEXTURED PEAT								55	VISUAL
	4.0-11.0	(	0	2	24	45	29	62	35	53)	
		GRAY SILTY SEDIMENTARY PEAT AND CLAY									VISUAL
	11.0-16.0		5	5	9	36	45	28	11	19	A-6a
1151+38 156'Lt	0.0-10.0	DARK-BROWN FINE-TEXTURED FIBROUS PEAT								575	VISUAL
	10.0-20.0	DARK-BROWN FINE-TEXTURED FIBROUS PEAT								464	VISUAL
	20.0-30.0	DARK-BROWN FINE-TEXTURED FIBROUS PEAT								366	VISUAL
1151+40 76'Lt	0.0-5.0	DARK-BROWN FINE-TEXTURED FIBROUS PEAT								438	VISUAL
	5.0-10.0	GRAY SILTY MARLY SEDIMENTARY PEAT								233	VISUAL
	10.0-16.0		10	9	18	30	33	28	8	19	A-4a
	16.0-22.0		6	6	14	34	40	26	11	16	A-6a
	22.0-25.0		12	9	19	31	29	20	5	18	A-4a
	25.0-30.0		18	7	24	29	22	NP	NP	12	A-4a
1151+67 8'Lt	0.0-5.0		9	9	23	36	23	36	13	37	A-6a
	5.0-10.0		6	3	8	42	41	28	11	16	A-6a
	10.0-15.0		0	4	9	46	41	29	11	18	A-6a
	15.0-20.0		0	4	9	44	43	29	11	18	A-6a
	20.0-25.0		11	9	27	39	14	NP	NP	11	A-4a
1152+57 162'Lt	0.0-8.0	DARK-BROWN FINE-TEXTURED PEAT								315	VISUAL
	8.0-16.0	DARK-BROWN FINE-TEXTURED PEAT								557	VISUAL
	16.0-24.0	GREENISH-BROWN SILTY SEDIMENTARY PEAT								362	VISUAL
	24.0-30.0		12	5	13	30	40	25	11	22	A-6a
1152+62 92'Lt	0.0-3.0	DARK-BROWN FINE-TEXTURED PEAT								324	VISUAL
	3.0-16.0	DARK-BROWN FINE-TEXTURED FIBROUS PEAT								406	VISUAL
	16.0-22.0		0	3	9	39	49	25	11	18	A-6a

STATION & OFFSET	DEPTH FROM	TO	% AGG.	% C.S.	% F.S.	% SILT	% CLAY	L.L.	P.I.	% W.C.	SHTL CLASS.
1453+53 180'Lt	0.0-5.0	DARK-BROWN FINE-TEXTURED FIBROUS PEAT								753	VISUAL
	5.0-11.0	DARK-BROWN FINE-TEXTURED FIBROUS PEAT								858	VISUAL
	11.0-16.0		0	6	17	44	33	23	5	23	A-4a
1453+59 95'Lt	0.0-5.0		13	7	17	33	30	23	8	14	A-4a
	5.0-10.0		5	7	22	43	23	17	2	11	A-4a
	10.0-15.0		13	9	33	26	19	NP	NP	12	A-4a
	15.0-20.0		0	8	64	16	12	NP	NP	18	A-3a
	20.0-24.0		0	2	20	65	13	NP	NP	17	A-4b
	24.0-28.0		12	5	31	34	18	NP	NP	15	A-4a
	28.0-30.0		0	3	84	1	12	NP	NP	18	A-3a
1453+65 20'Lt	0.0-5.0		8	7	12	40	33	27	11	13	A-6a
	5.0-9.0		8	6	11	45	30	28	11	14	A-6a
	9.0-15.0		8	6	25	43	18	NP	NP	10	A-4a
1454+49 177'Lt	0.0-5.0		0	6	10	64	20	27	9	20	A-4b
	5.0-10.0		10	5	11	45	29	28	11	15	A-6a
1457+00 , 80'Lt	0.5-5.0		0	6	23	42	29	31	13	20	A-6a
	5.0-10.0		15	10	17	10	48	24	11	10	A-6a
1457+00 CL	0.0-5.0		8	3	12	34	43	31	12	19	A-6a
	5.0-7.0		11	6	48	23	12	NP	NP	14	A-3a
	7.0-9.0		0	0	5	76	19	NP	NP	10	A-4b
	9.0-15.0		0	0	13	74	13	NP	NP	20	A-4b
	15.0-20.0		1	3	67	21	8	NP	NP	14	A-3a
1459+55 90'Lt	0.0-5.0		0	4	9	37	50	33	11	15	A-6a *
	5.0-10.0		0	3	8	41	48	33	12	16	A-6a
	10.0-12.0		37	10	10	14	20	25	8	21	A-2-4
1460+00 CL	0.5-5.0		14	3	7	35	41	30	12	15	A-6a *
	5.0-8.0		22	4	7	28	39	24	15	15	A-6a
	8.0-11.0		19	9	33	22	17	NP	NP	14	A-4a
	11.0-14.0		27	9	32	17	15	NP	NP	13	A-2-4
	14.0-20.0		17	3	19	36	25	20	5	12	A-4a
	20.0-24.0		40	5	16	15	24	20	5	13	A-4a
1460+00 50'Rt	0.0-5.0	GRAY SEDIMENTARY PEAT						111	-	144	VISUAL
	5.0-8.0	GRAY SEDIMENTARY PEAT						116	-	187	VISUAL
	8.0-12.5		11	5	10	37	37	27	11	19	A-6a
1460+00 100'Rt	0.5-5.0	BLACK WOODY PEAT								272	VISUAL
	5.0-10.0	GRAY SEDIMENTARY PEAT						197	-	261	VISUAL
	10.0-16.0	GRAY SEDIMENTARY PEAT						248	-	264	VISUAL
	16.0-21.0		34	3	7	23	33	25	11	19	A-6a
1461+00 CL	0.0-4.0		0	3	6	41	50	35	14	19	A-6a *
	4.0-9.0		0	0	1	41	58	50	32	22	A-7-6
	9.0-15.0		6	3	8	42	41	28	11	16	A-6a
1463+50 CL	0.0-6.0		7	4	8	27	54	33	13	15	A-6a
	6.0-12.0		3	4	24	41	28	22	6	16	A-4a
	12.0-18.0		11	10	27	33	19	21	5	15	A-4a
	18.0-24.0		11	8	27	35	19	NP	NP	10	A-4a *
	24.0-30.0		21	12	30	24	13	NP	NP	6	A-4a *
1465+25 CL	0.0-3.0		0	2	26	39	33	34	13	25	A-6a
—	3.0-6.0		6	5	12	42	35	31	11	23	A-6a
	6.0-12.0		18	3	8	34	37	28	11	18	A-6a
	12.0-17.0		13	7	13	36	29	26	7	18	A-4a
	17.0-20.0		12	7	15	34	32	23	6	16	A-4a
1465+50 50'Lt	0.0-6.0	BLACK FIBROUS PEAT								205	VISUAL
	6.0-12.0	GRAY SEDIMENTARY PEAT						148	-	127	VISUAL
	12.0-18.0	GRAY SEDIMENTARY PEAT						136	-	144	VISUAL
	18.0-23.0		8	2	7	40	43	29	11	29	A-6a
1465+50 , 50'Rt	0.0-5.0		13	6	13	31	37	27	11	14	A-6a
	5.0-11.0		15	4	13	30	38	28	11	13	A-6a
	11.0-16.0		4	4	10	37	45	26	11	17	A-6a
	16.0-20.0		14	5	10	35	36	25	11	15	A-6a
1466+00 100'Lt	0.0-10.0	BLACK FINE-TEXTURED PEAT								521	VISUAL
	10.0-20.0	BROWN SEDIMENTARY PEAT								200	VISUAL
	20.0-25.0		0	2	8	40	50	27	11	21	A-6a
	25.0-28.0		3	3	8	36	50	27	11	21	A-6a
1466+00 CL	0.0-7.0	BROWN SEDIMENTARY PEAT								68	VISUAL
	7.0-13.0		5	8	11	23	53	28	11	20	A-6a
	13.0-20.0		9	6	14	32	39	27	11	19	A-6a
1466+00 100'Rt	0.0-5.0		8	4	7	27	54	40	18	22	A-6b
	5.0-8.0		16	2	10	29	43	79	48	39	A-7-5
	8.0-14.0		6	8	14	29	43	28	11	15	A-6a
	14.0-20.0		10	4	6	37	43	27	11	19	A-6a
1467+00 200'Lt	0.0-3.0	BLACK FIBROUS PEAT								130	VISUAL
	3.0-6.0	GRAY SEDIMENTARY PEAT						107	-	89	VISUAL
	6.0-11.0		5	2	7	43	43	26	11	17	A-6a
	11.0-14.0		3	3	8	41	45	27	11	18	A-6a
	14.0-20.0		8	7	9	36	40	27	11	18	A-6a
1467+00 100'Lt	0.0-4.0		6	4	12	27	51	34	12	14	A-6a
	4.0-9.0		2	3	8	45	42	31	11	16	A-6a
	9.0-15.0		3	3	6	34	54	30	11	20	A-6a
	15.0-20.0		6	5	11	36	42	27	11	15	A-6a

STATION & OFFSET	DEPTH FROM	TO	% AGG.	% C.S.	% F.S.	% SILT	% CLAY	L.L.	P.I.	% W.C.	SHTL CLASS.
1467+47 34'Lt	0.0-5.0		11	6	9	35	39	33	14	12	A-6a *
	5.0-9.0		8	4	7	36	45	32	12	16	A-6a *
	9.0-13.0		0	3	7	38	52	26	11	16	A-6a
	13.0-19.0		15	11	30	32	12	NP	NP	11	A-4a
	19.0-25.0		17	8	13	44	18	NP	NP	13	A-4a
	25.0-30.0		17	19	49	-	15 -	NP	NP	15	A-3a
1468+00 250'Lt	0.0-6.0	BLACK WOODY PEAT								383	VISUAL
	6.0-12.0	BLACK FIBROUS PEAT								590	VISUAL
	12.0-17.0	BLACK FIBROUS PEAT								518	VISUAL
	17.0-22.0		2	3	8	36	51	28	11	18	A-6a
1468+00 175'Lt	0.0-5.0	BLACK FIBROUS PEAT								185	VISUAL
	5.0-9.5	GRAY SEDIMENTARY PEAT						130	-	28	VISUAL
	9.5-15.0		6	4	11	32	47	31	11	18	A-6a
1468+00 100'Lt	0.0-5.0		3	4	10	35	48	28	11	14	A-6a
	5.0-9.5		6	3	7	38	46	32	11	15	A-6a
	9.5-15.0		4	2	7	35	52	25	11	15	A-6a
	15.0-20.0		16	3	8	38	35	28	11	15	A-6a
1469+00 CL	0.0-5.0		3	2	8	37	50	35	12	17	A-6a
	5.0-10.0		8	6	9	36	41	31	11	14	A-6a
	10.0-15.0		5	3	8	37	47	37	16	17	A-6b
	15.0-21.0		8	4	8	33	47	29	11	15	A-6a
	21.0-26.0		11	6	34	33	16	NP	NP	12	A-4a *
	26.0-30.0		18	8	27	32	15	NP	NP	10	A-4a
1474+00 75'Lt	0.0-6.0		0	3	12	33	52	40	18	26	A-6b
1474+00 CL	0.0-6.0		47	9	10	16	21	35	16	11	A-2-6 *
	6.0-11.0		3	5	4	7	37	43	34	21	A-6a
	11.0-17.0		5	4	7	28	43	32	11	21	A-6a
	17.0-22.0		18	11	12	27	32	21	6	13	A-4a
	22.0-25.0		12	6	9	34	39	25	5	10	A-4a
1476+29 147'Lt	0.0-4.0		8	6	13	39	34	28	11	12	A-6a
1477+25 CL	0.0-5.0		24	7	14	31	24	27	8	13	A-4a
	5.0-9.0		31	3	8	29	29	30	11	15	A-6a
	9.0-15.0		8	2	7	35	48	31	12	14	A-6a *
	15.0-20.0		18	2	7	37	41	29	11	14	A-6a *
	20.0-24.0		31	3	7	29	30	27	11	14	A-6a
	24.0-30.0		18	6	19	28	29	19	7	16	A-4a
1479+00 75'Lt	0.0-5.5		0	0	4	37	59	52	28	46	A-7-6
1480+00 CL	0.0-6.0		10	5	9	33	43	30	11	13	A-6a *
	6.0-12.0		11	4	11	32	42	33	11	15	A-6a
	12.0-14.0		10	4	12	34	40	27	11	14	A-6a
	14.0-20.0		24	40	21	-	15 -	NP	NP	14	A-1-b
1485+00 80'Lt	0.0-6.0		14	9	14	34	29	27	11	14	A-6a
	6.0-12.0		7	4	11	33	45	30	11	14	A-6a

SOIL PROFILE

(3/37)

SUMMIT COUNTY
SUM-8-17.63

OHIO STATE HIGHWAY TESTING LABORATORY (3/7)
1620 W. BROAD ST. COLUMBUS 23, OHIO

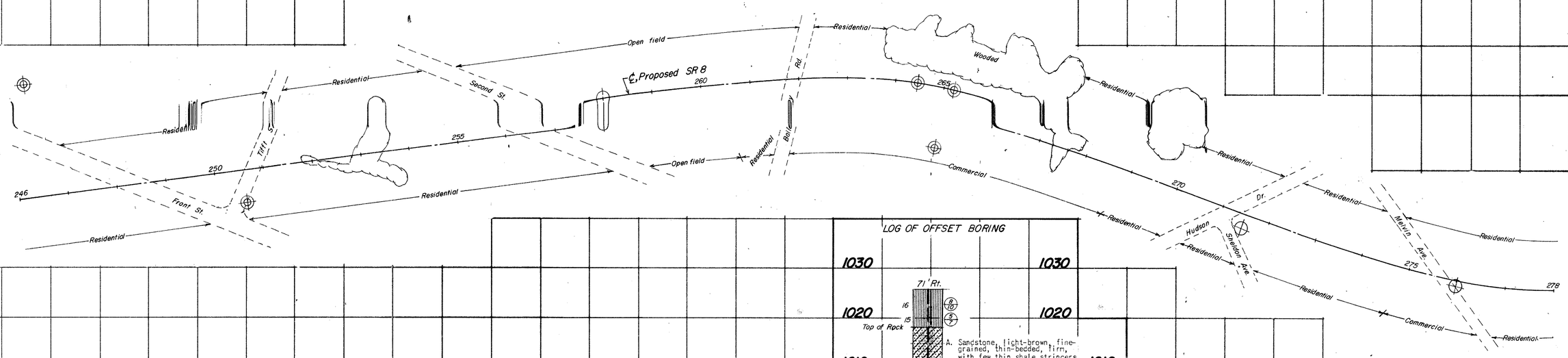

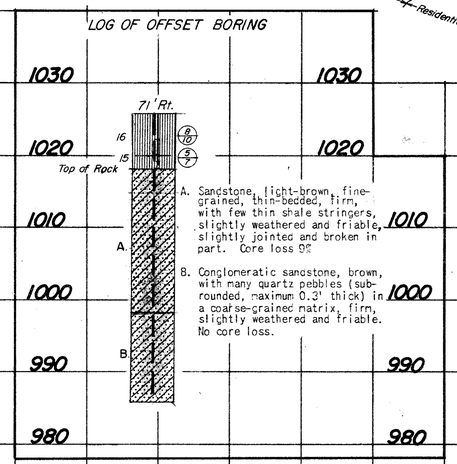

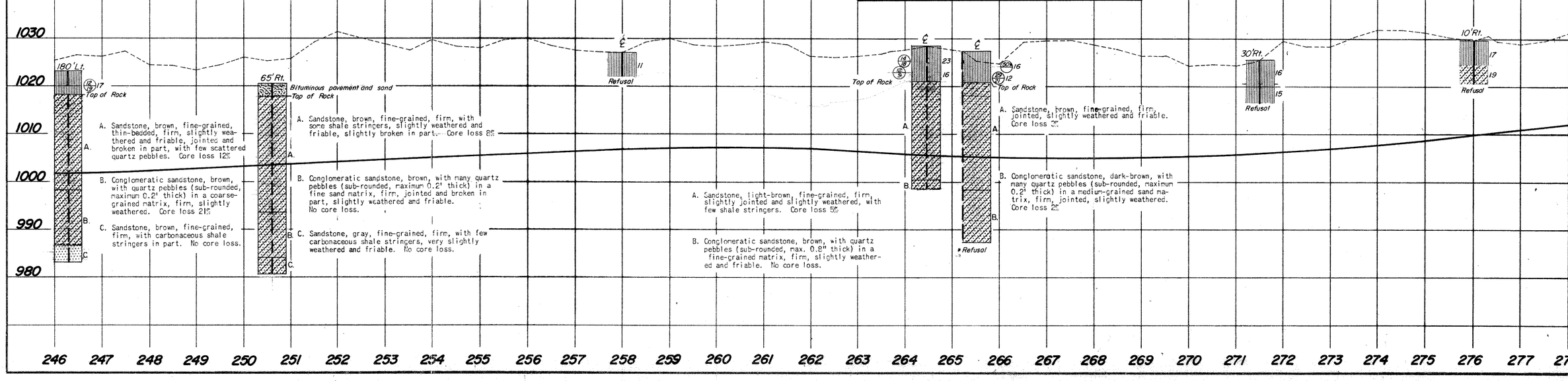

SOIL PROFILE

4/37

SUMMIT COUNTY
SUM-8-17.63

OHIO STATE HIGHWAY TESTING LABORATORY
1620 W. BROAD ST. COLUMBUS 23, OHIO

4/7

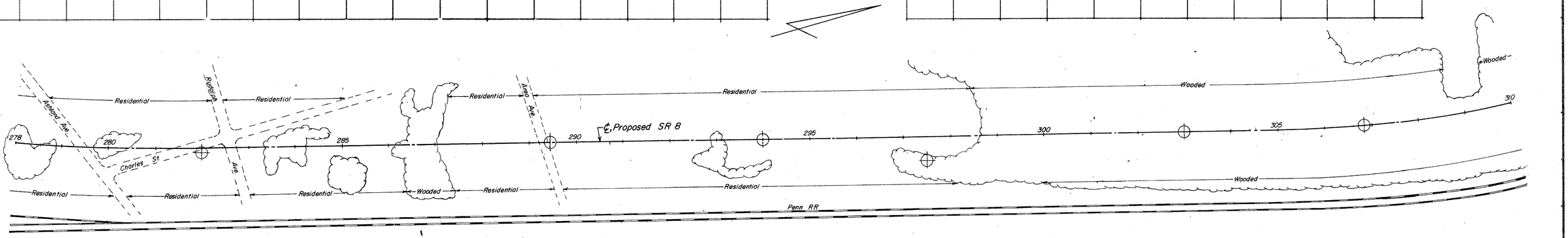

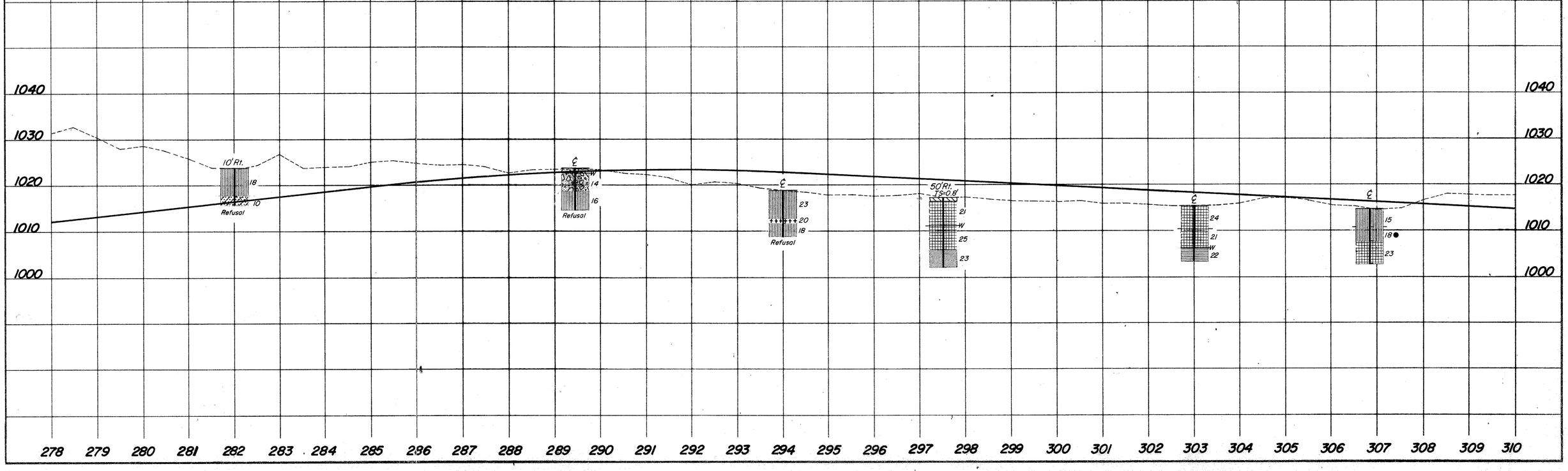

SOIL PROFILE

SUMMIT COUNTY
SUM-8-17.63

OHIO STATE HIGHWAY TESTING LABORATORY
1620 W. BROAD ST. COLUMBUS 23, OHIO

5/37

5/7

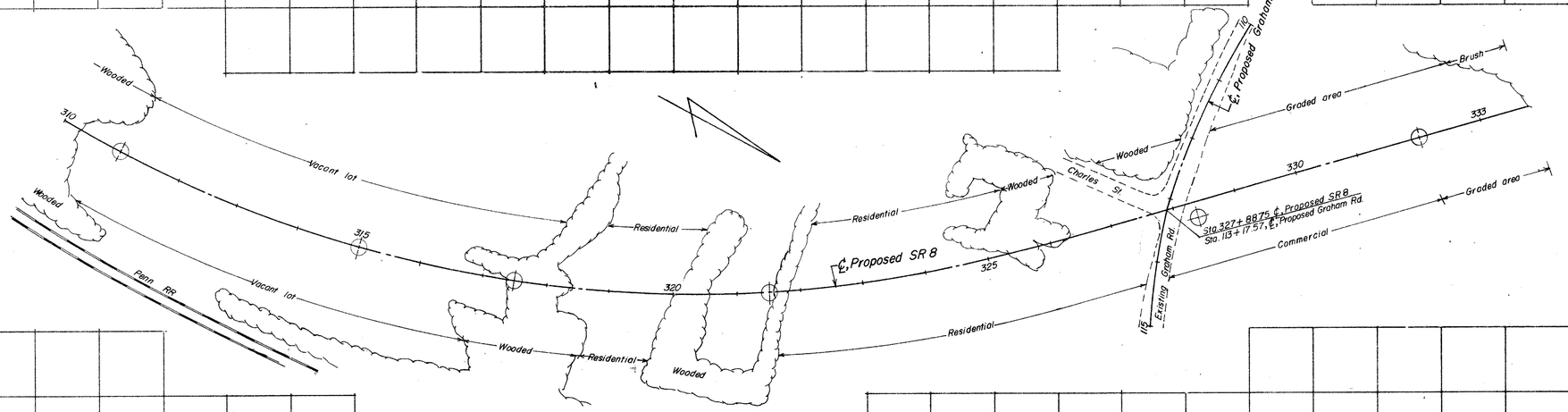

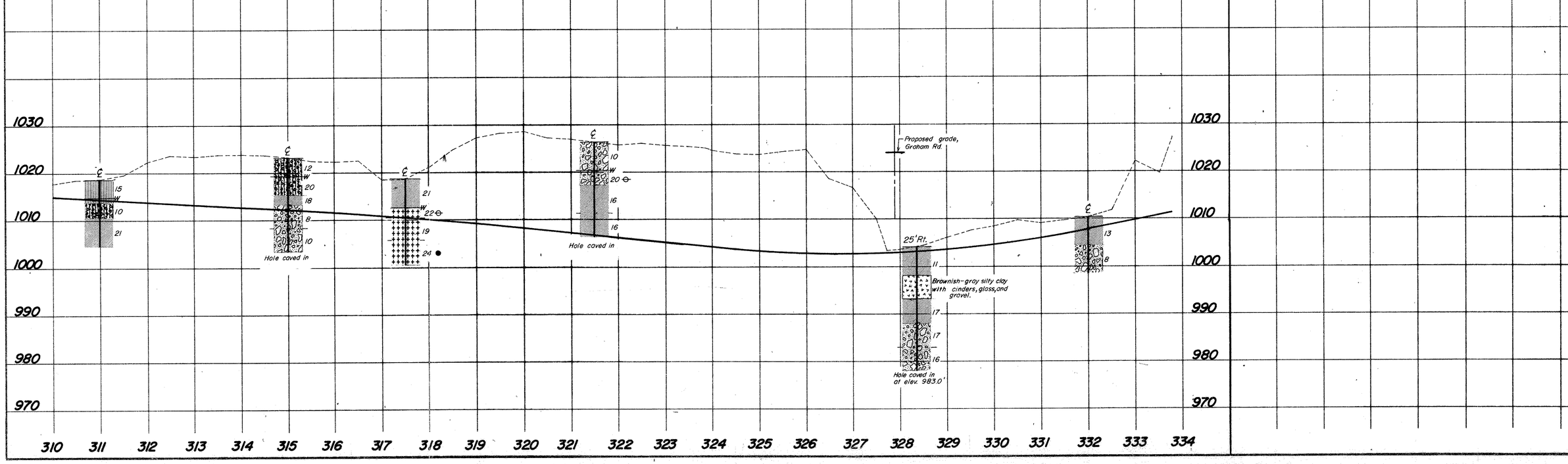

REVISED 12/21/67

SOIL PROFILE

6/37

SUMMIT COUNTY
SUM-8-17.63

6/7

OHIO STATE HIGHWAY TESTING LABORATORY
1620 W. BROAD ST. COLUMBUS 23, OHIO

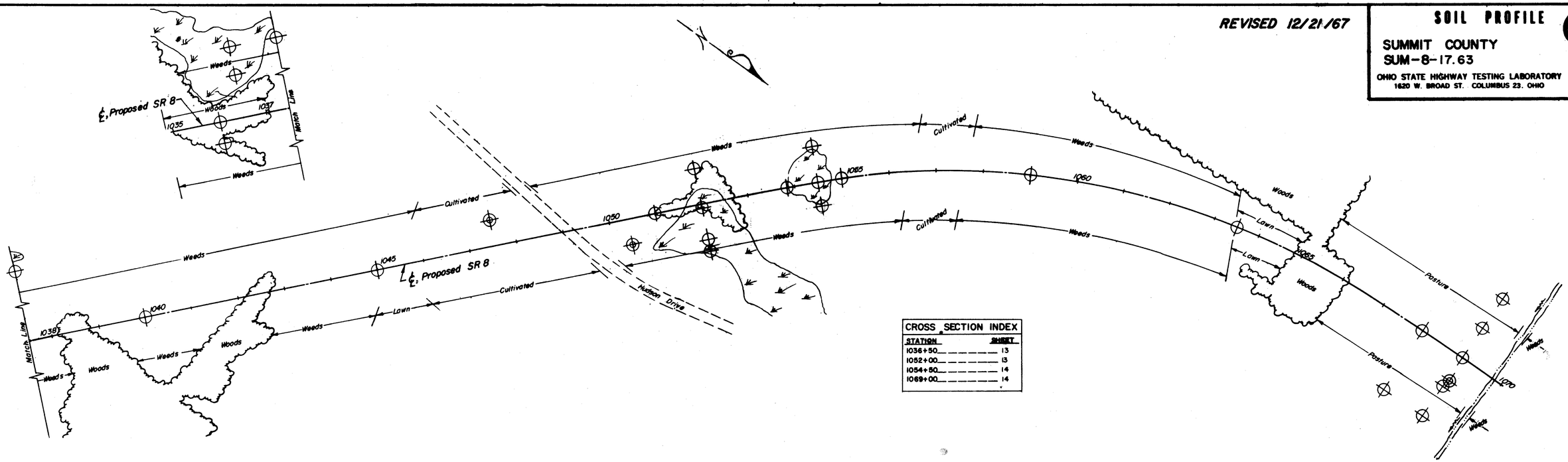

CROSS SECTION INDEX	
STATION	SHEET
1036+50	13
1052+00	13
1054+50	14
1069+00	14

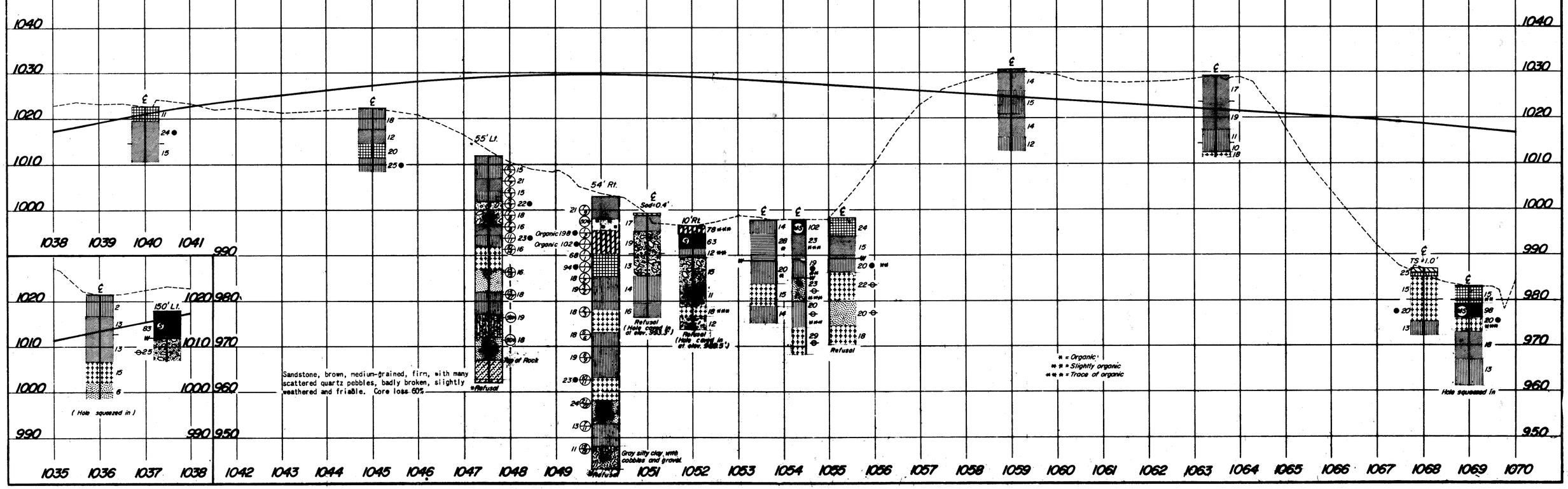

REVISED 12/21/67

SOIL PROFILE

(7/37)

SUMMIT COUNTY
SUM-8-17.63

OHIO STATE HIGHWAY TESTING LABORATORY
1620 W. BROAD ST. COLUMBUS 23, OHIO

(7/7)

Sta. 1052+00

Sod=0.4'
17
12
23
13
18
Refusal

78 Trace of organic
63
12 Slightly organic
15
11
18 Trace of organic
12
Refusal
(Hole caved in at elev. 989.5')

123 Organic
118
66 Slightly organic
16
14
Refusal
(Hole caved in at elev. 991.6')

Sod=0.4'
13 Trace of organic
12
12
(Hole squeezed in at elev. 992.3')

Sta. 1036+50

TS=0.9'
21 Trace of organic
18

74 Organic
97
20 Trace of organic
20

(Sta. 1036+00)
2
13
13
15
6
Hole squeezed in

(Sta. 1036+00)
9
15
9
18
13
Hole squeezed in

IE 95
.00 8 66

GENERAL INFORMATION

INTRODUCTION

The project consists of the construction of the Front Street-SR 3 Interchange and the Graham Road-SR 3 Interchange. Included in this report is a soil profile of an access Ramp at Hudson Drive.

For maximum proposed cuts and fill embankments, see the Project Index on this sheet.

GEOLOGY OF THE PROJECT

The project is located on portions of the moderately rolling, glaciated Allegheny Plateau. Glacial drift is thin in the vicinity of the Front Street Interchange to moderately deep in the vicinity of the Graham Road Interchange. Bedrock in the area is the sandstone conglomerate of the Sharon formation, Pennsylvanian age.

EXPLORATION

Exploratory borings were made by means of truck-mounted mechanical soil auger and hand auger (in areas of difficult access), on February 2, 22, and 23 and May 9 and 10, 1966. Included in this report are logs of borings made for the mainline and structure foundation investigations on this project.

INVESTIGATIONAL FINDINGS

Materials encountered immediately below proposed grade in the vicinity of the Front Street Interchange, are predominantly comprised of sandstone bedrock, where as materials encountered immediately below proposed grade at the Graham Road Interchange site, are predominantly silt clays (A-6a), generally having moisture contents in the lower portions of the plastic range.

Sandstone bedrock is anticipated in the following excavation areas:

Front Street Interchange - Ramp L stations 5+00 to 13+00, Ramp M stations 3+25 to 10+50, Ramp N stations 52+00 to 58+70, Ramp P stations 56+00 to 62+60, and Ramp Q stations 73+00 to 77+50.

In the embankment foundation areas materials consist of wet sandy silts (A-4a), wet silt clays (A-6a), and elastic clays (A-7-5), with some wet sandy gravels (A-1-b and A-2-4).

Areas of wet, low strength, compressible peat and wet organic materials were encountered between Ramp C stations 23+00 and 27+30, Ramp D stations 27+40 to 32+50, and Graham Road stations 115+00 to 119+00.

An apparent artesian condition was encountered between Graham Road stations 111+00 and 115+00.

Wet materials were also encountered at Graham Road station 115+50 and Ramp C stations 23+32 and 24+00.

LEGEND FOR PROJECT AVERAGE RESULTS OF TESTS — 127 SAMPLES TESTED

DESCRIPTION	H.R.B. CLASS	OHIO CLASS	% AGG.	% C. SAND	% F. SAND	% SILT	% CLAY	LIQUID LIMIT	PLASTICITY INDEX	WATER CONTENT	SAMPLES TESTED
Gravel	A-1-a(0)	A-1-a	56	20	13	-	11 -	NP	NP	15	4
Gravel with sand	A-1-b(0)	A-1-b	35	31	22	-	12 -	NP	NP	16	11
Fine sand	A-3(0)	A-3	4	36	57	-	4 -	NP	NP	22	-
Coarse and fine sand	----	A-3a	25	24	32	10	9	NP	NP	17	2
Gravel with sand and silt	A-2-4(0)	A-2-4	40	14	18	14	14	24	5	18	9
Gravel with sand, silt and clay	A-2-6(1)	A-2-6	43	15	15	11	16	32	15	17	5
Sandy silt	A-4(3)	A-4a	22	12	17	24	25	27	7	18	18
Silt	A-4(8)	A-4b	3	4	9	63	24	13	4	18	-
Silt and clay	A-6(9)	A-6a	11	5	10	34	40	30	12	22	47
Silty clay	A-6(11)	A-6b	11	6	10	33	40	38	13	28	4
Elastic clay	A-7-5(19)	A-7-5	11	6	13	35	35	73	32	44	16
Clay	A-7-6(18)	A-7-6	9	4	9	40	38	52	30	43	7
Bouldery zone	Random fill				VISUAL CLASSIFICATION						
Fine-textured peat					VISUAL CLASSIFICATION						3
Sedimentary peat					VISUAL CLASSIFICATION						
Weathered sandstone					VISUAL CLASSIFICATION						1
Sandstone					VISUAL CLASSIFICATION						
Various other materials					VISUAL CLASSIFICATION						

Topsoil=X'=Approximate depth.

Auger boring-plan view.

Drive sample and/or core boring-plan view.

Auger boring plotted to vertical scale only.

Drive sample and/or core boring plotted to vertical scale only.

Water content nearly equal to or greater than liquid limit.

Indicates a non-plastic material with a high water content.

Free water.

Number of blows for "Standard Penetration" test.
X=number of blows for first 6 inches.
Y=number of blows for second 6 inches.

NOTE: Figures beside borings indicate water content in percent, e.g. 15

SOIL PROFILE
SUMMIT COUNTY
SUM-8-17.63
SUPPLEMENT

OHIO STATE HIGHWAY TESTING LABORATORY
1620 W. BROAD ST. COLUMBUS 23, OHIO

23 / 37

1 / 8

NOTE: INFORMATION SHOWN BY THIS SUBGRADE PROFILE WAS OBTAINED SOLELY FOR USE IN ESTABLISHING DESIGN CONTROLS FOR THE PROJECT. THE STATE OF OHIO DOES NOT GUARANTEE THE ACCURACY OF THIS DATA AND IT IS NOT TO BE CONSTRUED AS A PART OF THE PLANS GOVERNING CONSTRUCTION OF THE PROJECT.

FED. NO. U-

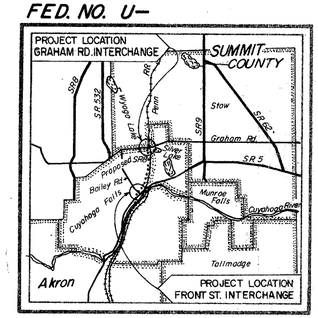

LOCATION MAP

Recon - J.S.M. - 2/22/66

Auger - T.R.S. - L.M.D. - 2/3/66, 2/22/66

2/23/66, 5/9/66 - 5/10/66

Drafting - A.D.B - 6/8/66

PROJECT INDEX

STATIONS FROM	STATIONS TO	PLAN VIEW SHEET	PROFILE SHEET	CUT MAX.	FILL EMB. MAX.
FRONT STREET INTERCHANGE					
Ramp L					
5+00	14+00	3	4	28'	-
Ramp M					
2+00	14+00	3	4	26'	5'
Ramp N					
51+00	59+00	3	4	19'	-
Ramp P					
53+00	63+00	3	4	23'	-
Second Street					
4+00	12+00	3	4	3'	6'
Ramp Q					
70+00	73+00	3	4	12'	-
GRAHAM ROAD INTERCHANGE					
Graham Road					
101+00	124+50	5	6	-	21'
Ramp A					
331+45	338+50	5	6	16'	-
Ramp B					
34+50	41+00	5	6	3'	-
Ramp C					
20+00	28+00	5	6	17'	26'
Ramp D					
27+00	38+00	5	6	15'	13'

SOIL PROFILE
SUMMIT COUNTY
SUM-8-17.63
SUPPLEMENT
OHIO STATE HIGHWAY TESTING LABORATORY
1620 W. BROAD ST. COLUMBUS 23, OHIO

9/37

2/8

SUMMARY OF SOIL TEST DATA

NOTE: NP shown in Liquid Limit and Plasticity Index columns indicates that the material is non-plastic.
*Denotes sample taken at or near grade.

STATION & OFFSET		DEPTH FROM	TO	% AGG.	% C.S.	% F.S.	% SILT	% CLAY	L.L.	P.I.	% W.C.	SHTL CLASS.
						SR 8						
258+00	CL	0.0-	5.0	13	6	26	30	25	22	7	11	A-4a
271+50	30'Rt	0.0-	5.0	7	8	28	36	21	22	6	16	A-4a
		5.0-	9.0	5	4	34	36	21	19	5	15	A-4a
276+00	10'Rt	0.0-	5.0	18	10	19	28	25	24	7	17	A-4a
		5.0-	9.0	(5	7	50	23	15	NP	NP	19)	
				Brown Weathered Sandstone								Visual
321+50	CL	0.0-	6.0	23	28	27	10	12	22	5	10	A-1-b
		6.0-	9.0	10	40	35	-	15 -	NP	NP	20	A-1-b
		9.0-	15.0	5	5	9	38	43	29	11	16	A-6a
		15.0-	20.0	8	9	14	34	35	27	11	16	A-6a
328+35	25'Rt	0.0-	6.0	30	19	14	21	16	30	11	11	A-6a
		6.0-	11.0	(31	15	13	21	19	39	16	37)	
				Brownish-Gray Silty Clay W/Cinders, Glass, and Gravel								Visual
		11.0-	16.0	20	6	11	29	34	33	12	17	A-6a
		16.0-	21.0	25	39	27	-	9 -	NP	NP	17	A-1-b
		21.0-	26.0	13	40	36	-	11 -	NP	NP	16	A-1-b
1036+00	CL	0.0-	5.0	7	15	22	34	24	23	5	2	A-4a
		5.0-	9.0	15	5	9	38	33	30	11	13	A-6a
		9.0-	15.0	9	6	13	31	41	24	11	13	A-6a
		15.0-	19.5	6	5	12	58	19	26	8	15	A-4b
		19.5-	23.0	0	13	64	12	11	NP	NP	6	A-3a
1036+00	45'Rt	0.0-	5.0	23	27	10	8	23	30	12	9	A-2-6
		5.0-	11.0	27	41	20	5	7	NP	NP	15	A-1-b
		11.0-	16.0	6	7	12	31	44	27	11	9	A-6a
		16.0-	22.0	7	6	9	44	34	25	11	13	A-6a
		22.0-	25.0	5	12	70	5	8	NP	NP	13	A-3a
1036+50	150'Lt	0.0-	4.0	0	1	4	49	46	31	11	21	A-6a
		4.0-	10.0	17	4	9	38	32	25	11	18	A-6a
1036+50	90'Lt	0.0-	5.0	0	9	20	49	22	33	50	74	A-7-5
		5.0-	11.0	Gray Silty Sedimentary Peat							97	Visual
		11.0-	14.0	0	2	8	65	28	NP	NP	20	A-4b
		14.0-	19.0	7	5	10	41	37	26	11	20	A-6a
1037+50	150'Lt	0.0-	6.0	Dark-Brown and Gray Silty Sedimentary Peat							83	Visual
		6.0-	11.0	3	48	19	15	9	NP	NP	25	A-1-b
1040+00	CL	0.0-	3.0	6	24	33	6	31	42	22	11	A-7-6
		3.0-	9.0	11	7	15	34	33	27	11	24	A-6a
		9.0-	12.0	0	6	12	41	41	26	11	15	A-6a
				GRAHAM ROAD INTERCHANGE								
				Graham Road								
107+00	15'Rt	0.0-	4.0	20	8	11	32	29	32	13	15	A-6a
		4.0-	9.0	57	10	10	11	12	27	13	15	A-6a
		9.0-	12.0	10	4	9	33	44	27	11	12	A-6a
115+50	40'Lt	0.0-	3.0	31	9	9	23	28	23	9	15	A-4a
		3.0-	6.0	32	19	15	15	19	27	8	17	A-4a
		6.0-	12.0	19	14	20	22	25	23	10	21	A-4a
		12.0-	17.0	32	14	21	16	17	24	7	21	A-2-4
		17.0-	21.0	10	7	12	30	38	28	11	18	A-6a

STATION & OFFSET		DEPTH FROM	TO	% AGG.	% C.S.	% F.S.	% SILT	% CLAY	L.L.	P.I.	% W.C.	SHTL CLASS.
116+50	50'Lt	0.0-	4.0	18	7	13	32	30	27	11	14	A-6a
		4.0-	7.0	0	6	5	37	52	33	51	43	A-7-5
		7.0-	11.0	8	7	20	31	34	31	12	26	A-6a
		11.0-	15.0	0	4	9	45	42	33	51	70	A-7-5
		15.0-	18.0	0	2	8	50	40	40	10	37	A-6b
		18.0-	23.0	0	3	5	42	50	35	32	35	A-7-6
		23.0-	30.0	3	4	7	41	40	27	11	18	A-6a
117+50	40'Lt	0.0-	5.0	0	2	10	33	44	37	11	30	A-6a
		5.0-	9.0	0	4	18	41	37	61	23	50	A-7-5
		9.0-	15.0	0	4	13	34	49	40	15	40	A-6a
		15.0-	20.0	0	2	8	49	41	32	11	39	A-6a
		20.0-	25.0	0	5	15	37	44	35	13	41	A-6a
		25.0-	30.0	0	3	10	46	41	32	11	37	A-6a
119+00	30'Lt	0.0-	2.0	24	19	10	26	15	20	6	16	A-4a
		2.0-	6.0	17	7	13	22	41	39	17	26	A-6b
		6.0-	9.0	9	7	14	32	38	31	13	18	A-6a
		9.0-	13.0	28	30	25	-	17 -	NP	NP	11	A-1-b
		13.0-	18.0	27	29	28	-	11 -	NP	NP	13	A-1-b
		18.0-	25.0	30	16	42	-	12 -	NP	NP	12	A-3a
						RAMP A						
332+75	BL	0.0-	6.0	48	22	16	-	14 -	NP	NP	15	A-1-b
		6.0-	9.0	44	21	21	-	14 -	NP	NP	22	A-1-b
		9.0-	14.0	29	9	10	30	37	25	11	17	A-6a
		14.0-	20.0	0	6	15	31	48	26	11	15	A-6a
335+00	BL	0.0-	5.0	0	8	11	34	47	29	11	21	A-6a
		5.0-	11.0	12	5	8	37	38	25	11	18	A-6a
		11.0-	15.0	16	8	13	31	32	25	11	12	A-6a
						RAMP B						
37+50	BL	1.0-	6.0	0	4	11	39	46	28	11	17	A-6a
		6.0-	9.0	0	6	8	42	45	27	11	15	A-6a
		9.0-	**15.0**	24	6	13	27	30	23	7	17	A-4a
						RAMP C						
22+50	BL	0.0-	4.0	33	23	21	6	17	28	12	12	A-2-6
		4.0-	10.0	9	7	22	32	30	23	5	18	A-4a
23+32	47'Rt	0.0-	2.0	21	14	23	27	15	NP	NP	23	A-4a
		2.0-	4.0	0	8	23	37	32	25	7	9	A-4a
		4.0-	6.0	46	13	15	14	12	NP	NP	27	A-2-4
24+00	BL	0.0-	5.0	15	3	9	33	40	35	16	25	A-6b
		5.0-	11.0	48	15	8	17	12	26	5	23	A-2-4
		11.0-	15.0	0	7	14	41	38	24	6	15	A-4a
24+00	50'Rt	0.0-	3.0	0	2	16	41	41	63	35	40	A-7-6
		3.0-	7.0	47	24	16	-	13 -	NP	NP	13	A-1-b
		7.0-	13.0	0	2	5	61	32	43	19	35	A-7-5
		13.0-	19.0	35	39	17	-	9 -	NP	NP	17	A-1-b
25+00	BL	0.0-	5.0	0	5	14	37	44	28	11	15	A-6a
		5.0-	10.0	0	0	2	41	57	33	11	26	A-6a
		10.0-	16.0	7	4	8	36	45	28	11	18	A-6a
		16.0-	20.0	34	11	23	17	15	15	2	18	A-2-4
25+00	50'Rt	0.0-	5.0	46	12	16	14	12	24	8	23	A-2-4
		5.0-	8.0	15	4	9	35	37	38	15	40	A-6a
		8.0-	13.0	54	19	14	-	13 -	NP	NP	14	A-1-a
		13.0-	16.0	56	18	13	-	13 -	NP	NP	16	A-1-a
		16.0-	21.0	11	7	8	36	38	26	11	18	A-6a

STATION & OFFSET		DEPTH FROM	TO	% AGG.	% C.S.	% F.S.	% SILT	% CLAY	L.L.	P.I.	% W.C.	SHTL CLASS.
26+50	BL	0.0-	4.0	0	3	8	41	48	32	11	22	A-6a
		4.0-	7.0	19	11	13	21	36	28	11	25	A-6a
		7.0-	12.0	15	10	14	18	43	36	20	22	A-6b
		12.0-	15.0	36	9	12	23	20	25	11	20	A-6a
		15.0-	20.0	23	10	10	28	29	24	6	17	A-4a
		20.0-	23.0	14	5	8	39	34	23	11	16	A-6a
26+50	50'Rt	0.0-	6.0	Black Fine-Textured Peat							210	Visual
		6.0-	10.0	0	0	7	54	39	69	35	63	A-7-5
		10.0-	16.0	0	2	12	49	37	84	42	63	A-7-5
		16.0-	21.0	0	2	9	50	39	70	31	76	A-7-5
		21.0-	26.0	0	1	3	47	49	76	49	64	A-7-6
		26.0-	30.0	59	18	12	-	11 -	NP	NP	15	A-1-a
27+30	45'Rt	0.0-	3.0	0	24	38	17	21	66	26	64	A-7-5
		3.0-	6.0	40	9	20	17	14	43	22	31	A-2-7
		6.0-	11.0	33	12	16	21	18	32	11	15	A-6a
		11.0-	16.0	22	54	15	-	9 -	NP	NP	19	A-1-b
		16.0-	21.0	19	32	22	15	12	NP	NP	21	A-3a
		21.0-	25.0	49	26	16	-	9 -	NP	NP	20	A-1-b
						RAMP D						
28+50	40'Rt	0.0-	4.0	0	2	9	41	48	88	26	65	A-7-5
		4.0-	10.0	34	6	12	24	24	64	33	54	A-7-5
		10.0-	15.0	20	8	11	31	30	40	11	45	A-6a
		15.0-	20.0	21	8	15	28	28	46	16	58	A-7-5
		20.0-	26.0	20	7	10	28	35	36	11	43	A-6a
		26.0-	30.0	0	2	4	48	46	36	14	39	A-6a
29+00	CL	0.0-	3.0	12	6	25	28	29	23	5	13	A-4a
		3.0-	8.0	5	4	7	40	44	30	11	13	A-6a
		8.0-	9.0	24	22	12	18	24	28	9	13	A-4a
		9.0-	11.0	0	3	13	43	41	90	33	49	A-7-5
		11.0-	13.0	40	9	12	12	19	34	8	14	A-4a
		13.0-	17.0	Brown Fine-Textured Peat							72	Visual
		17.0-	22.0	Brown Fine-Textured Peat							120	Visual
		22.0-	26.0	21	8	10	30	25	66	32	56	A-7-5
		26.0-	30.0	0	4	6	40	50	36	11	44	A-6a
29+25	50'Rt	0.0-	6.0	34	9	14	13	24	30	10	17	A-4a
		6.0-	11.0	35	7	7	24	27	69	41	42	A-7-6
		11.0-	16.0	39	8	10	19	24	73	36	60*	A-7-5
		16.0-	21.0	0	8	16	37	39	69	31	41	A-7-6
		21.0-	27.0	27	8	9	27	29	68	31	41	A-7-6
		27.0-	30.0	0	3	5	43	49	37	13	37	A-6a
30+00	25'Rt	0.0-	5.0	14	6	13	26	41	31	12	18	A-6a
		5.0-	10.0	14	5	10	33	38	27	11	15	A-6a
		10.0-	15.0	21	9	13	27	31	26	11	20	A-6a
		15.0-	19.0	0	2	6	41	51	82	33	42	A-7-5
		19.0-	22.0	Black Fine-Textured Peat							132	Visual
		22.0-	26.0	44	9	8	14	25	44	14	44	A-7-5
		26.0-	30.0	29	8	8	23	32	38	13	31	A-6a
31+00	BL	0.0-	5.0	14	6	9	23	42	23	11	14	A-6a
		5.0-	10.0	43	14	16	10	17	23	12	10	A-2-6
		10.0-	14.0	41	17	13	10	19	28	9	16	A-2-4
		14.0-	19.0	20	9	15	27	29	24	24	49	A-7-5
		19.0-	25.0	55	25	13	-	7 -	NP	NP	16	A-1-a
32+00	20'Rt	0.0-	4.0	30	12	12	10	27	28	10	14	A-4a
		4.0-	7.0	24	8	10	25	33	30	11	15	A-6a
		7.0-	10.0	32	14	17	5	32	27	9	14	A-4a

STATION & OFFSET		DEPTH FROM	TO	% AGG.	% C.S.	% F.S.	% SILT	% CLAY	L.L.	P.I.	% W.C.	SHTL CLASS.
32+50	BL	0.0-	2.0	43	10	13	16	18	26	7	11	A-2-4
		2.0-	7.0	12	8	13	34	33	15	20	20	A-6a
		7.0-	12.0	24	17	21	18	20	26	9	17	A-4a
		12.0-	16.0	43	20	13	10	14	26	3	12	A-2-4
		16.0-	19.0	42	19	9	12	18	33	15	19	A-2-6
		19.0-	21.0	14	4	10	36	36	25	11	19	A-6a
33+50	BL	0.0-	4.0	5	3	11	36	45	31	11	18	A-6a
		4.0-	7.0	9	4	8	34	45	30	11	16	A-6a
		7.0-	9.0	27	4	10	27	32	27	11	15	A-6a
		9.0-	13.0	16	14	23	19	28	24	7	17	A-4a
		13.0-	18.0	22	29	35	-	14 -	NP	NP	9	A-1-b
		18.0-	22.0	35	29	22	-	14 -	NP	NP	21	A-1-b
35+00	BL	0.0-	4.0	25	43	24	-	8 -	NP	NP	12	A-1-b
		4.0-	10.0	15	4	9	25	47	23	12	13	A-6a
		10.0-	16.0	28	17	32	-	23 -	NP	NP	10	A-2-4
						DRIVE SAMPLE SOIL TEST DATA						
						SR 3						
246+30	130'Lt	2.5-	3.5	0	8	43	25	24	NP	NP	17	A-4a
262+10	CL	2.5-	3.5	14	10	21	25	30	28	10	18	A-4a
		10.0-	11.0	18	17	17	24	24	25	10	21	A-4a
270+95	CL	5.0-	6.0	17	4	20	34	25	19	3	16	A-4a
		7.5-	8.5	11	6	33	32	18	NP	NP	14	A-4a
						Second Street						
5+75	5'Rt	2.5-	3.5	22	6	31	23	18	19	2	16	A-4a
		5.0-	5.4	16	5	49	20	10	NP	NP	12	A-3a
						Graham Road						
111+48	37'Lt	5.0-	6.0	7	6	13	31	43	32	11	16	A-6a
		7.5-	8.5	12	4	10	30	44	29	13	13	A-6a
		10.0-	11.0	46	18	17	11	8	NP	NP	10	A-1-b
		12.5-	13.5	43	28	18	-	11 -	NP	NP	8	A-1-b
		15.0-	16.0	23	32	24	-	21 -	NP	NP	5	A-1-b
		20.0-	21.0	40	24	18	-	18 -	NP	NP	7	A-1-b
		25.0-	26.0	27	43	20	-	10 -	NP	NP	10	A-1-b
		35.0-	36.0	68	8	19	-	5 -	NP	NP	8	A-1-a
114+45	13'Rt	5.0-	6.0	17	4	9	32	38	26	8	16	A-4a
		7.5-	8.5	17	5	9	31	38	28	9	15	A-4a
		10.0-	11.0	22	4	8	29	37	27	11	15	A-6a
		12.5-	13.5	9	5	10	39	46	25	9	15	A-4a
		15.0-	16.0	48	23	21	-	8 -	NP	NP	9	A-1-b
		20.0-	21.0	25	31	35	-	9 -	NP	NP	15	A-1-b
		30.0-	31.0	14	20	61	-	5 -	NP	NP	19	A-3
		35.0-	35.2	0	44	49	-	7 -	NP	NP	19	A-3
		40.0-	41.0	0	51	46	-	3 -	NP	NP	27	A-3
		45.0-	46.0	0	28	71	-	1 -	NP	NP	22	A-3
		50.0-	51.0	29	43	25	-	3 -	NP	NP	15	A-1-b

SOIL PROFILE
SUMMIT COUNTY
SUM-8-17.63
SUPPLEMENT

OHIO STATE HIGHWAY TESTING LABORATORY
1620 W. BROAD ST. COLUMBUS 23, OHIO

10/37

3/8

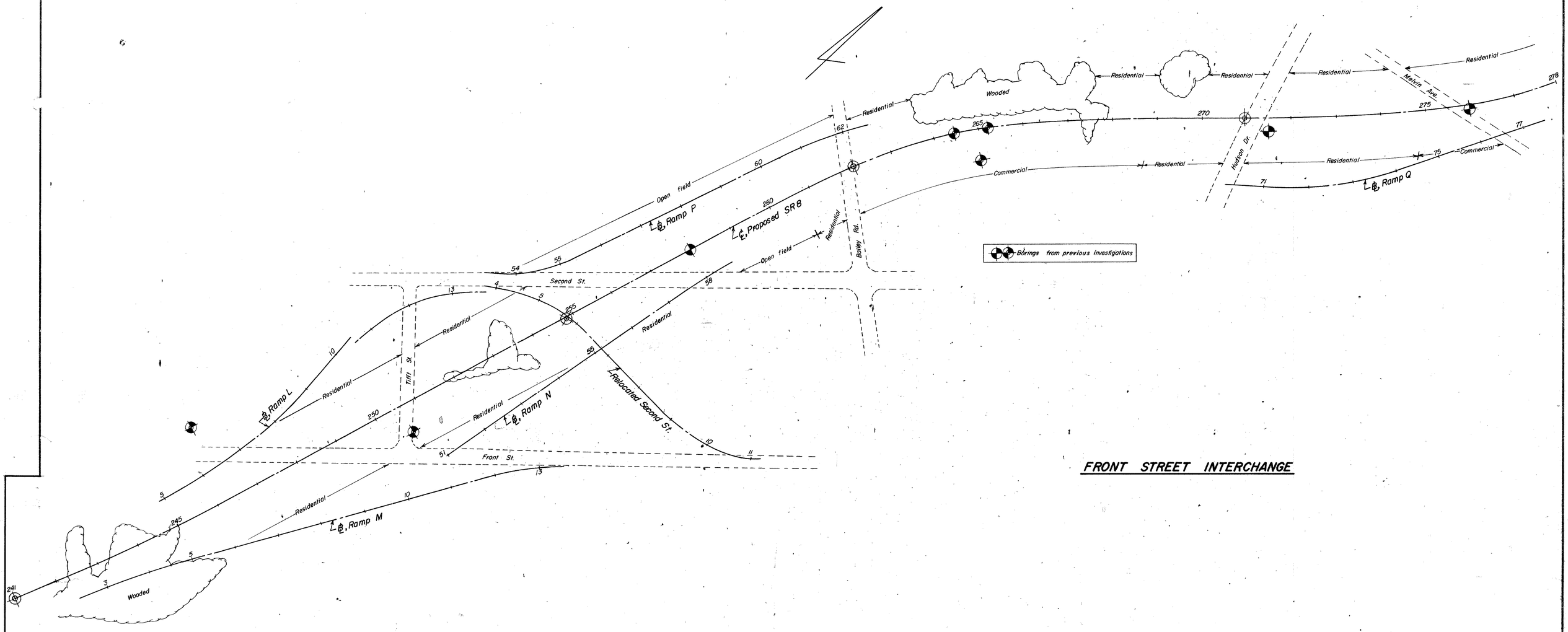

FRONT STREET INTERCHANGE

SOIL PROFILE
SUMMIT COUNTY
SUM-8-17.63
SUPPLEMENT

OHIO STATE HIGHWAY TESTING LABORATORY
1620 W. BROAD ST. COLUMBUS 23, OHIO

11 / 37

4 / 8

Ramp M

A. Sandstone, brown, fine-grained, firm, with some shale stringers, slightly weathered and friable, slightly broken in part. Core loss 4%.

B. Conglomeratic sandstone, brown, with many quartz pebbles (sub-rounded, maximum 0.2' thick) in a fine sand matrix, firm, jointed and broken in part, slightly weathered and friable. No core loss.

C. Sandstone, gray, fine-grained, firm, with few carbonaceous shale stringers, very slightly weathered and friable. No core loss.

(Sta. 241+00 ℄, Proposed SR 8) 57' Lt.
Brown sand
Top of Rock

Sandstone, brown, medium-grained, firm, with few scattered quartz pebbles, slightly weathered and friable, very badly broken in top 5.0'. Core loss 40%.

Sandstone, mottled dark-brown and tan, medium-grained, firm, with few quartz and shale pebbles, slightly weathered and friable. No core loss.

Sandstone, gray, fine-grained, massive, firm. Core loss 1%.

No recovery from 25.0' to 30.0' due to mechanical difficulties. Core loss 100%.

(Sta. 250+60, 65' Rt. Proposed SR 8) 142' Lt.
Bituminous Pavement and sand
Top of Rock

A.
B.
C.

Second Street

5' Rt.
16 (7/9)
12 (50/4")
Top of Rock

* Refusal

Sandstone, brown, medium-grained, firm, with few scattered pebbles (sub-rounded, max. 0.4" thick); slightly friable, jointed, and weathered. Core loss 11%.

Ramp Q

(Sta. 270+95 ℄, Proposed SR 8) 150' Lt.
16 (7/10)
14 (20/11)
Top of Rock

(Sta. 271+50, 30' Rt. Proposed SR 8) 123' Lt.
16
15
Refusal

Sandstone, brown, medium-grained, firm, with few scattered quartz pebbles (max. 1.0" thick), slightly friable, jointed, and weathered. No core loss.

(Sta. 276+00, 10' Rt. Proposed SR 8) 75' Lt.
17
19
Refusal

Ramp L

A. Sandstone, brown, fine-grained, thin-bedded, firm, slightly weathered and friable, jointed and broken in part, with few scattered quartz pebbles. Core loss 12%.

B. Conglomeratic sandstone, brown, with quartz pebbles (sub-rounded, maximum 0.2' thick) in a coarse-grained matrix, firm, slightly weathered. Core loss 21%.

C. Sandstone, brown, fine-grained, firm, with carbonaceous shale stringers in part. No core loss.

(Sta. 246+30, 180' Lt. Proposed SR 8) 105' Lt.
17
Top of Rock

A.
B.
C.

Ramp N

(Sta. 250+60, 65' Rt. Proposed SR 8) 87' Lt.
Bituminous Pavement and sand
Top of Rock

A.
B.
C.

For complete log of boring, see Ramp M of this sheet.

(Sta. 5+75, 5' Rt. Relocated Second St.) 100' Lt.
16 (7/9)
12 (50/4")
Top of Rock

* Refusal

Sandstone, brown, medium-grained, firm, with few scattered pebbles (sub-rounded, max. 0.4" thick); slightly friable, jointed, and weathered. Core loss 11%.

(Sta. 258+00 ℄, Proposed SR 8) 70' Lt.
11
Refusal

Ramp P

(Sta. 5+75, 5' Rt. Relocated Second St.) 122' Rt.
16 (7/9)
12 (50/4")
Top of Rock

* Refusal

Sandstone, brown, medium-grained, firm, with few scattered pebbles (sub-rounded, max. 0.4" thick); slightly friable, jointed, and weathered. Core loss 11%.

(Sta. 258+00 ℄, Proposed SR 8) 98' Rt.
91
Refusal

Brown clayey silty sand and gravel
Top of Rock

Sandstone, brown, fine-grained, jointed, firm, slightly friable, with few interbedded quartz pebbles in bottom 4.0'. Core loss 6%.

(Sta. 262+10 ℄, Proposed SR 8) 82' Rt.
18 (12/11)
21 (9/10)

SOIL PROFILE
SUMMIT COUNTY
SUM-8-17.63
SUPPLEMENT

OHIO STATE HIGHWAY TESTING LABORATORY
1620 W. BROAD ST. COLUMBUS 23, OHIO

12/37

5/8

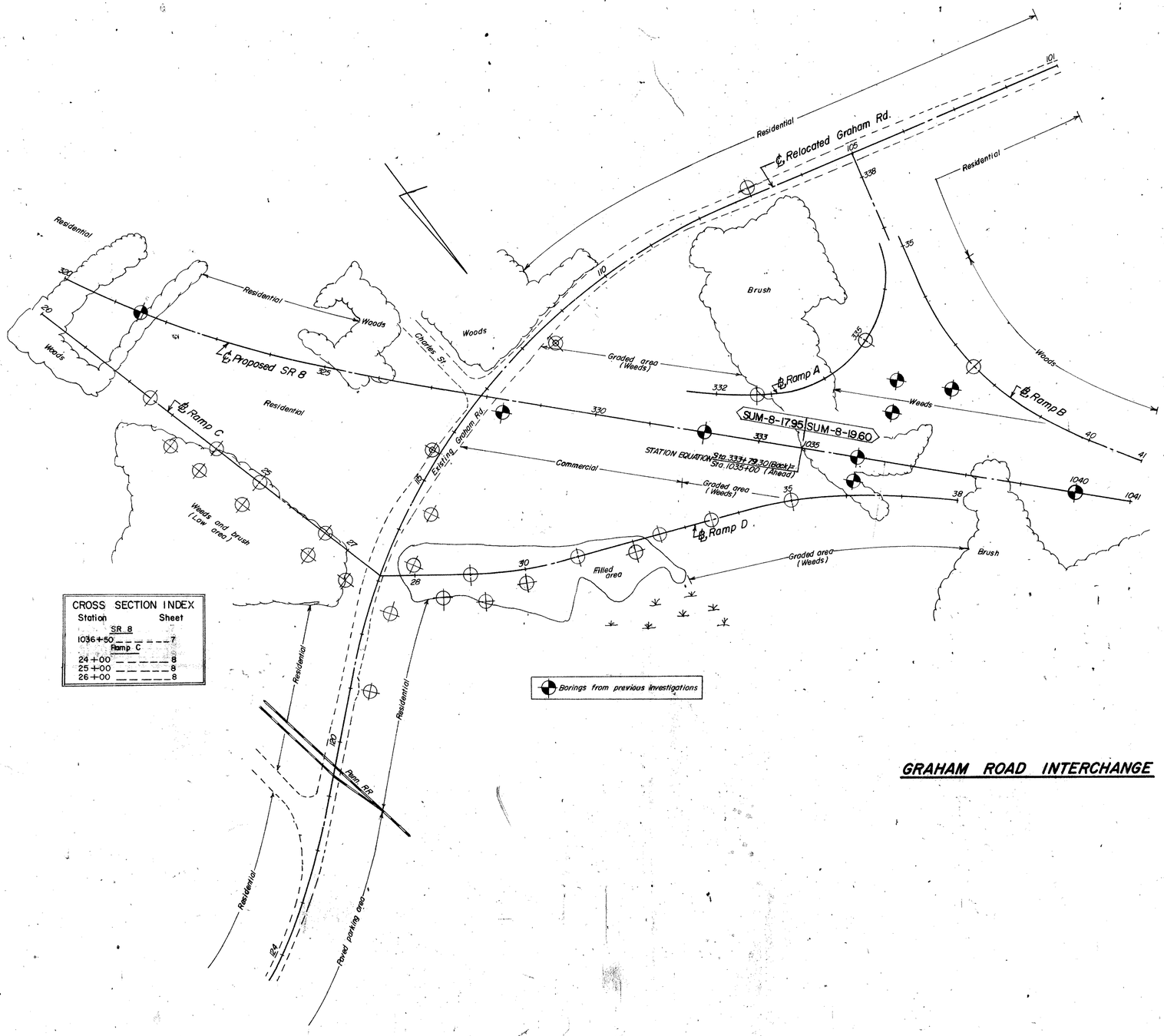

CROSS SECTION INDEX

Station	Sheet
SR 8	
1036+50	7
Ramp C	
24+00	8
25+00	8
26+00	8

Borings from previous investigations

GRAHAM ROAD INTERCHANGE

SOIL PROFILE
SUMMIT COUNTY
SUM-8-17.63
SUPPLEMENT

OHIO STATE HIGHWAY TESTING LABORATORY
1620 W. BROAD ST. COLUMBUS 23, OHIO

13 / 37

6 / 8

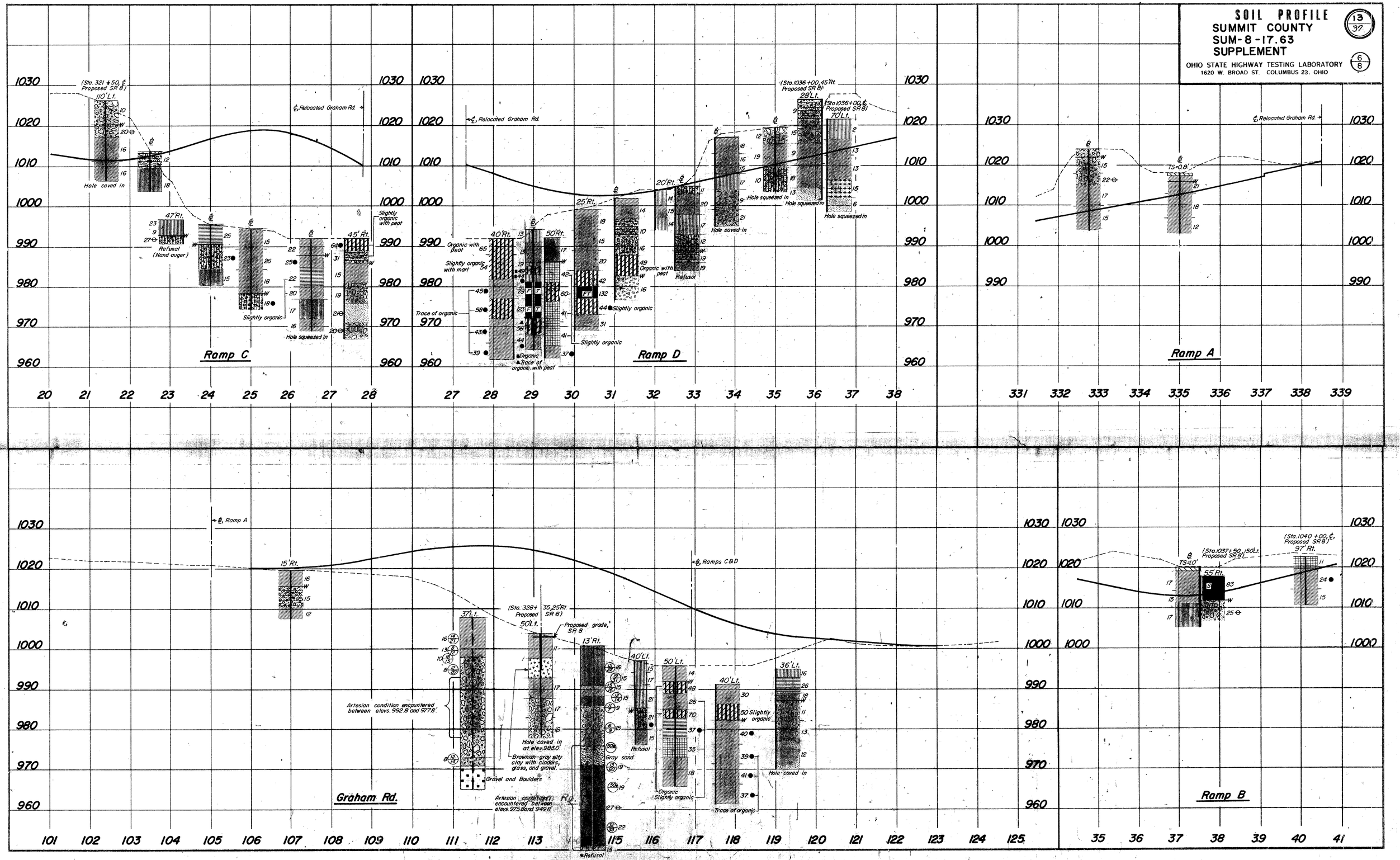

SOIL PROFILE

SUMMIT COUNTY

SUM-8-17.63

SUPPLEMENT

OHIO STATE HIGHWAY TESTING LABORATORY

1620 W. BROAD ST. COLUMBUS 23, OHIO

14/37

7/8

Proposed SR 8

Sta. 1036+50

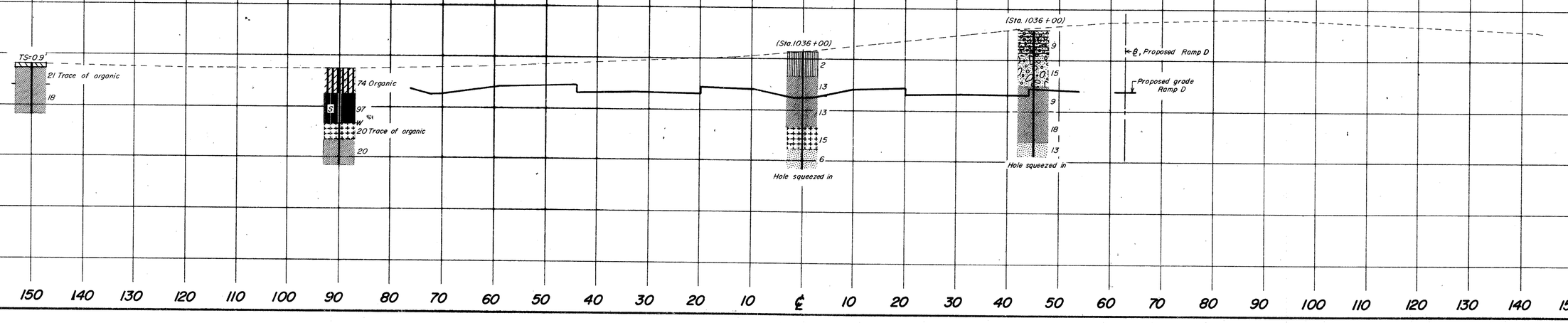

SOIL PROFILE

SUMMIT COUNTY

SUM- 8-17.63

SUPPLEMENT

OHIO STATE HIGHWAY TESTING LABORATORY

1620 W. BROAD ST. COLUMBUS 23. OHIO

(15/37)

(8/8)

Ramp C Sta.24+00

Proposed grade Ramp C

Approximate ground line

Slightly organic

Organic

25 W 23 15

40 W 13 35 17

Ramp C Sta.25+00

Proposed grade Ramp C

Approximate ground line

Trace of organic

15 26 18 W 18

TS=0.8 W 23 40 14 6 18

Ramp C Sta.26+50

Proposed grade Ramp C

Approximate ground line

Organic

Organic

Organic

Organic

Slightly organic

Slightly organic

Hole squeezed in

22 W 25 22 20 17 16

210 171 63 W 63 76 64 15

TE - 118
600 - 11 - 64

RECEIVED
MAR 05 1970
DEPT. OF HIGHWAYS

SUMMIT COUNTY
SUM-8-17.63

16
37
1
2

GEOLOGY OF THE SITE
The structure site is located in the glaciated moderately rolling portion of the Allegheny Plateau Region, over the Cuyahoga River, in an area where thin to absent glacial drift overlies sandstone bedrock, of Mississippian age.

EXPLORATION
The exploration consisted of two drive sample-core borings, made in conjunction with the roadway foundation investigation.

INVESTIGATIONAL FINDINGS
The borings disclosed that sloping bedrock surface, encountered at 3 and 5-foot depths, elevations 1001 and 994 feet, is overlain by sand and sandstone fragments. The borings were terminated 28 and 35 feet below bedrock surface, elevation 966 feet.

If it is the intention to found substructure units on bedrock, it is considered advisable that the open excavations be inspected in the field, in order to insure that the excavations have been extended to rock throughout the entire founding area.

Unconfined compression tests on similar Sandstone bedrock indicates a crushing strength on the order of 150 tons per square foot.

LEGEND

- Auger Boring Location - Plan View.
- Press and / or Drive Sample and / or Core Boring Location - Plan View.
- Drive Rod Penetration Resistance Sounding Location - Plan View.
- Capped Pile
- Footing
- Footing on Pile
- TR — Top of Rock
- Horizontal Bar on Boring Log Indicates the Depth the Sample Was Taken.
- X/Y — Figures Beside the Boring Log in Profile Indicate the Number of Blows for Standard Penetration Test.
  X = Number of Blows for First 6 inches.
  Y = Number of Blows for Second 6 inches.
- Drive Rod Penetration Resistance Sounding Log - Profile
- Casing
- Resistance "R" < 10,000 lbs.
- Resistance "R" > 10,000 lbs.
- Z — Indicates Final Measurement of Penetration, in Inches.
- W — Indicates Free Water Elevation.
- Indicates Static Water Elevation.

SYMBOLS OF ROCK TYPES

- Coal
- Weathered Indurated Clay
- Indurated Clay
- Weathered Shale
- Shale
- Weathered Sandstone
- Sandstone
- Leached Dolomite
- Dolomite
- Leached Limestone
- Limestone

GENERAL INFORMATION

Drive Rod Penetration Sounding Tests

Drive rod penetration resistance tests constitute driving a 1.315-inch diameter steel rod, with a 45° cone point, into the ground, using a 122-pound drop-hammer with a free fall of five feet. At one or two-foot depth intervals, a measurement is taken to determine the amount of penetration achieved in three hammer drops. This reading is converted to an empirical value for capacity "R", in thousands of pounds (which is a measure of both the point resistance and frictional resistance on the rod), by using charts prepared by the Ohio Department of Highways, Bureau of Bridges, on the basis of correlation study of rod penetration with past performance of pile driving. For interpretation, a graph is prepared by plotting the value "R" against the depth at which the reading was taken, and connecting the plotted points. The curve so obtained reflects the density of subsurface materials in a manner that can be readily compared with data from similar tests at other locations on the structure site. From this comparison, the overall uniformity of subsurface condition may be evaluated.

Drive Sample Borings - Drive-Press Sample Borings

Drive sample borings are made by means of a rotary-type drill rig, employing a 2" O.D., 1-3/8" I.D. sampler, at 2-1/2 and / or 5-foot depth intervals, driven by means of a 140 - pound drop-hammer with a free fall of 30 inches. The number of blows required to drive the sampler 12 inches is considered the standard penetration test.

Drive-press sample borings are made by means of a rotary-type drill rig, employing a 2" O.D., 1-3/8" I.D. drive sampler, and 3" O.D. thin-wall press sampler. The press sampler is advanced by continuous uniform pressure, applied by the drill rig.

The boring log sheets show a graphic plot of the information obtained, including depth and elevation of the sample, number of blows for the standard penetration tests in two 6-inch increments, depth of press samples, field sample number, sample description - based on laboratory tests and the Casagrande AC classification system - and gradation, plasticity, and moisture content determinations. Results of strength and consolidation testing, if performed, appear on separate enclosures.

At depths where materials are bouldery or gravelly to the extent that the sampler can not be driven, a wash sample is procured for visual classification, in order to determine the general character of the material. These samples are not considered sufficiently representative to warrant laboratory testing.

Particle Size Definitions

Boulders	Cobbles	Gravel	Coarse Sand	Fine Sand	Silt	Clay
	8"	3"	2.0mm (No. 10 sieve)	0.42mm (No. 40 sieve)	0.074mm (No. 200 sieve)	0.005mm

Boring taken from SUM-8-17.57 (Preliminary) — LOG OF BORING
Date Started 11-16-65 — Sampler Type SS — Dia. 1 3/8" — Water Elev. —
Date Completed 11-17-65 — Casing: Length 5' — Dia. 3 1/2"
Boring No. B-1 — Station & Offset 233+85, 48' Rt. — Surface Elev. 1006.0'

Elev.	Depth	Std. Pen. (N)	Rec. ft.	Loss ft.	Description	Sample No.	% Agg	% C.S.	% F.S.	% Silt	% Clay	L.L.	P.I.	W.C.	SHTL Class.
1006.0	0														
	2														
1003.5	4	4/7			Brown Sandstone Fragments	1	40	5	37	10	8	NP	NP	19	
1000.8		50*(0.2)			Brown Sandstone Fragments	2	25	11	44	14	6	NP	NP	15	
	6				TOP OF ROCK										
	8		2.3	2.7	Sandstone, brown, medium-grained, firm, with few scattered quartz pebbles, slightly weathered and friable, firm, with few coal stringers in part, broken in top 10.0' Core Loss 10%										
	10														
	12														
	14		3.9	2.1											
	16														
	18		5.0	0.0											
	20														
	22		5.0	0.0											
	24														
	26		5.0	0.0											
	28														
	30														
	32		5.0	0.0											
	34														
	36														
	38		5.0	0.0											
966.0	40														

BOTTOM OF BORING *Refusal

Boring taken from SUM-8-17.57 (Preliminary) — LOG OF BORING
Date Started 11-9-65 — Sampler Type SS — Dia. 1 3/8" — Water Elev. —
Date Completed 11-16-65 — Casing: Length — Dia. —
Boring No. B-2 — Station & Offset 241+00, CL — Surface Elev. 996.2'

Elev.	Depth	Std. Pen. (N)	Rec. ft.	Loss ft.	Description	Sample No.	% Agg	% C.S.	% F.S.	% Silt	% Clay	L.L.	P.I.	W.C.	SHTL Class.
996.2	0				Brown Sand										
993.7	2				TOP OF ROCK										
992.7	4	15/23			Brown Broken Sandstone	1	20	9	53	10	8	NP	NP	7	
	6		0.4	1.1	Sandstone, brown, medium-grained, firm, with few scattered quartz pebbles, slightly weathered and friable, very badly broken in top 5.0' Core Loss 48%										
	8		2.8	2.2											
985.2	10														
	12		4.7	0.3	Sandstone, mottled dark-brown and tan, medium-grained, firm, with few quartz and shale pebbles, slightly weathered and friable. No Core Loss.										
	14														
	16														
	18		5.0	0.0											
976.7	20														
	22		4.8	0.2	Sandstone, gray, fine-grained, massive, firm. Core Loss 4%										
	24														
971.2	26														
	28		0.0	5.0	No recovery from 25.0' to 30.0' due to mechanical difficulties. Core Loss 100%										
966.2	30														

BOTTOM OF BORING

NOTE: Information shown by this subsurface investigation was obtained solely for the use in establishing design controls for the project. The State of Ohio does not guarantee the accuracy of this data and it is not to be construed as a part of the plans governing construction of the project.

OHIO DEPARTMENT OF HIGHWAYS
TESTING LABORATORY
1620 WEST BROAD STREET, COLUMBUS 23, OHIO

STRUCTURE FOUNDATION INVESTIGATION
BRIDGE NO. SUM-8-1772
SR 8 OVER CUYAHOGA RIVER
SEC. SUM-8-17.63

CHECKED BY	REVIEWED BY	DATE
R. H. P.	R. D. R.	4/27/66

TE - 121
200 - 11 - 64

MICROFILMED
MAR 05 1979
REPRODUCTION

17
37
2/2

SUM-8-17.63

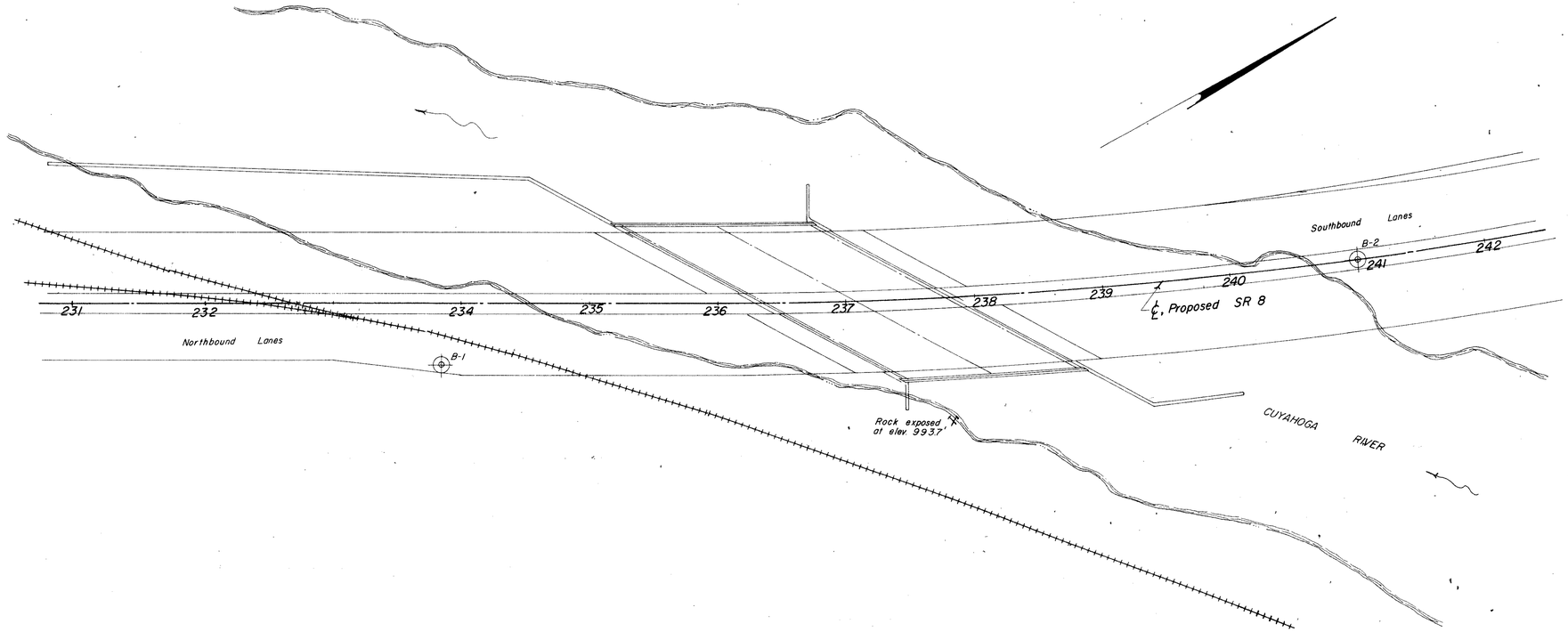

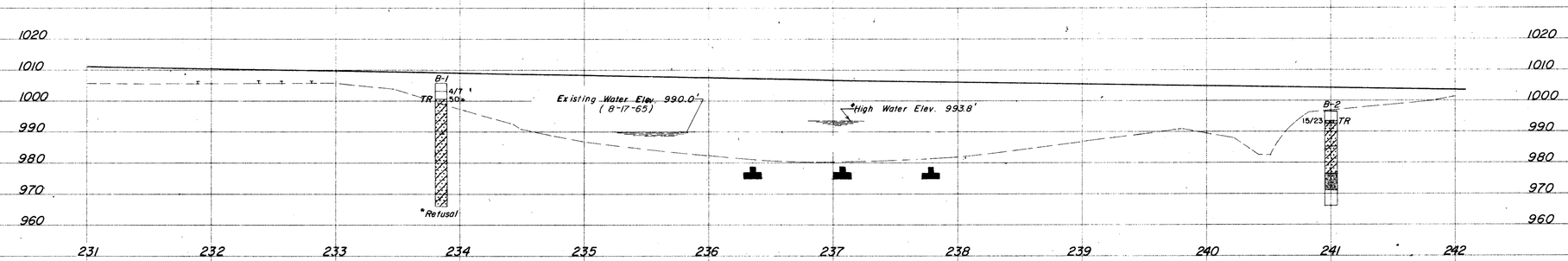

SCALE: HOR. = 1" = 50'
VERT. = 1" = 20'

OHIO DEPARTMENT OF HIGHWAYS
TESTING LABORATORY
1620 WEST BROAD STREET, COLUMBUS 23, OHIO

STRUCTURE FOUNDATION INVESTIGATION
BRIDGE NO. SUM-8-1772
SR 8 OVER CUYAHOGA RIVER
SEC. SUM-8-17.63

PLAN AND PROFILE

DRAWN BY	CHECKED BY	REVIEWED BY	DATE
R.L.F.	R.H.P.	R.D.R.	4/27/66

MAR 05

SUMMIT COUNTY
SUM – 8 – 17.63

GEOLOGY OF THE SITE

The structure site is located on a portion of the glaciated moderately rolling Allegheny Plateau, in an area where thin glacial drift overlies sandstone and sandstone conglomerate of the Sharon formation, Pennsylvanian age.

EXPLORATION

The exploration consisted of eight drive rod penetration tests, made on March 10 and 11, 1966. Also included in the report are the logs of borings made by means of rotary type drill rig, in conjunction with the roadway foundation investigation.

INVESTIGATIONAL FINDINGS

Borings disclosed that relatively flat-lying bedrock surface, encountered at 3 and 5-foot depths, elevation 1018 feet, is overlain by dense sandy silts and some clay. The borings were terminated 35 and 37 feet below bedrock surface, elevations 983 and 981 feet.

Rod soundings generally encountered rapid increase in penetration resistance with increase in depth and were terminated upon abrupt encounter with refusal to penetration at surface and 4 feet below ground surface, elevations 1024 to 1020 feet, considered to be on or immediately above bedrock surface.

No free water was observed in any of the rod sounding holes.

LEGEND

- Auger Boring Location - Plan View.
- Press and / or Drive Sample and / or Core Boring Location - Plan View.
- Drive Rod Penetration Resistance Sounding Location - Plan View.
- Capped Pile
- Footing
- Footing on Pile
- TR — Top of Rock
- Horizontal Bar on Boring Log Indicates the Depth the Sample Was Taken.
- X/Y — Figures Beside the Boring Log in Profile Indicate the Number of Blows for Standard Penetration Test.
  X = Number of Blows for First 6 inches.
  Y = Number of Blows for Second 6 inches.
- Drive Rod Penetration Resistance Sounding Log - Profile
- Casing
- Resistance "R" < 10,000 lbs.
- Resistance "R" > 10,000 lbs.
- Z — Indicates Final Measurement of Penetration, in Inches.
- W — Indicates Free Water Elevation.
- Indicates Static Water Elevation.

SYMBOLS OF ROCK TYPES

- Coal
- Weathered Indurated Clay
- Indurated Clay
- Weathered Shale
- Shale
- Weathered Sandstone
- Sandstone
- Leached Dolomite
- Dolomite
- Leached Limestone
- Limestone

GENERAL INFORMATION

Drive Rod Penetration Sounding Tests

Drive rod penetration resistance tests constitute driving a 1.315-inch diameter steel rod, with a 45° cone point, into the ground, using a 122-pound drop-hammer with a free fall of five feet. At one or two-foot depth intervals, a measurement is taken to determine the amount of penetration achieved in three hammer drops. This reading is converted to an empirical value for capacity "R", in thousands of pounds (which is a measure of both the point resistance and frictional resistance on the rod), by using charts prepared by the Ohio Department of Highways, Bureau of Bridges, on the basis of correlation study of rod penetration with past performance of pile driving. For interpretation, a graph is prepared by plotting the value "R" against the depth at which the reading was taken, and connecting the plotted points. The curve so obtained reflects the density of subsurface materials in a manner that can be readily compared with data from similar tests at other locations on the structure site. From this comparison, the overall uniformity of subsurface condition may be evaluated.

Drive Sample Borings - Drive-Press Sample Borings

Drive sample borings are made by means of a rotary-type drill rig, employing a 2" O.D., 1-3/8" I.D. sampler, at 2-1/2 and 5-foot depth intervals, driven by means of a 140 - pound drop-hammer with a free fall of 30 inches. The number of blows required to drive the sampler 12 inches is considered the standard penetration test.

Drive-press sample borings are made by means of a rotary-type drill rig, employing a 2" O.D., 1-3/8" I.D. drive sampler, and 3" O.D. thin-wall press sampler. The press sampler is advanced by continuous uniform pressure, applied by the drill rig.

The boring log sheets show a graphic plot of the information obtained, including depth and elevation of the sample, number of blows for the standard penetration tests in two 6-inch increments, depth of press samples, field sample number, sample description - based on laboratory tests and the Casagrande AC classification system - and gradation, plasticity, and moisture content determinations. Results of strength and consolidation testing, if performed, appear on separate enclosures.

At depths where materials are bouldery or gravelly to the extent that the sampler can not be driven, a wash sample is procured for visual classification, in order to determine the general character of the material. These samples are not considered sufficiently representative to warrant laboratory testing.

Particle Size Definitions

Boulders	Cobbles	Gravel	Coarse Sand	Fine Sand	Silt	Clay
8"	3"	2.0mm (No. 10 sieve)	0.42mm (No. 40 sieve)	0.074mm (No. 200 sieve)	0.005mm	

LOG OF BORING

Date Started 11-4-65 — Sampler Type SS — Dia 1 3/8" — Water Elev. —
Date Completed 11-5-65 — Casing Length 5' — Dia 3 1/2"
Boring No. B-2 — Station & Offset 47+23, 53' Lt. — Surface Elev. 1023.0'

Elev.	Depth	Std. Pen. (N)	Rec. ft.	Loss ft.	Description	Sample No.	Physical Characteristics: % Agg.	% C.S.	% F.S.	% Silt	% Clay	L.L.	P.I.	W.C.	SHTL Class.
1023.0	0														
	2														
1020.5	4	12/19			Brown Sandy Silt, with Some Clay	1	0	8	43	25	24	NP	NP	17	A-4a
1018.0	6				TOP OF ROCK										
	8		3.0	2.0	Sandstone, brown, fine-grained, thin-bedded, firm, slightly weathered and friable, jointed and broken in part, with few scattered quartz pebbles. Core loss 12%.										
	10														
	12		4.7	0.3											
	14														
	16		5.0	0.0											
	18														
	20		5.0	0.0											
	22														
	24														
998.0	26				Conglomeratic sandstone, brown, with quartz pebbles (sub-rounded, maximum 0.2" thick) in a coarse-grained matrix, firm, slightly weathered. Core loss 21%.										
	28		2.7	2.3											
	30														
	32		5.0	0.0											
	34														
	36		5.0	0.0											
985.5	38				Sandstone, brown, fine-grained, firm, with carbonaceous shale stringers in part. No core loss.										
983.0	40				BOTTOM OF BORING										

LOG OF BORING

Date Started 11-8-65 — Sampler Type SS — Dia 1 3/8" — Water Elev. —
Date Completed 11-9-65 — Casing Length 2.5' — Dia 3 1/2"
Boring No. B-2 — Station & Offset 52+10, 50' Lt. — Surface Elev. 1020.5'

Elev.	Depth	Std. Pen. (N)	Rec. ft.	Loss ft.	Description	Sample No.	Physical Characteristics: % Agg.	% C.S.	% F.S.	% Silt	% Clay	L.L.	P.I.	W.C.	SHTL Class.
1020.5	0														
	2				Bituminous Pavement and Sand										
1018.0	4		1.2	1.3	TOP OF ROCK										
	6														
	8		4.6	0.4											
	10														
	12		5.0	0.0											
	14				Sandstone, brown, fine-grained, firm, with some shale stringers, slightly weathered and friable, slightly broken in part. Core loss 8%.										
	16														
	18		4.6	0.4											
	20														
	22		5.0	0.0											
	24														
993.5	26														
	28		5.0	0.0	Conglomeratic sandstone, brown, with many quartz pebbles (sub-rounded, maximum 0.2" thick) in a fine sand matrix, firm, jointed and broken in part, slightly weathered and friable. No core loss.										
	30														
	32		5.0	0.0											
	34														
	36														
983.0	38		5.0	0.0	Sandstone, gray, fine-grained, firm, with few carbonaceous shale stringers, very slightly weathered and friable. No core loss.										
980.5	40				BOTTOM OF BORING										

NOTE: Information shown by this subsurface investigation was obtained solely for the use in establishing design controls for the project. The State of Ohio does not guarantee the accuracy of this data and it is not to be construed as a part of the plans governing construction of the project.

OHIO DEPARTMENT OF HIGHWAYS
TESTING LABORATORY
1620 WEST BROAD STREET, COLUMBUS 23, OHIO

STRUCTURE FOUNDATION INVESTIGATION
BRIDGE NO. SUM – 8 – 1800
UNDER FRONT STREET
SEC. SUM – 8 – 17.63

CHECKED BY	REVIEWED BY	DATE
L.N.L.	R. D. R.	3/17/66

MAR 25 1966

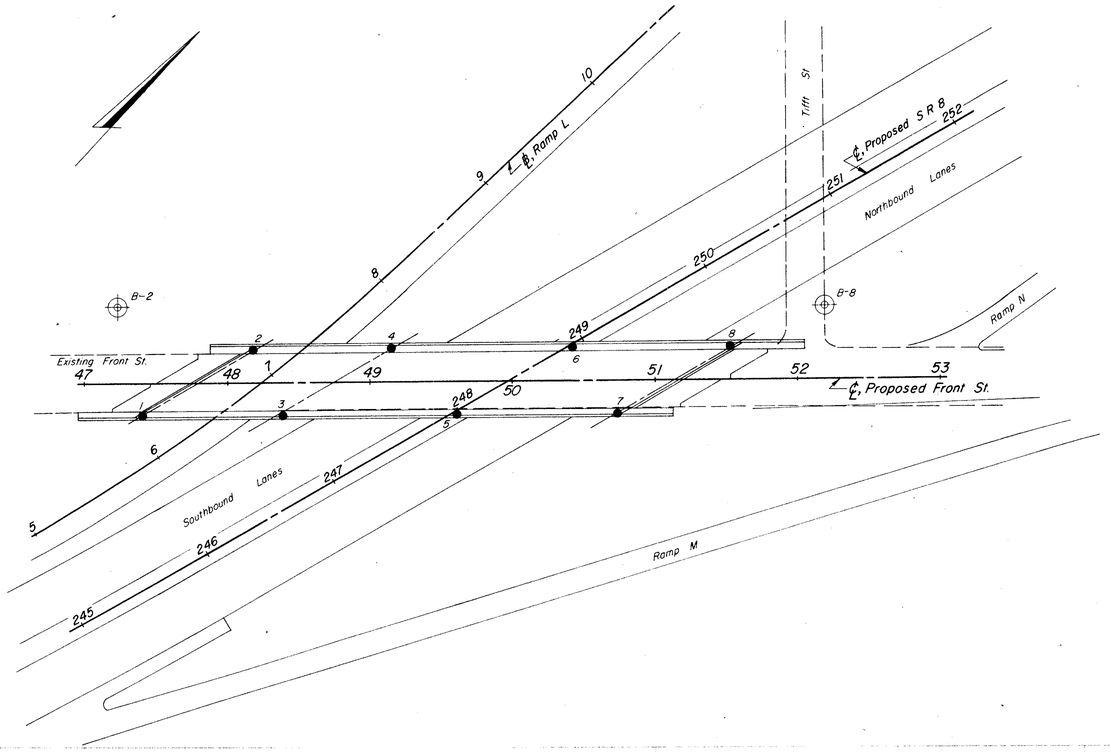

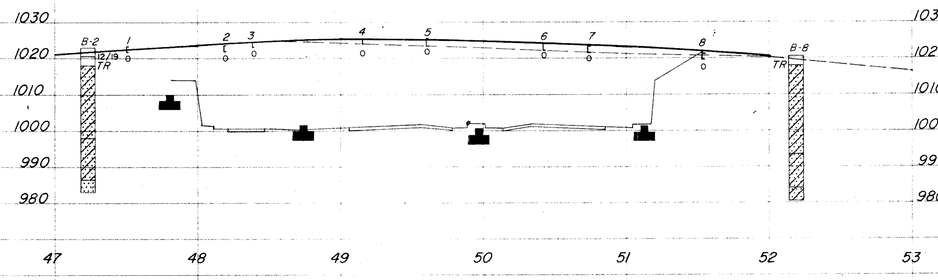

SCALE: HOR. = 1" = 50'
VERT. = 1" = 20'

OHIO DEPARTMENT OF HIGHWAYS
TESTING LABORATORY
1620 WEST BROAD STREET, COLUMBUS 23, OHIO

STRUCTURE FOUNDATION INVESTIGATION
BRIDGE NO. SUM – 8 – 1800
UNDER FRONT STREET
SEC. SUM – 8 – 17.63

PLAN AND PROFILE

DRAWN BY	CHECKED BY	REVIEWED BY	DATE
R.L.D.	L.N.L.	R.D.R.	3/17/66

TE-114
1000-1-64

MAR 08 1979

20
37

3
3

SUM - 8 - 17.63

Test Location No.	Station & Offset	Surface Elev.	Water Elev.	Piling	Hammer	Formula	Reference	Rod Condition
1	47+40, 23' RT. REAR ABUTMENT	1023.4'						GOOD
2	48+18, 23' LT. REAR ABUTMENT	1023.6'						GOOD
3	48+38, 23' RT. REAR PIER	1024.5'						GOOD
4	49+15, 23' LT. REAR PIER	1025.4'						GOOD
5	49+60, 23' RT. FORWARD PIER	1025.5'						GOOD
6	50+42, 23' LT. FORWARD PIER	1023.9'						GOOD
7	50+73, 23' RT. FORWARD ABUTMENT	1023.2'						GOOD
8	51+53, 23' LT. FORWARD ABUTMENT	1021.5'						GOOD

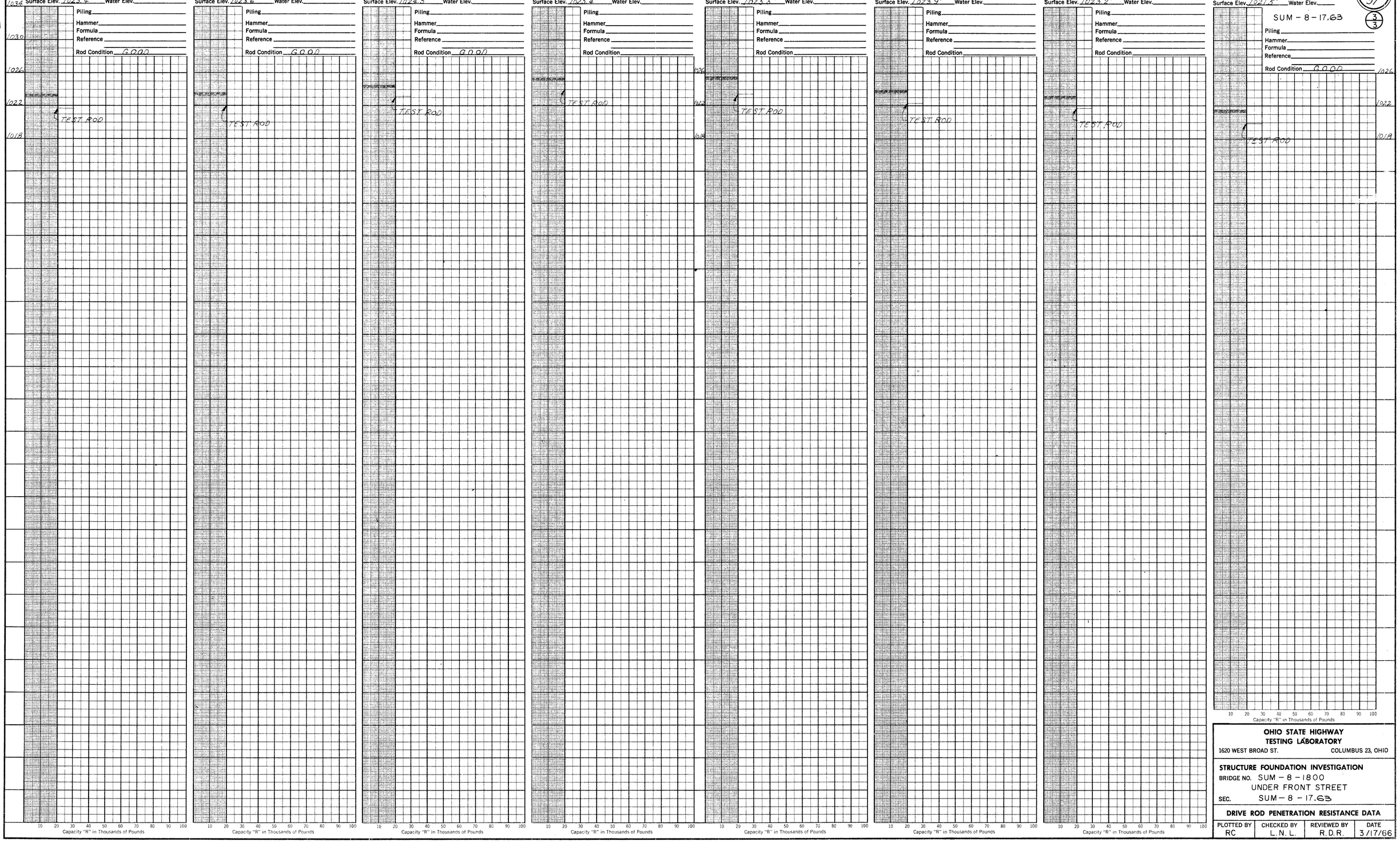

OHIO STATE HIGHWAY TESTING LABORATORY
1620 WEST BROAD ST. COLUMBUS 23, OHIO

STRUCTURE FOUNDATION INVESTIGATION
BRIDGE NO. SUM - 8 - 1800
UNDER FRONT STREET
SEC. SUM - 8 - 17.63

DRIVE ROD PENETRATION RESISTANCE DATA

PLOTTED BY	CHECKED BY	REVIEWED BY	DATE
RC	L. N. L.	R. D. R.	3/17/66

MAR 25 1966

GEOLOGY OF THE SITE

The structure site is located on a portion of the glaciated moderately rolling Alleghany Plateau, in an area where shallow and thin glacial dirft overlies sandstone and sandstone conglomerate of the Sharon formation, Pennsylvanian age.

EXPLORATION

The exploration consisted of one drive sample-core boring, made between February 12 and 15, 1966, and four drive rod penetration tests, made on March 10, 1966. Also included in the report are the logs of borings made by means of rotary type drill rig and truck-mounted mechanical soil auger, in conjunction with the roadway foundation investigation and for the Bailey Road structure foundation investigation.

INVESTIGATIONAL FINDINGS

Borings disclosed that sloping bedrock surface, encountered at 2 and 8-foot depths, elevations 1022 and 1014 feet, is overlain by moist, very dense sandy silts, gravelly sands and boulders. The borings were terminated 14 to 38 feet below bedrock surface, elevations 1008 and 981 feet. The truck-mounted soil auger boring was terminated upon encounter with refusal at 5-foot depth, elevation 1022 feet, on firm bedrock.

Rod soundings generally encountered rapid increase in penetration resistance with increase in depth and were terminated upon abrupt encounter with refusal to penetration at 5 feet below ground surface, elevations 1032 to 1012 feet, considered to be on or immediately above bedrock surface.

No free water was observed in any of the rod sounding holes.

LEGEND

- Auger Boring Location - Plan View.
- Press and / or Drive Sample and / or Core Boring Location - Plan View.
- Drive Rod Penetration Resistance Sounding Location - Plan View.
- Capped Pile
- Footing
- Footing on Pile
- TR — Top of Rock
- Horizontal Bar on Boring Log Indicates the Depth the Sample Was Taken.
- X/Y — Figures Beside the Boring Log in Profile Indicate the Number of Blows for Standard Penetration Test.
  X = Number of Blows for First 6 inches.
  Y = Number of Blows for Second 6 inches.
- Drive Rod Penetration Resistance Sounding Log - Profile
- Casing
- Resistance "R" < 10,000 lbs.
- Resistance "R" > 10,000 lbs.
- Z — Indicates Final Measurement of Penetration, in Inches.
- W — Indicates Free Water Elevation.
- Indicates Static Water Elevation.

SYMBOLS OF ROCK TYPES

- Coal
- Weathered Indurated Clay
- Indurated Clay
- Weathered Shale
- Shale
- Boulders
- Weathered Sandstone
- Sandstone
- Leached Dolomite
- Dolomite
- Leached Limestone
- Limestone

GENERAL INFORMATION

Drive Rod Penetration Sounding Tests

Drive rod penetration resistance tests constitute driving a 1.315-inch diameter steel rod, with a 45° cone point, into the ground, using a 122-pound drop-hammer with a free fall of five feet. At one or two-foot depth intervals, a measurement is taken to determine the amount of penetration achieved in three hammer drops. This reading is converted to an empirical value for capacity "R", in thousands of pounds (which is a measure of both the point resistance and frictional resistance on the rod), by using charts prepared by the Ohio Department of Highways, Bureau of Bridges, on the basis of correlation study of rod penetration with past performance of pile driving. For interpretation, a graph is prepared by plotting the value "R" against the depth at which the reading was taken, and connecting the plotted points. The curve so obtained reflects the density of subsurface materials in a manner that can be readily compared with data from similar tests at other locations on the structure site. From this comparison, the overall uniformity of subsurface condition may be evaluated.

Drive Sample Borings - Drive-Press Sample Borings

Drive sample borings are made by means of a rotary-type drill rig, employing a 2" O.D., 1-3/8" I.D. sampler, at 2-1/2 and 5-foot depth intervals, driven by means of a 140 - pound drop-hammer with a free fall of 30 inches. The number of blows required to drive the sampler 12 inches is considered the standard penetration test.

Drive-press sample borings are made by means of a rotary-type drill rig, employing a 2" O.D., 1-3/8" I.D. drive sampler, and 3" O.D. thin-wall press sampler. The press sampler is advanced by continuous uniform pressure, applied by the drill rig.

The boring log sheets show a graphic plot of the information obtained, including depth and elevation of the sample, number of blows for the standard penetration tests in two 6-inch increments, depth of press samples, field sample number, sample description - based on laboratory tests and the Casagrande AC classification system - and gradation, plasticity, and moisture content determinations. Results of strength and consolidation testing, if performed, appear on separate enclosures.

At depths where materials are bouldery or gravelly to the extent that the sampler can not be driven, a wash sample is procured for visual classification, in order to determine the general character of the material. These samples are not considered sufficiently representative to warrant laboratory testing.

Particle Size Definitions

Boulders	Cobbles	Gravel	Coarse Sand	Fine Sand	Silt	Clay
8"	3"	2.0mm (No. 10 sieve)	0.42mm (No. 40 sieve)	0.074mm (No. 200 sieve)	0.005mm	

NOTE: Information shown by this subsurface investigation was obtained solely for the use in establishing design controls for the project. The State of Ohio does not guarantee the accuracy of this data and it is not to be construed as a part of the plans governing construction of the project.

OHIO DEPARTMENT OF HIGHWAYS
TESTING LABORATORY
1620 WEST BROAD STREET, COLUMBUS 23, OHIO

STRUCTURE FOUNDATION INVESTIGATION
BRIDGE NO. SUM - 8 - 1812
UNDER RELOCATED SECOND ST.
SEC. SUM - 8 - 17.63

CHECKED BY	REVIEWED BY	DATE
R. H. P.	R. D. R.	3/17/66

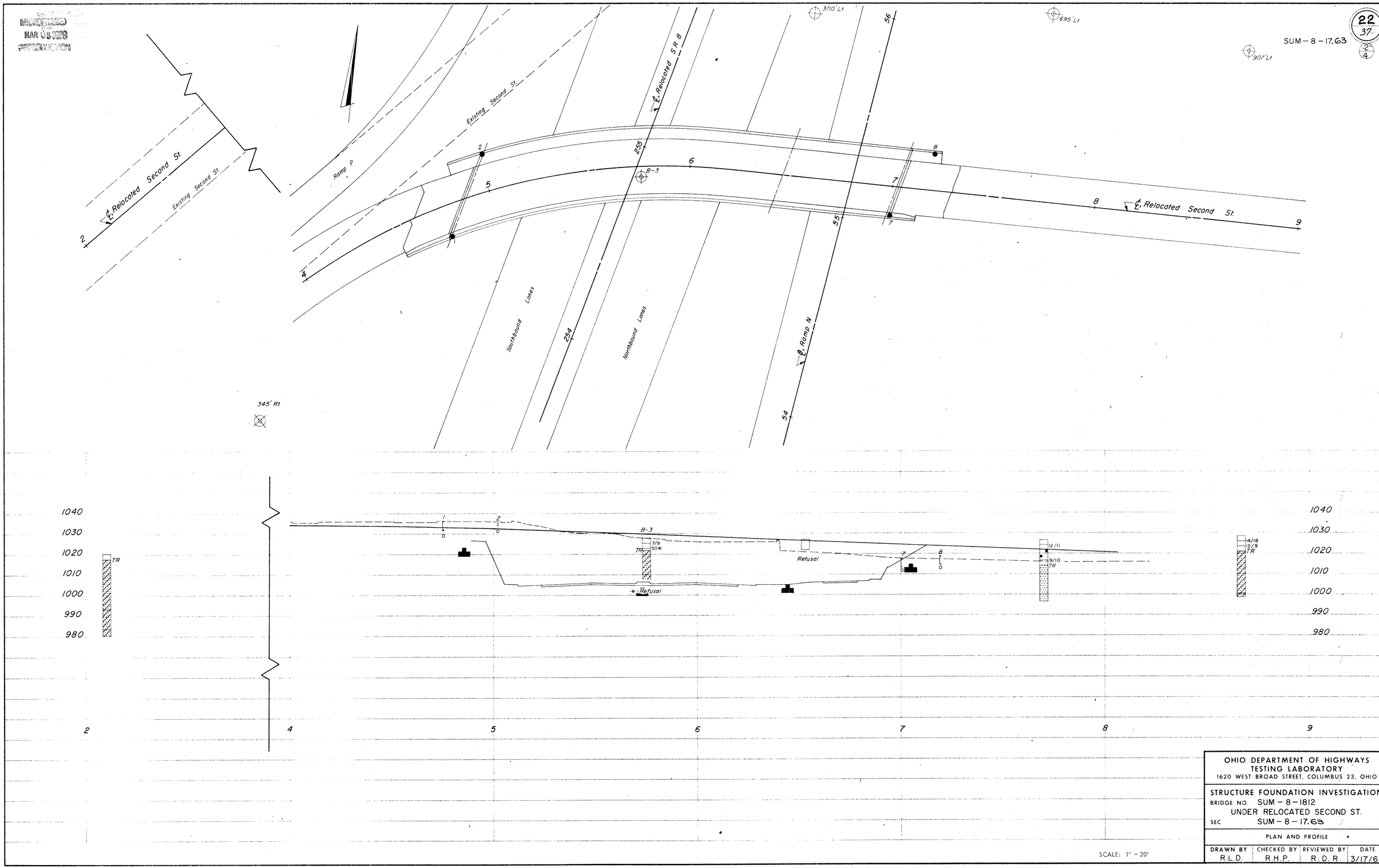

OHIO DEPARTMENT OF HIGHWAYS
TESTING LABORATORY
1620 WEST BROAD STREET, COLUMBUS 23, OHIO

STRUCTURE FOUNDATION INVESTIGATION
BRIDGE NO. SUM-8-1812
UNDER RELOCATED SECOND ST.
SEC. SUM-8-17.63

PLAN AND PROFILE

DRAWN BY	CHECKED BY	REVIEWED BY	DATE
R.L.D.	R.H.P.	R.D.R.	3/17/66

TE - 122
500 - 11 - 64

RECEIVED
MAR 05 1969
INVESTIGATION

SUM-8-17.63

23
37
3/4

LOG OF BORING

Date Started 11-8-65 Sampler Type SS Dia 1 3/8" Water Elev. —
Date Completed 11-9-65 Casing: Length 2.5' Dia 3 1/2"
Boring No. — Station & Offset 2+10, 345' Rt. Surface Elev. 1020.5

Elev.	Depth	Std. Pen (N)	Rec. ft.	Loss ft.	Description	Sample No.	Physical Characteristics: % Agg.	% C.S.	% F.S.	% Silt	% Clay	L.L.	P.I.	W.C.	SHTL Class.
1020.5	0														
1018.0	2				Bituminous Pavement and Sand										
	4		1.2	1.3	TOP OF ROCK										
	6														
	8		4.6	0.4											
	10														
	12		5.0	0.0	Sandstone, brown, fine-grained, firm, with some shale stringers, slightly weathered and friable, slightly broken in part. Core loss 0%.										
	14														
	16		4.6	0.4											
	18														
	20		5.0	0.0											
	22														
	24														
	26														
993.5	28		5.0	0.0	Conglomeratic sandstone, brown, with many quartz pebbles (sub-rounded, maximum 0.2' thick) in a fine sand matrix, firm, jointed and broken in part, slightly weathered and friable. No core loss.										
	30														
	32		5.0	0.0											
	34														
	36														
982.0	38		5.0	0.0											
980.5	40				Sandstone, gray, fine-grained, firm, with few carbonaceous shale stringers, very slightly weathered and friable: No core loss. BOTTOM OF BORING										

LOG OF BORING

Date Started 1-27-66 Sampler Type SS Dia 1 3/8" Water Elev. —
Date Completed 2-1-66 Casing: Length 15' Dia 3 1/2"
Boring No. — Station & Offset 7+70, 69' Lt. Surface Elev. 1026.8'

Elev.	Depth	Std. Pen (N)	Rec. ft.	Loss ft.	Description	Sample No.	Physical Characteristics: % Agg.	% C.S.	% F.S.	% Silt	% Clay	L.L.	P.I.	W.C.	SHTL Class.
1026.8	0														
1024.3	2														
	4	12/11			Brown Sandy Silt	1	14	10	21	25	30	28	10	18	A-4a
1021.8	6														
	8		1.0	4.0	Brown clayey silty sand and gravel with boulders.										
1016.8	10														
	12	9/10			Brown Gravelly Sandy Silt with Boulders TOP OF ROCK	2	18	17	17	24	24	25	10	21	A-4a
1014.3	14		1.5	3.5	Sandstone, brown, fine-grained, jointed, firm, slightly friable, with few interbedded quartz pebbles in bottom 4.0'. Core loss 6%.										
	16														
	18		5.0	0.0											
	20														
	22		5.0	0.0											
	24														
	26														
	28		5.0	0.0											
996.8	30				BOTTOM OF BORING										

LOG OF BORING

Date Started 2-2-66 Sampler Type SS Dia 1 3/8" Water Elev. —
Date Completed 2-15-66 Casing: Length — Dia —
Boring No. B-3 Station & Offset 5+75, 5' Rt. (Rear Pier) Surface Elev. 1027.8'

Elev.	Depth	Std. Pen (N)	Rec. ft.	Loss ft.	Description	Sample No.	Physical Characteristics: % Agg.	% C.S.	% F.S.	% Silt	% Clay	L.L.	P.I.	W.C.	SHTL Class.
1027.8	0														
1025.3	2														
	4	7/9			Brown Silty Gravelly Sand	1	22	6	31	23	18	19	2	16	A-4a
1022.8															
1021.8	6	50* (0.4)			Brown Silty Gravelly Sand TOP OF ROCK	2	16	5	49	20	10	NP	NP	12	A-3a
	8		2.4	1.6	Sandstone, brown, medium-grained, firm, with few scattered pebbles (sub-rounded, max. 0.4" thick); slightly friable, jointed, and weathered. Core loss 11%.										
	10														
	12		5.0	0.0											
	14														
	16														
	18		5.0	0.0											
1007.8	20				BOTTOM OF BORING *REFUSAL										

LOG OF BORING

Date Started 10-21-65 Sampler Type SS Dia 1 3/8" Water Elev. —
Date Completed 10-21-65 Casing: Length 8' Dia 3 1/2"
Boring No. — Station & Offset 8+67, 907' Lt. Surface Elv. 1028.5'

Elv.	Depth	Std. Pen (N)	Rec. ft.	Loss ft.	Description	Sample No.	Physical Characteristics: % Agg.	% C.S.	% F.S.	% Silt	% Clay	L.L.	P.I.	W.C.	SHTL Class.
1028.5	0														
1026.0	2														
	4	14/18			Brown Sandy Silt with Stone Fragments	1	21	13	25	22	19	23	8	23	A-4a
1023.5	6	12/9			Brown Sandy Silt with Stone Fragments	2	27	9	22	24	18	19	5	16	A-4a
1021.0	8														
	10		1.4	1.1	TOP OF ROCK										
	12														
	14		5.0	0.0											
	16														
	18		5.0	0.0	Sandstone, light-brown, fine-grained, firm, slightly jointed and slightly weathered, with few shale stringers. Core loss 5%.										
	20														
	22														
	24		10.0	0.0											
	26														
1000.5	28				Conglomeratic sandstone, brown, with quartz pebbles (sub-rounded, max. 0.8" thick) in a fine-grained matrix, firm, slightly weathered and friable. No core loss.										
998.5	30				BOTTOM OF BORING										

State of Ohio
Department of Highways
Testing Laboratory

LOG OF BORING

Date Started 1-3-66 Sampler Type WILLIAMS AUGER Water Elev. Immediate — Project Identification: —
Date Completed 1-3-66 After — Hours —
Boring No. — Station & Offset 6+53, 300' Lt. Surface Elev. 1027.1'

Elev.	Depth	Description	Field No.	Lab. Nos. So.	Physical Characteristics: % Agg.	% C.S.	% F.S.	% Silt	% Clay	L.L.	P.I.	W.C.	SHTL Class.
1027.1	0												
	2	Brown and Sandy Silt	1-S	8506	13	6	26	30	25	22	7	11	A-4a
1022.1	4												
		REFUSAL											

OHIO DEPARTMENT OF HIGHWAYS
TESTING LABORATORY
1620 WEST BROAD STREET, COLUMBUS 23, OHIO

STRUCTURE FOUNDATION INVESTIGATION
BRIDGE NO. SUM-8-1812
UNDER RELOCATED SECOND ST.
SEC. SUM-8-17.63

BORING DATA

TYPED BY	CHECKED BY	REVIEWED BY	DATE
J.M.S.	L.N.L.	R.D.R.	3/17/66

TE-114
1000-1-64

24
37
4
4

SUM - 8 - 17.63

Test Location No. ____
Station & Offset ____
Surface Elev. ____ Water Elev. ____
Piling ____
Hammer ____
Formula ____
Reference ____
Rod Condition ____

Test Location No. ____
Station & Offset ____
Surface Elev. ____ Water Elev. ____
Piling ____
Hammer ____
Formula ____
Reference ____
Rod Condition ____

Test Location No. ____
Station & Offset ____
Surface Elev. ____ Water Elev. ____
Piling ____
Hammer ____
Formula ____
Reference ____
Rod Condition ____

Test Location No. ____
Station & Offset ____
Surface Elev. ____ Water Elev. ____
Piling ____
Hammer ____
Formula ____
Reference ____
Rod Condition ____

Test Location No. 1
Station & Offset 4+75 15' RT
REAR ABUTMENT
Surface Elev. 1036.3' Water Elev. ____
Piling ____
Hammer ____
Formula ____
Reference ____
Rod Condition ____
TEST ROD

Test Location No. 2
Station & Offset 5+02 18' LT
REAR ABUTMENT
Surface Elev. 1035.2' Water Elev. ____
Piling ____
Hammer ____
Formula ____
Reference ____
Rod Condition ____
TEST ROD

Test Location No. 7
Station & Offset 7+00 14' RT
FORWARD ABUTMENT
Surface Elev. 1017.4' Water Elev. ____
Piling ____
Hammer ____
Formula ____
Reference ____
Rod Condition ____
TEST ROD

Test Location No. 8
Station & Offset 7+19 18' LT
FORWARD ABUTMENT
Surface Elev. 1018.7' Water Elev. ____
Piling ____
Hammer ____
Formula ____
Reference ____
Rod Condition ____
TEST ROD

1041
1037
1033
1029
1025
1021
1017
1013
1009

10 20 30 40 50 60 70 80 90 100
Capacity "R" in Thousands of Pounds

OHIO STATE HIGHWAY TESTING LABORATORY
1620 WEST BROAD ST. COLUMBUS 23, OHIO

STRUCTURE FOUNDATION INVESTIGATION
BRIDGE NO. SUM - 8 - 1812
UNDER RELOCATED SECOND ST.
SEC. SUM - 8 - 17.63

DRIVE ROD PENETRATION RESISTANCE DATA

PLOTTED BY	CHECKED BY	REVIEWED BY	DATE
RC	L.N.L.	R.D.R.	3/17/66

MAR 08 '66

GEOLOGY OF THE SITE

The structure site is located on a portion of the glaciated moderately rolling Allegheny Plateau, in an area where shallow glacial drift overlies sandstone and sandstone conglomerate of the Sharon formation, Pennsylvanian age.

EXPLORATION

The exploration consisted of one drive sample-core boring, made between January 27 and February 1, 1966, and five drive rod penetration tests, made on March 1, 1966. Also included in the report is the log of boring made in conjunction with the roadway foundation investigation.

INVESTIGATIONAL FINDINGS

Borings disclosed that sloping bedrock surface, encountered at 8 and 12 foot depths, elevations 1021 and 1014 feet is overlain by very moist, very dense sandy silts and some boulders and sand. The borings were terminated 18 and 22 feet below bedrock surface, elevations 999 and 997 feet.

Rod soundings generally encountered rapid increase in penetration resistance with increase in depth and were terminated upon abrupt encounter with refusal or near-refusal to penetration at 4 to 11-foot depths, elevations 1025 to 1016 feet, considered to be on or immediately above bedrock surface.

No free water was observed in any of the rod sounding holes.

LEGEND

- Auger Boring Location - Plan View.
- Press and / or Drive Sample and / or Core Boring Location - Plan View.
- Drive Rod Penetration Resistance Sounding Location - Plan View.
- Capped Pile
- Footing
- Footing on Pile
- TR — Top of Rock
- Horizontal Bar on Boring Log Indicates the Depth the Sample Was Taken.
- X/Y — Figures Beside the Boring Log in Profile Indicate the Number of Blows for Standard Penetration Test. X = Number of Blows for First 6 inches. Y = Number of Blows for Second 6 inches.
- Drive Rod Penetration Resistance Sounding Log - Profile
- Casing
- Resistance "R" < 10,000 lbs.
- Resistance "R" > 10,000 lbs.
- Z — Indicates Final Measurement of Penetration, in Inches.
- W — Indicates Free Water Elevation.
- Indicates Static Water Elevation.

SYMBOLS OF ROCK TYPES

- Coal
- Weathered Indurated Clay
- Indurated Clay
- Weathered Shale
- Shale
- Boulders
- Weathered Sandstone
- Sandstone
- Leached Dolomite
- Dolomite
- Leached Limestone
- Limestone

GENERAL INFORMATION

Drive Rod Penetration Sounding Tests

Drive rod penetration resistance tests constitute driving a 1.315-inch diameter steel rod, with a 45° cone point, into the ground, using a 122-pound drop-hammer with a free fall of five feet. At one or two-foot depth intervals, a measurement is taken to determine the amount of penetration achieved in three hammer drops. This reading is converted to an empirical value for capacity "R", in thousands of pounds (which is a measure of both the point resistance and frictional resistance on the rod), by using charts prepared by the Ohio Department of Highways, Bureau of Bridges, on the basis of correlation study of rod penetration with past performance of pile driving. For interpretation, a graph is prepared by plotting the value "R" against the depth at which the reading was taken, and connecting the plotted points. The curve so obtained reflects the density of subsurface materials in a manner that can be readily compared with data from similar tests at other locations on the structure site. From this comparison, the overall uniformity of subsurface condition may be evaluated.

Drive Sample Borings - Drive-Press Sample Borings

Drive sample borings are made by means of a rotary-type drill rig, employing a 2" O.D., 1-3/8" I.D. sampler, at 2-1/2 and / or 5-foot depth intervals, driven by means of a 140 - pound drop-hammer with a free fall of 30 inches. The number of blows required to drive the sampler 12 inches is considered the standard penetration test.

Drive-press sample borings are made by means of a rotary-type drill rig, employing a 2" O.D., 1-3/8" I.D. drive sampler, and 3" O.D. thin-wall press sampler. The press sampler is advanced by continuous uniform pressure, applied by the drill rig.

The boring log sheets show a graphic plot of the information obtained, including depth and elevation of the sample, number of blows for the standard penetration tests in two 6-inch increments, depth of press samples, field sample number, sample description - based on laboratory tests and the Casagrande AC classification system - and gradation, plasticity, and moisture content determinations. Results of strength and consolidation testing, if performed, appear on separate enclosures.

At depths where materials are bouldery or gravelly to the extent that the sampler can not be driven, a wash sample is procured for visual classification, in order to determine the general character of the material. These samples are not considered sufficiently representative to warrant laboratory testing.

Particle Size Definitions

Boulders	Cobbles	Gravel	Coarse Sand	Fine Sand	Silt	Clay
	8"	3"	2.0mm (No. 10 sieve)	0.42mm (No. 40 sieve)	0.074mm (No. 200 sieve)	0.005mm

LOG OF BORING

Date Started 1-27-66 | Sampler Type SS | Dia 1 3/8" | Water Elev. —
Date Completed 2-1-66 | Casing: Length 15' | Dia 3 1/2" | Surface Elev. 1026.8'
Boring No. B-4 | Station & Offset 50+33, 19' Rt. (Rear Pier)

Elev.	Depth	Std. Pen. (N)	Rec. ft.	Loss ft.	Description	Sample No.	% Agg.	% C.S.	% F.S.	% Silt	% Clay	L.L.	P.I.	W.C.	SHTL Class.
1026.8	0														
	2														
1024.3	4	12/11			Brown Sandy Silt	1	14	10	21	25	30	28	10	18	A-4a
1021.8	6														
	8		1.0	4.0	Brown clayey silty sand and gravel with boulders										
1016.8	10	9/10			Brown Gravelly Sandy Silt with Boulders	2	18	17	17	24	24	25	10	21	A-4a
1014.3	12				TOP OF ROCK										
	14		1.5	3.5	Sandstone, brown, fine-grained, jointed, firm, slightly friable, with few interbedded quartz peebles in bottom 4.0'. Core loss 6%.										
	16														
	18		5.0	0.0											
	20														
	22		5.0	0.0											
	24														
	26														
	28		5.0	0.0											
996.8	30				BOTTOM OF BORING										

LOG OF BORING

Date Started 10-21-65 | Sampler Type SS | Dia 1 3/8" | Water Elev. —
Date Completed 10-21-65 | Casing: Length 8' | Dia 3 1/2" | Surface Elev. 1028.5'
Boring No. — | Station & Offset 50+84, 248' Rt.

Elev.	Depth	Std. Pen. (N)	Rec. ft.	Loss ft.	Description	Sample No.	% Agg.	% C.S.	% F.S.	% Silt	% Clay	L.L.	P.I.	W.C.	SHTL Class.
1028.5	0														
	2														
1026.0	4	14/18			Brown Sandy Silt with Stone Fragments	1	21	13	25	22	19	23	8	23	A-4a
1023.5	6	12/9			Brown Sandy Silt with Stone Fragments	2	27	9	22	24	18	19	5	16	A-4a
1021.0	8				TOP OF ROCK										
	10		1.4	1.1											
	12														
	14		5.0	0.0											
	16				Sandstone, light-brown, fine-grained, firm, slightly jointed and slightly weathered, with few shale stringers. Core loss 5%.											
	18		5.0	0.0											
	20														
	22														
	24		10.0	0.0											
	26														
1000.5	28				Conglomeratic sandstone, brown, with quartz pebbles (sub-rounded, max. 0.8" thick) in a fine-grained matrix, firm, slightly weathered and friable.											No core loss.
998.5	30				BOTTOM OF BORING										

NOTE: Information shown by this subsurface investigation was obtained solely for the use in establishing design controls for the project. The State of Ohio does not guarantee the accuracy of this data and it is not to be construed as a part of the plans governing construction of the project.

OHIO DEPARTMENT OF HIGHWAYS
TESTING LABORATORY
1620 WEST BROAD STREET, COLUMBUS 23, OHIO

STRUCTURE FOUNDATION INVESTIGATION
BRIDGE NO. SUM - 8 - 1825
UNDER BAILEY RD.
SEC SUM - 8 - 17.63

CHECKED BY	REVIEWED BY	DATE
L.N.L.	R.D.R.	3/9/66

RECEIVED
MAR 08 1966
DIVISION OF

SUM-8-17.63

26/37 2/3

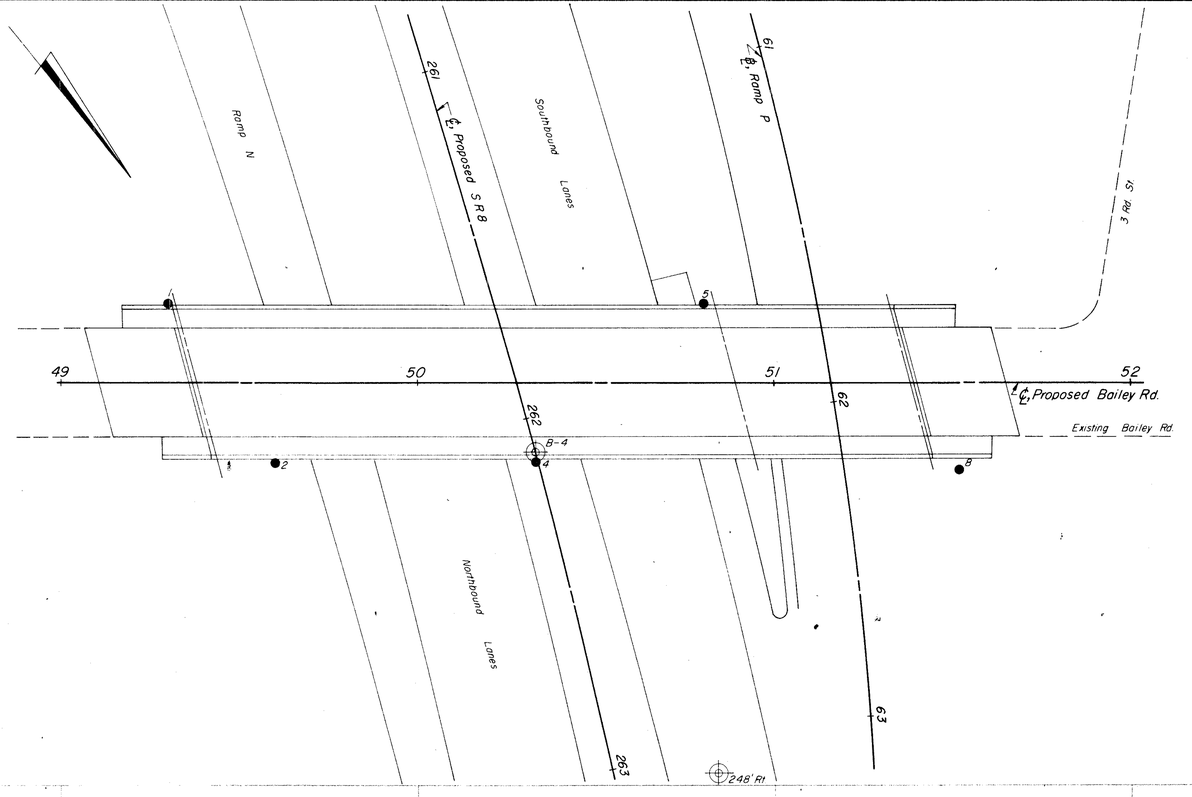

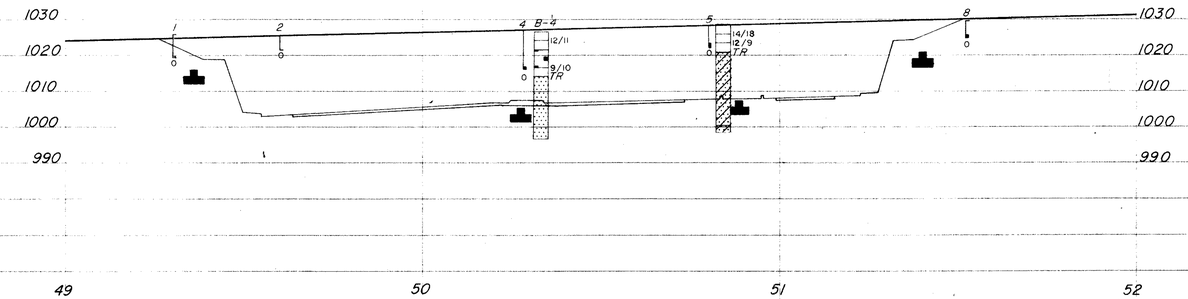

SCALE: 1" = 20'

OHIO DEPARTMENT OF HIGHWAYS
TESTING LABORATORY
1620 WEST BROAD STREET, COLUMBUS 23, OHIO

STRUCTURE FOUNDATION INVESTIGATION
BRIDGE NO. SUM – 8 – 1825
UNDER BAILEY RD.
SEC. SUM – 8 – 17.63

PLAN AND PROFILE

DRAWN BY	CHECKED BY	REVIEWED BY	DATE
R. L. D.	L.N.L.	R.D.R.	3/9/66

Test Location No. ____
Station & Offset ____
Surface Elev. ____ Water Elev. ____
Piling ____
Hammer ____
Formula ____
Reference ____
Rod Condition ____

Test Location No. ____
Station & Offset ____
Surface Elev. ____ Water Elev. ____
Piling ____
Hammer ____
Formula ____
Reference ____
Rod Condition ____

Test Location No. ____
Station & Offset ____
Surface Elev. ____ Water Elev. ____
Piling ____
Hammer ____
Formula ____
Reference ____
Rod Condition ____

Test Location No. 1
Station & Offset 49+30, 22' LT
REAR ABUTMENT
Surface Elev. 1025.8' Water Elev. ____
Piling ____
Hammer ____
Formula ____
Reference ____
Rod Condition GOOD

Test Location No. 2
Station & Offset 49+60, 22' RT
REAR ABUTMENT
Surface Elev. 1025.4' Water Elev. ____
Piling ____
Hammer ____
Formula ____
Reference ____
Rod Condition GOOD

Test Location No. 4
Station & Offset 50+33, 22' RT
REAR PIER
Surface Elev. 1027.1' Water Elev. ____
Piling ____
Hammer ____
Formula ____
Reference ____
Rod Condition GOOD

Test Location No. 5
Station & Offset 50+80, 22' LT
FORWARD PIER
Surface Elev. 1028.2' Water Elev. ____
Piling ____
Hammer ____
Formula ____
Reference ____
Rod Condition GOOD

Test Location No. 8
Station & Offset 51+52, 24' RT
FORWARD ABUTMENT
Surface Elev. 1029.6' Water Elev. ____
SUM - 8 - 17.63
Piling ____
Hammer ____
Formula ____
Reference ____
Rod Condition GOOD

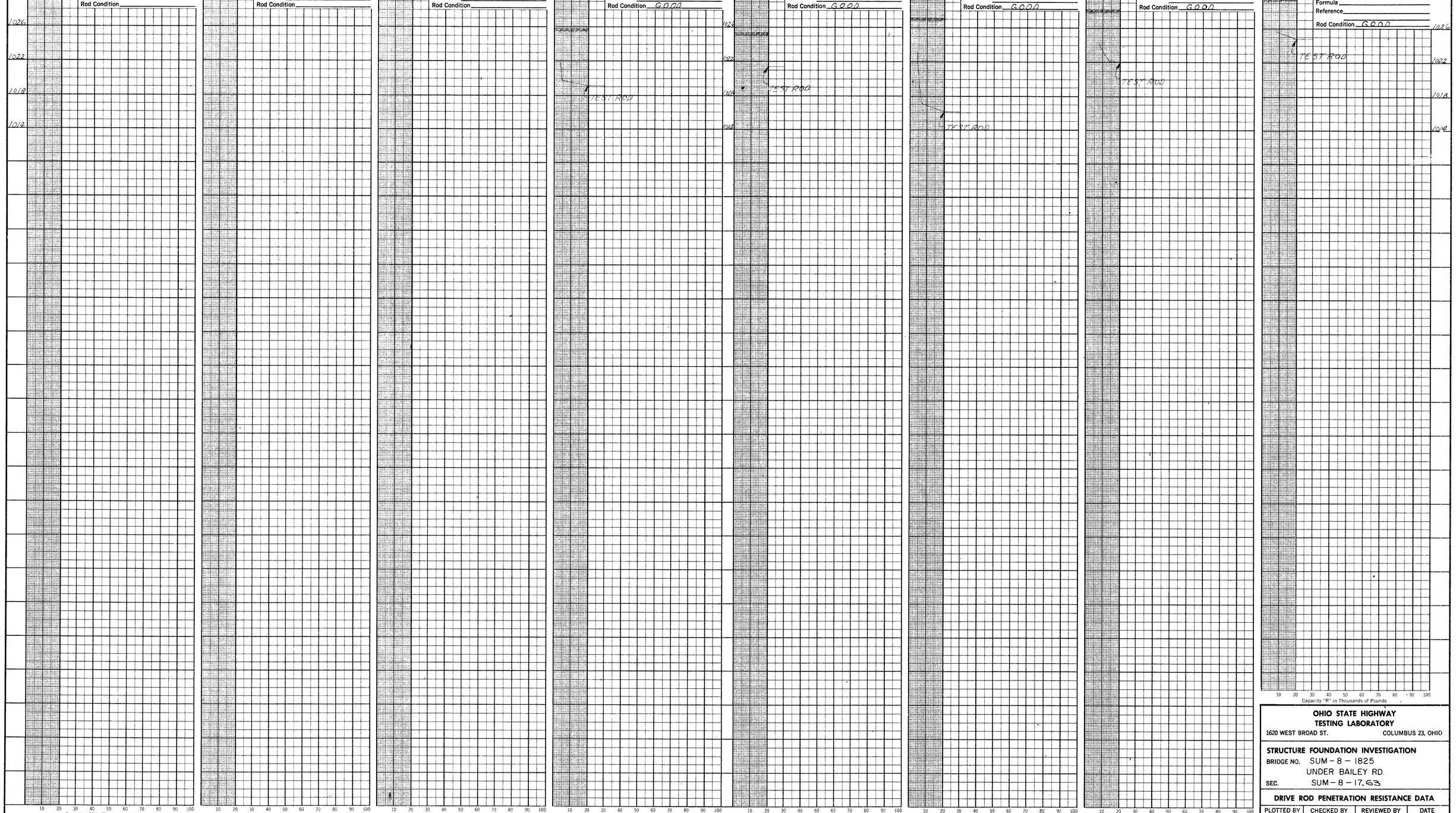

OHIO STATE HIGHWAY TESTING LABORATORY
1620 WEST BROAD ST. COLUMBUS 23, OHIO

STRUCTURE FOUNDATION INVESTIGATION
BRIDGE NO. SUM - 8 - 1825
UNDER BAILEY RD.
SEC. SUM - 8 - 17.63

DRIVE ROD PENETRATION RESISTANCE DATA

PLOTTED BY	CHECKED BY	REVIEWED BY	DATE
R.C.	L.N.L.	R.D.R.	3/9/66

MICROFILMED
MAR 05 1979

GEOLOGY OF THE SITE

The structure site is located on a portion of the glaciated moderately rolling Allegheny Plateau, in an area where shallow glacial drift overlies sandstone and sandstone conglomerate of the Sharon formation, Pennsylvanian age.

EXPLORATION

The exploration consisted of one drive sample-core boring, made on February 15, 1966, and four drive rod penetration tests, made on March 1, 1966. Also included in the report are the logs of a boring made by means of a rotary type drill rig, and two borings made by means of truck-mounted mechanical soil auger in conjunction with the roadway foundation investigation.

INVESTIGATIONAL FINDINGS

Borings disclosed that sloping bedrock surface, encountered at 5 and 10-foot detphs, elevations 1021 and 1015 feet, is overlain by moist, very dense sandy silts and some clay and sand. The borings were terminated 10 and 34 feet below bedrock surface, elevations 1005 and 988 feet. The truck-mounted soil auger borings were terminated upon encounter with refusal at 9-foot depth, elevations 1021 and 1017 feet, on firm sandstone bedrock.

Rod soundings generally encountered rapid increase in penetration resistance with increase in depth and were terminated upon abrupt encounter with refusal to penetration at 9 to 12-foot depths, elevations 1019 to 1013 feet, considered to be on or immediately above bedrock surface.

No free water was observed in any of the rod sounding holes.

LEGEND

Symbol	Meaning
	Auger Boring Location – Plan View.
	Press and / or Drive Sample and / or Core Boring Location – Plan View.
●	Drive Rod Penetration Resistance Sounding Location – Plan View.
	Capped Pile
	Footing
	Footing on Pile
TR	Top of Rock
	Horizontal Bar on Boring Log Indicates the Depth the Sample Was Taken.
X/Y	Figures Beside the Boring Log in Profile Indicate the Number of Blows for Standard Penetration Test. X = Number of Blows for First 6 inches. Y = Number of Blows for Second 6 inches.
	Drive Rod Penetration Resistance Sounding Log – Profile
	Casing
	Resistance "R" < 10,000 lbs.
	Resistance "R" > 10,000 lbs.
Z	Indicates Final Measurement of Penetration, in Inches.
W	Indicates Free Water Elevation.
▼	Indicates Static Water Elevation.

SYMBOLS OF ROCK TYPES

Coal
Weathered Indurated Clay
Indurated Clay
Weathered Shale
Shale
Weathered Sandstone
Sandstone
Leached Dolomite
Dolomite
Leached Limestone

GENERAL INFORMATION

Drive Rod Penetration Sounding Tests

Drive rod penetration resistance tests constitute driving a 1.315-inch diameter steel rod, with a 45° cone point, into the ground, using a 122-pound drop-hammer with a free fall of five feet. At one or two-foot depth intervals, a measurement is taken to determine the amount of penetration achieved in three hammer drops. This reading is converted to an empirical value for capacity "R", in thousands of pounds (which is a measure of both the point resistance and frictional resistance on the rod), by using charts prepared by the Ohio Department of Highways, Bureau of Bridges, on the basis of correlation study of rod penetration with past performance of pile driving. For interpretation, a graph is prepared by plotting the value "R" against the depth at which the reading was taken, and connecting the plotted points. The curve so obtained reflects the density of subsurface materials in a manner that can be readily compared with data from similar tests at other locations on the structure site. From this comparison, the overall uniformity of subsurface condition may be evaluated.

Drive Sample Borings – Drive-Press Sample Borings

Drive sample borings are made by means of a rotary-type drill rig, employing a 2" O.D., 1-3/8" I.D. sampler, at 2-1/2 and / or 5-foot depth intervals, driven by means of a 140 - pound drop-hammer with a free fall of 30 inches. The number of blows required to drive the sampler 12 inches is considered the standard penetration test.

Drive-press sample borings are made by means of a rotary-type drill rig, employing a 2" O.D., 1-3/8" I.D. drive sampler, and 3" O.D. thin-wall press sampler. The press sampler is advanced by continuous uniform pressure, applied by the drill rig.

The boring log sheets show a graphic plot of the information obtained, including depth and elevation of the sample, number of blows for the standard penetration tests in two 6-inch increments, depth of press samples, field sample number, sample description - based on laboratory tests and the Casagrande AC classification system - and gradation, plasticity, and moisture content determinations. Results of strength and consolidation testing, if performed, appear on separate enclosures.

At depths where materials are bouldery or gravelly to the extent that the sampler can not be driven, a wash sample is procured for visual classification, in order to determine the general character of the material. These samples are not considered sufficiently representative to warrant laboratory testing.

Particle Size Definitions

Boulders	8"	Cobbles	3"	Gravel	2.0mm (No. 10 sieve)	Coarse Sand	0.42mm (No. 40 sieve)	Fine Sand	0.074mm (No. 200 sieve)	Silt	0.005mm	Clay

LOG OF BORING

Date Started 10-25-65 Sampler Type SS Dia 1 3/8" Water Elev. ____
Date Completed 10-26-65 Casing Length 6.5' Dia 3 1/2"
Boring No ____ Station & Offset 45+66, 415' Lt. Surface Elev 1027.5'

Elev.	Depth	Std. Pen. (N)	Rec. ft.	Loss ft.	Description	Sample No.	% Agg.	% C.S.	% F.S.	% Silt	% Clay	L.L.	P.I.	W.C.	SHTL Class.
1027.5	0														
1025.0	2														
1022.5	4	50* (0.4')			Grayish-Brown Sandy Silt with Clay	1	0	8	32	31	29	24	8	16	A-4a
1021.0	6	29/21			Brown Sandy Silt with Clay and Gravel	2	23	6	29	21	21	20	5	12	A-4a
	8–10		3.0	0.5	TOP OF ROCK										
	12–14		5.0	0.0	Sandstone, brown, fine-grained, firm, jointed, slightly weathered and friable. Core loss 3%.										
	16–18		5.0	0.0											
	20–28		10.0	0.0											
998.5	30–38		9.8	0.2	Conglomeratic sandstone, dark-brown, with many quartz pebbles (sub-rounded, maximum 0.2' thick) in a medium-grained sand matrix, firm, jointed, slightly weathered. Core loss 2%.										
987.5	40				BOTTOM OF BORING										

*REFUSAL

LOG OF BORING

Date Started 2-15-66 Sampler Type SS Dia. 1 3/8" Water Elev. ____
Date Completed 2-15-66 Casing Length 10' Dia 3 1/2"
Boring No. B-3 Station & Offset 49+87, 18' Lt. (Pier) Surface Elev 1025.2'

Elev.	Depth	Std. Pen (N)	Rec. ft.	Loss ft.	Description	Sample No	% Agg.	% C.S	% F.S.	% Silt	% Clay	L.L.	P.I.	W.C.	SHTL Class.
1025.2	0														
1020.2	6	7/10			Brown Gravelly Sandy Silt	1	17	4	20	34	25	19	3	16	A-4a
1017.7	8	10/11			Brown Sandy Silt	2	11	6	33	32	18	NP	NP	14	A-4a
1015.4	10				TOP OF ROCK										
	12–14		5.2	0.0	Sandstone, brown, medium-graded, firm, with few scattered quartz pebbles (max. 1.0" thick), slightly friable, jointed, and weathered. No core loss.										
	16–18		5.0	0.0											
1005.2	20				BOTTOM OF BORING										

State of Ohio
Department of Highways
Testing Laboratory

LOG OF BORING

Date Started 1-6-66 Sampler Type WILLIAMS AUGER Water Elev. Immediate ____
Date Completed 1-6-66 After ____ Hours ____
Boring No. ____ Station & Offset 49+83, 40' Rt. Surface Elev. 1025.7'

Elev.	Depth	Description	Field No.	Lab. Nos. So.	% Agg.	% C.S.	% F.S.	% Silt	% Clay	L.L.	P.I.	W.C.	SHTL Class.
1025.7	0												
	2	Brown Sandy Silt	2-S	8507	7	8	28	36	21	22	6	16	A-4a
1020.7	4–6												
	8	Brown Sandy Silt	3-S	8508	5	4	34	36	21	19	5	15	A-4a
1016.7		BOTTOM OF BORING *REFUSAL											

State of Ohio
Department of Highways
Testing Laboratory

LOG OF BORING

Date Started 1-3-66 Sampler Type Williams Auger Water Elev. Immediate ____
Date Completed 1-3-66 After ____ Hours ____
Boring No. ____ Station & Offset 53+45, 336' Rt. Surface Elev. 1029.8'

Elev.	Depth	Description	Field No.	Lab. Nos. So.	% Agg.	% C.S.	% F.S.	% Silt	% Clay	L.L.	P.I.	W.C.	SHTL Class.
1029.8	0												
	2	Brown Gravelly Sandy Silt	4-S	8509	18	10	19	28	25	24	7	17	A-4a
1024.8	4	TOP OF WEATHERED ROCK											
	6–8	Brown Weathered Sandstone	5-S	8510	5	7	50	23	15	NP	NP	19	Visual
1020.8		BOTTOM OF BORING REFUSAL											

NOTE: Information shown by this subsurface investigation was obtained solely for the use in establishing design controls for the project. The State of Ohio does not guarantee the accuracy of this data and it is not to be construed as a part of the plans governing construction of the project.

OHIO DEPARTMENT OF HIGHWAYS
TESTING LABORATORY
1620 WEST BROAD STREET, COLUMBUS 23, OHIO

STRUCTURE FOUNDATION INVESTIGATION
BRIDGE NO. SUM – 8 – 1845
UNDER HUDSON DR.
SEC. SUM – 8 – 17.63

CHECKED BY	REVIEWED BY	DATE
L.N.L.	R.D.R.	3/9/66

SUM-8-17.63

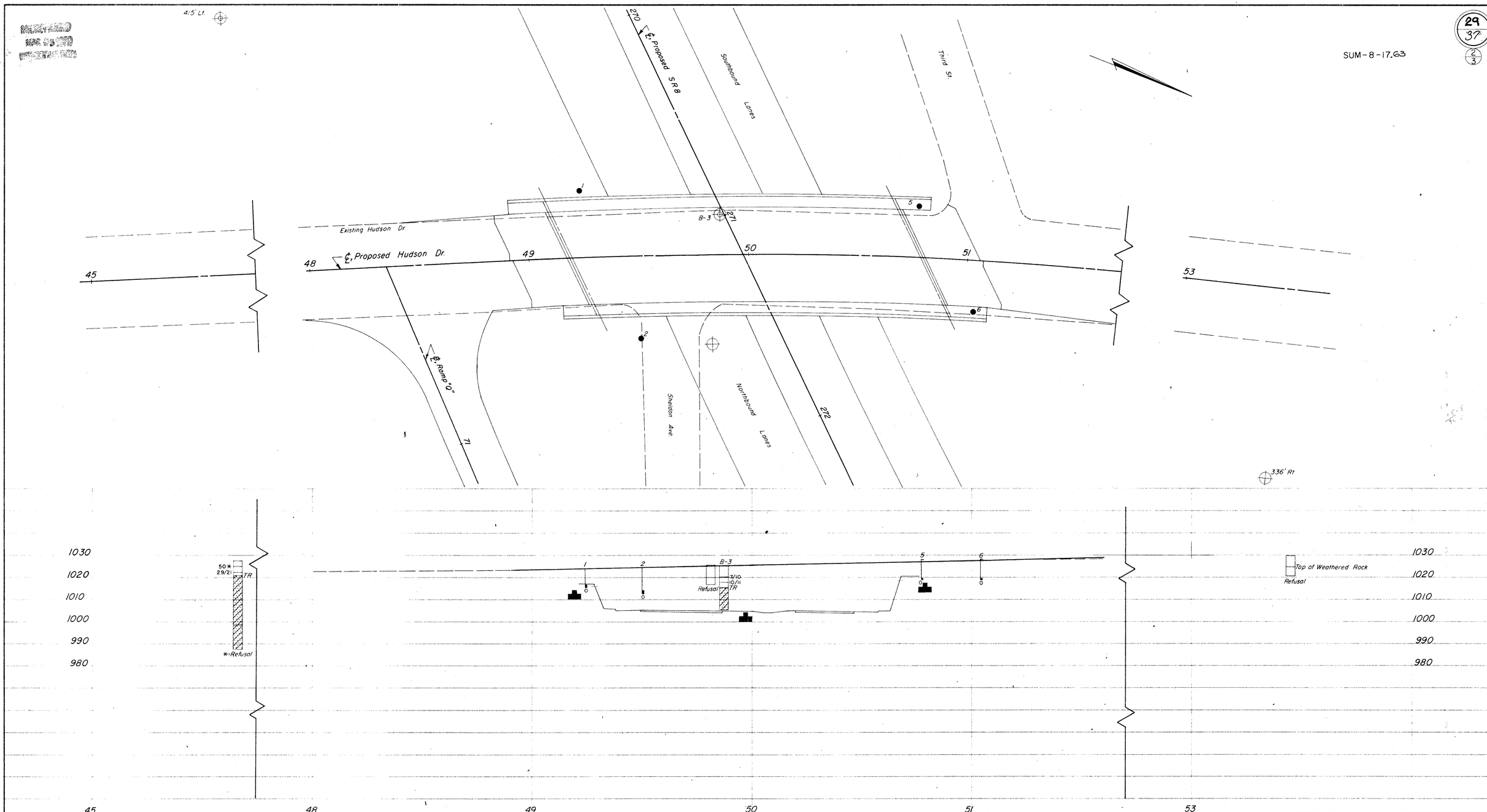

SCALE: 1" = 20'

OHIO DEPARTMENT OF HIGHWAYS
TESTING LABORATORY
1620 WEST BROAD STREET, COLUMBUS 23, OHIO

STRUCTURE FOUNDATION INVESTIGATION
BRIDGE NO. SUM - 8 - 1845
UNDER HUDSON DR.
SEC. SUM - 8 - 17.63

PLAN AND PROFILE

DRAWN BY	CHECKED BY	REVIEWED BY	DATE
R.L.D.	L.N.L.	R.D.R.	3/9/66

FE-114
1000-1-64

RECEIVED
MAR 15 1963
HIGHWAY DEPT.

30
37
3
3

Test Location No. ____
Station & Offset ____
Surface Elev. ____ Water Elev. ____
Piling ____
Hammer ____
Formula ____
Reference ____
Rod Condition ____

1033
1029
1025
1021
1017
1013
1009

Capacity "R" in Thousands of Pounds
10 20 30 40 50 60 70 80 90 100

Test Location No. ____
Station & Offset ____
Surface Elev. ____ Water Elev. ____
Piling ____
Hammer ____
Formula ____
Reference ____
Rod Condition ____

Capacity "R" in Thousands of Pounds
10 20 30 40 50 60 70 80 90 100

Test Location No. ____
Station & Offset ____
Surface Elev. ____ Water Elev. ____
Piling ____
Hammer ____
Formula ____
Reference ____
Rod Condition ____

Capacity "R" in Thousands of Pounds
10 20 30 40 50 60 70 80 90 100

Test Location No. ____
Station & Offset ____
Surface Elev. ____ Water Elev. ____
Piling ____
Hammer ____
Formula ____
Reference ____
Rod Condition ____

Capacity "R" in Thousands of Pounds
10 20 30 40 50 60 70 80 90 100

Test Location No. 1
Station & Offset 4.9+24.30' LT REAR ABUTMENT
Surface Elev. 1024.1 Water Elev. ____
Piling ____
Hammer ____
Formula ____
Reference ____
Rod Condition GOOD

1025
1021
1017
1013
1009

TEST ROD

Capacity "R" in Thousands of Pounds
10 20 30 40 50 60 70 80 90 100

Test Location No. 2
Station & Offset 49+50.37' RT REAR ABUTMENT
Surface Elev. 1024.5 Water Elev. ____
Piling ____
Hammer ____
Formula ____
Reference ____
Rod Condition GOOD

TEST ROD

Capacity "R" in Thousands of Pounds
10 20 30 40 50 60 70 80 90 100

Test Location No. 5
Station & Offset 50+77.23' LT FORWARD ABUTMENT
Surface Elev. 1028.5 Water Elev. ____
Piling ____
Hammer ____
Formula ____
Reference ____
Rod Condition GOOD

TEST ROD

Capacity "R" in Thousands of Pounds
10 20 30 40 50 60 70 80 90 100

Test Location No. 6
Station & Offset 51+24.23' RT FORWARD ABUTMENT
Surface Elev. 1028.1 Water Elev. ____
SUM – 8 – 17.63
Piling ____
Hammer ____
Formula ____
Reference ____
Rod Condition GOOD

1025
1021
1017
1013
1009

TEST ROD

Capacity "R" in Thousands of Pounds
10 20 30 40 50 60 70 80 90 100

OHIO STATE HIGHWAY
TESTING LABORATORY
1620 WEST BROAD ST. COLUMBUS 23, OHIO

STRUCTURE FOUNDATION INVESTIGATION
BRIDGE NO. SUM – 8 – 1845
UNDER HUDSON DR.
SEC. SUM – 8 – 17.63

DRIVE ROD PENETRATION RESISTANCE DATA

PLOTTED BY	CHECKED BY	REVIEWED BY	DATE
R.C.	L.N.I.	R.D.R.	3/13/63

MAR 08 1966

SUMMIT COUNTY
SUM-8-17.63

31
37
1
4

GEOLOGY OF THE SITE

The structure site is located on a portion of the glaciated moderately rolling Allegheny Plateau, in an area where deep glacial drift overlies sandstone and sandstone conglomerate of the Sharon formation, Pennsylvanian age.

EXPLORATION

The exploration consisted of two drive sample borings, made on February 2 and 9, 1966, and five drive rod penetration tests, made on March 2, 3, and 8, 1966. Also included in the report is the log of boring made by means of truck-mounted mechanical soil auger in conjunction with the roadway foundation investigation.

INVESTIGATIONAL FINDINGS

Borings encountered unstratified dense and very dense gravels, sands and silts with some stiff clays, and boulders. Boring B-1 was terminated at 43-foot depth, elevation 965 feet, after penetrating 6 feet of boulders. Boring B-10A was terminated at 51-foot depth, elevation 950 feet, after penetrating 20 feet of running sand. The truck-mounted soil auger boring was terminated at a predetermined depth, elevation 978 feet.

Rod soundings penetrated to greater depths than the borings and generally encountered very gradual increase in penetration resistance with increase in depth and were terminated upon near-refusal and refusal to penetration at 64 and 89 feet below ground surface, elevations 942 to 914 feet, considered to be in very dense and stiff material.

No free water was observed in any of the rod sounding holes.

No test penetrated to bedrock surface.

LEGEND

- Auger Boring Location - Plan View.
- Press and / or Drive Sample and / or Core Boring Location - Plan View.
- Drive Rod Penetration Resistance Sounding Location - Plan View.
- Capped Pile
- Footing
- Footing on Pile
- TR — Top of Rock
- Horizontal Bar on Boring Log Indicates the Depth the Sample Was Taken.
- X/Y — Figures Beside the Boring Log In Profile Indicate the Number of Blows for Standard Penetration Test.
  X = Number of Blows for First 6 inches.
  Y = Number of Blows for Second 6 inches.
- Drive Rod Penetration Resistance Sounding Log - Profile
- Casing
- Resistance "R" < 10,000 lbs.
- Resistance "R" > 10,000 lbs.
- Z — Indicates Final Measurement of Penetration, in Inches.
- W — Indicates Free Water Elevation.
- Indicates Static Water Elevation.

SYMBOLS OF ROCK TYPES

- Coal
- Weathered Indurated Clay
- Indurated Clay
- Weathered Shale
- Shale
- Boulders
- Weathered Sandstone
- Sandstone
- Leached Dolomite
- Dolomite
- Leached Limestone
- Limestone

GENERAL INFORMATION

Drive Rod Penetration Sounding Tests

Drive rod penetration resistance tests constitute driving a 1.315-inch diameter steel rod, with a 45° cone point, into the ground, using a 122-pound drop-hammer with a free fall of five feet. At one or two-foot depth intervals, a measurement is taken to determine the amount of penetration achieved in three hammer drops. This reading is converted to an empirical value for capacity "R", in thousands of pounds (which is a measure of both the point resistance and frictional resistance on the rod), by using charts prepared by the Ohio Department of Highways, Bureau of Bridges, on the basis of correlation study of rod penetration with past performance of pile driving. For interpretation, a graph is prepared by plotting the value "R" against the depth at which the reading was taken, and connecting the plotted points. The curve so obtained reflects the density of subsurface materials in a manner that can be readily compared with data from similar tests at other locations on the structure site. From this comparison, the overall uniformity of subsurface condition may be evaluated.

Drive Sample Borings - Drive-Press Sample Borings

Drive sample borings are made by means of a rotary-type drill rig, employing a 2" O.D., 1-3/8" I.D. sampler, at 2-1/2 and 5-foot depth intervals, driven by means of a 140-pound drop-hammer with a free fall of 30 inches. The number of blows required to drive the sampler 12 inches is considered the standard penetration test.

Drive-press sample borings are made by means of a rotary-type drill rig, employing a 2" O.D., 1-3/8" I.D. drive sampler, and 3" O.D. thin-wall press sampler. The press sampler is advanced by continuous uniform pressure, applied by the drill rig.

The boring log sheets show a graphic plot of the information obtained, including depth and elevation of the sample, number of blows for the standard penetration tests in two 6-inch increments, depth of press samples, field sample number, sample description - based on laboratory tests and the Casagrande AC classification system - and gradation, plasticity, and moisture content determinations. Results of strength and consolidation testing, if performed, appear on separate enclosures.

At depths where materials are bouldery or gravelly to the extent that the sampler can not be driven, a wash sample is procured for visual classification, in order to determine the general character of the material. These samples are not considered sufficiently representative to warrant laboratory testing.

Particle Size Definitions

Boulders	Cobbles	Gravel	Coarse Sand	Fine Sand	Silt	Clay
8"	3"	2.0mm (No. 10 sieve)	0.42mm (No. 40 sieve)	0.074mm (No. 200 sieve)	0.005mm	

NOTE: Information shown by this subsurface investigation was obtained solely for the use in establishing design controls for the project. The State of Ohio does not guarantee the accuracy of this data and it is not to be construed as a part of the plans governing construction of the project.

OHIO DEPARTMENT OF HIGHWAYS
TESTING LABORATORY
1620 WEST BROAD STREET, COLUMBUS 23, OHIO

STRUCTURE FOUNDATION INVESTIGATION
BRIDGE NO. SUM-8-1950
UNDER RELOC. GRAHAM ROAD
SEC. SUM-8-17.63

CHECKED BY	REVIEWED BY	DATE
L. N. L.	R. D. R.	3/18/66

MICROFILMED
MAR 05 1979
REPRODUCTION

SUM-8-17.63

32
37
2
4

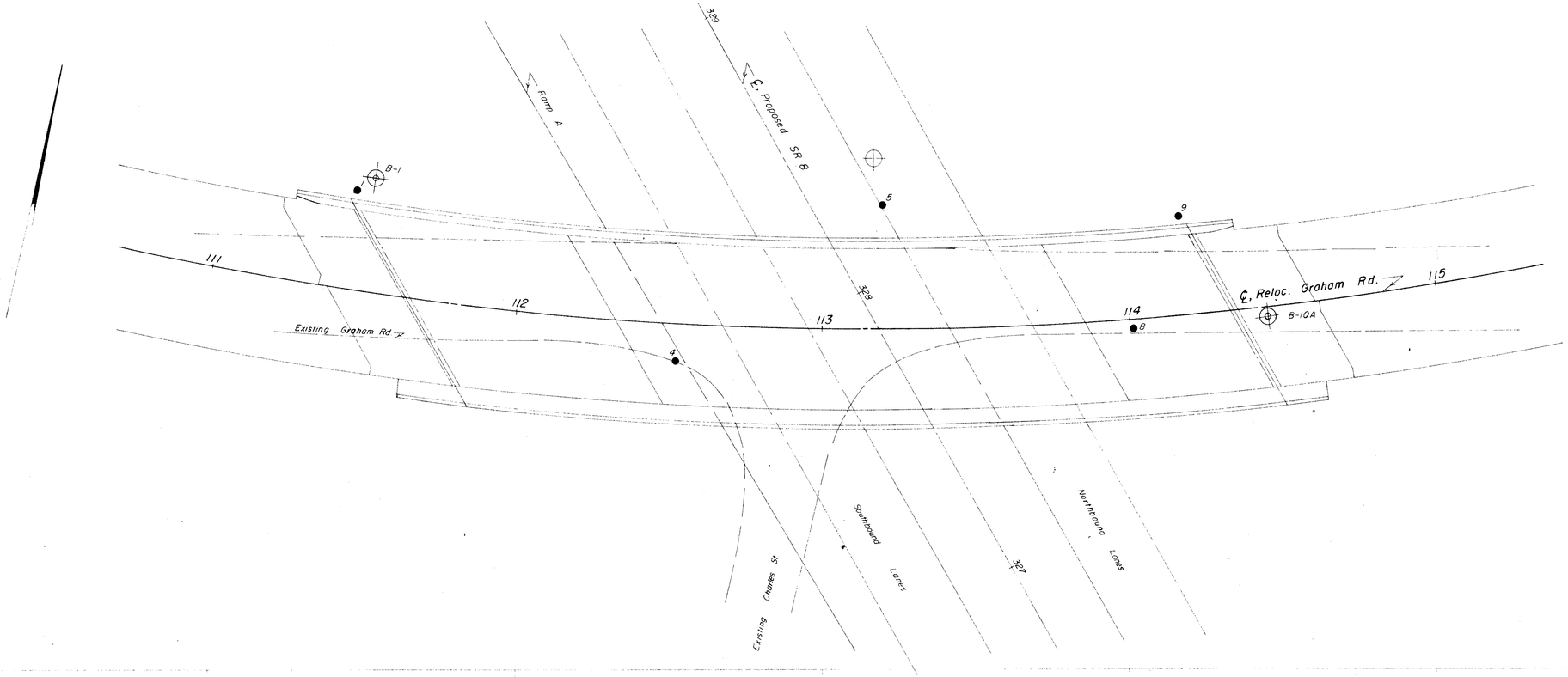

SCALE: 1" = 20'

OHIO DEPARTMENT OF HIGHWAYS
TESTING LABORATORY
1620 WEST BROAD STREET, COLUMBUS 23, OHIO

STRUCTURE FOUNDATION INVESTIGATION
BRIDGE NO. SUM-8-1950
UNDER RELOC. GRAHAM ROAD
SEC. SUM-8-17.63

PLAN AND PROFILE

DRAWN BY	CHECKED BY	REVIEWED BY	DATE
R. L. F.	L. N. L.	R. D. R.	3/18/66

RECEIVED
MAR 05 1979
DIVISION OF

SUM – 8 – 17.63

33/37 (3/4)

LOG OF BORING

Date Started 2-2-66 | Sampler Type SS | Dia. 1 3/8" | Water Elev. —
Date Completed 2-2-666 | Casing: Length 48' | Dia. 3 1/2"
Boring No. B-1 | Station & Offset 111+48, 37' Lt. (Rear Abutment) | Surface Elev. 1007.8'

Elev.	Depth	Std. Pen. (N)	Rec. ft.	Loss ft.	Description	Sample No.	Physical Characteristics: % Agg.	% C.S.	% F.S.	% Silt	% Clay	L.L.	P.I.	W.C.	SHTL Class.
1007.8	0														
	2														
	4														
1002.8	6	14/21			Brown and Gray Sandy Clay	1	7	6	13	31	43	32	11	16	
1000.3	8	8/12			Gray Sandy Clay	2	12	4	10	30	44	29	13	13	
997.8	10	18/15			Brown Silty Sandy Gravel	3	46	18	17	11	8	NP	NP	10	
995.3	12	12/20			Gray Silty Gravelly Sand	4	43	28	18	-11-		NP	NP	8	
992.8	14				Brown Silty Gravelly Sand	5	23	32	24	-21-		NP	NP	5	
	16														
	18														
987.8	20				Gray Silty Gravelly Sand	6	40	24	18	-18-		NP	NP	7	
	22														
	24														
982.8	26				Gray Silty Gravelly Sand	7	27	43	20	-10-		NP	NP	10	
	28														
977.8	30														
	32														
	34														
972.8	36	12/14			Gray Sandy Gravel	8	68	8	19	-5-		NP	NP	8	
970.8	38				No Sample Recovered										
	40				Gravel and Boulders (Driller's Description)										
	42														
964.8					BOTTOM OF BORING										

State of Ohio
Department of Highways
Testing Laboratory

LOG OF BORING

Date Started 1-4-66 | Sampler Type WILLIAMS AUGER | Water Elev. Immediate —
Date Completed 1-4-66 | After — Hours —
Boring No. — | Station & Offset 113+17, 55' Lt. | Surface Elev. 1004.0'

Elev.	Depth	Description	Field No.	Lab. Nos.	Physical Characteristics: % Agg.	% C.S.	% F.S.	% Silt	% Clay	L.L.	P.I.	W.C.	SHTL Class.
1004.0	0												
	2	Brown Clayey Gravelly Sand	38-S	8543	30	19	14	21	16	30	11	11	A-6a
	4												
998.0	6												
	8	Brownish-Gray Silty Clay with Cinders, Glass, and Gravel	39-S	8544	31	16	13	21	19	39	16	37	Visual
	10												
993.0	12												
	14	Brownish-Gray Sandy Gravelly Clay	40-S	8545	20	6	11	29	34	33	12	17	A-6a
988.0	16												
	18	Gray Gravelly Sand	41-S	8546	25	39	27	-9-		NP	NP	17	A-1-b
	20												
983.0	22												
	24	Gray Silty Sand	42-S	8547	13	40	36	-11-		NP	NP	16	AA1-b
978.0	26												
		BOTTOM OF BORING											

LOG OF BORING

Date Started 2-9-66 | Sampler Type SS | Dia. 1 3/8" | Water Elev. —
Date Completed 2-9-66 | Casing: Length 45' | Dia. 3 1/2"
Boring No. B-10A | Station & Offset 114+45, 13' Rt. (Forward Abutment) | Surface Elev. 1000.8'

Elev.	Depth	Std. Pen. (N)	Rec. ft.	Loss ft.	Description	Sample No.	Physical Characteristics: % Agg.	% C.S.	% F.S.	% Silt	% Clay	L.L.	P.I.	W.C.	SHTL Class.
1000.8	0														
	2														
	4														
995.8	6	15/22			Brown Gravelly Silt	1	17	4	9	32	38	26	8	16	A-4a
993.3	8	19/31			Brown Gravelly Silt	2	17	5	9	31	38	28	9	15	A-4a
990.8	10	15/16			Gray Gravelly Clay	3	22	4	8	29	37	27	11	15	A-6a
988.3	12	12/14			Gray Clayey Silt	4	0	5	10	39	46	25	9	15	A-4a
985.8	14	11/7			Gray Sandy Gravel	5	48	23	21	-8-		NP	NP	9	A-1-b
	16														
	18														
980.8	20	6/9			Gray Gravelly Sand	6	25	31	35	-9-		NP	NP	15	A-1-b
	22														
	24														
975.8	26	50* (0.7)			No Sample Recovered-(Sand heaved in Casing (Driller's Description)										
	28														
970.8	30	13/60			Gray Sand	7	14	20	61	-5-		NP	NP	19	A-3
	32														
	34														
965.8	36	50* (0.2)			Gray Sand - Sand Heaved in Casing	8	0	44	49	-7-		NP	NP	19	A-3
	38														
960.8	40				Gray Sand - Sand heaved 3' in casing	9	0	51	46	-3-		NP	NP	27	A-3
	42														
	44														
955.8	46	38/33			Gray Sand - Sand heaved 1.5' in casing	10	0	28	71	-1-		NP	NP	22	A-3
	48														
950.8	50				Gray Gravelly Sand - Sand heaved 4' in casing	11	29	43	25	-3-		NP	NP	15	A-1-b
949.8					BOTTOM OF BORING *REFUSAL										

OHIO DEPARTMENT OF HIGHWAYS
TESTING LABORATORY
1620 WEST BROAD STREET, COLUMBUS 23, OHIO

STRUCTURE FOUNDATION INVESTIGATION
BRIDGE NO. SUM – 8 – 1950
UNDER RELOC. GRAHAM ROAD
SEC. SUM – 8 – 17.63

BORING DATA

TYPED BY	CHECKED BY	REVIEWED BY	DATE
J. M. S.	R. C.	R. D. R.	3/18/66

MAR 05 1970

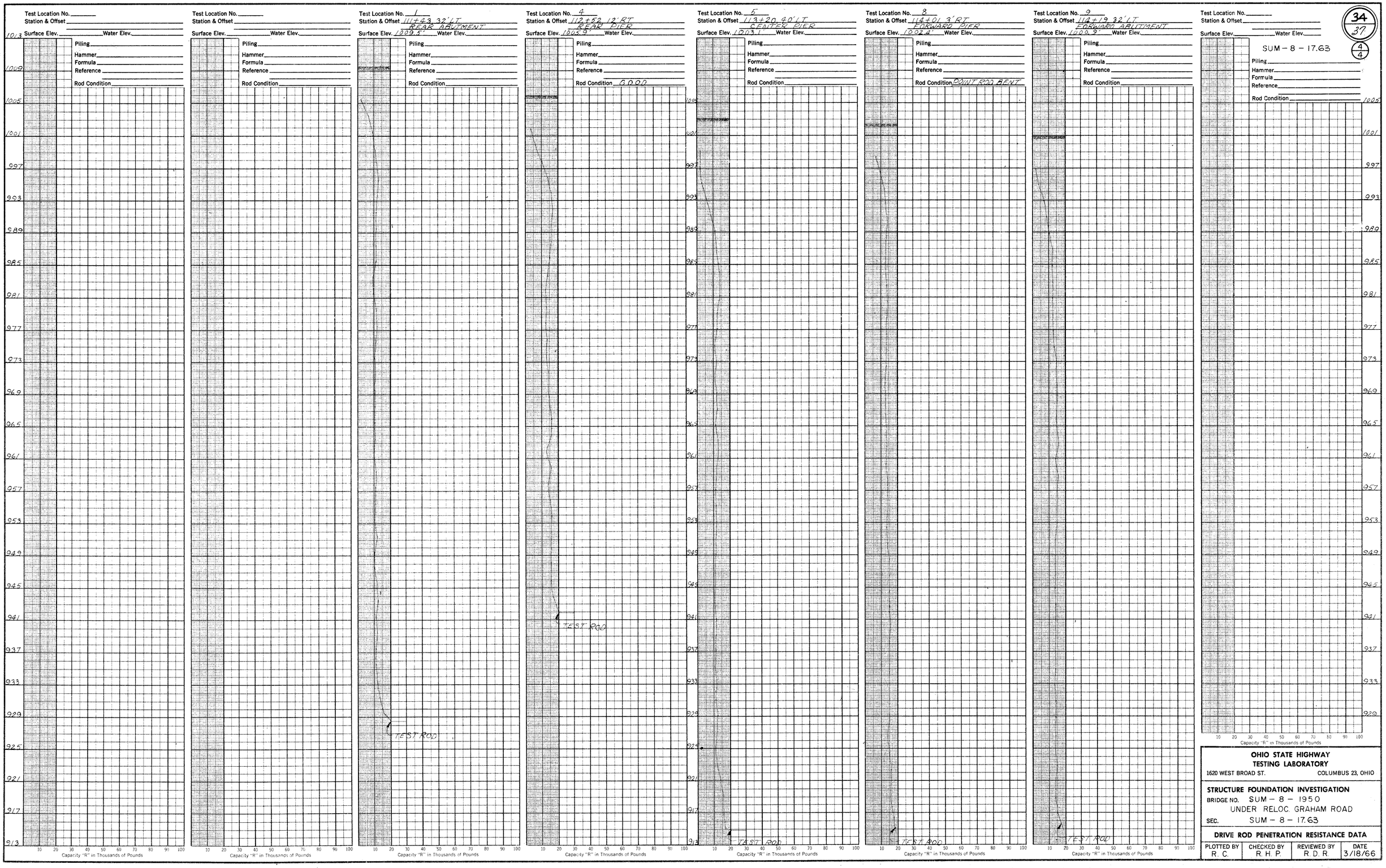

34
37
4/4

OHIO STATE HIGHWAY TESTING LABORATORY
1620 WEST BROAD ST. COLUMBUS 23, OHIO

STRUCTURE FOUNDATION INVESTIGATION
BRIDGE NO. SUM - 8 - 1950
UNDER RELOC. GRAHAM ROAD
SEC. SUM - 8 - 17.63

DRIVE ROD PENETRATION RESISTANCE DATA

PLOTTED BY	CHECKED BY	REVIEWED BY	DATE
R. C.	R. H. P.	R. D. R.	3/18/66

TE - 1 1 8
600 - 12 - 68

35
37
SUMMIT COUNTY
SUM-8-17.63
1
3

GEOLOGY OF THE SITE

THE STRUCTURE SITE IS LOCATED ON THE GLACIATED MODERATELY ROLLING ALLEGHENY PLATEAU, IN AN AREA WHERE DEEP GLACIAL DRIFT OVERLIES SANDSTONE BEDROCK, OF THE SHARON FORMATION, PENNSYLVANIAN AGE.

EXPLORATION

THE EXPLORATION CONSISTED OF THREE DRIVE SAMPLE BORINGS, MADE BETWEEN MARCH 5 AND 12, 1969.

INVESTIGATIONAL FINDINGS

BORINGS DISCLOSED LOOSE TO VERY DENSE SILTS, SANDS, AND GRAVELS TO 41 TO 61-FOOT DEPTHS, ELEVATIONS 982 TO 950 FEET, WHERE THE BORINGS WERE TERMINATED AFTER PENETRATING AT LEAST 20 FEET OF MATERIAL REQUIRING IN EXCESS OF 30 BLOWS PER FOOT IN THE STANDARD PENETRATION TEST.

LEGEND

- Auger Boring Location - Plan View.
- Press and / or Drive Sample and / or Core Boring Location - Plan View.
- Drive Rod Penetration Resistance Sounding Location - Plan View.
- Capped Pile
- Footing
- Footing on Pile
- TR — Top of Rock
- Horizontal Bar on Boring Log Indicates the Depth the Sample Was Taken.
- X/Y — Figures Beside the Boring Log in Profile Indicate the Number of Blows for Standard Penetration Test.
  X = Number of Blows for First 6 inches.
  Y = Number of Blows for Second 6 inches.
- Drive Rod Penetration Resistance Sounding Log - Profile
- Casing
- Resistance "R" < 10,000 lbs.
- Resistance "R" > 10,000 lbs.
- Z — Indicates Final Measurement of Penetration, in Inches.
- W — Indicates Free Water Elevation.
- Indicates Static Water Elevation.

SYMBOLS OF ROCK TYPES

- Coal
- Weathered Siltstone, Mudstone, or Claystone
- Siltstone, Mudstone, or Claystone
- Weathered Shale
- Shale
- Boulders or Cobbles
- Weathered Sandstone
- Sandstone
- Leached Dolomite
- Dolomite
- Leached Limestone
- Limestone

GENERAL INFORMATION

Drive Rod Penetration Sounding Tests

Drive rod penetration resistance tests constitute driving a 1.315-inch diameter steel rod, with a 45° cone point, into the ground, using a 122-pound drop-hammer with a free fall of five feet. At one or two-foot depth intervals, a measurement is taken to determine the amount of penetration achieved in three hammer drops. This reading is converted to an empirical value for capacity "R", in thousands of pounds (which is a measure of both the point resistance and frictional resistance on the rod), by using charts prepared by the Ohio Department of Highways, Bureau of Bridges, on the basis of correlation study of rod penetration with past performance of pile driving. For interpretation, a graph is prepared by plotting the value "R" against the depth at which the reading was taken, and connecting the plotted points. The curve so obtained reflects the density of subsurface materials in a manner that can be readily compared with data from similar tests at other locations on the structure site. From this comparison, the overall uniformity of subsurface condition may be evaluated.

Drive Sample Borings - Drive-Press Sample Borings

Drive sample borings are made by means of a rotary-type drill rig, employing a 2" O.D., 1-3/8" I.D. sampler, at 2-1/2 and / or 5-foot depth intervals, driven by means of a 140 - pound drop-hammer with a free fall of 30 inches. The number of blows required to drive the sampler 12 inches is considered the standard penetration test.

Drive-press sample borings are made by means of a rotary-type drill rig, employing a 2" O.D., 1-3/8" I.D. drive sampler, and 3" O.D. thin-wall press sampler. The press sampler is advanced by continuous uniform pressure, applied by the drill rig.

The boring log sheets show a graphic plot of the information obtained, including depth and elevation of the sample, number of blows for the standard penetration tests in two 6-inch increments, depth of press samples, field sample number, sample description - based on laboratory tests and the Casagrande AC classification system-and gradation, plasticity, and moisture content determinations. Results of strength and consolidation testing, if performed, appear on separate enclosures.

At depths where materials are bouldery or gravelly to the extent that the sampler can not be driven, a wash sample is procured for visual classification, in order to determine the general character of the material. These samples are not considered sufficiently representative to warrant laboratory testing.

Particle Size Definitions

Boulders	12"	Cobbles	3"	Gravel	2.0mm (No. 10 sieve)	Coarse Sand	0.42mm (No. 40 sieve)	Fine Sand	0.074mm (No. 200 sieve)	Silt	0.005mm	Clay

NOTE: Information shown by this subsurface investigation was obtained solely for the use in establishing design controls for the project. The State of Ohio does not guarantee the accuracy of this data and it is not to be construed as a part of the plans governing construction of the project.

OHIO DEPARTMENT OF HIGHWAYS
TESTING LABORATORY
1620 WEST BROAD STREET, COLUMBUS, OHIO 43223

STRUCTURE FOUNDATION INVESTIGATION
BRIDGE NO. SUM-8-1927
UNDER PEDESTRIAN BRIDGE
SEC. SUM-8-17.63

CHECKED BY	REVIEWED BY	DATE
L.N.L.	R.D.R.	3/26/69

TE - 119
1000 - 4 - 66

MICROFILMED
MAR 1 8 1970
PROCESSED

36/37

SUM-8-17.63 2/3

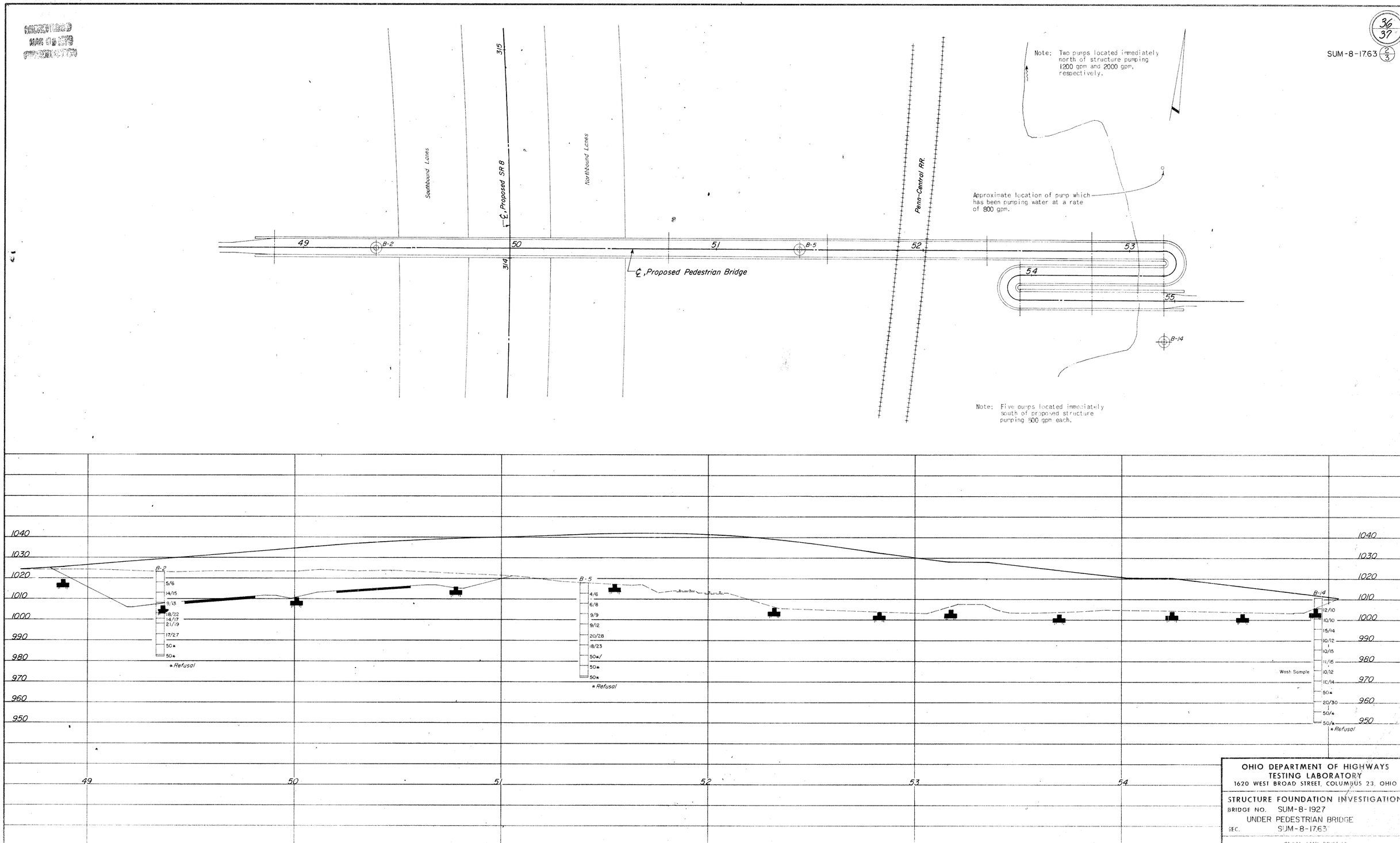

OHIO DEPARTMENT OF HIGHWAYS
TESTING LABORATORY
1620 WEST BROAD STREET, COLUMBUS 23, OHIO

STRUCTURE FOUNDATION INVESTIGATION
BRIDGE NO. SUM-8-1927
UNDER PEDESTRIAN BRIDGE
SEC. SUM-8-17.63

PLAN AND PROFILE

DRAWN BY	CHECKED BY	REVIEWED BY	DATE
J.E.C.	[illegible]	[illegible]	[illegible]

TE - 122
600 - 4 - 66

MAR 05 1969

32
32

SUM - 8 - 17.63

LOG OF BORING No. B-2

Date Started 3-12-69 | Sampler Type SS | Dia 1 3/8"
Date Finished 3-12-69 | Casing Length 40' | Dia 3 1/2"
Boring No. B-2 | Station & Offset 49+35, CL. (First Pier) | Surface Elev 1023.1'

Elev	Depth	Sm Pen (in)	Rec (ft)	Loss (ft)	Description	Sample No	% Agg	% G	% S	% Silt	% Clay	L L	P I	W C	SHTL Class.
1023.1	0														
1018.1	5	5/6			Brown Gravelly Sandy Silt	1	-	-	-	-	-	-	-	11	Visual
1013.1	10	14/15			Gray Sandy Silt	2	9	6	10	37	38	23	9	15	A-4a
1008.1	15	9/13			Gray Clayey Silt	3	8	4	7	38	43	22	8	22	A-4a
1003.1	20	18/22			Brown Sandy Silt	4	2	1	31	42	24	NP	NP	24	A-4a
1000.6	22	14/17			Brown Silty Sand	5	9	27	43	-21	-	NP	NP	10	A-3a
998.1	25	21/19			Brown Silty Sandy Gravel	6	47	24	12	-17	-	NP	NP	12	A-1-b
993.1	30	17/27			Gray Sandy Gravel	7	-	-	-	-	-	-	-	17	Visual
988.1	35	50* (0.7')			Gray Sandy Gravel	8	-	-	-	-	-	-	-	12	Visual
983.1	40	50* (0.7')			Gray Sandy Gravel	9	-	-	-	-	-	-	-	7	Visual
982.4					BOTTOM OF BORING										

*Refusal

LOG OF BORING No. B-5

Date Started 3-6-69 | Sampler Type SS | Dia 1 3/8"
Date Finished 3-11-69 | Casing Length 40' | Dia 3 1/2"
Boring No. B-5 | Station & Offset 51+40, CL. (4th Pier) | Surface Elev 1018.0'

Elev	Depth	Sm Pen (in)	Rec (ft)	Loss (ft)	Description	Sample No	% Agg	% G	% S	% Silt	% Clay	L L	P I	W C	SHTL Class.
1018.0	0														
1013.0	5	4/6			Brown Sandy Silt	1	8	2	24	39	27	19	5	19	A-4a
1008.0	10	6/8			Brown Sandy Silt	2	6	2	42	26	24	NP	NP	19	A-4a
1003.0	15	9/9			Gray Silt	3	0	1	10	70	19	NP	NP	20	A-4b
998.0	20	9/12			Gray Silt and Clay	4	0	1	3	39	57	29	11	20	A-6a
993.0	25	20/28			Gray Silty Sand	5	8	7	71	-14	-	NP	NP	12	A-3a
988.0	30	18/23			Gray Sand	6	0	24	67	- 9	-	NP	NP	20	A-3
983.0	35	50*/ (0.4')			Gray Sand	7	8	46	41	- 5	-	NP	NP	21	A-1-b
978.0	40	50* (0.8')			Gray Silty Sandy Gravel	8	62	16	10	-12	-	NP	NP	12	A-1-a
973.0	45	50* (0.8')			Gray Sand	9	0	40	53	- 7	-	NP	NP	20	A-3
972.2					BOTTOM OF BORING										

*Refusal

LOG OF BORING No. B-14

Date Started 3-5-69 | Sampler Type SS | Dia 1 3/8"
Date Finished 3-5-69 | Casing Length 55' | Dia 3 1/2"
Boring No. B-14 | Station & Offset 54+95, 20' Rt. (Forward Abutment) | Surface Elev 1010.9'

Elev	Depth	Sm Pen (in)	Rec (ft)	Loss (ft)	Description	Sample No	% Agg	% G	% S	% Silt	% Clay	L L	P I	W C	SHTL Class.
1010.9	0														
1005.9	5	12/10			Brown Gravelly Clay	1	13	6	5	21	55	43	19	27	A-7-6
1000.9	10	10/10			Brownish-Gray Sandy Silt	2	9	5	13	34	39	26	7	19	A-4a
995.9	15	15/14			Brown Silty Sandy Gravel	3	46	19	18	-17	-	NP	NP	12	A-1-b
990.9	20	10/12			Gray Sand	4	10	38	44	- 8	-	NP	NP	15	A-3a
985.9	25	10/15			Gray Sand	5	0	20	73	- 7	-	NP	NP	19	A-3
980.9	30	11/15			Gray Sandy Gravel	6	47	23	20	-10	-	NP	NP	13	A-1-b
975.9	35	10/12			No Sample Recovered - Gray Sand (Wash Sample) (Driller's Description)	7	0	39	61	- 0	-	NP	NP	24	A-3
970.9	40	10/14			Gray Sand	8	0	75	18	- 7	-	NP	NP	13	A-1-b
965.9	45	50* (0.8')			Gray Sandy Gravel	9	59	20	16	- 5	-	NP	NP	11	A-1-a
960.9	50	20/30			Gray Sandy Gravel	10	-	-	-	-	-	-	-	10	Visual
955.9	55	50/*			Gray Gravelly Sand	11	43	25	27	- 5	-	NP	NP	13	A-1-b
950.9	60	50/*			No Sample Recovered										
950.4					BOTTOM OF BORING										

*Refusal

OHIO DEPARTMENT OF HIGHWAYS
TESTING LABORATORY
1620 WEST BROAD STREET, COLUMBUS 23, OHIO

STRUCTURE FOUNDATION INVESTIGATION
BRIDGE NO. SUM-8-1927
UNDER PEDESTRIAN BRIDGE
SEC. SUM-8-17.63

BORING DATA

TYPED BY	CHECKED BY	REVIEWED BY	DATE
S A J	L N L	R D R	3/26/69