MICROFILMED
OCT 21 1994

SUM-76-11.57	OHIO
FED.PROJECT IM-76-2(44)19	F.H.W.A. REGION 5

1
1214

SUMMIT COUNTY

NOTE: ALL REFERENCES TO FEDERAL PROJECT NUMBER IR-76-2(44)19 SHOWN IN THESE PLANS SHALL BE CONSIDERED TO READ AS IM-76-2(44)19.

DESIGN DESIGNATION

Current A.D.T. (1990)	=	77,750
Design Year A.D.T. (2010)	=	100,900
D.H.V. (2010)	=	10,090
D	=	60%
T	=	5%
V (DESIGN AND LEGAL)	=	50 MPH
FUNCTIONAL CLASSIFICATION	=	Urban Interstate
DESIGN EXCEPTIONS	=	Vertical Alignment 8-25-86

STATE OF OHIO
DEPARTMENT OF TRANSPORTATION
SUM-76-11.57
AKRON EAST EXPRESSWAY
CITY OF AKRON
SUMMIT COUNTY

CONVENTIONAL SIGNS

Township Line
Section Line
Corporation Line
Fence Line (existing) (proposed)
Center Line
Trees, Stumps (to be removed)
Utility Poles: Telephone, Power, Light

Limited Access (only) LA
Right of Way (only) RW
Limited Access & Right of Way LA & RW
Existing Right of Way RW
Property Line (in existing fence)
Railroad or
Guardrail (existing) (proposed)

INDEX OF SHEETS

TITLE SHEET	1	CROSS-SECTION LAYOUT	243-245
SCHEMATIC PLAN	2	GRADING PLAN	246
GEOMETRIC PLAN	3-6	CROSS SECTIONS	247-477
TYPICAL SECTIONS	7-16	DRAINAGE PLANS	478-533
EXISTING TYPICAL SECTIONS	17-20, 32A, 32B	DRAINAGE PROFILES	534-550, 534A, B, C
MAINTENANCE OF TRAFFIC	21-88, 78A, 83A, B	DRAINAGE DETAILS	551-555, 555A, B
GENERAL NOTES	89-92, 89A	LANDSCAPE PLANS	556-567
GENERAL SUMMARY	93-99	WATERWORK PLANS	568-603, 576A
QUANTITY CALCULATIONS	100-113	WATERWORK PROFILES	604-612
ROADWAY PLANS	114-165	WATERWORK DETAILS	613-614
FENCE PLAN	166-168	TRAFFIC CONTROL	615-671, 671A
ROADWAY PROFILES	169-185	LIGHTING PLANS	672-706
DRIVEWAY PROFILES	186-187	RETAINING WALLS	707-804
ROADWAY DETAILS	188-191	STRUCTURES OVER 20' SPAN	805-1164, 844A, 886A, 906A, 808A
PAVEMENT DETAILS	192-217	RIGHT-OF-WAY PLANS	1165-1214
REMOVAL PLANS	218-242	SOIL PROFILE	

LINE DATA

BEGIN PROJECT	STA. 548+97.60	
END PROJECT	STA. 634+00.00	
	8,502.40 L.F. OR 1.610 MILES	
ADD FOR WORK		
I-76	STA. 541+50.00 TO STA. 548+97.60	- 747.60 L.F.
	STA. 634+00.00 TO STA. 644+67.00	- 1,067.00 L.F.
SCHOOL ROAD	STA. 10+34.80 TO STA. 15+00.00	- 465.20 L.F.
	LENGTH OF WORK	10,782.20 L.F. OR 2.042 MILES

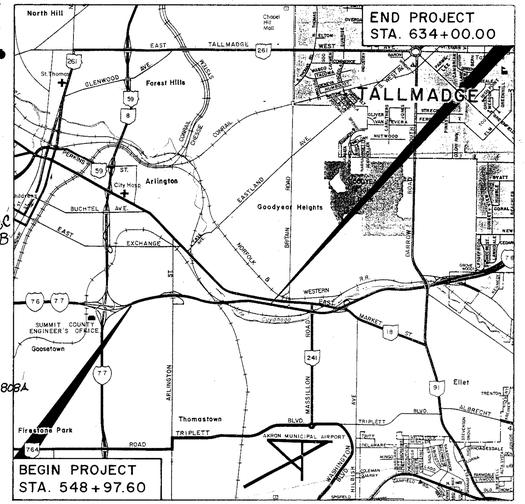

LOCATION MAP
SCALE IN MILES
0 1 2

Portion to be Improved
Other Roads

SCALES

Plan 0 20
Profile Horizontal 0 20 Vertical 0 5
Cross Section Horizontal 0 5 Vertical 0 5

N

FOR LISTINGS OF STANDARD DRAWINGS AND SUPPLEMENTAL SPECIFICATIONS SEE SHEET 92

UNDERGROUND UTILITIES
2 WORKING DAYS BEFORE YOU DIG
Call...800-362-2764 (Toll Free)
OHIO UTILITIES PROTECTION SERVICE
NON-MEMBERS MUST BE CALLED DIRECTLY

LIMITED ACCESS

THIS IMPROVEMENT IS ESPECIALLY DESIGNED FOR THROUGH TRAFFIC AND HAS BEEN DECLARED A LIMITED ACCESS HIGHWAY OR FREEWAY BY ACTION OF THE DIRECTOR IN ACCORDANCE WITH THE PROVISION OF SECTION 5511.02 OF THE REVISED CODE OF OHIO.

1991 SPECIFICATIONS

THE STANDARD SPECIFICATIONS OF THE STATE OF OHIO, DEPARTMENT OF TRANSPORTATION, INCLUDING CHANGES AND SUPPLEMENTAL SPECIFICATIONS LISTED IN THE PROPOSAL, SHALL GOVERN THIS IMPROVEMENT.

I HEREBY APPROVE THESE PLANS AND DECLARE THAT THE MAKING OF THIS IMPROVEMENT WILL NOT REQUIRE THE CLOSING TO TRAFFIC OF THE HIGHWAY AND THAT PROVISIONS FOR THE MAINTENANCE AND SAFETY OF TRAFFIC WILL BE AS SET FORTH ON THE PLANS AND ESTIMATES.

APPROVED _____
DATE 9-13-91 CITY OF AKRON DIRECTOR OF PUBLIC SERVICE
SUBMITTED C. David Haug
DATE 9-13-91 CITY ENGINEER
SUBMITTED David J. Celik
DATE 9-13-91 CITY OF AKRON DESIGN DIVISION MANAGER
SUBMITTED P.K. Khaitan /E Lea
DATE 9/16/91 CITY OF AKRON CONSTRUCTION DIVISION MANAGER
APPROVED _____
DATE 9-20-91 DISTRICT DEPUTY DIRECTOR OF TRANSPORTATION
APPROVED S.D. Hamlamni /WFE
DATE 3/24/92 ENGINEER, BUREAU OF BRIDGES AND STRUCTURAL DESIGN
APPROVED _____
DATE 5/11/92 DEPUTY DIRECTOR, PLANNING AND DESIGN
APPROVED _____
DATE 5-11-92 DIRECTOR, DEPARTMENT OF TRANSPORTATION

DEPARTMENT OF TRANSPORTATION
FEDERAL HIGHWAY ADMINISTRATION
APPROVED:
DIVISION ADMINISTRATOR DATE

Project: SUM-76-11.57
Date of Letting 19 , Contract No.

PLANS JOINTLY PREPARED BY:

URS CONSULTANTS
ARCHITECTS AKRON ENGINEERS COLUMBUS PLANNERS CLEVELAND

STATE OF OHIO FRANK A. MONAGO E-34380 REGISTERED PROFESSIONAL ENGINEER

F.A. Monago
F.A. MONAGO REG. ENGINEER No. 34380

SHEETS 70 TO 84 AND 805 TO 936
JOHN DAVID JONES & ASSOCIATES

JOHN DAVID JONES REG. ENGINEER No. 21776

SHEETS 85 TO 88 AND 937 TO 1164
McCOY ASSOCIATES, INC.
2620 RIDGEWOOD ROAD
AKRON, OHIO 44313
(216) 867-4727

Bryan E. McCoy
BRYAN E. McCOY REG. ENGINEER No. 2773

STATE OF OHIO BRYAN E. McCOY E-27730 REGISTERED PROFESSIONAL ENGINEER

SHEETS 556 TO 567
THE CITY OF AKRON
DEPARTMENT OF PUBLIC SERVICE
BUREAU OF ENGINEERING

AA B/P# 71942R

CALC. BY. DATE	SUM - 76 - 11.57	OHIO
CHKD. BY. DATE	FED. PROJECT IR-76-2(44)19	F.H.W.A. REGION 5

SUMMIT COUNTY

2
1214

SCHEMATIC PLAN

SLM 11.57
BEGIN PROJECT
SUM-76-11.57
STA. 548+97.60
IR-76-2(44)19

BEGIN WORK
I-76
STA. 541+50

END WORK
STA. 15+00, SCHOOL RD.

END WORK
STA 19+00, TALBOT AVE

END WORK
STA. 25+00, ARLINGTON

BEGIN WORK
STA. 20+27, SECOND AVE.

STRUCTURE N°
SUM-76-1244

STRUCTURE N°
SUM-76-1200

BEGIN WORK
STA. 10+34.80, SCHOOL RD.

STRUCTURE N°
SUM-76-1231

STRUCTURE N°
SUM-76-1180

STRUCTURE N°
SUM 76-1235

BEGIN WORK
STA. 10+95, ARLINGTON

END WORK
STA. 21+50, KELLY

END WORK
STA. 19+60, MARTHA

BEGIN WORK
STA. 22+38, MARKET

END WORK
STA. 38+40, SECOND

END WORK
STA. 16+90, FULLER

BEGIN WORK
STA. 21+63, THIRD

END WORK
STA. 35+79, THIRD

END WORK
STA. 42+30, MARKET

STRUCTURE N°
SUM-76-1296

STRUCTURE N°
SUM-76-1332

STRUCTURE N°
SUM-76-1267

BEGIN WORK
STA 11+40, FULLER

STRUCTURE N°
SUM-76-1277

STRUCTURE N°
SUM-76-1303

BEGIN WORK
STA. 20+25, ENGLEWOOD

END WORK
STA 70+75, FIFTH AVE

BEGIN WORK
STA. 7+00, KELLY

BEGIN WORK
STA. 5+09.31, MARTHA

END WORK
STA. 52+08, ENGLEWOOD

SLM 13.41
END PROJECT
SUM-76-11.57
STA. 634+00.00
IR-76-2(44)19

END WORK
I-76
STA 644+67

FOR GEOMETRIC LAYOUT, SEE SHEET 3-5.

SCALE IN FEET
0 200 400 600

SCHEMATIC PLAN

AA B/P# 71942R

GEOMETRIC LAYOUT

CALC. BY. KDK DATE 3/90	SUM-76-11.57	OHIO
CHKD. BY. DSS DATE 3/90	FED PROJECT IR-76-2(44)19	F.H.W.A. REGION 5

3 / 1214

SUMMIT COUNTY

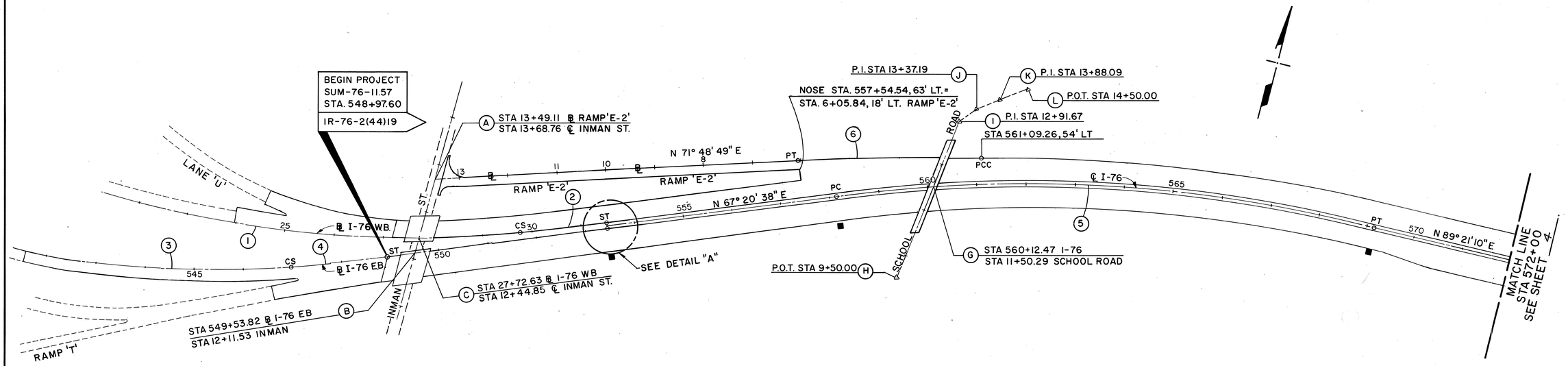

ITEM 604 - MONUMENT ASSEMBLY			
STATION	OFFSET	NORTH	EAST
553+43.40 AHD. P.O.T.	64.00' RT.	509992.727	2276033.548
558+15.65 P.C.	61.00' RT.	510177.406	2276468.201
569+16.09 P.T.	52.00' RT.	510402.583	2277516.441

NO.	INTERSECTION COORDINATES	
	NORTH	EAST
A	510053.415	2275652.275
B	509896.186	2275651.689
C	509929.510	2275651.835
D	510051.788	2276008.894
E	510046.252	2276011.207
F	510057.326	2276006.584
G	510303.217	2276628.797
H	510104.134	2276606.815
I	510443.740	2276644.313
J	510479.543	2276672.423
K	510511.030	2276712.416
L	510547.218	2276762.648

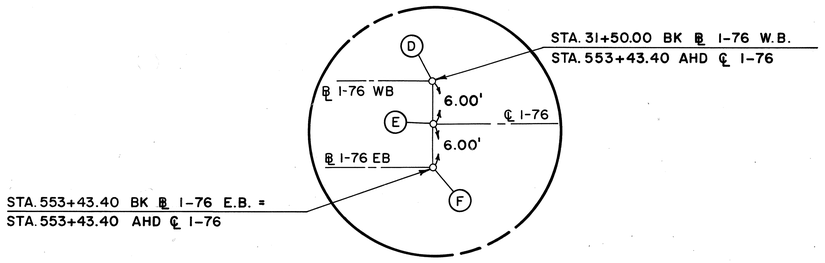

DETAIL "A"

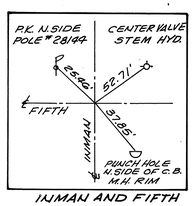

INMAN AND FIFTH

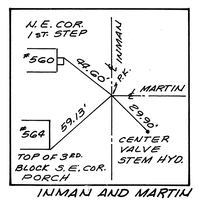

INMAN AND MARTIN

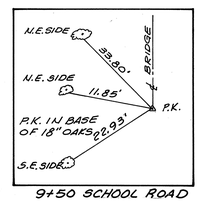

9+50 SCHOOL ROAD

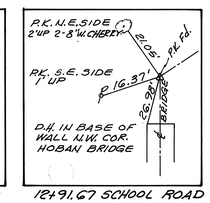

12+91.67 SCHOOL ROAD

CURVE NO.	CURVE DATA							CURVE COORDINATES								
	△	Dc	R	T	L	E	CH	P.I. STA.	NORTH	EAST	P.C. STA.	NORTH	EAST	P.T. STA.	NORTH	EAST
1	22° 56' 14"	2° 28' 00"	2,322.80'	471.25'	929.89'	47.32'	923.69'	25+17.86	509827.332	2275404.292 P	P.O.C. 25+00.00	509872.277	2275385.443	~	SEE SPIRAL	DATA ~
3	22° 06' 56"	2° 45' 07"	2,082.06'	406.89'	803.65'	39.39'	798.67'	543+01.57	509662.220	2275032.141	P.O.C. 545+00.00	509742.200	2275225.310	~	SEE SPIRAL	DATA ~
5	22° 00' 32"	2° 00' 00"	2,864.79'	557.09'	1,100.44'	53.66'	1,093.69'	563+72.74	510448.287	2276958.801	558+15.65	510233.698	2276444.701	569+16.09	510454.580	2277515.854
6	4° 30' 44"	1° 15' 00"	4,583.66'	180.59'	360.99'	3.56'	360.89'	559+33.09	510341.735	2276529.911	561+09.26	510384.425	2276705.379	6+05.84	510285.398	2276358.423

■ = ITEM 604- MONUMENT ASSEMBLY

FOR MAINLINE I-76 REFERENCE TIES, SEE SHEET 6

CURVE NO.	SPIRAL DATA				SPIRAL COORDINATES									
	Ls	⊖s	L.T.	S.T.	P.I. STA.	NORTH	EAST	CURVE PT.	STA.	NORTH	EAST	CURVE PT.	STA.	NORTH	EAST
2	173.50'	2° 08' 23"	115.68'	57.84'	30+34.33	510012.765	2275899.827	CS	29+76.49	509992.493	2275845.655	ST	31+50.00	510057.322	2276006.576
4	200.00'	2° 45' 07"	113.35'	66.68'	547+65.01	509823.446	2275477.424	CS	546+98.33	509800.745	2275414.726	ST	548+98.33	509874.812	2275600.483

COMBINED SCALE FACTOR = 0.9998894

SCALE IN FEET
0 100 200 300

GEOMETRIC LAYOUT

AA B/Pr 71942R

GEOMETRIC LAYOUT

CALC. BY. KDK DATE 3/90	SUM-76-11.57	OHIO	4
CHKD BY. DAB DATE 3/90	FED PROJECT IR-76-2(44)19	F.H.W.A. REGION 5	12.14

SUMMIT COUNTY

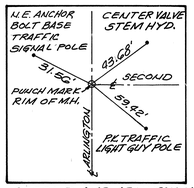

SECOND AND ARLINGTON

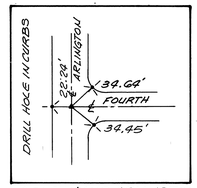

FOURTH AND ARLINGTON

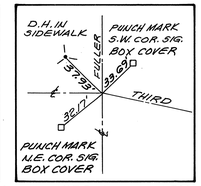

THIRD AND FULLER

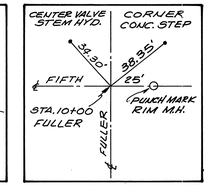

FIFTH AND FULLER

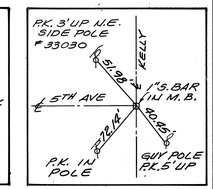

STA. 10+00 KELLY

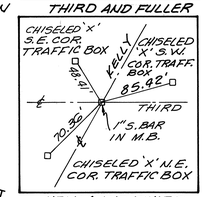

KELLY AND THIRD

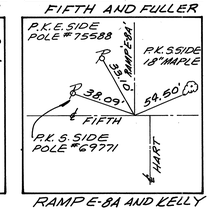

RAMP E-8A AND KELLY

MATCH LINE STA. 572+00 SEE SHEET 3

SEE DETAIL 'B'

ST.

SECOND AVE.

STA 578+82.21, 61.90' LT ℳ

CHITTENDEN STREET

NOSE STA. 580+86.00, 51' LT. ℄ I-76
STA. 80+90.31, 16' RT. ℄ RAMP 'E-7'

Ⓣ STA 85+03.80 RAMP 'E-4'=
STA 85+40.53 RAMP 'E-7'

SECOND AVENUE

MARTIN AVE.

RAMP 'E-4'

N 89° 21' 10" E 575

RAMP 'E-8'

RAMP 'E-6'

RAMP 'E-6'

RAMP 'E-7'

RAMP 'E-4'

℄ I-76

STA 574+71.64, 54' RT ℳ

Ⓟ STA 576+53.31 I-76=
STA 17+46.25 ARLINGTON

ARLINGTON

Ⓢ STA 79+43.88 RAMP 'E-6'=
STA 79+25.25 RAMP 'E-8'

NOSE STA. 588+75.00, 52.43' RT ℄ I-76=
STA. 88+73.24, 16' LT. ℄ RAMP 'E-2'

NOSE STA. 577+50.00, 65' RT. ℄ I-76=
STA. 77+48.65, 16' LT. ℄ RAMP 'E-8'

℄ SHIFT STA 83+65.02 BK=
STA 83+65.02, 16' LT AHD

Ⓡ STA 13+00.27 ARLINGTON=
STA 20+00.00 FOURTH

Ⓠ STA. 15+81.25 ARLINGTON=
STA. 76+73.59 RAMP 'E-6'

STA. 87+64.64, 21.50' RT. ℄ RAMP 'E-8'

STA. 89+00.00, 28' RT. ℄ RAMP 'E-8'

FOURTH AVE.

NOSE
STA. 90+00.08, 35' RT. ℄ RAMP 'E-8'
STA. 9+93.63, 16' LT. ℄ RAMP 'E-8A'

RAMP 'E-8A'

STA. 22+50.66, 16' LT. ℄ THIRD AVE.
STA. 96+90.45, ℄ RAMP 'E-7'

Ⓥ STA 95+78.09 RAMP 'E-7'=
STA 16+11.33 FULLER
STA 21+41.68 THIRD AVE.=
STA 15+99.82 FULLER

NOSE STA. 593+99.00, 70.5' LT. ℄ I-76 =
STA. 93+98.92, 16' RT. ℄ RAMP 'E-4'

THIRD

ST.

Ⓦ STA 595+87.84 I-76=
STA 13+88.02 FULLER

STA 600+39.01, 59.50' LT ℳ

Ⓩ STA 14+59.80 KELLY=
STA 29+22.29 THIRD

AVE.

SEE SHEET 5

MATCH LINE STA 605+00 SEE SHEET 5

STA. 604+50.15, 59.5' RT. P.O.S.
STA. 4+50.15 B RAMP 'E-9'

BALTIMORE AND OHIO RAILROAD

RAMP 'E-8B'

STA 95+93.15 RAMP 'E-8'=
STA 12+49.92 FULLER

STA 100+00.00 RAMP 'E-8B'=
STA 12+35.43 FULLER

FULLER

STA 603+09.60 I-76=
STA 13+36.52 KELLY

FIFTH AVE.

KELLY

STA 13+85.64 RAMP 'E-8A'=
STA 59+86.91 FIFTH

HART STREET

WEEKS ST.

STA 107+19.05 RAMP 'E-8B'=
STA 10+37.39 KELLY

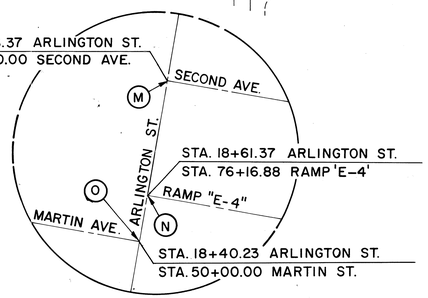

DETAIL "B"

NO.	INTERSECTION COORDINATES	
	NORTH	EAST
M	510623.027	2278254.045
N	510578.028	2278253.759
O	510556.888	2278253.625
P	510462.908	2278253.028
Q	510297.911	2278251.980
R	510016.939	2278250.196
S	510340.676	2278518.821
T	510538.545	2279137.983
U	509731.363	2279637.397
V	510348.024	2280147.376
W	510124.717	2280145.990
X	509986.625	2280145.093
Y	509972.131	2280144.999
Z	510193.921	2280906.953
AA	510078.384	2280864.397
BB	509781.519	2280838.322
OO	510336.514	2280147.367

ITEM 604 - MONUMENT ASSEMBLY			
STATION	OFFSET	NORTH	EAST
578+84.95 P.C.	52.00 RT.	510413.527	2278485.240
587+19.08 P.T.	79.00 RT.	510277.845	2279286.349
593+20.12 P.C.	69.50 RT.	510120.245	2279866.437
599+00.00 P.O.C.	69.50 RT.	510013.453	2280449.522

CURVE NO.	CURVE DATA							CURVE COORDINATES								
	△	Dc	R	T	L	E	CH	P.I. STA.	NORTH	EAST	P.C. STA.	NORTH	EAST	P.T. STA.	NORTH	EAST
7	16° 45' 08"	2° 00' 30"	2,852.90'	420.06'	834.14'	30.76'	831.17'	583+05.01	510470.269	2278904.688	578+84.95	510465.524	2278484.651	587+19.08	510353.744	2279308.267
8	21° 08' 51"	1° 58' 30"	2,901.05'	541.54'	1,070.76'	50.11'	1,064.69'	598+61.66	510036.795	2280406.004	593+20.12	510187.017	2279885.716	603+90.88	510084.393	2280945.450
9	19° 05' 29"	4° 00' 00"	1,432.39'	240.88'	477.29'	20.11'	475.08'	84+32.58	510572.848	2279069.438	81+91.70	510574.378	2278828.567	86+68.99	510492.619	2279296.561
10	17° 32' 55"	2° 48' 39"	2,038.30'	314.61'	624.29'	24.14'	621.86'	597+19.12	510144.707	2280281.472	93+98.92	510249.495	2279984.826	600+39.01	510134.239	2280595.908
11	12° 30' 00"	5° 00' 00"	1,145.92'	125.50'	250.00'	6.85'	249.50'	79+93.59	510351.476	2278567.465	78+68.09	510330.469	2278443.739	81+18.09	510345.206	2278692.805
12	12° 20' 00"	2° 05' 44"	2,734.10'	295.41'	588.54'	15.91'	587.41'	85+80.11	510322.123	2279154.245	82+84.69	510336.882	2278859.201	88+73.24	510244.683	2279439.327
13	4° 02' 16"	1° 56' 29"	2,951.44'	104.04'	208.00'	1.83'	207.96'	579+83.94	510531.169	2278585.186	578+82.21	510527.394	2278481.211	80+90.31	510527.614	2278689.169
14	10° 58' 31"	7° 00' 00"	818.51'	78.64'	156.79'	3.77'	156.55'	84+03.06	510516.925	2279001.736	83+24.42	510519.612	2278923.146	84+81.21	510529.249	2279079.399
15	28° 28' 19"	16° 30' 00"	347.25'	88.10'	172.56'	11.00'	170.79'	86+86.34	510561.397	2279281.996	85+98.24	510547.590	2279194.985	87+70.80	510532.054	2279365.065
16	12° 51' 22"	5° 00' 00"	1,145.92'	129.10'	257.12'	7.25'	256.59'	91+68.91	510399.455	2279740.441	90+39.80	510442.456	2279618.708	92+96.93	510384.618	2279868.690
17	9° 46' 47"	4° 30' 00"	1,273.24'	108.93'	217.33'	4.65'	217.07'	95+82.05	510351.851	2280151.925	94+73.12	510364.370	2280043.717	96+90.45	510321.134	2280256.434
18	18° 16' 49"	4° 00' 00"	1,432.39'	230.46'	457.01'	18.42'	455.07'	577+02.10	510409.462	2278302.426	574+71.64	510406.859	2278071.979	79+28.65	510339.650	2278522.061
19	8° 51' 32"	3° 00' 00"	1,909.86'	147.94'	295.29'	5.72'	295.00'	81+54.20	510271.327	2278737.013	80+06.26	510316.141	2278596.023	83+01.55	510248.759	2278883.223
20	6° 35' 53"	3° 00' 00"	1,909.86'	110.09'	219.93'	3.17'	219.81'	88+74.73	510177.137	2279452.135	87+64.64	510193.930	2279343.336	89+84.57	510147.954	2279558.284
21	4° 08' 08"	3° 05' 30"	1,853.28'	66.91'	133.76'	1.21'	133.74'	88+32.00	510159.318	2279405.618	87+64.64	510172.682	2279340.055	89+00.00	510141.260	2279470.047
22	74° 40' 32"	24° 50' 12"	230.69'	175.98'	300.67'	59.46'	279.83'	10+74.52	510093.768	2279639.498	89+00.00	510141.260	2279470.047	11+99.21	509917.791	2279638.478
23	42° 25' 53"	7° 59' 51"	716.42'	278.11'	530.56'	52.09'	518.52'	14+28.07	510172.186	2280840.849	11+49.96	509894.084	2280839.050	16+80.52	510376.236	2281029.814

■ = ITEM 604 - MONUMENT ASSEMBLY

FOR MAINLINE I-76 REFERENCE TIES, SEE SHEET 6

COMBINED SCALE FACTOR 0.9998894

SCALE IN FEET
0 100 200 300

GEOMETRIC LAYOUT

AA B/P# 71942R

GEOMETRIC LAYOUT

CALC. BY. KDK DATE 3/90	SUM-76-11.57	OHIO
CHKD. BY. DSB DATE 3/90	FED PROJECT IR-76-2(44)19	F.H.W.A. REGION 5

5 / 12.14

SUMMIT COUNTY

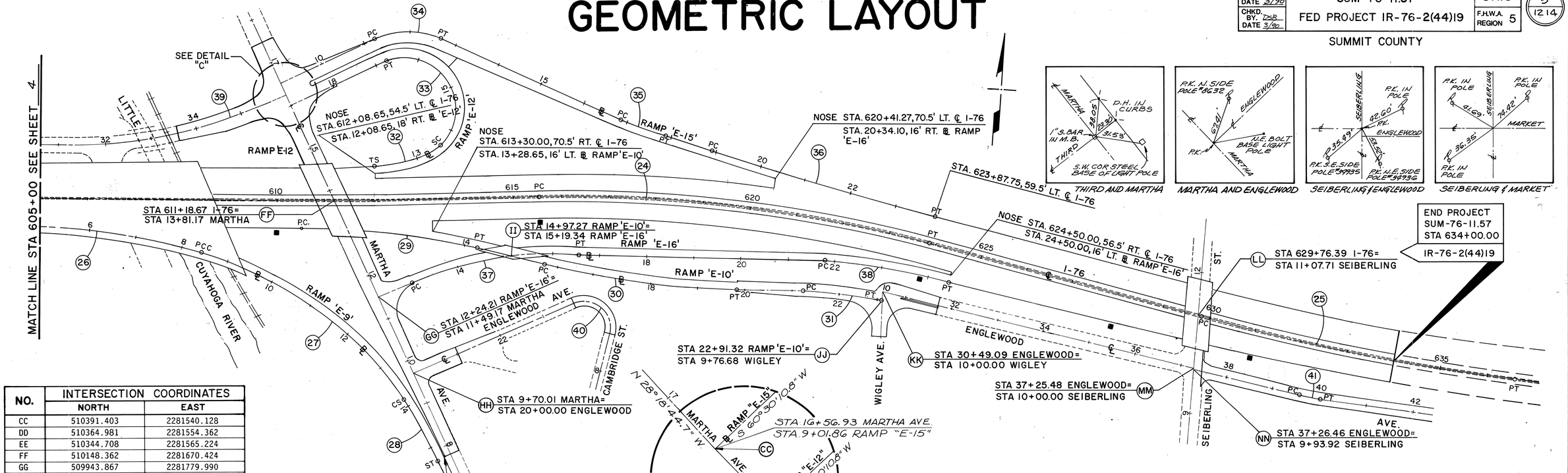

NO.	INTERSECTION COORDINATES	
	NORTH	EAST
CC	510391.403	2281540.128
DD	510364.981	2281554.362
EE	510344.708	2281565.224
FF	510148.362	2281670.424
GG	509943.867	2281779.990
HH	509785.948	2281864.601
II	510054.858	2282052.017
JJ	510007.907	2282842.326
KK	510031.222	2282842.618
LL	510019.434	2283509.912
MM	509911.730	2283508.368
NN	509905.650	2283508.281

ITEM 604 MONUMENT ASSEMBLY			
STATION	OFFSET	NORTH	EAST
610+00.00 P.O.T.	69.50 RT.	510068.701	2281558.322
615+54.92 P.C.	57.50 RT.	510129.429	2282110.040
623+87.75 P.T.	81.00 RT.	510059.434	2282916.494
628+00.00 P.O.T.	69.00 RT.	509987.584	2283323.204
631+00.00 P.O.C.	59.00 RT.	509937.597	2283620.455

CURVE NO.	CURVE DATA							CURVE COORDINATES								
	△	Dc	R	T	L	E	CH	P.I. STA.	NORTH	EAST	P.C. STA.	NORTH	EAST	P.T. STA.	NORTH	EAST
24	16° 43' 34"	2° 00' 30"	2,852.90'	419.40'	832.84'	30.66'	829.88'	619+74.32	510223.569	2282522.759	615+54.92	510186.706	2282104.982	623+87.75	510138.637	2282933.470
25	6° 47' 01"	1° 00' 00"	5,729.58'	339.58'	678.36'	10.05'	677.97'	633+20.79	509949.691	2283847.172	629+81.21	510018.458	2283514.630	636+59.57	509920.686	2284185.508
26	15° 43' 50"	4° 00' 00"	1,432.39'	197.88'	393.26'	13.60'	392.03'	6+48.03	510047.725	2281206.831	4+50.15	510030.333	2281009.721	8+43.41	510011.027	2281401.274
27	43° 12' 14"	8° 00' 00"	716.20'	283.59'	540.05'	54.10'	527.34'	11+27.00	509958.433	2281679.944	8+43.41	510011.027	2281401.274	~	SEE SPIRAL	DATA ~
29	15° 04' 49"	4° 00' 00"	1,432.39'	189.60'	377.01'	12.49'	375.92'	12+41.24	510099.866	2281797.750	610+51.64	510083.201	2281608.883	14+28.65	510066.818	2281984.448
30	12° 20' 33"	3° 00' 00"	1,909.86'	206.51'	411.42'	11.13'	410.62'	17+78.47	510005.844	2282328.917	15+71.97	510041.838	2282125.571	19+83.38	510014.148	2282535.257
31	12° 28' 48"	7° 30' 00"	763.94'	83.53'	166.40'	4.55'	166.07'	22+05.98	510023.100	2282757.679	21+22.45	510019.741	2282674.216	22+88.85	510008.343	2282839.895
33	164° 39' 14"	51° 09' 25"	112.00'	831.33'	321.86'	726.84'	222.00'	21+89.98	510863.060	2282481.521	~	SEE SPIRAL	DATA ~	16+80.51	510453.734	2281757.951
34	50° 00' 00"	34° 43' 29"	165.00'	76.94'	143.99'	17.06'	139.46'	11+99.08	510537.748	2281798.823	11+22.13	510499.864	2281731.855	12+66.12	510510.799	2281870.890
35	6° 19' 10"	6° 15' 00"	916.73'	50.61'	101.11'	1.40'	101.06'	17+37.78	510345.598	2282312.671	16+87.18	510363.323	2282265.271	17+88.29	510333.198	2282361.735
36	2° 30' 00"	0° 30' 00"	11,459.16'	250.04'	500.00'	2.73'	499.96'	621+43.42	510247.539	2282700.661	18+87.83	510308.807	2282458.243	623+87.75	510196.904	2282945.521
37	27° 33' 55"	7° 30' 00"	763.94'	187.40'	367.54'	22.65'	364.00'	14+87.29	510068.640	2282011.599	12+99.89	509979.762	2281846.620	16+67.43	510071.084	2282198.979
38	10° 59' 56"	4° 00' 00"	1,432.39'	137.91'	274.97'	6.62'	274.55'	23+12.93	510079.503	2282844.424	21+75.02	510077.704	2282706.528	24+50.00	510054.959	2282980.131
39	23° 19' 43"	5° 59' 57"	955.08'	197.17'	388.87'	20.14'	386.19'	33+17.31	510228.221	2281300.477	31+20.14	510211.101	2281104.055	35+09.01	510321.726	2281474.062
40	128° 30' 04"	100° 31' 08"	57.00'	118.18'	127.84'	74.20'	102.68'	24+88.40	510017.819	2282294.450	23+70.22	509961.712	2283508.281	24+98.06	509901.491	2282273.609
41	5° 03' 05"	11° 27' 33"	500.00'	22.06'	44.08'	0.49'	44.07'	39+81.29	509860.682	2283759.115	39+59.24	509864.574	2283737.405	40+03.32	509858.716	2283781.082

CURVE NO.	SPIRAL DATA				SPIRAL COORDINATES										
	Ls	Θs	L.T.	S.T.	P.I. STA.	NORTH	EAST	CURVE PT.	STA.	NORTH	EAST	CURVE PT.	STA.	NORTH	EAST
28	150.00'	6° 00' 00"	100.06'	50.05'	14+33.51	509688.881	2281876.563	CS	13+83.46	509729.319	2281847.067	ST	15+33.46	509602.324	2281926.756
32	150.00'	38° 22' 04"	102.45'	52.24'	13+11.10	510239.998	2281855.036	TS	12+08.65	510228.445	2281753.235	SC	13+58.65	510276.835	2281892.076

■ = ITEM 604 - MONUMENT ASSEMBLY

FOR MAINLINE I-76 REFERENCE TIES, SEE SHEET 6

COMBINED SCALE FACTOR = 0.9998894

SCALE IN FEET
0 100 200 300

GEOMETRIC LAYOUT

GEOMETRIC LAYOUT

CALC. BY. DATE	SUM-76-11.57	OHIO
CHKD. BY. DATE	FED. PROJECT IR-76-2(44) 19	F.H.W.A. REGION 5

G 1214

SUMMIT COUNTY

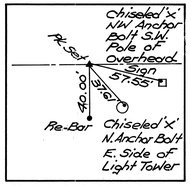

P.O.C. STA 25+00.00
℄ I-76 WB

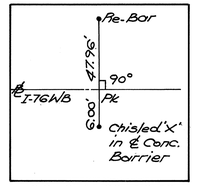

C.S. STA. 29+76.49
℄ I-76 WB

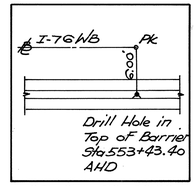

S.T. STA. 30+50.00
℄ I-76 WB

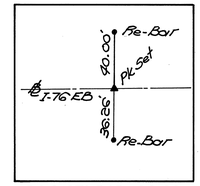

P.O.C. STA 545+00.00
℄ I-76 EB

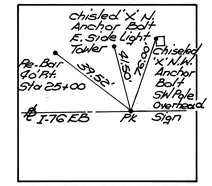

C.S. STA. 546+98.33
℄ I-76 EB

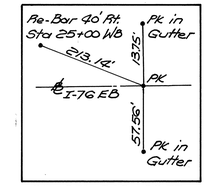

S.T. STA. 548+98.33
℄ I-76 EB

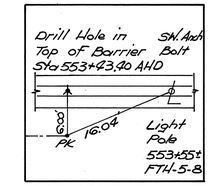

P.O.T. STA. 553+43.40 BK
℄ I-76 EB

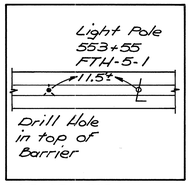

P.O.T. STA. 553+43.40 AHD.
℄ I-76

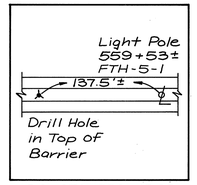

P.C. STA. 558+15.65
℄ I-76

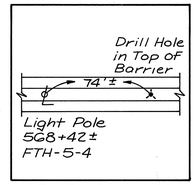

P.T. STA. 569+16.09
℄ I-76

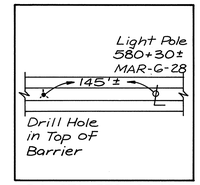

P.C. STA. 578+84.95
℄ I-76

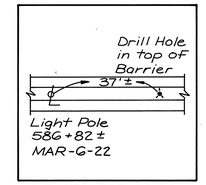

P.T. STA. 587+19.08
℄ I-76

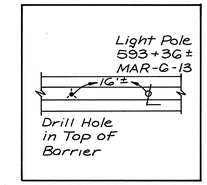

P.C. STA. 593+20.12
℄ I-76

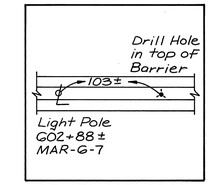

P.T. STA. 603+90.88
℄ I-76

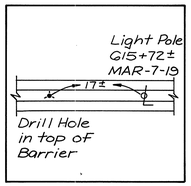

P.C. STA. 615+54.92
℄ I-76

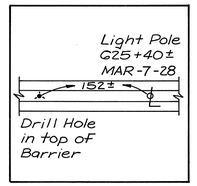

P.T. STA. 623+87.75
℄ I-76

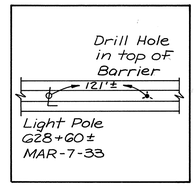

P.C. STA. 629+81.21
℄ I-76

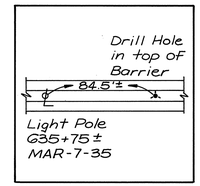

P.T. STA. 636+59.57
℄ I-76

TYPICAL SECTIONS

CALC. BY. DATE	SUM-76-11.57	OHIO
CHKD. BY. DATE	FED. PROJECT IR-76-2(44)19	F.H.W.A. REGION 5

SUMMIT COUNTY

7 / 1214

NOTES

NOTE 1: MAINLINE SHOULDER WIDTH IS GENERALLY 12'-0" BUT IT DOES VARY. SEE PAVEMENT DETAIL SHEETS FOR SHOULDER WIDTHS.

NOTE 2: FOR GUARDRAIL AND BARRIER PLACEMENT, SEE SHEET 16. FOR GUARDRAIL AND BARRIER LOCATION, SEE ROADWAY PLAN SHEETS 117-164.

NOTE 3: BEGINNING AT STA 553+43.40 BOTH E.B. AND W.B. PROFILE GRADES ARE AT THE SAME ELEVATION

▲ SLOPE PROPOSED SUBGRADE TO PROVIDE POSITIVE DRAINAGE OF BASE. MIN. SLOPE .021'/FT.

✱ PLACE UNDERDRAINS 30" DEEP IN FILL AND 50" DEEP IN CUT OR AS OTHERWISE SHOWN ON TYPICAL SECTIONS.

⊞ SAME AS PAVED SHOULDER SLOPE.

⊛ FOR SLOPE DETAILS SEE SHEET 16

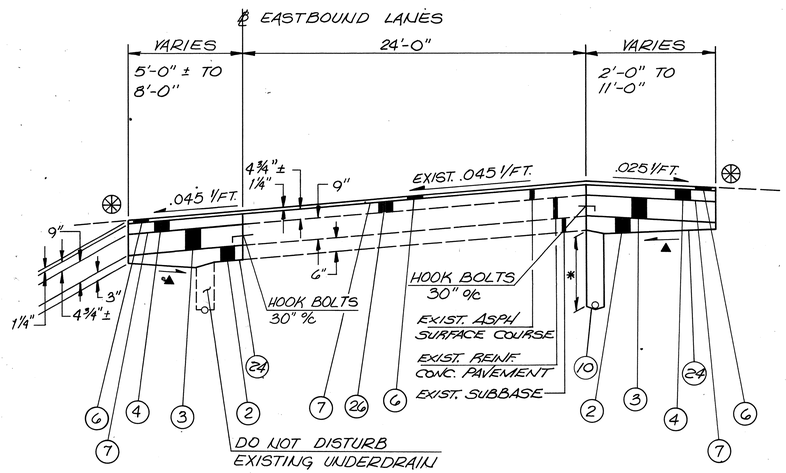

EASTBOUND LANES
STA. 541+50 TO STA. 547+08.5±

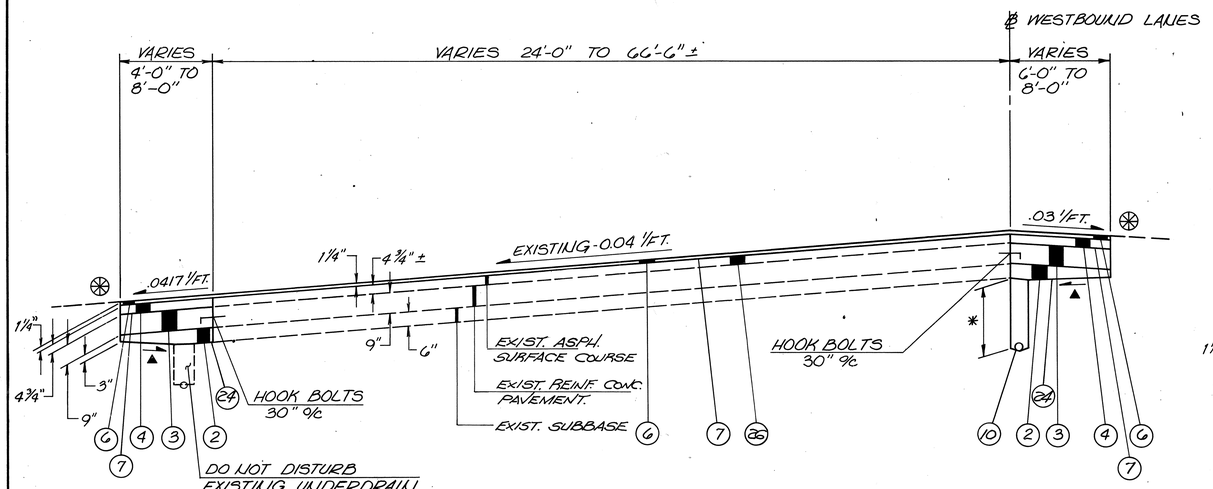

WESTBOUND LANES
STA. 24+50 TO STA. 27+17.78

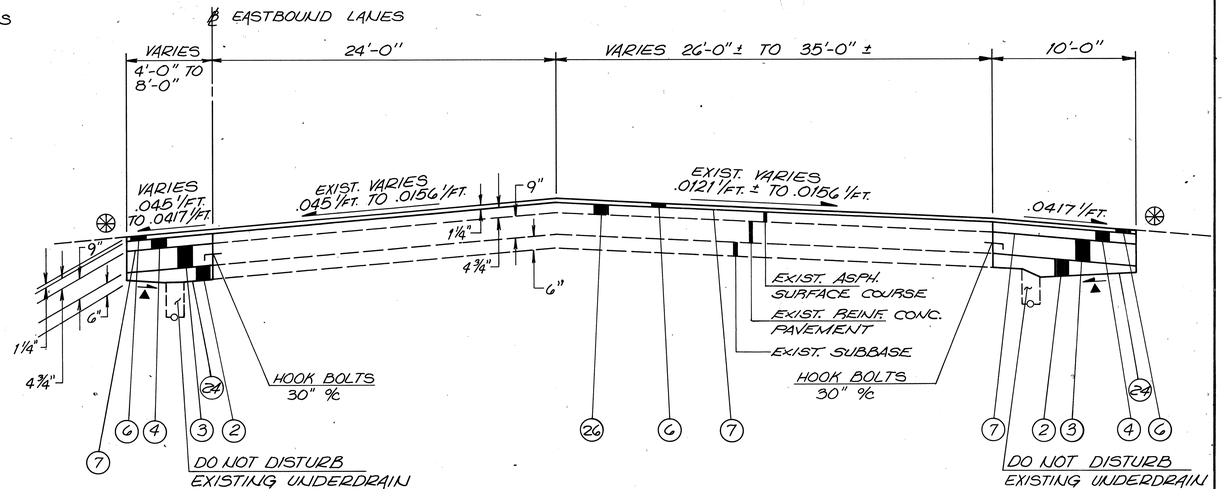

EASTBOUND LANES
STA. 547+08.5 ± TO STA. 548+97.60

LEGEND

(1) 3"	ITEM 301 - BITUMINOUS AGGREGATE BASE AC-20, DIMENSION AS SHOWN	
(2) 4"	ITEM 304 - AGGREGATE BASE, AS PER PLAN, DIMENSION AS SHOWN	
(3)	ITEM 305 - CONCRETE BASE, DIMENSION AS SHOWN	
(4)	ITEM 402 - ASPHALT CONCRETE, AC-20, DIMENSION AS SHOWN	
(5) 1"	ITEM 403 - ASPHALT CONCRETE, AC-20, DIMENSION AS SHOWN	
(6)	ITEM 404 - ASPHALT CONCRETE, AC-20, DIMENSION AS SHOWN	
(7)	ITEM 407 - TACK COAT	
(8) 11"	ITEM 451 - REINFORCED CONCRETE PAVEMENT, AS PER PLAN, DIMENSION AS SHOWN	
(9) 11"	ITEM 452 - PLAIN CONCRETE PAVEMENT, AS PER PLAN, DIMENSION AS SHOWN	
(10)	ITEM 605 - 6" PIPE UNDERDRAIN, AS PER PLAN	
(11)	ITEM 606 - GUARDRAIL, TYPE 5	
(12)	ITEM 608 - 4" CONCRETE WALK	
(13)	ITEM 609 - CURB, TYPE 2A	
(14)	ITEM 609 - CURB, TYPE 2B	
(15)	ITEM 612 - 6" CONCRETE MEDIAN	
(16)	ITEM 622 - CONCRETE BARRIER, TYPE D, AS PER PLAN	
(17)	- STANDARD LONGITUDINAL JOINT	
(18)	- STANDARD LONGITUDINAL JOINT WITHOUT TIEBARS	
(19)	- EXISTING CONCRETE BARRIER (TO REMAIN)	
(20)	ITEM 609 - COMBINATION CURB AND GUTTER, TYPE 2	
(21)	ITEM 609 - CURB, TYPE 6	
(22)	ITEM 601 - CRUSHED AGGREGATE SLOPE PROTECTION, AS PER PLAN	
(23)	ITEM 622 - CONCRETE BARRIER, TYPE D	
(24)	ITEM 203 - SUBGRADE COMPACTION	
(25)	ITEM 606 - GUARDRAIL, TYPE 4	
(26)	ITEM 254 - PAVEMENT PLANNING, BITUMINOUS (DEPTH 1 1/2")	
(27)	ITEM 605 - 6" SHALLOW PIPE UNDERDRAIN, AS PER PLAN, 707.15	

CALC. BY. DATE	SUM-76-11.57	OHIO
CHKD. BY. DATE	FED. PROJECT IR-76-2(44)19	F.H.W.A. REGION 5

SUMMIT COUNTY

8
1214

TYPICAL SECTIONS

TYPE 451 ON 301

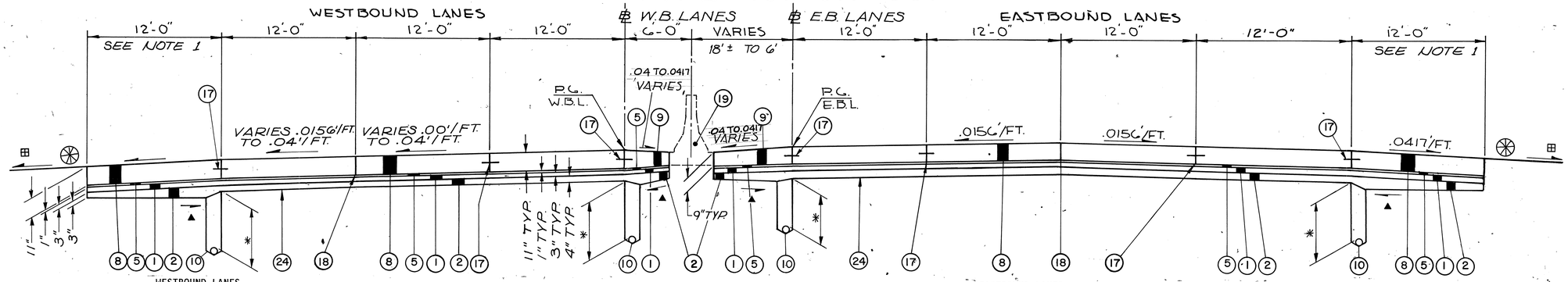

WESTBOUND LANES

STA 27+17.78 TO STA 29+79.19 (FULL SUPERELEVATION .04'/FT)
STA 29+79.19 TO STA 30+83.35 (TRANSITION .04'/FT TO .0156'/FT)
STA 30+83.35 TO STA 31+50.00 (TRANSITION .0156'/FT TO LEVEL)

BRIDGE LIMITS

STA 27+42.78 TO STA 28+02.59

APPROACH SLAB LIMITS

STA 27+17.78 TO STA 27+42.78
STA 28+02.59 TO STA 28+27.59

I-76 MAINLINE

EASTBOUND LANES

STA 548+97.60 TO STA 553+43.40 BACK

BRIDGE LIMITS

STA 549+22.60 TO STA 549+85.04

APPROACH SLAB LIMITS

STA 548+97.60 TO STA 549+22.60
STA 549+85.04 TO STA 550+10.04

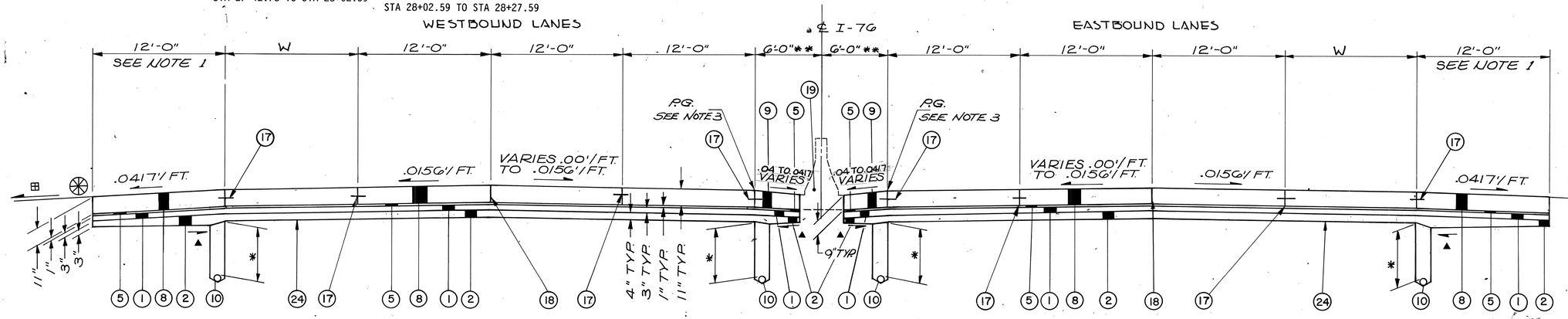

WESTBOUND LANES

(STA 31+50.00 BACK = STA 553+43.40 AHEAD)
STA 553+43.40 AHEAD TO STA 554+09.99 (TRANSITION LEVEL TO .0156'/FT) W=0'
STA 554+09.99 TO STA 554+82.32 W=0'
STA 572+49.42 TO STA 575+66.00 W=12'
STA 575+66.00 TO STA 576+98.28 W=VARIES 12' TO 15.31'
STA 589+10.75 TO STA 590+03.45 W=0' (MEDIAN WIDTH VARIES 7.75' TO 8.60')

BRIDGE LIMITS

STA 576+13.31 TO STA 576+93.31 WB

APPROACH SLAB LIMITS

STA 575+88.31 TO STA 576+13.31 WB
STA 576+93.31 TO STA 576+98.28 WB

EASTBOUND LANES

STA 553+43.40 AHEAD TO STA 554+98.98 W=12'
STA 572+32.76 TO STA 574+71.64 W=12'
STA 574+71.64 TO STA 575+68.28 W=VARIES 12' TO 15.26'
STA 588+61.27 TO STA 588+75.00 (TRANSITION LEVEL TO .0014'/FT) W=0'
** STA 588+75.00 TO STA 590+11.27 (TRANSITION .0014'/FT TO NORMAL) W=VARIES 25' TO 21.59' (MEDIAN WIDTH VARIES 7.30' TO 8.67')

FOR LEGEND AND NOTES SEE SHEET 7.

▲ SLOPE PROPOSED SUBGRADE TO PROVIDE POSITIVE DRAINAGE OF BASE. MIN. SLOPE .021'/FT.

✱ PLACE UNDERDRAINS 30" DEEP IN FILL AND 50" DEEP IN CUT OR AS OTHERWISE SHOWN ON TYPICAL SECTIONS.

⊞ SAME AS PAVED SHOULDER SLOPE.

⊛ FOR SLOPE DETAILS SEE SHEET 16

▲ SLOPE PROPOSED SUBGRADE TO PROVIDE POSITIVE DRAINAGE OF BASE. MIN. SLOPE .021'/FT.

✱ PLACE UNDERDRAINS 30" DEEP IN FILL AND 50" DEEP IN CUT OR AS OTHERWISE SHOWN ON TYPICAL SECTIONS.

⊞ SAME AS PAVED SHOULDER SLOPE.

TYPICAL SECTIONS

CALC. BY. DATE	SUM-76-11.57	OHIO
CHKD. BY. DATE	FED. PROJECT IR-76-2(44)19	F.H.W.A. REGION 5

SUMMIT COUNTY

9
12.14

TYPE 451 ON 301

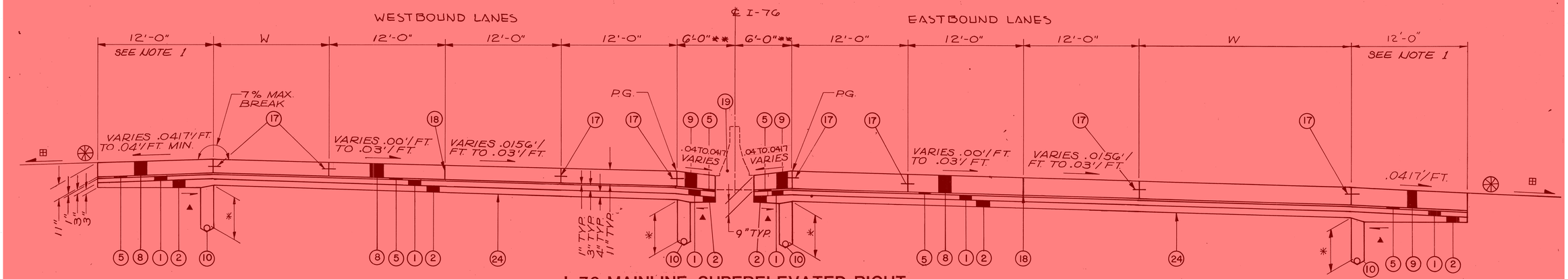

I-76 MAINLINE-SUPERELEVATED RIGHT

WESTBOUND LANES

STA 554+82.32 TO STA 556+32.32 (TRANSITION NORMAL TO LEVEL) W=0'
STA 556+32.32 TO STA 557+54.54 (TRANSITION LEVEL TO .015'/FT) W=0'
STA 557+54.54 TO STA 557+84.45 (TRANSITION .015'/FT TO .0156'/FT) W=VARIES 39.05' TO 37.6'
STA 557+84.45 TO STA 559+07.32 (TRANSITION .0156'/FT TO .03'/FT) W=VARIES 37.6' TO 27'
STA 559+07.32 TO STA 561+09.26 (FULL SUPERELEVATION .03'/FT) W=VARIES 27' TO 12'
STA 561+09.26 TO STA 568+24.42 (FULL SUPERELEVATION .03'/FT) W=12'
STA 568+24.42 TO STA 572+49.42 (TRANSITION .03'/FT TO NORMAL) W=12'
STA 576+98.28 TO STA 579+48.28 (TRANSITION NORMAL TO .03'/FT) W=VARIES 15.31' TO 21.54'
STA 579+48.28 TO STA 580+86.00 (FULL SUPERELEVATION .03'/FT) W=VARIES 21.54' TO 25'
STA 580+86.00 TO STA 586+60.75 (FULL SUPERELEVATION .03'/FT) W=0'
STA 586+60.75 TO STA 587+19.08 (TRANSITION .03'/FT TO .0212'/FT) W=0'
✱✱✱ STA 587+19.08 TO STA 589+10.75 (TRANSITION .0212'/FT TO NORMAL) W=0' (MEDIAN WIDTH VARIES 6' TO 7.75')

BRIDGE LIMITS

STA 576+13.31 TO STA 576+93.31 EB

APPROACH SLAB LIMITS

STA 576+98.28 TO STA 577+18.31 WB
STA 575+88.31 TO STA 576+13.31 EB
STA 576+93.31 TO STA 577+18.31 EB

EASTBOUND LANES

STA 554+98.98 TO STA 556+70.00 (TRANSITION NORMAL TO .0021'/FT) W=12'
STA 556+70.00 TO STA 558+98.98 (TRANSITION .0021'/FT TO .03'/FT) W=VARIES 12' TO 6.28'
STA 558+98.98 TO STA 561+50.00 (FULL SUPERELEVATION .03'/FT) W=VARIES 6.28' TO 0'
STA 561+50.00 TO STA 568+32.76 (FULL SUPERELEVATION .03'/FT) W=0'
STA 568+32.76 TO STA 569+27.07 (TRANSITION .03'/FT TO .0156'/FT) W=0'
STA 569+27.07 TO STA 569+50.00 (TRANSITION .0156'/FT TO .0133'/FT) W=0'
STA 569+50.00 TO STA 570+50.00 (TRANSITION .0133'/FT TO .0033'/FT) W=VARIES 0' TO 12'
STA 570+50.00 TO STA 572+32.76 (TRANSITION .0033'/FT TO NORMAL) W=12'
STA 575+68.28 TO STA 577+50.00 (TRANSITION NORMAL TO .0032'/FT) W=VARIES 15.26' TO 39.31'
STA 577+50.00 TO STA 579+68.28 (TRANSITION .0032'/FT TO .03'/FT) W=0'
STA 579+68.28 TO STA 586+11.27 (FULL SUPERELEVATION .03'/FT) W=0'
STA 586+11.27 TO STA 587+19.08 (TRANSITION .03'/FT TO .0142'/FT) W=0'
✱✱ STA 587+19.08 TO STA 588+61.27 (TRANSITION .0142'/FT TO LEVEL) W=0 (MEDIAN WIDTH VARIES 6' TO 7.30')

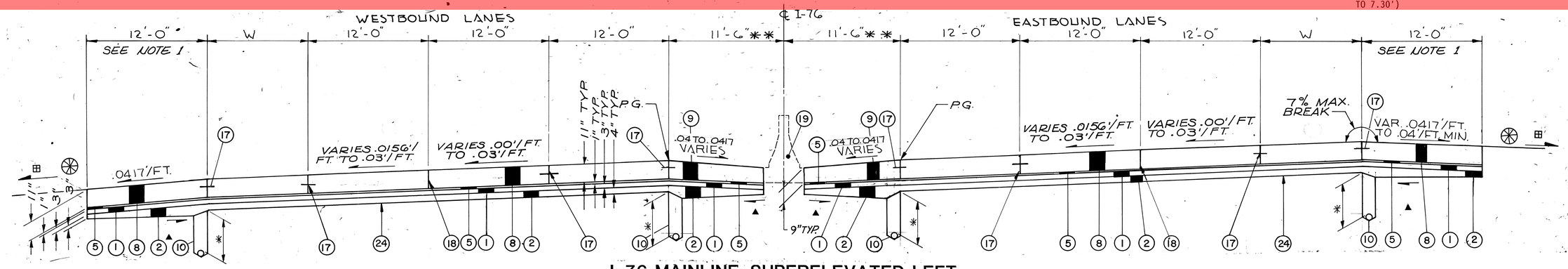

I-76 MAINLINE-SUPERELEVATED LEFT

WESTBOUND LANES

✱✱ STA 590+03.45 TO STA 593+20.12 (TRANSITION NORMAL TO .0173'/FT) W=0', (MEDIAN WIDTH VARIES 8.60' TO 11.50')
STA 593+20.12 TO STA 593+99.00 (FULL SUPERELEVATION .0173'/FT TO .0293'/FT) W=0'
STA 593+99.00 TO STA 594+03.45 (TRANSITION .0293'/FT TO .03'/FT) W=VARIES 39.06' TO 38.69'
STA 594+03.45 TO STA 599+77.40 (FULL SUPERELEVATION .03'/FT) W=VARIES 38.69' TO 12'
STA 599+77.40 TO STA 602+99.21 (FULL SUPERELEVATION .03'/FT) W=12'
STA 602+99.21 TO STA 606+88.65 (TRANSITION .03'/FT TO .0119'/FT) W=12'
STA 606+88.65 TO STA 607+24.21 (TRANSITION .0119'/FT TO NORMAL) W=VARIES 12' TO 12.89'
STA 627+31.21 TO STA 630+58.93 (TRANSITION NORMAL TO .02'/FT) W=12'
STA 630+58.93 TO STA 633+30.00 (FULL SUPERELEVATION .02'/FT) W=12'
STA 633+30.00 TO STA 634+00.00 (FULL SUPERELEVATION .02'/FT) W=12'

BRIDGE LIMITS

STA 595+49.19 TO STA 596+16.79 EB & WB
STA 600+55.23 TO STA 607+24.21 WB
STA 600+55.23 TO STA 605+72.08 EB
STA 629+47.21 TO STA 630+05.59 EB & WB

APPROACH SLAB LIMITS

STA 595+24.19 TO STA 595+49.19 EB & WB
STA 596+16.79 TO STA 596+41.79 EB & WB
STA 600+25.23 TO STA 600+55.23 EB & WB
STA 629+22.21 TO STA 629+47.21 EB & WB
STA 630+05.59 TO STA 630+30.59 EB & WB

EASTBOUND LANES

✱✱ STA 590+11.27 TO STA 593+20.12 (TRANSITION NORMAL TO .0164'/FT) W=VARIES 21.59' TO 13'87 (MEDIAN WIDTH VARIES 8.67 TO 11.5')
STA 593+20.12 TO STA 593+95.00 (TRANSITION .0164'/FT TO .0251'/FT) W=VARIES 13.87' TO 12'
STA 593+95.00 TO STA 594+36.27 (TRANSITION .0251'/FT TO .03'/FT) W=12'
STA 594+36.27 TO STA 602+99.21 (FULL SUPERELEVATION .03'/FT) W=12'
STA 602+99.21 TO STA 604+50.15 (TRANSITION .03'/FT TO .0098'/FT) W=12'
STA 604+50.15 TO STA 605+72.08 (TRANSITION .0098'/FT TO NORMAL) W=VARIES 12' TO 17.20'
STA 628+56.21 TO STA 630+33.93 (TRANSITION NORMAL TO .02'/FT) W=VARIES 14.85' TO 10.64'
STA 630+33.93 TO STA 634+00.00 (FULL SUPERELEVATION .02'/FT) W=VARIES 10.64' TO 1.25'

FOR LEGEND AND NOTES SEE SHEET 7.
✱ FOR SLOPE DETAILS, SEE SHEET 16.

CALC BY.		SUM-76-11.57	OHIO
CHKD BY.		FED. PROJECT IR-76-2(44)19	F.H.W.A. REGION 5
DATE		SUMMIT COUNTY	

10
1214

▲ SLOPE PROPOSED SUBGRADE TO PROVIDE POSITIVE DRAINAGE OF BASE. MIN. SLOPE .021'/FT.

* PLACE UNDERDRAINS 30" DEEP IN FILL AND 50" DEEP IN CUT OR AS OTHERWISE SHOWN ON TYPICAL SECTIONS.

⊞ SAME AS PAVED SHOULDER SLOPE.

TYPICAL SECTIONS

TYPE 451 ON 301

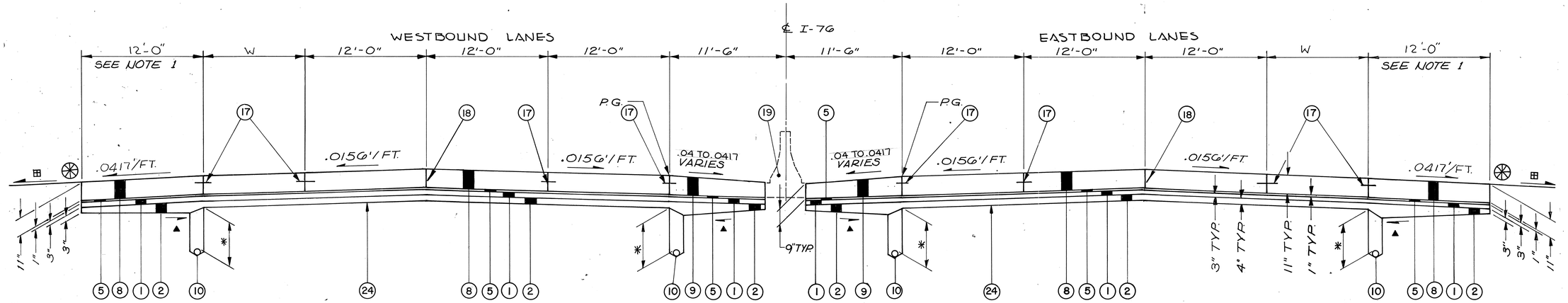

I-76 MAINLINE-NORMAL

WESTBOUND LANES

STA 607+24.21 TO STA 612+08.65 W=VARIES 12.89' TO 25.0'
STA 612+08.65 TO STA 613+79.92 W=0'
STA 625+62.75 TO STA 627+31.21 W=12'

APPROACH SLAB LIMITS

STA 608+69.03 TO STA 608+99.03 EB & WB
STA 610+56.52 TO STA 610+81.52 EB & WB
STA 611+54.83 TO STA 611+79.83 EB & WB

BRIDGE LIMITS

STA 607+24.21 TO STA 608+69.03 WB
STA 605+72.08 TO STA 608+69.03 EB
STA 610+81.52 TO STA 611+54.83 WB & EB

EASTBOUND LANES

STA 605+72.08 TO STA 607+84.00 W=VARIES 17.20' TO 51.45'
STA 607+84.00 TO STA 610+51.64 W=12'
STA 610+51.64 TO STA 612+54.92 W=VARIES 12' TO 26.50'
STA 626+87.75 TO STA 628+56.21 W=VARIES 19.06' TO 14.85'

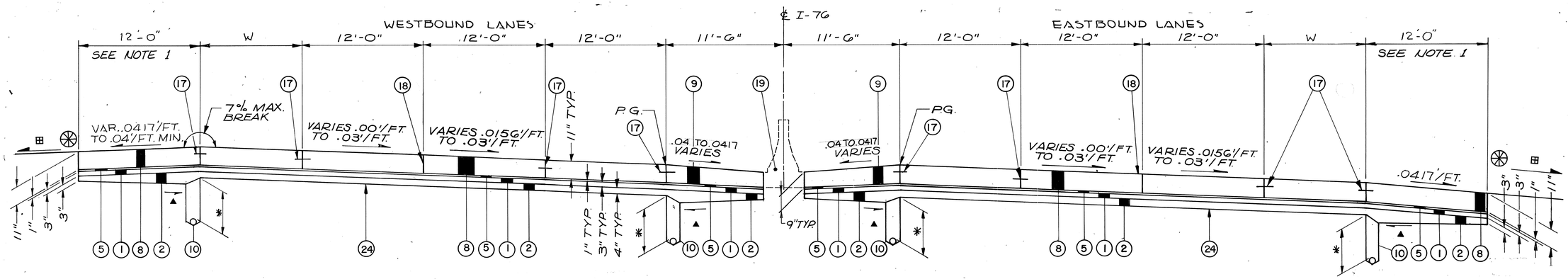

I-76 MAINLINE-SUPERELEVATED RIGHT

WESTBOUND LANES

STA 613+79.92 TO STA 616+22.14 (TRANSITION NORMAL TO .03'/FT) W=0'
STA 616+22.14 TO STA 620+41.27 (FULL SUPERELEVATION .03'/FT) W=0'
STA 620+41.27 TO STA 623+20.53 (FULL SUPERELEVATION .03'/FT) W=VARIES 39.19' TO 13.01'
STA 623+20.53 TO STA 623+87.83 (TRANSITION .03'/FT TO .0193'/FT) W=VARIES 13.01' TO 12'
STA 623+87.83 TO STA 625+62.75 (TRANSITION .0193'/FT TO NORMAL) W=12'

EASTBOUND LANES

STA 612+54.92 TO STA 613+30.00 (TRANSITION NORMAL TO .0078'/FT) W=VARIES 26.50' TO 39.31'
STA 613+30.00 TO STA 616+47.64 (TRANSITION .0078'/FT TO .03'/FT) W=0'
STA 616+47.64 TO STA 622+97.03 (FULL SUPERELEVATION .03'/FT) W=0'
STA 622+97.03 TO STA 624+50.00 (TRANSITION .03'/FT TO .0091'/FT) W=0'
STA 624+50.00 TO STA 626+87.75 (TRANSITION .0091'/FT TO NORMAL) W=VARIES 25' TO 19.06'

FOR LEGEND, AND NOTES SEE SHEET 7
⊛ FOR SLOPE DETAILS, SEE SHEET 16

CALC. BY. DATE	SUM-76-11.57	OHIO
CHKD. BY. DATE	FED. PROJECT IR-76-2(44)19	F.H.W.A. REGION 5

SUMMIT COUNTY

11 / 1214

TYPICAL SECTIONS

TYPE 451 ON 301

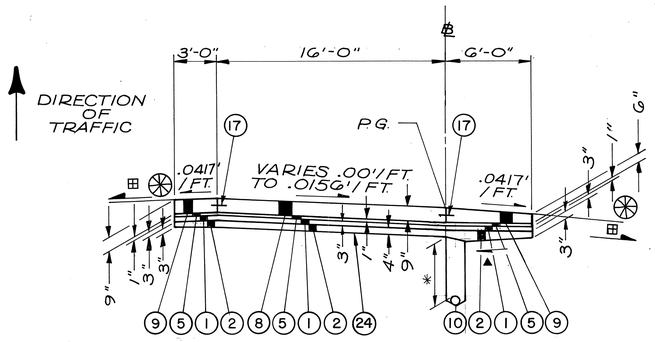

ONE LANE RAMP-NORMAL

RAMP E-4 STA 89+75.70 TO STA 90+19.38 (TRANSITION LEVEL TO .0156'/FT)
RAMP E-4 STA 90+19.38 TO STA 93+58.60 (.0156'/FT)

RAMP E-6 STA 76+99.99 TO STA 78+34.76 (.0156'/FT)
RAMP E-6 STA 81+51.42 TO STA 82+51.99 (.0156'/FT)

RAMP E-7 STA 82+11.28 TO STA 82+52.61 (TRANSITION LEVEL TO .0156'/FT)
RAMP E-7 STA 82+52.61 TO STA 82+93.80 (.0156'/FT)
RAMP E-7 STA 85+00.00 TO STA 85+41.60 (TRANSITION .0156'/FT TO LEVEL)
RAMP E-7 STA 89+76.72 TO STA 90+20.40 (TRANSITION LEVEL TO .0156'/FT)
RAMP E-7 STA 93+16.34 TO STA 93+60.02 (TRANSITION .0156'/FT TO LEVEL)

RAMP E-8 STA 79+20.88 TO STA 79+67.45 (TRANSITION .0156'/FT TO LEVEL)

RAMP E-8A STA 12+15.62 TO STA 13+74.64 (.0156'/FT)

RAMP E-10 STA 14+51.56 TO STA 15+00.31 (TRANSITION .0156'/FT TO LEVEL)

RAMP E-15 STA 15+37.18 TO STA 16+37.18 (.0156'/FT)
RAMP E-15 STA 18+38.29 TO STA 20+34.10 (.0156'/FT)

RAMP E-16 STA 12+45.21 TO STA 13+52.55 (.0156'/FT)
RAMP E-16 STA 16+84.10 TO STA 21+25.02 (.0156'/FT)

BRIDGE LIMITS

RAMP E-7 STA 85+00.00 TO STA 85+41.60
RAMP E-8 STA 79+20.88 TO STA 79+59.30
RAMP E-10 STA 14+51.56 TO STA 15+00.31

APPROACH SLAB LIMITS

RAMP E-8 STA 79+59.30 TO STA 79+67.45

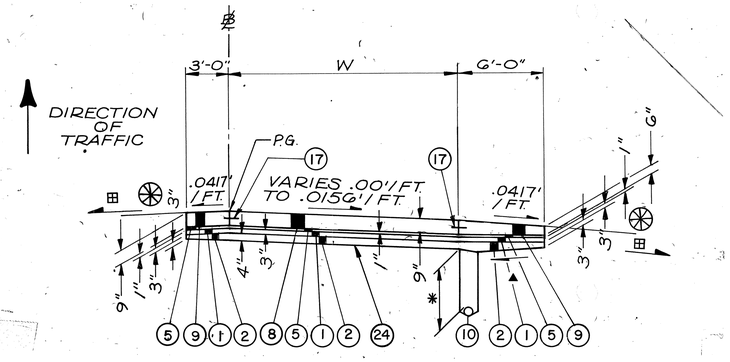

ONE LANE RAMP-NORMAL

RAMP E-8 STA 83+65.02 TO STA 84+15.02 (TRANSITION LEVEL TO .0156'/FT) W=16'
RAMP E-8 STA 84+15.02 TO STA 86+50.00 (.0156'/FT) W=16'
RAMP E-8 STA 86+50.00 TO STA 87+31.31 (.0156'/FT) W=VARIES 16' TO 19.90'
RAMP E-8 STA 90+17.90 TO STA 91+00.00 (.0156'/FT) W=16'

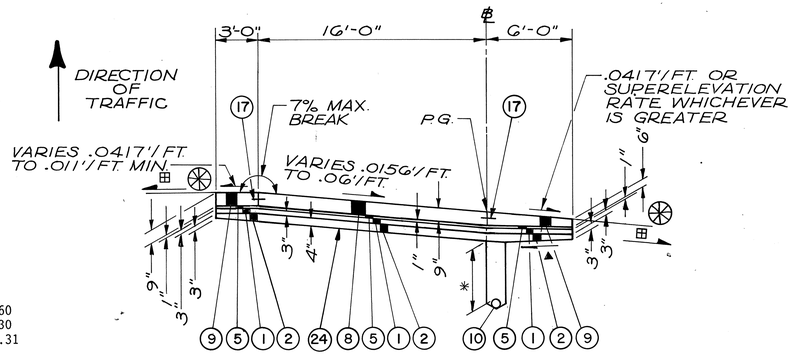

ONE LANE RAMP-SUPERELEVATED RIGHT

RAMP E-4 STA 93+58.60 TO STA 93+98.93 (TRANSITION .0156'/FT TO .03'/FT)

RAMP E-6 STA 78+34.76 TO STA 78+84.76 (TRANSITION .0156'/FT TO .027'/FT)
RAMP E-6 STA 78+84.76 TO STA 81+01.42 (FULL SUPERELEVATION .027'/FT)
RAMP E-6 STA 81+01.42 TO STA 81+51.42 (TRANSITION .027'/FT TO .0156'/FT)
RAMP E-6 STA 82+51.99 TO STA 83+01.99 (TRANSITION .0156'/FT TO .027'/FT)
RAMP E-6 STA 83+01.99 TO STA 88+73.24 (FULL SUPERELEVATION .027'/FT)

RAMP E-7 STA 82+93.80 TO STA 83+39.73 (TRANSITION .0156'/FT TO .033'/FT)
RAMP E-7 STA 83+39.73 TO STA 84+51.08 (FULL SUPERELEVATION .033'/FT)
RAMP E-7 STA 84+51.08 TO STA 85+00.00 (TRANSITION .033'/FT TO .0156'/FT)
RAMP E-7 STA 90+20.40 TO STA 90+49.52 (TRANSITION .0156'/FT TO .026'/FT)
RAMP E-7 STA 90+49.52 TO STA 92+87.22 (FULL SUPERELEVATION .026'/FT)
RAMP E-7 STA 92+87.22 TO STA 93+16.34 (TRANSITION .026'/FT TO .0156'/FT)

RAMP E-8 STA 77+48.65 TO STA 78+57.00 (FULL SUPERELEVATION .037'/FT)
RAMP E-8 STA 78+57.00 TO STA 79+20.88 (TRANSITION .037'/FT TO .0156'/FT)

RAMP E-8A STA 9+93.63 TO STA 11+91.00 (FULL SUPERELEVATION .027'/FT)
RAMP E-8A STA 11+91.00 TO STA 12+15.62 (TRANSITION .027'/FT TO .0156'/FT)

RAMP E-9 STA 7+83.40 TO STA 8+30.91 (FULL SUPERELEVATION .037'/FT)
RAMP E-9 STA 8+30.91 TO STA 8+55.91 (TRANSITION .037'/FT TO .04'/FT)
RAMP E-9 STA 8+55.91 TO STA 13+83.46 (FULL SUPERELEVATION .04'/FT)
RAMP E-9 STA 13+83.46 TO STA 15+33.46 (TRANSITION .04'/FT TO .0208'/FT)
(PAVEMENT WIDTH VARIES 16'-0" TO 15'-0")
RAMP E-10 STA 13+28.65 TO STA 13+75.31 (FULL SUPERELEVATION .04'/FT)
RAMP E-10 STA 13+75.31 TO STA 14+51.56 (TRANSITION .04'/FT TO .0156'/FT)

RAMP E-12 STA 12+08.65 TO STA 13+58.65 (TRANSITION .0319'/FT TO .06'/FT)
(PAVEMENT WIDTH VARIES 18'-0" TO 20'-0")
RAMP E-12 STA 13+58.65 TO STA 15+82.79 (FULL SUPERELEVATION .06'/FT)

RAMP E-15 STA 16+37.18 TO STA 17+12.18 (TRANSITION .0156'/FT TO .037'/FT)
RAMP E-15 STA 17+12.18 TO STA 17+63.29 (FULL SUPERELEVATION .037'/FT)
RAMP E-15 STA 17+63.29 TO STA 18+38.29 (TRANSITION .037'/FT TO .0156'/FT)

RAMP E-16 STA 13+52.55 TO STA 13+72.71 (TRANSITION .0156'/FT TO .024'/FT)
RAMP E-16 STA 13+72.71 TO STA 16+59.10 (FULL SUPERELEVATION .024'/FT)
RAMP E-16 STA 16+59.10 TO STA 16+84.10 (TRANSITION .024'/FT TO .0156'/FT)
RAMP E-16 STA 21+25.02 TO STA 22+00.02 (TRANSITION .0156'/FT TO .037'/FT)
RAMP E-16 STA 22+00.02 TO STA 24+25.00 (FULL SUPERELEVATION .037'/FT)
RAMP E-16 STA 24+25.00 TO STA 24+50.00 (TRANSITION .037'/FT TO .0227'/FT)

BRIDGE LIMITS

RAMP E-7 STA 84+68.46 TO STA 85+00.00
RAMP E-8 STA 78+64.04 TO STA 79+20.88
RAMP E-10 STA 14+37.14 TO STA 14+51.56

APPROACH SLAB LIMITS

RAMP E-7 STA 83+98.83 TO STA 84+68.46
RAMP E-8 STA 78+09.73 TO STA 78+64.04
RAMP E-9 STA 9+43.13 TO STA 9+73.13
RAMP E-10 STA 14+07.14 TO STA 14+37.14

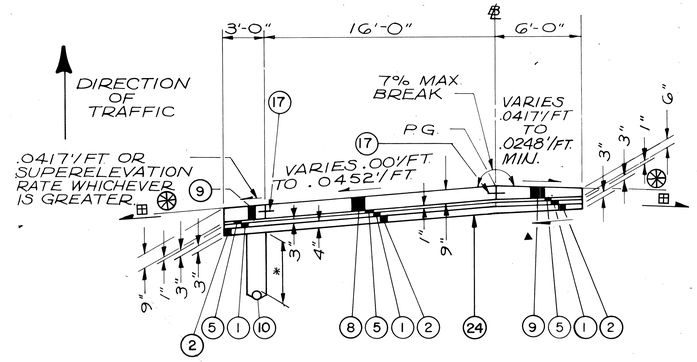

ONE LANE RAMP-SUPERELEVATED LEFT

RAMP E-4 STA 76+43.00 TO STA 81+67.89 (.0156'/FT)
RAMP E-4 STA 81+67.89 TO STA 82+02.60 (TRANSITION .0156'/FT TO .03'/FT)
RAMP E-4 STA 82+02.60 TO STA 85+57.09 (FULL SUPERELEVATION .03'/FT)
RAMP E-4 STA 85+57.09 TO STA 85+92.80 (TRANSITION .03'/FT TO .0156'/FT)
RAMP E-4 STA 85+92.80 TO STA 89+32.02 (.0156'/FT)
RAMP E-4 STA 89+32.02 TO STA 89+75.70 (TRANSITION .0156'/FT TO LEVEL)

RAMP E-7 STA 80+90.31 TO STA 81+67.60 (.0156'/FT)
RAMP E-7 STA 81+67.60 TO STA 82+11.28 (TRANSITION .0156'/FT TO LEVEL)
RAMP E-7 STA 85+41.60 TO STA 86+32.12 (TRANSITION LEVEL TO .04'/FT)
RAMP E-7 STA 86+32.12 TO STA 87+48.03 (FULL SUPERELEVATION .04'/FT)
RAMP E-7 STA 87+48.03 TO STA 88+16.35 (TRANSITION .04'/FT TO .0156'/FT)
RAMP E-7 STA 88+16.35 TO STA 89+33.04 (.0156'/FT)
RAMP E-7 STA 89+33.04 TO STA 89+76.72 (TRANSITION .0156'/FT TO LEVEL)
RAMP E-7 STA 93+60.02 TO STA 94+03.70 (TRANSITION LEVEL TO .0156'/FT)
RAMP E-7 STA 94+03.70 TO STA 94+81.89 (TRANSITION .0156'/FT TO .025'/FT)
RAMP E-7 STA 94+81.89 TO STA 95+72.12 (FULL SUPERELEVATION .025'/FT)

RAMP E-8 STA 79+67.45 TO STA 80+14.02 (TRANSITION LEVEL TO .0156'/FT)
RAMP E-8 STA 80+14.02 TO STA 80+57.00 (TRANSITION .0156'/FT TO .03 /FT)
RAMP E-8 STA 80+57.00 TO STA 82+65.02 (FULL SUPERELEVATION .03'/FT)
RAMP E-8 STA 82+65.02 TO STA 83+65.02 (TRANSITION .03'/FT TO LEVEL)

RAMP E-10 STA 15+00.31 TO STA 16+25.31 (TRANSITION LEVEL TO .034'/FT)
RAMP E-10 STA 16+25.31 TO STA 19+44.58 (FULL SUPERELEVATION .034'/FT)
RAMP E-10 STA 19+44.58 TO STA 20+00.00 (TRANSITION .034'/FT TO .0189'/FT)

RAMP E-15 STA 12+66.12 TO STA 14+16.12 (TRANSITION .0452'/FT TO .0156'/FT)
(PAVEMENT VARIES 24'-0" TO 16'-0")
RAMP E-15 STA 14+16.12 TO STA 14+37.18 (.0156'/FT)
RAMP E-15 STA 14+37.18 TO STA 15+37.18 (TRANSITION .0156'/FT TO LEVEL)

BRIDGE LIMITS

RAMP E-7 STA 85+41.60 TO STA 85+72.67
RAMP E-10 STA 15+00.31 TO STA 15+40.87

APPROACH SLAB LIMITS

RAMP E-7 STA 85+72.67 TO STA 86+24.70
RAMP E-8 STA 79+67.45 TO STA 80+14.34
RAMP E-10 STA 15+40.87 TO STA 15+70.87

▲ SLOPE PROPOSED SUBGRADE TO PROVIDE POSITIVE DRAINAGE OF BASE. MIN. SLOPE .021'/FT.

* PLACE UNDERDRAINS 30" DEEP IN FILL AND 50" DEEP IN CUT OR AS OTHERWISE SHOWN ON TYPICAL SECTIONS.

⊞ SAME AS PAVED SHOULDER SLOPE.

FOR LEGEND, SEE SHEET 7.
⊛ FOR SLOPE DETAILS, SEE SHEET 16.

CALC BY ____ DATE ____	SUM-76-11.57	OHIO	12
CHKD BY ____ DATE ____	FED. PROJECT IR-76-2(44)19	F.H.W.A. REGION 5	12.14

SUMMIT COUNTY

TYPICAL SECTIONS

TYPE 451 ON 301

**NOTE: CONSTRUCT LONGITUDINAL JOINT WHEN WIDTH (W) EXCEEDS 16'. SEE PAVEMENT DETAILS SHEET 206.

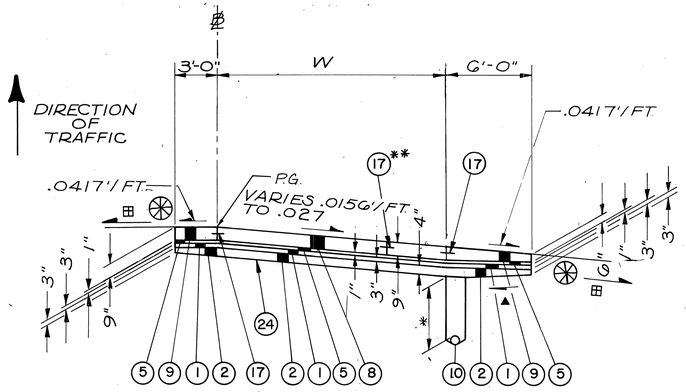

ONE LANE RAMP-SUPERELEVATED RIGHT

RAMP E-8 STA 87+31.31 TO STA 87+81.31 (TRANSITION .0156'/FT TO .027'/FT) W=VARIES 19.90' TO 22.29'
RAMP E-8 STA 87+81.31 TO STA 89+67.90 (FULL SUPERELEVATION .027'/FT) W=VARIES 22.29' TO 40.06'
RAMP E-8 STA 89+67.90 TO STA 90+00.08 (TRANSITION .027'/FT TO .0197'/FT) W=VARIES 40.06' TO 52.62'
RAMP E-8 STA 90+00.08 TO STA 90+17.90 (TRANSITION .0197'/FT TO .0156'/FT) W=16'-0"

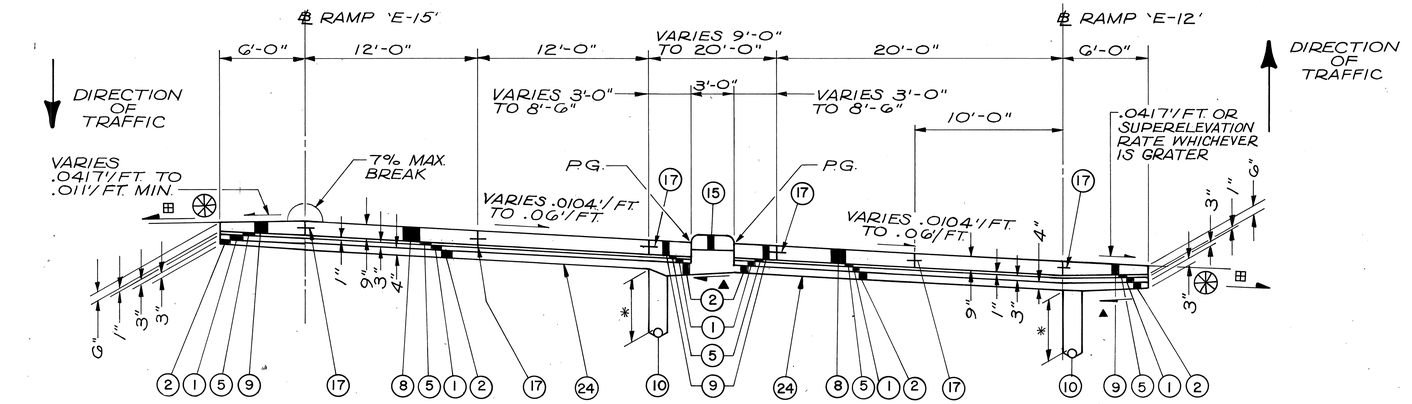

RAMP E-12/E-15-SUPERELEVATED RIGHT

RAMP E-12 STA 15+82.79 TO STA 16+30.51 (FULL SUPERELEVATION .06'/FT)
RAMP E-12 STA 16+30.51 TO STA 17+80.51 (TRANSITION .06 TO .0156'/FT)
RAMP E-12 STA 17+80.51 TO STA 18+78.94 (TRANSITION .0156 TO .0104'/FT)

RAMP E-15 STA 9+24.86 TO STA 10+22.13 (TRANSITION .0104 TO .0156'/FT)
RAMP E-15 STA 10+22.13 TO STA 11+72.13 (TRANSITION .0156 TO .06'/FT)
RAMP E-15 STA 11+72.13 TO STA 12+16.12 (FULL SUPERELEVATION .06'/FT)
RAMP E-15 STA 12+16.12 TO STA 12+66.12 (TRANSITION .06 TO .0452'/FT)

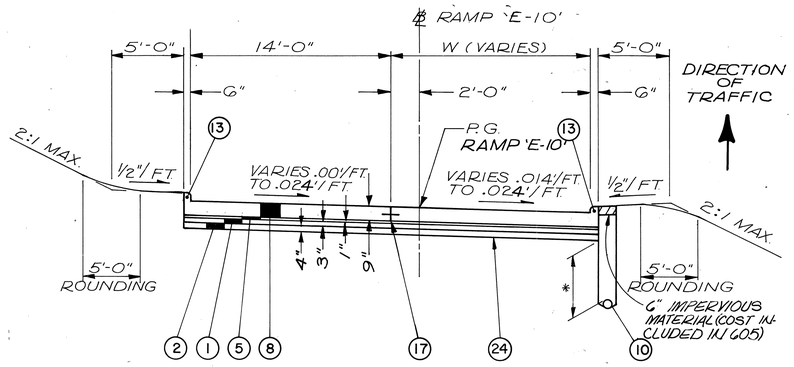

TWO LANE RAMP-SUPERELEVATED RIGHT

RAMP E-10 STA 20+69.58 TO STA 21+00.00 (TRANSITION LEVEL TO .0097'/FT) W=VARIES 10.35' TO 14'
RAMP E-10 STA 21+00.00 TO STA 21+44.58 (TRANSITION TO .0097'/FT TO .024'/FT) W=14'
RAMP E-10 STA 21+44.58 TO STA 22+32.32 (FULL SUPERELEVATION .024'/FT) W=14'
RAMP E-10 STA 22+32.32 TO STA 22+81.50 (TRANSITION .024'/FT TO .014'/FT) W=14'

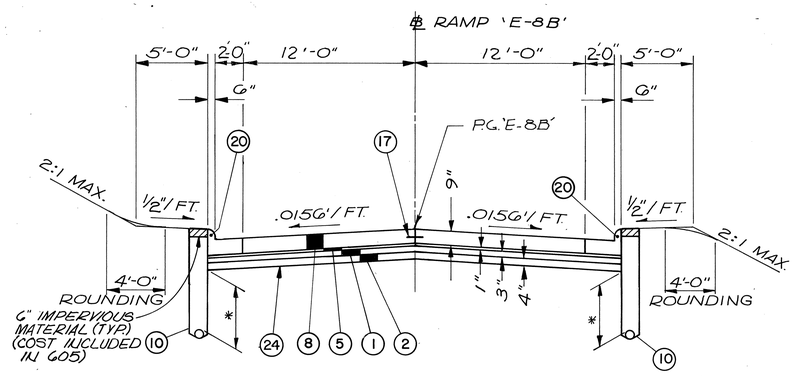

TWO LANE RAMP NORMAL (CURBED)

RAMP E-8B STA 100+12.42 TO STA 106+96.27

▲ SLOPE PROPOSED SUBGRADE TO PROVIDE POSITIVE DRAINAGE OF BASE. MIN. SLOPE .021'/FT.

✱ PLACE UNDERDRAINS 30" DEEP IN FILL AND 50" DEEP IN CUT OR AS OTHERWISE SHOWN ON TYPICAL SECTIONS.

⊞ SAME AS PAVED SHOULDER SLOPE.

FOR LEGEND, SEE SHEET 7.
FOR SLOPE DETAILS, SEE SHEET 16.

CALC. BY. DATE	SUM-76-11.57	OHIO
CHKD BY. DATE	FED. PROJECT IR-76-2(44)19	F.H.W.A. REGION 5

SUMMIT COUNTY

13
1214

TYPICAL SECTIONS

TYPE 451 ON 301

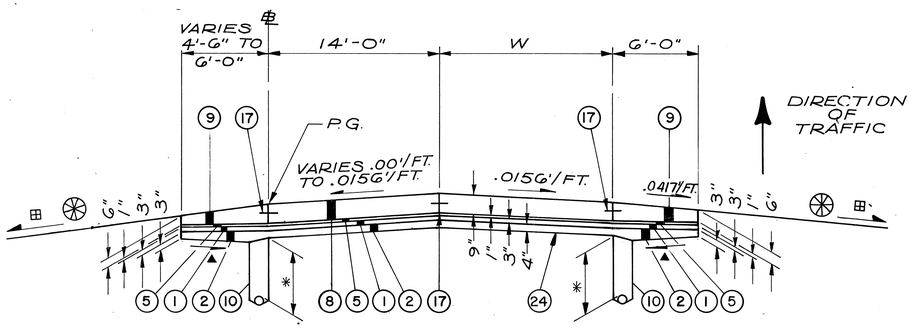

TWO LANE RAMP -NORMAL

RAMP E-8 STA 91+38.22 TO STA 91+76.44 (TRANSITION LEVEL TO .0156'/FT) W=4.29' TO 6.59'
RAMP E-8 STA 91+76.44 TO STA 94+00.00 (.0156'/FT) W=6.59' TO 14'
RAMP E-8 STA 94+00.00 TO STA 95+80.73 (.0156'/FT) W=14'

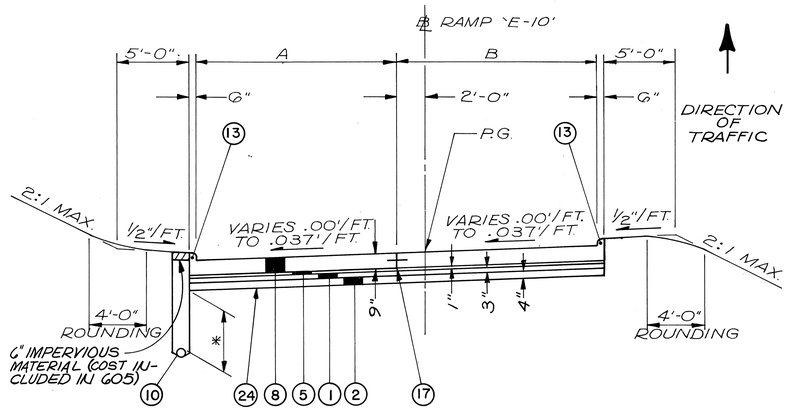

TWO LANE RAMP -SUPERELEVATED LEFT

RAMP E-10 STA 20+00.00 TO STA 20+69.58 (TRANSITION .0189'/FT TO LEVEL) A=14'/FT B=VARIES 2' TO 10.35'

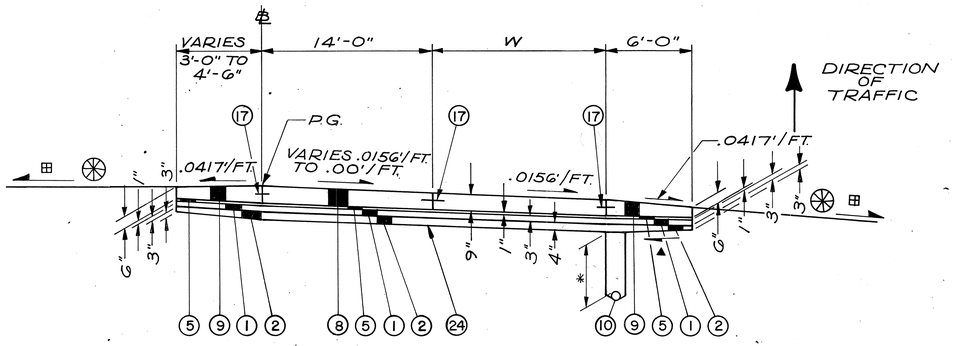

TWO LANE RAMP -SUPERELEVATED RIGHT

RAMP E-8 STA 91+00.00 TO STA 91+38.22 (TRANSITION .0156'/FT TO LEVEL) W=2' TO 4.29'

▲ SLOPE PROPOSED SUBGRADE TO PROVIDE POSITIVE DRAINAGE OF BASE. MIN. SLOPE .021'/FT.

✱ PLACE UNDERDRAINS 30" DEEP IN FILL AND 50" DEEP IN CUT OR AS OTHERWISE SHOWN ON TYPICAL SECTIONS.

⊞ SAME AS PAVED SHOULDER SLOPE.

FOR LEGEND, SEE SHEET 7
℄ FOR SLOPE DETAILS, SEE SHEET 16

TYPICAL SECTIONS

CALC BY	SUM-76-11.57	OHIO	14 / 1214
CHKD BY	FED.PROJECT IR-76-2(44)19	F.H.W.A. REGION 5	
DATE	SUMMIT COUNTY		

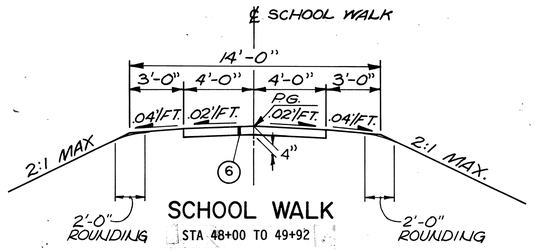

SCHOOL WALK

STA 48+00 TO 49+92

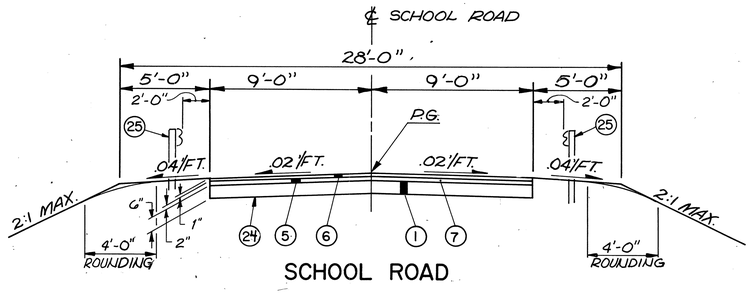

SCHOOL ROAD

STA 10+34.80 TO STA 10+48
STA 12+54. TO STA 15+00

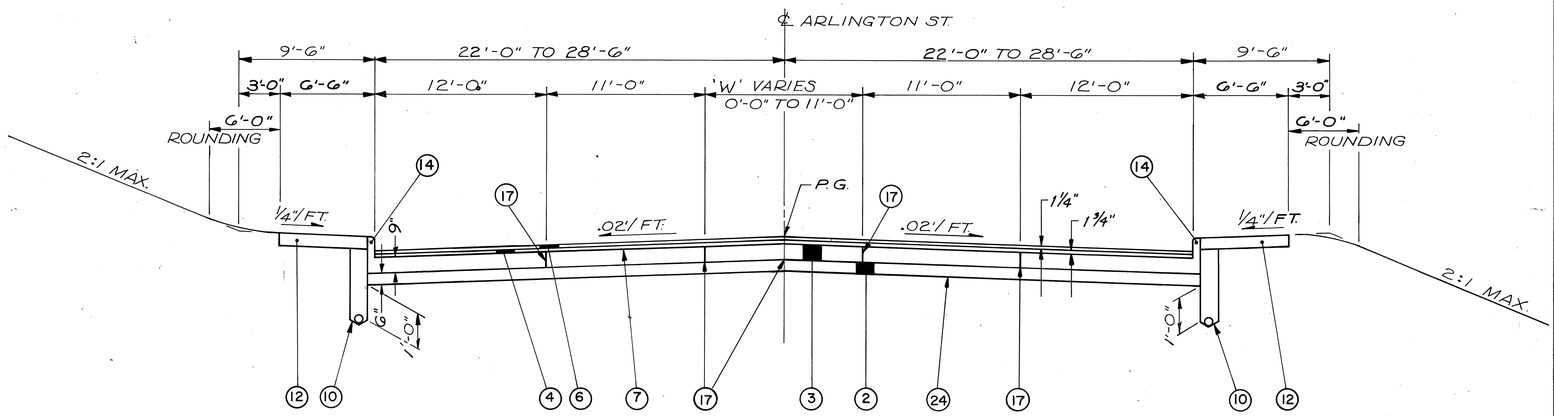

ARLINGTON STREET

STA 13+70.00 TO STA 15+00.00 W=VARIES 0' TO 11'
STA 15+00.00 TO STA 19+62.60 W=11'
STA 19+62.60 TO STA 20+92.60 W=VARIES 11' TO 0'

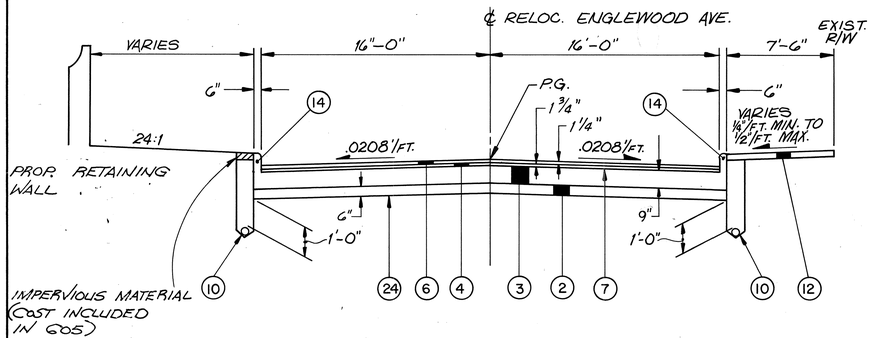

RELOCATED ENGLEWOOD AVENUE

STA 37+46.76 TO STA 48+80

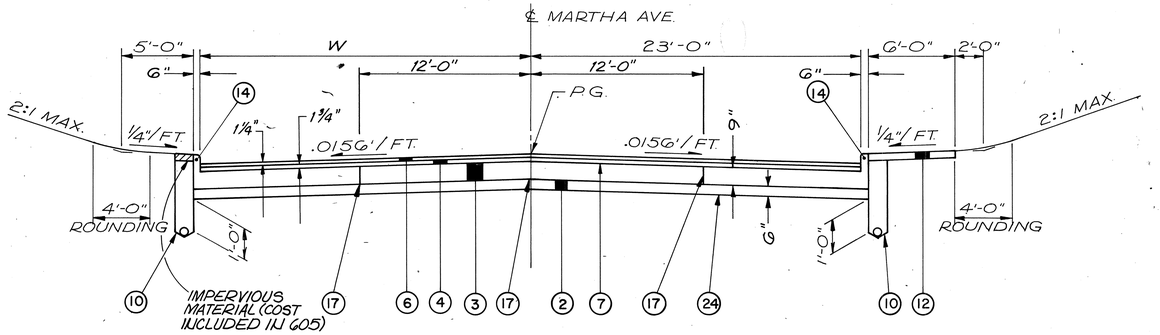

MARTHA AVENUE

STA 7+77.31 TO STA 8+79.31 W=13'
STA 8+79.31 TO STA 11+79.31 W=VARIES 13' TO 23'
STA 11+79.31 TO STA 17+51.77 W=23'

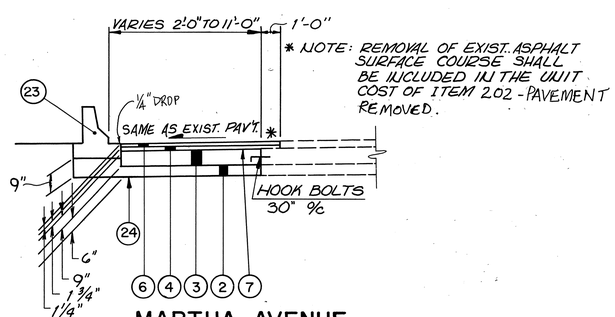

MARTHA AVENUE

STA 5+09.31 TO STA 7+77.31

FOR LEGEND, SEE SHEET 7

TYPICAL SECTIONS

CALC BY DATE	SUM-76-11.57	OHIO	15 / 1214
CHKD BY DATE	FED. PROJECT IR-76-2(44)19	F.H.W.A. REGION 5	

SUMMIT COUNTY

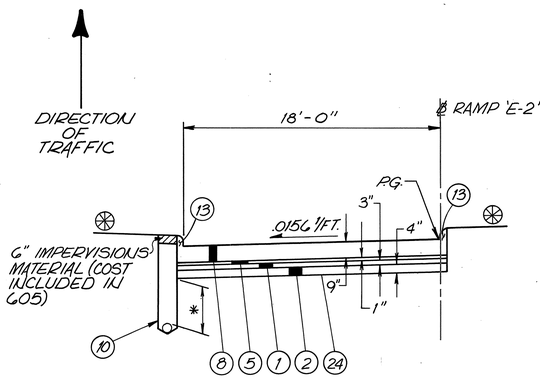

RAMP 'E-2'

STA 10+90.00 TO STA 13+32.32

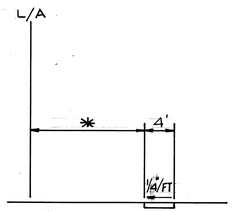

* VARIES
1' TO 3' STA. 17+50 TO STA. 18+69.8
RAMP E-10
3' TO 1' STA. 18+69.8 TO STA. 19+75.3
RAMP E-10
1' TO 19' STA. 19+75.3 TO STA. 22+76.9
RAMP E-10

SIDEWALK
STA. 17+50 TO STA. 22+76.9 RAMP E-10, RT

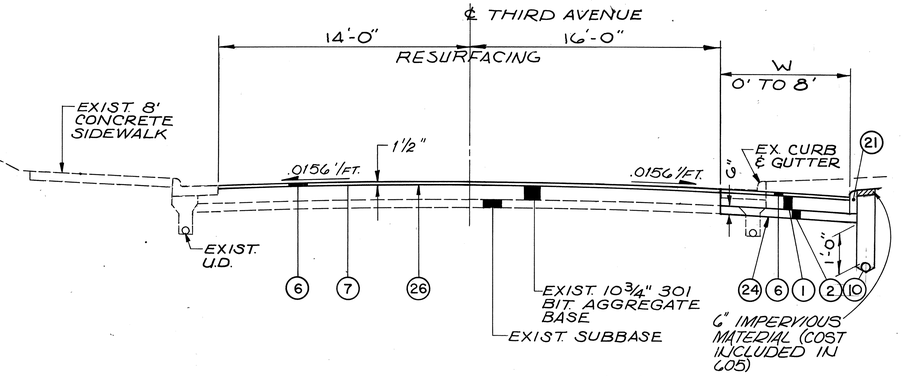

THIRD AVENUE WIDENING

STA 33+59.00 TO STA 34+50.00 W=VARIES 0' TO 8'
STA 34+50.00 TO STA 34+91.95 W=8'

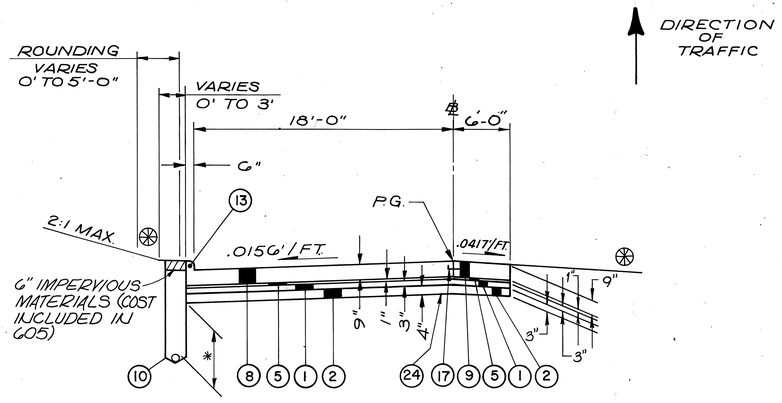

RAMP 'E-2'

STA 6+05.84 TO STA 10+90.00

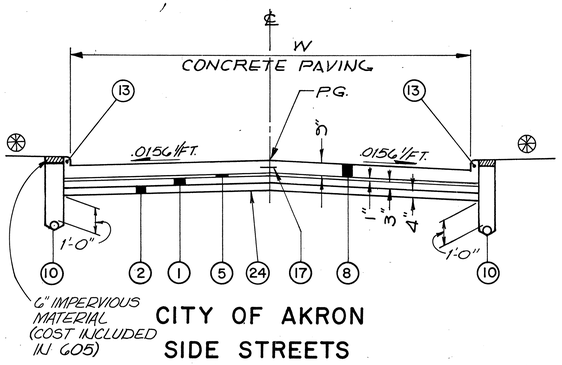

CITY OF AKRON
SIDE STREETS

FULLER STREET STA 11+40.59 TO STA 16+88.83 W=24'
THIRD AVENUE STA 21+53 TO STA 22+50.66 W=32'

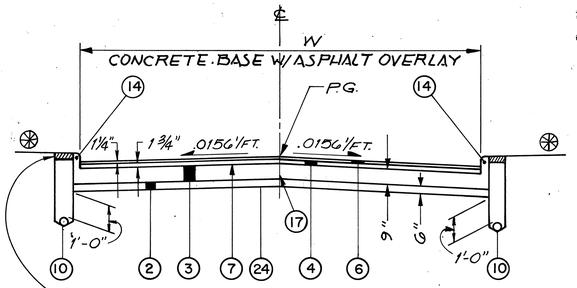

CITY OF AKRON
SIDE STREETS

TALBOT AVENUE STA 18+40.44 TO STA 19+00 W=26'
MARTIN AVENUE STA 46+49.92 TO STA 49+71.50 W=28'
SECOND AVENUE STA 20+28.50 TO STA 21+10 W=30'
THIRD AVENUE STA 34+91.95 TO ST 35+79 W=VARIES
WIGLEY AVENUE STA 9+01.72 TO STA 10+00 W=32'
ENGLEWOOD AVENUE STA 30+49.09 TO STA 31+70.00 W=VARIES

FOR LEGEND, SEE SHEET 7.

⊛ FOR SLOPE DETAILS, SEE SHEET 16.

* PLACE UNDERDRAINS 30" DEEP IN FILL AND 50" DEEP IN CUT OR OTHERWISE SHOWN ON TYPICAL SECTIONS.

CALC. BY ____ DATE ____	SUM-76-11.57	OHIO
CHKD. BY ____ DATE ____	FED. PROJECT IR-76-2(44)19	F.H.W.A. REGION 5

SUMMIT COUNTY

16
1214

TYPICAL SECTIONS

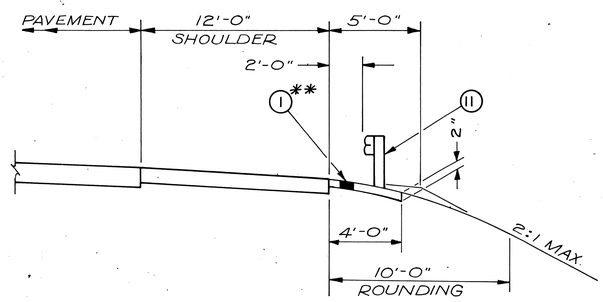

MAINLINE FILL SLOPE DETAIL

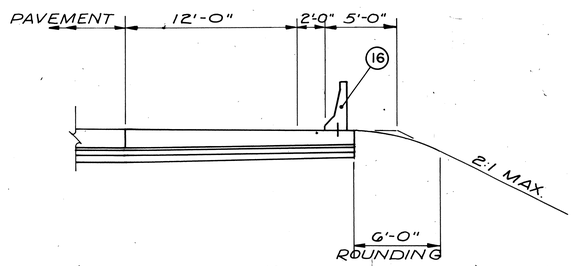

MAINLINE FILL SLOPE W/BARRIER

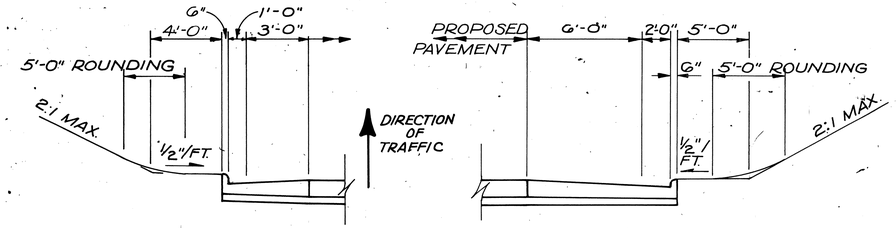

RAMP CUT SLOPE DETAIL W/CURB

** NOTE: TO BE USED W/GUARDRAIL

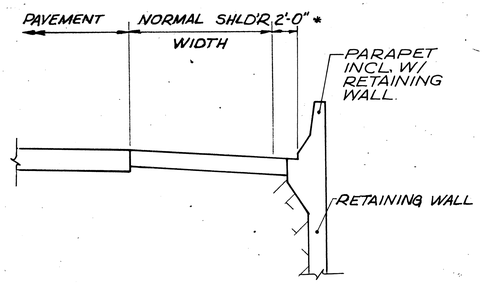

MAINLINE & RAMP
W/ RETAINING WALL

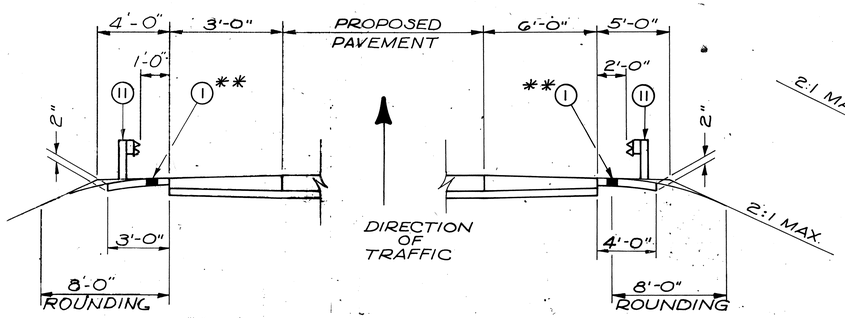

RAMP FILL SLOPE DETAIL

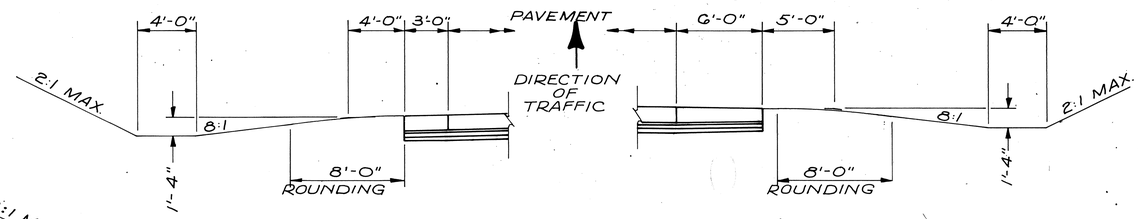

RAMP CUT SLOPE

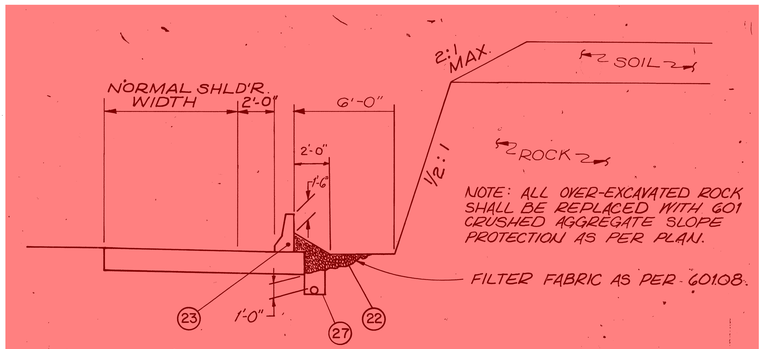

SLOPE TREATMENT AT ROCK CUT

I-76 EASTBOUND STA 559+25 TO STA 569+00
I-76 WESTBOUND STA 560+25 TO STA 569+00

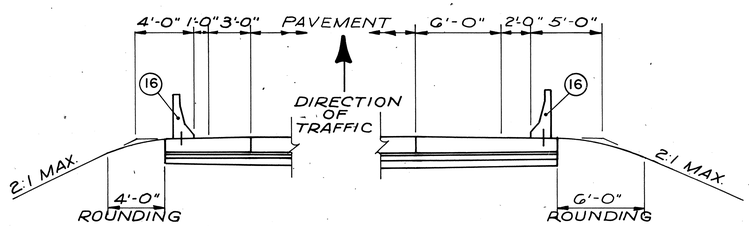

RAMP FILL SLOPE W/BARRIER

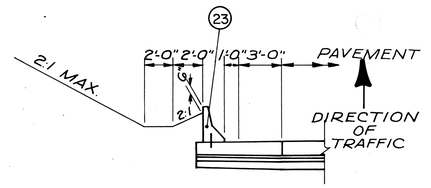

RAMP CUT SLOPE W/BARRIER

RAMP E-6 STA 79+96 TO STA 81+75
RAMP E-16 STA 17+75 TO STA 22+20

FOR LEGEND, SEE SHEET 7

* NOTE: 1'-0" ON LEFT SIDE OF RAMPS.

EXISTING TYPICAL SECTIONS

CALC. BY. DATE	SUM-76-11.57	OHIO	17 / 1214
CHKD. BY. DATE	FED. PROJECT IR-76-2(44)19	F.H.W.A. REGION 5	

SUMMIT COUNTY

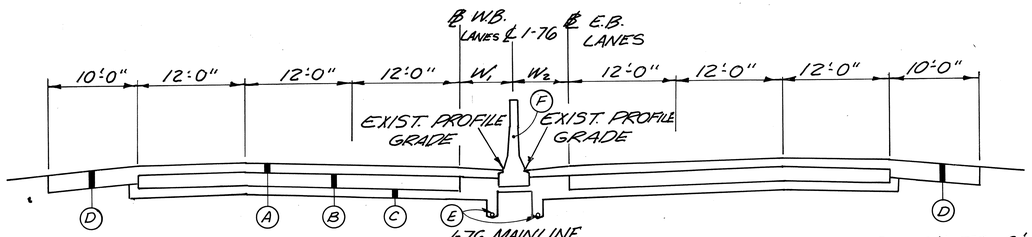

I-76 MAINLINE

STA. 549+85 ± TO STA. 553+43.40 W_1=6'-0", W_2 VARIES 20'± TO 6'-0"

* STA. 553+43.40 TO STA. 587+00.47 W_1=6'-0", W_2=6'-0"

STA. 587+00.47 TO STA. 593+27.25 W_1=VARIES 6'-0" TO 2'-0", W_2=VARIES 6'-0" TO 2'-0"

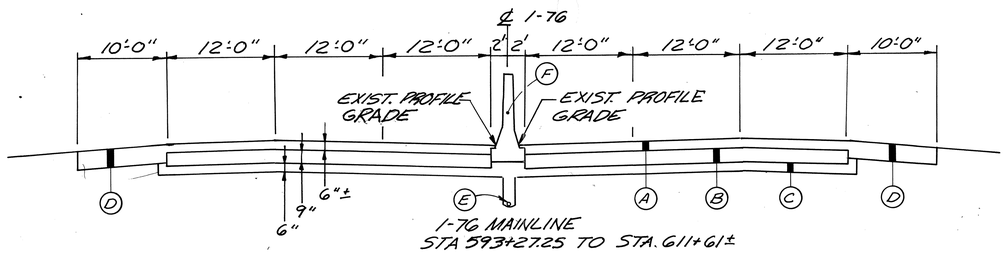

I-76 MAINLINE

STA 593+27.25 TO STA. 611+61±

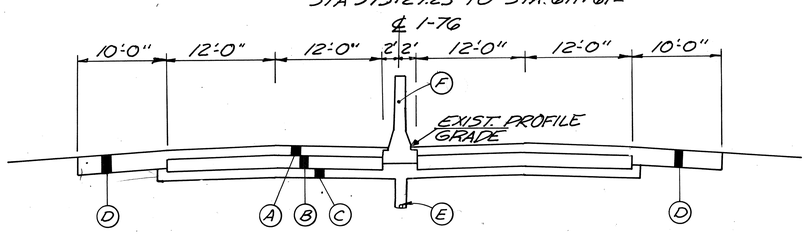

I-76 MAINLINE

STA. 611+61± TO STA. 634+00

LEGEND

- (A) 6" ASPHALT CONCRETE
- (B) 9" REINF. CONCRETE PAVEMENT
- (C) 6" SUBBASE
- (D) 12"± BITUMINOUS SHOULDER
- (E) 6" PIPE UNDERDRAIN
- (F) CONCRETE BARRIER

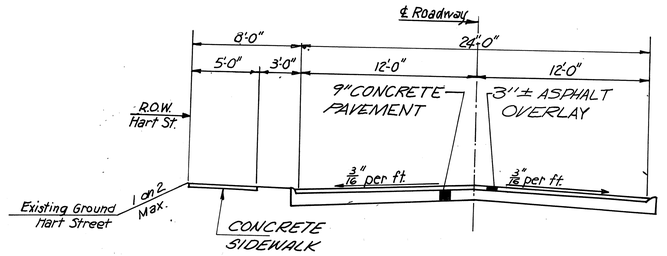

HART STREET

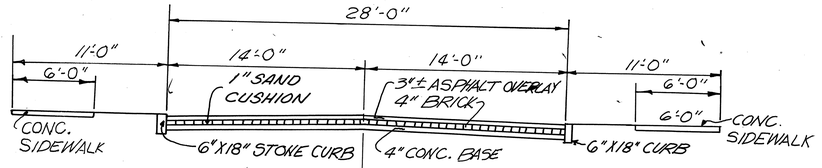

CROSS SECTION OF EXISTING THIRD AVENUE
HART AVENUE TO FULLER STREET

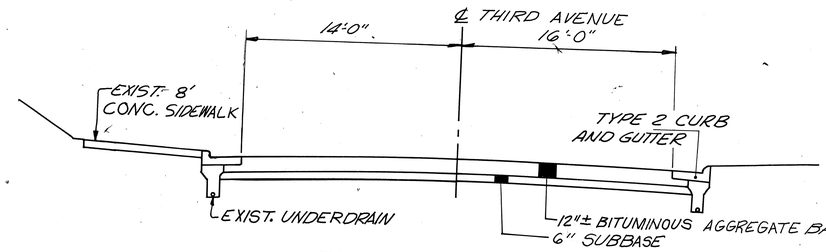

EXISTING THIRD AVENUE
FULLER STREET TO MARTHA AVENUE

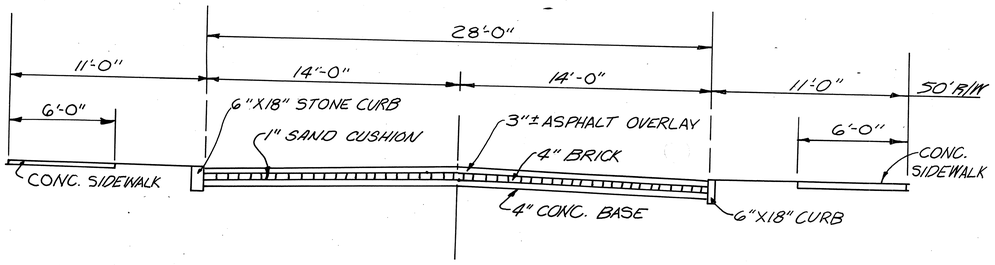

EXISTING FOURTH AVENUE

AA B/P# 21942R

EXISTING TYPICAL SECTIONS

CALC. BY. ____ DATE ____	SUM-76-11.57	OHIO	18 / 1214
CHKD. BY. ____ DATE ____	FED. PROJECT IR-76-2(44)19	F.H.W.A. REGION 5	

SUMMIT COUNTY

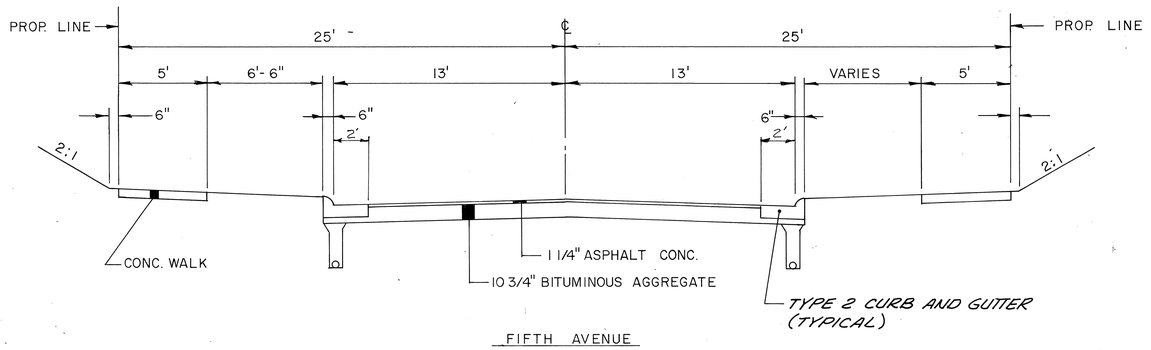

FIFTH AVENUE

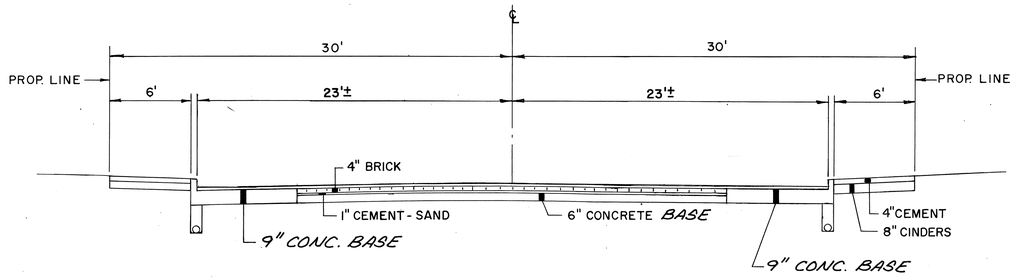

MARTHA AVE.

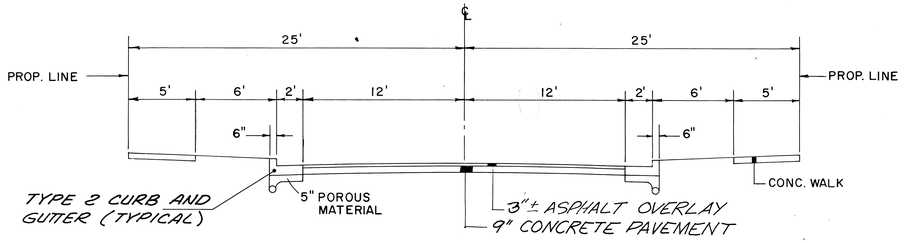

FULLER ST.

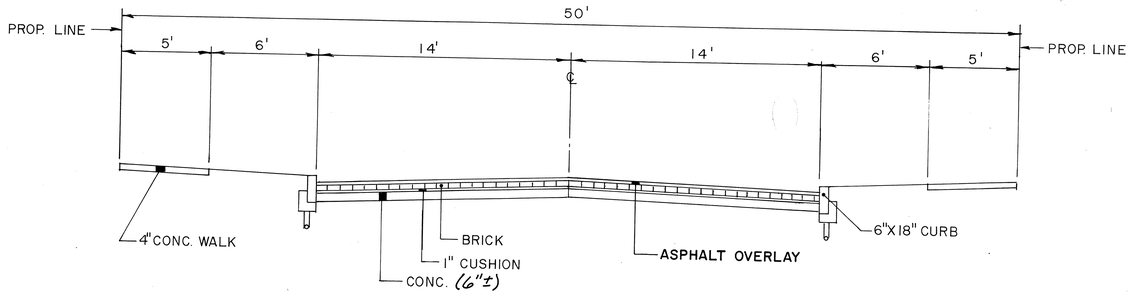

MARTIN AVE.

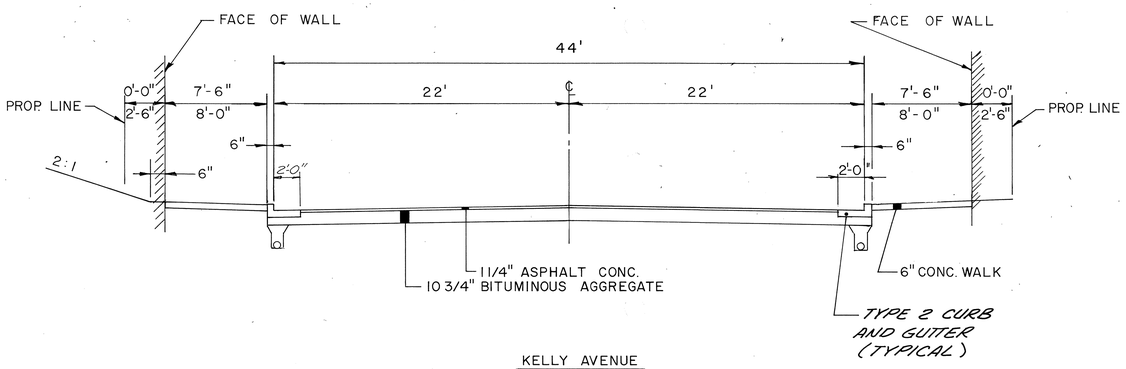

KELLY AVENUE

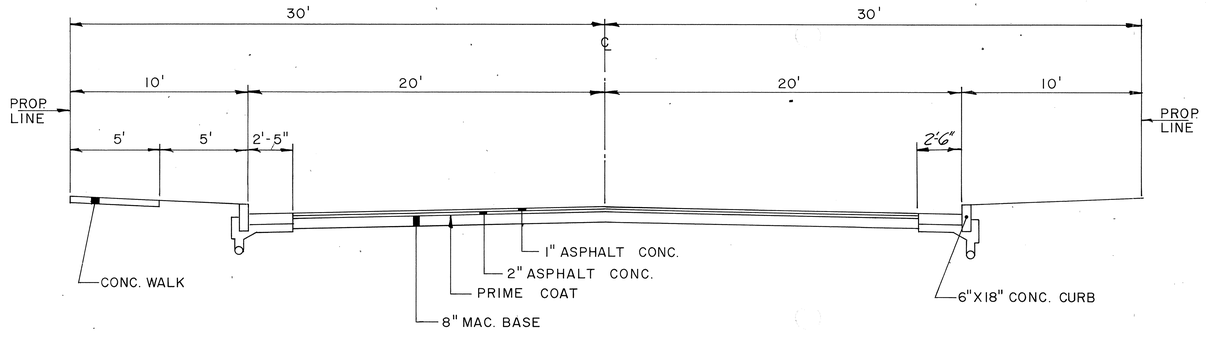

SEIBERLING STREET

EXISTING TYPICAL SECTIONS

AA B/P# 71942R

EXISTING TYPICAL SECTIONS

CALC. BY. ____ DATE ____	SUM-76-11.57	OHIO	19 / 1214
CHKD. BY. ____ DATE ____	FED. PROJECT IR-76-2(44)19	F.H.W.A. REGION 5	

SUMMIT COUNTY

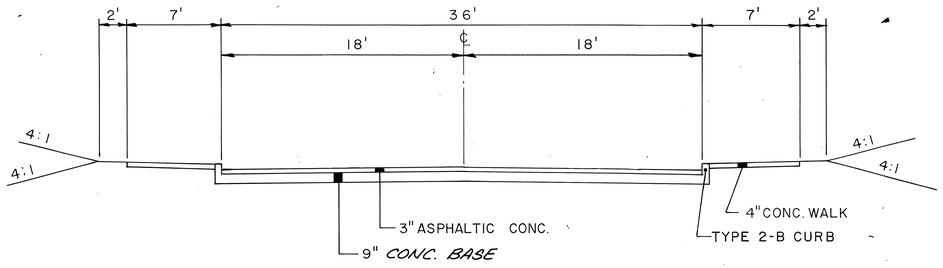

INMAN STREET

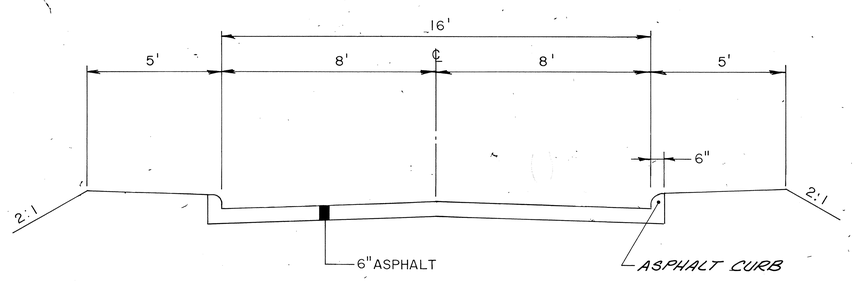

SCHOOL ROAD

SECOND AVE.

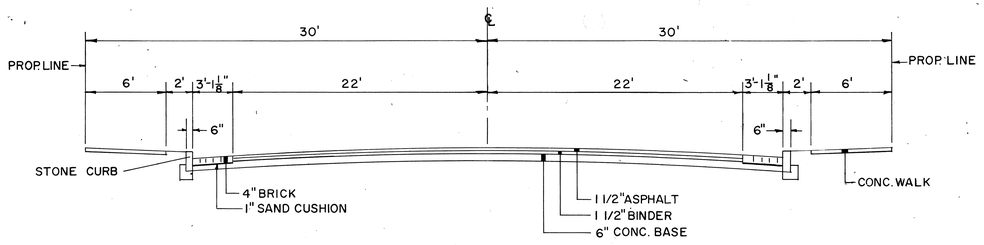

ARLINGTON ST.

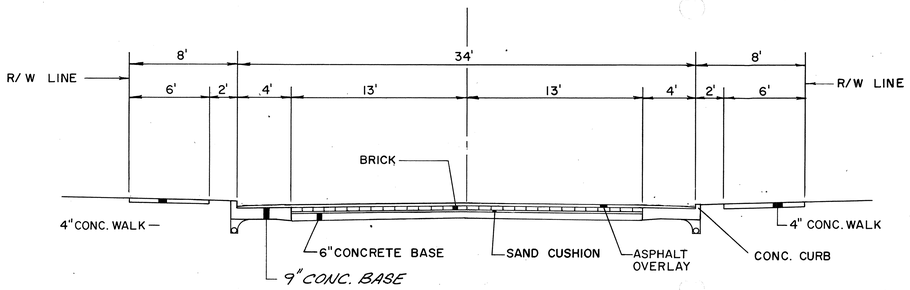

CHITTENDEN STREET

EXISTING TYPICAL SECTIONS

EXISTING TYPICAL SECTIONS

CALC. BY.		SUM-76-11.57	OHIO
CHKD. BY.		FED. PROJECT IR-76-2(44)19	F.H.W.A. REGION 5
DATE		SUMMIT COUNTY	

20
1214

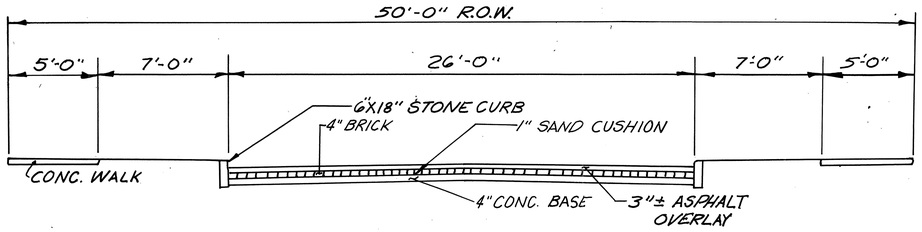

EXISTING JOHNS AVENUE

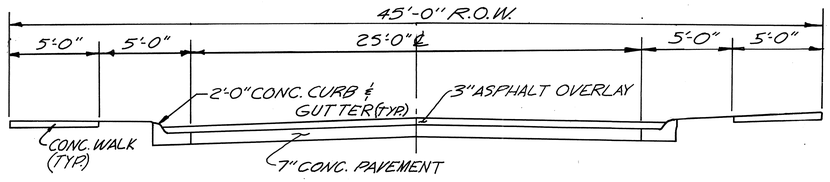

EXISTING CAMBRIDGE STREET

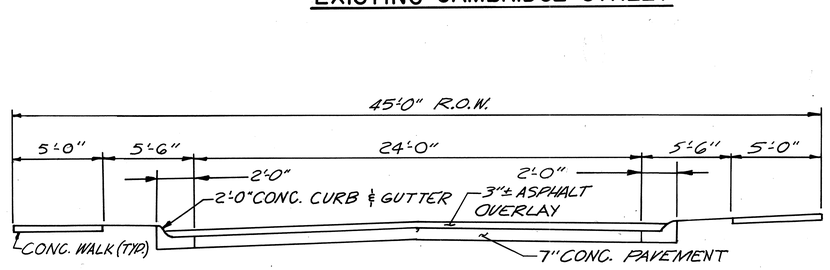

EXISTING DETROIT STREET

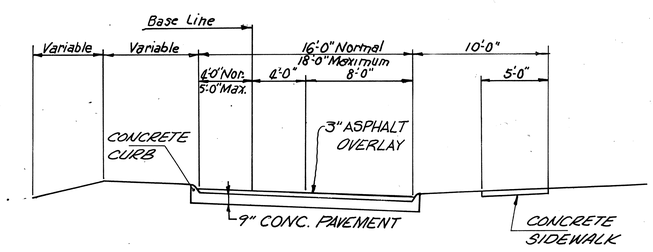

ENGLEWOOD AVE.
DETROIT STREET TO WIGLEY STREET

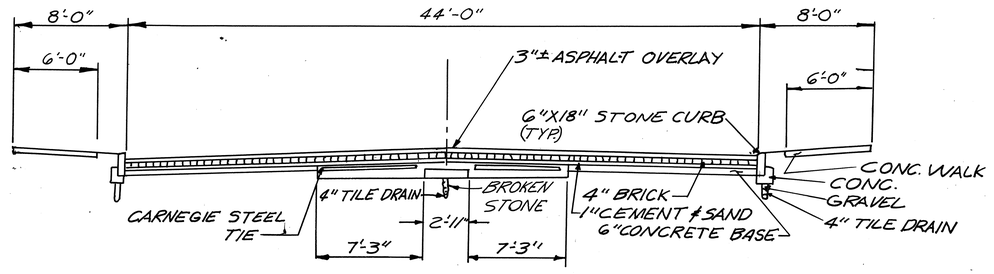

EXISTING ENGLEWOOD AVENUE

WIGLEY TO MASSILLON

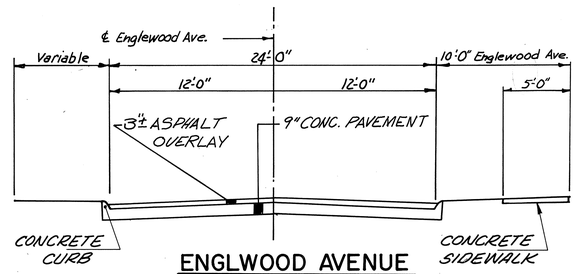

ENGLWOOD AVENUE
MARTHA AVENUE TO DETROIT STREET

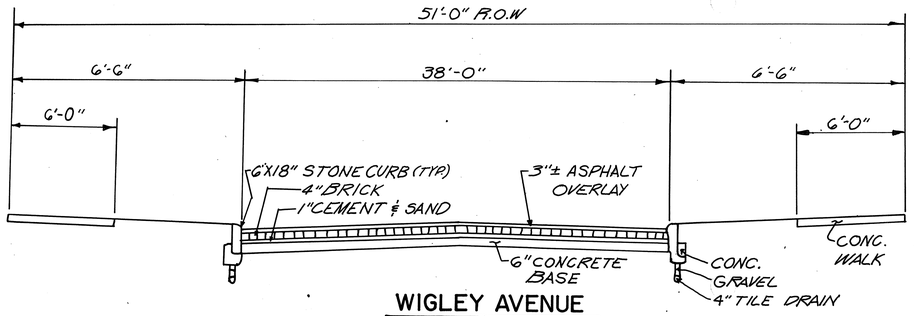

WIGLEY AVENUE
MARKET TO ENGLEWOOD

MAINTENANCE OF TRAFFIC GENERAL NOTES

1. TRAFFIC CONTROL DEVICES

ALL TRAFFIC CONTROL DEVICES SHALL BE FURNISHED BY THE CONTRACTOR AND SHALL BE ERECTED AND MAINTAINED IN COMPLIANCE WITH THE STATE OF OHIO "MANUAL OF UNIFORM TRAFFIC CONTROL DEVICES" CURRENT EDITION, LATEST REVISION. THE CONTRACTOR SHALL BE RESPONSIBLE AT ALL TIMES FOR PROVIDING AND MAINTAINING LIGHTS, SIGNS, AND BARRICADES FOR THE MAINTENANCE OF TRAFFIC AND SAFETY OF HIS WORK AT THE LOCATIONS SHOWN ON THESE PLANS OR AS DIRECTED BY THE ENGINEER. ANY REPAIRS TO TRAFFIC CONTROL DEVICES SHALL BE PERFORMED WITHIN 24 HOURS OF NOTIFICATION.

2. SUSPENSION OF WORK

IF THE CONTRACTOR FAILS TO COMPLY WITH THE PROVISIONS FOR TRAFFIC CONTROL AS SET FORTH IN THESE PLANS OR WITH PROVISIONS OF THE MANUAL, THE ENGINEER SHALL SUSPEND WORK UNTIL THE CONTRACTOR COMPLIES WITH THE NECESSARY REQUIREMENTS.

3. TRAFFIC MANAGEMENT PROGRAM (TMP)

CONCURRENT WITH THE CONSTRUCTION OF THE PROJECT, THE CITY OF AKRON WILL IMPLEMENT A TRAFFIC MANAGEMENT PROGRAM (TMP) TO COORDINATE THE CONSTRUCTION OF THIS PROJECT AND OTHER ROADWAY CONSTRUCTION PROJECTS. (SEE ITEM SPECIAL – TRAFFIC SAFETY COORDINATOR, SHEET 25). THE CONTRACTOR SHALL FAMILIARIZE HIMSELF WITH THE TMP.

4. MINIMUM MAINLINE TRAFFIC LANES

THE CONTRACTOR SHALL SCHEDULE HIS OPERATIONS SO THAT A MINIMUM OF TWO MAINLINE TRAFFIC LANES IN EACH DIRECTION ARE MAINTAINED AT ALL TIMES. NO WORK WILL BE PERMITTED WHICH WILL REDUCE THE NUMBER, EXCEPT AS NOTED ON THE PLANS, OR AS DIRECTED BY THE ENGINEER.

5. PRIOR NOTICE

EIGHTEEN (18) DAYS PRIOR TO IMPLEMENTATION OF ANY MAINTENANCE OF TRAFFIC MEASURE, THE CONTRACTOR'S TRAFFIC SAFETY COORDINATOR SHALL PROVIDE WRITTEN NOTIFICATION TO THE PROJECT ENGINEER AND THE CITY OF AKRON, T.M.P. Coordinator, OF THE TYPE WORK TO BE DONE, WHICH RAMPS WILL BE OPEN, THE MAINLINE LANE CLOSURES AND ANY OTHER PERTINENT MAINTENANCE OF TRAFFIC INFORMATION. THE TRAFFIC SAFETY COORDINATOR SHALL ALSO PROVIDE WRITTEN NOTIFICATION TO THE PROJECT ENGINEER AND THE CITY OF AKRON, T.M.P. Coordinator, FOURTEEN (14) DAYS PRIOR TO ANY RAMP CLOSURES, MAINLINE OR SURFACE STREET LANE CLOSURES, OR ANY MAINTENANCE OF TRAFFIC PHASE CHANGE. DURING CONSTRUCTION THE CONTRACTOR'S TRAFFIC SAFETY COORDINATOR SHALL INFORM THE PROJECT ENGINEER, OF TRAFFIC CONDITIONS WITHIN THE WORK ZONES. and T.M.P. Coordinator

6. EQUIPMENT STORAGE AND STAGING AREA

PRIOR TO THE START OF CONSTRUCTION, THE CONTRACTOR SHALL SUBMIT TO THE PROJECT ENGINEER THE LOCATION OR LOCATIONS THAT THE CONTRACTOR INTENDS TO USE FOR PARKING PRIVATE VEHICLES, EQUIPMENT AND MATERIAL STORAGE AND/OR STAGING AREA. THESE LOCATIONS SHALL BE APPROVED BY THE PROJECT ENGINEER.

7. PRIVATE VEHICLES

NO PRIVATE VEHICLES (BELONGING TO THE CONTRACTOR'S EMPLOYEES OR TO ODOT PERSONNEL ASSIGNED TO THE PROJECT) SHALL BE PARKED WITHIN THE ROADWAY TRAVEL PORTION (PAVEMENT AND SHOULDER) OF THE HIGHWAY PROJECT LIMITS. NO PRIVATE VEHICLES SHALL BE PARKED WITHIN THE LIMITS OF THE PERMANENT LIMITED ACCESS FENCE.

8. INSTALLATION AND RESETTING CONSTRUCTION PHASES

ONLY DURING OFF-PEAK TRAFFIC PERIODS (i.e. ANY PERIOD OTHER THAN 7-9 A.M. AND 4-6 P.M.) SHALL THE CONTRACTOR INSTALL AND SUBSEQUENTLY RESET ALL TRAFFIC CONTROL DEVICES NECESSARY FOR MAINTAINING TRAFFIC FOR EACH CONSTRUCTION PHASE.

9. HOLIDAYS

NO WORK WHICH REQUIRES THE CLOSING OF EXISTING TRAFFIC LANES OFF OF THE MAIN LINE , SHALL BE PERFORMED DURING HOLIDAYS. HOWEVER, WORK WHICH DOES NOT REQUIRE EXISTING LANE CLOSURES MAY BE PERFORMED. ALL EXISTING LANES SHALL BE OPEN TO TRAFFIC DURING THE FOLLOWING DESIGNATED HOLIDAYS:

CHRISTMAS EVE	CHRISTMAS DAY
NEW YEARS EVE	NEW YEARS DAY
FRIDAY BEFORE MEMORIAL DAY	MEMORIAL DAY
FOURTH OF JULY	FRIDAY BEFORE LABOR DAY
LABOR DAY	WEDNESDAY BEFORE THANKSGIVING
THANKSGIVING DAY	FRIDAY, SATURDAY, AND SUNDAY AFTER THANKSGIVING

THE PERIOD OF TIME THAT THE LANES ARE TO BE OPEN DEPENDS ON THE DAY OF THE WEEK ON WHICH THE HOLIDAY FALLS. THE FOLLOWING SCHEDULE SHALL BE USED TO DETERMINE THIS PERIOD:

DAY OF THE WEEK	TIME ALL LANES MUST BE OPEN TO TRAFFIC
SUNDAY	12:00N FRIDAY THROUGH 12:00N MONDAY
MONDAY	12:00N FRIDAY THROUGH 12:00N TUESDAY
TUESDAY	12:00N MONDAY THROUGH 12:00N WEDNESDAY
WEDNESDAY	12:00N TUESDAY THROUGH 12:00N THURSDAY
THURSDAY	12:00N WEDNESDAY THROUGH 12:00N MONDAY
FRIDAY	12:00N THURSDAY THROUGH 12:00N MONDAY
SATURDAY	12:00N FRIDAY THROUGH 12:00N MONDAY

10. PUBLIC INFORMATION

TRAFFIC INFORMATION SHALL BE PROVIDED VIA AM RADIO AS PART OF THE CITY OF AKRON'S TRAFFIC MANAGEMENT PROGRAM.

SPECIAL SIGNS TO NOTIFY MOTORISTS OF AM RADIO ADVISORY SHALL BE PROVIDED, ERECTED AND MAINTAINED BY THE CONTRACTOR. THESE SIGNS SHALL BE LOCATED BETWEEN THE 5 MILE/4 MILE AND 2 MILE/1 MILE "ROAD CONSTRUCTION AHEAD" LEAD-IN SIGNS SHOWN ON SHEET 33 & 45* EXACT LOCATIONS SHALL BE DETERMINED BY THE ENGINEER. COST FOR THIS WORK TO BE INCLUDED WITH ITEM 614 – MAINTAINING TRAFFIC. A TYPICAL SIGN IS SHOWN BELOW:

*and between the following locations:
Howe Ave - Gorge Blvd
E. North St. - Perkins
Wilbeth - Waterloo
Warner - Killian

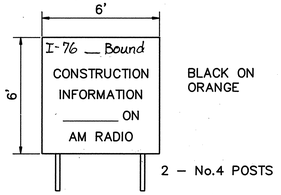

The two signs located east of the project shall read westbound and 530 on A.M., the remainder shall read eastbound and 1610 A.M.

11. TEMPORARY DRAINAGE

IT IS THE RESPONSIBILITY OF THE CONTRACTOR TO MAINTAIN ADEQUATE DRAINAGE OF THE TRAVELLED ROADWAYS DURING ALL PHASES OF CONSTRUCTION BY USING DITCHES, EXISTING DRAINAGE FACILITIES, TEMPORARY DRAINAGE FACILITIES, AND PERMANENT DRAINAGE FACILITIES.

12. EXISTING LIGHTING

EXISTING LIGHTING ON ALL EXISTING ROADWAYS REMAINING OPEN TO TRAFFIC THROUGH THE PROJECT AREA SHALL BE MAINTAINED. SEE LIGHTING PLAN SHEET G76 FOR CONTRACTOR'S MAINTENANCE RESPONSIBILITY DURING CONSTRUCTION OPERATIONS AND FOR ANY DISRUPTION OF EXISTING SERVICE.

13. TEMPORARY FENCE

ALL LIMITED ACCESS TO THE ROADWAY SHALL BE RESTRICTED AT ALL TIMES THROUGH A COMBINATION OF EXISTING, TEMPORARY OF PERMANENT FENCE. (SEE ROADWAY GENERAL NOTES, SHEET 91 .)

14. NIGHT WORK

UNLESS OTHERWISE REQUIRED BY SPECIFIC PLAN NOTE, NO WORK SHALL BE DONE AT NIGHT UNLESS WRITTEN APPROVAL BY THE PROJECT ENGINEER HAS BEEN RECEIVED. THE CONTRACTOR'S REQUEST FOR USE OF NIGHT WORK SHALL INCLUDE THE TYPE OF WORK TO BE DONE, THE DURATION OF THE WORK, LOCATION OF THE INTENDED WORK, AND THE CONTRACTOR'S TEMPORARY LIGHTING PLAN. ALL TEMPORARY LIGHTING REQUIRED FOR NIGHT WORK SHALL BE AT THE CONTRACTOR'S EXPENSE.

15. STOPPAGE OF MAINLINE TRAFFIC

ERECTION OF SPAN TYPE OVERHEAD SUPPORTS SHALL BE ACCOMPLISHED IN SUCH A MANNER THAT COMPLETE TRAFFIC STOPPAGE ON ALL LANES OF ANY DIRECTIONAL ROADWAY IS NOT MORE THAN 10 MINUTES IN ANY CONSECTUIVE 30-MINUTE PERIOD. A MINIMUM OF TWO (2) LAW ENFORCEMENT PATROL VEHICLES SHALL BE USED TO PACE MOTORISTS TO A STOP. AFTER TRAFFIC HAS BEEN SLOWED, ONE (1) PATROL VEHICLE SHALL TRAVEL ALONG THE ROADWAY SHOULDER 500' BEHIND THE BACK UP OF STOPPED VEHICLES. SEE DETAIL BELOW. WHERE STOPPAGE OCCURS IN THE VICINITY OF FREEWAY ENTRANCES, THE CONTRACTOR SHALL PLACE FLAGMEN ON THE RAMPS TO STOP TRAFFIC. PATROL VEHICLES SHALL HAVE HIGH RISE FLASHING BEACONS TO PROVIDE ADEQUATE VISIBILITY TO APPROACHING MOTORISTS. WHEN THE ENGINEER DEEMS APPROPRIATE, THE CONTRACTOR SHALL ERECT AND MAINTAIN "ROADWAY AHEAD" "PREPARE TO STOP" AND "STOP AHEAD" SIGNS WITH FLASHING 12" TRAFFIC SIGNAL HEADS IN ACCORDANCE WITH 632.05. THESE SIGNS SHALL BE ILLUMINATED DURING NIGHT OPERATIONS. PATROL VEHICLES AND SIGNS SHALL BE LOCATED IN ACCORDANCE WITH THE FOLLOWING SKETCH. ERECTION OF SIGN SPANS SHALL BE DONE AT NIGHT BETWEEN THE HOURS OF 10 P.M. AND 6 A.M.

THE CONTRACTOR SHALL NOTIFY THE CITY OF AKRON, T.M.P. Coordinator, 24 HOURS PRIOR TO ANY MAINLINE TRAFFIC STOPPAGE.

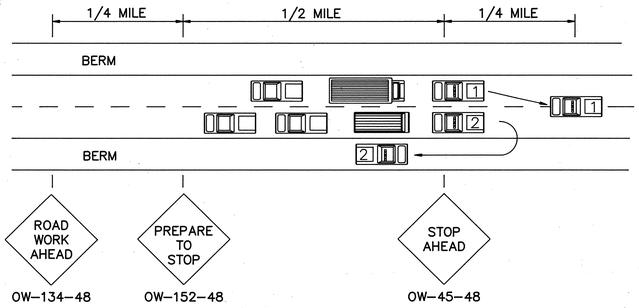

MAINTENANCE OF TRAFFIC GENERAL NOTES

16. TEMPORARY PAVEMENT MARKINGS

TEMPORARY LINE PAVEMENT MARKINGS SHALL BE 4" IN WIDTH AND SHALL BE INSTALLED BY THE CONTRACTOR AS PER MT – 99.10. ALL TEMPORARY PAVEMENT MARKINGS SHALL BE INSTALLED PRIOR TO SETTING THE TEMPORARY CONCRETE BARRIER.

17. BARRICADE WARNING LIGHTS

THE TYPE "A" FLASHING BARRICADE WARNING LIGHTS SHALL BE MOUNTED ON NOTED SIGNS AT ALL TIMES.

18. PROTECTION FOR LOCAL STREETS AND HIGHWAYS AND RAILROADS

A SAFETY NET OR PLATFORM SHALL BE REQUIRED TO PROTECT THE WORKERS AND TRAVELING PUBLIC FROM FALLING DEBRIS DURING THE BRIDGE DEMOLITION AND RECONSTRUCTION OVER EXISTING STREETS. THE CONTRACTOR SHALL PROVIDE A SAFETY NET OR PLATFORM OF SUITABLE STRENGTH AT THE UNDERSIDE OF THE DECK. THE DESIGN OF THE NET OR PLATFORM SHALL CONFORM WITH OSHA REQUIREMENTS AND HAVE THE APPROVAL OF THE ENGINEER. IT SHALL REMAIN IN PLACE UNTIL THE WORK HAS BEEN COMPLETED AND ACCEPTED, OR AS DIRECTED BY THE ENGINEER.

19. ERECTION OF STRUCTURAL STEEL

DURING THE ERECTION OR REMOVAL OF STRUCTURAL STEEL, THE CONTRACTOR WILL BE PERMITTED TO TEMPORARILY CLOSE THE SURFACE STREET FOR THE PLACING OR REMOVAL OF ONE BEAM OR GIRDER. THE STREET SHALL BE REOPENED TO CLEAR THE TRAFFIC BEFORE PLACING THE SECOND BEAM. THE MAXIMUM DURATION FOR TEMPORARY CLOSING SHALL BE HELD TO FIFTEEN (15) MINUTES AT ANY ONE TIME. THE CLOSING IS NOT PERMITTED BETWEEN THE HOURS OF 7:00 TO 9:00 A.M. AND 4:00 TO 6:00 P.M.

A RAILROAD FLAGGER SHALL BE PRESENT DURING ALL BEAM ERECTION OR REMOVAL OVER THE RAILROADS. THE CONTRACTOR SHALL NOTIFY THE RESPECTIVE RAILROADS 48 HOURS PRIOR TO ANY SCHEDULED WORK. NO WORK WILL BE PERMITTED WITHOUT RAILROAD APPROVAL OF THE CONTRACTOR'S OPERATIONS.

20. UTILITY WORK

EXCAVATIONS MADE FOR CONDUIT OR UTILITIES RESULTING IN OPEN TRENCHES SHALL BE ADEQUATELY MAINTAINED AND PROTECTED AT ALL TIMES. THE USE OF METAL PLATES OVER OPEN TRENCHES IS ONLY PERMITTED IMMEDIATELY AFTER THE EXCAVATION IN ORDER TO MAINTAIN THE ROADWAY LANES TO TRAFFIC AND SHALL AT ALL TIMES BE SUBJECT TO APPROVAL OF THE ENGINEER. UPON COMPLETING THE SUBSURFACE CONNECTIONS, THE OPENING SHALL BE RETURNED TO THE ROADWAY SURFACE LEVEL WITH APPROVED BACKFILL MATERIAL AND REPAVED (SEE ROADWAY GENERAL NOTES, "EXISTING STREET RESTORATION", SHEET 92).

21. ALTERNATE MAINTENANCE OF TRAFFIC PLANS

IF THE CONTRACTOR SO ELECTS, HE MAY SUBMIT ALTERNATE METHODS FOR THE MAINTENANCE OF TRAFFIC, PROVIDED THE INTENT OF THE ABOVE PROVISIONS IS FOLLOWED AND NO ADDITIONAL INCONVENIENCE TO THE TRAVELING PUBLIC RESULTS THEREFROM. NO ALTERNATE PLAN SHALL BE PLACED INTO EFFECT UNTIL APPROVAL HAS BEEN GRANTED IN WRITING BY THE ODOT DISTRICT CONSTRUCTION ENGINEER AND THE CITY OF AKRON.

22. ITEM 614 – BARRIER REFLECTORS

BARRIER REFLECTORS AND THEIR MOUNTING SHALL CONFORM TO SUPPLEMENTAL SPECIFICATION 802 EXCEPT THAT SPACING SHALL BE AT 10' INCREMENTS, ONE REFLECTOR PER EACH UNIT OF TEMPORARY CONCRETE BARRIER.

QUANTITY CARRIED TO MAINTENANCE OF TRAFFIC SUMMARY:

ITEM 614 – BARRIER REFLECTOR, TYPE B 3,574 EACH

	STATIONING	TYPE B YELLOW	TYPE B WHITE
PHASE 2			
EASTBOUND	546+50 TO 634+00	–	875
WESTBOUND	27+00 TO 31+50	–	45
	553+43 TO 557+00	–	36
	569+00 TO 624+50	–	555
	627+50 TO 639+50	–	120
	PHASE 2 TOTAL	–	1,631
PHASE 3			
EASTBOUND	575+50 TO 577+50	20	–
WESTBOUND	557+00 TO 569+00	–	120
	577+50 TO 580+00	–	25
	624+50 TO 629+20	–	47
	PHASE 3 TOTAL	20	192
PHASE 4			
EASTBOUND	546+00 TO 634+00	880	–
WESTBOUND	27+00 TO 31+50	45	–
	553+43 TO 634+00	806	–
	PHASE 4 TOTAL	1,731	–
PROJECT TOTAL		1,751	1,823

NOTE: MUCH OF THE CONCRETE BARRIER FROM PHASE 2 REMAINS IN PLACE FOR PHASE 3.

23. ITEM 614 – REPLACEMENT BARRIER REFLECTORS, TYPE B

REPLACEMENT BARRIER REFLECTORS AND THEIR MOUNTING SHALL CONFORM TO SUPPLEMENTAL SPECIFICATION 802 EXCEPT THAT SPACING SHALL BE AT 10' INCREMENTS, ONE REFLECTOR PER EACH UNIT OF TEMPORARY CONCRETE BARRIER.

THE FOLLOWING QUANTITY HAS BEEN INCLUDED IN THE MAINTENANCE OF TRAFFIC SUMMARY FOR USE AS DIRECTED BY THE ENGINEER FOR REPLACEMENT OF BARRIER REFLECTORS:

ITEM 614 – REPLACEMENT BARRIER REFLECTORS, TYPE B 1,000 EACH

24. ITEM 615 – TEMPORARY PAVEMENT, CLASS A, AS PER PLAN

TEMPORARY PAVEMENT SHALL BE RIGID PAVEMENT CLASS A AS PER SECTION 615.05 OF THE SPECIFICATIONS. PAYMENT FOR TEMPORARY PAVEMENT, CLASS A, AS PER PLAN, SHALL BE AS PER ITEM 615, EXCEPT THE PAVEMENT SHALL REMAIN IN PLACE IN LIEU OF BEING REMOVED.

25. ITEM 622 – Portable CONCRETE BARRIER, 50"$_3$, AS PER PLAN

THIS WORK SHALL CONSIST OF THE FURNISHING, INSTALLATION, MAINTENANCE, AND SUBSEQUENT REMOVAL OF A 50" TEMPORARY CONCRETE BARRIER AT THE LOCATIONS SHOWN ON THE PLANS. THE INDIVIDUAL SECTIONS SHALL NOT BE LESS THAN 10' IN LENGTH.

TEMPORARY CONCRETE BARRIER, TYPE A32 WITH AN 18" MINIMUM HEIGHT GLARE SCREEN MAY BE USED AT THE OPTION OF THE CONTRACTOR. THE TEMPORARY CONCRETE BARRIER, TYPE A32, SHALL BE CONSTRUCTED USING ONE (1) OF THE FOLLOWING SYSTEMS OR EQUAL APPROVED BY THE ENGINEER:

SYRO GLAREFOIL
SYRO STEEL COMPANY
1170 NORTH STATE STREET
GIRARD, OHIO 44420
(216) 545-4373

CARSONITE MODULAR GLARE SCREEN
CARSONITE INTERNATIONAL
2900 LOCKHEED WAY
CARSON CITY, NEVADA 89701
(702) 883-5104 (800) 648-7974

FORWARD GLARE SCREEN
PROVEN PRODUCTS, INC.
7560 S. W. LAVIEW DRIVE
PORTLAND, OREGON 97219
(503) 244-9185

PADDLE OR INTERMITTENT TYPE GLARE SCREEN SHALL BE DESIGNED USING A 20 DEGREE CUT-OFF ANGLE BASED ON TANGENT ALIGNMENT. THAT SPACING SHALL BE USED THROUGHOUT THE BARRIER LENGTH WITHOUT REGARD TO THE BARRIER CURVATURE. THE GLARE SCREEN SYSTEM ATTACHED TO THE 32" TEMPORARY CONCRETE BARRIER SHALL BE SECURELY FASTENED USING THE HARDWARE AND PROCEDURES SPECIFIED BY THE MANUFACTURER.

THE CONTRACTOR SHALL SELECT ONE BARRIER TYPE (i.e. 50" BARRIER OR 32" BARRIER W/GLARE SCREEN) AND USE IT THROUGHOUT THE PROJECT. NO MIXING OF BARRIER TYPES SHALL BE PERMITTED.

TEMPORARY CONCRETE BARRIER WHICH HAS BECOME DAMAGED BEYOND REPAIR BY TRAFFIC SHALL BE REPLACED BY THE CONTRACTOR WITHIN TWENTY-FOUR (24) HOURS OF NOTIFICATION OF THE INCIDENT WHICH CAUSED THE DAMAGE. REPLACEMENT BARRIER SHALL BE AS PER SECTION 622.04 OF THE SPECIFICATIONS.

PAYMENT SHALL INCLUDE FURNISHING, INSTALLATION, MAINTENANCE, AND SUBSEQUENT REMOVAL OF TEMPORARY CONCRETE BARRIER INCLUDING ALL LABOR, MATERIAL, AND EQUIPMENT NECESSARY TO PERFORM THE WORK AND SHALL BE PAID FOR AT THE UNIT PRICE BID PER LINEAL FOOT FOR ITEM 622 – Portable CONCRETE BARRIER, 50"$_3$, AS PER PLAN.

MAINTENANCE OF TRAFFIC GENERAL NOTES

26. ITEM 622 – Portable CONCRETE BARRIER, 50" BRIDGE MOUNTED, As Per Plan

ALL TEMPORARY CONCRETE BARRIER ON BRIDGES SHALL BE BRACED AS SHOWN ON SHEET 32. ALL PROVISIONS OF ITEM 622 – TEMPORARY CONCRETE BARRIER, TYPE A50, AS PER PLAN, SHALL APPLY TO BRIDGE MOUNTED BARRIER. TEMPORARY CONCRETE BARRIER ON BRIDGES SHALL BE BRACED AND ANCHORED WHEN SPECIFIED ON THE PLANS AND AS SHOWN ON SHEET 32.

THE UNIT PRICE BID FOR ITEM 622 – Portable CONCRETE BARRIER, 50" BRIDGE MOUNTED,* SHALL BE FULL COMPENSATION FOR FURNISHING, INSTALLATION, MAINTENANCE, AND SUBSEQUENT REMOVAL OF TEMPORARY CONCRETE BARRIER ON BRIDGES, AND ALL MATERIALS INCLUDING BRACING AND MISCELLANEOUS HARDWARE, AND LABOR REQUIRED TO MAKE THIS ITEM COMPLETE.

*as Per Plan

27. ITEM 630 – REMOVAL OF OVERLAY SIGN

WHEN PHASE 4 MAINTENANCE OF TRAFFIC IS NO LONGER NEEDED AND PRIOR TO OPENING THE COMPLETED PROJECT TO TRAFFIC, THE FOLLOWING OVERLAY SIGNS ARE TO BE REMOVED:

LOCATION	QUANTITY	PLACED IN PHASE
STA 518+20, EASTBOUND	1	4
STA 529+30, EASTBOUND	1	4
STA 554+00, WESTBOUND	1	2
STA 561+20, WESTBOUND	2	2,3
STA 575+00, WESTBOUND	1	3
STA 597+00, EASTBOUND	1	3
STA 597+50, WESTBOUND	1	3
STA 606+70, EASTBOUND	2	4
STA 610+55, EASTBOUND	1	2
STA 622+00, WESTBOUND	1	3
STA 630+90, WESTBOUND	1	3
	13	

THE FOLLOWING QUANTITY HAS BEEN CARRIED TO THE MAINTENANCE OF TRAFFIC SUMMARY SHEET:

ITEM 630 – REMOVAL OF OVERLAY SIGN 13 EACH

28. ITEM 630 – SIGNS, FLAT SHEET, TYPE G SHEETING, AS PER PLAN

THE DESCRIPTION OF WORK FOR ITEM 630 – SIGNS, FLAT SHEET, TYPE G SHEETING, AS PER PLAN, SHALL COMPLY WITH SECTION 630.01 OF THE SPECIFICATIONS WITH THE ADDITION THAT THE REQUIRED SUPPORTS, AND THE SUBSEQUENT REMOVAL OF THE SIGN AND SUPPORTS SHALL BE INCLUDED IN THE UNIT PRICE BID FOR ITEM 630 – SIGNS, FLAT SHEET, TYPE G SHEETING, AS PER PLAN. ANY RELOCATION OF THE SIGN DUE TO A CHANGE IN TRAFFIC PHASING SHALL BE INCLUDED UNDER ITEM 614 – MAINTAINING TRAFFIC.

29. ITEM 630 – CONCRETE FOR ANCHOR BASE FOUNDATIONS, AS PER PLAN

THE METHOD OF MEASUREMENT FOR ITEM 630 – CONCRETE FOR ANCHOR BASE FOUNDATIONS, AS PER PLAN SHALL COMPLY WITH SECTION 630.14 OF THE SPECIFICATION WITH THE ADDITION THAT THE ANCHOR BOLTS SHALL BE FURNISHED AS REQUIRED BY THE PERTINENT STANDARD DRAWING AND THE FOUNDATION SHALL BE REMOVED A MINIMUM OF 1' BELOW THE PROPOSED SUBGRADE LINE UPON THE REMOVAL OF THE TEMPORARY SIGN. NO SEPARATE PAYMENT SHALL BE MADE FOR THE ANCHOR BOLTS AND FOUNDATION REMOVAL BUT SHALL BE INCLUDED IN THE UNIT PRICE BID FOR ITEM 630 – CONCRETE FOR ANCHOR BASE FOUNDATIONS, AS PER PLAN.

30. ITEM 630 – SIGN SUPPORT ASSEMBLY, POLE MOUNTED, AS PER PLAN

PAYMENT FOR SIGN SUPPORT ASSEMBLY, POLE MOUNTED, AS PER PLAN, SHALL BE AS PER ITEM 630, AND SHALL ALSO INCLUDE ALL REQUIRED RESETTING AND REMOVAL OF THE SIGN SUPPORT ASSEMBLY.

31. ITEM 630 – REMOVAL OF OVERHEAD SIGN SUPPORT AND DISPOSAL, TYPE TC-12.30

ALL TEMPORARY SIGNS AND CANTILEVER SUPPORTS REMOVED SHALL BE DISPOSED OF BY THE CONTRACTOR. INCLUDED WITH THIS PAY ITEM IS THE REMOVAL OF CONCRETE FOUNDATION. PAYMENT FOR THIS WORK SHALL BE MADE AT THE CONTRACT BID PRICE PER EACH, ITEM 630 – REMOVAL OF OVERHEAD SIGN SUPPORT AND DISPOSAL, TYPE TC-12.30.

32. ITEM 625 – GROUND ROD, AS PER PLAN

PAYMENT FOR GROUND ROD, AS PER PLAN, SHALL BE AS PER ITEM 625 EXCEPT FOR THE REMOVAL OF THE GROUND RODS WHICH SHALL ALSO BE INCLUDED IN THE UNIT PRICE BID FOR ITEM 625 – GROUND ROD, AS PER PLAN.

33. ITEM 631 – SIGN SERVICE, AS PER PLAN

PAYMENT FOR SIGN SERVICE, AS PER PLAN, SHALL BE AS PER ITEM 631, EXCEPT THE SIGN SERVICE REMOVAL SHALL ALSO BE INCLUDED WITH THE UNIT PRICE BID.

34. ITEM 631 – SIGNS WIRED, AS PER PLAN

PAYMENT FOR SIGNS WIRED, AS PER PLAN, SHALL BE AS PER ITEM 631, EXCEPT THE SIGN WIRED REMOVAL SHALL ALSO BE INCLUDED WITH THE UNIT PRICE BID.

36. ITEM SPECIAL – IMPACT ATTENUATOR, HEX-FOAM SYSTEM, MODEL NO. 209509H5S

THIS WORK SHALL CONSIST OF FURNISHING IMPACT ATTENUATORS, AS REQUIRED IN THE PLANS. THIS ITEM SHALL INCLUDE ALL RELATED HARDWARE, NOT SEPARATELY SPECIFIED, AS REQUIRED BY THE MANUFACTURER TO CONSTRUCT COMPLETE AND FUNCTIONAL FIVE-BAY, MEDIUM WIDTH HEX-FOAM IMPACT ATTENUATOR SYSTEMS. THE IMPACT ATTENUATOR SHALL BE MANUFACTURED BY THE ENERGY ABSORPTION SYSTEMS, INC., ONE EAST WACKER DRIVE, CHICAGO, ILLINOIS 60601; TELEPHONE: (312) 467-6750. THE ATTENUATORS SHALL BE PLACED IN ACCORDANCE WITH THE MANUFACTURER'S SPECIFICATIONS AND AT THE LOCATION SHOWN ON SHEET 51.

THE CONTRACTOR SHALL BE RESPONSIBLE FOR INSPECTION, REPAIRING, AND OTHERWISE RESTORING THE IMPACT ATTENUATOR IN ACCORDANCE WITH THE MANUFACTURER'S MAINTENANCE INSTRUCTIONS WHILE IT IS IN USE ON THE PROJECT. SUCH REPAIRS SHALL BE PERFORMED WITHIN TWENTY-FOUR (24) HOURS OF NOTIFICATION OF THE INCIDENT WHICH CAUSED DAMAGE TO THE ATTENUATOR. THE CONTRACTOR SHALL BE RESPONSIBLE FOR SUPPLYING ALL NECESSARY MATERIALS AND EQUIPMENT REQUIRED TO PERFORM THE ABOVE DESCRIBED RESTORATION OF THE ATTENUATOR. ONE (1) EXTRA COMPLETE SET OF HEX-FOAM CARTRIDGES, AS MANUFACTURED BY ENERGY ABSORPTION SYSTEMS, INC., FOR THE ATTENUATOR FURNISHED, SHALL BE STOCKED AT ALL TIMES FOR THE ABOVE REPAIRS AND THE COST SHALL BE INCLUDED IN THE COST OF THE ATTENUATOR.

THE NOSE COVER OF THE ATTENUATOR SHALL BE MARKED WITH EVENLY SPACED 4" WIDE HORIZONTAL STRIPES OF YELLOW REFLECTIVE MATERIAL, MEETING THE REQUIREMENTS OF SECTION 730.19 OF THE SPECIFICATIONS.

PAYMENT FOR THE ABOVE WORK SHALL BE MADE AT THE UNIT PRICE BID FOR EACH, ITEM SPECIAL – IMPACT ATTENUATOR, HEX-FOAM SYSTEM, MODEL NO. 209509H5S, WHICH PRICE SHALL BE CONSIDERED FULL PAYMENT FOR FURNISHING, INSTALLING, AT THE SPECIFIED LOCATIONS, FURNISHING EXTRA HEX-FOAM CARTRIDGES AS SPECIFIED ABOVE, RESTORATION AFTER EACH VEHICLE IMPACT, INCLUDING ALL LABOR, TOOLS, EQUIPMENT, AND MISCELLANEOUS HARDWARE MATERIALS NECESSARY TO COMPLETE THIS ITEM OF WORK IN PLACE. ALSO INCLUDED IN THE ABOVE COST SHALL BE THE REMOVAL OF THE IMPACT ATTENUATOR AND INSTALLATION AT THE LOCATION SPECIFIED FOR THE NEXT STAGE OF CONSTRUCTION.

MAINTENANCE OF TRAFFIC GENERAL NOTES

37. ITEM SPECIAL – REPLACEMENT IMPACT ATTENUATOR, HEX-FOAM SYSTEM, MODEL NO. 209509H5S

IMPACT ATTENUATORS FURNISHED BY THE CONTRACTOR IN ACCORDANCE WITH THE REQUIREMENT OF THE PLAN, SPECIFICATION, AND PROPOSAL WHICH BECOME DAMAGED BEYOND REPAIR BY TRAFFIC FOR REASONS BEYOND THE CONTROL OF THE CONTRACTOR SHALL BE REPLACED AS DIRECTED BY THE ENGINEER BY THE CONTRACTOR WITHIN TWENTY-FOUR (24) HOURS OF NOTIFICATION OF THE INCIDENT WHICH CAUSED THE DAMAGE TO THE ATTENUATOR. REPLACEMENT ATTENUATORS SHALL MEET THE SPECIFICATIONS OF THE ORIGINAL ATTENUATOR.

ONE (1) REPLACEMENT ATTENUATOR SHALL BE STOCKED AT ALL TIMES BY THE CONTRACTOR FOR IMMEDIATE REPLACEMENT ON THE PROJECT.

THE FOLLOWING ESTIMATED QUANTITY FOR A REPLACEMENT IMPACT ATTENUATOR HAS BEEN CARRIED TO THE MAINTENANCE OF TRAFFIC SUMMARY FOR USE AS DIRECTED BY THE ENGINEER.

ITEM SPECIAL – REPLACEMENT IMPACT ATTENUATOR, HEX-FOAM SYSTEM, MODEL NO. 209509H5S 1 EACH

38. ITEM SPECIAL – TEMPORARY IMPACT ATTENUATOR, (G.R.E.A.T. TYPE), MODEL NO. 200200NF6GCZ

THIS WORK SHALL CONSIST OF FURNISHING IMPACT ATTENUATORS, AS REQUIRED IN THE PLANS. THIS ITEM SHALL INCLUDE ALL RELATED HARDWARE, NOT SEPARATELY SPECIFIED, AS REQUIRED BY THE MANUFACTURER TO CONSTRUCT COMPLETE AND FUNCTIONAL G.R.E.A.T. IMPACT ATTENUATOR SYSTEMS. THE IMPACT ATTENUATOR SHALL BE MANUFACTURED BY THE ENERGY ABSORPTION SYSTEMS, INC., ONE EAST WACKER DRIVE, CHICAGO, ILLINOIS 60601; TELEPHONE: (312) 467-6750. THE ATTENUATORS SHALL BE PLACED IN ACCORDANCE WITH THE MANUFACTURER'S SPECIFICATIONS AND AT THE LOCATIONS SHOWN ON SHEET 43 .

THE CONTRACTOR SHALL BE RESPONSIBLE FOR INSPECTION, REPAIRING, AND OTHERWISE RESTORING THE IMPACT ATTENUATOR IN ACCORDANCE WITH THE MANUFACTURER'S MAINTENANCE INSTRUCTIONS WHILE IT IS IN USE ON THE PROJECT. SUCH REPAIRS SHALL BE PERFORMED WITHIN TWENTY-FOUR (24) HOURS OF NOTIFICATION OF THE INCIDENT WHICH CAUSED DAMAGE TO THE ATTENUATOR. THE CONTRACTOR SHALL BE RESPONSIBLE FOR SUPPLYING ALL NECESSARY MATERIALS AND EQUIPMENT REQUIRED TO PERFORM THE ABOVE DESCRIBED RESTORATION OF THE ATTENUATOR. ONE (1) EXTRA COMPLETE SET OF HEX-FOAM CARTRIDGES, AS MANUFACTURED BY ENERGY ABSORPTION SYSTEMS, INC., FOR THE ATTENUATOR FURNISHED, SHALL BE STOCKED AT ALL TIMES FOR THE ABOVE REPAIRS AND THE COST SHALL BE INCLUDED IN THE COST OF THE ATTENUATOR.

THE NOSE COVER OF THE ATTENUATOR SHALL BE MARKED WITH EVENLY SPACED 4" WIDE HORIZONTAL STRIPES OF YELLOW REFLECTIVE MATERIAL, MEETING THE REQUIREMENTS OF SECTION 730.19 OF THE SPECIFICATIONS.

PAYMENT FOR THE ABOVE WORK SHALL BE MADE AT THE UNIT PRICE BID FOR EACH, ITEM SPECIAL – TEMP IMPACT ATTENUATOR, (G.R.E.A.T. TYPE) , MODEL NUMBER 200200NF6GCZ, WHICH PRICE SHALL BE CONSIDERED FULL PAYMENT FOR FURNISHING, INSTALLING, AT THE SPECIFIED LOCATIONS, FURNISHING EXTRA HEX-FOAM CARTRIDGES AS SPECIFIED ABOVE, RESTORATION AFTER EACH VEHICLE IMPACT, INCLUDING ALL LABOR, TOOLS, EQUIPMENT, AND MISCELLANEOUS HARDWARE MATERIALS NECESSARY TO COMPLETE THIS ITEM OF WORK IN PLACE. ALSO INCLUDED IN THE ABOVE COST SHALL BE THE REMOVAL OF THE IMPACT ATTENUATOR AND INSTALLATION AT THE LOCATION SPECIFIED FOR THE NEXT STAGE OF CONSTRUCTION.

39. ITEM SPECIAL – REPLACEMENT IMPACT ATTENUATOR, G.R.E.A.T. SYSTEM, MODEL NO. 200200NF6GCZ

IMPACT ATTENUATORS FURNISHED BY THE CONTRACTOR IN ACCORDANCE WITH THE REQUIREMENT OF THE PLAN, SPECIFICATION, AND PROPOSAL WHICH BECOME DAMAGED BEYOND REPAIR BY TRAFFIC FOR REASONS BEYOND THE CONTROL OF THE CONTRACTOR SHALL BE REPLACED AS DIRECTED BY THE ENGINEER BY THE CONTRACTOR WITHIN TWENTY-FOUR (24) HOURS OF NOTIFICATION OF THE INCIDENT WHICH CAUSED THE DAMAGE TO THE ATTENUATOR. REPLACEMENT ATTENUATORS SHALL MEET THE SPECIFICATIONS OF THE ORIGINAL ATTENUATOR.

ONE (1) REPLACEMENT ATTENUATOR SHALL BE STOCKED AT ALL TIMES BY THE CONTRACTOR FOR IMMEDIATE REPLACEMENT ON THE PROJECT.

THE FOLLOWING ESTIMATED QUANTITY FOR A REPLACEMENT IMPACT ATTENUATOR HAS BEEN CARRIED TO THE MAINTENANCE OF TRAFFIC SUMMARY FOR USE AS DIRECTED BY THE ENGINEER.

ITEM SPECIAL – TEMPORARY IMPACT ATTENUATOR, G.R.E.A.T. TYPE , (REPLACEMENT) MODEL NO. 200200NF6GCZ 1 EACH

40. ITEM SPECIAL – PLASTIC SAFETY DRUMS

ALL DRUMS FURNISHED FOR THIS PROJECT SHALL BE NEW. ALSO, THEY SHALL BE THE PLASTIC SAFETY TYPE. NO USED OR LIKE-NEW DRUMS WILL BE PERMITTED. LIKEWISE ANY REPLACEMENT DRUMS MUST BE NEW. THE DRUMS SHALL HAVE A NOMINAL HEIGHT OF 36" AND A NOMINAL DIAMETER BETWEEN 18" AND 24". THE DRUMS SHALL BE REFLECTORIZED IN ACCORDANCE WITH 614.03(a).

VOID

REQUIRED DRUMS PER PHASE: For information only

PHASE 1 = 140
PHASE 2 = 62 (ALL RESET)
PHASE 3 = 35
PHASE 4 = 145 (ALL RESET)

NEW PLASTIC SAFETY DRUMS INCLUDING THE SETTING, MAINTENANCE, AND REPOSITIONING OF DRUMS FOR THE VARIOUS PHASES SHALL BE INCLUDED IN THE UNIT COST BID FOR ITEM SPECIAL – PLASTIC SAFETY DRUMS.

DRUMS REQUIRED FOR PHASE 3 ARE IN ADDITION TO THOSE REQUIRED FOR PHASE 2. Payment shall be included in item 614 Maintaining Traffic.

41. ITEM SPECIAL – REPLACEMENT DRUMS

DRUMS FURNISHED BY THE CONTRACTOR IN ACCORDANCE WITH THE REQUIREMENT OF THE PLAN, SPECIFICATION, AND PROPOSAL WHICH BECOME DAMAGED BY TRAFFIC FOR REASONS BEYOND THE CONTROL OF THE CONTRACTOR SHALL BE REPLACED IN KIND WHEN ORDERED BY THE ENGINEER AND PAID FOR UNDER ITEM SPECIAL – REPLACEMENT DRUMS. PAYMENT FOR EACH NEW DRUM SHALL INCLUDE (1) THE COST OF REMOVING AND DISPOSING OF THE DAMAGED DRUM AND (2) PROVIDING, MAINTAINING, REPOSITIONING AND SUBSEQUENTLY REMOVING THE REPLACEMENT DRUM IN ACCORDANCE WITH THE CONTRACT REQUIREMENTS FOR THE ORIGINAL DRUMS.

AN ESTIMATED QUANTITY OF ITEM SPECIAL – REPLACEMENT DRUMS HAS BEEN CARRIED TO THE MAINTENANCE OF TRAFFIC SUMMARY FOR USE AS DIRECTED BY THE ENGINEER:

ITEM SPECIAL – REPLACEMENT DRUMS 200 EACH

42. ITEM SPECIAL – REPLACEMENT SIGNS

FLAT SHEET SIGNS FURNISHED BY THE CONTRACTOR IN ACCORDANCE WITH THE REQUIREMENT OF THE PLAN, SPECIFICATION, AND PROPOSAL WHICH BECOME DAMAGED BY TRAFFIC FOR REASONS BEYOND THE CONTROL OF THE CONTRACTOR SHALL BE REPLACED IN KIND WHEN ORDERED BY THE ENGINEER.

PAYMENT FOR THE NEW SIGNS SHALL BE MADE AT THE BID PRICE PER SQUARE FOOT FOR ITEM SPECIAL – REPLACEMENT SIGNS AND SHALL INCLUDE THE COST OF REMOVING AND DISPOSING OF THE DAMAGED SIGNS, HARDWARE, AND SUPPORTS AND PROVIDING NECESSARY REPLACEMENT HARDWARE, SUPPORTS, ETC. REPLACEMENT SIGNS SHALL BE NEW. SUPPORTS AND HARDWARE MAY BE SALVAGED SUBJECT TO THE APPROVAL OF THE ENGINEER.

AN ESTIMATED QUANTITY OF ITEM SPECIAL – REPLACEMENT SIGNS HAS BEEN CARRIED TO THE Maintenance of Traffic SUMMARY:

ITEM SPECIAL – REPLACEMENT SIGNS 500 SQ FT

43. ITEM SPECIAL – LAW ENFORCEMENT OFFICER WITH PATROL CAR

THE CONTRACTOR SHALL PROVIDE THE SERVICES OF UNIFORMED LAW ENFORCEMENT OFFICERS (L.E.O.) WITH PATROL CARS, PER WORK AREA AS DIRECTED BY THE ENGINEER.

A L.E.O. WITH PATROL CAR SHALL BE PROVIDED ON I-76 DURING INSTALLATION AND REMOVAL OF TEMPORARY CONCRETE BARRIER, OVERHEAD TRAFFIC CONTROL SIGNS, DETOUR SIGNS, OR FOR OTHER WORK AS DIRECTED BY THE ENGINEER.

INFORMATION REGARDING ARRANGEMENTS AND PAYMENTS BY THE CONTRACTOR FOR THE L.E.O. MAY BE OBTAINED BY CONTACTING OHIO HIGHWAY PATROL 660 EAST MAIN STREET, COLUMBUS, OHIO, PHONE: (614) 466-2300. IF AFTER CONTACTING THE OHIO HIGHWAY PATROL, IT IS DETERMINED THAT THEY CANNOT SUPPLY THE L.E.O., THEN AN AUTHORIZED MUNICIPAL OR COUNTY POLICE OFFICER EQUIPPED WITH A MARKED AND FLASHER-LIGHT EQUIPPED OFFICAL POLICE OR PATROL CAR SHALL BE PROVIDED. THE CONTRACTOR SHALL MAKE ARRANGEMENTS FOR THESE SERVICES WITH THE CHIEF AKRON POLICE DEPARTMENT: CITY-COUNTY SAFETY BUILDING 217 SOUTH HIGH ST. AKRON, OHIO 44303 PHONE (216) 375-2451.
THIS REQUIREMENT DOES NOT PRECLUDE THE CONTRACTORS USE OF AN L.E.O. FOR OTHER PURPOSES OF CONTROLLING TRAFFIC AS APPROVED BY THE ENGINEER.

THE L.E.O. SHALL BE CONSIDERED AN EMPLOYEE OF THE CONTRACTOR AND THE CONTRACTOR SHALL BE RESPONSIBLE FOR HIS/HER ACTIONS. ALTHOUGH EMPLOYED BY THE CONTRACTOR, THE PROJECT ENGINEER SHALL HAVE CONTROL OVER THE L.E.O. PLACEMENT AND HIS ACTIVITIES.
PAYMENT SHALL BE AT THE UNIT PRICE BID FOR THE ACTUAL NUMBER OF HOURS FOR ITEM SPECIAL – LAW ENFORCEMENT OFFICER WITH PATROL CAR.

ITEM SPECIAL – LAW ENFORCEMENT OFFICER WITH PATROL CAR 2,000 HOURS

MAINTENANCE OF TRAFFIC GENERAL NOTES

44. ITEM SPECIAL – TRAFFIC SAFETY COORDINATOR

THE CONTRACTOR SHALL HAVE A FULL–TIME TRAFFIC SAFETY COORDINATOR OR A QUALIFIED REPRESENTATIVE OF THE TRAFFIC SAFETY COORDINATOR ON DUTY 24 HOURS A DAY WHENEVER ACTIVE CONSTRUCTION WORK IS BEING PERFORMED AND/OR WHENEVER AN ACTIVE MAINTENANCE OF TRAFFIC ZONE IS IN PLACE WITHIN THE LIMITS OF THIS PROJECT. THE TRAFFIC SAFETY COORDINATOR SHALL BE RESPONSIBLE FOR THE CONTRACTOR'S MAINTENANCE OF TRAFFIC OPERATIONS. THE CONTRACTOR SHALL DESIGNATE A QUALIFIED INDIVIDUAL TO THE POSITION (OTHER THAN THE SUPERINTENDENT), IN WRITING TO THE DISTRICT CONSTRUCTION ENGINEER FOR APPROVAL, PRIOR TO THE PRECONSTRUCTION CONFERENCE.* ANY REPRESENTATIVE OF THE TRAFFIC SAFETY COORDINATOR MUST ALSO HAVE DISTRICT APPROVAL. THE APPOINTED TRAFFIC SAFETY COORDINATOR SHALL BE PRESENT AT THE PRECONSTRUCTION CONFERENCE.

THE TRAFFIC SAFETY COORDINATOR SHALL BE RESPONSIBLE FOR THE MAINTENANCE OF TRAFFIC AS OUTLINED IN THE MAINTENANCE PLAN AND SHALL ALSO BE RESPONSIBLE FOR THE FOLLOWING:

A. UNDERSTAND AND BE FAMILIAR WITH THE REQUIREMENTS OF THE OHIO MANUAL OF UNIFORM TRAFFIC CONTROL DEVICES, CURRENT EDITION, LATEST REVISION, THE TRAFFIC MAINTENANCE AND SAFETY PROVISIONS OF THE CONTRACT PROPOSAL, AND THE CITY OF AKRON'S TRAFFIC MANAGEMENT PROGRAM (TMP).

B. CONSTANTLY MONITOR AND REVIEW THE TRAFFIC CONTROL DEVICES TO DETERMINE OPERATIONAL PROBLEMS OR AREAS OF NONCOMPLIANCE WITH THE MAINTENANCE OF TRAFFIC PLANS WHICH SHOULD BE IMMEDIATELY REPORTED TO THE CONTRACTOR FOR CORRECTIVE ACTION.

C. COORDINATE MAINTENANCE OF TRAFFIC OPERATIONS WITH THE PROJECT ENGINEER AND CITY OF AKRON'S TRAFFIC MANAGEMENT PROGRAM PROJECT COORDINATOR (TMPPC).

D. ATTEND MONTHLY MEETINGS WITH THE PROJECT ENGINEER AND TMPPC TO REVIEW AND RECOMMEND PROCEDURES FOR REVISIONS IN THE MAINTENANCE OF TRAFFIC OPERATIONS.

E. HOLD TRAFFIC SAFETY MEETINGS WITH THE CONTRACTOR AND SUBCONTRACTOR'S SUPERINTENDENTS AND FOREMEN PRIOR TO AND DURING CONSTRUCTION. (THE PROJECT ENGINEER AND TMPPC SHALL BE INVITED TO ATTEND THESE MEETINGS.)

THE TRAFFIC SAFETY COORDINATOR and his representative SHALL HAVE A VEHICLE EQUIPPED WITH A CELLULAR TELEPHONE AND THE TELEPHONE NUMBER SHALL BE PROVIDED TO THE PROJECT ENGINEER, AND THE CITY OF AKRON POLICE DEPARTMENT. THE TRAFFIC SAFETY COORDINATOR SHALL BE PROVIDED WITH AN ELECTRONIC PAGER. THE CONTRACTORS TRAFFIC SAFETY COORDINATOR SHALL ALSO FURNISH AN ELECTRONIC PAGER TO THE TRAFFIC MANAGEMENT PROGRAM PROJECT COORDINATOR FOR PURPOSES OF MAINTAINING COMMUNICATION.

PAYMENT FOR THIS INDIVIDUAL AND EQUIPMENT SHALL BE AT THE LUMP SUM PRICE BID FOR ITEM SPECIAL – TRAFFIC SAFETY COORDINATOR.

46. METHOD OF PAYMENT

PAYMENT FOR THE MAINTENANCE OF TRAFFIC ITEMS, UNLESS SPECIFIED SEPARATELY, SHALL BE AT THE LUMP SUM PRICE BID FOR ITEM 614 – MAINTAINING TRAFFIC, WHICH SHALL INCLUDE ALL LABOR, EQUIPMENT, MATERIALS, AND INCIDENTALS TO COMPLETE THE WORK AS DETAILED IN THE PLANS.

* Included in this submittal shall be the traffic safety coordinators resume showing traffic experience, listing past, present, etc. The traffic safety cooridantor shall be familiar with the traffic control requirements in the plan and have no other duties except what appears in this note.

MAINTENANCE OF TRAFFIC GENERAL NOTES

PHASE 1

ALONG MAINLINE I-76

THE FIRST MAINLINE PROJECT ITEM THAT NEEDS TO BE COMPLETED IS THE PROPOSED MEDIAN BARRIER SIGN SUPPORT FOUNDATIONS AND ERECTION OF THE MEDIAN SIDE SIGN SUPPORT END FRAMES. THE FOUNDATION CONSTRUCTION LOCATIONS SHALL BE GROUPED INTO WORK AREAS:

STA 561+10 } 1,440'
STA 575+00 }

STA 575+50 }
STA 597+50 } 1,450'
STA 612+00 }

STA 622+00 } 890'
STA 630+90 }

THE MOVEMENT OF WORK AREA GROUPS SHALL BE CONTINUOUS AND PROCEED WEST TO EAST OR EAST TO WEST. THE CONTRACTOR WILL NOT BE PERMITTED TO HAVE LANE CLOSURES FOR MORE THAN ONE WORK AREA AT A TIME. LANE CLOSURES FOR THE CONSTRUCTION OF THE MEDIAN FOUNDATION IS LIMITED TO THE HOURS BETWEEN 9:00 P.M. TO 6:00 A.M.

ALL LIGHTING CIRCUITS IN THE EXISTING MEDIAN CONDUIT SHALL BE MAINTAINED. THE CONSTRUCTION OF EACH FOUNDATION IS CONSIDERED SHORT TERM AND MAINTENANCE OF TRAFFIC IS CONTROLLED BY THE FEATURES CONTAINED IN ODOT STANDARD MT-95.30, CLOSING LEFT LANE OF MULTI-LANE DIVIDED HIGHWAY WITH DRUMS. ALL SIGN SUPPORT FOUNDATIONS AND ERECTION OF SIGN SUPPORT END FRAMES SHALL BE COMPLETED PRIOR TO IMPLEMENTING PHASE 2.

OTHER AREAS

PHASE 1 WORK MAY ALSO INCLUDE ANY WORK THAT DOES NOT AFFECT EITHER THE MAINLINE TRAFFIC OR RAMP TRAFFIC. ADDITIONAL CONSTRUCTION ACTIVITIES INCLUDE THE GRADE CHANGE AND UTILITY ADJUSTMENTS ALONG ARLINGTON STREET AND MARTHA AVENUE. THIS WORK SHALL CONTINUE UNTIL COMPLETION AND OPEN TO TRAFFIC DURING PHASE 2. THERE ARE OTHER WORK ITEMS, SUCH AS THE CASING PIPE AND WATER MAIN AT STA 573+22 AND THE WATER MAIN RELOCATION IN ENGLEWOOD AVENUE THAT COULD BE SCHEDULED DURING PHASE 1.

PHASE 2

CONSTRUCTION UNDER THIS PHASE SHALL CONSIST OF A MAJOR PORTION OF I-76 PROPOSED OUTSIDE LANE AND SHOULDER WHICH INCLUDES THE BRIDGE WIDENINGS. MOST OF THE PROPOSED RAMPS AND RETAINING WALLS CAN ALSO BE COMPLETED. THE RECONSTRUCTION OF THE HOBAN PEDESTRIAN BRIDGE (STRUCTURE NO. SUM-76-1200) SHALL BE SCHEDULED BETWEEN APRIL 15 TO JULY 31 AS TO AVOID INTERFERENCE WITH SCHOOL-RELATED ACTIVITIES. TWO I-76 BRIDGES, ONE OVER CHITTENDEN STREET AND THE OTHER OVER EXISTING RAMP E-10, ARE TO BE REMOVED WITH THE FIRST STAGE OF REMOVAL COMPLETED IN THIS PHASE. EASTBOUND AND WESTBOUND TRAFFIC IS MOVED TOWARDS THE EXISTING MEDIAN BARRIER WITH TWO LANES MAINTAINED IN EACH DIRECTION. TEMPORARY OVERHEAD SIGNS ARE REQUIRED FOR ACCESS TO THOSE EXITS THAT REMAIN OPEN. THE STATUS OF EXISTING RAMPS IS AS FOLLOWS:

SEQUENCE OF CONSTRUCTION OPERATIONS

EASTBOUND

NO.	TYPE	SERVICE	STATUS	COMMENTS
E-5	EXIT	TO CHITTENDEN STREET	CLOSED	TRAFFIC DETOURED TO RAMP E-17*
E-6	ENTRANCE	FROM CHITTENDEN STREET	CLOSED	ACCESS ELIMINATED
E-8	EXIT	TO 5TH AVENUE, KELLY AVENUE	CLOSED	TRAFFIC DETOURED TO RAMP E-17*
E-9	EXIT	TO MARTHA AVENUE	CLOSED	TRAFFIC DETOURED TO RAMP E-17*
E-10	EXIT	TO MARKET STREET	CLOSED	ACCESS ELIMINATED
E-16	ENTRANCE	FROM MARTHA AVENUE	CLOSED	TRAFFIC DETOURED ALONG EAST-
E-17	EXIT	TO GENERAL STREET	OPEN	BOUND EAST MARKET STREET*

*NOTE: FOR DETOUR PLANS, SEE SHEET 46-48

WESTBOUND

NO.	TYPE	SERVICE	STATUS	COMMENTS
E-2	EXIT	TO INMAN STREET	OPEN	
E-3	ENTRANCE	FROM ARLINGTON STREET	OPEN	
E-4	EXIT	TO ARLINGTON STREET	CLOSED	TRAFFIC DETOURED TO RAMP E-15*
E-7	ENTRANCE	FROM FULLER STREET	CLOSED	TRAFFIC DETOURED TO RAMP E-3*
E-12	ENTRANCE	FROM MARTHA AVENUE	CLOSED	TRAFFIC DETOURED TO RAMP E-3*
E-13	ENTRANCE	FROM MARKET STREET	CLOSED	TRAFFIC DETOURED TO RAMP E-3*
E-15	EXIT	TO MARKET STREET	OPEN	
E-18	ENTRANCE	FROM BRITTAIN ROAD	OPEN	
E-19	ENTRANCE	FROM GENERAL STREET	OPEN	

*NOTE: FOR DETOUR PLANS, SEE SHEET 46-48

THE EXISTING STOP SIGN CONDITION FOR WESTBOUND EXIT RAMP E-15 AT MARKET STREET IS TO BE REPLACED BY A TEMPORARY SIGNAL. FOR TEMPORARY SIGNAL PLANS, SEE SHEET 49 .

PHASE 3

THE CONSTRUCTION IN THIS PHASE IS A CONTINUATION OF PHASE 2 WHERE THE REMAINING PORTION OF THE OUTSIDE LANE AND SHOULDER ARE COMPLETED. I-76 TRAFFIC IS MAINTAINED AS IN PHASE 2.

EASTBOUND

NO.	TYPE	SERVICE	STATUS	COMMENTS
PROP. E-6	ENTRANCE	FROM ARLINGTON STREET	OPEN	
EXIST. E-6	ENTRANCE	FROM CHITTENDEN STREET	CLOSED	
PROP. E-8	EXIT	TO KELLY AVENUE	OPEN	ONLY TO FULLER STREET
EXIST. E-8	EXIT	TO 5TH AVENUE, KELLY AVENUE	CLOSED	REPLACED BY PROP. E-8
PROP. E-10	EXIT	TO ENGLEWOOD AVENUE	CLOSED	TRAFFIC USES EXIST. E-17
PROP. E-16	ENTRANCE	FROM MARTHA AVENUE	CLOSED	TRAFFIC DETOURED TO EXIST. E-21*
EXIST. E-17	EXIT	TO GENERAL STREET	OPEN	

*NOTE: FOR DETOUR PLANS, SEE SHEET 46-48

WESTBOUND

NO.	TYPE	SERVICE	STATUS	COMMENTS
EXIST. E-2	EXIT	TO INMAN STREET	CLOSED	TRAFFIC USES PROP. E-4
EXIST. E-3	ENTRANCE	FROM ARLINGTON STREET	CLOSED	TRAFFIC TO PROP. E-7
EXIST. E-4	EXIT	TO ARLINGTON STREET	CLOSED	REPLACED BY PROP. E-4
PROP. E-4	EXIT	TO ARLINGTON STREET	OPEN	
EXIST. E-7	ENTRANCE	FROM THIRD AVENUE	CLOSED	REPLACED BY PROP. E-7
PROP. E-7	ENTRANCE	FROM THIRD AVENUE	OPEN	
PROP. E-12	ENTRANCE	FROM MARTHA AVENUE	CLOSED	TRAFFIC USES PROP. E-7
EXIST. E-15	EXIT	TO MARKET STREET	CLOSED	REPLACED BY PROP. E-15
PROP. E-15	EXIT	TO MARTHA AVENUE	OPEN	
EXIST. E-15	EXIT	TO MARKET STREET	CLOSED	TRAFFIC TO PROP. E-15
EXIST. E-18	ENTRANCE	FROM BRITTAIN ROAD	OPEN	
EXIST. E-19	ENTRANCE	FROM GENERAL STREET	OPEN	

PHASE 4

MAINLINE TRAFFIC CAN NOW BE SHIFTED ONTO THE COMPLETED OUTSIDE LANE AND SHOULDER WHICH PERMITS THE CONSTRUCTION OF THE MEDIAN SHOULDER AND THE INSIDE TWO DIRECTIONAL ROADWAY LANES. ACCESS TO THE WORK AREA SHALL BE AT THE EXTREME ENDS OF THE PROJECT. THE CONTRACTOR SHALL NOT BREAK THE TEMPORARY CONCRETE BARRIER TO ALLOW ACCESS FOR HIS EQUIPMENT OR MATERIALS. THIS ALSO INCLUDES THE SECOND PART OF THE BRIDGE REMOVALS AT CHITTENDEN STREET AND AT EXISTING RAMP E-10. ALL THE PROPOSED RAMPS ARE OPEN. EXISTING ENTRANCE RAMP E-18 FROM BRITTAIN ROAD AND E-19 FROM GENERAL STREET SHALL REMAIN OPEN. THE REPLACEMENT OF THE I-76 BRIDGE DECKS REQUIRE THAT THE EXISTING LIGHTING CIRCUITS IN THE MEDIAN BARRIER BE MAINTAINED BY PROVIDING TEMPORARY POLES AND OVERHEAD WIRING (SEE LIGHTING PLANS, SHEET 676).

MAINTENANCE OF TRAFFIC SUBSUMMARY

CALC. BY: BWK DATE 3/90
CHKD. BY: DSB DATE 7/90

SUM-76-11.57
FED.PROJECT IR-76-2(44)19

OHIO
F.H.W.A. REGION 5

27
1214

SUMMIT COUNTY

SHEET NUMBER													PARTICIPATION			ITEM	ITEM EXT.	GRAND TOTAL	UNIT	DESCRIPTION
					22	23	30	73	76	79	84	88								
																				GUARDRAIL & FENCE
							550									606		550	L.F.	GUARDRAIL, TYPE 5
							1									606		1	EA.	ANCHOR ASSEMBLY, TYPE A
							2									606		2	EA.	ANCHOR ASSEMBLY, TYPE T
																606		1	EA.	Bridge Terminal Assembly, Type 2
																				MAINTAINING TRAFFIC
							7.38	0.23	0.63	0.96	0.13	0.50				614		9.83	MILE	TEMPORARY EDGE LINE, WHITE, CLASS I, 740.05, TYPE C } COMBINED IN GENERAL SUMMARY
							6.95	0.01	0.05		0.09					614		7.10	MILE	TEMPORARY EDGE LINE, YELLOW, CLASS I, 740.05, TYPE C
								0.23	1.20	0.87		0.84				614		3.14	MILE	TEMPORARY CENTER LINE, CLASS I, 740.05, TYPE C
							6.16	0.05	0.21	0.66		0.09				614		7.17	MILE	TEMPORARY LANE LINE, CLASS I, 740.05, TYPE C
							10855	300	1148	1160		375				614		13838	L.F.	TEMPORARY CHANNELIZING LINE, CLASS I, 740.05, TYPE C
							1334									614		1334	L.F.	TEMPORARY TRANSVERSE LINE, CLASS I, 740.05, TYPE C
							2230									614		2230	L.F.	TEMPORARY DOTTED LINE, CLASS I, 740.05, TYPE C
							202	45	91	212		36				614		586	L.F.	TEMPORARY STOP LINE, CLASS I, 740.05, TYPE C
								2	10	18		9				614		39	EA.	TEMPORARY LANE ARROW, CLASS I, 740.05, TYPE C
								1	4	10		4				614		19	EA.	TEMPORARY WORD "ONLY" ON PAVEMENT, 72", CLASS I, 740.05, TYPE C
					3574											614		3574	EA.	BARRIER REFLECTOR, TYPE B
					1000											614		1000	EA.	REPLACEMENT BARRIER REFLECTOR, TYPE B
							10									614		10	EA.	WORK ZONE MARKING SIGNS
																				TEMPORARY ROADS AND PAVEMENT
							2011									615		2011	S.Y.	TEMPORARY PAVEMENT, CLASS A
							1928									615		1928	S.Y.	TEMPORARY PAVEMENT, CLASS A, AS PER PLAN
																615		LUMP	LUMP	TEMPORARY ROAD
																				CONCRETE BARRIER
							30.000									622		30.000	L.F.	Portable CONCRETE BARRIER, 50", AS PER PLAN
							7350									622		7350	L.F.	Portable CONCRETE BARRIER, 50", BRIDGE MOUNTED, As Per Plan
							14									622		14	L.F.	CONCRETE BARRIER, TYPE D, AS PER PLAN
																				HIGHWAY LIGHTING
							5									625		5	EA.	GROUND ROD, AS PER PLAN

MAINTENANCE OF TRAFFIC SUBSUMMARY

CALC. BY. EWK DATE 3/96
CHKD. BY. DSB DATE 7/96

SUM-76-11.57
FED.PROJECT IR-76-2(44)19

OHIO
F.H.W.A. REGION 5

28
1214

SUMMIT COUNTY

SHEET NUMBER													PARTICIPATION			ITEM	ITEM EXT.	GRAND TOTAL	UNIT	DESCRIPTION
				23	24	25	30	73	76	79	84	88								
																				TRAFFIC SIGNS AND SUPPORTS
							22.3									630		22.3	C.Y.	CONCRETE FOR ANCHOR BASE FOUNDATIONS, AS PER PLAN
							53									630		53	L.F.	GROUND MOUNTED SUPPORTS, W 10 x 22 BEAM, AS PER PLAN
							8									630		8	EA.	SIGN SUPPORT ASSEMBLY, POLE MOUNTED, AS PER PLAN
							792									630		792	S.F.	SIGNS, FLAT SHEET, TYPE G SHEETING, AS PER PLAN
							1164									630		1164	S.F.	SIGNS, TEMPORARY OVERLAY
							1									630		1	EA.	REMOVAL OF GROUND MOUNTED MAJOR SIGN AND DISPOSAL
							4									630		4	EA.	REMOVAL OF OVERHEAD SIGN AND REERECTION
							4									630		4	EA.	REMOVAL OF OVERHEAD SIGN SUPPORT AND REERECTION, TYPE TC-12.30
							3									630		3	EA.	REMOVAL OF OVERHEAD SIGN SUPPORT AND DISPOSAL, TYPE TC-12.30
				13			10									630		23	EA.	REMOVAL OF OVERLAY SIGN
																				SIGN LIGHTING AND ELECTRICAL SIGNS
							5									631		5	EA.	SIGN SERVICE, AS PER PLAN
							5									631		5	EA.	SIGNS WIRED, AS PER PLAN
																				SPECIAL
					200											SPECIAL		200	EA.	REPLACEMENT DRUMS
					500											SPECIAL		500	S.F.	REPLACEMENT SIGNS
					2000											SPECIAL		2000	HRS.	LAW ENFORCEMENT OFFICER WITH PATROL CAR
						LUMP										SPECIAL		LUMP		TRAFFIC SAFETY COORDINATOR
							1									SPECIAL		1	EA.	IMPACT ATTENUATOR, HEX-FOAM SYSTEM MODEL NO. 209509H5S
							1									SPECIAL		1	EA.	IMPACT ATTENUATOR, (G.R.E.A.T TYPE) MODEL NO. 200200NF6GCZ (TEMPORARY)
					1											SPECIAL		1	EA.	REPLACEMENT IMPACT ATTENUATOR, HEX-FOAM SYSTEM
																				MODEL NO. 209509H5S
					1											SPECIAL		1	EA.	TEMP. IMPACT ATTENUATOR, G.R.E.A.T TYPE (REPLACEMENT)
																				MODEL NO. 200200NF6GCZ

MAINTENANCE OF TRAFFIC SUBSUMMARY

CALC. BY: EWK DATE 6/90
CHKD. BY: DSB DATE 7/90

SUM-76-11.57
FED.PROJECT IR-76-2(44)19
SUMMIT COUNTY

OHIO
F.H.W.A. REGION 5

29
1214

LINE No.	SHEET No.	LOCATION	SIDE	606			614								615		622			625	630										631					SPEC		6010						
				GUARDRAIL, TYPE 5	ANCHOR ASSEMBLY, TYPE A	ANCHOR ASSEMBLY, TYPE T	TEMPORARY EDGE LINES, WHITE, CLASS I, 947.03, TYPE C	TEMPORARY EDGE LINES, YELLOW, CLASS I, 947.03, TYPE C	TEMPORARY LANE LINES, CLASS I, 947.03, TYPE C	TEMPORARY CHANELIZING LINES, CLASS I, 947.03, TYPE C	TEMPORARY TRANSVERSE LINES, CLASS I, 947.03, TYPE C	TEMPORARY DOTTED LINES CLASS I, 947.03, TYPE C	TEMPORARY STOP LINES CLASS I, 947.03, TYPE C	WORK ZONE MARKING SIGNS	TEMPORARY PAVEMENT, CLASS A	TEMPORARY PAVEMENT, CLASS A, AS PER PLAN	TEMPORARY CONCRETE BARRIER, TYPE A50, AS PER PLAN	TEMPORARY CONCRETE BARRIER, TYPE A50, BRIDGE MOUNTED, APP (ANCHORED)	CONCRETE BARRIER, TYPE D, AS PER PLAN	GROUND ROD, AS PER PLAN	CONCRETE FOR ANCHOR BASE FOUNDATIONS, AS PER PLAN	GROUND-MOUNTED SUPPORTS W 10 x 22 BEAM, AS PER PLAN		SIGN SUPPORT ASSEMBLY, POLE MOUNTED, AS PER PLAN	SIGNS, FLAT SHEET, TYPE G SHEETING, AS PER PLAN	SIGNS, TEMPORARY OVERLAY	REMOVAL OF GROUND MOUNTED MAJOR SIGN AND DISPOSAL	REMOVAL OF OVERHEAD SIGN AND REERECTION	REMOVAL OF OVERHEAD SIGN SUPPORT AND REERECTION, TYPE TC-12.30	REMOVAL OF OVERHEAD SIGN SUPPORT AND DISPOSAL TYPE TC-12.30	REMOVAL OF OVERLAY SIGN	SIGN SERVICE, AS PER PLAN	SIGNS WIRED, AS PER PLAN				IMPACT ATTENUATOR, G.R.E.A.T. SYSTEM MODEL NO. 200200NF66CZ	IMPACT ATTENUATOR, HEX-FOAM SYSTEM MODEL NO. 209506HSS	Bridge Terminal Assembly, Type 2						
1		PHASE 2		L.F.	EA.	EA.	L.F.	L.F.	L.F.	L.F.	L.F.	L.F.	L.F.	EA.	S.Y.	S.Y.	L.F.	L.F.	L.F.	EA.	C.Y.	L.F.		EA.	S.F.	S.F.	EA.	EA.	EA.	EA.	EA.	EA.				EA.	EA.						
2	33	RAMP T	EB																						32																	
3	33	518+20 AND 529+30	EB																							12																
4	34	RAMP T	EB																						12.5																
5	34	RAMP S	EB				650			235		240																													
6	34	541+00 TO 553+50	EB				1250	450	300	200							700																							
7	34	RAMP U	WB				250			115																															
8	34	24+00 TO 553+50	WB				458	758	758	165	53						460																							
9	35	553+50 TO 566+00	EB				1250	1250	1250								1250							1	12																
10	35	553+50 TO 566+00	WB				1250	1250	1650	600							500									37																
11	36	566+00 TO 578+00	EB				1200	1200	1200						72		1000	200																							
12	36	566+00 TO 578+00	WB				1200	1200	1200	170							700	200						1	12																
13	37	578+00 TO 590+00	EB				1200	1200	700	500							1100	100																							
14	37	578+00 TO 590+00	WB				1200	1200	700	500							1100	100		1	3.96																1	1				
15	39	590+00 TO 601+00	EB				1100	1100	1100								870	230						1	12																
16	39	590+00 TO 601+00	WB				1100	1100	1100						210		870	230		1	4.49			1	12	32											1	1				
17	40	601+00 TO 610+50	EB				950	950	950								210	780																							
18	40	601+00 TO 610+50	WB				950	950	950								200	760																							
19	41	610+50 TO 617+00	EB				650	650	650						85		530	80		1	3.96					21			1							1	1				
20	41	610+50 TO 617+00	WB				650	650	650								550	90											1												
21	43	617+00 TO 629+00	EB				1200	1200	1200								1050	150		1	4.49								1							1	1				
22	43	617+00 TO 629+00	WB				1100	1200	1200	300	254				553		930	150							34													1				
23	44	629+00 TO 640+00	EB	350		1	500	500	500							1195	370	130	14	1	2.92							1							1	1				
24	44	629+00 TO 640+00	WB	200	1	1	700	500	500							733	950	100						1	58.5														1		
25	46	ALONG ARLINGTON ST.																							12																
26	46	ALONG FIFTH AVE.																							30																
27	46	ALONG SECOND AVE.																							26	7															
28	46	ALONG THIRD AVE.																							32																
29	47	ALONG MARTHA AVE.																							20	7															
30	47	ALONG MARKET ST.																							21																
31	48	ALONG GENERAL ST.																							115.5																
32	49	E. MARKET ST. AT RAMP E-15 INTERSECTION										202																													
33																																										
34		PHASE 2 TOTAL		550	1	2	18,808	17,308	16,558	2785	307	240	202		920	1928	13,340	3300	14	5	19.82			5	441.5	116			4			5	5			1		1				
35																																										
36		PHASE 3																																								
37	50	557+00 TO 566+00	WB				700										900									161.5															
38	51	566+00 TO 578+00	EB				300			1100	463						200								34	168												1			
39	51	566+00 TO 578+00	WB				350										350									136															
40	52	578+00 TO 590+00	EB				1000																		16																
41	52	578+00 TO 590+00	WB				600										200								28.5			1		1										
42	53	590+00 TO 601+00	EB														500								12.5	168															
43	53	590+00 TO 601+00	WB							850							200									156		1		1										
44	56	617+00 TO 629+00	WB				860			610							650									9															
45	57	629+00 TO 630+90	WB																							136															
46																																										
47		PHASE 3 TOTAL					3810			2560	463						3000								91	934.5		2		2								1			
48																																										
49																																										

MAINTENANCE OF TRAFFIC SUBSUMMARY

CALC. BY: CWK DATE 2/96
CHKD. BY: DSB DATE 7/96

SUM-76-11.57
FED. PROJECT IR-76-2(44)19
SUMMIT COUNTY

OHIO
F.H.W.A. REGION 5

30
1214

LINE No.	SHEET No.	LOCATION	SIDE	606			614								615		622			625	630											631					SPEC		606
				GUARDRAIL, TYPE 5	ANCHOR ASSEMBLY, TYPE A	ANCHOR ASSEMBLY, TYPE T	TEMPORARY EDGE LINES, WHITE, CLASS 1, 947.03, TYPE C	TEMPORARY EDGE LINES, YELLOW, CLASS 1, 947.03, TYPE C	TEMPORARY LANE LINES, CLASS 1, 947.03, TYPE C	TEMPORARY CHANELIZING LINES, CLASS 1, 947.03, TYPE C	TEMPORARY TRANSVERSE LINES, CLASS 1, 947.03, TYPE C	TEMPORARY DOTTED LINES CLASS 1, 947.03, TYPE C	TEMPORARY STOP LINES CLASS 1, 947.03, TYPE C	WORK ZONE MARKING SIGNS	TEMPORARY PAVEMENT, CLASS A	TEMPORARY PAVEMENT, CLASS A, AS PER PLAN	TEMPORARY CONCRETE BARRIER, TYPE ASO, AS PER PLAN	TEMPORARY CONCRETE BARRIER, TYPE ASO, BRIDGE MOUNTED, APP (ANCHORED)	CONCRETE BARRIER, TYPE D, AS PER PLAN	GROUND ROD, AS PER PLAN	CONCRETE FOR ANCHOR BASE FOUNDATIONS, AS PER PLAN	GROUND-MOUNTED SUPPORTS W 10 x 22 BEAM, AS PER PLAN		SIGN SUPPORT ASSEMBLY, POLE MOUNTED, AS PER PLAN	SIGNS, FLAT SHEET, TYPE G SHEETING, AS PER PLAN	SIGNS, TEMPORARY OVERLAY	REMOVAL OF GROUND MOUNTED MAJOR SIGN AND DISPOSAL	REMOVAL OF OVERHEAD SIGN AND REERECTION	REMOVAL OF OVERHEAD SIGN SUPPORT AND REERECTION, TYPE TC-12.30	REMOVAL OF OVERHEAD SIGN SUPPORT AND DISPOSAL TYPE TC-12.30	REMOVAL OF OVERLAY SIGN	SIGN SERVICE, AS PER PLAN	SIGNS WIRED, AS PER PLAN				IMPACT ATTENUATOR, G.R.E.A.T. SYSTEM MODEL NO. 200200NF66G2	IMPACT ATTENUATOR, HEX-FOAM SYSTEM MODEL NO. 209506HSS	Bridge Terminal Assembly, Type 2					
1		PHASE 4		L.F.	EA.	EA.	L.F.	L.F.	L.F.	L.F.	L.F.	L.F.	L.F.	EA.	S.Y.	S.Y.	L.F.	L.F.	L.F.	EA.	C.Y.	L.F.		EA.	S.F.	S.F.	EA.	EA.	EA.	EA.	EA.	EA.	EA.			EA.	EA.						
2	58	518+20	EB																							6					1										
3	58	529+30	EB																							6					1										
4	58	531+50	EB																						9															
5	58	535+00	EB																		2.40	52.5			133		1													
6	59	541+00 TO 553+50	EB				750	1250	250	1340		150		2	821		750							1	12															
7	59	23+00 TO 553+50	WB				607	857	457	800	168						460								30															
8	60	553+50 TO 566+00	EB				1250	1250	1250								1250																						
9	60	553+50 TO 566+00	WB				1030	1250	1250	130	57						1250																						
10	61	566+00 TO 578+00	EB				1200	1200	1200								1000	200																					
11	61	566+00 TO 578+00	WB				1200	1200	1200					2			1050	150						1	12															
12	62	578+00 TO 590+00	EB				1150	1200	1050	150					178		1050	150																						
13	62	578+00 TO 590+00	WB				950	1200	1200			250					1050	150																					
14	63	590+00 TO 601+00	EB				800	1100	1100					2			800	300																					
15	63	590+00 TO 601+00	WB				600	1100	1100	290		280			92		800	300																					
16	64	601+00 TO 610+50	EB				835	950	950	170	51							950								64													
17	64	601+00 TO 610+50	WB				800	960	950			150						950																					
18	65	610+50 TO 617+00	EB				450	650	650	230							500	150								20		1			2								
19	65	610+50 TO 617+00	WB				400	650	650			250		2			500	150																					
20	66	617+00 TO 629+00	EB				1200	1200	1200			500					1050	150										1		1									
21	66	617+00 TO 629+00	WB				1200	1200	1200			260					1050	150							28.5														
22	67	629+00 TO 640+00	EB				1000	1100	150	1450	288	150					550	150																					
23	67	629+00 TO 640+00	WB				900	1100	150	950							550	150						1	28.5	17					1								
24	68	ALONG E. MARKET ST.																							6														
25	69	WESTBOUND MAINLINE												2																									
26																																							
27		PHASE 4 TOTAL					16,322	19,407	15,957	5510	564	1990		10	1091		13,660	4050			2.46	52.5		3	259	113	1	2		1	10									
28																																							
29																																							
30																																							
31																																							
32																																							
33																																							
34																																							
35																																							
36																																							
37																																							
38																																							
39																																							
40																																							
41		PHASE 2 TOTAL		550	1	2	18,808	17,308	16,558	2785	807	240	202		920	1928	13,340	3300	14	5	19.82			5	441.5	116			4			5	5				1		1			
42																																							
43		PHASE 3 TOTAL					3810			2560	463						3000								91	934.5		2		2						1			
44																																							
45		PHASE 4 TOTAL					16222	19407	15957	5510	564	1990		10	1091		13660	4050			246	52.5		3	259	113	1	2		1	10									
46																																							
47																																							
		GRAND TOTALS		550	1	2	38950	36715	32515	10,855	1334	2230	202	10	2011	1928	30000	7350	14	5	22.28	52.5		8	792	1164	1	4	4	3	1.0	5	5				1	1	1			
		MILES					7.38	6.95	6.16																															

CALC. BY DATE	SUM-76-11.57	OHIO
CHKD. BY DATE	FED. PROJECT IR-76-2(44)19	F.H.W.A. REGION 5

SUMMIT COUNTY

31
1214

ITEM 622
TEMPORARY CONCRETE BARRIER, TYPE A50, AS PER PLAN

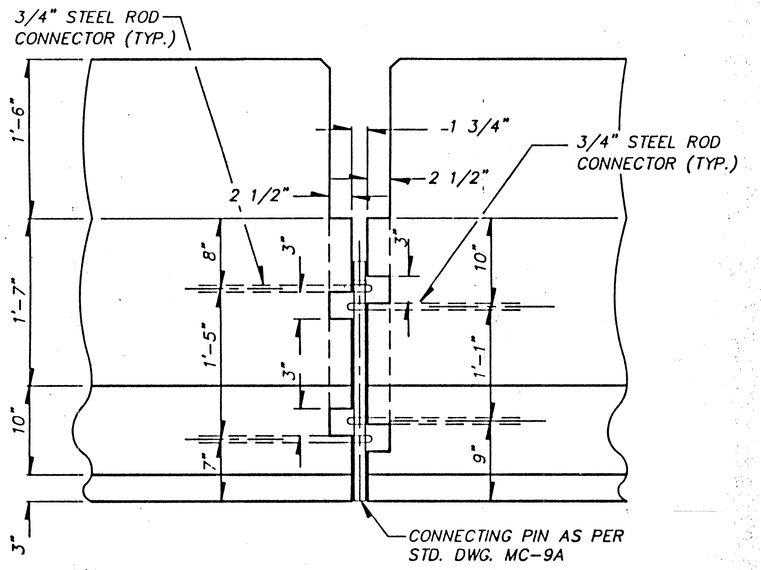

ELEVATION AT CONNECTION

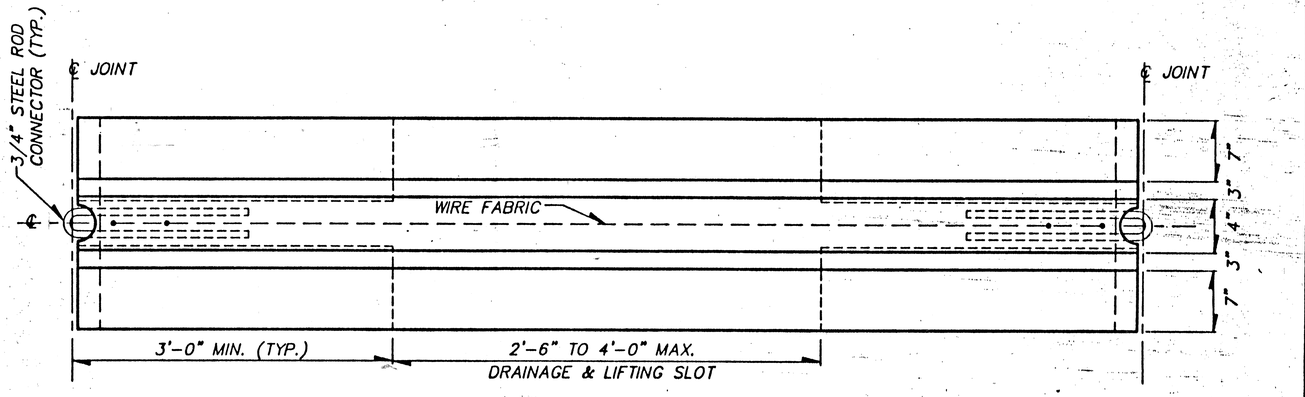

PLAN VIEW

TEMPORARY CONCRETE BARRIER, TYPE A32 WITH AN 18" MINIMUM HEIGHT GLARE SCREEN MAY BE USED AT THE OPTION OF THE CONTRACTOR. SEE MAINTENANCE OF TRAFFIC NOTE No. 22

NOTE: FOR ADDITIONAL NOTES & DETAILS SEE STD. DWG. MC-9.2

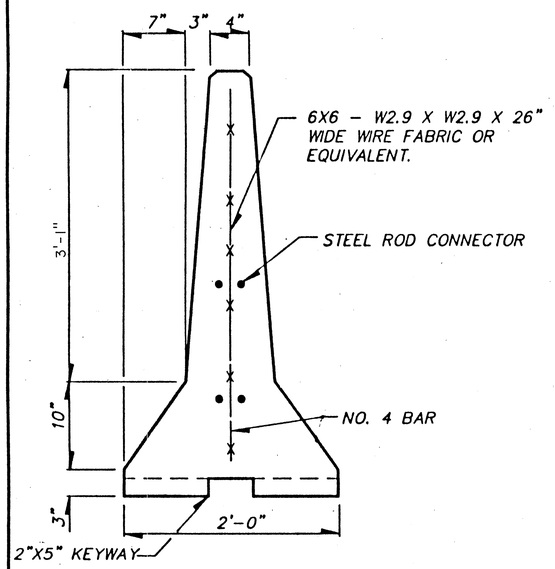

SECTION A-A

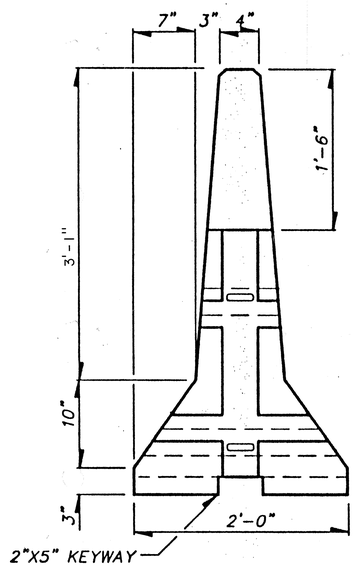

END

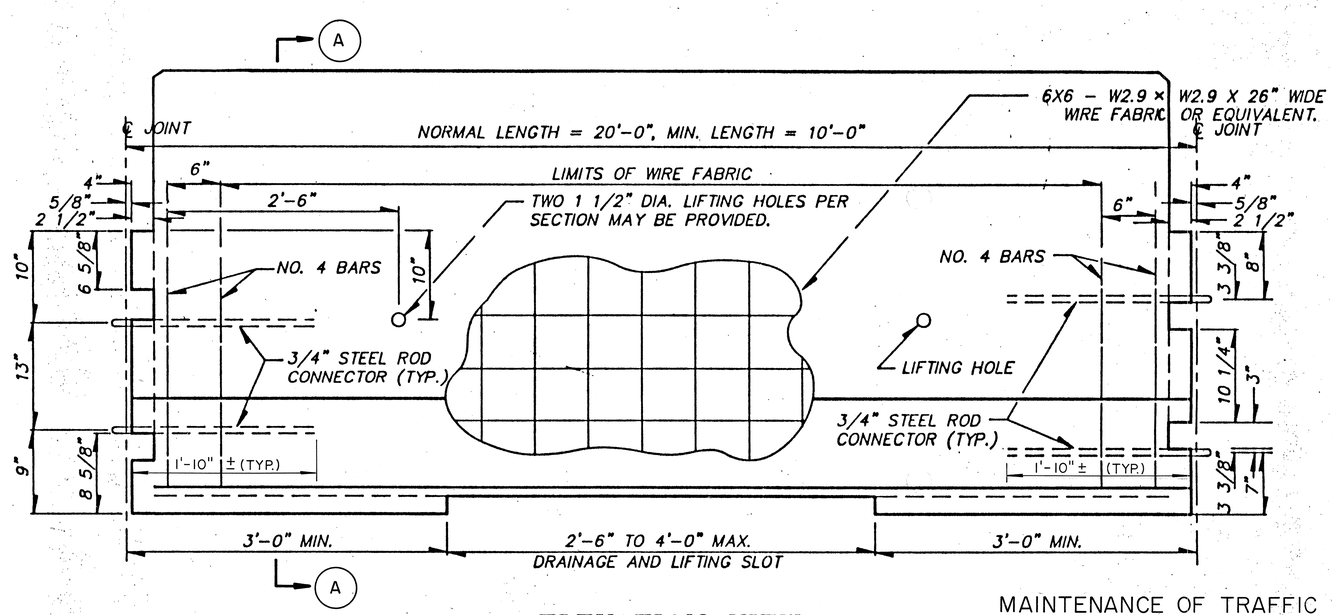

ELEVATION VIEW

MAINTENANCE OF TRAFFIC DETAILS

REVISED 1-11-89

AA B/P# 71942R

CALC. BY. DATE	SUM - 76 - 11.57	OHIO	32
CHKD. BY. DATE	FED. PROJECT IR-76-2(44)19	F.H.W.A. REGION 5	1214

SUMMIT COUNTY

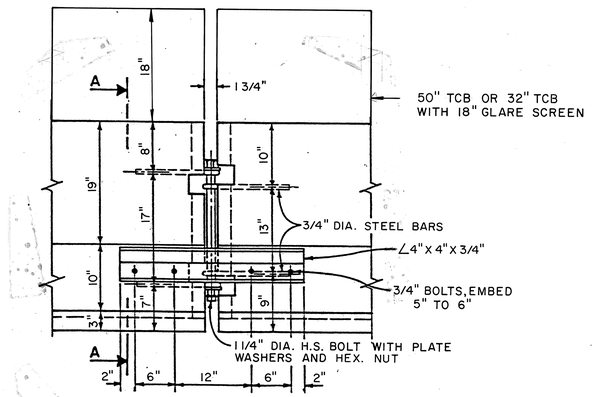

ELEVATION AT JOINT

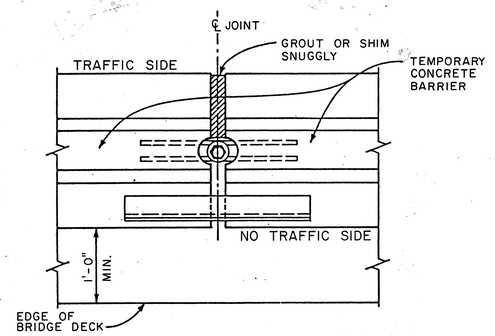

PLAN AT JOINT

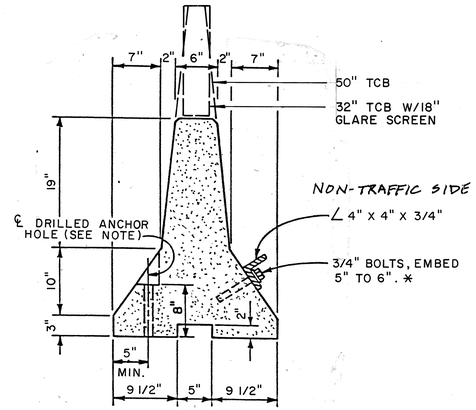

SECTION A-A

ITEM 622, TEMPORARY CONCRETE BARRIER, TYPE A50, BRIDGE MOUNTED

(SEE SHEET 31 FOR ADDITIONAL DETAILS)

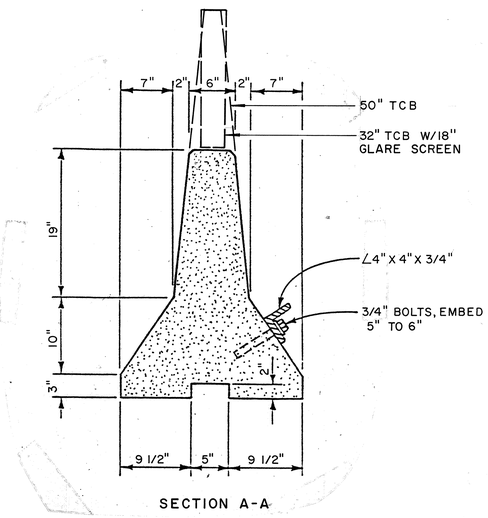

SECTION A-A

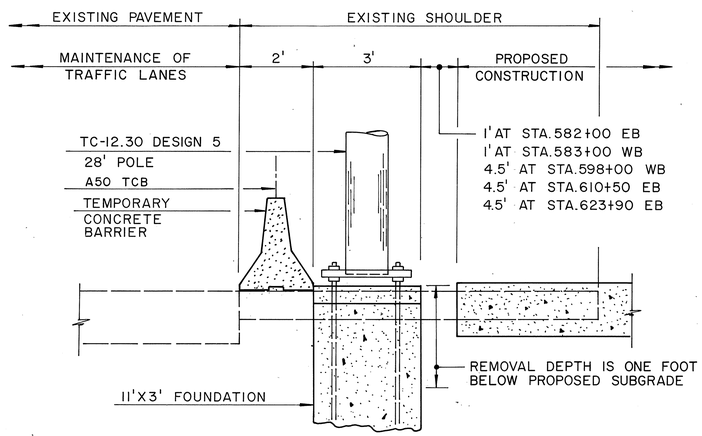

SECTION AT TEMPORARY SIGN SUPPORTS

* EXPANSION **BOLT** PER CMS 712.01 OR EMBED **WITH NON**-SKRINK EPOXY MORTAR OR RESIN ANCHORS **PER** SS 852/952

NOTES:

IN ORDER TO ANCHOR THE CONCRETE BARRIER TO THE BRIDGE DECK, WHERE ANCHORING IS REQUIRED, 1 1/4" MINIMUM DIAMETER HOLES MUST BE DRILLED THROUGH THE BARRIER TOE AT THE LOCATION SHOWN IN THE ABOVE SECTION. GREAT CARE MUST BE USED IN DRILLING AND INSTALLING THE BARRIER SEGMENTS, AS ANY DAMAGE TO THEM WILL BE CONSIDERED CAUSE FOR THEIR REJECTION.

ALL ANCHORS SHALL BE 1" DIAMETER, HIGH STRENGTH, THROUGH BOLTS OR APPROVED RESIN ANCHORS. WHEN RESIN ANCHORS ARE USED, THEY MUST BE EMBEDDED A MINIMUM OF 6" INTO FIRM CONCRETE.

ITEM 622
TEMPORARY CONCRETE BARRIER,
A50, BRIDGE MOUNTED, As Per Plan
(ANCHORED)

MAINTENANCE OF TRAFFIC DETAILS

TEMPORARY SIGN SUPPORT REQUIREMENTS

A. PLACEMENT OF SIGNS WHICH WILL REMAIN MORE THAN ONE DAY:

1) LATERAL PLACEMENT TO NEAREST EDGE OF SIGNS SHALL BE AS FOLLOWS:

   a) ON THE RIGHT SIDE OF THE ROAD FOR APPROACHING TRAFFIC (EXCEPT FOR DUAL MOUNTED SIGNS AND SIGNS DESIGNATED IN THE PLANS FOR LEFT SIDE MOUNTING).

   b) CURBED ROADWAY - PREFERABLY 2 FT. (MINIMUM 1 FT.) BEHIND FACE OF CURB.

   c) UNCURBED ROADWAY-12 FT. FROM EDGE OF TRAFFIC LANE OR 6 FT. FROM EDGE OF PAVED OR USEABLE SHOULDER, WHICHEVER IS GREATER.

   d) BEHIND GUARDRAIL OR BARRIER - PREFERABLY 2 FT. BEHIND FACE OF GUARDRAIL (MINIMUM 1 FT.) FOR SIGNS ON CLASS A SUPPORTS: 4 FT. FOR CLASS B OR C SUPPORTS 1 FT. BEHIND FACE OF CONCRETE BARRIER UNLESS BARRIER TOP MOUNTING IS REQUIRED BY THE PLAN.

2) VERTICAL CLEARANCE OF SIGNS, MEASURED ABOVE ROADWAY ELEVATION; SHALL BE AS FOLLOWS:

   a) RURAL - 5 FT. WHEN PARKED CARS, CONSTRUCTION EQUIPMENT, ETC WILL NOT OBSCURE SIGN VISIBILITY.

   b) RURAL AREAS WITH PARKED CARS OR CONSTRUCTION EQUIPMENT - 7 FT.

   c) URBAN - 7 FT.

   d) CARE SHALL BE TAKEN TO ASSURE THAT SIGNS WILL NOT BE OBSCURED BY CONSTRUCTION EQUIPMENT, TREES, WEEDS OR OTHER OBSTACLES. BRUSH, WEEDS OR GRASS WITHIN THE RIGHT OF WAY SHALL BE TRIMMED AS NECESSARY. SIGNS SHALL NORMALLY BE VISIBLE TO TRAFFIC 400 TO 600 FT. IN ADVANCE OF THE SIGN.

3) SUPPORTS FOR SIGNS WHICH WILL REMAIN IN PLACE MORE THAN ONE DAY SHALL BE FIXED RATHER THAN PORTABLE EXCEPT IN SITUATIONS WHERE THE SIGN MUST REST ON PERMANENT PAVEMENT OR OTHER SURFACE WHICH WOULD BE DAMAGED BY INSERTION OF POST TYPE SUPPORTS.

B. PLACEMENT OF SIGNS WHICH WILL REMAIN FOR ONE DAY OR LESS:

1) SAME AS A-1 ABOVE EXECPT THAT SIGNS MAY BE PLACED ON THE ROADWAY ONLY IF THEY DO NOT INTRUDE INTO A TRAFFIC LANE IN USE.

2) MINIMUM OF 1 FT. ABOVE ROADWAY

C. CLASSES OF SUPPORTS:

ALL TEMPORARY SIGN SUPPORTS SHALL BE OF THE FOLLOWING TYPES:

1) CLASS A:

SUPPORTS SHALL BE USED FOR EXPOSED LOCATIONS ON HIGHWAYS WHERE TRAFFIC APPROACH SPEEDS OF 40 MPH AND HIGHER ARE ENCOUNTERED. THEY ARE ALSO SUITABLE FOR USE IN ALL OTHER LOCATIONS.

2) CLASS B:

SUPPORTS SHALL BE USED FOR EXPOSED LOCATIONS ON HIGHWAYS WHERE TRAFFIC APPROACH SPEEDS OF LESS THAN 40 MPH ARE ENCOUNTERED. THEY ARE ALSO SUITABLE FOR USE IN ALL APPLICATIONS DEFINED FOR CLASS C SUPPORTS.

3) CLASS C:

SUPPORTS MAY ONLY BE USED WHERE FULLY PROTECTED BY GUARDRAIL, CONCRETE BARRIER AND IN LOCATIONS POSITIVELY PROTECTED FROM TRAFFIC SUCH AS ON RETAINING WALLS OR WHERE TRAFFIC APPROACH SPEEDS ARE LESS THAN 25 MPH.

D. TRAFFIC APPROACH SPEEDS:

TRAFFIC APPROACH SPEEDS SHALL BE THE LOCALLY POSTED SPEED (NOT ADVISORY SPEED SIGNS) OR THE MEASURED ACTUAL (85TH PERCENTILE) SPEED (IF AVAILABLE) OF APPROACHING TRAFFIC, WHICHEVER IS HIGHER, ADJACENT TO THE SIGN LOCATION.

TABLE

APPROACH SPEED (MPH)	COMPLETELY PROTECTED BY GUARDRAIL OR BARRIER	PARTLY PROTECTED BY GUARDRAIL OR BARRIER *	GREATER THAN 30' FROM EDGE OF PAVEMENT	WITHIN 30' FROM EDGE OF PAVEMENT
40 AND HIGHER	A, B OR C	A OR B	A OR B **	A ONLY
26 TO 39	A, B OR C	A OR B	A OR B	A OR B
0 TO 25	A, B OR C	A, B OR C	A, B OR C	A, B OR C

* IF SUPPORTS ARE BEHIND GUARDRAIL BUT NOT FULLY 5.5' BEHIND FACE OF RAIL OR IF SIGN IS NOT 1' BEHIND FACE OF CONCRETE BARRIER.

** 30' CRITERION IS BASED UPON STRAIGHT ROADWAY AND A SLOPE OF 6:1 OR FLATTER. SUPPORTS ON THE OUTSIDE OF CURVES OR LOCATED DOWN A SLOPE (STEEPER THAN 6:1) WILL REQUIRE USE OF CLASS A SUPPORTS.

E. BALLASTING

BALLASTING OF PORTABLE SUPPORTS SHALL BE WITH SANDBAGS PLACED WITHIN 1 FT. OF THE GROUND. IN NO CASE SHALL HARD OBJECTS BE USED FOR BALLAST.

F. STRENGTH OF SIGN SUPPORTS

THE CONTRACTOR SHALL CHOOSE SIGN SUPPORTS OF ADEQUATE STRENGTH AND WITH ADEQUATE FOUNDATIONS AND ANCHORAGE TO SUPPORT THE SIGN SIZES ERECTED. PROPRIETARY DEVICES SHALL NOT BE LOADED BEYOND THE LIMITS RECOMMENDED BY THE MANUFACTURER. SLIP BASE TYPE BREAKAWAY BEAM CONNECTIONS SHALL BE AT LEAST PARTIALLY EMBEDDED IN CONCRETE CONSISTING OF A 1 FT. DEEP BY 12" DIAMETER COLLAR. SIGN SUPPORTS WHICH FAIL UNDER TYPICAL WIND LOAD CONDITIONS SHALL BE IMMEDIATELY MODIFIED OR REPLACED WITH A SUPPORT OF ADEQUATE STRENGTH.

G. PROHIBITED SUPPORTS

THE FOLLOWING SUPPORT TYPES SHALL NOT BE PERMITTED ON PROJECTS:

1) SUPPORTS FABRICATED FROM AUTOMOTIVE AXLE DIFFERENTIAL ASSEMBLIES AND SIMILARLY HEAVY ASSEMBLIES WHICH CANNOT BE CONSIDERED BREAKAWAY TYPE.

2) SUPPORTS CONSISTING OF VERTICAL POSTS WITH ANGLED BRACES MADE FROM DRIVEPOST OR OTHER RIGID ELEMENTS.

CALC BY _____ DATE _____
CHKD BY _____ DATE _____

SUM-76-11.57

OHIO
FHWA REGION 5

32A
1214

CLASS A SUPPORTS

FIXED SUPPORTS

1) ALL #2, #3, AND #4 POST WHEN INSTALLED SINGLY OR IN PAIRS ACCORDING TO THE DETAILS OF TC-41.20. THE NUMBER OF SUPPORTS SHALL BE AS SHOWN ON TC-52.10 AND TC-52.20.

2) THE FOLLOWING POST TYPES, WHEN INSTALLED SINGLY, BY IMBEDMENT OR DRIVING INTO EARTH TO A DEPTH OF ABOUT 42 INCHES:

   a) - UP TO 4" X 4" WOOD

   b) - UP TO 2 INCH DIAMETER SCHEDULE 40 STEEL PIPE

   c) - UP TO 3 INCH DIAMETER SCHEDULE 40 ALUMINUM PIPE

   d) - UP TO 2 1/4 INCH SQUARE, 12 GAUGE WALL, PUNCHED STEEL POST

   e) - UP TO 6" X 8" WOOD WITH BREAKAWAY HOLES SHOWN BELOW

3) THE FOLLOWING POST TYPES WHEN INSTALLED IN PAIRS WITH LESS THAN 7 FT. BETWEEN POSTS, BY IMBEDMENT OR DRIVING INTO EARTH TO A DEPTH OF ABOUT 42 INCHES:

   a) - UP TO 4" X 4" WOOD

   b) - UP TO 2 INCH DIAMETER SCHEDULE 40 STEEL PIPE

   c) - UP TO 3 INCH DIAMETER SCHEDULE 40 ALUMINUM PIPE

   d) - UP TO 2 INCH SQUARE, 14 GAUGE WALL, PUNCHED STEEL POST

4) FIXED TYPE III BARRICADES:

5) ALL BREAKAWAY CONNECTION BEAM SUPPORTS, WHEN INSTALLED ACCORDING TO THE PROPER DETAILS SHOWN ON TC-41.10 WITH A MINIMUM CLEAR DISTANCE BETWEEN SUPPORTS OF 7 FT. FOR SUPPORTS LARGER THAN W6 X 9.

6) ANY BREAKAWAY POST OR POST AND CONNECTION WHICH HAS BEEN CRASH TESTED AND APPROVED BY THE FHWA AS SATISFYING THE BREAKAWAY CRITERIA DESCRIBED IN 630.06.

(CONTINUED ON SHEET 32B)

ALL WORK AND TRAFFIC CONTROL DEVICES SHALL BE IN ACCORDANCE WITH 614 AND OTHER APPLICABLE PORTIONS OF THE C & M SPECIFICATIONS AS WELL AS IN ACCORDANCE WITH PART 7 OF THE OMUTCD. PAYMENT FOR ALL LABOR, EQUIPMENT AND MATERIALS TO PROVIDE THIS METHOD OF TRAFFIC CONTROL SHALL BE INCLUDED IN THE LUMP SUM BID FOR 614 MAINTAINING TRAFFIC, UNLESS SEPARATELY ITEMIZED IN THE PLAN.

REVISED BY:	DATE:

210510	DATE 05/07/90
TEMPORARY SIGN SUPPORT	
PLAN INSERT SHEET	

WCC

CALC BY DATE		OHIO	32B 1214
CHKD BY DATE	SUM-76-11.57	FHWA REGION 5	

CLASS A SUPPORTS

FIXED

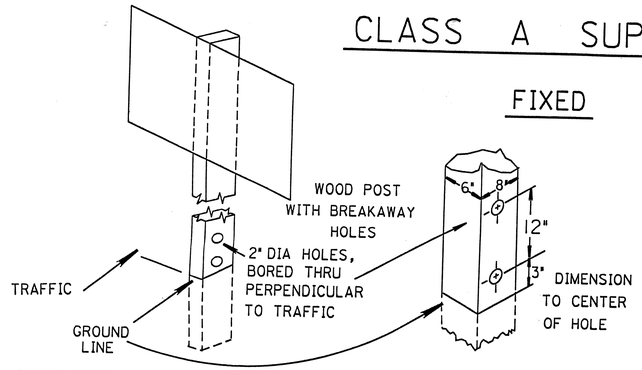

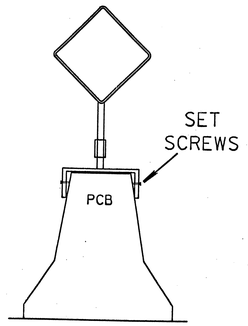

PORTABLE

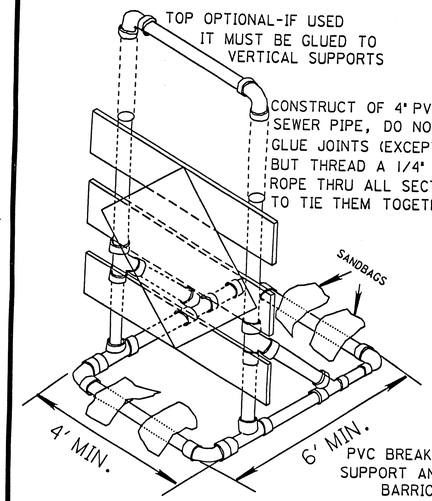

PVC BREAKAWAY SIGN SUPPORT AND TYPE III BARRICADE

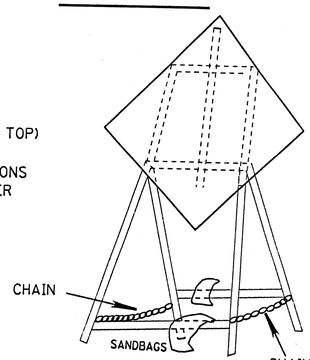

EASEL

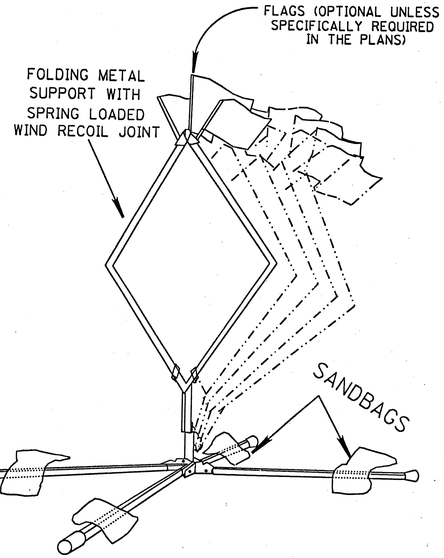

STUBBING STANDARD

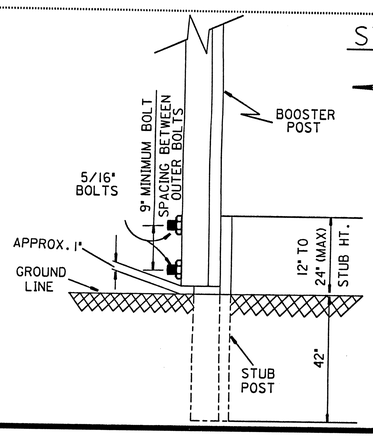

NOTES

1. FOR USE WITH #3 POST OR SMALLER ONLY
2. BOLTS SHALL BE STEEL OR ALUMINUM
3. A MINIMUM OF TWO FASTENERS SHALL BE USED PER ASSEMBLY
4. BOOSTER POST SHALL BE MOUNTED BEHIND STUB POST
5. BOOSTER POST SHALL BE THE SAME OR 1 LB./FT. LESS THAN STUB POST

CLASS B SUPPORTS

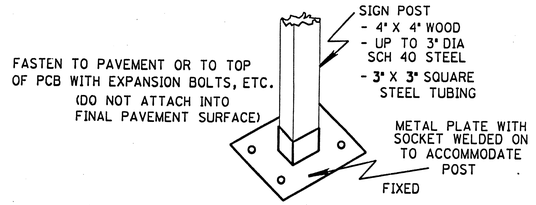

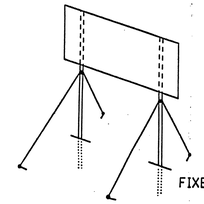

ANY CLASS A SIGN POST WITH GUY WIRES ADDED TO INCREASE SIGN CARRYING ABILITY. (GUY WIRES SHALL NOT BE HEAVIER THAN 1/8" DIA. BRAIDED CABLE. GUY ANCHORS SHALL NOT EXTEND MORE THAN 6" ABOVE GROUND SURFACE).

CLASS C SUPPORTS

1. ALL BEAM TYPE SUPPORTS WITHOUT BREAKAWAY CONNECTIONS.
2. SUPPORTS SIMILAR TO BUT LARGER THAN PERMITTED FOR CLASS A OR B.
3. THE STEEL DRUM(S) SHOWN BELOW MAY BE USED ONLY WHEN LOCATED BEHIND GUARDRAIL OR BARRIER.

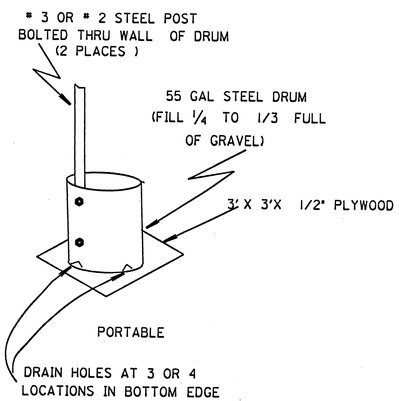

PORTABLE

DRAIN HOLES AT 3 OR 4 LOCATIONS IN BOTTOM EDGE

ALL WORK AND TRAFFIC CONTROL DEVICES SHALL BE IN ACCORDANCE WITH 614 AND OTHER APPLICABLE PORTIONS OF THE C & M SPECIFICATIONS AS WELL AS IN ACCORDANCE WITH PART 7 OF THE OMUTCD. PAYMENT FOR ALL LABOR, EQUIPMENT AND MATERIALS TO PROVIDE THIS METHOD OF TRAFFIC CONTROL SHALL BE INCLUDED IN THE LUMP SUM BID FOR 614 MAINTAINING TRAFFIC, UNLESS SEPARATELY ITEMIZED IN THE PLAN.

REVISED BY:	DATE:
210511	DATE 05/07/90
TEMPORARY SIGN SUPPORT	
PLAN INSERT SHEET	

WCC

AA B/P# 71942R

CALC. BY.		SUM - 76 - 11.57	OHIO	33
DATE				12 14
CHKD. BY.		FED. PROJECT IR-76-2(44)19	F.H.W.A. REGION 5	
DATE				

SUMMIT COUNTY

OW-145A-30 SIGN	LOCATION	LEFT SIDE (MEDIAN)	RIGHT SIDE
1 MILE	WEST OF WOLF LEDGES	1560'	1630'
2 MILES	EAST OF BOWERY ST	1230'	1000'
3 MILES	WEST OF EAST AVE	620'	640'
4 MILES	WEST OF WOOSTER RD	170'	220'
5 MILES	EAST OF COPLEY RD	850'	840'

ALL ARE ATTACHED TO EXISTING LIGHT POLES EXCEPT AT 4 MILE LOCATION WHERE IT IS ATTACHED TO THE EXISTING OVERHEAD SIGN END FRAME ON THE MEDIAN SIDE.

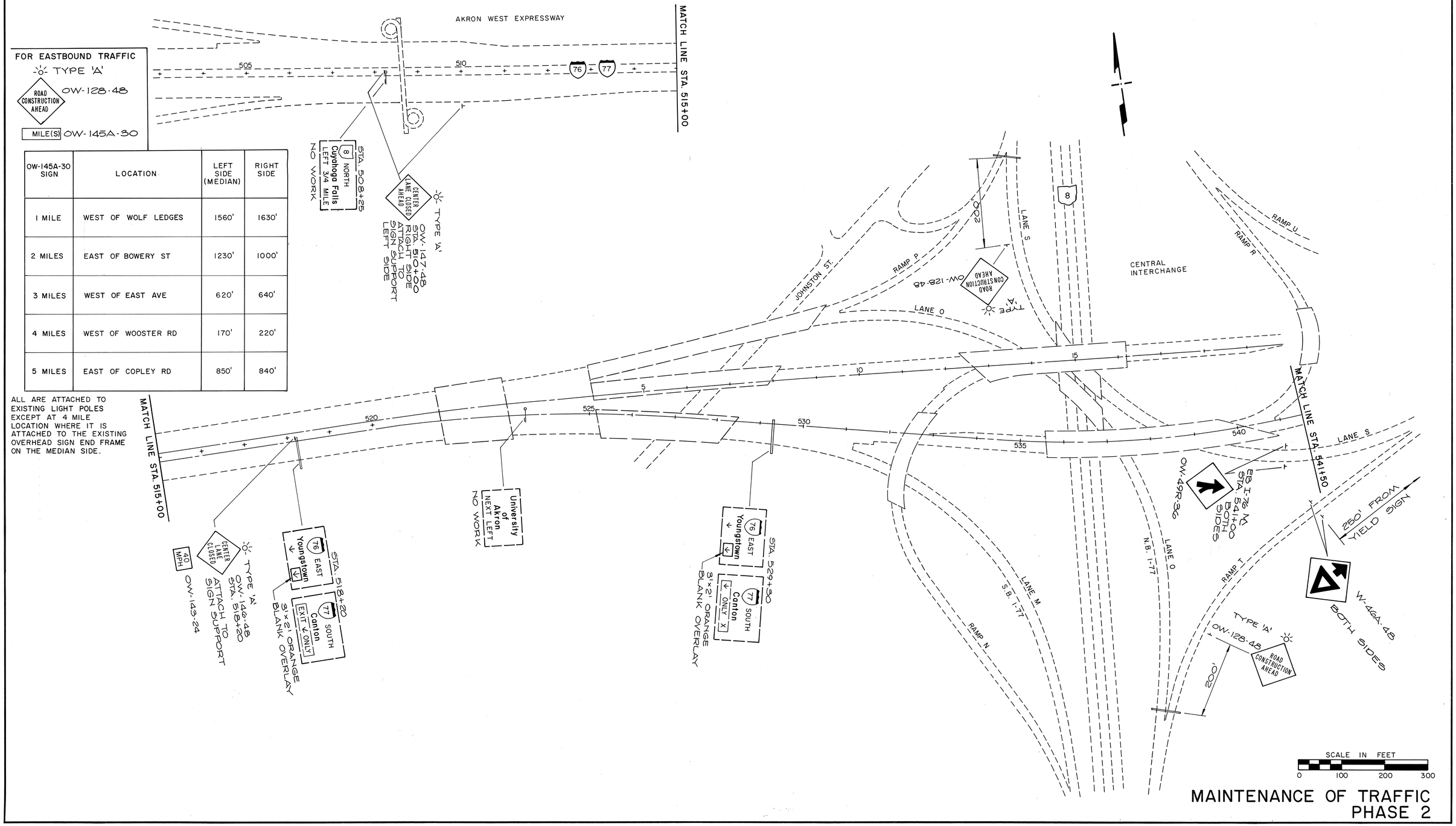

MAINTENANCE OF TRAFFIC PHASE 2

AA B/P# 71942R

CALC. BY. DATE	SUM-76-11.57	OHIO
CHKD. BY. DATE	FED. PROJECT IR-76-2(44)19	F.H.W.A. REGION 5

SUMMIT COUNTY

34
12.14

END CONSTRUCTION
OC-8
STA. 20+00

RAMP "R"

20

77 SOUTH
Canton
NO WORK

END CONSTRUCTION
OC-8

200'

LANE "U"

11 DRUMS AT 25' SPACES
STA. 24+50 TO STA. 27+00

WHITE TEMP. EDGE LINE
STA. 24+50 TO STA. 553+50

250' TAPER

(EXISTING SIGN SUPPORT)
STA. 25+58

EXIT 238
8 NORTH
Cuyahoga Falls
EXIT ONLY

76 77 WEST NORTH
LEFT 2 LANES

EXIT 234
77 SOUTH
Canton
LEFT 1/4 MILE

NO WORK

STREET

RAMP "E-2"

TEMP. LANE LINE
STA. 24+00 TO STA. 553+50

TYPE A50, AS PER PLAN
TEMP. CONC. BARRIER
STA. 28+90 TO STA. 553+50

YELLOW TEMP. EDGE LINE
STA. 24+00 TO STA. 553+50

12' SHOULDER
12' PAVEMENT

MATCH LINE STA. 553+50

24+00

27+00

25

℄ I-76 WB

48'
30'
3'
12'
12'
12'
24'
3'
12'
12'

EB. STA. 553+43.40=
WB. STA. 31+50.70

24' PAVEMENT
12' SHOULDER

TEMP. CHANNELIZING LINE
STA. 24+00 TO STA. 25+65

TEMP. CHANNELIZING LINE
STA. 24+50 TO STA. 25+65

TEMP. TRANSVERSE LINES, 53'

STA. 54+00
FLASHING ARROW PANEL
TYPE C (MOD.)

600' LANE TRANSITION
STA. 541+00 TO STA. 547+00
TEMPORARY WHITE EDGE LINE
STA. 541+00 TO STA. 548+50
25 DRUMS AT 25' SPACES
STA. 541+00 TO STA. 547+00

MATCH LINE STA. 541+50

545

℄ I-76 EB

550

12'
12'
12'
12'

YELLOW TEMP. EDGE LINE
STA. 549+00 TO STA. 553+50

TEMPORARY LANE LINE
STA. 550+50 TO STA. 553+50

TEMPORARY CHANNELIZATION LINE
STA. 548+50 TO STA. 550+50

TEMPORARY CONCRETE BARRIER
TYPE A50, AS PER PLAN
STA. 546+50 TO STA. 553+50

TEMP. WHITE EDGE LINE
STA. 547+50 TO STA. 553+50

SHOULDER RECONSTRUCTION

TEMP. CHANNELIZING LINES

15'
15'
120'
115'

LANE "S"

30' MIN.

548+50

200' BARRIER TAPER

TAPERED END SECTION

546+50

TEMPORARY WHITE EDGE LINE
STA. 547+00 TO STA. 548+50

547+50

INMAN

240' TEMP. DOTTED LINE

RAMP "T"

25'
50'

OW-1RS-36

400' LANE TRANSITION
USING 17 DRUMS AT 25' SPACES
AND WHITE TEMPORARY EDGE LINE

R-2-60
YIELD

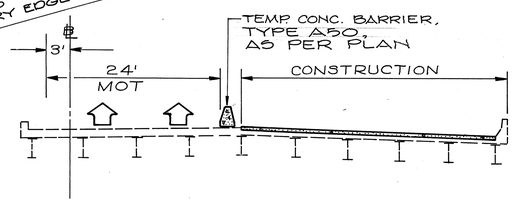

EASTBOUND

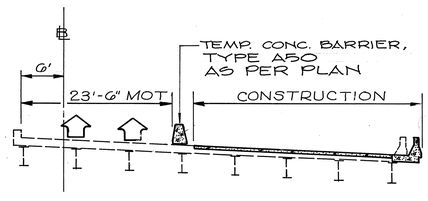

WESTBOUND

I-76 OVER INMAN STREET

SCALE IN FEET
0 40 80 120

MAINTENANCE OF TRAFFIC PHASE 2

AA B/P# 71942R

CALC. BY. DATE	SUM-76-11.57	OHIO
CHKD. BY. DATE	FED. PROJECT IR-76-2(44)19	F.H.W.A. REGION 5

35
1214

SUMMIT COUNTY

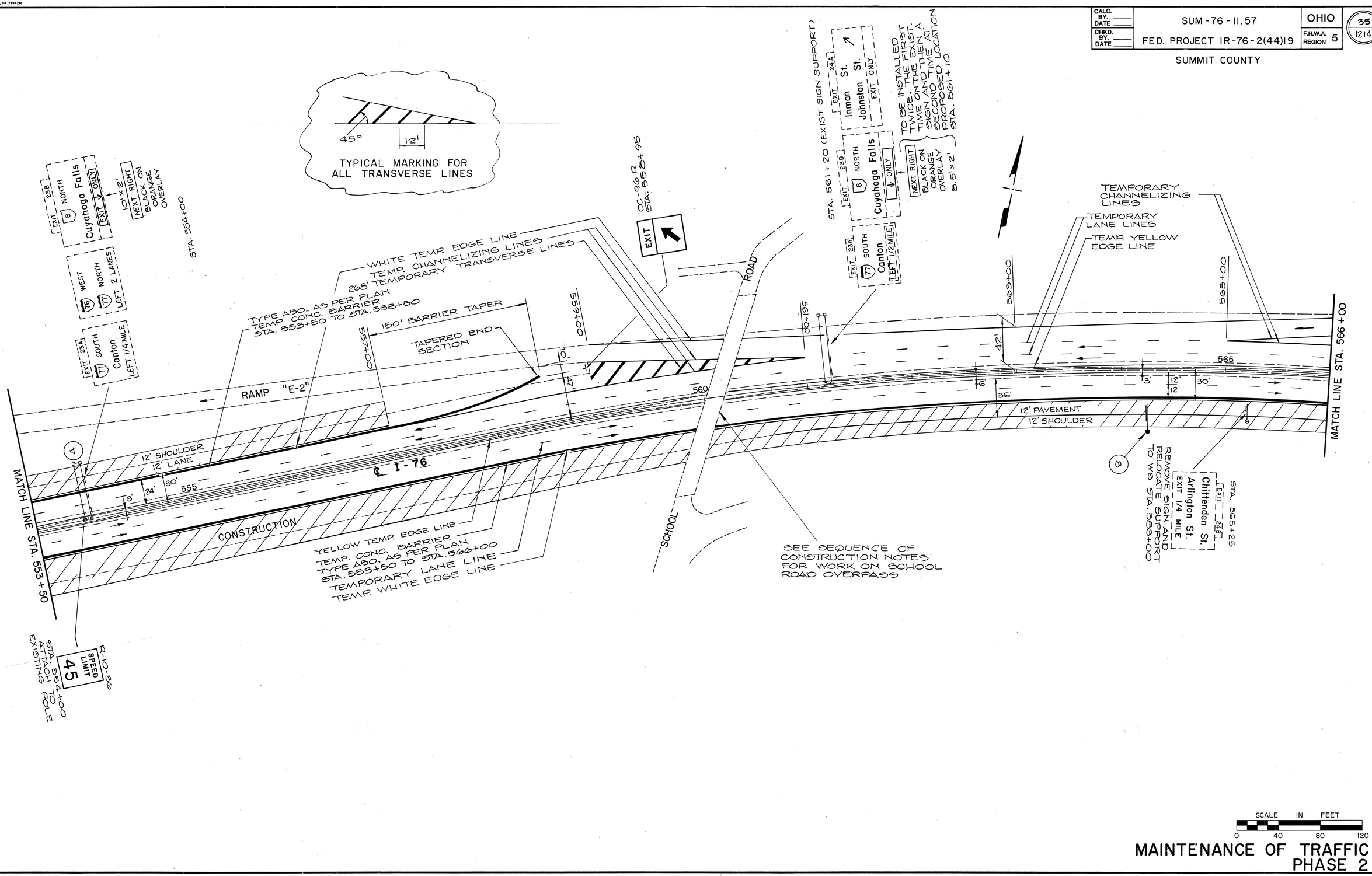

SCALE IN FEET
0 40 80 120

MAINTENANCE OF TRAFFIC PHASE 2

AA B/Pw 71942R

CALC. BY. DATE	SUM - 76 - 11.57	OHIO
CHKD. BY. DATE	FED. PROJECT IR-76-2(44)19	F.H.W.A. REGION 5

SUMMIT COUNTY

36 / 1214

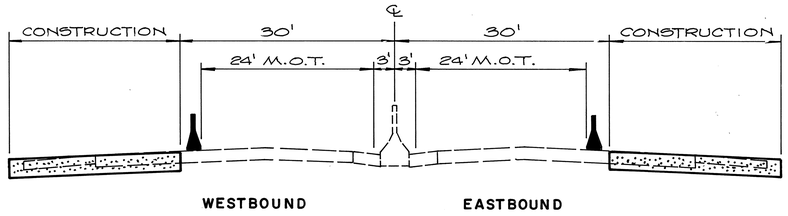

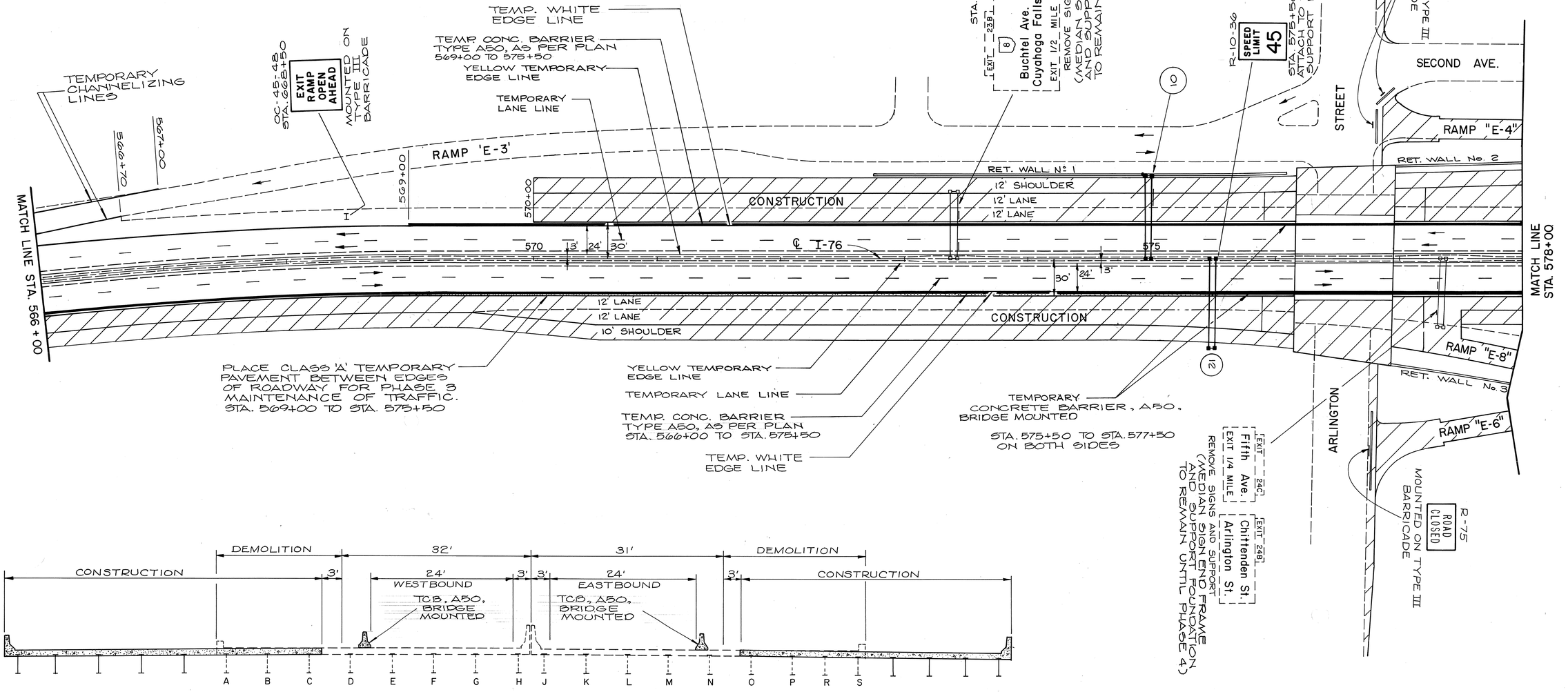

I-76 OVER ARLINGTON ST.

SCALE IN FEET
0 40 80 120

MAINTENANCE OF TRAFFIC PHASE 2

AA B/P# 71242R

CALC. BY. DATE	SUM-76-11.57	OHIO
CHKD. BY. DATE	FED. PROJECT IR-76-2(44)19	F.H.W.A. REGION 5

SUMMIT COUNTY

37
12.14

REERECT EXISTING POLE AND ARMS FROM STA. 585+25 EASTBOUND. 3'x15' FOUNDATION STA. 583+00

(18) (b)

Inman St. Johnston St. 1/2 MILE

REMOVE SIGNS AND SUPPORT

E. Market St. EXIT 1/3 MILE

Martha Ave. EXIT 240

Fifth Ave. NEXT RIGHT EXIT 242

STA. 583+26

Inman St. EXIT 24A

Johnston St. EXIT 1/2 MILE

Arlington St. EXIT 23B

REMOVE SIGNS AND SUPPORT

SECOND AVENUE

RAMP "E-4"

EXIST. RAMP "E-4"

RET. WALL Nº 2

TEMPORARY CHANNELIZING LINE

CONSTRUCTION

MATCH LINE STA. 578+00

30' 3' 24' 580

24' 11' LANE 11' LANE

℄ I-76

585

TYPE A50, AS PER PLAN TEMPORARY CONCRETE BARRIER

TEMPORARY CHANNELIZING LINE

RET. WALL Nº 4

A50 TEMPORARY CONCRETE BARRIER, BRIDGE MOUNTED, (ANCHORED) EB AND WB

SEE CHITTENDEN STREET BRIDGE REMOVAL PLANS, SHEET No. 38

RAMP "E-6"

RAMP "E-8"

580+00 582+00 583+00 585+00

PAVEMENT TRANSITION 24' TO 22' BOTH SIDES

22' PAVEMENT BOTH SIDES

PAVEMENT TRANSITION 22' TO 24' BOTH SIDES

TYPE A50, AS PER PLAN TEMPORARY CONCRETE BARRIER

WHITE TEMP. EDGE LINE

TEMPORARY LANE LINE

12' SHOULDER 12' LANE

YELLOW TEMP. EDGE LINE

RET. WALL Nº 5

RAMP "E-7"

EXIST. RAMP "E-7"

30' 24' 3'

CONSTRUCTION

YELLOW TEMPORARY EDGE LINE

TEMPORARY LANE LINE

WHITE TEMP. EDGE LINE

MATCH LINE STA. 590+00

SCALE IN FEET

0 40 80 120

MAINTENANCE OF TRAFFIC PHASE 2

F.H.W.A. REG.	STATE	PROJECT	
5	OHIO	SUM-76-11.57	

38
1214

SUMMIT COUNTY

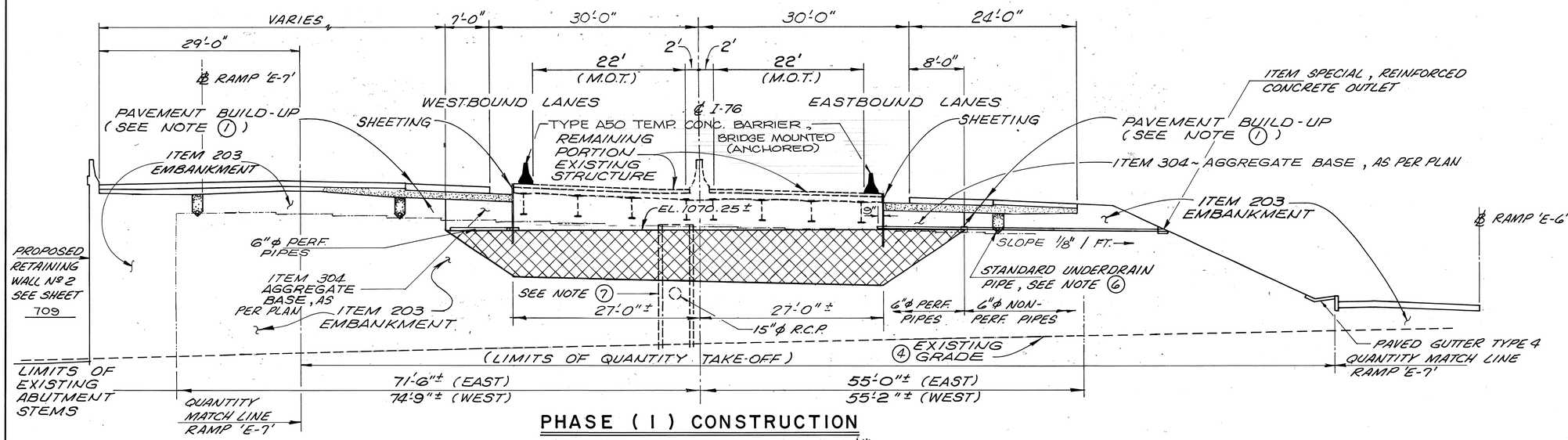

PHASE (1) CONSTRUCTION

(TYPICAL TRANSVERSE SECTION)*

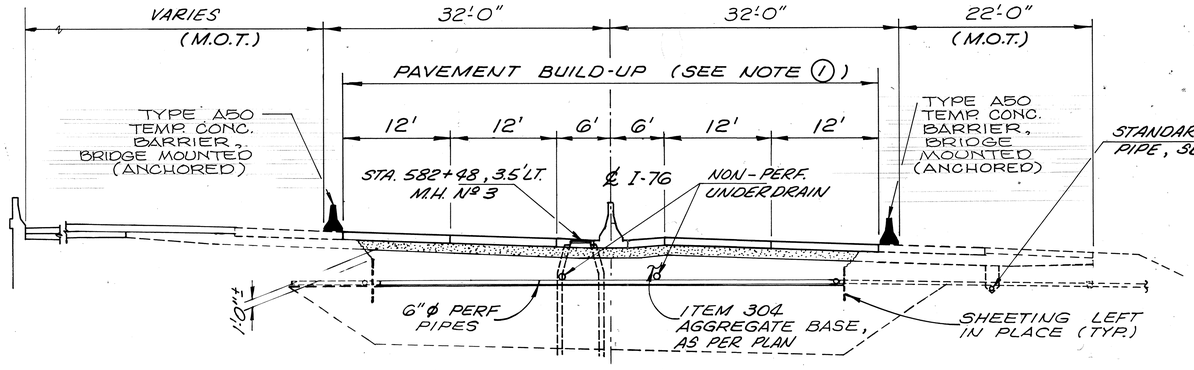

PHASE (2) CONSTRUCTION

(TYPICAL TRANSVERSE SECTION)*

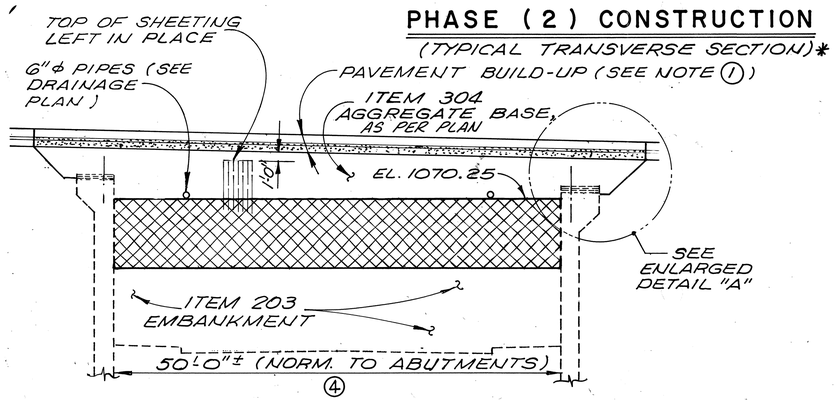

SECTION "C-C"

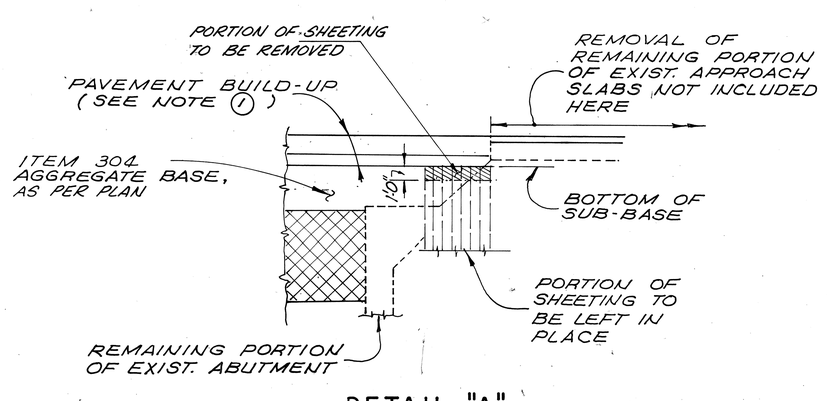

DETAIL "A"

NOTE

① FOR ACTUAL PAVEMENT BUILD-UP AND PAVEMENT BREAKS SEE PROPOSED TYPICAL SECTIONS SHT. 9

② FOR ADDITIONAL PHASING AND REMOVAL DETAILS SEE SHEET 239

③ M.O.T. ~ DENOTES LIMITS OF MAINTENANCE OF TRAFFIC.

▨ DENOTES LIMITS OF ITEM SPEC. ~ LOW STRENGTH MORTAR BACKFILL MATERIAL

④ FOR WORK ASSOCIATED WITH PAVEMENT REMOVAL, EXISTING AND PROPOSED UTILITIES AND PROPOSED WORK, NOT SHOWN HERE, SEE ROADWAY DRAWINGS.

MAINTENANCE OF TRAFFIC NOTES

PHASE I CONSTRUCTION SHOWN ON THIS SHEET IS FOR MAINTENANCE OF TRAFFIC PHASE 2
AND
PHASE 2 CONSTRUCTION SHOWN ON THIS SHEET IS FOR MAINTENANCE OF TRAFFIC PHASE 4

FOR OTHER REMAINING BRIDGE REMOVAL DETAILS, ADDITIONAL NOTES AND DRAINAGE PLAN, SEE THE STRUCTURE REMOVAL PLANS.

MAINTENANCE OF TRAFFIC

URS

7

PROPOSED CONSTRUCTION LIMITS

REMOVAL CHITTENDEN STREET
I-76 STA. 582+50.00

AKRON OHIO — SUMMIT COUNTY

DESIGNED	DRAWN	TRACED	CHECKED	REVIEWED	DATE	REVISED
A.L.H.	A.L.H.		F.A.M.			

AA B/P# 71942R

CALC. BY. DATE	SUM -76 -11.57	OHIO	39
CHK'D. BY. DATE	FED. PROJECT IR-76-2(44)19	F.H.W.A. REGION 5	1214

SUMMIT COUNTY

STA. 592+00 STA. 593+99.00
RAMP E-4 4' SHOULDER
CLASS 'A' TEMP. PAVEMENT
WB 4% 12' SHOULDER
STA. 593+00
7'

TEMP. WHITE EDGE LINE
TEMP. LANE LINE
TEMP. YELLOW EDGE LINE
TEMP. CONC. BARRIER TYPE A50, AS PER PLAN
RAMP "E-7"
EXIST. RAMP "E-7"
592+00
593+00
INSTALL CLASS 'A' TEMP. PAVEMENT FOR PHASE 3
BARRIER TAPER
STA. 593+00 TO STA. 595+00
RAMP "E-4"
CONSTRUCTION
MATCH LINE STA. 590+00
24'
595
26'
24'
12' LANE
12' LANE
SHOULDER
EXIT RAMP OPEN AHEAD
OC-45-48
591+25
TEMP. WHITE EDGE LINE
TEMP. YELLOW EDGE LINE
TEMP. LANE LINE
RAMP 'E-8'
TEMP. CONC BARRIER, TYPE A50, AS PER PLAN
BARRIER TAPER
STA 593+00 TO
STA 595+00

TYPE III BARRICADE
FULLER STREET
R-75
ROAD CLOSED
TEMPORARY CONCRETE BARRIER, TYPE A50, BRIDGE MOUNTED EASTBOUND AND WESTBOUND
596+50
595+00
76 EAST
EXIT 24D
E. Market St.
EXIT ONLY
EXIT 24C
Martha Ave.
Fifth Ave.
REMOVE SIGNS AND SUPPORT

REERECT EXISTING SUPPORT FROM INTERSECTION AT MARKET AT RAMP E-19. INSTALLATION OF SECTION RAMP E-19. 9'x17' FOUNDATION
CHESSIE SYSTEM
THIRD AVE.
ATTACH TO SUPPORT POLE STA. 597+50
R-10-36
SPEED LIMIT 45
R-10-36
SPEED LIMIT 45
33.5' LEFT STA. 598+00
Inman St.
Johnston St.
EXIT ONLY
BLACK ON ORANGE 3/4 MILE
16x2' OVERLAY
18
10
TEMP. CONC. BARRIER TYPE A50, BRIDGE MOUNTED
C2+00.69
MATCH LINE STA. 601+00
℄ I-76
24'
600
12'
12'
12' LANE
12' LANE
12' SHOULDER
600+20
TYPE A50 TEMP. CONC. BARRIER, BRIDGE MOUNTED
EXIST. RAMP "E-8"
TEMPORARY LANE LINE
TEMP. YELLOW EDGE LINE
TEMP. WHITE EDGE LINE
TYPE III BARRICADE
R-75
ROAD CLOSED
STREET
FIFTH AVE.
WEEKS ST.

℄
34'
3.5'
CONSTRUCTION
DEMOLITION
8.5'
24'
WESTBOUND
2'
2'
24'
EASTBOUND
2'
DEMOLITION
CONSTRUCTION
3'
2'
A50 TEMP. CONC. BARRIER, BRIDGE MOUNTED
A B C D E F G

SCALE IN FEET
0 40 80 120

I-76 OVER FULLER STREET

MAINTENANCE OF TRAFFIC PHASE 2

AA B/P# 71942R

CALC. BY. DATE	SUM -76 - 11.57	OHIO
CHKD. BY. DATE	FED. PROJECT IR-76-2(44)19	F.H.W.A. REGION 5

SUMMIT COUNTY

40
1214

FOR KELLY AVE. MAINTENANCE OF TRAFFIC PLAN, SEE SHEET 85.

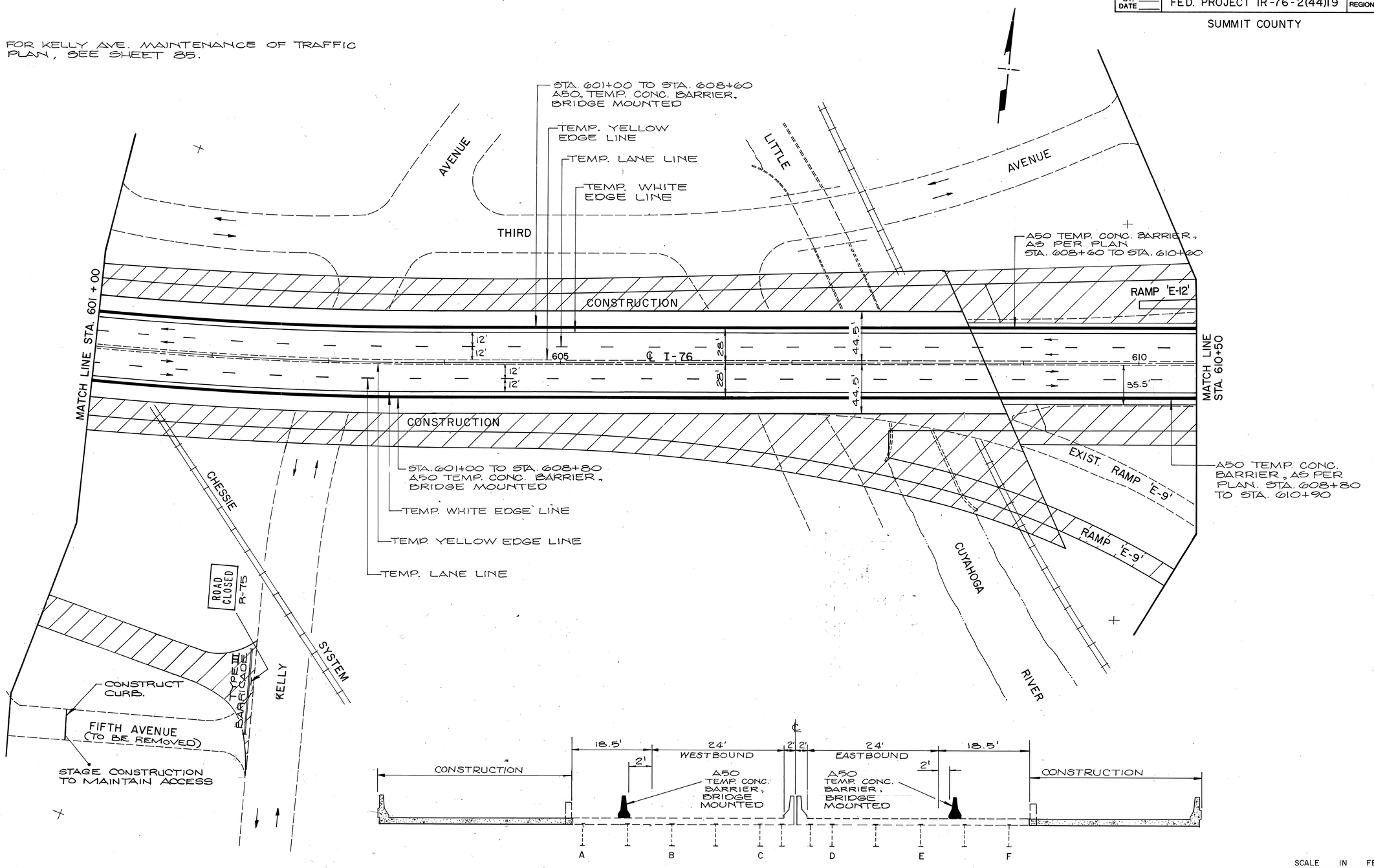

SCALE IN FEET
0 40 80 120

I-76 WEST VIADUCT

MAINTENANCE OF TRAFFIC PHASE 2

AA B/P# 71942R

CALC. BY.		SUM-76-11.57	OHIO	41
CHKD. BY.		FED. PROJECT IR-76-2(44)19	F.H.W.A. REGION 5	12.14
DATE		SUMMIT COUNTY		

FOR MARTHA AVE. MAINTENANCE OF TRAFFIC PLAN, SEE SHEET 86.

STA. 615+00
STA. 613+30.00
EB W 12' SHOULDER
1'
2'
RAMP E-10 4' SHOULDER
CLASS 'A' TEMP. PAVEMENT
NOT TO SCALE
DETAIL 'A'

BLANK OVERLAY, 3'x3'
6'x2' OVERLAY BLACK ON ORANGE
1/2 MILE
EXIT ONLY
General St. ✓
Brittain Rd.

REERECT EXISTING POLE AND ARMS FROM STA. 612+25 EASTBOUND 3'x15' FOUNDATION

STA. 610+55, 31.5' RT.
(22) (b)
MATCH LINE STA. 610+50

E-9
A50 TEMPORARY CONCRETE BARRIER, BRIDGE MOUNTED.
STA. 610+90 TO STA. 611+70

RAMP "E-9"
EXIST. RAMP
MARTHA
TYPE III BARRICADE
25'
R-75 ROAD CLOSED

(22)
A50 TEMP. CONC. BARRIER, BRIDGE MOUNTED (ANCHORED) STA. 610+60 TO STA. 611+50
WHITE TEMPORARY EDGE LINE.
TEMP. LANE LINE
TEMP. YELLOW EDGE LINE

REMOVE SIGN
RELOCATE SUPPORT TO STA. 610+55 EASTBOUND
TYPE III BARRICADE
E. Market St.
Goodyear Blvd.
EXIT 24A
EXIT ONLY
STA. 612+25
R-75 ROAD CLOSED

TEMP. LANE LINE
TEMP. YELLOW EDGE LINE
TEMP. WHITE EDGE LINE
CLASS A TEMP. PAVEMENT, SEE DETAIL 'A'
CONSTRUCT CURB
RAMP "E-16"
S. JOHNS AVE.
ENGLEWOOD AVE.
E-10'
℄ I-76
CONSTRUCTION
28' 28'
35.5' 35.5'
615
12' SHOULDER
12' LANE
12' LANE
12' SHOULDER
EXIST. RAMP "E-10"
RET. WALL Nº 10
RET. WALL Nº 9
CONSTRUCTION

A50, AS PER PLAN TEMP. CONC. BARRIER STA. 611+90 TO STA 617+00
BARRIER TAPER STA. 615+00 TO STA. 617+00

CONSTRUCT CURB
EXIST. RAMP "E-12"
RAMP "E-12"
TYPE III BARRICADE
R-75 ROAD CLOSED
AVENUE

EXIST. RAMP "E-13"
RAMP "E-15"
A50, AS PER PLAN TEMP. CONC. BARRIER STA. 611+50 TO STA. 617+00
BARRIER TAPER STA. 615+50 TO STA. 617+00

REMOVE SIGNALIZATION
CONSTRUCT CURB
REMOVE SIGNAL SUPPORT, SIGN AND REFLECT AT STA. 598+00 WB
76 WEST

MATCH LINE STA. 617+00
26' 26'

NOTE: WATER LINE RECONSTRUCTION ALONG ENGLEWOOD AVE TO BE COMPLETED PRIOR TO ROADWAY CONSTRUCTION

DEMOLITION
CONSTRUCTION
6.5'
24'
2'
2'
A50 TEMP. CONC. BARRIER, BRIDGE MOUNTED (ANCHORED)
A B C D E F G H J

WESTBOUND

2'
24'
9'
DEMOLITION
2'
3.5'
CONSTRUCTION
A50 TEMP. CONC. BARRIER, BRIDGE MOUNTED
K L M N O P Q R

EASTBOUND

I-76 OVER MARTHA AVENUE

SCALE IN FEET
0 40 80 120

MAINTENANCE OF TRAFFIC PHASE 2

F.H.W.A. REG.	STATE	PROJECT	
5	OHIO	SUM-76-11.57	

42 / 12.14

SUMMIT COUNTY

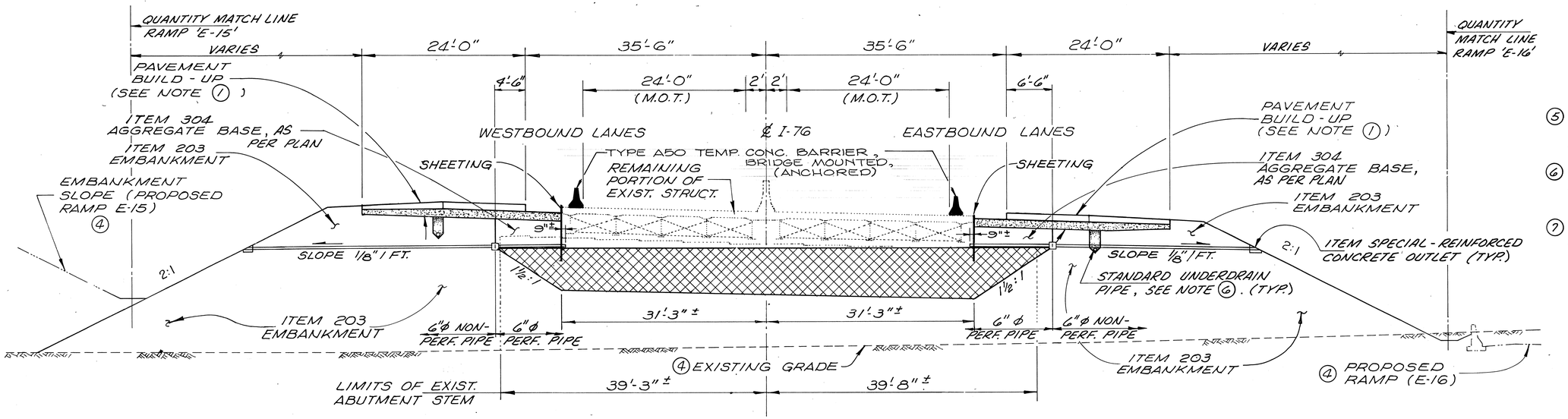

PHASE (I) CONSTRUCTION
(TYPICAL TRANSVERSE SECTION) *

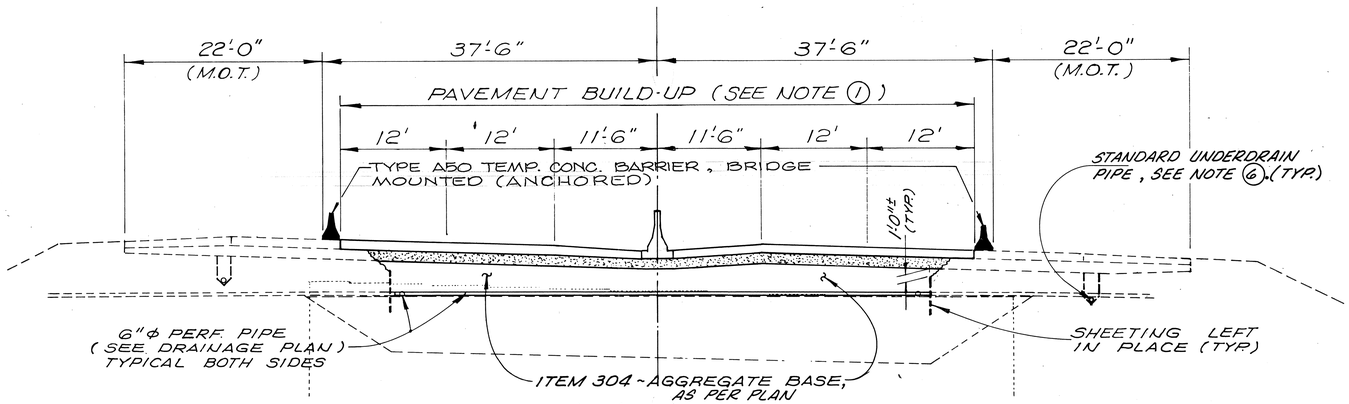

PHASE (2) CONSTRUCTION
(TYPICAL TRANSVERSE SECTION) *

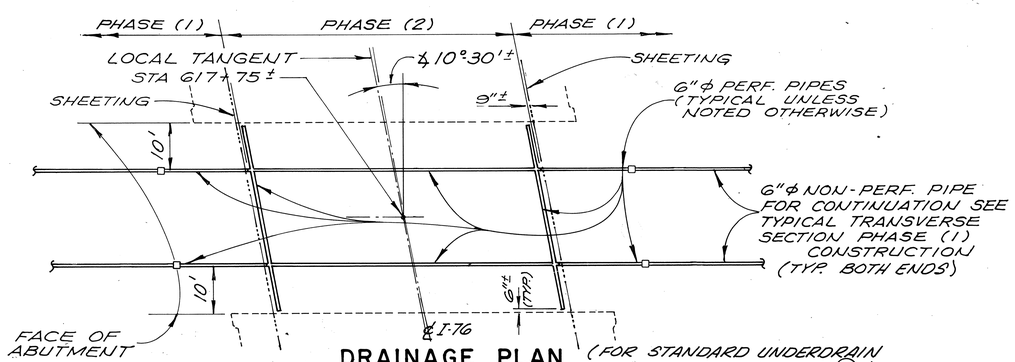

DRAINAGE PLAN

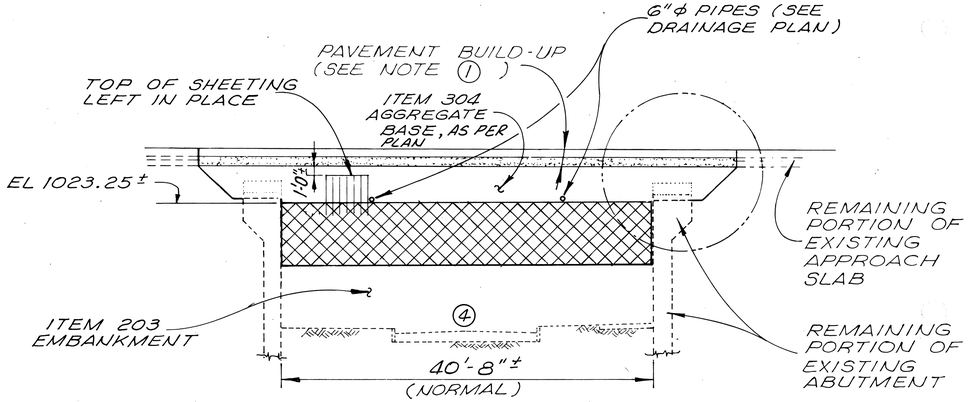

TYPICAL LONGITUDINAL SECTION

MAINTENANCE OF TRAFFIC NOTES

PHASE I CONSTRUCTION SHOWN ON THIS SHEET IS FOR MAINTENANCE OF TRAFFIC PHASE 2
AND
PHASE 2 CONSTRUCTION SHOWN ON THIS SHEET IS FOR MAINTENANCE OF TRAFFIC PHASE 4

FOR OTHER REMAINING BRIDGE REMOVAL DETAILS SEE THE STRUCTURE REMOVAL PLANS.

(5) * ~ INDICATES TRANSVERSE SECTION FROM STA. 617+54.25 TO STA. 617+95.75.

(6) FOR STANDARD UNDERDRAIN LOCATIONS AND QUANTITIES SEE SHEET 521/1214 THRU 524/1214.

(7) EXISTING BRIDGE PLANS CAN BE OBTAINED FROM THE OHIO DEPARTMENT OF TRANSPORTATION, DISTRICT 4, RAVENNA, OHIO FOR DETAILS AND DIMENSIONS NOT SHOWN.

NOTE

(1) FOR ACTUAL PAVEMENT BUILD-UP AND PAVEMENT BREAKS SEE PROPOSED TYPICAL SECTIONS SHT. 10/1214

(2) FOR ADDITIONAL PHASING AND REMOVAL DETAILS SEE SHEET 241/1214.

(3) M.O.T. ~ DENOTES LIMITS OF MAINTENANCE OF TRAFFIC.

DENOTES LOW STRENGTH MORTOR BACKFILL MATERIAL.

(4) FOR WORK ASSOCIATED WITH PAVEMENT REMOVAL, EXISTING AND PROPOSED UTILITIES AND PROPOSED WORK, NOT SHOWN HERE, SEE ROADWAY DRAWINGS.

MAINTENANCE OF TRAFFIC

URS

PROPOSED CONSTRUCTION LIMITS
REMOVAL RAMP E-10
I-76 STA. 617+75.00

AKRON OHIO — SUMMIT COUNTY

DESIGNED	DRAWN	TRACED	CHECKED	REVIEWED	DATE	REVISED
A.L.H.	A.L.H.		F.A.M.			

AA B/P# 71942R

CALC. BY. DATE	SUM-76-11.57	OHIO
CHKD. BY. DATE	FED. PROJECT IR-76-2(44)19	F.H.W.A. REGION 5

43
1214

SUMMIT COUNTY

REMOVE EXISTING SIGNALIZATION (See Sheet 616)

CONSTRUCT CURB

INSTALL TEMPORARY SIGNAL SEE SHEET 49

EAST MARKET ST.

EXIST. RAMP "E-10" (TO BE REMOVED)

TEMP. YELLOW EDGE LINE

TEMP. WHITE EDGE LINE STA. 617+00 TO STA. 626+50

TEMP. LANE LINE

DETROIT ST.

WIGLEY AVE.

BARRIER TAPER STA. 618+50 TO STA. 622+50

INSTALL CLASS 'A' TEMP. PAVEMENT FOR PHASE 3 MAINTENANCE OF TRAFFIC

BARRIER TAPER STA. 624+50 TO STA. 628+50

TEMP. IMPACT ATTENUATOR MODEL No. 200200NF66CZ

TEMPORARY PAVEMENT, CLASS A (See Detail 'A')

TEMPORARY TRANSVERSE LINE, 254'

TEMPORARY CHANNELIZING LINES

REMOVE EXIT PANEL AND INSTALL Arlington St 17'1"x2' BLACK ON ORANGE

EXIT 254 Goodyear Blvd. Seiberling St.

RAMP "E-15"

150' A50 TEMP. CONC. BARRIER, BRIDGE MOUNTED (ANCHORED) EASTBOUND AND WESTBOUND

CONSTRUCTION

EXIST. RAMP "E-15" (OPEN)

MATCH LINE STA. 617+00

℄ I-76

620

625

26'

35.5'

28'

30'

38'

12' LANE

12' SHOULDER

BARRIER TAPER STA. 618+50 TO STA. 620+50

SEE RAMP "E-10" BRIDGE REMOVAL PLANS SHEET No. 42

TEMP. CONC. BARRIER, TYPE A50 AS PER PLAN

CONSTRUCTION

RETAINING WALL No. 13

RET. WALL No. 9

RAMP "E-16"

RET. WALL No. 10

EXIST. RAMP "E-16" (CLOSED)

RAMP "E-10"

ENGLEWOOD AVE.

TYPE III BARRICADE

R-75 ROAD CLOSED

WIGLEY AVE.

MAINTAIN ACCESS DURING CONSTRUCTION

STA. 621+00 EXIT 258 General St. Brittain Rd. EXIT 1/4 MILE RELOCATE SIGN AND SUPPORT TO STA. 623+90

STA. 623+90, 31.5' RT. REERECT EXISTING POLE AND ARMS FROM STA. 621+00 EASTBOUND. 3'x17' FOUNDATION

TEMP. YELLOW EDGE LINE

TEMP. WHITE EDGE LINE

TEMP. LANE LINE

MATCH LINE STA. 629+00

STA. 626+50

EXIST RAMP "E-15" PAVEMENT

615-TEMP PAV'T CLASS A

EXIST I-76 WB PAVEMENT

30'

19'

STA. 626+41

DETAIL "A"

SCALE IN FEET
0 40 80 120

MAINTENANCE OF TRAFFIC PHASE 2

AA B/P# 71942R

CALC. BY. DATE	SUM-76-11.57	OHIO	44
CHKD. BY. DATE	FED. PROJECT IR-76-2(44)19	F.H.W.A. REGION 5	12 14

SUMMIT COUNTY

FOR SEIBERLING ST. MAINTENANCE OF TRAFFIC PLAN, SEE SHEET 87.

SEE SHEET 67 AND MAINLINE CROSSECTIONS FOR GEOMETRY OF TEMPORARY PAVEMENT.

NOTE: EXIST. RAMP E-18 IS OPEN.

SEIBERLING STREET

STA. 629+00 TO STA. 634+00

TEMP. LANE LINE

TEMP. YELLOW EDGE LINE

A50 TEMP. CONC. BARRIER, BRIDGE MOUNTED (ANCHORED)

CONSTRUCT SIGN FOUNDATION AND END FRAME SUPPORT

R-10-36 SPEED LIMIT 45

STA. 631+88 ATTACH TO EXISTING POLE

REMOVE EXISTING SIGNS AND SUPPORT WHEN EXIT RAMP E-19 IS CLOSED

[EXIT 28] [8] [52B] E. Market St. Mogadore Rd.

[EXIT 25B] General St. Brittain Rd.

[EXIT 25A] Goodyear Blvd. Seiberling St.

[EXIT 24B] Arlington St. EXIT 1 MILE

TEMPORARY PAVEMENT, CLASS A, AS PER PLAN, SHALL REMAIN IN PLACE

A50 TEMP. CONC. BARRIER, AS PER PLAN STA. 630+20 TO STA. 639+50

TEMP. WHITE EDGE LINE, STA. 629+00 TO STA. 636+00

GUARDRAIL, TYPE 5, STA. 634+00 TO STA. 636+00 WITH TYPE A AND TYPE T ANCHOR ASSEMBLYS

R-2-60 STA. 639+00 YIELD

REMOVE EXIT PANEL 17'x21' BLACK ON ORANGE

Arlington St
Goodyear Blvd.
Seiberling St.
EXIT 3/4 MILE

STA. 665+35

STA. 639+50, PLACE TAPERED END SECTION AT EDGE OF SHOULDER

RETAINING WALL No. 279

CONSTRUCTION

615.05 RIGID PAVEMENT

30' LEFT AT STA. 636+00

37' LEFT AT STA. 638+00

EXIST. RAMP 'E-19'

EXIST. RAMP 'E-17'

MATCH LINE STA. 629+00

630 635 640

℄ I-76

28' 35.5' 24'

CONSTRUCTION

615.05 RIGID PAVEMENT

RETAINING WALL No. 14

RET. WALL No. 13

A50, TEMP. CONC. BARRIER, BRIDGE MOUNTED (ANCHORED)

TEMP. CONC. BARRIER, TYPE A50, AS PER PLAN

STA. 629+00 TO STA. 634+00

TEMP. WHITE EDGE LINE

TEMP. YELLOW EDGE LINE

TEMP. LANE LINE

14' OF TYPE D CONC. BARRIER WITH PARAPET TRANSITION DETAIL SAME AS FOR STRUCTURE SUM-76-1235. SEE SHEET 880

21 DRUMS AT 25' SPACES STA. 634+00 TO STA. 639+00

TEMPORARY PAVEMENT, CLASS A, AS PER PLAN, IS TO REMAIN IN PLACE.

GUARDRAIL, TYPE 5, STA. 634+00 TO STA. 637+50 WITH TYPE T ANCHOR ASSEMBLY, & BRIDGE TERMINAL ASSEMBLY, TYPE 2.

ENGLEWOOD AVENUE

ENGLEWOOD AVENUE CONSTRUCTION ENDS AT STA. 49+25.

[EXIT 25B] General St. Brittain Rd.

RELOCATE EXISTING SIGN AND SUPPORT TO STA. 637+50, 70' RT.

NO OUTLET

STREET

629+20 630+20 634+00 636+00 638+00 639+00

℄

2' 24' MAINTENANCE OF TRAFFIC 6.5' DEMOLITION

2' 3.5' CONSTRUCTION

TEMP. CONCRETE BARRIER, A50 BRIDGE MOUNTED (ANCHORED)

I-76 EASTBOUND AND WESTBOUND OVER SEIBERLING STREET

SCALE IN FEET
0 40 80 120

MAINTENANCE OF TRAFFIC PHASE 2

AA B/P# 71942R

CALC. BY. DATE	SUM-76-11.57	OHIO	45
CHKD. BY. DATE	FED. PROJECT IR-76-2(44)19	F.H.W.A. REGION 5	1214

SUMMIT COUNTY

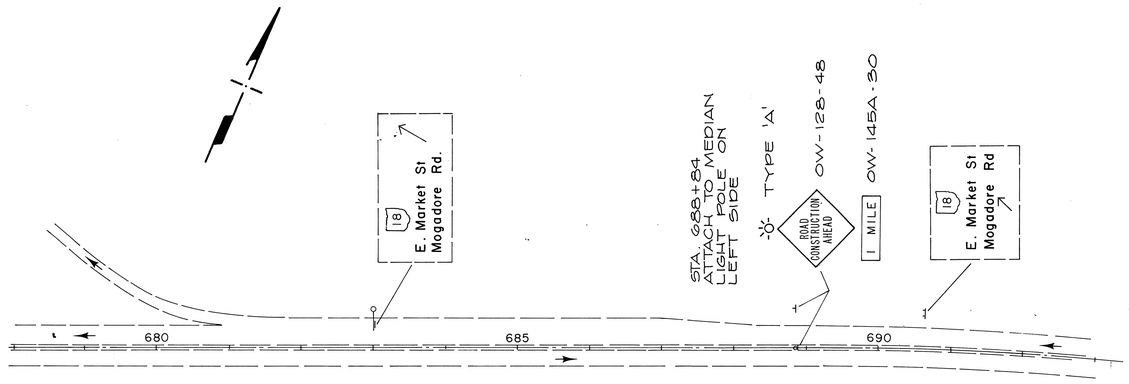

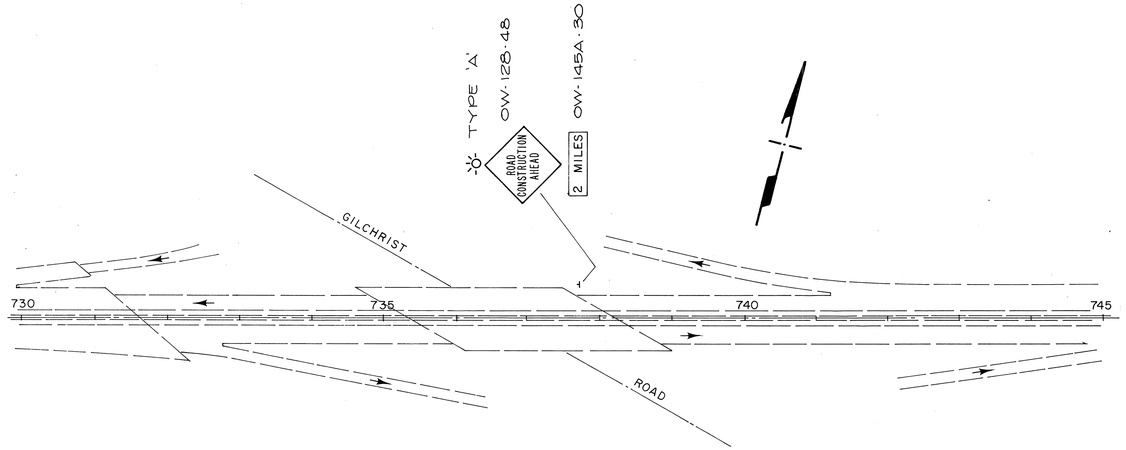

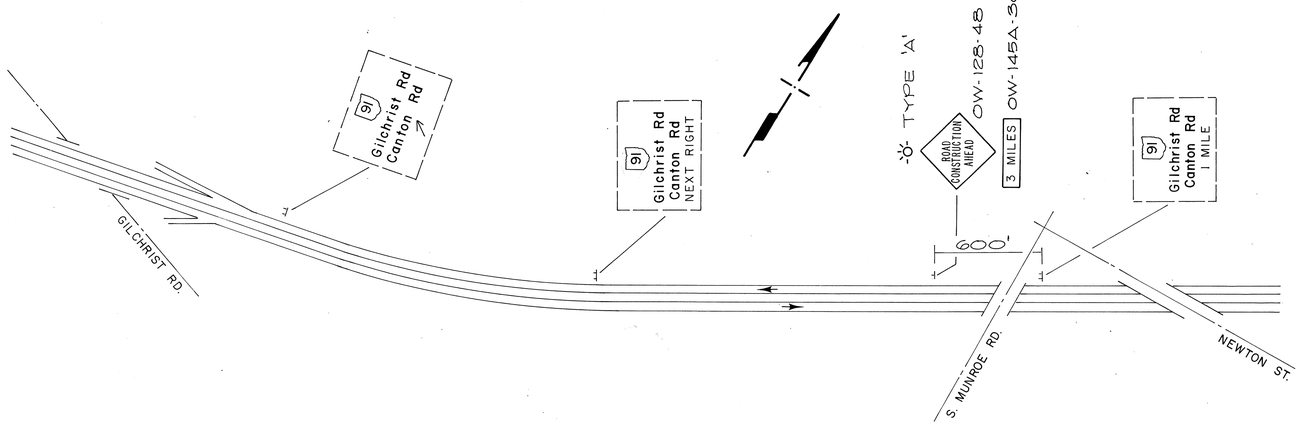

NOTE: THE MAINTENANCE OF TRAFFIC SIGNING SHOWN ON THIS SHEET WILL NOT BE REQUIRED IF CONTRACT ^ IS STARTED.
Sum-76-13.41

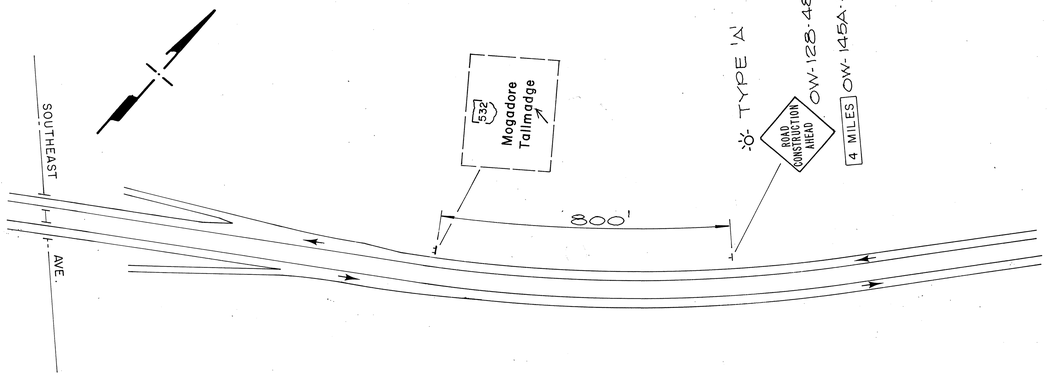

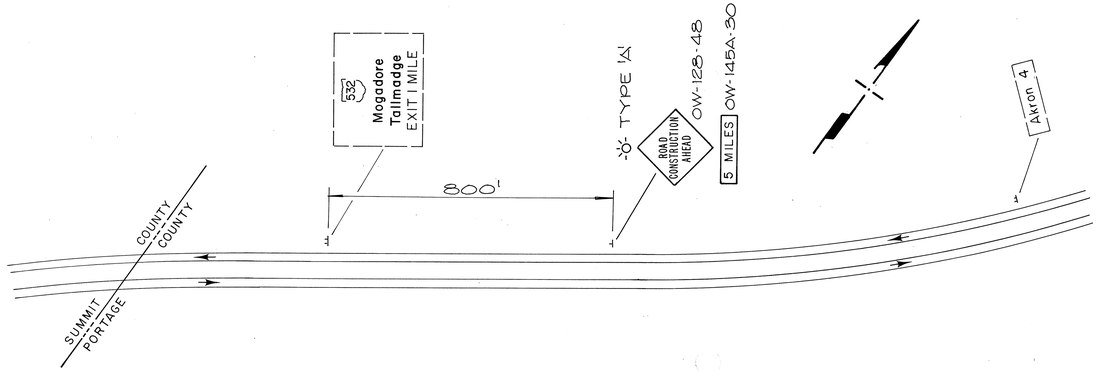

MAINTENANCE OF TRAFFIC PHASE 2

AA B/P# 71942R

CALC. BY. DATE	SUM-76-11.57	OHIO
CHKD. BY. DATE	FED. PROJECT IR-76-2(44)19	F.H.W.A. REGION 5

46
1214

SUMMIT COUNTY

MAINTENANCE OF TRAFFIC PHASE 2

R-75 ROAD CLOSED
MOUNTED ON TYPE III BARRICADE

D-14 OC-29 Arlington St. DETOUR WEST 76 EAST INSTALL 3'x2' BLANK OVERLAY

INSTALL 1'x1' OVERLAY

IM-39-24 M-5-24-2 OM-13-30 OM-23 OW-13-30

OC-29R OC-29L

D-14 IM-40-24 M-5-24-2 OC-29L

IM-39-24 M-5-24-2 OC-29R

SECOND AVE.

THIRD AVE.

FOURTH AVE.

FIFTH AVE.

ARLINGTON ST.

CHITTENDEN ST.

HART ST.

FULLER ST.

KELLY AVE.

E-4 CLOSED

E-5 CLOSED

E-6 CLOSED

E-7 CLOSED

E-8 CLOSED

575 580 585 590 595 600

REMOVE EXISTING SIGNALIZATION. PLACE STOP SIGNS AND POSTS ON ALL FOUR CORNERS.

REMOVE I-76 EAST

REMOVE I-76 WEST

EXPRESSWAY EAST REMOVE

TO I-76 EAST ON WORK

TO I-76 WEST

OC-29 M-5-24-2 IM-39-24

OC-29L M-5-24-2 IM-39-24

OC-29R M-5-24-2 IM-40-24 D-14

OW-14-30 OM-23 M-5-24-2 IM-39-24

MATCH LINE STA. 605+00

SCALE
0 100 200 300

AA B/P# 71942R

CALC. BY. DATE	SUM-76-11.57	OHIO	47
CHKD. BY. DATE	FED. PROJECT IR-76-2(44)19	F.H.W.A. REGION 5	12.14

SUMMIT COUNTY

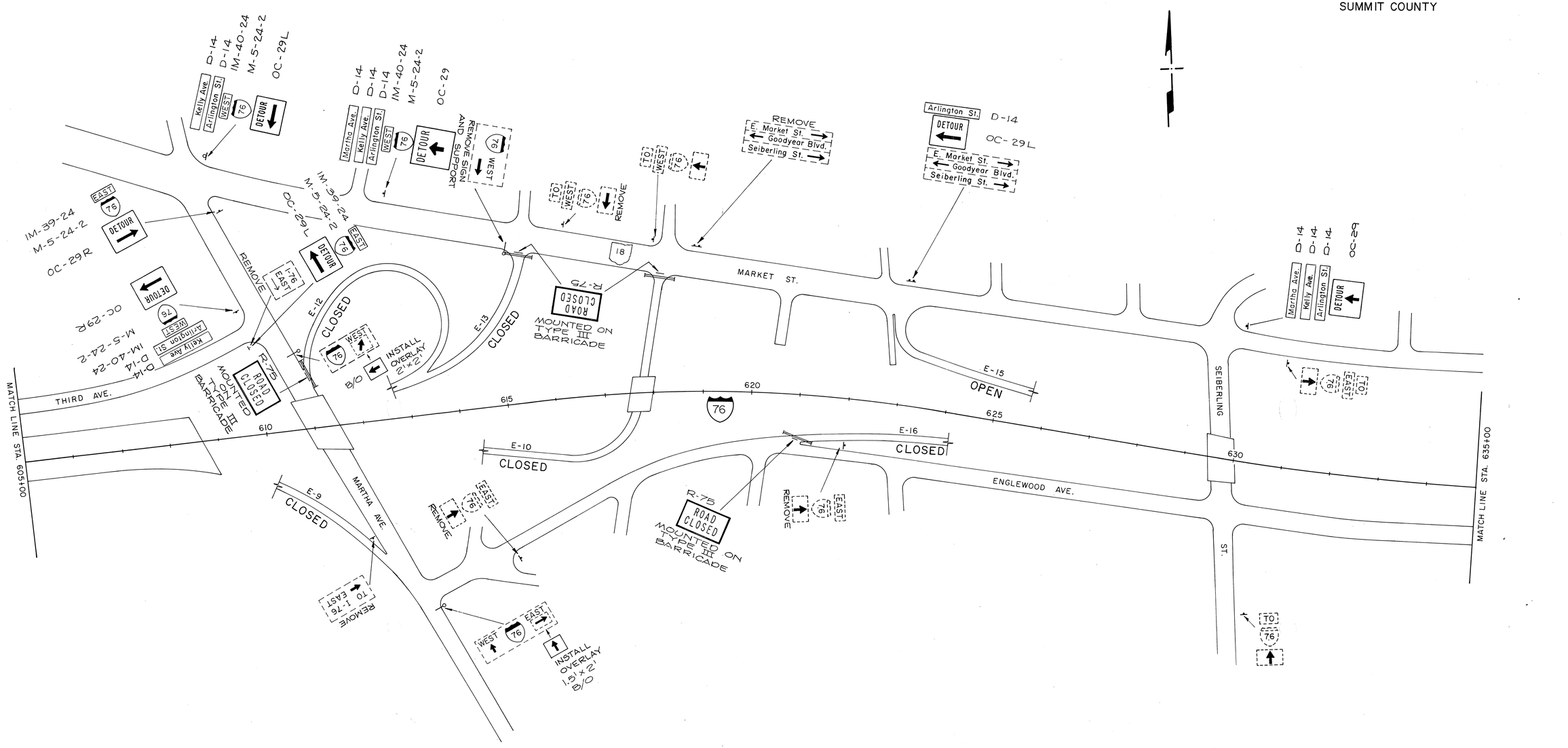

SCALE
0 100 200 300

MAINTENANCE OF TRAFFIC PHASE 2

AA B/P# 71942R

CALC. BY. DATE	SUM - 76 - 11.57	OHIO	48
CHKD. BY. DATE	FED. PROJECT IR-76-2(44)19	F.H.W.A. REGION 5	1214

SUMMIT COUNTY

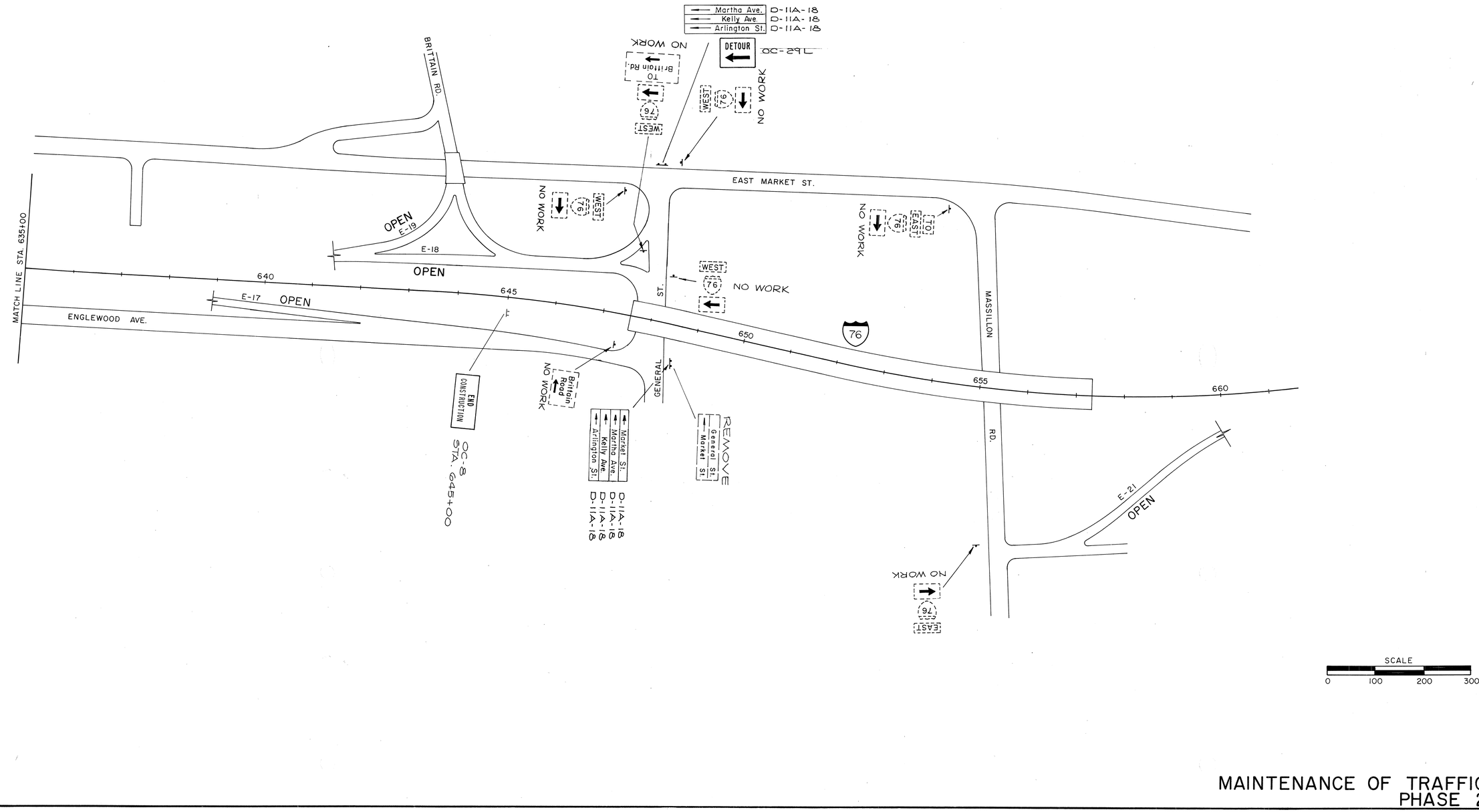

MAINTENANCE OF TRAFFIC PHASE 2

AA B/P# 71942R

CALC. BY. DATE	SUM-76-11.57	OHIO	49
CHKD. BY. DATE	FED. PROJECT IR-76-2(44)19	F.H.W.A. REGION 5	1214

SUMMIT COUNTY

DISPLAY CHART

PHASE	2+6			4			8			
DISPLAY	R/W	CI	C2	R/W	CI	C2	R/W	CI	C2	FLASH
SIGNAL 1,2,3,4	G	Y	R	R	R	R	R	R	R	Y
SIGNAL 7,8	R	R	R	R	R	R	G	Y	R	R
SIGNAL 5,6,9,10	R	R	R	G	Y	R	R	R	R	R

TIMING CHART

INTERVAL OR FEATURE		NEMA PHASE No. 1	2	3	4	5	6	7	8
INTERSECTION MOVEMENT			EB		WIGLEY ELM		WB		E-15
MINIMUM GREEN (INITIAL)	(sec)		25		6		25		6
PASSAGE TIME (PRESET GAP)	(sec)				3				3
MAXIMUM GREEN I	(sec)		HOLD		15		HOLD		30
MAXIMUM GREEN II	(sec)								
YELLOW CHANGE	(sec)		3		3		3		3
ALL RED CLEARANCE	(sec)		2		2		2		2
RECALL	MAXIMUM (on/off)		on		off		on		on
	MINIMUM (on/off)				off				
	PEDESTRIAN (on/off)				off				
MEMORY	(on/off)				off				

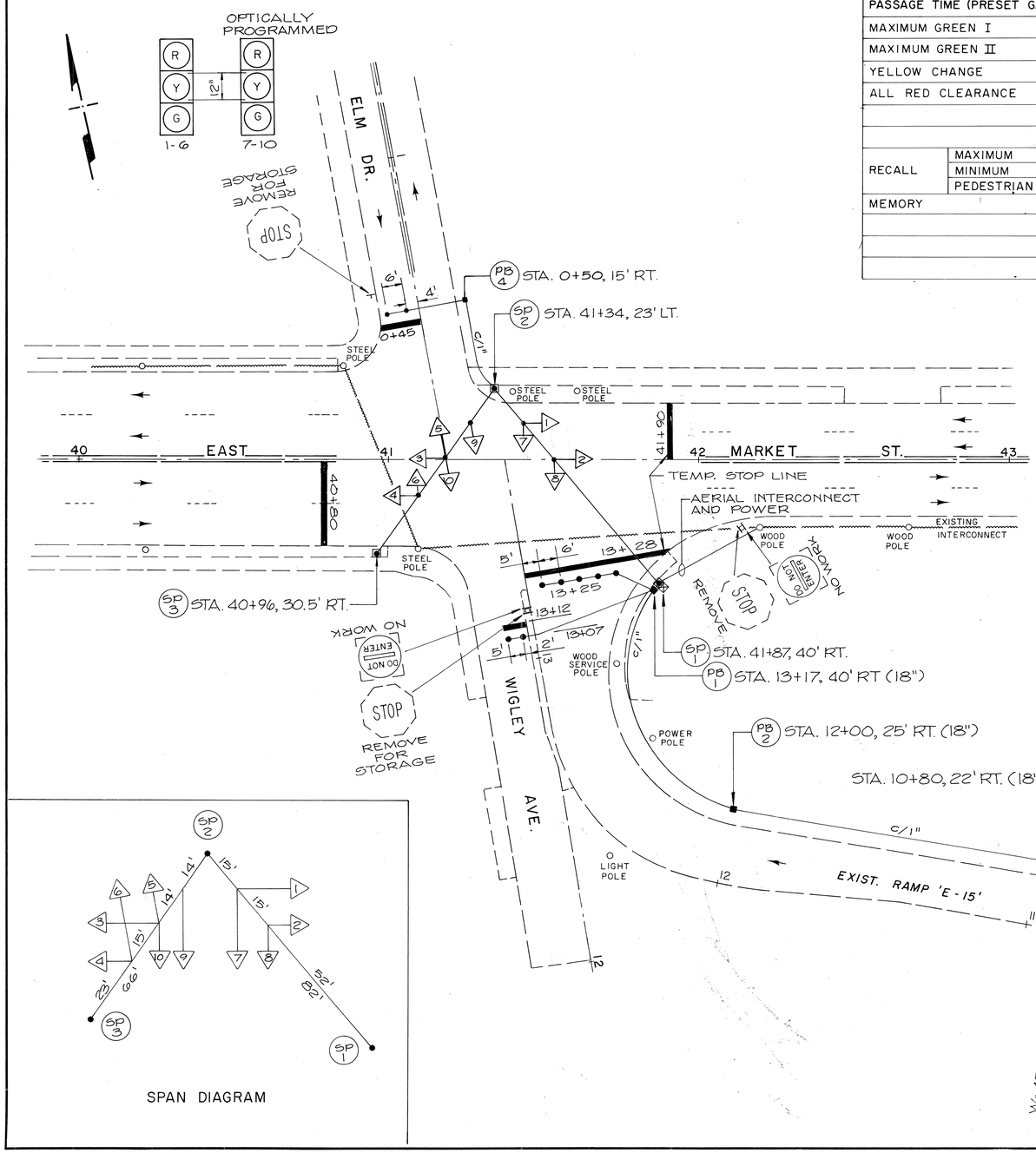

SPAN DIAGRAM

PHASING DIAGRAM

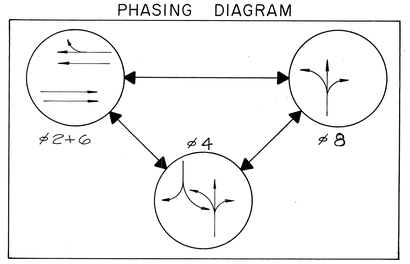

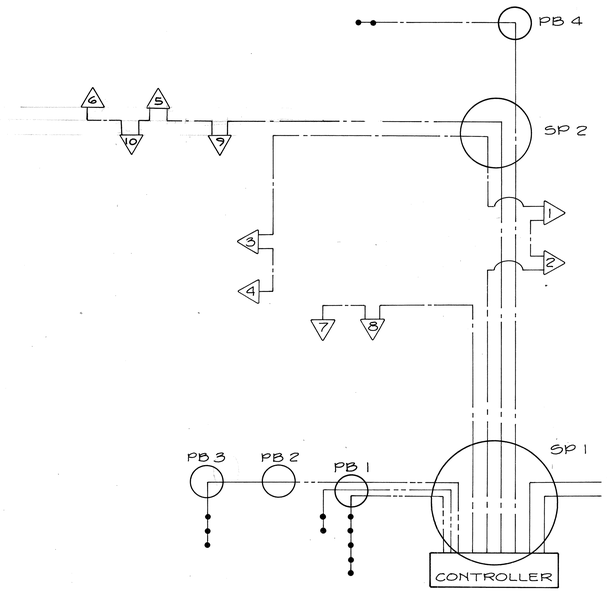

CABLE:
- 4 CONDUCTOR
- 5 CONDUCTOR
- TRAFFIC SIGNAL HEAD
- MAGNETOMETER DETECTORS

WIRING DIAGRAM

THE CITY OF AKRON TRAFFIC ENGINEERING DEPARTMENT SHALL BE RESPONSIBLE FOR PROVIDING THE SIGNAL INTERCONNECTION TO THE INTERSECTION.

WHEN EXISTING RAMP E-15 IS NO LONGER NEEDED, THE FOLLOWING WORK IS TO BE PERFORMED:

1. REMOVE TEMPORARY SIGNAL INSTALLATION.
2. REMOVE TEMPORARY STOP LINE PAVEMENT MARKINGS.
3. REPLACE EXISTING STOP SIGNS FOR WIGLEY AVENUE AND ELM DRIVE.
4. CONSTRUCT PROPOSED CURBING FROM WIGLEY AVENUE TO MARKET STREET.

PAYMENT FOR TEMPORARY SIGNAL INSTALLATION IS INCLUDED IN LUMP SUM BID FOR ITEM 614 - MAINTAINING TRAFFIC.

SCALE
0 20 40 60

TEMPORARY SIGNAL PLAN MARKET ST. AT RAMP E-15 MAINTENANCE OF TRAFFIC PHASE 2

AA B/P# 71942R

CALC. BY. DATE	SUM - 76 - 11.57	OHIO
CHKD. BY. DATE	FED. PROJECT IR-76-2(44)19	F.H.W.A. REGION 5

50
1214

SUMMIT COUNTY

NOTE : NO BREAK IN THE TEMP. CONCRETE BARRIER IS PERMITTED.

SIGNS TO REMAIN ON EXISTING STRUCTURE AT STA. 561+20 UNTIL PROPOSED STRUCTURE AT STA 561+10 IS COMPLETED.

Inman St. / Johnston St. EXIT ONLY

BLANK OVERLAY 19' x 8.5'

8 NORTH Cuyahoga Falls NEXT RIGHT

77 SOUTH Canton LEFT 1/2 MILE

SEE SEQUENCE OF CONSTRUCTION NOTES FOR WORK ON SCHOOL ROAD OVERPASS

TEMP. WHITE EDGE LINE, STA. 559+00 TO STA. 566+00

TYPE A50, AS PER PLAN TEMP. CONC. BARRIER STA. 557+00 TO STA. 566+00

8 NORTH Cuyahoga Falls NEXT RIGHT

76 WEST 77 NORTH LEFT 2 LANES

77 SOUTH Canton LEFT 1/4 MILE

STA. 557+00

ROAD

CONSTRUCTION

RAMP 'E-2'

PHASE 2 CONSTRUCTION

℄ I-76

555

560

565

30'

27'

MATCH LINE STA. 566+00

EXISTING TEMPORARY CONCRETE BARRIER

SCHOOL

Arlington St. / Kelly Ave. 1/4 MILE

SEE TRAFFIC CONTROL PLANS SHEET 631

SPEED LIMIT 45

Arlington St. / Kelly Ave. 1/2 MILE

SEE TRAFFIC CONTROL PLANS, SHEET 630.

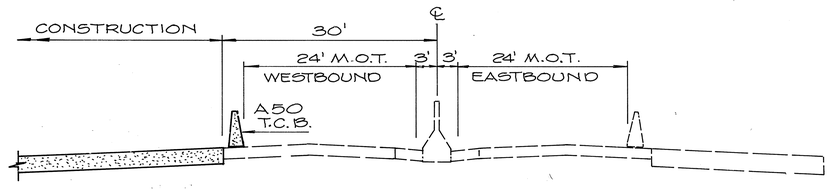

SCALE IN FEET
0 40 80 120

MAINTENANCE OF TRAFFIC PHASE 3

AA B/P# 71942R

CALC. BY. DATE	SUM - 76 - 11.57	OHIO
CHKD. BY. DATE	FED. PROJECT IR-76-2(44)19	F.H.W.A. REGION 5

51
1214

SUMMIT COUNTY

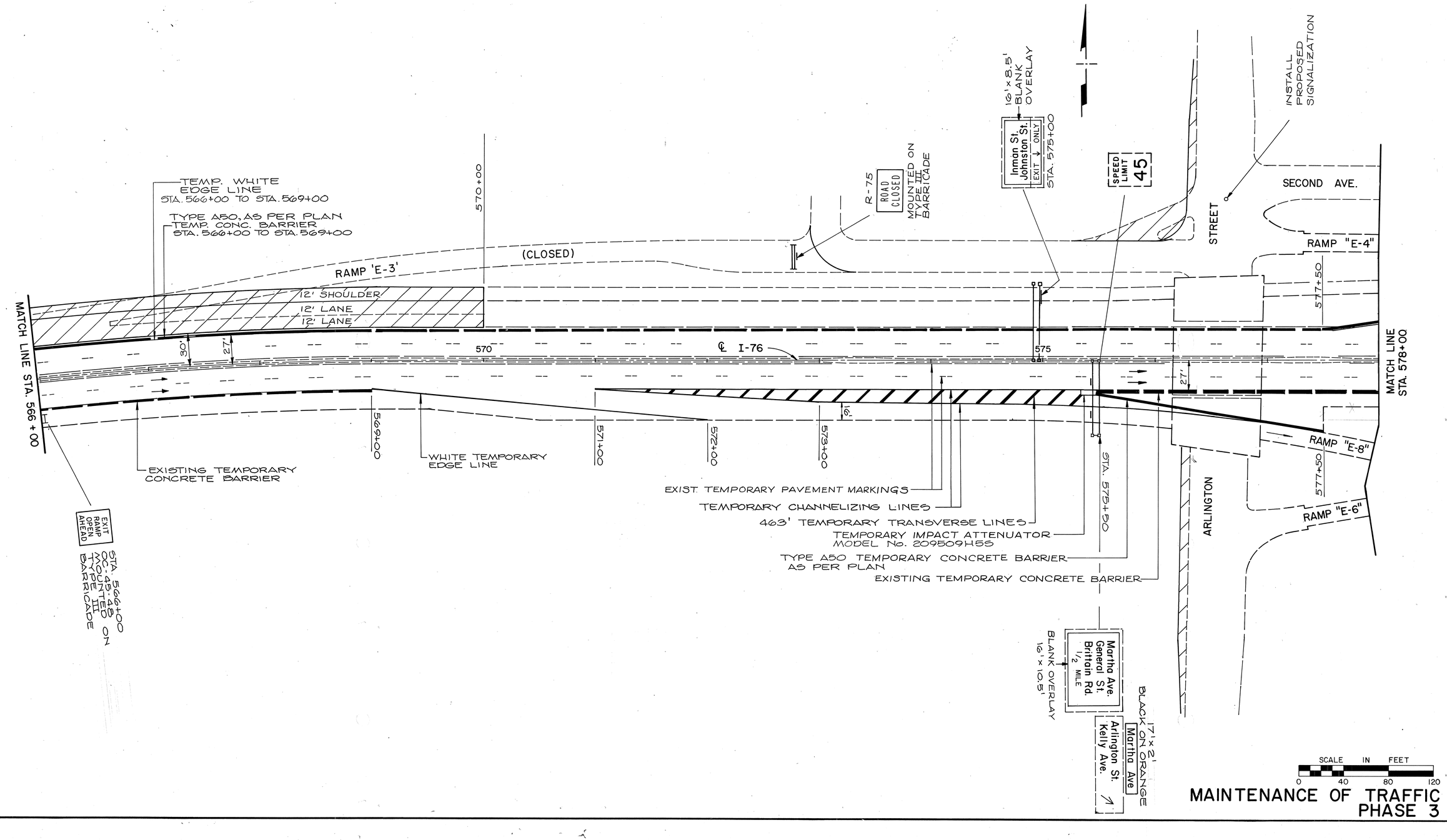

MAINTENANCE OF TRAFFIC PHASE 3

AA B/Pa 71942R

CALC. BY.		SUM - 76 - 11.57	OHIO	52
CHKD. BY, DATE		FED. PROJECT IR-76-2(44)19	F.H.W.A. REGION 5	1214

SUMMIT COUNTY

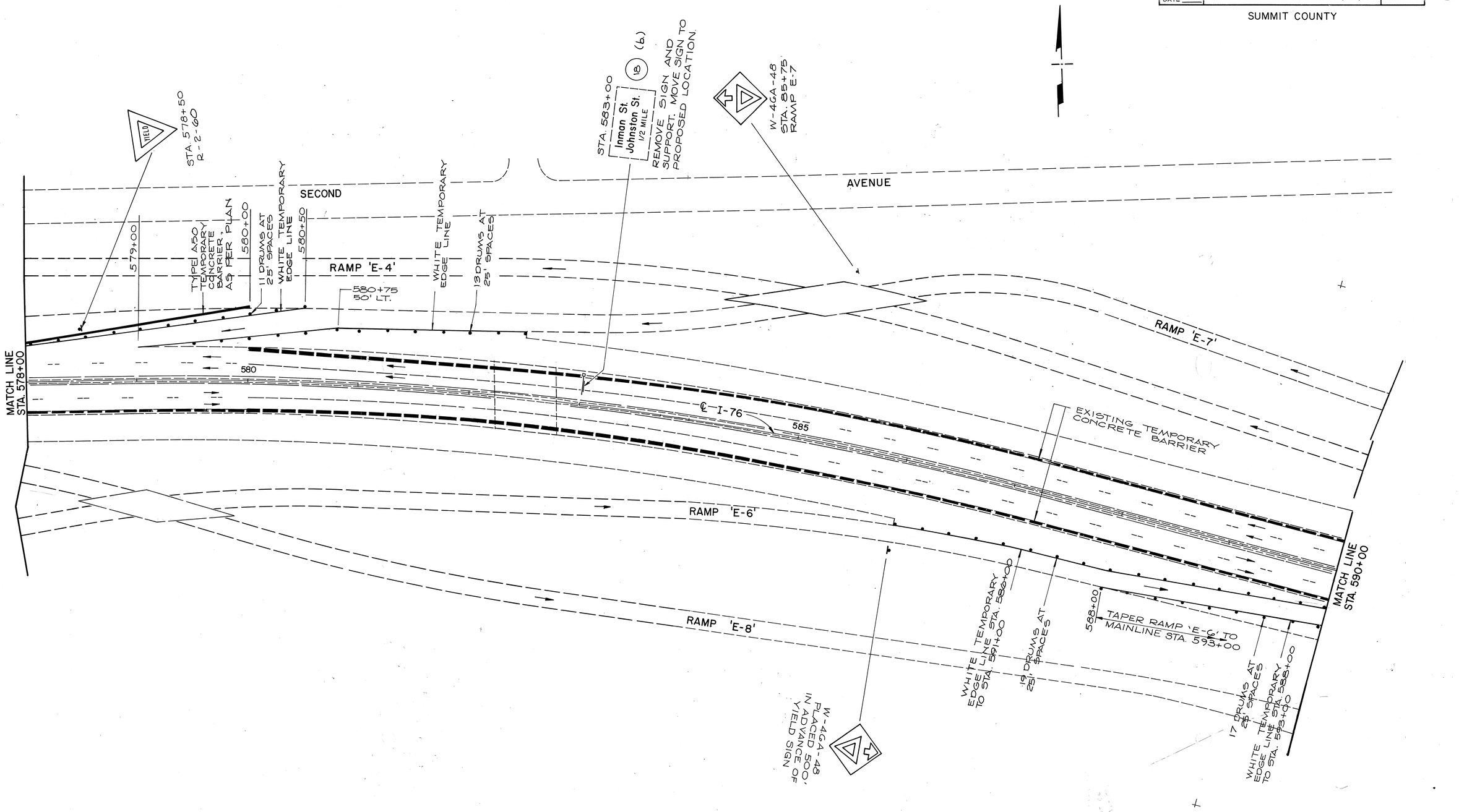

MAINTENANCE OF TRAFFIC PHASE 3

AA B/P# 71942R

CALC. BY. DATE	SUM-76-11.57	OHIO
CHKD. BY. DATE	FED. PROJECT IR-76-2(44)19	F.H.W.A. REGION 5

SUMMIT COUNTY

53
1214

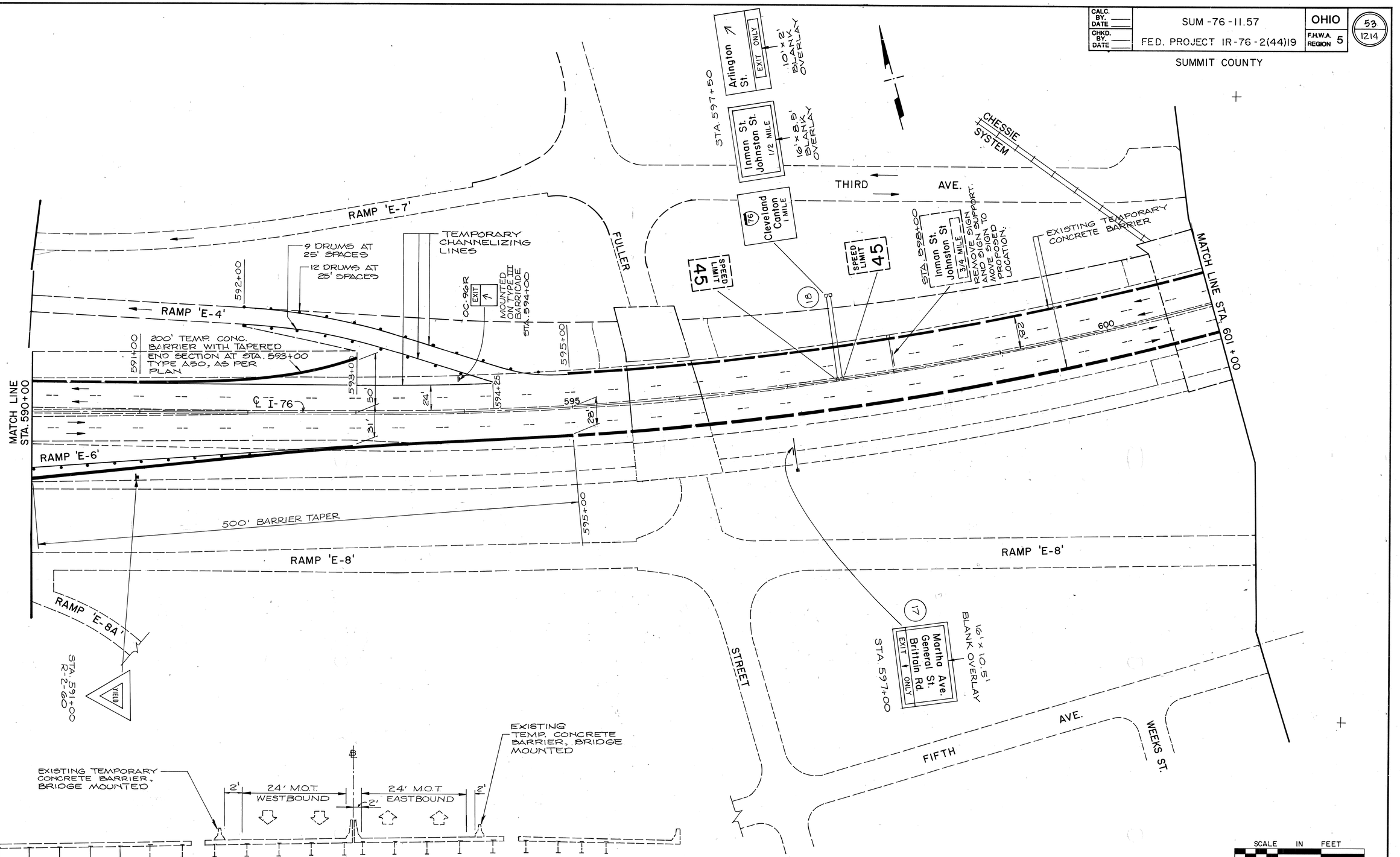

I-76 OVER FULLER STREET

SCALE IN FEET
0 40 80 120

MAINTENANCE OF TRAFFIC PHASE 3

AA B/P# 71442R

CALC. BY. DATE	SUM -76 - 11.57	OHIO	54
CHKD. BY. DATE	FED. PROJECT IR-76-2(44)19	F.H.W.A. REGION 5	12.14

SUMMIT COUNTY

FOR KELLY AVE. MAINTENANCE OF TRAFFIC PLAN, SEE SHEET 85.

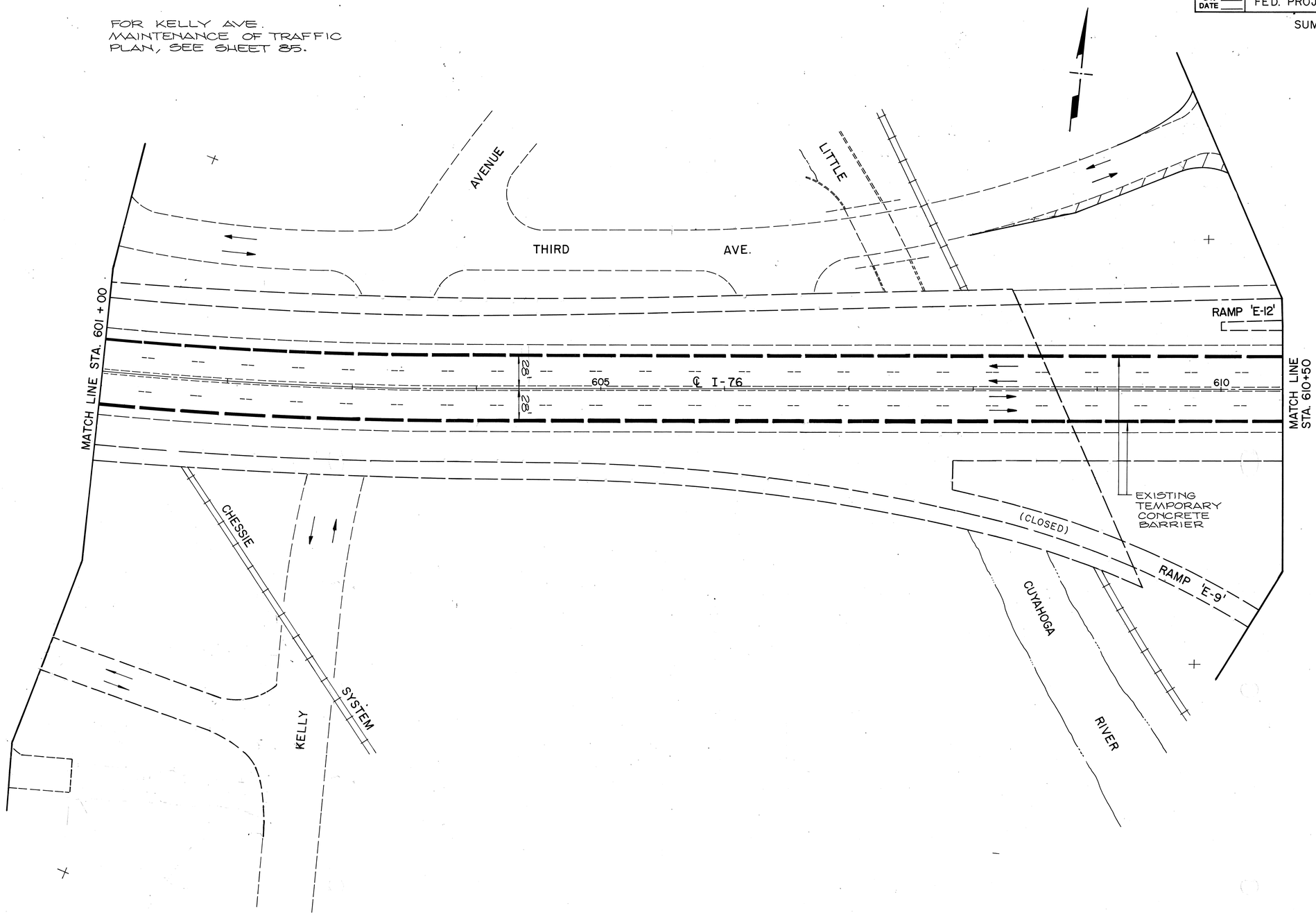

SCALE IN FEET
0 40 80 120

MAINTENANCE OF TRAFFIC PHASE 3

AA B/P# 71942R

CALC. BY. DATE	SUM-76-11.57	OHIO	55 12.14
CHKD. BY. DATE	FED. PROJECT IR-76-2(44)19	F.H.W.A. REGION 5	

SUMMIT COUNTY

FOR MARTHA AVE. MAINTENANCE OF TRAFFIC PLAN, SEE SHEET 86.

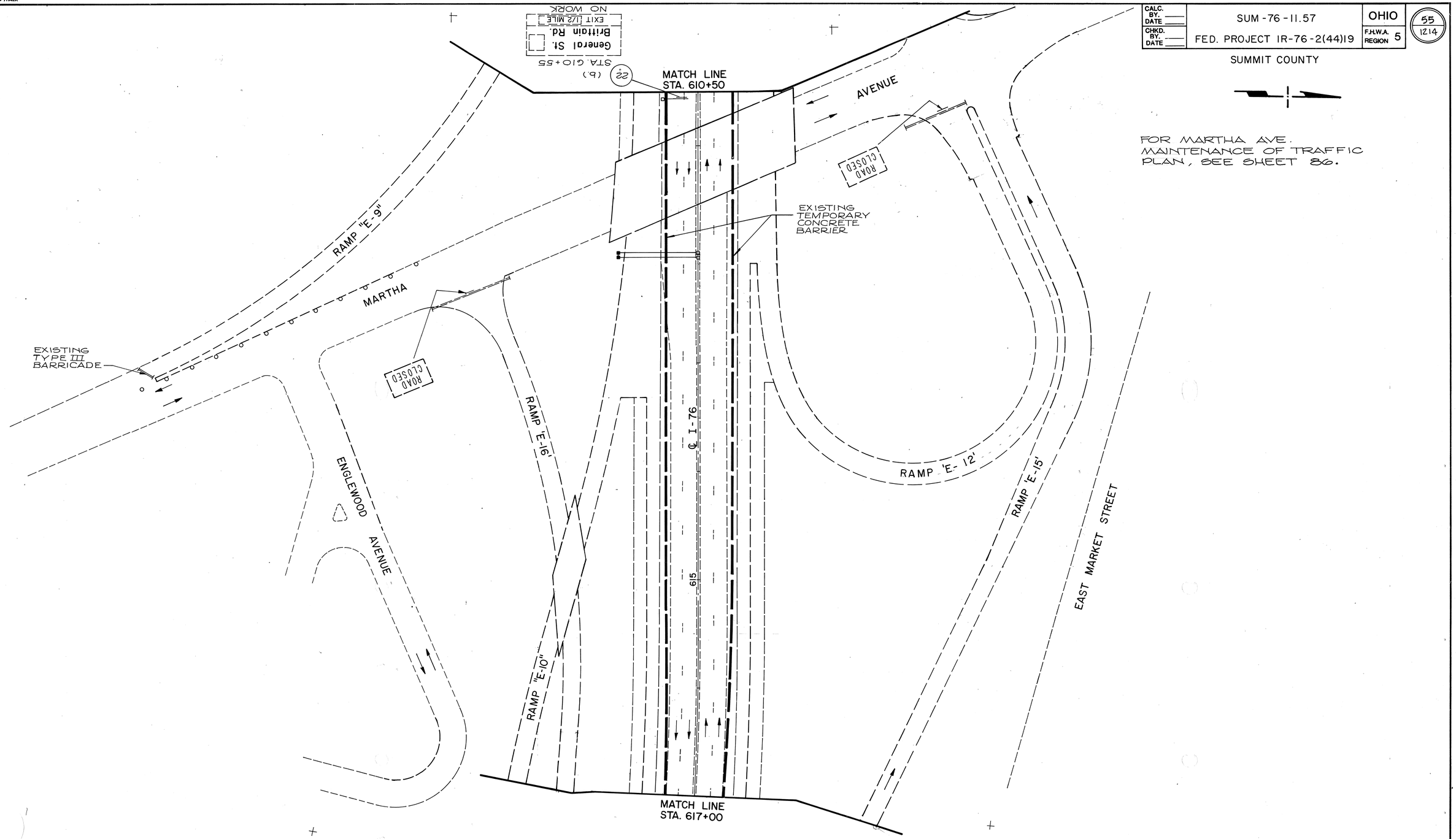

SCALE IN FEET
0 40 80 120

MAINTENANCE OF TRAFFIC PHASE 3

AA B/P# 71942R

CALC. BY. DATE	SUM-76-11.57	OHIO
CHKD. BY. DATE	FED. PROJECT IR-76-2(44)19	F.H.W.A. REGION 5

56
1214

SUMMIT COUNTY

EAST MARKET STREET

TEMP. CHANNELIZING LINE STA. 618+50 TO STA. 622+50

DETROIT ST.

TEMP. CHANNELIZING LINE STA. 620+40 TO STA. 622+50

WHITE TEMPORARY EDGE LINE, STA. 620+40 TO STA. 624+50

9 DRUMS AT 25' SPACES

STA. 622+00

Martha Ave. / Kelly Ave. EXIT ONLY

Arlington St. 1/2 MILE

BLANK OVERLAY 4.5"x2'

REMOVE TEMPORARY SIGNAL AND REPLACE EXISTING STOP SIGNS FOR WIGLEY AVE AND ELM DR.

17 DRUMS AT 25' SPACES

WIGLEY AVE.

624+50

EXIST. RAMP 'E-15' (CLOSED)

TYPE A50, AS PER PLAN TEMPORARY CONCRETE BARRIER, STA. 624+50 TO STA. 629+00

627+00

WHITE TEMPORARY EDGE LINE, STA. 624+50 TO STA. 629+00

RAMP 'E-15'

200' TEMP. CONC. BARRIER TAPERED END SECTION TYPE A50, AS PER PLAN

623+81.6

625+029

50

CONSTRUCTION

℄ I-76

620

625

35.5'

28'

24'

MATCH LINE STA. 617+00

MATCH LINE STA. 629+00

EXISTING TEMPORARY CONCRETE BARRIER

RAMP 'E-16'

RAMP "E-10"

ENGLEWOOD AVENUE

ROAD CLOSED

NO WORK

General St. Britain Rd. EXIT 1/4 MILE

CONSTRUCTION 35.5'
28'
24' M.O.T. WESTBOUND
24' M.O.T. EASTBOUND

SCALE IN FEET
0 40 80 120

MAINTENANCE OF TRAFFIC PHASE 3

AA B/P# 71942R

CALC. BY. DATE	SUM-76-11.57	OHIO	57
CHKD. BY. DATE	FED. PROJECT IR-76-2(44)19	F.H.W.A. REGION 5	1214

SUMMIT COUNTY

FOR SEIBERLING ST. MAINTENANCE OF TRAFFIC PLAN, SEE SHEET 87.

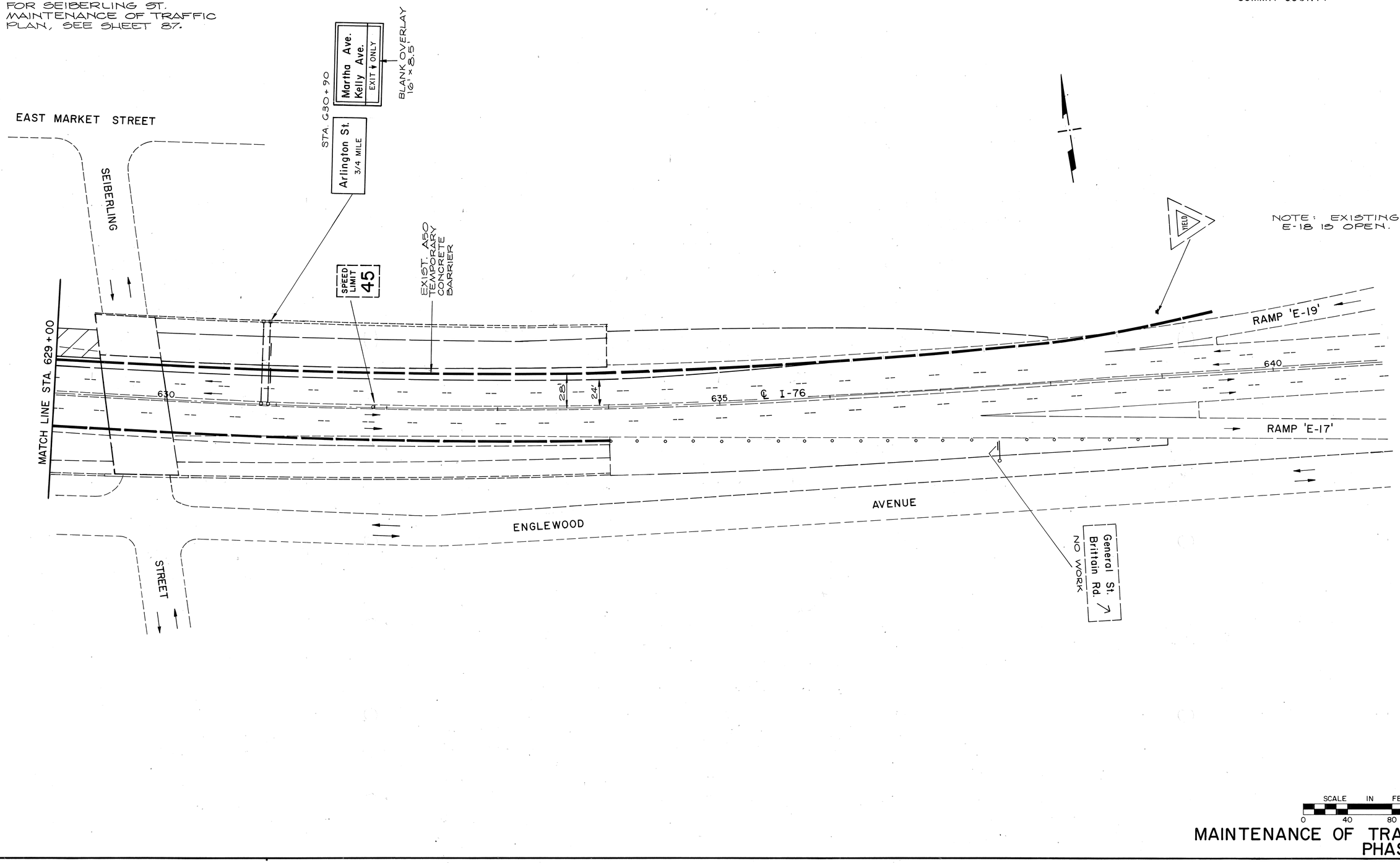

SCALE IN FEET
0 40 80 120

MAINTENANCE OF TRAFFIC
PHASE 3

AA B/P# 71942R

CALC. BY. DATE	SUM-76-11.57	OHIO
CHKD. BY. DATE	FED. PROJECT IR-76-2(44)19	F.H.W.A. REGION 5

58
1214

SUMMIT COUNTY

SCALE IN FEET
0 100 200 300

AKRON WEST EXPRESSWAY

505 510 515 520 525 535 540

76 77

STA. 502+15
ROAD CONSTRUCTION AHEAD

STA. 508+25
8 NORTH
Cuyahoga Falls
LEFT 3/4 MILE
NO WORK

LEFT LANE CLOSED AHEAD

TYPE 'A'
OW-123-48
STA. 508+25
RIGHT SIDE.
ATTACH TO SIGN SUPPORT ON LEFT SIDE.

STA. 518+20
76 EAST
Youngstown
77 SOUTH
Canton
EXIT ONLY

3'x2' ORANGE BLANK OVERLAY
REMOVE EXISTING BLANK OVERLAY

University of Akron
NEXT LEFT
NO WORK

STA. 529+30
76 EAST
Youngstown
77 SOUTH
Canton
EXIT ONLY

3'x2' ORANGE BLANK OVERLAY
REMOVE EXISTING BLANK OVERLAY

STA. 530+00

STA. 530+00

STA. 531+50
LEFT LANE CLOSED AHEAD
76
TYPE 'A'
M-5-36.2
OW-123-48

LANE "M"

STA. 535+00

76
Eastbound
MERGE RIGHT
9.5'
14'
24.5'
28'
BLACK ON ORANGE
W10x22 BEAM
2.5' x 6.75' FOUNDATION
1095
1090
1085
1080

SCALE IN FEET
0 40 80 120

8

℄ I-76 EB

OW-138-36
STA. 541+00

MATCH LINE
STA. 541+50

24'

LANE "S"

TYPE 'A'
OW-60D-48
STA. 541+00

MAINTENANCE OF TRAFFIC
PHASE 4

AA B/P# 71942R

CALC. BY. DATE	SUM-76-11.57	OHIO	59
CHK'D. BY. DATE	FED. PROJECT IR-76-2(44)19	F.H.W.A. REGION 5	1214

SUMMIT COUNTY

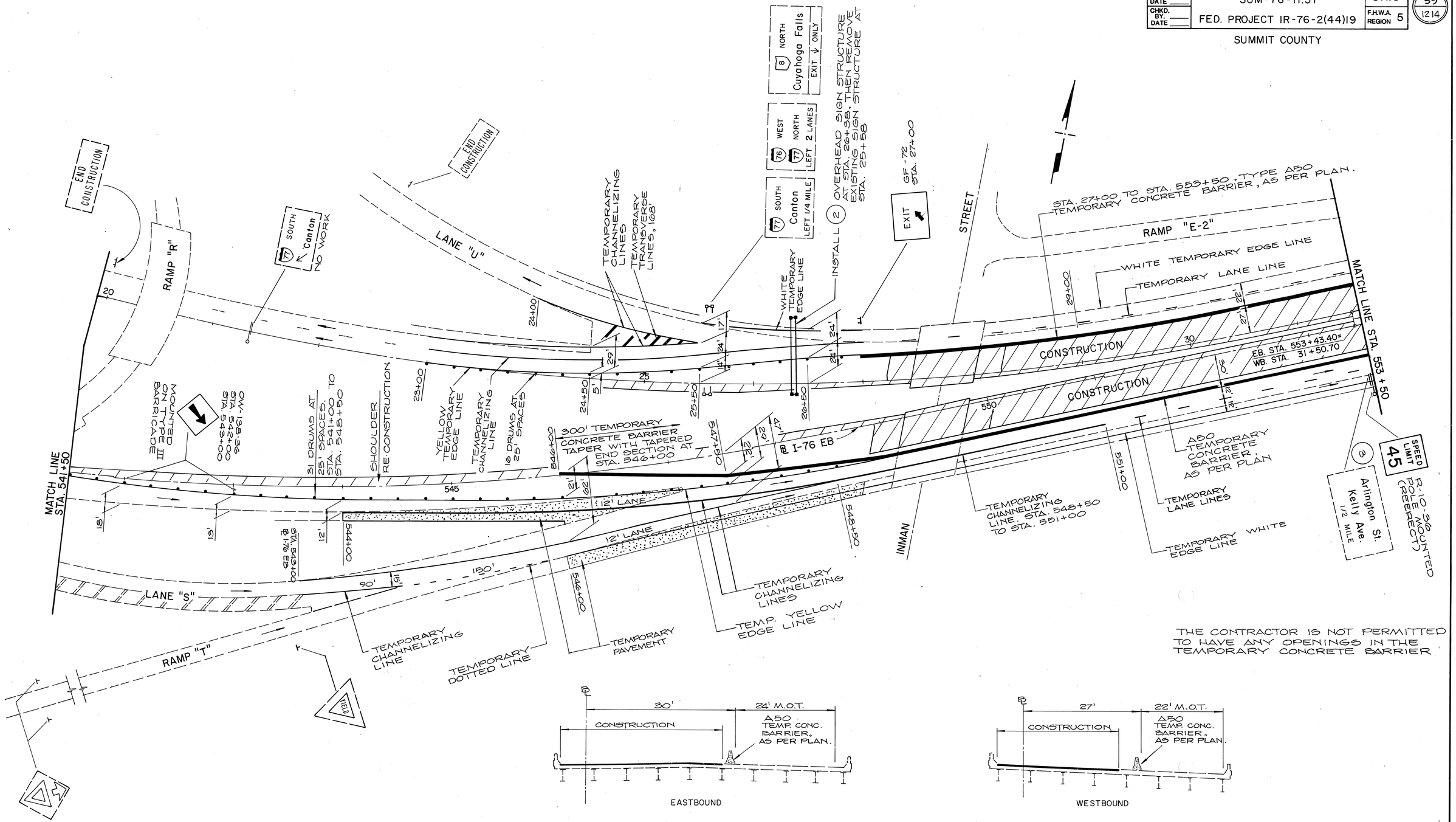

THE CONTRACTOR IS NOT PERMITTED TO HAVE ANY OPENINGS IN THE TEMPORARY CONCRETE BARRIER

EASTBOUND

WESTBOUND

I-76 OVER INMAN STREET

SCALE IN FEET
0 40 80 120

MAINTENANCE OF TRAFFIC PHASE 4

AA B/P# 71942R

CALC. BY. DATE	SUM-76-11.57	OHIO
CHKD. BY. DATE	FED. PROJECT IR-76-2(44)19	F.H.W.A. REGION 5

60
1214

SUMMIT COUNTY

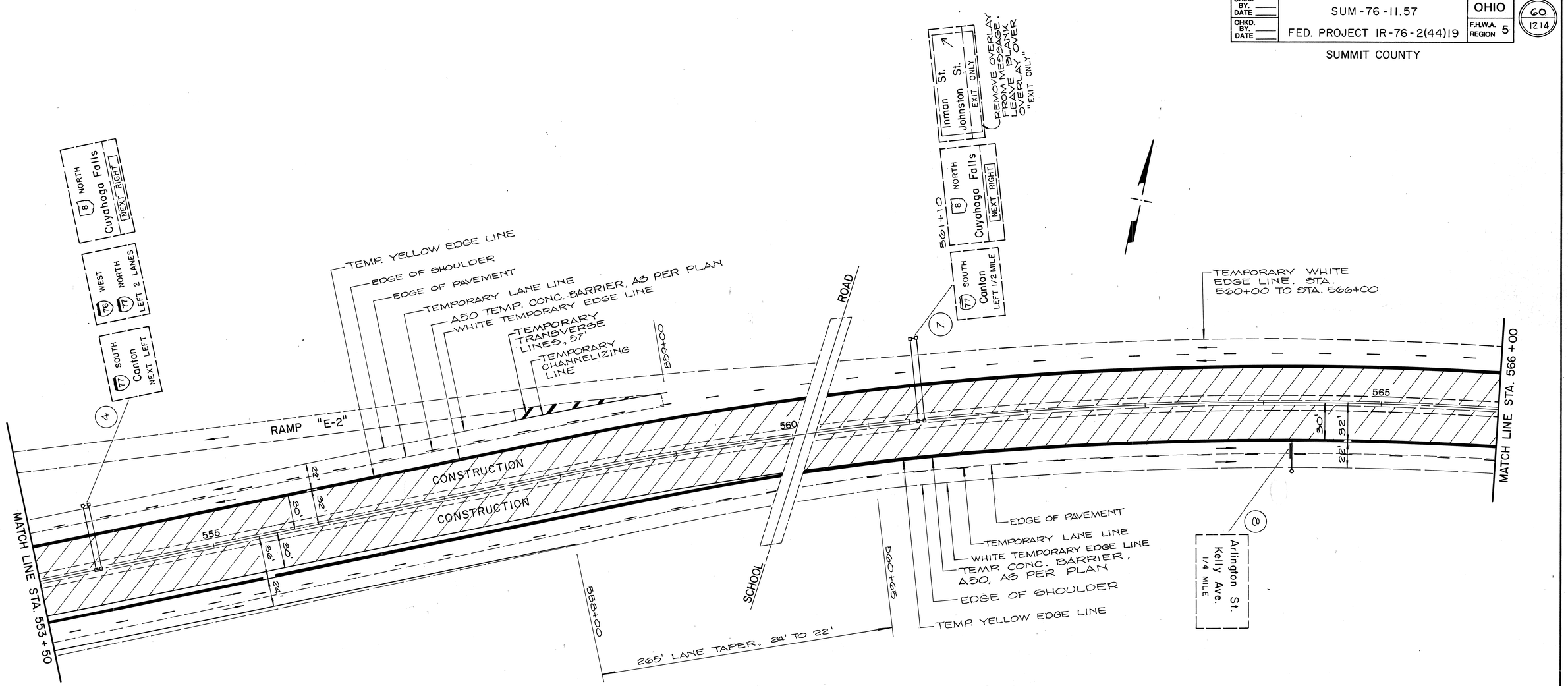

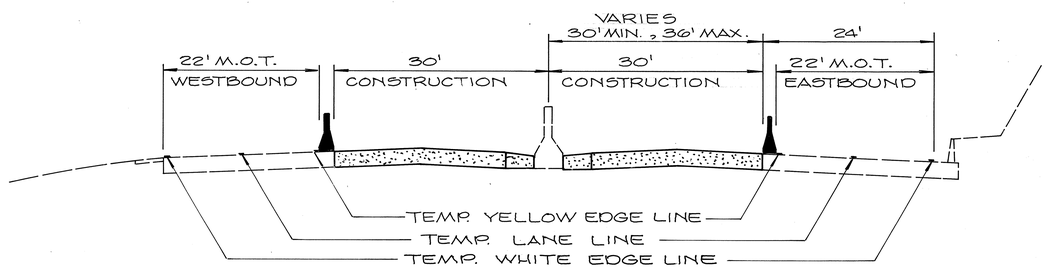

THE CONTRACTOR IS NOT PERMITTED TO HAVE ANY OPENINGS IN THE TEMPORARY CONCRETE BARRIER

SCALE IN FEET
0 40 80 120

MAINTENANCE OF TRAFFIC PHASE 4

3/12

AA B/P# 71942R

CALC. BY. DATE	SUM-76-11.57	OHIO
CHKD. BY. DATE	FED. PROJECT IR-76-2(44)19	F.H.W.A. REGION 5

G1
12.14

SUMMIT COUNTY

THE CONTRACTOR IS NOT PERMITTED TO HAVE ANY OPENINGS IN THE TEMPORARY CONCRETE BARRIER.

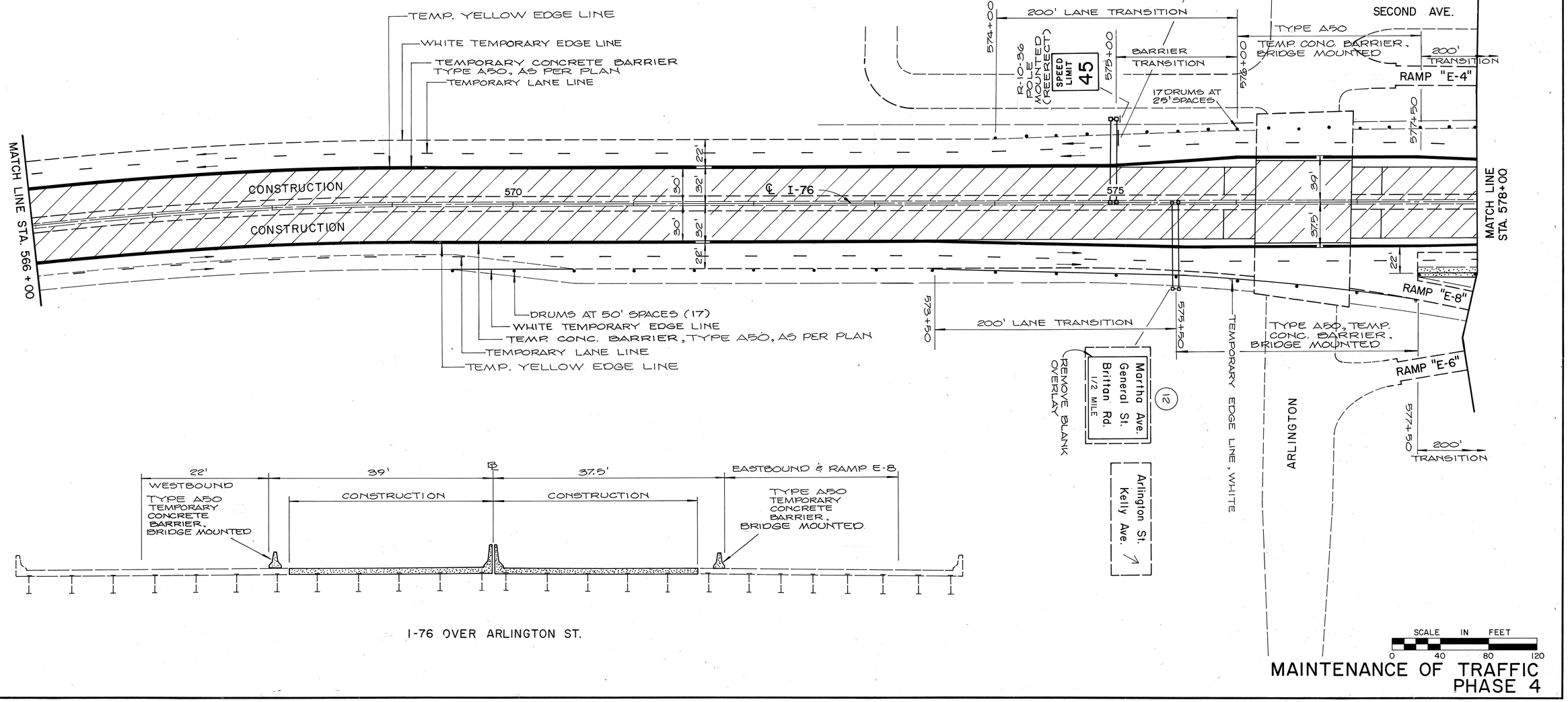

I-76 OVER ARLINGTON ST.

SCALE IN FEET
0 40 80 120

MAINTENANCE OF TRAFFIC
PHASE 4

AA B/P# 71942R

CALC. BY. ____ DATE ____	SUM -76 -11.57	OHIO	G2 1214
CHKD. BY. ____ DATE ____	FED. PROJECT IR-76-2(44)19	F.H.W.A. REGION 5	

SUMMIT COUNTY

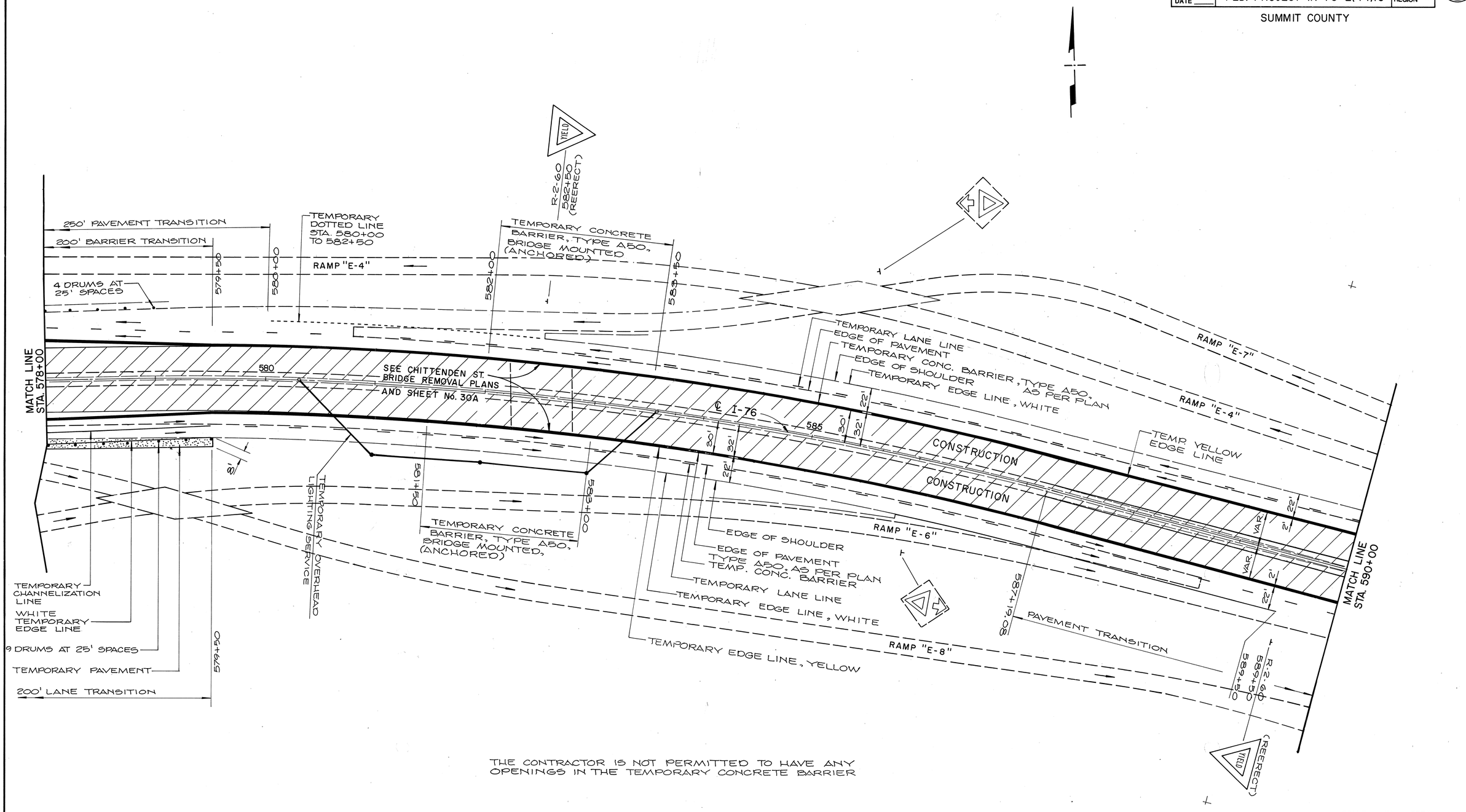

THE CONTRACTOR IS NOT PERMITTED TO HAVE ANY OPENINGS IN THE TEMPORARY CONCRETE BARRIER

SCALE IN FEET
0 40 80 120

MAINTENANCE OF TRAFFIC PHASE 4

AA B/P# 71942R

CALC. BY.		SUM-76-11.57	OHIO
DATE			F.H.W.A. REGION 5
CHKD. BY.		FED. PROJECT IR-76-2(44)19	
DATE			

63
1214

SUMMIT COUNTY

THE CONTRACTOR IS NOT PERMITTED TO HAVE ANY OPENINGS IN THE TEMPORARY CONCRETE BARRIER

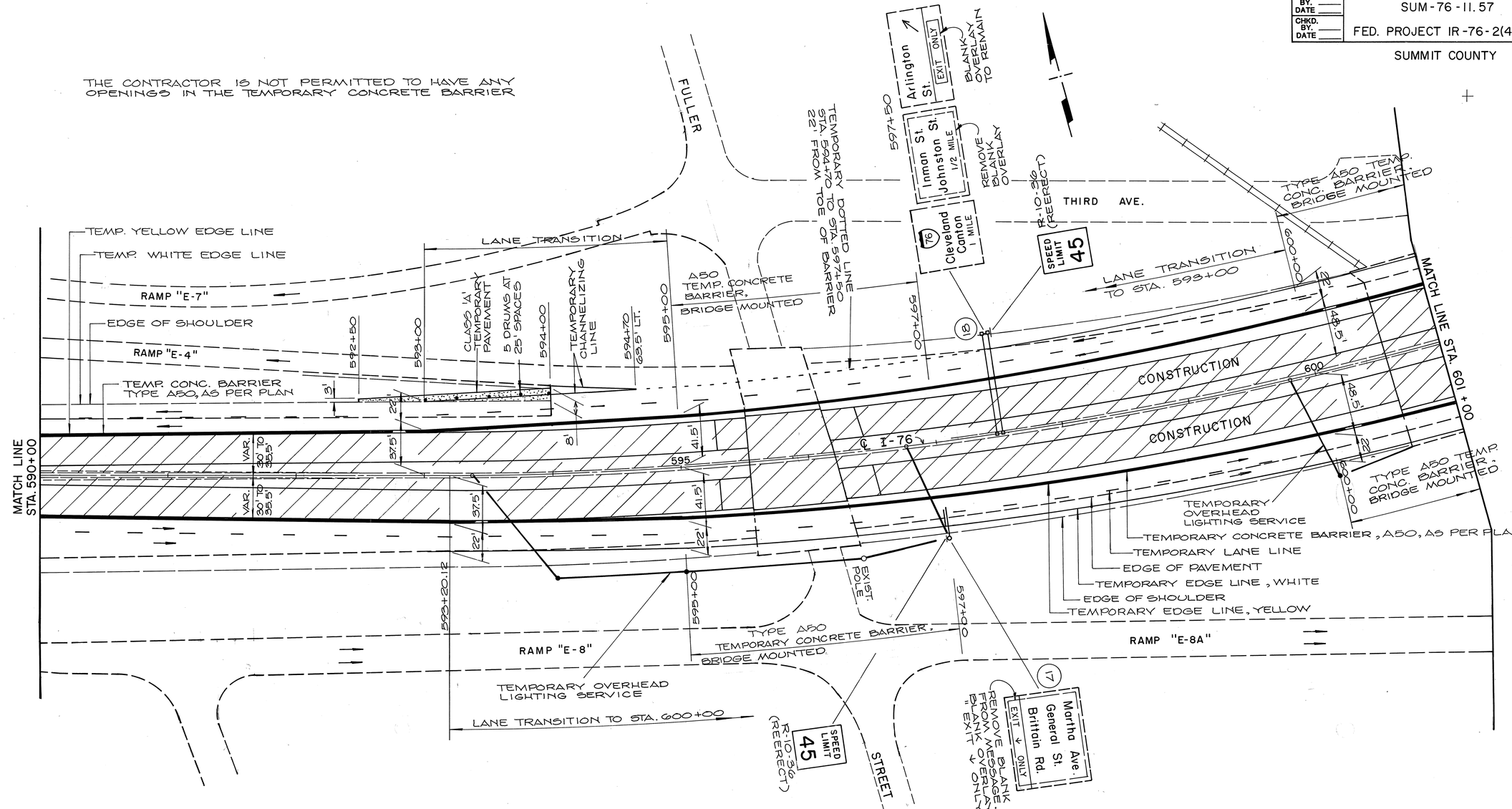

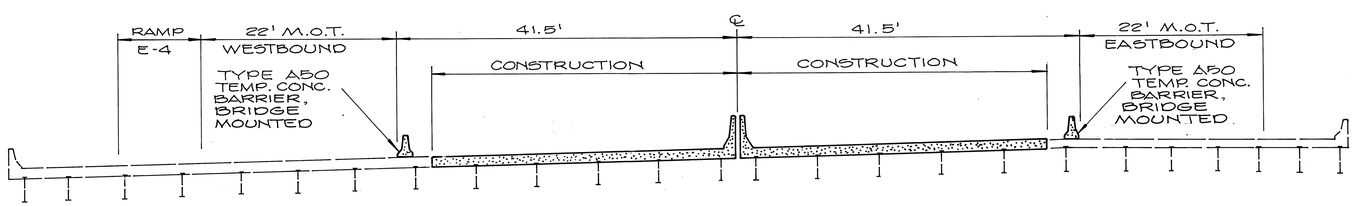

I-76 OVER FULLER STREET

SCALE IN FEET
0 40 80 120

MAINTENANCE OF TRAFFIC
PHASE 4

6/2

AA B/P# 71942R

CALC. BY. DATE	SUM - 76 - 11.57	OHIO
CHKD. BY. DATE	FED. PROJECT IR-76-2(44)19	F.H.W.A. REGION 5

SUMMIT COUNTY

64
1214

FOR KELLY AVE. MAINTENANCE OF TRAFFIC PLAN, SEE SHEET 85.

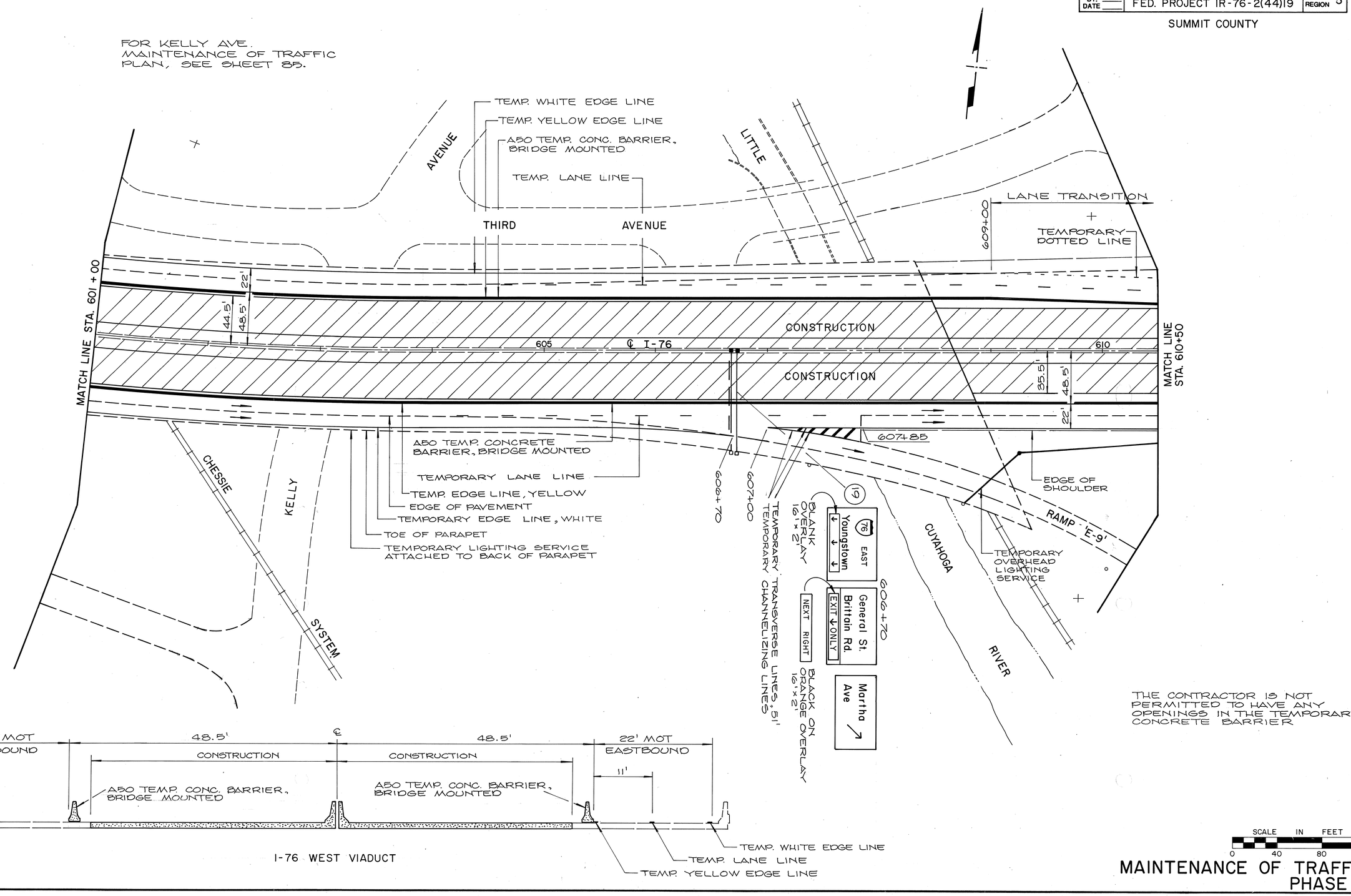

THE CONTRACTOR IS NOT PERMITTED TO HAVE ANY OPENINGS IN THE TEMPORARY CONCRETE BARRIER

I-76 WEST VIADUCT

SCALE IN FEET
0 40 80 120

MAINTENANCE OF TRAFFIC PHASE 4

AA B/P# 71942R

CALC. BY. DATE	SUM-76-11.57	OHIO	65
CHKD. BY. DATE	FED. PROJECT IR-76-2(44)19	F.H.W.A. REGION 5	1214

SUMMIT COUNTY

FOR MARTHA AVE. MAINTENANCE OF TRAFFIC PLAN, SEE SHEET 86.

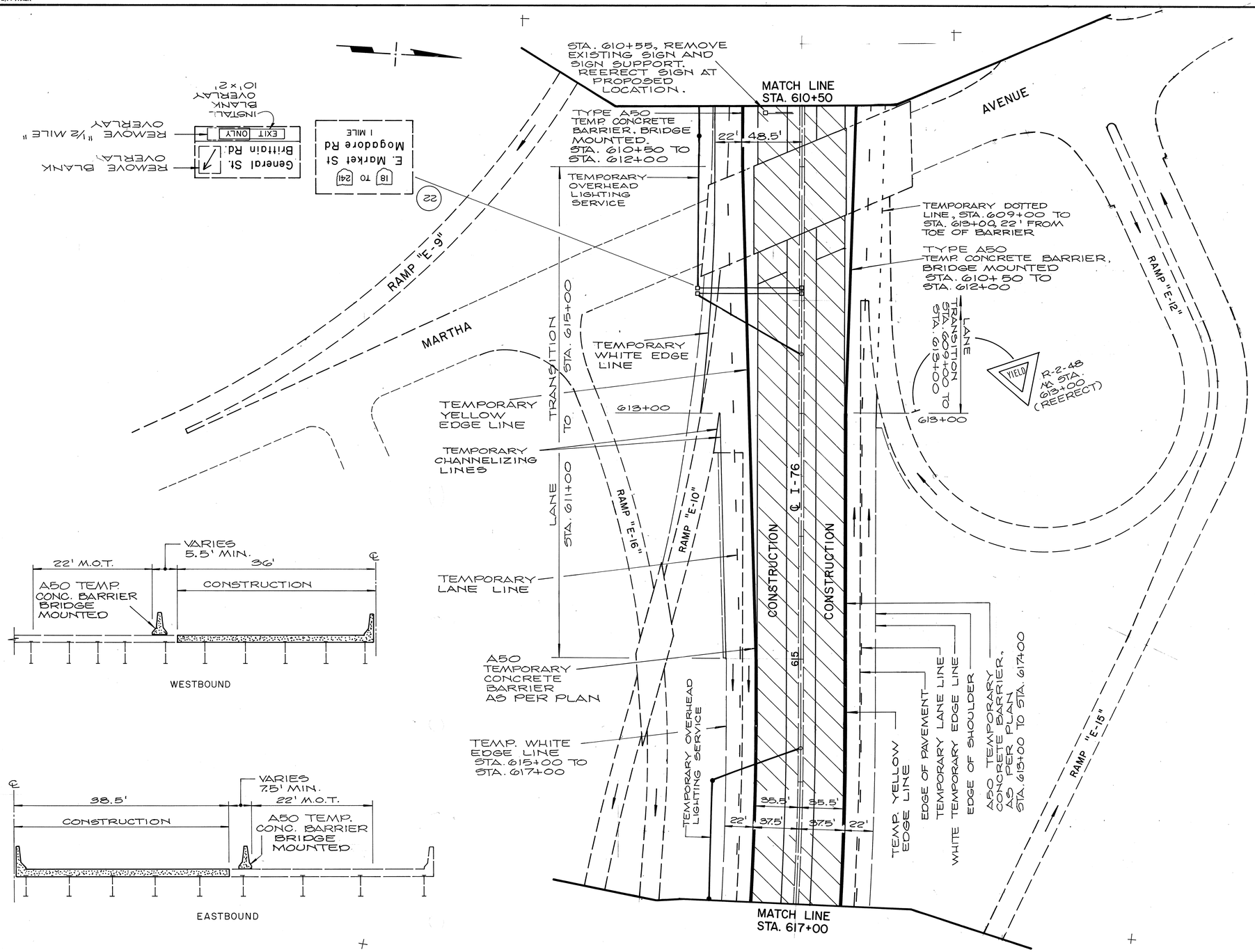

WESTBOUND

EASTBOUND

I-76 OVER MARTHA AVENUE

THE CONTRACTOR IS NOT PERMITTED TO HAVE ANY OPENINGS IN THE TEMPORARY CONCRETE BARRIER

SCALE IN FEET
0 40 80 120

MAINTENANCE OF TRAFFIC PHASE 4

AA B/P# 71942R

CALC. BY. DATE	SUM-76-11.57	OHIO
CHKD. BY. DATE	FED. PROJECT IR-76-2(44)19	F.H.W.A. REGION 5

66 / 1214

SUMMIT COUNTY

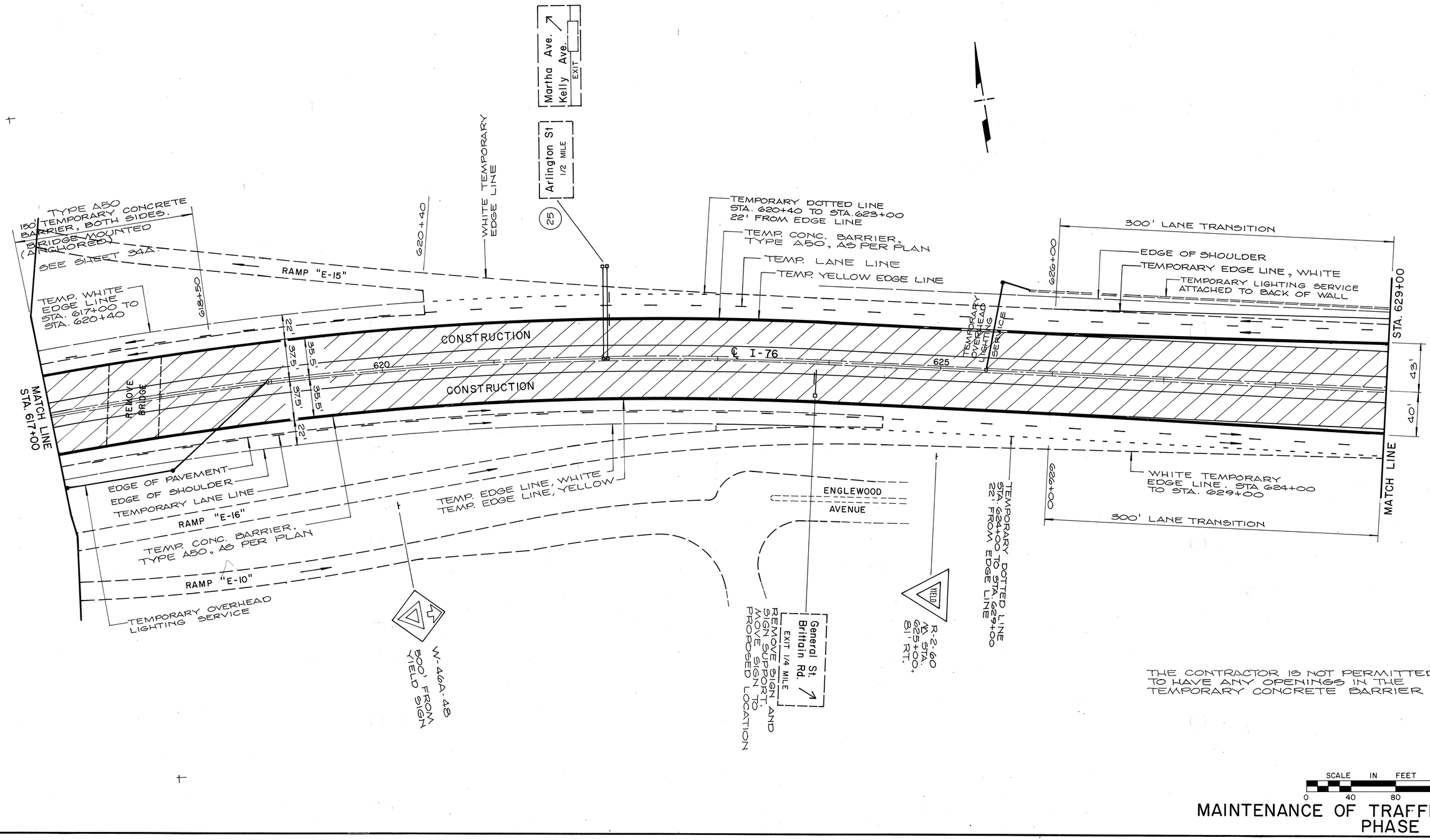

THE CONTRACTOR IS NOT PERMITTED TO HAVE ANY OPENINGS IN THE TEMPORARY CONCRETE BARRIER

SCALE IN FEET
0 40 80 120

MAINTENANCE OF TRAFFIC PHASE 4

AA B/P# 71942R

CALC. BY. DATE	SUM-76-11.57	OHIO
CHKD. BY. DATE	FED. PROJECT IR-76-2(44)19	F.H.W.A. REGION 5

SUMMIT COUNTY

67 / 1214

FOR SEIBERLING ST. MAINTENANCE OF TRAFFIC SEE SHEET 87.

OFFSET TO ℄ TEMPORARY ROADWAYS

STATION	LEFT WESTBOUND	RIGHT EASTBOUND
634+00	49.5'	48.5'
634+50	49.0'	48.5'
635+00	48.5'	48.5'
635+50	47.64'	48.05'
636+00	45.06'	47.72'
636+50	40.74'	44.49'
637+00	34.77'	41.25'
637+50	28.13'	36.69'
638+00	22.68'	30.90'
638+50	18.56'	25.01'
639+00	15.75'	20.28'
639+50	14.27'	16.88'
640+00	14.0'	14.79'

℄ CURVE DATA

CURVE W1
Δ = 6°15'00.03"
Dc = 3°00'00"
R = 1909.86'
T = 104.27'
L = 208.33'
PC = 635+00
PT = 637+08.90

CURVE W2
Δ = 7°50'44.51"
Dc = 3°00'00"
R = 1909.86'
T = 130.97'
L = 261.52'
PC = 637+21.15
PT = 639+81.86

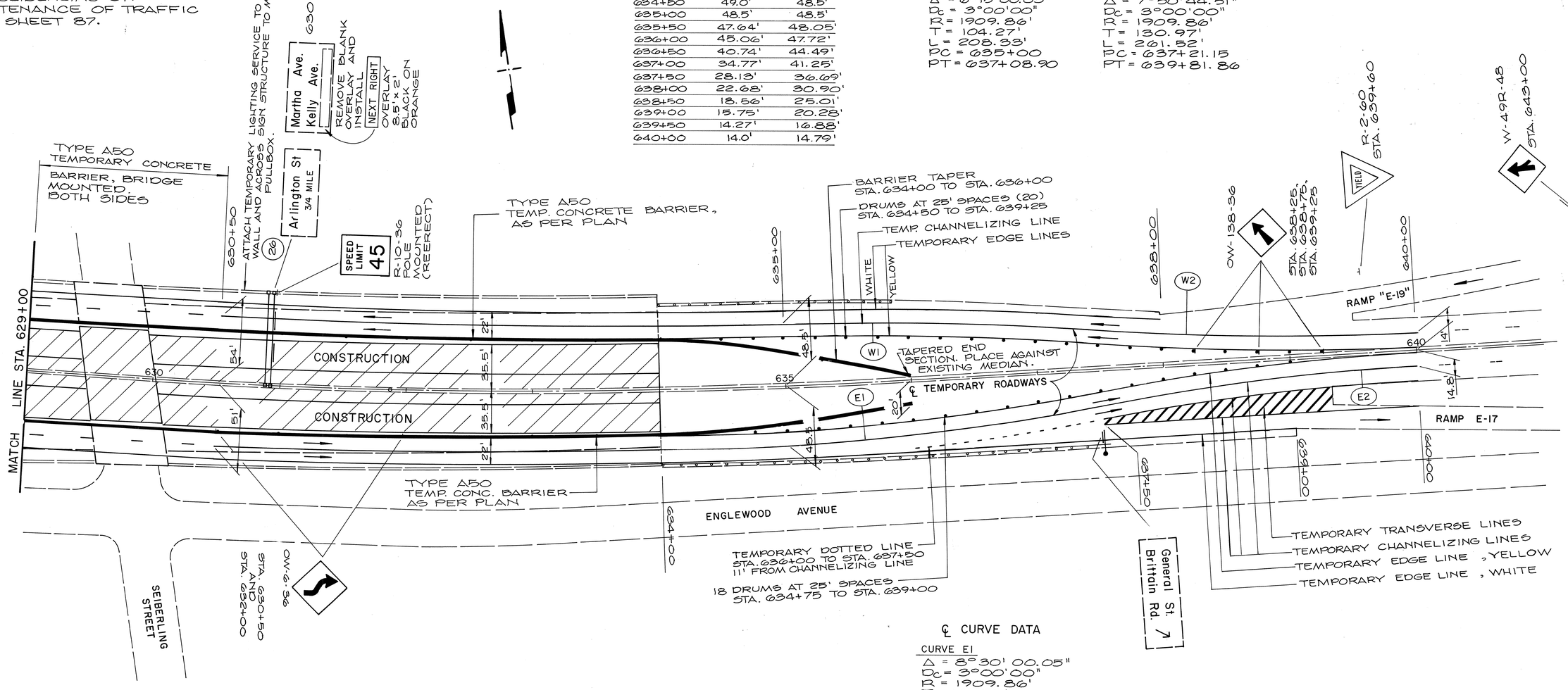

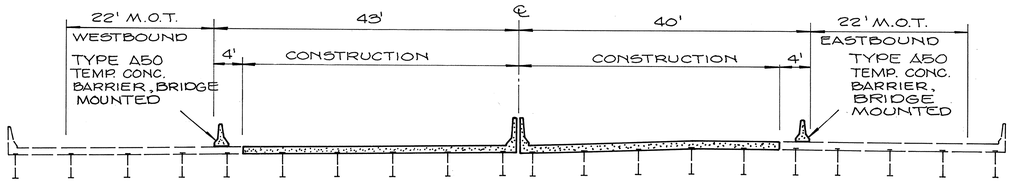

I-76 OVER SEIBERLING STREET

℄ CURVE DATA

CURVE E1
Δ = 8°30'00.05"
Dc = 3°00'00"
R = 1909.86'
T = 141.93'
L = 283.33'
PC = 635+00
PT = 637+81.44

CURVE E2
Δ = 6°54'15.67"
Dc = 3°00'00"
R = 1909.86'
T = 115.21'
L = 230.15'
PC = 638+25.21
PT = 640+54.80

THE CONTRACTOR IS NOT PERMITTED TO HAVE ANY OPENINGS IN THE TEMPORARY CONCRETE BARRIER

SCALE IN FEET
0 40 80 120

MAINTENANCE OF TRAFFIC PHASE 4

AA B/P# 71942R

CALC. BY. DATE	SUM-76-11.57	OHIO
CHKD. BY. DATE	FED. PROJECT IR-76-2(44)19	F.H.W.A. REGION 5

68
12 14

SUMMIT COUNTY

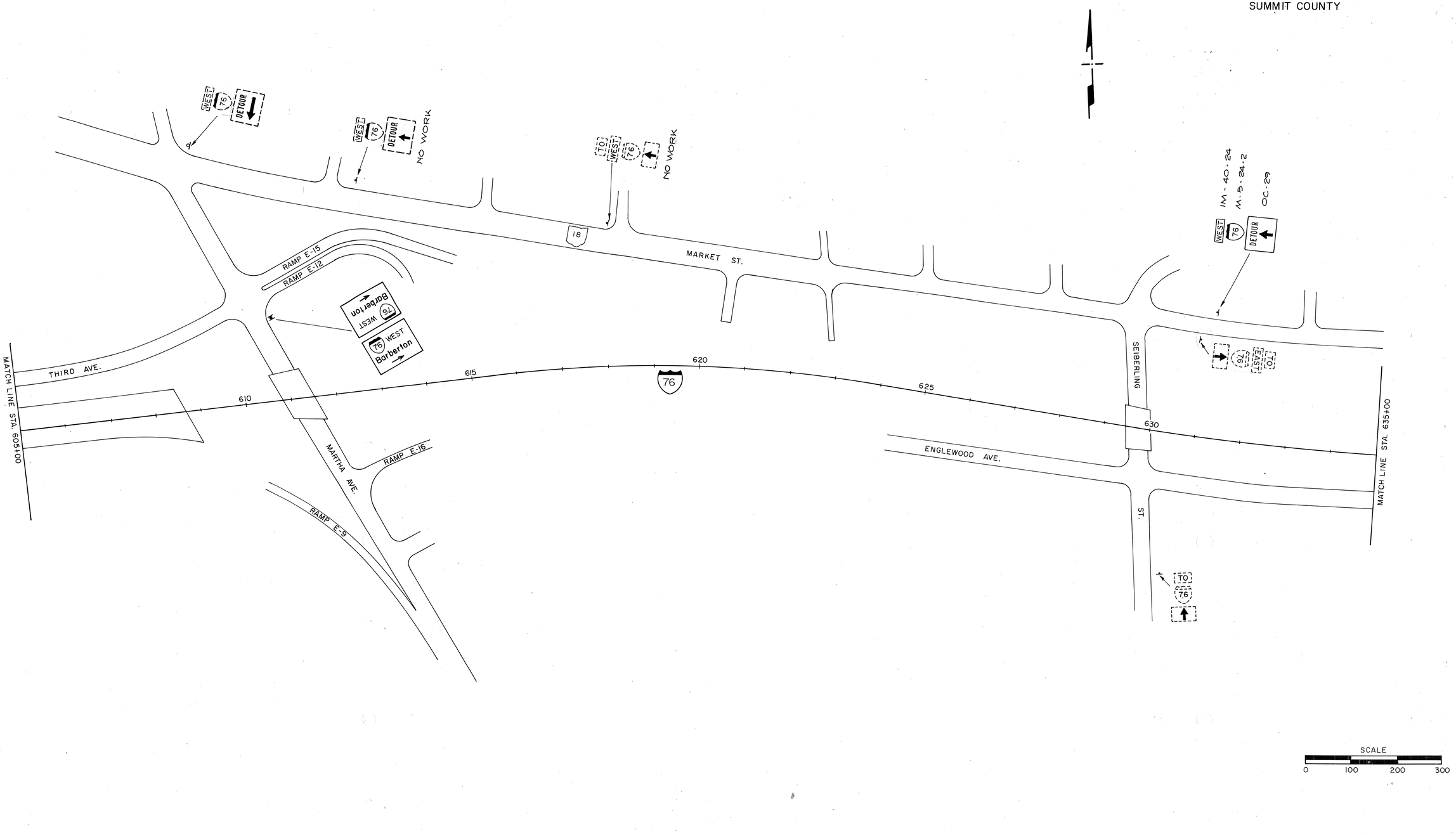

MAINTENANCE OF TRAFFIC
PHASE 4

AA B/P# 71942R

CALC. BY. DATE	SUM - 76 - 11.57	OHIO
CHKD. BY. DATE	FED. PROJECT IR-76-2(44)19	F.H.W.A. REGION 5

SUMMIT COUNTY

69
1214

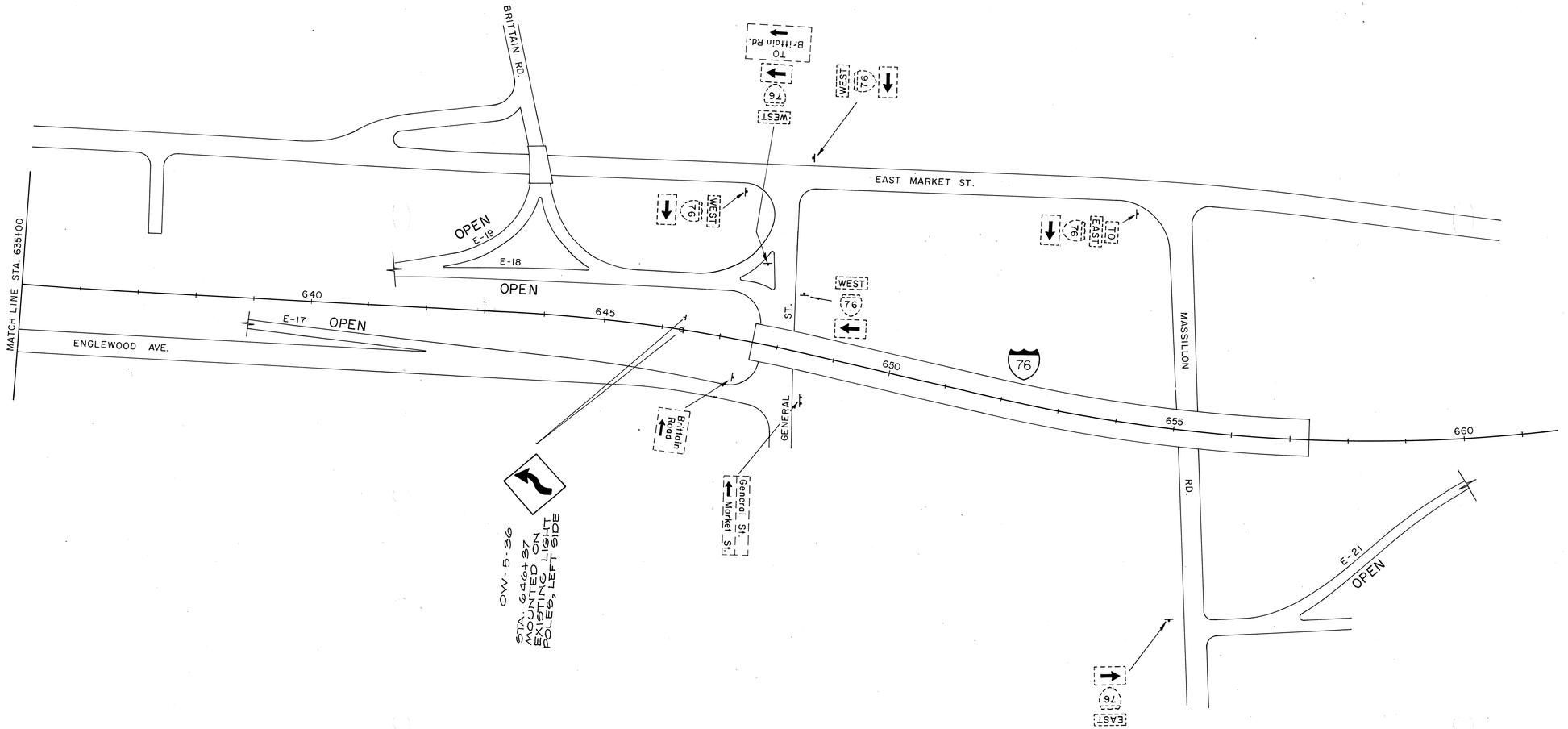

MAINTENANCE OF TRAFFIC
PHASE 4

MAINTENANCE OF TRAFFIC

SCALE IN FEET
0 100 200 300

FHWA REGION	STATE	PROJECT	
5	OHIO		

70
12/14

SUMMIT COUNTY
SUM-76-11.57

NOTES:
1) FOR WORK RELATED TO BRIDGE, SEE SHEET 805 THRU 824.
2) REMOVE SOUTH INMAN ST. DETOUR SIGNS DURING CLOSING OF RAMP E-2.

KEY:
- ⊢ = MOUNTED ON TYPE III GATE & BARRICADE W/YELLOW LIGHTS.
- ⊢ = MOUNTED ON PORTABLE TYPE III BARRICADE W/RED LIGHTS
- ⊢ = SIGN MOUNTED ON POST SUPPORT.
- ⇉ = DETOUR ROUTE
- ⊠ = PROJECT LIMITS
- D = 200 FT.
- * = TYPE A BARRICADE WARNING LIGHT

JOHNSTON ST
GRIDLEY
INMAN
MC GOWAN
DOWNING
WINDSOR
BLACK ST
MATHIEWS
CHAMPLAIN
CLARK ST
FIRST AVE
SECOND AVE
MARTIN AVE
TALBOT AVE
ARLINGTON
FOURTH AVE
FIFTH AVE
MERTON
BERTHA
HUDSON
ELBON
WINANS
WHITNEY
HOBAN SCHOOL ROAD
EDGE
FLOW ARROWS
FLOW ARROW E-2
FLOW ARROW E-3
℄ I-76
CHITTENDEN ST
ARLINGTON ST
EXIT ½ MILE
N

DETOUR
ROAD CLOSED
1/4 MILES AHEAD
LOCAL TRAFFIC ONLY
R-7GA
OC-14L
SOUTH INMAN ST M-38 D-14
DETOUR
OC-29R
INMAN ST. DETOUR D-14 OC-29
OC-29 D-14 INMAN ST. DETOUR
D-14 INMAN ST. DETOUR OC-29L
OC-29R D-14 INMAN ST. DETOUR
ROAD CLOSED
1/5 MILES AHEAD
LOCAL TRAFFIC ONLY
R-7GA
ROAD CLOSED AHEAD
OW-120-36
DETOUR AHEAD
OW-127-36
ROAD CLOSED
R-75
DETOUR
OC-14R
TYPE III BARRICADE
ROAD CLOSED
R-75
SOUTH INMAN ST M-38 D-14
DETOUR
OC-29R
OC-29 D-14 INMAN ST. DETOUR
D-14 INMAN ST. DETOUR OC-29
OC-29R D-14 INMAN ST. DETOUR
OC-29L D-14 INMAN ST. DETOUR

PHASE II & IV MAINTENANCE OF TRAFFIC BRIDGE No. SUM-76-1180

MAINTENANCE OF TRAFFIC

SEE SHEET 120 FOR CONSTRUCTION LIMITS

SCALE IN FEET
0 100 200 300

TRACT	STATE	PROJECT	
5	OHIO		

71
1214

SUMMIT COUNTY
SUM-76-11.57

NOTE:
1. FOR WORK RELATED TO BRIDGE, SEE SHEET 325 THRU 340 FOR BRIDGE No. SUM.-76-1200
KEY:
** TYPE C BARRICADE WARNING LIGHT
2. HOBAN SCHOOL PEDESTRIAN BRIDGE IS TO REMAIN OPEN WHEN INMAN STREET IS CLOSED.

JOHNSTON ST
GRIDLEY
INMAN
McGOWAN
DOWNING
WINDSOR
BLACK ST
MATHIEWS
CLARK ST
CHAMPLAIN
EDGE
EDGE
FIRST AVE
SECOND AVE
TALBOT AVE
MARTIN AVE
ST.
ARLINGTON
FOURTH AVE
FIFTH AVE
TALBOT AVE
HOBAN SCHOOL ROAD
PARKING
MERTON
BERTHA
HUDSON
ELBON
WINANS
WHITNEY

PEDESTRIAN
BRIDGE OUT
1/4 MILE AHEAD
LOCAL TRAFFIC ONLY
R-76B
DETOUR
OC-14R
VIA INMAN ST.

** BRIDGE CLOSED TYPE III BARRICADE R-75

** BRIDGE CLOSED TYPE III BARRICADE R-75

FOR FENCE PLAN SEE SHEET 166

EXIST E-2 FLOW ARROW

EXIST E-3 FLOW ARROW

FLOW ARROWS

PEDESTRIAN
BRIDGE OUT
1/10 MILE AHEAD
LOCAL TRAFFIC ONLY
R-76B
DETOUR
OC-14L
VIA INMAN ST.

545 550 555 560 565 570 575

℄ I-76

N

PHASE IV MAINTENANCE OF TRAFFIC - BRIDGE NO. SUM-76-12.00

MAINTENANCE OF TRAFFIC

SCALE
0 50' 100' 150'

N

SUMMIT COUNTY
SUM-76-11.57

72
1214

NOTE:
1) REFER TO SHEET 74 FOR MAINTENANCE OF TRAFFIC SIGNING AND PAVEMENT MARKING NORTH OF STA 22+30 AND FOR NOTES & KEY.

2) COORDINATE WITH CITY OF AKRON TRAFFIC ENGINEERING DIVISION FORCES FOR ADJUSTMENT OF SIGNAL HEADS AND/OR TRAFFIC SIGNAL TIMING.

3) PEDESTRIAN TRAFFIC SHALL BE MAINTAINED AT ALL TIMES ON THE OPPOSITE SIDE OF THE STREET FROM CONSTRUCTION.

KEY:
D = 200 FT.
D/2 = 100 FT.
* = TYPE A BARRICADE WARNING LIGHT

MATCH LINE STA. 11+00
FIFTH AVE.
SIXTH AVE.
ARLINGTON ST.
44'
STA 9+70
D
D/2
OW-60C-36
RIGHT LANE CLOSED AHEAD
OW-122-36
FLOW ARROWS
FLOW ARROW
ROAD CONSTRUCTION AHEAD
OW-128-36
25 MPH
OW-143-18
EXIST. ℄
28'-6"
7'-9"
14'-3"
11'-0"
11'-0"
WORK AREA
TEMP ℄
EXIST PAV'T
PROP PAV'T
SIDEWALK
ABUTMENT
DRUMS W/LIGHT
ABUTMENT
SECTION A-A
TYPICAL SECTION
ARLINGTON ST. SHEET 74
SCALE IN FEET
0 10

EXISTING SIGNALIZATION (SEE NOTE 2)
TEMP. STOP LINE, CLASS I
STA. 18+25
TEMP. STOP LINE, CLASS I
STA. 49+60
R-120-24
MATCH LINE STA. 18+80
MARTIN AVE.
EXIST E-3
PROP E-4
TEMP. LANE ARROW CLASS I
STA. 17+90
FLOW ARROW
I-76
TEMP. WORD ONLY, CLASS I
STA. 17+00
ONLY ONLY
R-31Q-36
TEMP. CHANNELIZING LINE CLASS I
PROP E-8
11' LANE TYP.
PROP E-6
TEMP. LANE ARROW
STA. 15+80
BEGIN CHANNELIZING LINE
STA 15+20
STA 14+70
TEMP. EDGE LINE CLASS I, WHITE
SIDEWALK CLOSED
END TAPER
STA 13+70
FOURTH AVE.
ARLINGTON ST.
TEMP. CENTERLINE SOLID DOUBLE CLASS I
8-30
END CONSTRUCTION
TEMP. LANE LINE CLASS I
OW-138-30
BEGIN TAPER
STA 11+70
MATCH LINE STA. 11+00

CLARK AVE.
FLOW ARROWS
FIRST AVE.
STA. 22+30
ARLINGTON ST.
TEMP LANE LINE CLASS I
SIDEWALK CLOSED
STA. 20+92
TEMP EDGE LINE CLASS I, WHITE
TEMP CENTER LINE SOLID DOUBLE CLASS I.
DRUMS 20' APART (MAX) 10' AT INTERSECTION
OW-138-30
11'
CONSTRUCTION
R-121-24
D/2
END TAPER
STA 21+10
R43-R-36
ONE WAY
BEGIN TAPER
STA 23+10
D
ROAD CONSTRUCTION AHEAD
OW-128-36
SECOND AVE.
TEMP. STOP LINE, CLASS I
STA. 19+50
MATCH LINE
STA. 18+80
TEMP EDGE LINE CLASS I YELLOW
12' MIN.
ONE WAY
R43-L-36
TEMP. STOP LINE, CLASS I
STA. 20+15
R41-B-24
DO NOT ENTER
EXISTING SIGNALIZATION (SEE NOTE 2)

PHASE I MAINTENANCE OF TRAFFIC - BRIDGE NO. SUM-76-12.31

MAINTENANCE OF TRAFFIC

CALC BY R.W. DATE 6/90	SUMMIT COUNTY	OHIO
CHKD BY R.B DATE 8/90	SUM - 76 - 11.57	F.H.W.A. REGION 5

73 / 1214

* For information only

LINE NUMBER	SHEET NUMBER	LOCATION	SIDE	614 TEMP. LANE LINES CLASS I, 947.03, TYPE C LF	614 TEMP. CENTER LINES CLASS I, 947.03, TYPE C LF	614 TEMP. CHANNELIZING LINES CLASS I, 947.03, TYPE C LF	614 TEMP. EDGE LINES, WHITE CLASS I, 947.03, TYPE C LF	614 TEMP. STOP LINES CLASS I, 947.03, TYPE C LF	614 TEMP. LANE ARROWS CLASS I, 947.03, TYPE C EA	614 TEMP. WORD "ONLY" CLASS I 947.03 TYPE C EA	614 TEMP. EDGE LINES, YELLOW CLASS I 947.03 TYPE C LF	* PLASTIC SAFETY DRUMS EA	LINE NUMBER
1													1
2													2
3		INMAN ST.											3
4													4
5													5
6													6
7													7
8													8
9													9
10													10
11													11
12													12
13		ARLINGTON ST.											13
14													14
15	72	STA. 11+70 TO 13+70		200	200		200					12	15
16	72	STA. 13+70 TO 15+20 (2)			300								16
17	72	STA. 13+70 TO 15+20					150					8	17
18	72	STA 15+20 TO 18+20			300	300		22	2	1			18
19	72	STA. 15+20 TO 18+80					360					26	19
20	72	STA. 19+05 TO 21+15			210		210	11				14	20
21	72	STA. 21+15 TO 22+30 (2)			230								21
22	72	STA. 21+40 TO 22+30		90									22
23													23
24													24
25		SECOND AVE.											25
26													26
27	72	STA. 20+10 TO 20+70									50	6	27
28	72	STA. 20+10 TO 23+10					300	12				15	28
29													29
30													30
31													31
32													32
33													33
34													34
35													35
36													36
37													37
38													38
39													39
40													40
41													41
42													42
43													43
44													44
SUB-TOTALS				290	1240	300	1220	45	2	1	50	81	
MILE				0.05	0.23	—	0.23	—	—	—	0.01		

MAINTENANCE OF TRAFFIC SUB-SUMMARY

MAINTENANCE OF TRAFFIC

SCALE
0 50' 100' 150'

N

SUMMIT COUNTY
SUM-76-11.57

74
1214

NOTE:
1) TWO (2) 11 FT. LANES ARE TO BE MAINTAINED ON ARLINGTON ST. AT ALL TIMES.
2) TRAFFIC SIGNAL TIMING AND/OR ADJUSTMENT OF SIGNAL HEADS AT ARLINGTON ST., SECOND AVE. AND MARTIN AVE. TO BE COORDINATED WITH THE CITY OF AKRON TRAFFIC ENGINEERING DIVISION FORCES.
3) FOR WORK RELATED TO BRIDGE SEE SHEET 84 THRU 863 FOR BRIDGE NO. SUM-76-1231
4) FOR TYPICAL SECTION A-A SEE SHEET 72
5) FOR I-76 WEST DETOUR AND SECOND AVE SIGNING SEE SHEET 80

KEY:
D = 200 FT.
* = TYPE A BARRICADE WARNING LIGHT.
D/2 = 100 FT.

MATCH LINE STA. 11+00
R-31A-36
TEMP. WORD ONLY, CLASS I STA. 10+95
FIFTH AVE.
TEMP. LANE ARROW, CLASS I STA. 10+50
TEMP. WORD ONLY, CLASS I STA. 9+40
TEMP. LANE ARROW, CLASS I STA. 9+70
TEMP. LANE ARROW, CLASS I STA. 8+70
R-31A-36
TEMP CHANNELIZING LINES CLASS I
BEGIN CHANNELIZING LINE STA 8+40
TEMP. EDGE LINE CLASS I, WHITE.
STA 7+90
TEMP CENTERLINE SOLID DOUBLE CLASS I
ARLINGTON ST.
END TAPER STA. 6+90
OC-8
TEMP LANE LINE CLASS I
OW-138-30
BEGIN TAPER STA. 4+90
SIXTH AVE.

44'
STA 2+40
D
D
OW-60C-36
RIGHT LANE CLOSED AHEAD
OW-122-36
FLOW ARROWS
25 MPH
OW-143-18
ROAD CONSTRUCTION AHEAD
OW-128-36

EXISTING SIGNALIZATION (SEE NOTE 2)
TEMP. STOP LINE, CLASS I STA. 19+60
MATCH LINE STA. 18+80
MARTIN AVE. EXIST E-3
PROP. E-4
TEMP. STOP LINE, CLASS I STA. 18+25
FLOW ARROW
A
D/2
A
R-121-24
I-76
FLOW ARROW
PROP. E-8
PROP. E-6
TEMP. EDGE LINE CLASS I WHITE
TEMP. CENTERLINE SOLID DOUBLE CLASS I
CONSTRUCTION
11' LANE TYP.
DRUMS W/TYPE C SB LIGHT 20' APART (MAX.) 10' AT INTERSECTION
R-121-24
D/2
ARLINGTON ST.
STA 13+70
FOURTH AVE.
TEMP EDGE LINE CLASS I-WHITE
STA. 11+90
R-31A-36
OW-138-30
BEGIN TAPER STA. 11+40
TEMP. LANE ARROW, CLASS I STA. 11+20
MATCH LINE STA. 11+00

MATCH LINE STA. 26+50
CLARK AVE.
BEGIN TAPER STA. 26+20
TEMP. LANE ARROW CLASS I STA. 25+25
R-31FF-48
TEMP. LANE ARROW, CLASS I STA. 24+50
BEGIN CHANNELIZING LINE STA. 25+10
END CHANNELIZING LINE STA. 24+60
TEMP. WORD ONLY CLASS I STA. 23+70
R31-Q-36
TEMP CENTER LINE SOLID DOUBLE CLASS I
11' LANE TYP.
TEMP LANE LINE CLASS I
TEMP. LANE ARROW, CLASS I STA. 23+10
FIRST AVE.
ARLINGTON ST.
TEMP LANE LINE CLASS I
TEMP CENTER LINE SOLID DOUBLE CLASS I
TEMP. STOP LINE, CLASS I STA. 19+10
R-121-24
D/2
R41-B-24
DO NOT ENTER
R43-R-36
ONE WAY
SEE NOTE 5 FOR SECOND AVE. SIGNING.
MIN. 2'
EXISTING SIGNALIZATION (SEE NOTE 2)
ONE WAY
R43-L-36
SECOND AVE.
TEMP CENTER LINE SOLID DOUBLE CLASS I
TEMP LANE LINE CLASS I
MATCH LINE STA. 18+80
TEMP. EDGE LINE CLASS I, YELLOW
TEMP. STOP LINE, CLASS I STA. 20+15
STA. 21+10
R-120-24
BEGIN TAPER STA. 23+00
MATCH LINE STA. 26+50

OW-128-36
ROAD CONSTRUCTION AHEAD
25 MPH
OW-143-18
D
ST.
OW-123-36
LEFT LANE CLOSED AHEAD
OW-60D-36
STA 30+20
ARLINGTON
FLOW ARROWS
ACKLEY AVE.
END TAPER STA. 28+20
END CONSTRUCTION
OC-8
TEMP LANE LINE CLASS I

PHASE I MAINTENANCE OF TRAFFIC - BRIDGE NO. SUM-76-12.31

MAINTENANCE OF TRAFFIC

SCALE 0 50' 100' 150'

FED. AID PROJ. NO.	STATE	PROJECT	
5	OHIO		

75
1214

SUMMIT COUNTY
SUM-76-11.57

NOTE:
1) TWO (2) 11 FT LANES ARE TO BE MAINTAINED ON ARLINGTON ST. AT ALL TIMES.
2) TRAFFIC SIGNAL TIMING AND/OR ADJUSTMENT OF SIGNAL HEADS AT ARLINGTON ST, SECOND AVE., MARTIN AVE. TO BE COORDINATED WITH CITY OF AKRON TRAFFIC ENGINEERING DIVISION FORCES.
3) FOR WORK RELATED TO BRIDGE SEE SHT 841 THRU 863 FOR BRIDGE NO. SUM.-76-1231
4) FOR TYPICAL SECTION B-B SEE SHEET 77
5) FOR I-76 WEST DETOUR SEE SHEET 80

KEY:
D= 200 FT
*=-TYPE A BARRICADE WARNING LIGHT
L= 100 FT

MATCH LINE
STA. 11+00
BEGIN TAPER STA. 10+80
KEEP RIGHT
OC-39R
FIFTH AVE.
OC-8
END CONSTRUCTION
44'-0"
ARLINGTON ST.
STA. 8+80
OW-60 D-36
STA. 6+80
FLOW ARROWS
LEFT LANE CLOSED AHEAD
OW-123-36
STA. 4+80
25 MPH
OW-143-18
SIXTH AVE.
ROAD CONSTRUCTION AHEAD
OW-128-36
R-121-24
TEMP. STOP LINE, CLASS I
STA. 18+30
TEMP. STOP LINE, CLASS I
STA. 49+85
EXISTING SIGNALIZATION (SEE NOTE 2)
R-121-24
TYPE III BARRICADE
MATCH LINE
STA. 18+80
FLOW ARROWS
MARTIN AVE.
EXIST E-3
FLOW ARROWS
OW-128-36
ROAD CONSTRUCTION AHEAD
RIGHT LANE CLOSED AHEAD
OW-122-36
I-76
STA. 48+90
STA. 49+40
OW-138-30
PROP. E-4
ROAD CLOSED
R-75
PROP. E-8
PROP. E-6
TYPE III BARRICADE
11'-0" TYP.
ROAD CLOSED
R-75
DRUMS W/TYPE C SB LIGHTS 20' APART (MAX) 10' AT INTERSECTION
TEMP. CENTERLINE SOLID, DOUBLE CLASS I
TEMP. EDGE LINE CLASS I, WHITE
STA. 13+70
ARLINGTON ST.
FOURTH AVE.
R-121-24
TEMP. LANE LINE CLASS I
MATCH LINE
STA. 11+00
MATCH LINE
STA. 26+50
BEGIN TAPER STA. 26+20
CLARK AVE.
ONLY ONLY
R-31Q-36
TEMP. LANE ARROW, CLASS I
STA. 25+55
BEGIN CHANNELIZING LINE
STA. 25+10
TEMP. LANE ARROW, CLASS I
STA. 23+85
END CHANNELIZING LINE
STA. 24+60
TEMP. WORD ONLY, CLASS I
STA. 23+00
ONLY ONLY
R-31Q-36
TEMP. CHANNELIZING LINE CLASS I
TEMP. CENTER LINE SOLID DOUBLE CLASS I
TEMP. LANE ARROW, CLASS I
STA. 22+75
END TAPER STA. 22+62
FIRST AVE.
FLOW ARROWS
OW-60C-36
TEMP. CENTER LINE SOLID DOUBLE CLASS I
ARLINGTON ST.
DRUMS W/TYPE C SB LIGHTS 20' APART (MAX.) 10' AT INTERSECTION
TEMP. EDGE LINE CLASS I, WHITE
TEMP. STOP LINE, CLASS I
STA. 19+30
TEMP. STOP LINE, CLASS I
STA. 20+60
BEGIN TAPER STA. 20+92
SECOND AVE.
FLOW ARROWS
10' SPA. TYP.
R-121-24
MATCH LINE
STA. 18+80
EXISTING SIGNALIZATION (SEE NOTE 2)
OW-128-36
ROAD CONSTRUCTION AHEAD
OW-143-18
25 MPH
OW-122-36
RIGHT LANE CLOSED AHEAD
D
STA. 30+20
OW-60C-36
ARLINGTON ST.
FLOW ARROWS
ACKLEY AVE.
END CONSTRUCTION
OC-8
END TAPER STA. 28+20
TEMP CENTER LINE SOLID DOUBLE CLASS I
TEMP EDGE LINE CLASS I, WHITE
MATCH LINE
STA. 26+50

PHASE I MAINTENANCE OF TRAFFIC - BRIDGE NO. SUM - 76 - 12.31

MAINTENANCE OF TRAFFIC

A: R.W. 6/90	SUMMIT COUNTY	OHIO
M: R.B. 8/90	SUM - 76 - 11.57	FHWA REGION 5

76/1214

* For information only

LINE NUMBER	SHEET NUMBER	LOCATION	SIDE	614 TEMP. LANE LINES CLASS I, 947.03, TYPE C	614 TEMP CENTER LINES CLASS I, 947.03, TYPE C	614 TEMP. CHANNELIZING LINES CLASS I, 947.03, TYPE C	614 TEMP. EDGE LINES, WHITE CLASS I, 947.03, TYPE C	614 TEMP. STOP LINES CLASS I, 947.03, TYPE C	614 TEMP. LANE ARROWS CLASS I, 947.03, TYPE C	614 TEMP. WORD "ONLY" CLASS I 947.03 TYPE C	614 TEMP. EDGE LINES, YELLOW CLASS I 947.03 TYPE C	* PLASTIC SAFETY DRUMS	LINE NUMBER
				LF	LF	LF	LF	LF	EA	EA		EA	
1													1
2		ARLINGTON ST.											2
3													3
4	74	STA. 4+90 TO 6+90		200	200		200						4
5	74	STA. 6+90 TO 8+40 (2)			300							12	5
6	74	STA. 6+90 TO 11+40			1450	410	450		4	2		25	6
7	74	STA. 11+40 TO 12+90 (2)			300								7
8	74	STA. 11+40 TO 12+90					150					10	8
9	74	STA. 12+90 TO 20+60			770		770	33				47	9
10	74	STA. 20+60 TO 22+30 (2)			340								10
11	74	STA. 20+60 TO 22+30		170									11
12	74	STA 22+60 TO 26+20		360	360	320			3	1			12
13	74	STA. 26+20 TO 28+20 (2)			400								13
14	74	STA. 26+20 TO 28+20		200									14
15													15
16													16
17		SECOND AVE.											17
18													18
19	74	STA. 19+10 TO 19+40					30	12				3	19
20	74	STA. 19+10 TO 23+00									290	21	20
21													21
22													22
23													23
24													24
25													25
26		ARLINGTON ST.											26
27													27
28	75	STA. 10+80 TO 12+80		200	200								28
29	75	STA. 12+80 TO 20+92			812		812	34				48	29
30	75	STA. 20+92 TO 21+42 (2)			300								30
31	75	STA. 20+92 TO 21+42					150					8	31
32	75	STA. 21+42 TO 26+00			458	418	458		3	1		24	32
33	75	STA. 26+00 TO 28+20 (2)			440								33
34	75	STA. 26+00 TO 28+20					220					15	34
35													35
36													36
37		MARTIN AVE											37
38													38
39	75	STA. 48+90 TO 50+00					110	12				10	39
40													40
41													41
42													42
43													43
44													44
		SUB-TOTALS		1130	6330	1148	3350	91	10	4	290	223	
		MILE		0.21	1.20	—	0.63	—	—	—	0.05		

MAINTENANCE OF TRAFFIC SUB-SUMMARY

MAINTENANCE OF TRAFFIC

SCALE 0 50' 100' 150'

FHWA REGION	STATE	PROJECT	
5	OHIO		

77 / 1214

SUMMIT COUNTY
SUM-76-11.57

N

MATCH LINE STA. 11+00

FIFTH AVE.

OW-128-36 ROAD CONSTRUCTION AHEAD

OW-121-36 ONE LANE ROAD AHEAD *

STA. 9+70

LEFT LANE CLOSED AHEAD OW-123-36

25 MPH OW-143-18

ARLINGTON ST.

STA. 7+70

ROAD CONSTRUCTION AHEAD OW-128-36 *

SIXTH AVE.

TEMP. STOP LINE, CLASS I
STA. 18+30

TEMP. STOP LINE, CLASS I
STA. 49+80

STA. 48+25

MATCH LINE

MARTIN AVE.

12' MIN

EXISTING SIGNALIZATION (SEE NOTE 1)

TYPE III BARRICADE

ROAD CLOSED R-75

STA. 18+80

PROP. E-4

CLARK AVE.

R121-24

FLOW ARROW

I-76

FLOW ARROW

PROP. E-8

PROP. E-6

TYPE III BARRICADE

ROAD CLOSED R-75

END TAPER STA. 15+70

TEMP. LANE LINE CLASS I,

TEMP. CENTER LINE SOLID DOUBLE CLASS I

KEEP RIGHT OC-39R 30

BEGIN TAPER STA. 13+70

8-30 CONSTRUCTION END

ARLINGTON ST.

FOURTH AVE.

OW-60D-36

STA. 11+70

MATCH LINE STA. 11+00

NOTE:
1) REFER TO SHT. 75 FOR MAINTENANCE OF TRAFFIC PLAN NORTH OF STA. 22+30 AND FOR NOTES AND KEY.
2) FOR I-76 WEST DETOUR SEE SHEET 80
3) MARTIN AVE SHALL BE UNDER FLAGGER CONTROL DURING CONST. OPERATIONS (9 AM TO 4 PM WEEKDAYS) WHEN ONLY ONE (1) LANE IS MAINTAINED. DURING ALL OTHER TIMES TWO (2) LANES ARE TO BE MAINTAINED WITH TEN (10) FT. MINIMUM * LANE WIDTH EACH.

OW-128-36 ROAD CONSTRUCTION AHEAD *

MARTIN AVE. SOUTH

TEMP. EDGE LINE CLASS I, WHITE

MARTIN AVE.

12' MIN

OW-121-36 ONE LANE ROAD AHEAD *

STA. 47+75

STA. 48+25

STA. 49+40

ARLINGTON ST.

OW-138-30

TEMP. STOP LINE, CLASS I
STA. 49+55

FIRST AVE.

STA. 22+30

ARLINGTON ST.

TEMP. EDGE LINE CLASS I, WHITE

TEMP. CENTERLINE SOLID DOUBLE CLASS I

STA. 20+92

DRUMS 20' APART (MAX) 10' AT INTERSECTION

R121-24

CONSTRUCTION

TEMP. STOP LINE, CLASS I
STA. 19+30

TEMP. STOP LINE, CLASS I
STA. 20+55

SECOND AVE.

MATCH LINE STA. 18+80

EXISTING SIGNALIZATION (SEE NOTE 1)

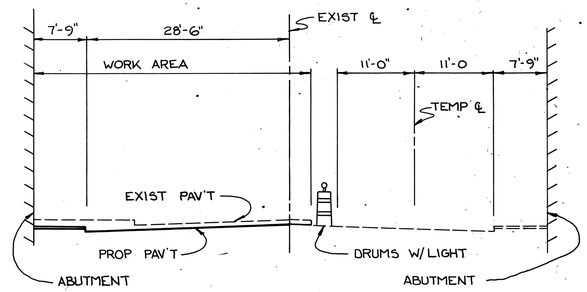

SECTION B-B
TYPICAL SECTION
ARLINGTON ST SHT 75

SCALE IN FEET
0 10

PHASE I MAINTENANCE OF TRAFFIC - BRIDGE NO. SUM-76-12.31

MAINTENANCE OF TRAFFIC

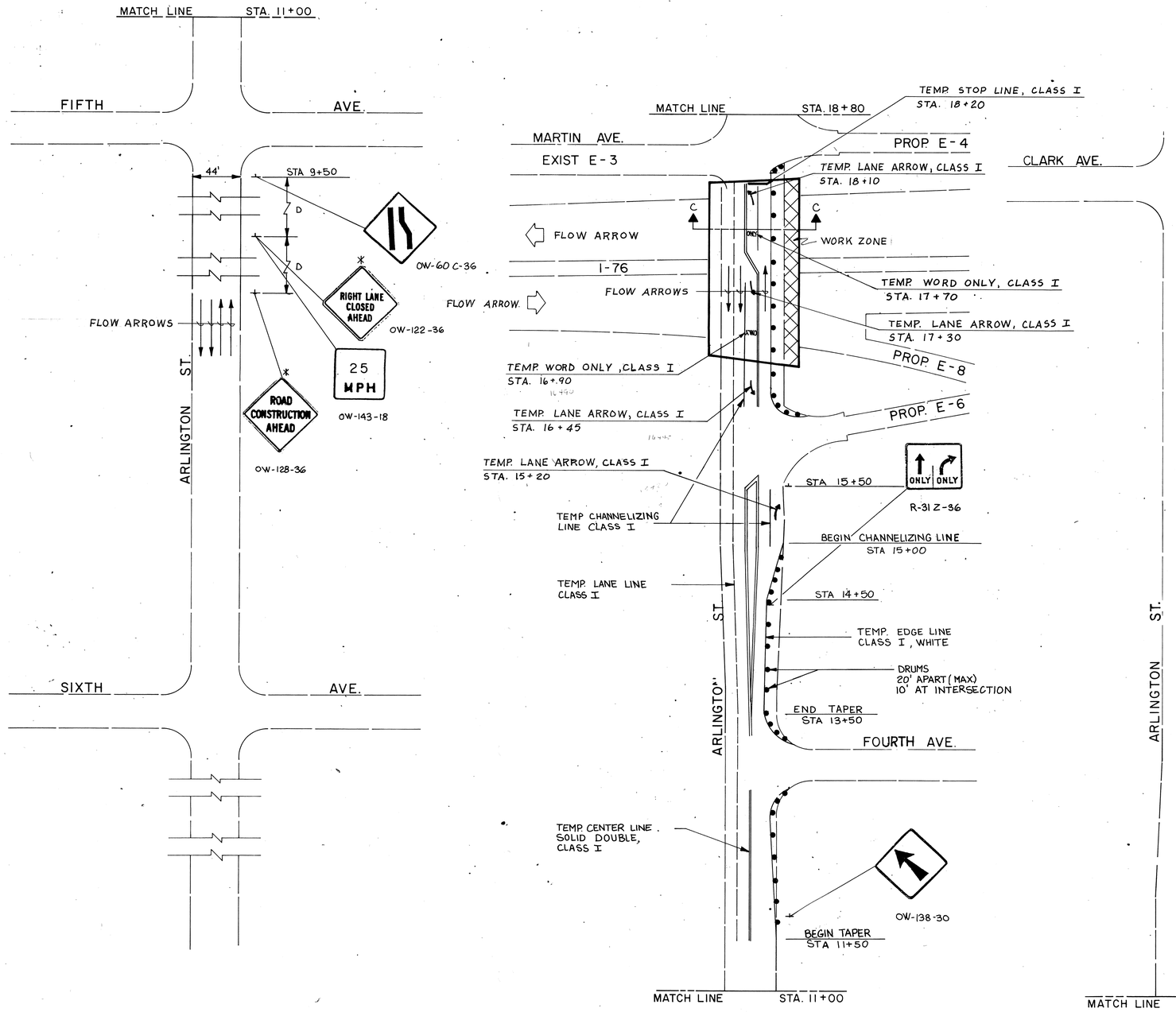

SCALE
0 50' 100' 150'

N

78
1214

SUMMIT COUNTY
SUM-76-11.57

NOTES:
1) ELEVEN (11) FT. LANES ARE TO BE MAINTAINED ON ARLINGTON ST. AT ALL TIMES.
2) FOR WORK RELATED TO BRIDGE, SEE SHT 84 THRU 863 FOR BRIDGE NO. SUM-76-1231.

KEY:
D= 200 FT.
X= TYPE A BARRICADE WARNING LIGHT.

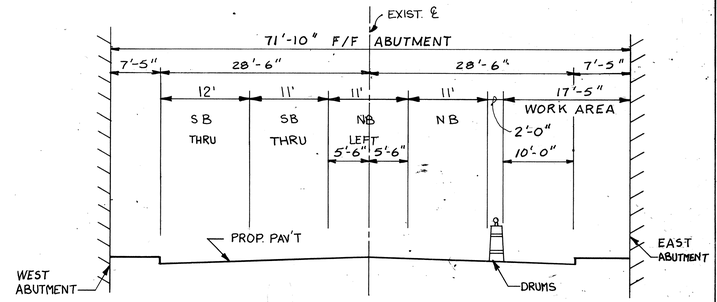

SECTION C-C
TYPICAL SECTION
ARLINGTON ST. - EAST ABUTMENT WORK

SCALE IN FEET
0 10

MAINTENANCE OF TRAFFIC

SCALE
0 50' 100' 150'

FHWA REGION	STATE	PROJECT	
5	OHIO		

78A
1214

SUMMIT COUNTY
SUM-76-11.57

NOTES:
1. ELEVEN (11) FT. LANES ARE TO BE MAINTAINED ON ARLINGTON ST. AT ALL TIMES.
2. FOR WORK RELATED TO BRIDGE SEE SHT. 841 THRU 863 FOR BRIDGE NO. SUM-76-1231.

KEY:
D = 200' FT.

MATCH LINE STA. 11+00

FIFTH AVE.

ARLINGTON ST.

44'

STA. 9+50

D

OW-60C-36

RIGHT LANE CLOSED AHEAD

25 MPH

OW-122-36
OW-193-18

ROAD CONSTRUCTION AHEAD

OW-128-36

SIXTH AVE.

MATCH LINE STA. 18+80

MARTIN AVE.

EXIST E-3

PROP. E-4

TEMP. STOP LINE, CLASS I
STA. 18+20

FLOW ARROWS

TEMP. LANE ARROW, CLASS I
STA. 17+95

FLOW ARROW

WORK ZONE

I-76

TEMP. WORD ONLY, CLASS I
STA. 17+70

TEMP. LANE ARROW, CLASS I
STA. 17+30

FLOW ARROW

TEMP. EDGE LINE, WHITE, CLASS I

TEMP. LANE ARROW, CLASS I
STA. 16+40

TEMP. LANE LINE, CLASS I

FLOW ARROW

PROP. E-8

BEGIN TAPER
STA. 16+25

TEMP. WORD ONLY, CLASS I
STA. 16+85

PROP. E-6

TEMP. LANE LINE, CLASS I

BEGIN CHANNELIZING LINE
STA. 15+00

TEMP. CENTERLINE, SOLID DOUBLE, CLASS I

END TAPER
STA. 14+25

ARLINGTON ST.

TEMP. EDGE LINE, WHITE, CLASS I

END TAPER
STA. 13+50

FOURTH AVE.

TEMP. CENTERLINE, SOLID DOUBLE, CLASS I

OW-138-30

BEGIN TAPER
STA. 11+50

MATCH LINE STA. 11+00

MATCH LINE STA. 26+50

CLARK AVE.

OW-128-36
STA. 25+50

ROAD CONSTRUCTION AHEAD

OW-128-18
STA. 24+00

25 MPH

OW-138-30
STA. 22+67.5

FLOW ARROWS

FIRST AVE.

BEGIN TAPER
STA. 22+30

ARLINGTON ST.

TEMP. CENTERLINE, SOLID DOUBLE, CLASS I

TEMP. LANE LINE, WHITE, CLASS I

END TAPER
STA. 21+30

TEMP. EDGE LINE, WHITE, CLASS I

BEGIN TAPER
STA. 20+30

END TAPER
STA. 19+80

TEMP. LANE ARROW, CLASS I
STA. 19+50

TEMP. WORD ONLY, CLASS I
STA. 19+75

SECOND AVE.

TEMP. STOP LINE, CLASS I
STA. 19+25

MATCH LINE STA. 18+80

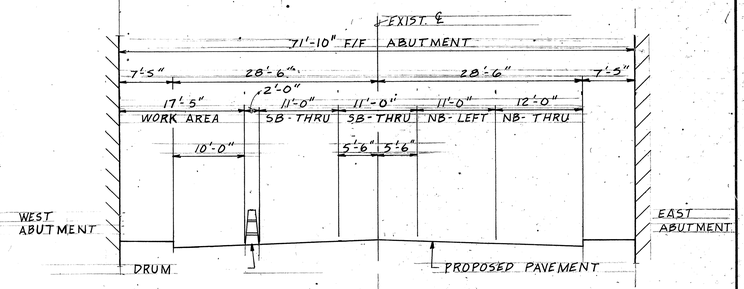

SECTION D-D
TYPICAL SECTION
ARLINGTON ST.-WEST ABUTMENT WORK

SCALE IN FEET
0 10

ACKLEY AVE.

ARLINGTON ST.

OW-128-36
STA. 27+00

ROAD CONSTRUCTION AHEAD

MATCH LINE STA. 26+50

MAINTENANCE OF TRAFFIC

CALC BY R.W DATE 6/90
CHK BY R.B DATE 8/90

SUMMIT COUNTY
SUM - 76 - 11.57

OHIO
F.H.W.A. REGION 5

79
1214

*For information only

| LINE NUMBER | SHEET NUMBER | LOCATION | SIDE | | 614 TEMP. LANE LINES CLASS I, 947.03, TYPE C LF | 614 TEMP CENTER LINES CLASS I, 947.03, TYPE C LF | 614 TEMP. CHANNELIZING LINES CLASS I, 947.03, TYPE C LF | 614 TEMP EDGE LINES, WHITE CLASS I, 947.03, TYPE C LF | 614 TEMP. STOP LINES CLASS I, 947.03, TYPE C LF | 614 TEMP. LANE ARROWS CLASS I, 947.03, TYPE C EA | 614 TEMP. WORD "ONLY" CLASS I 947.03 TYPE C EA | | | | | | | * PLASTIC SAFETY DRUMS EA | | | | | | |

MAINTENANCE OF TRAFFIC

SCALE IN FEET
0 100 200 300

FHWA REGION	STATE	PROJECT	
5	OHIO		

80
1214

SUMMIT COUNTY
SUM-76-11.57

N

NOTE:
1) SIGNING ON SECOND AVE OW-128 TO BE ERECTED DURING WORK RELATED TO SHT 74

KEY:
D = 200 FT.
* = TYPE A BARRICADE WARNING LIGHT
** = 1M-40-24
M-5-24-2

CLARK
MILES
IRVIN
HART ST
MARKET STREET
ARLINGTON STREET
CHITTENDEN STREET
FIRST AVE
SECOND AVE.
THIRD AVE.
FOURTH AVE
FIFTH AVE
FULLER ST.
WEEKS ST.
KELLY AVE

OW-138-30
OW-128-36
ROAD CONSTRUCTION AHEAD
ROAD CLOSED TYPE III BARRICADE
OC-29
WEST 76 DETOUR
TO WEST 77 76
ARLINGTON ST. WEST 76 DETOUR
E-4 FLOW ARROW
E-7 FLOW ARROW
E-6 FLOW ARROW
585
℄ I-76
590
FLOW ARROWS
595
PROP. E-8
FLOW ARROW
600
605
EXIST. E-8
FLOW ARROW
ROAD CLOSED TYPE III BARRICADE
EAST 76 DETOUR
TO WEST CLOSED 77 76
8'×2' BLACK ON ORANGE OVERLAY
EAST 76
WEST 76 **
DETOUR OC-29R
DETOUR EAST 76 TO 76
EAST 76 DETOUR
WEST 76 ** DETOUR OC-29L
EAST 76 DETOUR
WEST 76 **

PHASE II & IV MAINTENANCE OF TRAFFIC – BRIDGE NO. SUM-76-12.31

MAINTENANCE OF TRAFFIC

FHWA REGION	STATE	PROJECT	
5	OHIO		

81
1214

SUMMIT COUNTY
SUM-76-11.57

SCALE IN FEET
0 100 200 300

N

NOTE:
1) ONE (1) 14 FT. LANE SHALL BE MAINTAINED ON THIRD AVE. AT ALL TIMES
2) PEDESTRIAN TRAFFIC SHALL NOT BE MAINTAINED UNDER THE BRIDGE DURING THIS PHASE.
3) WORK RELATED TO BRIDGE No. SUM-76-12.67 SEE SHEET 903-936.

KEY:
A = 75 FT.
D = 200 FT.
* = TYPE A BARRICADE WARNING LIGHT.

CLARK
MILES
IRVIN
HART ST
MARKET STREET
ARLINGTON STREET
FIRST AVE
SECOND AVE.
THIRD AVE.
FOURTH AVE
FIFTH AVE
CHITTENDEN STREET
FULLER
HART ST.
KELLY AVE
WEEKS ST.
FLOW ARROW
FLOW ARROWS
585
590
595
600
605
℄ I-76
DRUM (20' SPACING MAX)
WORK AREA
STA 16+90
STA 22+50
STA 11+40
BEGIN TAPER STA. 24+50
TEMP. EDGE LINE (YELLOW)
PROP. E-8
TO WEST 77 76
TO EAST 76
ROAD CLOSED TYPE III BARRICADE
ROAD CLOSED TO THRU TRAFFIC
MARTHA AVE. MARKET ST EXIT AT FIFTH AVE.
FIFTH AVE NEXT RIGHT
DETOUR
EAST 76
WEST 76
FULLER ST.
D-14
OC-29
OC-29L
OC-29R
OC-14R
OC-2
OC-8
R-41-B-24
R-43-L-36
R-75
R-76C
OW-127-36
OW-127-24
OW-138-30
OW-123-36
OW-120-36
DO NOT ENTER
ONE WAY
END CONSTRUCTION
ROAD CONSTRUCTION AHEAD
DETOUR AHEAD
ROAD CLOSED AHEAD

PHASE II & IV MAINTENANCE OF TRAFFIC BRIDGE No. SUM-76-12.67

MAINTENANCE OF TRAFFIC

FHWA REGION	STATE	PROJECT	
5	OHIO		

82
1214

SUMMIT COUNTY
SUM-76-11.57

SCALE IN FEET
0 100 200 300

N

NOTE:
1) ONE (1) 14 FT. LANE SHALL BE MAINTAINED ON THIRD AVE. AT ALL TIMES.
2) PEDESTRIAN TRAFFIC SHALL NOT BE MAINTAINED UNDER THE BRIDGE DURING THIS PHASE.
3) FOR DETOUR ROUTE SIGNING FOR FULLER ST. REFER TO SHEET 81.
4) WORK RELATED TO BRIDGE No. SUM-76-12.67 SEE SHEET 903-936.

KEY:
A = 75 FT.
D = 200 FT.
* = TYPE A BARRICADE WARNING LIGHT.

CLARK
IRVIN
MILES
HART ST
MARKET STREET
FIRST AVE
ARLINGTON STREET
CHITTENDEN STREET
SECOND AVE.
FOR SIGNING ON FULLER ST. REFER TO SHEET 81.
FOR SIGNING ON SECOND ST. REFER. TO SHEET 81.
ARLINGTON ST.
WEST 76 DETOUR
EAST 76 DETOUR
FLOW ARROW
TEMPORARY EDGE LINE, WHITE CLASS I
TO WEST 77 76
TO EAST 76
ROAD CLOSED TYPE III BARRICADE
EAST 76 DETOUR
WEST 76 DETOUR
TYPE III BARRICADE ROAD CLOSED
ROAD CLOSED EAST 76 DETOUR
DETOUR
OC 14R
E-4
E-6
E-7
E-8
585
590
595
600
605
℄ I-76
PROP.
R-75
R-76C
OC-12R
DRUMS (20' SPACING MAX.)
ROAD CLOSED THRU TRAFFIC
STA 16+90
STA 22+50
BEGIN TAPER STA 24+50
TEMP EDGE LINE (WHITE)
TYPE III BARRICADE ROAD CLOSED
ROAD CLOSED TYPE III BARRICADE
THIRD AVE.
OM-13B-30
FOR SIGNING ON THIRD AVE. REFER TO SHEET 81.
MARTHA AVE. MARKET ST EXIT AT FIFTH AVE
FIFTH AVE NEXT RIGHT
FOURTH AVE
WORK AREA
FULLER ST.
HART ST.
FIFTH AVE.
KELLY AVE
WEEKS ST.
FOR SIGNING ON FIFTH AVE. AND FULLER ST. REFER TO SHEET 81.

PHASE II & IV MAINTENANCE OF TRAFFIC BRIDGE No. SUM-76-12.67

MAINTENANCE OF TRAFFIC

SCALE IN FEET
0 100 200 300

N

5	OHIO		

83
1214

SUMMIT COUNTY
SUM-76-11.57

NOTE:
1. WORK RELATED TO BRIDGE, SEE SHT 903 FOR BRIDGE No. SUM-76-12.67
2. PEDESTRIAN TRAFFIC SHALL NOT BE MAINTAINED UNDER THE BRIDGE.

KEY:
D = 200 FT.
✱ = TYPE A BARRICADE WARNING LIGHT

3. ERECT NORTH FULLER ST. DETOUR ROUTE SIGNS BEFORE OPENING RAMP E-8.

CLARK
ARLINGTON STREET
MILES
IRVIN
HART ST
MARKET STREET
FIRST AVE
CHITTENDEN STREET
SECOND AVE
THIRD AVE
FOURTH AVE
FIFTH AVE
HART ST.
FULLER ST.
WEEKS ST.
KELLY AVE
PROP. E-4
PROP. E-6
PROP. E-7
PROP. E-8
FLOW ARROW
FLOW ARROWS
℄ I-76
585
590
595
600
605
TO WEST 77 76
TO EAST 76
ROAD CLOSED TYPE III BARRICADE
ROAD CLOSED
OW-120-36
OW-127-36
DETOUR AHEAD
ROAD CLOSED AHEAD
TEMP. EDGE LINE CLASS I WHITE
DRUMS 20' APART (MAX)
STA 16+50
FULLER ST ℄ STA. 14+90±
FULLER ST ℄ STA. 13+10±
END LINE STA. 22+50
WORK AREA
ROAD CLOSED TO THRU TRAFFIC
DETOUR
ARLINGTON ST. WEST 76 DETOUR
ARLINGTON ST. EAST 76 DETOUR
WEST 76 DETOUR
EAST 76 DETOUR
NORTH FULLER ST D-14 M-37
FULLER ST D-14 DETOUR
R-75 OC-141
R-75 OC-29R
R-76C OC-14R
OC-29L
OC-29R
M-37 D-14

PHASE II & IV MAINTENANCE OF TRAFFIC - BRIDGE NO. SUM-76-12.67

MAINTENANCE OF TRAFFIC

SCALE IN FEET
0 100 200 300

N

F.H.W.A. REGION	STATE	PROJECT	
5	OHIO		

83A
1214

SUMMIT COUNTY
SUM-76-11.57

NOTE:
1. WORK RELATED TO BRIDGE, SEE SITE PLAN FOR BRIDGE No. SUM-76-12.67, SHEET 903.
2. PEDESTRIAN TRAFFIC SHALL NOT BE MAINTAINED UNDER THE BRIDGE.

KEY:
D = 200 FT.
✱ = TYPE A BARRICADE WARNING LIGHT

CLARK
ARLINGTON STREET
MILES
IRVIN
HART ST
MARKET STREET
FIRST AVE
SECOND AVE.
CHITTENDEN STREET
ROAD CLOSED TYPE III BARRICADE
OW-120-36
ROAD CLOSED AHEAD
OW-127-36
DETOUR AHEAD
PROP. E-4
FLOW ARROW
PROP. E-7
FLOW ARROW
585
℄ 1-76
PROP. E-6
FLOW ARROW
590
FLOW ARROWS
PROP. E-8
FLOW ARROW
595
ROAD CLOSED TYPE III BARRICADE
R-75
OC-14L
DETOUR
THIRD AVE.
FULLER ST. ℄ STA. 14+90±
FLOW ARROWS
WORK AREA
600
FLOW ARROWS
605
OC-29L
DETOUR
FULLER ST.
D-14
FULLER ST. ℄ STA. 13+10±
FOURTH AVE
HART ST.
FULLER ST.
ROAD CLOSED TO THRU TRAFFIC
DETOUR
R-76C
OC-14R
FLOW ARROWS
FLOW ARROW
FIFTH AVE
FIFTH AVE.
SIXTH AVE.
WEEKS ST.
KELLY AVE
OC-29L
DETOUR
FULLER ST.
D-14
FULLER ST.
D-14
DETOUR
OC-29L
FLOW ARROW

PHASE II & IV - MAINTENANCE OF TRAFFIC - BRIDGE No. SUM-76-12.67

MAINTENANCE OF TRAFFIC

CALC. BY: RW DATE: 6/90	SUMMIT COUNTY	OHIO
CHK. BY: RB DATE: 8/90	SUM - 76 - 11.57	FHWA REGION 5

84 / 1214

*For information only

| LINE NUMBER | SHEET NUMBER | LOCATION | SIDE | | 614 TEMP. LANE LINES CLASS I, 947.03, TYPE C | 614 TEMP. CENTER LINES CLASS I, 947.03, TYPE C | 614 TEMP. CHANNELIZING LINES CLASS I, 947.03, TYPE C | 614 TEMP. EDGE LINES, WHITE CLASS I, 947.03, TYPE C | 614 TEMP. STOP LINES CLASS I, 947.03, TYPE C | 614 TEMP. LANE ARROWS CLASS I, 947.03, TYPE C | 614 TEMP. WORD "ONLY" CLASS I 947.03 TYPE C | 614 TEMP. EDGE LINES, YELLOW CLASS I, 947.03, TYPE | | | | | | * PLASTIC SAFETY DRUMS | | | | | |

FHWA REGION	STATE	PROJECT	
5	OHIO		

85
1214

SUM-76-11.57

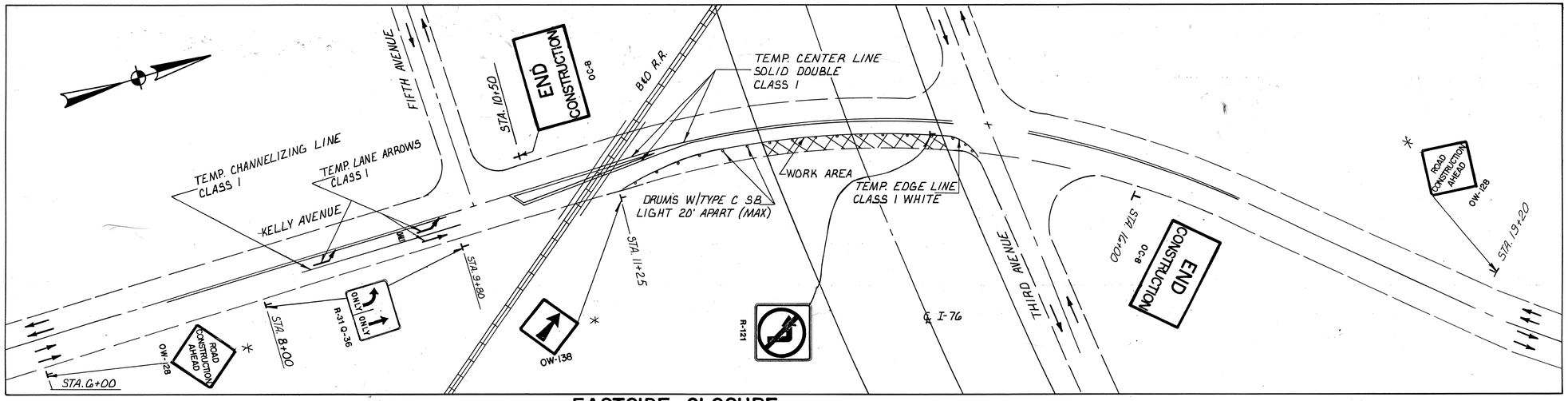

EASTSIDE CLOSURE

NOTES

1. THREE (3) 11 FOOT LANES ARE TO BE MAINTAINED ON KELLY AVE. AT ALL TIMES.
2. SIDEWALK ON OPPOSITE SIDE OF WORK AREA IS TO REMAIN OPEN FOR PEDESTRIAN TRAFFIC.
3. FOR WORK RELATED TO BRIDGE, SEE SHEET 937
4. THIS CLOSURE IS FOR THE CONSTRUCTION OF PIER THREE SUBSTRUCTURE WIDENING AND SHALL BE LIMITED IN DURATION TO THE ACTUAL TIME NECESSARY TO COMPLETE THE WIDENING.

KEY

* TYPE A BARRICADE WARNING LIGHT

STRUCTURE SUM 76-1277
MAINTENANCE OF TRAFFIC-KELLY AVENUE

FHWA REGION	STATE	PROJECT	
5	OHIO		

86
12.14

SUM-76-11.57

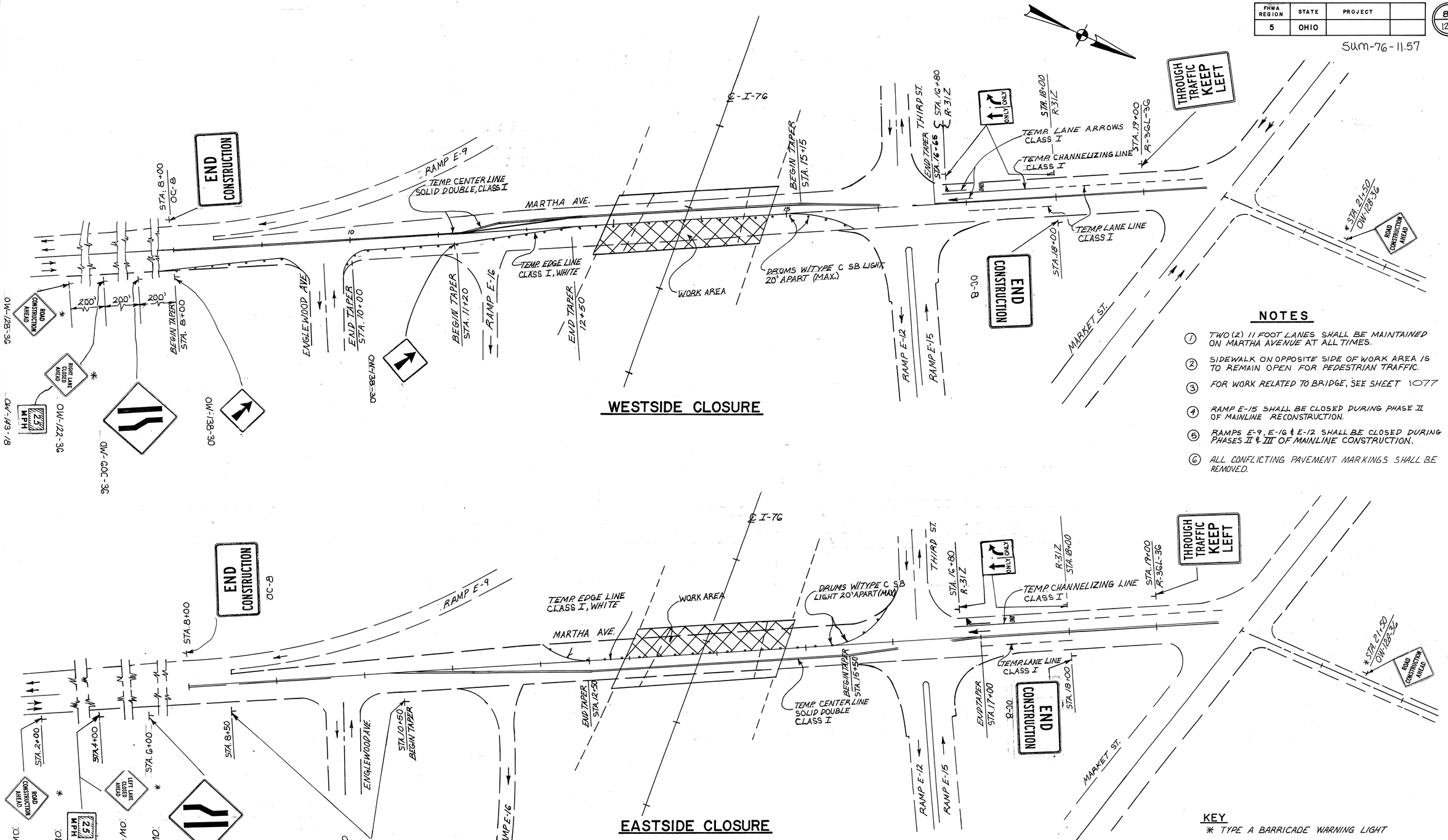

NOTES

1. TWO (2) 11 FOOT LANES SHALL BE MAINTAINED ON MARTHA AVENUE AT ALL TIMES.
2. SIDEWALK ON OPPOSITE SIDE OF WORK AREA IS TO REMAIN OPEN FOR PEDESTRIAN TRAFFIC.
3. FOR WORK RELATED TO BRIDGE, SEE SHEET 1077
4. RAMP E-15 SHALL BE CLOSED DURING PHASE II OF MAINLINE RECONSTRUCTION.
5. RAMPS E-9, E-16 & E-12 SHALL BE CLOSED DURING PHASES II & III OF MAINLINE CONSTRUCTION.
6. ALL CONFLICTING PAVEMENT MARKINGS SHALL BE REMOVED.

KEY
* TYPE A BARRICADE WARNING LIGHT

STRUCTURE SUM 76-1296
MAINTENANCE OF TRAFFIC - MARTHA AVE.

FHWA REGION	STATE	PROJECT	
5	OHIO		

87
1214

Sum-76-11.57

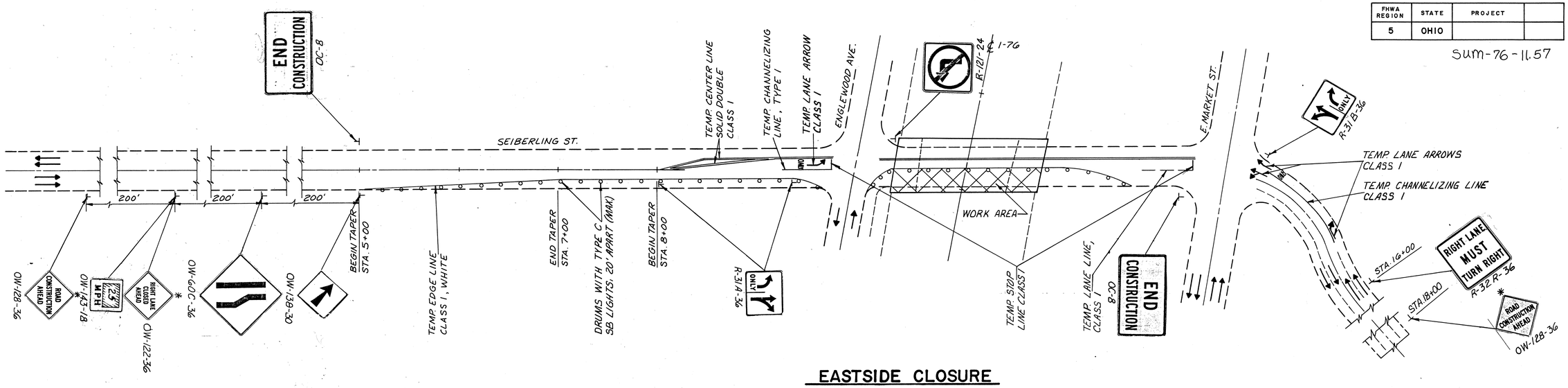

EASTSIDE CLOSURE

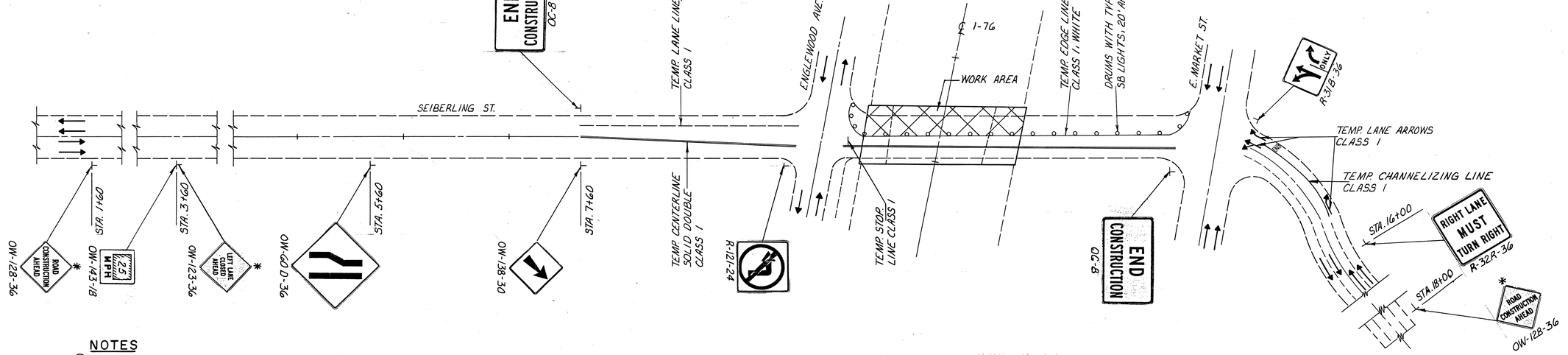

WESTSIDE CLOSURE

KEY
* TYPE A BARRICADE WARNING LIGHTS

NOTES

1. TWO (2) 11 FOOT LANES ARE TO BE MAINTAINED ON SEIBERLING STREET AT ALL TIMES.
2. SIDEWALK ON OPPOSITE SIDE OF WORK AREA IS TO REMAIN OPEN FOR PEDESTRIAN TRAFFIC.
3. FOR WORK RELATED TO BRIDGE SEE SHEET 1135.
4. CONTRACTOR SHALL ADJUST BARREL SPACING TO MAINTAIN ACCESS TO DRIVEWAYS WHERE POSSIBLE.
5. ALL CONFLICTING PAVEMENT MARKINGS SHALL BE REMOVED.

STRUCTURE SUM 76-1332
MAINTENANCE OF TRAFFIC-SEIBERLING ST.

MAINTENANCE OF TRAFFIC

CALC. BY JBH		OHIO	88
DATE 3-90		F.H.W.A. REGION 5	1214
CHKD. BY MSC			
DATE 3-90			

SUMMIT COUNTY
SUM 76-11.57

* For information only

LINE NUMBER	SHEET NUMBER	LOCATION — STATION TO STATION	SIDE	* PLASTIC SAFETY DRUMS EACH	614 TEMPORARY EDGE LINES, WHITE, CLASS I, 947.03 TYPE C LF	614 TEMPORARY LANE LINES, CLASS I, 947.03 TYPE C LF	614 TEMPORARY CHANNELIZING LINES, CLASS I, 947.03 TYPE C LF	614 TEMPORARY CENTER LINE, SOLID DOUBLE, CLASS I, 947.03 TYPE C LF	614 TEMPORARY LANE ARROWS, 947.03 TYPE C EACH	614 TEMPORARY STOP LINES, CLASS I, 947.03 TYPE C LF	614 TEMPORARY WORD "ONLY" ON PAVEMENT, 72 INCH, CLASS I 947.03 TYPE C EACH	LINE NUMBER
1												1
2												2
3												3
4												4
5		KELLY AVENUE 6+00 TO 19+20										5
6		EASTSIDE CLOSURE		18	340		150	1000	3		1	6
7												7
8												8
9												9
10												10
11												11
12		MARTHA AVENUE 2+00 TO 24+50										12
13		BOTH CLOSURES				200	125		2		1	13
14		EASTSIDE CLOSURE ONLY		36	800			1250				14
15		WESTSIDE CLOSURE ONLY		18	400			1050				15
16												16
17												17
18												18
19		SEIBERLING STREET 0+00 TO 18+00										19
20		BOTH CLOSURES					100		3		1	20
21		EASTSIDE CLOSURE ONLY		38	750	50		625	1	24	1	21
22		WESTSIDE CLOSURE ONLY		20	350	210		525		12		22
23												23
24												24
25												25
26												26
27												27
28												28
29												29
30												30
31												31
32												32
33												33
34												34
35												35
36												36
37												37
38												38
39												39
40												40
41												41
42												42
43												43
44												44
		TOTALS		130	2640	460	375	4450	9	36	4	
		Mile			0.50	0.90		0.84				

MAINTENANCE OF TRAFFIC SUB-SUMMARY

AA.B.Pt 71942R

GENERAL NOTES

CALC. BY. KDK DATE 9/89	SUM-76-11.57	OHIO	89
CHKD. BY. DJB DATE 10/89	FED. PROJECT IR-76-2(44)19	F.H.W.A. REGION 5	1214

SUMMIT COUNTY

ITEM 619 - FIELD OFFICE, TYPE C, AS PER PLAN

SECTION 619.02 OF THE SPECIFICATIONS SHALL BE REVISED TO READ AS FOLLOWS:

THE CONTRACTOR SHALL FURNISH A FIELD OFFICE COMPLETE WITH APPURTENANCES, FURNISHINGS, AND EQUIPMENT AS FOLLOWS:

1. THE FIELD OFFICE SHALL BE A MINIMUM OF 1,200 SQUARE FEET WITH AN INSIDE HEIGHT OF AT LEAST SEVEN (7) FEET. PROVIDE TWO (2) OUTSIDE DOORS, LOCKABLE VANDAL-PROOF CYLINDER TYPE DEAD BOLT LOCKS AND LOCKABLE WINDOWS.
2. FLOOR SPACE SHALL BE DIVIDED INTO ONE (1) RESTROOM, ONE (1) GENERAL OFFICE AREA, NOT LESS THAN THREE (3) PRIVATE OFFICES, AND ONE (1) CONFERENCE ROOM, AS DEEMED SUITABLE TO THE ENGINEER.
3. HEATING AND AIR CONDITIONING TO MAINTAIN TEMPERATURE BETWEEN 68°F AND 78°F.
4. WATER COOLER.
5. WATER HEATER.
6. LIGHTING AND ELECTRIC OUTLETS.
7. PARKING SPACINGS FOR UP TO EIGHT (8) VEHICLES, FOR USE BY ODOT AND ENGINEER'S PERSONNEL, GRADED FOR DRAINAGE AND PAVED.
8. RESTROOM CONNECTED TO AN EXISTING SANITARY SEWER LINE FOR THE USE OF THE OCCUPANTS OF THE FIELD OFFICE, MEETING THE REQUIREMENTS OF THE GOVERNMENTAL AGENCIES HAVING RELEVANT JURISDICTION.
9. ONE (1) COPIER SUITABLE FOR CONTINUOUS PRINTING IN BLACK AND WHITE AND IN COLOR OF 8 1/2 X 11, 8 1/2 X 14 AND 11 X 17 SIZE SHEETS; IT SHALL BE CAPABLE OF REDUCING AND ENLARGING PRINTS AND SHALL BE AS MANUFACTURED BY XEROX, KODAK OR APPROVED EQUAL.
10. FACSIMILE COPIER PROVIDED WITH AUTODIALER.
11. ONE (1) WALKIE/TALKIE (MOTOROLA HT 220. TYPE CC 3540 OR APPROVED EQUAL) COMMUNICATION SYSTEM CONSISTING OF EIGHT (8) FIELD UNITS AND ONE (1) BASE STATION TO BE OPERATIONAL WITHIN CONSTRUCTION LIMITS.
12. FURNISHINGS CONSISTING OF THE FOLLOWING:
    A. FIVE (5) DESKS W/MINIMUM 30" X 50" TOP, FOUR (4) STORAGE DRAWERS, AND ONE (1) LETTER SIZE FILE DRAWER. PROVIDE SWIVEL-TYPE DESK CHAIRS WITH ARMS AND CASTERS.
    B. ONE (1) SECRETARY'S DESK W/MINIMUM 30" X 50" TOP, THREE (3) STORAGE DRAWERS, AND TYPEWRITER PEDESTAL. PROVIDE SWIVAL-TYPE SECRETARY'S CHAIR ON CASTERS.
    C. ONE (1) DRAFTING/PLAN TABLE W/MINIMUM 30" X 72" WORK SURFACE AND ONE (1) PLAN STORAGE AND ONE (1) INSTRUMENT STORAGE DRAWER. PROVIDE APPROPRIATE DRAFTING TABLE CHAIR.
    D. ONE (1) FOUR (4) DRAWER LOCKABLE FIRE PROOF (3 HOUR RATING) LEGAL SIZE FILE CABINET.
    E. THREE (3) TABLE TOP WORKING SURFACES, MINIMUM SIZE 30" X 60".
    F. SIX (6) TWO DRAWER LETTER-SIZE FILES.
    G. FOUR (4) PLAN RACKS WITH APPURTENANT HOLDERS. EACH PLAN RACK SHALL BE A MINIMUM CAPACITY OF TWELVE (12) HOLDERS.
    H. ONE (1) OFFICE SUPPLY STORAGE CABINET.
    I. FOUR (4) FOLDING CONFERENCE TABLES, MINIMUM SIZE 30" X 72" TOP. PROVIDE THIRTY (30) FOLDABLE OR STACKABLE CHAIRS FOR USE AT THE CONFERENCE TABLES.
13. TELEPHONE SERVICE AT EACH DESK AND IN THE CONFERENCE ROOM, INTERCONNECTED BETWEEN OFFICES. THE PRIVATE OFFICE AND CONFERENCE ROOM INSTRUMENTS SHALL BE EQUIPPED WITH SPEAKERS TO PERMIT CONVERSATIONS WITHOUT RAISING THE HANDSET WITH A FEATURE TO PERMIT THE ESTABLISHMENT OF CONFERENCE CALLS WITH OR WITHOUT RAISING THE HANDSET. A TOTAL OF FOUR (4) OUTSIDE LINES SHALL BE PROVIDED, ONE OF WHICH SHALL BE DEDICATED FOR USE OF THE FACSIMILE COPIER.
14. ADEQUATE WORKING AND STORAGE FACILITIES.
15. TWO (2) FIRST AID KITS MAINTAINED ON A BIMONTHLY BASIS.
16. ONE (1) PORTABLE VIDEO CAMERA CAPABLE OF PRODUCING VIDEO TAPES OF CONSTRUCTION ACTIVITIES.
17. ONE (1) VIDEO TAPE PLAYER AND ONE (1) COLOR MONITOR MOUNTED ON A PORTABLE TABLE FOR VIEWING PROJECT VIDEO TAPES. TAPE PLAYER SHALL BE EQUIPPED WITH AN INFRARED REMOTE CONTROL CAPABLE OF CONTROLLING ALL FEATURES OF THE PLAYER. PLAYER SHALL HAVE THE ABILITY TO PROVIDE CLEAR "FREEZE FRAME" VIDEO.
18. THREE (3) PERSONAL COMPUTERS; EACH CONSISTING OF AND INCLUDING THE FOLLOWING:
    A. IBM PC, COMPATIBLE COMPUTER WITH 80386 PROCESSOR, OR APPROVED EQUAL, PROVIDED WITH THE FOLLOWING AS A MINIMUM:
       - 30 MEGABYTE HARD DISK
       - 640 K RAM
       - ONE 360 KB FLOPPY DRIVE
       - GRAPHICS ADAPTER
       - TRACTOR FEED PRINTER OF AT LEAST 200 CPS
    B. A COLOR EGA MONITOR
    C. SURGE PROTECTOR
    D. HAYES COMPATIBLE MODEM CAPABLE OF TRANSMISSION AT 1200 BAUD
    E. IT SHALL BE THE SAME TYPE AND MODEL AS THE ONE UTILIZED BY THE CONTRACTOR IN DEVELOPING AND MAINTAINING HIS PROGRESS SCHEDULE AS REQUIRED UNDER ARTICLE 108.03.

THE CONTRACTOR SHALL ALSO FURNISH TWO PRINTERS; ONE LASERJET TYPE PRINTER (EQUAL TO HEWLETT PACKARD LASERJET SERIES II WITH ONE [1] MEGABYTE MEMORY MINIMUM, COMPLETE WITH FONTS FOR PRESTIGE ELITE AND PICA, AND SUPPLY TRAY FOR LETTER AND LEGAL SIZE PAPER) AND ONE PRINTER CAPABLE OF PRODUCING COLOR OUTPUT.

ALL COMPUTER HARDWARE FURNISHED BY THE CONTRACTOR SHALL REMAIN THE CONTRACTOR'S PROPERTY AND SHALL BE MAINTAINED BY HIM DURING THE LIFE OF THE CONTRACT.

EXPENSES FOR OPERATION OF THE FIELD OFFICE, SUCH AS: ELECTRICAL SERVICE, HEATING, TELEPHONE SERVICE, JANITORIAL SERVICES, ETC., SHALL BE THE RESPONSIBILITY OF THE CONTRACTOR. THE CONTRACTOR SHALL ALSO PROVIDE ALL NECESSARY SUPPLIES AND MAINTENANCE FOR ALL EQUIPMENT THAT HE IS REQUIRED TO FURNISH.

THE CONTRACTOR SHALL RETAIN RESPONSIBILITY FOR RISK OF LOSS OR DAMAGE TO SAID FIELD OFFICE, FURNISHINGS, AND EQUIPMENT WHILE THE OFFICE IS IN USE FOR THIS CONTRACT.

THE FIELD OFFICE LOCATION SHALL BE ON, OR IN CLOSE PROXIMITY TO, THE JOB SITE, AND SHALL BE APPROVED IN ADVANCE BY THE ENGINEER. THE FIELD OFFICE SHALL BE FULLY OPERATIONAL AS SOON AS POSSIBLE AFTER EXECUTION OF THE CONTRACT, AND SHALL BE IN PLACE AND FULLY OPERATIONAL PRIOR TO THE START OF THE WORK.

THE FIELD OFFICE, COMPLETE WITH FURNISHINGS AND EQUIPMENT PRESCRIBED HEREIN, WITH THE EXCEPTION OF COMPUTER SOFTWARE, SHALL REMAIN THE PROPERTY OF THE CONTRACTOR. THE CONTRACTOR SHALL REMOVE THE FIELD OFFICE AND RESTORE THE SITE AT A TIME AGREED TO BY THE ENGINEER, BUT NOT LATER THAN NINETY (90) DAYS AFTER COMPLETION OF THE WORK.

PAYMENT SHALL BE INCLUDED IN THE LUMP SUM PRICE BID FOR ITEM 619 - FIELD OFFICE, TYPE C, AS PER PLAN.

ROUNDING OF CORNERS SHOWN ON CROSS SECTIONS

THE ROUNDED CORNERS SHOWN ON THE TYPICAL SECTIONS, APPLY TO ALL CROSS SECTIONS EVEN THOUGH OTHERWISE SHOWN ON THESE PLANS.

UNDERGROUND UTILITIES

THE LOCATIONS OF THE UNDERGROUND UTILITIES SHOWN ON THE PLANS ARE AS OBTAINED FROM THE OWNERS OF THE UTILITY AS REQUIRED BY SECTION 153.64 ORC.

UTILITY OWNERSHIP

THE FOLLOWING UTILITIES AND OWNERS ARE LOCATED WITHIN THE WORK LIMITS OF THIS PROJECT:

ELECTRIC

OHIO EDISON COMPANY
76 SOUTH MAIN STREET
AKRON, OHIO 44308
(216) 384-5100

TELEPHONE

OHIO BELL TELEPHONE COMPANY
2525 STATE ROAD
CUYAHOGA FALLS, OHIO 44223
(216) 922-2495

GAS

THE EAST OHIO GAS COMPANY
2100 EASTWOOD AVENUE
AKRON, OHIO 44305
(216) 798-7148

WATER

CITY OF AKRON PUBLIC UTILITIES BUREAU
WATER DEPARTMENT
65 S. HIGH ST.
AKRON, OHIO 44308
(216) 375-2690

CABLE TV

WARNER CABLE COMMUNICATION, INC.
1655 BRITTAIN ROAD
AKRON, OHIO 44310
(216) 633-9203

CONTINGENCY QUANTITIES

THE CONTRACTOR SHALL NOT ORDER MATERIALS OR PERFORM WORK LISTED IN THE GENERAL SUMMARY FOR ITEMS DESIGNATED BY PLAN NOTE TO BE USED "AS DIRECTED BY THE ENGINEER" UNLESS AUTHORIZED BY THE ENGINEER. THE ACTUAL WORK LOCATIONS AND QUANTITIES USED AT THE ENGINEER'S DISCRETION SHALL BE MADE A MATTER OF RECORD BY INCORPORATION INTO THE FINAL CHANGE ORDER GOVERNING COMPLETION OF THIS PROJECT.

REMOVAL OF TREES OR STUMPS

ALL TREES AND STUMPS SPECIFICALLY MARKED FOR REMOVAL WITHIN THE CONSTRUCTION LIMITS OF THIS PROJECT SHALL BE REMOVED UNDER THE LUMP SUM PRICE BID FOR ITEM 201 - CLEARING AND GRUBBING, EXCEPT THAT THOSE TREES FOR WHICH PROTECTION AND PRESERVATION WORK IS INDICATED ELSEWHERE IN THESE PLANS SHALL NOT BE REMOVED.

THE FOLLOWING IS AN APPROXIMATE ESTIMATE OF THE NUMBER OF TREES AND STUMPS TO BE REMOVED:

SIZES	NO. TREES	NO. STUMPS	TOTAL
18"	117	3	120
30"	3	1	4
48"	3	0	3

THE ABOVE ESTIMATE IS APPROXIMATE AND THE STATE OF OHIO RESERVES THE RIGHT TO ORDER THE REMOVAL OF ADDITIONAL TREES OR STUMPS OUTSIDE OF THE LIMITS OF CONSTRUCTION BUT WITHIN THE RIGHT-OF-WAY AND/OR EASEMENT LINES. PAYMENT FOR THE REMOVAL OF THESE ADDITIONAL TREES OR STUMPS SHALL BE INCLUDED IN THE LUMP SUM PRICE BID FOR ITEM 201 - CLEARING AND GRUBBING.

BENCHING OF FOUNDATION SLOPES

ALTHOUGH CROSS SECTIONS ON THIS PLAN INDICATE SPECIFIC WIDTHS AND DEPTHS OF PROPOSED BENCHING OF THE EMBANKMENT FOUNDATION IN CERTAIN AREAS, NO WAIVER OF THE SPECIFICATIONS IS INTENDED, AND ALL OTHER SLOPED FOUNDATION AREAS SHALL BE BENCHED AS SET FORTH IN 203.09. NO ADDITIONAL PAYMENT WILL BE MADE FOR BENCHING REQUIRED BY THE PROVISIONS OF 203.09.

SLOPE BENCHES - FOR ADDITIONAL NOTES AND QUANTITIES SEE SHEET 89A.

IN THE AREAS LISTED BELOW, THE CONTRACTOR SHALL BENCH EXISTING SLOPES AS SHOWN ON THE CROSS SECTIONS AND AS PER SECTION 203.09. THE BENCHING SHALL HAVE A MAXIMUM HORIZONTAL WIDTH OF SEVEN (7) FEET AND A MAXIMUM VERTICAL HEIGHT OF THREE (3) FEET. BACK SLOPES MAY BE ADJUSTED BY THE CONTRACTOR WITH THE APPROVAL OF THE ENGINEER; HOWEVER, VERTICAL SLOPES SHOWN ON THE CROSS SECTIONS SHALL BE USED AS LIMITS OF PAYMENT. PAYMENT FOR BENCHING SHOWN ON CROSS SECTIONS SHALL BE ITEM 203 - EXCAVATION NOT INCLUDING EMBANKMENT CONSTRUCTION, AND ITEM 203 - EMBANKMENT. BENCHING FOR AREAS OTHER THAN THOSE SHOWN BELOW SHALL BE AS SECTION 203.09:

I-76 WESTBOUND: STA 26+75± TO STA 27+10±
STA 28+40± TO STA 555+60±
STA 557+00± TO STA 559+10±
STA 599+25± TO STA 599+75±
STA 548+25± TO STA 548+75±

I-76 EASTBOUND: STA 550+00± TO STA 550+50±
STA 551+75± TO STA 553+25±
STA 553+60± TO STA 555+25±

RAMP E-2 STA 6+05.84 TO STA 6+74±

SOFT SUBGRADE

THE FOLLOWING QUANTITIES HAVE BEEN INCLUDED IN THE GENERAL SUMMARY FOR USE AS DIRECTED BY THE ENGINEER IN AREAS WHERE SOFT SUBGRADE IS ENCOUNTERED:

ITEM 203 - EXCAVATION NOT INCLUDING EMBANKMENT CONSTRUCTION	5,000 CU YD
ITEM 203 - EMBANKMENT	5,000 CU YD

QUANTITY BREAK LINES

QUANTITY BREAK LINES SHOWN ON THE CROSS SECTIONS ARE FOR EARTHWORK QUANTITY SPLITS AROUND RETAINING WALLS. EARTHWORK VOLUMES ARE CARRIED WITH THE PERTINENT RETAINING WALL QUANTITIES.

F.H.W.A. REGION	STATE	PROJECT NO.	FUNDS
5	OHIO		

89A
1214

SUM - 76 - 11.57

GENERAL NOTES

SLOPE BENCHES - CONTINUED

IN THE AREAS LISTED BELOW, THE CONTRACTOR SHALL BENCH EXISTING SLOPES AS SHOWN ON THE CROSS SECTIONS AND AS PER 203.09. THE BENCHING SHALL HAVE MAXIMUM HORIZONTAL WIDTH AS SHOWN ON THE CROSS SECTIONS. BACK SLOPES MAY BE ADJUSTED BY THE CONTRACTOR WITH THE APPROVAL OF THE ENGINEER, HOWEVER THE VERTICAL SLOPPING FACES SHOWN ON THE CROSS SECTIONS SHALL BE USED AS THE LIMITS OF PAYMENT. THE QUANTITIES FOR THESE SLOPE BENCHES ARE CALCULATED BELOW AND ARE IN ADDITION TO THESE QUANTITIES SHOWN ON THE CROSS - SECTIONS. THOSE STATIONS WITH ZERO END AREA ARE SHOWN FOR CALCULATION PURPOSES ONLY AND DOES NOT RELIEVE THE CONTRACTOR OF PROVIDING THE NECESSARY BENCHING AS SPECIFIED UNDER ITEM 203.09. PAYMENT FOR THE ABOVE DESCRIBED WORK SHALL BE ITEM 203-EXCAVATION NOT INCLUDING EMBANKMENT CONSTRUCTION AND ITEM 203 EMBANKMENT. BENCHING FOR AREAS OTHER THAN THOSE SHOWN BELOW OR SHOWN ON SHEET 89 SHALL BE AS PER 203.09.

CARRIED TO GENERAL SUMMARY:

ITEM 203 - EXCAVATION NOT INCLUDING EMBANKMENT CONSTRUCTION	6046 CY
ITEM 203 - EMBANKMENT	6046 CY

SHEET	STATION	SIDE	EXTRA AREA	DISTANCE	VOLUME	TOTAL
255	555+50	LT	0			
256	556+00	LT	21	50	19	
256	556+50	LT	14	50	32	
256	557+00	LT	0	50	13	64
283	596+16.79	LT	0			
284	596+50	LT	149	33.21	92	
284	597+00	LT	118	50	247	
285	597+50	LT	162	50	259	
285	598+00	LT	199	50	334	
286	598+50	LT	240	50	406	
286	599+00	LT	193	50	401	
287	599+25	LT	194	25	179	1918
288	608+69.03	LT	0			
289	609+00	LT	14	30.97	8	
289	609+50	LT	26	50	37	
290	610+00	LT	33	50	55	
290	610+45±	LT	0	45	28	128
291	611+55±	LT	0			
291	612+08.65= 12+08.65	LT E-12	90	53.65	89	89
331	573+00	RT	0			
332	573+50	RT	35	50	32	
332	574+00	RT	67	50	94	
332	574+50	RT	61	50	119	
333	575+00	RT	49	50	102	
333	575+50	RT	62	50	103	
333	576+00	RT	0	50	57	507
335	580+50	RT	0			
336	581+00	RT	42	50	39	
336	581+50	RT	95	50	127	
337	582+00	RT	93	50	174	
337	582+23	RT	0	23	40	380
339	583+00	RT	0			
340	583+50	RT	33	50	31	
340	584+00	RT	21	50	50	
340	584+50	RT	0	50	19	100
346	596+16.79	RT	0			
346	596+50	RT	82	33.21	50	
346	597+00	RT	0	50	76	126
351	611+90±	RT	0			
352	612+50	RT	52	60	58	
352	613+00	RT	51	50	95	
353	613+30	RT	34	30	47	
353	613+50	RT	0	20	13	213
354	615+00	RT	0			
354	615+50	RT	42	50	39	
354	616+00	RT	57	50	92	
355	616+50	RT	106	50	151	
355	617+00	RT	57	50	151	
355	617+35	RT	0	35	37	470
356	617+95.75	RT	0			
356	618+50	RT	70	54.25	70	
356	619+00	RT	65	50	125	
357	619+50	RT	58	50	114	
357	620+00	RT	0	50	54	363
383	92+50	E-4	0			
384	93+00	E-4	39	50	36	
384	93+50	E-4	0	50	36	72
407	81+00	E-8	0			
407	81+50	E-8	55	50	36	
407	82+00	E-8	0	50	36	72
423	10+00	E-9	0			
424	10+50	E-9	268	50	248	
424	11+00	E-9	0	50	248	496
433	12+08.65 =612+08.65	E-12	175			
433	12+50	E-12	171	41.35	265	
434	13+00	E-12	0	50	158	423
475	48+00	SCHOOL WALK	0			
475	48+50		22	50	20	
475	49+00		56	50	72	
475	49+50		48	50	96	
475	49+88		40	38	62	250
476	12+84	SCHOOL ROAD	0			
476	13+00		118	16	35	
476	13+50		125	50	225	
476	14+00		46	50	158	
476	14+50		0	50	43	375
				GRAND	TOTAL	6046

ZFA1:£20,133JOENOTE.DGN

GENERAL NOTES

CALC. BY KDK DATE 9/89
CHKD. BY DSB DATE 10/89
SUM-76-11.57
FED. PROJECT IR-76-2(44)19
OHIO
F.H.W.A. REGION 5
90
1214
SUMMIT COUNTY

ITEM 203 - PROOF ROLLING

AN ESTIMATED QUANTITY FOR THIS ITEM HAS BEEN PROVIDED IN THE GENERAL SUMMARY FOR USE AS DIRECTED BY THE ENGINEER.

ITEM SPECIAL - SUBGRADE PREPARATION

THIS WORK SHALL CONSIST OF PREPARATION OF EXISTING SUBGRADE IN AREAS WHERE EXISTING SUBBASE IS TO REMAIN. THE EXISTING SUBBASE SHALL BE THOROUGHLY MIXED WITH A MINIMUM OF 6" OF THE UNDERLYING SOIL IN ORDER TO CONTAMINATE THE SUBBASE MATERIAL AS A WATER CONDUCTOR. MOISTURE CONTROL SHALL BE AS SPECIFIED IN SECTION 203.11 OF THE SPECIFICATIONS. THE UNIT PRICE BID PER SQUARE YARD FOR ITEM SPECIAL - SUBGRADE PREPARATION, SHALL BE FULL COMPENSATION FOR ALL LABOR, MATERIALS, TOOLS, AND INCIDENTALS REQUIRED TO MAKE THIS ITEM COMPLETE.

MONUMENTS

MONUMENTS SHALL BE CONSTRUCTED IN ACCORDANCE WITH DETAILS SHOWN ON STANDARD CONSTRUCTION DRAWING MC-1. FOR LOCATIONS, SEE SHEET NO. 3-5.

BENCHMARKS

NEW BENCHMARK DISKS SHALL BE PROVIDED BY THE CITY OF AKRON AND SET IN PLACE ON A HORIZONTAL SURFACE OF THE ABUTMENT OR WINGWALL BY THE CONTRACTOR. THE PLACEMENT OF THE DISK SHALL BE SUCH THAT ACCESS TO THE DISK WILL NOT BE IMPEDED BY GUARDRAIL, BRIDGE RAILING, OR ANY PORTION OF THE STRUCTURE. THE DISK SHALL NOT BE PLACED IN AN AREA THAT IS SUBJECT TO ROADWAY TRAFFIC, ROADWAY DRAINAGE, OR FUTURE RESURFACING. AFTER COMPLETION OF THE PROJECT, CITY OF AKRON SHALL REESTABLISH THE ELEVATION. ANY EXISTING BENCHMARK DISK THAT IS DISTURBED BY THE CONTRACTOR DURING DEMOLITION SHALL BE CAREFULLY REMOVED AND STORED FOR SALVAGE BY THE CITY OF AKRON. ALL COSTS FOR THE ABOVE DESCRIBED WORK SHALL BE INCIDENTAL TO, AND INCLUDED IN, THE UNIT PRICE BID FOR ITEM 511 - CONCRETE, CLASS "S".

SIGN, CATCH BASIN, AND LIGHT POLE LOCATIONS ON PROPRIETARY WALLS

SIGN, CATCH BASIN, AND LIGHT POLE LOCATIONS ON THE PROPRIETARY WALL PLANS MAY VARY SLIGHTLY FROM THE LOCATIONS SHOWN IN THE SIGNING, DRAINAGE, OR LIGHTING PLANS DUE TO DIFFERENCES IN THE PANEL POINT LOCATIONS AMONG THE THREE PROPRIETARY WALL MANUFACTURERS. ANY REVISIONS IN PLAN QUANTITIES SHALL BE NOTED IN THE FINAL CHANGE ORDER GOVERNING COMPLETION OF THIS PROJECT.

SEEDING

QUANTITIES FOR SEEDING ARE CALCULATED FOR THE SOIL AREAS BETWEEN THE RIGHT OF WAY, FENCE LINES, BETWEEN THE RIGHT-OF-WAY LINES IN UNFENCED AREAS, AND WITHIN THE WORK LIMITS FOR AREAS OUTSIDE THE RIGHT-OF-WAY LINES COVERED BY WORK AGREEMENT OR SLOPE EASEMENT.

ITEM 605 - 6" SHALLOW PIPE UNDERDRAIN, AS PER PLAN, WITH FABRIC WRAP

ALL PROVISIONS OF 605 SHALL APPLY EXCEPT THAT THE AGGREGATE BACKFILL MATERIAL SHALL BE 304 AGGREGATE BASE, AS PER PLAN AS DETAILED ON SHEETS 239 & 242 AND THE UNDERDRAIN PIPE SHALL BE WRAPPED WITH A FILTER FABRIC SOCK MEETING THE REQUIREMENTS OF 712.09, TYPE A. THE CONFIGURATION OF THE FILTER FABRIC SOCK TO BE WRAPPED AROUND OR SLEEVED OVER THE UNDERDRAIN PIPE SHALL MEET THE APPROVAL OF THE ENGINEER.

FENCE REMOVED

IT IS INTENDED TO REMOVE EXISTING FENCE AND INSTALL NEW FENCE IN A CONTINUOUS OPERATION. A MAXIMUM OF 2,000 FEET OF EXISTING FENCE MAY BE REMOVED PRIOR TO INSTALLATION OF NEW FENCE. THE REMOVAL OF ALL FENCE SHALL AT ALL TIMES BE AS DIRECTED BY THE ENGINEER. NO FENCE SHALL BE REMOVED UNTIL REPLACEMENT MATERIAL IS ON THE SITE, READY FOR INSTALLATION. FAILURE TO COMPLY WITH THIS REQUIREMENT SHALL BE DEEMED SUFFICIENT CAUSE TO ORDER WORK SUSPENDED ON THIS PROJECT UNTIL SUCH TIME THAT THE ENGINEER IS ASSURED OF SAID COMPLIANCE.

TEMPORARY SOIL EROSION AND SEDIMENT CONTROL

THE FOLLOWING ESTIMATED QUANTITIES ARE TO BE USED AS DIRECTED BY THE ENGINEER, FOR TEMPORARY EROSION AND SEDIMENT CONTROL MEASURES:

ITEM 207 - TEMPORARY SEEDING AND MULCHING	32,530	SQ YD
ITEM 207 - STRAW OR HAY BALES	210	EA
ITEM 207 - TEMPORARY SLOPE DRAINS	600	LIN FT
ITEM 207 - TEMPORARY BENCHES, DAMS, AND SEDIMENT BASINS	3,000	CU YD
ITEM 207 - FILTER FABRIC FENCE	200	LIN FT
ITEM 601 - ROCK CHANNEL PROTECTION, TYPE C, WITHOUT FILTER	24	CU YD
ITEM 659 - MOWING	366	M SQ FT
ITEM 659 - COMMERCIAL FERTILIZER	6.9	TON
ITEM 659 - WATER	71	M GAL
ITEM 207 - TEMPORARY DIKES	4,000	LIN FT

EROSION CONTROL

ITEMS 601, 660, AND 670 ARE PROVIDED IN THE PLANS FOR EROSION CONTROL. ROCK OF A STABLE NATURE WILL NOT BE REMOVED IN ORDER TO PLACE ANY OF THESE ITEMS, AND TURF OF A STABLE NATURE WILL NOT BE REMOVED IN ORDER TO PLACE 660 OR 670. THE ENGINEER SHALL CHECK AND NON-PERFORM QUANTITIES OR ADJUST LOCATIONS AND QUANTITIES FOR THESE ITEMS WHERE INDICATED BY FIELD CONDITIONS DURING CONSTRUCTION. IN ADDITION, THESE ITEMS SHALL MEET THE REQUIREMENTS OF SECTION 108.04 OF THE SPECIFICATIONS.

ITEM 207 - FILTER FABRIC FENCE

FILTER FABRIC SHALL MEET THE REQUIREMENTS OF SECTION 207.02 OF THE SPECIFICATIONS.

THE BOTTOM OF THE FENCE SHALL BE BURIED 6" BELOW THE GROUND. THE FENCE SHALL BE HIGH ENOUGH TO RETAIN SEDIMENT LADEN WATER AND ADEQUATELY SUPPORTED TO PREVENT COLLAPSE OR BURSTING. THE GROUND ELEVATION OF THE FENCE SHALL BE HELD CONSTANT EXCEPT THAT THE END ELEVATIONS SHALL BE RAISED TO PREVENT FLOW AROUND THE END OF THE FENCE.

THE FILTER FABRIC FENCE SHALL, AT THE DIRECTION OF THE ENGINEER, BE MAINTAINED TO BE FUNCTIONAL. THIS SHALL INCLUDE REMOVAL OF TRAPPED SEDIMENT AND REQUIRED CLEANING, REPAIR, AND/OR REPLACEMENT OF THE FILTER FABRIC.

THE COST OF ALL MATERIALS, CONSTRUCTION, MAINTENANCE AND REMOVAL REQUIRED SHALL BE PAID FOR UNDER ITEM 207 - LIN. FT. FILTER FABRIC FENCE.

ITEM 601 - CRUSHED AGGREGATE SLOPE PROTECTION, AS PER PLAN

CRUSHED AGGREGATE SLOPE PROTECTION, AS PER PLAN, SHALL BE AS DETAILED ON SHEET 16.

ALL OVER-EXCAVATED ROCK SHALL BE REPLACED WITH AGGREGATE AS PER 601.05. FILTER FABRIC SHALL BE PLACED UNDER THE AGGREGATE AS PER 601.08. FILTER FABRIC SHALL CONFORM TO 712.09, TYPE B. THE COST OF ALL MATERIALS, LABOR, AND INCIDENTALS INCLUDING THE FILTER FABRIC SHALL BE INCLUDED WITH THE UNIT PRICE FOR BID FOR ITEM 601 - CRUSHED AGGREGATE SLOPE PROTECTION, AS PER PLAN.

ITEM 657 - RIPRAP FOR TREE PROTECTION, AS PER PLAN

RIPRAP FOR TREE PROTECTION, AS PER PLAN, SHALL BE AS DETAILED ON SHEET 191. POROUS BACKFILL SHALL CONFORM TO SECTION 703.04 OF THE SPECIFICATIONS AND SHALL BE INCLUDED IN THE UNIT PRICE BID FOR ITEM 657 - RIPRAP FOR TREE PROTECTION, AS PER PLAN. ALL PROVISIONS OF SECTION 657 OF THE SPECIFICATIONS SHALL APPLY. THE PIPE UNDERDRAIN SHOWN SHALL COMPLY AND BE PAID FOR UNDER SECTION 603 OF THE SPECIFICATIONS. THE UNDERDRAIN LONGITUDINAL SLOPE AND OUTLET LOCATION SHALL BE SUCH AS TO PROVIDE POSITIVE DRAINAGE BEHIND THE WALL AND SHALL BE APPROVED BY THE ENGINEER.

REVIEW OF DRAINAGE FACILITIES

BEFORE ANY WORK IS STARTED ON THE PROJECT, AND AGAIN BEFORE FINAL ACCEPTANCE BY THE STATE, REPRESENTATIVES OF THE STATE, CITY OF AKRON, AND THE CONTRACTOR SHALL MAKE AN INSPECTION OF THE EXISTING SEWERS WITHIN THE WORK LIMITS WHICH ARE TO REMAIN IN SERVICE AND WHICH MAY BE AFFECTED BY THE WORK. THE CONDITION OF THE EXISTING CONDUITS AND THEIR APPURTENANCES SHALL BE DETERMINED FROM FIELD OBSERVATIONS. RECORDS OF THE INSPECTIONS SHALL BE KEPT IN WRITING BY THE STATE.

ALL NEW CONDUITS, INLETS, CATCH BASINS, AND MANHOLES CONSTRUCTED AS A PART OF THE PROJECT SHALL BE FREE OF ALL FOREIGN MATTER AND IN A CLEAN CONDITION BEFORE THE PROJECT WILL BE ACCEPTED BY THE STATE.

ALL EXISTING SEWERS INSPECTED INITIALLY BY THE ABOVE-MENTIONED PARTIES SHALL BE MAINTAINED AND LEFT IN A CONDITION REASONABLY COMPARABLE TO THAT DETERMINED BY THE ORIGINAL INSPECTION. ANY CHANGE IN THE CONDITION RESULTING FROM THE CONTRACTOR'S OPERATIONS SHALL BE CORRECTED BY THE CONTRACTOR TO THE SATISFACTION OF THE ENGINEER.

PAYMENT FOR ALL OF THE ABOVE SHALL BE INCLUDED IN THE UNIT PRICE BID FOR THE PERTINENT 603 ITEM.

CONNECTION TO EXISTING PIPE

WHERE THE PLANS PROVIDE FOR PROPOSED CONDUIT TO BE CONNECTED TO, OR TO CROSS EITHER OVER OR UNDER AN EXISTING SEWER, IT SHALL BE THE RESPONSIBILITY OF THE CONTRACTOR TO LOCATE THE EXISTING PIPE BOTH AS TO LINE AND GRADE BEFORE HE STARTS TO LAY THE PROPOSED CONDUIT. EXTENDING EXISTING CONDUITS SHALL BE DONE USING THE SAME MATERIAL AS THE EXISTING PIPE. THE LAST SECTION OF THE EXISTING PIPE SHALL BE REMOVED TO PROVIDE A DESIRABLE CONNECTION.

PAYMENT FOR ALL OPERATIONS DESCRIBED ABOVE SHALL BE INCLUDED IN THE UNIT PRICE BID FOR THE PERTINENT 603 CONDUIT ITEMS.

CONDUIT END TREATMENT

IMMEDIATELY AFTER PLACEMENT OF ANY CONDUITS, THE CONTRACTOR SHALL CONSTRUCT THE END TREATMENTS REQUIRED BY THE PLANS AT BOTH THE OUTLET AND INLET ENDS. THIS SHALL INCLUDE HEADWALLS, CONCRETE RIPRAP, ROCK CHANNEL PROTECTION, SODDING, ETC.

HOUSE CONNECTIONS

EXISTING ROOF DRAINS, FOOTER DRAINS OR YARD DRAINS, DISTURBED BY THE PROPOSED WORK, SHALL BE PROVIDED WITH UNOBSTRUCTED OUTLETS BY CONNECTING TO A STORM SEWER, MANHOLE, CATCH BASIN, OR THROUGH THE CURB AS DETAILED ON SHEET 555.
THE LOCATION, TYPE, SIZE, AND GRADE OF REQUIRED REPLACEMENTS WILL BE DETERMINED BY THE ENGINEER DURING CONSTRUCTION.

THE FOLLOWING ESTIMATED QUANTITIES HAVE BEEN INCLUDED IN THE GENERAL SUMMARY FOR THE WORK NOTED ABOVE:

ITEM 603 - 3" CONDUIT, TYPE E, 706.07, 706.08, OR 707.19 — 600 LIN FT

NONE OF THE ABOVE MATERIALS SHALL BE ORDERED BY THE CONTRACTOR UNTIL REQUESTED BY THE ENGINEER.

UNRECORDED SANITARY CONNECTIONS

ANY UNRECORDED ACTIVE CONNECTION TO A SANITARY SEWER ENCOUNTERED DURING CONSTRUCTION SHALL BE RECONNECTED TO THE EXISTING SEWER, AS DIRECTED BY THE ENGINEER. THE FOLLOWING ESTIMATED QUANTITIES HAVE BEEN INCLUDED IN THE GENERAL SUMMARY FOR THE WORK NOTED ABOVE.

ITEM 603 - 6" CONDUIT, TYPE C, 706.01 OR 706.08 WITH JOINTS AS PER 706.11 OR 706.12 — 200 LIN FT

ITEM 603 - 6" CONDUIT, TYPE B, 706.01, OR 706.08 WITH JOINTS AS PER 706.11 OR 706.12 — 200 LIN FT

NONE OF THE ABOVE MATERIALS SHALL BE ORDERED BY THE CONTRACTOR UNTIL AUTHORIZED BY THE ENGINEER.

AA B.Pe 71942R

GENERAL NOTES

CALC. BY KDK DATE 9/89
CHKD. BY DSB DATE 10/89
SUM-76-11.57
FED. PROJECT IR-76-2(44)19
OHIO
F.H.W.A. REGION 5
91
12.14

SUMMIT COUNTY

SANITARY MANHOLES

ALL MANHOLES USED ON SANITARY OR COMBINED SEWERS SHALL HAVE FULL-DEPTH BRICK CHANNEL OR CONCRETE CHANNEL LINE WITH VITRIFIED BRICK. INTERIOR BARREL AND JOINT SURFACES SHALL BE EPOXY COATED AS PER 706.03. COST SHALL BE CONSIDERED INCIDENTAL AND INCLUDED IN THE UNIT PRICE BIDE FOR THE PERTINENT 604 ITEM.

MANHOLES, CATCH BASINS, AND INLETS REMOVED OR ABANDONED

THE CASTINGS SHALL BE CAREFULLY REMOVED AND STORED WITHIN THE RIGHT OF WAY FOR SALVAGE BY THE CITY OF AKRON FORCES.

PAYMENT FOR ALL OF THE ABOVE SHALL BE INCLUDED IN THE UNIT PRICE BID FOR THE PERTINENT 202 ITEM.

ITEM 604 - INLETS, VARIOUS, AS PER PLAN

ALL REINFORCING STEEL LISTED IN THE STEEL LIST ON THE STANDARD CONSTRUCTION DRAWINGS OR PLAN DETAILS SHALL BE EPOXY COATED IN ACCORDANCE WITH SECTION 509.10 OF THE SPECIFICATIONS. THE COST OF THIS COATING SHALL BE INCLUDED IN THE UNIT PRICE BID FOR THE PERTINENT 604 ITEM.

ITEM 604 - INLET NO. 3, AS PER PLAN No.1

ITEM 604 - INLET NO. 3, AS PER PLAN, SHALL BE AS DETAILED ON SHEET 552. ALL REINFORCING STEEL SHALL BE EPOXY COATED AS PER 509.10. THE UNIT PRICE BID FOR ITEM 604 - INLET NO. 3, AS PER PLAN, SHALL BE FULL COMPENSATION FOR ALL MATERIALS, LABOR, INCLUDING EXCAVATION AND BACKFILL, AND ALL OTHER INCIDENTALS REQUIRED TO MAKE THIS ITEM COMPLETE.

ITEM 604 - INLET NO. 3A, AS PER PLAN

ITEM 604 - INLET NO. 3A, AS PER PLAN, SHALL BE AS DETAILED ON SHEET 553. ALL REINFORCING STEEL SHALL BE EPOXY COATED AS PER 509.10. THE UNIT PRICE BID FOR ITEM 604 - INLET NO. 3A, AS PER PLAN, SHALL BE FULL COMPENSATION FOR ALL MATERIALS, LABOR, INCLUDING EXCAVATION AND BACKFILL, AND ALL OTHER INCIDENTALS REQUIRED TO MAKE THIS ITEM COMPLETE.

ITEM 604 - INLET, CITY OF AKRON, NO. 3

ITEM 604 - INLET, CITY OF AKRON, NO. 3, SHALL BE AS DETAILED ON SHEET 551. THE UNIT PRICE BID FOR ITEM 604 - INLET, CITY OF AKRON, NO. 3, SHALL BE FULL COMPENSATION FOR ALL MATERIALS, LABOR, INCLUDING EXCAVATION AND BACKFILL, AND ALL OTHER INCIDENTALS REQUIRED TO MAKE THIS ITEM COMPLETE.

ITEM SPECIAL - FILL AND PLUG EXISTING CONDUIT

THIS ITEM SHALL CONSIST OF THE CONSTRUCTION OF BULKHEADS IN THE EXISTING SEWER AND FILLING THE AREA THUS SEALED OFF WITH SAND OR OTHER GRANULAR MATERIAL APPROVED BY THE ENGINEER.

BULKHEADS SHALL BE LOCATED AT THE LIMITS OF THE AREA TO BE FILLED AS INDICATED ON THE PLANS. THE BULKHEADS SHALL CONSIST OF BRICK OR CONCRETE MASONRY WITH A MINIMUM THICKNESS OF 12".

THE FILL MATERIAL SHALL BE PUMPED INTO PLACE OR PLACED BY SOME OTHER MEANS APPROVED BY THE ENGINEER SO THAT AFTER SETTLEMENT AT LEAST 90 PERCENT OF THE CROSS-SECTIONAL AREA OF THE SEWER FOR ITS ENTIRE LENGTH SHALL BE FILLED. THE FOOTAGE OF FILLED AND PLUGGED SEWER TO BE PAID FOR SHALL BE THE ACTUAL NUMBER OF LINEAR FEET (MEASURED ALONG THE CENTERLINE OF THE SEWER FROM OUTER FACE OF BULKHEADS) FILLED AND PLUGGED AS DESCRIBED ABOVE.

THE FOOTAGE AS PROVIDED ABOVE SHALL BE PAID FOR AT THE CONTRACT UNIT PRICE BID PER LINEAR FOOT FOR ITEM SPECIAL - FILL AND PLUG EXISTING CONDUIT, WHICH PRICE AND PAYMENT SHALL CONSTITUTE FULL COMPENSATION FOR FURNISHING, HAULING, AND PLACING ALL THE NECESSARY MATERIALS AND FOR ALL LABOR, EQUIPMENT, TOOLS, AND INCIDENTALS NECESSARY TO COMPLETE THIS ITEM.

ITEM 605 - PIPE UNDERDRAINS, AS PER PLAN

ALL PROVISIONS OF 605 SHALL APPLY EXCEPT THAT BACKFILL AS SPECIFIED IN 605.03c SHALL BE LIMITED TO DURABLE NATURAL AGGREGATES. NO SLAG SHALL BE PERMITTED.

ITEM SPECIAL - PRECAST REINFORCED CONCRETE OUTLET

PRECAST REINFORCED CONCRETE OUTLETS SHALL BE PROVIDED AT THE OUTLET END OF ALL PIPE UNDERDRAINS, AS DETAILED ON SHEET 555, EXCEPT WHEN OUTLETTED INTO A DRAINAGE STRUCTURE. THE UNIT PRICE BID FOR ITEM SPECIAL - PRECAST REINFORCED CONCRETE OUTLET SHALL BE FULL COMPENSATION FOR ALL MATERIAL, LABOR, AND INCIDENTALS REQUIRED TO MAKE THIS ITEM COMPLETE.

ITEM 607 - FENCE, TYPE CLT, AS PER PLAN, AND ITEM 607 - GATE, TYPE CLT, AS PER PLAN

SECTION 607 OF THE SPECIFICATIONS SHALL BE AMENDED TO INCLUDE THE FOLLOWING:

ALL FRESH CUT BRUSH SURFACES SHALL BE TREATED WITH HERBICIDE BANVEL-CST, PATHWAY OR EQUAL APPROVED BY THE ENGINEER. THE TREATED AREA SHALL BE ONE (1) FOOT TO EITHER SIDE OF THE PROPOSED FENCE AND THE APPLICATION RATE SHALL BE IN ACCORDANCE WITH THE MANUFACTURER'S RECOMMENDATIONS. PAYMENT SHALL BE INCLUDED IN THE CONTRACT UNIT PRICE, PER LINEAR FOOT OF THE PERTINENT 607 FENCE ITEM.

SECTION 607.02 SHALL BE AMENDED TO PROVIDE THAT ALL POSTS SHALL BE ROUND IN SHAPE AS SPECIFIED IN SECTION 710.03 OF THE SPECIFICATIONS.

ITEM 607 - TEMPORARY FENCE

FOR THE SAFETY OF PEDESTRIANS, MOTORISTS, AND WORKERS, THE CONTRACTOR SHALL MAINTAIN FENCING AROUND ALL ACTIVE WORK AREAS. THIS FENCING MAY BE ANY COMBINATION EXISTING FENCE OR TEMPORARY FENCE PROVIDED BY THE CONTRACTOR AND APPROVED BY THE ENGINEER. USED MATERIALS IN GOOD CONDITION MAY BE USED. THE UNIT PRICE BID FOR ITEM 607 - TEMPORARY FENCE SHALL BE FULL COMPENSATION FOR THE ERECTION, MAINTENANCE, AND SUBSEQUENT REMOVAL OF THE FENCE AS DIRECTED BY THE ENGINEER. THE FOLLOWING QUANTITY HAS BEEN INCLUDED IN THE GENERAL SUMMARY FOR USE AS DIRECTED BY THE ENGINEER FOR THE WORK NOTED ABOVE:

ITEM 607 - TEMPORARY FENCE 12,000 LIN FT

LOCATION OF GUARDRAIL

THE LOCATIONS OF GUARDRAIL RUNS, AS SHOWN IN THESE PLANS, ARE SUBJECT TO ADJUSTMENT BY THE ENGINEER PRIOR TO FINAL ACCEPTANCE. THE ENGINEER SHALL BE SATISFIED THAT ALL INSTALLATIONS WILL AFFORD MAXIMUM PROTECTION FOR TRAFFIC.

ITEM 608 - CURB RAMPS, TYPE 1, AS PER PLAN, AND CURB RAMPS, TYPE 2, AS PER PLAN

CURB RAMPS SHALL BE AS DETAILED ON SHEET 189. THE UNIT PRICE BID FOR ITEM 608 - CURB RAMP, TYPE 1, AS PER PLAN, AND CURB RAMPS, TYPE 2, AS PER PLAN, SHALL BE FULL COMPENSATION FOR ALL LABOR AND MATERIALS REQUIRED TO MAKE THESE ITEMS COMPLETE.

ITEM 622 - CONCRETE BARRIER, TYPE B50, AS PER PLAN

ITEM 622 - CONCRETE BARRIER, TYPE B50, AS PER PLAN, SHALL BE AS DETAILED ON SHEET 190. ALL PROVISIONS OF SECTION 622 OF THE SPECIFICATIONS SHALL APPLY.

ITEM 622 - CONCRETE BARRIER, TYPE D, AS PER PLAN

ITEM 622 - CONCRETE BARRIER, TYPE D, AS PER PLAN, SHALL BE AS DETAILED ON SHEET 190. ALL PROVISIONS OF SECTION 622 OF THE SPECIFICATIONS SHALL APPLY. WHERE REQUIRED TO FACILITATE THE ATTACHMENT OF BRIDGE TERMINAL ASSEMBLIES AS SHOWN IN THE PLANS, THE CONCRETE BARRIER SHALL BE TRANSITIONED AS SHOWN IN ODOT STANDARD BRIDGE DRAWING GR-3. ALL TRANSITIONS AND INCIDENTALS SHALL BE INCLUDED IN THE UNIT PRICE BID FOR ITEM 622 - CONCRETE BARRIER, TYPE D, AS PER PLAN AND SHALL BE FULL COMPENSATION FOR ALL LABOR AND MATERIALS NECESSARY TO COMPLETE THE WORK.

ITEM SPECIAL - BRICK WALK

THIS ITEM SHALL CONSIST OF FURNISHING THE NECESSARY LABOR, MATERIAL, AND EQUIPMENT REQUIRED TO INSTALL BRICKS ON A PREPARED BASE IN AREAS SHOWN ON THE PLAN AND AS DETAILED ON SHEET 190.

BRICKS SHALL BE STANDARD PAVING BRICKS (4" X 4" X 8" NOMINAL SIZE) WHICH HAVE BEEN SALVAGED FROM OLD BRICK STREETS, OR NEW BRICKS ACQUIRED BY THE CONTRACTOR. OLD PAVING BRICKS ARE STOCKPILED BY THE CITY OF AKRON AT THE MUNICIPAL SERVICES CENTER, 1420 TRIPLETT BOULEVARD, AKRON, OHIO, AND ARE AVAILABLE TO THE CONTRACTOR AT NO COST. THE CONTRACTOR SHALL CONTACT THE CITY OF AKRON PUBLIC WORKS BUREAU (375-2834) TO MAKE ARRANGEMENTS TO PICK UP THE BRICKS. NEW BRICKS SHALL BE FURNISHED BY THE CONTRACTOR IF SALVAGED OR STOCKPILED BRICKS ARE OF INSUFFICIENT QUANTITIES TO COMPLETE THE WORK.

THE BASE COURSE MATERIAL SHALL BE CLASS "C" CONCRETE MEETING THE REQUIREMENTS OF 499.03.

THE SAND CUSHION SHALL MEET THE REQUIREMENTS OF 703.03.

THE JOINT FILLER SHALL CONSIST OF MASONRY CEMENT MEETING THE REQUIREMENTS OF 701.07, AND NATURAL SAND MEETING THE REQUIREMENTS OF 703.03, AND SHALL BE THOROUGHLY MIXED ONE PART CEMENT AND FOUR PARTS DAMP, LOOSE SAND MEASURED BY VOLUME.

INSTALLATION OF THE BRICKS SHALL NOT START UNTIL THE CONSTRUCTION OF ADJACENT SIDEWALK AND CURB HAS BEEN COMPLETED. THE CONTRACTOR SHALL CORRECT ANY AND ALL DEFICIENCIES IN THE SUBGRADE AS NECESSARY IN A MANNER ACCEPTABLE TO THE ENGINEER.

THE SUBGRADE SHALL BE TAMPED OR ROLLED TO SECURE A FIRM FOUNDATION. THE CONCRETE BASE SHALL THEN BE PLACED 3 INCHES THICK AND SCREEDED TO THE PROPER DEPTH AND ELEVATION SO THAT AFTER THE SAND CUSHION AND BRICKS ARE PLACED AND COMPACTED, THE BRICKS SHALL MEET ADJACENT ELEVATIONS OF SURROUNDING CONCRETE WALK AND CURB.

AFTER THE CONCRETE BASE IS CURED, THE SAND CUSHION SHALL BE SPREAD AND LEVELED AT 1/2"-1" THICKNESS. THE CONTRACTOR SHALL BE RESPONSIBLE FOR THE DELIVERY OF THE BRICKS TO THE SITE. ANY FOREIGN MATERIALS, INCLUDING CONCRETE, ASPHALT, SOIL, AND PAINT SHALL BE REMOVED PRIOR TO INSTALLATION. THE BRICKS SHALL BE LAID IN STRAIGHT COURSES TO FORM A "RUNNING BOND" PATTERN, AS SHOWN ON THE DRAWINGS OR AS DIRECTED BY THE ENGINEER, HAND TIGHT, WITH A SMOOTH FINISHED SURFACE. ALL OBJECTIONABLE BRICKS SHALL BE REMOVED AND REPLACED WITH ACCEPTABLE BRICKS. THE BRICKS SHALL BE BROUGHT TO FIRM BEARING AND FINISHED GRADE WITH THE ADJACENT CURB AND SIDEWALK BY MEANS OF A RUBBER MALLET AND WOOD BLOCKS. DRIVING OR RAMMING OF THE BRICKS SHALL NOT BE PERMITTED. A MAXIMUM OF 1/8 INCH SHALL BE PERMITTED FOR WHOLE OR CUT BRICK JOINTS. MORTAR MIX SHALL BE SWEPT OVER THE BRICK TO FILL ALL JOINTS, AND THE AREA SATURATED BY FINE SPRAYING WITH WATER.

THE BRICK SURFACE SHALL NOT VARY MORE THAN 1/8 INCH IN 10 FEET AND SHALL NOT BE MORE THAN 1/16 INCH ABOVE OR BELOW THE ADJACENT CURB OR SIDEWALK.

UNUSED WHOLE PAVING BRICKS SHALL BE RETURNED BY THE CONTRACTOR TO THE STOCKPILE AT 1420 TRIPLETT BOULEVARD. BROKEN BRICKS, UNUSED BRICK PIECES, SAND, CEMENT, AND OTHER DEBRIS SHALL BE REMOVED FROM THE SITE AND DISPOSED OF BY THE CONTRACTOR.

THE QUANTITY TO BE PAID SHALL BE THE NUMBER OF SQUARE FEET OF BRICK WALK INSTALLED AND ACCEPTED, AS DETERMINED FROM THE ENGINEER'S FINAL MEASUREMENTS.

PAYMENT FOR COMPLETED WORK SHALL BE MADE AT THE CONTRACT UNIT PRICE BID PER SQ FT FOR ITEM SPECIAL - BRICK WALK:
THIS PRICE SHALL INCLUDE COMPENSATION FOR ALL LABOR, MATERIALS, EQUIPMENT, TOOLS, AND INCIDENTALS REQUIRED TO COMPLETE THE WORK AS SPECIFIED HEREIN, INCLUDING ALL EXCAVATION, CONCRETE BASE, SAND CUSHION, BRICKS, AND MORTAR JOINT FILLER.

EXISTING BRICK WALK

WERE EXISTING BRICK WALK ABUTS EXISTING CURB TO BE REMOVED, ANY BRICK WALK REMOVED OR DAMAGED SHALL BE REPLACED IN ACCORDANCE WITH ITEM SPECIAL - BRICK WALK AND PLAN DETAILS. THIS WORK SHALL BE CONSIDERED INCIDENTAL TO THE CURB AND/OR PAVEMENT REMOVAL.

AA B.Pe 71942R

GENERAL NOTES

CALC. BY KDK DATE 9/89	SUM-76-11.57	OHIO
CHKD. BY DSB DATE 10/89	FED. PROJECT IR-76-2(44)19	F.H.W.A. REGION 5

92 / 1214

SUMMIT COUNTY

ITEM SPECIAL - LOW STRENGTH MORTAR BACKFILL MATERIAL (SEE PROPOSAL NOTE)

~~VOID~~

~~THIS WORK SHALL CONSIST OF THE PLACEMENT OF A FLOWABLE MIXTURE OF PORTLAND~~ CEMENT, FLY ASH, AND SAND FOR BACKFILLING CONDUITS OR AT OTHER LOCATIONS AS SHOWN ON THE PLANS OR AS SPECIFIED. BACKFILL SHALL NOT BE USED AS STRUCTURE BACKFILL FOR ALUMINUM AND ALUMINUM-COATED PIPE CULVERTS. THE WORK SHALL BE IN ACCORDANCE WITH ODOT ITEMS 603 AND 499 UNLESS OTHERWISE SPECIFIED HEREIN.

MATERIALS SHALL BE:

A. CEMENT . . . . . 701.01 OR 704.04

B. FLY ASH SHALL MEET ASTM C-618 AND COME FROM A SOURCE APPROVED BY THE ENGINEER.

C. FINE AGGREGATE SHALL BE NATURAL SAND CONSISTING OF MINERAL AGGREGATE PARTICLES. THE GRADATION OF THE SAND SHALL MEET THE REQUIREMENTS OF 703.05. THE SAND SHALL BE FINE ENOUGH TO STAY IN SUSPENSION IN THE MIXTURE TO THE EXTENT REQUIRED FOR PROPER FLOW. THE ENGINEER RESERVES THE RIGHT TO REJECT THE SAND IF A FLOWABLE MIXTURE CANNOT BE PRODUCED.

D. WATER USED FOR MORTAR BACKFILL SHALL BE FREE FROM OIL, SALTS, AND OTHER IMPURITIES THAT WOULD HAVE AN ADVERSE EFFECT ON THE QUALITY OF THE BACKFILL MATERIAL.

THE INITIAL TRIAL MIXTURE SHALL CONSIST OF THE FOLLOWING QUANTITIES OF MATERIALS PER CUBIC YARD:

	CLASS LSM - 100	CLASS LSM - 50
CEMENT	100 LBS.	50 LBS.
FLY ASH	250 LBS.	250 LBS.
SAND (SSD)*	2,850 LBS.	2,910 LBS.
WATER (MAXIMUM)	500 LBS.	500 LBS.

*SATURATED-SURFACE-DRY

ADJUSTMENTS OF THE PROPORTIONS MAY BE MADE BY THE ENGINEER PROVIDING THE TOTAL ABSOLUTE VOLUME OF THE MATERIALS IS MAINTAINED.

TO EXPEDITE SETTLEMENT OF THE MORTAR, IT WILL BE NECESSARY FOR BLEED WATER TO APPEAR ON THE SURFACE IMMEDIATELY AFTER THE MORTAR IS STRUCK OFF. A DELAY IN BLEEDING INDICATES THERE ARE TOO MANY FINES IN THE MIXTURE, SO THE FLY ASH QUANTITY SHALL BE REDUCED IN INCREMENTS OF 50 LBS. UNTIL MIXTURE IS BLEEDING FREELY. APPROXIMATELY 60 LBS. OF SAND SHALL BE ADDED TO REPLACE EACH 50 LBS. INCREMENT OF FLY ASH TO MAINTAIN THE ORIGINAL YIELD.

TO PRODUCE A FLOWABLE MORTAR IT MAY BE NECESSARY TO MAKE SEVERAL ONE CUBIC YARD TRIAL BATCHES AT DIFFERENT WATER CONTENTS. MIXTURE IS TOO DRY WHEN CRACKS DEVELOP IN THE MORTAR AS IT FLOWS INTO PLACE.

SUFFICIENT MIXING CAPACITY OF MIXERS SHALL BE PROVIDED TO PERMIT THE MORTAR TO BE PLACED WITHOUT INTERRUPTION.

~~FLOWABLE MORTAR SHALL BE DISCHARGED FROM THE MIXER BY ANY REASONABLE MEANS~~ INTO THE SPACE TO BE FILLED. THE FILL MATERIAL SHALL BE BROUGHT UP UNIFORMLY TO THE FILL LINE SHOWN ON THE PLANS OR AS DIRECTED BY THE ENGINEER. PLACING OF MATERIAL OVER LOW-STRENGTH MORTAR BACKFILL MAY COMMENCE AS SOON AS THE SURFACE WATER IS GONE OR AS DIRECTED.

VOID

THE NUMBER OF CUBIC YARDS OF LOW-STRENGTH MORTAR WILL BE MEASURED BY CONVERSION OF THE TOTAL BATCH WEIGHTS. CONVERSION FACTOR WILL BE 3,650 LBS. PER CU. YD.

FOR THE VOLUME OF MORTAR FURNISHED AND PLACED, THE CONTRACTOR WILL BE PAID AT THE CONTRACT UNIT PRICE PER CUBIC YARD. THIS PAYMENT SHALL BE FULL COMPENSATION FOR PLACING THE LOW-STRENGTH MORTAR AND FOR FURNISHING ALL MATERIALS, EQUIPMENT, AND INCIDENTALS NECESSARY TO COMPLETE THIS ITEM, UNLESS INCLUDED UNDER OTHER ITEMS ON THE PLANS.

ITEM 304 - AGGREGATE BASE, AS PER PLAN

MATERIALS FURNISHED FOR THIS ITEM SHALL EXCLUDE ALL SLAG EXCEPT GRANULATED SLAG OR CRUSHED AIR-COOLED BLAST FURNACE SLAG. THE PERCENTAGE OF MATERIAL PASSING THE NO. 200 SIEVE IN SECTION 304.02 SHALL BE 0-8.

ITEM 407 - TACK COAT

THE RATE OF APPLICATION OF ITEM 407 - TACK COAT SHALL BE SUBJECT TO ADJUSTMENT, AS DIRECTED BY THE ENGINEER. PLAN QUANTITIES INDICATE AN AVERAGE APPLICATION RATE OF 0.075 GALLONS PER SQUARE YARD OF TACK COAT FOR ESTIMATING PURPOSES ONLY.

CONTRACTION JOINTS IN PAVEMENT WIDENING

WHERE NEW CONCRETE PAVEMENT IS PLACED ADJACENT TO EXISTING CONCRETE PAVEMENT, CONTRACTION JOINTS SHALL BE PROVIDED IN THE NEW PAVEMENT SO AS TO FORM A CONTINUOUS JOINT WITH THAT IN THE EXISTING PAVEMENT.

THE MAXIMUM DISTANCE BETWEEN THE JOINTS IN NEW PAVEMENT SHALL BE IN ACCORDANCE WITH STANDARD CONSTRUCTION DRAWING BP-4. IF NECESSARY, ADDITIONAL JOINTS SHALL BE PROVIDED IN NEW PAVEMENT AT APPROXIMATELY EQUAL INTERVALS BETWEEN EXISTING JOINTS THAT EXCEED THE MAXIMUM SPACING.

PART-WIDTH CONSTRUCTION

BECAUSE OF THE NECESSITY OF BUILDING THIS PROJECT UNDER TRAFFIC AND CONSTRUCTING THE FULL PAVEMENT WIDTH IN STAGES, EXTREME CARE SHALL BE TAKEN TO PREVENT THE CONSTRUCTION OF A BUTT JOINT ON CENTERLINE IN THE BASE COURSES. LONGITUDINAL JOINTS SHALL BE LAPPED AS SHOWN ON STANDARD CONSTRUCTION DRAWING BP-5.

JOINT SEALERS

ALL REFERENCES TO 705.01 OR 705.02 APPEARING ON STANDARD DRAWINGS OR ON THE PLANS SHALL BE CONSIDERED TO READ 705.04.

MAINTAIN EXISTING LIGHTING

SEE LIGHTING GENERAL NOTES, SHEET G76.

ITEM 451 - REINFORCED CONCRETE PAVEMENT, AS PER PLAN

REINFORCED CONCRETE PAVEMENT SHALL MEET THE REQUIREMENTS OF ITEM 451 AND STANDARD DRAWING BP-4 WITH THE FOLLOWING EXCEPTIONS:

1. THE MAXIMUM SPACING BETWEEN CONTRACTION/EXPANSION JOINTS SHALL BE 21 FEET.
2. THE WIDTH OF THE CONTRACTION JOINTS SHALL BE 5/8" ±1/16" AND THE MINIMUM DEPTH SHALL BE 2 1/4". PREFORMED ELASTIC JOINT SEALER SHALL BE USED AND SHALL MEET THE REQUIREMENTS OF 705.11 AND SHALL HAVE A MINIMUM WIDTH OF 1 1/4". DRAWINGS AND SPECIFICATIONS FOR THE MATERIAL PROPOSED FOR USE SHALL BE SUBMITTED TO THE DIRECTOR FOR REVIEW AND APPROVAL.
3. DOWEL INSTALLING MACHINES WILL BE PERMITTED ON THIS PROJECT.
4. MESH SHALL BE RECTANGULAR AND CENTERED IN EACH PANEL SO AS TO MAINTAIN A CLEARANCE OF 3 (±2) INCHES FROM THE END OF THE DOWELS. THE MESH SHALL CONSIST OF W8.5 OR D8.5 LONGITUDINAL WIRES SPACED AT 6" CENTER TO CENTER AND W4 OR D4 TRANSVERSE WIRES SPACED AT 12" CENTER TO CENTER.
5. DOWELS SHALL BE EPOXY COATED AS PER 709.13. DOWEL ASSEMBLIES SHALL BE EPOXY COATED AS PER 709.00.
6. REFER TO A "MAINLINE PAVEMENT SURFACE SMOOTHNESS REQUIREMENTS" IN THE PROPOSAL.
7. JOINT ASSEMBLIES SHALL BE HELD FIRMLY IN POSITION BY THE USE OF A POWER DRIVEN FASTENER AND AN APPROPRIATE CLIP MEETING THE APPROVAL OF THE ENGINEER AT A MINIMUM OF 6 LOCATIONS ALONG THE ASSEMBLY (THREE EACH SIDE OF THE ASSEMBLY) TO SECURE THE BASKET FROM LATERAL AND VERTICAL DISPLACEMENT DURING CONCRETE PLACEMENT.

ITEM 452 - PLAIN CONCRETE PAVEMENT, AS PER PLAN

PLAIN CONCRETE PAVEMENT SHALL MEET ALL THE REQUIREMENTS OF 452 AND STANDARD DRAWING BP-3 WITH THE FOLLOWING EXCEPTIONS:

1. THE MAXIMUM SPACING BETWEEN CONTRACTION/EXPANSION JOINTS SHALL BE 21 FEET.
2. THE WIDTH OF THE CONTRACTION JOINTS SHALL BE 5/8" ±1/16" AND THE MINIMUM DEPTH SHALL BE 2 1/4". PREFORMED ELASTIC JOINT SEALER SHALL BE USED AND SHALL MEET THE REQUIREMENTS OF 705.11 AND SHALL HAVE A MINIMUM WIDTH OF 1 1/4". DRAWINGS AND SPECIFICATIONS FOR THE MATERIAL PROPOSED FOR USE SHALL BE SUBMITTED TO THE DIRECTOR FOR REVIEW AND APPROVAL.
3. THE JOINT BETWEEN THE INSIDE AND OUTSIDE SHOULDERS AND MAINLINE PAVEMENT SHALL BE TIED AT 30" SPACINGS.
4. ALL 452 CONCRETE SHOULDERS SHALL RECEIVE THE RUMBLE STRIP TREATMENT. RUMBLE STRIPS SHALL BE CENTERED BETWEEN TRANSVERSE JOINTS. COST OF THE RUMBLE STRIPS SHALL BE INCLUDED IN THE UNIT PRICE BID FOR ITEM 452 - PLAIN CONCRETE PAVEMENT, AS PER PLAN. FOR RUMBLE STRIP DETAILS, SEE SHEET NO. 190.
5. ALL TRANSVERSE JOINTS SHALL BE NORMAL TO THE CENTERLINE OF PAVEMENT.

CURBS ON APPROACH SLABS

WITH THE EXCEPTION OF THE AREAS ABUTTING WINGWALLS RETAINING WALLS, CONCRETE BARRIER, AND THE APPROACH SLAB AT THE EAST END OF STRUCTURE NO. SUM-76-1277 (MAINLINE AND RAMP E-9), ALL APPROACH SLABS SHALL HAVE CURBS. ALL CURB SHALL BE TYPE 2A AS DETAILED ON STANDARD CONSTRUCTION DRAWING BP-7 AND INCLUDED IN THE PERTINENT 611 ITEM AS PER SECTION 611.08 OF THE SPECIFICATIONS.

DUST CONTROL

THE FOLLOWING ESTIMATED QUANTITIES HAVE BEEN PROVIDED FOR USE AS DIRECTED BY THE ENGINEER FOR DUST CONTROL ON THIS PROJECT;

ITEM 616 - CALCIUM CHLORIDE	50 TONS
ITEM 616 - WATER	500 M GAL

MEDIAN PAVEMENT AND BARRIERS ON APPROACH SLABS

THE WIDTH AND TYPE OF MEDIAN PAVEMENT AND BARRIERS ON APPROACH SLABS SHALL BE TRANSITIONED FROM THE STANDARD SECTION USED ON THE APPROACH PAVEMENT TO THE SECTION USED ON THE BRIDGE WITHIN THE LIMITS OF THE APPROACH SLAB.

EXISTING STREET RESTORATION

WHEN THE PLANS CALL FOR CONSTRUCTION OF A SEWER OR WATERLINE IN AN EXISTING STREET WHICH IS NOT BEING RECONSTRUCTED, THE STREET SHALL BE RESTORED IN ACCORDANCE WITH SECTIONS 603.09 AND 814.08 AND AS DETAILED ON SHEET 188. COST FOR THIS WORK SHALL BE INCLUDED IN THE PERTINENT 603 OR 814 ITEM.

SUPPLEMENTAL PRINTS OF STANDARD CONSTRUCTION DRAWINGS

BP-1	6-1-65	MH-3	12-18-84	TC-31.21	3-6-79	MT-95.30	10-10-88
BP-2	1-11-85	MH-5	6-12-75	TC-32.10	3-8-79	GR-3.1	5-6-91
BP-3	12-6-76	MC-4	7-26-76	TC-32.11	3-21-79	GR-8	10-25-90
BP-4	10-1-87	MC-5	6-12-75	TC-35.10	8-29-84	GR-13	2-21-92
BP-5	10-1-87	MC-7	10-15-76	TC-41.10	8-29-84	GR-6	2-5-82
BP-7	10-1-87	MC-10	5-1-76	TC-41.20	3-26-79	MC-9.2	5-6-91
BP-9	12-6-76	MC-11	8-1-78	TC-41.40	6-18-79	GR-4.1	5-6-91
BP-10	1-30-84	HL-10.11	5-1-87	TC-41.41	8-2-79	GR-4.2	5-6-91
BP-12	10-1-87	HL-10.12	5-1-87	TC-41.50	3-26-79	GR-4.3	2-21-92
F-1	11-10-83	HL-10.13	5-1-87	TC-42.10	8-19-77	GR-4.4	2-21-92
F-3	5-1-76	HL-20.11	5-1-87	TC-42.20	3-26-79		
F-4	11-10-83	HL-20.13	5-1-87	TC-51.10	1-20-84	BP-11	1-30-84
GR-1.1	5-6-91	HL-20.14	5-1-87	TC-51.11	1-20-84		
GR-1.2	5-6-91	HL-20.31	5-1-87	TC-52.10	4-3-79	F-5	5-1-76
GR-2.1	5-6-91	HL-30.11	5-1-87	TC-52.20	4-3-79	F-6	5-1-76
GR-2.3	5-6-91	HL-30.21	5-1-87	TC-61.10	4-5-82		
GR-3.2	5-6-91	HL-30.22	5-1-87	TC-65.10	2-1-90		
GR-5	2-5-82	HL-30.31	5-1-87	TC-65.11	2-1-90		
MC-1	6-13-69	HL-30.33	5-1-87				
MC-2	7-7-81	HL-40.10	5-1-87	TC-72.20	2-26-82		
MC-6	1-30-84	HL-50.11	5-1-87	TC-81.10	1-20-84		
MC-9	1-30-84	HL-50.21	5-1-87	TC-81.20	1-20-84		
		HL-60.11	5-1-87	TC-82.10	8-29-84		
CB-2-2A&B	5-1-79	HL-60.12	5-1-87	TC-83.10	1-20-84		
		HL-60.31	5-1-87	TC-83.20	1-20-84		
CB-2-3&2-4	5-1-79	LA-1	6-1-79	TC-84.20	1-20-84		
		LA-2	6-1-79	TC-85.10	1-20-84		
CB-3	5-1-79	TC-7.65	3-1-79	TC-85.20	1-20-84		
CB-3A	5-1-79	TC-9.10	4-24-80	MT-99.10	11-14-86		
CB-5	11-10-83	TC-12.30	1-20-84	AS-1-81	11-27-81		
CB-458A	5-1-79	TC-18.24	4-25-79	EXJ-2-81	4-2-84		
HW-4A	4-1-80	TC-18.26	5-31-79	EXJ-4-87	1-5-89		
I-2	12-18-84	TC-21.10	1-20-84	FB-1-82	5-10-82		
I-2A	12-18-84	TC-21.20	1-20-84	RB-1-55	2-2-59		
I-3A&B	4-1-80	TC-21.40	3-1-79	SD-1-69	6-12-69		
		TC-22.10	3-1-79	HL-20.15	5-1-87		
MH-1	12-18-84	TC-22.20	3-1-79	HL-30.32	5-1-87		

SUPPLEMENTAL SPECIFICATIONS

802	4-13-90	849	12-24-85	915	1-21-88	949	9-26-86
814	1-21-88	852	6-10-87	931	3-18-92	952	12-14-88
836	11-12-85	843	7-29-88	940	6-10-87	953	8-21-80
845	5-31-88	862	12-16-88	943	6-10-87	944	3-18-92
841	5-16-84	910	5-20-91	942	3-18-92	962	1-23-90
820	3-18-92						

REVISED 8-18-92

GENERAL SUMMARY

CALC. BY. KDK DATE 4/91	SUM-76-11.57	OHIO	93
CHKD. BY. DGB DATE 4/91	FED. PROJECT IR-76-2(44)19	F.H.W.A. REGION 5	12.14

SUMMIT COUNTY

SHEET NUMBER													PARTICIPATION			ITEM	ITEM EXT.	GRAND TOTAL	UNIT	DESCRIPTION
1193	3	4	5	27	89	89A	91	101	103	115	116	479								
																				ROADWAY
					LUMP											201	11000	LUMP		CLEARING AND GRUBBING
LUMP																202	56000	LUMP		BUILDING DEMOLISHED, PARCEL 46A-WL, ONE 2-STORY FRAMED STRUCTURE AND FRAMED GARAGE
										LUMP						202	11000	LUMP		STRUCTURES REMOVED
										LUMP						202	11200	LUMP		PORTIONS OF STRUCTURES REMOVED
										105334						202	23000	105334	S.Y.	PAVEMENT REMOVED
										72523						202	30000	72523	S.F.	WALK REMOVED
										LUMP						202	30204	LUMP		STEPS REMOVED
										1424						202	30700	1424	L.F.	CONCRETE BARRIER REMOVED
										182						202	32000	182	L.F.	CURB REMOVED
												1363				202	35100	1363	L.F.	PIPE REMOVED, 24" AND UNDER
										13690						202	38000	13690	L.F.	GUARDRAIL REMOVED
												3				202	58000	3	EA.	MANHOLE REMOVED
												18				202	58100	18	EA.	CATCH BASIN REMOVED
												5				202	58200	5	EA.	INLET REMOVED
												11				202	58400	11	EA.	INLET ABANDONED
												46				202	58500	46	EA.	CATCH BASIN ABANDONED
												12				202	58700	12	EA.	MANHOLE ABANDONED
												1				202	58701	1	EA.	MANHOLE ABANDONED, AS PER PLAN (SEE SHEET 555B)
										17904						202	75000	17904	L.F.	FENCE REMOVED (SEE SHEET 90)
					5000	6046		133290		1						203	12000	144337	C.Y.	EXCAVATION NOT INCLUDING EMBANKMENT CONSTRUCTION
					5000	6046		203109		7313						203	20000	221468	C.Y.	EMBANKMENT
									58							203	45000	58	HR.	PROOF ROLLING
									171724							203	50000	171724	S.Y.	SUBGRADE COMPACTION
									80144							SPECIAL	20398100	80144	S.Y.	ROADWAY MISC. : SUBGRADE PREPARATION (SEE SHEET 90)
										LUMP						503	11100	LUMP		COFFERDAMS, CRIBS, AND SHEETING
											1556					SPECIAL	50341300	1556	C.Y.	LOW STRENGTH MORTAR BACKFILL MATERIAL, CLASS LSM-100 (SEE PROPOSAL NOTE)
	3	4	5													604	38500	12	EA.	MONUMENT ASSEMBLY
				550						7987.5						606	13000	8537.5	L.F.	GUARDRAIL, TYPE 5
										387.5						606	12500	387.5	L.F.	GUARDRAIL, TYPE 4
				1						27						606	25000	28	EA.	ANCHOR ASSEMBLY, TYPE A
										3						606	26000	3	EA.	ANCHOR ASSEMBLY, TYPE B
				2						13						606	26500	15	EA.	ANCHOR ASSEMBLY, TYPE T
										24						606	35000	24	EA.	BRIDGE TERMINAL ASSEMBLY, TYPE 1
				1						8						606	35100	9	EA.	BRIDGE TERMINAL ASSEMBLY, TYPE 2
											16930					607	23001	16930	L.F.	FENCE, TYPE CLT, AS PER PLAN (SEE SHEET 91)
							12000									607	98000	12000	L.F.	FENCE MISC. : TEMPORARY FENCE (SEE SHEET 91)
											1					607	61201	1	EA.	GATE, TYPE CLT, AS PER PLAN (SEE SHEET 91)
											42697					608	10000	42697	S.F.	4" CONCRETE WALK
											136					608	40000	136	L.F.	CONCRETE STEPS, TYPE A
											72					608	41000	72	L.F.	CONCRETE STEPS, TYPE B
											35					608	50001	35	EA.	CURB RAMP, TYPE 1, AS PER PLAN (SEE SHEET 91)
											4					608	51001	4	EA.	CURB RAMP, TYPE 2, AS PER PLAN (SEE SHEET 91)
											90					608	53001	90	S.F.	CURB RAMP, TYPE 1, AS PER PLAN (SEE SHEET 91)
											25					608	54001	25	S.F.	CURB RAMP, TYPE 2, AS PER PLAN (SEE SHEET 91)

REVISED 8-18-92

GENERAL SUMMARY

CALC. BY: KDK DATE 4/91	SUM-76-11.57	OHIO
CHKD. BY: JSB DATE 4/91	FED. PROJECT IR-76-2(44)19	F.H.W.A. REGION 5

94 12.14

SUMMIT COUNTY

SHEET NUMBER													PARTICIPATION			ITEM	ITEM EXT.	GRAND TOTAL	UNIT	DESCRIPTION
						90	92	115	116	479	481	558								
																				ROADWAY cont.
							500									616	10000	500	M. GAL.	WATER
							50									616	20000	50	TON	CALCIUM CHLORIDE
									1185							SPECIAL	60898000	1185	S.F.	ROADWAY MISC: BRICK WALK (SEE SHEET 91)
																				EROSION CONTROL
						32530										207	10000	32530	S.Y.	TEMPORARY SEEDING AND MULCHING
						200				3225						207	30000	3425	L.F.	FILTER FABRIC FENCE
						600										207	40000	600	L.F.	TEMPORARY SLOPE DRAIN
						3000				1156						207	50000	4156	C.Y.	TEMPORARY BENCHES, DAMS, AND SEDIMENT BASINS
						210				392						207	70000	602	EA.	STRAW OR HAY BALES
						1000										207	55000	1100	L.F.	TEMPORARY DIKES
										1158						601	20001	1158	S.Y.	CRUSHED AGGREGATE SLOPE PROTECTION, AS PER PLAN (SEE SHEET 90)
										2						601	32200	2	C.Y.	ROCK CHANNEL PROTECTION, TYPE C WITH FILTER
						24				17						601	34200	41	C.Y.	ROCK CHANNEL PROTECTION, TYPE C WITHOUT FILTER
										299						601	37500	299	L.F.	PAVED GUTTER, TYPE 1-2
										211						601	39000	211	L.F.	PAVED GUTTER, TYPE 4
									46							657	10001	46	S.Y.	RIPRAP FOR TREE PROTECTION, AS PER PLAN (SEE SHEET 90)
												160553				659	10001	160553	S.Y.	SEEDING AND MULCHING, AS PER PLAN (SEE SHEET 557)
												7917				659	14000	7917	S.Y.	REPAIR SEEDING AND MULCHING
						7						16				659	20000	23	TON	COMMERCIAL FERTILIZER
												71				659	30001	71	TON	AGRICULTURAL LIMING, AS PER PLAN (SEE SHEET 556)
						71						343				659	35000	414	M.GAL.	WATER
						366						1428				659	40000	1794	M.S.F.	MOWING
											500					660	20000	500	S.Y.	REINFORCED SODDING
											30	666				660	30000	696	S.Y.	SODDING
											7015					670	40000	7015	S.Y.	DITCH EROSION PROTECTION
																				DRAINAGE
										1.8						602	20000	1.8	C.Y.	CONCRETE MASONRY
						600										603	98300	600	L.F.	CONDUIT MISC: 3" CONDUIT, TYPE E, 706.07, 706.08, OR 707.19
										9						603	00900	9	L.F.	6" CONDUIT, TYPE B
										277						603	00900	277	L.F.	6" CONDUIT, TYPE B, 707.17 NON-PERFORATED ASTM 3034, SDR 35 OR SS931
								102								603	01400	102	L.F.	6" CONDUIT, TYPE E, 707.15 PERFORATED
								203		2400						603	01500	2603	L.F.	6" CONDUIT, TYPE F, 707.17, NON-PERFORATED ASTM 3034, SDR 35 OR SS931
										108						603	04400	108	L.F.	12" CONDUIT, TYPE B
										930						603	04400	930	L.F.	12" CONDUIT, TYPE B, 706.02
										10						603	04600	10	L.F.	12" CONDUIT, TYPE C
										83						603	04600	83	L.F.	12" CONDUIT, TYPE C, 706.02
										51						603	04600	51	L.F.	12" CONDUIT, TYPE C, 707.13
										44						603	05200	44	L.F.	12" CONDUIT, TYPE F, 707.17, NON-PERFORATED ASTM 3034 SDR35 OR SS931

GENERAL SUMMARY

CALC. BY KDK DATE 4/91 | CHKD. BY ZSB DATE 4/91 | SUM-76-11.57 | FED. PROJECT IR-76-2(44)19 | OHIO | F.H.W.A. REGION 5 | 95 12.14

SUMMIT COUNTY

SHEET NUMBER													PARTICIPATION			ITEM	ITEM EXT.	GRAND TOTAL	UNIT	DESCRIPTION
											479	480								
																				DRAINAGE cont.
											2104					603	05900	2104	L.F.	15" CONDUIT, TYPE B
											633					603	05900	633	L.F.	15" CONDUIT, TYPE B, 706.02
											402					603	05900	402	L.F.	15" CONDUIT, TYPE B, 707.13
											168					603	05900	168	L.F.	15" CONDUIT, TYPE B, 706.02 OR 707.13
											38					603	05900	38	L.F.	15" CONDUIT, TYPE B, 706.02, D-LOAD 3000
											1682					603	06100	1682	L.F.	15" CONDUIT, TYPE C
											198					603	06100	198	L.F.	15" CONDUIT, TYPE C, 706.02
											233					603	06100	233	L.F.	15" CONDUIT, TYPE C, 707.13
												711				603	07400	711	L.F.	18" CONDUIT, TYPE B
												55				603	07400	55	L.F.	18" CONDUIT, TYPE B, 706.02
												93				603	07400	93	L.F.	18" CONDUIT, TYPE B, 706.02, D-LOAD 3000
												645				603	07600	645	L.F.	18" CONDUIT, TYPE C
												231				603	08900	231	L.F.	21" CONDUIT, TYPE B, 706.02
												123				603	08900	123	L.F.	21" CONDUIT, TYPE B, 706.02, D-LOAD 1500
												222				603	10400	222	L.F.	24" CONDUIT, TYPE B
												207				603	10400	207	L.F.	24" CONDUIT, TYPE B, 706.02, D-LOAD 1500
												151				603	10600	151	L.F.	24" CONDUIT, TYPE C
												94				603	10600	94	L.F.	24" CONDUIT, TYPE C, 706.02, D-LOAD 1250, OR 707.13
												347				603	13400	347	L.F.	30" CONDUIT, TYPE B
												45				603	13400	45	L.F.	30" CONDUIT, TYPE B, 706.02, D-LOAD 1500
												132				603	13400	132	L.F.	30" CONDUIT, TYPE B, 706.02, D-LOAD 2500
												60				603	13401	60	L.F.	30" CONDUIT, TYPE B, AS PER PLAN, 706.02, D-LOAD 3000 UNDER R.R. W/CASING PIPE
												83				603	13400	83	L.F.	30" CONDUIT, TYPE B, 706.02, D-LOAD 1250, OR 707.13 (SEE SHEET 534C)
												730				603	13600	730	L.F.	30" CONDUIT, TYPE C
												163				603	13600	163	L.F.	30" CONDUIT, TYPE C, 706.02, D-LOAD 1500
												1117				603	13600	1117	L.F.	30" CONDUIT, TYPE C, 706.02, D-LOAD 1250, OR 707.13
												5				604	00400	5	EA.	CATCH BASIN NO. 3
												2				604	00800	2	EA.	CATCH BASIN NO. 3A
												37				604	01604	37	EA.	CATCH BASIN NO. 5 WITHOUT APRON
												5				604	01810	5	EA.	CATCH BASIN NO. 5A WITHOUT APRON
												1				604	04100	1	EA.	CATCH BASIN NO. 2-2-A
												2				604	04500	2	EA.	CATCH BASIN NO. 2-2-B
												1				604	04900	1	EA.	CATCH BASIN NO. 2-3
												3				604	09000	3	EA.	CATCH BASIN ADJUSTED TO GRADE
												1				604	10901	1	EA.	INLET NO. 2-6, AS PER PLAN (SEE SHEET 91)
												6				604	14501	6	EA.	INLET NO. 3A, AS PER PLAN (SEE SHEET 91)
												6				604	14603	6	EA.	INLET NO. 3B50, AS PER PLAN (SEE SHEET 91)
												1				604	17501	1	EA.	INLET NO. 2-A-6, AS PER PLAN (SEE SHEET 91)
												2				604	18301	2	EA.	INLET NO. 2-A-10, AS PER PLAN (SEE SHEET 91)
												1				604	18701	1	EA.	INLET NO. 2-A-12, AS PER PLAN (SEE SHEET 91)
												1				604	20301	1	EA.	INLET NO. 2-A-20, AS PER PLAN (SEE SHEET 91)
												2				604	22500	2	EA.	INLET MISC.: INLET NO. 3, AS PER PLAN, NO. 1 (SEE SHEET 91)
												36				604	22500	36	EA.	INLET MISC.: INLET NO. 3, CITY OF AKRON (SEE SHEET 91)
												1				604	20600	1	EA.	INLET ADJUSTED TO GRADE

GENERAL SUMMARY

*707.17, ASTM 3034 SDR35 OR SS931 PERFORATED AS PER 707.15

CALC. BY KDK DATE 4/91 | CHKD. BY DSS DATE 4/91 | SUM-76-11.57 | FED. PROJECT IR-76-2(44)19 | OHIO | F.H.W.A. REGION 5 | 96 12.14

SUMMIT COUNTY

SHEET NUMBER													PARTICIPATION			ITEM	ITEM EXT.	GRAND TOTAL	UNIT	DESCRIPTION
	105	107	108	109	110	111	112	115	116	479	480	481								
																				DRAINAGE cont.
											24					604	30100	24	EA.	MANHOLE NO. 1
											5					604	31500	5	EA.	MANHOLE NO. 3
											1					604	32100	1	EA.	MANHOLE NO. 5, CITY OF AKRON
											16					604	34500	16	EA.	MANHOLE ADJUSTED TO GRADE
											6					604	35500	6	EA.	MANHOLE RECONSTRUCTED TO GRADE
											1					604	98000	1	EA.	DRAINAGE STRUCTURE MISC.: MANHOLE RECONSTRUCTED, AS PER PLAN (SEE SHEET 555B)
									6			15				SPECIAL	60436600	21	EA.	PRECAST REINFORCED CONCRETE OUTLET (SEE SHEET 91)
											1					604	37501	1	EA.	JUNCTION CHAMBER, AS PER PLAN (SEE SHEET 555A)
								494								605	11111	494	L.F.	6" SHALLOW PIPE UNDERDRAIN WITH FABRIC WRAP, AS PER PLAN * (SEE SHEET 90)
								1811								605	11101	1811	L.F.	6" SHALLOW PIPE UNDERDRAIN, AS PER PLAN, 707.17, ASTM 3034,
																				SDR35 OR SS931, PERFORATED AS PER 707.15 OR 707.17 (SEE SHEET 91)
												44572				605	11101	44572	L.F.	6" SHALLOW PIPE UNDERDRAIN, AS PER PLAN (SEE SHEET 91)
												1678				605	11101	1678	L.F.	6" SHALLOW PIPE UNDERDRAIN, AS PER PLAN, 707.17 (SEE SHEET 91)
												2734				605	12201	2734	L.F.	6" DEEP PIPE UNDERDRAIN, AS PER PLAN (SEE SHEET 91)
												2694				605	13301	2694	L.F.	6" UNCLASSIFIED PIPE UNDERDRAIN, AS PER PLAN (SEE SHEET 91)
												792				605	98000	792	L.F.	UNDERDRAIN MISC.: 12" SHALLOW PIPE, AS PER PLAN (SEE SHEET 91)
												1527				605	98000	1527	L.F.	UNDERDRAIN MISC.: 12" UNCLASSIFIED PIPE, AS PER PLAN (SEE SHEET 91)
												143				SPECIAL	20270000	143	L.F.	FILL AND PLUG EXISTING CONDUIT (SEE SHEET 91)
																				PAVEMENT
								4727								254	01000	4727	S.Y.	PAVEMENT PLANING, BITUMINOUS
	11650							206								301	10002	11856	C.Y.	BITUMINOUS AGGREGATE BASE, AC-20
		21991						1301								304	20001	23292	C.Y.	AGGREGATE BASE, AS PER PLAN (SEE SHEET 92)
										77						305	12000	77	S.Y.	8" CONCRETE BASE
		19731						643								305	13000	20374	S.Y.	9" CONCRETE BASE
			1089					1								402	20000	1090	C.Y.	ASPHALT CONCRETE, AC-20
				3879												403	20000	3879	C.Y.	ASPHALT CONCRETE, AC-20
					872			68		3						404	20000	943	C.Y.	ASPHALT CONCRETE, AC-20
								22								404	25000	22	C.Y.	ASPHALT CONCRETE, AC-20 (DRIVEWAYS)
					1811			53		6						407	10000	1870	GAL.	TACK COAT
								2								408	10000	2	GAL.	BITUMINOUS PRIME COAT
						27973										451	14001	27973	S.Y.	9" REINFORCED CONCRETE PAVEMENT, AS PER PLAN (SEE SHEET 92)
						89404										451	15501	89404	S.Y.	11" REINFORCED CONCRETE PAVEMENT, AS PER PLAN (SEE SHEET 92)
									1765							SPECIAL	45130000	1765	L.F.	PRESSURE RELIEF JOINT, TYPE A
									128							SPECIAL	45132000	128	L.F.	PRESSURE RELIEF JOINT, TYPE C WITH RESURFACING
								139								452	10000	139	S.Y.	6" PLAIN CONCRETE PAVEMENT
							6939									452	16201	6939	S.Y.	6"-9" PLAIN CONCRETE PAVEMENT, AS PER PLAN, (7½")
								257								452	12000	257	S.Y.	8" PLAIN CONCRETE PAVEMENT
							3488									452	13001	3488	S.Y.	9" PLAIN CONCRETE PAVEMENT, AS PER PLAN (SEE SHEET 92)
							10685									452	14001	10685	S.Y.	10" PLAIN CONCRETE PAVEMENT, AS PER PLAN (SEE SHEET 92)

GENERAL SUMMARY

CALC. BY KDK DATE 9/96	SUM-76-11.57	OHIO
CHKD. BY DSB DATE 12/96	FED. PROJECT IR-76-2(44)19	F.H.W.A. REGION 5

97 / 1214

SUMMIT COUNTY

SHEET NUMBER													PARTICIPATION			ITEM	ITEM EXT.	GRAND TOTAL	UNIT	DESCRIPTION
								27	28	112	113	116								
																				PAVEMENT cont.
												1160				609	12000	1160	L.F.	COMBINATION CURB AND GUTTER, TYPE 2
												5639				609	14000	5639	L.F.	CURB, TYPE 2A
												9175				609	16000	9175	L.F.	CURB, TYPE 2B
												266				609	26000	266	L.F.	CURB, TYPE 6
										680						611	15001	680	S.Y.	REINFORCED CONCRETE APPROACH SLAB (T=13"), AS PER PLAN (SEE SHEETS 879 & 898)
											3134					611	25000	3134	S.Y.	REINFORCED CONCRETE APPROACH SLAB (T=15")
											914					611	25001	914	S.Y.	REINFORCED CONCRETE APPROACH SLAB (T=15"), AS PER PLAN (SEE SHEET 930)
											1290					611	30001	1290	S.Y.	REINFORCED CONCRETE APPROACH SLAB (T=17"), AS PER PLAN (SEE SHEETS 1074, 1076, & 1134)
												36				612	14000	36	S.Y.	6" CONCRETE TRAFFIC ISLAND
												206				612	42000	206	S.Y.	CONCRETE MEDIAN
												874				622	23404	874	L.F.	CONCRETE BARRIER, TYPE B-50
												40				622	23405	40	L.F.	CONCRETE BARRIER, TYPE B-50, AS PER PLAN (SEE SHEET 91)
												1680				622	24000	1680	L.F.	CONCRETE BARRIER, TYPE D
								14				2489				622	24001	2503	L.F.	CONCRETE BARRIER, TYPE D, AS PER PLAN (SEE SHEET 91)
																				MAINTENANCE OF TRAFFIC
								10								614	12460	10	EA.	WORK ZONE MARKING SIGN
								3574								614	13300	3574	EA.	BARRIER REFLECTOR, TYPE B
								1000								614	13300	1000	EA.	REPLACEMENT BARRIER REFLECTOR, TYPE B
								7.17								614	20300	7.17	MILE	TEMPORARY LANE LINE, CLASS I, 740.05, TYPE C
								2.85								614	21300	2.85	MILE	TEMPORARY CENTER LINE, CLASS I, 740.05, TYPE C
								16.93								614	22300	16.93	MILE	TEMPORARY EDGE LINE, CLASS I, 740.05, TYPE C
								13838								614	23600	13,838	L.F.	TEMPORARY CHANNELIZING LINE, CLASS I, 740.05, TYPE C
								2230								614	24600	2230	L.F.	TEMPORARY DOTTED LINE, CLASS I, 740.05, TYPE C
								1334								614	25600	1334	L.F.	TEMPORARY TRANSVERSE LINE, CLASS I, 740.05, TYPE C
								586								614	26600	586	L.F.	TEMPORARY STOP LINE, CLASS I, 740.05, TYPE C
								39								614	30600	39	EA.	TEMPORARY LANE ARROW, CLASS I, 740.05, TYPE C
								19								614	31600	19	EA.	TEMPORARY WORD ON PAVEMENT, 72", CLASS I, 740.05, TYPE C
								2011								615	20000	2011	S.Y.	TEMPORARY PAVEMENT, CLASS A
								1928								615	20001	1928	S.Y.	TEMPORARY PAVEMENT, CLASS A, AS PER PLAN (SEE SHEET 22)
																615	10000	LUMP SUM	LUMP SUM	TEMPORARY ROAD
								30,000								622	40031	30,000	L.F.	PORTABLE CONCRETE BARRIER, 50", AS PER PLAN (SEE SHEET 22)
								7350								622	40047	7350	L.F.	PORTABLE CONCRETE BARRIER, 50", BRIDGE MOUNTED (SEE SHEET 23)
								5								625	32001	5	EA.	GROUND ROD, AS PER PLAN (SEE SHEET 23)
									23							630	00001	23	C.Y.	CONCRETE FOR ANCHOR BASE FOUNDATIONS, AS PER PLAN (SEE SHEET 23)
									53							630	07501	53	L.F.	GROUND MOUNTED SUPPORTS, W 10 x 22 BEAM, AS PER PLAN (SEE SHEET 23)
									8							630	79501	8	EA.	SIGN SUPPORT ASSEMBLY, POLE MOUNTED, AS PER PLAN (SEE SHEET 23)
									792							630	80109	792	S.F.	SIGNS, FLAT SHEET, TYPE G SHEETING, AS PER PLAN (SEE SHEET 23)
									1164							630	80300	1164	S.F.	SIGNS, TEMPORARY OVERLAY
									1							630	85400	1	EA.	REMOVAL OF GROUND MOUNTED MAJOR SIGN AND DISPOSAL

GENERAL SUMMARY

CALC. BY KDK DATE 9/90	SUM-76-11.57	OHIO
CHKD. BY DSB DATE 10/90	FED. PROJECT IR-76-2(44)19	F.H.W.A. REGION 5

SUMMIT COUNTY

98
1214

SHEET NUMBER										PARTICIPATION			ITEM	ITEM EXT.	GRAND TOTAL	UNIT	DESCRIPTION
										28	90	481					
																	MAINTENANCE OF TRAFFIC cont.
										4			630	97700	4	EA.	REMOVAL OF OVERHEAD SIGN AND REERECTION
										6			630	89100	6	EA.	REMOVAL OF OVERHEAD SIGN SUPPORT AND REERECTION, TYPE TC-12.30
										3			630	89706	3	EA.	REMOVAL OF OVERHEAD SIGN SUPPORT AND DISPOSAL, TYPE TC-12.30
										23			630	89900	23	EA.	REMOVAL OF OVERLAY SIGN
										5			631	84001	5	EA.	SIGN SERVICE, AS PER PLAN (SEE SHEET 23)
										5			631	84301	5	EA.	SIGNS WIRED, AS PER PLAN (SEE SHEET 23)
										200			SPECIAL	614126000	200	EA.	REPLACEMENT DRUMS (SEE SHEET 24)
										500			SPECIAL	614125000	500	S.F.	REPLACEMENT SIGNS (SEE SHEET 24)
										2000			SPECIAL	614111000	2000	HR.	LAW ENFORCEMENT OFFICER WITH PATROL CAR (SEE SHEET 24)
										LUMP			SPECIAL	614180002	LUMP		TRAFFIC SAFETY COORDINATOR (SEE SHEET 24)
										1			SPECIAL	69010400	1	EA.	IMPACT ATTENUATOR, HEX-FOAM SAND SYSTEM MODEL No. 209509H5S (SEE SHEET 23)
										1			SPECIAL	69010300	1	EA.	TEMP. IMPACT ATTENUATOR (G.R.E.A.T. TYPE) MODEL No. 200200NF6GCZ (SEE SHEET 24)
										1			SPECIAL	69010410	1	EA.	REPLACEMENT IMPACT ATTENUATOR, HEX-FOAM
																	SYSTEM MODEL NO. 209509H5S (SEE SHEET 24)
										1			SPECIAL	69010600	1	EA.	TEMPORARY IMPACT ATTENUATOR, G.R.E.A.T. TYPE (REPLACEMENT)
																	MODEL NO. 200200NF6GCZ (SEE SHEET 24)
																	SANITARY SEWER
												12	202	58700	12	EA.	MANHOLE ABANDONED
											200		603	00900	200	L.F.	6" CONDUIT, TYPE B, 706.01 OR 706.08 WITH 706.11 OR 706.12 JOINTS
											200		603	01100	200	L.F.	6" CONDUIT, TYPE C, 706.01 OR 706.08 WITH 706.11 OR 706.12 JOINTS
												284	603	02000	284	L.F.	8" CONDUIT, TYPE C, 706.08 WITH 706.12 JOINTS
												273	603	04400	273	L.F.	12" CONDUIT, TYPE B, 706.03, D-LOAD 2750 WITH 706.11 JOINTS
												28	603	05900	28	L.F.	15" CONDUIT, TYPE B, 706.03 WITH 706.11 JOINTS
												180	603	07400	180	L.F.	18" CONDUIT, TYPE B, 706.03, D-LOAD 3000 WITH 706.11 JOINTS
												230	603	07400	230	L.F.	18" CONDUIT, TYPE B, 706.03, D-LOAD 3250 WITH 706.11 JOINTS
												5	604	31500	5	EA.	MANHOLE NO. 3 WITH 706.11 JOINTS
												8	604	34500	8	EA.	MANHOLE ADJUSTED TO GRADE
												3	604	35500	3	EA.	MANHOLE RECONSTRUCTED TO GRADE

GENERAL SUMMARY

CALC. BY. KDK DATE 7/98	SUM-76-11.57	OHIO
CHKD. BY. DSB DATE 8/98	FED. PROJECT IR-76-2(44)19	F.H.W.A. REGION 5

SUMMIT COUNTY

99
1214

SHEET NUMBER	PARTICIPATION	ITEM	ITEM EXT.	GRAND TOTAL	UNIT	DESCRIPTION
89						
						FOR LANDSCAPE QUANTITIES, SEE SHEET 558
						FOR WATERWORK QUANTITIES, SEE SHEET 571
						FOR TRAFFIC CONTROL QUANTITIES, SEE SHEETS 617-621
						FOR LIGHTING QUANTITIES, SEE SHEETS 678 & 679
						FOR RETAINING WALL DESIGN 1 QUANTITIES, SEE SHEET 724
						FOR RETAINING WALL DESIGN 2 QUANTITIES, SEE SHEET 755
						FOR RETAINING WALL DESIGN 3 QUANTITIES, SEE SHEET 780
						FOR STRUCTURE SUM-76-1180 QUANTITIES, SEE SHEET 807
						FOR STRUCTURE SUM-76-1200 QUANTITIES, SEE SHEET 826
						FOR STRUCTURE SUM-76-1231 QUANTITIES, SEE SHEET 843
						FOR STRUCTURE SUM-76-1235 QUANTITIES, SEE SHEET 866
						FOR STRUCTURE SUM-76-1244 QUANTITIES, SEE SHEET 886
						FOR STRUCTURE SUM-76-1267 QUANTITIES, SEE SHEET 905
						FOR STRUCTURE SUM-76-1277 QUANTITIES, SEE SHEET 945
						FOR STRUCTURE SUM-76-1296 QUANTITIES, SEE SHEET 1081
						FOR STRUCTURE SUM-76-1303 QUANTITIES, SEE SHEET 1114
						FOR STRUCTURE SUM-76-1332 QUANTITIES, SEE SHEET 1140
		614	11000	LUMP		MAINTAINING TRAFFIC
LUMP		619	15021	LUMP		FIELD OFFICE, TYPE C, AS PER PLAN (SEE SHEET 89)
		623	10000	LUMP		CONSTRUCTION LAYOUT STAKES
		624	10000	LUMP		MOBILIZATION

QUANTITY CALCULATIONS

CDB 3/88	SUM-76-11.57	OHIO
KDK 8/89	FED. PROJECT IR-76-2(44)19	F.H.W.A. REGION 5

SUMMIT COUNTY

100 1214

LOCATION	ITEM 203 EXCAVATION C.Y.	ITEM 203 EMBANKMENT C.Y.
I-76 LEFT		
SHEET NO. 247		
STA 24+50 TO 25+00	46	0
SHEET NO. 248		
STA 25+50 TO 26+50	121	0
SHEET NO. 249		
STA 27+00 TO 27+44.22	209	230
SHEET NO. 250		
STA 28+02.59 TO 28+50	21	21
SHEET NO. 251		
STA 29+00 TO 29+50	609	907
SHEET NO. 252		
STA 30+00 TO 30+50	634	845
SHEET NO. 253		
STA 31+00 TO 31+50	573	716
SHEET NO. 254		
STA 554+00 TO 554+50	453	558
SHEET NO. 255		
STA 555+00 TO 555+50	317	396
SHEET NO. 256		
STA 556+00 TO 557+00	214	158
SHEET NO. 257		
STA 557+54.54 TO 558+50	498	554
SHEET NO. 258		
STA 559+00 TO 560+50	680	215
SHEET NO. 259		
STA 561+00 TO 562+50	755	46
SHEET NO. 260		
STA 563+00 TO 564+50	1,188	0
SHEET NO. 261		
STA 565+00 TO 566+00	885	6
SHEET NO. 262		
STA 566+50 TO 567+00	127	6
SHEET NO. 263		
STA 567+50 TO 568+50	311	233
SHEET NO. 264		
STA 569+00 TO 571+00	500	1,521
SHEET NO. 265		
STA 571+50 TO 573+00	499	1,698
SHEET NO. 266		
STA 573+50 TO 574+50	288	13
SHEET NO. 267		
STA 575+00 TO 576+13.56	400	16
SHEET NO. 268		
STA 576+93.41 TO 578+00	126	0
SHEET NO. 269		
STA 578+50 TO 579+50	244	0
SHEET NO. 270		
STA 580+00 TO 580+50	204	0
SHEET NO. 271		
STA 580+86 TO 581+50	290	0
SHEET NO. 272		
STA 582+00 TO 582+23.77	128	0
SHEET NO. 273		
STA 582+50 TO 582+74.09	0	0
SHEET NO. 274		
STA 583+00	56	0
SHEET NO. 275		
STA 583+50 TO 584+00	209	0
SHEET NO. 276		
STA 584+50 TO 585+00	209	48
SHEET NO. 277		
STA 585+50 TO 586+00	354	126
SHEET NO. 278		
STA 586+50 TO 587+50	1,570	32
SHEET NO. 279		
STA 588+00 TO 589+00	1,690	33
SHEET NO. 280		
STA 589+50 TO 591+50	864	123
SHEET NO. 281		
STA 592+00 TO 593+50	250	124
SHEET NO. 282		
593+99 TO 595+00	411	2,158
SHEET NO. 283		
STA 595+49.19 TO 596+16.79	148	1,492
SHEET NO. 284		
STA 596+50 TO 597+00	87	3,167
SHEET NO. 285		
STA 597+50 TO 598+00	43	2,984
SHEET NO. 286		
STA 598+50 TO 599+00	57	2,656
SHEET NO. 287		
STA 599+50 TO 600+00	375	1,579
SHEET NO. 288		
STA 600+55.23 TO 608+69.03	92	1,392
SHEET NO. 289		
STA 609+00 TO 609+50	53	3,177
SHEET NO. 290		
STA 610+00 TO 610+80.96	84	2,160
SHEET NO. 291		
STA 611+55.38 TO 613+00	193	1,340
SHEET NO. 292		
STA 613+50 TO 615+00	173	1,576
SHEET NO. 293		
STA 615+50 TO 616+00	94	2,437
SHEET NO. 294		
STA 616+50 TO 617+54.25	86	4,285
SHEET NO. 295		
STA 617+95.75 TO 619+00	54	2,282
SHEET NO. 296		
STA 619+50 TO 620+41.27	62	1,226
SHEET NO. 297		
STA 621+00 TO 622+00	169	5,105
SHEET NO. 298		
STA 622+50 TO 624+00	202	4,712
SHEET NO. 299		
STA 624+50 TO 625+50	144	1,705
SHEET NO. 300		
STA 626+00 TO 627+00	833	278
SHEET NO. 301		
STA 627+50 TO 628+50	735	95
SHEET NO. 302		
STA 629+00 TO 629+47.20	128	24
SHEET NO. 303		
STA 630+05.59 TO 631+00	36	104
SHEET NO. 304		
STA 631+50 TO 632+50	63	22
SHEET NO. 305		
STA 633+00 TO 634+50	86	97
SHEET NO. 306		
STA 635+00 TO 637+50	9	25
SUBTOTAL	19,939	54,703
I-76 RIGHT		
SHEET NO. 307		
STA 541+00 TO 542+00	55	0
SHEET NO. 308		
STA 542+50 TO 543+50	177	0
SHEET NO. 309		
STA 544+00 TO 545+50	230	0
SHEET NO. 310		
STA 546+00 TO 547+00	111	0
SHEET NO. 311		
STA 547+50 TO 548+50	277	193
SHEET NO. 312		
STA 548+98.79	163	188
SHEET NO. 313		
STA 549+23.73 TO 549+85.04	26	0
SHEET NO. 314		
STA 550+25 TO 551+00	561	142
SHEET NO. 315		
STA 551+50 TO 552+50	843	387
SHEET NO. 316		
STA 553+00 TO 553+43.40	884	491
SHEET NO. 317		
STA 554+00 TO 555+00	956	508
SHEET NO. 318		
STA 555+50 TO 557+00	578	362
SHEET NO. 319		
STA 557+50 TO 558+50	362	57
SHEET NO. 320		
STA 559+00 TO 559+50	282	5
SHEET NO. 321		
STA 560+00 TO 560+50	393	2
SHEET NO. 322		
STA 561+00 TO 561+50	741	1
SHEET NO. 323		
STA 562+00 TO 562+50	1,140	0
SHEET NO. 324		
STA 563+00 TO 563+50	1,442	0
SHEET NO. 325		
STA 564+00 TO 564+50	1,817	0
SHEET NO. 326		
STA 565+00 TO 565+50	1,989	0
SHEET NO. 327		
STA 566+00 TO 566+50	2,141	0
SHEET NO. 328		
STA 567+00 TO 567+50	1,602	0
SHEET NO. 329		
568+00 TO 569+00	1,437	0
SHEET NO. 330		
569+50 TO 571+50	757	597
SHEET NO. 331		
STA 572+00 TO 573+00	315	1,159
SHEET NO. 332		
STA 573+50 TO 574+50	340	1,183
SHEET NO. 333		
STA 575+00 TO 576+13.56	340	1,203
SHEET NO. 334		
STA 576+93.41 TO 578+00	334	26
SHEET NO. 335		
STA 578+50 TO 580+50	1,395	39
SHEET NO. 336		
STA 581+00 TO 581+50	399	110
SHEET NO. 337		
STA 582+00 TO 582+23.77	161	509
SHEET NO. 338		
STA 582+50 TO 582+74.09	0	0
SHEET NO. 339		
STA 583+00	55	311
SHEET NO. 340		
STA 583+50 TO 584+50	329	745
SHEET NO. 341		
STA 585+00 TO 586+50	382	356
SHEET NO. 342		
STA 587+00 TO 589+00	570	24
SHEET NO. 343		
STA 589+50 TO 592+00	1,649	110
SHEET NO. 344		
STA 592+50 TO 594+00	314	1,017
SHEET NO. 345		
STA 594+50 TO 595+49.19	178	2,270
SHEET NO. 346		
STA 596+16.79 TO 597+00	150	606
SHEET NO. 347		
STA 597+50 TO 598+50	1,965	311
SHEET NO. 348		
STA 599+00 TO 600+00	1,939	1,450
SHEET NO. 349		
STA 600+55.23 TO 608+69.03	245	1,110
SHEET NO. 350		
STA 609+50 TO 610+00	132	1,237
SHEET NO. 351		
STA 610+50 TO 611+55.38	183	1,597
SHEET NO. 352		
STA 612+50 TO 613+00	317	970
SHEET NO. 353		
STA 613+30 TO 614+50	222	373
SHEET NO. 354		
STA 615+00 TO 616+00	95	833
SHEET NO. 355		
STA 616+50 TO 617+54.25	104	2,090
SHEET NO. 356		
STA 617+95.75 TO 619+00	52	2,215
SHEET NO. 357		
STA 619+50 TO 620+50	99	2,811
SHEET NO. 358		
STA 621+00 TO 622+00	78	1,784
SHEET NO. 359		
STA 622+50 TO 623+50	79	561
SHEET NO. 360		
STA 624+00 TO 625+50	267	128
SHEET NO. 361		
STA 626+00 TO 627+00	358	22
SHEET NO. 362		
STA 627+50 TO 628+50	305	50
SHEET NO. 363		
STA 629+00 TO 629+47.20	153	23
SHEET NO. 364		
STA 630+05.59 TO 631+00	70	190
SHEET NO. 365		
STA 631+50 TO 632+50	87	269
SHEET NO. 366		
STA 633+00 TO 634+50	110	546
SHEET NO. 367		
STA 635+00 TO 637+00	122	1,095
SHEET NO. 368		
STA 637+50 TO 640+00	61	481
SHEET NO. 369		
STA 640+50 TO 642+50	17	121
SUBTOTAL	32,935	32,868
RAMP E-2		
SHEET NO. 370		
STA 6+05.84 TO 7+50	254	376
SHEET NO. 371		
STA 8+00 TO 9+50	172	9
SHEET NO. 372		
STA 10+00 TO 11+50	142	10
SHEET NO. 373		
STA 12+00 TO 13+30.22	111	17
SUBTOTAL	679	412
RAMP E-4		
SHEET NO. 374		
STA 76+45.38 TO 78+00	821	0
SHEET NO. 375		
STA 78+50 TO 79+50	3,201	0
SHEET NO. 376		
STA 80+00 TO 80+50	2,713	0
SHEET NO. 377		
STA 81+00 TO 82+00	2,996	38
SHEET NO. 378		
STA 82+50 TO 84+00	745	233
SHEET NO. 379		
STA 84+45 TO 85+50	79	165
SHEET NO. 380		
STA 86+00 TO 86+50	268	168
SHEET NO. 381		
STA 87+00 TO 88+00	1,431	382
SHEET NO. 382		
STA 88+50 TO 90+00	2,994	22
SHEET NO. 383		
STA 90+50 TO 92+50	1,548	310
SHEET NO. 384		
STA 93+00 TO 93+98.92	223	1,194
SUBTOTAL	17,019	2,512

QUANTITY CALCULATIONS

CALC BY CDB DATE 3/88	SUM-76-11.57	OHIO
CHK BY KDK DATE 4/88	FED. PROJECT IR-76-2(44)19	FHWA REGION 5

SUMMIT COUNTY

101/1214

LOCATION	ITEM 203 EXCAVATION C.Y.	ITEM 203 EMBANKMENT C.Y.
RAMP E-6		
SHEET NO. 385		
STA 77+02.53 TO 78+50	1,428	0
SHEET NO. 386		
STA 79+00 TO 80+00	2,249	0
SHEET NO. 387		
STA 80+50 TO 81+00	1,695	0
SHEET NO. 388		
STA 81+50 TO 82+50	653	401
SHEET NO. 389		
STA 83+00 TO 84+00	0	1,688
SHEET NO. 390		
STA 84+50 TO 85+50	0	2,315
SHEET NO. 391		
STA 86+00 TO 87+00	0	1,615
SHEET NO. 392		
STA 87+50 TO 88+73.24	126	379
SUBTOTAL	6,151	6,398
RAMP E-7		
SHEET NO. 393		
STA 80+90.31 TO 82+00	7	0
SHEET NO. 394		
STA 82+50 TO 83+00	0	184
SHEET NO. 395		
STA 83+50 TO 84+00	4	60
SHEET NO. 396		
STA 84+71.60 TO 85+72.60	0	4,524
SHEET NO. 397		
STA 86+25 TO 86+50	0	4,651
SHEET NO. 398		
STA 87+00 TO 88+00	9	3,998
SHEET NO. 399		
STA 88+50 TO 90+00	511	2,251
SHEET NO. 400		
STA 90+50 TO 92+00	1,331	28
SHEET NO. 401		
STA 92+50 TO 94+00	1,499	4
SHEET NO. 402		
STA 94+50 TO 96+00	945	64
SHEET NO. 403		
STA 96+50 TO 96+90.45	172	0
SUBTOTAL	4,478	15,764
RAMP E-8		
SHEET NO. 404		
STA 77+48.65 TO 78+00	250	0
SHEET NO. 405		
STA 78+64.47 TO 79+56.94	411	302
SHEET NO. 406		
STA 80+00 TO 80+50	188	1,709
SHEET NO. 407		
STA 81+00 TO 82+00	379	2,546
SHEET NO. 409		
STA 82+50 TO 83+65.02	79	6,836
SHEET NO. 410		
STA 84+00 TO 84+50	72	3,479
SHEET NO. 411		
STA 85+00 TO 86+50	417	3,946
SHEET NO. 412		
STA 87+00 TO 88+50	1,272	259
SHEET NO. 413		
STA 89+00 TO 91+00	3,433	0
SHEET NO. 414		
STA 91+50 TO 93+50	1,928	6
SHEET NO. 415		
STA 94+00 TO 95+80.21	2,367	217
SHEET NO. 408		
STA 81+50 TO 83+00	139	188
SUBTOTAL	10,935	19,488

LOCATION	ITEM 203 EXCAVATION C.Y.	ITEM 203 EMBANKMENT C.Y.
RAMP E-8A		
SHEET NO. 416		
STA 9+93.63 TO 11+50	1,510	222
SHEET NO. 418		
STA 12+00 TO 13+72.64	934	37
SHEET NO. 417		
STA 9+93.63 TO 12+50	339	33
SUBTOTAL	2,873	292
RAMP E-8B		
SHEET NO. 419		
100+12.94 TO 101+50	435	49
SHEET NO. 420		
STA 102+00 TO 103+50	1,616	0
SHEET NO. 421		
STA 104+00 TO 105+00	3,894	20
SHEET NO. 422		
STA 105+50 TO 106+98.34	4,963	20
SUBTOTAL	10,908	89
RAMP E-9		
SHEET NO. 423		
STA 9+45 TO 10+00	8	3,451
SHEET NO. 424		
STA 10+50 TO 11+00	84	3,878
SHEET NO. 425		
STA 11+50 TO 13+00	207	3,209
SHEET NO. 426		
STA 13+50 TO 15+33.46	173	199
SUBTOTAL	472	10,737
RAMP E-10		
SHEET NO. 427		
STA 13+28.65 TO 15+40.87	169	711
SHEET NO. 428		
STA 16+00	1,234	674
SHEET NO. 429		
STA 16+50 TO 17+50	244	1,545
SHEET NO. 430		
STA 18+00 TO 19+50	60	2,517
SHEET NO. 431		
STA 20+00 TO 21+50	148	1,685
SHEET NO. 432		
STA 22+00 TO 22+78	134	416
SUBTOTAL	1,989	7,548
RAMP E-12		
SHEET NO. 433		
STA 12+08.65 TO 12+50	0	338
SHEET NO. 434		
STA 13+00 TO 14+50	46	2,793
SHEET NO. 435		
STA 15+00 TO 16+50	20	2,976
SHEET NO. 436		
STA 17+00 TO 18+78.93	335	386
SUBTOTAL	401	6,493

LOCATION	ITEM 203 EXCAVATION C.Y.	ITEM 203 EMBANKMENT C.Y.
RAMP E-15		
SHEET NO. 437		
STA 9+24.86 TO 11+50	670	75
SHEET NO. 438		
STA 12+00 TO 13+00	0	1,487
SHEET NO. 439		
STA 13+50 TO 14+00	4	2,612
SHEET NO. 440		
STA 14+50 TO 15+50	76	6,041
SHEET NO. 441		
STA 16+00 TO 17+00	57	10,410
SHEET NO. 442		
STA 17+50 TO 18+50	48	9,392
SHEET NO. 443		
STA 19+00 TO 20+00	57	5,943
SHEET NO. 444		
STA 20+34.10	10	1,117
SUBTOTAL	922	37,077
RAMP E-16		
SHEET NO. 445		
STA 12+47.21 TO 14+00	5,016	0
SHEET NO. 446		
STA 14+50 TO 15+50	5,982	0
SHEET NO. 447		
STA 16+00 TO 16+50	1,410	0
SHEET NO. 448		
STA 17+00 TO 18+00	912	25
SHEET NO. 449		
STA 18+50 TO 19+50	17	819
SHEET NO. 450		
STA 20+00 TO 21+00	0	2,001
SHEET NO. 451		
STA 21+50 TO 22+50	0	2,566
SHEET NO. 452		
STA 23+00 TO 24+50	312	487
SUBTOTAL	13,649	5,898
ARLINGTON STREET		
SHEET NO. 453		
STA 13+50 TO 15+00	170	0
SHEET NO. 454		
STA 15+50 TO 17+00	633	0
SHEET NO. 455		
STA 17+50 TO 19+50	775	0
SHEET NO. 456		
STA 20+00 TO 21+50	106	0
SUBTOTAL	1,684	0
FULLER STREET		
SHEET NO. 457		
STA 11+40.59 TO 14+00	341	50
SHEET NO. 458		
STA 14+50 TO 15+83	344	38
SHEET NO. 459		
STA 16+11.33 TO 16+88.83	36	25
SUBTOTAL	721	113
FIFTH AVENUE		
SHEET NO. 460		
STA 68+75 TO 70+70	7	56
THIRD AVENUE		
SHEET NO. 461		
STA 33+59 TO 34+91.81	207	104
SHEET NO. 462		
STA 35+50 TO 35+77.22	192	0
SUBTOTAL	399	104

LOCATION	ITEM 203 EXCAVATION C.Y.	ITEM 203 EMBANKMENT C.Y.
MARTHA AVENUE		
SHEET NO. 463		
STA 5+00 TO 5+50	13	0
SHEET NO. 464		
STA 6+00 TO 6+50	43	0
SHEET NO. 465		
STA 7+00 TO 7+50	75	0
SHEET NO. 466		
STA 7+77.31 TO 9+00	64	6
SHEET NO. 467		
STA 9+50 TO 11+50	874	20
SHEET NO. 468		
STA 12+00 TO 13+50	1,251	0
SHEET NO. 469		
STA 14+00 TO 15+50	330	565
SHEET NO. 470		
STA 16+00 TO 17+51.77	143	0
SUBTOTAL	2,793	591
ENGLEWOOD AVENUE		
SHEET NO. 471		
STA 20+23 TO 21+03	705	5
SHEET NO. 472		
STA 21+50 TO 22+00	1,171	28
SHEET NO. 473		
STA 22+50 TO 23+50	2,315	0
SHEET NO. 474		
STA 23+70.22 TO 25+01.88	115	133
SUBTOTAL	4,306	166
SCHOOL WALK		
SHEET NO. 475		
STA 48+00 TO 50+00	4	604
SCHOOL ROAD		
SHEET NO. 476		
STA 9+00 TO 14+50	1	1,153
SHEET NO. 477		
STA 15+00 TO 15+50	14	40
SUBTOTAL	15	1,193
SECOND AVENUE		
SHEET NO. 477		
STA 20+28.50 TO 21+10	11	3
TOTAL	133,290	203,109

NOTE: FOR ADDITIONAL EARTHWORK QUANTITIES ASSOCIATED WITH RETAINING WALLS, SEE SHEET 724(DES.1), 755(DES.2), 780(DES.3)

QUANTITY CALCULATIONS

CALC BY PRP DATE 8/88
CHK BY DSB DATE 3/90

SUM-76-11.57 | FED. PROJECT IR-76-2(44)19 | OHIO | F.H.W.A. REGION 5

102
1214

SUMMIT COUNTY

ITEM 203 - SUBGRADE COMPACTION

I-76 WESTBOUND SHOULDER

STA 24+58 TO STA 26+69 LT (LANE U)	208' X 8' AVG X 1/9	=	184.89 SY
STA 26+69 TO STA 27+08 LT (LANE U)	49' X 5.5' AVG X 1/9	=	29.94 SY
STA 24+50 TO STA 24+96 LT	44' X 7.5' AVG X 1/9	=	36.67 SY
STA 24+50 TO STA 25+88 RT	138' X 9.5' X 1/9	=	145.67 SY
STA 25+88 TO STA 26+38 RT	50' X 8.5' AVG X 1/9	=	47.22 SY
STA 26+38 TO STA 27+17.78 RT	78.78' X 7.5' AVG X 1/9	=	66.48 SY
		SUBTOTAL	510.87 SY

I-76 EASTBOUND SHOULDER

STA 541+50 TO STA 542+25 LT	75' X 8' AVG X 1/9	=	66.67 SY
STA 542+25 TO STA 548+22.60 LT	597.60 X 9.5' X 1/9	=	630.80 SY
STA 548+22.60 TO STA 548+97.60 LT	75' X 8' AVG X 1/9	=	66.67 SY
STA 541+50 TO STA 545+53 RT	403' X 11' AVG X 1/9	=	492.56 SY
STA 543+53 TO STA 546+32 RT	79' X 6.5' AVG X 1/9	=	57.06 SY
STA 546+65 TO STA 548+78 RT (LANE T)	217' X 12.25' AVG X 1/9	=	295.36 SY
		SUBTOTAL	1,609.12 SY

I-76 PAVEMENT AND MEDIAN

AREA UNDER ITEM 451 I-76 WB		=	35,863.37 SY
AREA UNDER ITEM 451 I-76 EB		=	34,012.88 SY
AREA UNDER ITEM 452 MEDIAN		=	10,684.90 SY
AREA UNDER ITEM 611 I-76 EB & WB		=	5,148.88 SY
		SUBTOTAL	85,710.03 SY

I-76 LEFT SIDE SHOULDER

STA 28+27.59 TO STA 31+50.00 BK	322.41' X 13.5' X 1/9	=	483.62 SY
STA 553+43.40 AHD TO STA 557+54.54	411.14' X 13.5' X 1/9	=	616.71 SY
STA 557+54.54 TO STA 560+10.00	255.46' X 9.5' X 1/9	=	269.65 SY
STA 560+10.00 TO STA 561+00.00	90.00' x 11.5' x 1/9	=	115.00 SY
STA 561+00.00 TO STA 562+00.00	100' X 13.5' AVG X 1/9	=	150.00 SY
STA 562+00.00 TO STA 566+00.00	400' X 15.5' X 1/9	=	688.89 SY
STA 566+00.00 TO STA 566+40.00	40' X 17.5' AVG X 1/9	=	77.78 SY
STA 566+40.00 TO STA 572+50.00	610' X 13.5' X 1/9	=	915.00 SY
STA 572+50.00 TO STA 575+88.31	338.31' X 15.5' AVG X 1/9	=	582.65 SY
STA 577+18.31 TO STA 577+22.21	3.90' X 15.5' X 1/9	=	6.72 SY
STA 577+22.21 TO STA 578+82.21	160' X 13.5' AVG X 1/9	=	240.00 SY
STA 578+82.21 TO STA 580+86.00	203.79' X 11.5' X 1/9	=	260.40 SY
STA 580+86.00 TO STA 583+21.60	235.60' X 18.5' AVG X 1/9	=	484.29 SY
STA 583+21.60 TO STA 593+99.00	1,077.40' X 13.5' X 1/9	=	1,616.10 SY
STA 593+99.00 TO STA 594+25.00	26' X 10.02' AVG X 1/9	=	28.95 SY
STA 594+25.00 TO STA 594+99.00	74' X 16.02' AVG X 1/9	=	131.72 SY
STA 594+99.00 TO STA 595+24.19	25.19' X 16.5' X 1/9	=	46.18 SY
STA 596+41.79 TO STA 598+70.00	228.21' X 17.5' X 1/9	=	443.74 SY
STA 598+70.00 TO STA 600+25.23	155.23' X 15.5' X 1/9	=	267.34 SY
STA 608+99.03 TO STA 609+00.00	0.97' X 15.5' X 1/9	=	1.67 SY
STA 609+00.00 TO STA 610+00.00	100' X 13.5' AVG X 1/9	=	150.00 SY
STA 610+00.00 TO STA 610+56.52	56.52' X 11.5' X 1/9	=	72.22 SY
STA 611+79.83 TO STA 612+08.65	28.82' X 13.5' X 1/9	=	43.23 SY
STA 612+08.65 TO STA 613+29.21	120.56' X 17.5' AVG X 1/9	=	234.42 SY
STA 613+29.21 TO STA 620+41.27	712.06' X 13.5' X 1/9	=	1,068.09 SY
STA 620+41.27 TO STA 621+41.27	100' X 11.5' AVG X 1/9	=	127.78 SY
STA 621+41.27 TO STA 625+75.00	433.73' X 13.5' X 1/9	=	650.60 SY
STA 625+75.00 TO STA 629+22.20	347.20' X 15.5' X 1/9	=	597.96 SY
STA 630+30.59 TO STA 634+00.00	369.41' X 15.5' X 1/9	=	636.21 SY
		SUBTOTAL	11,006.92 SY

I-76 RIGHT SIDE SHOULDER

STA 550+10.04 TO STA 553+43.40 BK	333.36' X 13.5' X 1/9	=	500.04 SY
STA 553+43.40 AHD TO STA 558+30.00	486.60' X 13.5' X 1/9	=	729.90 SY
STA 558+30.00 TO STA 558+70.00	40' X 19.5' AVG X 1/9	=	86.67 SY
STA 558+70.00 TO STA 569+25.00	1,055' X 17.5' X 1/9	=	2,051.39 SY
STA 569+25.00 TO STA 569+75.00	50' X 15.5' AVG X 1/9	=	86.11 SY
STA 569+75.00 TO STA 570+50.00	75' X 12.5' AVG X 1/9	=	104.17 SY
STA 570+50.00 TO STA 573+25.00	275' X 9.5' X 1/9	=	290.28 SY
STA 573+25.00 TO STA 573+65.00	40' X 15.5' AVG X 1/9	=	68.89 SY
STA 573+65.00 TO STA 575+83.23	218.23' X 13.5' X 1/9	=	327.35 SY
STA 575+83.23 TO STA 575+88.31	5.08' X 11.5' X 1/9	=	6.49 SY
STA 577+18.31 TO STA 577+50.00	31.69' X 11.5' X 1/9	=	40.49 SY
STA 577+50.00 TO STA 586+11.67	861.67' X 13.5' X 1/9	=	1,292.51 SY
STA 586+11.67 TO STA 588+75.00	263.33' X 18.5' AVG X 1/9	=	541.29 SY
STA 588+75.00 TO STA 592+35.00	360' X 9.5' X 1/9	=	380.00 SY
STA 592+35.00 TO STA 593+95.00	160' X 11.5' AVG X 1/9	=	204.44 SY
STA 593+95.00 TO STA 595+24.19	129.19' X 13.5' X 1/9	=	193.79 SY
STA 596+41.79 TO STA 600+25.23	383.44' X 13.5' X 1/9	=	575.16 SY

ITEM 203 - SUBGRADE COMPACTION (CONT'D)

STA 608+99.03 TO STA 610+56.52	157.49' X 13.5' X 1/9	=	236.24 SY
STA 611+79.83 TO STA 612+34.00	54.17' X 15.5' X 1/9	=	93.29 SY
STA 612+34.00 TO STA 613+30.00	96.00' X 15.5' AVG X 1/9	=	165.33 SY
STA 613+30.00 TO STA 622+42.12	912.12' X 13.5' X 1/9	=	1,368.18 SY
STA 622+42.12 TO STA 624+50.00	207.88' X 18.5' AVG X 1/9	=	427.31 SY
STA 624+50.00 TO STA 629+22.21	472.21' X 11.5' X 1/9	=	603.38 SY
STA 630+30.59 TO STA 632+90.00	259.41' X 11.5' X 1/9	=	331.47 SY
STA 632+90.00 TO STA 634+00.00	110.00' X 12.88' AVG X 1/9	=	157.42 SY
		SUBTOTAL	10,861.59 SY

RAMP E-2

AREA UNDER ITEM 451		=	1,581.02 SY
STA 6+05.84 TO STA 7+05.84 RT	100' X 8.5' AVG X 1/9	=	94.44 SY
STA 7+05.84 TO STA 10+72.00 RT	366.16' X 7.5' X 1/9	=	305.13 SY
CURB RETURN (STA 10+72.00 TO STA 10+90)	73 SF X 1/9	=	8.11 SY
STA 10+90 TO STA 12+89.12	199.12' X 3' X 1/9	=	66.37 SY
CURB RETURN (STA 12+89.12 TO STA 13+32.32)	107.05' X 1.5' X 1/9	=	17.84 SY
		SUBTOTAL	2,072.91 SY

RAMP E-4

AREA UNDER ITEM 451		=	3,237.41 SY
STA 76+95.38 TO STA 83+75.00 RT	679.62' X 4.5' X 1/9	=	339.81 SY
STA 83+75.00 TO STA 85+99.00 RT	224' X 5.5' X 1/9	=	136.89 SY
STA 85+99.00 TO STA 86+39.00 RT	40' X 6.5' AVG X 1/9	=	27.56 SY
STA 86+39.00 TO STA 93+98.92 RT	759.92' X 4.5' X 1/9	=	379.96 SY
STA 76+95.38 TO STA 77+95.38 LT	100.00' X 5.5' AVG X 1/9	=	61.11 SY
STA 77+95.38 TO STA 84+46.00 LT	650.62' X 7.5' X 1/9	=	542.18 SY
STA 84+46.00 TO STA 88+37.00 LT	391' X 9.5' X 1/9	=	412.72 SY
STA 88+37.00 TO STA 93+48.92 LT	511.92' X 7.5' X 1/9	=	426.60 SY
STA 93+48.92 TO STA 93+98.92 LT	50' X 8.5' AVG X 1/9	=	47.22 SY
		SUBTOTAL	5,611.46 SY

RAMP E-6

AREA UNDER ITEM 451		=	2,287.78 SY
STA 77+59.68 TO STA 86+13.36 LT	853.68' X 5.5' X 1/9	=	521.69 SY
STA 77+59.68 TO STA 79+09.68 RT	150' X 6.5' AVG X 1/9	=	108.83 SY
STA 79+09.68 TO STA 80+37.00 RT	127.32' X 9.5' X 1/9	=	134.39 SY
STA 80+37.00 TO STA 88+23.24 RT	786.24' X 7.5' X 1/9	=	655.20 SY
STA 88+23.24 TO STA 88+73.24 RT	50' X 8.5' AVG X 1/9	=	47.22 SY
		SUBTOTAL	3,755.11 SY

RAMP E-7

AREA UNDER ITEM 451		=	2,425.00 SY
AREA UNDER ITEM 611		=	419.05 SY
STA 83+31.11 TO STA 84+45.00 RT	113.89' X 4.5' X 1/9	=	56.95 SY
STA 86+85.00 TO STA 88+25.00 RT	140.00' X 5.5' X 1/9	=	85.56 SY
STA 88+25.00 TO STA 88+65.00 RT	40' X 6.5' AVG X 1/9	=	28.89 SY
STA 88+65.00 TO STA 95+13.54 RT	648.54' X 4.5' X 1/9	=	324.27 SY
STA 95+13.54 TO STA 95+38.54 RT	25' X 4' AVG X 1/9	=	11.11 SY
STA 80+90.31 TO STA 81+40.31 LT	50' X 10.5' AVG X 1/9	=	58.33 SY
STA 81+40.31 TO STA 83+98.83 LT	258.52' X 9.5' X 1/9	=	272.88 SY
STA 86+24.70 TO STA 87+08.00 LT	83.30' X 9.5' X 1/9	=	87.93 SY
STA 87+08.00 TO STA 87+48.00 LT	40' X 10.5' AVG X 1/9	=	46.67 SY
STA 87+48.00 TO STA 93+73.12 LT	625.12' X 7.5' X 1/9	=	520.93 SY
STA 93+73.12 TO STA 94+73.12 LT	100' X 5.5' AVG X 1/9	=	61.11 SY
		SUBTOTAL	4,398.68 SY

RAMP E-8

AREA UNDER ITEM 451		=	4,103.89 SY
AREA UNDER ITEM 611		=	376.65 SY
STA 77+48.65 TO STA 78+44.00 LT	95.35' X 4.5' X 1/9	=	47.68 SY
STA 80+50.00 TO STA 82+40.00 LT	190.00' X 5.5' X 1/9	=	116.11 SY
STA 82+40.00 TO STA 92+00.00 LT	960' X 4.5' X 1/9	=	480.00 SY
STA 77+48.65 TO STA 77+98.65 RT	50' X 10.5' AVG X 1/9	=	58.33 SY
STA 77+98.65 TO STA 78+09.73 RT	11.08' X 9.5' X 1/9	=	11.70 SY
STA 80+14.34 TO STA 90+02.31 RT	987.97' X 7.5' X 1/9 RT	=	823.31 SY
STA 90+02.31 TO STA 94+00.00 RT	397.69' X 7.5' X 1/9	=	331.41 SY
STA 94+00.00 TO STA 95+19.94 RT	119.94' X 5.5' AVG X 1/9	=	73.30 SY
STA 92+00.00 TO STA 93+00.00 LT	100' X 6.5' AVG X 1/9	=	72.22 SY
STA 93+00.00 TO STA 94+00.00 LT	100' X 9' X 1/9	=	100.00 SY
STA 94+00.00 TO STA 95+19.94 LT	119.94' X 6' AVG X 1/9	=	79.96 SY
		SUBTOTAL	6,674.56 SY

ITEM 203 - SUBGRADE COMPACTION (CONT'D)

RAMP E-8A

AREA UNDER ITEM 451		=	796.28 SY
STA 9+95.92 TO STA 13+19.67 LT	323.75' X 4.5' X 1/9	=	161.88 SY
STA 13+19.67 TO STA 13+44.65 LT	24.98' X 4' AVG X 1/9	=	11.10 SY
STA 9+95.92 TO STA 12+33.38 RT	237.46' X 7.5' X 1/9	=	197.88 SY
STA 12+33.38 TO STA 13+33.38 RT	100' X 5.5' AVG X 1/9	=	61.11 SY
		SUBTOTAL	1,228.25 SY

RAMP E-8B

CURB RETURNS	7,356 SF X 1/9	=	817.33 SY
STA 100+93.30 TO STA 106+34.73	541.43 X 31 X 1/9	=	1,864.93 SY
		SUBTOTAL	2,682.26 SY

RAMP E-9

AREA UNDER ITEM 451		=	1,084.69 SY
AREA UNDER ITEM 611		=	120.00 SY
STA 9+73.32 TO STA 13+83.46 LT	410.14' X 4.5' X 1/9	=	205.07 SY
STA 9+73.32 TO STA 10+75.00 RT	101.68' X 15.5' X 1/9	=	175.12 SY
STA 10+75.00 TO STA 10+96.00 RT	21' X 15.08' AVG X 1/9	=	35.19 SY
STA 10+96.00 TO STA 12+25.00 RT	129' X 11.08' AVG X 1/9	=	158.81 SY
STA 12+25.00 TO STA 12+83.46 RT	58.46' X 7.5' X 1/9	=	48.72 SY
STA 12+83.46 TO STA 13+83.46 RT	100' X 5.5' AVG X 1/9	=	61.11 SY
		SUBTOTAL	1,888.71 SY

RAMP E-10

AREA UNDER ITEM 451		=	1,867.65 SY
AREA UNDER ITEM 611		=	206.66 SY
STA 13+28.65 TO STA 14+07.14 LT	78.49' X 4.5' X 1/9	=	39.25 SY
STA 15+70.87 TO STA 19+83.38 LT	412.51' X 5.5' X 1/9	=	252.09 SY
STA 13+28.65 TO STA 13+78.65 RT	50' X 10.5 AVG X 1/9	=	58.33 SY
STA 13+78.65 TO STA 14+07.14 RT	28.49' X 9.5' X 1/9	=	30.07 SY
STA 15+70.87 TO STA 18+83.38 RT	312.51' X 7.5' X 1/9	=	260.43 SY
STA 18+83.38 TO STA 19+83.38 RT	100' X 5.5' AVG X 1/9	=	61.11 SY
		SUBTOTAL	2,775.59 SY

RAMP E-12

AREA UNDER ITEM 451		=	1,647.15 SY
STA 13+23.88 TO STA 18+47.00 RT	523.12' X 4.5' X 1/9	=	261.56 SY
STA 12+08.65 TO STA 12+58.65 LT	50' X 8.5' AVG X 1/9	=	47.22 SY
STA 12+58.65 TO STA 17+94.72 LT	536.07' X 7.5' X 1/9	=	446.73 SY
		SUBTOTAL	2,402.66 SY

RAMP E-15

AREA UNDER ITEM 451		=	2,567.14 SY
STA 9+56 TO STA 20+34.10 RT	1,078.10' X 4.5' X 1/9	=	539.05 SY
STA 9+89.69 TO STA 11+22.13 LT	132.44' X 5.5' AVG X 1/9	=	80.94 SY
STA 11+22.13 TO STA 19+84.10 LT	861.97' X 7.5' X 1/9	=	718.31 SY
STA 19+84.10 TO STA 20+34.10 LT	50' X 8.5' AVG X 1/9	=	47.22 SY
		SUBTOTAL	3,952.66 SY

RAMP E-16

AREA UNDER ITEM 451		=	2,413.91 SY
STA 13+32.49 TO STA 22+15.00 LT	882.51' X 5.5' X 1/9	=	539.31 SY
STA 22+15.00 TO STA 22+47.04 LT	32.04' X 4.5' X 1/9	=	16.02 SY
STA 13+32.49 TO STA 14+82.49 RT	150' X 6.5' AVG X 1/9	=	108.33 SY
STA 14+82.49 TO STA 17+16.00 RT	233.51' X 9.5' X 1/9	=	246.48 SY
STA 17+16.00 TO STA 20+80.00 RT	364.00' X 7.5' X 1/9	=	303.33 SY
STA 20+80.00 TO STA 21+20.00 RT	40' X 10.5' AVG X 1/9	=	46.67 SY
STA 21+20.00 TO STA 24+00.00 RT	280' X 9.5' X 1/9	=	295.56 SY
STA 24+00.00 TO STA 24+50.00 RT	50' X 10.5' AVG X 1/9	=	58.33 SY
		SUBTOTAL	4,027.94 SY

TALBOT AVENUE

STA 18+69.87 TO STA 19+00	30.13' X 29' X 1/9	=	97.09 SY
TALBOT/MARTIN CONNECTION (STA 18+69.87 TALBOT TO STA 46+80 MARTIN)	1,842 SF X 1/9	=	204.67 SY
		SUBTOTAL	301.76 SY

QUANTITY CALCULATIONS

CALC BY PRP DATE 8/88 | CHK BY DSB DATE 3/90 | SUM-76-11.57 | FED. PROJECT IR-76-2(44)19 | OHIO | F.H.W.A. REGION 5 | 103 1214

SUMMIT COUNTY

ITEM 203 - SUBGRADE COMPACTION (CONT'D)

MARTIN AVENUE

STA 46+80 TO STA 49+42.22	262.22' X 31' X 1/9	=	903.20 SY
CURB RETURNS (STA 49+42.22 TO STA 49+71.50)	1,196 SF X 1/9	=	132.89 SY
		SUBTOTAL	1,036.09 SY

ARLINGTON STREET

STA 13+70.00 TO STA 15+00.00	130' X 54.5' AVG X 1/9	=	787.22 SY
STA 15+00.00 TO STA 19+62.60	462.6' X 60' AVG X 1/9	=	3,084.00 SY
STA 19+62.60 TO STA 20+92.60	130' X 54.5' AVG X 1/9	=	787.22 SY
		SUBTOTAL	4,658.44 SY

SECOND AVENUE

CURB RETURNS (STA 20+26.5 TO STA 21+10)	3,232 SF X 1/9	=	359.09 SY
		SUBTOTAL	359.09 SY

THIRD AVENUE

CURB RETURNS	1,522 SF X 1/9	=	169.11 SY
STA 21+58 TO STA 22+50.66	92.66' X 35' X 1/9	=	360.34 SY
CURB RETURNS (STA 34+91.95 TO STA 35+77.22)	5,325 SF X 1/9	=	591.67 SY
		SUBTOTAL	1,121.12 SY

FULLER STREET

STA 11+40.59 TO STA 16+88.83	548.24 X 27' X 1/9	=	1,644.72 SY
		SUBTOTAL	1,644.72 SY

MARTHA AVENUE

STA 5+09.31 TO STA 7+77.31	270' X 9.5' AVG X 1/9	=	285.00 SY
STA 7+77.31 TO STA 8+79.31	102' X 39' X 1/9	=	442.00 SY
STA 8+79.31 TO STA 11+79.31	300' X 44' AVG X 1/9	=	1,466.67 SY
STA 11+79.31 TO STA 17+51.77	572.46' X 49' X 1/9	=	3,116.73 SY
		SUBTOTAL	5,310.40 SY

ENGLEWOOD AVENUE

CURB RETURNS	101 SF X 1/9	=	11.22 SY
STA 20+23 TO STA 21+03	80' X 40' X 1/9	=	355.56 SY
ENGLEWOOD/CAMBRIDGE CONNECTION	131.66' X 27' X 1/9	=	394.98 SY
CURB RETURNS	1,729 SF X 1/9	=	192.11 SY
STA 30+68.31 TO STA 31+70	101.69' X 42' AVG X 1/9	=	474.55 SY
STA 37+70 TO STA 48+80	1,110' X 35' X 1/9	=	4,316.67 SY
CURB RETURNS	131 SF X 1/9	=	14.56 SY
		SUBTOTAL	5,759.65 SY

WIGLEY AVENUE

STA 9+01.72 TO STA 9+95	93.28' X 35' X 1/9	=	362.76 SY
		SUBTOTAL	362.76 SY
		TOTAL	171,723.35 SY

ITEM 203 - PROOF ROLLING

AREA OF 203 SUBGRADE COMPACTION	171,724 SY X 1/3,000	=	57.24 HR
		TOTAL	57.24 HR

ITEM SPECIAL - SUBGRADE PREPARATION

I-76 WESTBOUND

STA 28+02 TO STA 31+50.00 BK	348' X 51' X 1/9	=	1,972.00 SY
STA 553+43.40 TO STA 559+05	561.60' X 51' X 1/9	=	3,182.40 SY
STA 559+05 TO STA 566+65	760' X 70' AVG X 1/9	=	5,911.11 SY
STA 566+65 TO STA 576+13	948' X 51' X 1/9	=	5,372.00 SY
STA 576+93 TO STA 581+36	443' X 51' X 1/9	=	2,510.33 SY
STA 581+36 TO STA 582+23	87' X 73' AVG X 1/9	=	705.67 SY
STA 582+80 TO STA 586+65	385' X 67' AVG X 1/9	=	2,866.11 SY
STA 586+65 TO STA 595+51	886' X 51' X 1/9	=	5,020.67 SY
STA 596+16 TO STA 600+54	438' X 51' X 1/9	=	2,482.00 SY
STA 608+65 TO STA 610+80	215' X 53' AVG X 1/9	=	1,266.11 SY
STA 611+52 TO STA 617+46	594' X 36' X 1/9	=	2,376.00 SY
STA 617+92 TO STA 627+38	946' X 36' X 1/9	=	3,784.00 SY
STA 627+38 TO STA 629+48	210' X 58' AVG X 1/9	=	1,353.33 SY
STA 630+04 TO STA 634+00	396' X 48' X 1/9	=	2,112.00 SY
		SUBTOTAL	40,913.73 SY

I-76 EASTBOUND

STA 549+86 TO STA 562+50	1,264' X 59' AVG X 1/9	=	8,286.22 SY
STA 562+50 TO STA 576+13	1,363' X 51' X 1/9	=	7,723.67 SY
STA 576+93 TO STA 578+24	131' X 68' AVG X 1/9	=	989.78 SY
STA 578+24 TO STA 582+23	399' X 51' X 1/9	=	2,261.00 SY
STA 582+80 TO STA 589+82	702' X 51' X 1/9	=	3,978.00 SY
STA 589+82 TO STA 593+40	358' X 58' AVG X 1/9	=	2,307.11 SY
STA 593+40 TO STA 595+51	211' X 54' AVG X 1/9	=	1,266.00 SY
STA 596+16 TO STA 600+54	438' X 48' X 1/9	=	2,336.00 SY
STA 608+65 TO STA 610+80	215' X 48' X 1/9	=	1,146.67 SY
STA 611+52 TO STA 612+15	63' X 57' AVG X 1/9	=	399.00 SY
STA 612+15 TO STA 617+46	531' X 36' X 1/9	=	2,124.00 SY
STA 617+92 TO STA 628+33	1,041' X 36' X 1/9	=	4,164.00 SY
STA 628+33 TO STA 629+48	115' X 52' AVG X 1/9	=	664.44 SY
STA 630+04 TO STA 634+00	396' X 36' X 1/9	=	1,584.00 SY
		SUBTOTAL	39,229.89 SY
		TOTAL	80,143.62 SY

ITEM 301 - BITUMINOUS AGGREGATE BASE, AC-20

I-76 WESTBOUND PAVEMENT

STA 28+27.59 TO STA 31+50.00 BK	322.41' X 36' X 3/12 X 1/27	=	107.47 CY
STA 553+43.40 AHD TO STA 557+54.54	411.14' X 36' X 3/12 X 1/27	=	137.05 CY
STA 557+54.54 TO STA 561+57.32	402.78' X 61' AVG X 3/12 X 1/27	=	227.50 CY
STA 561+57.32 TO STA 575+66.00	1,408.68' X 48' X 3/12 X 1/27	=	626.08 CY
STA 575+66.00 TO STA 575+88.31	22.31' X 48.28' AVG X 3/12 X 1/27	=	9.97 CY
STA 577+18.31 TO STA 580+86.00	367.69' X 56.40' AVG X 3/12 X 1/27	=	192.02 CY
STA 580+86.00 TO STA 593+99.00	1,313' X 36' X 3/12 X 1/27	=	437.67 CY
STA 593+99.00 TO STA 595+24.19	125.19' X 72.07' AVG X 3/12 X 1/27	=	83.54 CY
STA 596+41.79 TO STA 599+77.40	335.61' X 55.80' AVG X 3/12 X 1/27	=	173.40 CY
STA 599+77.40 TO STA 600+25.23	47.83' X 48' X 3/12 X 1/27	=	21.26 CY
STA 608+99.03 TO STA 610+56.52	157.49' X 55.22' AVG X 3/12 X 1/27	=	80.52 CY
STA 611+79.83 TO STA 612+08.65	28.82' X 60.65' AVG X 3/12 X 1/27	=	16.18 CY
STA 612+08.65 TO STA 620+41.27	832.62' X 36' X 3/12 X 1/27	=	277.54 CY
STA 620+41.27 TO STA 623+87.83	346.56' X 61.60' AVG X 3/12 X 1/27	=	197.67 CY
STA 623+87.83 TO STA 629+22.21	534.38' X 48' X 3/12 X 1/27	=	237.50 CY
STA 630+30.59 TO STA 634+00.00	369.41' X 48' X 3/12 X 1/27	=	164.18 CY
		SUBTOTAL	2,989.55 CY

I-76 EASTBOUND PAVEMENT

STA 550+10.04 TO STA 553+43.40 BK	333.36' X 48' X 3/12 X 1/27	=	148.16 CY
STA 553+43.40 AHD TO STA 556+70.00	326.60' X 48' X 3/12 X 1/27	=	145.16 CY
STA 556+70.00 TO STA 561+50.00	480' X 42' AVG X 3/12 X 1/27	=	186.67 CY
STA 561+50.00 TO STA 569+50.00	800' X 36' X 3/12 X 1/27	=	266.67 CY
STA 569+50.00 TO STA 570+50.00	100' X 42' AVG X 3/12 X 1/27	=	38.89 CY
STA 570+50.00 TO STA 574+71.64	421.64' X 48' X 3/12 X 1/27	=	187.40 CY
STA 574+71.64 TO STA 575+88.31	116.67' X 50.96' AVG X 3/12 X 1/27	=	55.05 CY
STA 577+18.31 TO STA 577+50.00	31.69' X 73.21' AVG X 3/12 X 1/27	=	21.48 CY
STA 577+50.00 TO STA 588+75.00	1,125' X 36' X 3/12 X 1/27	=	375.00 CY
STA 588+75.00 TO STA 593+95.00	520' X 54.50' AVG X 3/12 X 1/27	=	262.41 CY
STA 593+95.00 TO STA 595+24.19	129.19' X 48' X 3/12 X 1/27	=	57.42 CY
STA 596+41.79 TO STA 600+25.23	383.44' X 48' X 3/12 X 1/27	=	170.42 CY
STA 608+99.03 TO STA 610+51.64	152.61' X 48' X 3/12 X 1/27	=	67.83 CY
STA 610+51.64 TO STA 610+56.52	4.88' X 48.15' AVG X 3/12 X 1/27	=	2.18 CY
STA 611+79.83 TO STA 613+30.00	150.17' X 66.25' AVG X 3/12 X 1/27	=	92.12 CY
STA 613+30.00 TO STA 624+50.00	1,120' X 36' X 3/12 X 1/27	=	373.33 CY
STA 624+50.00 TO STA 629+22.21	472.21' X 55.14' AVG X 3/12 X 1/27	=	241.09 CY
STA 630+30.59 TO STA 634+00.00	369.41' X 41.98' AVG X 3/12 X 1/27	=	143.59 CY
		SUBTOTAL	2,834.87 CY

ITEM 301 - BITUMINOUS AGGREGATE BASE, AC-20 (CONT'D)

I-76 LEFT SIDE SHOULDER

STA 28+27.59 TO STA 31+50.00 BK	322.41' X 12' X 3/12 X 1/27	=	35.82 CY
STA 553+43.40 AHD TO STA 557+54.54	411.14' X 12' X 3/12 X 1/27	=	45.68 CY
STA 557+54.54 TO STA 560+10.00	255.46' X 8' X 3/12 X 1/27	=	18.92 CY
STA 560+10.00 TO STA 561+00.00	90' X 10' X 3/12 X 1/27	=	8.33 CY
STA 561+00.00 TO STA 562+00.00	100' X 12' AVG X 3/12 X 1/27	=	11.11 CY
STA 562+00.00 TO STA 566+00.00	400' X 14' X 3/12 X 1/27	=	51.85 CY
STA 566+00.00 TO STA 566+40.00	40' X 16' AVG X 3/12 X 1/27	=	5.93 CY
STA 566+40.00 TO STA 572+50.00	610' X 12' X 3/12 X 1/27	=	67.78 CY
STA 572+50.00 TO STA 575+88.31	338.31' X 14' AVG X 3/12 X 1/27	=	43.86 CY
STA 577+18.31 TO STA 577+22.21	3.90' X 14' X 3/12 X 1/27	=	0.51 CY
STA 577+22.21 TO STA 578+82.21	160' X 12' AVG X 3/12 X 1/27	=	17.78 CY
STA 578+82.21 TO STA 580+86.00	203.79' X 10' X 3/12 X 1/27	=	18.87 CY
STA 580+86.00 TO STA 583+21.60	235.60' X 17' AVG X 3/12 X 1/27	=	37.08 CY
STA 583+21.60 TO STA 593+99.00	1,077.40' X 12' X 3/12 X 1/27	=	119.71 CY
STA 593+99.00 TO STA 594+25.00	26' X 8.52' AVG X 3/12 X 1/27	=	2.05 CY
STA 594+25.00 TO STA 594+99.00	74' X 14.52' AVG X 3/12 X 1/27	=	9.95 CY
STA 594+99.00 TO STA 595+24.19	25.19' X 16' X 3/12 X 1/27	=	3.73 CY
STA 596+41.79 TO STA 598+70.00	228.21' X 16' X 3/12 X 1/27	=	33.81 CY
STA 598+70.00 TO STA 600+25.23	155.23' X 14' X 3/12 X 1/27	=	20.12 CY
STA 608+99.03 TO STA 609+00.00	0.97' X 14' X 3/12 X 1/27	=	0.13 CY
STA 609+00.00 TO STA 610+00.00	100' X 12' AVG X 3/12 X 1/27	=	11.11 CY
STA 610+00.00 TO STA 610+56.52	56.52' X 10' X 3/12 X 1/27	=	5.23 CY
STA 611+79.83 TO STA 612+08.65	28.82' X 12' X 3/12 X 1/27	=	3.20 CY
STA 612+08.65 TO STA 613+29.21	120.56' X 16' AVG X 3/12 X 1/27	=	17.86 CY
STA 613+29.21 TO STA 620+41.27	712.06' X 12' X 3/12 X 1/27	=	79.12 CY
STA 620+41.27 TO STA 621+41.27	100' X 10' AVG X 3/12 X 1/27	=	9.26 CY
STA 621+41.27 TO STA 625+75.00	433.73' X 12' X 3/12 X 1/27	=	48.19 CY
STA 625+75.00 TO STA 629+22.20	347.20' X 14' X 3/12 X 1/27	=	45.01 CY
STA 630+30.59 TO STA 634+00.00	369.41' X 14' X 3/12 X 1/27	=	47.89 CY
		SUBTOTAL	819.89 CY

I-76 RIGHT SIDE SHOULDER

STA 550+10.04 TO STA 553+43.40 BK	333.36' X 12' X 3/12 X 1/27	=	37.04 CY
STA 553+43.40 AHD TO STA 558+30.00	486.60' X 12' X 3/12 X 1/27	=	54.07 CY
STA 558+30.00 TO STA 558+70.00	40' X 18' AVG X 3/12 X 1/27	=	6.67 CY
STA 558+70.00 TO STA 569+25.00	1,055' X 16' X 3/12 X 1/27	=	156.30 CY
STA 569+25.00 TO STA 569+75.00	50' X 14' AVG X 3/12 X 1/27	=	6.48 CY
STA 569+75.00 TO STA 570+50.00	75' X 9.50' AVG X 3/12 X 1/27	=	6.60 CY
STA 570+50.00 TO STA 573+25.00	275' X 8' X 3/12 X 1/27	=	20.37 CY
STA 573+25.00 TO STA 573+65.00	40' X 14' AVG X 3/12 X 1/27	=	5.19 CY
STA 573+65.00 TO STA 575+83.23	218.23' X 12' X 3/12 X 1/27	=	24.25 CY
STA 575+83.23 TO STA 575+88.31	5.08' X 10' X 3/12 X 1/27	=	0.47 CY
STA 577+18.31 TO STA 577+50.00	31.69' X 10' X 3/12 X 1/27	=	2.93 CY
STA 577+50.00 TO STA 586+11.67	861.67' X 12' X 3/12 X 1/27	=	95.74 CY
STA 586+11.67 TO STA 588+75.00	263.33' X 17' AVG X 3/12 X 1/27	=	41.45 CY
STA 588+75.00 TO STA 592+35.00	360' X 8' X 3/12 X 1/27	=	26.67 CY
STA 592+35.00 TO STA 593+95.00	160' X 10' AVG X 3/12 X 1/27	=	14.81 CY
STA 593+95.00 TO STA 595+24.19	129.19' X 12' X 3/12 X 1/27	=	14.35 CY
STA 596+41.79 TO STA 600+25.23	383.44' X 12' X 3/12 X 1/27	=	42.60 CY
STA 608+99.03 TO STA 610+56.52	157.49' X 12' X 3/12 X 1/27	=	17.50 CY
STA 611+79.83 TO STA 612+34.00	54.17' X 14' X 3/12 X 1/27	=	7.02 CY
STA 612+34.00 TO STA 613+30.00	96' X 14' X 3/12 X 1/27	=	12.44 CY
STA 613+30.00 TO STA 622+42.12	912.12' X 12' X 3/12 X 1/27	=	101.35 CY
STA 622+42.12 TO STA 624+50.00	207.88' X 17' AVG X 3/12 X 1/27	=	32.72 CY
STA 624+50.00 TO STA 629+22.21	472.21' X 10' X 3/12 X 1/27	=	43.72 CY
STA 630+30.59 TO STA 632+90.00	259.41' X 10' X 3/12 X 1/27	=	24.02 CY
STA 632+90.00 TO STA 634+00.00	110.00' X 11.38' AVG X 3/12 X 1/27	=	11.59 CY
		SUBTOTAL	806.35 CY

I-76 MEDIAN SHOULDER LEFT

STA 28+27.59 TO STA 31+50.00 BK	322.41' X 4.25' X 3/12 X 1/27	=	12.69 CY
		SUBTOTAL	12.69 CY

I-76 MEDIAN SHOULDER RIGHT

STA 550+10.04 TO STA 553+43.40 BK	333.36' X 9.25' AVG X 3/12 X 1/27	=	28.55 CY
		SUBTOTAL	28.55 CY

I-76 MEDIAN SHOULDER LEFT & RIGHT

STA 553+43.40 AHD TO STA 575+88.31	2,244.91' X 4.25' X 3/12 X 1/27 X 2	=	176.68 CY
STA 577+18.31 TO STA 587+19.08	1,000.77' X 4.25' X 3/12 X 1/27 X 2	=	78.76 CY
STA 587+19.08 TO STA 593+20.12	601.04' X 7' AVG X 3/12 X 1/27 X 2	=	77.91 CY
STA 593+20.12 TO STA 595+24.19	204.07' X 9.75' X 3/12 X 1/27 X 2	=	36.85 CY
STA 596+41.79 TO STA 600+25.23	383.44' X 9.75' X 3/12 X 1/27 X 2	=	69.23 CY
STA 608+99.03 TO STA 610+56.52	157.49' X 9.75' X 3/12 X 1/27 X 2	=	28.44 CY
STA 611+79.83 TO STA 629+22.21	1,742.38' X 9.75' X 3/12 X 1/27 X 2	=	314.60 CY
STA 630+30.59 TO STA 634+00.00	369.41' X 9.75' X 3/12 X 1/27 X 2	=	66.70 CY
		SUBTOTAL	849.17 CY

QUANTITY CALCULATIONS

CALC BY PRP DATE 8/88
CHK BY DSB DATE 3/90
SUM-76-11.57
FED. PROJECT IR-76-2(44)19
OHIO
F.H.W.A. REGION 5
104
1214
SUMMIT COUNTY

ITEM 301 - BITUMINOUS AGGREGATE BASE, AC-20 (CONT'D)

RAMP E-2 PAVEMENT

STA 6+05.84 TO STA 10+90	484.16' X 18.5' X 3/12 X 1/27	=	82.93 CY
STA 10+90 TO STA 12+89.12	199.12' X 19' X 3/12 X 1/27	=	35.03 CY
CURB RETURNS (STA 12+89.12 TO STA 13+32.32)	1,489 SF X 3/12 X 1/27	=	13.79 CY
		SUBTOTAL	131.75 CY

RAMP E-2 RIGHT SIDE SHOULDER

STA 6+05.84 TO STA 7+05.84	100' X 7' AVG X 3/12 X 1/27	=	6.48 CY
STA 7+05.84 TO STA 10+72.00	366.16' X 6' X 3/12 X 1/27	=	20.34 CY
CURB RETURNS (STA 10+72.00 TO STA 10+90:00)	44 SF X 3/12 X 1/27	=	0.41 CY
		SUBTOTAL	27.23 CY

RAMP E-4 PAVEMENT

CURB RETURNS (STA 76+43.38 TO STA 76+95.38)	1,680 SF X 3/12 X 1/27	=	15.56 CY
STA 76+95.38 TO STA 77+95.38	100' X 18' AVG X 3/12 X 1/27	=	16.67 CY
STA 77+95.38 TO STA 93+98.92	1,603.54' X 16' X 3/12 X 1/27	=	237.56 CY
		SUBTOTAL	269.79 CY

RAMP E-4 RIGHT SIDE SHOULDER

STA 76+95.38 TO STA 83+75.00	679.62' X 3' X 3/12 X 1/27	=	18.88 CY
STA 83+75.00 TO STA 85+99.00	224' X 4' X 3/12 X 1/27	=	8.30 CY
STA 85+99.00 TO STA 86+39.00	40' X 5' AVG X 3/12 X 1/27	=	1.85 CY
STA 86+39.00 TO STA 93+98.92	759.92' X 3' X 3/12 X 1/27	=	21.11 CY
		SUBTOTAL	50.14 CY

RAMP E-4 LEFT SIDE SHOULDER

STA 76+95.38 TO STA 77+95.38	100.00' X 4.00' AVG X 3/12 X 1/27	=	3.70 CY
STA 77+95.38 TO STA 84+46.00	650.62' X 6' X 3/12 X 1/27	=	36.14 CY
STA 84+46.00 TO STA 88+37.00	391' X 8' X 3/12 X 1/27	=	28.96 CY
STA 88+37.00 TO STA 93+48.92	511.92' X 6' X 3/12 X 1/27	=	28.44 CY
STA 93+48.92 TO STA 93+98.92	50' X 7' AVG X 3/12 X 1/27	=	3.24 CY
		SUBTOTAL	100.48 CY

RAMP E-6 PAVEMENT

CURB RETURNS (STA 77+00.50 TO STA 77+59.68)	2,323 SF X 3/12 X 1/27	=	21.51 CY
STA 77+59.68 TO STA 79+09.68	150' X 19' AVG X 3/12 X 1/27	=	26.39 CY
STA 79+09.68 TO STA 88+73.24	963.56' X 16' X 3/12 X 1/27	=	142.75 CY
		SUBTOTAL	190.65 CY

RAMP E-6 LEFT SIDE SHOULDER

STA 77+59.68 TO STA 85+75.00	815.32' X 4.50' X 3/12 X 1/27	=	33.97 CY
STA 85+75.00 TO STA 86+13.36	38.36' X 4.00' X 3/12 X 1/27	=	1.42 CY
		SUBTOTAL	35.39 CY

RAMP E-6 RIGHT SIDE SHOULDER

STA 77+59.68 TO STA 79+09.68	150' X 5' AVG X 3/12 X 1/27	=	6.94 CY
STA 79+09.68 TO STA 80+37.00	127.32' X 8.5' X 3/12 X 1/27	=	10.02 CY
STA 80+37.00 TO STA 88+23.24	786.24' X 6' X 3/12 X 1/27	=	43.68 CY
STA 88+23.24 TO STA 88+73.24	50' X 7' AVG X 3/12 X 1/27	=	3.24 CY
		SUBTOTAL	63.88 CY

RAMP E-7 PAVEMENT

STA 80+90.31 TO STA 83+98.83	308.52' X 16' X 3/12 X 1/27	=	45.71 CY
STA 86+24.70 TO STA 93+73.12	748.42' X 16' X 3/12 X 1/27	=	110.88 CY
STA 93+73.12 TO STA 94+73.12	100' X 18' AVG X 3/12 X 1/27	=	16.67 CY
CURB RETURNS, AS PER PLAN	3,114 SF X 3/12 X 1/27	=	28.83 CY
		SUBTOTAL	202.09 CY

ITEM 301 - BITUMINOUS AGGREGATE BASE, AC-20 (CONT'D)

RAMP E-7 RIGHT SIDE SHOULDER

STA 83+31.11 TO STA 84+45.00	113.89' X 3' X 3/12 X 1/27	=	3.16 CY
STA 86+85.00 TO STA 88+25.00	140.00' X 4' X 3/12 X 1/27	=	5.19 CY
STA 88+25.00 TO STA 88+65.00	40' X 5' AVG X 3/12 X 1/27	=	1.85 CY
STA 88+65.00 TO STA 95+13.54	648.54' X 3' X 3/12 X 1/27	=	18.02 CY
STA 95+13.54 TO STA 95+38.54	25' X 2.50' AVG X 3/12 X 1/27	=	0.58 CY
		SUBTOTAL	28.80 CY

RAMP E-7 LEFT SIDE SHOULDER

STA 80+90.31 TO STA 81+40.31	50' X 9' AVG X 3/12 X 1/27	=	4.17 CY
STA 81+40.31 TO STA 83+98.83	258.52' X 8' X 3/12 X 1/27	=	19.15 CY
STA 86+24.70 TO STA 87+08.00	83.30' X 8' X 3/12 X 1/27	=	6.17 CY
STA 87+08.00 TO STA 87+48.00	40' X 9' AVG X 3/12 X 1/27	=	3.33 CY
STA 87+48.00 TO STA 93+73.12	625.12' X 6' X 3/12 X 1/27	=	34.73 CY
STA 93+73.12 TO STA 94+73.12	100' X 4' AVG X 3/12 X 1/27	=	3.70 CY
		SUBTOTAL	71.25 CY

RAMP E-8 PAVEMENT

STA 77+48.65 TO STA 78+09.73	61.08' X 16' X 3/12 X 1/27	=	9.05 CY
STA 80+14.34 TO STA 86+50.00	635.66' X 16' X 3/12 X 1/27	=	94.17 CY
STA 86+50.00 TO STA 89+00.00	250' X 22' AVG X 3/12 X 1/27	=	50.92 CY
STA 89+00.00 TO STA 90+02.31	102.31' X 40.31' AVG X 3/12 X 1/27	=	38.19 CY
STA 90+02.31 TO STA 91+00.00	97.69' X 16' X 3/12 X 1/27	=	14.47 CY
STA 91+00.00 TO STA 94+00.00	300' X 22' AVG X 3/12 X 1/27	=	61.11 CY
STA 94+00.00 TO STA 95+19.94	119.94' X 33' AVG X 3/12 X 1/27	=	36.65 CY
CURB RETURNS, AS PER PLAN	4,042 SF X 3/12 X 1/27	=	37.42 CY
		SUBTOTAL	341.98 CY

RAMP E-8 LEFT SIDE SHOULDER

STA 77+48.65 TO STA 78+44.00	95.35' X 3' X 3/12 X 1/27	=	2.65 CY
STA 80+50.00 TO STA 82+40.00	190.00' X 4' X 3/12 X 1/27	=	7.04 CY
STA 82+40.00 TO STA 92+00.00	960' X 3' X 3/12 X 1/27	=	26.67 CY
STA 92+00.00 TO STA 93+00.00	100' X 5' AVG X 3/12 X 1/27	=	4.63 CY
STA 93+00.00 TO STA 94+00.00	100' X 7.50' X 3/12 X 1/27	=	6.94 CY
STA 94+00.00 TO STA 95+19.94	119.94' X 4.50' AVG X 3/12 X 1/27	=	5.00 CY
		SUBTOTAL	52.93 CY

RAMP E-8 RIGHT SIDE SHOULDER

STA 77+48.65 TO STA 77+98.65	50' X 9' AVG X 3/12 X 1/27	=	4.17 CY
STA 77+98.65 TO STA 78+09.73	11.08' X 8' X 3/12 X 1/27	=	0.82 CY
STA 80+14.34 TO STA 90+02.31	987.97' X 6' X 3/12 X 1/27	=	54.89 CY
STA 90+02.31 TO STA 94+00.00	397.69' X 6' X 3/12 X 1/27	=	22.09 CY
STA 94+00.00 TO STA 95+19.94	119.94' X 4' AVG X 3/12 X 1/27	=	4.44 CY
		SUBTOTAL	86.41 CY

RAMP E-8A PAVEMENT

STA 9+95.92 TO STA 12+33.38	237.46' X 16' X 3/12 X 1/27	=	35.18 CY
STA 12+33.38 TO STA 13+19.67	86.29' X 17.73' AVG X 3/12 X 1/27	=	14.17 CY
STA 13+19.67 TO STA 13+33.38	13.71' X 21.10' AVG X 3/12 X 1/27	=	2.68 CY
CURB RETURNS, AS PER PLAN	1,548 SF X 3/12 X 1/27	=	14.33 CY
		SUBTOTAL	66.36 CY

RAMP E-8A LEFT SIDE SHOULDER

STA 9+95.92 TO STA 13+19.67	323.75' X 3' X 3/12 X 1/27	=	8.99 CY
STA 13+19.67 TO STA 13+44.65	24.98' X 2.50' AVG X 3/12 X 1/27	=	0.58 CY
		SUBTOTAL	9.57 CY

RAMP E-8A RIGHT SIDE SHOULDER

STA 9+95.92 TO STA 12+33.38	237.46' X 6' X 3/12 X 1/27	=	13.19 CY
STA 12+33.38 TO STA 13+33.38	100' X 4' AVG X 3/12 X 1/27	=	3.70 CY
		SUBTOTAL	16.89 CY

RAMP E-8B PAVEMENT

CURB RETURNS, AS PER PLAN	3,422 SF X 3/12 X 1/27	=	31.68 CY
STA 100+93.30 TO STA 106+34.73	541.43' X 29' X 3/12 X 1/27	=	145.38 CY
CURB RETURNS, AS PER PLAN	3,088 SF X 3/12 X 1/27	=	28.59 CY
		SUBTOTAL	205.65 CY

ITEM 301 - BITUMINOUS AGGREGATE BASE, AC-20 (CONT'D)

RAMP E-9 PAVEMENT

STA 9+73.32 TO STA 12+83.46	310.14' X 16' X 3/12 X 1/27	=	45.95 CY
STA 12+83.46 TO STA 13+83.46	100' X 18' AVG X 3/12 X 1/27	=	16.67 CY
STA 13+83.46 TO STA 15+33.46	150' X 20' AVG X 3/12 X 1/27	=	27.78 CY
		SUBTOTAL	90.40 CY

RAMP E-9 LEFT SIDE SHOULDER

STA 9+73.32 TO STA 13+83.46	410.14' X 3' X 3/12 X 1/27	=	11.39 CY
		SUBTOTAL	11.39 CY

RAMP E-9 RIGHT SIDE SHOULDER

STA 9+73.32 TO STA 10+75.00	101.68' X 14' X 3/12 X 1/27	=	13.18 CY
STA 10+75.00 TO STA 10+96.00	21' X 13.58' AVG X 3/12 X 1/27	=	2.64 CY
STA 10+96.00 TO STA 12+25.00	129' X 9.58' AVG X 3/12 X 1/27	=	11.44 CY
STA 12+25.00 TO STA 12+83.46	58.46' X 6' X 3/12 X 1/27	=	3.25 CY
STA 12+83.46 TO STA 13+83.46	100' X 4' AVG X 3/12 X 1/27	=	3.70 CY
		SUBTOTAL	34.21 CY

RAMP E-10 PAVEMENT

STA 13+28.65 TO STA 14+07.14	78.49' X 16' X 3/12 X 1/27	=	11.63 CY
STA 15+70.87 TO STA 18+83.38	312.51' X 16' X 3/12 X 1/27	=	46.30 CY
STA 18+83.38 TO STA 19+83.38	100' X 18' AVG X 3/12 X 1/27	=	16.67 CY
STA 19+83.38 TO STA 21+03.38	120' X 28' AVG X 3/12 X 1/27	=	31.11 CY
STA 21+03.38 TO STA 22+08.09	104.71' X 29' X 3/12 X 1/27	=	28.12 CY
CURB RETURNS, AS PER PLAN (STA 22+08.09 TO STA 22+74.09)	2,581 SF X 3/12 X 1/27	=	23.90 CY
		SUBTOTAL	157.73 CY

RAMP E-10 LEFT SIDE SHOULDER

STA 13+28.65 TO STA 14+07.14	78.49' X 3' X 3/12 X 1/27	=	2.18 CY
STA 15+70.87 TO STA 19+83.38	412.51' X 4' X 3/12 X 1/27	=	15.28 CY
		SUBTOTAL	17.46 CY

RAMP E-10 RIGHT SIDE SHOULDER

STA 13+28.65 TO STA 13+78.65	50' X 9' X 3/12 X 1/27	=	4.17 CY
STA 13+78.65 TO STA 14+07.14	28.49' X 8' X 3/12 X 1/27	=	2.11 CY
STA 15+70.87 TO STA 18+83.38	312.51' X 6' X 3/12 X 1/27	=	17.36 CY
STA 18+83.38 TO STA 19+83.38	100' X 4' AVG X 3/12 X 1/27	=	3.70 CY
		SUBTOTAL	27.34 CY

RAMP E-12 PAVEMENT

STA 12+08.65 TO STA 13+58.65	150' X 19' AVG X 3/12 X 1/27	=	26.39 CY
STA 13+58.65 TO STA 17+94.72	436.07' X 20' X 3/12 X 1/27	=	80.75 CY
CURB RETURN (STA 17+94.72 TO STA 18+80.93)	3,253 SF X 3/12 X 1/27	=	30.12 CY
		SUBTOTAL	137.26 CY

RAMP E-12 RIGHT SIDE SHOULDER

STA 13+23.88 TO STA 18+47.00	523.12' X 3' X 3/12 X 1/27	=	14.53 CY
		SUBTOTAL	14.53 CY

RAMP E-12 LEFT SIDE SHOULDER

STA 12+08.65 TO STA 12+58.65	50' X 7' X 3/12 X 1/27	=	3.24 CY
STA 12+58.65 TO STA 17+94.72	536.07' X 6' X 3/12 X 1/27	=	29.78 CY
		SUBTOTAL	33.02 CY

RAMP E-15 PAVEMENT

CURB RETURN (STA 9+22.86 TO STA 9+89.69)	3,185 SF X 3/12 X 1/27	=	29.49 CY
STA 9+89.69 TO STA 11+22.13	132.44' X 27.00' AVG X 3/12 X 1/27	=	33.11 CY
STA 11+22.13 TO STA 12+66.12	143.99' X 24' X 3/12 X 1/27	=	32.00 CY
STA 12+66.12 TO STA 14+16.12	150' X 20.00' AVG X 3/12 X 1/27	=	27.78 CY
STA 14+16.12 TO STA 20+34.10	617.98' X 16' X 3/12 X 1/27	=	91.55 CY
		SUBTOTAL	213.93 CY

QUANTITY CALCULATIONS

CALC BY PRP DATE 8/88
CHK BY DSB DATE 3/90
SUM-76-11.57
FED. PROJECT IR-76-2(44)19
OHIO
F.H.W.A. REGION 5
SUMMIT COUNTY
105
1214

ITEM 301 - BITUMINOUS AGGREGATE BASE, AC-20 (CONT'D)

RAMP E-15 RIGHT SIDE SHOULDER

STA 9+56 TO STA 20+34.10	1,078.10' X 3' X 3/12 X 1/27	=	29.95 CY
	SUBTOTAL		29.95 CY

RAMP E-15 LEFT SIDE SHOULDER

STA 9+89.69 TO STA 11+22.13	132.44' X 4' AVG X 3/12 X 1/27	=	4.91 CY
STA 11+22.13 TO STA 19+84.10	861.97' X 6' X 3/12 X 1/27	=	47.89 CY
STA 19+84.10 TO STA 20+34.10	50' X 7' AVG X 3/12 X 1/27	=	3.24 CY
	SUBTOTAL		56.04 CY

RAMP E-16 PAVEMENT

CURB RETURNS (STA 12+45.21 TO STA 13+32.49)	3,395 SF X 3/12 X 1/27	=	31.44 CY
STA 13+32.49 TO STA 14+82.49	150' X 19' AVG X 3/12 X 1/27	=	26.39 CY
STA 14+82.49 TO STA 24+50.00	967.51' X 16' X 3/12 X 1/27	=	143.33 CY
	SUBTOTAL		201.16 CY

RAMP E-16 RIGHT SIDE SHOULDER

STA 13+32.49 TO STA 14+82.49	150' X 5' AVG X 3/12 X 1/27	=	6.94 CY
STA 14+82.49 TO STA 17+16.00	233.51' X 8' X 3/12 X 1/27	=	17.30 CY
STA 17+16.00 TO STA 20+80.00	364.00' X 6' X 3/12 X 1/27	=	20.22 CY
STA 20+80.00 TO STA 21+20.00	40.00' X 9' AVG X 3/12 X 1/27	=	3.33 CY
STA 21+20.00 TO STA 24+00.00	280' X 8' X 3/12 X 1/27	=	20.74 CY
STA 24+00.00 TO STA 24+50.00	50' X 9' AVG X 3/12 X 1/27	=	4.17 CY
	SUBTOTAL		72.70 CY

RAMP E-16 LEFT SIDE SHOULDER

STA 13+32.49 TO STA 22+15.00	882.51' X 4' X 3/12 X 1/27	=	32.69 CY
STA 22+15.00 TO STA 22+47.04	32.04' X 3' X 3/12 X 1/27	=	0.89 CY
	SUBTOTAL		33.58 CY

SCHOOL ROAD PAVEMENT

CURB RETURNS (STA 10+33 TO STA 10+48)	295 SF X 6/12' X 1/27	=	5.46 CY
STA 12+54 TO STA 12+92	38' X 16.5' AVG X 6/12' X 1/27	=	11.61 CY
STA 12+92 TO STA 15+00	208' X 18' X 6/12' X 1/27'	=	69.33 CY
	SUBTOTAL		86.40 CY

FULLER STREET

STA 11+40.59 TO STA 16+88.83	548.24' X 25' X 3/12' X 1/27'	=	126.91 CY
	SUBTOTAL		126.91 CY

THIRD AVENUE

STA 33+59 TO STA 34+50	91' X 4' AVG X 6/12 X 1/27	=	6.74 CY
STA 34+50 TO STA 34+91.95	41.95' X 8' X 6/12 X 1/27	=	6.21 CY
	SUBTOTAL		12.95 CY
	TOTAL		11,649.27 CY

ITEM 304 - AGGREGATE BASE, AS PER PLAN

I-76 WESTBOUND SHOULDER

STA 24+58 TO STA 26+69 LT (LANE U)	208' X 2.77 SF AVG X 1/27	=	21.34 CY
STA 26+69 TO STA 27+08 LT (LANE U)	49' X 1.616 SF AVG X 1/27	=	2.93 CY
STA 24+50 TO STA 24+96 LT	44' X 2.502 SF AVG X 1/27	=	4.08 CY
STA 24+50 TO STA 25+88 RT	138' X 3.466 SF X 1/27	=	17.72 CY
STA 25+88 TO STA 26+38 RT	50' X 2.882 SF AVG X 1/27	=	5.34 CY
STA 26+38 TO STA 27+17.78 RT	78.78' X 2.347 SF X 1/27	=	6.93 CY
	SUBTOTAL		58.34 CY

ITEM 304 - AGGREGATE BASE, AS PER PLAN (CONT'D)

I-76 EASTBOUND SHOULDER

STA 541+50 TO STA 542+25 LT	75' X 2.772 SF AVG X 1/27	=	7.70 CY
STA 542+25 TO STA 548+22.60 LT	597.60 X 3.645 SF X 1/27	=	80.68 CY
STA 548+22.60 TO STA 548+97.60 LT	75' X 2.772 SF AVG X 1/27	=	7.70 CY
STA 541+50 TO STA 545+53 RT	403' X 4.438 SF AVG X 1/27	=	66.24 CY
STA 545+53 TO STA 546+32 RT	79' X 1.861 SF AVG X 1/27	=	5.44 CY
STA 546+65 TO STA 548+78 RT (LANE T)	217' X 5.288 SF AVG X 1/27	=	42.50 CY
	SUBTOTAL		210.26 CY

I-76 WESTBOUND

STA 28+27.59 TO STA 31+50.00 BK	322.41' X 36' X 4/12 X 1/27	=	143.29 CY
STA 553+43.40 AHD TO STA 557+54.54	411.14' X 36' X 4/12 X 1/27	=	182.73 CY
STA 557+54.54 TO STA 561+57.32	402.78' X 61' AVG X 4/12 X 1/27	=	303.33 CY
STA 561+57.32 TO STA 575+66.00	1,408.68' X 48' X 4/12 X 1/27	=	834.77 CY
STA 575+66.00 TO STA 575+88.31	22.31' X 48.28' AVG X 4/12 X 1/27	=	13.30 CY
STA 577+18.31 TO STA 580+86.00	369.69' X 56.40' AVG X 4/12 X 1/27	=	257.41 CY
STA 580+86.00 TO STA 593+99.00	1,313' X 36' X 4/12 X 1/27	=	583.56 CY
STA 593+99.00 TO STA 595+24.19	125.19' X 72.07' AVG X 4/12 X 1/27	=	111.39 CY
STA 596+41.79 TO STA 599+77.40	335.61' X 55.80' AVG X 4/12 X 1/27	=	231.20 CY
STA 599+77.40 TO STA 600+25.23	47.83' X 48' X 4/12 X 1/27	=	28.34 CY
STA 608+99.03 TO STA 610+56.52	157.49' X 55.22' AVG X 4/12 X 1/27	=	107.37 CY
STA 611+79.83 TO STA 612+08.65	28.82' X 60.65' AVG X 4/12 X 1/27	=	21.58 CY
STA 612+08.65 TO STA 620+41.27	832.62' X 36' X 4/12 X 1/27	=	370.05 CY
STA 620+41.27 TO STA 623+87.83	346.56' X 61.60' AVG X 4/12 X 1/27	=	263.56 CY
STA 623+87.83 TO STA 629+22.21	534.38' X 48' X 4/12 X 1/27	=	316.67 CY
STA 630+30.59 TO STA 634+00.00	369.41' X 48' X 4/12 X 1/27	=	218.91 CY
AREA UNDER ITEM 611	288.88 SY X 9 X 6/12 X 1/27	=	48.15 CY
	SUBTOTAL		4,035.61 CY

I-76 EASTBOUND

STA 550+10.04 TO STA 553+43.40 BK	333.36' X 48' X 4/12 X 1/27	=	197.55 CY
STA 553+43.40 AHD TO STA 556+70.00	326.60' X 48' X 4/12 X 1/27	=	193.54 CY
STA 556+70.00 TO STA 561+50.00	480' X 42' AVG X 4/12 X 1/27	=	248.89 CY
STA 561+50.00 TO STA 569+50.00	800' X 36' X 4/12 X 1/27	=	355.56 CY
STA 569+50.00 TO STA 570+50.00	100' X 42' X 4/12 X 1/27	=	51.85 CY
STA 570+50.00 TO STA 574+71.64	421.64' X 48' X 4/12 X 1/27	=	249.86 CY
STA 574+71.64 TO STA 575+88.31	116.67' X 50.96' AVG X 4/12 X 1/27	=	73.40 CY
STA 577+18.31 TO STA 577+50.00	31.69' X 73.21' AVG X 4/12 X 1/27	=	28.64 CY
STA 577+50.00 TO STA 588+75.00	1,125' X 36' X 4/12 X 1/27	=	500.00 CY
STA 588+75.00 TO STA 593+95.00	520' X 54.50' AVG X 4/12 X 1/27	=	349.88 CY
STA 593+95.00 TO STA 595+24.19	129.19' X 48' X 4/12 X 1/27	=	76.56 CY
STA 596+41.79 TO STA 600+25.23	383.44' X 48' X 4/12 X 1/27	=	227.22 CY
STA 608+99.03 TO STA 610+51.64	152.61' X 48' X 4/12 X 1/27	=	90.44 CY
STA 610+51.64 TO STA 610+56.52	4.88' X 48.15' AVG X 4/12 X 1/27	=	2.90 CY
STA 611+79.83 TO STA 613+30.00	150.17' X 66.25' AVG X 4/12 X 1/27	=	122.82 CY
STA 613+30.00 TO STA 624+50.00	1,120' X 36' X 4/12 X 1/27	=	497.78 CY
STA 624+50.00 TO STA 629+22.21	472.20' X 55.14' AVG X 4/12 X 1/27	=	321.45 CY
STA 630+30.59 TO STA 634+00.00	369.41' X 41.98' AVG X 4/12 X 1/27	=	191.45 CY
AREA UNDER ITEM 611 (EB)	350.00 SY X 9 X 6/12 X 1/27	=	58.33 CY
AREA UNDER ITEM 611 (EB & WB)	4,380 SY X 9 X 6/12 X 1/27	=	730.00 CY
	SUBTOTAL		4,568.12 CY

RAMP E-2 PAVEMENT

STA 6+05.84 TO STA 10+90	484.16' X 18.5' X 4/12 X 1/27	=	110.58 CY
STA 10+90 TO STA 12+89.12	199.12' X 19' X 4/12 X 1/27	=	46.71 CY
CURB RETURNS (STA 12+89.12 TO STA 12+32.32)	1,489 SF X 4/12 X 1/27	=	18.38 CY
	SUBTOTAL		175.67 CY

RAMP E-4 PAVEMENT

CURB RETURNS (STA 76+43.38 TO STA 76+95.38)	1,680 SF X 4/12 X 1/27	=	20.74 CY
STA 76+95.38 TO STA 77+95.38	100' X 18' AVG X 4/12 X 1/27	=	22.22 CY
STA 77+95.38 TO STA 93+98.92	1,603.54' X 16' X 4/12 X 1/27	=	316.75 CY
	SUBTOTAL		359.71 CY

RAMP E-6 PAVEMENT

CURB RETURNS (STA 77+00 TO STA 77+59.68)	2,323 SF X 4/12 X 1/27	=	28.68 CY
STA 77+59.68 TO STA 79+09.68	150' X 19' AVG X 4/12 X 1/27	=	35.19 CY
STA 79+09.68 TO STA 88+73.24	963.56' X 16' X 4/12 X 1/27	=	190.33 CY
	SUBTOTAL		254.20 CY

ITEM 304 - AGGREGATE BASE, AS PER PLAN (CONT'D)

RAMP E-7 PAVEMENT

STA 80+90.31 TO STA 83+98.83	308.52' X 16' X 4/12 X 1/27	=	60.94 CY
STA 86+24.70 TO STA 93+73.12	748.42' X 16' X 4/12 X 1/27	=	147.84 CY
STA 93+73.12 TO STA 94+73.12	100' X 18' AVG X 4/12 X 1/27	=	22.22 CY
CURB RETURNS (STA 94+73.12 TO STA 95+66.88)	3,114 SF X 4/12 X 1/27	=	38.44 CY
AREA UNDER ITEM 611	378.50 SY X 9 X 6/12 X 1/27	=	63.08 CY
	SUBTOTAL		332.52 CY

RAMP E-8 PAVEMENT

STA 77+48.65 TO STA 78+09.73	61.08' X 16' X 4/12 X 1/27	=	12.07 CY
STA 80+14.34 TO STA 86+50.00	635.66' X 16' X 4/12 X 1/27	=	125.56 CY
STA 86+50.00 TO STA 89+00.00	250' X 22' AVG X 4/12 X 1/27	=	67.90 CY
STA 89+00.00 TO STA 90+02.31	102.31' X 40.31' AVG X 4/12 X 1/27	=	50.92 CY
STA 90+02.31 TO STA 91+00.00	97.69' X 16' X 4/12 X 1/27	=	19.30 CY
STA 91+00.00 TO STA 94+00.00	300' X 22' AVG X 4/12 X 1/27	=	81.48 CY
STA 94+00.00 TO STA 95+19.94	119.94' X 33' AVG X 4/12 X 1/27	=	48.86 CY
CURB RETURNS	4,042 SF X 4/12 X 1/27	=	49.90 CY
AREA UNDER ITEM 611	340.20 SY X 9 X 6/12 X 1/27	=	56.70 CY
	SUBTOTAL		512.69 CY

RAMP E-8A PAVEMENT

STA 9+95.92 TO STA 12+33.38	237.46' X 16' X 4/12 X 1/27	=	46.91 CY
STA 12+33.38 TO STA 13+19.67	86.29' X 17.73' AVG X 4/12 X 1/27	=	18.89 CY
STA 13+19.67 TO STA 13+33.38	13.71' X 21.10' AVG X 4/12 X 1/27	=	3.57 CY
CURB RETURNS (STA 13+33.38 TO STA 13+74.64)	1,548 SF X 4/12 X 1/27	=	19.11 CY
	SUBTOTAL		88.48 CY

RAMP E-8B PAVEMENT

CURB RETURNS (STA 100+9.32 TO STA 100+93.30)	3,422 SF X 4/12 X 1/27	=	42.25 CY
STA 100+93.30 TO STA 106+34.73	541.43' X 28' X 4/12 X 1/27	=	187.16 CY
CURB RETURNS (STA 106+34.73 TO STA 106+98.34)	3,088 SF X 4/12 X 1/27	=	38.12 CY
	SUBTOTAL		267.53 CY

RAMP E-9 PAVEMENT

STA 9+73.32 TO STA 12+83.46	310.14' X 16' X 4/12 X 1/27	=	61.26 CY
STA 12+83.46 TO STA 13+83.46	100' X 18' AVG X 4/12 X 1/27	=	22.22 CY
STA 13+83.46 TO STA 15+33.46	150' X 20' AVG X 4/12 X 1/27	=	37.04 CY
AREA UNDER ITEM 611	110.00 SY X 9 X 6/12 X 1/27	=	18.33 CY
	SUBTOTAL		138.85 CY

RAMP E-10 PAVEMENT

STA 13+28.65 TO STA 14+07.14	78.49' X 16' X 4/12 X 1/27	=	15.50 CY
STA 15+70.87 TO STA 18+83.38	312.51' X 16' X 4/12 X 1/27	=	61.73 CY
STA 18+83.38 TO STA 19+83.38	100' X 18' AVG X 4/12 X 1/27	=	22.22 CY
STA 19+83.38 TO STA 21+03.38	120' X 27' AVG X 4/12 X 1/27	=	40.00 CY
STA 21+03.38 TO STA 22+08.09	104.71' X 28' X 4/12 X 1/27	=	36.20 CY
CURB RETURNS	2,581 SF X 4/12 X 1/27	=	31.86 CY
AREA UNDER ITEM 611	186.66 SY X 9 X 6/12 X 1/27	=	31.11 CY
	SUBTOTAL		238.62 CY

RAMP E-12 PAVEMENT

STA 12+08.65 TO STA 13+58.65	150' X 19' AVG X 4/12 X 1/27	=	35.19 CY
STA 13+58.65 TO STA 17+94.72	436.07' X 20' X 4/12 X 1/27	=	107.67 CY
CURB RETURN (STA 17+94.72 TO STA 18+80.93)	3,253 SF X 4/12 X 1/27	=	40.16 CY
	SUBTOTAL		183.02 CY

RAMP E-15 PAVEMENT

CURB RETURN (STA 9+22.86 TO STA 9+89.69)	3,185 SF X 4/12 X 1/27	=	39.32 CY
STA 9+89.69 TO STA 11+22.13	132.44' X 27' AVG X 4/12 X 1/27	=	44.15 CY
STA 11+22.13 TO STA 12+66.12	143.99' X 24' X 4/12 X 1/27	=	42.66 CY
STA 12+66.12 TO STA 14+16.12	150' X 20' AVG X 4/12 X 1/27	=	37.04 CY
STA 14+16.12 TO STA 20+34.10	617.98' X 16' X 4/12 X 1/27	=	122.07 CY
	SUBTOTAL		285.24 CY

QUANTITY CALCULATIONS

CALC BY PRP DATE 8/88
CHK'D BY DSB DATE 3/90

SUM-76-11.57 | OHIO
FED. PROJECT IR-76-2(44)19 | F.H.W.A. REGION 5

106
1214

SUMMIT COUNTY

ITEM 304 - AGGREGATE BASE, AS PER PLAN (CONT'D)

RAMP E-16 PAVEMENT

CURB RETURNS (STA 12+45.21 TO STA 13+32.49)	3,395 SF X 4/12 X 1/27	=	41.91 CY
STA 13+32.49 TO STA 14+82.49	150' X 19' AVG X 4/12 X 1/27	=	35.19 CY
STA 14+82.49 TO STA 24+50.00	967.51' X 16' X 4/12 X 1/27	=	191.11 CY
		SUBTOTAL	268.21 CY

I-76 RIGHT SIDE SHOULDER

STA 550+10.04 TO STA 553+43.40 BK	333.36' X 7.10 SF X 1/27	=	87.66 CY
STA 553+43.40 AHD TO STA 558+30.00	486.60' X 7.10 SF X 1/27	=	127.96 CY
STA 558+30.00 TO STA 558+70.00	40' X 14.00 SF AVG X 1/27	=	20.74 CY
STA 558+70.00 TO STA 569+25.00	1,055' X 11.45 SF X 1/27	=	447.40 CY
STA 569+25.00 TO STA 569+75.00	50' X 9.15 SF AVG X 1/27	=	16.94 CY
STA 569+75.00 TO STA 570+50.00	75' X 4.88 SF AVG X 1/27	=	13.56 CY
STA 570+50.00 TO STA 573+25.00	275' X 3.74 SF X 1/27	=	38.09 CY
STA 573+25.00 TO STA 573+65.00	40' X 9.15 SF AVG X 1/27	=	13.56 CY
STA 573+65.00 TO STA 575+83.23	218.23' X 7.10 SF X 1/27	=	57.39 CY
STA 575+83.23 TO STA 575+88.31	5.08' X 5.03 SF X 1/27	=	0.95 CY
STA 577+18.31 TO STA 577+50.00	31.69' X 5.30 SF X 1/27	=	6.22 CY
STA 577+50.00 TO STA 586+11.67	861.67' X 7.10 SF X 1/27	=	226.59 CY
STA 586+11.67 TO STA 588+75.00	263.33' X 12.70 SF AVG X 1/27	=	123.86 CY
STA 588+75.00 TO STA 592+35.00	360' X 3.74 SF X 1/27	=	49.87 CY
STA 592+35.00 TO STA 593+95.00	160' X 5.30 SF AVG X 1/27	=	31.41 CY
STA 593+95.00 TO STA 595+24.19	129.19' X 7.10 SF X 1/27	=	33.97 CY
STA 596+41.79 TO STA 600+25.23	383.44' X 7.10 SF X 1/27	=	100.83 CY
STA 608+99.03 TO STA 610+56.52	157.49' X 7.10 SF X 1/27	=	41.41 CY
STA 611+79.83 TO STA 612+34.00	54.17' X 9.15 SF X 1/27	=	18.36 CY
STA 612+34.00 TO STA 613+30.00	96' X 9.15 SF AVG X 1/27	=	32.53 CY
STA 613+30.00 TO STA 622+42.12	912.12' X 7.10 SF X 1/27	=	239.85 CY
STA 622+42.12 TO STA 624+50.00	207.88' X 12.70 SF AVG X 1/27	=	97.78 CY
STA 624+50.00 TO STA 629+22.21	472.21' X 5.30 SF X 1/27	=	92.69 CY
STA 630+30.59 TO STA 632+90.00	259.41' X 5.30 SF X 1/27	=	50.92 CY
STA 632+90.00 TO STA 634+00.00	110.00 X 6.51 SF X 1/27	=	26.52 CY
		SUBTOTAL	1,997.06 CY

I-76 LEFT SIDE SHOULDER

STA 28+27.59 TO STA 31+50.00 BK	322.41' X 7.10 SF X 1/27	=	84.78 CY
STA 553+43.40 AHD TO STA 557+54.54	411.14' X 7.10 SF X 1/27	=	108.11 CY
STA 557+54.54 TO STA 560+10.00	255.46' X 3.74 SF X 1/27	=	35.39 CY
STA 560+10.00 TO STA 561+00.00	90' X 5.30 SF X 1/27	=	17.67 CY
STA 561+00.00 TO STA 562+00.00	100' X 7.10 SF AVG X 1/27	=	26.30 CY
STA 562+00.00 TO STA 566+00.00	400' X 9.15 SF X 1/27	=	135.56 CY
STA 566+00.00 TO STA 566+40.00	40' X 11.45 SF AVG X 1/27	=	16.96 CY
STA 566+40.00 TO STA 572+50.00	610' X 7.10 SF X 1/27	=	160.41 CY
STA 572+50.00 TO STA 575+88.31	338.31' X 9.15 SF X 1/27	=	114.65 CY
STA 577+18.31 TO STA 577+22.21	3.90' X 9.15 SF X 1/27	=	1.32 CY
STA 577+22.21 TO STA 578+82.21	160' X 7.10 SF AVG X 1/27	=	42.07 CY
STA 578+82.21 TO STA 580+86.00	203.79' X 5.30 SF X 1/27	=	40.00 CY
STA 580+86.00 TO STA 583+21.60	235.60' X 12.70 SF AVG X 1/27	=	110.82 CY
STA 583+21.60 TO STA 593+99.00	1,077.40' X 7.10 SF X 1/27	=	283.32 CY
STA 593+99.00 TO STA 594+25.00	26' X 4.12 SF AVG X 1/27	=	0.98 CY
STA 594+25.00 TO STA 594+99.00	74' X 9.72 SF AVG X 1/27	=	26.64 CY
STA 594+99.00 TO STA 595+24.19	25.19' X 11.45 SF X 1/27	=	10.68 CY
STA 596+41.79 TO STA 598+70.00	228.21' X 11.45 SF X 1/27	=	96.78 CY
STA 598+70.00 TO STA 600+25.23	155.23' X 9.15 SF X 1/27	=	52.61 CY
STA 608+99.03 TO STA 609+00.00	0.97' X 9.15 SF X 1/27	=	0.33 CY
STA 609+00.00 TO STA 610+00.00	100' X 7.10 SF AVG X 1/27	=	26.30 CY
STA 610+00.00 TO STA 610+56.52	56.52' X 5.30 SF X 1/27	=	11.09 CY
STA 611+79.83 TO STA 612+08.65	28.82' X 7.10 SF X 1/27	=	7.58 CY
STA 612+08.65 TO STA 613+29.21	120.56' X 11.45 SF AVG X 1/27	=	51.13 CY
STA 613+29.21 TO STA 620+41.27	712.06' X 7.10 SF X 1/27	=	187.25 CY
STA 620+41.27 TO STA 621+41.27	100' X 5.30 SF AVG X 1/27	=	19.63 CY
STA 621+41.27 TO STA 625+75.00	433.73' X 7.10 SF X 1/27	=	114.05 CY
STA 625+75.00 TO STA 629+22.20	347.20' X 9.15 SF X 1/27	=	117.66 CY
STA 630+30.59 TO STA 634+00.00	369.41' X 9.15 SF X 1/27	=	125.19 CY
		SUBTOTAL	2,025.26 CY

I-76 MEDIAN SHOULDER LEFT

STA 28+27.59 TO STA 31+50.00 BK	322.41' X 1.51 SF X 1/27	=	18.03 CY
		SUBTOTAL	18.03 CY

I-76 MEDIAN SHOULDER RIGHT

STA 550+10.04 TO STA 553+43.40 BK	333.36' X 4.68 SF AVG X 1/27	=	57.78 CY
		SUBTOTAL	57.78 CY

ITEM 304 - AGGREGATE BASE, AS PER PLAN (CONT'D)

I-76 MEDIAN SHOULDER LEFT & RIGHT

STA 553+43.40 AHD TO STA 575+88.31	2,244.91' X 1.51 SF X 1/27 X 2	=	251.10 CY
STA 577+18.31 TO STA 587+19.08	1,000.77' X 1.51 SF X 1/27 X 2	=	111.94 CY
STA 587+19.08 TO STA 593+20.12	601.04' X 3.06 SF AVG X 1/27 X 2	=	136.24 CY
STA 593+20.12 TO STA 595+24.19	204.07' X 5.09 SF X 1/27 X 2	=	76.94 CY
STA 596+41.79 TO STA 600+25.23	383.44' X 5.09 SF X 1/27 X 2	=	144.57 CY
STA 608+99.03 TO STA 610+56.52	157.49' X 5.09 SF X 1/27 X 2	=	59.38 CY
STA 611+79.83 TO STA 629+22.21	1,742.38' X 5.09 SF X 1/27 X 2	=	656.94 CY
STA 630+30.59 TO STA 634+00.00	369.41' X 5.09 SF X 1/27 X 2	=	139.28 CY
		SUBTOTAL	1,576.39 CY

RAMP E-2 RIGHT SIDE SHOULDER

STA 6+05.84 TO STA 7+05.84	100' X 2.04 SF AVG X 1/27	=	7.56 CY
STA 7+05.84 TO STA 10+72.00	366.16' X 1.75 SF X 1/27	=	23.73 CY
CURB RETURN (STA 10+72.00 TO STA 10+90.00)	44 SF X 3.5/12 X 1/27	=	0.48 CY
		SUBTOTAL	31.77 CY

RAMP E-4 RIGHT SIDE SHOULDER

STA 76+95.38 TO STA 83+75.00	679.62' X .87 SF X 1/27	=	21.90 CY
STA 83+75.00 TO STA 85+99.00	224' X 1.17 SF X 1/27	=	9.71 CY
STA 85+99.00 TO STA 86+39.00	40' X 1.46 SF AVG X 1/27	=	2.16 CY
STA 86+39.00 TO STA 89+75.70	336.70' X .87 SF X 1/27	=	10.85 CY
STA 89+75.70 TO STA 93+98.92	423.22' X .97 SF X 1/27	=	15.20 CY
		SUBTOTAL	59.82 CY

RAMP E-4 LEFT SIDE SHOULDER

STA 76+95.38 TO STA 77+95.38	100.00' X 1.17 SF AVG X 1/27	=	4.33 CY
STA 77+95.38 TO STA 84+46.00	650.62' X 1.75 SF AVG X 1/27	=	42.17 CY
STA 84+46.00 TO STA 88+37.00	391' X 2.33 SF X 1/27	=	33.74 CY
STA 88+37.00 TO STA 93+48.92	511.92' X 1.75 SF X 1/27	=	33.18 CY
STA 93+48.92 TO STA 93+98.92	50' X 2.04 SF AVG X 1/27	=	3.78 CY
		SUBTOTAL	117.20 CY

RAMP E-6 RIGHT SIDE SHOULDER

STA 77+59.68 TO STA 79+09.68	150' X 1.89 SF AVG X 1/27	=	10.50 CY
STA 79+09.68 TO STA 80+37.00	127.32' X 3.74 SF X 1/27	=	17.64 CY
STA 80+37.00 TO STA 88+23.24	786.24' X 2.45 SF X 1/27	=	71.34 CY
STA 88+23.24 TO STA 88+73.24	50' X 3.06 SF AVG X 1/27	=	5.67 CY
		SUBTOTAL	105.15 CY

RAMP E-6 LEFT SIDE SHOULDER

STA 77+59.68 TO STA 86+13.36	853.68' X 1.17 SF X 1/27	=	36.99 CY
		SUBTOTAL	36.99 CY

RAMP E-7 RIGHT SIDE SHOULDER

STA 83+31.11 TO STA 84+45.00	113.89' X .97 SF X 1/27	=	4.09 CY
STA 86+85.00 TO STA 88+25.00	140.00' X 1.17 SF X 1/27	=	6.07 CY
STA 88+25.00 TO STA 88+65.00	40' X 1.46 SF AVG X 1/27	=	2.16 CY
STA 88+65.00 TO STA 89+76.72	111.72' X .87 SF X 1/27	=	3.60 CY
STA 89+76.72 TO STA 93+60.02	383.30' X .97 SF X 1/27	=	13.77 CY
STA 93+60.02 TO STA 95+13.54	153.52' X .87 SF X 1/27	=	4.95 CY
STA 95+13.54 TO STA 95+38.54	25' X .73 SF AVG X 1/27	=	0.68 CY
		SUBTOTAL	35.32 CY

RAMP E-7 LEFT SIDE SHOULDER

STA 80+90.31 TO STA 81+40.31	50' X 2.62 SF AVG X 1/27	=	4.85 CY
STA 81+40.31 TO STA 83+98.83	258.52' X 2.33 SF X 1/27	=	22.31 CY
STA 86+24.70 TO STA 87+08.00	83.30' X 2.33 SF X 1/27	=	7.19 CY
STA 87+08.00 TO STA 87+48.00	40' X 2.62 SF AVG X 1/27	=	3.88 CY
STA 87+48.00 TO STA 93+73.12	625.12' X 1.75 SF X 1/27	=	40.52 CY
STA 93+73.12 TO STA 94+73.12	100' X 1.17 SF AVG X 1/27	=	4.33 CY
		SUBTOTAL	83.08 CY

RAMP E-8 RIGHT SIDE SHOULDER

STA 77+48.65 TO STA 77+98.65	50' X 4.49 SF AVG X 1/27	=	8.31 CY
STA 77+98.65 TO STA 78+09.73	11.08' X 3.74 SF X 1/27	=	1.53 CY
STA 80+14.34 TO STA 83+65.02	350.68' X 1.75 SF X 1/27	=	22.73 CY

ITEM 304 - AGGREGATE BASE, AS PER PLAN (CONT'D)

STA 83+65.02 TO STA 90+02.31	637.29' X 2.45 SF X 1/27	=	57.83 CY
STA 90+02.31 TO STA 94+00.00	397.69' X 2.45 SF X 1/27	=	36.09 CY
STA 94+00.00 TO STA 95+19.94	119.94' X 1.40 SF AVG X 1/27	=	6.22 CY
		SUBTOTAL	132.71 CY

RAMP E-8 LEFT SIDE SHOULDER

STA 77+48.65 TO STA 78+44.00	95.35' X 0.87 SF X 1/27	=	3.07 CY
STA 80+50.00 TO STA 82+40.00	190.00' X 1.17 SF X 1/27	=	8.23 CY
STA 82+40.00 TO STA 91+38.22	898.22' X 0.87 SF X 1/27	=	28.94 CY
STA 91+38.22 TO STA 92+00.00	61.78' X 0.97 SF X 1/27	=	2.22 CY
STA 92+00.00 TO STA 93+00.00	100.00' X 1.89 SF AVG X 1/27	=	7.00 CY
STA 93+00.00 TO STA 94+00.00	100.00' X 3.40 SF AVG X 1/27	=	12.59 CY
STA 94+00.00 TO STA 95+19.94	119.94' X 1.64 SF AVG X 1/27	=	7.29 CY
		SUBTOTAL	69.34 CY

RAMP E-8A RIGHT SIDE SHOULDER

STA 9+95.92 TO STA 12+33.38	237.46' X 2.45 SF X 1/27	=	21.55 CY
STA 12+33.38 TO STA 13+33.38	100' X 1.40 SF AVG X 1/27	=	5.19 CY
		SUBTOTAL	26.74 CY

RAMP E-8A LEFT SIDE SHOULDER

STA 9+95.92 TO STA 13+19.67	323.75' X 0.87 SF X 1/27	=	10.43 CY
STA 13+19.67 TO STA 13+44.65	24.98' X 0.73 SF AVG X 1/27	=	0.68 CY
		SUBTOTAL	11.11 CY

RAMP E-9 RIGHT SIDE SHOULDER

STA 9+73.32 TO STA 10+75.00	101.68' X 9.15 SF X 1/27	=	34.46 CY
STA 10+75.00 TO STA 10+96.00	21' X 8.70 SF AVG X 1/27	=	6.77 CY
STA 10+96.00 TO STA 12+25.00	129' X 4.96 SF AVG X 1/27	=	23.65 CY
STA 12+25.00 TO STA 12+83.46	58.46' X 2.45 SF X 1/27	=	5.30 CY
STA 12+83.46 TO STA 13+83.46	100' X 1.40 SF AVG X 1/27	=	5.19 CY
		SUBTOTAL	75.37 CY

RAMP E-9 LEFT SIDE SHOULDER

STA 9+73.32 TO STA 13+83.46	410.14' X 0.87 SF X 1/27	=	13.22 CY
		SUBTOTAL	13.22 CY

RAMP E-10 RIGHT SIDE SHOULDER

STA 13+28.65 TO STA 13+78.65	50' X 4.49 SF AVG X 1/27	=	8.31 CY
STA 13+78.65 TO STA 14+07.14	28.49' X 3.74 SF X 1/27	=	3.95 CY
STA 15+70.87 TO STA 18+83.38	312.51' X 1.75 SF X 1/27	=	20.26 CY
STA 18+83.38 TO STA 19+83.38	100' X 1.17 SF AVG X 1/27	=	4.33 CY
		SUBTOTAL	36.85 CY

RAMP E-10 LEFT SIDE SHOULDER

STA 13+28.65 TO STA 14+07.14	78.49' X 0.87 SF X 1/27	=	2.53 CY
STA 15+70.87 TO STA 19+83.38	412.51' X 1.17 SF X 1/27	=	17.88 CY
		SUBTOTAL	20.41 CY

RAMP E-12 RIGHT SIDE SHOULDER

STA 13+23.88 TO STA 18+47.00	523.12' X 0.97 SF X 1/27	=	18.79 CY
		SUBTOTAL	18.79 CY

RAMP E-12 LEFT SIDE SHOULDER

STA 12+08.65 TO STA 12+58.65	50' X 2.04 SF AVG X 1/27	=	3.78 CY
STA 12+58.65 TO STA 15+82.79	324.14' X 1.75 SF X 1/27	=	21.01 CY
STA 15+82.79 TO STA 17+94.72	211.93' X 6' X 4/12 X 1/27	=	15.70 CY
		SUBTOTAL	40.49 CY

RAMP E-15 RIGHT SIDE SHOULDER

STA 9+56.00 TO STA 12+66.12	310.12' X 0.97 SF X 1/27	=	11.03 CY
STA 12+66.12 TO STA 20+34.10	767.98' X 0.87 SF X 1/27	=	24.75 CY
		SUBTOTAL	35.78 CY

QUANTITY CALCULATIONS

CALC BY PRP DATE 3/88	SUM-76-11.57	OHIO
CHK BY DSB DATE 3/90	FED. PROJECT IR-76-2(44)19	F.H.W.A. REGION 5

107 / 1214

SUMMIT COUNTY

ITEM 304 - AGGREGATE BASE, AS PER PLAN (CONT'D)

RAMP E-15 LEFT SIDE SHOULDER

STA 9+89.69 TO STA 11+22.13	132.44' X 1.17 SF AVG X 1/27	=	5.74 CY
STA 11+22.13 TO STA 15+37.18	415.05' X 1.75 SF X 1/27	=	26.90 CY
STA 15+37.18 TO STA 19+84.10	446.92' X 2.45 SF X 1/27	=	40.55 CY
STA 19+84.10 TO STA 20+34.10	50' X 3.06 SF AVG X 1/27	=	5.67 CY
		SUBTOTAL	78.86 CY

RAMP E-16 RIGHT SIDE SHOULDER

STA 13+32.49 TO STA 14+82.49	150' X 1.89 SF AVG X 1/27	=	10.50 CY
STA 14+82.49 TO STA 17+16.00	233.51' X 3.74 SF X 1/27	=	32.35 CY
STA 17+16.00 TO STA 20+80.00	364.00' X 2.45 SF X 1/27	=	33.03 CY
STA 20+80.00 TO STA 21+20.00	40' X 4.49 SF AVG X 1/27	=	6.65 CY
STA 21+20.00 TO STA 24+00.00	280.00' X 3.74 SF X 1/27	=	38.79 CY
STA 24+00.00 TO STA 24+50.00	50' X 4.49 SF AVG X 1/27	=	8.31 CY
		SUBTOTAL	129.63 CY

RAMP E-16 LEFT SIDE SHOULDER

STA 13+32.49 TO STA 22+15.00	882.51' X 1.17 SF X 1/27	=	38.24 CY
STA 22+15.00 TO STA 22+47.04	32.04' X 0.87 SF X 1/27	=	1.03 CY
		SUBTOTAL	39.27 CY

TALBOT AVENUE

STA 18+69.87 TO STA 19+00	30.13' X 27' X 6/12 X 1/27	=	15.07 CY
TALBOT/MARTIN CONNECTION (STA 18+69.87 TALBOT TO STA 46+80 MARTIN)	1,630 SF X 6/12 X 1/27	=	30.19 CY
		SUBTOTAL	45.26 CY

MARTIN AVENUE

STA 46+80 TO STA 49+42	262.22' X 29' X 6/12 X 1/27	=	140.82 CY
CURB RETURNS (STA 49+42.22 TO STA 49+71.50)	1,058 SF X 6/12 X 1/27	=	19.59 CY
		SUBTOTAL	160.41 CY

ARLINGTON STREET

STA 13+70.00 TO STA 15+00.00	130.00' X 52.5' AVG X 6/12 X 1/27	=	126.39 CY
STA 15+00.00 TO STA 19+62.60	462.60' X 58' X 6/12 X 1/27	=	496.87 CY
STA 19+62.60 TO STA 20+92.60	130' X 52.5' X 6/12 X 1/27	=	126.39 CY
		SUBTOTAL	749.65 CY

SECOND AVENUE

CURB RETURNS (STA 20+26.50 TO STA 21+10.00)	2,860 SF X 6/12 X 1/27	=	52.96 CY
		SUBTOTAL	52.96 CY

THIRD AVENUE

CURB RETURNS	1,347 SF X 6/12 X 1/27	=	24.94 CY
STA 21+58 TO STA 22+50.66	92.66' X 33' X 6/12 X 1/27	=	56.63 CY
STA 33+59 TO STA 34+50	91' X 4' AVG X 6/12 X 1/27	=	6.74 CY
STA 34+50 TO STA 34+91.95	41.95' X 8' X 6/12 X 1/27	=	6.21 CY
CURB RETURNS	4,712 SF X 6/12 X 1/27	=	87.26 CY
		SUBTOTAL	181.78 CY

FULLER STREET

STA 11+40.59 TO STA 16+88.33	548.24' X 25' X 4/12 X 1/27	=	169.21 CY
		SUBTOTAL	169.21 CY

MARTHA AVENUE

STA 7+77.31 TO STA 8+79	101.69' X 37' X 6/12 X 1/27	=	69.68 CY
STA 8+79 TO STA 11+79	300' X 42' AVG X 6/12 X 1/27	=	233.33 CY
STA 11+79 TO STA 17+51.77	572.77' X 47' X 6/12 X 1/27	=	498.52 CY
		SUBTOTAL	801.53 CY

ITEM 304 - AGGREGATE BASE, AS PER PLAN (CONT'D)

ENGLEWOOD AVENUE

CURB RETURNS	89 SF X 6/12 X 1/27	=	1.65 CY
STA 20+23 TO STA 21+03	80' X 38' X 6/12 X 1/27	=	56.30 CY
ENGLEWOOD/CAMBRIDGE CONNECTION	131.66' X 26' X 6/12 X 1/27	=	63.39 CY
CURB RETURNS	1,530 SF X 6/12 X 1/27	=	28.33 CY
STA 30+68.31 TO STA 31+70	101.69' X 40' AVG X 6/12 X 1/27	=	75.33 CY
CURB RETURNS	1,060 SF X 6/12 X 1/27	=	19.63 CY
STA 37+70 TO STA 48+80	1,110' X 33' X 6/12 X 1/27	=	678.33 CY
		SUBTOTAL	922.96 CY

WIGLEY AVENUE

STA 9+01.72 TO STA 9+95	93.28' X 33' X 6/12 X 1/27	=	57.00 CY
		SUBTOTAL	57.00 CY
		TOTAL	21,990.25 CY

ITEM 305 - 9" CONCRETE BASE

I-76 WESTBOUND SHOULDER

STA 24+58 TO STA 26+69 LT (LANE U)	208' X 6.5' AVG X 1/9	=	150.22 SY
STA 26+69 TO STA 27+08 LT (LANE U)	49' X 4' AVG X 1/9	=	21.78 SY
STA 24+50 TO STA 24+96 LT	44' X 6' AVG X 1/9	=	29.33 SY
STA 24+50 TO STA 25+88 RT	138' X 8' X 1/9	=	122.67 SY
STA 25+88 TO STA 26+38 RT	50' X 7' AVG X 1/9	=	38.89 SY
STA 26+38 TO STA 27+17.78 RT	79.78' X 6' AVG X 1/9	=	53.19 SY
		SUBTOTAL	416.08 SY

I-76 EASTBOUND SHOULDER

STA 541+50 TO STA 542+25 LT	75' X 6.5' AVG X 1/9	=	54.17 SY
STA 542+25 TO STA 548+22.60 LT	597.6 X 8' X 1/9	=	531.20 SY
STA 548+22.60 TO STA 548+97.60 LT	75' X 6.5' AVG X 1/9	=	54.17 SY
STA 541+50 TO STA 545+53 RT	403' X 9.5' AVG X 1/9	=	425.39 SY
STA 545+53 TO STA 546+32 RT	79' X 5' AVG X 1/9	=	43.89 SY
RAMP 'T' RIGHT SHOULDER STA 546+65 TO STA 548+78 RT (LANE T)	217' X 10.75' AVG X 1/9	=	259.19 SY
		SUBTOTAL	1,368.01 SY

TALBOT AVENUE

STA 18+69.87 TO STA 19+00	30.13' X 27' X 1/9	=	90.39 SY
TALBOT/MARTIN CONNECTION (STA 18+69.87 TALBOT TO STA 46+80 MARTIN)	1,630 SF X 1/9	=	181.11 SY
		SUBTOTAL	271.50 SY

MARTIN AVENUE

STA 46+80 TO STA 49+42.22	262.22' X 29' X 1/9	=	844.93 SY
CURB RETURNS (STA 49+42.22 TO STA 49+71.50)	1,058 SF X 1/9	=	117.56 SY
		SUBTOTAL	962.49 SY

ARLINGTON STREET

STA 13+70.00 TO STA 15+00.00	130' X 52.5' AVG X 1/9	=	758.33 SY
STA 15+00.00 TO STA 19+62.60	462.6' X 58' AVG X 1/9	=	2,981.20 SY
STA 19+62.60 TO STA 20+92.60	130' X 52.5' AVG X 1/9	=	758.33 SY
		SUBTOTAL	4,497.86 SY

SECOND AVENUE

CURB RETURNS (STA 20+26.5 TO STA 21+10)	2,860 SF X 1/9	=	317.78 SY
		SUBTOTAL	317.78 SY

THIRD AVENUE

CURB RETURNS	1,347 SF X 1/9	=	149.67 SY
STA 21+58 TO STA 22+50.66	92.66' X 33' X 1/9	=	339.75 SY
CURB RETURNS (STA 34+91.95 TO STA 35+77.22)	4,712 SF X 1/9	=	523.56 SY
		SUBTOTAL	1,012.98 SY

ITEM 305 - 9" CONCRETE BASE (CONT'D)

MARTHA AVENUE

STA 5+09.31 TO STA 7+79.31	270' X 7' AVG X 1/9	=	210.00 SY
STA 7+77.31 TO STA 8+79.31	102' X 37' X 1/9	=	419.33 SY
STA 8+79.31 TO STA 11+79.31	300' X 42' AVG X 1/9	=	1,400.00 SY
STA 11+79.31 TO STA 17+51.77	572.46' X 47' X 1/9	=	2,989.51 SY
		SUBTOTAL	5,018.84 SY

ENGLEWOOD AVENUE

CURB RETURNS	89 SF X 1/9	=	9.89 SY
STA 20+23 TO STA 21+03	80' X 38' X 1/9	=	337.78 SY
ENGLEWOOD/CAMBRIDGE CONNECTION	131.66' X 25' X 1/9	=	365.72 SY
CURB RETURNS	1,530 SF X 1/9	=	170.00 SY
STA 30+68.31 TO STA 31+70	101.69' X 40' AVG X 1/9	=	451.96 SY
CURB RETURNS	1,060 SF X 1/9	=	117.78 SY
STA 37+70 TO 48+80	1,110' X 33' X 1/9	=	4,070.00 SY
		SUBTOTAL	5,523.13 SY

WIGLEY AVENUE

STA 9+01.72 TO STA 9+95	93.28' X 33' X 1/9	=	342.03 SY
		SUBTOTAL	342.03 SY
		TOTAL	19,730.70 SY

ITEM 402 - ASPHALT CONCRETE, AC-20

I-76 WESTBOUND SHOULDER

STA 24+58 TO STA 26+69 LT (LANE U)	208' X 6.5' AVG X 4.75/12 AVG X 1/27	=	19.82 CY
STA 26+69 TO STA 27+08 LT (LANE U)	49' X 4' AVG X 4.75/12 AVG X 1/27	=	2.87 CY
STA 24+50 TO STA 24+96 LT	44' X 6' AVG X 4.75/12 AVG X 1/27	=	3.87 CY
STA 24+50 TO STA 25+88 RT	138' X 8' X 4.75/12 AVG X 1/27	=	16.18 CY
STA 25+88 TO STA 26+38 RT	50' X 7' AVG X 4.75/12 AVG X 1/27	=	5.13 CY
STA 26+38 TO STA 27+17.78 RT	79.78' X 6' AVG X 4.75/12 AVG X 1/27	=	7.02 CY
		SUBTOTAL	54.89 CY

I-76 EASTBOUND SHOULDER

STA 541+50 TO STA 542+25 LT	75' X 6.5' AVG X 4.75/12 AVG X 1/27	=	7.15 CY
STA 542+25 TO STA 548+22.60 LT	597.6 X 8' X 4.75/12 AVG X 1/27	=	70.09 CY
STA 548+22.60 TO STA 548+97.60 LT	75' X 6.5' AVG X 4.75/12 AVG X 1/27	=	7.15 CY
STA 541+50 TO STA 545+53 RT	403' X 9.5' AVG X 4.75/12 AVG X 1/27	=	56.13 CY
STA 545+53 TO STA 546+32 RT	79' X 5' AVG X 4.75/12 AVG X 1/27	=	5.79 CY
RAMP 'T' RIGHT SHOULDER STA 546+65 TO STA 548+78 RT (RAMP T)	217' X 10.75' AVG X 4.75/12 AVG X 1/27	=	34.20 CY
		SUBTOTAL	180.51 CY

TALBOT AVENUE

STA 18+69.87 TO STA 19+00	30.13' X 26' X 1.75/12 X 1/27	=	4.23 CY
TALBOT/MARTIN CONNECTION (STA 18+69.87 TALBOT TO STA 46+80 MARTIN)	1,630 SF X 1.75/12 X 1/27	=	8.80 CY
		SUBTOTAL	13.03 CY

MARTIN AVENUE

STA 46+80 TO STA 49+42.22	262.22' X 28' X 1.75/12 X 1/27	=	39.66 CY
CURB RETURNS (STA 49+42.22 TO STA 49+71.50)	1,058 SF X 1.75/12 X 1/27	=	5.71 CY
		SUBTOTAL	45.37 CY

ARLINGTON STREET

STA 13+70.00 TO STA 15+00.00	130' X 51.5' AVG X 1.75/12 X 1/27	=	36.16 CY
STA 15+00.00 TO STA 19+62.60	462.6' X 57' X 1.75/12 X 1/27	=	142.42 CY
STA 19+62.60 TO STA 20+92.60	130' X 51.5' AVG X 1.75/12 X 1/27	=	36.16 CY
		SUBTOTAL	214.74 CY

SECOND AVENUE

CURB RETURNS (STA 20+26.50 TO STA 21+10.00)	2,860 SF X 1.75/12 X 1/27	=	15.45 CY
		SUBTOTAL	15.45 CY

QUANTITY CALCULATIONS

SUMMIT COUNTY

ITEM 402 - ASPHALT CONCRETE, AC-20 (CONT'D)

THIRD AVENUE

CURB RETURNS	1,347 SF X 1.75/12 X 1/27	=	7.28 CY
STA 21+58 TO STA 22+50.66	92.66' X 32' X 1.75/12 X 1/27	=	16.02 CY
CURB RETURNS (STA 34+91.95 TO STA 35+77.22)	4,712 SF X 1.75/12 X 1/27	=	25.45 CY
		SUBTOTAL	48.75 CY

MARTHA AVENUE

STA 5+09.31 TO STA 7+79.31	270' X 6.5' X 1.75/12 X 1/27	=	9.48 CY
STA 7+77.31 TO STA 8+79.31	102' X 36' X 1.75/12 X 1/27	=	19.83 CY
STA 8+79.31 TO STA 11+79.31	300' X 41' AVG X 1.75/12 X 1/27	=	66.44 CY
STA 11+79.31 TO STA 17+51.77	572.46' X 46' X 1.75/12 X 1/27	=	142.23 CY
		SUBTOTAL	237.98 CY

ENGLEWOOD AVENUE

CURB RETURNS	89 SF X 1.75/12 X 1/27	=	0.48 CY
STA 20+23 TO STA 21+03	80' X 37' X 1.75/12 X 1/27	=	15.99 CY
ENGLEWOOD/CAMBRIDGE CONNECTION	131.66' X 25' X 1.75/12 X 1/27	=	17.78 CY
CURB RETURNS	1,530 SF X 1.75/12 X 1/27	=	8.26 CY
STA 30+68.31 TO STA 31+70	101.69' X 39' AVG X 1.75/12 X 1/27	=	21.42 CY
CURB RETURNS	1,060 SF X 1.75/12 X 1/27	=	5.73 CY
STA 37+70 TO 48+80	1,110' X 32' X 1.75/12 X 1/27	=	191.85 CY
		SUBTOTAL	261.51 CY

WIGLEY AVENUE

STA 9+01.72 TO STA 9+95	93.28' X 32' X 1.75/12 X 1/27	=	16.12 CY
		SUBTOTAL	16.12 CY
		TOTAL	1,088.35 CY

ITEM 403 - ASPHALT CONCRETE, AC-20

I-76 WESTBOUND PAVEMENT

STA 28+27.59 TO STA 31+50.00 BK	322.41' X 36' X 1/12 X 1/27	=	35.82 CY
STA 553+43.40 AHD TO STA 557+54.54	411.14' X 36' X 1/12 X 1/27	=	45.68 CY
STA 557+54.54 TO STA 561+57.32	402.78' X 61' AVG X 1/12 X 1/27	=	75.83 CY
STA 561+57.32 TO STA 575+66.00	1,408.68' X 48' X 1/12 X 1/27	=	208.69 CY
STA 575+66.00 TO STA 575+88.31	22.31' X 48.28' AVG X 1/12 X 1/27	=	3.32 CY
STA 577+18.31 TO STA 580+86.00	367.69' X 56.40' AVG X 1/12 X 1/27	=	64.01 CY
STA 580+86.00 TO STA 593+99.00	1,313' X 36' X 1/12 X 1/27	=	145.89 CY
STA 593+99.00 TO STA 595+24.19	125.19' X 72.07' AVG X 1/12 X 1/27	=	27.85 CY
STA 596+41.79 TO STA 599+77.40	335.61' X 55.80' AVG X 1/12 X 1/27	=	57.80 CY
STA 599+77.40 TO STA 600+25.23	47.83' X 48' X 1/12 X 1/27	=	7.09 CY
STA 608+99.03 TO STA 610+56.52	157.49' X 55.22' AVG X 1/12 X 1/27	=	26.84 CY
STA 611+79.83 TO STA 612+08.65	28.82' X 60.65' AVG X 1/12 X 1/27	=	5.39 CY
STA 612+08.65 TO STA 620+41.27	832.62' X 36' X 1/12 X 1/27	=	92.51 CY
STA 620+41.27 TO STA 623+87.83	346.56' X 61.60' AVG X 1/12 X 1/27	=	65.89 CY
STA 623+87.83 TO STA 629+22.21	534.38' X 48' X 1/12 X 1/27	=	79.17 CY
STA 630+30.59 TO STA 634+00.00	369.41' X 48' X 1/12 X 1/27	=	54.73 CY
		SUBTOTAL	996.51 CY

I-76 EASTBOUND PAVEMENT

STA 550+10.04 TO STA 553+43.40 BK	333.36' X 48' X 1/12 X 1/27	=	49.39 CY
STA 553+43.40 TO STA 556+70.00	326.60' X 48' X 1/12 X 1/27	=	48.39 CY
STA 556+70.00 TO STA 561+50.00	480' X 42' AVG X 1/12 X 1/27	=	62.22 CY
STA 561+50.00 TO STA 569+50.00	800' X 36' X 1/12 X 1/27	=	88.89 CY
STA 569+50.00 TO STA 570+50.00	100' X 42' AVG X 1/12 X 1/27	=	12.96 CY
STA 570+50.00 TO STA 574+71.64	421.64' X 48' X 1/12 X 1/27	=	62.47 CY
STA 574+71.64 TO STA 575+88.31	116.67' X 50.96' AVG X 1/12 X 1/27	=	18.35 CY
STA 577+18.31 TO STA 577+50.00	31.69' X 73.21' AVG X 1/12 X 1/27	=	7.16 CY
STA 577+50.00 TO STA 588+75.00	1,125' X 36' X 1/12 X 1/27	=	125.00 CY
STA 588+75.00 TO STA 593+95.00	520' X 54.50' AVG X 1/12 X 1/27	=	87.47 CY
STA 593+95.00 TO STA 595+24.19	129.19' X 48' X 1/12 X 1/27	=	19.14 CY
STA 596+41.79 TO STA 600+25.23	383.44' X 48' X 1/12 X 1/27	=	56.81 CY
STA 608+99.03 TO STA 610+51.64	152.61' X 48' X 1/12 X 1/27	=	22.61 CY
STA 610+51.64 TO STA 610+56.52	4.88' X 48.15' AVG X 1/12 X 1/27	=	0.73 CY
STA 611+79.83 TO STA 613+30.00	150.17' X 66.25' AVG X 1/12 X 1/27	=	30.71 CY
STA 613+30.00 TO STA 624+50.00	1,120' X 36' X 1/12 X 1/27	=	124.44 CY
STA 624+50.00 TO STA 629+22.21	472.21' X 55.14' AVG X 1/12 X 1/27	=	80.36 CY
STA 630+30.59 TO STA 634+00.00	369.41' X 41.98' AVG X 1/12 X 1/27	=	47.86 CY
		SUBTOTAL	944.96 CY

ITEM 403 - ASPHALT CONCRETE, AC-20 (CONT'D)

I-76 LEFT SIDE SHOULDER

STA 28+27.59 TO STA 31+50.00 BK	322.41' X 12' X 1/12 X 1/27	=	11.94 CY
STA 553+43.40 AHD TO STA 557+54.54	411.14' X 12' X 1/12 X 1/27	=	15.23 CY
STA 557+54.54 TO STA 560+10.00	255.46' X 8' X 1/12 X 1/27	=	6.31 CY
STA 560+10.00 TO STA 561+00.00	90' X 10' X 1/12 X 1/27	=	2.78 CY
STA 561+00.00 TO STA 562+00.00	100' X 12' AVG X 1/12 X 1/27	=	3.70 CY
STA 562+00.00 TO STA 566+00.00	400' X 14' X 1/12 X 1/27	=	17.28 CY
STA 566+00.00 TO STA 566+40.00	40' X 16' AVG X 1/12 X 1/27	=	1.98 CY
STA 566+40.00 TO STA 572+50.00	610' X 12' X 1/12 X 1/27	=	22.59 CY
STA 572+50.00 TO STA 575+88.31	338.31' X 14' AVG X 1/12 X 1/27	=	14.62 CY
STA 577+18.31 TO STA 577+22.21	3.90' X 14' X 1/12 X 1/27	=	0.17 CY
STA 577+22.21 TO STA 578+82.21	160' X 12' AVG X 1/12 X 1/27	=	5.93 CY
STA 578+82.21 TO STA 580+86.00	203.79' X 10' X 1/12 X 1/27	=	6.29 CY
STA 580+86.00 TO STA 583+21.60	235.60' X 17' AVG X 1/12 X 1/27	=	12.36 CY
STA 583+21.60 TO STA 593+99.00	1,077.40' X 12' X 1/12 X 1/27	=	39.90 CY
STA 593+99.00 TO STA 594+25.00	26' X 8.52' AVG X 1/12 X 1/27	=	0.68 CY
STA 594+25.00 TO STA 594+99.00	74' X 14.52' AVG X 1/12 X 1/27	=	3.32 CY
STA 594+99.00 TO STA 595+24.19	25.19' X 16' X 1/12 X 1/27	=	1.24 CY
STA 596+41.79 TO STA 598+70.00	228.21' X 16' X 1/12 X 1/27	=	11.27 CY
STA 598+70.00 TO STA 600+25.23	155.23' X 14' X 1/12 X 1/27	=	6.71 CY
STA 608+99.03 TO STA 609+00.00	0.97' X 14' X 1/12 X 1/27	=	0.04 CY
STA 609+00.00 TO STA 610+00.00	100' X 12' AVG X 1/12 X 1/27	=	3.70 CY
STA 610+00.00 TO STA 610+56.52	56.52' X 10' X 1/12 X 1/27	=	1.74 CY
STA 611+79.83 TO STA 612+08.65	28.82' X 12' X 1/12 X 1/27	=	1.07 CY
STA 612+08.65 TO STA 613+29.21	120.56' X 16' AVG X 1/12 X 1/27	=	5.95 CY
STA 613+29.21 TO STA 620+41.27	712.06' X 12' X 1/12 X 1/27	=	26.37 CY
STA 620+41.27 TO STA 621+41.27	100' X 10' AVG X 1/12 X 1/27	=	3.09 CY
STA 621+41.27 TO STA 625+75.00	433.73' X 12' X 1/12 X 1/27	=	16.06 CY
STA 625+75.00 TO STA 629+22.20	347.20' X 14' X 1/12 X 1/27	=	15.00 CY
STA 630+30.59 TO STA 634+00.00	369.41' X 14' X 1/12 X 1/27	=	15.96 CY
		SUBTOTAL	273.28 CY

I-76 RIGHT SIDE SHOULDER

STA 550+10.04 TO STA 553+43.40 BK	333.36' X 12' X 1/12 X 1/27	=	12.35 CY
STA 553+43.40 AHD TO STA 558+30.00	486.60' X 12' X 1/12 X 1/27	=	18.02 CY
STA 558+30.00 TO STA 558+70.00	40' X 18' AVG X 1/12 X 1/27	=	2.22 CY
STA 558+70.00 TO STA 569+25.00	1,055' X 16' X 1/12 X 1/27	=	52.10 CY
STA 569+25.00 TO STA 569+75.00	50' X 14' AVG X 1/12 X 1/27	=	2.16 CY
STA 569+75.00 TO STA 570+50.00	75' X 9.50' AVG X 1/12 X 1/27	=	2.20 CY
STA 570+50.00 TO STA 573+25.00	275' X 8' X 1/12 X 1/27	=	6.79 CY
STA 573+25.00 TO STA 573+65.00	40' X 14' AVG X 1/12 X 1/27	=	1.73 CY
STA 573+65.00 TO STA 575+83.23	218.23' X 12' X 1/12 X 1/27	=	8.08 CY
STA 575+83.23 TO STA 575+88.31	5.08' X 10' X 1/12 X 1/27	=	0.16 CY
STA 577+18.31 TO STA 577+50.00	31.69' X 10' X 1/12 X 1/27	=	0.98 CY
STA 577+50.00 TO STA 586+11.67	861.67' X 12' X 1/12 X 1/27	=	31.91 CY
STA 586+11.67 TO STA 588+75.00	263.33' X 17' AVG X 1/12 X 1/27	=	13.82 CY
STA 588+75.00 TO STA 592+35.00	360' X 8' X 1/12 X 1/27	=	8.89 CY
STA 592+35.00 TO STA 593+95.00	160' X 10' AVG X 1/12 X 1/27	=	4.94 CY
STA 593+95.00 TO STA 595+24.19	129.19' X 12' X 1/12 X 1/27	=	4.78 CY
STA 596+41.79 TO STA 600+25.23	383.44' X 12' X 1/12 X 1/27	=	14.20 CY
STA 608+99.03 TO STA 610+56.52	157.49' X 12' X 1/12 X 1/27	=	5.83 CY
STA 611+79.83 TO STA 612+34.00	54.17' X 14' X 1/12 X 1/27	=	2.34 CY
STA 612+34.00 TO STA 613+30.00	96' X 14' AVG X 1/12 X 1/27	=	4.15 CY
STA 613+30.00 TO STA 622+42.12	912.12' X 12' X 1/12 X 1/27	=	33.78 CY
STA 622+42.12 TO STA 624+50.00	207.88' X 17' AVG X 1/12 X 1/27	=	10.91 CY
STA 624+50.00 TO STA 629+22.21	472.21' X 10' X 1/12 X 1/27	=	14.57 CY
STA 630+30.59 TO STA 632+90.00	259.41' X 10' X 1/12 X 1/27	=	8.01 CY
STA 632+90.00 TO STA 634+00.00	110.00' X 11.38' AVG X 1/12 X 1/27	=	3.86 CY
		SUBTOTAL	268.78 CY

I-76 MEDIAN SHOULDER LEFT

STA 28+27.59 TO STA 31+50.00 BK	322.41' X 4.25' X 1/12 X 1/27	=	4.23 CY
		SUBTOTAL	4.23 CY

I-76 MEDIAN SHOULDER RIGHT

STA 550+10.04 TO STA 553+43.40 BK	333.36' X 9.25' AVG X 1/12 X 1/27	=	9.52 CY
		SUBTOTAL	9.52 CY

I-76 MEDIAN SHOULDER LEFT & RIGHT

STA 553+43.40 AHD TO STA 575+88.31	2,244.91' X 4.25' X 1/12 X 1/27 X 2	=	58.89 CY
STA 577+18.31 TO STA 587+19.08	1,000.77' X 4.25' X 1/12 X 1/27 X 2	=	26.25 CY
STA 587+19.08 TO STA 593+20.12	601.04' X 7' AVG X 1/12 X 1/27 X 2	=	25.97 CY
STA 593+20.12 TO STA 595+24.19	204.07' X 9.75' X 1/12 X 1/27 X 2	=	12.28 CY
STA 596+41.79 TO STA 600+25.23	383.44' X 9.75' X 1/12 X 1/27 X 2	=	23.08 CY
STA 608+99.03 TO STA 610+55.96	157.49' X 9.75' X 1/12 X 1/27 X 2	=	9.48 CY
STA 611+79.83 TO STA 629+22.21	1,742.38' X 9.75' X 1/12 X 1/27 X 2	=	104.87 CY
STA 630+30.59 TO STA 634+00.00	369.41' X 9.75' X 1/12 X 1/27 X 2	=	22.23 CY
		SUBTOTAL	283.05 CY

ITEM 403 - ASPHALT CONCRETE, AC-20 (CONT'D)

RAMP E-2 PAVEMENT

STA 6+05.84 TO STA 10+90	484.16' X 18.5' X 1/12 X 1/27	=	27.64 CY
STA 10+90 TO STA 12+89.12	199.12' X 19' X 1/12 X 1/27	=	11.68 CY
CURB RETURNS (STA 12+89.12 TO STA 13+32.32)	1,489 SF X 1/12 X 1/27	=	4.60 CY
		SUBTOTAL	43.92 CY

RAMP E-2 RIGHT SIDE SHOULDER

STA 6+05.84 TO STA 7+05.84	100' X 7' AVG X 1/12 X 1/27	=	2.16 CY
STA 7+05.84 TO STA 10+72.00	366.16' X 6' X 1/12 X 1/27	=	6.78 CY
CURB RETURN (STA 10+72.00 TO STA 10+90.00)	44 SF X 1/12 X 1/27	=	0.14 CY
		SUBTOTAL	9.08 CY

RAMP E-4 PAVEMENT

CURB RETURNS (STA 76+43.38 TO STA 76+95.38)	1,680 SF X 1/12 X 1/27	=	5.19 CY
STA 76+95.38 TO STA 77+95.38	100' X 18' AVG X 1/12 X 1/27	=	5.56 CY
STA 77+95.38 TO STA 93+98.92	1,603.54' X 16' X 1/12 X 1/27	=	79.19 CY
		SUBTOTAL	89.94 CY

RAMP E-4 RIGHT SIDE SHOULDER

STA 76+95.38 TO STA 83+75.00	679.62' X 3' X 1/12 X 1/27	=	6.29 CY
STA 83+75.00 TO STA 85+99.00	224' X 4' X 1/12 X 1/27	=	2.77 CY
STA 85+99.00 TO STA 86+39.00	40' X 5' AVG X 1/12 X 1/27	=	0.62 CY
STA 86+39.00 TO STA 93+98.92	759.92' X 3' X 1/12 X 1/27	=	7.04 CY
		SUBTOTAL	16.72 CY

RAMP E-4 LEFT SIDE SHOULDER

STA 76+95.38 TO STA 77+95.38	100.00' X 4.00' AVG X 1/12 X 1/27	=	1.23 CY
STA 77+95.38 TO STA 84+46.00	650.62' X 6' X 1/12 X 1/27	=	12.05 CY
STA 84+46.00 TO STA 88+37.00	391' X 8' X 1/12 X 1/27	=	9.65 CY
STA 88+37.00 TO STA 93+48.92	511.92' X 6' X 1/12 X 1/27	=	9.48 CY
STA 93+48.92 TO STA 93+98.92	50' X 7' AVG X 1/12 X 1/27	=	1.08 CY
		SUBTOTAL	33.49 CY

RAMP E-6 PAVEMENT

CURB RETURNS (STA 77+00.50 TO STA 77+59.68)	2,323 SF X 1/12 X 1/27	=	7.17 CY
STA 77+59.68 TO STA 79+09.68	150' X 19' AVG X 1/12 X 1/27	=	8.80 CY
STA 79+09.68 TO STA 88+73.24	963.56' X 16' X 1/12 X 1/27	=	47.58 CY
		SUBTOTAL	63.55 CY

RAMP E-6 LEFT SIDE SHOULDER

STA 77+59.68 TO STA 85+75.00	815.32' X 4.50' X 1/12 X 1/27	=	11.32 CY
STA 85+75.00 TO STA 86+13.36	38.36' X 4.00' X 1/12 X 1/27	=	0.47 CY
		SUBTOTAL	11.79 CY

RAMP E-6 RIGHT SIDE SHOULDER

STA 77+59.68 TO STA 79+09.68	150' X 5' AVG X 1/12 X 1/27	=	2.31 CY
STA 79+09.68 TO STA 80+37.00	127.32' X 8.5' X 1/12 X 1/27	=	3.34 CY
STA 80+37.00 TO STA 88+23.24	786.24' X 6' X 1/12 X 1/27	=	14.56 CY
STA 88+23.24 TO STA 88+73.24	50' X 7' AVG X 1/12 X 1/27	=	1.08 CY
		SUBTOTAL	21.29 CY

RAMP E-7 PAVEMENT

STA 80+90.31 TO STA 83+98.83	308.52' X 16' X 1/12 X 1/27	=	15.24 CY
STA 86+24.70 TO STA 93+73.12	748.42' X 16' X 1/12 X 1/27	=	36.96 CY
STA 93+73.12 TO STA 94+73.12	100' X 18' AVG X 1/12 X 1/27	=	5.56 CY
CURB RETURNS, AS PER PLAN (STA 94+73.12 TO STA 95+66.88)	3,114 SF X 1/12 X 1/27	=	9.61 CY
		SUBTOTAL	67.37 CY

QUANTITY CALCULATIONS

SUMMIT COUNTY

ITEM 403 - ASPHALT CONCRETE, AC-20 (CONT'D)

RAMP E-7 RIGHT SIDE SHOULDER

STA 83+31.11 TO STA 84+45.00	113.89' X 3' X 1/12 X 1/27	=	1.05 CY
STA 86+85.00 TO STA 88+25.00	140.00' X 4' X 1/12 X 1/27	=	1.73 CY
STA 88+25.00 TO STA 88+65.00	40' X 5' AVG X 1/12 X 1/27	=	0.62 CY
STA 88+65.00 TO STA 95+13.54	648.54' X 3' X 1/12 X 1/27	=	6.01 CY
STA 95+13.54 TO STA 95+38.54	25' X 2.50' AVG X 1/12 X 1/27	=	0.19 CY
	SUBTOTAL		9.60 CY

RAMP E-7 LEFT SIDE SHOULDER

STA 80+90.31 TO STA 81+40.31	50' X 9' AVG X 1/12 X 1/27	=	1.39 CY
STA 81+40.31 TO STA 83+98.83	258.52' X 8' X 1/12 X 1/27	=	6.38 CY
STA 86+24.70 TO STA 87+08.00	83.30' X 8' X 1/12 X 1/27	=	2.06 CY
STA 87+08.00 TO STA 87+48.00	40' X 9' AVG X 1/12 X 1/27	=	1.11 CY
STA 87+48.00 TO STA 93+73.12	625.12' X 6' X 1/12 X 1/27	=	11.58 CY
STA 93+73.12 TO STA 94+73.12	100' X 4' AVG X 1/12 X 1/27	=	1.23 CY
	SUBTOTAL		23.75 CY

RAMP E-8 PAVEMENT

STA 77+48.65 TO STA 78+09.73	61.08' X 16' X 1/12 X 1/27	=	3.02 CY
STA 80+14.34 TO STA 86+50.00	635.66' X 16' X 1/12 X 1/27	=	31.39 CY
STA 86+50.00 TO STA 89+00.00	250' X 22' AVG X 1/12 X 1/27	=	16.98 CY
STA 89+00.00 TO STA 90+02.31	102.31' X 40.31' AVG X 1/12 X 1/27	=	12.73 CY
STA 90+02.31 TO STA 91+00.00	97.68' X 16' X 1/12 X 1/27	=	4.82 CY
STA 91+00.00 TO STA 94+00.00	300' X 22' AVG X 1/12 X 1/27	=	20.37 CY
STA 94+00.00 TO STA 95+19.94	119.94' X 33' AVG X 1/12 X 1/27	=	12.22 CY
CURB RETURNS, AS PER PLAN	4,042 SF X 1/12 X 1/27	=	12.48 CY
	SUBTOTAL		114.01 CY

RAMP E-8 LEFT SIDE SHOULDER

STA 77+48.65 TO STA 78+44.00	95.35' X 3' X 1/12 X 1/27	=	0.88 CY
STA 80+50.00 TO STA 82+40.00	190.00' X 4' X 1/12 X 1/27	=	2.35 CY
STA 82+40.00 TO STA 92+00.00	960' X 3' X 1/12 X 1/27	=	8.89 CY
STA 92+00.00 TO STA 93+00.00	100' X 5' AVG X 1/12 X 1/27	=	1.54 CY
STA 93+00.00 TO STA 94+00.00	100' X 7.50' X 1/12 X 1/27	=	2.31 CY
STA 94+00.00 TO STA 95+19.94	119.94' X 4.50' AVG X 1/12 X 1/27	=	1.67 CY
	SUBTOTAL		17.64 CY

RAMP E-8 RIGHT SIDE SHOULDER

STA 77+48.65 TO STA 77+98.65	50' X 9' AVG X 1/12 X 1/27	=	1.39 CY
STA 77+98.65 TO STA 78+09.73	11.08' X 8' X 1/12 X 1/27	=	0.27 CY
STA 80+14.34 TO STA 90+02.31	987.97' X 6' X 1/12 X 1/27	=	18.30 CY
STA 90+02.31 TO STA 94+00.00	397.69' X 6' X 1/12 X 1/27	=	7.36 CY
STA 94+00.00 TO STA 95+19.94	119.94' X 4' AVG X 1/12 X 1/27	=	1.48 CY
	SUBTOTAL		28.80 CY

RAMP E-8A PAVEMENT

STA 9+95.92 TO STA 12+33.38	237.46' X 16' X 1/12 X 1/27	=	11.73 CY
STA 12+33.38 TO STA 13+19.67	86.29' X 17.73' AVG X 1/12 X 1/27	=	4.72 CY
STA 13+19.67 TO STA 13+33.38	13.71' X 21.10' AVG X 1/12 X 1/27	=	0.89 CY
CURB RETURNS, AS PER PLAN (STA 13+33.38 TO STA 13+74.64)	1,548 SF X 1/12 X 1/27	=	4.78 CY
	SUBTOTAL		22.12 CY

RAMP E-8A LEFT SIDE SHOULDER

STA 9+95.92 TO STA 13+19.67	323.75' X 3' X 1/12 X 1/27	=	3.00 CY
STA 13+19.67 TO STA 13+44.65	24.98' X 2.50' AVG X 1/12 X 1/27	=	0.19 CY
	SUBTOTAL		3.19 CY

RAMP E-8A RIGHT SIDE SHOULDER

STA 9+95.92 TO STA 12+33.38	237.46' X 6' X 1/12 X 1/27	=	4.40 CY
STA 12+33.38 TO STA 13+33.38	100' X 4' AVG X 1/12 X 1/27	=	1.23 CY
	SUBTOTAL		5.63 CY

RAMP E-8B PAVEMENT

CURB RETURNS, AS PER PLAN	3,422 SF X 1/12 X 1/27	=	10.56 CY
STA 100+93.30 TO STA 106+34.73	541.43' X 29' X 1/12 X 1/27	=	48.46 CY
CURB RETURNS, AS PER PLAN	3,088 SF X 1/12 X 1/27	=	9.53 CY
	SUBTOTAL		68.55 CY

ITEM 403 - ASPHALT CONCRETE, AC-20 (CONT'D)

RAMP E-9 PAVEMENT

STA 9+73.32 TO STA 12+83.46	310.14' X 16' X 1/12 X 1/27	=	15.32 CY
STA 12+83.46 TO STA 13+83.46	100' X 18' AVG X 1/12 X 1/27	=	5.56 CY
STA 13+83.46 TO STA 15+33.46	150' X 20' AVG X 1/12 X 1/27	=	9.26 CY
	SUBTOTAL		30.14 CY

RAMP E-9 LEFT SIDE SHOULDER

STA 9+73.32 TO STA 13+83.46	410.14' X 3' X 1/12 X 1/27	=	3.80 CY
	SUBTOTAL		3.80 CY

RAMP E-9 RIGHT SIDE SHOULDER

STA 9+73.32 TO STA 10+75.00	101.68' X 14' X 1/12 X 1/27	=	4.39 CY
STA 10+75.00 TO STA 10+96.00	21' X 13.58' AVG X 1/12 X 1/27	=	0.88 CY
STA 10+96.00 TO STA 12+25.00	129' X 9.58' AVG X 1/12 X 1/27	=	3.81 CY
STA 12+25.00 TO STA 12+83.46	58.46' X 6' X 1/12 X 1/27	=	1.08 CY
STA 12+83.46 TO STA 13+83.46	100' X 4' AVG X 1/12 X 1/27	=	1.23 CY
	SUBTOTAL		11.39 CY

RAMP E-10 PAVEMENT

STA 13+28.65 TO STA 14+07.14	78.49' X 16' X 1/12 X 1/27	=	3.88 CY
STA 15+70.87 TO STA 18+83.38	312.51' X 16' X 1/12 X 1/27	=	15.43 CY
STA 18+83.38 TO STA 19+83.38	100' X 18' AVG X 1/12 X 1/27	=	5.56 CY
STA 19+83.38 TO STA 21+03.38	120' X 28' AVG X 1/12 X 1/27	=	10.37 CY
STA 21+03.38 TO STA 22+08.09	104.71' X 29' X 1/12 X 1/27	=	9.37 CY
CURB RETURNS, AS PER PLAN (STA 22+08.09 TO STA 22+74.09)	2,581 SF X 1/12 X 1/27	=	7.97 CY
	SUBTOTAL		52.58 CY

RAMP E-10 LEFT SIDE SHOULDER

STA 13+28.65 TO STA 14+07.14	78.49' X 3' X 1/12 X 1/27	=	0.73 CY
STA 15+70.87 TO STA 19+83.38	412.51' X 4' X 1/12 X 1/27	=	5.09 CY
	SUBTOTAL		5.82 CY

RAMP E-10 RIGHT SIDE SHOULDER

STA 13+28.65 TO STA 13+78.65	50' X 9' X 1/12 X 1/27	=	1.39 CY
STA 13+78.65 TO STA 14+07.14	28.49' X 8' X 1/12 X 1/27	=	0.70 CY
STA 15+70.87 TO STA 18+83.38	312.51' X 6' X 1/12 X 1/27	=	5.79 CY
STA 18+83.38 TO STA 19+83.38	100' X 4' AVG X 1/12 X 1/27	=	1.23 CY
	SUBTOTAL		9.11 CY

RAMP E-12 PAVEMENT

STA 12+08.65 TO STA 13+58.65	150' X 19' AVG X 1/12 X 1/27	=	8.80 CY
STA 13+58.65 TO STA 17+94.72	436.07' X 20' X 1/12 X 1/27	=	26.92 CY
CURB RETURN (STA 17+94.72 TO STA 18+80.93)	3,253 SF X 1/12 X 1/27	=	10.04 CY
	SUBTOTAL		45.76 CY

RAMP E-12 RIGHT SIDE SHOULDER

STA 13+23.88 TO STA 18+47.00	523.12' X 3' X 1/12 X 1/27	=	4.84 CY
	SUBTOTAL		4.84 CY

RAMP E-12 LEFT SIDE SHOULDER

STA 12+08.65 TO STA 12+58.65	50' X 7' X 1/12 X 1/27	=	1.08 CY
STA 12+58.65 TO STA 17+94.72	536.07' X 6' X 1/12 X 1/27	=	9.93 CY
	SUBTOTAL		11.01 CY

RAMP E-15 PAVEMENT

CURB RETURN (STA 9+22.86 TO STA 9+89.69)	3,185 SF X 1/12 X 1/27	=	9.83 CY
STA 9+89.69 TO STA 11+22.13	132.44' X 27.00' AVG X 1/12 X 1/27	=	11.04 CY
STA 11+22.13 TO STA 12+66.12	143.99' X 24' X 1/12 X 1/27	=	10.67 CY
STA 12+66.12 TO STA 14+16.12	150' X 20.00' AVG X 1/12 X 1/27	=	9.26 CY
STA 14+16.12 TO STA 20+34.10	617.98' X 16' X 1/12 X 1/27	=	30.52 CY
	SUBTOTAL		71.32 CY

ITEM 403 - ASPHALT CONCRETE, AC-20 (CONT'D)

RAMP E-15 RIGHT SIDE SHOULDER

STA 9+56 TO STA 20+34.10	1,078.10' X 3' X 1/12 X 1/27	=	9.98 CY
	SUBTOTAL		9.98 CY

RAMP E-15 LEFT SIDE SHOULDER

STA 9+89.69 TO STA 11+22.13	132.44' X 4' AVG X 1/12 X 1/27	=	1.64 CY
STA 11+22.13 TO STA 19+84.10	861.97' X 6' X 1/12 X 1/27	=	15.96 CY
STA 19+84.10 TO STA 20+34.10	50' X 7' AVG X 1/12 X 1/27	=	1.08 CY
	SUBTOTAL		18.68 CY

RAMP E-16 PAVEMENT

CURB RETURNS (STA 12+45.21 TO STA 13+32.49)	3,395 SF X 1/12 X 1/27	=	10.48 CY
STA 13+32.49 TO STA 14+82.49	150' X 19' AVG X 1/12 X 1/27	=	8.80 CY
STA 14+82.49 TO STA 24+50.00	967.51' X 16' X 1/12 X 1/27	=	47.78 CY
	SUBTOTAL		67.06 CY

RAMP E-16 RIGHT SIDE SHOULDER

STA 13+32.49 TO STA 14+82.49	150' X 5' AVG X 1/12 X 1/27	=	2.31 CY
STA 14+82.49 TO STA 17+16.00	233.51' X 8' X 1/12 X 1/27	=	5.77 CY
STA 17+16.00 TO STA 20+80.00	364' X 6' X 1/12 X 1/27	=	6.74 CY
STA 20+80.00 TO STA 21+20.00	40' X 9' AVG X 1/12 X 1/27	=	1.11 CY
STA 21+20.00 TO STA 24+00.00	280' X 8' X 1/12 X 1/27	=	6.91 CY
STA 24+00.00 TO STA 24+50.00	50' X 9' AVG X 1/12 X 1/27	=	1.39 CY
	SUBTOTAL		24.23 CY

RAMP E-16 LEFT SIDE SHOULDER

STA 13+32.49 TO STA 22+15.00	882.51' X 4' X 1/12 X 1/27	=	10.90 CY
STA 22+15.00 TO STA 22+47.04	32.04' X 3' X 1/12 X 1/27	=	0.30 CY
	SUBTOTAL		11.20 CY

SCHOOL ROAD PAVEMENT

CURB RETURNS (STA 10+33 TO STA 10+48	295 SF X 2/12 X 1/27	=	1.82 CY
STA 12+54 TO STA 12+92	38' X 16.5' AVG X 2/12 X 1/27	=	3.87 CY
STA 12+92 TO STA 15+00	208' X 18' X 2/12 X 1/27	=	23.11 CY
	SUBTOTAL		28.80 CY

FULLER STREET

STA 11+40.59 TO STA 16+88.83	548.24' X 25' X 1/12 X 1/27	=	42.30 CY
	SUBTOTAL		42.30 CY
	TOTAL		3,878.79 CY

QUANTITY CALCULATIONS

CALC BY FRP DATE 8/88 | CHK'D DSB DATE 3/90 | SUM-76-11.57 | FED. PROJECT IR-76-2(44)19 | OHIO | F.H.W.A. REGION 5 | 110 1214

SUMMIT COUNTY

ITEM 404 - ASPHALT CONCRETE, AC-20

I-76 WESTBOUND PAVEMENT

STA 24+50 TO 24+94	2,550 SF X 1.25/12 X 1/27	=	9.84 CY
STA 24+94 TO STA 26+00	5,756 SF X 1.25/12 X 1/27	=	22.21 CY
STA 26+00 TO STA 27+00	4,290 SF X 1.25/12 X 1/27	=	16.55 CY
STA 27+00 TO STA 27+17.78	1,153 SF X 1.25/12 X 1/27	=	4.45 CY
		SUBTOTAL	53.05 CY

I-76 WESTBOUND SHOULDER

STA 24+58 TO STA 26+69 LT (LANE U)	208' X 6.5' AVG X 1.25/12 X 1/27	=	5.22 CY
STA 26+69 TO STA 27+08 LT (LANE U)	49' X 4' AVG X 1.25/12 X 1/27	=	0.76 CY
STA 24+50 TO STA 24+96 LT	44' X 6' AVG X 1.25/12 X 1/27	=	1.02 CY
STA 24+50 TO STA 25+88 RT	138' X 8' X 1.25/12 X 1/27	=	4.26 CY
STA 25+88 TO STA 26+38 RT	50' X 7' AVG X 1.25/12 X 1/27	=	1.35 CY
STA 26+38 TO STA 27+17.78 RT	79.78' X 6' AVG X 1.25/12 X 1/27	=	1.85 CY
		SUBTOTAL	14.46 CY

I-76 EASTBOUND PAVEMENT

STA 541+50 TO STA 546+72	12,528 SF X 1.25/12 X 1/27	=	48.33 CY
STA 546+72 TO STA 547+08	928 SF X 1.25/12 X 1/27	=	3.58 CY
RAMP 'T'	1,567 SF X 1.25/12 X 1/27	=	6.05 CY
STA 547+08 TO STA 548+00	5,152 SF X 1.25/12 X 1/27	=	19.88 CY
STA 548+00 TO STA 548+97.60	4,617 SF X 1.25/12 X 1/27	=	17.81 CY
		SUBTOTAL	95.65 CY

I-76 EASTBOUND SHOULDER

STA 541+50 TO STA 542+25 LT	75' X 6.5 AVG X 1.25/12 X 1/27	=	1.88 CY
STA 542+25 TO STA 548+22.60 LT	597.6 X 8' X 1.25/12 X 1/27	=	18.44 CY
STA 548+22.60 TO STA 548+97.60 LT	75' X 6.5' AVG X 1.25/12 X 1/27	=	1.88 CY
STA 541+50 TO STA 545+53 RT	403' X 9.5' AVG X 1.25/12 X 1/27	=	14.77 CY
STA 545+53 TO STA 546+32 RT	79' X 5' AVG X 1.25/12 X 1/27	=	1.52 CY
STA 546+65 TO STA 548+78 RT (RAMP T)	217' X 10.75' AVG X 1.25/12 X 1/27	=	9.00 CY
		SUBTOTAL	47.49 CY

TALBOT AVENUE

STA 18+69.87 TO STA 19+00	30.13' X 26' X 1.25/12 X 1/27	=	3.02 CY
TALBOT/MARTIN CONNECTION (STA 18+69.87 TO STA 46+80 MARTIN)	1,630 SF X 1.25/12 X 1/27	=	6.29 CY
		SUBTOTAL	9.31 CY

MARTIN AVENUE

STA 46+80 TO STA 49+42.22	262.22' X 28' X 1.25/12 X 1/27	=	28.33 CY
CURB RETURNS (STA 49+42.22 TO STA 49+71.50)	1,058 SF X 1.25/12 X 1/27	=	4.08 CY
		SUBTOTAL	32.41 CY

ARLINGTON STREET

STA 13+70.00 TO STA 15+00.00	130' X 51.5' AVG X 1.25/12 X 1/27	=	25.83 CY
STA 15+00.00 TO STA 19+66.00	462.60' X 57' X 1.25/12 X 1/27	=	101.73 CY
STA 19+62.60 TO STA 20+92.60	130' X 51.5' AVG X 1.25/12 X 1/27	=	25.83 CY
		SUBTOTAL	153.39 CY

SECOND AVENUE

CURB RETURNS (STA 20+26.75 TO STA 21+10.00)	2,860 SF X 1.25/12 X 1/27	=	11.03 CY
		SUBTOTAL	11.03 CY

THIRD AVENUE

CURB RETURNS	1,347 SF X 1.25/12 X 1/27	=	5.20 CY
STA 21+58 TO STA 22+50.66	92.66' X 32' X 1.25/12 X 1/27	=	11.44 CY
STA 33+59 TO STA 34+50	91' X 4' AVG X 1.25/12 X 1/27	=	1.40 CY
STA 33+59 TO STA 34+91.95	132.95' X 30' X 1.25/12 X 1/27	=	15.39 CY
STA 34+50 TO STA 34+91.95	41.95' X 8' X 1.25/12 X 1/27	=	1.29 CY
CURB RETURNS (STA 34+91.95 TO STA 35+77.22)	4,712 SF X 1.25/12 X 1/27	=	18.18 CY
		SUBTOTAL	52.90 CY

ITEM 404 - ASPHALT CONCRETE, AC-20 (CONT'D)

MARTHA AVENUE

STA 5+09.31 TO STA 7+79.31	270' X 6.5' AVG X 1.25/12 X 1/27	=	6.77 CY
STA 7+77.31 TO STA 8+79.31	102' X 36' X 1.25/12 X 1/27	=	14.17 CY
STA 8+79 TO STA 11+79.31	300' X 41' AVG X 1.25/12 X 1/27	=	47.45 CY
STA 11+79.31 TO STA 17+51.77	572.46' X 46' X 1.25/12 X 1/27	=	101.59 CY
		SUBTOTAL	169.98 CY

ENGLEWOOD AVENUE

CURB RETURNS	89 SF X 1.25/12 X 1/27	=	0.34 CY
STA 20+23 TO STA 21+03	80' X 37' X 1.25/12 X 1/27	=	11.42 CY
ENGLEWOOD/CAMBRIDGE CONNECTION	131.66' X 25' X 1.25/12 X 1/27	=	12.70 CY
CURB RETURNS	1,530 SF X 1.25/12 X 1/27	=	5.90 CY
STA 30+68.31 TO STA 31+70	101.69' X 39' AVG X 1.25/12 X 1/27	=	15.30 CY
CURB RETURNS	1,060 SF X 1.25/12 X 1/27	=	4.09 CY
STA 37+70.70 TO STA 48+80	1,110.00' X 32' X 1.25/12 X 1/27	=	137.04 CY
		SUBTOTAL	186.79 CY

WIGLEY AVENUE

STA 9+01.72 TO STA 9+95	93.28' X 32' X 1.25/12 X 1/27	=	11.52 CY
		SUBTOTAL	11.52 CY

SCHOOL ROAD

CURB RETURNS (STA 10+33 TO STA 10+48)	295 SF X 1/12 X 1/27	=	0.91 CY
STA 12+54 TO STA 12+92	38' X 16.5' AVG X 1/12 X 1/27	=	1.94 CY
STA 12+92 TO STA 15+00	208' X 18' X 1/12 X 1/27	=	11.56 CY
		SUBTOTAL	14.41 CY

SCHOOL WALK

STA 48+00 TO STA 49+92	192' X 8' X 4/12 X 1/27	=	18.96 CY
CURB RETURNS	40 SF X 4/12 X 1/27	=	0.49 CY
		SUBTOTAL	19.45 CY
		TOTAL	871.84 CY

ITEM 407 - TACK COAT

I-76 WESTBOUND PAVEMENT

STA 24+50 TO 24+94	2,550 SF X 1/9 X 0.075	=	21.25 GAL
STA 24+94 TO STA 26+00	5,756 SF X 1/9 X 0.075	=	47.97 GAL
STA 26+00 TO STA 27+00	4,290 SF X 1/9 X 0.075	=	35.75 GAL
STA 27+00 TO STA 27+17.70	1,153 SF X 1/9 X 0.075	=	9.61 GAL
		SUBTOTAL	114.88 GAL

I-76 WESTBOUND SHOULDER

STA 24+58 TO STA 26+69 LT (LANE U)	208' X 6.5' AVG X 1/9 X 0.075	=	11.27 GAL
STA 26+69 TO STA 27+08 LT (LANE U)	49' X 4' AVG X 1/9 X 0.075	=	1.63 GAL
STA 24+50 TO STA 24+96 LT	44' X 6' AVG X 1/9 X 0.075	=	2.20 GAL
STA 24+50 TO STA 25+88 RT	138' X 8' X 1/9 X 0.075	=	9.20 GAL
STA 25+88 TO STA 26+38 RT	50' X 7' AVG X 1/9 X 0.075	=	2.92 GAL
STA 26+38 TO STA 27+17.78 RT	79.78' X 6' AVG X 1/9 X 0.075	=	3.99 GAL
		SUBTOTAL	31.21 GAL

I-76 EASTBOUND PAVEMENT

STA 541+50 TO STA 546+72	12,528 SF X 1/9 X 0.075	=	104.40 GAL
STA 546+72 TO STA 547+08	928 SF X 1/9 X 0.075	=	7.73 GAL
RAMP 'T'	1,567 SF X 1/9 X 0.075	=	13.06 GAL
STA 547+08 TO STA 548+00	5,152 SF X 1/9 X 0.075	=	42.93 GAL
STA 548+00 TO STA 548+97.60	4,617 SF X 1/9 X 0.075	=	38.48 GAL
		SUBTOTAL	206.60 GAL

I-76 EASTBOUND SHOULDER

STA 541+50 TO STA 542+25 LT	75' X 6.5 AVG X 1/9 X 0.075	=	4.06 GAL
STA 542+25 TO STA 548+22.60 LT	597.6 X 8' X 1/9 X 0.075	=	39.84 GAL
STA 548+22.60 TO STA 548+97.60 LT	75' X 6.5' AVG X 1/9 X 0.075	=	4.06 GAL
STA 541+50 TO STA 545+53 RT	403' X 9.5' AVG X 1/9 X 0.075	=	31.90 GAL
STA 545+53 TO STA 546+32 RT	79' X 5' AVG X 1/9 X 0.075	=	3.29 GAL
STA 546+65 TO STA 548+78 RT (RAMP T)	217' X 10.75' AVG X 1/9 X 0.075	=	19.44 GAL
		SUBTOTAL	102.59 GAL

ITEM 407 - TACK COAT (CONT'D)

TALBOT AVENUE

STA 18+69.87 TO STA 19+00	30.0753' X 26' X 1/9 X 0.075	=	6.53 GAL
TALBOT/MARTIN CONNECTION (STA 18+69.87 TO STA 46+80 MARTIN)	1,630 SF X 1/9 X 0.075	=	13.58 GAL
		SUBTOTAL	20.11 GAL

MARTIN AVENUE

STA 46+80 TO STA 49+42.22	262.22' X 28' X 1/9 X 0.075	=	61.18 GAL
CURB RETURNS (STA 49+42.22 TO STA 49+71.50)	1,058 SF X 1/9 X 0.075	=	8.82 GAL
		SUBTOTAL	70.00 GAL

ARLINGTON STREET

STA 13+70.00 TO STA 15+00.00	130' X 51.5' AVG X 1/9 X 0.075	=	55.79 GAL
STA 15+00.00 TO STA 19+66.00	462.60' X 57' X 1/9 X 0.075	=	219.74 GAL
STA 19+62.60 TO STA 20+92.60	130' X 51.5' AVG X 1/9 X 0.075	=	55.79 GAL
		SUBTOTAL	331.32 GAL

SECOND AVENUE

CURB RETURNS (STA 20+26.75 TO STA 21+10.00)	2,860 SF X 1/9 X 0.075	=	23.83 GAL
		SUBTOTAL	23.83 GAL

THIRD AVENUE

CURB RETURNS	1,347 SF X 1/9 X 0.075	=	11.22 GAL
STA 21+58 TO STA 22+50.66	92.66' X 32' X 1/9 X 0.075	=	24.71 GAL
STA 33+59 TO STA 34+50	91' X 4' AVG X 1/9 X 0.075	=	3.03 GAL
STA 33+59 TO STA 34+91.95	132.95' X 30' X 1/9 X 0.075	=	33.24 GAL
STA 34+50 TO STA 34+91.95	41.95' X 8' X 1/9 X 0.075	=	2.80 GAL
CURB RETURNS (STA 34+91.95 TO STA 35+77.22)	4,712 SF X 1/9 X 0.075	=	39.27 GAL
		SUBTOTAL	114.27 GAL

MARTHA AVENUE

STA 5+09.31 TO STA 7+79.31	270' X 6.5' AVG X 1/9 X 0.075	=	14.62 GAL
STA 7+77.31 TO STA 8+79.31	102' X 36' X 1/9 X 0.075	=	30.60 GAL
STA 8+79 TO STA 11+79.31	300' X 41' AVG X 1/9 X 0.075	=	102.50 GAL
STA 11+79.31 TO STA 17+51.77	572.46' X 46' X 1/9 X 0.075	=	219.44 GAL
		SUBTOTAL	367.16 GAL

ENGLEWOOD AVENUE

CURB RETURNS	89 SF X 1/9 X 0.075	=	0.74 GAL
STA 20+23 TO STA 21+03	80' X 37' X 1/9 X 0.075	=	24.67 GAL
ENGLEWOOD/CAMBRIDGE CONNECTION	131.66' X 25' X 1/9 X 0.075	=	27.43 GAL
CURB RETURNS	1,530 SF X 1/9 X 0.075	=	12.75 GAL
STA 30+68.31 TO STA 31+70	101.69' X 39' AVG X 1/9 X 0.075	=	33.05 GAL
CURB RETURNS	180 SF X 1/9 X 0.075	=	8.83 GAL
STA 37+46 TO STA 49+25	1,179.00' X 32' X 1/9 X 0.075	=	296.00 GAL
		SUBTOTAL	403.47 GAL

WIGLEY AVENUE

STA 9+01.72 TO STA 9+95	93.28' X 32' X 1/9 X 0.075	=	24.87 GAL
		SUBTOTAL	24.87 GAL
		TOTAL	1,810.31 GAL

QUANTITY CALCULATIONS

SUMMIT COUNTY

ITEM 451 - 11" REINFORCED CONCRETE PAVEMENT, AS PER PLAN

I-76 WESTBOUND PAVEMENT

STA 28+27.59 TO STA 31+50.00 BK	322.41' X 36' X 1/9	=	1,289.64 SY
STA 553+43.40 AHD TO STA 557+54.54	411.14' X 36' X 1/9	=	1,644.56 SY
STA 557+54.54 TO STA 561+57.32	402.78' X 61' AVG X 1/9	=	2,729.95 SY
STA 561+57.32 TO STA 575+66.00	1,408.68' X 48' X 1/9	=	7,512.96 SY
STA 575+66.00 TO STA 575+88.31	22.31' X 48.28' AVG X 1/9	=	119.68 SY
STA 577+18.31 TO STA 580+86.00	367.59' X 56.40' AVG X 1/9	=	2,304.19 SY
STA 580+86.00 TO STA 593+99.00	1,313' X 36' X 1/9	=	5,252.00 SY
STA 593+99.00 TO STA 595+24.19	125.19' X 72.07' AVG X 1/9	=	1,002.49 SY
STA 596+41.79 TO STA 599+77.40	335.61' X 55.80' AVG X 1/9	=	2,069.60 SY
STA 599+77.40 TO STA 600+25.23	47.83' X 48' X 1/9	=	255.09 SY
STA 608+99.03 TO STA 610+56.52	157.49' X 55.22' AVG X 1/9	=	966.29 SY
STA 611+79.83 TO STA 612+08.65	28.82' X 60.65' AVG X 1/9	=	194.21 SY
STA 612+08.65 TO STA 620+41.27	832.62' X 36' X 1/9	=	3,330.48 SY
STA 620+41.27 TO STA 623+87.83	346.56' X 61.60' AVG X 1/9	=	2,372.01 SY
STA 623+87.83 TO STA 629+22.21	534.38' X 48' X 1/9	=	2,850.03 SY
STA 630+30.59 TO STA 634+00.00	369.41' X 48' X 1/9	=	1,970.19 SY
		SUBTOTAL	35,863.37 SY

I-76 EASTBOUND PAVEMENT

STA 550+10.04 TO STA 553+43.40 BK	333.36' X 48' X 1/9	=	1,777.92 SY
STA 553+43.40 AHD TO STA 556+70.00	326.60' X 48' X 1/9	=	1,741.87 SY
STA 556+70.00 TO STA 561+50.00	480' X 42' AVG X 1/9	=	2,240.00 SY
STA 561+50.00 TO STA 569+50.00	800' X 36' X 1/9	=	3,200.00 SY
STA 569+50.00 TO STA 570+50.00	100' X 42' AVG X 1/9	=	466.67 SY
STA 570+50.00 TO STA 574+71.64	421.64' X 48' X 1/9	=	2,248.75 SY
STA 574+71.64 TO STA 575+88.31	116.67' X 50.96' AVG X 1/9	=	660.61 SY
STA 577+18.31 TO STA 577+50.00	31.69' X 73.21' AVG X 1/9	=	257.78 SY
STA 577+50.00 TO STA 588+75.00	1,125' X 36' X 1/9	=	4,500.00 SY
STA 588+75.00 TO STA 593+95.00	520' X 54.50' AVG X 1/9	=	3,148.89 SY
STA 593+95.00 TO STA 595+24.19	129.19' X 48' X 1/9	=	689.01 SY
STA 596+41.79 TO STA 600+25.23	383.44' X 48' X 1/9	=	2,045.01 SY
STA 608+99.03 TO STA 610+51.64	152.61' X 48' X 1/9	=	813.92 SY
STA 610+51.64 TO STA 610+56.52	4.88' X 48.15' AVG X 1/9	=	26.11 SY
STA 611+79.83 TO STA 613+30.00	150.17' X 66.25' AVG X 1/9	=	1,105.42 SY
STA 613+30.00 TO STA 624+50.00	1,120' X 36' X 1/9	=	4,480.00 SY
STA 624+50.00 TO STA 629+22.21	472.21' X 55.14' AVG X 1/9	=	2,887.83 SY
STA 630+30.59 TO STA 634+00.00	369.41' X 41.98' AVG X 1/9	=	1,723.09 SY
		SUBTOTAL	34,012.88 SY

I-76 LEFT SIDE SHOULDER

STA 28+27.59 TO STA 31+50.00 BK	322.41' X 12' X 1/9	=	429.88 SY
STA 553+43.40 AHD TO STA 557+54.54	411.14' X 12' X 1/9	=	548.19 SY
STA 557+54.54 TO STA 560+10.00	255.46' X 8' X 1/9	=	227.08 SY
STA 560+10.00 TO STA 561+00.00	90.00' x 10' x 1/9	=	100.00 SY
STA 561+00.00 TO STA 562+00.00	100' X 12' AVG X 1/9	=	133.33 SY
STA 562+00.00 TO STA 566+00.00	400' X 14' X 1/9	=	622.22 SY
STA 566+00.00 TO STA 566+40.00	40' X 16' AVG X 1/9	=	71.11 SY
STA 566+40.00 TO STA 572+50.00	610' X 12' X 1/9	=	813.33 SY
STA 572+50.00 TO STA 575+88.31	338.31' X 14' AVG X 1/9	=	526.26 SY
STA 577+18.31 TO STA 577+22.21	3.90' X 14' X 1/9	=	6.07 SY
STA 577+22.21 TO STA 578+82.21	160' X 12' AVG X 1/9	=	213.33 SY
STA 578+82.21 TO STA 580+86.00	203.79' X 10' X 1/9	=	226.43 SY
STA 580+86.00 TO STA 583+21.60	235.60' X 17' AVG X 1/9	=	445.02 SY
STA 583+21.60 TO STA 593+99.00	1,077.40' X 12' X 1/9	=	1,436.53 SY
STA 593+99.00 TO STA 594+25.00	26' X 8.52' AVG X 1/9	=	24.61 SY
STA 594+25.00 TO STA 594+99.00	74' X 14.52' AVG X 1/9	=	119.39 SY
STA 594+99.00 TO STA 595+24.19	25.19' X 15' X 1/9	=	44.78 SY
STA 596+41.79 TO STA 598+70.00	228.21' X 16' X 1/9	=	405.71 SY
STA 598+70.00 TO STA 600+25.23	155.23' X 14' X 1/9	=	241.47 SY
STA 608+99.03 TO STA 609+00.00	0.97' X 14' X 1/9	=	1.51 SY
STA 609+00.00 TO STA 610+00.00	100' X 12' AVG X 1/9	=	133.33 SY
STA 610+00.00 TO STA 610+56.52	56.52' X 10' X 1/9	=	62.80 SY
STA 611+79.83 TO STA 612+08.65	28.82' X 12' X 1/9	=	38.43 SY
STA 612+08.65 TO STA 613+29.21	120.56' X 16' AVG X 1/9	=	214.33 SY
STA 613+29.21 TO STA 620+41.27	712.06' X 12' X 1/9	=	949.41 SY
STA 620+41.27 TO STA 621+41.27	100' X 10' AVG X 1/9	=	111.11 SY
STA 621+41.27 TO STA 625+75.00	433.73' X 12' X 1/9	=	578.31 SY
STA 625+75.00 TO STA 629+22.20	347.20' X 14' X 1/9	=	540.09 SY
STA 630+30.59 TO STA 634+00.00	369.41' X 14' X 1/9	=	574.64 SY
		SUBTOTAL	9,838.70 SY

ITEM 451 - 11" REINFORCED CONCRETE PAVEMENT, AS PER PLAN (CONT'D)

I-76 RIGHT SIDE SHOULDER

STA 550+10.04 TO STA 553+43.40 BK	333.36' X 12' X 1/9	=	444.48 SY
STA 553+43.40 AHD TO STA 558+30.00	486.60' X 12' X 1/9	=	648.80 SY
STA 558+30.00 TO STA 558+70.00	40' X 18' AVG X 1/9	=	80.00 SY
STA 558+70.00 TO STA 569+25.00	1,055' X 16' X 1/9	=	1,875.56 SY
STA 569+25.00 TO STA 569+75.00	50' X 14' AVG X 1/9	=	77.78 SY
STA 569+75.00 TO STA 570+50.00	75' X 11' AVG X 1/9	=	91.67 SY
STA 570+50.00 TO STA 573+25.00	275' X 8' X 1/9	=	244.44 SY
STA 573+25.00 TO STA 573+65.00	40' X 14' AVG X 1/9	=	62.22 SY
STA 573+65.00 TO STA 575+83.23	218.23' X 12' X 1/9	=	290.97 SY
STA 575+83.23 TO STA 575+88.31	5.08' X 10' X 1/9	=	5.64 SY
STA 577+18.31 TO STA 577+50.00	31.69' X 10' X 1/9	=	35.21 SY
STA 577+50.00 TO STA 586+11.67	861.67' X 12' X 1/9	=	1,148.89 SY
STA 586+11.67 TO STA 588+75.00	263.33' X 17' AVG X 1/9	=	497.40 SY
STA 588+75.00 TO STA 592+35.00	360' X 8' X 1/9	=	320.00 SY
STA 592+35.00 TO STA 593+95.00	160' X 10' AVG X 1/9	=	177.78 SY
STA 593+95.00 TO STA 595+24.19	129.19' X 12' X 1/9	=	172.25 SY
STA 596+41.79 TO STA 600+25.23	383.44' X 12' X 1/9	=	511.25 SY
STA 608+99.03 TO STA 610+56.52	157.49' X 12' X 1/9	=	209.99 SY
STA 611+79.83 TO STA 612+34.00	54.17' X 14' X 1/9	=	84.26 SY
STA 612+34.00 TO STA 613+30.00	96.00' X 14' AVG X 1/9	=	149.33 SY
STA 613+30.00 TO STA 622+42.12	912.12' X 12' X 1/9	=	1,216.16 SY
STA 622+42.12 TO STA 624+50.00	207.88' X 17' AVG X 1/9	=	392.66 SY
STA 624+50.00 TO STA 629+22.21	472.21' X 10' X 1/9	=	524.68 SY
STA 630+30.59 TO STA 632+90.00	259.41' X 10' X 1/9	=	288.23 SY
STA 632+90.00 TO STA 634+00.00	110.00' X 11.38' AVG X 1/9	=	139.09 SY
		SUBTOTAL	9,638.74 SY
		TOTAL	89,403.69 SY

ITEM 451 - 9" REINFORCED CONCRETE PAVEMENT, AS PER PLAN

RAMP E-2

STA 6+05.84 TO STA 10+90	484.16' X 18.5' X 1/9	=	935.22 SY
STA 10+90 TO STA 12+89.12	199.12' X 19' X 1/9	=	420.36 SY
CURB RETURNS (STA 12+89.12 TO STA 13+32.32)	1,489 SF X 1/9	=	165.44 SY
		SUBTOTAL	1,521.02 SY

RAMP E-4

CURB RETURNS (STA 76+43.38 TO STA 76+95.38)	1,680 SF X 1/9	=	186.67 SY
STA 76+95.38 TO STA 77+95.38	100' X 18' AVG X 1/9	=	200.00 SY
STA 77+95.38 TO STA 93+98.92	1,603.54' X 16' X 1/9	=	2,850.74 SY
		SUBTOTAL	3,237.41 SY

RAMP E-6

CURB RETURNS (STA 77+00.50 TO STA 77+59.68)	2,323 SF X 1/9	=	258.11 SY
STA 77+59.68 TO STA 79+09.68	150' X 19' AVG X 1/9	=	316.67 SY
STA 79+09.68 TO STA 88+73.24	963.56' X 16' X 1/9	=	1,713.00 SY
		SUBTOTAL	2,287.78 SY

RAMP E-7

STA 80+90.31 TO STA 83+98.83	308.52' X 16' X 1/9	=	548.48 SY
STA 86+24.70 TO STA 93+73.12	748.42' X 16' X 1/9	=	1,330.52 SY
STA 93+73.12 TO STA 94+73.12	100' X 18' AVG X 1/9	=	200.00 SY
CURB RETURNS (STA 94+73.12 TO STA 95+66.88)	3,114 SF X 1/9	=	346.00 SY
		SUBTOTAL	2,425.00 SY

RAMP E-8

STA 77+48.65 TO STA 78+09.73	61.08' X 16' X 1/9	=	108.59 SY
STA 80+14.34 TO STA 86+50.00	635.66' X 16' X 1/9	=	1,130.06 SY
STA 86+50.00 TO STA 89+00.00	250' X 22' AVG X 1/9	=	611.11 SY
STA 89+00.00 TO STA 90+02.31	102.31' X 40.31' AVG X 1/9	=	458.24 SY
STA 90+02.31 TO STA 91+00.00	97.69' X 16' X 1/9	=	173.67 SY
STA 91+00.00 TO STA 94+00.00	300' X 22' AVG X 1/9	=	733.33 SY
STA 94+00.00 TO STA 95+19.94	119.94' X 33' AVG X 1/9	=	439.78 SY
CURB RETURNS (STA 95+19.94 TO STA 95+83.83)	4,042 SF X 1/9	=	449.11 SY
		SUBTOTAL	4,103.89 SY

ITEM 451 - 9" REINFORCED CONCRETE PAVEMENT, AS PER PLAN (CONT'D)

RAMP E-8A

STA 9+95.92 TO STA 12+33.38	237.46' X 16' X 1/9	=	422.15 SY
STA 12+33.38 TO STA 13+19.67	86.29' X 17.73' AVG X 1/9	=	169.99 SY
STA 13+19.67 TO STA 13+33.38	13.71' X 21.10' AVG X 1/9	=	32.14 SY
CURB RETURNS (STA 13+33.88 TO STA 13+74.64)	1,548 SF X 1/9	=	172.00 SY
		SUBTOTAL	796.28 SY

RAMP E-8B

CURB RETURNS (STA 100+09.32 TO STA 100+93.30)	3,422 SF X 1/9	=	380.22 SY
STA 100+93.30 TO STA 106+34.73	541.43' X 28' X 1/9	=	1,684.45 SY
CURB RETURNS (STA 106+34.73 TO STA 106+98.34)	3,088 SF X 1/9	=	343.11 SY
		SUBTOTAL	2,407.78 SY

RAMP E-9

STA 9+73.32 TO STA 12+83.46	310.14' X 16' X 1/9	=	551.36 SY
STA 12+83.46 TO STA 13+83.46	100' X 18' AVG X 1/9	=	200.00 SY
STA 13+83.46 TO STA 15+33.46	150' X 20' AVG X 1/9	=	333.33 SY
		SUBTOTAL	1,084.69 SY

RAMP E-10

STA 13+28.65 TO STA 14+07.14	78.49' X 16' X 1/9	=	139.54 SY
STA 15+70.87 TO STA 18+83.38	312.51' X 16' X 1/9	=	555.57 SY
STA 18+83.38 TO STA 19+83.38	100' X 18' AVG X 1/9	=	200.00 SY
STA 19+83.38 TO STA 21+03.38	120' X 27' AVG X 1/9	=	360.00 SY
STA 21+03.38 TO STA 22+08.09	104.71' X 28' X 1/9	=	325.76 SY
CURB RETURNS (STA 22+08.09 TO STA 22+74.09)	2,581 SF X 1/9	=	286.78 SY
		SUBTOTAL	1,867.65 SY

RAMP E-12

STA 12+08.65 TO STA 13+58.65	150' X 19' AVG X 1/9	=	316.67 SY
STA 13+58.65 TO STA 17+94.72	436.07' X 20' X 1/9	=	969.04 SY
CURB RETURN (STA 17+94.72 TO STA 18+80.93)	3,253 SF X 1/9	=	361.44 SY
		SUBTOTAL	1,647.15 SY

RAMP E-15 PAVEMENT

CURB RETURN (STA 9+22.86 TO STA 9+89.69)	3,185 SF X 1/9	=	353.89 SY
STA 9+89.69 TO STA 11+22.13	132.44' X 27' AVG X 1/9	=	397.32 SY
STA 11+22.13 TO STA 12+66.12	143.99' X 24' X 1/9	=	383.97 SY
STA 12+66.12 TO STA 14+16.12	150' X 20.00' AVG X 1/9	=	333.33 SY
STA 14+16.12 TO STA 20+34.10	617.98' X 16' X 1/9	=	1,098.63 SY
		SUBTOTAL	2,567.14 SY

RAMP E-16

CURB RETURNS (STA 12+45.21 TO STA 13+32.49)	3,395 SF X 1/9	=	377.22 SY
STA 13+32.49 TO STA 14+82.49	150' X 19' AVG X 1/9	=	316.67 SY
STA 14+82.49 TO STA 24+50.00	967.51' X 16' X 1/9	=	1,720.02 SY
		SUBTOTAL	2,413.91 SY

FULLER STREET

STA 11+40.59 TO STA 16+88.83	548.24' X 25' X 1/9	=	1,552.89 SY
		SUBTOTAL	1,552.89 SY
		TOTAL	27,972.59 SY

QUANTITY CALCULATIONS

CALC BY PRP DATE 3/88 | CHK'D BY DSB DATE 3/90 | SUM-76-11.57 | FED. PROJECT IR-76-2(44)19 | OHIO | F.H.W.A. REGION 5 | 112 / 1214

SUMMIT COUNTY

ITEM 452 - 10" (AVG) PLAIN CONCRETE PAVEMENT, AS PER PLAN

I-76 MEDIAN SHOULDER LEFT

STA 28+27.59 TO STA 31+50.00 BK	322.41' X 4.25' X 1/9	=	152.25 SY
	SUBTOTAL		152.25 SY

I-76 MEDIAN SHOULDER RIGHT

STA 550+10.04 TO STA 553+43.40 BK	333.36' X 9.25' AVG X 1/9	=	342.62 SY
	SUBTOTAL		342.62 SY

I-76 MEDIAN SHOULDER LEFT & RIGHT

STA 553+43.40 AHD TO STA 575+88.31	2,244.91' X 4.25' X 1/9 X 2	=	2,120.19 SY
STA 577+18.31 TO STA 587+19.08	1,000.77' X 4.25' X 1/9 X 2	=	945.17 SY
STA 587+19.08 TO STA 593+20.12	601.04' X 7' AVG X 1/9 X 2	=	934.95 SY
STA 593+20.12 TO STA 595+24.19	204.07' X 9.75' X 1/9 X 2	=	442.15 SY
STA 596+41.79 TO STA 600+25.23	383.44' X 9.75' X 1/9 X 2	=	830.79 SY
STA 608+99.03 TO STA 610+56.52	157.49' X 9.75' X 1/9 X 2	=	341.23 SY
STA 611+79.83 TO STA 629+22.21	1,742.38' X 9.75' X 1/9 X 2	=	3,775.16 SY
STA 630+30.59 TO STA 634+00.00	369.41' X 9.75' X 1/9 X 2	=	800.39 SY
	SUBTOTAL		10,190.03 SY
	TOTAL		10,684.90 SY

ITEM 452 - 9" PLAIN CONCRETE PAVEMENT, AS PER PLAN

RAMP E-2 RIGHT SIDE SHOULDER

STA 6+05.84 TO STA 7+05.84	100' X 7' AVG X 1/9	=	77.78 SY
STA 7+05.84 TO STA 10+72.00	366.16' X 6' X 1/9	=	244.11 SY
CURB RETURN (STA 10+72.00 TO STA 10+90.00	44 SF X 1/9	=	4.89 SY
	SUBTOTAL		326.78 SY

RAMP E-4 RIGHT SIDE SHOULDER

STA 76+95.38 TO STA 83+75.00	679.62' X 3' X 1/9	=	226.54 SY
STA 83+75.00 TO STA 85+99.00	224' X 4' X 1/9	=	99.56 SY
STA 85+99.00 TO STA 86+39.00	40' X 5' AVG X 1/9	=	22.22 SY
STA 86+39.00 TO STA 93+98.92	759.92' X 3' X 1/9	=	253.31 SY
	SUBTOTAL		601.63 SY

RAMP E-6 LEFT SIDE SHOULDER

STA 77+59.68 TO STA 86+13.36	853.68' X 4' X 1/9	=	379.41 SY
	SUBTOTAL		379.41 SY

RAMP E-7 RIGHT SIDE SHOULDER

STA 83+31.11 TO STA 84+45.00	113.89' X 3' X 1/9	=	37.96 SY
STA 86+85.00 TO STA 88+25.00	140.00' X 4' X 1/9	=	62.22 SY
STA 88+25.00 TO STA 88+65.00	40' X 5' AVG X 1/9	=	22.22 SY
STA 88+65.00 TO STA 95+13.54	648.54' X 3' X 1/9	=	216.18 SY
STA 95+13.54 TO STA 95+38.54	25' X 2.50' AVG X 1/9	=	6.94 SY
	SUBTOTAL		345.52 SY

RAMP E-8 LEFT SIDE SHOULDER

STA 77+48.65 TO STA 78+40.00	95.35' X 3' X 1/9	=	31.78 SY
STA 80+50.00 TO STA 82+40.00	190.00' X 4' X 1/9	=	84.44 SY
STA 82+40.00 TO STA 92+00.00	960' X 3' X 1/9	=	320.00 SY
	SUBTOTAL		436.22 SY

RAMP E-8A LEFT SIDE SHOULDER

STA 9+95.92 TO STA 13+19.67	323.75' X 3' X 1/9	=	107.92 SY
STA 13+19.67 TO STA 13+44.65	24.98' X 2.50' AVG X 1/9	=	6.94 SY
	SUBTOTAL		114.86 SY

RAMP E-9 LEFT SIDE SHOULDER

STA 9+73.32 TO STA 13+83.46	410.14' X 3' X 1/9	=	136.71 SY
	SUBTOTAL		136.71 SY

ITEM 452 - 9" PLAIN CONCRETE PAVEMENT, AS PER PLAN (CONT'D)

RAMP E-10 LEFT SIDE SHOULDER

STA 13+28.65 TO STA 14+07.14	78.49' X 3' X 1/9	=	26.16 SY
STA 15+70.87 TO STA 19+83.38	412.51' X 4' X 1/9	=	183.34 SY
	SUBTOTAL		209.50 SY

RAMP E-12 RIGHT SIDE SHOULDER

STA 13+23.88 TO STA 18+47.00	523.12' X 3' X 1/9	=	174.37 SY
	SUBTOTAL		174.37 SY

RAMP E-15 RIGHT SIDE SHOULDER

STA 9+56 TO STA 20+34.10	1,078.10' X 3' X 1/9	=	359.37 SY
	SUBTOTAL		359.37 SY

RAMP E-16 LEFT SIDE SHOULDER

STA 13+32.49 TO STA 22+15.00	882.51' X 4' X 1/9	=	392.23 SY
STA 22+15.00 TO STA 22+47.04	32.04' X 3' X 1/9	=	10.68 SY
	SUBTOTAL		402.91 SY
	TOTAL		3,487.28 SY

ITEM 452 - 7.5" (AVG) PLAIN CONCRETE PAVEMENT, AS PER PLAN

RAMP E-4 LEFT SIDE SHOULDER

STA 76+95.38 TO STA 77+95.38	100.00' X 4.00' AVG X 1/9	=	44.44 SY
STA 77+95.38 TO STA 84+46.00	650.62' X 6' X 1/9	=	433.75 SY
STA 84+46.00 TO STA 88+37.00	391' X 8' X 1/9	=	347.56 SY
STA 88+37.00 TO STA 93+48.92	511.92' X 6' X 1/9	=	341.28 SY
STA 93+48.92 TO STA 93+98.92	50' X 7' AVG X 1/9	=	38.89 SY
	SUBTOTAL		1,205.92 SY

RAMP E-6 RIGHT SIDE SHOULDER

STA 77+59.68 TO STA 79+09.68	150' X 5' AVG X 1/9	=	83.33 SY
STA 79+09.68 TO STA 80+37.00	127.32' X 8' X 1/9	=	113.17 SY
STA 80+37.00 TO STA 88+23.24	786.24' X 6' X 1/9	=	524.16 SY
STA 88+23.24 TO STA 88+73.24	50' X 7' AVG X 1/9	=	38.89 SY
	SUBTOTAL		759.55 SY

RAMP E-7 LEFT SIDE SHOULDER

STA 80+90.31 TO STA 81+40.31	50' X 9' AVG X 1/9	=	50.00 SY
STA 81+40.31 TO STA 83+98.83	258.52' X 8' X 1/9	=	229.80 SY
STA 86+24.70 TO STA 87+08.00	83.30' X 8' X 1/9	=	74.04 SY
STA 87+08.00 TO STA 87+48.00	40' X 9' AVG X 1/9	=	40.00 SY
STA 87+48.00 TO STA 93+73.12	625.12' X 6' X 1/9	=	416.75 SY
STA 93+73.12 TO STA 94+73.12	100' X 4' AVG X 1/9	=	44.44 SY
	SUBTOTAL		855.03 SY

RAMP E-8 RIGHT SIDE SHOULDER

STA 77+48.65 TO STA 77+98.65	50' X 9' AVG X 1/9	=	50.00 SY
STA 77+98.65 TO STA 78+09.73	11.08' X 8' X 1/9	=	9.85 SY
STA 80+14.34 TO STA 90+02.31	987.97' X 6' X 1/9	=	658.65 SY
STA 90+02.31 TO STA 94+00.00	397.69' X 6' X 1/9	=	265.13 SY
STA 94+00.00 TO STA 95+19.94	119.94' X 4' AVG X 1/9	=	53.31 SY
	SUBTOTAL		1,036.94 SY

RAMP E-8 LEFT SIDE SHOULDER

STA 92+00.00 TO STA 93+00.00	100' X 5' AVG X 1/9	=	55.56 SY
STA 93+00.00 TO STA 94+00.00	100' X 7.50' X 1/9	=	83.33 SY
STA 94+00.00 TO STA 95+19.94	119.94' X 4.50' AVG X 1/9	=	59.97 SY
	SUBTOTAL		198.86 SY

RAMP E-8A RIGHT SIDE SHOULDER

STA 9+95.92 TO STA 12+33.38	237.46' X 6' X 1/9	=	158.31 SY
STA 12+33.38 TO STA 13+33.38	100' X 4' AVG X 1/9	=	44.44 SY
	SUBTOTAL		202.75 SY

ITEM 452 - 7.5" (AVG) PLAIN CONCRETE PAVEMENT, AS PER PLAN (CONT'D)

RAMP E-9 RIGHT SIDE SHOULDER

STA 9+73.32 TO STA 10+75.00	101.68' X 14' X 1/9	=	158.17 SY
STA 10+75.00 TO STA 10+96.00	21' X 13.58' AVG X 1/9	=	31.69 SY
STA 10+96.00 TO STA 12+25.00	129' X 9.58' AVG X 1/9	=	137.31 SY
STA 12+25.00 TO STA 12+83.46	58.46' X 6' X 1/9	=	38.97 SY
STA 12+83.46 TO STA 13+83.46	100' X 4' AVG X 1/9	=	44.44 SY
	SUBTOTAL		410.58 SY

RAMP E-10 RIGHT SIDE SHOULDER

STA 13+28.65 TO STA 13+78.65	50' X 9' AVG X 1/9	=	50.00 SY
STA 13+78.65 TO STA 14+07.14	28.49' X 8' X 1/9	=	25.32 SY
STA 15+70.87 TO STA 18+83.38	312.51' X 6' X 1/9	=	208.34 SY
STA 18+83.38 TO STA 19+83.38	100' X 4' AVG X 1/9	=	44.44 SY
	SUBTOTAL		328.10 SY

RAMP E-12 LEFT SIDE SHOULDER

STA 12+08.65 TO STA 12+58.65	50' X 7' AVG X 1/9	=	38.89 SY
STA 12+58.65 TO STA 17+94.72	536.07' X 6' X 1/9	=	357.38 SY
	SUBTOTAL		396.27 SY

RAMP E-15 LEFT SIDE SHOULDER

STA 9+89.69 TO STA 11+22.13	132.44' X 4' AVG X 1/9	=	58.86 SY
STA 11+22.13 TO STA 19+84.10	861.97' X 6' X 1/9	=	574.65 SY
STA 19+84.10 TO STA 20+34.10	50' X 7' AVG X 1/9	=	38.89 SY
	SUBTOTAL		672.40 SY

RAMP E-16 RIGHT SIDE SHOULDER

STA 13+32.49 TO STA 14+82.49	150' X 5' AVG X 1/9	=	83.33 SY
STA 14+82.49 TO STA 17+16.00	233.51' X 8' X 1/9	=	207.56 SY
STA 17+16.00 TO STA 20+80.00	364.00' X 6' X 1/9	=	242.67 SY
STA 20+80.00 TO STA 21+20.00	40' X 9' AVG X 1/9	=	40.00 SY
STA 21+20.00 TO STA 24+00.00	280' X 8' X 1/9	=	248.89 SY
STA 24+00.00 TO STA 24+50.00	50' X 9' AVG X 1/9	=	50.00 SY
	SUBTOTAL		872.45 SY
	TOTAL		6,938.85 SY

ITEM 611 - REINFORCED CONCRETE APPROACH SLAB (T=13"), AS PER PLAN

RAMP E-7

(FOR DETAIL, SEE SHEET 898)

STA 83+98.83 TO STA 84+68.46	AS PER PLAN	=	176.78 SY
STA 85+72.60 TO STA 86+24.70	AS PER PLAN	=	158.33 SY
	SUBTOTAL		335.11 SY

RAMP E-8

(FOR DETAIL, SEE SHEET 879)

STA 78+09.73 TO STA 78+64.04	AS PER PLAN	=	156.82 SY
STA 79+59.30 TO STA 80+20.08	AS PER PLAN	=	187.95 SY
	SUBTOTAL		344.77 SY
	TOTAL		679.88 SY

QUANTITY CALCULATIONS

CALC BY PRP DATE 8/88	SUM-76-11.57	OHIO
CK BY DSB DATE 3/90	FED. PROJECT IR-76-2(44)19	F.H.W.A. REGION 5

SUMMIT COUNTY

113
1214

ITEM 611 - REINFORCED CONCRETE APPROACH SLAB (T=15")

I-76 WESTBOUND

STA 27+17.78 TO STA 27+42.78	25' X 52' X 1/9	=	144.44 SY
STA 28+02.59 TO STA 28+27.59	25' X 52' X 1/9	=	144.44 SY
		SUBTOTAL	288.88 SY

I-76 EASTBOUND

STA 548+97.60 TO STA 549+22.60	25' X 66' X 1/9	=	183.33 SY
STA 549+85.04 TO STA 550+10.04	25' X 60' X 1/9	=	166.67 SY
		SUBTOTAL	350.00 SY

I-76 EASTBOUND AND WESTBOUND

STA 575+88.31 TO STA 576+13.31	25' X 140' AVG X 1/9	=	388.89 SY
STA 576+93.31 TO STA 577+18.31	25' X 156' AVG X 1/9	=	433.33 SY
STA 610+56.52 TO STA 610+81.52	AS PER PLAN 3,858 SF X 1/9	=	428.67 SY
STA 611+54.83 TO STA 611+79.83	AS PER PLAN 4,080 SF X 1/9	=	453.33 SY
STA 629+22.21 TO STA 629+47.21	AS PER PLAN 3,617 SF X 1/9	=	401.89 SY
STA 630+05.59 TO STA 630+30.59	AS PER PLAN 3,493 SF X 1/9	=	388.11 SY
		SUBTOTAL	2,494.22 SY
		TOTAL	3,133.10 SY

ITEM 611 - REINFORCED CONCRETE APPROACH SLAB (T=15"), AS PER PLAN

(FOR DETAIL, SEE SHEET 930)

STA 595+24.19 TO STA 595+49.19	25' X 167' AVG X 1/9	=	463.89 SY
STA 596+16.79 TO STA 596+41.79	25' X 162' AVG X 1/9	=	450.00 SY
		TOTAL	913.89 SY

ITEM 611 - REINFORCED CONCRETE APPROACH SLAB (T=17"), AS PER PLAN

I-76 EASTBOUND AND WESTBOUND

(FOR DETAIL, SEE SHEET 1074)

STA 600+25.23 TO STA 600+55.23	AS PER PLAN 4,365 SF X 1/9	=	485.00 SY

(FOR DETAIL, SEE SHEET 1075)

STA 608+69.03 TO STA 608+99.03	AS PER PLAN 4,521 SF X 1/9	=	502.33 SY
		SUBTOTAL	987.33 SY

RAMP E-9

(FOR DETAIL, SEE SHEET 1076)

STA 9+43.13 TO STA 9+73.13	AS PER PLAN 993 SF X 1/9	=	110.33 SY
		SUBTOTAL	110.33 SY

RAMP E-10

(FOR DETAIL, SEE SHEET 1134)

STA 14+07.14 TO STA 14+37.14	AS PER PLAN 851 SF X 1/9	=	94.56 SY
STA 15+40.87 TO STA 15+70.87	AS PER PLAN 879 SF X 1/9	=	97.67 SY
		SUBTOTAL	192.23 SY
		TOTAL	1,289.89 SY

AA B.Pe 71942R

CALC. BY. DATE	SUM - 76 - 11.57	OHIO	114 / 1214
CHKD. BY. DATE	FED. PROJECT IR-76-2(44)19	F.H.W.A. REGION 5	
	SUMMIT COUNTY		

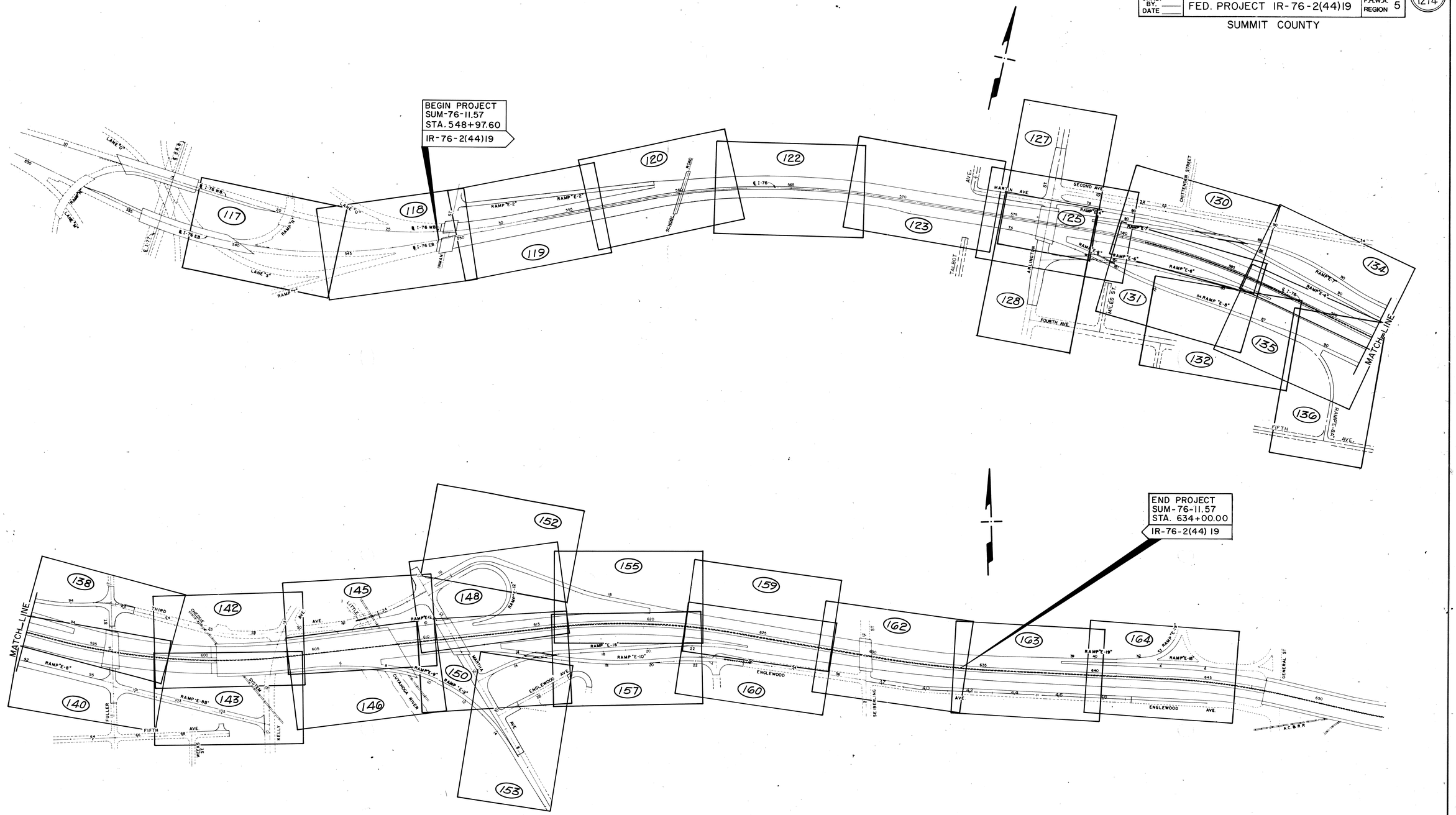

ROADWAY **KEY MAP**

ROADWAY SUBSUMMARY

CALC. BY KDK DATE 7/90	SUM-76-11.57	OHIO
CHKD. BY DSB DATE 9/90	FED PROJECT IR-76-2(44)19	F.H.W.A. REGION 5
	SUMMIT COUNTY	

115
1214

SHEET NUMBER																														ITEM	GRAND TOTAL	UNIT	DESCRIPTION
121	124	126	129	133	137	139	141	144	147	149	151	154	156	158	165	220	222	224	225	227	228	230	232	234	236	237	240						
																																	ROADWAY
																			LUMP		LUMP	LUMP		LUMP	LUMP					202	LUMP		STRUCTURES REMOVED
																										LUMP	LUMP			202	LUMP		PORTIONS OF STRUCTURES REMOVED
																12,545	11,660	20,147		18,959		4,680	14,401	12,974	10,968					202	105,334	S.Y.	PAVEMENT REMOVED
																	685		18,969		19,591	3,385	11,593	9,545	9,255					202	72,523	S.F.	WALK REMOVED
																					182									202	182	L.F.	CURB REMOVED
																			LUMP		LUMP	LUMP								202	LUMP		STEPS REMOVED
																3,987.5	846	2,375		1,129		1,095	859	2,314	1,584					202	13,690	L.F.	GUARDRAIL REMOVED
																2,287	2,536	2,456		2,645		2,036	2,035	2,079	1,830					202	17,904	L.F.	FENCE REMOVED
																	645		289		50	60	145	140	155					202	1,424	L.F.	CONCRETE BARRIER REMOVED
																											1			203	1	C.Y.	EXCAVATION NOT INCLUDING EMBANKMENT CONSTRUCTION
																										3,655	3,658			203	7,313	C.Y.	EMBANKMENT
																9,283						444								254	4,727	S.Y.	PAVEMENT PLANING, BITUMINOUS (DEPTH 1 1/4")
76.2		15.8		26	8.8		16.4				8.8	34		19.5																301	206	C.Y.	BITUMINOUS AGGREGATE BASE, AC-20
3.0		17.5	23.2	45.2		6.1	0.9	4.4			9.7	62.1	12.6	13.7	37.6											543	522			304	1,301	C.Y.	AGGREGATE BASE, AS PER PLAN
				224				26				373			19.8															305	643	S.Y.	9" CONCRETE BASE
			0.5																											402	1	C.Y.	ASPHALT CONCRETE, AC-20
			0.5	7.4				0.9				12.5																		404	22	C.Y.	ASPHALT CONCRETE, AC-20 (DRIVEWAYS)
															67.8															404	68	C.Y.	ASPHALT CONCRETE, AC-20
				19				2.1				29.9			1.7															407	53	GAL.	TACK COAT
			1.6																											408	2	GAL.	BITUMINOUS PRIME COAT
		28	50				8							53																452	139	S.Y.	6" PLAIN CONCRETE PAVEMENT
		17	88												152															452	257	S.Y.	8" PLAIN CONCRETE PAVEMENT
																										LUMP	LUMP			503	LUMP		COFFERDAMS, CRIBS, AND SHEETING
																										58	145			603	203	L.F.	6" CONDUIT, TYPE F, 707.17, NON-PERFORATED, ASTM 3034 SDR35 OR SS931
																										249	245			605	494	L.F.	6" SHALLOW PIPE UNDERDRAIN, AS PER PLAN, 707.17, ASTM 3034 SDR35 OR SS931
																																	PERFORATED AS PER 707.15, WITH FABRIC WRAP
			102																											603	102	L.F.	6" CONDUIT, TYPE E 707.15 PERFORATED
124		890		61	35	171	140	143	188	157	191			34	277															605	1,811	L.F.	6" SHALLOW PIPE UNDERDRAINS, 707.17, ASTM 3034, SDR 35 OR SS 931,
																																	PERFORATED AS PER 707.15 OR 707.17, AS PER PLAN
2962.5	25	550		1037.5	337.5		637.5	37.5		25	250	1362.5		762.5																606	7987.5	L.F.	GUARDRAIL, TYPE 5
387.5																														606	387.5	L.F.	GUARDRAIL, TYPE 4
5	1	4		2	5		1			1	4	2		2																606	27	EA.	ANCHOR ASSEMBLY, TYPE A
3																														606	3	EA.	ANCHOR ASSEMBLY, TYPE B
5		1		2	2							1		2																606	13	EA.	ANCHOR ASSEMBLY, TYPE T
6	1	3		1	3		2			1	4	2		1																606	24	EA.	BRIDGE TERMINAL ASSEMBLY, TYPE 1
4				1			1					1		1																606	8	EA.	BRIDGE TERMINAL ASSEMBLY, TYPE 2

ROADWAY SUBSUMMARY

CALC. BY KDK DATE 7/90
CHKD. BY DSB DATE 7/90

SUM-76-11.57
FED PROJECT IR-76-2(44)19
SUMMIT COUNTY

OHIO
F.H.W.A. REGION 5

116
1214

SHEET NUMBER																					ITEM	GRAND TOTAL	UNIT	DESCRIPTION
121	124	126	129	133	137	139	141	144	147	149	151	154	156	158	161	165	166	167	168	237	240					
																									ROADWAY cont.
																	5,393	7,084	4,453			607	16,930	L.F.	FENCE, TYPE CLT, AS PER PLAN
																	1					607	1	EA.	14' GATE, TYPE CLT, AS PER PLAN
129	653	5,333	8,452	426	309	7,716	903	1,235	1,160	4,617	2,081	1,699	2,005	2,035	1058	8,896						608	42,697	S.F.	4" CONCRETE WALK
2	1	7			2	5	5	2	1	2	2	3				3						608	35	EA.	CURB RAMP, TYPE 1, AS PER PLAN
												90										608	90	S.F.	CURB RAMP, TYPE 1, AS PER PLAN
	1			2											1							608	4	EA.	CURB RAMP, TYPE 2, AS PER PLAN
								25														608	25	S.F.	CURB RAMP, TYPE 2, AS PER PLAN
136																						608	136	L.F.	CONCRETE STEPS, TYPE A
			72																			608	72	L.F.	CONCRETE STEPS, TYPE B
1,053	89	161	354	436	306	730	931	26		460	288	168		697								609	5,639	L.F.	CURB, TYPE 2A
60	769	655	671	804				90	170	1,248	161	1,593		442	147	8,365						609	9,175	L.F.	CURB, TYPE 2B
	26			29	26			27		133				25								609	266	L.F.	CURB, TYPE 6
							1160															609	1,160	L.F.	COMBINATION CURB AND GUTTER, TYPE 2
										135		71										612	206	S.Y.	CONCRETE MEDIAN
															36							612	36	S.Y.	6" CONCRETE TRAFFIC ISLAND
40		99		108		77.5	50	30	30		128.5		168			142.5						622	874	L.F.	CONCRETE BARRIER, TYPE B50
		40																				622	40	L.F.	CONCRETE BARRIER, TYPE B50, AS PER PLAN
1680																						622	1,680	L.F.	CONCRETE BARRIER, TYPE D
	204	53		309	30	330			83	137	247	410		616	70							622	2489	L.F.	CONCRETE BARRIER, TYPE D, AS PER PLAN
			46																			657	96	S.Y.	RIPRAP FOR TREE PROTECTION, AS PER PLAN
																				847	709	SPECIAL	1,556	C.Y.	LOW STRENGTH MORTAR BACKFILL MATERIAL, CLASS LSM-100
												411	774									SPECIAL	1,185	S.F.	BRICK WALK
124		282		54	28	171	140	143	180	157	183			26		277						SPECIAL	1,765	L.F.	PRESSURE RELIEF JOINT, TYPE A
128																						SPECIAL	128	L.F.	PRESSURE RELIEF JOINT, TYPE C, W/ RESURFACING
																				2	4	SPECIAL	6	EA.	PRECAST REINFORCED CONCRETE OUTLET

CALC. BY. DATE	SUM-76-11.57	OHIO	117 / 1214
CHKD. BY. DATE	FED. PROJECT IR-76-2(44)19	F.H.W.A. REGION 5	

SUMMIT COUNTY

LEGEND

- ROADWAY SOIL BORING
- (GR) GUARDRAIL
- (PJ) PRESSURE RELIEF JOINT
- (B) BARRIER
- (D) DRIVEWAY
- (ST) CONCRETE STEPS
- (CM) CONCRETE MEDIAN
- (SW) SIDEWALK
- FULL DEPTH ASPHALT PAVEMENT
- (AC) ASPHALT CONCRETE
- (C) CURB
- (RW) RETAINING WALL
- (CR) CURB RAMP
- ASPHALT RESURFACING
- ASPHALT OVERLAY W/ CONCRETE BASE

48" COMB

EX. 6" U.D.

I-76 WEST BOUND

17 18 19 20 21

BY OTHERS
PROJECT SUM-76-11.48
SUM-77-8.94
SUM-8-0.00

STA. 41+23.98 RAMP 'R' BACK
STA. 2+84.03 RAMP 'R' AHEAD

EX. RAMP 'R'

COMB 15"

12" S

5 4 3 2 1

COMB 48"

ELEC

39 40 41

539 540 541

75' SHOULDER TAPER

541+50 542+25

EX. 6" U.D.

542 543

MEET EXISTING WIDTH-5'±

MEET EXISTING WIDTH-11'±

I-76 EAST BOUND

GR 2A

GR 1A

MATCH LINE STA. 544+00
SEE SHEET 118

WALL

12" S

6" U.D.

BEGIN WORK
STA. 541+50 I-76 E.B.

EX. LANE 'S'

BY OTHERS
PROJECT SUM-76-11.48
SUM-77-8.94
SUM-8-0.00

FOR ROADWAY QUANTITIES, SEE SHEET 121
FOR DRAINAGE PLAN, SEE SHEET 485
FOR REMOVAL PLAN, SEE SHEET 218

SAN 8"

EX. RAMP 'T'

EX. 6" U.D.

0 20 40 60
SCALE IN FEET

STA. 538+00 TO STA. 544+00
ROADWAY

CALC. BY. DATE	SUM-76-11.57	OHIO
CHKD. BY. DATE	FED. PROJECT IR-76-2(44)19	F.H.W.A. REGION 5

SUMMIT COUNTY

118
1214

BENCHMARK : TOP OF ½" BOLT ON NORTH SIDE OF POLE AT S.E. CORNER OF ISLAND AT INMAN ST. AND FIFTH AVE. EL. 1102.83

EX. LANE 'U'

COMB 48"

EX. 6" U.D.?

I-76 WEST BOUND

STA. 24+58 ± BEGIN CONCRETE SHOULDER

COMB 24"

W 12"

NORTH SERVICE ROAD

STA. 27+72.63, ℄ I-76 WESTBOUND
STA. 12+44.85, ℄ INMAN STREET

GR 4

C 1

PROP. CURB TYPE 28

12" W

6" G

STREET

24" COMB

PJ 2

BEGIN APPROACH SLAB
STA. 27+17.78

MATCH LINE STA. 544+00
SEE SHEET 117

GR 2A

EX. 6" U.D.?

545

546

547

548

549

I-76 EAST BOUND

CS STA. 546+98.33

COMB 48"

STA. 25+88

50' SHOULDER TAPER

548+22.60

26+38

GR 3

GR 2

548+97.60

PROP. TYPE 28 CURB

75' SHOULDER TAPER

MATCH LINE STA. 550+00
SEE SHEET 119

8"

MEET EXISTING WIDTH - 5 ±

BEGIN APPROACH SLAB
STA. 548+97.60

PJ 1

ST STA. 548+98.33

GR 1A

STA. 545+53

6"

2"

15" COMB

12" S

EX. RAMP 'T'

STA. 546+65 ± BEGIN CONCRETE SHOULDER

24" COMB

STA. 549+53.82 ℄ I-76 EASTBOUND
STA. 12+11.53, ℄ INMAN ST.

GR 1

C 2

PROP. CURB TYPE 28

12" S

15" S

12" S

BEGIN PROJECT
SUM-76-11.57
STA. 548+97.60
IR-76-2(44)19

SOUTH SERVICE ROAD

W 6"

12" W

INMAN

6" G

39" COMB

24" COMB

FOR STRUCTURE PLAN, SEE SHEET 805
FOR LEGEND, SEE SHEET 117.
FOR ROADWAY QUANTITIES, SEE SHT. 121
FOR DRAINAGE PLAN, SEE SHEET 486.
FOR PAVEMENT DETAILS, SEE SHT. 192.
FOR REMOVAL PLAN, SEE SHEET 219.
* CURB TRANSITION 0" TO 6" IN 10'
FOR FENCE PLAN SEE SHT. 166

0 20 40 60
SCALE IN FEET

STA. 544+00 TO STA. 550+00
ROADWAY

CALC. BY. DATE	SUM-76-11.57	OHIO
CHKD. BY. DATE	FED. PROJECT IR-76-2(44)19	F.H.W.A. REGION 5

SUMMIT COUNTY

119
1214

STA. 13+32.32 ℄ RAMP E-2
END NEW PAVEMENT

** CURB TRANSITION MEET EXISTING CURB IN 10'

14" COMB 24"

12" W

INMAN STREET

8" W COMB 24"

12" W 13

CR 2

CR 1

EXIST. L/A

PROP. CURB TYPE 2A

C 7

GR 7

RAMP 'E-2'

STA. 13+49.11, ℄ RAMP 'E-2'
STA. 13+68.76, ℄ INMAN STREET

* CURB TRANSITION 0" TO 6" IN 10'

PROP CURB TYPE 2A C 5

GR 6

C 6 PROP. CURB TYPE 2A

MATCH LINE STA. 7+65

MATCH LINE STA. 28+25

PJ 4

END APPROACH SLAB
STA. 28+27.59

CS STA. 29+76.49

I-76 WEST BOUND

℄ SHIFT STA. 31+50.00 BK. ℄ I-76 WB =
STA. 553+43.40 AHD. ℄ I-76, 6' RT.

ST STA. 31+50.00

℄ I-76

EX. U/D

EX. ℄ W.B.

EXIST. ℄ E.B.

MATCH LINE STA. 550+00
SEE SHEET 118

MATCH LINE STA. 556+00
SEE SHEET 120

END APPROACH SLAB
STA. 550+10.04

PJ 3

℄ SHIFT STA. 553+43.40 BK. ℄ I-76 EB =
STA. 553+43.40 AHD. ℄ I-76, 6' LT.

I-76 EAST BOUND

PROP CURB TYPE 2A C 4

GR 5

EXIST. L/A

FOR LEGEND, SEE SHEET 117

FOR ROADWAY QUANTITIES, SEE SHEET 121.

FOR PAVEMENT DETAILS, SEE SHEET 192.

FOR DRAINAGE PLAN, SEE SHEET 487.

FOR FENCE PLAN SEE SHEET 166.

FOR REMOVAL PLAN, SEE SHEET 213.

FOR STRUCTURE PLANS, SEE SHEET 805.

0 20 40 60
SCALE IN FEET

STA. 550+00 TO STA. 556+00
ROADWAY

CALC. BY.		SUM-76-11.57	OHIO
CHKD. BY.		FED. PROJECT IR-76-2(44)19	F.H.W.A. REGION 5
DATE		SUMMIT COUNTY	

120
1214

* CURB TRANSITION 0" TO 6" IN 10'

FOOTBALL STADIUM

TIE TO EXISTING GUARDRAIL RUN

SCHOOL ROAD

MATCH LINE STA. 14+50

STA. 15+00 MEET EXIST.

NOSE STA. 557+54.54, 63' LT. ℄ I-76
STA. 6+05.84, 18' LT. ℄ RAMP 'E-2'

STA. 48+00 MEET EXIST.

STA. 12+83.92, SCHOOL ROAD = STA. 50+00.00, SCHOOL WALK

FOR GRADING LIMITS, SEE DRAINAGE SHEET 488

STA. 12+91.67

STA. 13+37.19

STA 13+88.09

MATCH LINE STA. 14+50

SCHOOL WALK

EXIST LA

50' SHOULDER & TAPER

MATCH LINE STA. 7+65

RAMP 'E-2'

PROP. CURB TYPE 2A

STA. 560+12.47, ℄ I-76
STA. 11+50.29, ℄ SCHOOL ROAD

PROP. CONC. STEPS TO BE CONSTRUCTED PER O.D.O.T. STD. MC-2 TYPE-A, FOR DETAIL SEE CROSS SECTION SHEET 476

PCC STA. 561+09.26, 54' LT ℄ I-76

100' SHOULDER TAPER

MATCH LINE STA. 556+00 SEE SHEET 119

PC STA. 558+15.65

I-76 WEST BOUND

℄ I-76

I-76 EAST BOUND

EX. UD

48' STA. 556+70

40:1 TAPER

11 SCHOOL ROAD

36' STA. 561+50

MATCH LINE STA. 562+00 SEE SHEET 122

EXISTING PEDESTRIAN BRIDGE TO BE UPGRADED

SEE LANDSCAPE PLANS, SHEET 560 FOR EXISTING TREES TO REMAIN.

FEATHER AREA

EXIST. L/A

STA 10+34.80 MEET EXIST

EXISTING GATE (DO NOT DISTURB)

HOBAN SCHOOL

FOR REMOVAL PLAN, SEE SHEET 215 & 221

FOR LEGEND, SEE SHEET 117.

FOR ROADWAY QUANTITIES, SEE SHEET 121.

FOR PAVEMENT DETAILS, SEE SHEET 193.

FOR DRAINAGE PLAN, SEE SHEET 488.

FOR FENCE PLAN SEE SHEET 166.

FOR STRUCTURE PLANS, SEE SHEET 825.

0 20 40 60
SCALE IN FEET

STA. 556+00 TO STA. 562+00
ROADWAY

QUANTITY SUB-SUMMARY

* 707.17, ASTM 3034 SDR 35 OR SUPP. SPEC. 931 PERFORMED AS PER 707.15 OR 707.17 AS PER PLAN

CALC. BY CDB DATE 6/89	SUM-76-11.57	OHIO	121 / 1214
CHKD BY DSB DATE 8/90	FEDERAL PROJ. IR-76-2-(44)19	F.H.W.A. REGION 5	

SUMMIT COUNTY

SHEET NUMBER	REFERENCE NUMBER	LOCATION	SIDE	304	605	SPEC.	SPEC.	606	606	606	606	606	301	606	606	608	608	608	609	609	622	622	622
				AGGREGATE BASE, AS PER PLAN	6" SHALLOW PIPE UNDERDRAIN, *	PRESSURE RELIEF JOINT, TYPE A	PRESSURE RELIEF JOINT TYPE C W/RESURFACING	GUARDRAIL, TYPE 5	ANCHOR ASSEMBLY, TYPE A	ANCHOR ASSEMBLY, TYPE T	BRIDGE TERMINAL ASSEMBLY, TYPE 1	BRIDGE TERMINAL ASSEMBLY, TYPE 2	BITUMINOUS AGGREGATE BASE, AC-20	GUARDRAIL, TYPE 4	ANCHOR ASSEMBLY, TYPE B	CURB RAMP, TYPE I AS PER PLAN	4" CONCRETE WALK	CONCRETE STEPS, TYPE A	CURB, TYPE 2A	CURB, TYPE 2B	CONCRETE BARRIER, TYPE B50	CONCRETE BARRIER, TYPE D	
				C.Y.	LF.	LF.	LF.	LF.	EA.	EA.	EA.	EA.	C.Y.	LF.	EA.	EA.	S.F.	LF.	LF.	LF.	LF.	LF.	
117	GR-1A	STA. 541+50 TO STA 544+12.50 I-76 EB	RT.					250		1			6.5										
117	GR-2A	STA. 542+41 TO STA. 545+03.5 I-76 EB	LT.					225	1	1			6.5										
118	GR-1	STA 546+65 TO STA 548+57 I-76 EB	RT					200			1		5.0										
	GR-2	STA 547+92 TO STA 549+17 I-76 EB	LT					100	1		1		3.1										
	GR-3	STA 26+06 TO STA 27+31 I-76 WB	RT					112.5		1		1	3.1										
	GR-4	STA 24+64 TO STA 27+20 I-76 WB	LT					262.5				1	6.5										
	PJ-1	STA 547+88 I-76 EB	LT/RT				71																
	PJ-2	STA 26+36 I-76 WB	LT/RT				57																
	C-1	STA 26+94 TO STA 27+20 I-76 WB	LT																	26			
	C-2	STA 548+31 TO STA 548+57 I-76 EB	RT																	26			
118	C-3	STA 548+92 TO STA 549+00 I-76 EB	LT																	8			
119	GR-5	STA 550+00 I-76 EB TO STA 555+14 I-76	RT					500		1		1	12.7										
	GR-6	STA 28+56 I-76 WB TO STA 556+77 I-76	LT					600	1		1		15.5										
	GR-7	STA 10+45 RAMP E-2 TO STA 500+35 I-76	RT/LT					687.5		1	1	1	17.3										
	PJ-3	STA 550+22 TO STA 550+35 I-76 EB	LT/RT		70	70																	
	PJ-4	STA 28+64 TO STA 28+73 I-76 WB	LT/RT		54	54																	
	C-7	STA 10+74 RAMP E-2 TO STA. 14+16 INMAN ST.	LT/RT																264				
	C-4	STA 550+00 TO STA 550+26 I-76	RT																26				
	C-5	STA 28+56 TO STA 28+82 I-76 WB	LT																26				
	C-6	STA 6+05.84 TO STA 13+50 INMAN ST	LT/RT																737				
	CR-1	STA. 13+52 INMAN ST	RT													1	64						
119	CR-2	STA. 14+05 INMAN ST.	RT													1	60						
120	B-1	STA 558+30 TO STA 569+25 I-76	RT																			1095	
	B-2	STA 560+35 TO STA 566+00 I-76	LT																			585	
	B-3	STA 560+65 TO STA 561+05 I-76	℄	3.0																	40		
	ST-1	STA. 12+79 SCHOOL RD	RT															136					
	GR-7C	STA. 557+80 TO STA. 558+30	RT.					25	1		1												
120	GR-7B	STA. 566+00 TO STA. 566+50 I-76	LT.						1		1			212.5	1								
120	GR-7A	STA. 13+00 TO 15+00 (SCHOOL ROAD)	RT.											175	2								
	TOTALS			3.0	124	124	128	2962.5	5	5	6	4	76.2	387.5	3	2		124	136		1053	60		40		1680

AA B.Ps 71942R

CALC. BY. DATE	SUM-76-11.57	OHIO
CHKD. BY. DATE	FED. PROJECT IR-76-2(44)19	F.H.W.A. REGION 5

122
121.4

SUMMIT COUNTY

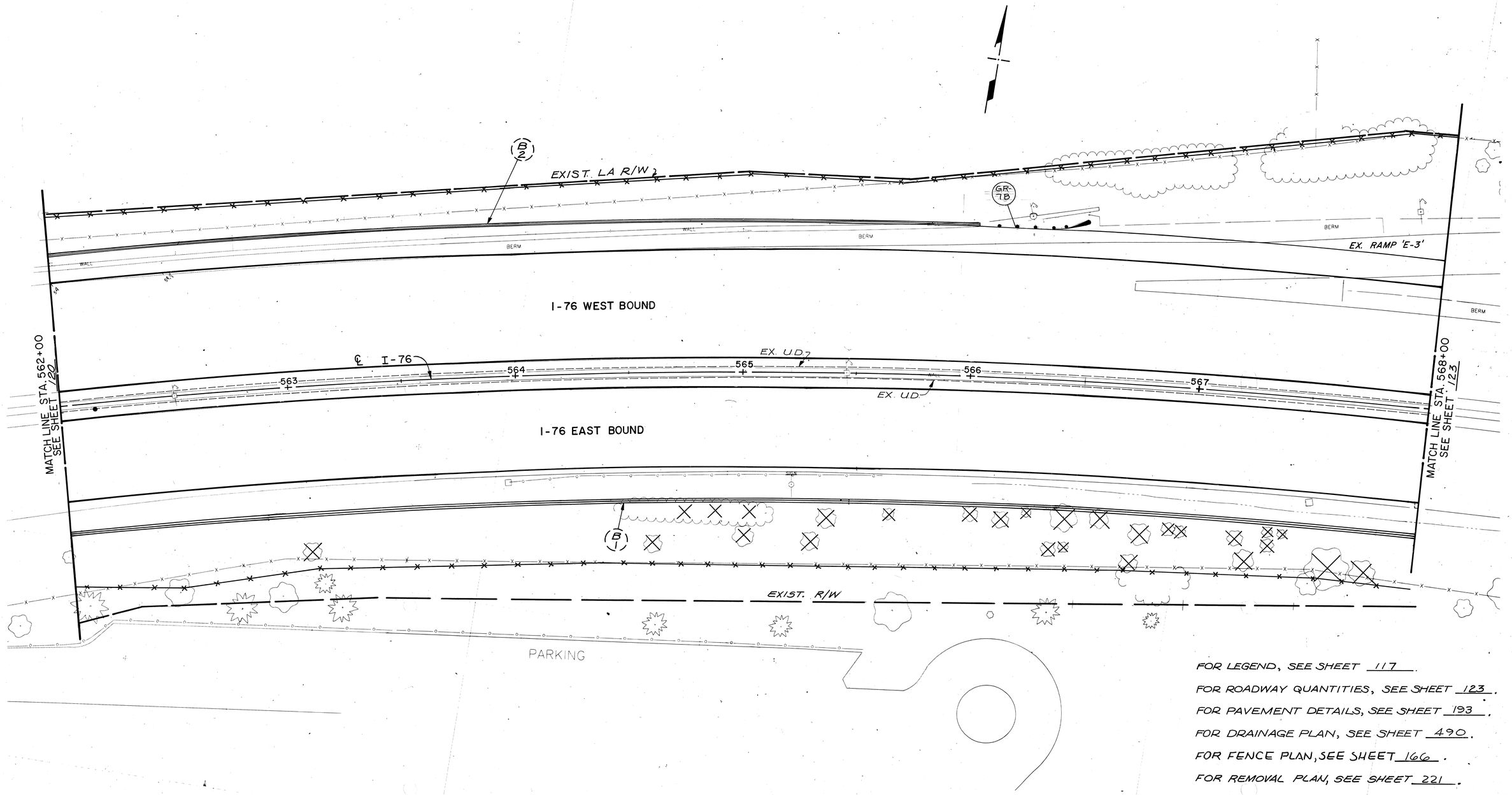

FOR LEGEND, SEE SHEET 117.

FOR ROADWAY QUANTITIES, SEE SHEET 123.

FOR PAVEMENT DETAILS, SEE SHEET 193.

FOR DRAINAGE PLAN, SEE SHEET 490.

FOR FENCE PLAN, SEE SHEET 166.

FOR REMOVAL PLAN, SEE SHEET 221.

0 20 40 60
SCALE IN FEET

STA. 562+00 TO STA. 568+00
ROADWAY

AA. B/P# 71942R

CALC. BY. DATE	SUM-76-11.57	OHIO
CHKD. BY. DATE	FED. PROJECT IR-76-2(44)19	F.H.W.A. REGION 5

123 / 214

SUMMIT COUNTY

* CURB TRANSITION MEET EXIST. CURB IN 10'

END WORK STA. 19+00 BUTT JOINT

PROP CURB TYPE 2B (C9)

PROP CURB TYPE 2B (C10)

STA. 46+49.92, ℄ MARTIN AVE. = STA. 18+40.44, ℄ TALBOT AVE.

EXIST. L.A R/W

EXIST. R/W

EVERGREENS

O.B.T.

3" G

EX. RAMP 'E-3'

15" S

W 6"

GATE

MARTIN AVENUE

47' 8" SAN.

MATCH LINE STA. 47+45

RETAINING WALL NO. 1 FOR DETAIL SEE SHEET 108

EXISTING RETAINING WALL

B-1

B-2

B-3

BERM

P.T. STA. 569+16.09

MATCH LINE STA. 568+00 SEE SHEET 122

I-76 WEST BOUND

I-76 EAST BOUND

℄ I-76

EX. U.D.

569 570 571 572 573

12" S

36'-0"

48'-0"

12' S

14'

15"

8'

STA. 569+50

STA. 570+50

100' PAVEMENT TAPER

PROP CURB TYPE 2A (C8)

EXIST. L/A

PROP CURB TYPE 6 (C11)

COMB. 24"

TALBOT AVENUE

EXIST. R/W

EXIST. L/A

MATCH LINE STA. 574+00 SEE SHEET 125

0 20 40 60 SCALE IN FEET

FOR LEGEND, SEE SHEET 117.

FOR ROADWAY QUANTITIES, SEE SHEET 124.

FOR PAVEMENT DETAILS, SEE SHEET 194.

FOR DRAINAGE PLAN, SEE SHEET 491.

FOR FENCE PLAN SEE SHEET 166.

FOR WATERWORKS PLAN, SEE SHEET 573.

FOR REMOVAL PLAN, SEE SHEET 221 & 223.

STA. 568+00 TO STA. 574+00

ROADWAY

QUANTITY SUB-SUMMARY

CALC BY CDB DATE 6/89	SUM-76-11.57	OHIO
CHKD BY DSB DATE 8/90	FEDERAL PROJ. IR-76-2-(44)19	F.H.W.A. REGION 5

SUMMIT COUNTY

124
1214

SHEET NUMBER	REFERENCE NUMBER	LOCATION	SIDE	606 BRIDGE ANCHOR ASSEMBLY, TYPE A (EA)	606 BRIDGE TERMINAL ASSEMBLY, TYPE I (EA)	606 GUARDRAIL, TYPE 5 (L.F.)	608 CURB RAMP, TYPE 1 AS PER PLAN (EA.)	608 CURB RAMP, TYPE 2 AS PER PLAN (EA.)	608 4" CONCRETE WALK (S.F.)	609 CURB, TYPE 2A (L.F.)	609 CURB, TYPE 2B (L.F.)	609 CURB, TYPE 6 (L.F.)	622 CONCRETE BARRIER, TYPE D, AS PER PLAN (L.F.)
123	GR-8	STA 16+28 TALBOT AVE	℄			25							
	GR-8A	STA. 573+25 TO STA. 573+75, I-76		1	1								
	B-4	STA 573+25 TO STA 575+79 I-76	RT										204
	SW-1	STA 18+54 TO STA 18+64 TALBOT AVE	LT						100				
	SW-2	STA 18+56 TALBOT TO STA 47+70 MARTIN	LT						553				
	CR-3	STA 18+58 TALBOT AVE	LT					1					
	CR-4	STA 18+58 TALBOT AVE	RT				1						
	C-8	STA 569+25 TO STA 569+75 I-76	RT							25			
	C-9	STA 19+00 TALBOT TO STA 18+10.51 ARLINGTON	LT/RT								405		
	C-10	STA 19+00 TALBOT TO STA 18+83.21 ARLINGTON	RT/LT								364		
123	C-11	STA 16+26 TALBOT AVE	℄									26	
	TOTALS			1	1	25	1	1	653	25	769	26	204

CALC. BY. DATE		SUM-76-11.57	OHIO
CHKD. BY. DATE		FED. PROJECT IR-76-2(44)19	F.H.W.A. REGION 5

125
1214

SUMMIT COUNTY

FOR LEGEND, SEE SHEET 117
FOR STRUCTURE DETAILS, SEE SHEET 841 & 864
FOR ROADWAY QUANTITIES, SEE SHEET 126
FOR WATERWORKS PLAN, SEE SHEET 574.
FOR PAVEMENT DETAILS, SEE SHEET 195
FOR DRIVEWAY DETAILS, SEE SHEET 189.
FOR DRAINAGE PLANS, SEE SHEET 493
FOR REMOVAL PLAN, SEE SHEET 223.
FOR FENCE PLAN SEE SHEET 166.

SECTION A-A

STA. 18+40.23 ℄ ARLINGTON STREET = STA 50+00.00, ℄ MARTIN AVENUE

STA. 19+06.37, ℄ ARLINGTON STREET = STA. 20+00.00, ℄ SECOND STREET

STA. 21+10 MEET EXIST.

SECOND AVENUE

100' SHOULDER TAPER

STA. 76+95.38 STA. 18+61.37, ℄ ARLINGTON STREET = EXIST. LA R/W
STA. 76+16.88, ℄ RAMP 'E-4' STA. 77+95.38

RAMP 'E-4'

EXIST. R/W

EXIST. LA R/W

MARTIN AVENUE

O.B.T.

RETAINING WALL #1 FOR DETAIL SEE SHEET 708

RETAINING WALL #2 FOR DETAIL SEE SHEET 709

EX. RAMP 'E-4'

P.C. STA. 578+82.21, 61.90' LT. ℄ I-76

40:1 TAPER

160' SHOULDER TRANSITION

BEGIN APPROACH SLAB STA. 575+88.31

END APPROACH SLAB STA. 577+18.31

P.C. STA. 578+84.95

I-76 WEST BOUND

I-76 EAST BOUND

I-76

P.C. STA. 574+71.64 54' RT. ℄ I-76

STA. 576+53.31, ℄ I-76 = STA. 17+46.25, ℄ ARLINGTON STREET (FOR ARLINGTON ST. STRUCTURE PLAN, SEE SHEET 841).

STA. 15+81.25, ℄ ARLINGTON STREET STA. 76+73.59, ℄ RAMP 'E-6'

NOSE STA. 577+50.00, 65' RT ℄ I-76 STA. 77+48.65, 16' LT. ℄ RAMP 'E-8'

EX. RAMP 'E-5'

RAMP 'E-8'

STA. 79+43.88, ℄ RAMP 'E-6' = STA. 79+25.25, ℄ RAMP 'E-8' (FOR RAMP E-8 STRUCTURE PLANS, SEE SHEET 864)

50' SHOULDER TAPER

BEGIN APPROACH SLAB STA. 78+09.73

RETAINING WALL NO. 3 FOR DETAIL SEE SHT. 111

RAMP 'E-6'

P.T. STA. 79+28.65

P.C. STA. 78+68.09

150' SHOULDER TAPER

STA 77+59.68

STA 79+09.68

PROP CURB TYPE 2A

CURB TYPE 2B

CURB TYPE 2A

ARLINGTON

MATCH LINE STA. 47+45

MATCH LINE STA. 574+00 SEE SHEET 123.

MATCH LINE STA. 79+76.50 SEE SHEET 130.

MATCH LINE STA. 580+00 SEE SHEET 131.

MATCH LINE STA. 80+20 SEE SHEET 131.

BENCHMARK: "R" IN COREY HYDRANT, EAST SIDE OF ARLINGTON, SOUTH OF I-76 E.B.

ELEV. 1073.35

* CURB TRANSITION 0" TO 6" IN 10'

** CURB TRANSITION MEET EXIST. CURB IN 10'

0 20 40 60
SCALE IN FEET

STA. 574+00 TO STA. 580+00
ROADWAY

QUANTITY SUB-SUMMARY

CALC. BY CDB DATE 6/89	SUM-76-11.57	OHIO
CHKD. BY DSB DATE 8/90	FEDERAL PROJ. IR-76-2-(44)19	F.H.W.A. REGION 5

SUMMIT COUNTY

126
1214

* 707.17, ASTM 3034 SDR 35 OR SUPP.SPEC. 931 PERFORATED AS PER 707.15 OR 707.17

SHEET NUMBER	REFERENCE NUMBER	LOCATION	SIDE	304 AGGREGATE BASE, AS PER PLAN C.Y.	452 6" PLAIN CONCRETE PAVEMENT S.Y.	452 8" PLAIN CONCRETE PAVEMENT S.Y.	605 6" SHALLOW PIPE UNDERDRAIN, * L.F.	SPEC. PRESSURE RELIEF JOINT, TYPE A L.F.	301 BITUMINOUS AGGREGATE BASE, AC-20 C.Y.	606 GUARDRAIL, TYPE 5 L.F.	606 ANCHOR ASSEMBLY, TYPE A EA.	606 ANCHOR ASSEMBLY, TYPE T EA.	606 BRIDGE TERMINAL ASSEMBLY, TYPE 1 EA.	608 CURB RAMP, TYPE I AS PER PLAN EA.	608 4" CONCRETE WALK S.F.	609 CURB, TYPE 2A L.F.	609 CURB, TYPE 2B L.F.	622 CONCRETE BARRIER, TYPE B50 L.F.	622 CONCRETE BARRIER, TYPE B50, AS PER PLAN L.F.	622 CONCRETE BARRIER, TYPE D, AS PER PLAN L.F.
125	GR-9	STA 578+79 TO STA 582+95 I-76	RT						10.2	375	1	1								
	GR-10	STA 78+05 TO STA 79+00 RAMP E-8	LT						2.5	75	1		1							
	GR-11	STA 77+65 TO STA 78+90 RAMP E-6	RT						3.1	100	1		1							
	GR-9A	STA 77+59 TO STA 78+09 RAMP E-6	LT								1		1							
	B-5	STA 574+55 TO STA 574+95 I-76	℄	3.0														37.5		
	B-6	STA 575+05 TO STA 575+45 I-76	℄	5.6															40	
	B-7	STA 575+55 TO STA 576+14 I-76	℄	3.0														36.5		
	B-8	STA 576+94 TO STA 577+19 I-76	℄															25		
	B-9	STA 78+09 TO STA 78+62 RAMP E-6	LT																	53
	SW-3	STA 16+25 TO STA 18+26 ARLINGTON ST	LT												1218					
	SW-4	STA 47+45 MARTIN AVE TO STA 19+18													937					
		ARLINGTON ST	LT																	
	SW-5	STA 19+24 TO STA 20+92.60 ARLINGTON ST	LT												1080					
	SW-6	STA 16+15 TO STA 18+45 ARLINGTON ST	RT												1458					
	SW-7	STA 14+88 TO STA 15+72 ARLINGTON ST	RT												510					
	SW-8	STA.47+82 TO STA.48+08 MARTIN AVE	LT												130					
	CR-5	STA 18+20 ARLINGTON ST	LT											1						
	CR-6	STA 18+67 ARLINGTON ST	LT											1						
	CR-7	STA 18+30 ARLINGTON ST	RT											1						
	CR-8	STA 76+55 RAMP E-4	RT											1						
	CR-9	STA 19+28 ARLINGTON ST	RT											1						
	CR-10	STA 77+15 RAMP E-6	LT											1						
	CR-11	STA 15+60 ARLINGTON ST	RT											1						
	PJ-5	STA 275+44 TO STA 275+54 I-76	LT				67	67												
	PJ-6	STA 275+44 TO STA 275+54 I-76	RT				66	66												
	PJ-7	STA 577+53 TO STA 577+63 I-76	LT				70	70												
	PJ-8	STA 577+54 TO STA 577+64 I-76	RT				52	52												
	PJ-9	STA 77+90 TO STA 77+97 RAMP E-8	LT/RT				35	27												
	C-12	STA 13+70 TO STA.18+10.51 ARLINGTON	LT																441	
	C-13	STA 77+06 RAMP E-4 TO STA 78+00																161	214	
		RAMP E-6	RT																	
	D-4A	STA. 48+14 MARTIN	LT	1.5		13														
	D-4B	STA. 47+77 MARTIN	LT	1.7		15														
125	D-1	STA 21+00 SECOND AVE	LT	2.7			17													
	TOTALS			17.5		28	17		290	282	15.8	550	4	1	3	7	5333	161	655	99	40	53

CALC. BY		SUM-76-11.57	OHIO
CHKD. BY		FED. PROJECT IR-76-2(44)19	F.H.W.A. REGION 5
DATE			

127
12/14

SUMMIT COUNTY

I-76 ℄

EXIST. LA R/W

MARTIN AVENUE

EXIST. R/W

PROP CURB TYPE 2B

PROP CURB TYPE 2A

STA. 18+40.23 ℄ ARLINGTON STREET =
STA. 50+00.00 ℄ MARTIN AVE.

STA. 18+61.37 ℄ ARLINGTON STREET
STA. 76+16.88 ℄ RAMP 'E-4'

EXIST. STONE WALL NOT TO BE DISTURBED

12" STONE WALL *

R/W

OBT

ARLINGTON STREET

END WORK
STA. 20+92.60
MEET EXIST.

* CURB TRANSITION - MEET EXIST. CURB IN 10'

STA. 19+06.37 ℄ ARLINGTON STREET =
STA. 20+00.00 ℄ SECOND AVENUE

SECOND AVENUE

STA. 21+10.00
MEET EXIST.

STA. 576+53.31, ℄ I-76 =
STA. 17+46.25, ℄ ARLINGTON STREET

RAMP 'E-8'

RAMP 'E-4'

EXIST. LA R/W

EXIST. R/W

SEE SHEET 128
MATCH LINE STA. 17+00

B-5.

FOR LEGEND, SEE SHEET 117.

FOR ROADWAY QUANTITIES, SEE SHEET 129.

FOR PAVEMENT DETAILS, SEE SHEET 214

FOR DRAINAGE PLAN, SEE SHEET 495.

FOR DRIVEWAY DETAILS, SEE SHEET 189.

FOR FENCE PLAN SEE SHEET 166.

FOR WATERWORKS PLAN, SEE SHEET 577.

0 20 40 60
SCALE IN FEET

ARLINGTON STREET
STA. 17+00 TO STA. 20+92.60
ROADWAY

CALC BY DATE	SUM-76-11.57	OHIO	128 1214
CHKD BY DATE	FED PROJECT IR-76-2(44)19		

SUMMIT COUNTY

BENCHMARK: "R" IN COREY HYDRANT E. SIDE OF ARLINGTON ST. SOUTH OF I-76 E.B.

ELEV. 1073.35

B-4

RIPRAP FOR TREE PROTECTION AS PER PLAN FOR DETAIL, SEE SHEET 191.

STA. 15+81.25, ℄ ARLINGTON STREET = STA. 76+73.59, ℄ RAMP 'E-6'

BEGIN WORK STA. 13+70.00 MEET EXIST.

LIMESTONE DRIVE

PROP. CURB TYPE 2B

EXIST. LA

I-76 ℄

ARLINGTON STREET

R/W

OBT

8"G

6"W

24" COMB.

20" COMB.

12" W

12" S

8" COMB.

MATCH LINE STA. 17+00 SEE SHEET 127

575

576

577

CURB TRANSITION MEET EXIST. CURB IN 10'

10' ASPHALT DRIVE

PROP. CURB TYPE 2B

PROP. CURB TYPE 2A

RAMP 'E-6'

RAMP 'E-8'

78 ℄

B-5

B-6

EXIST. LA

CONCRETE STEP DETAILS				
REF	WALK WIDTH	TREAD WIDTH	RISER HEIGHT	NO. OF TREADS
	L.F.	IN.	IN.	EA.
ST-1	4.5	12	7	11
ST-2	3.5	12	5 3/8	3
ST-3	3.5	12	6 3/8	3

FOR LEGEND, SEE SHEET 117.

FOR ROADWAY QUANTITIES, SEE SHEET 129.

FOR PAVEMENT DETAILS, SEE SHEET 214.

FOR DRAINAGE PLAN, SEE SHEET 490.

FOR DRIVEWAY DETAILS, SEE SHEET 189.

FOR FENCE PLAN SEE SHEET 166.

FOR WATERWORKS PLAN, SEE SHEET 575

0 20 40 60
SCALE IN FEET

ARLINGTON STREET
STA. 13+70 TO STA. 17+00
ROADWAY

B-8

QUANTITY SUB-SUMMARY

CALC. BY CDB DATE 6/99	SUM-76-11.57	OHIO	129 / 1214
CHKD. BY DSB DATE 8/99	FEDERAL PROJ. IR-76-2-(44)19	F.H.W.A. REGION 5	

SUMMIT COUNTY

SHEET NUMBER	REFERENCE NUMBER	LOCATION	SIDE	304 AGGREGATE BASE, AS PER PLAN C.Y.	402 ASPHALT CONCRETE, AC-20 C.Y.	404 ASPHALT CONCRETE, AC-20 (DRIVEWAYS) C.Y.	408 BITUMINOUS PRIME COAT GAL.	452 6" PLAIN CONCRETE PAVEMENT S.Y.	452 8" PLAIN CONCRETE PAVEMENT S.Y.	603 6" CONDUIT, TYPE E, 707.15 (PERFORATED) L.F.	608 4" CONCRETE WALK S.F.	608 CONCRETE STEPS, TYPE B L.F.	609 CURB, TYPE 2A L.F.	609 CURB, TYPE 2B L.F.	657 RIPRAP FOR TREE PROTECTION, AS PER PLAN S.Y.
/27	SW-9	STA 19+50 TO STA 20+29 ARLINGTON ST	LT								474				
	SW-10	STA 20+60 TO STA 20+92.60 ARLINGTON ST	LT								196				
	C-14	STA 21+10.00 SECOND AVE TO STA 77+75											124	66	
		RAMP E-4	RT/LT												
	C-15	STA 18+83.27 TO STA 20+92.60												210	
		ARLINGTON ST	LT												
	C-16	STA 21+10.00 SECOND AVE TO												245	
		STA 20+92.60 ARLINGTON ST	LT/RT												
	D-2	STA 19+33 TO STA 19+50 ARLINGTON ST	LT	3.6					22						
	D-3	STA 20+43 ARLINGTON ST	LT	3.6					22						
/27	D-4	STA 48+50 MARTIN AVE	LT	2.1				19							
/28	SW-11	STA 13+70 TO STA 14+43 ARLINGTON ST	LT								438				
	SW-12	STA 14+78 TO STA 16+16 ARLINGTON ST	LT								828				
	SW-13	STA 14+32 TO STA 14+79 ARLINGTON ST	RT								282				
	SW-14	STA 13+70 TO STA 14+09 ARLINGTON ST	RT								234				
	C-17	STA 13+70.00 ARLINGTON ST TO											230	150	
		STA 78+89 RAMP E-6	RT												
	ST-1	STA 15+96 ARLINGTON ST	LT									50			
	ST-2	STA 14+47 ARLINGTON ST	RT									11			
	ST-3	STA 14+73 ARLINGTON ST	RT									11			
	D-5	STA 16+21 ARLINGTON ST	LT	3.4				31							
	D-6	STA 14+25 ARLINGTON ST	RT	2.4					15						
	D-7	STA 14+83 ARLINGTON ST	RT	1.3	0.5	0.5	1.6		8						
	D-8	STA 14+60 ARLINGTON ST	LT	6.8					21						
	RW-1	STA 15+25 TO STA 15+93 ARLINGTON ST	LT							67					30
/28	RW-2	STA 15+99 TO STA 16+16 ARLINGTON ST	LT							35					16
	TOTALS			23.2	0.5	0.5	1.6	50	88	102	2452	72	354	671	46

CALC. BY. DATE	SUM-76-11.57	OHIO
CHKD. BY. DATE	FED. PROJECT IR-76-2(44)19	F.H.W.A. REGION 5

SUMMIT COUNTY

130
1214

BENCHMARK: "R" IN COREY HYDRANT AT NW. CORNER OF SECOND AVE. AND CHITTENDEN.

ELEV. 1054.18

FOR STRUCTURE PLANS, SEE SHEET 884.

FOR LEGEND, SEE SHEET 117.

FOR ROADWAY QUANTITIES, SEE SHEET 133.

FOR PAVEMENT DETAILS, SEE SHEET 196.

FOR DRAINAGE PLAN, SEE SHEET 498.

FOR FENCE PLAN SEE SHEET 167.

FOR REMOVAL PLAN, SEE SHEET 223.

FOR WATERWORKS PLAN, SEE SHEET 578.

CURB TRANSITION MEET EXIST. CURB IN 10'

STA. 25+94.90 ℄ SECOND AVENUE = STA. 19+06.21 ℄ CHITTENDEN STREET

END APPROACH SLAB STA. 86+24.70

MATCH LINE STA. 29+75

MATCH LINE STA. 79+77

MATCH LINE STA. 86+00

MATCH LINE SEE SHEET 125

MATCH LINE SEE SHEET 134

STA. 580+00

STA. 586+00

SECOND AVENUE

CHITTENDEN STREET

EXIST. LA.

PROP CURB TYPE 2B FOR CURB REPLACEMENT DETAIL SEE SHEET 188.

P.C. STA. 85+98.24

P.T. STA. 84+81.21

L A R/W

PC STA. 81+97.70

RAMP 'E-4'

RAMP 'E-7'

C 18 PROP CURB TYPE 2A

P.C. STA. 83+24.42

RETAINING WALL #2 FOR DETAIL, SEE SHEET 709.

NOSE STA. 580+86.00, 51' LT. ℄ I-76 = STA. 80+90.31, 16' RT., ℄ RAMP 'E-7'

50' SHOULDER TAPER

BEGIN APPROACH SLAB STA. 83+98.83

STA. 85+03.80 ℄ RAMP 'E-4' = STA. 85+40.53 ℄ RAMP 'E-7'

I-76 WEST BOUND

I-76 EAST BOUND

I-76 ℄

STA. 582+48.94, ℄ I-76 = STA. 17+23.48 ℄ CHITTENDEN STREET

MATCH SHEET 131.

0 20 40 60
SCALE IN FEET

WEST BOUND
STA. 580+00 TO STA. 586+00
ROADWAY

CALC. BY. DATE	SUM-76-11.57	OHIO
CHKD. BY. DATE	FED. PROJECT IR-76-2(44)19	F.H.W.A. REGION 5

SUMMIT COUNTY

131
1214

STA. 580+00
MATCH LINE SEE SHEET 125

I-76 WEST BOUND

I-76 EAST BOUND

EX. U.D.

581 582 583 584 585

MATCH SHEET 130

B 10

15"

I-76 ℄

4" G

6" W COMB. 18" W

GR 9

C 19 PROP. CURB TYPE 2A

STA. 586+00
MATCH LINE SEE SHEET 135

B 40

RAMP 'E-6'

MATCH LINE STA. 80+20

MATCH LINE STA. 80+00

81 82 83 84 85

B-8 B-9

6" W 8" SAN.

15" S 12" S 2" G

PROP CURB TYPE 2A C 21

PT STA. 81+18.09

RETAINING WALL #4
FOR DETAIL, SEE SHEET 711

PJ 11

PC STA. 82+84.69

℄ SHIFT STA. 83+65.02 BACK =
STA. 83+65.02, 16' LT. AHEAD

END APPROACH SLAB
STA. 80+20.08 RAMP E-8
P.C. STA. 80+06.26

RAMP 'E-8'

B-10

SERVICE AVE.

THIRD ROAD

GR 14

GR 12

P.T. STA 83+01.55

C 22 STREET

LA R/W

EXIST LA

8" IPG CHITTENDEN STREET

6" W COMB. 16" W

MILES SAN 6" W

ASPHALT PARKING

MATCH LINE STA. 13+75
SEE SHEET 132

MATCH LINE
SEE SHEET 132

FOR LEGEND, SEE SHEET 117

FOR ROADWAY QUANTITIES, SEE SHEET 133

FOR PAVEMENT DETAILS, SEE SHEET 196

FOR DRAINAGE PLAN, SEE SHEET 500

FOR FENCE PLAN SEE SHEET 167

FOR REMOVAL PLAN, SEE SHEET 223

FOR WATERWORKS PLAN, SEE SHEET 579

FOR STRUCTURE PLANS, SEE SHEET 864

0 20 40 60
SCALE IN FEET

EAST BOUND
STA. 580+00 TO STA. 586+00
ROADWAY

AA B/P# 71942R

CALC. BY. R.V. DATE 2-88	SUM-76-11.57	OHIO
CHKD. BY. ____ DATE ____	FED. PROJECT IR-76-2(44)19	F.H.W.A. REGION 5

SUMMIT COUNTY

132
1214

THIRD AVENUE SERVICE ROAD

UNPAVED

SOCCER FIELD

ASPHALT PARKING

MATCH LINE SEE SHEET 135

MATCH LINE STA. 13+75 SEE SHEET 131.

6" SAN. 8" STREET 16" SAN. 8"

* CURB TRANSITION MEET EXIST. CURB IN 10'

CR 12

CR 13

SW 15

2' 8'

6" W 8" SAN.

26 27 28 6" W 29 30 W 6" 8" SAN.

C 23 PROP. CURB TYPE 2B SEE CURB REPLACEMENT DETAIL SHEET 188.

FOURTH AVENUE

WALK WALL STEP STEPS WALK WALK

8" IPG 12" COMB. 12+50 CHITTENDEN

STA. 25 + 95.39 FOURTH AVE.
STA. 13 + 02.66 CHITTENDEN ST.

TOOHOS SCHOOL

FOR LEGEND, SEE SHEET 117.
FOR ROADWAY QUANTITIES, SEE SHEET 133.
FOR REMOVAL PLANS, SEE SHEET 223.
FOR WATERWORKS PLAN, SEE SHEET 581.

SCALE IN FEET
0 20 40 60

CHITTENDEN STREET & FOURTH AVENUE
ROADWAY

QUANTITY SUB-SUMMARY

CALC. BY CDB DATE 6/89	SUM-76-11.57	OHIO	133 / 1214
CHKD BY DSB DATE 8/90	FEDERAL PROJ. IR-76-2-(44)19	F.H.W.A. REGION 5	

SUMMIT COUNTY

* 707.17, ASTM 3034 SDR 35 OR SUPP. SPEC. 931 PERFORATED AS PER 707.15 OR 707.17, AS PER PLAN

SHEET NUMBER	REFERENCE NUMBER	LOCATION	SIDE	304 AGGREGATE BASE, AS PER PLAN C.Y.	404 ASPHALT CONCRETE, AC-20 (DRIVEWAYS) C.Y.	605 6" SHALLOW PIPE UNDERDRAIN, * L.F.	SPEC. PRESSURE RELIEF JOINT, TYPE A L.F.	301 BITUMINOUS AGGREGATE BASE, AC-20 C.Y.	606 GUARDRAIL, TYPE 5 L.F.	606 ANCHOR ASSEMBLY, TYPE A EA.	606 ANCHOR ASSEMBLY, TYPE T EA.	606 BRIDGE TERMINAL ASSEMBLY, TYPE 2 EA.	BRIDGE TERMINAL ASSEMBLY, TYPE 1 EA.	305 9" CONCRETE BASE S.Y.	407 TACK COAT GAL.	608 CURB RAMP, TYPE 2 AS PER PLAN EA.	608 4" CONCRETE WALK S.F.	609 CURB, TYPE 2A L.F.	609 CURB, TYPE 2B L.F.	609 CURB, TYPE 6 L.F.	622 CONCRETE BARRIER, TYPE B50 L.F.	622 CONCRETE BARRIER, TYPE D, AS PER PLAN L.F.
130	GR-13	STA 585+25 TO STA 590+50 I-76	LT					13.0	487.5	1	1												
	GR-13A	STA. 85+89 TO STA. 86+39 RAMP E-4								1			1										
	B-10	STA 581+92 TO STA 583+00 I-76	℄	8.2																		108	
	B-11	STA 85+68 TO STA 86+97 RAMP E-7	LT																				129
	B-12	STA 85+64 TO STA 85+89 RAMP E-4	RT																				25
	C-18	STA 83+73 TO STA 83+99 RAMP E-4	RT																	26			
	C-19	STA 25+32 TO STA 32+69 SECOND AVE	RT	34	6.8											205	17				737		
130	PJ-10	STA 83+79 TO STA 83+86 RAMP E-7	RT/LT			35	28																
131	GR-12	STA 79+49 TO STA 84+74 RAMP E-8	RT					13.0	512.5		1	1											
	GR-14	STA 12+30 MILES ST	℄						37.5														
	B-40	STA 79+96 TO STA 81+70 RAMP E-6	LT																				155
	PJ-11	STA 80+60 TO STA 80+67 RAMP E-8	LT/RT			26	26																
	C-20	STA 81+70 TO STA 85+75 RAMP E-6	LT																	394			
	C-21	STA 80+42 TO STA 80+58 RAMP E-6	RT																	16			
131	C-22	STA 12+28 MILES ST	℄																			29	
132	C-23	STA 13+16 CHITTENDEN ST	LT/RT	3.0	0.6									19	2						67		
	CR-12	STA. 26+17. FOURTH AVE	LT													1							
	CR-13	STA 26+40 FOURTH AVE	LT													1							
132	SW-15	STA 13+18 TO STA 13+24 CHITTENDEN ST	LT/RT														426						
	TOTALS			45.2	7.4	61	54	26	1037.5	2	2	1	1	224	19	2	426			436	804	29	108	309

CALC. BY: DATE:	SUM-76-11.57	OHIO
CHKD. BY: DATE:	FED. PROJECT IR-76-2(44)19	F.H.W.A. REGION 5

SUMMIT COUNTY

134 / 1214

BENCHMARK: RIVET IN WALK AT NW CORNER OF SECOND AVE. AND HART AVE. ELEV. 1023.01

B-15

FOR REMOVAL PLAN, SEE SHEET 226.
FOR LEGEND, SEE SHEET 117.
FOR ROADWAY QUANTITIES, SEE SHEET 137.
FOR PAVEMENT DETAILS, SEE SHEET 196.
B-14 FOR DRAINAGE PLANS, SEE SHEET 502.
FOR FENCE PLAN, SEE SHEET 167.

FOR WATERWORKS PLAN, SEE SHEET 582.

SECOND AVENUE
THIRD AVENUE
HART AVENUE
RAMP 'E-7'
RAMP 'E-4'
EX. RAMP 'E-7'
I-76 WEST BOUND
I-76 EAST BOUND
I-76

L A R/W
EX. R/W
ELEC.
12" S
4" G
G" IPG
18" S
G" W
8" SAN.
3" G
8" W
4" G
8" SAN.
12" S
EX. U.D.
EX. 6" U.D.

* CURB TRANSITION 0" TO 6" IN 10'
** CURB TRANSITION MEET EXISTING CURB IN 10'

PROP. CURB TYPE 2B FOR CURB REPLACEMENT DETAIL, SEE SHEET 188.
PROP. CURB TYPE 2A (C24)

P.C. STA. 90+39.80
P.T. STA. 87+70.80
P.T. STA. 86+68.99
P.T. STA. 587+19.08 BEGIN MEDIAN TRANSITION

RETAINING WALL #5 FOR DETAIL, SEE SHEET 112 (B14)

B-11 B-12 B-13
GR 15A GR 15B GR 15C GR 15 GR 13
PJ 12
C19 C25

MATCH LINE STA. 29+75 SEE SHEET 130
MATCH LINE STA. 86+25 SEE SHEET 130
MATCH LINE STA. 86+00 SEE SHEET 130
MATCH LINE STA. 92+50 SEE SHEET 138
MATCH LINE STA. 92+04 SEE SHEET 138
MATCH LINE STA. 586+00 SEE SHEET 130
MATCH LINE STA. 592+00 SEE SHEET 138

MATCH SHEET 135.

0 20 40 60
SCALE IN FEET

WEST BOUND
STA. 586+00 TO STA. 592+00
ROADWAY

CALC. BY. DATE	SUM-76-11.57	OHIO
CHKD. BY. DATE	FED. PROJECT IR-76-2(44)19	F.H.W.A. REGION 5

135
1214

SUMMIT COUNTY

MATCH SHEET 134

BENCHMARK 'D' IN DARLING ON HYDRANT HEAD AT NW CORNER OF FOURTH AVE. AND HART.

ELEV. 1043.81

STA. 586+00
MATCH LINE SEE SHEET 131

STA. 592+00
MATCH LINE SEE SHEET 140

I-76 WEST BOUND

I-76 EAST BOUND

PT STA. 587+19.08
BEGIN MEDIAN TRANSITION

EX. U.D.

EX. 6" U.D.

8" SAN.

12" S

RAMP 'E-6'

EX. RAMP 'E-6'

B-11

50' SHOULDER TAPER

NOSE STA. 88+73.24, 16' LT., 'E-6'
STA. 588+75.00, 52.43' RT., I-76

P.T. STA. 89+84.57

125' SHOULDER TAPER

MATCH LINE STA. 92+00 SEE SHEET 140

GR 16

P.C. STA. 87+64.64
℄ RAMP 'E-8'

RAMP 'E-8'

250' PAVEMENT TAPER

GR 17

P.C. STA. 87+64.64, 21.50' RT.
℄ RAMP 'E-8'

P.C.C. STA 89+00.00, 28.00' RT.
℄ RAMP 'E-8'

RAMP 'E-8A'

B-10

B-13

MATCH LINE STA. 86+00

MATCH LINE STA. 10+50 SEE SHEET 136

THIRD AVENUE SERVICE ROAD

LA R/W

NOSE STA. 90+00.08, 35' RT ℄ RAMP 'E-8' =
STA. 9+93.63, 16' LT ℄ RAMP 'E-8A'

4" G

6" G

6" W.

8" SAN.

20" S

FOURTH AVENUE

HART STREET

FOR LEGEND, SEE SHEET 117.

FOR ROADWAY QUANTITIES, SEE SHEET 137.

FOR PAVEMENT DETAILS, SEE SHEET 196.

FOR DRAINAGE PLAN, SEE SHEET 504.

FOR FENCE PLAN SEE SHEET 167.

FOR REMOVAL PLAN, SEE SHEET 226.

FOR WATERWORKS PLAN, SEE SHEET 583.

0 20 40 60
SCALE IN FEET

EAST BOUND
STA. 586+00 TO STA. 592+00
ROADWAY

AA B/P# 71942R

CALC. BY. DATE	SUM-76-11.57	OHIO
CHKD. BY. DATE	FED. PROJECT IR-76-2(44)19	F.H.W.A. REGION 5

136/1214

BENCHMARK 'D' IN DARLING ON HYDRANT HEAD AT NW CORNER OF FOURTH AVE. AND HART

ELEV. 1043.81

LA R/W

EXIST. R/W

PROP CURB TYPE 2A (C 27)

SW 16

CR 14

CR 15

STA. 13+85.64 RAMP 'E-8A' = STA. 59+86.91 ℄ FIFTH AVENUE

AVENUE

HART ST.

FIFTH

FOURTH

RAMP 'E-8A'

P.T. STA. 11+99.21

100' SHOULDER & PAVEMENT TAPER

STA. 12+33.38

STA. 13+33.38

PROP CURB TYPE 2A (C 26)

SW 17

END WORK STA. 13+74.64

MATCH LINE STA. 10+50 SEE SHEET 135

6"W

8" SAN.

4" G

6" G

12"S

15"S

20"S

24"S

10"W

59

60

58

* CURB TRANSITION 0" TO 6" IN 10'

** CURB TRANSITION MEET EXIST. CURB IN 10'

FOR WATERWORK PLANS, SEE SHEET 584

FOR LEGEND, SEE SHEET 117.

FOR ROADWAY QUANTITIES, SEE SHEET 137.

FOR PAVEMENT DETAIL, SEE SHEET 207.

FOR DRAINAGE PLAN, SEE SHEET 505.

FOR FENCE PLAN SEE SHEET 167.

FOR REMOVAL PLAN, SEE SHEET 226.

0 20 40 60
SCALE IN FEET

RAMP 'E-8A'
STA. 10+50 TO STA. 13+85.65
ROADWAY

QUANTITY SUB-SUMMARY

CALC. BY CDB DATE 6/89	SUM-76-11.57	OHIO	137 / 1214
CHKD. BY DSB DATE 8/90	FEDERAL PROJ. IR-76-2-(44)19	F.H.W.A. REGION 5	

SUMMIT COUNTY

* 707.17, ASTM 3034 SDR 35 OR SUPP. SPEC. 931 PERFORATED AS PER 707.15 OR 707.17, AS PER PLAN

SHEET NUMBER	REFERENCE NUMBER	LOCATION	SIDE	605 6" SHALLOW PIPE UNDERDRAIN, * LF.	SPEC. 301 PRESSURE RELIEF JOINT, TYPE A LF.	BITUMINOUS AGGREGATE BASE, AC-20 C.Y.	606 GUARDRAIL, TYPE 5 L.F.	ANCHOR ASSEMBLY, TYPE A EA.	ANCHOR ASSEMBLY, TYPE T EA.	BRIDGE TERMINAL ASSEMBLY, TYPE 1 EA.	608 CURB RAMP, TYPE 1, AS PER PLAN EA.	4" CONCRETE WALK S.F.	609 CURB, TYPE 2A L.F.	CURB, TYPE 6 L.F.	622 CONCRETE BARRIER, TYPE D, AS PER PLAN L.F.
134															
	B-14	STA 88+10 TO STA 88+50 RAMP E-7	RT												30
	GR-15A	STA 86+97 TO STA 87+47 RAMP E-7	LT					1		1					
	GR-15	STA 18+44 HART AVE	℄				37.5								
	GR-15B	STA 85+87 TO STA 86+62 RAMP E-4	RT				25	1		1					
	GR-15C	STA 88+50 TO STA 89+00 RAMP E-7	RT					1		1					
	RJ-12	STA 86+96 TO STA 87+01 RAMP E-7	LT/RT	35	28										
	C-24	STA 86+50 TO STA 88+37 RAMP E-4	LT										187		
134	C-25	STA 18+46 HART AVE	℄											26	
135	GR-16	STA 87+90 TO STA 89+65 RAMP E-8	LT			4.4	137.5	1	1						
135	GR-17	STA 87+90 RAMP E-8 TO STA 9+68				4.4	137.5	1	1						
		RAMP E-8A	RT												
136	SW-16	STA 13+55 TO STA 13+72 RAMP E-8A	LT									124			
	SW-17	STA 13+55 TO STA 13+70 RAMP E-8A	RT									180			
	CR-14	STA 60+14 FIFTH AVE	LT								1				
	CR-15	STA 59+64 FIFTH AVE	LT								1				
	C-26	STA 13+22 TO STA 13+73 RAMP E-8A	RT										73		
136	C-27	STA 13+33 TO STA 13+73 RAMP E-8A	LT										46		
	TOTALS			35	28	8.8	337.5	5	2	3	2	304	306	26	30

AA B.P# 71942R

CALC. BY.		SUM-76-11.57	OHIO
CHK'D. BY.		FED. PROJECT IR-76-2(44)19	F.H.W.A. REGION 5

138 / 12/4

SUMMIT COUNTY

FOR LEGEND, SEE SHEET 117.
FOR ROADWAY QUANTITIES, SEE SHEET 139.
FOR PAVEMENT DETAILS, SEE SHEET 197.
FOR DRAINAGE PLAN, SEE SHEET 507.
FOR FENCE PLAN SEE SHEET 167.
FOR WATERWORK PLAN, SEE SHEET 585.
FOR REMOVAL PLAN, SEE SHEET 226.
FOR STRUCTURE PLANS, SEE SHEET 903.

BENCHMARK TOP OF SW BOLT ON BASE OF LIGHT POST AT NE CORNER OF FULLER & THIRD AVE.

ELEV. 1015.92

LA. R/W

MATCH LINE STA. 92+50

PC STA. 94+73.12

P.T. STA. 92+96.93

100' SHOULDER TAPER

STA. 93+73.12

STA. 94+73.12

PROP. CURB TYPE 2A (C 28)

RAMP 'E-7'

THIRD

STREET

FULLER

AVENUE

END WORK STA. 16+88.85 BUTT JOINT

STA. 95+78.09, ℄ RAMP 'E-7' = STA. 16+11.33, ℄ FULLER STREET

PROP. CURB TYPE 2A (C 29)

STA. 21+41.68, ℄ THIRD AVENUE
STA. 15+99.82, ℄ FULLER STREET

P.T. STA. 96+90.45 ℄ RAMP 'E-7' = STA. 22+50.66, 16' LT. ℄ THIRD AVENUE END WORK; BUTT JOINT

PROP. CURB TYPE 2A (C 30)

* CURB TRANSITION MEET EX. CURB IN 10'

NOSE STA. 93+98.92 ℄ RAMP 'E-4', 16' RT. = STA. 593+99.00, 70.5' LT ℄ I-76

150' SHOULDER TAPER

STA. 93+48.92

STA. 594+99

RAMP 'E-4'

MATCH LINE STA. 92+04

MATCH LINE STA. 592+00 SEE SHEET 134

I-76 WEST BOUND

I-76 EAST BOUND

℄ I-76

PC. STA. 593+20.12
END MEDIAN TRANSITION

BEGIN APPROACH SLAB STA. 595+24.19

END APPROACH SLAB STA. 596+41.79

STA. 595+87.84, ℄ I-76
STA. 13+88.02, ℄ FULLER STREET

MATCH LINE STA. 598+00 SEE SHEET 142

MATCH SHEET 140

EX. 6" U.D.

EX. U.D.

BERM

0 20 40 60
SCALE IN FEET

WEST BOUND
STA. 592+00 TO STA. 598+00
ROADWAY

QUANTITY SUB-SUMMARY

CALC BY CDB DATE 6/89	SUM-76-11.57	OHIO	139/1214
CHKD BY DSB DATE 8/90	FEDERAL PROJ. IR-76-2-(44)19	F.H.W.A. REGION 5	

SUMMIT COUNTY

* 707.17, ASTM 3034 SDR 35 OR SUPP. SPEC. 931
PERFORATED AS PER 707.15 OR 707.17 AS PER PLAN

SHEET NUMBER	REFERENCE NUMBER	LOCATION	SIDE	304 AGGREGATE BASE, AS PER PLAN C.Y.	604	605 6" SHALLOW PIPE UNDERDRAIN, * L.F.	SPEC. PRESSURE RELIEF JOINT, TYPE A L.F.	608 CURB RAMP, TYPE I, AS PER PLAN EA.	608 4" CONCRETE WALK S.F.	609 CURB, TYPE 2A L.F.	622 CONCRETE BARRIER, TYPE B50 L.F.	622 CONCRETE BARRIER, TYPE D, AS PER PLAN L.F.
	B-15	STA 594+25 TO STA 595+26 I-76	LT									100
	B-16	STA 596+15 TO STA 598+70 I-76	LT									230
	B-17	STA 597+05 TO STA 597+95 I-76	℄	6.1							77.5	
	SW-18	STA 16+35 TO STA 16+89 FULLER ST	LT						405			
	SW-19	STA 12+89 TO STA 16+00 FULLER ST	LT						3468			
	SW-20	STA 16+89 FULLER ST TO STA 96+90							1327			
		RAMP E-7	LT									
	SW-21	STA 12+42 TO STA 15+62 FULLER ST	RT						2516			
	CR-16	STA 16+44 FULLER ST	LT					1				
	CR-17	STA 16+18 FULLER ST	RT					1				
	CR-18	STA 95+53 RAMP E-7	RT					1				
	CR-19	STA 15+58 FULLER ST	LT					1				
	CR-20	STA 15+53 FULLER ST	RT					1				
	PJ-13	STA 594+80 TO STA 594+92 I-76	LT			30	30					
	PJ-14	STA 596+63 TO STA 596+74 I-76	LT			81	81					
	C-28	STA 94+73.12 RAMP E-7 TO STA 16+88.83								127		
		FULLER ST	LT									
	C-29	STA.16+88.83 FULLER ST TO STA 96+90.45								176		
		RAMP E-7	RT/LT									
138	C-30	STA.100+34.62 RAMP E8-B TO STA 96+90.45								427		
		RAMP E-7	RT/LT									
	TOTALS			6.1		171	171	5	7716	730	77.5	330

CALC. BY. DATE	SUM-76-11.57	OHIO
CHKD. BY. DATE	FED. PROJECT IR-76-2(44)19	F.H.W.A. REGION 5

SUMMIT COUNTY

140 / 1214

STA. 595+87.84, ℄ I-76 =
STA. 13+88.02, ℄ FULLER STREET

MATCH SHEET 138

MATCH LINE STA. 592+00
SEE SHEET 135

PC STA. 593+20.12
END MEDIAN TRANSITION

BEGIN APPROACH SLAB
STA. 595+24.19

I-76 WEST BOUND

I-76 EAST BOUND

END APPROACH SLAB
STA. 596+41.79

MATCH LINE STA. 598+00
SEE SHEET 143

EX. 6" U.D.

EX. U.D.

EX. RAMP 'E-8'

8" SAN

4" G

6" W

8" SAN

12" S

15" SAN

21" S

4" G

B-16

B-17

125' SHOULDER TAPER

STA. 93+00

STA. 93+69.94

PROP CURB TYPE 2A

150' SHOULDER TAPER

STA. 95+49.94

100' SHOULDER TAPER

STA. 95+24.55

STA. 94+24.55

STA 95+93.15, ℄ RAMP 'E-8'
STA 12+49.92, ℄ FULLER STREET

STA. 100+00.00, ℄ RAMP 'E-8B' =
STA. 12+35.43, ℄ FULLER STREET

PROP CURB TYPE 2A

PROP. COMB. CURB & GUTTER TYPE 2

RAMP 'E-8B'

EXIST. LA

LA R/W

FOURTH AVENUE

FULLER STREET

BEGIN WORK
STA. 11+40.59
BUTT JOINT

* CURB TRANSITION
0" TO 6" IN 10'

** CURB TRANSITION
MEET EXIST. CURB
IN 10'

FOR LEGEND, SEE SHEET 117

FOR ROADWAY QUANTITIES, SEE SHEET 141

FOR PAVEMENT DETAILS, SEE SHEET 197

FOR DRAINAGE PLAN, SEE SHEET 509

FOR FENCE PLAN SEE SHEET 167

FOR REMOVAL PLAN, SEE SHEET 226

FOR WATERWORK PLAN, SEE SHEET 586

FOR STRUCTURE PLANS, SEE SHEET 903

0 20 40 60
SCALE IN FEET

EAST BOUND
STA. 592+00 TO STA. 598+00
ROADWAY

QUANTITY SUB-SUMMARY

CALC. BY CDB DATE 6/89	SUM-76-11.57	OHIO	141 / 1214
CHKD. BY DSB DATE 8/90	FEDERAL PROJ. IR-76-2-(44)19	F.H.W.A. REGION 5	

SUMMIT COUNTY

* 707.17, ASTM 3034 SDR 35 OR SUPP. SPEC. 931, PERFORATED AS PER 707.15 OR 707.17 AS PER PLAN

SHEET NUMBER	REFERENCE NUMBER	LOCATION	SIDE	304 AGGREGATE BASE, AS PER PLAN C.Y.	452 6" PLAIN CONCRETE PAVEMENT S.Y.	605 6" SHALLOW PIPE UNDERDRAIN, * L.F.	SPEC. PRESSURE RELIEF JOINT, TYPE A L.F.	301 BITUMINOUS AGGREGATE BASE, AC-20 C.Y.	606 GUARDRAIL, TYPE 5 L.F.	606 ANCHOR ASSEMBLY, TYPE A EA.	606 BRIDGE TERMINAL ASSEMBLY, TYPE 1 EA.	606 BRIDGE TERMINAL ASSEMBLY, TYPE 2 EA.	608 CURB RAMP, TYPE 1, AS PER PLAN EA.	608 4" CONCRETE WALK S.F.	609 CURB, TYPE 2A L.F.	609 COMBINATION CURB AND GUTTER, TYPE 2 L.F.	622 CONCRETE BARRIER, TYPE B50 L.F.
140	GR-18	STA 592+20 TO STA 595+38 I-76	RT					7.7	287.5	1	1						
	GR-19	STA 596+41 TO STA 600+05 I-76	RT					8.7	350		1	1					
	B-18	STA 595+24 TO STA 595+49 I-76	℄														25
	B-19	STA 596+17 TO STA 596+42 I-76	℄														25
	SW-22	STA 11+41 TO STA 12+16 FULLER ST	LT											480			
	SW-23	STA 11+41 TO STA 12+00 FULLER ST	RT											423			
	CR-21	STA 12+97 FULLER ST	LT										1				
	CR-22	STA 12+82 FULLER ST	RT										1				
	CR-23	STA 100+20 RAMP E-8B	LT										1				
	CR-24	STA 12+06 FULLER ST	LT										1				
	CR-25	STA 11+94 FULLER ST	RT										1				
	PJ-15	STA 594+82 TO STA 594+93 I-76	RT			70	70										
	PJ-16	STA 596+77 TO STA 596+87 I-76	RT			70	70										
	C-31	STA 93+00 RAMP E-8 TO STA 95+38.55													544		
		RAMP E-7	LT														
	C-32	STA 95+15 RAMP E-8 TO STA 11+40.59													136		
		FULLER ST	RT/LT														
	C-33	STA 596+12 TO STA 595+38 I-76	RT												15		
	C-34	STA 396+41 TO STA 596+67 I-76	RT												16		
	C-35	STA.10+34.62 RAMP E 8B STA.10+86.56														608	
		KELLY AVE.	RT/LT														
	C-36	STA 11+40.59 FULLER ST TO STA 9+63.50													220	552	
		KELLY AVE.	RT														
140	D-12	STA.11+46 FULLER ST.	RT	0.9	8												
	TOTALS			0.9	8	140	140	16.4	637.5	1	2	1	5	903	931	1160	50

AA B/P4 71942R

CALC. BY. DATE	SUM-76-11.57	OHIO
CHKD. BY. DATE	FED. PROJECT IR-76-2(44)19	F.H.W.A. REGION 5

142 / 1214

SUMMIT COUNTY

BENCHMARK: TOP SW BOLT ON BASE OF RAILROAD WARNING LIGHTS, N SIDE OF THIRD AVE, EAST SIDE OF TRACKS.

ELEV. 1003.98

EXIST. R/W

36" S

BALTIMORE & OHIO RAILROAD

EXIST. R/W

PAVED PARKING

P.C. STA. 25+85.69

R.R. SIGNAL BOX

P.T. STA. 28+36.98

12" CIP (ABAN.)

60" 57" RS (ABAN.)

LITTLE CUYAHOGA INTERCEPTOR

24" S

30" S

24" S

24

30" S

WALK

THIRD

25

12" S

24" S

12" S

LA R/W

12" S

15"

12" S

12" S

R.R. SIGNAL BOX

PCC STA. 600+39.01
59.50' LT. ℄ I-76

B 16

27

AVENUE

28

29

PIPE BRIDGE

OVERHEAD PIPES

12" S

12" S

12" S

6" S

WALK

STA. 29+22.29 THIRD AVE. =
STA. 14+39.80 ℄ KELLY AVE.

30" S

15" S

78" S

PROP. AERIAL EASEMENT LINE

12" W

14

10" F.P. (GOODYEAR)

6" G

MATCH LINE STA. 598+00 SEE SHEET 138

599

600

EX. U.D.

PJ 17

B 20

I-76 WEST BOUND

I-76

601

602

603

WALL

BEGIN APPROACH SLAB
STA. 600+25.23

I-76 EAST BOUND

STA. 603+09.60, ℄ I-76 =
STA. 13+36.52, ℄ KELLY AVENUE

P.T. STA. 603+90.88

MATCH LINE STA. 604+00 SEE SHEET 145

MATCH SHEET 143 . 16

FOR LEGEND, SEE SHEET 117.

FOR ROADWAY QUANTITIES, SEE SHEET 144.

FOR PAVEMENT DETAIL, SEE SHEET 197.

FOR DRAINAGE PLANS, SEE SHEET 510.
FOR STRUCTURE PLANS, SEE SHEET 937.
FOR FENCE PLAN SEE SHEET 167.

FOR REMOVAL PLAN, SEE SHEET 223.

0 20 40 60
SCALE IN FEET

WEST BOUND
STA. 598+00 TO STA. 604+00
ROADWAY

AA B/P# 71942R

CALC. BY. DATE	SUM-76-11.57	OHIO
CHKD. BY. DATE	FED. PROJECT IR-76-2(44)19	F.H.W.A. REGION 5

SUMMIT COUNTY

143 / 1214

MATCH SHEET 142

BEGIN APPROACH SLAB
STA. 600+25.23

STA. 603+09.60, ℄ I-76
STA. 13+36.52, ℄ KELLY AVENUE

I-76 WEST BOUND

I-76 EAST BOUND

I-76

MATCH LINE STA. 598+00
SEE SHEET 140

MATCH LINE STA. 604+00
SEE SHEET 146

P.T. STA. 603+90.88

EX. U.D.

SAN. 8"

PROP CURB TYPE 2A

PROP. AERIAL BALTIMORE & OHIO RAILROAD EASEMENT LINE

EX. RAMP 'E-8'

FOR REMOVAL PLAN, SEE SHEET 225.
FOR WATERWORK PLAN, SEE SHEET 588.

MATCH LINE STA. 102+00

℄ RAMP 'E-8B'

L.A R/W

PROP CURB & GUTTER TYPE 2

PAVED PARKING

B-18

PROP CURB TYPE 2B
FOR CURB REPLACEMENT DETAIL, SEE SHEET 188.

PROP CURB TYPE 6

PROP CURB TYPE 2A

FIFTH AVENUE

KELLY AVENUE

COMB.

P.C. STA. 11+49.96

BALTIMORE & OHIO RAILROAD

FOR LEGEND, SEE SHEET 117.

FOR ROADWAY QUANTITIES, SEE SHEET 144.

FOR PAVEMENT DETAILS, SEE SHEET 197.
FOR STRUCTURE PLANS, SEE SHEET 937.
FOR DRAINAGE PLAN, SEE SHEET 512.
FOR FENCE PLAN SEE SHEET 167.

* CURB TRANSITION 0" TO 6" IN 10'

** CURB TRANSITION MEET EXIST. CURB IN 10'

STA. 107+19.05, ℄ RAMP 'E-8B' =
STA. 10+37.39, ℄ KELLY AVENUE

END WORK
STA. 106+38.34

0 20 40 60
SCALE IN FEET

EAST BOUND
STA. 598+00 TO STA. 604+00
ROADWAY

QUANTITY SUB-SUMMARY

* 707.17, ASTM 3034 SDR 35, OR SUPP. SPEC. 931
PERFORATED AS PER 707.15 OR 707.17, AS PER PLAN

CALC. BY CDB DATE 6/89	SUM-76-11.57	OHIO	144 / 1214
CHKD. BY DSB DATE 8/90	FEDERAL PROJ. IR-76-2-(44)19	F.H.W.A. REGION 5	

SUMMIT COUNTY

SHEET NUMBER	REFERENCE NUMBER	LOCATION	SIDE	304 AGGREGATE BASE, AS PER PLAN C.Y.	404 ASPHALT CONCRETE, AC-20 (DRIVEWAYS) C.Y.	605 6" SHALLOW PIPE UNDERDRAIN, * L.F.	SPEC. PRESSURE RELIEF JOINT, TYPE A L.F.	606 GUARDRAIL, TYPE 5 L.F.	305 9" CONCRETE BASE S.Y.	407 TACK COAT GAL.	608 CURB RAMP, TYPE 2 AS PER PLAN S.F.	CURB RAMP, TYPE I EA.	4" CONCRETE WALK S.F.	609 CURB, TYPE 2A L.F.	CURB, TYPE 2B L.F.	CURB, TYPE 6 L.F.	622 CONCRETE BARRIER, TYPE B50 L.F.
142	B-20	STA 600+25.25 TO STA 600+55.25	℄														30
142	PJ-17	STA 599+78 TO STA 599+87 I-76	LT			71	71										
143	GR-21	STA 70+70 FIFTH AVE	℄					37.5									
	SW-24	STA 70+18 TO STA 71+66 FIFTH AVE	RT/LT										1100				
	SW-25	STA 10+75 TO STA 10+92 KELLY AVE	LT										135				
	CR-26	STA 68+60 FIFTH AVE	LT								25						
	CR-27	STA 10+80 KELLY AVE	LT									1					
	CR-28	STA 10+05 KELLY AVE	LT									1					
	PJ-18	STA 599+83 TO STA 599+93 I-76	RT			72	72										
	C-37	STA 70+70 FIFTH AVE	℄													27	
	C-38	STA 599+79 TO STA 600+05 I-76	RT											26			
143	C-39	STA 68+75 TO STA 69+65 FIFTH AVE	LT/	4.4	0.9				26	2.1					90		
TOTALS				4.4	0.9	143	143	37.5	26	2.1	25	2	1235	26	90	27	30

AA. B. P# 71942R

CALC. BY. DATE	SUM-76-11.57	OHIO
CHKD. BY. DATE	FED. PROJECT IR-76-2(44)19	F.H.W.A. REGION 5

145/1214

BENCHMARK: TOP SW BOLT ON BASE OF R.R. WARNING LIGHTS ON N. SIDE OF THIRD AVE. JUST EAST OF BRIDGE OVER LITTLE CUYAHOGA RIVER

ELEV. 1003.19

SUMMIT COUNTY

STA. 16+26.92, ℄ MARTHA AVE.
STA. 36+00.22, ℄ THIRD AVE.

CR 29

R/W

MARTHA AVENUE

P.T. STA. 35+09.01

PROP. CURB TYPE 2B

C 40

SW 26

STA. 34+91.95
BEGIN FULL DEPTH PAVING

STA. 33+59
BEGIN WORK

EXIST. R/W

EX. CURB & GUTTER

LA R/W

C 41

PROP. CURB TYPE 2B

FULL DEPTH ASPHALT WIDENING

PROP. CURB TYPE 6

GATE

EXIST. R/W

* TAPER TO MEET EX. CURB IN 10'

100' SHOULDER TAPER

B 22

P/I 9

B 21

6" U.D.

END APPROACH SLAB
STA. 608+99.03

MATCH LINE STA. 610+00
SEE SHEET 148

AVENUE

12" C.I.P. (ABAN.)

57" B.S. (ABAN.)

60"

LITTLE CUYAHOGA RIVER

AKRON BARBERTON BELT

EXIST. R/W

KELLY

16

15 ℄

30" S

P.C. STA. 31+20.14

WALK

12" S

INTERCEPTOR

RAILROAD

30

THIRD

31

32

33

34

35

EXIST R/W

PROP. AERIAL EASEMENT LINE

I-76 WEST BOUND

I-76 EAST BOUND

℄ I-76

605

606

607

608

609

MATCH LINE STA. 604+00
SEE SHEET 142

PAVED

BERM

0 20 40 60
SCALE IN FEET

FOR LEGEND, SEE SHEET 117.
FOR ROADWAY QUANTITIES, SEE SHEET 147.
FOR PAVEMENT DETAILS, SEE SHEET 198.
FOR DRAINAGE PLAN, SEE SHEET 513.
FOR FENCE PLAN SEE SHEET 167.
FOR REMOVAL PLAN, SEE SHEET 225.
FOR STRUCTURE PLANS, SEE SHEET 937.

MATCH SHEET 146.

WEST BOUND
STA. 604+00 TO STA. 610+00
ROADWAY

AA B/P# 71942R

CALC. BY. DATE	SUM-76-11.57	OHIO
CHKD. BY. DATE	FED. PROJECT IR-76-2(44)19	F.H.W.A. REGION 5

SUMMIT COUNTY

146 / 1214

MATCH SHEET 145

MATCH LINE SEE SHEET 142

STA. 604+00

I-76 WEST BOUND

I-76 EAST BOUND

I-76 ℄

605 606 607 608 609

WALL

12" F.P. (GOODYEAR)

LITTLE

LITTLE CUYAHOGA

END APPROACH SLAB
STA. 608+99.03

B 21

PJ 20

EX. 6" UD

MATCH LINE SEE SHEET 150

STA. 610+00

GR 22

NO CURB ON APPROACH SLABS

21" S

P.C. STA. 604+50.15, 59.50' RT. ℄ I-76

PROP. AERIAL EASEMENT LINE

NOSE STA. 607+84.00, 82.5' RT. ℄ I-76
STA. 7+83.30, 16' LT. ℄ RAMP 'E-9'
P.C.C. STA. 8+43.41, ℄ RAMP 'E-9'

INTERCEPTOR

RAMP 'E-9'

30" S

12" S

10" SAN

AKRON

END APPROACH SLAB
STA. 9+75.13

PJ 21

B 21

MATCH LINE STA. 10+25

BALTIMORE & OHIO RAILROAD

TANK

TANK

TANK

WALL

CUYAHOGA RIVER

BARBERTON RAILROAD BELT

EXIST. LA

0 20 40 60
SCALE IN FEET

FOR LEGEND, SEE SHEET 117.
FOR ROADWAY QUANTITIES, SEE SHEET 147.
FOR PAVEMENT DETAILS, SEE SHEET 198.
FOR DRAINAGE PLAN, SEE SHEET 515.
FOR STRUCTURE PLANS, SEE SHEET 937.

EAST BOUND
STA. 604+00 TO STA. 610+00
ROADWAY

QUANTITY SUB-SUMMARY

CALC BY CDB DATE 6/89	SUM-76-11.57	OHIO	147 / 1214
CHKD BY DSB DATE 8/90	FEDERAL PROJ. IR-76-2-(44)19	F.H.W.A. REGION 5	

SUMMIT COUNTY

* 707.17 ASTM 3034 SDR 35, OR SUPP. SPEC. 931
PERFORATED AS PER 707.15 OR 707.17, AS PER PLAN

SHEET NUMBER	REFERENCE NUMBER	LOCATION	SIDE	605 SPEC. 6" SHALLOW PIPE UNDERDRAIN, * L.F.	605 SPEC. PRESSURE RELIEF JOINT, TYPE A L.F.	608 CURB RAMP, TYPE I AS PER PLAN EA.	608 4" CONCRETE WALK S.F.	609 CURB, TYPE 2B L.F.	622 CONCRETE BARRIER, TYPE B50 L.F.	622 CONCRETE BARRIER, TYPE D, AS PER PLAN L.F.
145	B-21	STA 608+69 TO STA 608+99 I-76	℄						30	
	B-22	STA 608+93 TO STA 610+01 I-76	LT							83
	SW-26	STA 34+93 THIRD AVE TO STA 17+52					1160			
		MARTHA AVE	LT							
	CR-29	STA 16+80 MARTHA AVE	LT			1				
	PJ-19	STA 609+08 TO STA 609+20 I-76	LT	77	77					
145	C-40	STA 34+91.95 THIRD AVE TO STA 17+52						170		
		MARTHA AVE	LT							
146	PJ-20	STA 609+40 TO STA 609+50 I-76	RT	70	70					
146	PJ-21	STA 10+01 TO STA 10+09 RAMP E-9	RT/LT	41	33					
		TOTALS		188	180	1	1160	170	30	83

AA B/P# 71942R

CALC. BY.		SUM-76-11.57	OHIO
CHKD. BY.		FED. PROJECT IR-76-2(44)19	F.H.W.A. REGION 5

148/1214

SUMMIT COUNTY

STA. 17+51.77
END WORK

MATCH SHEET 152.

P.C. STA. 11+22.13

P.T. STA. 12+66.12

STA. 9+01.86, ℄ RAMP 'E-15' =
STA. 16+56.93, ℄ MARTHA AVENUE

LA R/W

PROP. CURB TYPE 2A

OBT

4" G ELEC.

AVENUE "T" (CSAH) W. "G"

RAMP 'E-12'

RAMP 'E-15'

B-21

B-22

P.T. STA. 16+80.51

* CURB TRANSITION
0" TO 6" IN 10'

** CURB TRANSITION
MEET EXIST. CURB IN 10'

BENCHMARK CHISELED 'X' ON
TOP OF S.W. BOLT OF BASE
OF I-76 WEST SIGN AT MARTHA
AND RAMP 'E-12'

ELEV. 1013.17

STA. 16+03.92, ℄ MARTHA AVENUE
STA. 19+01.94 ℄ RAMP 'E-12'

STA. 16+26.92
℄ MARTHA AVE.
STA. 36+00.22
℄ THIRD AVE.

MARTHA "S" AVE. W. "S"

CONC. WALK

NOSE STA. 12+08.65, 18' RT. ℄ RAMP 'E-12'
STA. 612+08.65, 54.5' LT. ℄ I-76

S.C. STA. 13+58.65

T.S.

EX. RAMP 'E-13'

I-76 WEST BOUND

I-76 EAST BOUND

I-76

EX. 6" U.D.

BEGIN APPROACH SLAB
STA. 610+56.52

END APPROACH SLAB
STA. 611+79.83

STA. 611+18.67, ℄ I-76
STA. 13+81.17, ℄ MARTHA AVE.

P.C. STA. 615+54.92

MATCH LINE STA. 610+00
SEE SHEET 145

MATCH LINE STA. 616+00
SEE SHEET 155

MATCH SHEET 150.

FOR LEGEND, SEE SHEET 117.
FOR ROADWAY QUANTITIES, SEE SHEET 149.
FOR PAVEMENT DETAILS, SEE SHEET 199.
FOR DRAINAGE PLAN, SEE SHEET 516.
FOR REMOVAL PLAN, SEE SHEET 231.
FOR FENCE PLAN, SEE SHEET 168.
FOR WATERWORK PLAN, SEE SHEET 589.
FOR STRUCTURE PLANS, SEE SHEET 1077.

0 20 40 60
SCALE IN FEET

WEST BOUND
STA. 610+00 TO STA. 616+00
ROADWAY

QUANTITY SUB-SUMMARY

* 707.17, ASTM 3034 SDR 35, OR SUPP. SPEC. 931
PERFORMED AS PER 707.15 OR 707.17 AS PER PLAN

CALC. BY CDB DATE 6/89	SUM-76-11.57	OHIO
CHKD. BY DSB DATE 8/90	FEDERAL PROJ. IR-76-2-(44)19	F.H.W.A. REGION 5

SUMMIT COUNTY

149
1214

SHEET NUMBER	REFERENCE NUMBER	LOCATION	SIDE	605	SPEC.	606	606		608		609			612	622	
				6" SHALLOW PIPE UNDERDRAIN, *	PRESSURE RELIEF JOINT, TYPE A	GUARDRAIL, TYPE 5	BRIDGE TERMINAL ASSEMBLY, TYPE 1	ANCHOR ASSEMBLY, TYPE A	CURB RAMP, TYPE 1 AS PER PLAN	4" CONCRETE WALK	CURB, TYPE 2A	CURB, TYPE 2B	CURB, TYPE 6	CONCRETE MEDIAN	CONCRETE BARRIER, TYPE D, AS PER PLAN	
				L.F.	L.F.		EA.	EA.	EA.	S.F.	L.F.	L.F.	L.F.	S.Y.	L.F.	
148	B-23	STA 611+63 I-76 TO STA 13+00 RAMP E-12	LT												137	
	SW-27	STA 16+70 TO STA 17+52 MARTHA AVE	RT							642						
	SW-28	STA 11+70 TO STA 15+91 MARTHA AVE	RT							2685						
	SW-29	STA 13+06 TO STA 14+79 MARTHA AVE	LT							1290						
	CR-30	STA 16+77 MARTHA AVE	RT						1							
	CR-31	STA 18+55 RAMP E-12	LT						1							
	GR-21A	STA 13+50 TO STA 13+00 RAMP E-12				25	1	1								
	PJ-22	STA 610+03 TO STA 610+13 I-76	LT	76	76											
	PJ-23	STA 611+90 TO STA 612+03 I-76	LT	81	81											
	CM-1	STA 15+43 TO STA 18+45 RAMP E-12	RT											135		
	C-41	STA 33+59 THIRD AVE TO STA 8+79										889	133			
		MARTHA AVE	RT/LT													
	C-42	STA 17+52 MARTHA AVE TO STA 10+75									211					
		RAMP E-15	RT/LT													
148	C-43	STA 13+65 RAMP E-16 TO STA 17+84.72									249	359				
		RAMP E-12	LT													
	TOTALS			157	157	25	1	1	2	4617	460	1248	133	135	137	

AA. B. P# 71V42R

CALC. BY.		SUM-76-11.57	OHIO
CHKD. BY.		FED. PROJECT IR-76-2(44)19	F.H.W.A. REGION 5
DATE			

150 / 1214

SUMMIT COUNTY

BENCHMARK: TOP NE BOLT OF CONCRETE BASE OF OVERHEAD SIGN SOUTH OF I-76 JUST EAST OF MARTHA.

ELEV. 1031.50

MATCH SHEET 148

FOR LEGEND, SEE SHEET 117.

FOR ROADWAY QUANTITIES, SEE SHEET 151.

FOR PAVEMENT DETAILS, SEE SHEET 199.

FOR DRAINAGE PLAN, SEE SHEET 518.

FOR FENCE PLAN SEE SHEET 168.

FOR REMOVAL PLAN, SEE SHEET 231.

FOR WATERWORK PLAN, SEE SHEET 591.

FOR STRUCTURE PLANS, SEE SHEET 1077 & 1111.

STA. 611+18.67, ℄ I-76
STA. 13+81.17, ℄ MARTHA AVE.

BEGIN APPROACH SLAB
STA. 610+56.52

END APPROACH SLAB
STA. 611+79.83

P.C. STA. 615+54.92

MATCH LINE STA. 610+00
SEE SHEET 146

MATCH LINE STA. 616+00
SEE SHEET 157

I-76 WEST BOUND

I-76 EAST BOUND

I-76

611 612 613 614 615

EX. 6" U.D.

B 24 B 25 B 26

PJ 24 PJ 25 PJ 26

15" SAN

12" S

13

14

GR 22 GR 23 GR 24 GR 25 GR 27 GR 28

P.C. STA. 610+51.64
59.50' RT. ℄ I-76

C 44 PROP. CURB TYPE 2A

SW 29 SW 28 SW 30

100' SHOULDER TAPER

50' SHOULDER TAPER

NOSE STA 613+30.00, 70.5' RT ℄ I-76 =
STA. 13+28.65, 16' LT. ℄ RAMP 'E-10'

EX. RAMP 'E-10'

BEGIN APPROACH SLAB
STA. 14+07.14

P.T. STA. 14+28.65

RETAINING WALL #9
FOR DETAIL, SEE SHEET 713

RAMP 'E-10'

RAMP 'E-16'

STA. 14+97.27, ℄ RAMP 'E-10' =
STA. 15+19.34, ℄ RAMP 'E-16'

END APPROACH SLAB
STA. 15+70.87

P.C. STA. 15+71.97

STA. 14+82.49

STA. 13+32.49

PROP. CURB TYPE 2B

150' SHOULDER TAPER

P.C. STA. 12+99.89

B-20

C 43 C 41 C 45 C 50

CR 32 CR 33 CR 34 CR 35 CR 36 CR 37

MATCH LINE STA. 16+25
SEE SHEET 153

MATCH LINE STA. 16+00
SEE SHEET 153

CURB TRANSITION
0" TO 6" IN 10"

EX. RAMP 'E-9'

RAMP 'E-9'

STA. 11+49.17, ℄ MARTHA AVENUE
STA. 12+24.21, ℄ RAMP 'E-16'

STA. 10+75

150' SHOULDER TAPER

EXIST. LA

LITTLE CUYAHOGA INTERCEPTOR

STA. 12+25

MATCH LINE STA. 10+25
SEE SHEET 149

MARTHA AVENUE

JOHNS AVENUE

ENGLEWOOD AVENUE

LA R/W

4" G

8" SAN

18" SAN

30" S

W 6"

W 12"

OBT

ELEC

0 20 40 60
SCALE IN FEET

MATCH SHEET 153

EAST BOUND
STA. 610+00 TO STA. 616+00
ROADWAY

QUANTITY SUB-SUMMARY

* 707.17, ASTM 3034 SDR 35, OR SUPP. SPEC. 931 PERFORATED AS PER 707.15 OR 707.17 AS PER PLAN

CALC. BY CDB DATE 6/89	SUM-76-11.57	OHIO
CHKD. BY DSB DATE 8/90	FEDERAL PROJ. IR-76-2-(44)19	F.H.W.A. REGION 5

151 / 1214

SUMMIT COUNTY

SHEET NUMBER	REFERENCE NUMBER	LOCATION	SIDE	304 AGGREGATE BASE, AS PER PLAN C.Y.	605 6" SHALLOW PIPE UNDERDRAIN, * L.F.	SPEC. 301 PRESSURE RELIEF JOINT, TYPE A L.F.	606 BITUMINOUS AGGREGATE BASE, AC-20 C.Y.	606 GUARDRAIL, TYPE 5 L.F.	606 ANCHOR ASSEMBLY, TYPE A EA.	606 BRIDGE TERMINAL ASSEMBLY, TYPE I EA.	608 CURB RAMP, TYPE I AS PER PLAN EA.	608 4" CONCRETE WALK S.F.	609 CURB, TYPE 2A L.F.	609 CURB, TYPE 2B L.F.	622 CONCRETE BARRIER, TYPE B50 L.F.	622 CONCRETE BARRIER, TYPE D, AS PER PLAN L.F.
150	GR-22	STA 609+67 TO STA 610+67 I-76	RT				2.5	75	1	1						
	GR-23	STA 13+95 TO STA 14+70 RAMP E-10	LT				1.9	50	1	1						
	GR-24	STA 12+90 TO STA 13+65 RAMP E-16	LT				1.9	50	1	1						
	GR-25	STA 13+70 TO STA 14+70 RAMP E-16	RT				2.5	75	1	1						
	B-24	STA 610+40 TO STA 610+80.96 I-76	℄	3.1											41	
	B-25	STA 611+55 TO STA 612+45 I-76	℄	6.6											87.5	
	B-26	STA 612+35 I-76 TO STA 14+07 RAMP E-10	RT													172
	B-27	STA 10+17 TO STA 10+95 RAMP E-9	RT													75
	SW-30	STA 9+98 TO STA 22+44 MARTHA AVE = EDGLEWOOD AVE	RT/LT									2081				
	CR-32	STA 12+58 RAMP E-16	LT								1					
	CR-33	STA 11+18 MARTHA AVE	RT								1					
	PJ-24	STA 610+35 TO STA 610+45 I-76	RT		71	71										
	PJ-25	STA 612+27 TO STA 612+39 I-76	RT		85	85										
	PJ-26	STA 13+79 TO STA 13+94 RAMP E-10	LT/RT		35	27										
	C-44	STA 610+43 TO STA 610+69 I-76	RT										26			
150	C-45	STA 14+70 RAMP E-16 TO STA 21+03 ENGLEWOOD AVE	RT/LT										262	161		
	TOTALS			9.7	191	183	8.8	250	4	4	2	2081	288	161	128.5	247

AA B/P# 719428R

CALC. BY. DATE	SUM-76-11.57	OHIO
CHKD. BY. DATE	FED. PROJECT IR-76-2(44) 19	F.H.W.A. REGION 5

152/214

SUMMIT COUNTY

CONCRETE BARRIER END TREATMENT AS PER ODOT STD. DRAWING GR-8

IRENE AVENUE

SAN JOHNS AVENUE

8" SAN. S

18" S

6" W

21" S

12" W

24" S

15" SAN. S

6" W

29 30 31 32 33 34

℄ EAST MARKET STREET

BR 1 BR 2 BR 3 B 28 C 46 BR 4

15" SAN.

12" W

15" SAN.

8" G

15" SAN.

12" S

15" SAN.

MATCH LINE STA. 34+40
SEE SHEET 155

LA R/W

P.C. STA. 11+22.13

P.T. STA. 12+66.12

GR-26A GR-26B GR-26

SW 31

PROP. CURB TYPE 2B
FOR CURB REPLACEMENT DETAIL, SEE SHEET 188.

* CURB TRANSITION. 0" TO 6" IN 10'

** CURB TRANSITION MEET EXIST. CURB IN 10'

RAMP 'E-15'

RAMP 'E-12'

CM 1

B-21

B-22

C 42 PROP. CURB TYPE 2A

LA R/W

P.T. STA. 16+80.51

MATCH SHEET 148.

12" S

FOR LEGEND, SEE SHEET 117.

FOR ROADWAY QUANTITIES, SEE SHEET 154.

FOR PAVEMENT DETAILS, SEE SHEET 211.

FOR BRICK SIDEWALK DETAILS, SEE SHEET 190.

FOR FENCE PLAN SEE SHEET 168.

FOR REMOVAL PLAN, SEE SHEET 231.

FOR WATERWORK PLAN, SEE SHEET 590.

SCALE IN FEET
0 20 40 60

RAMPS 'E-12' & 'E-15'
ROADWAY

AA B,P# 71942R

CALC. BY. DATE	SUM-76-11.57	OHIO
CHKD. BY. DATE	FED. PROJECT IR-76-2(44)19	F.H.W.A. REGION 5

153
1214

BENCHMARK: CHISELED 'X' ON TOP NE BOLT, BASE OF I-76 EAST & WEST SIGN, EAST SIDE OF MARTHA, 75'± SOUTH OF ENGLEWOOD AVE.

ELEV. 1022.53

MATCH SHEET 150

MATCH LINE STA. 12+40

SUMMIT COUNTY

STA 12+83.46

100' SHOULDER TAPER

STA 13+83.46

C.S. STA. 13+83.46

PROP CURB TYPE 2A

NOSE STA. 15+33.46, 15' LT. ℄ RAMP 'E-9' = STA. 7+79.31, 17' LT. ℄ MARTHA AVE.

S.T. STA. 15+33.46

RAMP 'E-9'

RAMP 'E-16'

LITTLE CUYAHOGA INTERCEPTOR

RAILROAD

BELT

BARBERTON

AKRON

MARTHA

AVENUE

JOHNS AVENUE

ENGLEWOOD AVENUE

LEAGUE STREET

L.A R/W

PROP CURB TYPE 2B

PROP CURB TYPE 2A

PROP CURB TYPE 2B

PROP CURB TYPE 2B

PROP CURB TYPE 2B

PROP CURB TYPE 2B

STA. 9+70.01, ℄ MARTHA AVENUE = STA. 20+00.00, ℄ ENGLEWOOD AVENUE

STA. 21+03, MEET EXIST. FULL DEPTH PAVEMENT

STA. 21+14.20, ℄ ENGLEWOOD AVE. = STA. 40+00.00, ℄ LEAGUE STREET

P.C. STA. 12+99.89

B-19

B-20

B-29

C47 C48 C49 C50 C41 C45

CR 33 CR 34 CR 35 CR 36 CR 37

SW 32 SW 33

CM 2

8" SAN

4" G

W 6"

W 12"

OBT

EXIST. 281800 E

FULL DEPTH WIDENING

TRANSITION BARRIER TO MEET EXIST. CURB. FOR DETAIL, SEE SHEET 1162.

STA. 5+09.31 BEGIN WORK

STA. 7+77.31 MEET EXIST. FULL DEPTH PAVEMENT

FOR CURB REPLACEMENT DETAIL, SEE SHEET 188.

MATCH LINE STA. 23+00 SEE SHEET 157

* CURB TRANSITION 0" TO 6" IN 10'

** CURB TRANSITION MEET EXIST. CURB IN 10'

FOR LEGEND, SEE SHEET 117

FOR ROADWAY QUANTITIES, SEE SHEET 154.

FOR PAVEMENT DETAILS, SEE SHEET 209.

FOR DRAINAGE PLAN, SEE SHEET 520.

FOR FENCE PLAN SEE SHEET 168.

FOR REMOVAL PLAN, SEE SHEET 231.

FOR WATERWORK PLAN, SEE SHEET 592.

0 20 40 60
SCALE IN FEET

MATCH SHEET 150

RAMP 'E-9' & 'E-16'
ROADWAY

QUANTITY SUB-SUMMARY

CALC. BY CDB DATE 6/89	SUM-76-11.57	OHIO	154 / 1214
CHKD. BY DSB DATE 8/90	FEDERAL PROJ. IR-76-2-(44)19	F.H.W.A. REGION 5	

SUMMIT COUNTY

SHEET NUMBER	REFERENCE NUMBER	LOCATION	SIDE	304 AGGREGATE BASE, AS PER PLAN C.Y.	404 ASPHALT CONCRETE, AC-20 (DRIVEWAYS) C.Y.	301 BITUMINOUS AGGREGATE BASE, AC-20 C.Y.	606 GUARDRAIL, TYPE 5 L.F.	606 BRIDGE TERMINAL ASSEMBLY, TYPE 1 EA.	606 ANCHOR ASSEMBLY, TYPE T EA.	606 BRIDGE TERMINAL ASSEMBLY, TYPE 2 EA.	606 ANCHOR ASSEMBLY, TYPE A EA.	305 9" CONCRETE BASE S.Y.	407 TACK COAT GAL.	608 CURB RAMP, TYPE 1, AS PER PLAN S.F.	608 CURB RAMP, TYPE I AS PER PLAN EA.	608 4" CONCRETE WALK S.F.	SPEC BRICK WALK S.F.	609 CURB, TYPE 2A L.F.	609 CURB, TYPE 2B L.F.	612 CONCRETE MEDIAN S.Y.	622 CONCRETE BARRIER, TYPE D, AS PER PLAN L.F.
152	GR-26	STA 11+37 RAMP E-15 TO STA 625+10 I-76	LT			34.0	1362.5		1	1											
	GR-26A	STA 12+08 TO STA 12+58 RAMP E-15						1			1										
	GR-26B	STA 13+45 TO STA 13+95 RAMP E-15						1			1										
	B-28	STA 12+58 TO STA 13+45 RAMP E-15	LT																		87
	SW-31	STA 33+41 TO STA 33+94 MARKET ST	RT													265					
	C-46	STA 30+13 TO STA 42+18 MARKET ST	RT	55.8	11.2							335	26.8						1,206		
	BR-1	STA 30+13 TO STA 30+33 MARKET ST.	RT.														54				
	BR-2	STA 30+52 TO STA 30+82 MARKET ST	RT.														87				
	BR-3	STA 31+95 TO STA 32+33 MARKET ST	RT.														111				
152	BR-4	STA 33+41 TO STA 33+94 MARKET ST	RT.														159				
153	B-29	STA 5+09.31 MARTHA AVE TO STA 14+80																			323
		RAMP E-9	LT/RT																		
	SW-32	STA 7+77.31 MARTHA AVE TO STA 21+03														1434					
		ENGLEWOOD AVE	RT																		
	CR-34	STA 9+47 MARTHA AVE	RT												1						
	CR-35	STA 9+92 MARTHA AVE	RT												1						
	CR-36	STA. 22+36 ENGLEWOOD AVE	LT												1						
	CR-37	STA 22+36 ENGLEWOOD AVE	RT											90							
	CM-2	STA 7+79 TO STA 8+79 MARTHA AVE	LT																	71	
	C-47	STA 13+74 TO STA 14+80 RAMP E-9	RT															106			
	C-48	STA 13+74 TO STA 14+34 RAMP E-9	LT															62			
	C-49	STA 7+77.31 MARTHA AVE TO STA 21+03																	246		
		ENGLEWOOD AVE	RT																		
153	C-50	STA. 21+03 TO STA. 22+44		6.3	1.3							38	3.1						141		
		ENGLEWOOD AVE	LT																		
	TOTALS			62.1	12.5	34	1362.5	2	1	1	2	373	29.9	90	3	1699	411	168	1593	71	410

AA B.P. 7194ER

CALC. BY. DATE	SUM-76-11.57	OHIO
CHKD. BY. DATE	FED. PROJECT IR-76-2(44)19	F.H.W.A. REGION 5

155 / 1214

SUMMIT COUNTY

MATCH LINE STA. 34+40 SEE SHEET 152

MATCH LINE STA. 15+50

MATCH LINE STA. 40+60

MATCH LINE STA. 616+00 SEE SHEET 148

MATCH LINE STA. 622+00 SEE SHEET 159

EAST MARKET STREET

DETROIT STREET

LA R/W

RAMP 'E-15'

B-24

I-76 WEST BOUND

I-76 EAST BOUND

I-76

FOR BRICK WALK DETAILS, SEE SHEET 190.

PROP. CURB TYPE 2B FOR CURB REPLACEMENT DETAIL, SEE SHEET 188.

P.C. STA. 16+87.18

P.T. STA. 17+68.29

P.C. STA. 18+87.83

EX. RAMP 'E-10'

EX. U.D.

150' SHOULDER TAPER

STA. 19+84.10

NOSE STA. 620+41.27, 70.5' LT. ℄ I-76
STA. 20+34.10, 16' RT. ℄ RAMP 'E-15'

STA. 621+41.27 I-76

EXIST. STRUCTURE TO BE REMOVED FOR DETAILS, SEE SHEET 240.

MATCH SHEET 157

FOR LEGEND, SEE SHEET 117

FOR ROADWAY QUANTITIES, SEE SHEET 156

FOR PAVEMENT DETAILS, SEE SHEET 200

FOR DRAINAGE PLAN, SEE SHEET 521

FOR FENCE PLAN SEE SHEET 168

FOR REMOVAL PLAN, SEE SHEET 233

FOR WATERWORK PLAN, SEE SHEET 594

0 20 40 60
SCALE IN FEET

WEST BOUND
STA. 616+00 TO STA. 622+00
ROADWAY

QUANTITY SUB-SUMMARY

CALC. BY CDB DATE 6/89	SUM-76-11.57	OHIO	156 / 1214
CHKD. BY DSB DATE 8/90	FEDERAL PROJ. IR-76-2-(44)19	F.H.W.A. REGION 5	

SUMMIT COUNTY

SHEET NUMBER	REFERENCE NUMBER	LOCATION	SIDE	304 AGGREGATE BASE, AS PER PLAN C.Y.	608 4" CONCRETE WALK S.F.	SPEC BRICK WALK S.F.	622 CONCRETE BARRIER, TYPE B50 L.F.
155	B-30	STA 617+35 TO STA 618+23 I-76	℄	6.7			88
	B-37	STA 621+55 TO STA 622+45 I-76	℄	5.9			80
	SW-33	STA 36+38 TO STA 36+98 MARKET ST	RT		300		
	SW-34	STA 38+66 TO STA 42+07 MARKET ST	RT		1705		
	BR-5	STA 34+46 TO STA 34+71 MARKET ST	RT			72	
	BR-6	STA 34+80 TO STA 35+00 MARKET ST	RT			57	
	BR-7	STA 35+53 TO STA 35+81 MARKET ST	RT			75	
	BR-8	STA 36+38 TO STA 36+98 MARKET ST	RT			180	
	BR-9	STA 37+73 TO STA 38+05 MARKET ST	RT			87	
	BR-10	STA 38+48 TO STA 38+70 MARKET ST	RT			60	
	BR-11	STA 38+95 TO STA 39+56 MARKET ST	RT			180	
155	BR-12	STA 39+90 TO STA 40+12 MARKET ST	RT			63	
TOTALS				12.6	2005	774	168

AA B/P# 71942R

CALC. BY. DATE	SUM-76-11.57	OHIO
CHKD. BY. DATE	FED. PROJECT IR-76-2(44)19	F.H.W.A. REGION 5

157/1214

SUMMIT COUNTY

MATCH SHEET 155

BENCHMARK: NW CORNER OF FIRST STEP AT WALK TO HOUSE NO. 39 DETROIT ST.
ELEV. 1008.20

MATCH LINE STA. 616+00 SEE SHEET 150

MATCH LINE STA. 622+00 SEE SHEET 160

EXIST STRUCTURE TO BE REMOVED FOR DETAILS SEE SHEET 240.

I-76 WEST BOUND

I-76 EAST BOUND

I-76

EX. U.D.

617 618 619 620 621

B 30 B 31 B 37

GR 27

RETAINING WALL #9 FOR DETAIL, SEE SHEET 713

B-23

8" SAN

15" S

12" S

8" W

MATCH LINE STA. 16+25

MATCH LINE STA. 16+00

MATCH LINE STA. 22+00

RAMP 'E-16'

17 18 19 20 21

B 32 B 33

GR 29A

PT. STA. 16+67.43

PC. STA. 21+75.02

ENGLEWOOD

RETAINING WALL #10 FOR DETAIL, SEE SHEET 713

C 51 PROP. CURB TYPE 2A

P.I. 27

SAN 8"

G 4"

RAMP 'E-10'

MATCH LINE STA. 21+50

PROP. CURB TYPE 2B C 54

STA. 17+50, 40' RT EL. 1007.0

GR 28

STA. 18+69.8, 51.5' RT EL. 1007.7

P.T. STA. 19+83.38

C 52 PROP. CURB TYPE 2A

PC. STA. 21+22.45

P.C. STA. 23+70.22 MEET EXIST BUTT JOINT

D 9

AGG. REC. DRIVE

100' SHOULDER TAPER

STA. 18+83.38

GR 29

STA. 21+50, 70' RT EL. 1002.4

L'A R'W

ENGLEWOOD AVENUE

MATCH LINE STA. 23+00

CONC. APRON

SW 35

SW 35A

DETROIT STREET

R/W

C 53 PROP. CURB TYPE 2B

D 10

D 11

CONC. DRIVE

STA. 19+75.3, 55.5' RT EL. 1006.4

C 55

CAMBRIDGE STREET

P.T. STA. 24+98.06

STA. 25+01.88 MEET EXIST. BUTT JOINT

* CURB TRANSITION 0" TO 6" IN 10'

** CURB TRANSITION MEET EXIST. CURB IN 10'

FOR LEGEND, SEE SHEET 117

FOR ROADWAY QUANTITIES, SEE SHEET 158

FOR PAVEMENT DETAILS, SEE SHEET 200

FOR DRAINAGE PLAN, SEE SHEET 523

FOR REMOVAL PLAN, SEE SHEET 233

FOR DRIVEWAY DETAILS, SEE SHEET 189:

FOR FENCE PLAN SEE SHEET 168.

FOR WATERWORK PLAN, SEE SHEET 595.

0 20 40 60
SCALE IN FEET

EAST BOUND
STA. 616+00 TO STA. 622+00
ROADWAY

QUANTITY SUB-SUMMARY

* 707.17 ASTM 3034 SDR 35, OR SUPP. SPEC 931
PERFORATED AS PER 707.15 OR 707.17 AS PER PLAN

CALC. BY CDB DATE 6/89	SUM-76-11.57	OHIO
CHKD. BY DSB DATE 8/90	FEDERAL PROJ. IR-76-2-(44)19	F.H.W.A. REGION 5

SUMMIT COUNTY

158
1214

SHEET NUMBER	REFERENCE NUMBER	LOCATION	SIDE	304 AGGREGATE BASE, AS PER PLAN C.Y.	452 6" PLAIN CONCRETE PAVEMENT S.Y.	605 6" SHALLOW PIPE UNDERDRAIN, * L.F.	SPEC. 301 PRESSURE RELIEF JOINT, TYPE A L.F.	BITUMINOUS AGGREGATE BASE, AC-20 C.Y.	606 GUARDRAIL, TYPE 5 L.F.	ANCHOR ASSEMBLY, TYPE A EA.	ANCHOR ASSEMBLY, TYPE T EA.	BRIDGE TERMINAL ASSEMBLY, TYPE 2 EA.	BRIDGE TERMINAL ASSEMBLY, TYPE 1 EA.	608 4" CONCRETE WALK S.F.	609 CURB, TYPE 2A L.F.	CURB, TYPE 2B L.F.	CURB, TYPE 6 L.F.	622 CONCRETE BARRIER, TYPE D, AS PER PLAN L.F.
157	GR-27	STA 614+98 TO STA 619+49 I-76	RT					10.8	400	1	1							
	GR-28	STA 15+28 TO STA 18+78 RAMP E-10	RT					8.7	337.5		1	1						
	GR-29	STA 19+83 TO STA 20+12 RAMP E-10	RT						25									
	GR-29A	STA. 21+22 TO STA. 21+72 RAMP E-16								1			1					
	B-31	STA 17+75 TO STA 22+20 RAMP E-16	LT															445
	B-32	STA 16+38 TO STA 17+16 RAMP E-16	RT															78
	B-33	STA 21+72 TO STA 22+65 RAMP E-16	RT															93
	SW-35	STA 23+70.22 TO STA 25+01.88 ENGLEWOOD	RT											435				
	~~SW-35A~~	~~STA 17+50 TO STA 21+50 RAMP E-10~~	~~RT~~											1600				
	PJ-27	STA 16+39.70 STA 16+47 RAMP E-10	LT/RT			34	26											
	C-51	STA 18+70 RAMP E-10 TO STA 31+70.00 ENGLEWOOD AVE	LT												392	143		
	C-52	STA 19+73 TO STA 22+85 RAMP E-10	RT												305	43		
	C-53	STA 23+70.22 TO STA 25+01.88 ENGLEWOOD	RT													101		
	C-54	STA 23+77.22 TO STA 25+01.88 ENGLEWOOD	LT													155		
	C-55	STA 19+85 TO STA 20+10 RAMP E-10	RT														25	
	D-9	STA 24+44 ENGLEWOOD AVE	LT	3.2	14													
	D-10	STA 24+63 ENGLEOOD AVE	LT	3.3	29													
157	D-11	STA 24+93 ENGLEWOOD AVE	LT	1.2	10													
	TOTALS			13.7	53	34	26	19.5	762.5	2	2	1	1	2035	697	442	25	616

2035

CALC. BY.		SUM-76-11.57	OHIO
DATE			
CHKD. BY.		FED. PROJECT IR-76-2(44)19	F.H.W.A. REGION 5
DATE			

159
1214

SUMMIT COUNTY

MATCH LINE STA. 40+60

STA. 41+37.63, ℄ E. MARKET STREET
STA. 13+65.72, ℄ WIGLEY AVE.

ELINOR AVENUE

EAST MARKET STREET

LA R/W

PROP. CURB (C) TYPE 2B FOR (46) CURB REPLACEMENT DETAIL, SEE SHEET 188.

CURB TRANSITION MEET EXISTING CURB IN 10'.

WIGLEY AVENUE

EXIST. LA

P.T. STA. 623+87.75
59.50' LT. ℄ I-76

EX. RAMP 'E-15'

RETAINING WALL NO.11
FOR DETAIL, SEE SHEET 715.

B-26

I-76 WEST BOUND

I-76 EAST BOUND

I-76

P.T. STA. 623+87.75

MATCH LINE STA. 622+00
SEE SHEET 155

MATCH LINE STA. 628+00
SEE SHEET 162

MATCH SHEET 160.

FOR LEGEND, SEE SHEET 117.
FOR ROADWAY QUANTITIES, SEE SHEET 161
FOR PAVEMENT DETAILS, SEE SHEET 200.
FOR DRAINAGE PLAN, SEE SHEET 525.
FOR REMOVAL PLAN, SEE SHEET 233.
FOR FENCE PLAN SEE SHEET 168.
FOR WATERWORK PLAN, SEE SHEET 596.

0 20 40 60
SCALE IN FEET

WEST BOUND

AA B.P# 71942R

CALC. BY. DATE	SUM-76-11.57	OHIO
CHKD. BY. DATE	FED. PROJECT IR-76-2(44)19	F.H.W.A. REGION 5

160 / 214

SUMMIT COUNTY

MATCH SHEET 159

BENCHMARK: 'R' IN CORY ON HYDRANT ON NORTH SIDE OF ENGLEWOOD 180'± EAST OF WIGLEY AVE.

ELEV. 1005.61

P.T. STA. 623+87.75

I-76 WEST BOUND

I-76 EAST BOUND

I-76

MATCH LINE STA. 622+00 SEE SHEET 157

MATCH LINE STA. 628+00 SEE SHEET 162

EX. U.D.

12" S

8" SAN. S.

EX. RAMP 'E-16'

NOSE STA. 624+50.00, 50.5' RT. ℄ I-76 = STA. 24+50.00, 16' LT. ℄ RAMP 'E-16'

40:1 TAPER

50' SHOULDER TAPER

RAMP 'E-16'

RETAINING WALL #13 FOR DETAIL, SEE SHEET 717.

LA R/L

ENGLEWOOD AVENUE

B-25

B-27

PROP. CURB TYPE 2A

PROP. CURB TYPE 2B

RAMP 'E-10'

WIGLEY AVENUE

R/W

STA. 31+70.00 MEET EXIST. BUTT JOINT

STA. 30+49.09, ℄ ENGLEWOOD AVENUE = STA. 10+00.00, ℄ WIGLEY AVENUE

P.T. STA. 22+88.85 ℄ RAMP 'E-10'

STA. 22+91.32, ℄ RAMP 'E-10' = STA. 9+70.68, ℄ WIGLEY AVENUE

STA. 22+769.67 RT EL. 1002.30

STA. 9+01.72 MEET EXIST. BUTT JOINT

PAVED GUTTER

PAVED PARKING

* CURB TRANSITION MEET EXIST CURB IN 10'

** MEDIAN TRANSITION 0" TO 6" IN 10'

FOR LEGEND, SEE SHEET 117.

FOR ROADWAY QUANTITIES, SEE SHEET 161.

FOR PAVEMENT DETAILS, SEE SHEET 200.

FOR DRAINAGE PLAN, SEE SHEET 527.

FOR REMOVAL PLAN, SEE SHEET 233.

FOR FENCE PLAN SEE SHEET 168.

FOR WATERWORK PLAN, SEE SHEET 598.

0 20 40 60
SCALE IN FEET

EAST BOUND
STA. 622+00 TO STA. 628+00
ROADWAY

QUANTITY SUB-SUMMARY

CALC. BY CDB DATE 6/89	SUM-76-11.57	OHIO
CHKD. BY DSS DATE 8/90	FEDERAL PROJ. IR-76-2-(44)19	F.H.W.A. REGION 5

SUMMIT COUNTY

161
1214

SHEET NUMBER	REFERENCE NUMBER	LOCATION	SIDE	608 CURB RAMP, TYPE 2 AS PER PLAN EA.	608 4" CONCRETE WALK S.F.	609 CURB, TYPE 2B L.F.	612 6" CONCRETE TRAFFIC ISLAND S.Y.	622 CONCRETE BARRIER, TYPE D, AS PER PLAN L.F.
159	B-34	STA 625+10 TO STA 626+00 I-76	LT					70
160	CM-3	STA 30+89 TO STA 31+70 ENGLEWOOD AVE	RT				36	
	SW36	STA 9+01.22 WIGLEY TO STA 31+25 ENGLEWOOD AVE.	RT.		480			
	SW-40	STA. 9+01.22 TO STA. 9+29 WIGLEY AVE.	LT.		70			
	~~SW-40A~~	~~STA. 21+50 TO STA. 22+769 RAMP E-10~~	RT		508			
	C-56	STA 9+01.72 WIGLEY AVE TO STA 31+70.00 ENGLEWOOD AVE	RT			147		
	CR-38	STA. 9+09 WIGLEY AVE	LT.					
160	CR-39	STA. 9+09 WIGLEY AVE.	RT	1				
	TOTALS			1	1058	147	36	70

AA B.P# 71942R

CALC. BY. DATE	SUM-76-11.57	OHIO
CHKD. BY. DATE	FED. PROJECT IR-76-2(44)19	F.H.W.A. REGION 5
	SUMMIT COUNTY	

162
1214

BENCHMARK: R' IN CORY HYDRANT AT SE CORNER OF INTERSECTION OF ENGLEWOOD AND SEIBERLING

ELEV. 1007.82

FOR LEGEND, SEE SHEET 117.
FOR ROADWAY QUANTITIES, SEE SHEET 165.
FOR PAVEMENT DETAILS, SEE SHEET 201.
FOR DRAINAGE PLAN, SEE SHEET 529.
FOR REMOVAL PLAN, SEE SHEET 235.
FOR WATERWORK PLAN, SEE SHEET 599.
FOR STRUCTURE PLANS SEE SHEET 1135.

END PROJECT SUM-76-11.57 STA. 634+00 IR-76-2(44)19

STA. 629+76.39, ℄ I-76
STA. 11+07.71, ℄ SEIBERLING STREET

P.C. STA. 629+81.21

END APPROACH SLAB STA. 630+30.59

RETAINING WALL NO. 12 FOR DETAIL, SEE SHEET 716

RETAINING WALL No. 11 FOR DETAIL, SEE SHEET 715

RETAINING WALL No. 13 FOR DETAIL, SEE SHEET 717.

RETAINING WALL No. 14 FOR DETAIL, SEE SHEET 719

BEGIN APPROACH SLAB STA. 629+22.21

STA. 37+46 BEGIN WORK MEET EXISTING

STA. 37+25.48, ℄ ENGLEWOOD AVE. = STA. 10+00.00, ℄ SEIBERLING STREET

STA. 37+26.46, ℄ RELOCATED ENGLEWOOD AVE. STA. 9+93.92, ℄ SEIBERLING STREET

P.C. STA. 39+59.24

P.T. STA. 40+03.32

MATCH LINE STA. 628+00 SEE SHEET 159 & 160

MATCH LINE STA. 634+00 SEE SHEET 163

SEIBERLING STREET

I-76 WEST BOUND

I-76 EAST BOUND

RELOCATED ENGLEWOOD AVENUE

EXIST. LA

EXIST. R/W

LA R/W

PROP CURB TYPE 2B

EX. RAMP 'E-16'

40:1 TAPER

PAVED PARKING

PAVED PARKING LOT

EX. U.D.

SAN 8"

SAN 10"

SAN 12"

SAN 36" W

8" G

4" I.P.G.

ELEC. 10" W

2" G

6" G

12" S

18" S

24" S

36" S

WALK

berm

overhead sign

* CURB TRANSITION MEET EXISTING CURB IN 10'

0 20 40 60
SCALE IN FEET

STA. 628+00 TO STA. 634+00
ROADWAY

AA B/P# 71942R

CALC. BY.		SUM-76-11.57	OHIO
CHKD. BY.		FED. PROJECT IR-76-2(44)19	F.H.W.A. REGION 5
DATE			

163
1214

SUMMIT COUNTY

ramp

BENCHMARK 'R' IN CORY HYDRANT ON NORTH SIDE OF ENGLEWOOD ABOUT 35' EAST OF ENTRANCE TO AKRON STANDARD (NO. 1624) NEAR GENERAL ST. EXIT. RAMP

ELEV. 1013.10

END RETAINING WALL No. 12
STA. 634+00

RETAINING WALL No. 27
TO BE CONSTRUCTED BY OTHERS
IN PROJECT SUM-76-13.41

MATCH LINE STA. 634+00
SEE SHEET 162

EXIST. LA

18"

AC 1

STA. 635+25
FEATHER AREA
MEET EXISTING

38'

32'

I-76 WEST BOUND

I-76 EAST BOUND

ITEM 615 TEMPORARY PAVEMENT AS PER PLAN
CLASS 'A' FLEXIBLE FOR DETAILS, SEE SHEET 22.

AC 2

12" S

EX U.D

635

636

I-76

637

638

639

B-25

B-28

15" S

berm

EX. RAMP 'E-19'

8" SAN

STA. 637+50

STA. 638+58

5'

18" S

4" IPG

ELEC.

LA R/W

CAS LINE MARKER (APP LOC)

C 58 PROP CURB TYPE 2B

CAS LINE MARKER

ELEC

4" IPG

LA R/W

RELOCATED ENGLEWOOD AVENUE

42 43 44 45 47

24" S

10" SAN

18" S

8" SAN

WALK

C 59 PROP CURB TYPE 2-B

D 1 D 2 D 3 D 4

SW 39

PAVED PARKING LOT

END RETAINING WALL No. 14
STA. 634+00

RETAINING WALL No. 16
TO BE CONSTRUCTED BY OTHERS
IN PROJECT SUM-76-13.41

MATCH LINE STA. 640+00
SEE SHEET 164

FOR LEGEND, SEE SHEET 117.

FOR ROADWAY QUANTITIES, SEE SHEET 165.

FOR PAVEMENT DETAILS, SEE SHEET 201.

FOR DRAINAGE PLAN, SEE SHEET 531.

FOR REMOVAL PLAN, SEE SHEET 235.

FOR WATERWORK PLAN, SEE SHEET 601.

0 20 40 60
SCALE IN FEET

STA. 634+00 TO STA. 640+00
ROADWAY

CALC. BY.		SUM-76-11.57	OHIO
DATE			
CHKD. BY.		FED. PROJECT IR-76-2(44)19	F.H.W.A. REGION 5
DATE			

164
1214

SUMMIT COUNTY

FOR LEGEND, SEE SHEET 117 .

FOR DRAINAGE PLAN, SEE SHEET 532 .

FOR PAVEMENT DETAILS, SEE SHEET 217 .

FOR ROADWAY QUANTITIES, SEE SHEET 165 .

FOR REMOVAL PLAN , SEE SHEET 235 .

HOLMES STREET

RAMP 'E-19'

RAMP 'E-18'

RAMP 'E-20'

I-76 WEST BOUND

I-76 EAST BOUND

I-76

MATCH LINE STA. 640+00
SEE SHEET 163

B-30

B-31

PROP CURB TYPE 2B (C 58)

PROP CURB TYPE 2B (C 59)

RELOCATED

ENGLEWOOD AVENUE

LA R/W

STA 48+80
END NEW PAVEMENT

STA. 49+30
END FEATHER AREA
MEET EXISTING

PAVED PARKING LOT

FACTORY

0 20 40 60
SCALE IN FEET

STA. 640+00 TO STA. 646+00
ROADWAY

QUANTITY SUB-SUMMARY

CALC. BY CDB DATE 6/89	SUM-76-11.57	OHIO	165 / 1214
CHKD. BY DSB DATE 8/90	FEDERAL PROJ. IR-76-2-(44)19	F.H.W.A. REGION 5	

SUMMIT COUNTY

* 707.17, ASTM 3034 SDR 35, OR SUPP. SPEC. 931
PERFORATED AS PER 707.15 OR 707.17, AS PER PLAN

SHEET NUMBER	REFERENCE NUMBER	LOCATION	SIDE	304 AGGREGATE BASE, AS PER PLAN C.Y.	404 ASPHALT CONCRETE, AC-20 C.Y.	452 8" PLAIN CONCRETE PAVEMENT S.Y.	605 6" SHALLOW PIPE UNDERDRAIN, * L.F.	SPEC. PRESSURE RELIEF JOINT, TYPE A L.F.	305 9" CONCRETE BASE S.Y.	407 TACK COAT GAL.	608 CURB RAMP, TYPE I AS PER PLAN EA.	608 4" CONCRETE WALK S.F.	609 CURB, TYPE 2B L.F.	622 CONCRETE BARRIER, TYPE B50 L.F.
162	B-35	STA 629+22.20 TO STA 629+47.20 I-76	℄											25
	B-36	STA 630+05.59 TO STA 631+35	℄	9.1										117.5
	SW-37	STA 10+25 TO STA 11+90 SEIBERLING ST	LT									803		
	SW-38	STA 10+05 TO STA 11+95 SEIBERLING ST	RT									915		
	SW-39	STA 9+34 SEIBERLING ST TO										7178		
		STA 48+80 RELOC. ENGLEWOOD AVE	RT.											
	CR-40	STA 36+96 ENGLEWOOD AVE	LT								1			
	CR-41	STA 37+54 ENGLEWOOD AVE	LT								1			
	CR-42	STA 37+57 ENGLEWOOD AVE	RT.								1			
	PJ-28	STA 628+74 TO STA 628+84 I-76	LT				72	72						
	PJ-29	STA 628+89 TO STA 628+98 I-76	RT				70	70						
	PJ-30	STA 630+50 TO STA 630+61 I-76	LT				73	73						
	PJ-31	STA 630+50 TO STA 630+76 I-76	RT				62	62						
	C-57	STA 10+25 TO STA 10+64 SEIBERLING ST	LT	2.2	0.5				12.8	1.1			46	
	C-58	STA. 10+57 SEIBERLING TO		1.2	0.3				7.0	0.6			1180	
		STA 48+80 RELOC. ENGLEWOOD AVE	RT/LT.											
	C-59	STA 9+34 SEIBERLING ST. TO											1139	
		STA 48+80 RELOC. ENGLEWOOD AVE	RT											
	D-1	STA 39+06, RELOC. ENGLEWOOD AVE	RT	3.1		19								
162	D-2	STA 40+42, RELOC. ENGLEWOOD AVE	RT	4.5		27								
163	AC-1	STA 634+00 TO STA 635+25 I-76	LT		34									
	AC-2	STA 634+00 TO STA 635+25 I-76	RT		25									
	D-1	STA 42+06 RELOC. ENGLEWOOD AVE	RT	4.5		27								
	D-2	STA 42+52 RELOC. ENGLEWOOD AVE	RT	3.6		22								
	D-3	STA 42+92 RELOC. ENGLEWOOD AVE	RT	3.6		22								
163	D-4	STA 43+27 RELOC. ENGLEWOOD AVE	RT	3.4		20								
164	AC-3	STA 48+80 TO STA 49+30 ENGLEWOOD AVE.	℄		8									
164	D-1	STA 48+62 RELOC. ENGLEWOOD AVE	RT	2.4		15								
	TOTALS			37.6	67.8	152	277	277	19.8	1.7	3	8896	2365	142.5

CALC BY KDK DATE 8/89	SUM-76-11.57	OHIO	166 1214
CHKD BY DOB DATE 8/90	FED PROJECT IR-76-2(44)19	FHWA REGION 5	

SUMMIT COUNTY

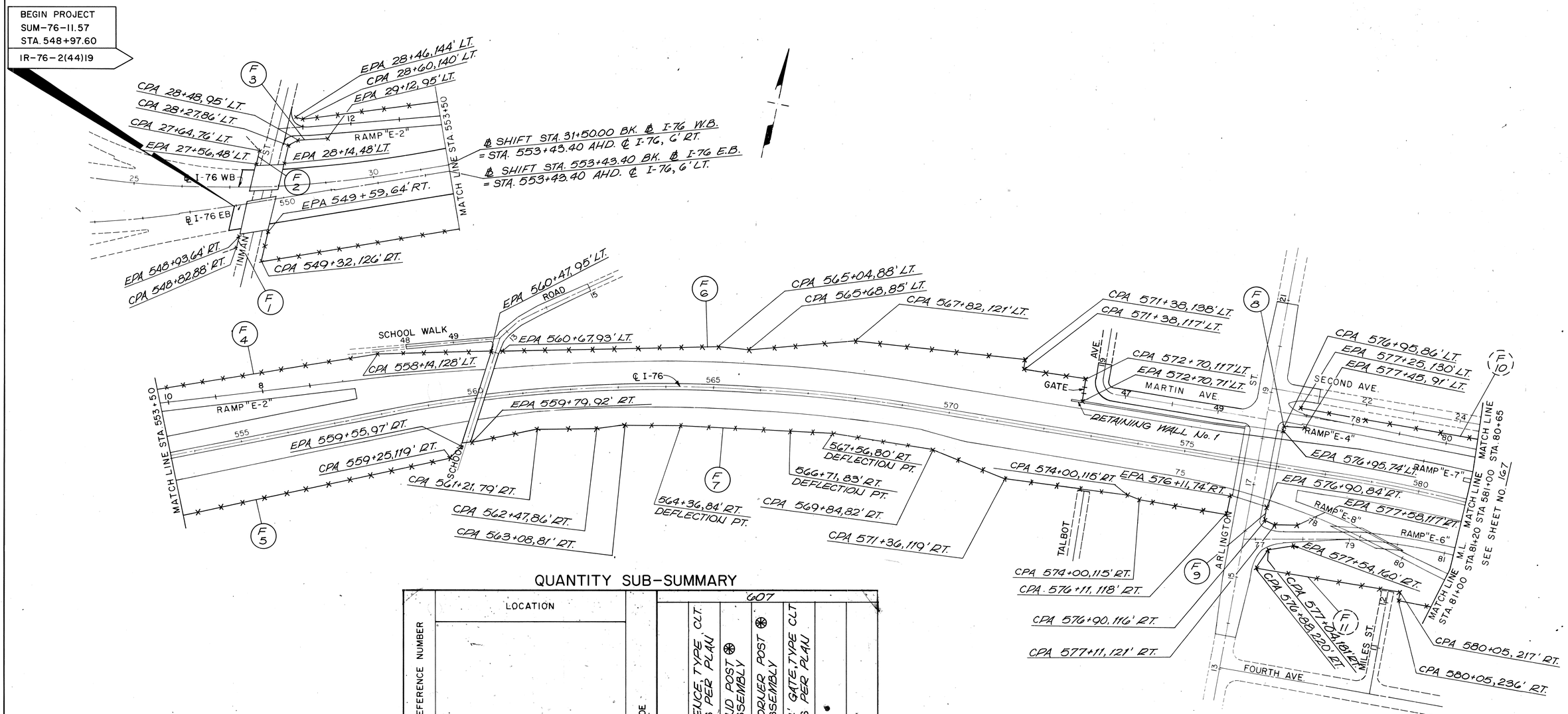

QUANTITY SUB-SUMMARY

REFERENCE NUMBER	LOCATION	SIDE	607 FEUCE, TYPE CLT. AS PER PLAN	END POST ASSEMBLY ⊛	CORNER POST ASSEMBLY ⊛	14' GATE, TYPE CLT AS PER PLAN		
			L.F.	EA.	EA.	EA.		
F-1	548+82 TO 548+93 I-76 E.B.	RT.	26	1	1			
F-2	27+56 TO 27+64 I-76 W.B.	LT.	29	1	1			
F-3	28+14 TO 29+12 I-76 W.B.	LT.	123	2	2			
F-4	28+46 I-76 W.B. TO 560+47 I-76 E.B.	LT.	1006	2	2			
F-5	549+59 TO 559+55 I-76	RT.	1092	2	2			
F-6	560+67 TO 572+70 I-76	LT.	1295	2	6	1		
F-7	559+79 TO 576+11 I-76	RT.	1656	2	8			
F-8	576+95 TO 577+45 I-76	LT.	63	2	1			
F-9	576+90 TO 577+58 I-76	RT.	103	2	2			
	TOTALS		5393	16	25	1		

⊛ FOR INFORMATION ONLY

LEGEND

CPA .... CORNER POST ASSEMBLY
EPA .... END POST ASSEMBLY

FOR ROADWAY PLAN, SEE SHEET 118 THRU 130

SCALE IN FEET
0 100 200 300

FENCE PLAN

CALC BY KDK DATE 8/89	SUM-76-11.57	OHIO	167
CHKD BY DSB DATE 8/90	FED. PROJECT IR-76-2(44)19	FHWA REGION 5	1214

SUMMIT COUNTY

REFERENCE NUMBER	LOCATION	SIDE	607 FENCE, TYPE CLT AS PER PLAN L.F.	END POST ✱ ASSEMBLY EA.	CORNER POST ✱ ASSEMBLY EA.	14' GATE, TYPE CLT AS PER PLAN EA.
F-10	577+25 TO 594+58 I-76	LT.	2068	2	11	
F-11	577+54 TO 591+85 I-76	RT.	2004	2	18	
F-12	594+65 TO 595+40 I-76	LT.	146	2	1	
F-13	592+63 TO 595+46 I-76	RT.	672	2	6	
F-14	595+10 TO 595+51 I-76	RT.	72	2	1	
F-15	596+27 TO 596+80 I-76	RT.	94	2	1	
F-16	595+97 TO 600+08 I-76	LT.	497	2	4	
F-17	596+96 TO 602+04 I-76	RT.	875	2	13	
F-18	600+32 TO 602+15 I-76	RT.	352	2	5	
F-19	608+37 TO 610+40 I-76	LT.	304	2	3	
	TOTALS		7084	20	63	

✱ FOR INFORMATION ONLY

CPA 589+84, 208' LT.
CPA 589+86, 204' LT.
CPA 589+03, 315.5' LT.
CPA 589+37, 194' LT.
CPA 590+34, 223' LT.
CPA 590+36, 219' LT.
CPA 594+50, 255.5' LT.
CPA 594+28, 336.5' LT.
EPA 594+58, 231' LT.
EPA 594+65, 193' LT.
CPA 595+18, 190' LT.
EPA 595+40, 95' LT.
EPA 595+51, 80' RT.
CPA 595+51, 115' RT.
EPA 595+10, 113' RT.
EPA 595+46, 176' RT.
CPA 595+76, 184' RT.
CPA 595+96, 197' RT.
CPA 593+40, 309.5' RT.
CPA 593+50, 347.5' RT.
CPA 596+04, 238' RT.
CPA 592+42, 380' RT.
EPA 592+63, 459' RT.
CPA 594+91, 242' LT.
CPA 595+04, 267' LT.
CPA 595+08, 258' LT.
CPA 595+95, 165' LT.
CPA 596+14, 174' LT.
CPA 595+88, 153' LT.
EPA 595+97, 93' LT.
EPA 596+27, 82' RT.
CPA 596+35, 128' RT.
EPA 596+80, 131' RT.
EPA 596+96, 181' RT.
CPA 596+73, 185' RT.
CPA 596+59, 195' RT.
CPA 596+51, 207' RT.
CPA 596+53, 227' RT.
CPA 599+81, 311' RT.
CPA 599+72, 118' LT.
EPA 600+08, 76' LT.
EPA 600+32, 76' RT.
CPA 600+32, 90' RT.
CPA 601+46, 90' RT.
CPA 597+74, 208' RT.
CPA 599+31, 233.5' RT.
CPA 599+78, 251' RT.
CPA 601+67, 343' RT.
CPA 602+44, 230' RT.
CPA 602+44, 244' RT.
CPA 602+34, 250' RT.
EPA 602+15, 251' RT.
EPA 602+04, 302' RT.
CPA 602+30, 317' RT.
CPA 602+40, 332' RT.
CPA 602+40, 343' RT.
CPA 601+67, 304' RT.
CPA 581+27, 228' RT.
CPA 585+81, 229.5' RT.
CPA 589+48, 208' RT.
CPA 585+27, 237.5' RT.
CPA 584+71, 238' RT.
CPA 583+16, 343' RT.
CPA 583+09, 264.5' RT.
CPA 581+42, 361' RT.
CPA 590+05, 410' RT.
CPA 590+36, 401' RT.
CPA 590+44, 429.5' RT.
CPA 591+37, 402' RT.
CPA 591+63, 493.5' RT.
CPA 591+74, 488' RT.
EPA 591+85, 469' RT.
EPA 610+40, 80' LT.
CPA 610+10, 141' LT.
CPA 609+66, 163' LT.
CPA 608+24, 110' LT.
EPA 608+37, 80' LT.

CHITTENDEN STREET
SECOND AVE.
HART AVE.
RAMP "E-7"
RAMP "E-4"
RAMP "E-6"
RAMP "E-8"
RAMP "E-8A"
RAMP "E-8B"
RAMP "E-9"
RAMP "E-12"
℄ I-76
SYSTEM
THIRD
CHESSIE
FULLER ST.
FIFTH AVE
WEEKS ST.
KELLY AVE
LITTLE AVE
CUYAHOGA RIVER
F 10
F 11
F 12
F 13
F 14
F 15
F 16
F 17
F 18
F 19
SEE SHEET NO. 166 M.L. STA 80+80 MATCH LINE STA 581+00
M.L. STA 81+00
SEE SHEET NO. 168 M.L. STA 610+50 MATCH LINE STA 610+50

FOR ROADWAY PLAN, SEE SHEET 130 THRU 148

SCALE IN FEET
0 100 200 300

Revised 8-18-92

FENCE PLAN

CALC BY KDK DATE 9/89	SUM-76-11.57	OHIO	168
CHKD BY DSB DATE 8/90	FED. PROJECT IR-76-2(44)19	F.H.W.A. REGION 5	1214

SUMMIT COUNTY

QUANTITY · SUB-SUMMARY

REFERENCE NUMBER	LOCATION		SIDE	607 FENCE, TYPE CLT AS PER PLAN L.F.	607 END POST ASSEMBLY ⊛ EA.	607 CORNER POST ASSEMBLY ⊛ EA.	607 14' GATE, TYPE CLT AS PER PLAN EA.		
F-20	611+23 TO 611+36	I-76	LT.	185	2	2			
F-21	611+10 TO 612+55	I-76	RT.	338	2	1			
F-22	612+12 TO 613+65	I-76	RT.	320	2	1			
F-23	611+91 TO 612+89	I-76	RT.	150	2	1			
F-24	613+15 TO 622+09	I-76	RT.	1258	2	8			
F-25	610+16 TO 629+35	I-76	LT.	2132	2	8			
F-26	622+58 TO 622+98	I-76	RT.	70	2	1			
	TOTALS			4453	14	22	X		

⊛ FOR INFORMATION ONLY

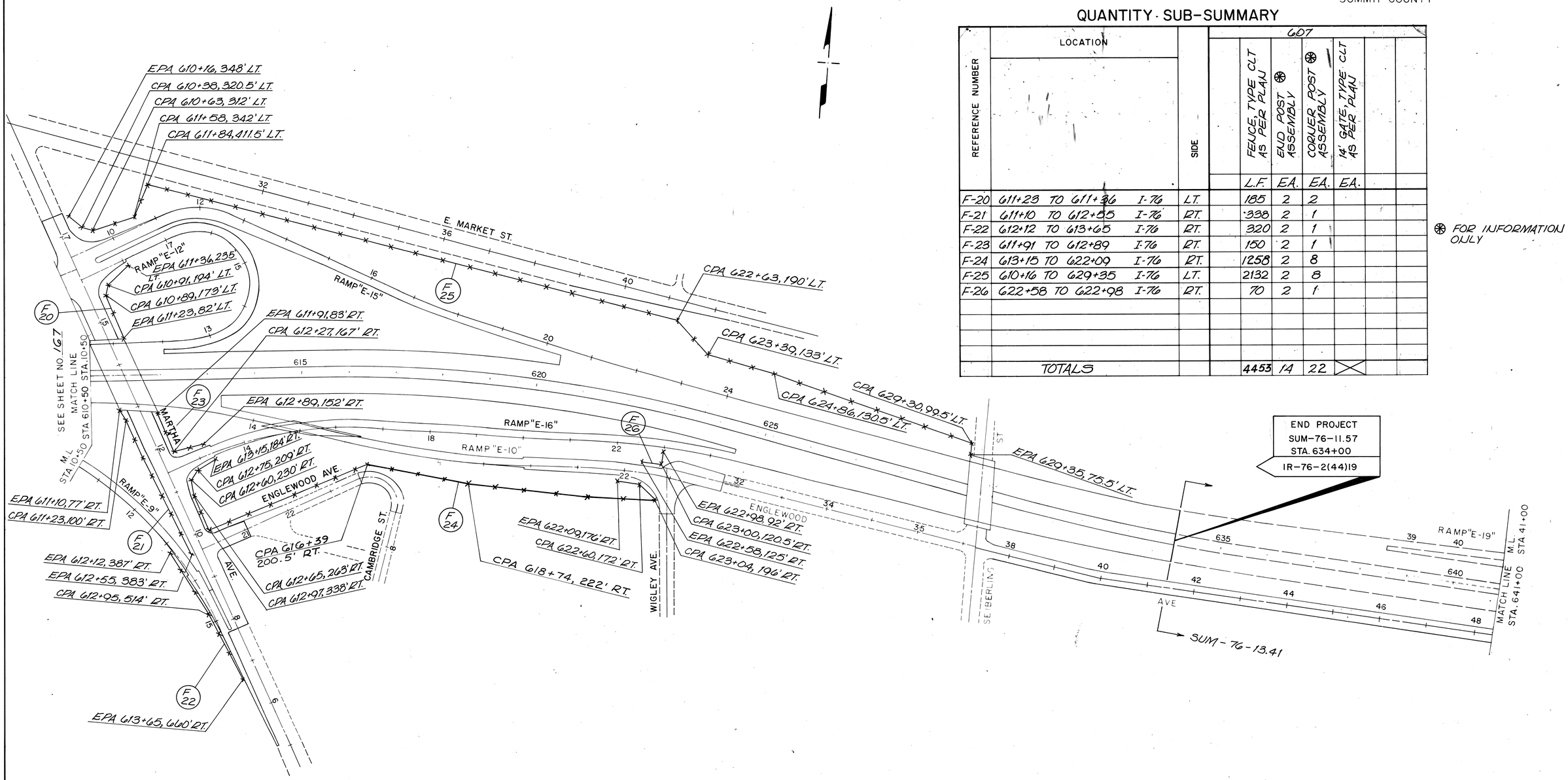

FOR ROADWAY PLAN, SEE SHEET 148 THRU 164

SCALE IN FEET
0 100 200 300

FENCE PLAN

CALC. BY. ____ DATE ____	SUM-76-11.57	OHIO
CHKD. BY. ____ DATE ____	FED. PROJECT IR-76-2(44)19	F.H.W.A. REGION 5

169
1214

SUMMIT COUNTY

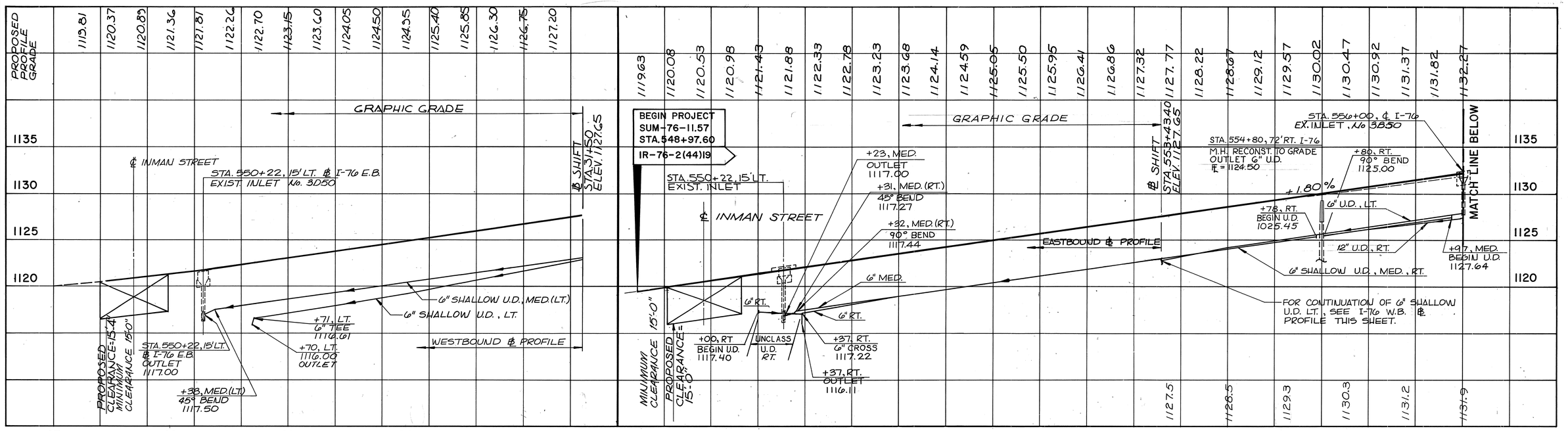

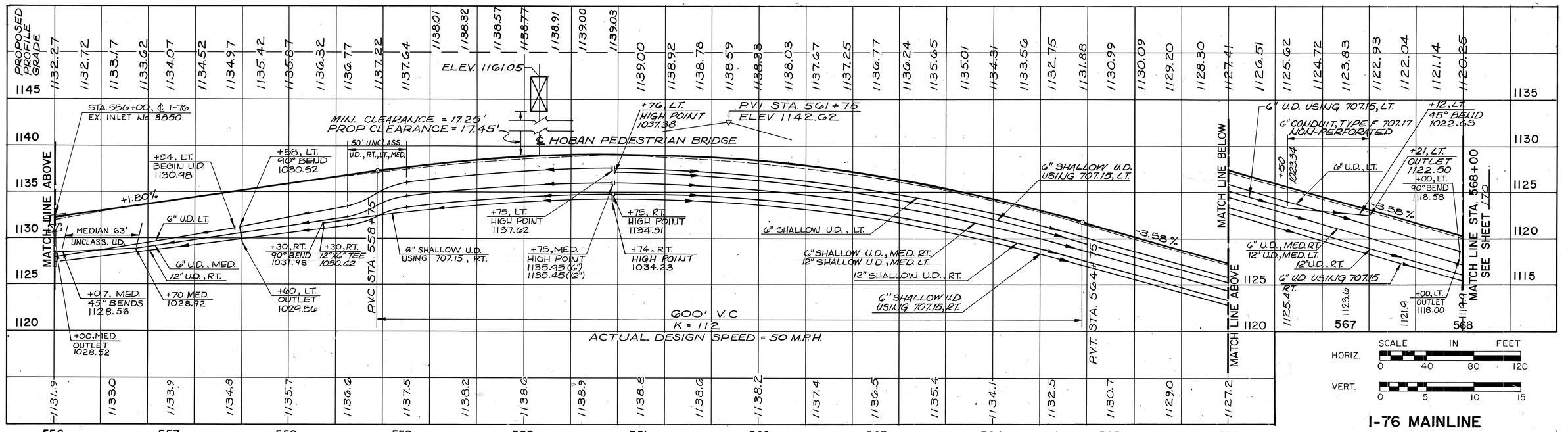

SCALE IN FEET
HORIZ. 0 40 80 120
VERT. 0 5 10 15

I-76 MAINLINE
STA. 545+00 TO STA. 568+00
ROADWAY PROFILE

CALC. BY. DATE	SUM-76-11.57	OHIO
CHKD. BY. DATE	FED. PROJECT IR-76-2(44)19	F.H.W.A. REGION 5

170 / 1214

SUMMIT COUNTY

PROPOSED PROFILE GRADE

MATCH LINE STA. 568+00 SEE SHEET 169

6" U.D., LT.
6" U.D. USING 707.15, RT.
STA. 569+50, ℄ I-76
EXIST. INLET No. 3B50
6" U.D. MED. RT.
12" U.D. MED LT.
12" U.D., RT.
50' UNCLASS. U.D., LT.
+00, LT. OUTLET 1118.00
+02, LT. BEGIN U.D. 1118.65
+40, MED. 45° BEND 12" 1112.16 (6") 1111.66 (12")
+45, RT. 45° BEND 1110.95
+50, MED. OUTLET 1111.56 (16") 1111.06 (12")
+50, RT. OUTLET 1110.74 (SHOULDER U.D.) 1110.74 (BARRIER U.D.)
+58, MED. BEGIN U.D. 1110.01
+54, RT. BEGIN U.D. 1109.65
-3.58%
6" U.D., LT.
6" U.D. MED.
6" U.D., RT.
6" U.D., LT., RT., MED.
+46, RT. 6" CROSS 1088.73
+58, RT. 90° BEND 1088.33
P.V.I. STA. 576+00 ELEV. 1091.61
PVC STA. 574+75
+47, MED. (LT.) 6" CROSS 1089.06
+42, MED. (RT.) 6" TEE 1089.22
+42, LT. 6" TEE 1089.22
250' V.C. K=196' ACTUAL DESIGN SPEED ≥ 70 M.P.H.
+70, LT. 45° BEND 1088.33
+70, MED. (LT. & RT.) 45° BEND 1088.34
+75, LT. OUTLET 1087.79
℄ ARLINGTON STREET
STA. 575+80, ℄ I-76 INLET No. 3B50
PVT STA. 577+25
PROP. CLEARANCE = 15'-4"
MIN. CLEARANCE = 15'-4"
+30, MED. BEGIN U.D. 1084.06
+30, LT. BEGIN U.D. 1084.14
MATCH LINE BELOW
MATCH LINE ABOVE
-2.30%
6" U.D., LT.
6" U.D., MED.
6" U.D., RT.
+51, LT. 6" TEE 1083.78
+51, MED. (RT.) 6" TEE 1083.55
+56, MED. (LT.) 6" CROSS 1083.43
+55, RT. 6" TEE 1083.20
TO OUTLET 575+60, 102' RT. 1075.90
+80, MED. OUTLET 1087.64

PROPOSED PROFILE GRADE

MATCH LINE ABOVE

P.V.C. STA. 580+50
P.V.I. STA. 582+25 ELEV. 1077.21 STA. 582+48, 3.5' LT. MH. No. 3
P.V.T. STA. 584+00
350' V.C. K=297' ACTUAL DESIGN SPEED > 70 M.P.H.
6" LT.
6" U.D., LT.
+90, LT. BEGIN U.D. 1076.76
FOR CONTINUATION OF 6" SHALLOW U.D., SEE RAMP 'E-7' ROADWAY PROFILE SHEET 176
+43, MED. 45° BEND 1071.55
+48, MED. OUTLET 1071.40
+90, MED. BEGIN U.D. 1070.13
EX. CHITTENDEN ST.
PROP. 16" WATER MAINS
* 6" CONDUIT TYPE F, 707.17 NON-PERFORATED
PROP. 18" COMB. SEWER
EX. 16" WATER MAIN TO BE ABANDONED
STA. 583+10, ℄ INLET No. 3B50
STA. 583+12 TO STA. 583+22, LT. 10'-6" TYPE F 707.17 NON-PERFORATED
+14, MED. (LT.) BEGIN U.D. 1069.37
+10, MED. (RT.) BEGIN U.D. 1069.50
+10, MED. (LT. & RT.) OUTLET 1069.50
+07, 1069.60 MED. (LT.) 45° BEND MED. (RT.) 45° BEND
6" U.D., LT.
6" U.D., MED.
6" U.D., RT.
+46, RT. 45° BEND 1060.38
+50, RT. BEGIN U.D. 1060.27
STA. 85+60, 20' LT. RAMP 'E-6' OUTLET 1059.30
+00, MED. OUTLET 1057.25
+97, MED. 45° BEND 1057.28
+61, MED. 6" U.D. 1057.46
MED. 39' UNCLASSIFIED 6" PIPE U.D.
STA. 587+00, ℄ I-76 EXIST. INLET No. 3B50
+08, MED. BEGIN U.D. 1055.93
EX. 12" STORM TO REMAIN
-3.48%
6" U.D., LT.
6" U.D., MED.
6" U.D., RT.
+75, MED. 6" U.D. 1046.53
STA. 587+15 TO 587+25, RT. 10'-6" CONDUIT, TYPE F 707.17 NON-PERFORATED
FOR CONTINUATION OF 6" SHALLOW U.D., SEE RAMP 'E-6' ROADWAY PROFILE SHEET 175
40' UNCLASS. U.D.
MATCH LINE STA. 590+00 SEE SHEET 171

SCALE IN FEET
HORIZ. 0 40 80 120
VERT. 0 5 10 15

I-76 MAINLINE
STA. 568+00 TO STA. 590+00
ROADWAY PROFILE

AA B.P# 71942R

CALC. BY. DATE	SUM-76-11.57	OHIO	171
CHKD. BY. DATE	FED. PROJECT IR-76-2(44)19	F.H.W.A. REGION 5	1214

SUMMIT COUNTY

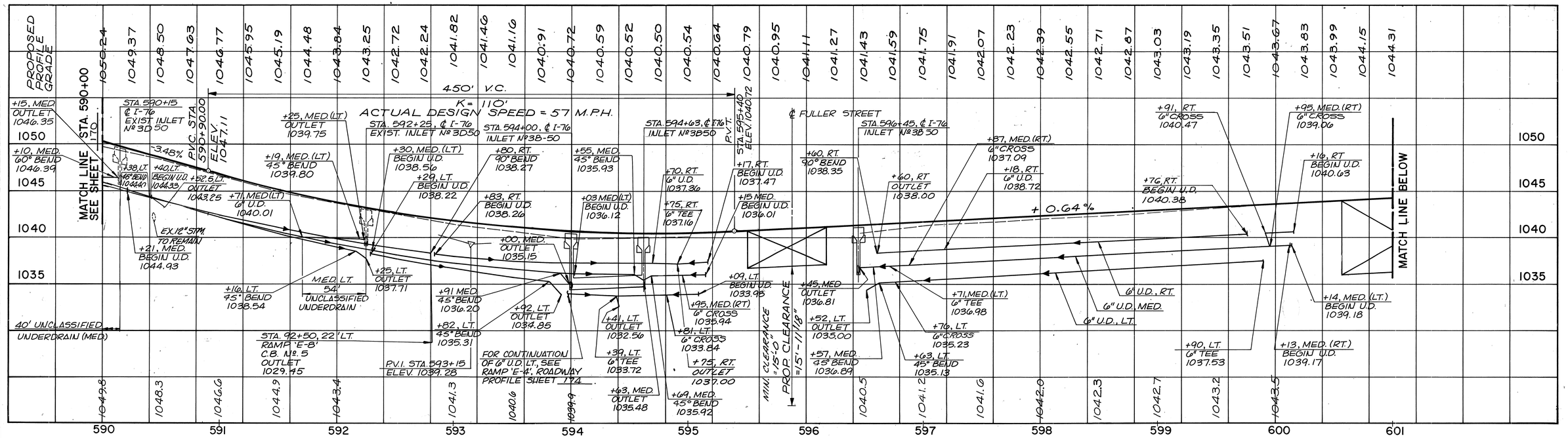

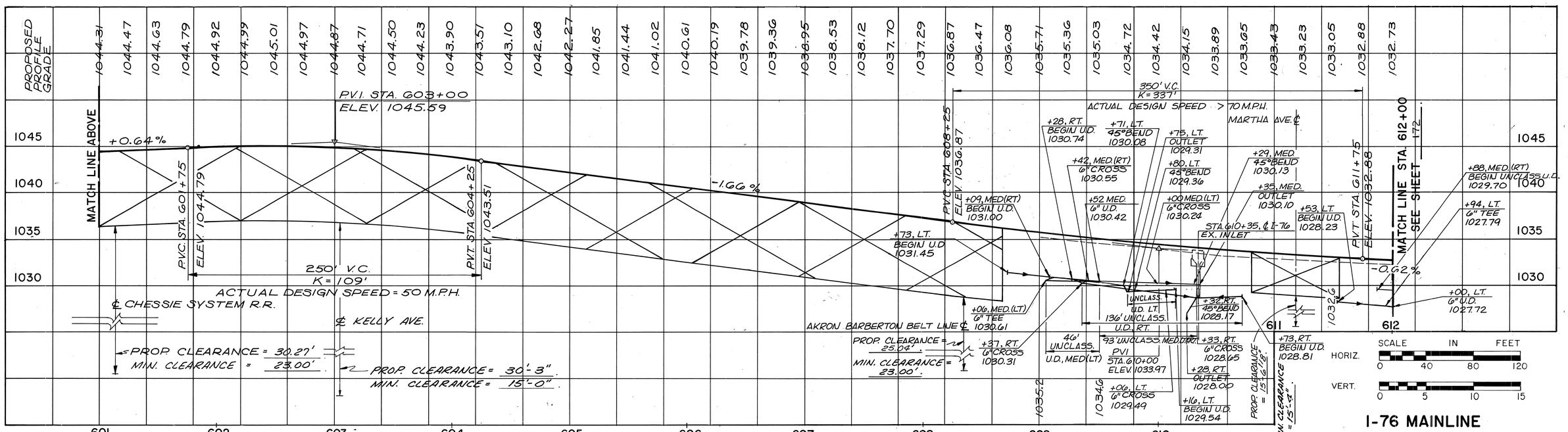

SCALE IN FEET
HORIZ. 0 40 80 120
VERT. 0 5 10 15

I-76 MAINLINE STA. 590+00 TO STA. 612+00

ROADWAY PROFILE

CALC. BY. DATE	SUM-76-11.57	OHIO
CHKD. BY. DATE	FED. PROJECT IR-76-2(44)19	F.H.W.A. REGION 5

172
1214

SUMMIT COUNTY

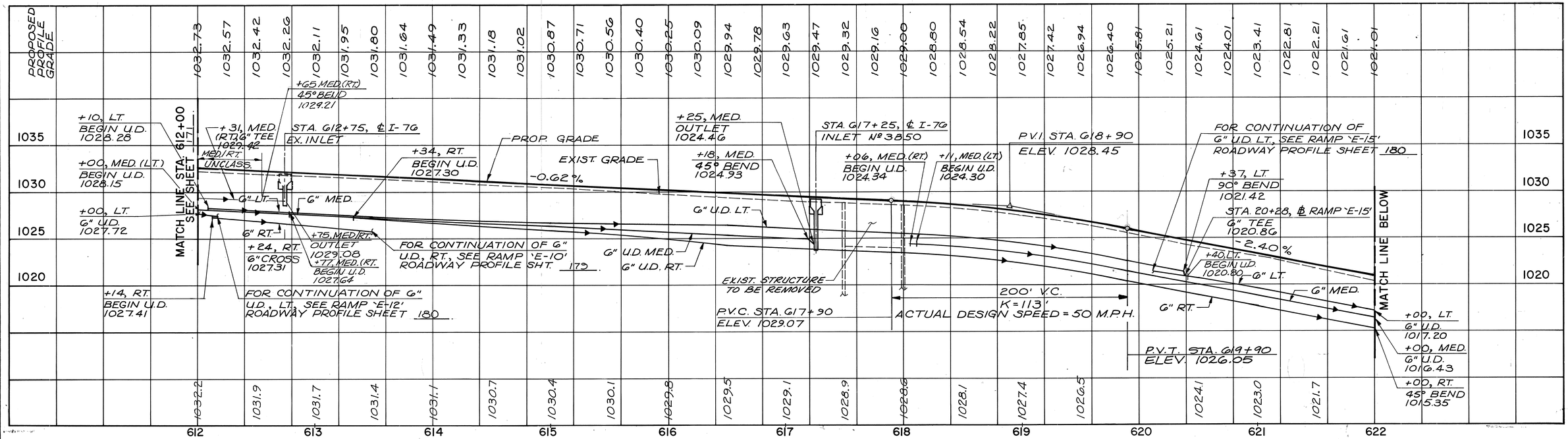

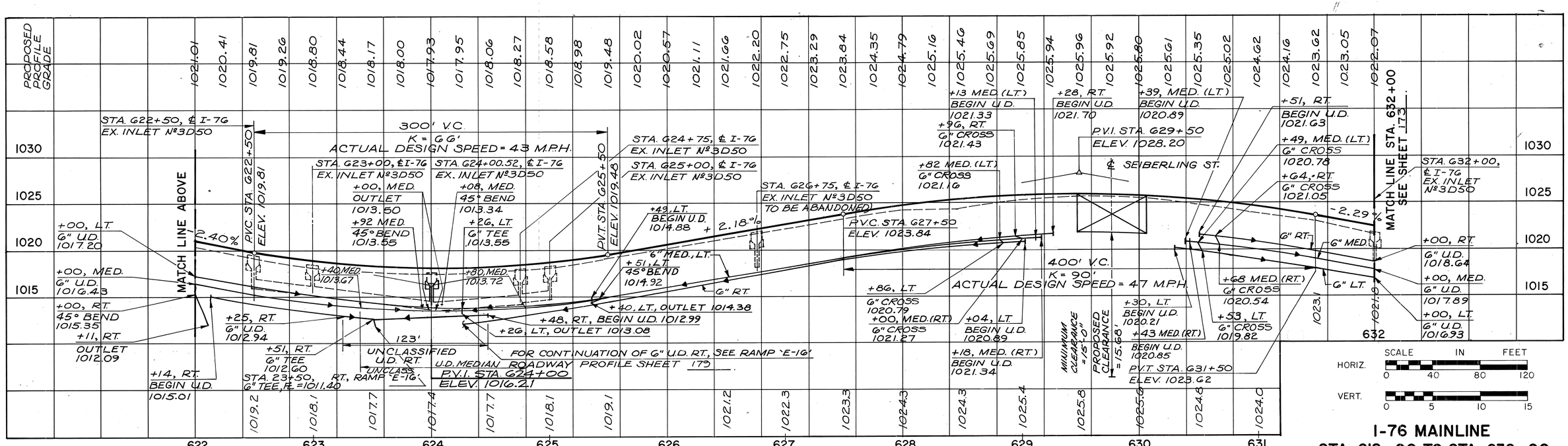

SCALE IN FEET

HORIZ. 0 40 80 120

VERT. 0 5 10 15

I-76 MAINLINE
STA. 612+00 TO STA. 632+00
ROADWAY PROFILE

CALC. BY.		SUM-76-11.57	OHIO	173
CHKD. BY.		FED. PROJECT IR-76-2(44)19	F.H.W.A. REGION 5	1214
DATE				

SUMMIT COUNTY

PROJECT SUM-76-11.57 | PROJECT SUM-76-13.41

PROPOSED PROFILE GRADE

1022.47 1021.90 1021.33 1020.76 1020.18 1019.61 1019.04 1018.47 1017.89 1017.32 1016.75 1016.18 1015.63 1015.15 1014.72 1014.36 1014.06 1013.81 1013.63 1013.51 1013.45 1013.45 1013.50 1013.62 1013.80 1014.04 1014.34 1014.71 1015.13 1015.61 1016.15 1016.73 1017.30 1017.88 1018.45 1019.03 1019.60 1020.18 1020.75 1021.33 1021.90

STA. 632+00, ℄ I-76
EXIST. INLET N°3D50

MATCH LINE STA. 632+00
SEE SHEET 172

STA. 633+10 ℄ I-76
EXIST. INLET N°3D50

PROPOSED GRADE

+05, MED.
45° BEND
1014.07

+20, MED
OUTLET
1013.99

STA. 634+20 ℄ I-76
EXIST. INLET N°3D50

PVC STA. 634+76.09
ELEV. 1016.18

2.29 %

475' V.C.
K = 104
ACTUAL DESIGN SPEED = 50 MPH

STA. 635+00, ℄ I-76
EXIST. INLET N°3D50

STA. 635+30, ℄ I-76
EXIST. INLET N°3D50

PVT. STA. 639+51.09
ELEV. 1016.18

+2.30 %

6" RT.
6" MED.
6" LT.

+00, RT.
6" U.D.
1018.64

+58 MED.
6" U.D.
1014.28

+00. MED
6" U.D.
1017.89

+00. L.T.
6" U.D.
1016.93

END PROJECT
SUM-76-11.57
STA. 634+00.00
IR-76-2(44)19

62'
UNCLASSIFIED
6" U.D., MED.

+06, RT
OUTLET
1012.92

+00 LT.
6" U.D.
1012.32

+06, RT.
90° BEND
1013.89

STA. 635+00 54' LT., ℄ I-76
EXIST. MANHOLE
OUTLET
1008.92

PVI STA. 637+13.59
ELEV. 1010.71

EXISTING GROUND

1020 1015 1010 1005

1021.8 1020.9 1018.6 1017.5 1016.3 1014.9 1014.0 1011.8 1011.4 1011.0 1010.7 1011.1 1011.5 1012.0 1013.1 1014.3 1015.5 1016.5 1017.7

632 633 634 635 636 637 638 639 640 641 642

PROPOSED PROFILE GRADE

1021.90 1022.48 1023.05 1023.63 1024.20 1024.78 1025.35 1025.93 1026.50 1027.08 1027.65 1028.23 1028.80 1029.38 1029.95 1030.53 1031.10 1031.68 1032.25 1032.83 1033.40

1040 1035 1030 1025 1020 1015

PROPOSED GRADE

+2.30 %

EXISTING GROUND

1017.7 1018.9 1019.9 1021.2 1022.3 1023.2 1024.6 1025.7 1028.1 1029.2

642 643 644 645 646 647 648 649 650 651

SCALE IN FEET
HORIZ. 0 40 80 120
VERT. 0 5 10 15

I-76 MAINLINE
STA. 632+00 TO STA. 634+00
ROADWAY PROFILE

AA B/P# 71942R

CALC. BY. DATE	SUM-76-11.57	OHIO	174 / 1214
CHKD. BY. DATE	FED. PROJECT IR-76-2(44)19	F.H.W.A. REGION 5	

SUMMIT COUNTY

PROPOSED PROFILE GRADE

1070.77 1070.27 1069.77 1069.27 1068.77 1068.27 1067.77 1067.27 1066.68 1065.98 1065.17 1064.25 1063.30 1062.35 1061.40 1060.45 1059.50 1058.55 1057.60 1056.65 1055.70 1054.75 1053.80 1052.85 1051.90 1050.95 1050.00 1049.05

E/P

PVI STA. 78+43.47
ELEV. 1066.40

-2.00%

+00, RT.
45° BEND
1064.99

+48, RT.
BEGIN U.D.
1065.66

+96, RT.
45° BEND
1065.02

℄ ARLINGTON ST.
STA. 76+16.88
ELEV. 1070.93

P.V.C. STA. 77+93.47
ELEV. 1066.40

100' V.C.
K=55
ACTUAL DESIGN SPEED=38 M.P.H

P.V.T. STA. 78+93.47
ELEV. 1064.50

EX. 8" SAN.
TO BE ABD.

-3.80%

EX. 12" STM.
(TO BE REMOVED)

EX. 8" I.P.E.

EX. 4" G.

EX. 16" W.
(TO BE ABD.)

6" SHALLOW U.D., RT.

EX. 6" W.
(TO BE ABD.)

MATCH LINE STA. 83+00

PROP. 16" ENCASED WATERLINES

℄ CHITTENDEN ST.

PROP. 18" COMB.

PROP. 15" STM.

72 73 74 75 76 77 78 79 80 81 82 83

PROPOSED PROFILE GRADE

1049.05 1048.10 1047.15 1046.23 1045.38 1044.59 1043.86 1043.20 1042.60 1042.06 1041.60 1041.18 1040.84 1040.56 1040.34 1040.19 1040.10 1040.07 1040.11 1040.18 1040.25 1040.32 1040.39 1040.46 1040.53 1040.60 1040.67 1040.73 1040.76 1040.78 1040.76 1040.73 1040.67 1040.59 1040.48 1040.36 1040.20 1040.03 1039.83 1039.62 1039.41 1039.20 1038.99 1038.78 1038.57 1038.36 1038.15 1037.94 1037.73

MATCH LINE STA. 83+00

STA. 83+24 TO STA. 83+34
10'-6" CONDUIT, TYPE F
707.17, NON-PERFORATED

PROP. 15" STM.

P.C. STA. 83+50
ELEV. 1047.15

℄ RAMP E-7

PROP. CLEARANCE=16'-7¼"
MIN. CLEARANCE = 16'-0"

P.V.I. STA. 85+50
ELEV. 1039.55

EX. 12" STORM
(TO BE ABAND.)

6" SHALLOW U.D., RT.

+10, RT.
45° BEND
1035.42

400' V.C.
K=98
ACTUAL DESIGN SPEED=54 MPH

+25, RT.
OUTLET
1033.67 E
1035.34 W

P.T. STA. 87+50
ELEV. 1040.11

+40, RT.
45° BEND
1033.76

STA. 87+25, 26' RT.
RAMP 'E-4'
C.B. NO. 5

+0.28%

6" DEEP UNDERDRAIN, RT.

P.C. STA. 89+50
ELEV. 1040.67

+25, RT.
HIGH POINT
1034.94

℄ HART AVE.

EX. 3" G.

ELEC.

EX. 8" W.
TO BE ABD.

+25' LT.
HIGH POINT
1036.36

P.V.I. STA. 91+00
ELEV. 1041.09

EX. 6" W.
TO BE ABD.

6" SHALLOW UNDERDRAIN, LT.

EX. 8" SAN.
TO BE ABD.

300' V.C.
K=268
ACTUAL DESIGN SPEED=68 MPH

EX. 12" STM.
TO REMAIN

P.T. STA. 92+50
ELEV. 1039.83

-0.84%

RAMP ~E4
NOSE
STA. 93+98.92
ELEV. 1039.58

GRAPHIC GRADE

PROP. 15" STM.

FOR CONTINUATION OF U.D. SEE ROADWAY PROFILE SHEET 171.
95

83 84 85 86 87 88 89 90 91 92 93

SCALE IN FEET

HORIZ. 0 40 80 120

VERT. 0 5 10 15

RAMP 'E-4'
ROADWAY PROFILE

CALC. BY. DATE	SUM-76-11.57	OHIO
CHKD. BY. DATE	FED. PROJECT IR-76-2(44)19	F.H.W.A. REGION 5

175
12.14

SUMMIT COUNTY

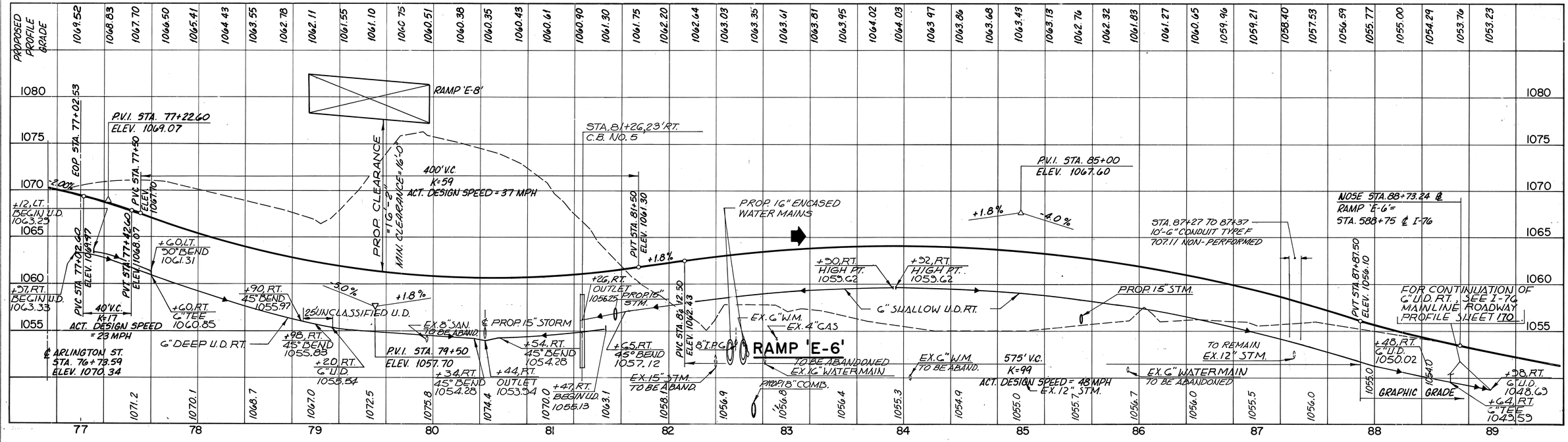

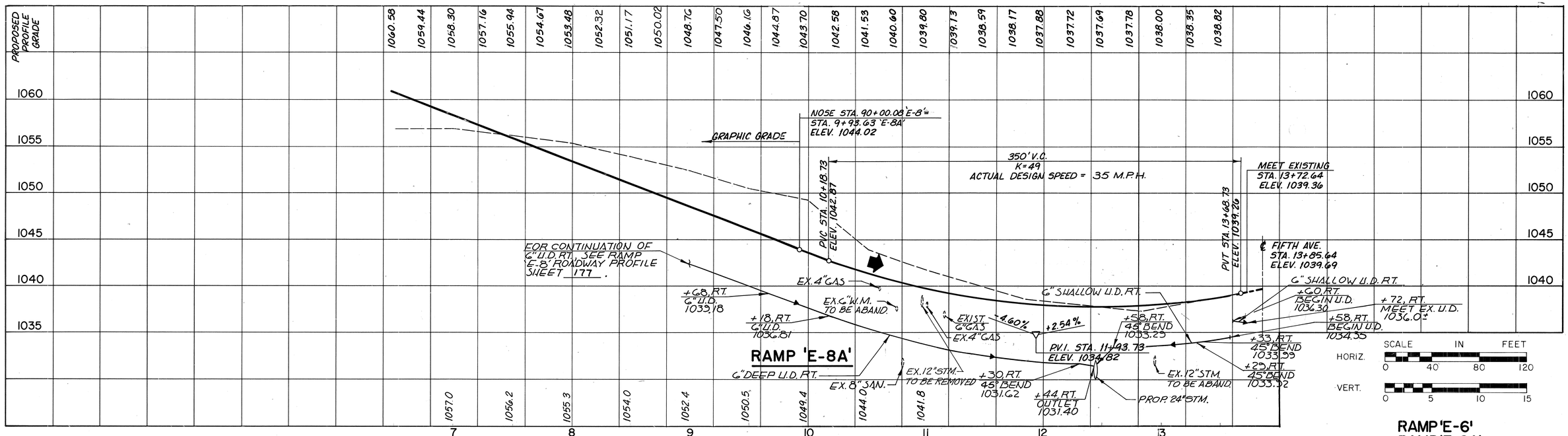

SCALE IN FEET

HORIZ. 0 40 80 120

VERT. 0 5 10 15

RAMP 'E-6'
RAMP 'E-8A'

ROADWAY PROFILE

CALC. BY: DATE	SUM-76-11.57	OHIO
CHKD. BY: DATE	FED. PROJECT IR-76-2(44)19	F.H.W.A. REGION 5

176
1214

SUMMIT COUNTY

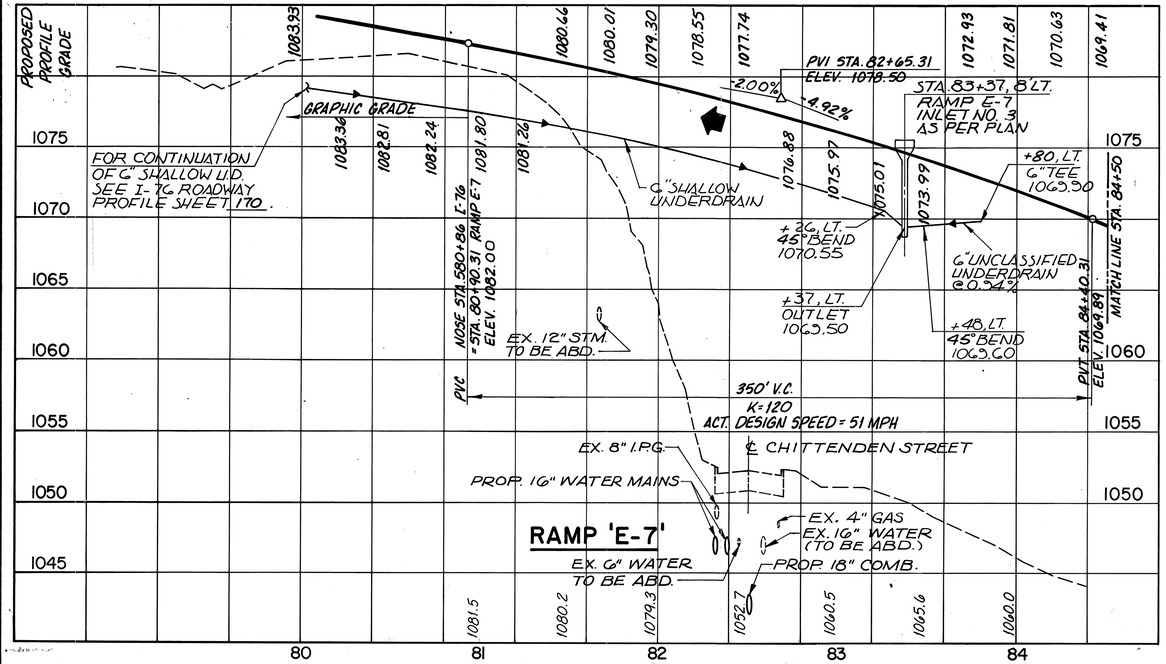

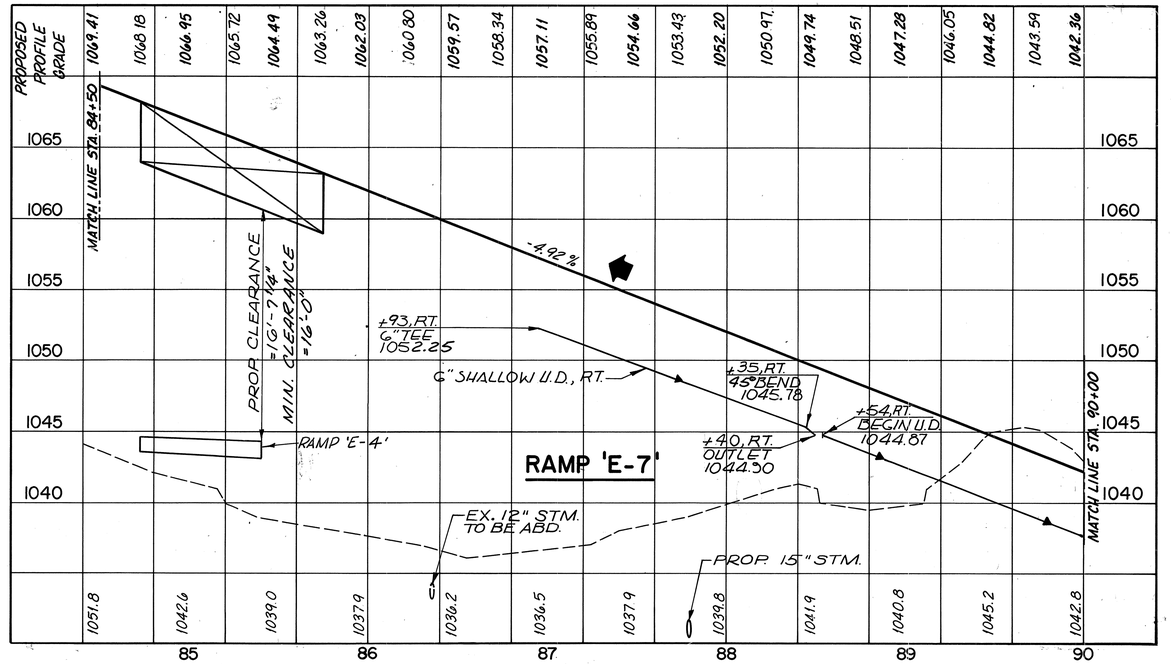

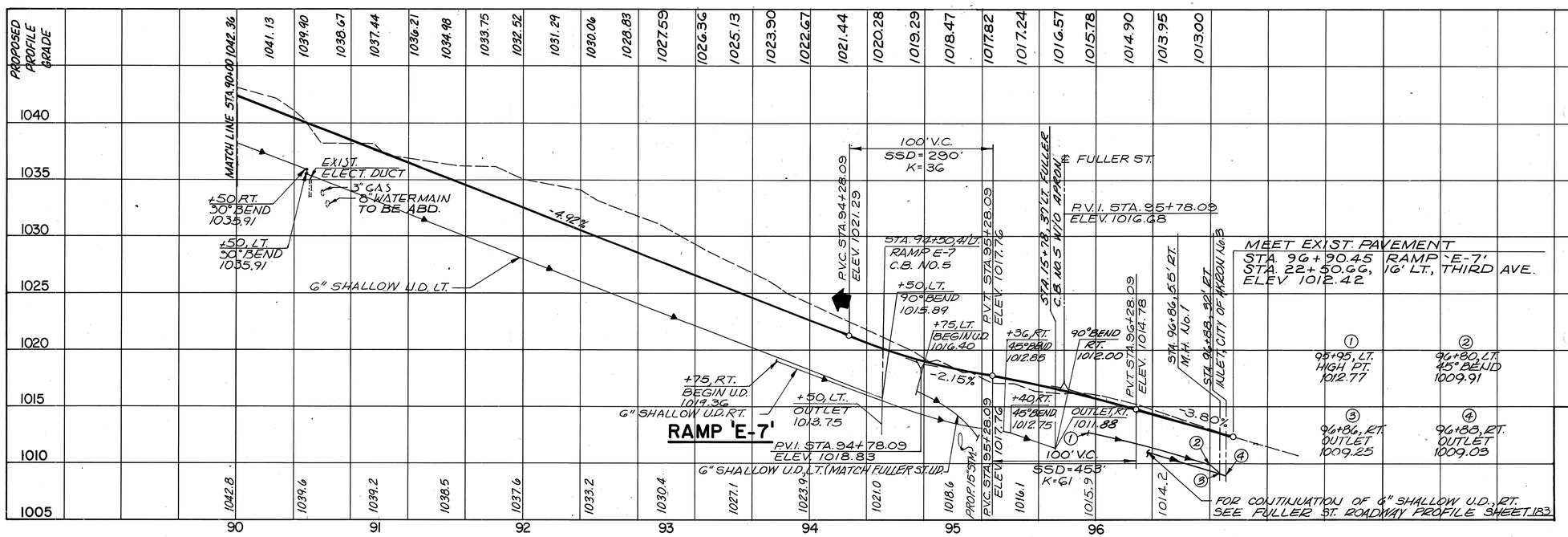

SCALE IN FEET

HORIZ. 0 40 80 120

VERT. 0 5 10 15

RAMP 'E-7'
ROADWAY PROFILE

CALC. BY. DATE	SUM-76-11.57	OHIO
CHKD. BY. DATE	FED. PROJECT IR-76-2(44)19.	F.H.W.A. REGION 5

177
1214

SUMMIT COUNTY

PROPOSED PROFILE GRADE

1094.30 1093.51 1092.72 1091.93 1091.14 1090.35 1089.56 1088.78 1087.99 1087.20 1086.41 1085.64 1084.93 1084.27 1083.60 1083.11 1082.60 1082.15 1081.75 1081.38 1081.00 1080.63 1080.25 1079.88 1079.50 1079.13 1078.75 1078.34 1077.88 1077.35 1076.75 1076.10 1075.38 1074.60 1073.76 1072.86 1071.90 1070.87 1069.78 1068.66 1067.54 1066.42 1065.30 1064.18 1063.06

GRAPHIC GRADE

200' V.C.
K = 121
ACTUAL DESIGN SPEED = 60 MPH

PVC STA. 77+50
ELEV. 1086.41

6" CONDUIT, TYPE F
707.17 NON-PERFORMED

℄ RAMP 'E-6'

PVT STA. 79+50
ELEV. 1081.75

+30, RT.
BEGIN U.D.
1083.46

-3.16%

+90, RT.
6" TEE
1081.79

NOSE STA. 77+48.65 'RAMP E-8' =
STA. 577+50 MAIN LINE I-76

6" UNCLASS. PIPE U.D., RT.

+88, LT. 90° BEND
1081.68

PROPOSED CLEARANCE 15'-1"

P.V.I. STA. 78+50
ELEV. 1083.25

PROP. CLEARANCE
= 16'-2"
MIN. CLEARANCE
= 16'-0"

+71, LT.
45° BEND
1079.99

+80, LT.
OUTLET
1079.92

℄ ARLINGTON ST.

RAMP 'E-6'

-1.5%

+67, LT
6" TEE
1075.17

PVC STA. 81+50
ELEV. 1078.75

6" SHALLOW PIPE U.D., LT.

EX. 15" STM. TO BE ABANDONED

RAMP 'E-8'

P.V.I. STA. 83+00
ELEV. 1076.50

RAMP E-8
STA. 83+65.02

-1.5%

-4.48%

℄ SHIFT - 16' LT.

+00, LT.
90° BEND
1067.48

+00, RT.
90° BEND
1067.30

℄ CHITTENDEN ST.

300' V.C.
K = 101
ACTUAL DESIGN SPEED = 48 MPH

PVT STA. 84+50
ELEV. 1069.78

-4.48%

6" SHALLOW PIPE U.D., RT.

MATCH LINE STA. 86+00

1078.0 1076.0 1074.0 1072.0 1068.5 1066.5 1066.0 1066.8 1066.0 1064.0 1058.2 1060.1 1059.5 1057.9 1056.6 1058.1 1057.6 1057.9

75 76 77 78 79 80 81 82 83 84 85 86

PROPOSED PROFILE GRADE

1060.82 1059.70 1058.58 1057.46 1056.34 1055.22 1054.10 1052.98 1051.86 1050.74 1049.62 1048.50 1047.38 1046.26 1045.14 1044.02 1042.90 1041.78 1040.66 1039.54 1038.42 1037.30 1036.18 1035.06 1033.94 1032.82 1031.70 1030.60 1029.60 1028.71 1027.91 1027.22 1026.63 1026.15 1025.76 1025.46 1025.16 1024.86 1024.56

MATCH LINE STA. 86+00

1061.94

6" SHALLOW PIPE U.D., RT.

+25, RT.
90° BEND
1052.71

+25, RT.
OUTLET
1052.00

+28, RT.
BEGIN U.D.
1050.91

PROP. 15" STM.

6" DEEP PIPE U.D., RT.

FOR CONTINUATION, SEE RAMP 'E-8A' ROADWAY PROFILE, SHEET 175.

-4.48%

℄ HART ST.

EX. 15" STM. TO BE REMOVED

+02, RT.
BEGIN U.D.
1038.66

+38, LT.
BEGIN U.D.
1032.88

+93, LT.
45° BEND
1025.93

+01, LT.
45° BEND
1025.24

6" DEEP PIPE U.D., LT.

6" DEEP PIPE U.D., RT.

+10, LT. - OUTLET
1019.41

RAMP 'E-8'

PVC STA. 93+07.99
ELEV. 1031.34

200' V.C.
S.S.D. = 345'
K = 61
ACTUAL DESIGN SPEED = 46 M.P.H.

PVT STA. 95+07.99
ELEV. 1025.66

STA. 95+10, 8' LT.
INLET № 2-A-12
AS PER PLAN

STA. 94+07.99
ELEV. 1026.86

+13, RT.
45° BEND
1019.40

+16, RT.
45° BEND
1019.32

-1.20%

RAMP 'E-8'
SEE SHEET 178.

℄ FULLER ST.
STA. 95+93.20
ELEV. 1024.64

+26, LT. BEGIN U.D.
1022.90

+60, RT. OUTLET
1018.88

E/P

STA. 95+60, 40' RT.
C.B. NO. 3

MEET EX. U.D., RT.

+60, RT. OUTLET
1022.46

FOR CONTINUATION, SEE FULLER ST. ROADWAY PROFILE, SHEET 183.

SCALE IN FEET
HORIZ. 0 40 80 120
VERT. 0 5 10 15

1057.9 1057.3 1056.0 1055.3 1054.9 1054.1 1052.8 1050.9 1049.8 1047.4 1042.4 1041.4 1039.2 1036.4 1033.9 1031.1 1027.1 1027.0 1026.0 1027.2

86 87 88 89 90 91 92 93 94 95

RAMP 'E-8'
ROADWAY PROFILE

CALC. BY. DATE	SUM-76-11.57	OHIO
CHKD. BY. DATE	FED. PROJECT IR-76-2(44)19	F.H.W.A. REGION 5

178
1214

SUMMIT COUNTY

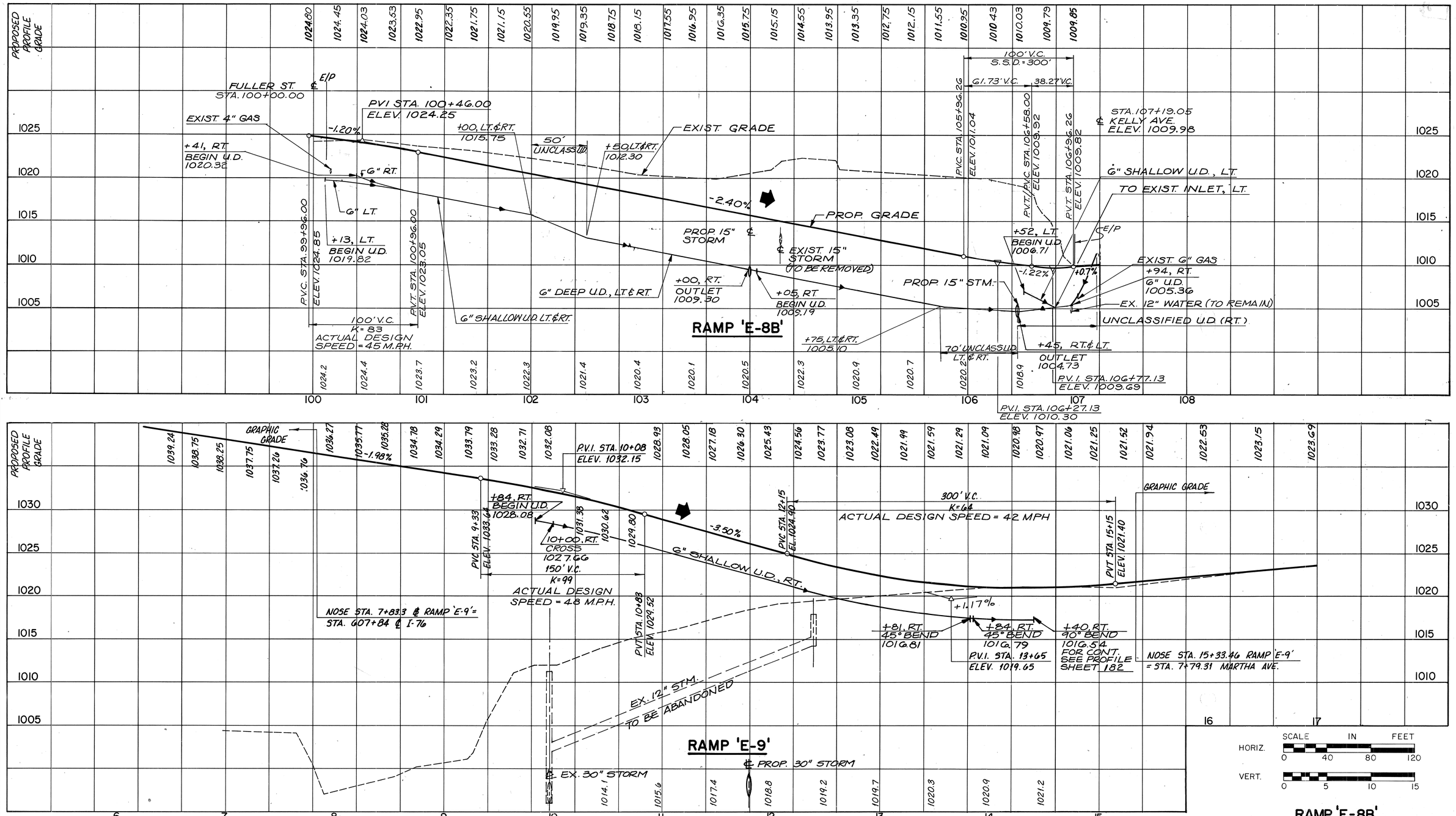

SCALE IN FEET
HORIZ. 0 40 80 120
VERT. 0 5 10 15

RAMP 'E-8B'
RAMP 'E-9'
ROADWAY PROFILE

CALC. BY. DATE	SUM-76-11.57	OHIO	179
CHKD. BY. DATE	FED. PROJECT IR-76-2(44)19	F.H.W.A. REGION 5	1214

SUMMIT COUNTY

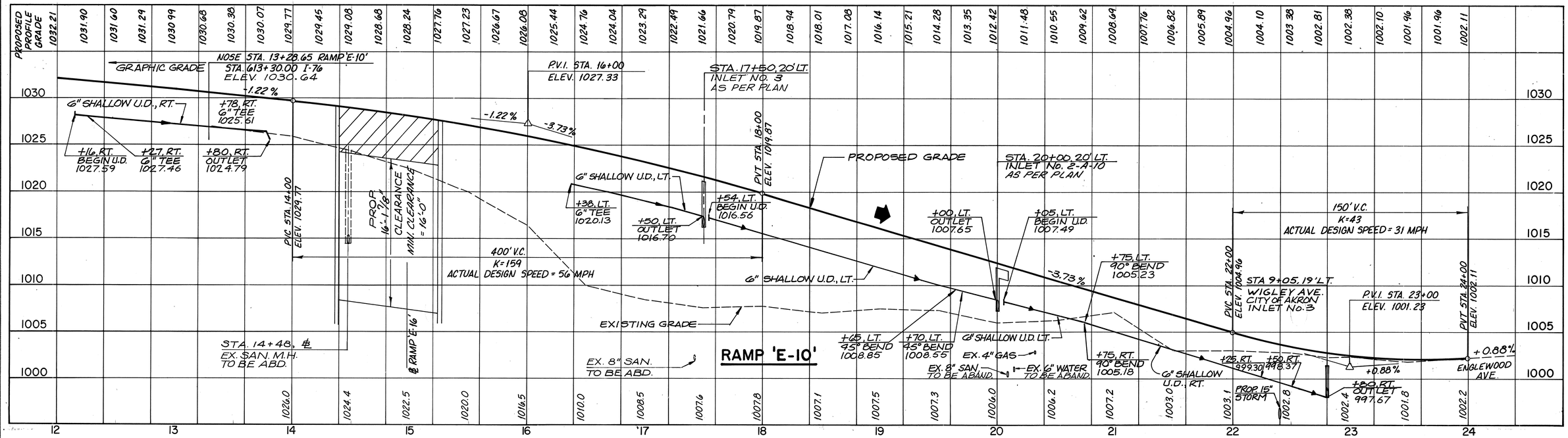

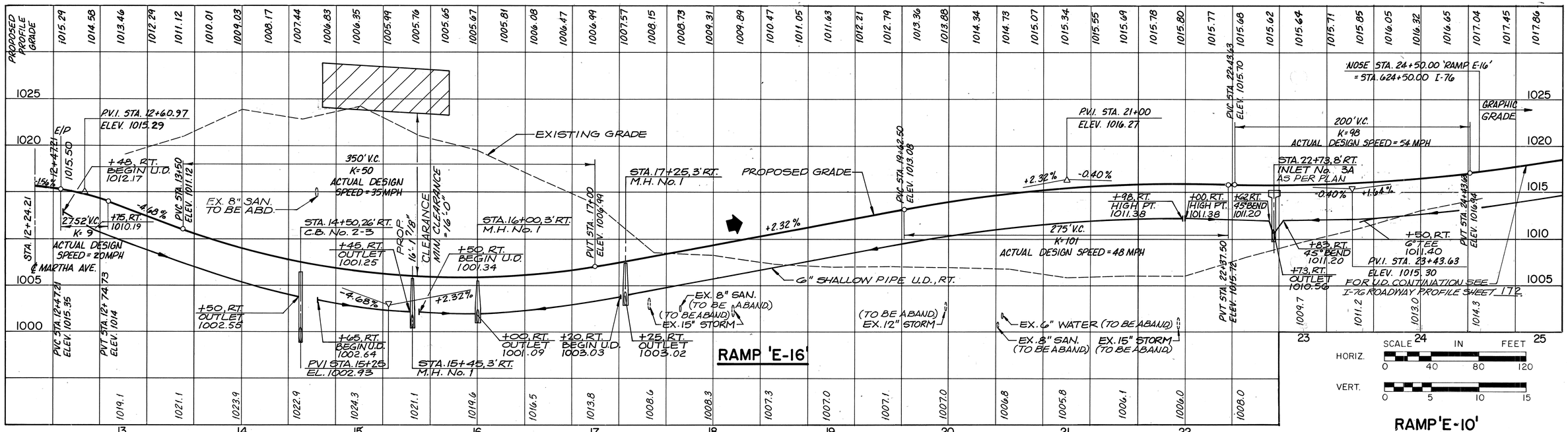

SCALE IN FEET

HORIZ. 0 40 80 120

VERT. 0 5 10 15

RAMP 'E-10'
RAMP 'E-16'

ROADWAY PROFILE

AA B.Pe 21942R

CALC. BY. DATE	SUM-76-11.57	OHIO
CHKD. BY. DATE	FED. PROJECT IR-76-2(44)19	F.H.W.A. REGION 5

180 / 1214

SUMMIT COUNTY

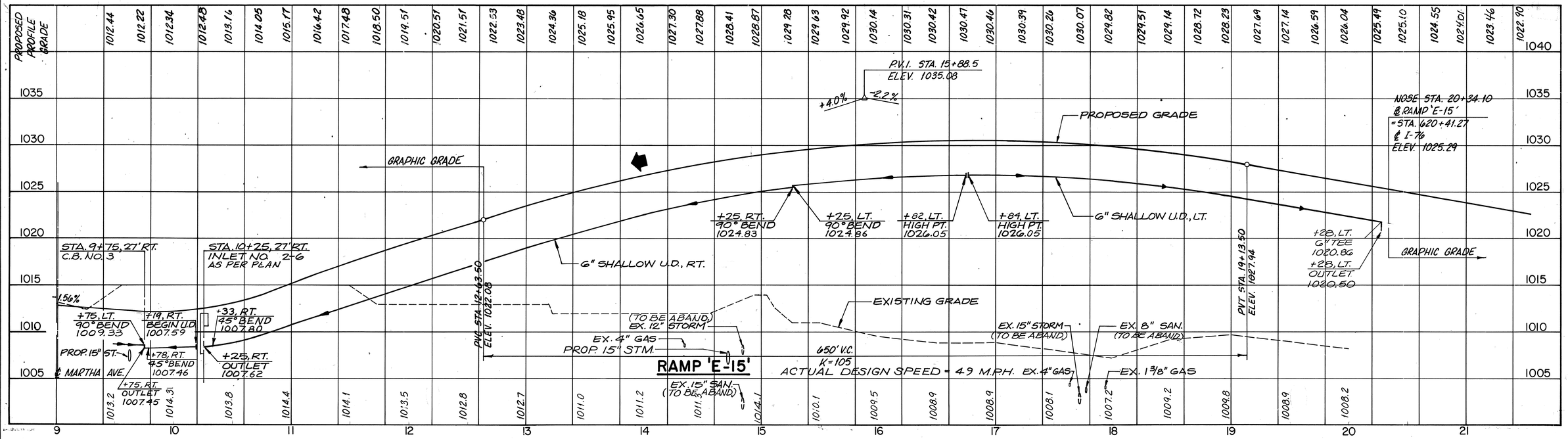

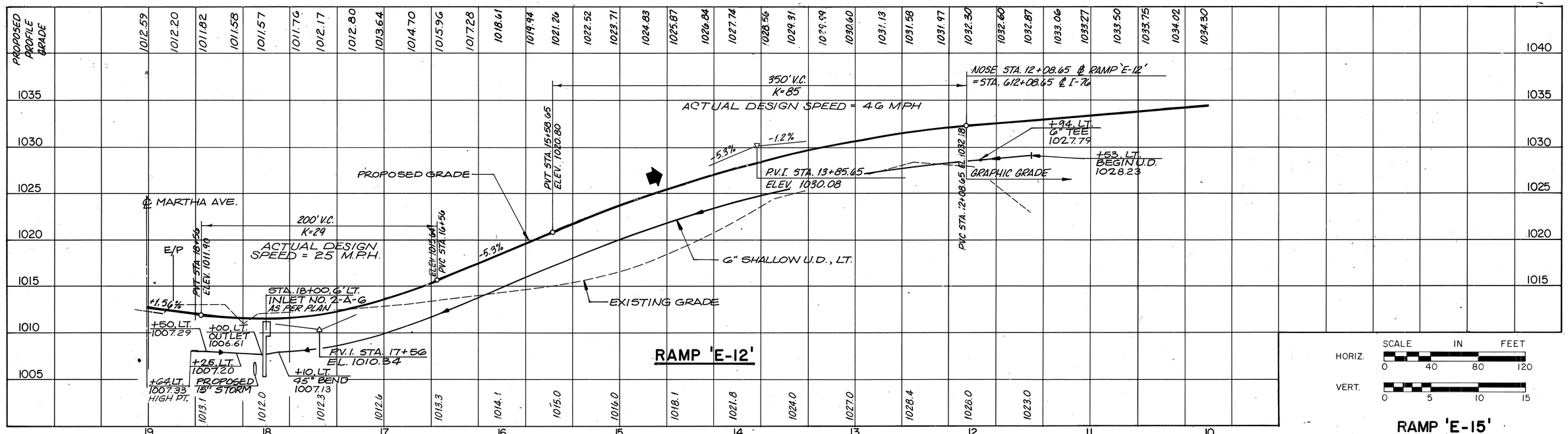

SCALE IN FEET

HORIZ. 0 40 80 120

VERT. 0 5 10 15

RAMP 'E-15'
RAMP 'E-12'
ROADWAY PROFILE

CALC. BY. DATE	SUM-76-11.57	OHIO
CHKD. BY. DATE	FED. PROJECT IR-76-2(44)19	F.H.W.A. REGION 5

181
1214

SUMMIT COUNTY

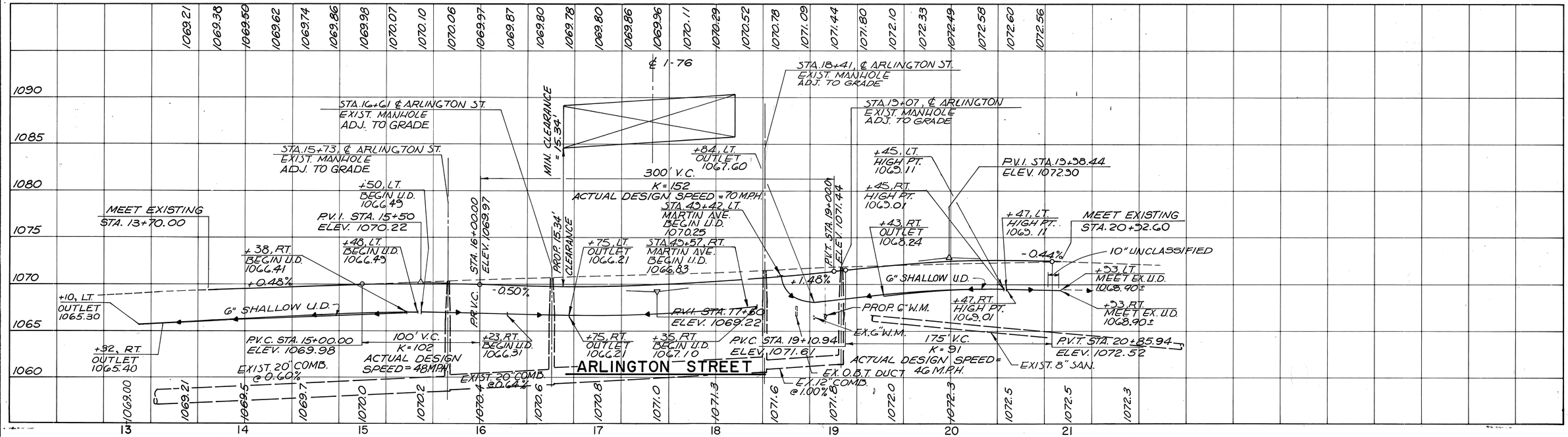

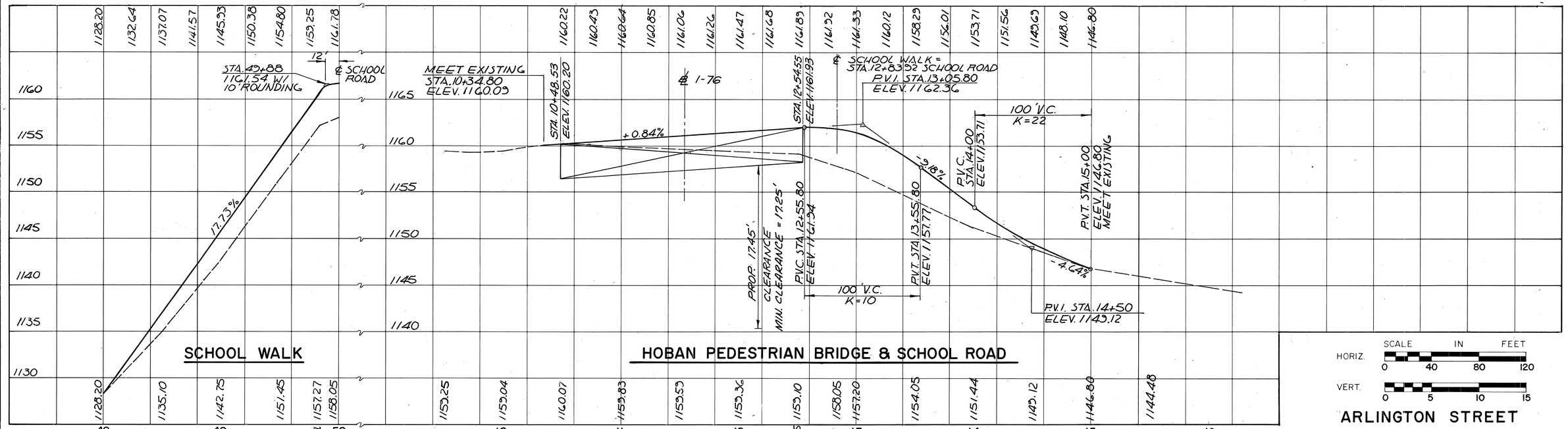

SCALE IN FEET

HORIZ. 0 40 80 120

VERT. 0 5 10 15

ARLINGTON STREET
HOBAN PEDESTRIAN BRIDGE

ROADWAY PROFILE

AA B/P# 71942R

CALC. BY. DATE	SUM-76-11.57	OHIO
CHKD. BY. DATE	FED. PROJECT IR-76-2(44)19	F.H.W.A. REGION 5

182
1214

SUMMIT COUNTY

1022.32 -47.31 | 1022.09 | 1021.84 | 1021.59 | 1021.31 | 1020.95 | 1020.53 | 1020.04 | 1019.52 | 1018.99 | 1018.47 | 1017.94 | 1017.42 | 1016.89 | 1016.37 | 1015.84 | 1015.32 | 1014.79 | 1014.27 | 1013.74 | 1013.22 | 1012.69 | 1012.17 | 1011.74 | 1011.42 | 1011.21 | 1011.10 | 1011.11 | 1011.24 | 1011.46 | 1011.71 | 1011.96 | 1012.21 | 1012.46 | 1012.71 | 1012.96 | 1013.21 | 1013.46 | 1013.77 | 1014.06

STA. 9+71, 1' LT. MARTHA AVE.
EXIST. MANHOLE
RECONSTRUCT TO GRADE
EXIST. T.C. = 1020.64
NEW T.C. = 1019.60

STA. 20+45, 17.5' RT. ENGLEWOOD AVE.
INLET CITY OF AKRON NO. 3
GUTTER EL. = 1019.27

STA. 12+90, 1' LT. MARTHA AVE.
M.H. NO. 3
T.C. = 1012.90

STA. 10+87, 22' RT. MARTHA AVE.
INLET CITY OF AKRON NO. 3
GUTTER EL. 1016.49

P.V.C. STA. 13+16.69
ELEV. 1012.34

175' V.C.
K = 57
ACTUAL DESIGN SPEED = 39 M.P.H.

P.V.T. STA. 14+91.69
ELEV. 1011.38

STA. 13+18, 1' LT. MARTHA AVE.
EXIST. MANHOLE
RECONSTRUCT TO GRADE
EXIST. T.C. = 1013.39
NEW T.C. = 1012.30

STA. 35+63, 31' LT. 3RD. AVE.
INLET CITY OF AKRON NO. 3
GUTTER EL. = 1011.55

STA. 17+44, 23' RT. MARTHA AVE.
INLET CITY OF AKRON NO. 3
GUTTER EL. 1013.31

MEET EXIST.
STA. 7+77.31

P.V.I. STA. 9+00.00
ELEV. 1021.09

STA. 11+20, 29' LT. MARTHA AVE.
M.H. NO. 3
T.C. = 1016.45

STA. 13+60, 1' LT. MARTHA AVE.
EXIST. MANHOLE
RECONSTRUCT TO GRADE
EXIST. T.C. = 1012.60
NEW T.C. = 1011.59

STA. 14+25, 23' LT. & RT. MARTHA AVE.
INLET CITY OF AKRON NO. 3
GUTTER EL. (LT. & RT.) = 1010.41

MEET EXIST.
STA. 17+51.77
1010.70±

1025 | 1020 | 1015 | 1010 | 1005 | 1000 | 995 | 990

-1.00%

+90, RT.
BEGIN U.D.
1016.11

EXISTING GRADE

PROPOSED GRADE

-2.10%

EXIST. 12" STM.

7+77.5, RT.
MEET EXIST. U.D.
1019.0±

6" SHALLOW U.D. RT.

124' UNCLASS. U.D. LT.

+76, LT.
90° BEND
1016.35

14+40, RT., RAMP E-9
90° BEND
1016.54
FOR CONTINUATION
SEE PROFILE SHEET 178.

12" W. = 1016.10
6" U.D. W.(RT.) = 1016.60

P.V.C. STA. 8+50
ELEV. 1021.59

P.V.T. STA. 9+50
ELEV. 1020.04

100' V.C.
K = 91
ACTUAL DESIGN SPEED = 47 M.P.H.

+00, LT.
1015.70

EX. 6" WATER LINE

PROP. 6" WATER LINE

12" W. = 1013.32
6" U.D. S.(RT.) 1013.82

+11, LT.
45° BEND
1013.34

PROP. 30" STM.

+13, LT.
BEGIN U.D.
1013.28

+74, RT.
BEGIN U.D.
1011.83

EXIST. 12" STM.

EXIST. 8" SAN.
(TO BE ABANDONED)

-3.65%

15" N. = 1007.57
30" E, W. = 997.37
6" U.D. S.(LT.) = 1013.00

EXIST. 8" S. = 995.46
PROP. 15" N. = 991.93
PROP. 18" W. = 991.70

P.V.I. STA. 14+04.19
ELEV. 1010.50

29 L.F. 15" CONDUIT, TYPE B, 706.02, D-LOAD 2000
W/ 706.11 JOINTS @ 0.35%

EXIST. 8" S. = 994.40
EXIST. 15" N. = 992.05
PROP. 15" S. = 992.05

+1.00%

+94, LT.
BEGIN U.D.
1007.15

EXIST. ELEC. DUCTS

6" UNCLASS. U.D. LT.

EXIST. 15" STM.

15" E.(LT.) = 1003.62
15" W.(RT.) = 1006.14
6" U.D. S., (LT. & RT.) N.(RT.) = 1007.74
6" U.D. N(LT.) = 1006.26

+0.35%

EXIST. 15" SAN.

HIGH PT., 1008.75

℄ THIRD AVE.

+40, RT.
BEGIN U.D.
1010.58

15" S. = 1009.97
6" U.D., N.(RT.) = 1010.64

+70, RT.
90° BEND
1009.33
FOR CONTINUATION,
SEE PROFILE SHEET 180.

12" S. = 1008.21
6" U.D. N.(LT.) = 1008.88

1023.1 | 1022.6 | 1022.1 | 1021.8 | 1021.4 | 1021.0 | 1020.3 | 1019.4 | 1018.3 | 1017.2 | 1016.1 | 1015.0 | 1013.8 | 1012.7 | 1011.9 | 1011.4 | 1011.5 | 1012.0 | 1012.6 | 1013.0 | 1013.5

8 | 9 | 10 | 11 | 12 | 13 | 14 | 15 | 16 | 17

SCALE IN FEET
HORIZ. 0 40 80 120
VERT. 0 5 10 15

MARTHA AVENUE
ROADWAY PROFILE

CALC. BY. DATE	SUM-76-11.57	OHIO
CHKD. BY. DATE	FED. PROJECT IR-76-2(44)19	F.H.W.A. REGION 5

183
1214

SUMMIT COUNTY

PROPOSED PROFILE GRADE

1135 1130 1125 1120 1115 1110 1105 1100

1099.40 1099.15 1098.90 1098.86 1099.10 1099.64 1100.47 1101.59 1102.99 1104.49 1105.99 1107.49 1108.99 1110.49 1111.99 1113.49 1114.99 1116.49 1118.07 1119.65 1121.23 1122.82 1124.40 1125.98 1127.56 1129.14 1130.73 1132.31 1133.89 1135.10

STA 13+32.32 ℄ RAMP 'E-2'
ELEV. 1099.47
MEET EXIST. PAV'T.

+82, LT.
BEGIN U.D.
1100.90

150' V.C.
K=21
ACTUAL DESIGN
SPEED = 20 M.P.H.

STA. 10+78, 18' LT.
C.B. ADJ. TO GRADE

GRAPHIC GRADE
STA 9+00

STA. 8+77, 18' LT.
C.B. ADJ. TO GRADE

25'-UNCLASS. U.D., LT.

NOSE STA 6+05.84 ℄ RAMP 'E-2'
STA 557+54.54 I-76
ELEV. 1135.10

℄ INMAN STREET
STA 13+49.11
ELEV. 1099.50

STA. 12+83.18' LT. ℄ RAMP E-2
EXIST. C.B. No. 3

PVC STA 12+79.90
ELEV. 1098.95

+53, LT.
1102.61

+83, LT.
OUTLET
1094.15

PVI STA 11+29.90
ELEV. 1102.70

+6.00%

G" SHALLOW U.D., LT.

+47, LT.
1115.14

30'-UNCLASS. U.D., LT.

+08, LT.
BEGIN U.D.
1130.26

STA 13+49.71 RT.
INMAN ST.
BEGIN U.D.
1095.11

-1.00%

+81, LT.
BEGIN U.D.
1112.99

+77, LT.
OUTLET
1114.89

RAMP 'E-2'

+78, LT.
OUTLET
1101.30

1099.5 1098.7 1098.8 1099.8 1101.8 1104.6 1107.6 1110.6 1113.6 1116.7 1119.6 1122.5 1125.5 1128.9 1131.8 1134.1

13 12 PVI STA 12+04.90 ELEV. 1098.20 11 10 9 8 7 6

PROPOSED PROFILE GRADE

1035 1030 1025 1020 1015 1010

1027.30 1026.04 1024.84 1024.64 1024.66 1023.84 1022.53 1021.96 1021.46 1020.96 1020.46 1019.96 1019.46 1018.96 1018.39 1017.53 1016.35 1015.68 1016.22 1016.24 1014.95 1013.38

STA. 11+85.22' RT.
CITY OF AKRON
INLET U.D. 5

P.V.I. STA 12+64.92
ELEV. 1024.52

30' V.C.
K=6.6

25' V.C.
K=32

℄ RAMP E-8

℄ RAMP E-8 B
STA 12+35.43
ELEV. 1024.80

℄ I-76

PROP. CLEARANCE
15'-11"

P.V.I. STA 15+18.73
ELEV. 1018.08

+75, LT.
90° BEND
1013.06

EXISTING GRADE

-0.95%

-6.54%

P.V.C. STA 12+79.92
ELEV. 1023.54

P.V.T. STA 13+09.92
ELEV. 1022.56

P.V.C. STA 15+53.73
ELEV. 1016.15

P.V.T. STA 15+78.73 (E/P)
ELEV. 1015.74

STA. 15+78.97' LT.
C.B. No. 5 AKRON

℄ RAMP E-7
STA 16+11.33
ELEV. 1016.47
E/P

FOR CONTINUATION OF U.D.
SEE RAMP 'E-7' ROADWAY
PROFILE, SHEET 176.

STA 11+40.59, RT.
MEET EXIST. U.D.
1024.5 ±

+85, RT.
OUTLET
1022.52

STA 12+20.94
ELEV. 1024.58

-2.00%

GRAPHIC GRADE

STA 16+88.83
EL. 1012.58
MEET EXISTING

-5.53%

-2.24%

STA 12+49.92
ELEV. 1024.66

P.V.I. STA 12+94.92
ELEV. 1022.56

G" SHALLOW U.D. LT. & RT.

P.V.T. STA 12+79.92
ELEV. 1023.54

P.V.C. STA 14+83.78
ELEV. 1018.78

+76, LT.
OUTLET
1012.72

STA. 16+88.83 LT.
MEET EXIST. U.D.
1009.6 ±

GRAPHIC GRADE

STA 11+40.59
ELEV. 1027.69
MEET EXISTING

P.V.I. STA 15+66.23
ELEV. 1015.46

FULLER STREET

+53, RT.
BEGIN U.D.
1021.45

30' V.C.
K=5.4

70' V.C.
K=20

ACTUAL DESIGN
SPEED=25 M.P.H.

+23, RT.
HIGH PT.
1012.77

STA. 16+88.83, RT
MEET EXIST. U.D.
1009.4 ±

FOR CONTINUATION OF U.D.
SEE RAMP E-8
ROADWAY PROFILE
SEE 177

FOR CONTINUATION OF LT. U.D.
SEE RAMP E-8
ROADWAY PROFILE
SHEET 177.

FOR CONTINUATION OF RT. U.D.
SEE RAMP E-7
ROADWAY PROFILE, SHEET 176.

1033.2 1031.1 1029.2 1027.3 1025.5 1023.9 1022.5 1021.6 1020.6 1019.6 1018.6 1017.5 1016.3 1014.7 1012.0 1008.5 1005.0

10 11 12 13 14 15 16 17 18

SCALE IN FEET
HORIZ. 0 40 80 120
VERT. 0 5 10 15

RAMP 'E-2'
FULLER STREET
ROADWAY PROFILE

CALC. BY. DATE	SUM-76-11.57	OHIO
CHKD. BY. DATE	FED. PROJECT IR-76-2(44)19	F.H.W.A. REGION 5

184
12.14

SUMMIT COUNTY

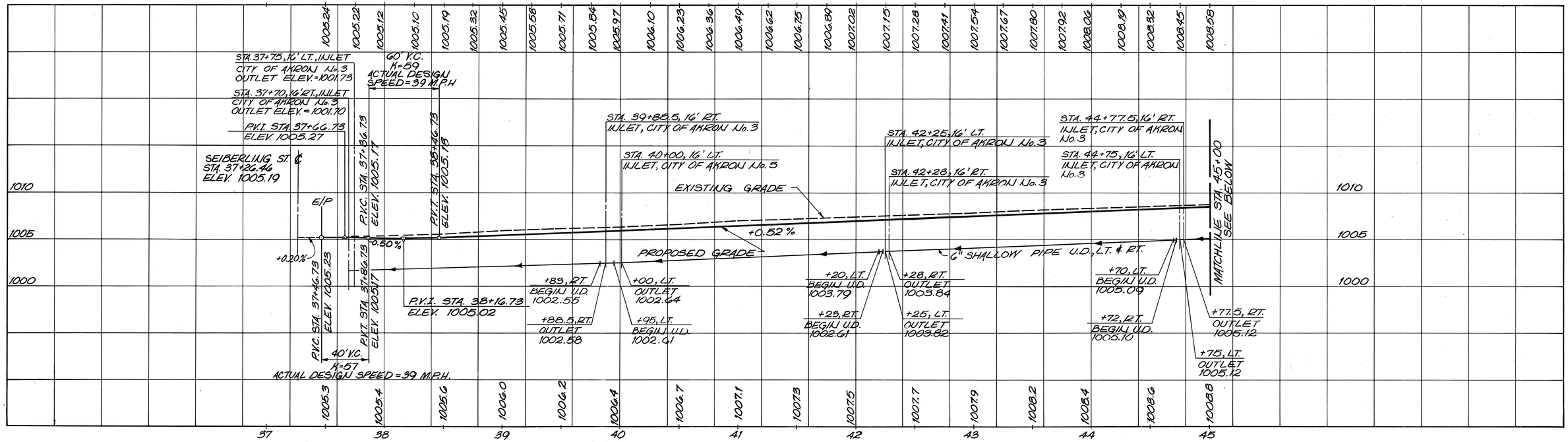

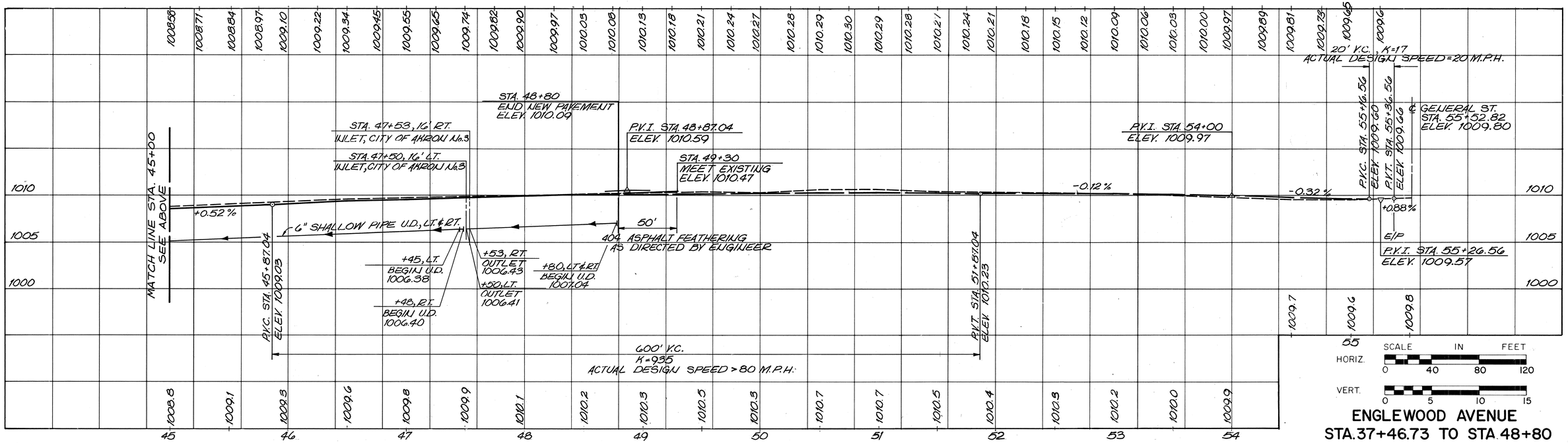

SCALE IN FEET
HORIZ. 0 40 80 120
VERT. 0 5 10 15

ENGLEWOOD AVENUE
STA. 37+46.73 TO STA. 48+80

ROADWAY PROFILE

CALC. BY. DATE	SUM-76-11.57	OHIO
CHKD. BY. DATE	FED. PROJECT IR-76-2(44)19	F.H.W.A. REGION 5

185
12.14

SUMMIT COUNTY

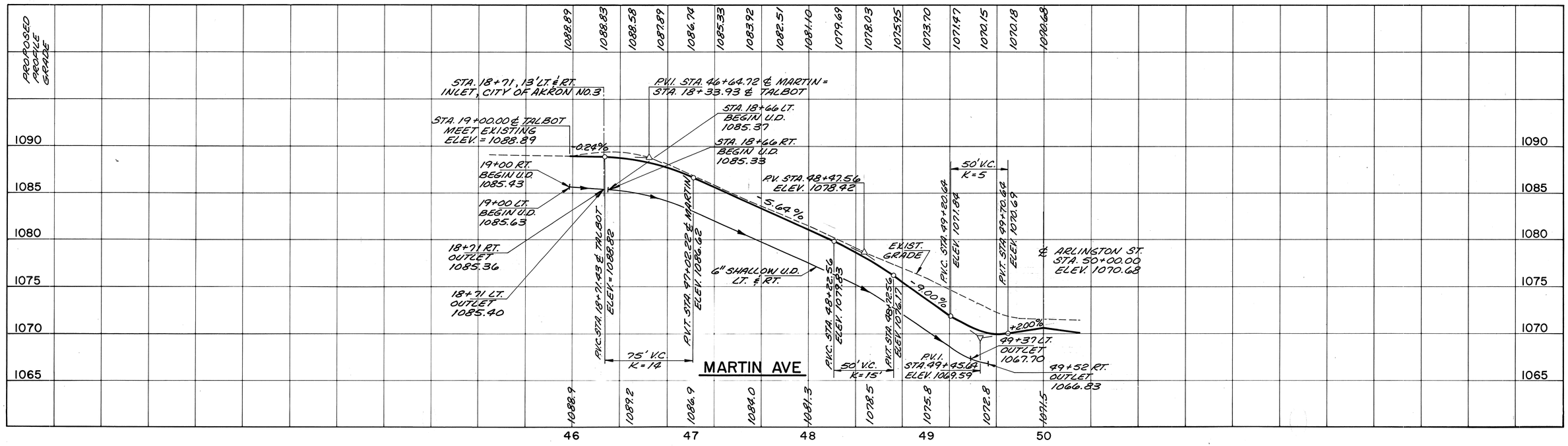

SCALE IN FEET

HORIZ 0 40 80 120

VERT 0 5 10 15

MARTIN AVE.

ROADWAY PROFILE

ORIGINAL SURVEY		BY	DATE
	SURVEYED		
	PLOTTED		
NOTE BOOK	TEMPLATE		
	AREAS		
NO.	AREAS CHECKED		

FINAL SURVEY		BY	DATE
	SURVEYED		
	PLOTTED		
NOTE BOOK	TEMPLATE		
	AREAS		
NO.	AREAS CHECKED		

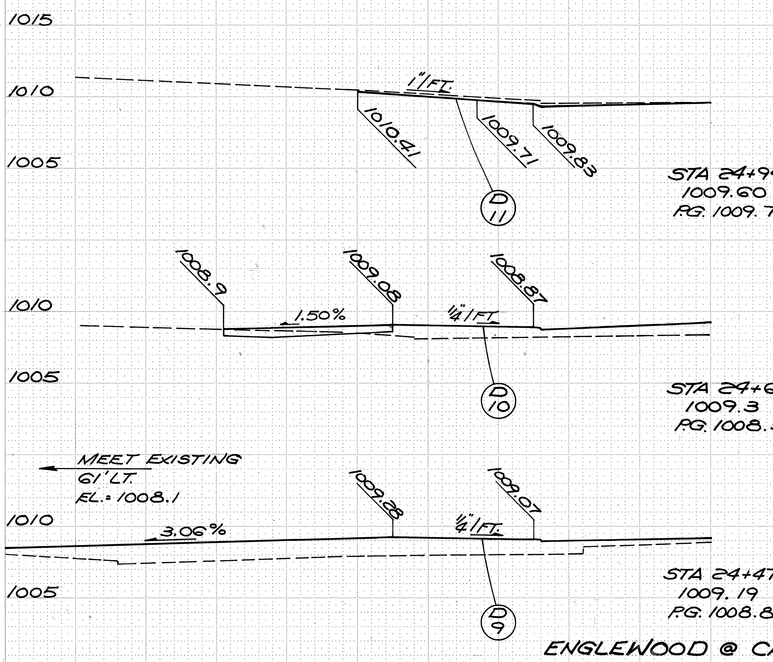

ENGLEWOOD @ CAMBRIDGE ST.

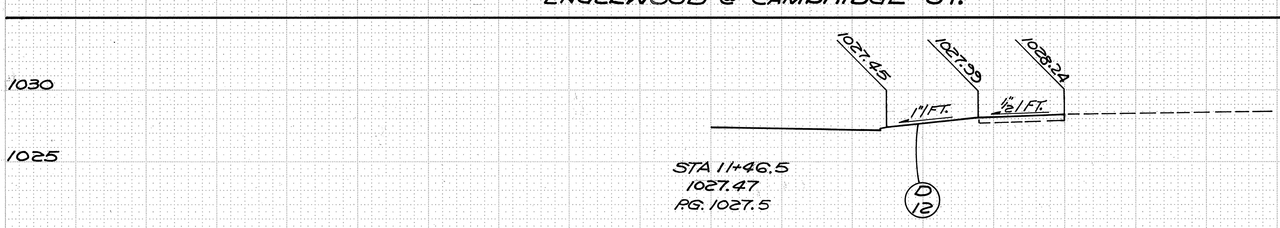

FULLER ST.

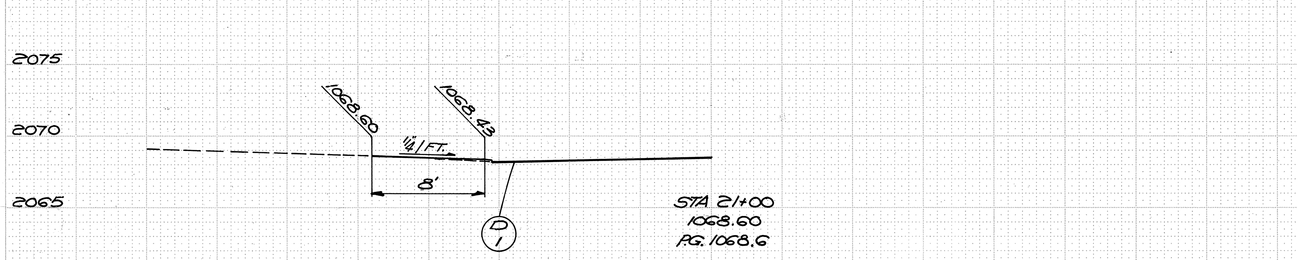

2ND AVE.

2ND AVE., FULLER ST & ENGLEWOOD AVE. DRIVEWAY PROFILES

SUMMIT COUNTY

CALC BY / DATE	
CHKD / DATE	
FEDERAL PROJ	SUM-76-11.57
	IR-76-2-(44)19
F.H.WA. REGION 5	OHIO

186
1214

PLATE 3. CROSS SECTION
KEUFFEL & ESSER CO.

ORIGINAL SURVEY		BY	DATE
	SURVEYED		
	PLOTTED		
NOTE BOOK	TEMPLATE		
	AREAS		
NO.	AREAS CHECKED		

FINAL SURVEY		BY	DATE
	SURVEYED		
	PLOTTED		
NOTE BOOK	TEMPLATE		
	AREAS		
NO.	AREAS CHECKED		

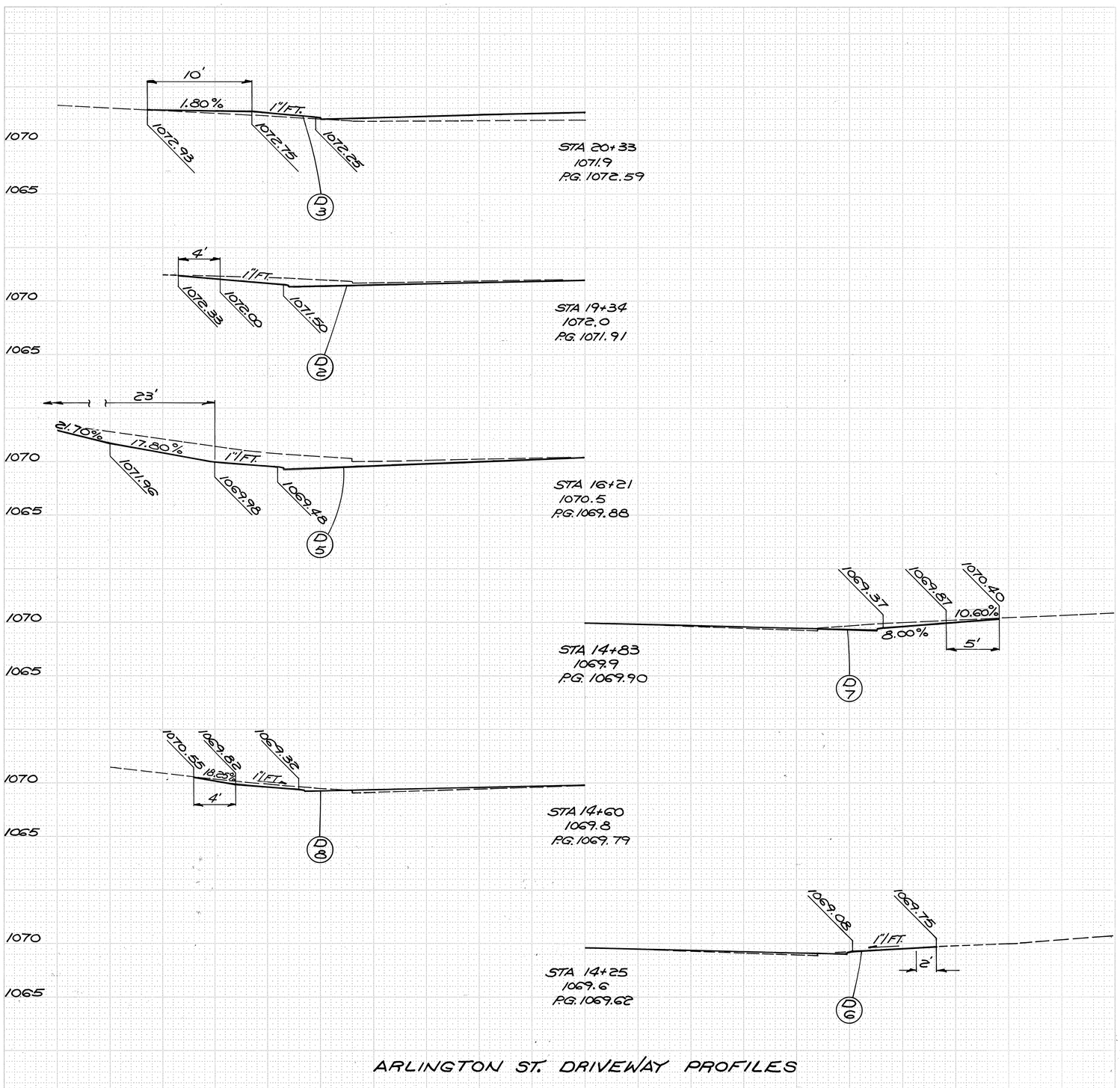

ARLINGTON ST. DRIVEWAY PROFILES

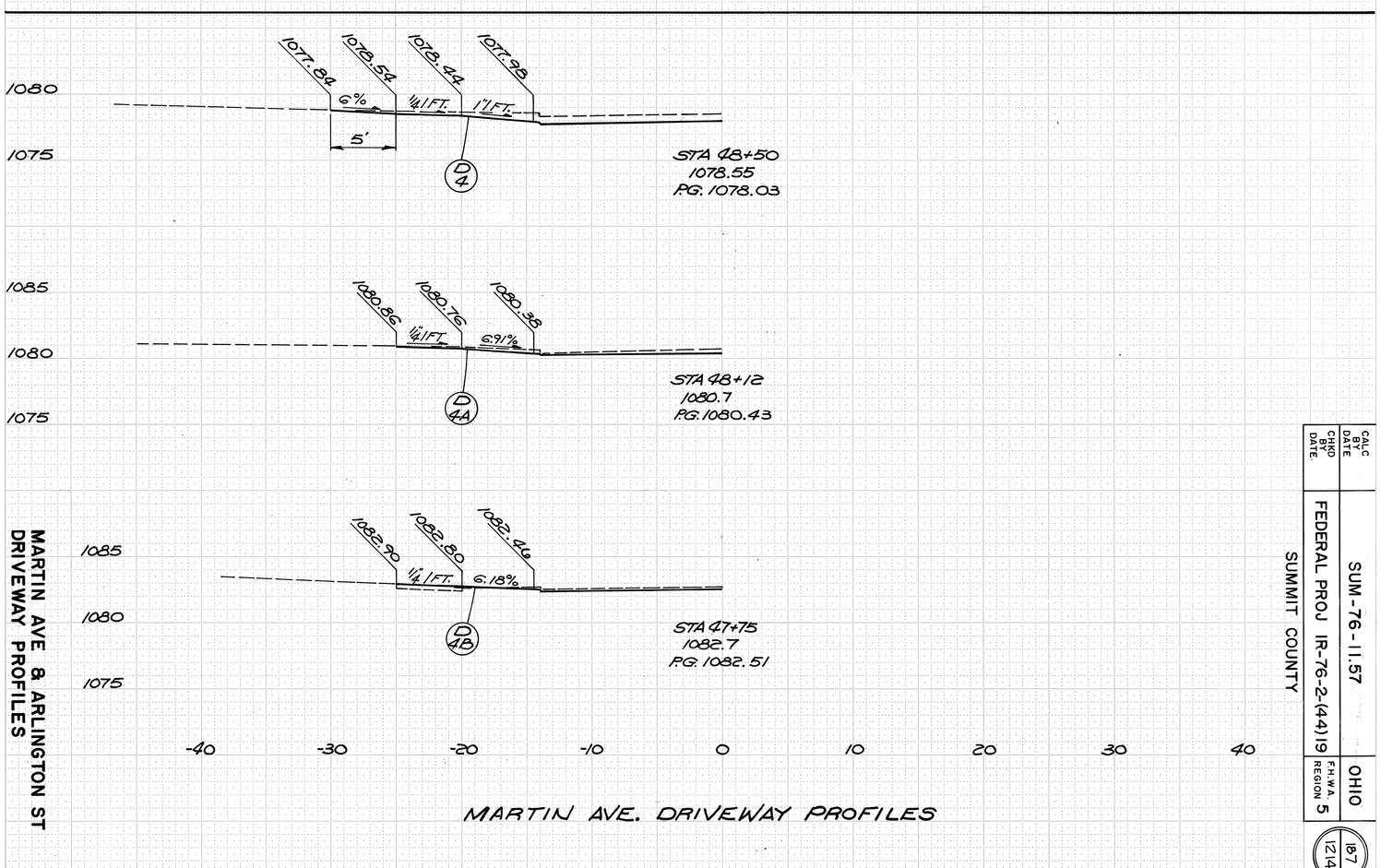

MARTIN AVE. DRIVEWAY PROFILES

MARTIN AVE & ARLINGTON ST
DRIVEWAY PROFILES

CALC BY DATE
CHKD BY DATE

SUM-76-11.57
FEDERAL PROJ IR-76-2(44)19
SUMMIT COUNTY

OHIO
F.H.W.A. REGION 5

187
1214

K&E PLATE 3. CROSS SECTION KEUFFEL & ESSER CO.

AA. B.Pa 71942R

CALC. BY. DATE	SUM-76-11.57	OHIO	188
CHKD. BY. DATE	FED. PROJECT IR-76-2(44)19	F.H.W.A. REGION 5	1214

SUMMIT COUNTY

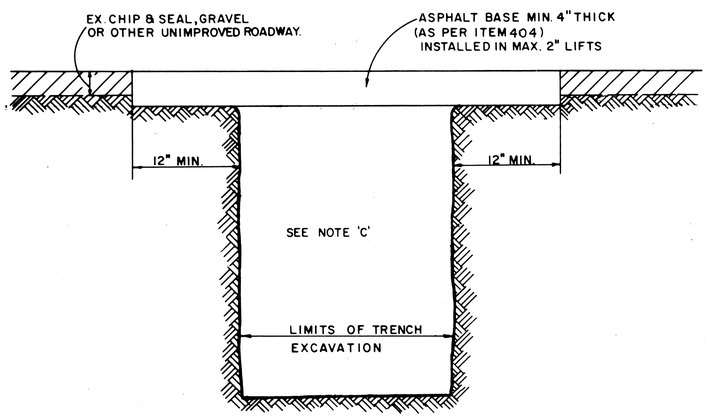

DUST TREATED, CHIP AND SEAL, CINDER OR GRAVEL ROADWAYS RESTORATION DETAIL

DETAIL NO. 1

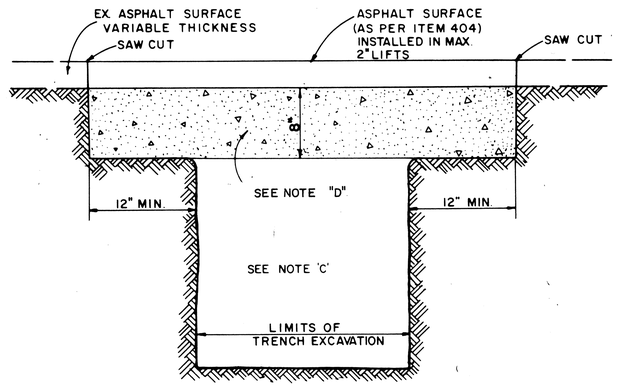

ASPHALT SURFACE RESTORATION DETAIL

DETAIL NO. 2

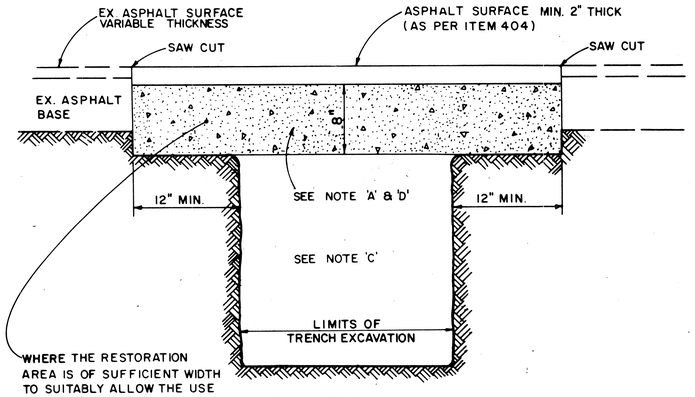

WHERE THE RESTORATION AREA IS OF SUFFICIENT WIDTH TO SUITABLY ALLOW THE USE OF A ROLLER FOR COMPACTION OF THE REPLACEMENT BASE MATERIAL, THIS ITEM MAY BE ASPHALT BASE 8" THICK — ITEM 301, WHERE APPROVED BY THE ENGINEER.

ASPHALT PAVEMENT RESTORATION DETAIL

DETAIL NO. 3

NOTE A THE TOP OF THE NEW CONCRETE BASE SHALL NOT BE CONSTRUCTED HIGHER THAN THE EXISTING ASPHALT BASE.

NOTE B UNLESS OTHERWISE PROVIDED FOR BY THE PLANS OR SPECIFICATIONS, THE COST OF ALL RESTORATION SHALL BE INCLUDED IN THE PRICE BID FOR THE 603 OR 814 ITEM WHICH MADE NECESSARY THE RESTORATION, IN ACCORDANCE WITH 603.09.

NOTE C BACKFILL MEETING THE REQUIREMENTS OF 603.08

NOTE D CONCRETE PAVEMENT SHALL MEET THE REQUIREMENTS OF SECTION 305

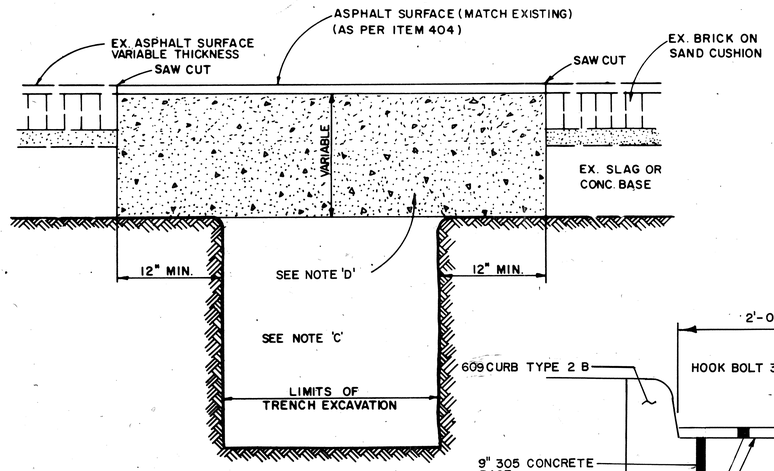

RESURFACED BRICK PAVEMENT RESTORATION DETAIL

DETAIL NO. 4

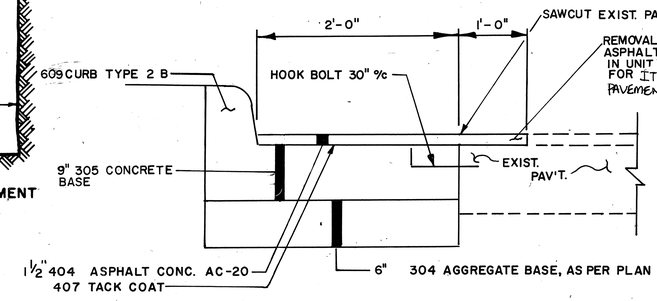

CURB REPLACEMENT DETAIL W/RIGID PAVEMENT

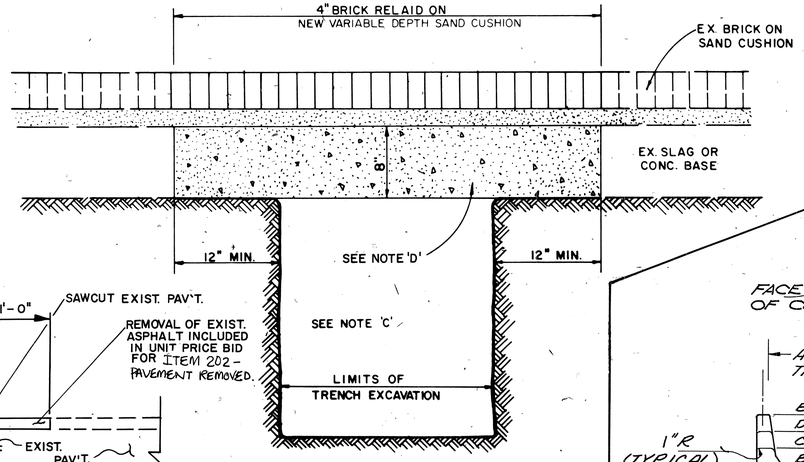

EXPOSED BRICK PAVEMENT RESTORATION DETAIL

DETAIL NO. 5

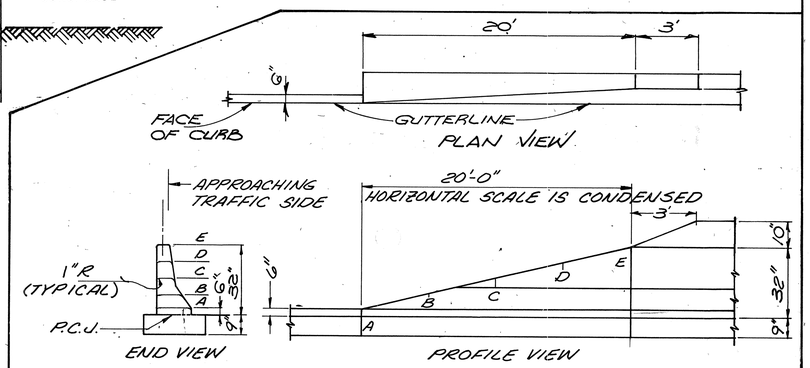

CONCRETE BARRIER TRANSITION TO CURB

N.T.S.

ROADWAY DETAILS

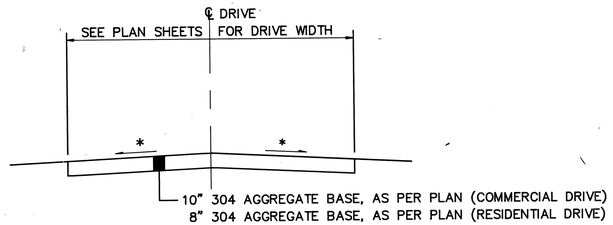

SECTION B–B
GRAVEL DRIVE

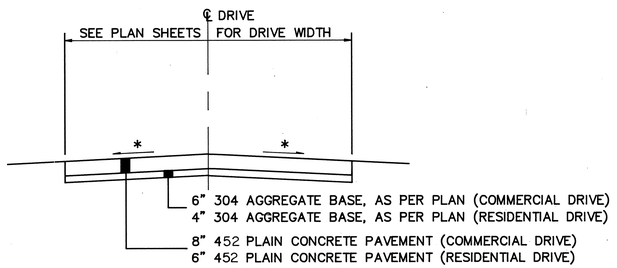

SECTION B–B
CONCRETE DRIVE

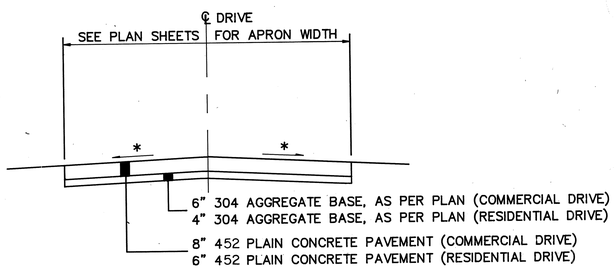

SECTION A–A

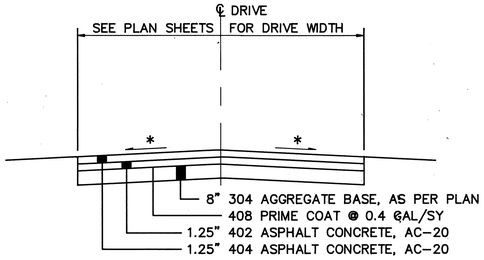

SECTION B–B
COMMERCIAL ASPHALT DRIVE

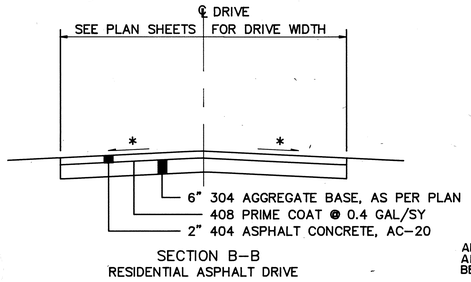

SECTION B–B
RESIDENTIAL ASPHALT DRIVE

* NOTE: SLOPE AS DIRECTED BY THE ENGINEER

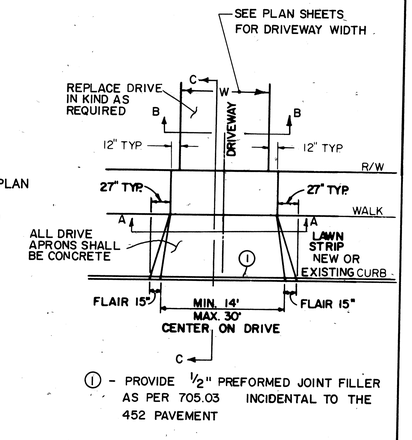

① – PROVIDE ½" PREFORMED JOINT FILLER AS PER 705.03 INCIDENTAL TO THE 452 PAVEMENT

SEE DRIVEWAY PROFILES SHEET 186-187

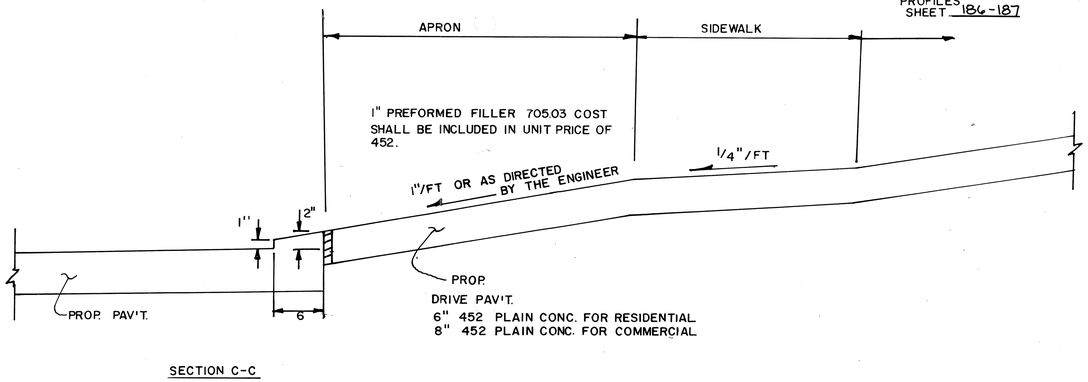

SECTION C–C

DRIVEWAY DETAILS
N.T.S.

DRIVEWAY APPROACHES

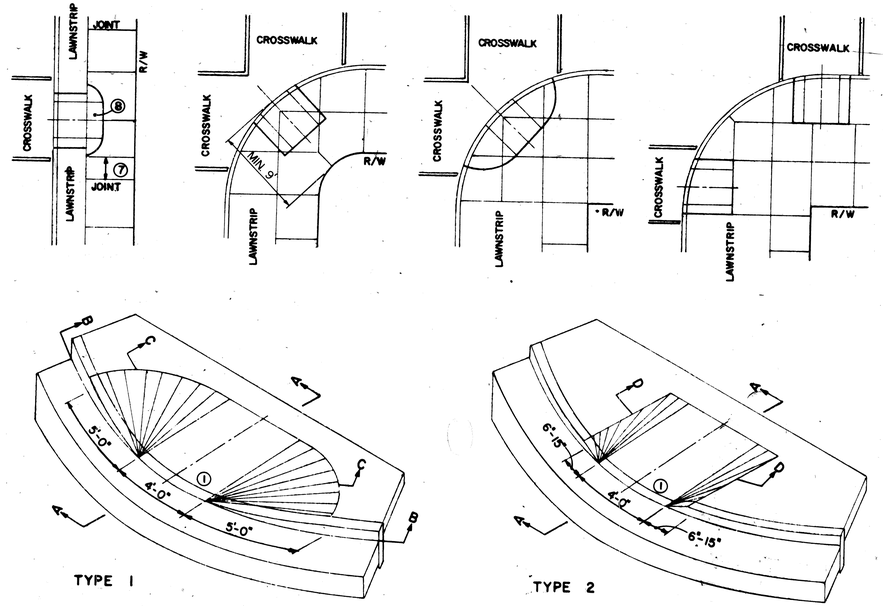

① PROVIDE ½" PREMOLDED EXPANSION MATERIAL.
② RAMP TO MEET PAVEMENT SURFACE FLUSH.
③ CURB CONSTRUCTION AS PER PLAN.
④ PAVEMENT CONSTRUCTION AS PER PLAN.
⑤ REMOVE EXISTING CURB - CONSTRUCT NEW CONCRETE CURB AS REQUIRED, ITEM 609.
⑥ PAVEMENT RECONSTRUCTION AS REQUIRED.
⑦ NOT LESS THAN 4' FOR WALK BLOCK LENGTH.
⑧ DEPRESS WALK WHEN LAWNSTRIP IS LESS THAN THE REQUIRED 5'-6" WIDTH, OR OF SUFFICIENT WIDTH TO ALLOW A 12:1 RAMP SLOPE.

SURFACE TEXTURE SHALL BE OBTAINED BY COARSE BROOMING TRANSVERSE TO THE RAMP SLOPES AND SHALL BE ROUGHER THAN THE ADJACENT WALK.

JOINTS SHALL BE PROVIDED WHERE DIRECTED BY THE ENGINEER. LINES SHOWN TO INDICATE THE RAMP EDGE AND SLOPE CHANGES ARE NOT NECESSARILY JOINT LINES.

DIMENSIONS, LOCATIONS AND TYPE OF CURB RAMP MAY BE MODIFIED AS DIRECTED BY THE ENGINEER IN ACCORDANCE WITH THE FOLLOWING:
TYPE OF CURB RAMP BUILT SHALL BE THE TYPE THAT BEST FITS THE LOCATION UNLESS A SPECIFIC TYPE IS DESIGNATED.
ANY COMBINATION OF TYPE 1 AND TYPE 2 SIDE SLOPES ON OPPOSITE SIDES OF A RAMP MAY BE USED TO BEST FIT THE SITE CONDITIONS.
SLOPE OF THE RAMP TOWARD THE CURB SHALL BE 12:1 OR FLATTER. THE MINIMUM RAMP LENGTH IS 6' FROM THE FACE OF A 6" CURB AND MAY BE INCREASED WHERE FEASIBLE TO OBTAIN A FLATTER RAMP SLOPE OR TO BETTER BLEND WITH THE WALK CONFIGURATION.
WIDTH OF THE RAMP SHALL NORMALLY BE 48", BUT IN NO CASE SHALL BE LESS THAN 40".

WALK THICKNESS IN THE RAMP AREA SHALL BE 6". COST SHALL BE INCLUDED IN THE UNIT PRICE BID FOR ITEM 608 CURB RAMP, TYPE, AS PER PLAN.

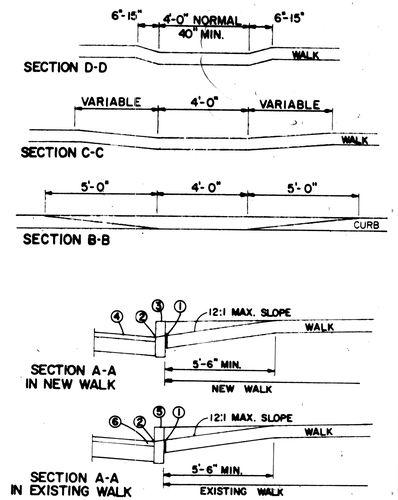

ITEM 608- CURB RAMPS AS PER PLAN
N.T.S.

ROADWAY DETAILS

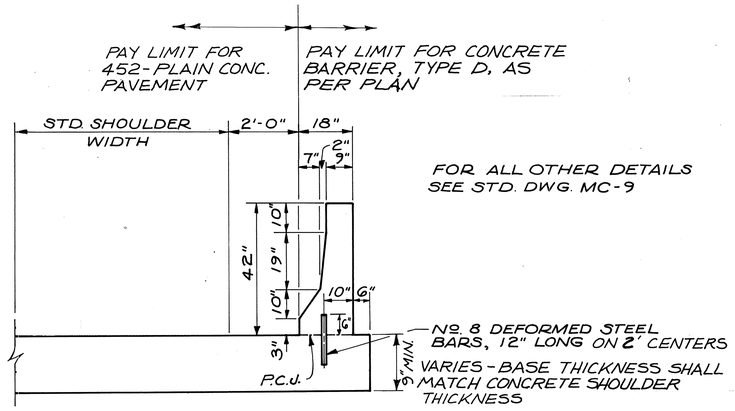

FOR ALL OTHER DETAILS SEE STD. DWG. MC-9

ITEM 622 - CONCRETE BARRIER, TYPE D, AS PER PLAN

N.T.S.

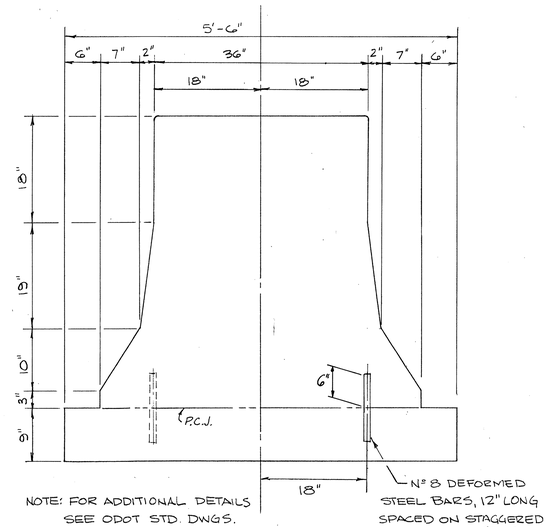

NOTE: FOR ADDITIONAL DETAILS SEE ODOT STD. DWGS. MC-9 AND TC-21.40

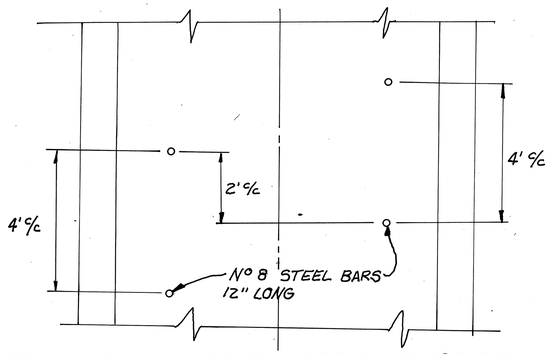

ITEM 622 - CONCRETE BARRIER, TYPE B50, AS PER PLAN

N.T.S.

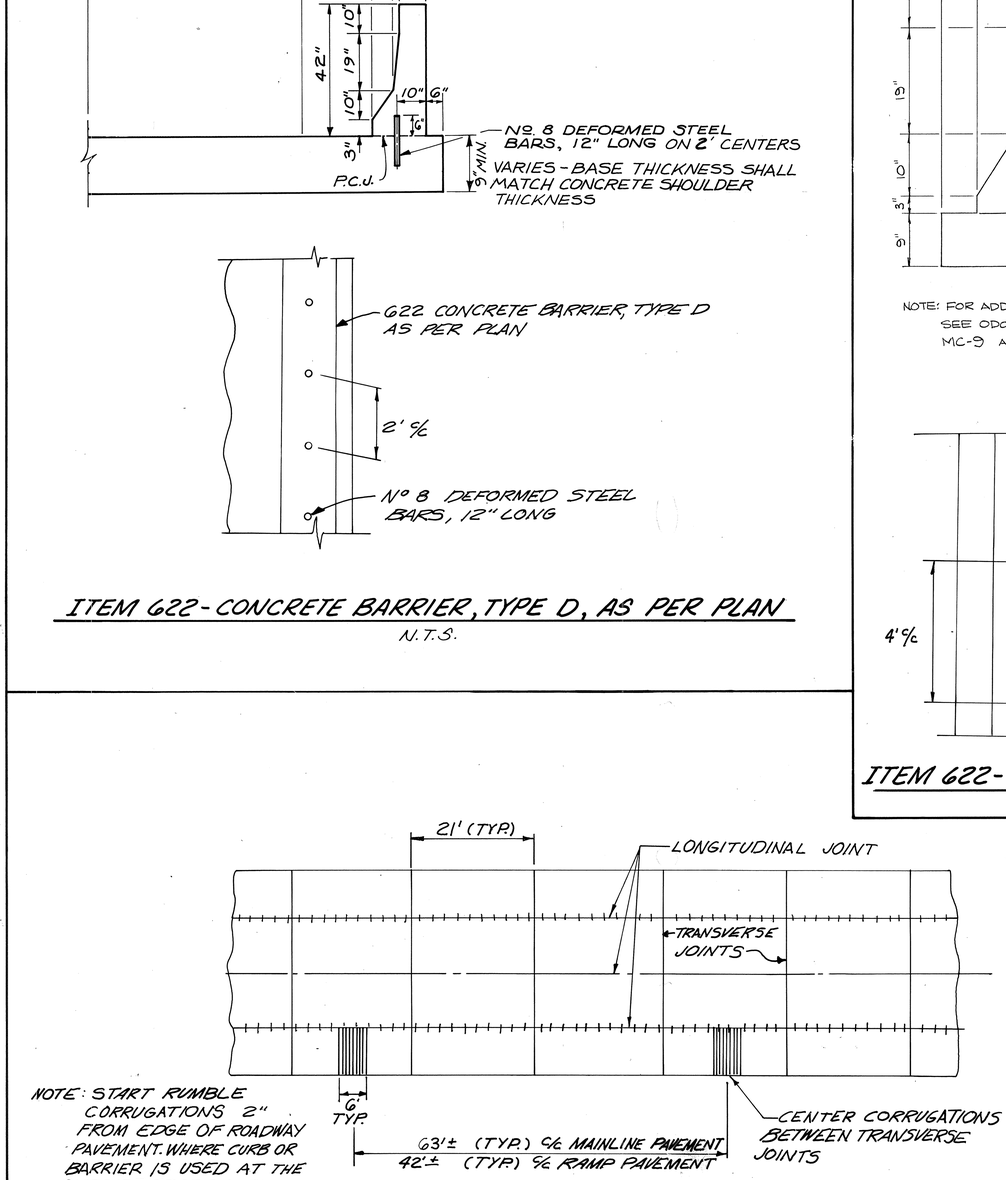

NOTE: START RUMBLE CORRUGATIONS 2" FROM EDGE OF ROADWAY PAVEMENT. WHERE CURB OR BARRIER IS USED AT THE OUTSIDE EDGE OF THE SHOULDER, THE CORRUGATION SHALL BE TERMINATED 1 FOOT FROM THE GUTTERLINE.

RUMBLE STRIP DETAIL

N.T.S.

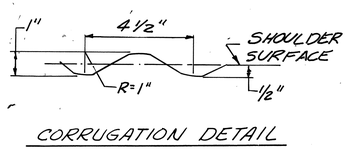

CORRUGATION DETAIL

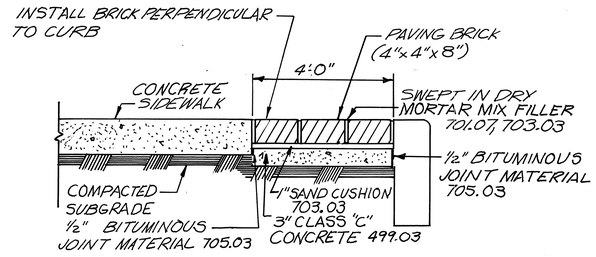

SECTION A-A

BRICK FURNISHED BY THE CONTRACTOR SHALL BE PAVING BRICKS (4"x4"x8") NOMINAL SIZE) SALVAGED FROM OLD BRICK STREETS, OR NEW BRICKS ACQUIRED BY THE CONTRACTOR IF OLD BRICKS IN SUFFICIENT QUANTITIES ARE NOT AVAILABLE.

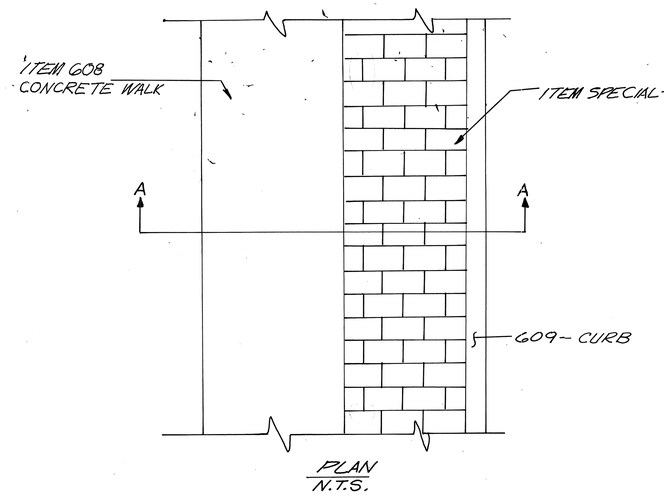

PLAN
N.T.S.

ITEM SPECIAL - BRICK WALK

N.T.S.

CALC BY DATE	SUM-76-11.57	OHIO	191
CHKD BY DATE	FED. PROJECT IR-76-2(44) 19	F.H.W.A. REGION 5	1214

SUMMIT COUNTY

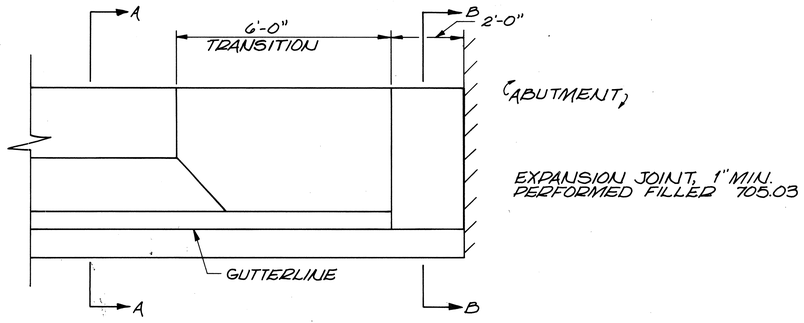

BARRIER TRANSITION DETAIL "A"

N.T.S.

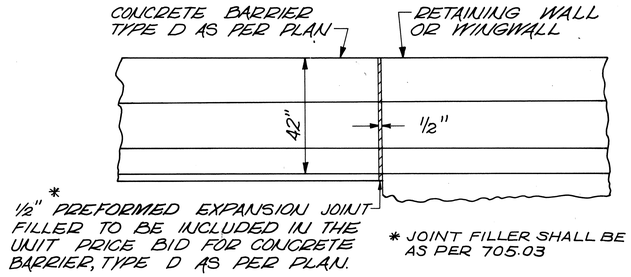

CONCRETE BARRIER CONNECTION TO RETAINING WALL OR WINGWALL

N.T.S.

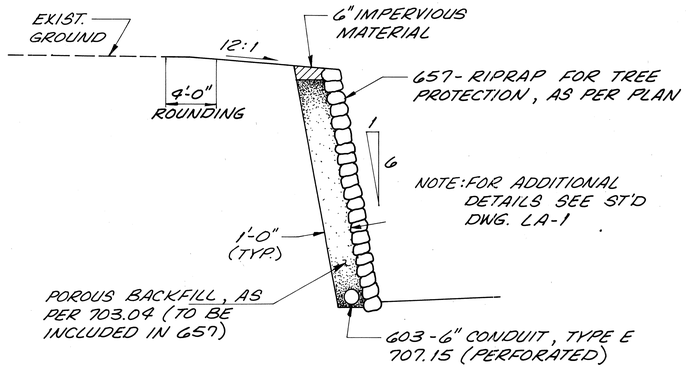

657- RIPRAP FOR TREE PROTECTION, AS PER PLAN

N.T.S.

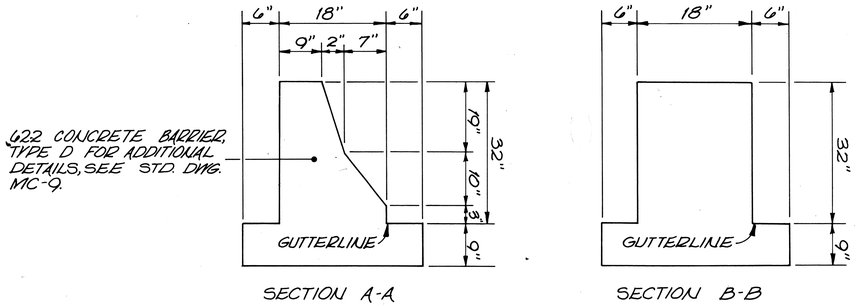

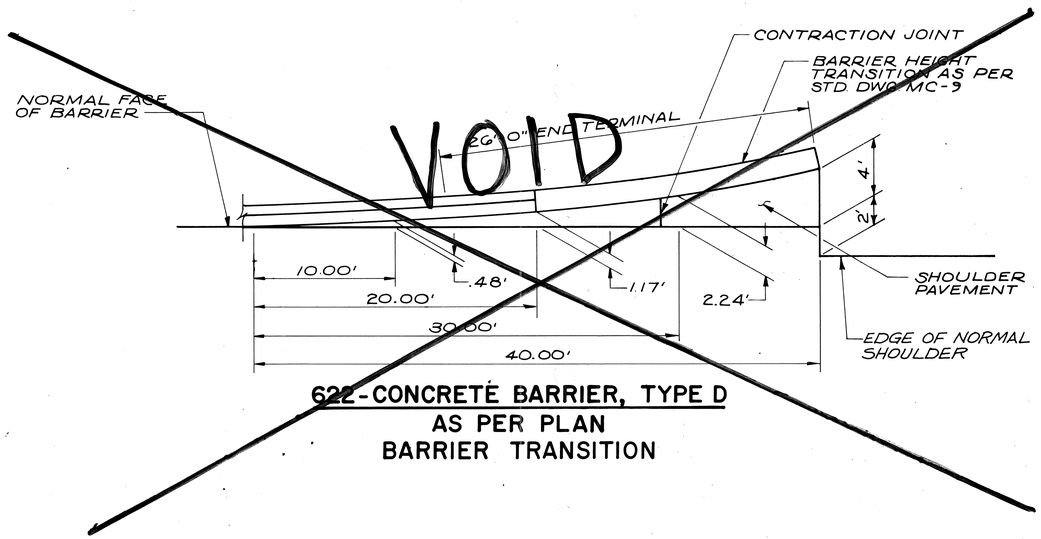

622-CONCRETE BARRIER, TYPE D
AS PER PLAN
BARRIER TRANSITION

I-76 LIMITING STATIONS

STA 560+65	TO	STA 561+05
STA 574+55	TO	STA 574+95
STA 575+05	TO	STA 575+45
STA 575+55	TO	STA 576+14
STA 581+92	TO	STA 583+00
STA 597+05	TO	STA 597+95
STA 610+40	TO	STA 610+80.96
STA 611+55	TO	STA 612+45
STA. 617+35	TO	STA 618+23
STA. 621+55	TO	STA 622+45
STA. 630+05.59	TO	STA 631+35

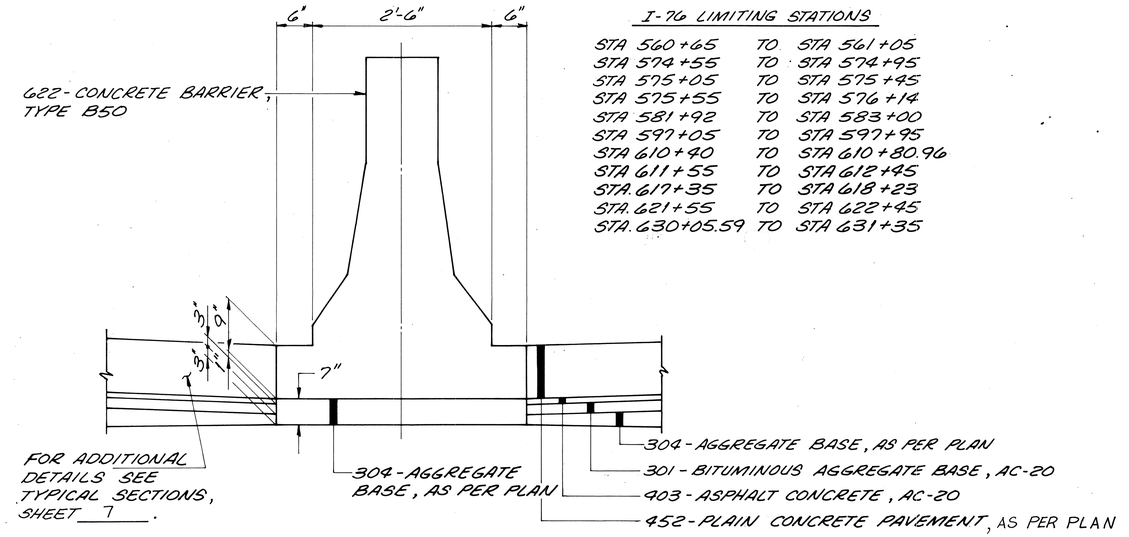

MEDIAN BARRIER REPLACEMENT DETAIL

N.T.S.

ROADWAY DETAILS

AA B/P# 71942R

CALC. BY. DATE	SUM-76-11.57	OHIO	192 / 1214
CHKD. BY. DATE	FED. PROJECT IR-76-2(44)19	F.H.W.A. REGION 5	

SUMMIT COUNTY

FULL DEPTH SHOULDER

BUTT JOINT SAW CUT

INMAN ST.

WESTBOUND LANE

RESURFACING LIMITS

MATCH LINE A-A

26' CURB TYPE '2B'

STA. 27+72.63 I-76 (W.B.) STA. 12+44.85 INMAN ST. STREET

26' CURB TYPE '2A'

STA. 29+79.19

BEGIN PROJECT ST. STA. 548+97.60

8' CURB TYPE 2B

75' SHOULDER TAPER

EASTBOUND LANE

FULL DEPTH SHOULDER

STA. 549+53.82 I-76 (E.B.) STA. 12+11.53 INMAN ST.

EXIST. CONCRETE BARRIER

C.S. STA. 29+76.49

RAMP 'E-2'

MATCH LINE STA. 12+50 RAMP E-2

STA. 13+49.11 ℄ RAMP E-2
STA. 13+68.76 ℄ INMAN ST.
STA. 13+32.32 ℄ RAMP E-2 MEET EXIST. PAVT.

50' SHOULDER TAPER

STA. 550+25.00

STA. 551+25.00

STA. 552+00

MATCH LINE

RAMP 'E-2'

MATCH LINE STA. 7+75 SEE SHEET 193

① Δ=107° 38' 18" R= 30.00' T= 41.02' L= 56.36' CH=48.43' E= 20.82' P.C. STA 12+89.12 ℄ E-2 P.T. STA 14+15.78, 18' RT. INMAN ST.

② Δ=52° 58' 22" R= 5.00' T= 2.49' L= 4.62' CH= 4.46' E=0.59' P.C. STA. 13+53.70, 19.99 RT. INMAN ST. P.T. STA. 13+49.71, 18' RT. INMAN ST.

③ Δ=18° 35' 25" R=50.0' T=16.82' L=16.22' CH=16.15' E=0.67 P.C. STA. 13+18.97, 18' LT. RAMP E-2 P.T. STA. 13+53.70, 19.99 RT. INMAN ST.

℄ SHIFT STA 31+50.00, 6' LT WB LANES BACK = STA 553+43.40 ℄ I-76 AHEAD

STA. 30+63.35

STA. 554+09.99

STA. 554+82.32

W.B.3

I-76

EXIST. CONCRETE BARRIER

E.B.

STA. 554+98.98

℄ SHIFT STA 553+43.40, 6' RT. EB LANES BK. = STA 553+43.40 ℄ I-76 AHEAD

STA. 552+00

STA. 556+00

MATCH LINE

SEE SHEET 193

SEE SHEET 193

JOINT LEGEND

- Ⓒ CONTRACTION JOINT
- Ⓔ EXPANSION JOINT
- Ⓛ LONGITUDINAL JOINT
- Ⓟ PRESSURE RELIEF JOINT
- (LW) LONGITUDINAL JOINT W/O TIEBARS

NOTE: ELEVATIONS SHOWN ALONG CURBS OR BARRIERS ARE GUTTERLINE ELEVATIONS.

* CURB TRANSITION 0" TO 6" IN 10'

** CURB TRANSITION MEET EXIST. CURB IN 10'

SCALE IN FEET
0 20 40 60

RAMP 'E-2'
STA. 548+97.60 TO STA. 556+00
PAVEMENT DETAILS

AA B/P# 71942R

CALC. BY. DATE	SUM-76-11.57	OHIO
CHKD. BY. DATE	FED. PROJECT IR-76-2(44) 19	F.H.W.A. REGION 5

193
1214

SUMMIT COUNTY

MATCH LINE STA. 556+00 SEE SHEET 192

MATCH LINE STA. 562+00 SEE SHEET 192

MATCH LINE STA. 562+00 SEE SHEET 194

RAMP 'E-2'

50' SHOULDER TRANSITION

NOSE STA. 6+05.84, 18' LT. RAMP E-2; STA. 557+54.54, 63' LT. I-76

STA. 557+84.45

STA. 559+07.32

STA. 559+17.32

STA. 560+12.47, ℄ I-76

STA. 11+50.29, ℄ SCHOOL RD

STA. 560+33.75

P.C.C. STA. 561+09.26, 54' LT.

CONCRETE BARRIER, TYPE D

100' SHOULDER TRANSITION

STA. 561+00

CURB, TYPE '2A'

℄ I-76

EXIST. CONC. BARRIER

PROP. BARRIER REPLACEMENT

SCHOOL ROAD

CONCRETE BARRIER, TYPE D

Ⓐ LONGITUDINAL DEPRESSION FOR DRAINAGE

STA 556+48.98 BEGIN PAV'T. TAPER

STA. 556+70

STA 558+04.67

P.C. STA 558+15.65 ℄ I-76

STA 558+98.92

STA. 561+50 END PAV'T. TAPER

CONCRETE BARRIER, TYPE D

EXIST. CONCRETE BARRIER

NOTE: ELEVATIONS SHOWN ALONG CURBS OR BARRIERS ARE GUTTER LINE ELEVATIONS.

*~ CURB TRANSITION 0" TO 6" IN 10'.

JOINT LEGEND

- Ⓒ CONTRACTION JOINT
- Ⓔ EXPANSION JOINT
- Ⓛ LONGITUDINAL JOINT
- Ⓟ PRESSURE RELIEF JOINT
- Ⓛw LONGITUDINAL JOINT W/O TIEBARS

SCALE IN FEET
0 20 40 60

RAMP 'E-2' & STA 556+00 TO STA 568+00
PAVEMENT DETAILS

AA 8/P# 71942R

CALC. BY.		SUM-76-11.57	OHIO	194
CHKD. BY.		FED. PROJECT IR-76-2(44) 19	F.H.W.A. REGION 5	1214
DATE				

① $\Delta = 89°07'12.0"$ $L = 38.89'$ $R = 25.00'$ $E = 10.09'$ $T = 24.62'$ $CH = 35.08'$
P.C. STA. 18+51.63, 13' LT. TALBOT AVE.
P.T. STA. 46+62.09, 14' RT. MARTIN AVE.

② $\Delta = 89°07'12.0"$ $L = 23.33'$ $R = 15.00'$ $E = 6.05'$ $T = 14.77'$ $CH = 21.05'$
P.C. STA. 18+69.87, 13' RT. TALBOT AVE.
P.T. STA. 46+78.37, 20' LT. MARTIN AVE.

SUMMIT COUNTY
STA. 13+00 TALBOT
END FULL DEPTH PAVING
(CONC. BASE W/ ASPH. OVERLAY)

③ $\Delta = 89°07'12.0"$ $L = 31.11'$ $R = 20.00'$ $E = 8.07'$ $T = 19.70'$ $CH = 28.07'$
P.C. STA. 18+60.14, ℄ TALBOT AVE.
P.T. STA. 46+69.62, ℄ MARTIN AVE.

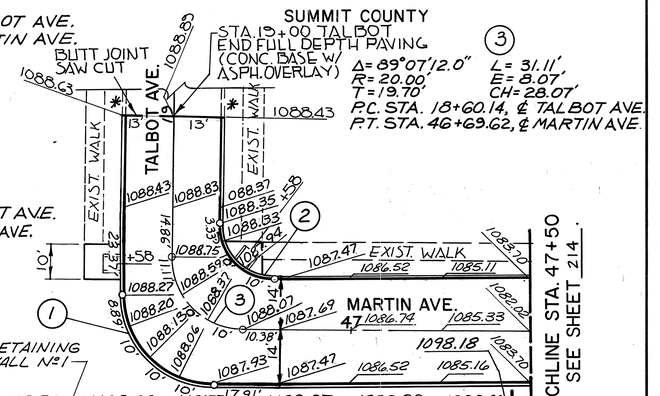

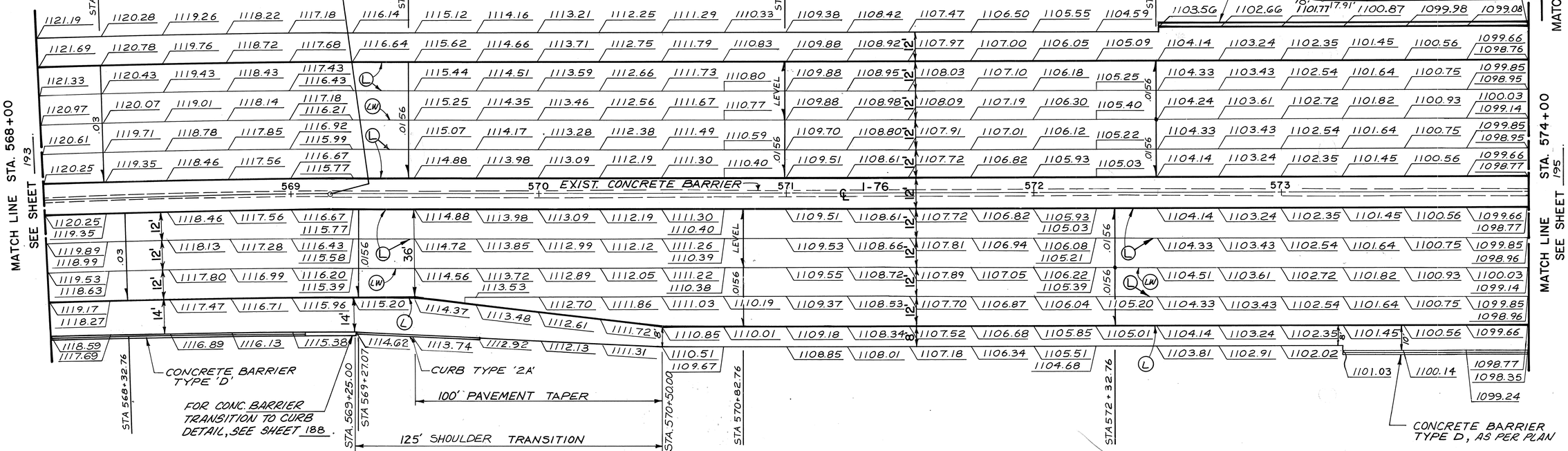

* ~ CURB TRANSITION MEET EXIST. CURB IN 10'

NOTE: ELEVATIONS SHOWN ALONG CURBS OR BARRIERS ARE GUTTER LINE ELEVATIONS.

JOINT LEGEND
- (C) CONTRACTION JOINT
- (E) EXPANSION JOINT
- (LJ) LONGITUDINAL JOINT
- (PJ) PRESSURE RELIEF JOINT
- (LW) LONGITUDINAL JOINT W/O TIEBARS

SCALE IN FEET
0 20 40 60

STA 568+00 TO STA 574+00
PAVEMENT DETAILS

AA B/P# 71942R

CALC. BY. DATE	SUM-76-11.57	OHIO
CHKD. BY. DATE	FED. PROJECT IR-76-2(44) 19	F.H.W.A. REGION 5

195
12.14

SUMMIT COUNTY

520' TAPER 40:1 PAVEMENT TRANSITION

ARLINGTON STREET

℄ I-76

STA. 575+66.00

STA. 576+98.28

STA. 576+53.31 I-76
STA. 17+46.25 ARLINGTON ST.

STA. 577+13.28

STA. 578+52.41

STA. 579+48.28

160' SHOULDER TRANSITION
14' TO 10'

RETAINING WALL NO. 1

RETAINING WALL NO. 2

P.C. STA 578+82.21
61.90' LT. ℄ I-76

STA. 574+00

SEE SHEET 194

MATCH LINE

EXIST. CONC. BARRIER

PROP. BARRIER REPLACEMENT

EXIST. CONCRETE BARRIER

PROP. BARRIER REPLACEMENT

STA. 576+52.64 RAMP 'E-8'
STA. 16+80.82 ARLINGTON ST.

P.C. STA 574+71.64, 54' RT. I-76
STA. 74+71.61 RAMP 'E-8'

CONCRETE BARRIER TYPE D AS PER PLAN

P.C. STA 578+84.95
℄ I-76

STA. 578+75.97
P.C. STA 576+84.95
I-76

STA. 579+68.28

STA. 577+18.28

FOR RAMP 'E-8' SEE SHT. 206.

RAMP 'E-8'

RETAINING WALL NO. 3

50' SHOULDER TRANSITION 10' TO 8'

NOSE STA. 577+50.00, 65' RT. ℄ I-76 =
STA. 77+48.65, 16' LT. ℄ RAMP E-8

STA. 580+00

SEE SHEET 196

MATCH LINE

NOTE: ELEVATIONS SHOWN ALONG CURBS OR BARRIERS ARE GUTTERLINE ELEVATIONS.

JOINT LEGEND

- (C) CONTRACTION JOINT
- (E) EXPANSION JOINT
- (L) LONGITUDINAL JOINT
- (P) PRESSURE RELIEF JOINT,

(LW) LONGITUDINAL JOINT W/O TIEBARS

SCALE IN FEET
0 20 40 60

STA 574+00 TO STA 580+00
PAVEMENT DETAILS

AA B/P# 71942R

CALC. BY. DATE	SUM-76-11.57	OHIO
CHKD. BY. DATE	FED. PROJECT IR-76-2(44) 19	F.H.W.A. REGION 5

196
1214

SUMMIT COUNTY

520' TAPER 40:1 PAVEMENT TRANSITION

PT. ℄ NOSE STA. 80+90.31, 16' RT. RAMP E-7' STA. 580+86.00, 67' LT. I-76

50' SHOULDER TRANSITION

STA. 81+67.61

STA. 82+11.28

RETAINING WALL NO. 2

STA. 82+93.80

P.C. STA. 83+24.42

STA. 83+27.32

FOR 'RAMP E-7' SEE SHEET 205

RAMP E-7

MATCH LINE STA. 580+00 SEE SHEET 195

EXIST. CONCRETE BARRIER

℄ I-76

PROP. CONC. BARRIER TYPE B50

EXIST. CONC. BARRIER

MATCH LINE STA. 586+00

MATCH LINE STA. 586+00 SEE SHEET 195

BEGIN MEDIAN TRANSITION

P.T. STA. 587+19.08

STA. 586+76.75

STA. 587+56.62

STA. 588+35.75

STA. 589+10.75

STA. 590+03.45

STA. 591+53.45

RAMP E-6

FOR RAMP E-6 SEE SHT. 204

NOTE: ELEVATIONS SHOWN ALONG CURBS OR BARRIERS ARE GUTTERLINE ELEV.

STA. 586+11.27

STA. 587+05.58

50' SHOULDER TRANSITION

STA. 588+61.27

P.T. ℄ NOSE STA. 88+73.24 16' LT. RAMP E-6 STA. 588+75.00 52.43' RT. I-76

520' TAPER 40:1 PAV'T TRANS.

STA. 590+41.27

STA. 591+61.27

MATCH LINE STA. 592+00 SEE SHEET 197

MATCH LINE STA. 592+00

JOINT LEGEND

- (C) CONTRACTION JOINT
- (E) EXPANSION JOINT
- (L) LONGITUDINAL JOINT
- (P) PRESSURE RELIEF JOINT

(LW) LONGITUDINAL JOINT W/O TIEBARS

SCALE IN FEET
0 20 40 60

STA 580+00 TO STA 592+00

PAVEMENT DETAILS

AA B/P# 71942R

CALC. BY. DATE	SUM-76-11.57	OHIO
CHK'D. BY. DATE	FED. PROJECT IR-76-2(44) 19	F.H.W.A. REGION 5

197
1214

SUMMIT COUNTY

STA. 592+00

STA. 598+00

STA. 604+00

MATCH LINE SEE SHEET 196

MATCH LINE SEE SHEET 198

STA 593+02.14

93+48.93

NOSE STA 93+98.52, 16' RT. ℄ RAMP E-4 = STA. 593+99.00, 70.5' LT. ℄ I-76

STA. 93+58.60 RAMP E-4

STA. 93+98.92 RAMP E-4

150' SHOULDER TRANSITION

STA. 594+03.45 I-76

STA. 594+25

STA. 594+35

FOR RAMP E-4 SEE SHEET 203

RAMP E-4

CONC. BARRIER TYPE D (AS PER PLAN)

FULLER STREET

PROP BARRIER REPLACEMENT

EXIST. CONCRETE BARRIER

593 594 595 596 597

+24.19 +41.79 +45 +05 +35

STA. 13+88.02 FULLER ST. = STA. 595+87.84 I-76

160' SHOULDER TRANSITION 40:1

P.C. STA. 593+20.12 ℄ I-76 END MEDIAN TRANSITION

540' TAPER 40:1 E.B. PAVEMENT TRANSITION

STA. 593+13.40

STA. 593+35

STA. 594+36.27

P.C.C. STA 600+39.01 59.50' LT. ℄ I-76

15' CURB TYPE 2A

16' CURB TYPE 2A

STA. 602+99.21

KELLY AVE.

P.T. STA. 603+90.88 I-76

STA. 603+09.60 ℄ I-76 = STA. 13+36.52, ℄ KELLY AVE.

599 EXIST. CONCRETE BARRIER 600 601 602 603

+25.23

26' CURB TYPE 2A

* CURB TRANSITION 0" TO 6" IN 10'

NOTE: ELEVATIONS SHOWN ALONG CURBS OR BARRIERS ARE GUTTERLINE ELEVATIONS

(LW) LONGITUDINAL JOINT W/O TIEBARS

JOINT LEGEND
- (C) CONTRACTION JOINT
- (E) EXPANSION JOINT
- (L) LONGITUDINAL JOINT
- (P) PRESSURE RELIEF JOINT

SCALE IN FEET
0 20 40 60

STA 592+00 TO STA 604+00
PAVEMENT DETAILS

AA B/P# 71942R

CALC. BY: DATE	SUM-76-11.57	OHIO
CHK'D. BY: DATE	FED. PROJECT IR-76-2(44) 19	F.H.W.A. REGION 5

198
12.14

SUMMIT COUNTY

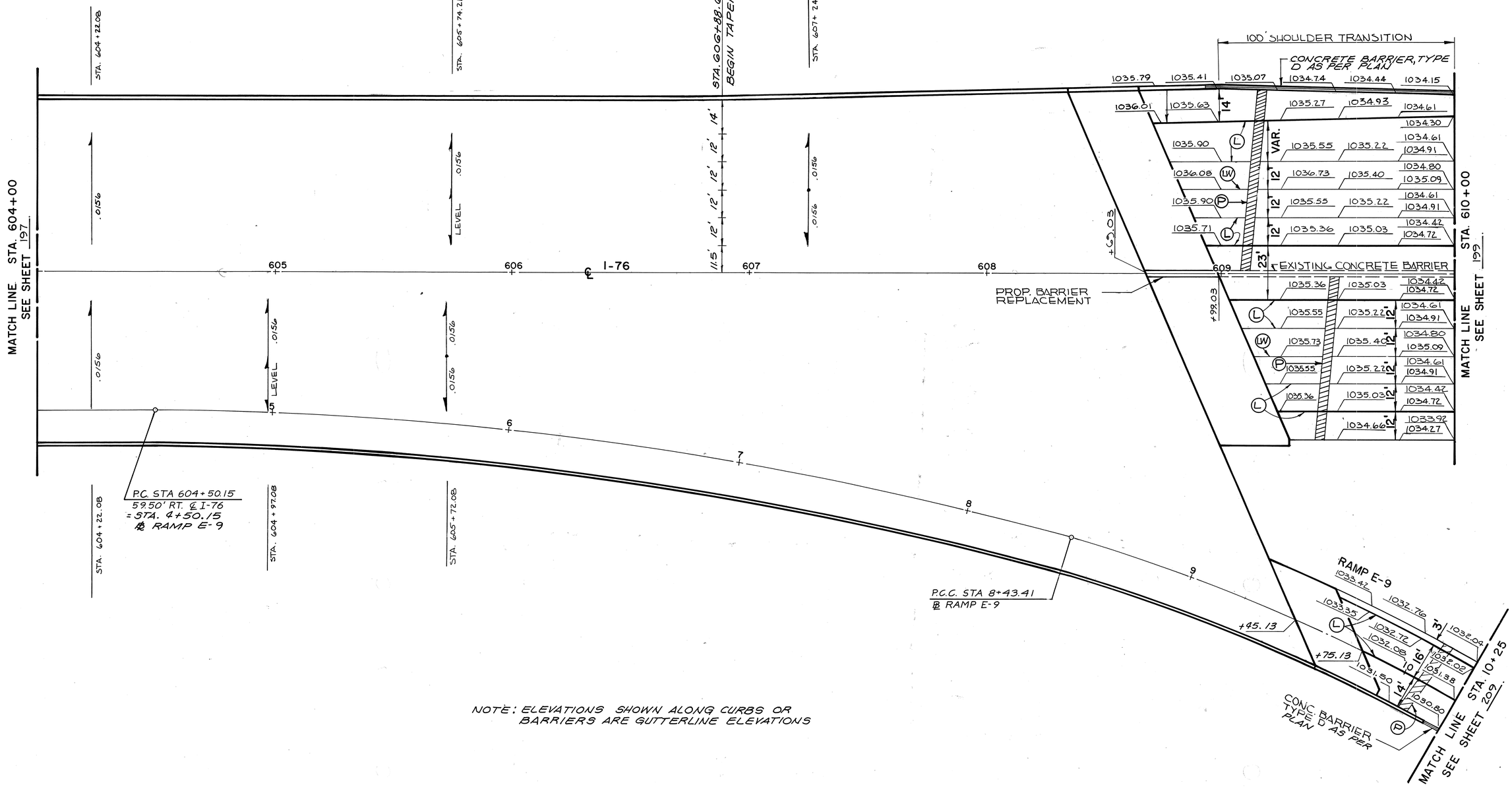

NOTE: ELEVATIONS SHOWN ALONG CURBS OR BARRIERS ARE GUTTERLINE ELEVATIONS

JOINT LEGEND

- (C) CONTRACTION JOINT
- (E) EXPANSION JOINT
- (L) LONGITUDINAL JOINT
- (P) PRESSURE RELIEF JOINT
- (LW) LONGITUDINAL JOINT W/O TIEBARS

SCALE IN FEET
0 20 40 60

RAMP 'E-9'
STA 604+00 TO STA 610+00
PAVEMENT DETAILS

AA B/P# 71942R

CALC. BY. DATE	SUM-76-11.57	OHIO
CHKD. BY. DATE	FED. PROJECT IR-76-2(44) 19	F.H.W.A. REGION 5

199
1214

SUMMIT COUNTY

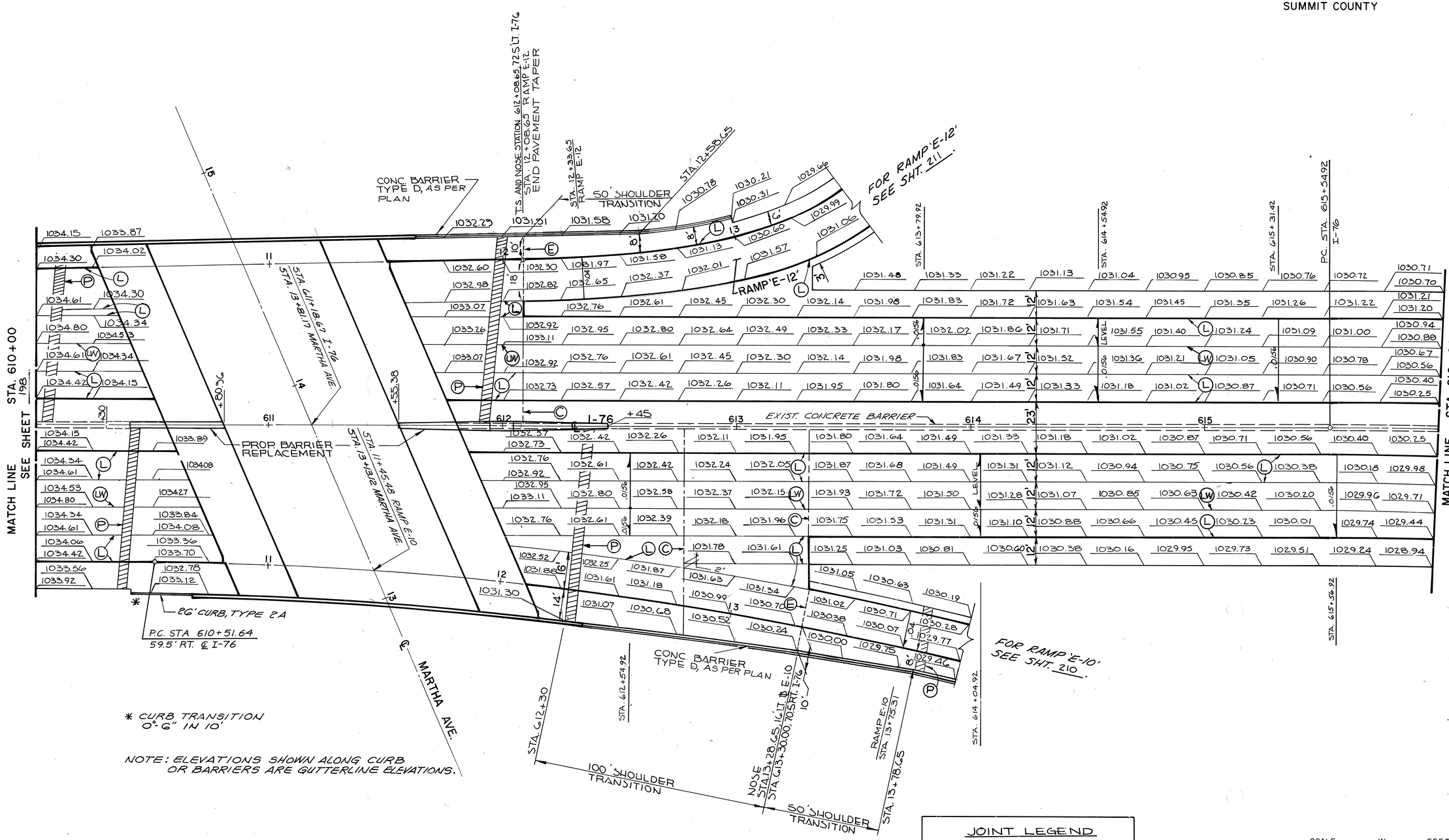

* CURB TRANSITION 0"-6" IN 10'

NOTE: ELEVATIONS SHOWN ALONG CURB OR BARRIERS ARE GUTTERLINE ELEVATIONS.

(LW) LONGITUDINAL JOINT W/O TIEBARS

JOINT LEGEND
- (C) CONTRACTION JOINT
- (E) EXPANSION JOINT
- (L) LONGITUDINAL JOINT
- (P) PRESSURE RELIEF JOINT

SCALE IN FEET
0 20 40 60

STA 610+00 TO STA 616+00
PAVEMENT DETAILS

AA B/P# 71942R

CALC. BY.		SUM-76-11.57	OHIO
DATE			
CHKD. BY.		FED. PROJECT IR-76-2(44) 19	F.H.W.A. REGION 5
DATE			

200
1214

NOTE: ELEVATIONS SHOWN ALONG CURBS OR BARRIERS ARE GUTTERLINE ELEVATIONS

FOR RAMP E-15, SEE SHEET 212

RAMP E-15 — 15+84.10 — NOSE STA 620+41.27, 70.5' LT. I-76, STA. 20+54.10, 16' RT. E-15

150' SHOULDER TRANSITION

SUMMIT COUNTY

621+41.27

STA. 616+22.14

MATCH LINE STA. 616+00 SEE SHEET 199

PROP. BARRIER REPLACEMENT I-76

EXIST. CONCRETE BARRIER

MATCH LINE STA. 622+00

STA. 622+00

MATCH LINE STA. 622+00

P.T. STA 623+87.75, 59.5' LT. ℄ I-76

CONC. BARRIER TYPE D, AS PER PLAN

RETAINING WALL NO. 11

STA. 614+47.64 · STA. 623+20.53 · STA. 624+11.25 · STA. 624+87.75 · STA. 625+62.75 · STA. 627+31.21

P.T. STA 623+87.75 ℄ I-76

EXIST. CONCRETE BARRIER

STA. 628+00

MATCH LINE STA. 622+00

SEE SHEET 201

CONCRETE BARRIER TYPE D, AS PER PLAN

RAMP E-16

FOR RAMP E-16, SEE SHEET 213

CONCRETE BARRIER TYPE D, AS PER PLAN

STA 622+97.03 · STA. 623+87.75 · STA. 624+25 RAMP E-16 · PT. STA 24+49.99 RAMP E-16

50' SHOULDER TRANSITION

NOSE STA. 24+50, 16' LT. E-16, STA. 624+50.56 RT. I-76

STA. 625+37.75

RETAINING WALL NO. 13.

40:1 PAVEMENT TAPER

STA. 626+87.75

JOINT LEGEND

- (C) CONTRACTION JOINT
- (E) EXPANSION JOINT
- (L) LONGITUDINAL JOINT
- (P) PRESSURE RELIEF JOINT
- (W) LONGITUDINAL JOINT W/O TIEBARS

SCALE IN FEET
0 20 40 60

I-76 MAINLINE
STA 616+00 TO STA 628+00
PAVEMENT DETAILS

AA. B.P# 71942R

CALC. BY. DATE	SUM-76-11.57	OHIO
CHKD. BY. DATE	FED. PROJECT IR-76-2(44)19	F.H.W.A. REGION 5

201
1214

SUMMIT COUNTY

RETAINING WALL NO.11

STA. 628+81.21

STA. 630+31.21

STA. 630+58.93

RETAINING WALL NO. 12

MATCH LINE STA. 628+00 SEE SHEET 200

P.C. STA. 629+81.21

+47.21

SEIBERLING ST.

STA. 629+76.39 I-76
STA 11+07.11 SEIBERLING ST.

+05.59

I-76

MATCH LINE STA. 634+00

40:1 SHOULDER TAPER
STA. 632+90
TO
STA. 634+00

STA. 632+40.81

40:1 PAVEMENT TAPER

RETAINING WALL NO. 13

RETAINING WALL NO. 14

STA. 628+56.21

STA. 630+33.93

END PROJECT
SUM-76-11.57
STA. 634+00.00
IR-76-2(44)19

RETAINING WALL NO.12

RETAINING WALL NO. 27

STA. 634+00 TO STA. 635+25
FEATHER AREA W/ASPHALT
@ 1"/25' TO MEET EXISTING

P.T. STA. 636+59.57

TEMPORARY PAVEMENT
CLASS 'A' FLEXIBLE

STA. 637+50

STA. 638+58

MATCH LINE STA. 634+00

RETAINING WALL NO.14

RETAINING WALL NO.16

NOTE: ELEVATIONS SHOWN ALONG CURBS OR BARRIERS ARE GUTTERLINE ELEVATIONS.

JOINT LEGEND
- (C) CONTRACTION JOINT
- (E) EXPANSION JOINT
- (L) LONGITUDINAL JOINT
- (P) PRESSURE RELIEF JOINT

(LW) LONGITUDINAL JOINT W/O TIEBARS

SCALE IN FEET
0 20 40 60

STA 628+00 TO STA 638+00
PAVEMENT DETAILS

AA B/P# 71942R

CALC. BY. DATE	SUM-76-11.57	OHIO
CHKD. BY. DATE	FED. PROJECT IR-76-2(44) 19	F.H.W.A. REGION 5

202
1214

SUMMIT COUNTY

** CURB TRANSITION
0" TO 6" IN 10'
*** CURB TRANSITION
MEET EXIST. CURB IN 10'

* FOR CURB CURVE DATA SEE SHEET 214.

SECOND AVENUE
STREET
ARLINGTON
CHITTENDEN STREET
100' PAVEMENT TAPER
BUTT JOINT
+43 BEG. CONC. PAV. RAMP E-4
STA. 76+16.88 RAMP E-4
STA. 18+61.37 ARLINGTON ST.
STA. 77+75
RAMP 'E-4'
RAMP 'E-7'
MATCH LINE STA. 81+25
MATCH LINE STA. 87+00 SEE SHEET 203.

Δ = 75°-51'-04"
R = 5.00'
T = 3.90'
CH = 6.15'
L = 6.62'
E = 1.34'
P.T. = 76+61.38, RT. (RAMP 'E-4')
P.C.C. = 18+40.85, 32.28' RT. (ARLINGTON)
P.C. = 18+36.00, 28.5' RT. (ARLINGTON)

Δ = 14°-08'-57"
R = 50.00'
T = 6.21'
CH = 12.32'
L = 12.35'
E = 0.38'
RT. (RAMP 'E-4')

FOR ARLINGTON ST. SEE SHEET 214.

STA. 25+99.90 SECOND AVE.
STA. 19+06.21 CHITTENDEN

CURB, TYPE 2B
CURB, TYPE 2A
RETAINING WALL NO. 2.
FOR RAMP 'E-7', SEE SHEET 205.
STA. 81+67.89
P.C. STA. 81+91.70
STA. 82+02.60
STA. 85+03.80 RAMP 'E-4' = STA. 85+40.53 RAMP 'E-7'
STA. 85+57.09
STA. 85+92.80
RETAINING WALL NO. 5.
CONC. BARRIER TYPE D, AS PER PLAN
CURB, TYPE 2A
CONC. BARRIER TYPE D, AS PER PLAN
P.T. STA. 86+68.33

NOTE: ELEVATIONS SHOWN ALONG CURBS OR BARRIERS ARE GUTTERLINE ELEVATIONS

JOINT LEGEND
- (C) CONTRACTION JOINT
- (E) EXPANSION JOINT
- (L) LONGITUDINAL JOINT
- (P) PRESSURE RELIEF JOINT

SCALE IN FEET
0 20 40 60

RAMP 'E-4'
STA. 76+16.88 TO STA. 87+00
PAVEMENT DETAILS

AA B/P# 71942R

CALC. BY. DATE	SUM-76-11.57	OHIO
CHKD. BY. DATE	FED. PROJECT IR-76-2(44) 19	F.H.W.A. REGION 5

203
1214

SUMMIT COUNTY

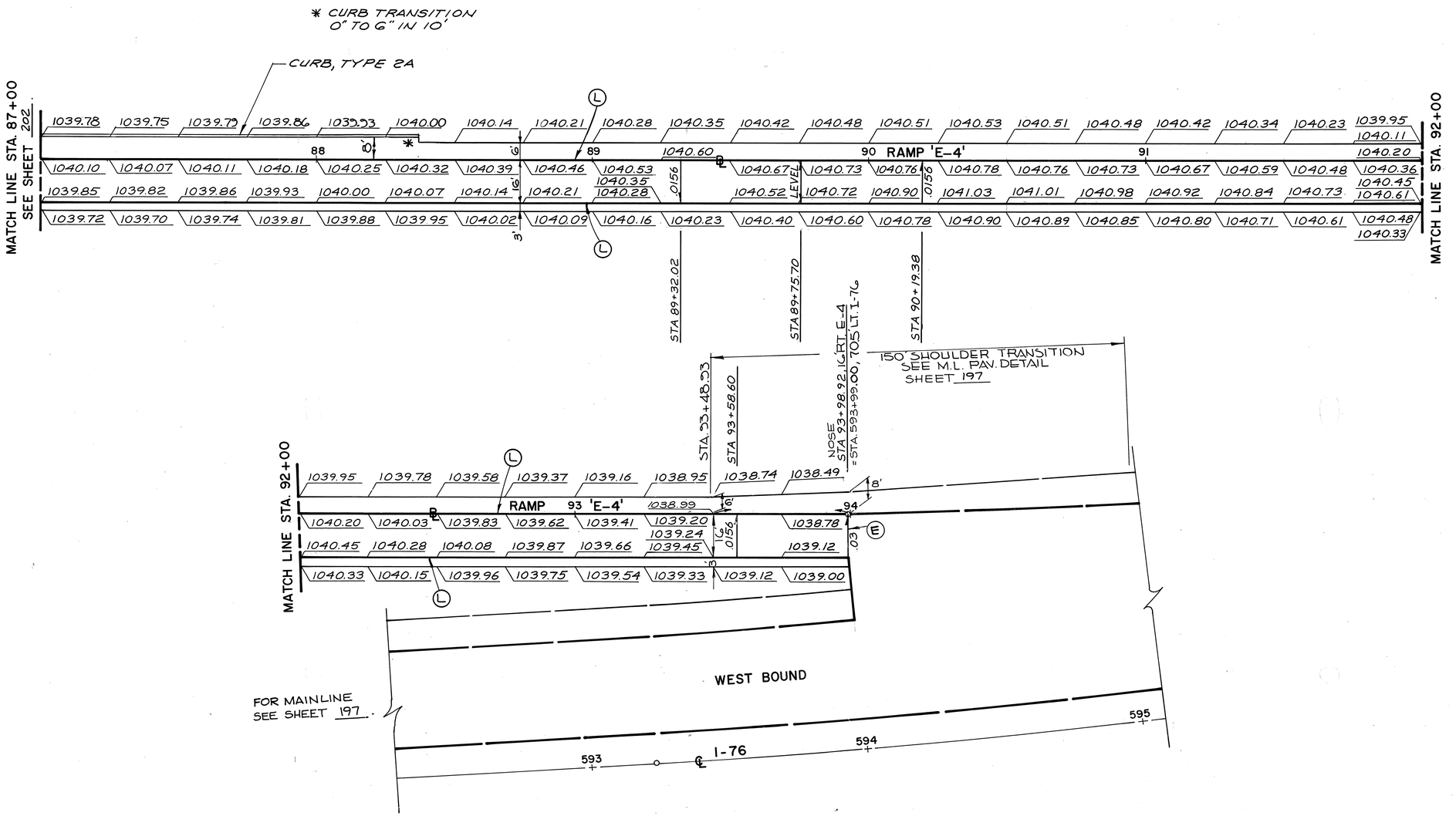

NOTE: ELEVATIONS SHOWN ALONG CURBS OR BARRIERS ARE GUTTERLINE ELEVATIONS

JOINT LEGEND
- (C) CONTRACTION JOINT
- (E) EXPANSION JOINT
- (L) LONGITUDINAL JOINT
- (P) PRESSURE RELIEF JOINT

SCALE IN FEET
0 20 40 60

RAMP 'E-4'
STA. 87+00 TO STA. 93+98.92
PAVEMENT DETAILS

AA B/P# 71942R

CALC. BY.		SUM-76-11.57	OHIO	204
CHKD. BY.		FED. PROJECT IR-76-2(44) 19	F.H.W.A. REGION 5	1214
DATE		SUMMIT COUNTY		

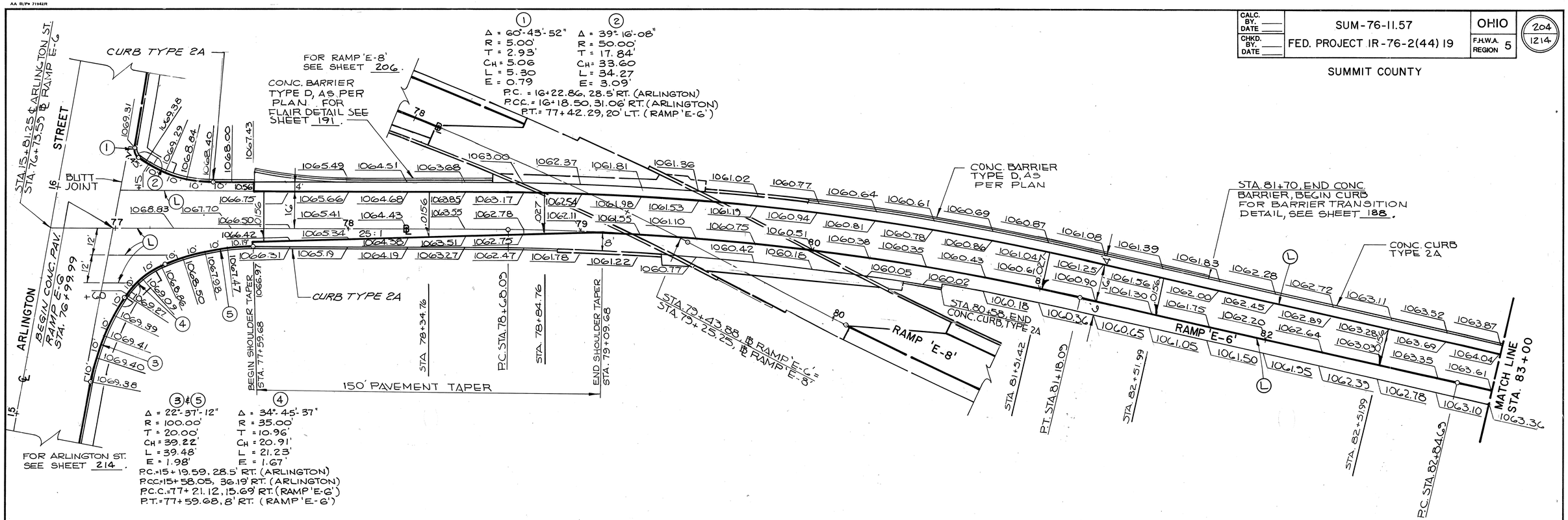

NOTE: ELEVATIONS SHOWN ALONG CURBS OR BARRIERS ARE GUTTERLINE ELEVATIONS.

JOINT LEGEND

- Ⓒ CONTRACTION JOINT
- Ⓔ EXPANSION JOINT
- Ⓛ LONGITUDINAL JOINT
- Ⓟ PRESSURE RELIEF JOINT

SCALE IN FEET
0 20 40 60

RAMP 'E-6'
STA. 76+73.59 TO STA. 88+73.24
PAVEMENT DETAILS

AA B/P# 71942R

CALC. BY.		SUM-76-11.57	OHIO
DATE			
CHKD. BY.		FED. PROJECT IR-76-2(44) 19	F.H.W.A. REGION 5
DATE			

205
1214

PT ℄ NOSE STA. 80+90.31
16 RT. RAMP E-7
STA. 580+86, S/LT. I-76

50' SHOULDER TRANSITION

STA. 81+67.60

STA. 82+11.28

RETAINING WALL NO. 2

STA. 82+93.80

P.C. STA. 83+24.42

STA. 83+27.32

STA. 84+67.49

P.T. STA. 84+81.24

STA. 85+00

STA. 85+41.60

CONC. BARRIER TYPE D

SUMMIT COUNTY

MATCH LINE STA. 87+00

RAMP 'E-4'

RAMP 'E-7'

LEVEL

BEGIN APPROACH SLAB
STA 83+98.83

STA 85+03.80 ℄ 'E-4'
STA 85+40.53 ℄ 'E-7'

P.C. STA. 85+28.24

END APPROACH SLAB
STA 86+24.70

STA. 86+32.12

FOR MAINLINE, SEE SHEET 196

I-76

STA. 87+48.03

STA. 88+16.35

STA. 89+33.04

STA. 89+76.72

STA. 90+20.40

P.C. STA. 90+35.80

STA. 90+49.52

MATCH LINE STA 87+00

MATCH LINE STA 92+50

RETAINING WALL NO. 5

CONC. BARRIER TYPE D

R.T. STA 87+70.80

RAMP E-7

BUTT JOINT SAW CUT MEET EXIST.

STA. 16+88.83 FULLER ST.

STA. 95+78.05 RAMP E-7
STA. 16+11.33 FULLER ST.

NOTE: ELEVATIONS SHOWN ALONG CURBS OR BARRIERS ARE GUTTERLINE ELEVATIONS.

100' PAVEMENT TAPER

STA. 94+73.12

P.C. STA. 92+26.33

FULLER ST.

THIRD AVE.

P.T. STA. 96+30.45 ℄ RAMP E-7
STA. 22+50.66, 16' LT. ℄ EXIST. THIRD AVE.

BUTT JOINT SAW CUT MEET EXIST.

STA. 15+95.82 FULLER ST.
STA. 21+41.68 ℄ EXIST. THIRD AVE.

P.C. STA. 94+73.12

STA. 92+87.22

STA. 93+16.34

STA. 93+60.02

STA. 94+03.70

STA. 94+55.57

STA. 94+81.83

FOR FULLER ST. SEE SHEET 215

① Δ = 16°13'18.5" R = 200.00' T = 28.50' L = 56.62' CH = 56.44' E = 2.02'
② Δ = 70°01'45.0" R = 40.00' T = 28.02' L = 48.89' CH = 45.90' E = 8.84'
③ Δ = 10°18'11.6" R = 120.00' T = 10.82' L = 21.58' CH = 21.55' E = 0.49'
P.C. STA. 94+73.12, 6' LT. ℄ RAMP E-7
P.C.C.$_1$ STA. 95+28.99, 7.56' LT. ℄ RAMP E-7
P.C.C.$_2$ STA. 16+67.37, 13.94' LT. ℄ FULLER ST.
P.T. STA. 16+88.83, 12' LT. ℄ FULLER ST.

④ Δ = 40°02'33.1" R = 50.00' T = 18.22' L = 34.94' CH = 34.24' E = 3.22'
P.C. STA. 95+38.55, 19' RT. RAMP E-7
P.T. STA. 15+82.62, 12' LT. FULLER ST.

⑤ Δ = 73°39'58" R = 30.00' T = 22.47' L = 38.57' CH = 35.97' E = 7.48'
P.C. STA. 16+35.45, 12' RT. ℄ FULLER ST.
P.T. STA. 96+11.86, 2.43' LT. ℄ RAMP E-7

⑥ Δ = 10°15'47.1" R = 120.00' T = 10.77' L = 21.49' CH = 21.47' E = 0.48'
P.C. STA. 15+07.63, 12' RT. FULLER ST.
P.C.C.$_1$ STA. 15+29.07, 13.92' RT. FULLER ST.
P.C.C.$_2$ STA. 22+05.30, 21.21' RT. THIRD AVE.
P.T. STA. 22+50.66, 16' RT. THIRD AVE.

⑦ Δ = 82°38'01.9" R = 40.00' T = 35.16' L = 57.69' CH = 52.82' E = 13.26'

⑧ Δ = 13°06'35.0" R = 200.00' T = 22.98' L = 45.76' CH = 45.66' E = 1.32'

JOINT LEGEND
(C) CONTRACTION JOINT
(E) EXPANSION JOINT
(L) LONGITUDINAL JOINT
(P) PRESSURE RELIEF JOINT

SCALE IN FEET
0 20 40 60

RAMP 'E-7'
STA. 80+90.3 TO STA. 95+85.12
PAVEMENT DETAILS

AA B/P# 71942R

CALC. BY. ____ DATE ____	SUM-76-11.57	OHIO	206
CHKD. BY. ____ DATE ____	FED. PROJECT IR-76-2(44) 19	F.H.W.A. REGION 5	1214

SUMMIT COUNTY

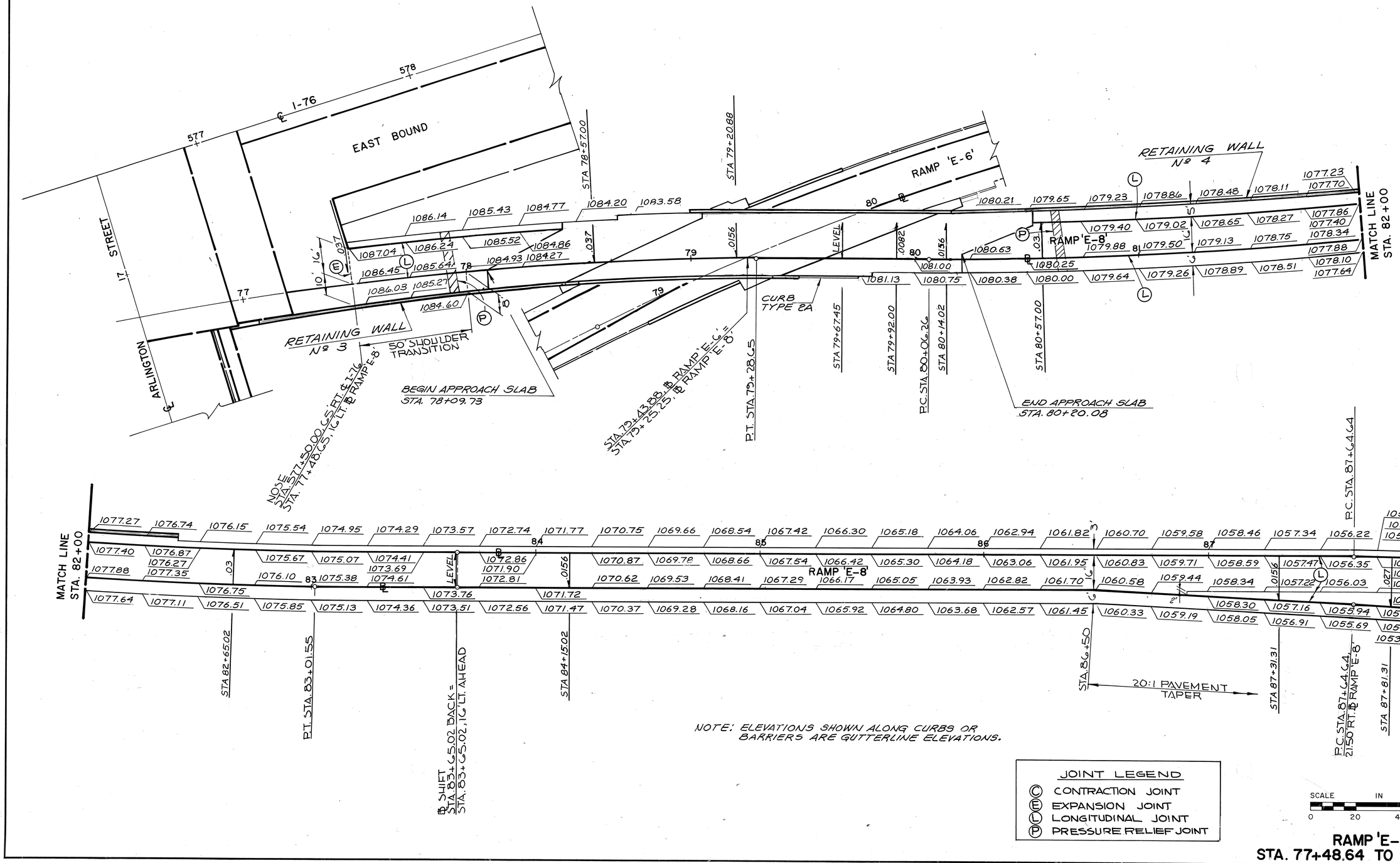

NOTE: ELEVATIONS SHOWN ALONG CURBS OR BARRIERS ARE GUTTERLINE ELEVATIONS.

JOINT LEGEND

- (C) CONTRACTION JOINT
- (E) EXPANSION JOINT
- (L) LONGITUDINAL JOINT
- (P) PRESSURE RELIEF JOINT

SCALE IN FEET
0 20 40 60

RAMP 'E-8'
STA. 77+48.64 TO STA. 88+00
PAVEMENT DETAILS

AA B/P# 71942R

CALC. BY. DATE	SUM-76-11.57	OHIO	207
CHKD. BY. DATE	FED. PROJECT IR-76-2(44) 19	F.H.W.A. REGION 5	1214

SUMMIT COUNTY

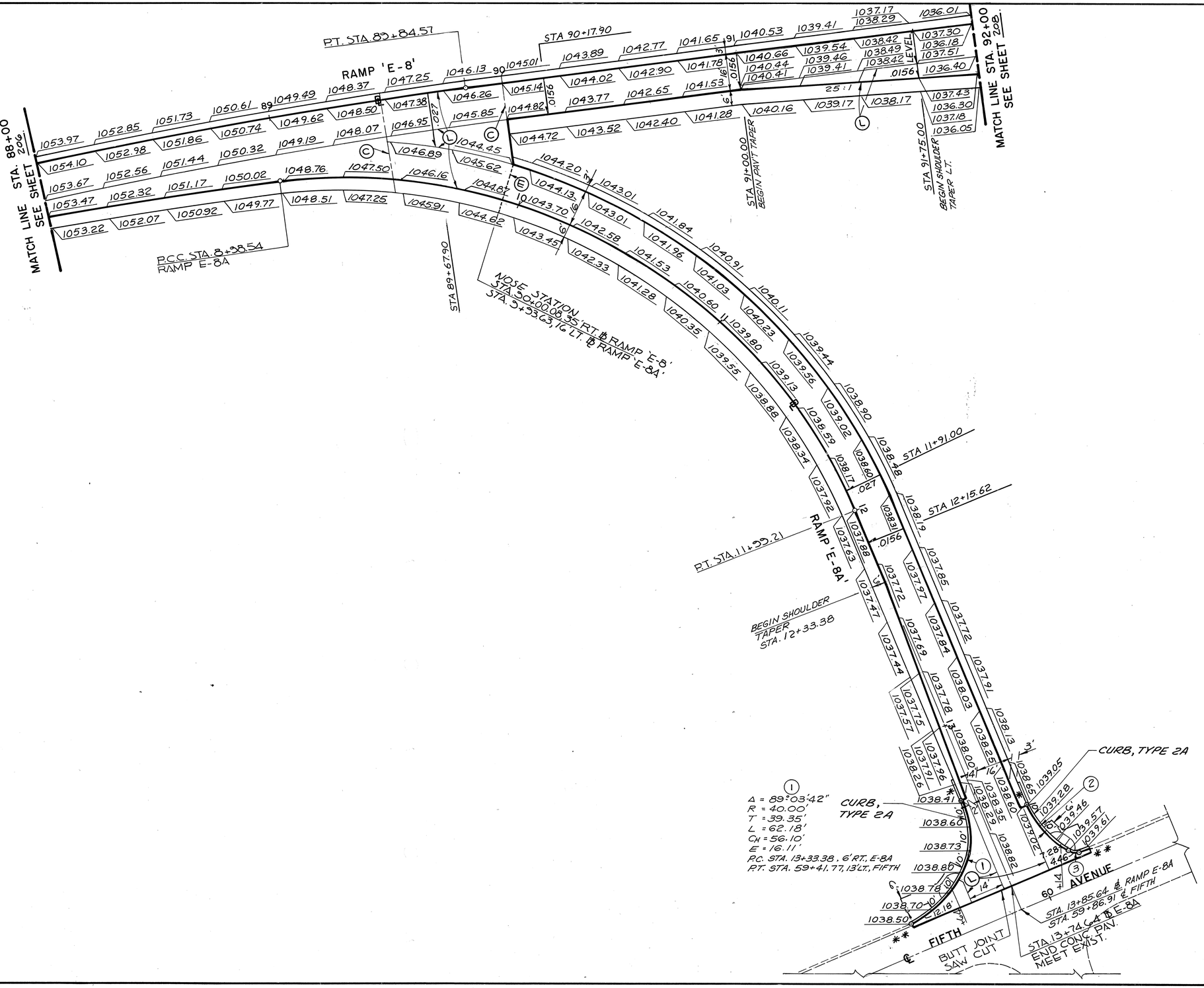

① Δ = 89°-03'-42"
R = 40.00'
T = 39.35'
L = 62.18'
C_H = 56.10'
E = 16.11'
P.C. STA. 13+33.38, 6' RT., E-8A
P.T. STA. 59+41.77, 13' LT., FIFTH

② Δ = 39°-52'-52"
R = 40.00'
T = 14.51'
L = 27.84'
C_H = 27.28'
E = 2.55'

③ Δ = 51°-03'-28"
R = 5.00'
T = 2.39'
L = 4.46'
C_H = 4.31'
E = 0.54'

P.C.C. STA. 13+44.65, 20' LT., E-8A
P.C.C. STA. 60+16.46, 14.86' LT., FIFTH
= STA. 13+70.29, 28.30' LT., E-8A
P.T. STA. 60+20.35, 13' LT., FIFTH

NOTE: ELEVATIONS SHOWN ALONG CURBS OR BARRIERS ARE GUTTERLINE ELEVATIONS.

* ~ CURB TRANSITION 0" TO 6" IN 10'

** ~ CURB TRANSITION MEET EXIST. CURB IN 10'

JOINT LEGEND
- (C) CONTRACTION JOINT
- (E) EXPANSION JOINT
- (L) LONGITUDINAL JOINT
- (P) PRESSURE RELIEF JOINT

SCALE IN FEET
0 20 40 60

RAMP 'E-8' & RAMP 'E-8A'
STA. 88+00 TO STA. 92+00
STA. 9+95.92 TO STA. 13+85.64

PAVEMENT DETAILS

AA. B/P# 71942R

CALC. BY. DATE	SUM-76-11.57	OHIO
CHKD. BY. DATE	FED. PROJECT IR-76-2(44) 19	F.H.W.A. REGION 5

208
12/14

SUMMIT COUNTY

① Δ = 104°59'59.6" R = 45.00' T = 58.65' L = 82.47' CH = 71.40' E = 28.92' P.C. STA. 95+15.94, 8'LT. ℄ RAMP E-8 P.T. STA. 13+20.07, 12'LT. FULLER ST.

FOR FULLER ST. SEE SHEET 215

STA. 95+93.15 RAMP E-8 STA. 12+49.92 FULLER ST.

STA. 100+00.00 RAMP E-8B STA. 12+35.43 FULLER ST.

⑤ Δ = 42°45'28.2" R = 5.00' T = 1.96' L = 3.74' CH = 3.65' E = 0.37'

⑥ Δ = 32°10'31.84" R = 50.00' T = 14.42' L = 28.08' CH = 27.71' E = 2.04'

P.C. STA. 12+57.70, 12'RT. FULLER ST.
P.C.C. STA. 12+54.30, 13.33'RT. FULLER ST.
P.T. STA. 100+34.62, 14'LT. RAMP E-8B

MATCH LINE STA. 92+00

MATCH LINE STA. 102+00

150' PAVEMENT TAPER

CONC. CURB TYPE 2A

RAMP 'E-8'

RAMP 'E-8B'

CURB & GUTTER TYPE 2

STA 92+50.00

300' PAVEMENT TAPER

124.55' PAVEMENT & SHOULDER TRANSITIONS

② & ④ Δ = 21°02'22.1" R = 120.00' T = 22.29' L = 44.06' CH = 43.82' E = 2.05'

③ Δ = 32°55'20.7" R = 45.00' T = 13.30' L = 25.86' CH = 25.50' E = 1.92'

P.C. STA. 95+24.55, 34'RT. RAMP E-8
P.C.C.$_1$ STA. 95+67.63, 42'RT. RAMP E-8
P.C.C.$_2$ STA. 11+55.73, 20'LT. FULLER ST.
P.T. STA. 11+52.65, 12'LT. FULLER ST.

⑦ & ⑨ Δ = 22°37'11.5" R = 100.00' T = 20.00' L = 39.48' CH = 39.22' E = 1.98'

⑧ Δ = 59°45'37.0" R = 35.00' T = 20.11' L = 36.51' CH = 34.87' E = 5.37'

P.C. STA. 11+40.59, 12'RT., FULLER ST.
P.C.C.$_1$ STA. 11+79.05, 19.65'RT. FULLER ST.
P.C.C.$_2$ STA. 100+54.84, 21.65'RT. RAMP E-8B
P.T. STA. 100+93.30, 14'RT. RAMP E-8B

FULLER STREET

CONC. CURB TYPE 2A

BUTT JOINT SAW CUT

STA. 11+40.59 FULLER ST. MEET EXIST. CONC. CURB TYPE 2A

STA. 107+19.05 RAMP E-8B STA. 10+37.35 KELLY AVE.

KELLY AVENUE

+2834 END CONC. PAV.

STA. 106+41, END CURB & GUTTER

CONC. CURB TYPE 2A

⑩ Δ = 58°32'54.5" R = 50.00' T = 28.03' L = 51.09' CH = 48.90' E = 7.32'

⑪ Δ = 46°27'11.1" R = 5.00' T = 2.15' L = 4.05' CH = 3.94' E = 0.44'

P.C. STA. 106+41.85, 14'LT. RAMP E-8B
P.C.C. STA. 10+82.95, 23.55'LT. KELLY AVE.
P.T. STA. 10+86.56, 22'LT. KELLY AVE.

⑫ & ⑭ Δ = 21°02'22.1" R = 120.00' T = 22.28' L = 44.06' CH = 43.82' E = 2.05'

⑬ Δ = 32°55'09.8" R = 45' T = 13.30' L = 25.85' CH = 25.50' E = 1.92'

P.C. STA. 106+34.73, 14'RT. RAMP E-8B
P.C.C.$_1$ STA. 106+77.81, 22'RT. RAMP E-8B
P.C.C.$_2$ STA. 10+06.58, 30.00'LT. KELLY AVE.
P.T. STA. 9+63.50, 22.00'LT. KELLY AVE.

NOTE: ELEVATIONS SHOWN ALONG CURBS OR BARRIERS ARE GUTTERLINE ELEVATIONS.

* ~ CURB TRANSITION 0" TO 6" IN 10'

** ~ CURB TRANSITION MEET EXIST. CURB IN 10'

℄ FIFTH AVENUE

PROP. 5' CONC. WALK

BUTT JOINT SAW CUT

JOINT LEGEND
- Ⓒ CONTRACTION JOINT
- Ⓔ EXPANSION JOINT
- Ⓛ LONGITUDINAL JOINT
- Ⓟ PRESSURE RELIEF JOINT

SCALE IN FEET 0 20 40 60

RAMPS 'E-8' & 'E-8B'
STA. 92+00 TO STA. 95+93.15
STA. 100+00 TO STA. 107+19.05

PAVEMENT DETAILS

AA B/P# 71942R

CALC. BY. DATE	SUM-76-11.57	OHIO
CHKD. BY. DATE	FED. PROJECT IR-76-2(44) 19	F.H.W.A. REGION 5

209
1214

SUMMIT COUNTY

STA. 13+81.17 MARTHA AVE. = STA. 611+18.67, I-76

MATCH LINE STA. 14+00 SEE SHEET 211

BOUND

EAST

MARTHA AVENUE

RAMP 'E-16'

FOR RAMP E-16 SEE SHEET 213

CONC. CURB TYPE 2B

+45.21 BEG. CONC. PAV.

BUTT JOINT

STA. 11+79.31 END TAPER

STA. 11+49.17 MARTHA AVE. = STA. 12+24.21 RAMP E-16

30:1 TAPER

STA. 9+70.01 MARTHA AVE. = STA. 20+00.00 ENGLEWOOD AVE.

① Δ = 89° 50' 18.2"
R = 15.00'
T = 15.23'
L = 23.52'
CH = 21.41'
E = 6.42'
P.C. STA. 20+38.10, 20' LT. & ENGLEWOOD AVE.
P.T. STA. 10+05.12, 23' RT. & MARTHA AVE.

② Δ = 89° 51' 20.2"
R = 15.00'
T = 14.26'
L = 23.52'
CH = 21.19'
E = 6.19'
P.C. STA. 9+38.11, 23' RT. & MARTHA AVE.
P.T. STA. 20+37.92, 17' RT. & ENGLEWOOD AVE.

STA. 21+86 MEET EXIST. CURB

CONC. CURB TYPE 2B

STA. 21+03 FULL DEPTH PAVEMENT MEET EXIST.

SAW CUT

ENGLEWOOD AVENUE

BUTT JOINT SAW CUT

LEAGUE STREET

STA. 8+79.00

STA. 7+77.31 FULL DEPTH PAV. MEET EXIST.

CONC. CURB TYPE 2B

RAISED CONC MEDIAN 100'

2' BUTT JOINT SAW CUT

MATCH LINE STA. 7+50

270' PAVEMENT TAPER 30:1

NOSE STA. 7+79.31, 17' LT. ℄ MARTHA AVE. STA. 15+33.46, 15 LT. ℄ RAMP 'E-9'

JOINT LEGEND
- (C) CONTRACTION JOINT
- (E) EXPANSION JOINT
- (L) LONGITUDINAL JOINT
- (P) PRESSURE RELIEF JOINT

RAMP 'E-9'

MATCH LINE SEE SHEET 198

STA. 10+25

STA. 10+75

150' SHOULDER TAPER

STA. 12+25

STA. 12+83.46

100' SHOULDER TAPER

CONC. BARRIER TYPE 'D', AS PER PLAN

STA. 7+50

MARTHA AVENUE

30:1 TAPER

CONC. BARRIER TYPE 'D', AS PER PLAN

FULL DEPTH WIDENING

END TAPER STA. 5+09.31 MEET EXIST.

FOR BARRIER TRANSITION TO CURB DETAIL, SEE SHEET 188.

25 F/F CURB

CONC. CURB TYPE 2A

CONC. BARRIER TYPE D, AS PER PLAN

150' PAVEMENT TAPER 3" TO 0" LT. & 6" TO ORT.

C.S. STA. 13+83.46

NOTE: ELEVATIONS SHOWN ALONG CURBS OR BARRIERS ARE GUTTERLINE ELEVATIONS.

* ~ CURB TRANSITION 0" TO 6" IN 10'

** ~ CURB TRANSITION MEET EXIST. CURB IN 10'

SCALE IN FEET
0 20 40 60

RAMP 'E-9' & MARTHA AVE. (SO.) PAVEMENT DETAILS

AA B/Pe 71942R

CALC. BY. DATE	SUM-76-11.57	OHIO	
CHKD. BY. DATE	FED. PROJECT IR-76-2(44) 19	F.H.W.A. REGION 5	210 / 1214

SUMMIT COUNTY

FOR MAINLINE SEE SHEET 199

E 1-76 EAST BOUND

STA 13+75.31 (L)

P.T. STA. 14+28.65

STA 15+00.31

MATCH LINE STA. 16+50

RAMP E-10'

LEVEL

+40.87

+37.14

STA. 14+57.27 RAMP E-10 = STA. 15+19.34 RAMP E-16

RAMP 'E-16'

120' PAVEMENT TAPER

P.C. STA. 15+71.97

STA 16+25.31

CONC. BARRIER TYPE 'D', AS PER PLAN

50' SHOULDER TAPER

NOSE STA. 613+30.00, 70.5 RT. ℄ I-76 = STA. 13+28.65, 16' LT. ℄ RAMP E-10

MARTHA AVENUE

FOR MARTHA AVE SEE SHEET 209

FOR RAMP 'E-16' SEE SHEET 213

RETAINING WALL Nº 10

MATCH LINE STA. 16+50

MATCH LINE STA. 21+50

STA. 19+44.58

P.T. STA. 15+83.38

CONC. CURB TYPE 2A

STA 20+69.58

END TAPER LT. & RT. STA. 21+03.38

P.C. STA. 21+22.45

STA 21+44.58

100' SHOULDER TRANSITION

100' PAVEMENT TAPER

STA. 10+00.00 WIGLEY AVE
STA. 30+49.09 ENGLEWOOD AVE

CURB, TYPE 2A

CURB, TYPE 2B

STA. 30+90.00 4' RT. ENGLEWOOD AVE

ENGLEWOOD AVE.

RAMP 'E-10'

END CONC. CURB TYPE 2A

BUTT JOINT

STA. 31+70.00 FULL DEPTH PAV. MEET EXIST. BUTT JOINT SAW CUT

STA. 31+68.00, 4' RT ℄ ENGLEWOOD AVE.

RAISED CONCRETE MEDIAN

CONC. CURB TYPE 2B

STA. 22+91.32 RAMP 'E-10' = STA. 9+76.68 WIGLEY AVE.

P.T. STA. 22+88.85

STA. 3+01.72 FULL DEPTH PAV., MEET EXIST., BUTT JOINT SAW CUT

WIGLEY AVE

NOTE: ELEVATIONS SHOWN ALONG CURBS OR BARRIERS ARE GUTTERLINE ELEVATIONS

* ~ CURB TRANSITION 0" TO 6" IN 10'

** ~ CURB TRANSITION MEET EXIST. CURB IN 10'

JOINT LEGEND
- (C) CONTRACTION JOINT
- (E) EXPANSION JOINT
- (L) LONGITUDINAL JOINT
- (P) PRESSURE RELIEF JOINT

CURVE DATA

CURVE Nº 1
- Δ = 73°-52'-28"
- R = 5.00'
- T = 3.76'
- L = 6.45'
- E = 1.26'
- CH = 6.01'

P.C. STA. 22+71.36, 16' LT. RAMP 'E-10'
P.C.C. STA. 22+76.05, 19.63' LT. RAMP 'E-10'
P.T. STA. 30+68.31, 19.28' LT. ENGLEWOOD AVE.

CURVE Nº 2
- Δ = 79°-00'-00"
- R = 30.00'
- T = 24.73'
- L = 41.36'
- E = 8.88'
- CH = 38.16'

CURVE Nº 3 & 5
- Δ = 20°-21'-51"
- R = 120.00'
- T = 21.55'
- L = 42.65'
- E = 1.92'
- CH = 42.43'

P.C. STA. 22+08.09, 12' RT. ℄ RAMP 'E-10'
P.C.C. STA. 22+49.85, 19.5' RT. ℄ RAMP 'E-10'
P.C.C. STA. 9+43.48, 26.5' LT. WIGLEY AVE
P.T. STA. 9+01.72, 19' LT. WIGLEY AVE

CURVE Nº 4
- Δ = 39°-48'-49"
- R = 40.00'
- T = 14.49'
- L = 27.80'
- E = 2.54'
- CH = 27.24'

CURVE Nº 6
- Δ = 99°-27'-30"
- R = 50.00'
- T = 59.02'
- L = 86.79'
- E = 27.35'
- CH = 76.30'

P.C. STA. 9+16.09, 12.5' RT. WIGLEY AVE.
P.T. STA. 31+24.53, 22.5' RT. ENGLEWOOD AVE.

SCALE IN FEET
0 20 40 60

RAMP 'E-10' WIGLEY AVE. & ENGLEWOOD AVE.

PAVEMENT DETAILS

AA B/P# 71942R

CALC. BY. DATE	SUM-76-11.57	OHIO
CHKD. BY. DATE	FED. PROJECT IR-76-2(44) 19	F.H.W.A. REGION 5

211
1214

SUMMIT COUNTY

STA. 17+51.77
FULL DEPTH PAV.
MEET EXIST.

BUTT JOINT
SAW CUT

CONC. CURB
TYPE 2A

CONC. CURB
TYPE 2B

STA. 16+56.33, MARTHA AVE.
STA. 9+01.86 RAMP E-15

④
Δ = 15°-44'-26"
R = 200.00'
T = 27.65'
CH = 54.77'
L = 54.94'
E = 1.90

⑤
Δ = 62°-36'-20"
R = 40.00'
T = 24.32'
CH = 41.56'
L = 43.71'
E = 6.81'

⑥
Δ = 12°-50'-19"
R = 120.00'
T = 13.50'
CH = 26.83'
L = 26.89'
E = 0.76'

P.C. = 17+51.77, 23' RT. (MARTHA AVE.)
P.C.C. = 16+97.51', 30.5' RT. (MARTHA AVE.)
P.C.C. = 9+63.03, 11' LT. (RAMP 'E-15')
P.T. = 9+89.69, 8' LT. (RAMP 'E-15')

①
Δ = 12°-50'-19"
R = 120.00'
T = 13.50'
CH = 26.83'
L = 26.89'
E = 0.76'

②
Δ = 61°-25'-24"
R = 40.00'
T = 23.76'
CH = 40.86'
L = 42.88'
E = 6.53'

③
Δ = 15°-44'-26"
R = 200.00'
T = 27.65'
CH = 54.77'
L = 54.94'
E = 1.90

P.C. = 34+91.95, 16' LT. (THIRD AVE.)
P.C.C. = 35+46.21, 23.5' LT. (THIRD AVE.)
P.C.C. = 16+79.89, 26' LT. (MARTHA AVE.)
P.T. = 17+06.55, 23' LT. (MARTHA AVE.)

STA. 34+21.55
FULL DEPTH PAV.
MEET EXIST.

STA. 33+52
MEET EXIST.

EX. CURB & GUTTER

EX. WALK

BUTT JOINT
SAW CUT

THIRD 34 AVENUE

P.T. STA. 35+09.01

FULL DEPTH
WIDENING

BUTT JOINT
(FULL DEPTH)

STA. 16+26.92 MARTHA AVE. =
STA. 36+00.22 THIRD AVE.

STA. 16+03.92 MARTHA AVE. =
STA. 19+02.02 RAMP E-12

MARTHA AVENUE

STA. 3+53.28 S
RT. RAMP E-15

RAISED CONC. MEDIAN

R.C. STA. 11+22.13

PAVEMENT TAPER

RAMP 'E-15'

STA. 11+72.13

STA. 10+22.13

STA. 12+66.12 (P.T.)
BEG. IN 150' PAVT. TAPER, LT

MATCH LINE
SEE SHEET 212
STA. 13+50

RAMP 'E-12'

P.T. STA. 16+80.51

STA. 16+30.51

STA. 17+80.51

PAVEMENT TAPER

⑩
Δ = 12°-50'-19"
R = 120.00'
T = 13.50'
CH = 26.83'
L = 26.89'
E = 0.76'

⑪
Δ = 60°-06'-21"
R = 40.00'
T = 23.14'
CH = 40.06'
L = 41.96'
E = 6.21'

⑫
Δ = 15°-44'-26"
R = 200.00'
T = 27.65'
CH = 54.77'
L = 54.94'
E = 1.90

P.C. = 15+35.62, 23' RT. (MARTHA AVE.)
P.C.C. = 15+62.29, 26' RT. (MARTHA AVE.)
P.C.C. = 18+48.97, 13.5 LT. (RAMP 'E-12')
P.T. = 17+94.72, 6' LT. (RAMP 'E-12')

CURB TYPE 2B

S.C. STA. 13+58.65

NOSE STA. 612+08.65, 54.5' LT. ℄ I-76 =
T.S. STA. 12+08.65, 18' RT. ℄ RAMP E-12

150' PAVEMENT TRANSITION

STA. 12+33.65

CONC. BARRIER
TYPE D, AS
PER PLAN

50' SHOULDER
TAPER

⑦
Δ = 12°-50'-19"
R = 120.00'
T = 13.50'
CH = 26.83'
L = 26.89'
E = 0.76'

⑧
Δ = 61°-32'-56"
R = 40.00'
T = 23.82'
CH = 40.93'
L = 42.97'
E = 6.56'

⑨
Δ = 15°-44'-26"
R = 200.00'
T = 27.65'
CH = 54.77'
L = 54.94'
E = 1.90

P.C. = 35+18.30, 24' RT. (THIRD AVE.)
P.C.C. = 35+39.96, 27' RT. (THIRD AVE.)
P.C.C. = 15+71.62, 30.5' LT. (MARTHA AVE.)
P.T. = 15+17.36, 23' LT. (MARTHA AVE.)

NOTE: ELEVATIONS SHOWN ALONG CURBS OR BARRIERS ARE GUTTERLINE ELEVATIONS.

* ~ CURB TRANSITION 0" TO 6" IN 10'

** ~ CURB TRANSITION MEET EXIST. CURB IN 10'

JOINT LEGEND
- (C) CONTRACTION JOINT
- (E) EXPANSION JOINT
- (LC) LONGITUDINAL JOINT
- (P) PRESSURE RELIEF JOINT

MATCH LINE STA. 14+00
SEE SHEET 209

FOR MAINLINE
SEE SHEET 199

WEST BOUND

SCALE IN FEET
0 20 40 60

MARTHA AVE. (NO.) THIRD AVE. & RAMP 'E-12' RAMP 'E-15' STA. 9+01.86 TO STA. 13+50

PAVEMENT DETAILS

AA B/P# 71942R

CALC. BY.		SUM-76-11.57	OHIO
CHKD. BY.		FED. PROJECT IR-76-2(44) 19	F.H.W.A. REGION 5
DATE			

212
1214

SUMMIT COUNTY

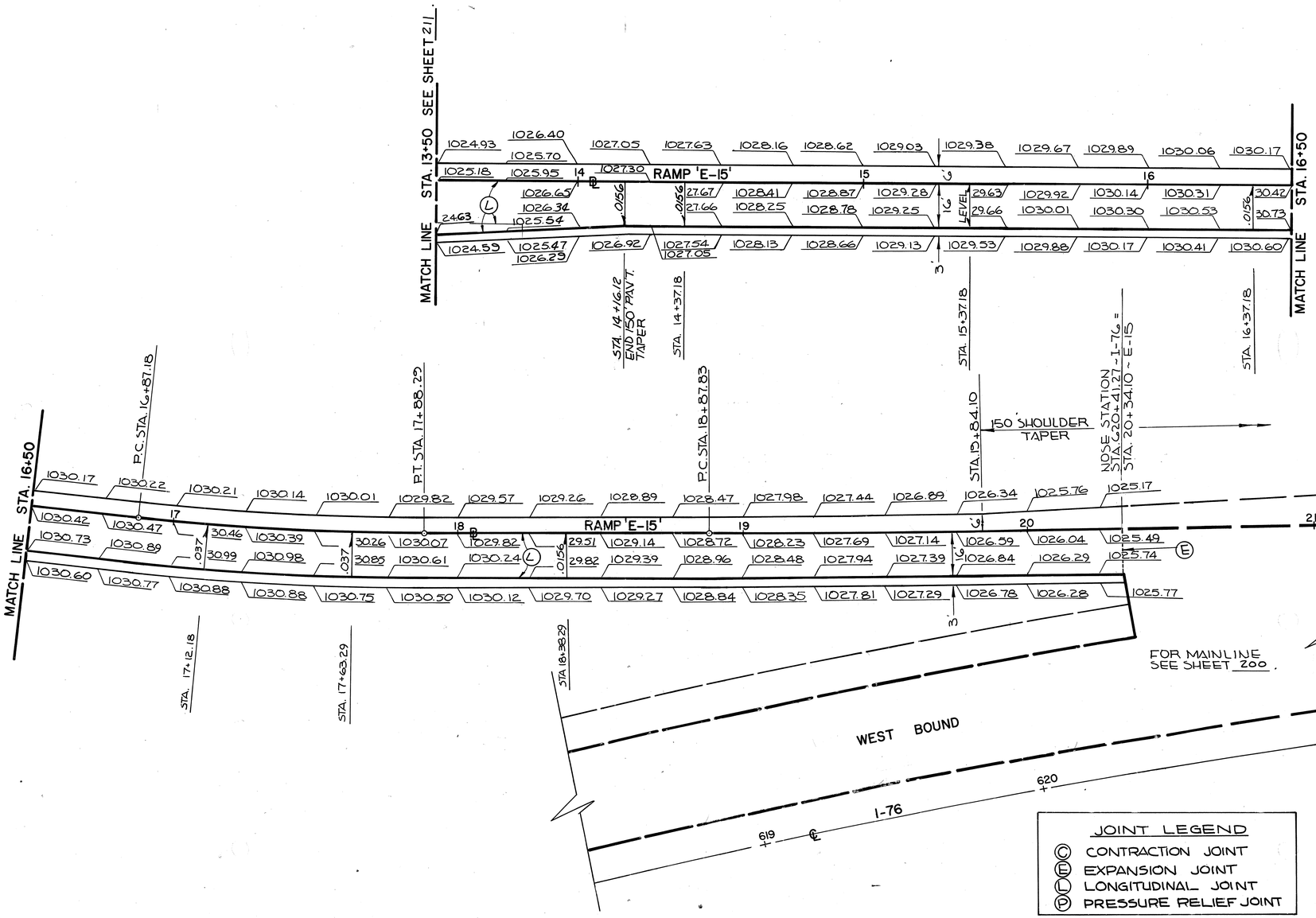

RAMP 'E-15'
STA. 13+50 TO STA. 20+34.10
PAVEMENT DETAILS

AA B/P# 71942R

CALC. BY. DATE	SUM-76-11.57	OHIO
CHKD. BY. DATE	FED. PROJECT IR-76-2(44) 19	F.H.W.A. REGION 5

213
1214

SUMMIT COUNTY

CONCRETE BARRIER TYPE 'D', AS PER PLAN

RETAINING WALL Nº 9

STA. 16+59.10

STA. 16+84.10

MATCH LINE STA. 18+50

RAMP 'E-16'

RAMP 'E-10'

P.T. STA. 16+67.43

FOR RAMP 'E-10' SEE SHEET 210.

CONCRETE BARRIER TYPE 'D', AS PER PLAN

STA. 15+19.34 RAMP E-16
STA. 14+57.27 RAMP E-10

NOTE: ELEVATIONS SHOWN ALONG CURBS OR BARRIERS ARE GUTTERLINE ELEVATIONS.

① Δ = 60°-29'-55" R = 5.00' T = 2.92' C_H = 5.04' L = 5.28' E = 1.58'

② Δ = 29°-30'-05" R = 50.00' T = 13.16' C_H = 25.46' L = 25.74' E = 1.70'

P.C. = 11+80.00, 23' RT. (MARTHA AVE.)
P.CC. = 11+75.71, 25.48' RT. (MARTHA AVE.)
P.T. = 12+74.37, 20' LT. (RAMP 'E-16')

P.C. STA. 12+99.85

CONC. CURB TYPE 2A

STA. 13+52.55

STA. 13+72.72

150' SHOULDER TAPER

CONC. CURB TYPE 2A

±45.21 RT. CONC. PIN RAMP E-16

STA. 11+49.17 (MARTHA AVE.)
STA. 12+24.21 (RAMP 'E-16')

MARTHA AVENUE

③ Δ = 12°-50'-19" R = 120.00' T = 13.50' C_H = 26.83' L = 26.89' E = 0.76'

④ Δ = 61°-17'-25" R = 40.00' T = 23.40 C_H = 40.78 L = 42.79 E = 6.49'

⑤ Δ = 15°-44'-26" R = 200.00' T = 27.65' C_H = 54.77' L = 54.94' E = 1.90'

P.C. = 10+77.54, 23' RT. (MARTHA AVE.)
P.C.C. = 11+04.20, 26' RT. (MARTHA AVE.)
P.C.C. = 12+78.23, 15.5' RT. (RAMP 'E-16')
P.T. = 13+32.49, 8' RT. (RAMP 'E-16')

FOR MARTHA AVE. SEE SHEET 209.

FOR MAINLINE SEE SHEET 200.

622 623 ℄ I-76 624

EAST BOUND

P.C. STA. 21+75.02

CONCRETE BARRIER TYPE 'D', AS PER PLAN

MATCH LINE STA. 18+50

RAMP 'E-16'

STA. 21+25.02

STA. 22+00.02

CONCRETE BARRIER TYPE 'D', AS PER PLAN

RETAINING WALL NO. 13

50' SHOULDER TAPER

STA. 24+25.00

NOSE STA. 24+50.00 56.5' RT. ℄ I-76
STA. 24+50.00 16' LT. ℄ RAMP E-16

JOINT LEGEND

- C — CONTRACTION JOINT
- E — EXPANSION JOINT
- L — LONGITUDINAL JOINT
- PR — PRESSURE RELIEF JOINT

SCALE IN FEET
0 20 40 60

RAMP 'E-16'
STA. 12+24.2 TO STA. 24+49.98
PAVEMENT DETAILS

AA B/P# 71942R

CALC. BY.		SUM-76-11.57	OHIO	2.14
DATE				12.14
CHKD. BY.		FED. PROJECT IR-76-2(44) 19	F.H.W.A. REGION 5	
DATE				

SUMMIT COUNTY

STA. 15+81.25 ℄ ARLINGTON ST. = STA. 76+73.55, ℄ RAMP 'E-6'

BEGIN PAVEMENT
STA. 13+70.00
BUTT JOINT

ARLINGTON STREET

END TAPER STA. 15+00.00

1068.78 1068.88 1068.99 1069.11 1069.22 1069.35 1069.45 1069.49 1069.49 1069.40 1069.30 1069.23 1069.21 1069.23

1068.73 1069.38 1069.50 1069.62 1069.74 1069.86 1069.98 1070.07 1070.10 1070.06 1069.97 1069.87 1069.80 1069.78

22' 22' 28.5' 28.5'

1069.33 1068.91 1069.03 1069.16 1069.28 1069.52 1069.80

SAW CUT

1068.63 1068.68 1068.80

MATCH LINE STA. 17+00

END TAPER STA. 15+00.00 1069.38

1069.40 1069.41 1069.39 1069.27 1069.09 1068.86 1068.50 1067.98 1067.47 1066.97

10' 10' 10'

AA B/P# 71942R

CALC. BY. DATE	SUM-76-11.57	OHIO
CHKD. BY. DATE	FED. PROJECT IR-76-2(44) 19	F.H.W.A. REGION 5

215
12.14

SUMMIT COUNTY

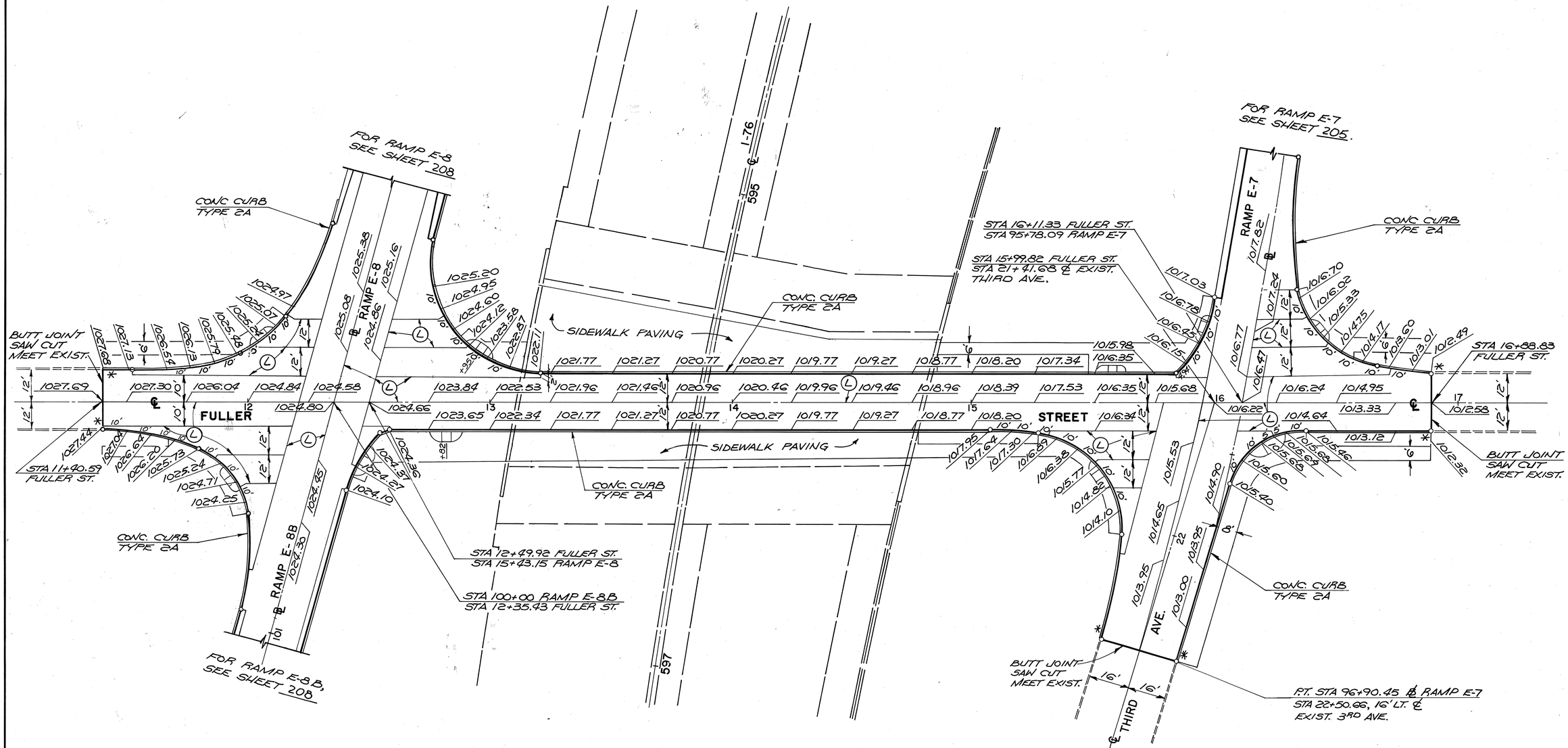

FOR CURB RETURN DATA, SEE SHEETS 208 & 205
FOR I-76, SEE SHEET 197.

NOTE: ELEVATIONS SHOWN ALONG CURBS ARE GUTTERLINE ELEVATIONS.

* CURB TRANSITION MEET EXIST. CURB IN 10'

SCALE IN FEET
0 20 40 60

FULLER STREET
STA 11+40.59 TO STA 16+88.83
PAVEMENT DETAILS

CALC. BY. DATE	SUM-76-11.57	OHIO
CHKD. BY. DATE	FED. PROJECT IR-76-2(44) 19	F.H.W.A. REGION 5

216
1214

SUMMIT COUNTY

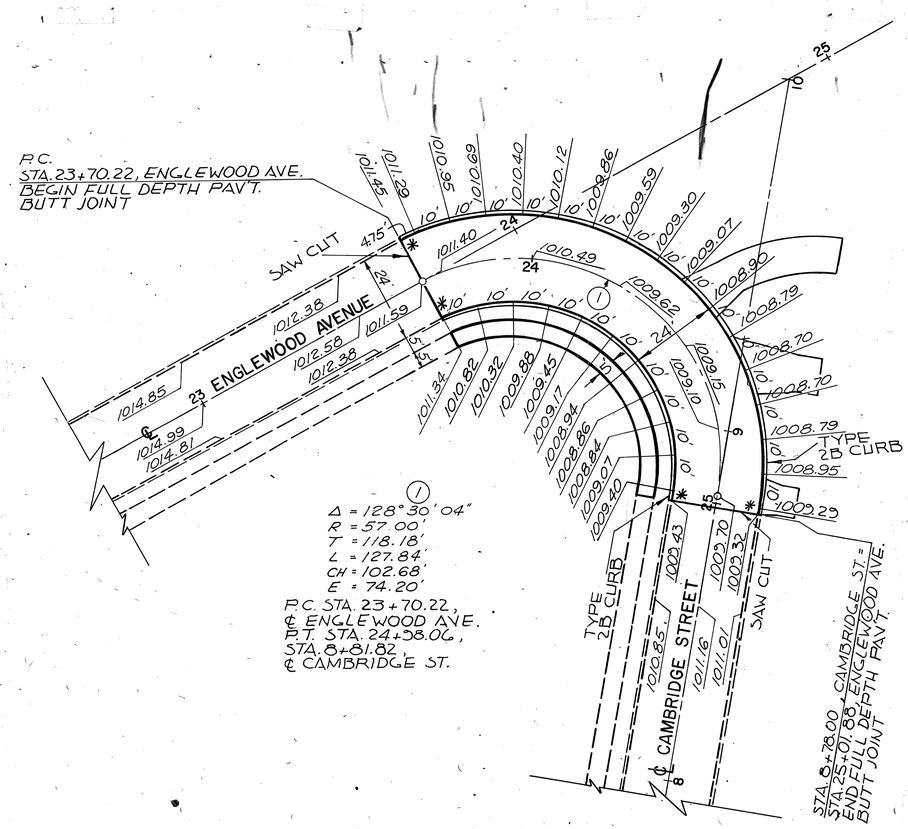

NOTE: ELEVATIONS SHOWN ALONG CURBS OR BARRIERS ARE GUTTERLINE ELEVATIONS.

*~ CURB TRANSITION MEET EXIST. CURB IN 10'.

JOINT LEGEND

- Ⓒ CONTRACTION JOINT
- Ⓔ EXPANSION JOINT
- Ⓛ LONGITUDINAL JOINT
- Ⓟ PRESSURE RELIEF JOINT

SCALE IN FEET
0 20 40 60

ENGLEWOOD AVENUE STA. 23+70 TO STA. 25+01

PAVEMENT DETAILS

CALC. BY. DATE	SUM-76-11.57	OHIO
CHKD. BY. DATE	FED. PROJECT IR-76-2(44) 19	F.H.W.A. REGION 5

217
12 14

SUMMIT COUNTY

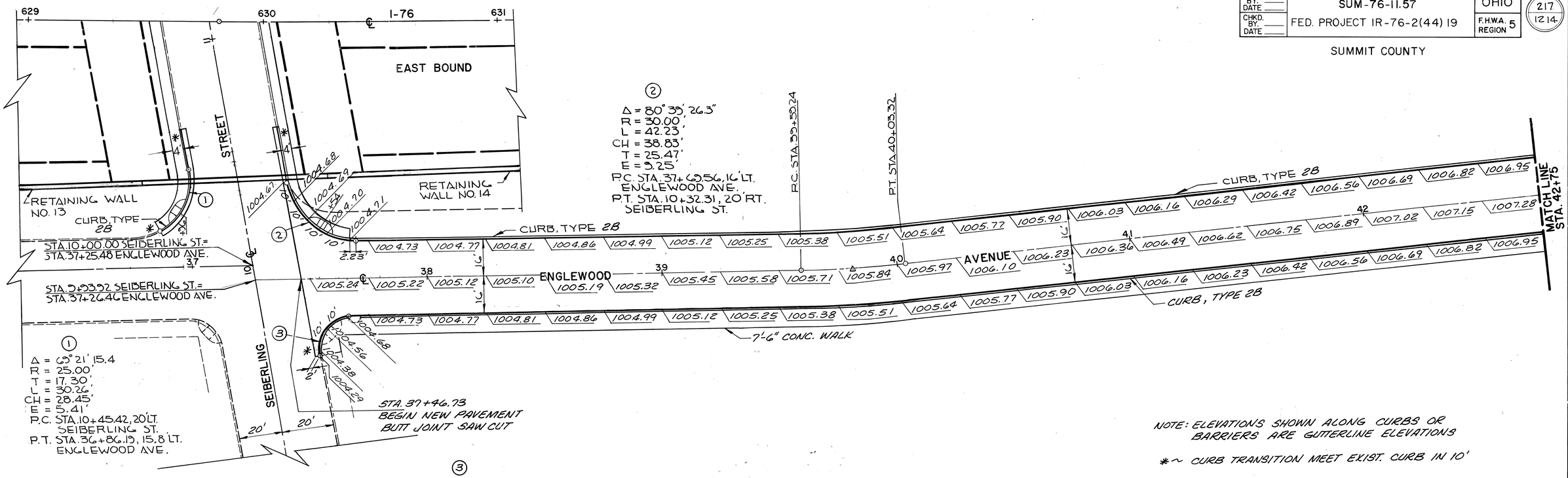

① Δ = 63° 21' 15.4"
R = 25.00'
T = 17.30'
L = 30.26'
CH = 28.45'
E = 5.41'
P.C. STA. 10+45.42, 20' LT. SEIBERLING ST.
P.T. STA. 36+86.19, 15.8' LT. ENGLEWOOD AVE.

② Δ = 80° 39' 26.3"
R = 30.00'
L = 42.23'
CH = 38.83'
T = 25.47'
E = 5.25'
P.C. STA. 37+69.56, 16' LT. ENGLEWOOD AVE.
P.T. STA. 10+32.31, 20' RT. SEIBERLING ST.

③ Δ = 99°-20'-33.7"
R = 15.00'
T = 17.67'
L = 26.01'
CH = 22.87'
E = 8.18
P.C. STA. 9+56.74, 20' RT. SEIBERLING ST.
P.T. STA. 37+67.03, 16' RT. ENGLEWOOD AVE.

NOTE: ELEVATIONS SHOWN ALONG CURBS OR BARRIERS ARE GUTTERLINE ELEVATIONS

*~ CURB TRANSITION MEET EXIST. CURB IN 10'

JOINT LEGEND
- (C) CONTRACTION JOINT
- (E) EXPANSION JOINT
- (L) LONGITUDINAL JOINT
- (P) PRESSURE RELIEF JOINT

SCALE IN FEET
0 20 40 60

ENGLEWOOD AVENUE PAVEMENT DETAILS

AA B/P# 71942R

CALC. BY. DATE	SUM-76-11.57	OHIO
CHKD. BY. DATE	FED. PROJECT IR-76-2(44) 19	F.H.W.A. REGION 5

218
1214

SUMMIT COUNTY

LEGEND

X	PAVEMENT REMOVED
GX	GUARDRAIL REMOVED
FX	FENCE REMOVED
BX	BARRIER REMOVED
ST	PORTIONS OF STRUCTURES REMOVED
WX	WALK REMOVED
SX	CONCRETE STEPS REMOVED
QX	PAVEMENT PLANING, BITUMINOUS
CX	CURB REMOVED

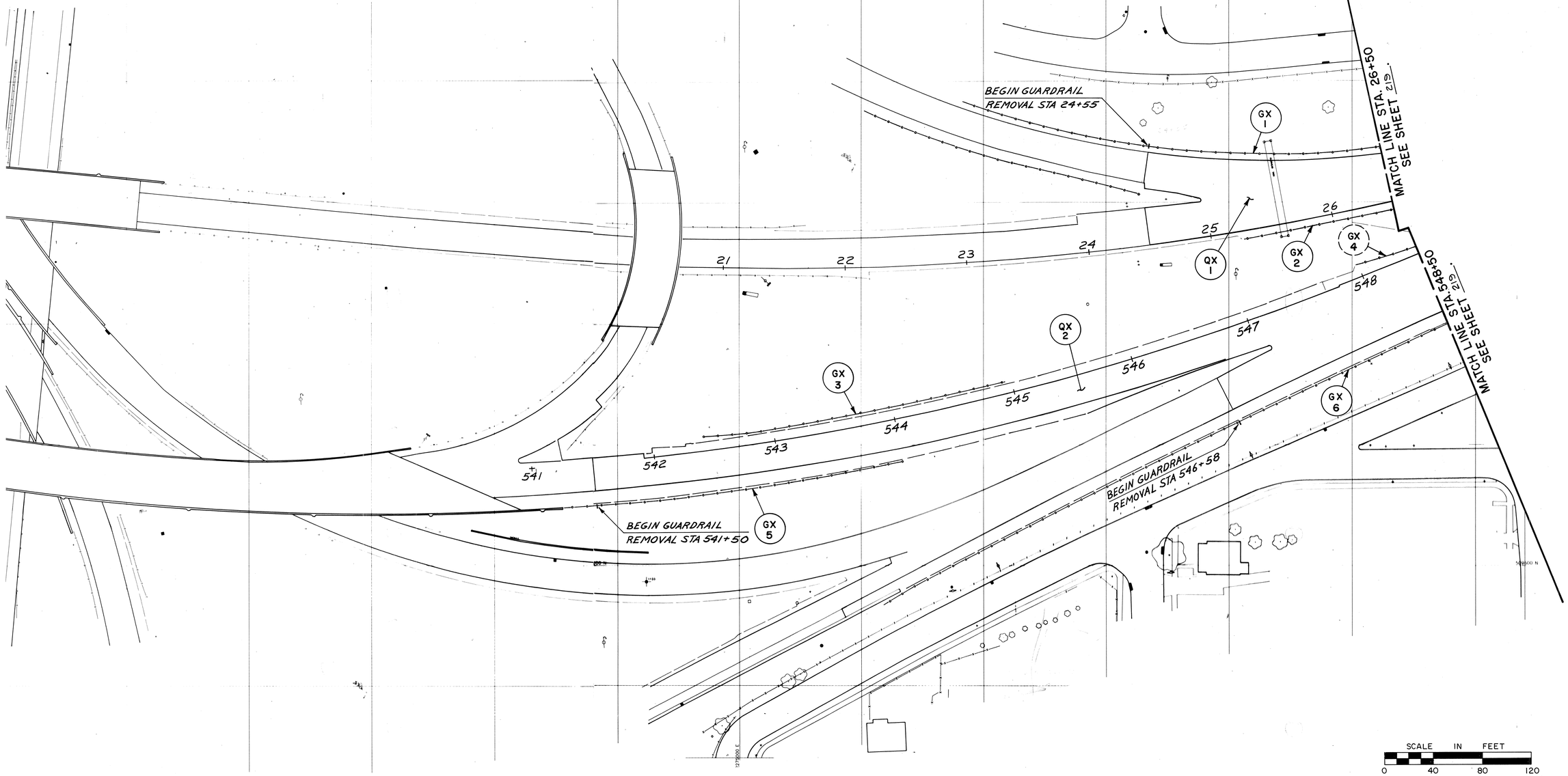

STA. 541+50 TO STA. 548+50
REMOVAL PLANS

CALC. BY. DATE	SUM-76-11.57	OHIO	219
CHKD. BY. DATE	FED. PROJECT IR-76-2(44) 19	F.H.W.A. REGION 5	1214

SUMMIT COUNTY

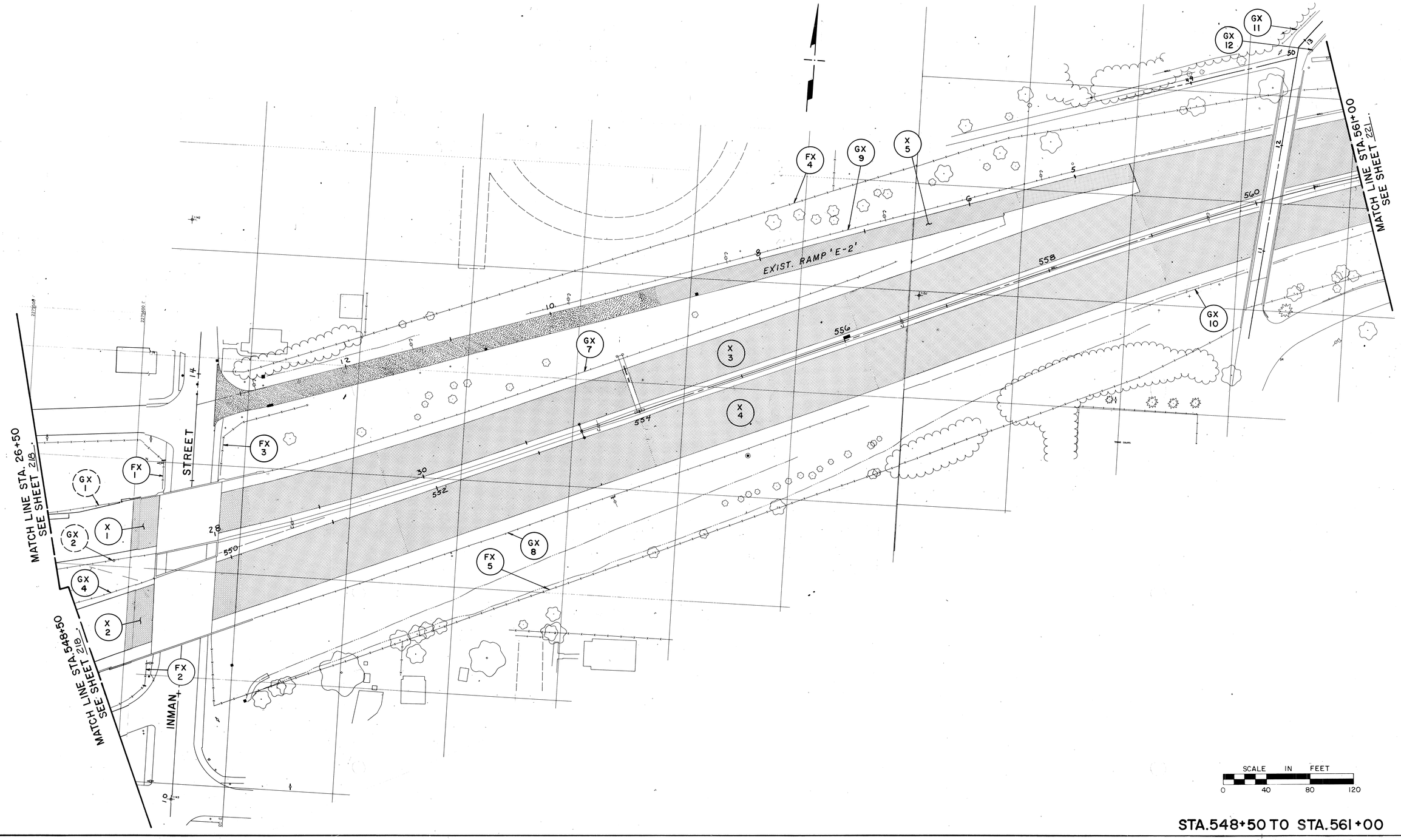

STA. 548+50 TO STA. 561+00

REMOVAL PLANS

QUANTITY SUB-SUMMARY

CALC. BY. CDB DATE 8/89	SUM-76-11.57	OHIO	220 / 1214
CHKD. BY. CB DATE 8/89	FEDERAL PROJ. IR-76-2-(44)19	F.H.W.A. REGION 5	

SHEET NUMBER	REFERENCE NUMBER	LOCATION	SIDE	202 PAVEMENT REMOVED SQ. YD.	202 FENCE REMOVED LIN. FT.	202 GUARDRAIL REMOVED LIN. FT.	254 PAVEMENT PLANING, BITUMINOUS (DEPTH 1-1/4") SQ. YD.
219	X-1	STA 27+17 TO STA 27+42 I-76 WB	LT	114			
T	X-2	STA 549+00 TO STA 549+25 I-76 EB	RT	141			
	X-3	STA 28+01 I-76 WB TO STA 561+00 I-76	LT	4,897			
	X-4	STA 549+86 I-76 EB TO STA 561+00 I-76	RT	5,533			
219	X-5	STA 4+50 TO STA 13+32.32 RAMP E+2	B L	1,860			
218	GX-1	STA 24+55 TO STA 27+18 I-76 WB	LT			262.5	
T	GX-2	STA 25+27 TO STA 27+32 I-76 WB	RT			212.5	
	GX-3	STA 542+38 TO STA 545+00 I-76 EB	LT			262.5	
	GX-4	STA 547+92 TO STA 549+17 I-76 EB	LT			125	
T	GX-5	STA 541+50 TO STA 544+25 I-76 EB	RT			275	
218	GX-6	STA 546+58 TO STA 548+58 I-76 EB	RT			200	
219	GX-7	STA 28+57 TO STA 556+70 I-76 WB	LT			614	
T	GX-8	STA 550+00 TO STA 556+00 I-76 EB	RT			600	
	GX-9	STA 554+51 TO STA 560+35 I-76	LT			710	
	GX-10	STA 558+58 TO STA 560+08 I-76	RT			150	
T	GX-11	STA 12+96 TO STA 13+26 SCHOOL RD	LT			42	
219	GX-12	STA 12+87 TO STA 13+26 SCHOOL RD	RT			34	
219	FX-1	STA 12+88 TO STA 13+77 INMAN ST	LT		29		
T	FX-2	STA 11+05 TO STA 11+33 INMAN ST	LT		28		
	FX-3	STA 28+14 TO STA 29+15 I-76 WB	LT		125		
	FX-4	STA 28+43 I-76 WB TO STA 560+46 I-76	LT		1,028		
219	FX-5	STA 549+60 TO STA 559+50 I-76	RT		1,077		
218	QX-1	STA 24+50 TO STA 27+17 I-76 WB	B L				1,528
218	QX-2	STA 541+50 TO STA 549+00 I-76 EB	B L				2,755
		TOTALS		12,545	2,287	3,4875	4,283

CALC. BY. DATE	SUM-76-11.57	OHIO
CHKD. BY. DATE	FED. PROJECT IR-76-2(44) 19	F.H.W.A. REGION 5

221
1214

SUMMIT COUNTY

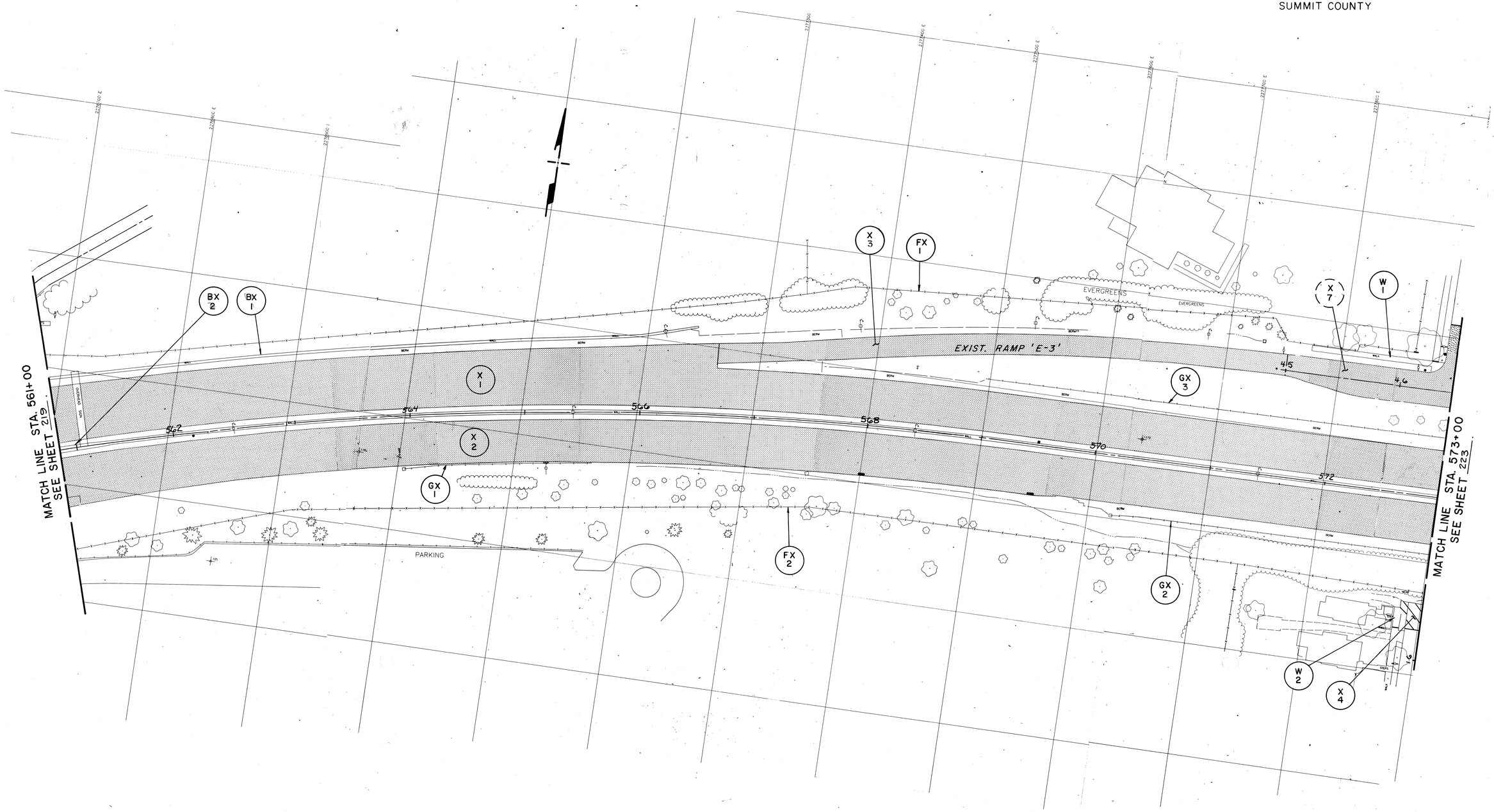

STA. 561+00 TO STA. 573+00

REMOVAL PLANS

QUANTITY SUB-SUMMARY

CALC. BY. CDB DATE 3/83	SUM-76-11.57	OHIO	222
CHKD. BY. CB DATE 3/83	FEDERAL PROJ. IR-76-2-(44)19	F.H.W.A. REGION 5	12.14

SHEET NUMBER	REFERENCE NUMBER	LOCATION	SIDE	202 PAVEMENT REMOVED SQ.YD.	202 FENCE REMOVED LIN. FT.	202 GUARDRAIL REMOVED LIN.FT.	202 CONCRETE BARRIER REMOVED L.F.	202 WALK REMOVED SQ.FT.
221	X-1	STA 561+00 TO STA 573+00 I-76	LT.	5,561				
	X-2	STA 561+00 TO STA 573+00 I-76	RT	5,033				
	X-3	STA 566+66 TO STA 571+53 I-76	LT	992				
	X-4	STA 16+26 TO STA 16+50 TALBOT AVE	℄	74				
	GX-1	STA 563+95 TO STA 565+58 I-76	RT			164		
	GX-2	STA 570+20 TO STA 573+00 I-76	RT			280		
	GX-3	STA 568+98 TO STA 573+00 I-76	LT			402		
	FX-1	STA 560+61 TO STA 572+63 I-76	LT		1,217			
	FX-2	STA 559+80 TO STA 573+00 I-76	RT		1,319			
	W-1	STA 45+20 TO STA 46+36 MARTIN AVE	LT					590
	W-2	STA 16+26 TO STA 16+45 TALBOT AVE	LT					95
	BX-1	STA 560+55 TO STA 566+50 I-76	LT				595	
221	BX-2	STA 560+65 TO STA 561+15 10'	℄				50	
	TOTALS			11,660	2,536	846	645	685

CALC. BY. DATE	SUM-76-11.57	OHIO
CHKD. BY. DATE	FED. PROJECT IR-76-2(44) 19	F.H.W.A. REGION 5

223
1214

SUMMIT COUNTY

MATCH LINE STA. 573+00
SEE SHEET 221

MATCH LINE STA. 585+00
SEE SHEET 226

MATCH LINE STA. 85+00

SECOND AVENUE
MARTIN AVENUE
9th AVE.
TALBOT
STREET
ARLINGTON
MILES ST.
CHITTENDEN
FOURTH AVENUE
EXIST. RAMP 'E-4'
RAMP 'E-4'
RAMP 'E-7'
EXIST. RAMP 'E-5'
RAMP 'E-6'
RAMP 'E-8'
EXIST. RAMP 'E-6'

FOR BRIDGE REMOVAL PLAN, SEE SHEET 237

SCALE IN FEET
0 40 80 120

STA. 573+00 TO STA. 585+00
REMOVAL PLANS

QUANTITY SUB-SUMMARY

CALC BY CDS DATE 3/83	SUM-76-11.57	OHIO
CHKD. BY CB DATE 3/83	FEDERAL PROJ. IR-76-2-(44)19	F.H.W.A. REGION 5

224
1214

SHEET NUMBER	REFERENCE NUMBER	LOCATION	SIDE	202 PAVEMENT REMOVED SQ.YD.	202 FENCE REMOVED LIN.FT.	202 GUARDRAIL REMOVED LIN.FT.
223 T	X-1	STA 573+00 TO STA 576+08 I-76	LT	1,232		
	X-2	STA 573+00 TO STA 576+08 I-76	RT	1,232		
	X-3	STA 576+93 TO STA 582+18 I-76	LT	2,337		
	X-4	STA 576+93 TO STA 582+25 I-76	RT	2,351		
	X-5	STA 582+74 TO STA 585+00 I-76	LT	1,205		
	X-6	STA 582+80 TO STA 585+00 I-76	RT	880		
	X-7	STA 45+00 TO STA 49+78 MARTIN AVE	℄	1,867		
	X-8	STA 13+70 TO STA 20+93 ARLINGTON ST	℄	3,615		
	X-9	STA 20+29 TO STA 21+10 SECOND AVE	℄	341		
	X-10	STA 576+75 TO STA 581+37 I-76	LT	987		
	X-11	STA 578+22 TO STA 582+55 I-76	RT	946		
	X-12	STA 12+21 TO STA 12+73 MILES ST	℄	177		
	X-13	STA 13+18 TO STA 18+97 CHITTENDEN ST	℄	2324		
	X-14	STA 82+86 TO STA 85+00 RAMP E-6	RT	653		
	GX-1	STA 573+00 TO STA 575+72 I-76	LT			272
	GX-2	STA 573+00 TO STA 575+70 I-76	RT			270
	GX-3	STA 20+59 TO STA 20+62 ARLINGTON ST	LT			25
	GX-4	STA 576+89 TO STA 576+98 I-76	LT			20
	GX-5	STA 577+62 TO STA 582+65 I-76	LT			413
	GX-6	STA 577+28 TO STA 579+53 I-76	LT			300
	GX-7	STA 577+25 TO STA 581+78 I-76	RT			474
	GX-8	STA 579+58 TO STA 581+87 I-76	RT			225
	GX-9	STA 583+09 TO STA 585+00 I-76	LT			191
	GX-10	STA 583+15 TO STA 585+00 I-76	RT			185
	FX-1	STA 573+00 TO STA 576+17 I-76	RT		353	
	FX-2	STA 576+00 TO STA 576+17 I-76	LT		37	
	FX-3	STA 576+92 TO STA 577+04	LT		42	
	FX-4	STA 576+90 TO STA 582+50 I-76	RT		662	
	FX-5	STA 577+27 TO STA 582+18 I-76	LT		562	
	FX-6	STA 15+50 TO STA 16+75 CHITTENDEN ST	LT		125	
	FX-7	STA 582+67 TO STA 585+00 I-76	LT		311	
	FX-8	STA 582+80 TO STA 584+97 I-76	RT		228	
223	FX-9	STA 14+98 TO STA 15+80 CHITTENDEN ST	RT		136	
	TOTALS			20,147	2,456	2,375

QUANTITY SUB-SUMMARY

CALC. BY CDB 8/83	SUM-76-11.57	OHIO
CHKD. BY CB 8/83	FEDERAL PROJ. IR-76-2-(44)19	F.H.W.A. REGION 5

225 / 1214

SHEET NUMBER	REFERENCE NUMBER	LOCATION	SIDE	202 CONCRETE BARRIER REMOVED	202 STRUCTURES REMOVED	202 WALK REMOVED	202 STEPS REMOVED
				L.F.	LUMP	SQ. FT.	LUMP
223	W-1	NOT USED					
T	W-2	STA 20+62 TO STA 20+93 ARLINGTON ST	LT			188	
	W-3	STA 19+50 TO STA 20+29 ARLINGTON ST	LT			570	
	W-4	STA 46+65 TO STA 49+78 MARTIN AVE	LT			1759	
	W-5	STA 18+55 TO STA 18+76 ARLINGTON ST	LT			110	
	W-6	STA 13+70 TO STA 18+30 ARLINGTON ST	LT			2,767	
	W-7	STA 15+93 TO STA 15+97 ARLINGTON ST	LT			40	
	W-8	STA 15+45 TO STA 15+49 ARLINGTON ST	LT			54	
	W-9	STA 14+89 TO STA 14+93 ARLINGTON ST	LT			24	
	W-10	STA 19+25 TO STA 20+93 ARLINGTON ST	RT			699	
	W-11	STA 18+68 TO STA 18+88 ARLINGTON ST	RT			75	
	W-12	STA 15+75 TO STA 18+46 ARLINGTON ST	RT			1,570	
	W-13	STA 14+40 TO STA 15+64 ARLINGTON ST	RT			1,067	
	W-14	STA 13+70 TO STA 14+20 ARLINGTON ST	RT			400	
	W-15	STA 12+21 TO STA 12+81 MILES ST	LT			300	
	W-16	STA 12+29 TO STA 12+46 MILES ST	RT			125	
	W-17	STA 14+74 TO STA 18+95 CHITTENDEN ST	LT			2,173	
	W-18	STA 13+18 TO STA 14+74 CHITTENDEN ST	LT			770	
	W-19	STA 16+24 TO STA 18+80 CHITTENDEN ST	RT			3,008	
	W-20	STA 13+18 TO STA 15+86 CHITTENDEN ST	RT			2,770	
	SX-1	STA 15+92 TO STA 15+97 ARLINGTON ST	LT				8 L.F. (FOR INFORMATION ONLY)
	SX-2	STA 15+45 TO STA 15+49 ARLINGTON ST	LT				12 L.F. (FOR INFORMATION ONLY)
	SX-3	STA 14+89 TO STA 14+93 ARLINGTON ST	LT				12 L.F. (FOR INFORMATION ONLY)
	SX-4	STA 12+57 TO STA 12+61 MILES ST	LT				12 L.F. (FOR INFORMATION ONLY)
	ST-1	STA 573+25 TO STA 576+00 I-76	LT		155 C.Y. (FOR INFORMATION ONLY)		
	ST-2	STA 19+50 TO STA 20+29 ARLINGTON ST	LT		10 C.Y. (FOR INFORMATION ONLY)		
	ST-3	STA 16+14 TO STA 16+15 ARLINGTON ST	LT		1.5 C.Y. (FOR INFORMATION ONLY)		
	BX-1	STA 574+55 TO STA 575+05 I-76	℄	50			
	BX-2	STA 575+05 TO STA 576+14 I-76	℄	109			
	BX-3	STA 576+94 TO STA 577+19 I-76	℄	25			
	BX-4	STA 581+92 TO STA 582+17 I-76	℄	25			
223	BX-5	STA 582+80 TO STA 583+00 I-76	℄	20			
		TOTALS		229	LUMP	18,469	LUMP

CALC. BY. DATE	SUM-76-11.57	OHIO
CHKD. BY: DATE	FED. PROJECT IR-76-2(44) 19	F.H.W.A. REGION 5

226
1214

SUMMIT COUNTY

SECOND AVENUE
HART STREET
RAMP 'E-7'
RAMP 'E-4'
EXIST. RAMP 'E-7'
THIRD AVENUE
THIRD STREET
RAMP 'E-6'
EXIST. RAMP 'E-6'
RAMP 'E-8'
RAMP 'E-8A'
NEWMAN ST.
FOURTH AVENUE
RAMP 'E-8B'
FULLER ST.
RAMP 'E-8A'
HART ST.
FIFTH AVE.
UNPAVED PLAYGROUND
ROBINSON SCHOOL

MATCH LINE STA. 585+00
SEE SHEET 223

MATCH LINE STA. 597+00
SEE SHEET 229

MATCH LINE STA. 85+00

MATCH LINE A-A

MATCH LINE A-A

W 1, X 5, X 9, W 3, ST 1, X 6, FX 7, W 3, W 10, X 12, X 13, W 9, GX 1, FX 1, X 6, X 1, X 2, SX 1, FX 6, GX 3, W 6, FX 8, BX 2, X 3, X 4, GX 4, W 7, W 8, BX 1, GX 5, FX 9, W 9, W 2, X 7, FX 2, GX 2, X 8, CX 1, FX 3, FX 11, FX 4, FX 5, GX 6, ST 2, FX 10, W 4, X 10, W 5, X 11, X 12

SCALE IN FEET
0 40 80 120

STA. 585+00 TO STA. 597+00

REMOVAL PLANS

QUANTITY SUB-SUMMARY

CALC BY CDB DATE 8/89	SUM-76-11.57	OHIO
CHKD. BY CB DATE 8/89	FEDERAL PROJ. IR-76-2-(44)19	F.H.W.A. REGION 5

227
1214

SHEET NUMBER	REFERENCE NUMBER	LOCATION	SIDE	202 PAVEMENT REMOVED SQ.YD.	202 FENCE REMOVED LIN. FT.	202 GUARDRAIL REMOVED LIN. FT.
226	X-1	STA 585+00 TO STA 595+49 I-76	LT	4,435		
	X-2	STA 585+00 TO STA 595+49 I-76	RT	4,620		
	X-3	STA 596+11 TO STA 597+00 I-76	LT	356		
	X-4	STA 596+20 TO STA 597+00 I-76	RT	445		
	X-5	STA 28+58 TO STA 32+02 SECOND AVE	RT	64		
	X-6	STA 586+63 TO STA 595+38 I-76	LT	2,165		
	X-7	STA 8+75 TO STA 9+94 NEWMAN ST	℄	204		
	X-8	STA 85+00 TO STA 89+77 RAMP E-6	RT/LT	900		
	X-9	STA 16+26 TO STA 17+49 HART ST	℄	441		
	X-10	STA 32+17 TO STA 38+89 FOURTH AVE	℄	2,242		
	X-11	STA 10+10 TO STA 12+86 HART ST	℄	870		
	X-12	STA 11+40 TO STA 16+89 FULLER ST	℄	1534		
	X-13	STA 21+44 TO STA 22+50 THIRD AVE	℄	183		
	GX-1	STA 585+00 TO STA 589+26 I-76	LT			430
	GX-2	STA 585+00 TO STA 586+70 I-76	RT			170
	GX-3	STA 592+97 TO STA 595+10 I-76	LT			213
	GX-4	STA 592+25 TO STA 595+00 I-76	RT			275
	GX-5	STA 12+84 TO STA 13+09 FULLER ST	RT			25
	GX-6	STA 8+75 TO NEWMAN ST	RT/LT			16
	FX-1	STA 585+00 TO STA 590+12 I-76	LT		524	
	FX-2	STA 85+00 TO STA 86+16 RAMP E-6	LT		115	
	FX-3	STA 585+97 TO STA 595+47 I-76	RT		996	
	FX-4	STA 589+90 TO STA 590+13 I-76	RT		80	
	FX-5	STA 590+19 TO STA 590+38 I-76	RT		89	
	FX-6	STA 590+02 TO 595+46 I-76	LT		550	
	FX-7	STA 16+25 TO STA 16+76 FULLER ST	LT		51	
	FX-8	STA 14+45 TO STA 15+28 FULLER ST	LT		84	
	FX-9	STA 12+16 TO STA 13+14 FULLER ST	RT		98	
	FX-10	STA 8+75 TO NEWMAN ST	RT/LT		19	
226	FX-11	STA 8+87 TO STA 9+10 RAMP E-8A	LT/RT		39	
		TOTALS		18,459	2645	1,129

QUANTITY SUB-SUMMARY

CALC. BY. CDB DATE 8/03	SUM-76-11.57	OHIO	228 1214
CHKD. BY. CB DATE 8/03	FEDERAL PROJ. IR-76-2-(44)19	F.H.W.A. REGION 5	

SHEET NUMBER	REFERENCE NUMBER	LOCATION	SIDE	202 CONCRETE BARRIER REMOVED LIN. FT.	202 STRUCTURES REMOVED LUMP	202 WALK REMOVED SQ. FT.	202 STEPS REMOVED LUMP	202 CURB REMOVED LIN. FT.
226	W-1	STA 28+58 TO STA 33+06 SECOND AVE	RT			2,700		
	W-2	STA 85+00 TO STA 85+83 RAMP E-6	RT			670		
	W-3	STA 17+48 HART ST TO STA 16+88 FULLER	RT/LT			3,190		
	W-4	STA 32+18 TO STA 33+85 FOURTH AVE	LT			950		
	W-5	STA 32+18 TO STA 33+85 FOURTH AVE	RT			952		
	W-6	STA 13 + 40 TO STA 15+80 FULLER ST	LT			1690		
	W-7	STA 34+14 TO STA 38+85 FOURTH AVE	LT			2,552		
	W-8	STA 34+14 FOURTH AVE TO STA 13+40 FULLER ST.	RT			3,628		
	W-9	STA 11 + 40 TO STA 15+64 FULLER ST	RT			2120		
			RT					
	W-10	STA 16+88 FULLER TO STA 22+50 THIRD ST	RT/LT			1139		
	SX-1	STA 93+28 TO 93+41 RAMP E-4	LT				10 L.F. (FOR INFORMATION ONLY)	
	ST-1	STA 91+93 TO STA 92+09 RAMP E-7	RT/LT		5 C.Y. (FOR INFORMATION ONLY)			
	ST-2	STA 8+75 TO NEWMAN ST	RT/LT		4 C.Y. (FOR INFORMATION ONLY)			
	CX-1	STA 586+70 TO STA 588+85 I-76	RT					182
	BX-1	STA 595+24 TO STA 595+49 I-76	℄	25				
226	BX-2	STA 596+17 TO STA 595+42 I-76	℄	25				
	TOTALS			50	LUMP	19,591	LUMP	182

CALC. BY. DATE	SUM-76-11.57	OHIO
CHKD. BY. DATE	FED. PROJECT IR-76-2(44).19	F.H.W.A. REGION 5

229
1214

SUMMIT COUNTY

MATCH LINE STA. 597+00
SEE SHEET 226

MATCH LINE STA. 609+00
SEE SHEET 231

THIRD AVENUE

RAMP 'E-88'

RAMP 'E-8'

RAMP 'E-9'

12 AVENUE

KELLY

FIFTH AVENUE

WEEKS STREET

PAVED PARKING

EXIST. RAMP 'E-8'

GX 1
FX 1
X 1
X 2
FX 3
GX 3
GX 2
FX 2
GX 4
X 5
BX 1
FX 4
SX 1
FX 5
W 1
W 2
X 6
W 3
ST 1
QX 1
BX 2
X 3
X 4

598 600 602 604 606 608
102 104 106
68 70
28 30 32 34
14 10 8

SCALE IN FEET
0 40 80 120

STA. 597+00 TO STA. 609+00
REMOVAL PLANS

QUANTITY SUB-SUMMARY

CALC. BY	CDS	SUM-76-11.57	OHIO
CHK'D. BY	CS	FEDERAL PROJ. IR-76-2-(44)19	F.H.W.A. REGION 5
DATE	8/83		

230
1214

SHEET NUMBER	REFERENCE NUMBER	LOCATION	SIDE	202 PAVEMENT REMOVED SQ.YD.	202 FENCE REMOVED LIN.FT.	202 GUARDRAIL REMOVED LIN.FT.	202 CONCRETE BARRIER REMOVED LIN.FT.	202 STRUCTURES REMOVED LUMP	202 WALK REMOVED SQ.FT.	202 STEPS REMOVED LUMP	254 PAVEMENT PLANING, BITUMINOUS (DEPTH 1 1/4") S.Y.
229	X-1	STA 597+00 TO STA 600+54 I-76	LT	1,455							
T	X-2	STA 597+00 TO STA 600+54 I-76	RT	1,450							
	X-3	STA 608+57 TO STA 609+00 I-76	LT	170							
	X-4	STA 608+77 TO STA 609+00 I-76	RT	130							
	X-5	STA 597+00 TO STA 601+25 I-76	RT	1,165							
	X-6	STA 70+70 TO STA 71+66 FIFTH AVE	℄	310							
	GX-1	STA 596+47 TO STA 599+51 I-76	LT			304					
	GX-2	STA 596+63 TO STA 600+05 I-76	RT			388					
	GX-3	STA 598+13 TO STA 600+23 I-76	RT			215					
	GX-4	STA 599+22 TO STA 600+44 I-76	RT			188					
	FX-1	STA 596+06 TO STA 600+30 I-76	LT		482						
	FX-2	STA 596+37 TO STA 600+15 I-76	RT		504						
	FX-3	STA 596+46 TO STA 598+32 I-76	RT		238						
	FX-4	STA 69+68 TO STA 71+25 FIFTH AVE	LT		554						
	FX-5	STA 600+54 TO STA 602+05 I-76	RT		258						
	W-1	STA 68+70 TO STA 70+05 FIFTH AVE	LT						186		
	W-2	STA 69+48 TO STA 71+65 FIFTH AVE	LT						1,463		
	W-3	STA 70+16 TO STA 71+64 FIFTH AVE	RT						1,736		
	SX-1	STA 11+22 TO STA 11+27 KELLY AVE	LT							58LF (FOR INFORMATION ONLY)	
	ST-1	STA 70+70 TO STA 71+30 FIFTH AVE	LT					4C.Y. (FOR INFORMATION ONLY)			
	BX-1	STA 600+25 TO STA 600+55 I-76	℄				30				
	BX-2	STA 608+69 TO STA 608+99 I-76	℄				30				
229	QX-1	STA 33+59 TO 34+92 THIRD AVE	℄								444
	TOTALS			4680	2,036	1,095	60	LUMP	3,385	LUMP	444

CALC. BY. ____ DATE ____	SUM-76-11.57	OHIO	231
CHKD. BY. ____ DATE ____	FED. PROJECT IR-76-2(44) 19	F.H.W.A. REGION 5	1214

SUMMIT COUNTY

MATCH LINE STA. 616+00
SEE SHEET 233.

MATCH LINE STA. 609+00
SEE SHEET 229.

JOHNS AVE.

ENGLEWOOD AVE.

LEAGUE ST.

EXIST. RAMP 'E-10'

EXIST. RAMP 'E-13'

RAMP 'E-15'

EXIST. RAMP 'E-12'

RAMP 'E-12'

EXIST. RAMP 'E-9'

RAMP 'E-9'

MARKET STREET

MARTHA AVENUE

SCALE IN FEET
0 40 80 120

STA. 609+00 TO STA. 616+00
REMOVAL PLANS

QUANTITY SUB-SUMMARY

CALC. BY CDB DATE 8/89	SUM-76-11.57	OHIO
CHKD. BY CB DATE 8/89	FEDERAL PROJ. IR-76-2-(44)19	F.H.W.A. REGION 5

232
1214

SHEET NUMBER	REFERENCE NUMBER	LOCATION	SIDE	202 PAVEMENT REMOVED SQ.YD.		202 FENCE REMOVED LIN.FT.		202 GUARDRAIL REMOVED LIN.FT.		202 CONCRETE BARRIER REMOVED LIN.FT.			202 WALK REMOVED SQ.FT.
231	X-1	STA 609+00 TO STA 610+73 I-76	LT	769									
	X-2	STA 609+00 TO STA 610+92 I-76	RT	775									
	X-3	STA 611+49 TO STA 616+00 I-76	LT	1,203									
	X-4	STA 611+65 TO STA 616+00 I-76	RT	1,243									
	X-5	STA 31+97 TO STA 32+35 MARKET ST	RT	16									
	X-6	STA 30+52 TO STA 30+53 MARKET ST	RT	13									
	X-7	STA 610+83 TO STA 613+99 I-76	LT	1,845									
	X-8	STA 7+80 TO STA 17+52 MARTHA AVE	℄	4,968									
	X-9	STA 33+77 TO STA 35+74 THIRD AVE	RT/LT	374									
	X-10	STA 613+60 TO STA 615+85 I-76	LT	616									
	X-11	STA 612+13 TO STA 616+00 I-76	RT	696									
	X-12	STA 609+00 I-76 TO STA 5+09 MARTHA AVE	RT/LT	794									
	X-13	STA 20+23 TO STA 21+87 ENGLEWOOD AVE	LT	1,089									
	GX-1	STA 608+78 TO STA 610+13 I-76	LT					137					
	GX-2	STA 614+48 TO STA 616+00 I-76	LT					148					
	GX-3	STA 614+97 TO STA 616+00 I-76	RT					101					
	GX-4	STA 609+91 TO STA 610+66 I-76	RT					76					
	GX-5	STA 610+13 TO STA 611+14 I-76	RT					125					
	GX-6	STA 609+67 TO STA 611+21 I-76	RT					186					
	GX-7	STA 612+20 TO STA 613+00 I-76	RT					86					
	FX-1	STA 16+30 TO STA 17+00 MARTHA AVE	RT			196							
	FX-2	STA 611+00 TO STA 615+05 I-76	LT			642							
	FX-3	STA 14+38 TO STA 15+18 MARTHA AVE	RT			88							
	FX-4	STA 609+07 TO STA 610+13 I-76	LT			106							
	FX-5	STA 612+20 TO STA 616+00 I-76	RT			809							
	FX-6	STA 11+45 TO STA 13+39 MARTHA AVE	LT			194							
	W-1	STA 30+53 TO STA 33+02 MARKET ST	RT										1,112
	W-2	STA 15+19 TO STA 17+52 MARTHA AVE	RT										1,402
	W-3	STA 16+44 TO STA 17+52 MARTHA AVE	LT										2,376
	W-4	STA 9 + 82 TO STA 15+19 MARTHA AVE	RT										3,410
	W-5	STA 20+62 TO STA 21+45 ENGLEWOOD AVE	LT										598
	W-6	STA 7+80 TO STA 9+54 MARTHA AVE	RT										1,260
	W-7	STA 5+10 TO STA 7+18 MARTHA AVE	LT										1,435
	BX-1	STA 610+25 TO STA 610+80 I-76	℄							55			
231	BX-2	STA 611+55 TO STA 612+45 I-76								90			
	TOTALS			14,401		2,035		855		145			11,593

CALC. BY. DATE	SUM-76-11.57	OHIO
CHKD. BY. DATE	FED. PROJECT IR-76-2(44) 19	F.H.W.A. REGION 5

233
1214

SUMMIT COUNTY

MARKET ST.

EXIST. RAMP 'E-10'

RAMP 'E-15'

EXIST. RAMP 'E-15'

RAMP 'E-16'

EXIST. RAMP 'E-16'

ENGLEWOOD AVE.

RAMP 'E-10'

DETROIT ST.

WIGLEY

CAMBRIDGE ST.

MATCH LINE STA. 616+00
SEE SHEET 231

MATCH LINE STA. 627+00
SEE SHEET 235

FOR BRIDGE REMOVAL, SEE SHEET 240.

SCALE IN FEET
0 40 80 120

STA. 616+00 TO STA. 627+00
REMOVAL PLANS

QUANTITY SUB-SUMMARY

CALC. BY / DATE	SUM-76-11.57	OHIO
CHKD. BY / DATE	FEDERAL PROJ. IR-76-2-(44)19	F.H.W.A. REGION 5

234
1214

SHEET NUMBER	REFERENCE NUMBER	LOCATION	SIDE	202 PAVEMENT REMOVED SQ.YD.	202 FENCE REMOVED LIN.FT.	202 GUARDRAIL REMOVED LIN.FT.	202 CONCRETE BARRIER REMOVED LIN.FT.	202 STRUCTURES REMOVED LUMP	202 WALK REMOVED SQ.FT.
233	X-1	STA 616+00 TO ST 617+55 I-76	LT	414					
	X-2	STA 616+00 TO STA 617+48 I-76	RT	394					
	X-3	STA 618+01 TO STA 627+00 I-76	LT	2,398					
	X-4	STA 617+96 TO STA 627+00 I-76	RT	2,411					
	X-5	STA 616+00 TO STA 618+45 I-76	RT/LT	1,010					
	X-6	STA 37+74 TO STA 38+70 MARKET ST	RT	22					
	X-7	STA 9+53 TO STA 11+03 DETROIT ST	℄	457					
	X-8	STA 22+70 TO STA 31+70 ENGLEWOOD AVE	℄	2324					
	X-9	STA 8+83 TO STA 9+83 CAMBRIDGE ST	℄	348					
	X-10	STA 6+43 TO STA 7+54 DETROIT ST	℄	332					
	X-11	STA 621+00 TO STA 627+00 I-76	RT	1,054					
	X-12	STA 12+00 TO STA 13+43 WIGLEY ST	LT	356					
	X-13	STA 622+58 TO STA 627+38 I-76	LT	1,181					
	X-14	STA 9+02 TO STA 9+79 WIGLEY ST	℄	273					
	GX-1	STA 616+00 TO STA 617+11 I-76	LT			113			
	GX-2	STA 616+00 TO STA 616+97 I-76	RT			98			
	GX-3	STA 616+40 TO STA 617+73 I-76	RT			175			
	GX-4	STA 618+48 TO STA 626+30 I-76	LT			790			
	GX-5	STA 618+22 TO STA 622+84 I-76	RT			463			
	GX-6	STA 624+60 TO STA 627+00 I-76	LT			240			
	GX-7	STA 622+58 TO STA 627+00 I-76	RT			435			
	ST-1	STA 620+57 TO STA 622+87 I-76	LT					90 C.Y. (FOR INFORMATION ONLY)	
	FX-1	STA 616+00 TO STA 617+56 I-76	LT		239				
	FX-2	STA 617+95 TO STA 620+57 I-76	LT		294				
	FX-3	STA 616+00 TO STA 620+93 I-76	RT		493				
	FX-4	STA 622+87 TO STA 623+45 I-76	LT		90				
	FX-5	STA 623+41 TO STA 627+00 I-76	LT		360				
	FX-6	STA 621+44 TO STA 627+00 I-76	RT		543				
	FX-7	STA. 9+33 WIGLEY TO STA 31+18 ENGLEWOOD	RT		60				
	W-1	STA 617+68 TO STA 618+07 I-76	LT						835
	W-2	STA 617+57 TO STA 618+45	RT/LT						1,955
	W-3	STA 22+70 TO STA 23+30 ENGLEWOOD AVE	RT						594
	W-4	STA 9+62 TO STA 10+95 DETROIT ST	LT						705
	W-5	STA 9+54 TO STA 11+00 DETROIT ST	LT						750
	W-6	STA 12+31 TO STA 13+43 WIGLEY ST	LT						594
	W-7	STA 23+22 TO STA 26+48 ENGLEWOOD AVE	RT						1,628
	W-8	STA 26+55 TO STA 30+46 ENGLEWOOD AVE	RT						2,100
	W-9	STA 30+73 TO STA 31+72 ENGLEWOOD AVE	RT						384
	BX-1	STA 617+15 TO STA 617+45 I-76	℄				30		
	BX-2	STA 618+05 TO STA 618+25 I-76	℄				20		
233	BX-3	STA 621+55 TO STA 622+45 I-76	℄				90		
	TOTALS			12,974	2,079	2,314	140	LUMP	9,545

CALC. BY. DATE	SUM-76-11.57	OHIO	235
CHKD. BY. DATE	FED. PROJECT IR-76-2(44) 19	F.H.W.A. REGION 5	1214

SUMMIT COUNTY

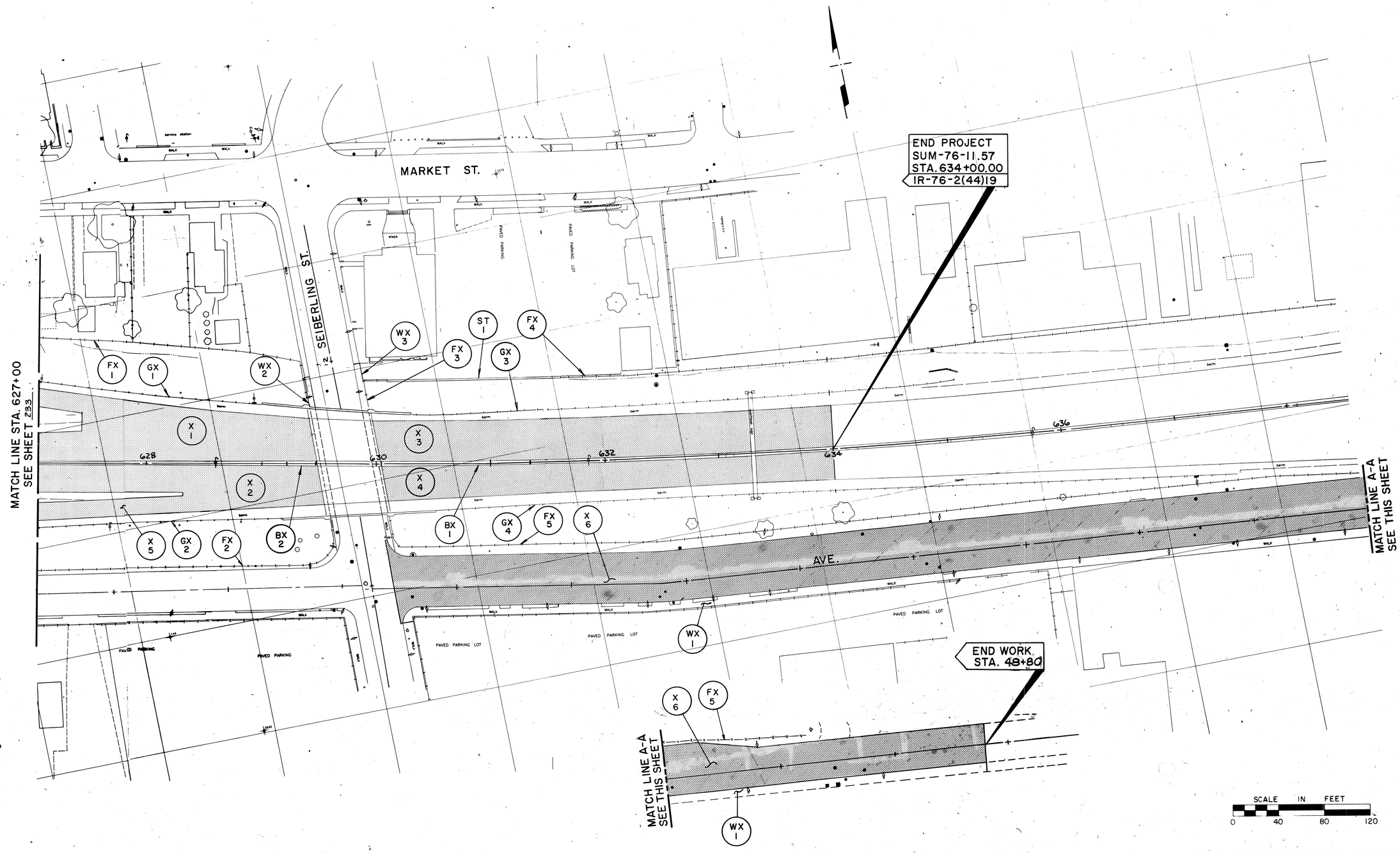

STA. 627+00 TO STA. 634+00

REMOVAL PLANS

QUANTITY SUB-SUMMARY

CALC BY / DATE			
CHKD BY / DATE	CB 8/89	FEDERAL PROJ. IR-76-2-(44)19	F.H.W.A. REGION 5

SUM-76-11.57 | OHIO

236
1214

SHEET NUMBER	REFERENCE NUMBER	LOCATION	SIDE	202 PAVEMENT REMOVED	202 FENCE REMOVED	202 GUARDRAIL REMOVED	202 CONCRETE BARRIER REMOVED	202 STRUCTURES REMOVED	202 WALK REMOVED
				SQ.YD.	LIN.FT.	LIN.FT.	LIN.FT.	LUMP	SQ.FT.
235	X-1	STA 627+00 TO STA 629+45 I-76	LT	1,159					
	X-2	STA 627+00 TO STA 629+53 I-76	RT	854					
	X-3	STA 630+00 TO STA 634+00 I-76	LT	1,600					
	X-4	STA 630+08 TO STA 634+00 I-76	RT	1,200					
	X-5	STA 627+00 TO STA 628+33 I-76	RT	225					
	X-6	STA 37+46 TO STA 48+80 ENGLEWOOD AVE	℄	5930					
	GX-1	STA 627+00 TO STA 629+00 I-76	LT			195			
	GX-2	STA 627+00 TO STA 629+18 I-76	RT			214			
	GX-3	STA 630+31 TO STA 635+10 I-76	LT			475			
	GX-4	STA 630+53 TO STA 637+50 I-76	RT			700			
	FX-1	STA 627+00 TO STA 629+38 I-76	LT		262				
	FX-2	STA 627+00 TO STA 629+60 I-76	RT		291				
	FX-3	STA 629+93 TO STA 630+11 I-76	LT		43				
	FX-4	STA 631+64 TO STA 634+00 I-76	LT		233				
	FX-5	STA 630+12 TO STA 634+00 I-76	RT		1,001				
	ST-1	STA 630+11 TO STA 631+64 I-76	LT					3.5 C.Y. (FOR INFORMATION ONLY)	
	BX-1	STA 630+05 TO STA 631+35 I-76	℄				130		
	BX-2	STA 629+22 TO STA 629+47 I-76	℄				25		
	WX-1	STA 37+46 TO 48+80 ENGLEWOOD AVE.	RT						7995
	WX-2	STA 10+35 TO 11+90 SEIBERLING ST	LT						600
235	WX-3	STA 10+25 TO 11+95 SEIBERLING ST	RT						660
	TOTALS			10,968	1,830	1,584	155	LUMP	9255

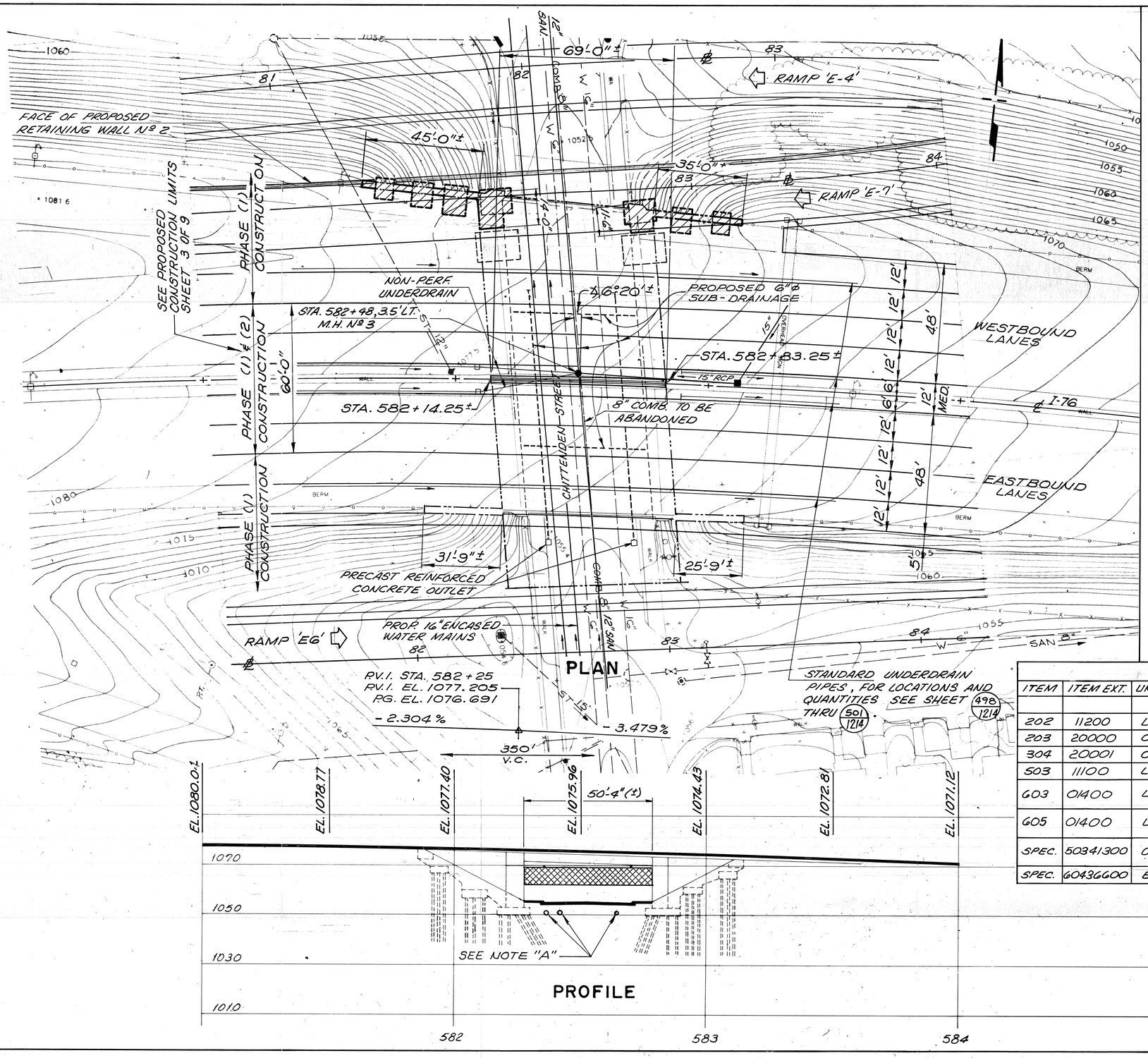

SEQUENCE OF CONSTRUCTION

PHASE (1)

REMOVE PORTIONS OF EXISTING BRIDGE DECK, BEAMS, ABUTMENT BACKWALLS AND WINGWALLS SEE PHASE (1) STRUCTURE REMOVAL LIMITS SHEET 238.

CONSTRUCT SOIL EMBANKMENT TO AN ELEVATION WHERE CLEARANCE BECOMES A PROBLEM FOR THE COMPACTION EQUIPMENT.

CONSTRUCT EARTH DIKES AT THE OUTSIDE EDGES OF THE PROPOSED EMBANKMENT USING PLAN SLOPES ON THE OUTSIDE SLOPES AND 1.5:1 SLOPES ON THE INSIDE SLOPES WITH THE TOE OF SLOPE BELOW THE EDGE OF THE REMAINING PORTION OF THE BRIDGE DECK.

PLACE LOW STRENGTH MORTAR BACKFILL MATERIAL RETAINED INSIDE THE EARTH DIKES AND THE EXISTING ABUTMENTS. UP TO AN ELEVATION JUST BELOW THE BRIDGE BEAMSEATS (EL. 1070.25±) AND ALLOW TO CURE.

PLACE SHEETING, DRAIN PIPES, AGGREGATE BASE AND REMAINING PORTION OF THE EMBANKMENT UP TO THE BOTTOM OF THE SUBGRADE UNDER PHASE (1) PAVEMENT.

CONSTRUCT PHASE (1) PAVEMENT

PHASE (2)

REMOVE REMAINING PORTIONS OF THE EXISTING BRIDGE DECK AND ABUTMENT BACKWALLS, SEE PHASE (2) STRUCTURE REMOVAL LIMITS SHEET 238.

PLACE PORTION OF AGGREGATE BASE AND THE REMAINING PORTION OF THE DRAIN PIPES.

PLACE AGGREGATE BASE UP TO 1:0 FROM THE BOTTOM OF THE SUBGRADE REMOVE SHEETING DOWN TO THIS LEVEL AND CONTINUE PLACING AGGREGATE BASE TO THE BOTTOM OF THE SUBGRADE UNDER PHASE (2) PAVEMENT.

CONSTRUCT PHASE (2) PAVEMENT

F.H.W.A. REG.	STATE	PROJECT	
5	OHIO	SUM-76-11.57	

237 / 1214

SUMMIT COUNTY

EXISTING STRUCTURE

SIMPLE SPAN (52'-9 7/8" ℄ TO ℄ BEARINGS) ROLLED STEEL BEAMS WITH REINFORCED CONCRETE ABUTMENTS, WINGWALLS AND SUPERSTRUCTURE WITH MEDIAN BARRIER, FASCIA PARAPETS W/ ALUM. PIPE RAIL AND (7 1/2"±) ASPHALT OVERLAY.

LEGEND

——·——·—— DENOTES LIMITS OF WORK AND ESTIMATED QUANTITIES.

DENOTES LOW STRENGTH MORTAR BACKFILL MATERIAL FOR ADDITIONAL DETAIL SEE SHEET 3 OF 9

NOTE "A"- PRIOR TO THE PLACING OF EMBANKMENT SEE ROADWAY DRAINAGE AND WATER MAIN DRAWINGS FOR PROPOSED WORK.

DENOTES PORTIONS OF STRUCTURE REMOVED, IN IT'S ENTIRETY.

ESTIMATED QUANTITIES

ITEM	ITEM EXT.	UNIT	TOTAL	DESCRIPTION	GENERAL	
202	11200	L.S.	LUMP	PORTIONS OF STRUCTURE REMOVED	LUMP	
203	20000	C.Y.	3,655	EMBANKMENT	3,655	
304	20001	C.Y.	543	AGGREGATE BASE, AS PER PLAN	543	
503	11100	L.S.	LUMP	COFFERDAMS, CRIBS & SHEETING	LUMP	
603	01400	L.F.	58	6" CONDUIT, TYPE F, 707.17, NON-PERFORATED, ASTM 3034 SDR35 OR SS931	58	
605	01400	L.F.	249	6" SHALLOW PIPE UNDERDRAIN, AS PER PLAN, 707.17, ASTM 3034 SDR35 OR SS931 PERFORATED AS PER 707.15, 4/ FABRIC WRAP	249	
SPEC.	50341300	C.Y.	847	LOW STRENGTH MORTAR BACKFILL MATERIAL, CLASS LSM-100	847	
SPEC.	60436600	EA.	2	PRECAST REINFORCED CONCRETE OUTLET	2	

QUANTITIES
CALC. BY: PEB 4-26-90
CHECKED BY: J.T.J. 4-26-90

URS

SITE PLAN & ESTIMATED QUANTITIES

1 / 6

REMOVAL CHITTENDEN STREET
I-76 STA. 582+50.00

AKRON OHIO — SUMMIT COUNTY

DESIGNED	DRAWN	TRACED	CHECKED	REVIEWED	DATE	REVISED
A.L.H.	A.L.H.		FAM			

F.H.W.A. REG.	STATE	PROJECT	
5	OHIO	SUM-76-11.57	

238
1214

SUMMIT COUNTY

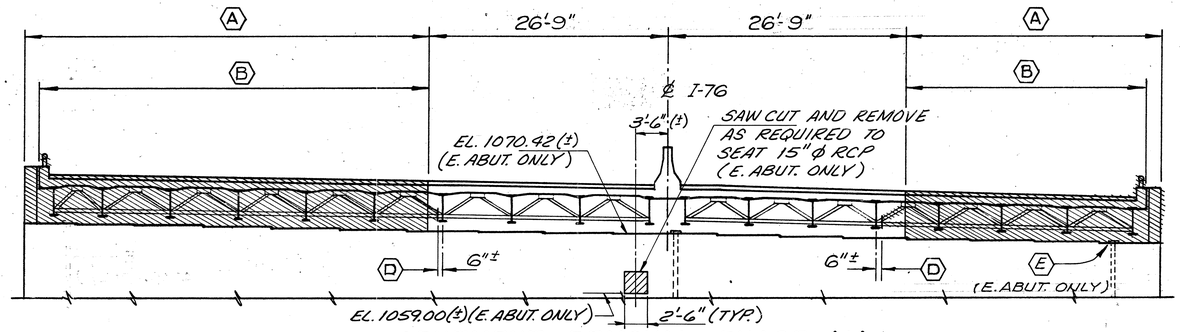

ABUTMENT REMOVAL PHASE (1)

(EAST ABUTMENT SHOWN, WEST ABUTMENT SIMILAR)

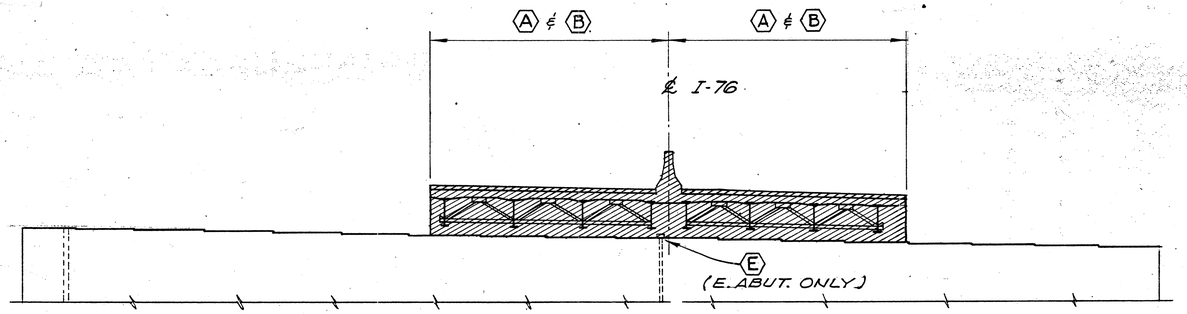

ABUTMENT REMOVAL PHASE (2)

(EAST ABUTMENT SHOWN, WEST ABUTMENT SIMILAR)

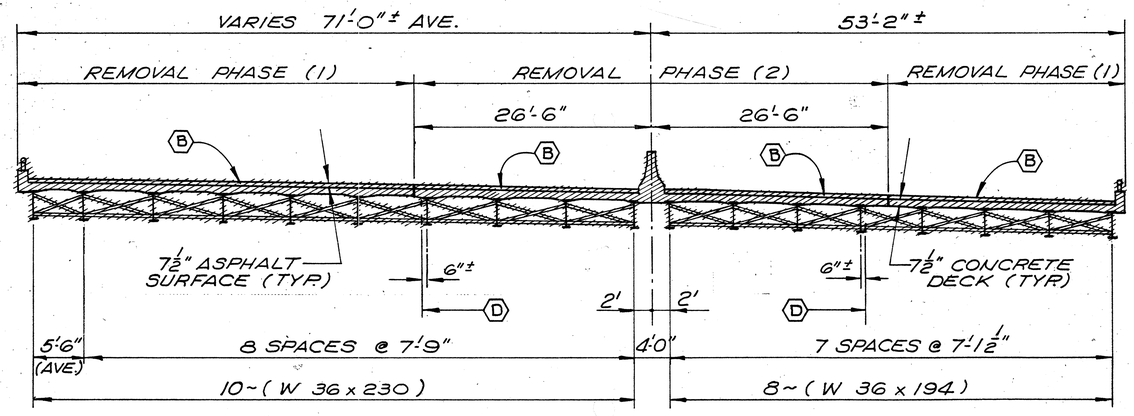

DECK REMOVAL PHASE (1) & (2)

(AS SHOWN & NOTED)

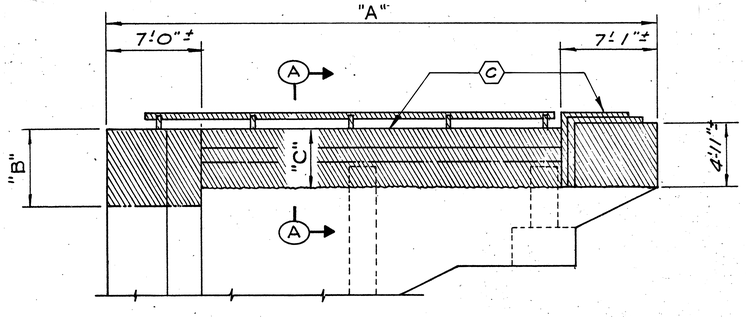

WINGWALL REMOVAL PHASE (1)

WINGWALL	N.W.	S.W.	N.E.	S.E.
DIM. "A"	*	41.00	*	35.00
DIM. "B"	*	6.19	*	6.27
DIM. "C"	*	4.50	*	4.50

*~INDICATES WINGWALL TO BE REMOVED IN ITS ENTIRETY. SEE SHEET 16 FOR LOCATION.

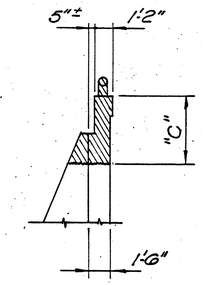

SECTION "A-A"

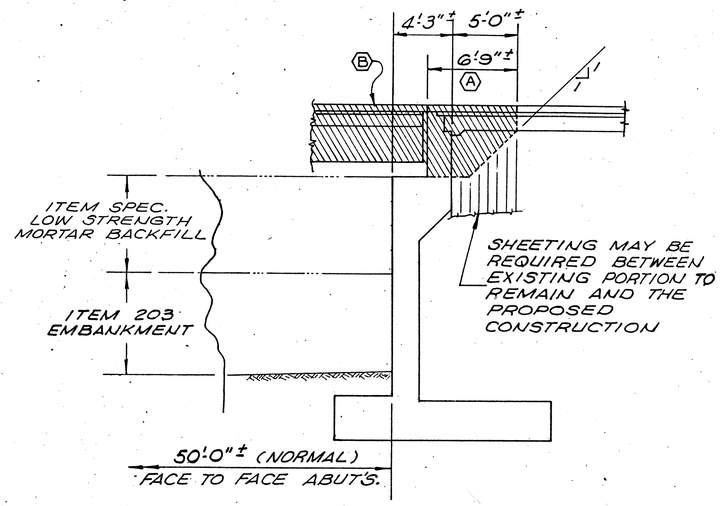

TYPICAL ABUTMENT SECTION

SEE SHEET 16 FOR ADDITIONAL ABUTMENT REMOVAL.

NOTE:

(A) ABUTMENT BACKWALL AND PARTIAL APPROACH SLAB REMOVAL.

(B) DECK REMOVAL INCLUDING BEAMS, CROSSFRAMES, BEARINGS AND RAILING.

(C) WINGWALL REMOVAL INCLUDING RAILING AND END BLOCK.

(D) REMOVE CROSSFRAMES TO THIS POINT.

(E) BEFORE THE PLACEMENT OF EMBANKMENT FILL ABOVE THE DRAIN PIPE OPENING, THE OPENING SHALL BE CAPPED OR FILLED WITH MORTAR TO A DEPTH OF 1'6"±. PAYMENT FOR THIS WORK SHALL BE INCLUDED WITH ITEM 203 - EMBANKMENT.

DENOTES LIMITS OF REMOVAL TO BE INCLUDED WITH ITEM 202 ~ PORTIONS OF STRUCTURES REMOVED.

(1) FOR ADDITIONAL PHASING AND CONSTRUCTION DETAILS SEE SHEET 3 6.

(2) EXISTING BRIDGE PLANS CAN BE OBTAINED FROM THE O.D.O.T, DISTRICT 4, RAVENNA, OHIO FOR DIMENSIONS AND DETAILS NOT SHOWN.

URS

PROPOSED 2 6
STRUCTURE REMOVAL LIMITS

REMOVAL CHITTENDEN STREET
I-76 STA. 582+50.00

AKRON OHIO SUMMIT COUNTY

DESIGNED	DRAWN	TRACED	CHECKED	REVIEWED	DATE	REVISED
A.L.H.	A.L.H.		F.A.M.			

F.H.W.A. REG.	STATE	PROJECT	
5	OHIO	SUM-76-11.57	

239 / 1214

SUMMIT COUNTY

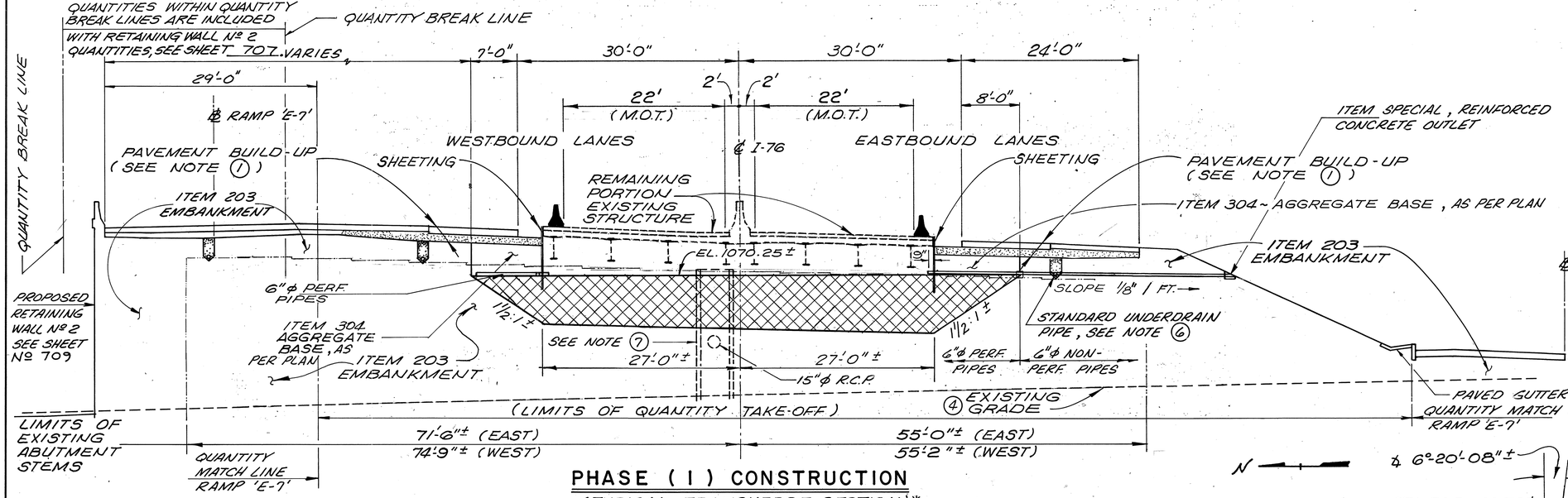

PHASE (1) CONSTRUCTION

(TYPICAL TRANSVERSE SECTION)*

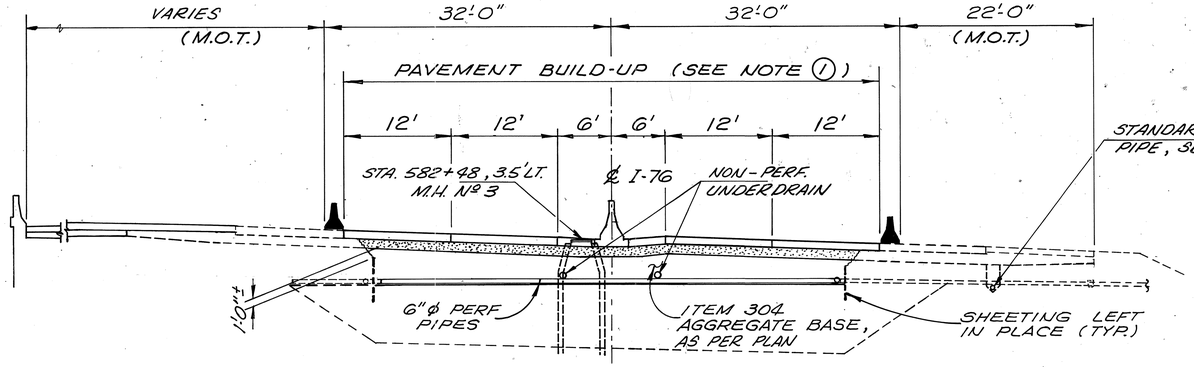

PHASE (2) CONSTRUCTION

(TYPICAL TRANSVERSE SECTION)*

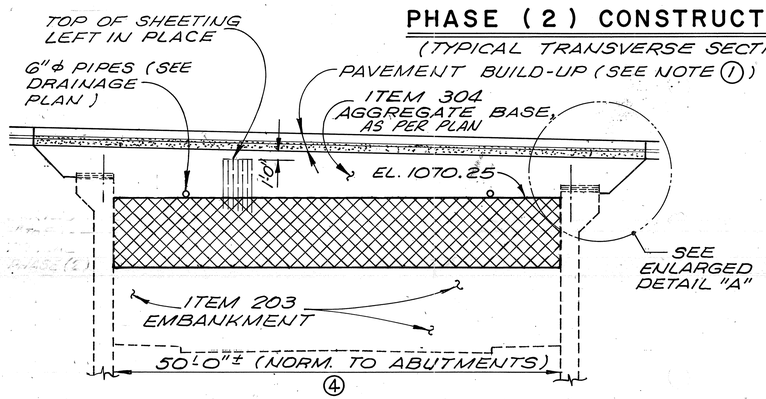

SECTION "C-C"

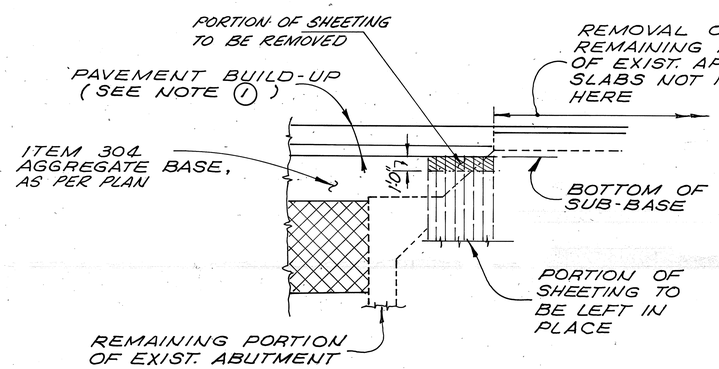

DETAIL "A"

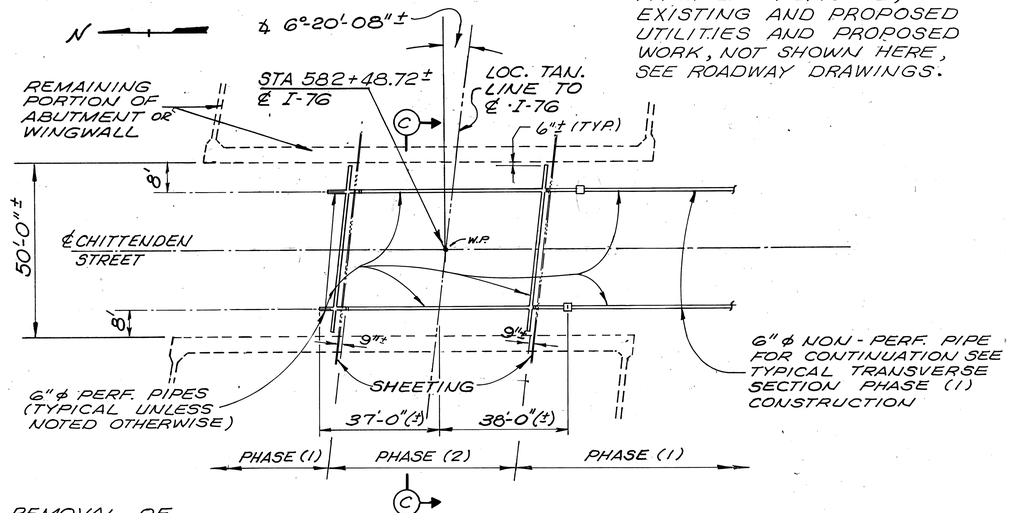

DRAINAGE PLAN

(FOR STANDARD UNDERDRAINS NOT SHOWN SEE NOTE 6.)

NOTE

1. FOR ACTUAL PAVEMENT BUILD-UP AND PAVEMENT BREAKS SEE PROPOSED TYPICAL SECTIONS SHT. 9 / 1214
2. FOR ADDITIONAL PHASING AND REMOVAL DETAILS SEE SHEET 2 / 6 .
3. M.O.T. ~ DENOTES LIMITS OF MAINTENANCE OF TRAFFIC.

   DENOTES LIMITS OF ITEM SPEC. ~ LOW STRENGTH MORTAR BACKFILL MATERIAL, CLASS LSM-100. (SEE SHEET Nº 92.)
4. FOR WORK ASSOCIATED WITH PAVEMENT REMOVAL, EXISTING AND PROPOSED UTILITIES AND PROPOSED WORK, NOT SHOWN HERE, SEE ROADWAY DRAWINGS.
5. *~ INDICATES TRANSVERSE SECTION FROM STA. 582+23.77 TO STA. 582+74.09 .
6. FOR STANDARD UNDERDRAIN LOCATIONS AND QUANTITIES SEE SHEET 498 / 1214 THRU 501 / 1214 .
7. MANHOLE @ STA. 582+48, 3.5' LT. SHALL BE BUILT TO AN ELEVATION GREATER THAN THE TOP OF LOW STRENGTH MORTOR BACKFILL ELEVATION IN PHASE (1) CONSTRUCTION, PRIOR TO PLACING THE MORTOR BACKFILL. THE REMAINING PORTION OF THE MANHOLE SHALL BE BUILT DURING PHASE (2) CONSTRUCTION.

URS

3 / 6

PROPOSED CONSTRUCTION LIMITS

REMOVAL CHITTENDEN STREET
I-76 STA. 582+50.00

AKRON OHIO SUMMIT COUNTY

DESIGNED	DRAWN	TRACED	CHECKED	REVIEWED	DATE	REVISED
AL.H.	AL.H.		F.A.M.			

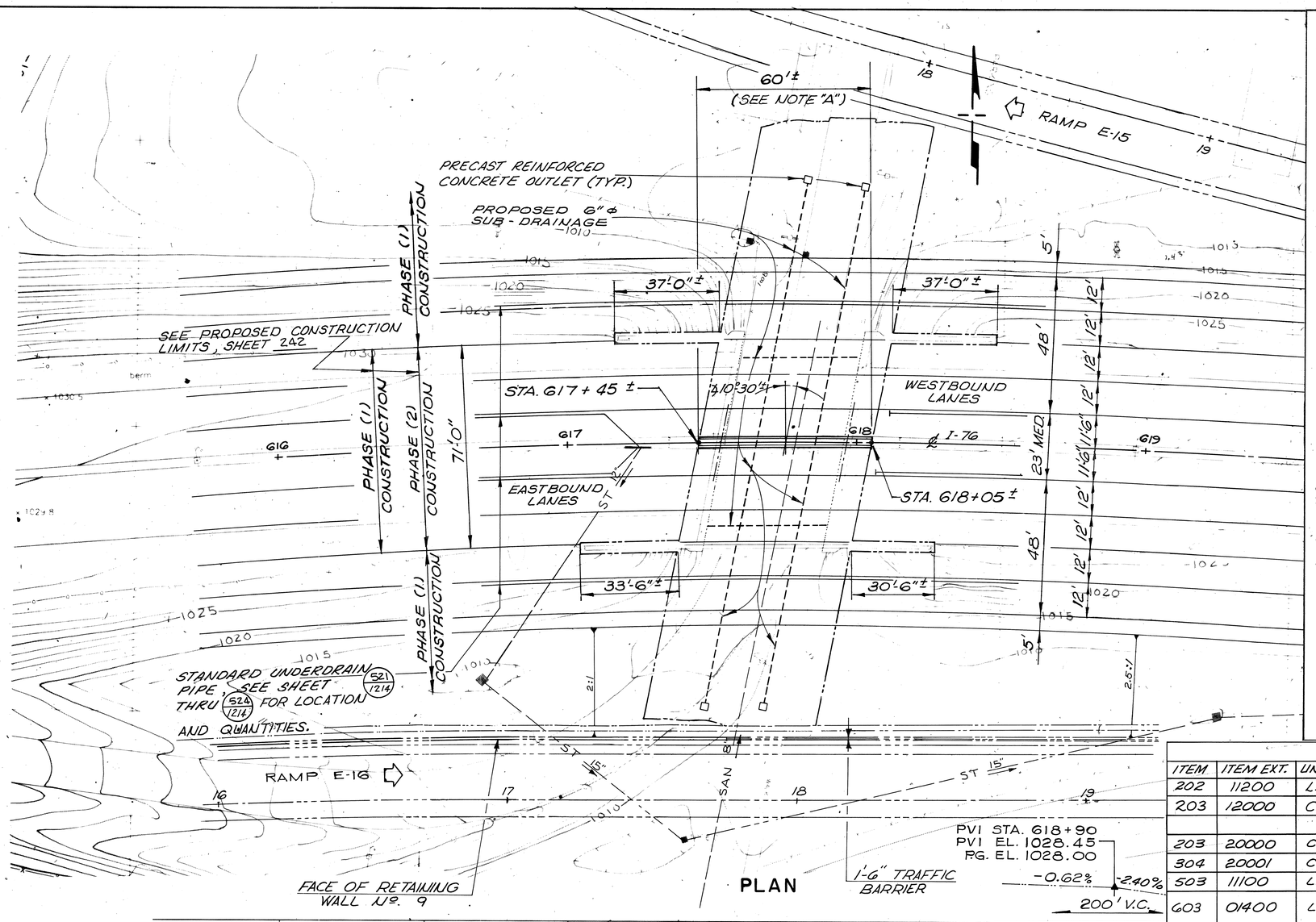

SEQUENCE OF CONSTRUCTION

PHASE (1)

REMOVE PORTIONS OF EXISTING BRIDGE DECK, BEAMS, ABUTMENT BACKWALLS AND WINGWALLS SEE PHASE (1) STRUCTURE REMOVAL LIMITS SHEET 241.

CONSTRUCT SOIL EMBANKMENT TO AN ELEVATION WHERE CLEARANCE BECOMES A PROBLEM FOR THE COMPACTION EQUIPMENT.

CONSTRUCT EARTH DIKES AT THE OUTSIDE EDGES OF THE PROPOSED EMBANKMENT USING PLAN SLOPES ON THE OUTSIDE SLOPES AND 1.5:1 SLOPES ON THE INSIDE SLOPES WITH THE TOE OF SLOPE BELOW THE EDGE OF THE REMAINING PORTION OF THE BRIDGE DECK.

PLACE LOW STRENGTH MORTAR BACKFILL MATERIAL RETAINED INSIDE THE EARTH DIKES AND THE EXISTING ABUTMENTS. UP TO AN ELEVATION JUST BELOW THE BRIDGE BEAMSEATS (EL. 1023.25±) AND ALLOW TO CURE.

PLACE SHEETING, DRAIN PIPES, AGGREGATE BASE AND REMAINING PORTION OF THE EMBANKMENT UP TO THE BOTTOM OF THE SUBGRADE UNDER PHASE (1) PAVEMENT.

CONSTRUCT PHASE (1) PAVEMENT

PHASE (2)

REMOVE REMAINING PORTIONS OF THE EXISTING BRIDGE DECK AND ABUTMENT BACKWALLS, SEE PHASE (2) STRUCTURE REMOVAL LIMITS SHEET 241.

PLACE PORTION OF AGGREGATE BASE AND THE REMAINING PORTION OF THE DRAIN PIPES.

PLACE AGGREGATE BASE UP TO 1'-0 FROM THE BOTTOM OF THE SUBGRADE REMOVE SHEETING DOWN TO THIS LEVEL AND CONTINUE PLACING AGGREGATE BASE TO THE BOTTOM OF THE SUBGRADE UNDER PHASE (2) PAVEMENT.

CONSTRUCT PHASE (2) PAVEMENT

FHWA REG	STATE	PROJECT	
5	OHIO	SUM-76-11.57	

240 / 1214

SUMMIT COUNTY

EXISTING STRUCTURE

SIMPLE SPAN (44'-0" ℄ TO ℄ BEARINGS) ROLLED STEEL BEAMS WITH REINFORCED CONCRETE ABUTMENTS, WINGWALLS AND SUPERSTRUCTURE WITH MEDIAN BARRIER, FASCIA PARAPETS W/ ALUM. PIPE RAIL AND (7½"±) ASPHALT OVERLAY.

LEGEND

——·——·—— DENOTES LIMITS OF WORK AND ESTIMATED QUANTITIES.

▨ DENOTES LOW STRENGTH MORTAR BACKFILL MATERIAL FOR ADDITIONAL DETAIL SEE SHEET 92

NOTE "A"~PRIOR TO THE PLACING OF EMBANKMENT SEE ROADWAY DRAINAGE DRAWINGS FOR THE PROPOSED WORK.

ESTIMATED QUANTITIES (CARRIED FORWARD SH. 115&116)

ITEM	ITEM EXT.	UNIT	TOTAL	DESCRIPTION	GENERAL	
202	11200	L.S.	LUMP	PORTIONS OF STRUCTURE REMOVED	LUMP	
203	12000	C.Y.	1	EXCAVATION NOT INCLUDING EMBANKMENT CONSTRUCTION.	1	
203	20000	C.Y.	3658	EMBANKMENT	3658	
304	20001	C.Y.	522	AGGREGATE BASE, AS PER PLAN	522	
503	11100	L.S.	LUMP	COFFERDAMS, CRIBS & SHEETING	LUMP	
603	01400	L.F.	145	6" CONDUIT, TYPE F, 707.17, NON-PERFORATED, ASTM 3034 SDR35 OR SS931	145	
605	01400	L.F.	245	6" SHALLOW PIPE UNDERDRAIN, AS PER PLAN, 707.17, ASTM 3034 SDR35 OR SS931 PERFORATED AS PER 707.15, W/FABRIC WRAP	245	
SPEC.	50341300	C.Y.	709	LOW STRENGTH MORTAR BACKFILL MATERIAL, CLASS LSM-100	709	
SPEC.	60436600	EA.	4	PRECAST REINFORCED CONCRETE OUTLET	4	

QUANTITIES

CALC. BY: PEB 4-26-90

CHECKED BY: J.T.J. 4-26-90

URS

4/6

SITE PLAN & ESTIMATED QUANTITIES

REMOVAL RAMP E-10

I-76 STA. 617+75.00

AKRON OHIO SUMMIT COUNTY

DESIGNED	DRAWN	TRACED	CHECKED	REVIEWED	DATE	REVISED
A.L.H.	A.L.H.		F.A.M.			

F.H.W.A. REG.	STATE	PROJECT	
5	OHIO	SUM-76-11.57	

241
1214

SUMMIT COUNTY

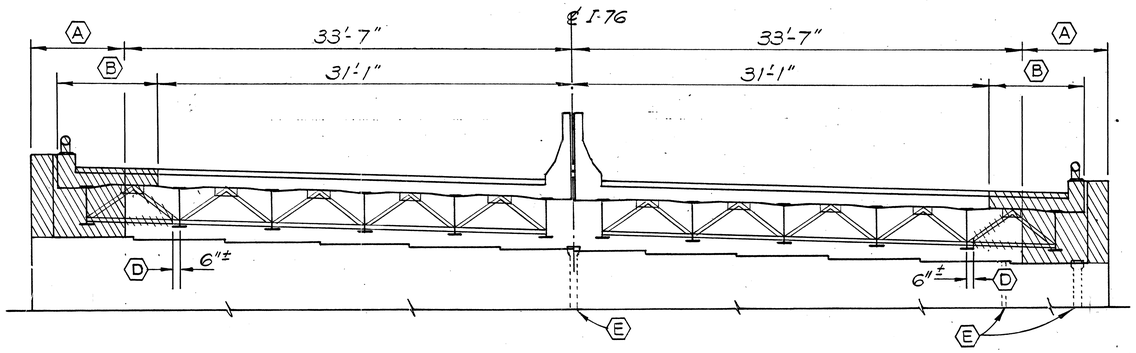

ABUTMENT REMOVAL PHASE (1)

(EAST ABUTMENT SHOWN, WEST ABUTMENT SIMILAR)

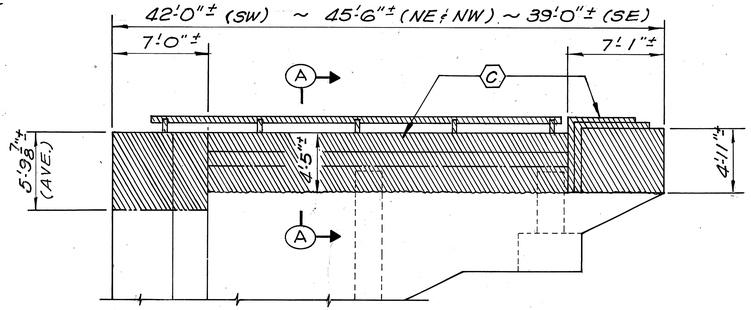

WINGWALL REMOVAL PHASE (1)

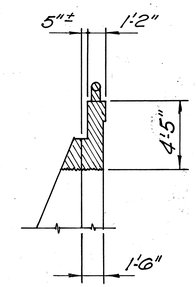

SECTION "A-A"

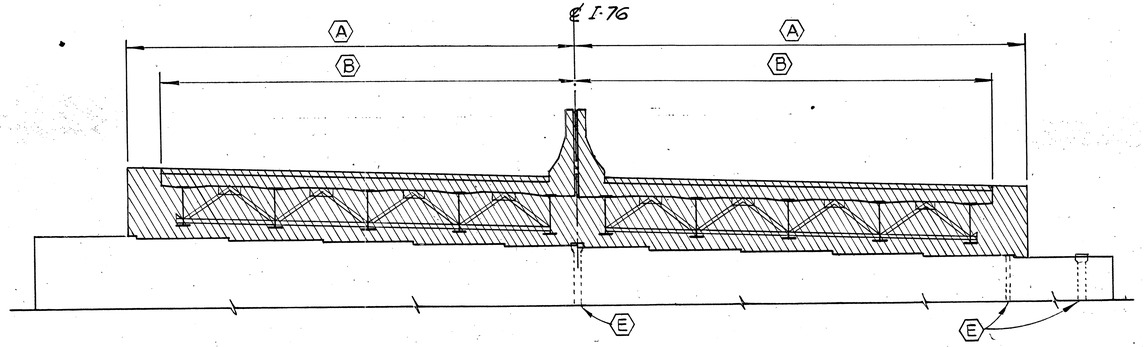

ABUTMENT REMOVAL PHASE (2)

(EAST ABUTMENT SHOWN, WEST ABUTMENT SIMILAR)

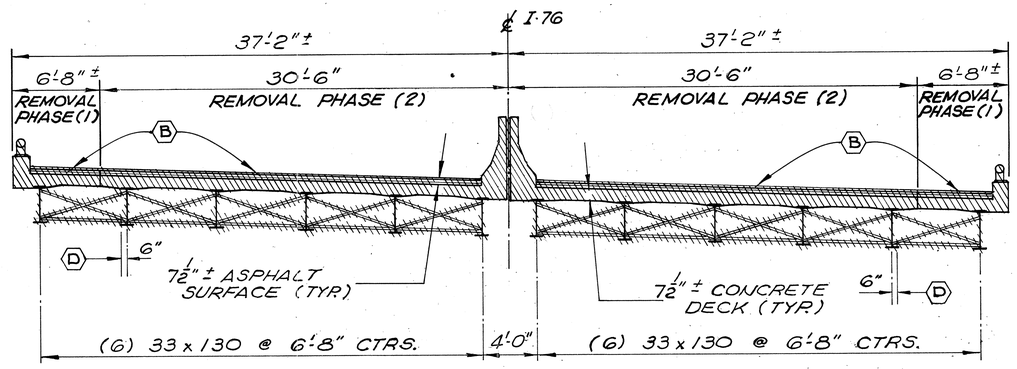

DECK REMOVAL PHASE (1) & (2)

(AS SHOWN & NOTED)

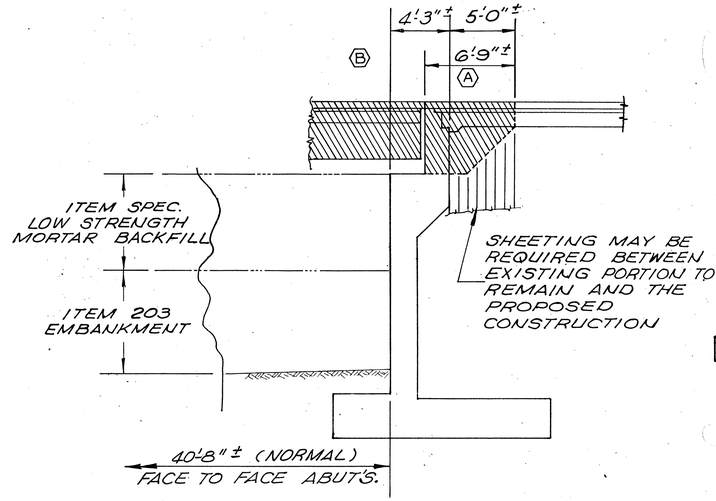

TYPICAL ABUTMENT SECTION

NOTE:

(A) ABUTMENT BACKWALL AND PARTIAL APPROACH SLAB REMOVAL.

(B) DECK REMOVAL INCLUDING BEAMS, CROSSFRAMES, BEARINGS AND RAILING.

(C) WINGWALL REMOVAL INCLUDING RAILING AND END BLOCK.

(D) REMOVE CROSSFRAMES TO THIS POINT.

(E) BEFORE THE PLACEMENT OF EMBANKMENT FILL ABOVE THE DRAIN PIPE OPENING, THE OPENING SHALL BE CAPPED OR FILLED WITH MORTAR TO A DEPTH OF 1'-6"±. PAYMENT FOR THIS WORK SHALL BE INCLUDED WITH ITEM 203 - EMBANKMENT.

DENOTES LIMITS OF REMOVAL TO BE INCLUDED WITH ITEM 202 - PORTIONS OF STRUCTURES REMOVED.

(1) FOR ADDITIONAL PHASING AND CONSTRUCTION DETAILS SEE SHEET 6/6.

URS

5/6

PROPOSED STRUCTURE REMOVAL LIMITS

REMOVAL RAMP E-10
I-76 STA. 617+75.00

AKRON OHIO — SUMMIT COUNTY

DESIGNED	DRAWN	TRACED	CHECKED	REVIEWED	DATE	REVISED
A.L.H.	A.L.H.		F.A.M.			

F.H.W.A. REG.	STATE	PROJECT	
5	OHIO	SUM-76-11.57	

242 / 1214

SUMMIT COUNTY

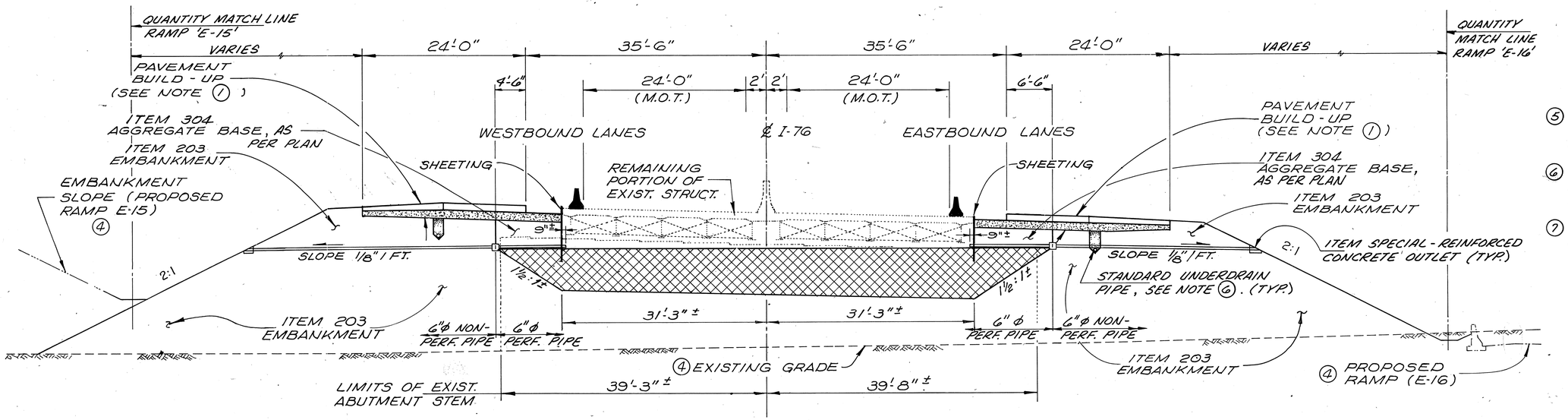

PHASE (1) CONSTRUCTION
(TYPICAL TRANSVERSE SECTION) *

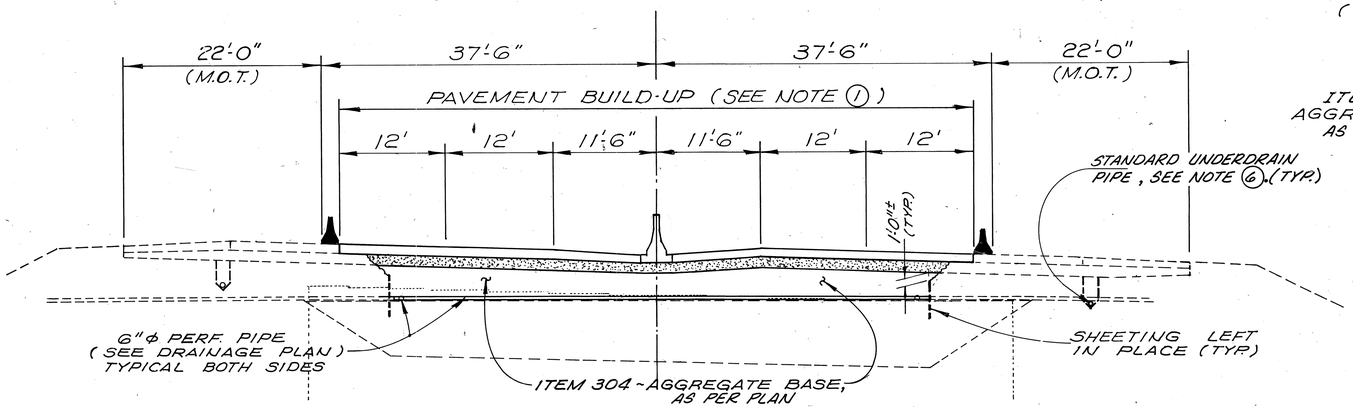

PHASE (2) CONSTRUCTION
(TYPICAL TRANSVERSE SECTION) *

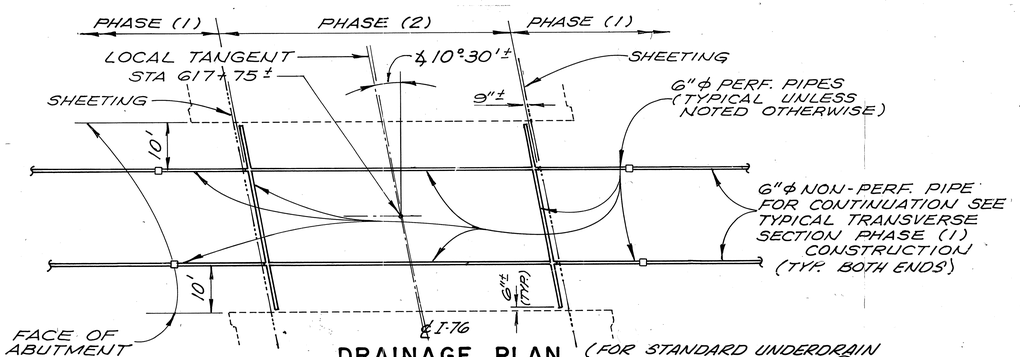

DRAINAGE PLAN

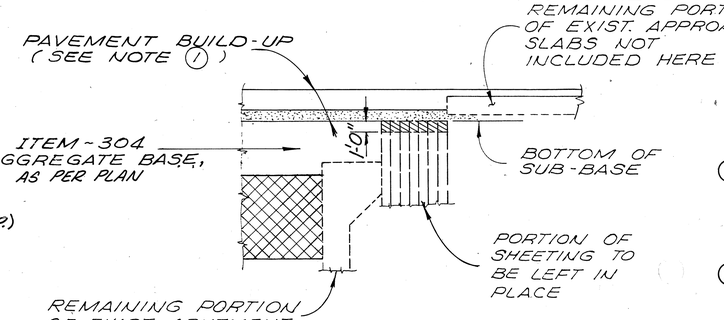

DETAIL "A"

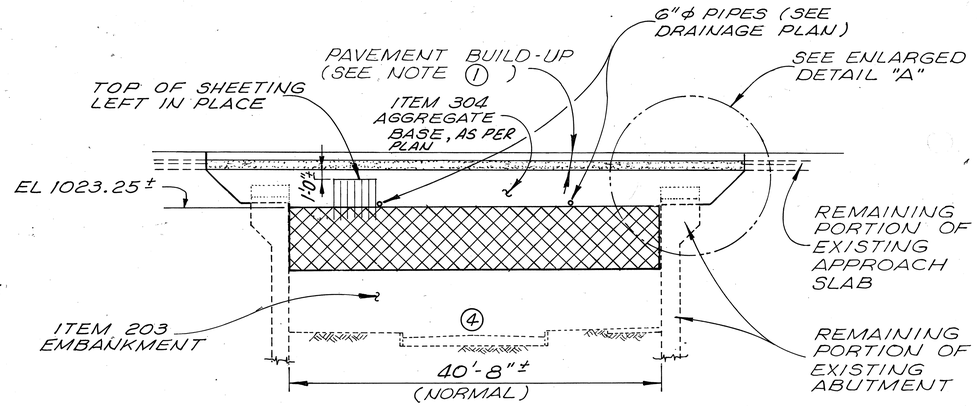

TYPICAL LONGITUDINAL SECTION

(5) * ~ INDICATES TRANSVERSE SECTION FROM STA. 617+54.25 TO STA. 617+95.75.

(6) FOR STANDARD UNDERDRAIN LOCATIONS AND QUANTITIES SEE SHEET (521/1214) THRU (524/1214).

(7) EXISTING BRIDGE PLANS CAN BE OBTAINED FROM THE OHIO DEPARTMENT OF TRANSPORTATION, DISTRICT 4, RAVENNA, OHIO FOR DETAILS AND DIMENSIONS NOT SHOWN.

NOTE

(1) FOR ACTUAL PAVEMENT BUILD-UP AND PAVEMENT BREAKS SEE PROPOSED TYPICAL SECTIONS SHT. (10/1214)

(2) FOR ADDITIONAL PHASING AND REMOVAL DETAILS SEE SHEET 5/6.

(3) M.O.T. ~ DENOTES LIMITS OF MAINTENANCE OF TRAFFIC.

▨ DENOTES LOW STRENGTH MORTOR BACKFILL MATERIAL, CLASS LSM-100. (SEE SHEET Nº 92.)

(4) FOR WORK ASSOCIATED WITH PAVEMENT REMOVAL, EXISTING AND PROPOSED UTILITIES AND PROPOSED WORK, NOT SHOWN HERE, SEE ROADWAY DRAWINGS.

URS

6/6

PROPOSED CONSTRUCTION LIMITS

REMOVAL RAMP E-10
I-76 STA. 617+75.00

AKRON OHIO — SUMMIT COUNTY

DESIGNED	DRAWN	TRACED	CHECKED	REVIEWED	DATE	REVISED
A.L.H.	A.L.H.		F.A.M.			

CALC. BY. DATE	SUM-76-11.57	OHIO
CHKD. BY. DATE	FED PROJECT IR-76-2(44)19	F.H.W.A. REGION 5

243
12.14

SUMMIT COUNTY

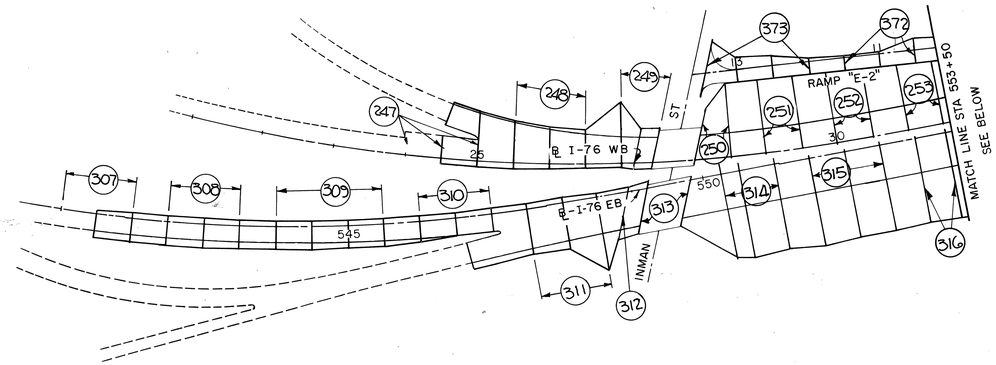

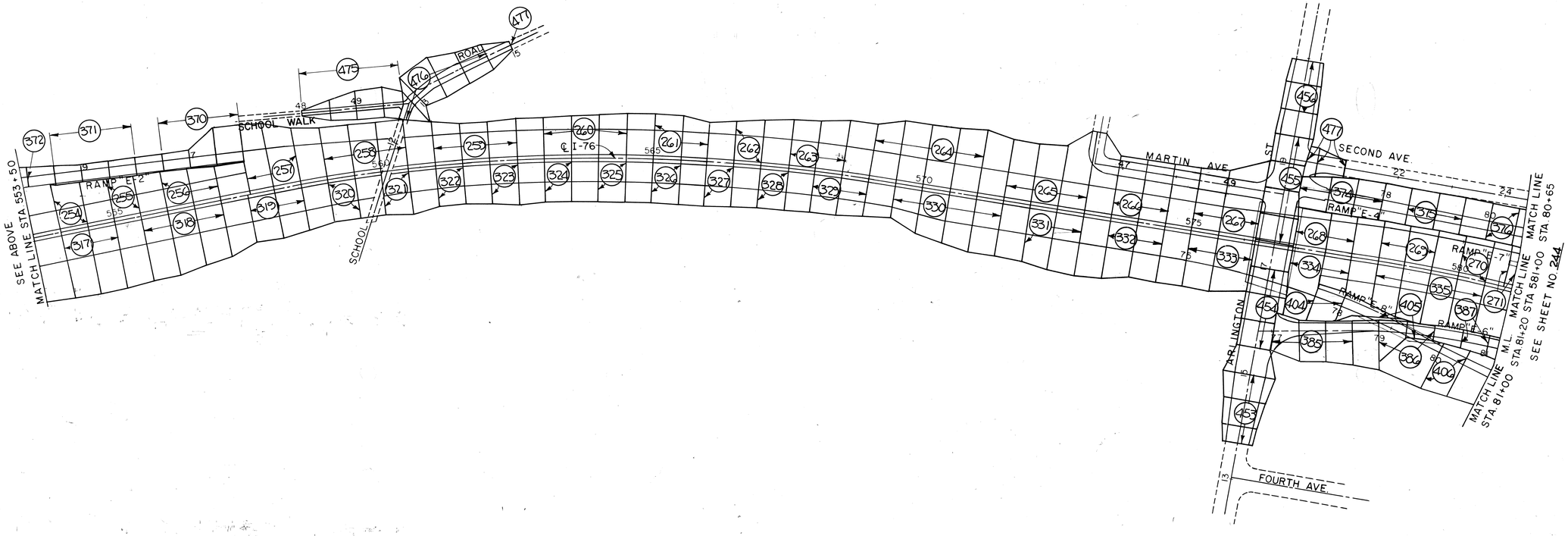

SCALE IN FEET
0 100 200 300

CROSS SECTION LAYOUT

CALC. BY. DATE	SUM-76-11.57	OHIO
CHKD. BY. DATE	FED. PROJECT IR-76-2(44)19	F.H.W.A. REGION 5

244
1214

SUMMIT COUNTY

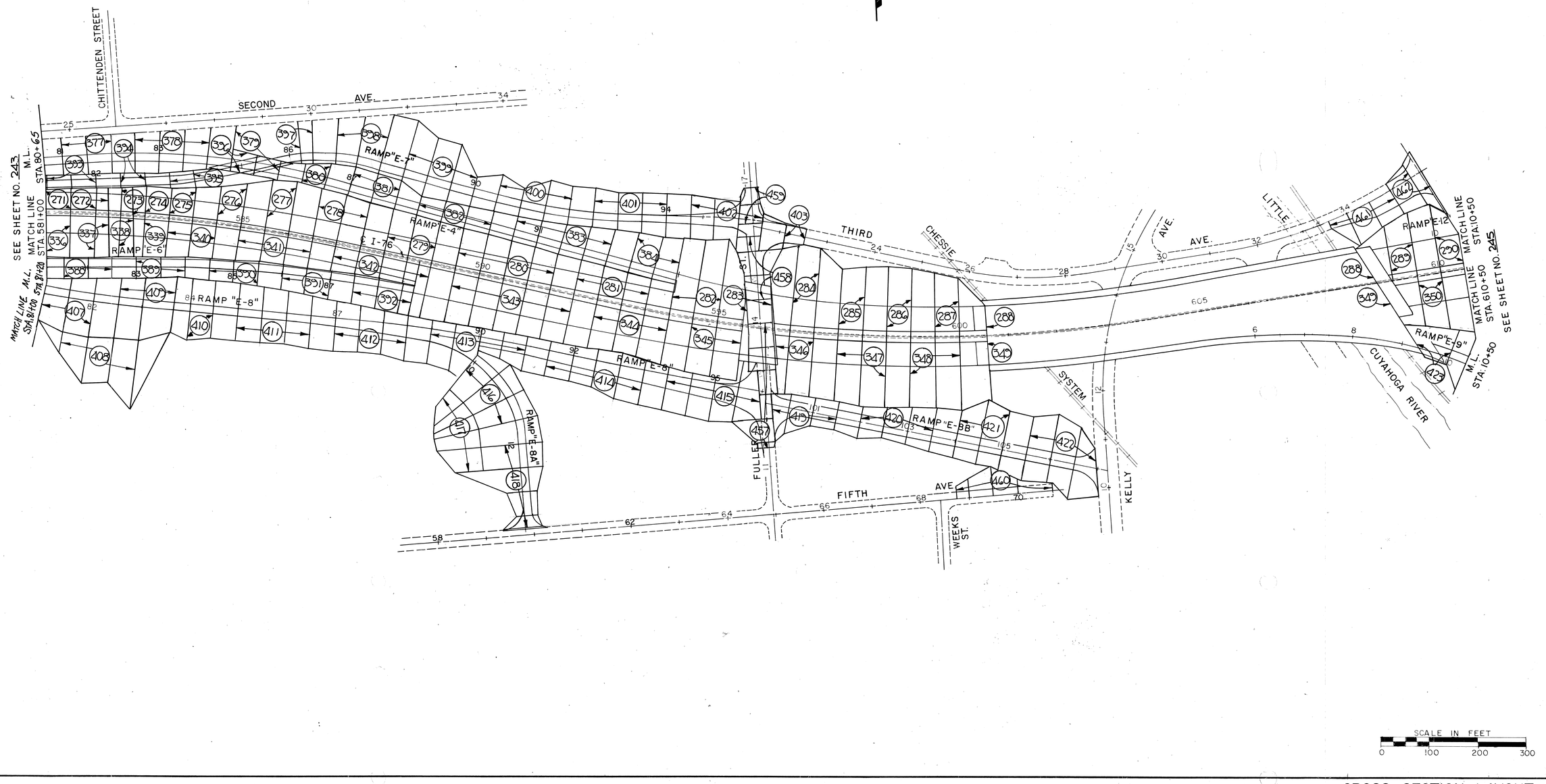

CROSS SECTION LAYOUT

CALC. BY. DATE	SUM-76-11.57	OHIO
CHKD. BY. DATE	FED. PROJECT IR-76-2(44)19	F.H.W.A. REGION 5

245
1214

SUMMIT COUNTY

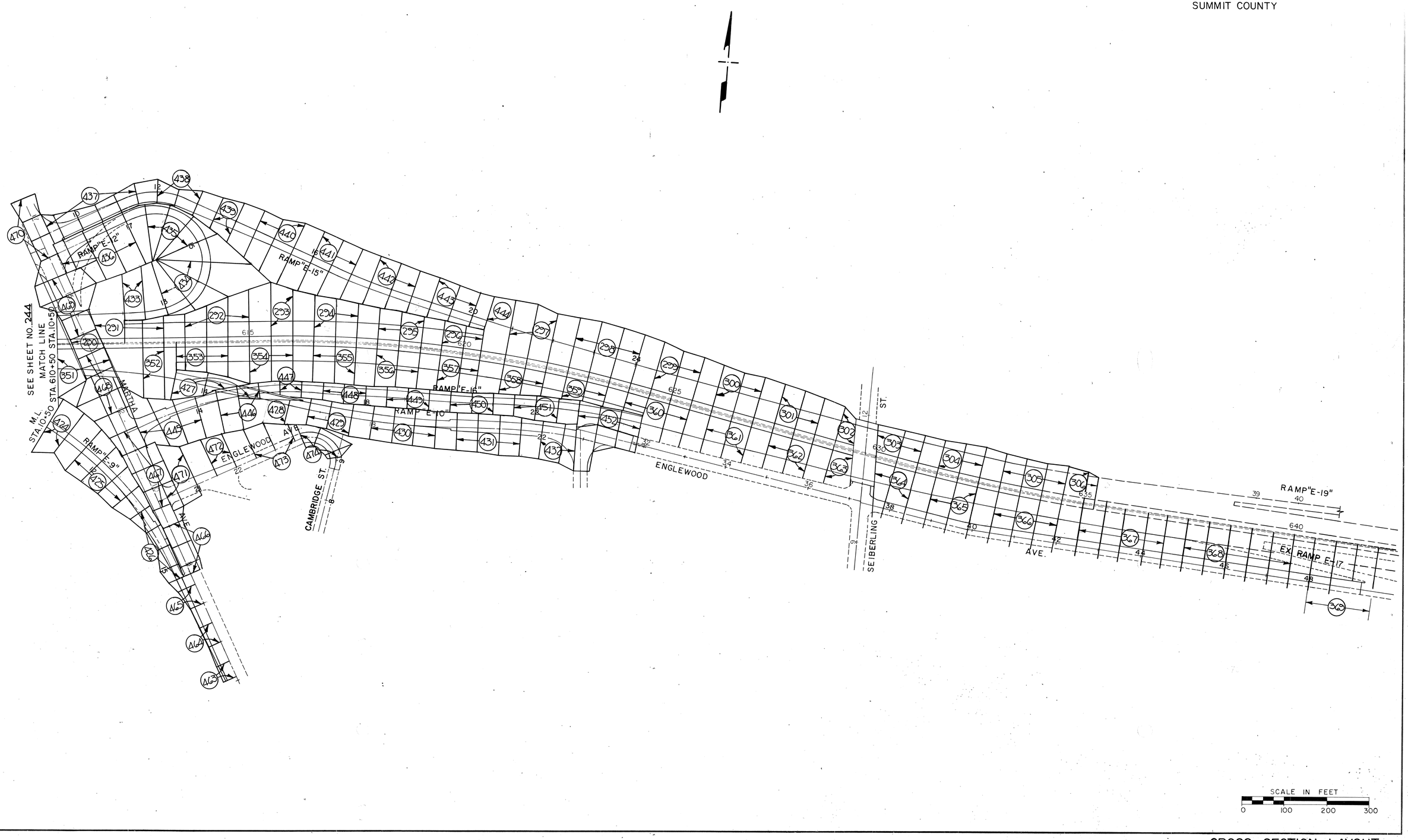

CROSS SECTION LAYOUT

AA. B.Pe 71942R

CALC. BY. DATE	SUM-76-11.57	OHIO	246 / 1214
CHKD. BY. DATE	FEDERAL PROJ. IR-76-2-(44)19	F.H.W.A. REGION 5	

RAMP 'E-12'

RAMP 'E-15'

RAMP 'E-16'

RAMP 'E-10'

RAMP 'E-9'

34 THIRD AVE.

AVENUE

MARTHA

ENGLEWOOD AVENUE

RAILROAD

CUYAHOGA RIVER

SCALE IN FEET

0 40 80 120

MARTHA AVENUE INTERCHANGE

GRADING PLAN

CALCULATED BY PRP DATE 3/90
CHECKED BY DSB DATE 7/90

FHWA REG	STATE	PROJECT	247 / 12.14
5	OHIO		

SUM - 76 - 11.57
IR - 76 - 2(44)19

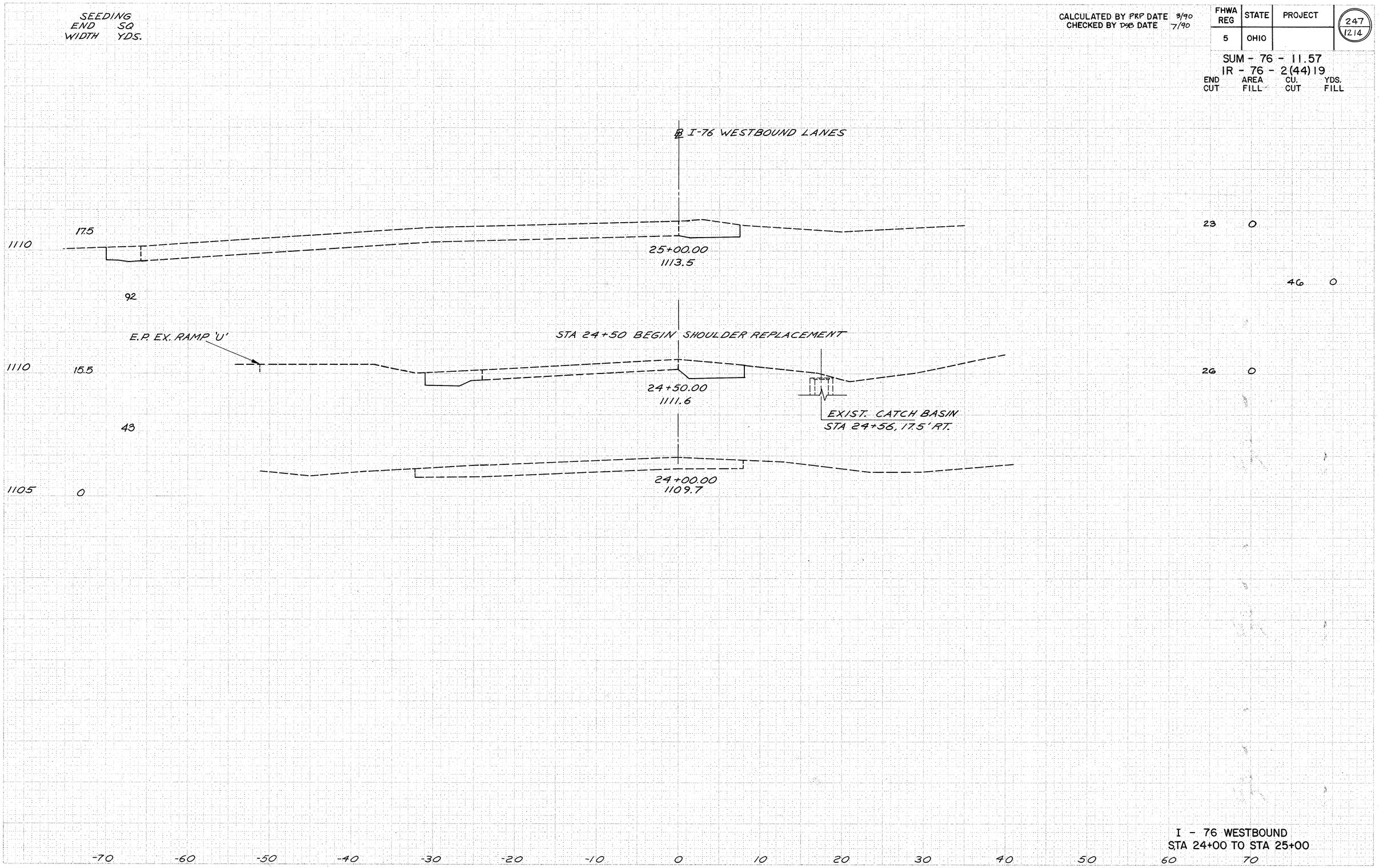

FINAL SURVEY: SURVEYED, PLOTTED, PLATE, ROUTE, BRIDGE, ITEM, DATE, AERIAL PHOTO, No.

ORIGINAL SURVEY: SURVEYED, PLOTTED, PLATE, ROUTE, BRIDGE, ITEM, DATE, AERIAL PHOTO, No.

PLATE 3, CROSS SECTION
ROUTES 4, 1958 CO.

CALCULATED BY PRP DATE 3/90
CHECKED BY DDB DATE 7/90

FHWA REG	STATE	PROJECT
5	OHIO	

248
1214

SUM - 76 - 11.57
IR - 76 - 2(44)19

SEEDING
END WIDTH — SQ. YARDS

END CUT	AREA FILL	CU. YDS. CUT	CU. YDS. FILL
1115	16		
1110			
1105			
1100	86		

℄ I-76 WESTBOUND
26+50.00
1118.2
23 0
41 0

END CUT	AREA FILL	CU. YDS. CUT	CU. YDS. FILL
1115	15		
	86		
1115			
1110	16		
1105			
1100	93		

℄
26+00.00
1117.0
21 0
39 0

℄ I-76 WESTBOUND
25+50.00
1115.5
21 0
41 0

-130 -120 -110 -100 -90 -80 -70 -60 -50 -40 -30 -20 -10 0 10 20

I - 76 WESTBOUND
STA 25+50 TO STA 26+50

PLATE 3. CROSS SECTION
KOPPERS A BRICK CO.

CALCULATED BY PRP DATE 3/90
CHECKED BY DSB DATE 7/90

FHWA REG	STATE	PROJECT	249 / 1214
5	OHIO		

SUM - 76 - 11.57
IR - 76 - 2(44)19

SEEDING

END WIDTH	SQ. YARDS
10 BACK	
	28
10	
	96
	54
	195

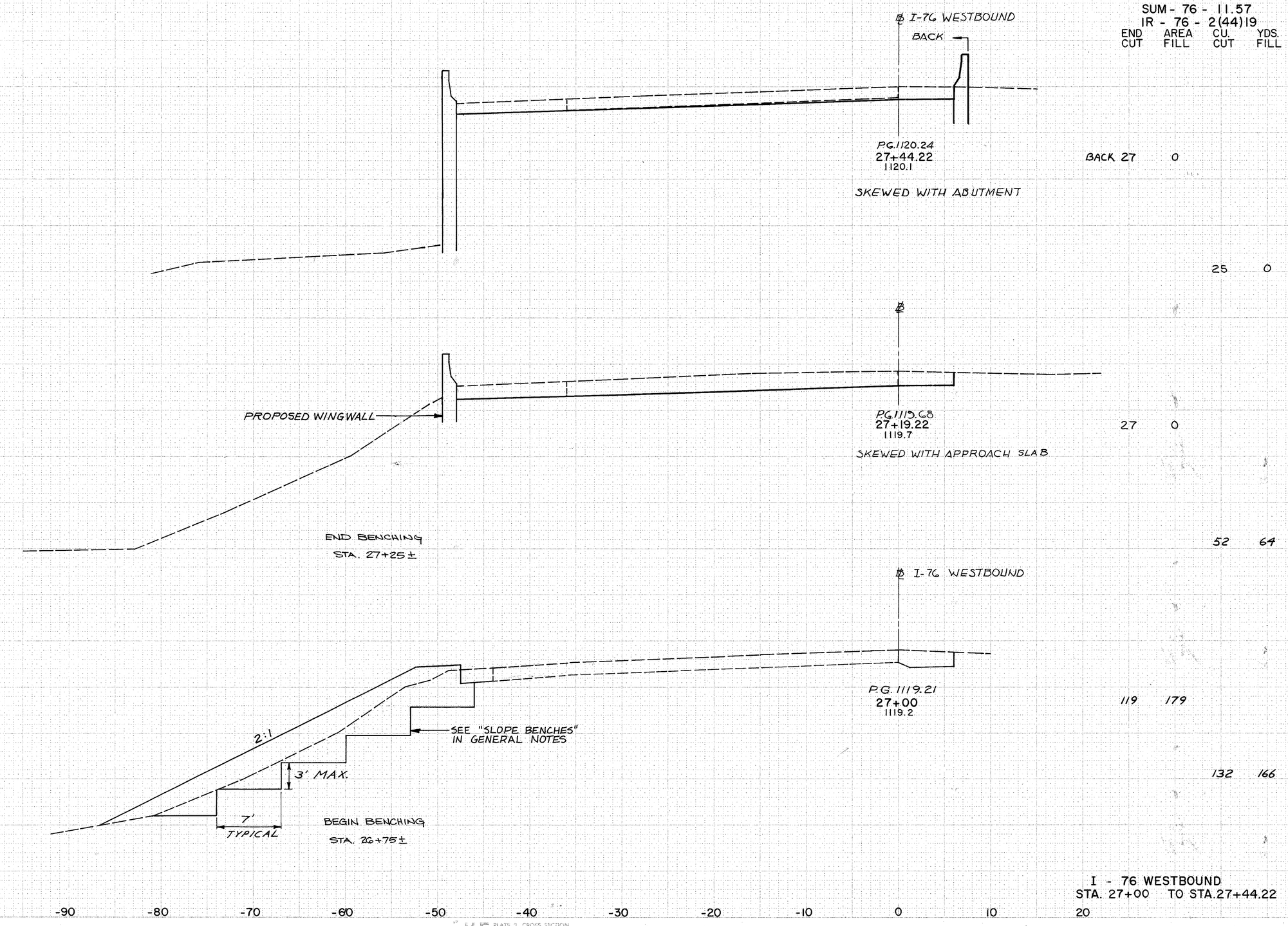

END CUT	AREA FILL	CU. YDS. CUT	CU. YDS. FILL
BACK 27	0		
25	0		
27	0		
52	64		
119	179		
132	166		

I - 76 WESTBOUND
STA. 27+00 TO STA. 27+44.22

FHWA REG	STATE	PROJECT	250 / 1214
5	OHIO		

CALCULATED BY BTB DATE 3/90
CHECKED BY DSB DATE 7/90

SUM - 76 - 11.57
IR - 76 - 2(44)19

END CUT	AREA FILL	CU. CUT	YDS. FILL

SEEDING
END WIDTH | SQ. YARDS

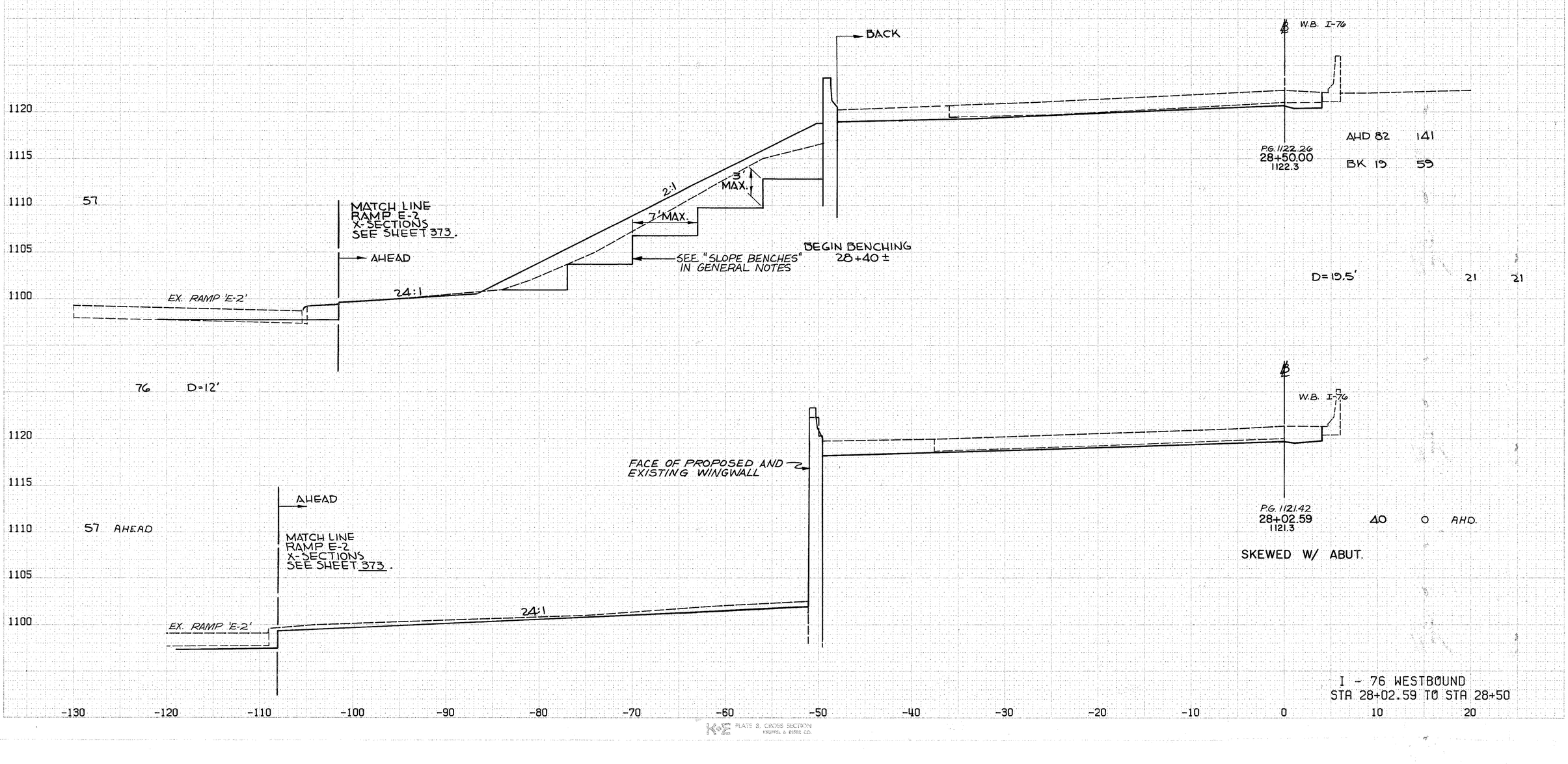

I - 76 WESTBOUND
STA 28+02.59 TO STA 28+50

PLATE 3. CROSS SECTION
KEUFFEL & ESSER CO.

SEEDING
END SQ.
WIDTH YARDS

CALCULATED BY BTB DATE 3/90
CHECKED BY DSB DATE 7/90

FHWA REG	STATE	PROJECT
5	OHIO	

251
1214

SUM - 76 - 11.57
IR - 76 - 2(44)19

END CUT	AREA FILL	CU. CUT	YDS. FILL

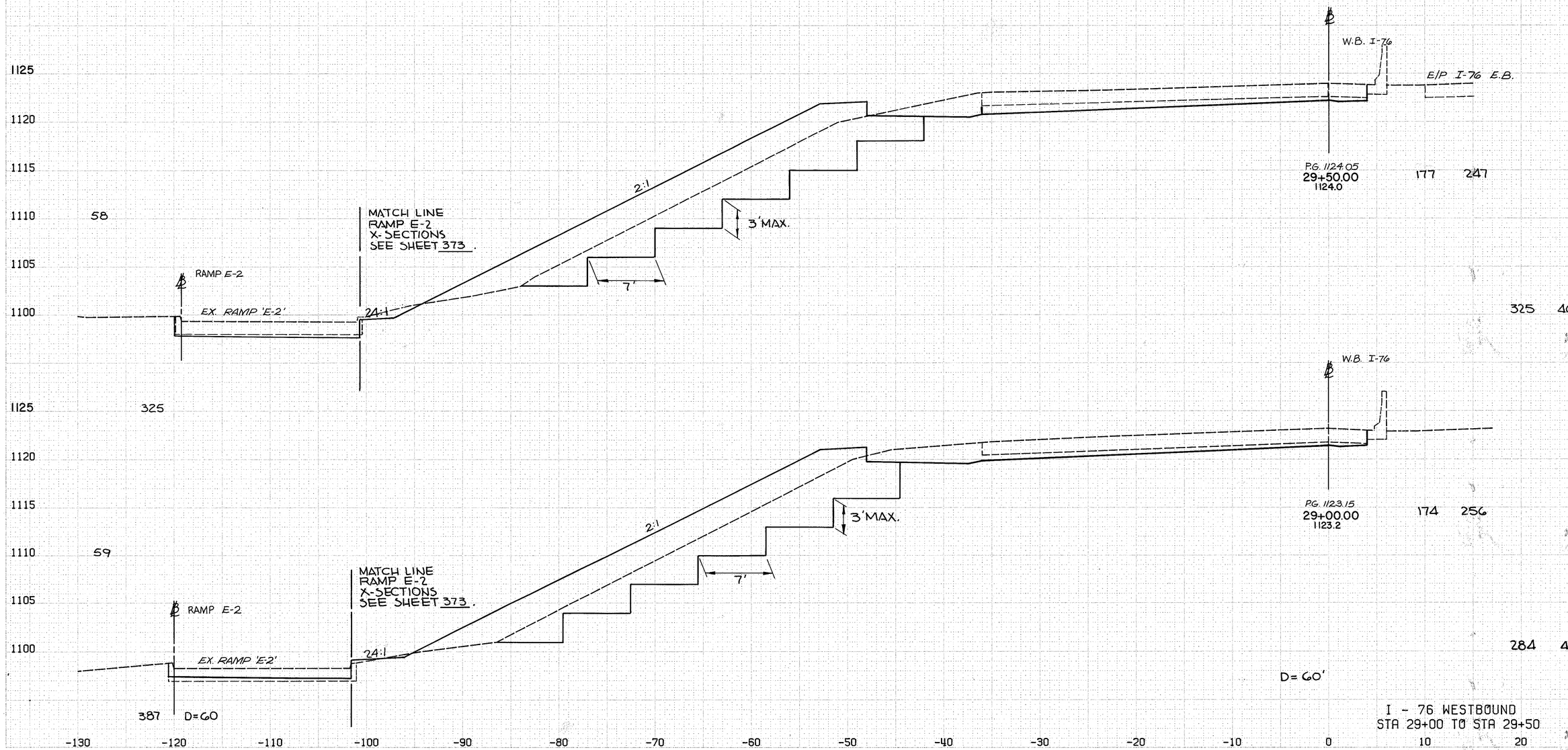

I - 76 WESTBOUND
STA 29+00 TO STA 29+50

K&E PLATE 3, CROSS SECTION
KEUFFEL & ESSER CO.

SEEDING
END SQ.
WIDTH YARDS

CALCULATED BY BJB DATE 3/90
CHECKED BY DSB DATE 7/90

FHWA REG	STATE	PROJECT	252 / 1214
5	OHIO		

SUM - 76 - 11.57
IR - 76 - 2(44)19

END CUT	AREA FILL	CU. YDS. CUT	CU. YDS. FILL
53	303	156	220
56	317	176	223
307	410		
327	435		

FINAL SURVEY — SURVEYED, PLOTTED, TEMPLATE, AREAS, ADDED, CHECKED

ORIGINAL SURVEY — SURVEYED, PLOTTED, TEMPLATE, AREAS, ADDED, CHECKED

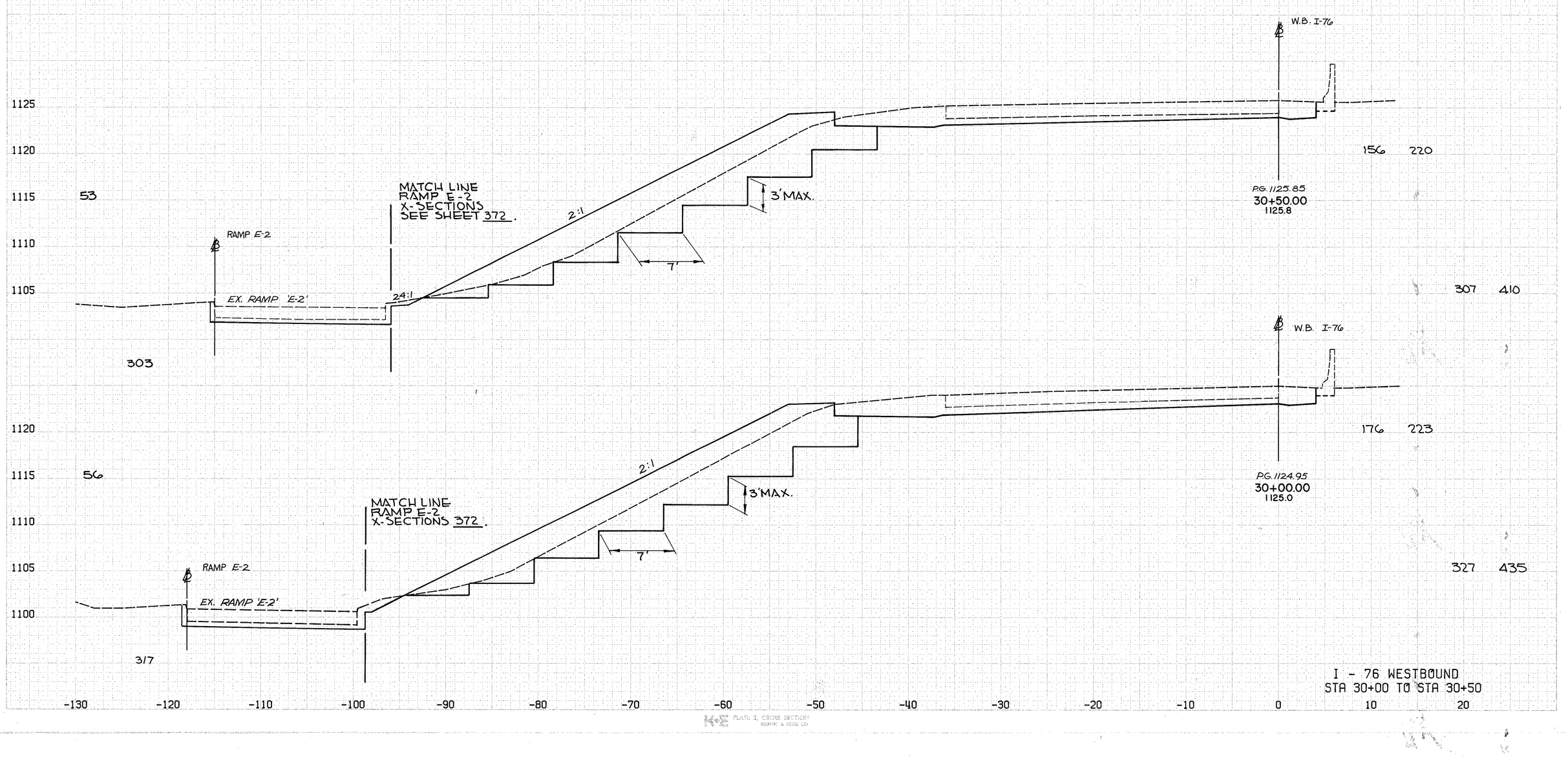

I - 76 WESTBOUND
STA 30+00 TO STA 30+50

PLATE 3, CROSS SECTION
KEMPER & KERN CO.

CALCULATED BY BJG DATE 3/90
CHECKED BY DSB DATE 7/90

FHWA REG	STATE	PROJECT	283 / 1214
5	OHIO		

SUM - 76 - 11.57
IR - 76 - 2(44)19

SEEDING
END SQ.
WIDTH YARDS

END CUT AREA FILL CU. YDS. CUT CU. YDS. FILL

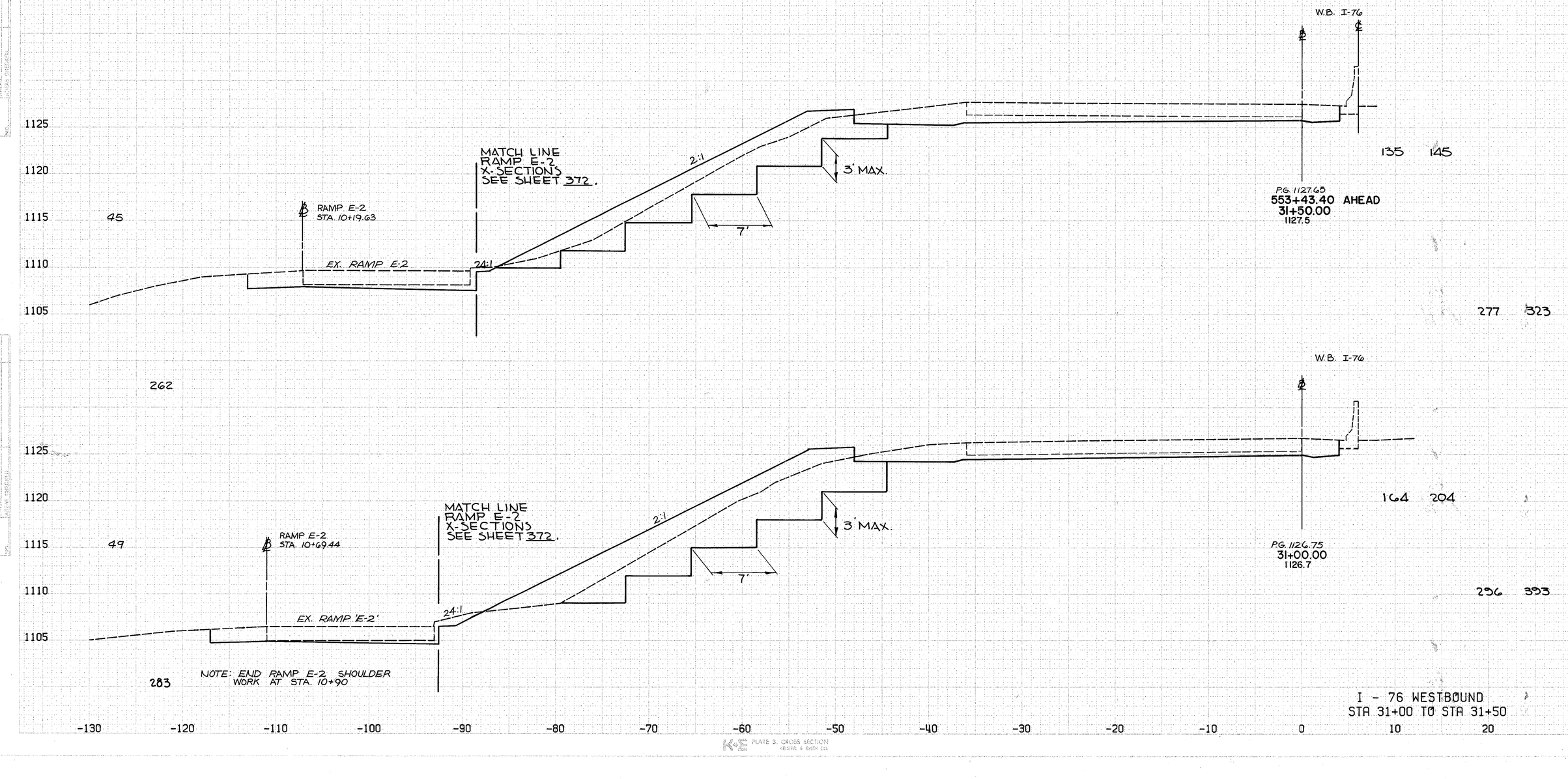

I - 76 WESTBOUND
STA 31+00 TO STA 31+50

PLATE 3. CROSS SECTION
KRIEGEL & ESSIG CO.

CALCULATED BY BSB DATE 3/90
CHECKED BY DSB DATE 7/90

FHWA REG	STATE	PROJECT	254 12.14
5	OHIO		

SUM - 76 - 11.57
IR - 76 - 2(44)19

SEEDING

END	SQ.
WIDTH	YARDS

END CUT	AREA FILL	CU. CUT	YDS. FILL
36	208	189	246
39	264	D=56.6	264 312

FINAL SURVEY — SURVEYED BY ... DATE ... PLOTTED BY ... CHECKED BY ... PLOTTED FROM ... AREAS ... REVISIONS ... BY ... DATE ... NO. ... AREAS CHECKED

ORIGINAL SURVEY — SURVEYED BY ... DATE ... PLOTTED BY ... CHECKED BY ... PLOTTED FROM ... AREAS ... REVISIONS ... BY ... DATE ... NO. ... AREAS CHECKED

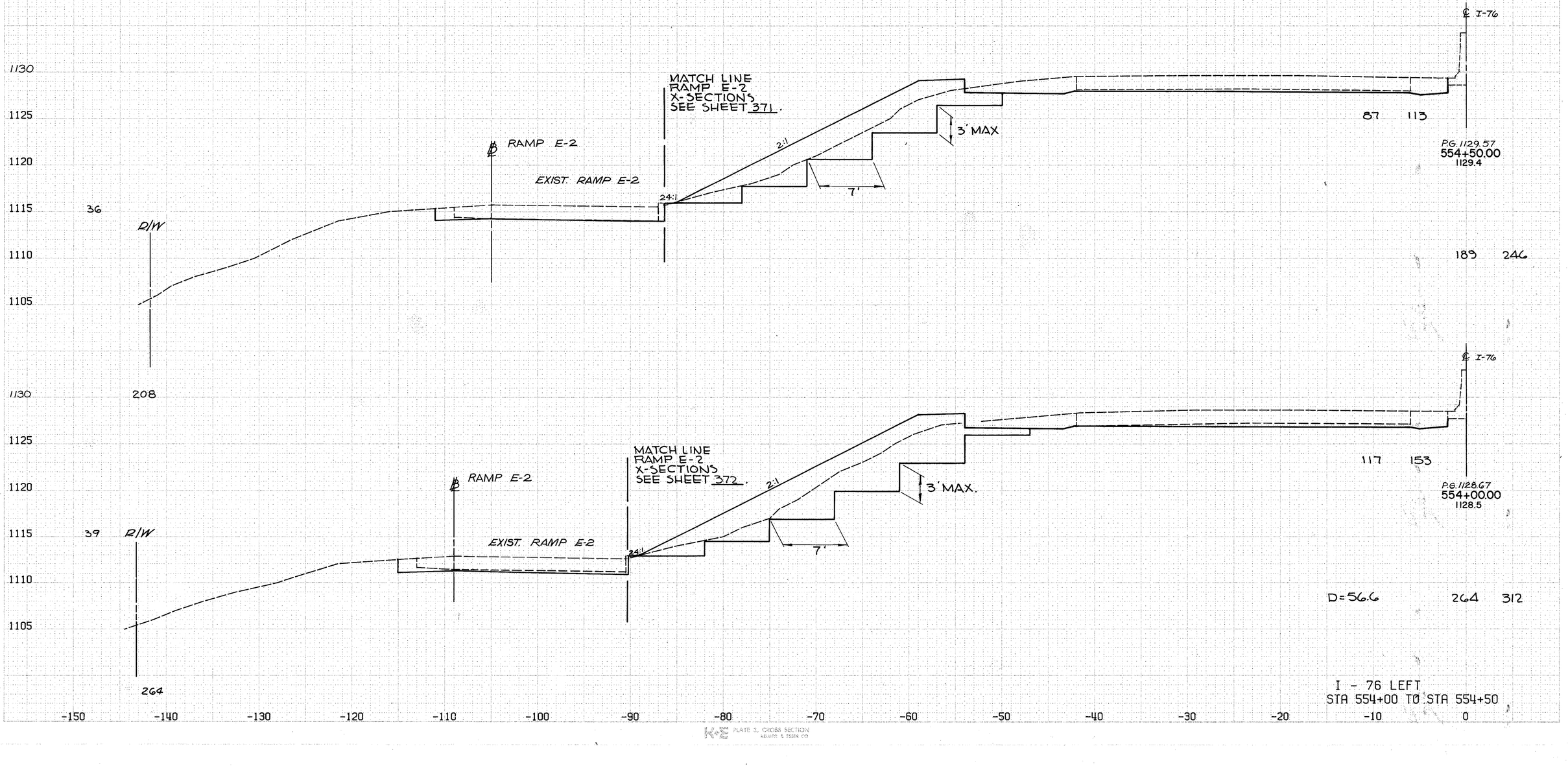

I - 76 LEFT
STA 554+00 TO STA 554+50

PLATE 3, CROSS SECTION

SEEDING
END WIDTH | SQ. YARDS

CALCULATED BY GJB DATE 3/90
CHECKED BY DSB DATE 7/90

FHWA REG	STATE	PROJECT
5	OHIO	

255
1214

SUM - 76 - 11.57
IR - 76 - 2(44)19

END CUT	AREA FILL	CU. YDS. CUT	CU. YDS. FILL
26	190	158	193
31	186	159	203

END BENCHING
555+60±

MATCH LINE
RAMP E-2 X-SECTIONS
SEE SHEET 371.

RAMP E-2

EX. RAMP 'E-2'

2:1

3' MAX.

7'

D = 60'

℄ I-76

57 68

P.G. 1131.37
555+50.00
1131.0

D/W

85 106

P.G. 1130.47
555+00.00
1130.3

1130
1125
1120
1115
1110
1105

-150 -140 -130 -120 -110 -100 -90 -80 -70 -60 -50 -40 -30 -20 -10 0

I - 76 LEFT
STA 555+00 TO STA 555+50

K-S PLATE 2, CROSS SECTION
KAUFFEL & SMITH CO.

CALCULATED BY B/B DATE 3/90
CHECKED BY DSB DATE 7/90

FHWA REG	STATE	PROJECT
5	OHIO	

256
1214

SUM - 76 - 11.57
IR - 76 - 2(44)19

SEEDING
END WIDTH — SQ. YARDS

END CUT — AREA FILL — CU. YDS. CUT — CU. YDS. FILL

RAMP E-2
℄
MATCH LINE
RAMP E-2 X-SECTIONS
SEE SHEET 370
EX. RAMP 'E-2'
24:1
3:1
2:1
3' MIN.
BEGIN BENCHING
556+50 ±
7'
R/W
℄ I-76
P.G. 1134.07
557+00.00
1133.8
27 20
℄
63 38
MATCH LINE
2:1
24:1
P.G. 1133.17
556+50.00
1133.0
41 21
77 47
STA. 556+00
EX. INLET No. I-3850
℄ I-76
EX. 12" STM.
P.G. 1132.27
556+00.00
1131.9
42 30
RAMP E-2
℄
MATCH LINE
RAMP E-2 X-SECTIONS
SEE SHEET 370
EX. RAMP 'E-2'
24:1
2:1
R/W
D=40 74 73
92
18
111
22
107 D=40

1130 1125 1120 1115 1110

-150 -140 -130 -120 -110 -100 -90 -80 -70 -60 -50 -40 -30 -20 -10 0

I - 76 LEFT
STA 556+00 TO STA 557+00

PLATE 2, CROSS SECTION

CALCULATED BY BTB DATE 3/90
CHECKED BY DSB DATE 7/90

FHWA REG	STATE	PROJECT	257 / 1214
5	OHIO		

SUM - 76 - 11.57
IR - 76 - 2(44)19

SEEDING
END WIDTH — SQ. YARDS

END CUT — AREA FILL — CU. CUT YDS. — CU. FILL YDS.

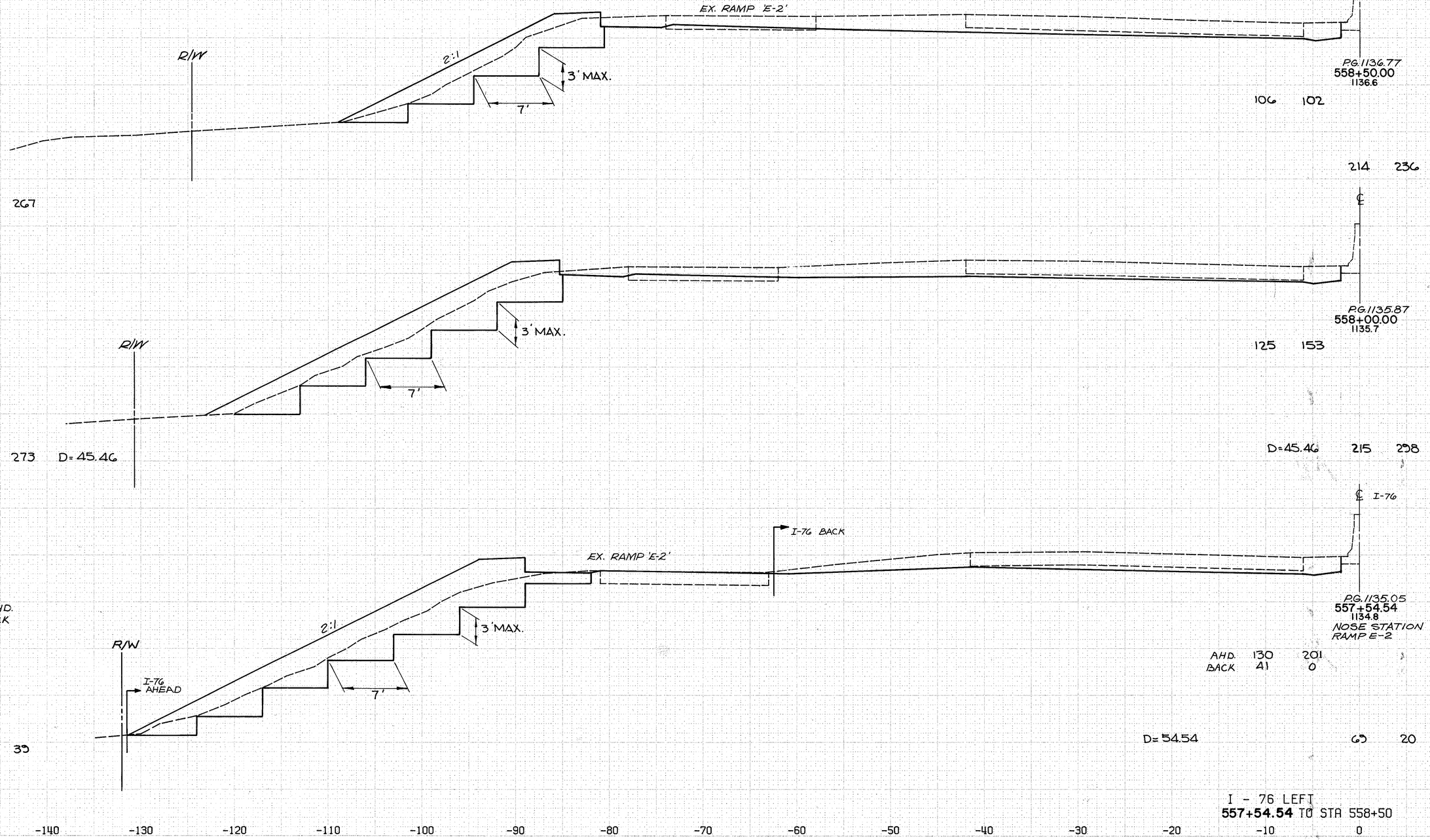

I - 76 LEFT
557+54.54 TO STA 558+50

K&E PLATE 5 CROSS SECTION

CALCULATED BY BJB DATE 3/90
CHECKED BY DSB DATE 7/90

FHWA REG	STATE	PROJECT
5	OHIO	

258
1214

SUM - 76 - 11.57
IR - 76 - 2(44)19

SEEDING
END WIDTH | SQ. YARDS

END CUT | AREA FILL | CU. YDS. CUT | CU. YDS. FILL

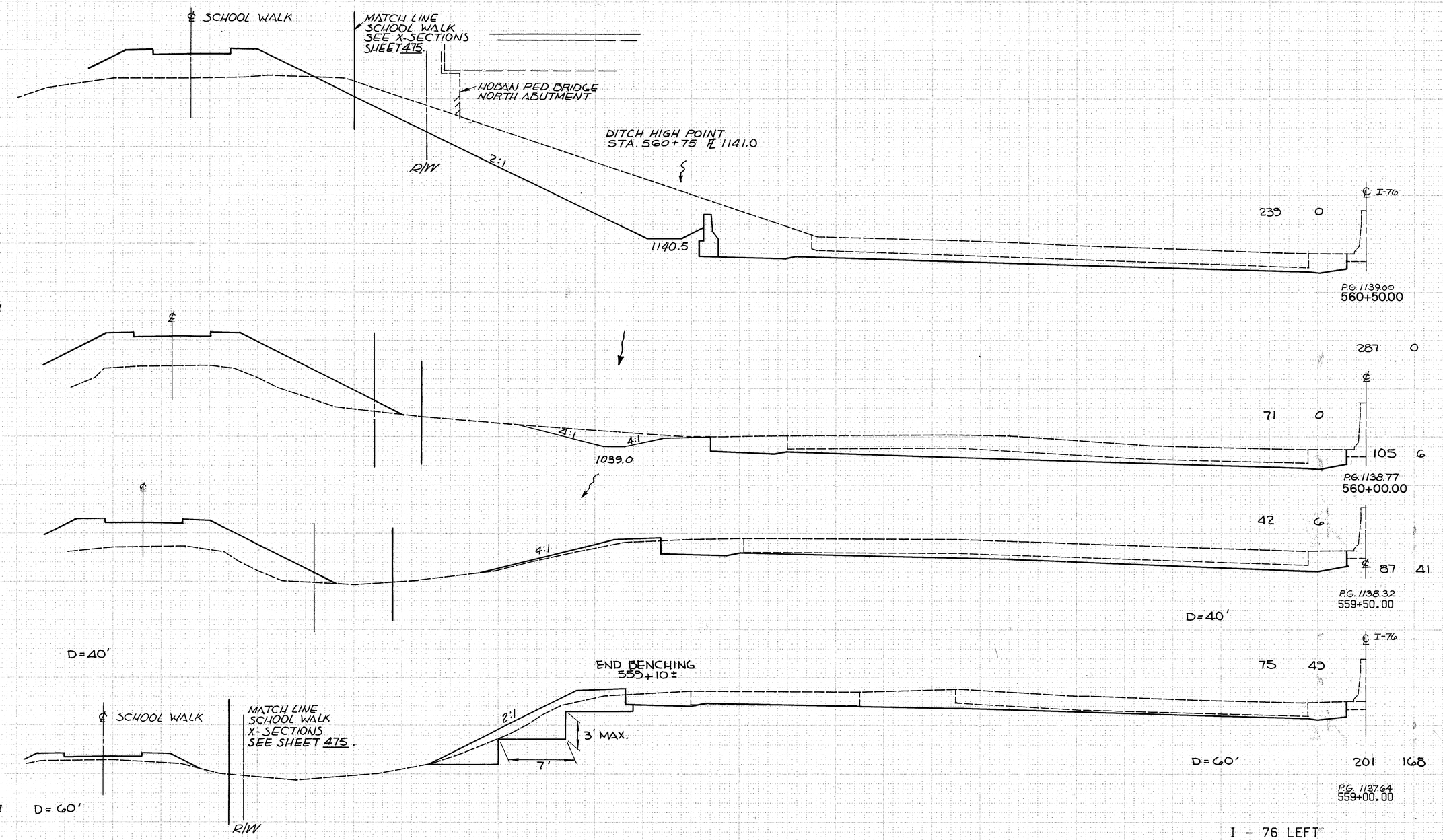

I - 76 LEFT
STA 559+00 TO STA 560+50

K+E PLATE 3. CROSS SECTION
KEUFFEL & ESSER CO.

CALCULATED BY BJB DATE 3/90
CHECKED BY DSB DATE 7/90

FHWA REG	STATE	PROJECT
5	OHIO	

259 / 1214

SUM - 76 - 11.57
IR - 76 - 2(44)19

SEEDING
END WIDTH — SQ. YARDS.

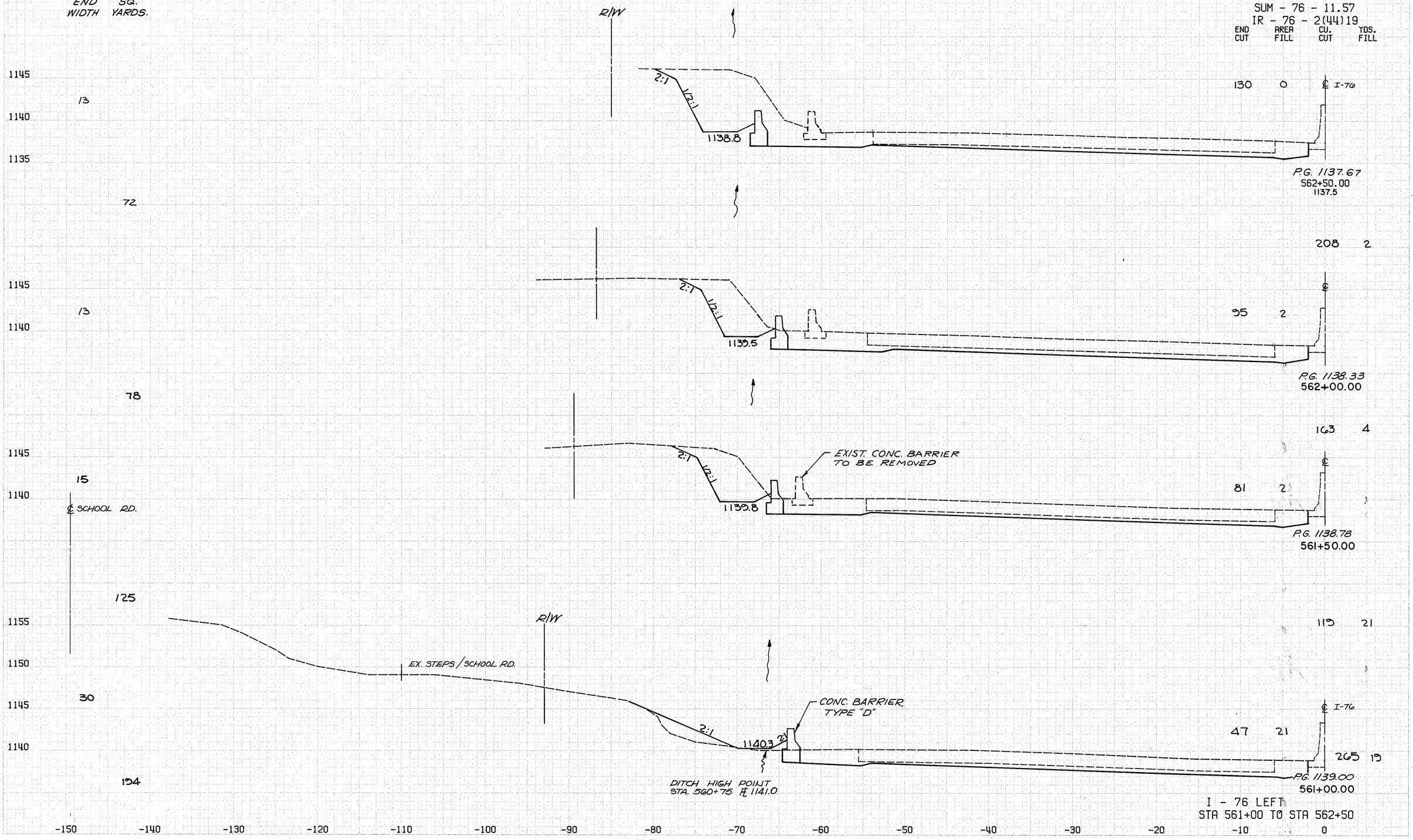

PLATE 3, CROSS SECTION
KRUEGER & GRAEF CO.

CALCULATED BY BJB DATE 3/90
CHECKED BY DSB DATE 7/90

FHWA REG	STATE	PROJECT	260 / 1214
5	OHIO		

SUM - 76 - 11.57
IR - 76 - 2(44)19

SEEDING
END SQ.
WIDTH YARDS

END CUT	AREA FILL	CU. YDS. CUT	CU. YDS. FILL
186	0		
332	0		
312	0		
288	0		
256	0		

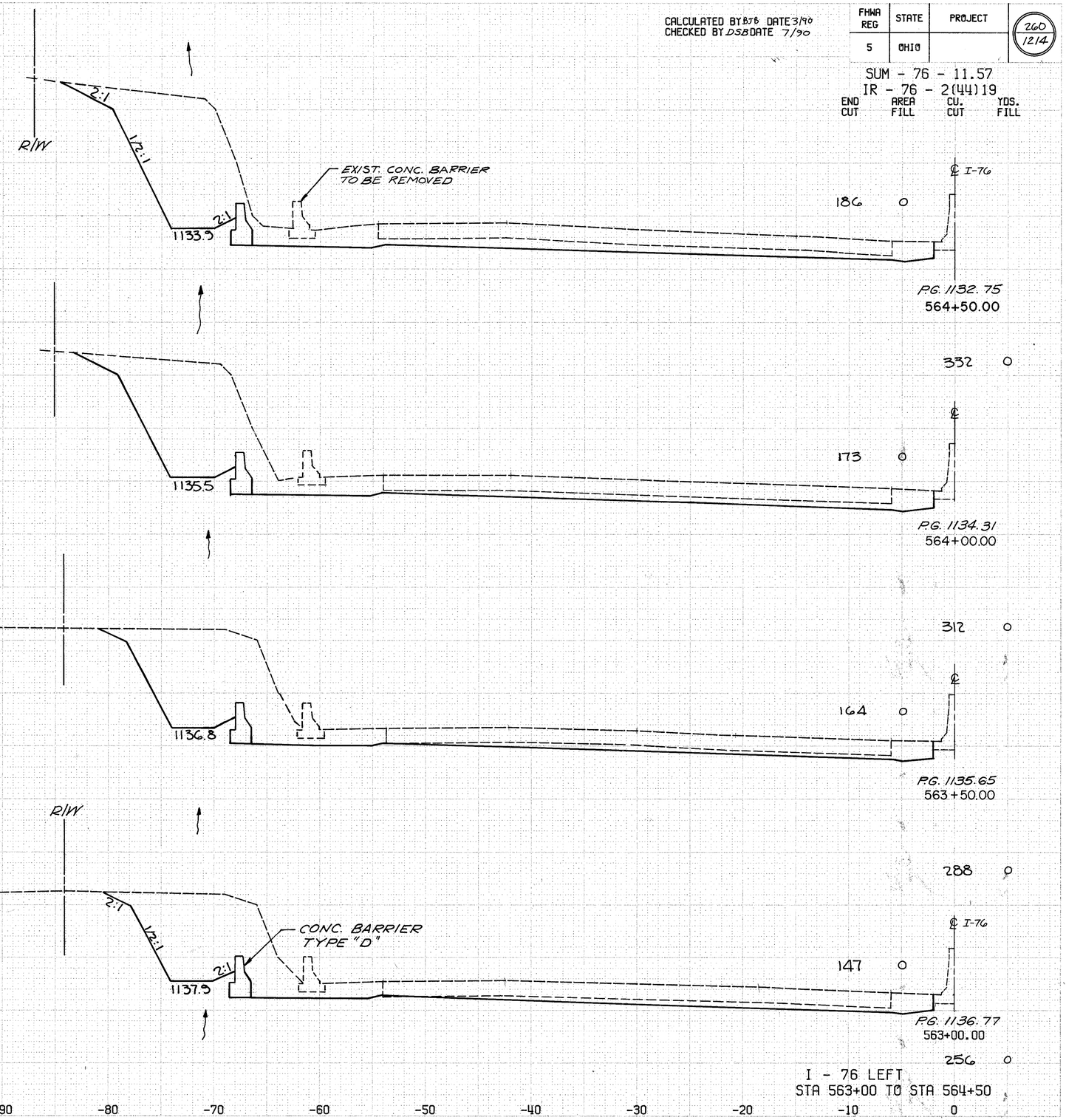

I - 76 LEFT
STA 563+00 TO STA 564+50

CALCULATED BY BJB DATE 3/90
CHECKED BY DSB DATE 7/90

FHWA REG	STATE	PROJECT
5	OHIO	

261
1214

SUM - 76 - 11.57
IR - 76 - 2(44)19

END CUT	AREA FILL	CU. CUT	YDS. FILL

SEEDING
END SQ.
WIDTH YARDS

16

86

15

89

17

92

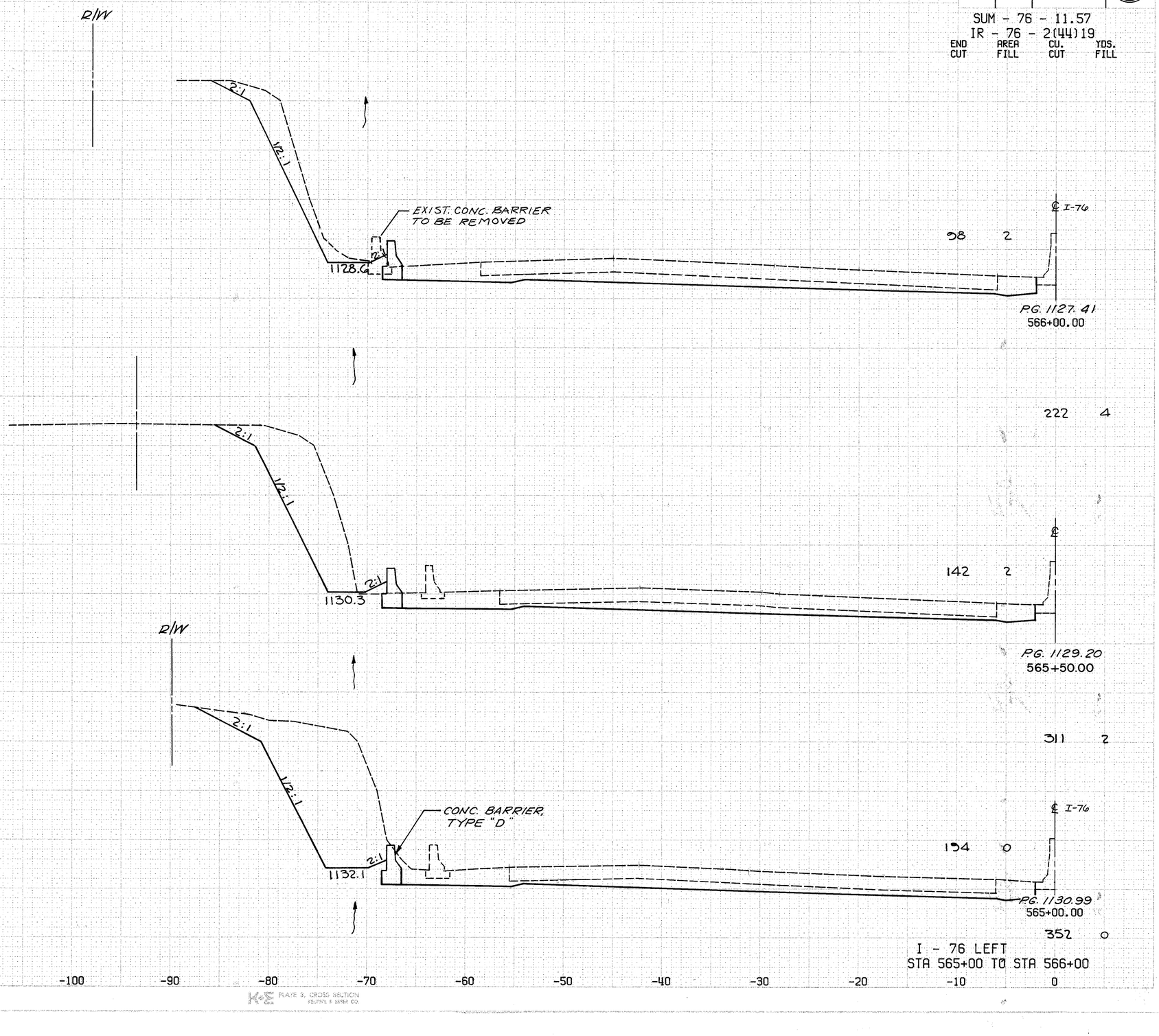

I - 76 LEFT
STA 565+00 TO STA 566+00

PLATE 3, CROSS SECTION
KOUNTZ & ESSER CO.

CALCULATED BY BTB DATE 3/90
CHECKED BY DSB DATE 7/90

FHWA REG	STATE	PROJECT
5	OHIO	

262
12/14

SUM - 76 - 11.57
IR - 76 - 2(44)19

SEEDING
END SQ.
WIDTH YARDS

END CUT	AREA FILL	CU. YDS. CUT	CU. YDS. FILL
52	0		
113	0		
70	0		
156	2		

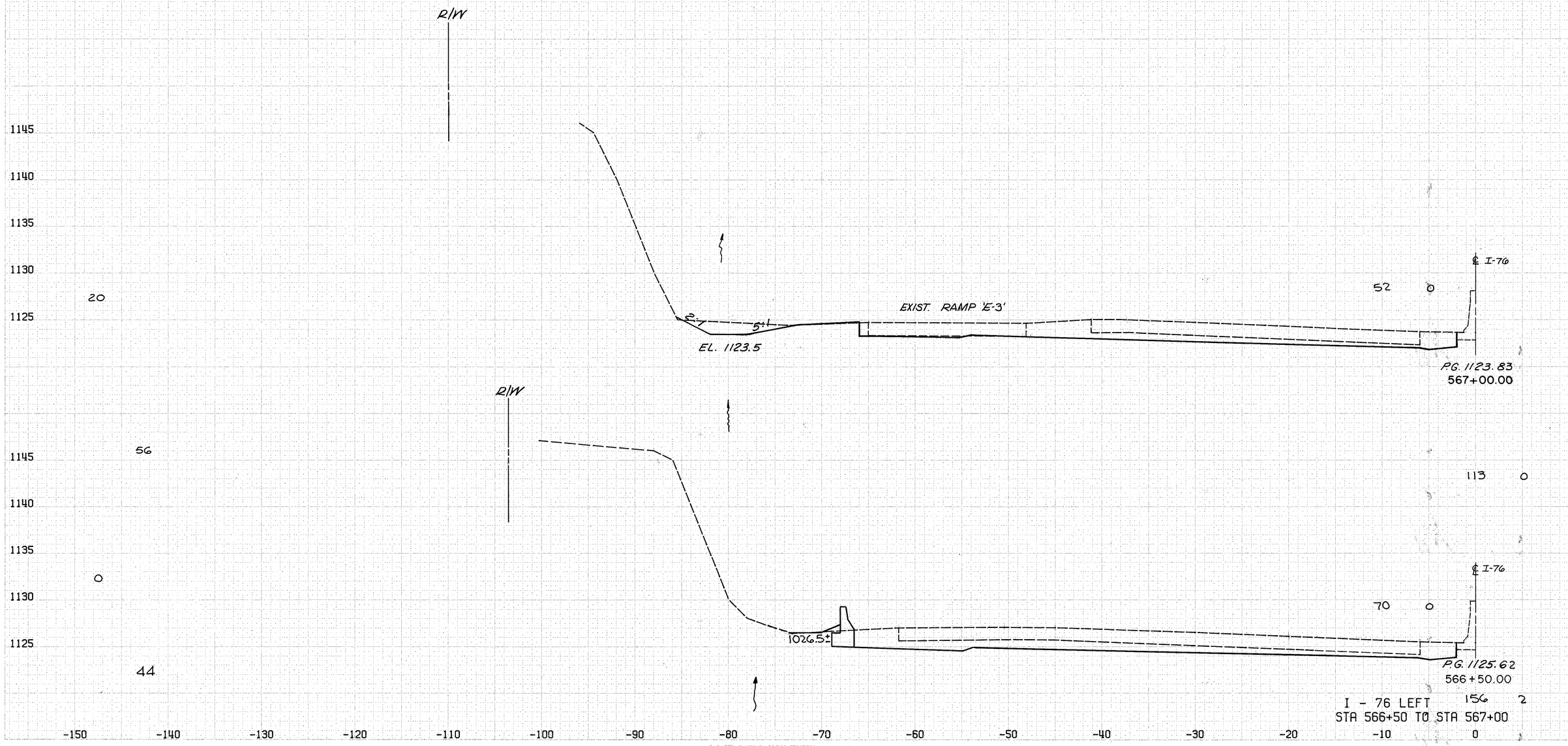

PLATE 3, CROSS SECTION
KEUFFEL & ESSER CO.

CALCULATED BY BSB DATE 3/90
CHECKED BY DSB DATE 7/90

FHWA REG	STATE	PROJECT
5	OHIO	

263
1214

SUM - 76 - 11.57
IR - 76 - 2(44)19

END CUT	AREA FILL	CU. CUT	YDS. FILL

SEEDING
END SQ.
WIDTH YARDS

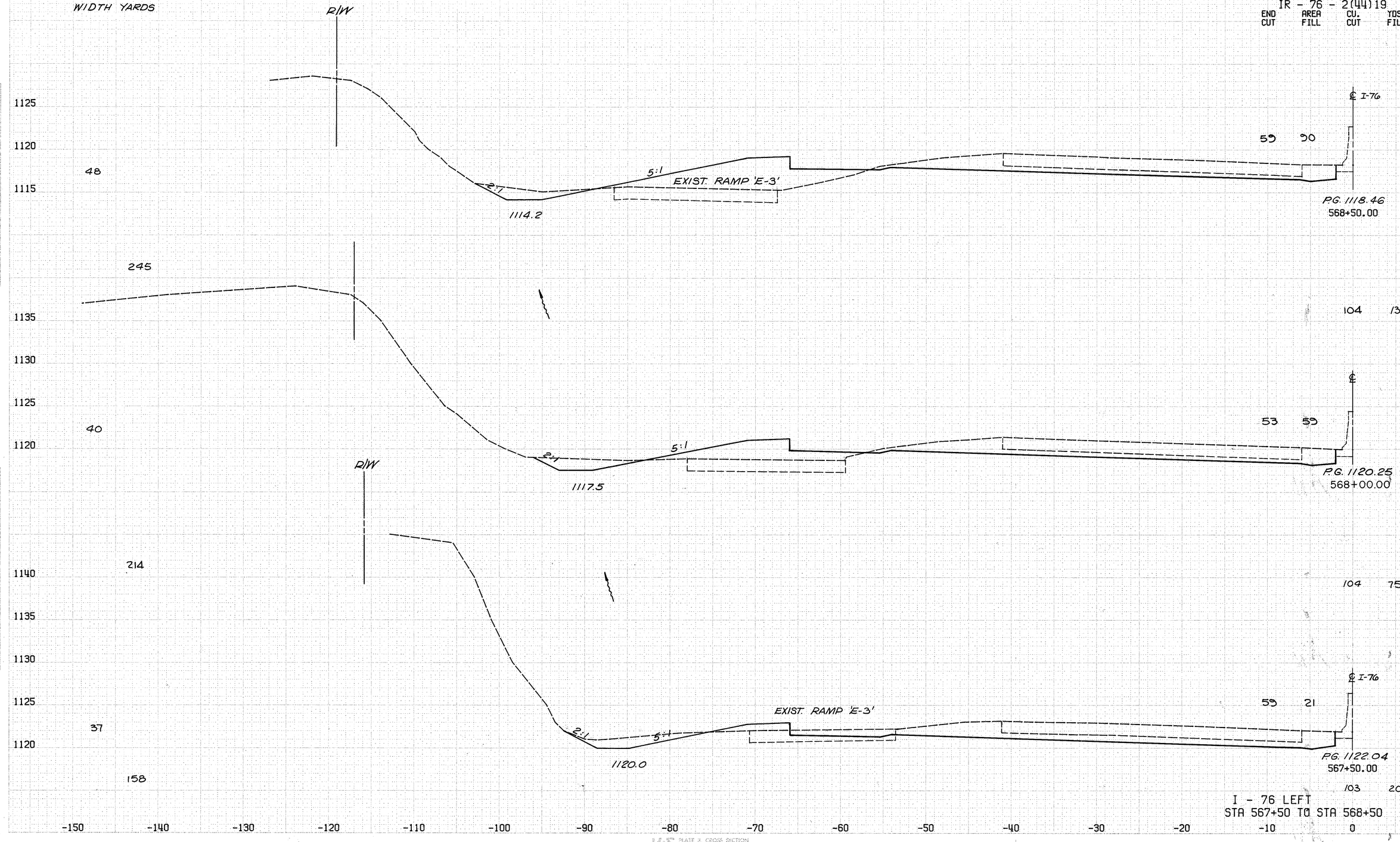

I - 76 LEFT
STA 567+50 TO STA 568+50

PLATE 3, CROSS SECTION
KNOWLES & ROSEN CO.

CALCULATED BY BJB DATE 3/90
CHECKED BY DSB DATE 7/90

FHWA REG	STATE	PROJECT
5	OHIO	

264
12/4

SUM - 76 - 11.57
IR - 76 - 2(44)19

SEEDING
END SQ.
WIDTH YARDS

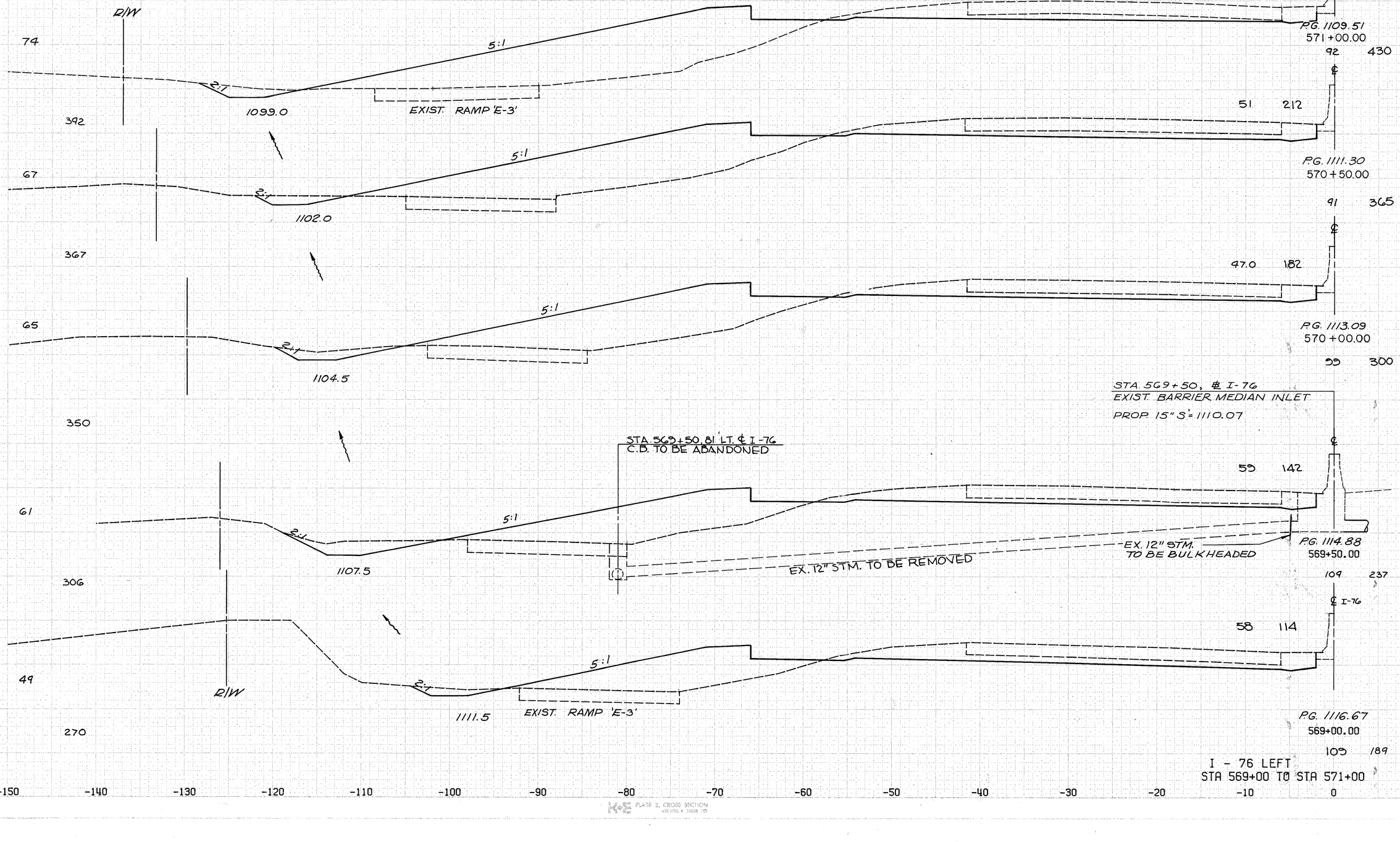

END CUT	AREA FILL	CU. CUT	YDS. FILL
48	252		
			℄ I-76
			P.G. 1109.51
			571+00.00
92	430		
			℄
51	212		
			P.G. 1111.30
			570+50.00
91	365		
			℄
47.0	182		
			P.G. 1113.09
			570+00.00
99	300		
			STA. 569+50, ℄ I-76
			EXIST. BARRIER MEDIAN INLET
			PROP. 15" S = 1110.07
			℄
59	142		
			P.G. 1114.88
			569+50.00
109	237		
			℄ I-76
58	114		
			P.G. 1116.67
			569+00.00
109	189		

STA. 569+50.81' LT. ℄ I-76
C.B. TO BE ABANDONED

EX. 12" STM. TO BE REMOVED

EX. 12" STM. TO BE BULKHEADED

I - 76 LEFT
STA 569+00 TO STA 571+00

PLATE 3, CROSS SECTION

CALCULATED BY BJS DATE 3/90
CHECKED BY DSB DATE 7/90

FHWA REG	STATE	PROJECT
5	OHIO	

265 / 12.14

SUM - 76 - 11.57
IR - 76 - 2[44]19

SEEDING
END SQ.
WIDTH YARDS

END CUT	AREA FILL	CU. YDS. CUT	CU. YDS. FILL
89	1		

℄ I-76

P.G. 1102.35
573+00.00

136 203

* PROPOSED RETAINING WALL Nº 1, FOR DETAILS, SEE SHEET 708.

NOTE: QUANTITY BREAK LINE - QBL SEE NOTE, SHEET 89.

1105
1100
1095

11

MARTIN AVE.

Q.B.L.

2:1
3.3:1

3"G.

208

6" W.M.

AHD

AHD 58 218
BK 78 284

℄

P.G. 1104.14
572+50.00

140 529

1105
1100
1095

64

BACK

R/W

3:1

EXIST. RAMP 'E-3'

2:1

1090.3

BEGIN RETAINING WALL Nº1
STA. 572+50

73 287

℄

P.G. 1105.93
572+00.00

123 499

1105
1100
1095

344

60

6" W.M.

3.5:1

1094.0

1110
1105
1100
1095

339

62

R/W

4:1

EXIST. RAMP 'E-3'

2:1

1097.0

378

6" W.M.

6" W.M.

℄ I-76

60 252

P.G. 1107.72
571+50.00

100 467

I - 76 LEFT
STA 571+50 TO STA 573+00

-150 -140 -130 -120 -110 -100 -90 -80 -70 -60 -50 -40 -30 -20 -10 0

PLATE 2, CROSS SECTION
KOUNS & SEIER CO.

CALCULATED BY BJB DATE 3/90
CHECKED BY DSB DATE 7/90

FHWA REG	STATE	PROJECT
5	OHIO	

266
1214

SUM - 76 - 11.57
IR - 76 - 2(44)19

END CUT	AREA FILL	CU. YDS. CUT	FILL
35	3		
40	4		
87	5		
54	1		
132	2		

SEEDING SODDING
END SQ. END SQ.
WIDTH YARDS WIDTH YARDS

PROPOSED RETAINING WALL NO. 1 FOR DETAILS SEE SHEET 708.

℄ I-76

P.G. 1096.98
574+50.00

P.G. 1098.77
574+00.00

P.G. 1100.56
573+50.00

℄ MARTIN AVE.

R/W

Q.B.L.

24:1

3"G.

6"W.M.

8"SAN.

P.G. 1081.38
47+95.14
1081.5

P.G. 1084.20
47+45.14
1034.0

P.G. 1087.00
46+95.14
1087.2

PROPOSED RETAINING WALL Nº 1, FOR DETAILS, SEE SHEET 708.

EXIST. RETAINING WALL TO BE REMOVED.

NOTE: QUANTITY BREAK LINE - QBL
SEE NOTE SHEET 89.

1095
1090
1085
1100

-150 -140 -130 -120 -110 -100 -90 -80 -70 -60 -50 -40 -30 -20 -10 0

I - 76 LEFT
STA 573+50 TO STA 574+50

PLATE 3, CROSS SECTION

CALCULATED BY BJB DATE 3/90
CHECKED BY DSB DATE 7/90

FHWA REG	STATE	PROJECT
5	OHIO	

267
1214

SUM - 76 - 11.57
IR - 76 - 2(44)19

SEEDING
END AREA | SQ. YARDS

SODDING
END AREA | SQ. YARDS

END CUT | AREA FILL | CU. YDS. CUT | CU. YDS. FILL

BK 36 0 ℄ I-76

P.G. 1091.61
576+13.56
SKEWED WITH ABUTMENT

166 4

105 3

P.G. 10.93.54
575+50.00

146 6

53 4 ℄ I-76

P.G. 1095.20
575+00.00

88 6

7.5 BACK 24 BACK

62 124

10 11

56 53

10 8

PROPOSED WINGWALL

BACK

EXISTING WINGWALL

MATCH LINE ARLINGTON ST. X-SECTION SEE SHEET 455.

32:1

3:1

℄ MARTIN AVE.

O.B.T.

3"G.

PROP. 12"STM.

6"W.M. TO BE ABD.

P.G.1070.00
49+58.70
1072.2

12"STM. TO BE REMOVED

PROP. 12"STM.

RELOC. 6"W.M.

8"SAN.

EXIST. RETAINING WALL TO BE REMOVED.

4:1

5:1

O.B.T.

3"G.

6"W.M. TO BE ABD.

P.G.1074.14
48+95.14
1076.0

RELOC. 6"W.M.

8"SAN.

PROPOSED RETAINING WALL Nº 1. FOR DETAILS, SEE SHEET 708.

R/W

℄ MARTIN AVE.

24:1

3"G.

6"W.M. TO BE ABD.

P.G.1078.39
48+45.14
1078.7

RELOC. 6"W.M.

EXIST. 8"SAN. INV. EL. 1068.2

QBL

NOTE: QUANTITY BREAK LINE - QBL
SEE NOTE SHEET 89.

I - 76 LEFT
STA 575+00 TO STA 576+13.56

1090
1085
1080
1075
1070
1095
1090
1085
1080

-150 -140 -130 -120 -110 -100 -90 -80 -70 -60 -50 -40 -30 -20 -10 0

PLATE 3 CROSS SECTION
KELLER & KIRBY CO.

SEEDING
END SQ.
WIDTH YARDS

CALCULATED BY BJB DATE 3/90
CHECKED BY DSB DATE 7/90

FHWA REG	STATE	PROJECT
5	OHIO	

268
1214

SUM - 76 - 11.57
IR - 76 - 2(44)19

END CUT	AREA FILL	CU. CUT	YDS. FILL

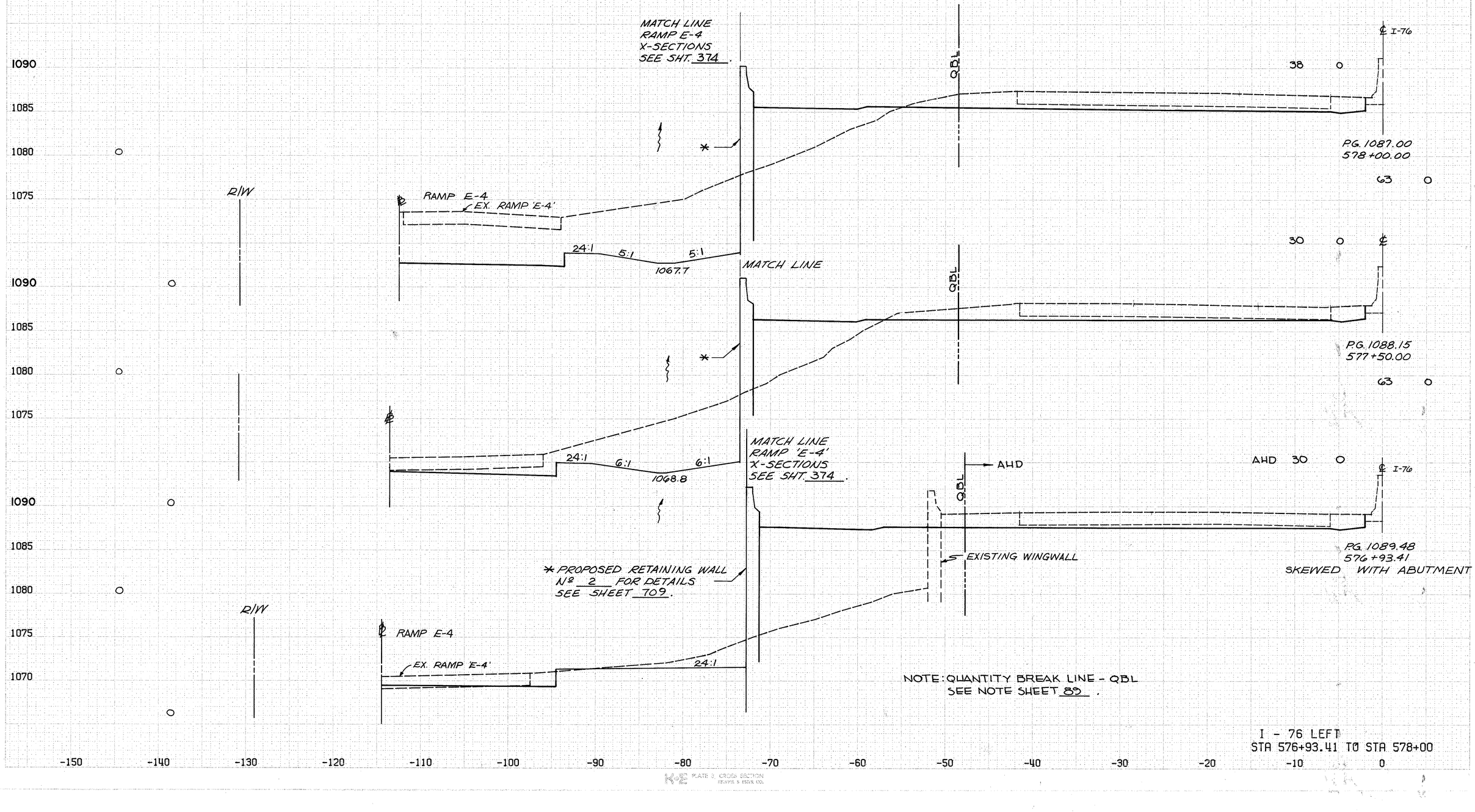

I - 76 LEFT
STA 576+93.41 TO STA 578+00

CALCULATED BY BJB DATE 3/90
CHECKED BY DSB DATE 7/90

FHWA REG	STATE	PROJECT	269 / 1214
5	OHIO		

SUM - 76 - 11.57
IR - 76 - 2(44)19

SEEDING
END WIDTH — SQ. YARDS

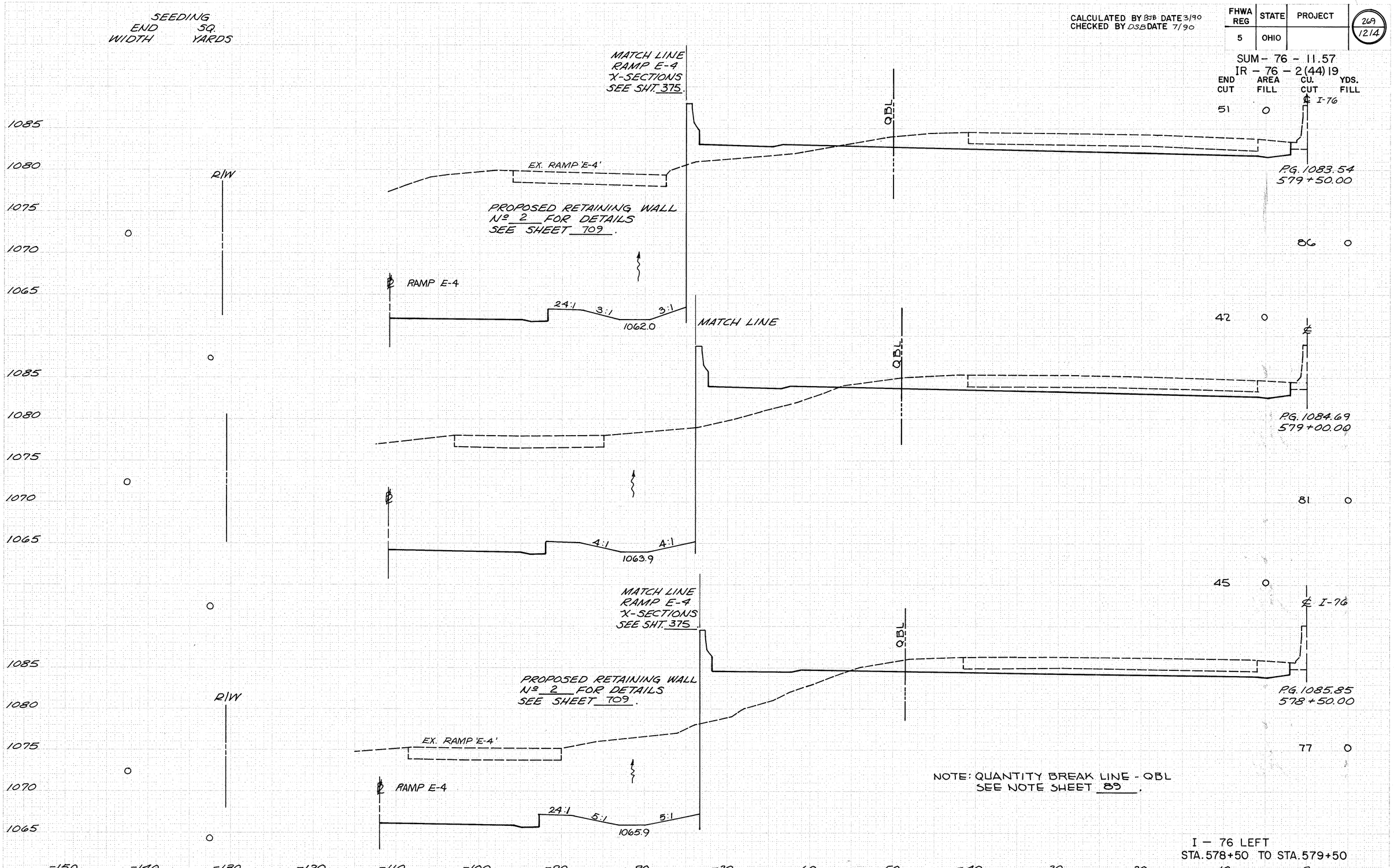

END CUT	AREA FILL	CU. YDS. CUT	CU. YDS. FILL
51	0		
			86 0
42	0		
			81 0
45	0		
			77 0

P.G. 1083.54
579+50.00

P.G. 1084.69
579+00.00

P.G. 1085.85
578+50.00

NOTE: QUANTITY BREAK LINE - QBL
SEE NOTE SHEET 89.

I — 76 LEFT
STA. 578+50 TO STA. 579+50

K&E PLATE 3, CROSS SECTION

CALCULATED BY BJB DATE 3/90
CHECKED BY DSB DATE 7/90

FHWA REG	STATE	PROJECT
5	OHIO	

270
12.14

SUM - 76 - 11.57
IR - 76 - 2(44)19

SEEDING
END WIDTH | SQ. YARDS

MATCH LINE
RAMP E-4
X-SECTIONS
SEE SHT. 376.

PROPOSED RETAINING WALL
Nº 2 FOR DETAILS
SEE SHEET 709.

END CUT	AREA FILL	CU. YDS. CUT	CU. YDS. FILL
57	0		
		105	0

℄ I-76

℄ RAMP E-4

EXIST. RAMP 'E-4'

P.G. 1081.24
580+50.00

24:1 3:1 3:1
1057.8

1085
1080
1075
1070
1065
1060
1055

R/W

℄ BL

MATCH LINE
RAMP E-4
X-SECTIONS
SEE SHT. 375.

EXIST. RAMP 'E-4'

PROPOSED RETAINING WALL
Nº 2 FOR DETAILS
SEE SHEET 709.

℄ RAMP E-4

24:1 3:1 2.5:1
1059.7

END CUT	AREA FILL	CU. YDS. CUT	CU. YDS. FILL
56	0		
		39	0

℄ I-76

P.G. 1082.39
580+00.00

1085
1080
1075
1070
1065
1060

R/W

℄ BL

NOTE: QUANTITY BREAK LINE - QBL
SEE NOTE SHEET 89.

-150 -140 -130 -120 -110 -100 -90 -80 -70 -60 -50 -40 -30 -20 -10 0

I - 76 LEFT
STA. 580+00 TO STA. 580+50

K&E PLATE 3, CROSS SECTION
KEUFFEL & ESSER CO.

CALCULATED BY BJB DATE 3/90
CHECKED BY DSB DATE 7/90

FHWA REG	STATE	PROJECT
5	OHIO	

271/1214

SUM - 76 - 11.57
IR - 76 - 2(44)19

SEEDING
END WIDTH SQ. YARDS

END CUT	AREA FILL	CU. CUT	YDS. FILL
35	0		
		83	0
54	0		
		113	0
AHEAD 68	0		
BACK 84	0		
D=36'		94	0

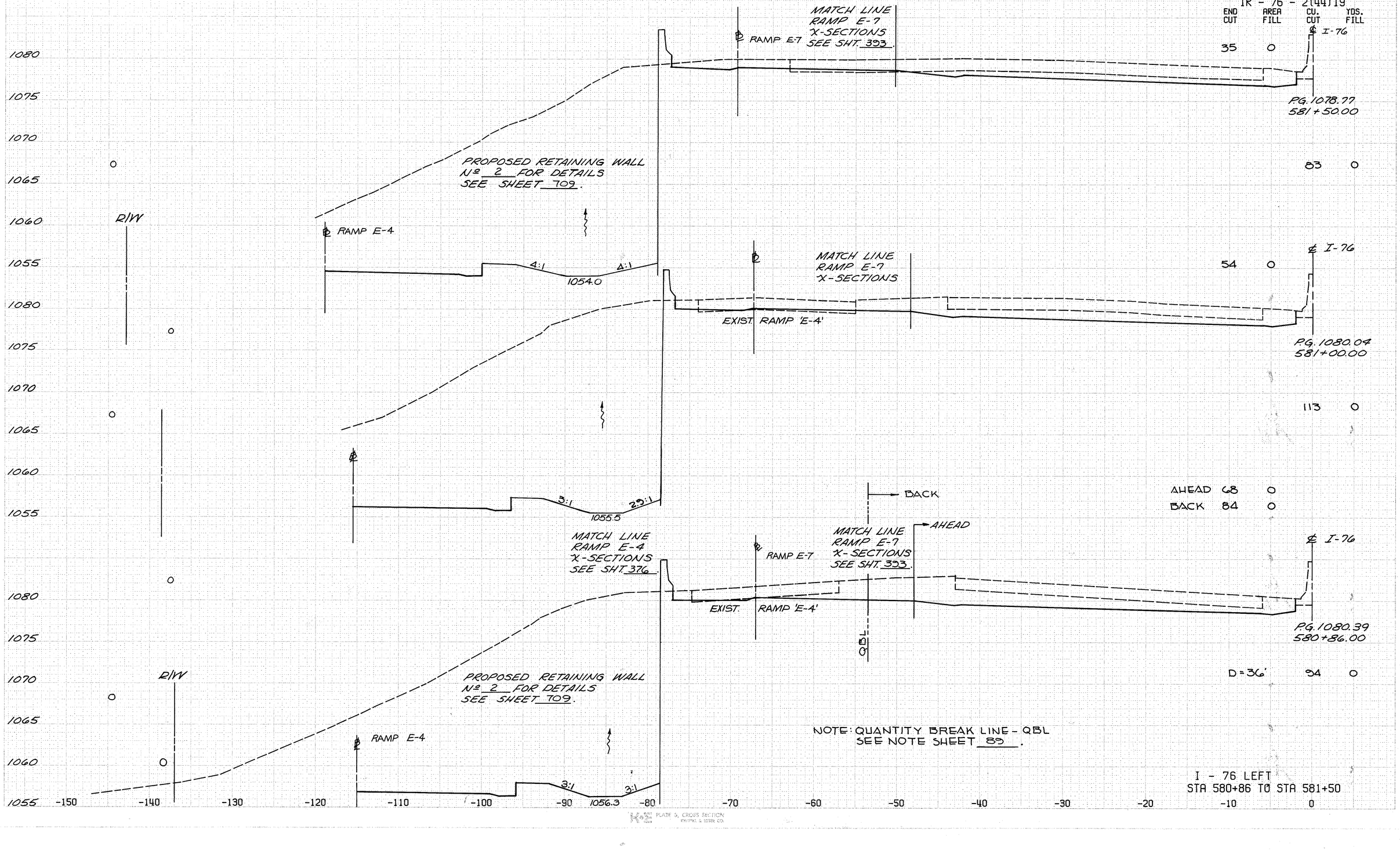

NOTE: QUANTITY BREAK LINE - QBL
SEE NOTE SHEET 89.

I - 76 LEFT
STA 580+86 TO STA 581+50

FINAL SURVEY PLOTTED ROUTE SHEET CANCELLED
ORIGINAL SURVEY PLOTTED ROUTE SHEET CANCELLED
BY DATE

CALCULATED BY BSB DATE 3/90
CHECKED BY DSB DATE 7/90

FHWA REG	STATE	PROJECT
5	OHIO	

272
1214

SUM – 76 – 11.57
IR – 76 – 2(44)19

SEEDING

END WIDTH	SQ. YARDS

END CUT AREA FILL CU. CUT YDS. FILL

℄ RAMP E-7

MATCH LINE RAMP E-7 X-SECTIONS SEE SHT. 394.

℄ I-76

BACK 41 0

℄ EXISTING WINGWALL

P.G. 1076.73
582+23.77

SKEWED W/BRIDGE ABUT.

43 0

1080
1075
0
1070
1065
R/W
1060
1055
1050

MATCH LINE RAMP E-7 X-SECTIONS SEE SHT. 393.

℄ I-76

℄ RAMP E-7

56 0

PROPOSED RETAINING WALL No 2. FOR DETAILS SEE SHEET 109

℄2 EXISTING WINGWALL

P.G. 1077.40
582+00.00

1075
1070
0
1065
1060
R/W
1055
1050

℄ RAMP E-4

5:1

4.4:1

1051.8

85 0

-150 -140 -130 -120 -110 -100 -90 -80 -70 -60 -50 -40 -30 -20 -10 0

I - 76 LEFT
STA. 582+00 TO STA. 582+23.77

K&E PLATE 3, CROSS SECTION
KEUFFEL & ESSER CO.

CALCULATED BY BJB DATE 3/90
CHECKED BY DSB DATE 7/90

FHWA REG	STATE	PROJECT
5	OHIO	

273
1214

SUM – 76 – 11.57
IR – 76 – 2(44)19

SEEDING
END WIDTH — SQ. YARDS

END CUT	AREA FILL	CU. CUT	YDS. FILL

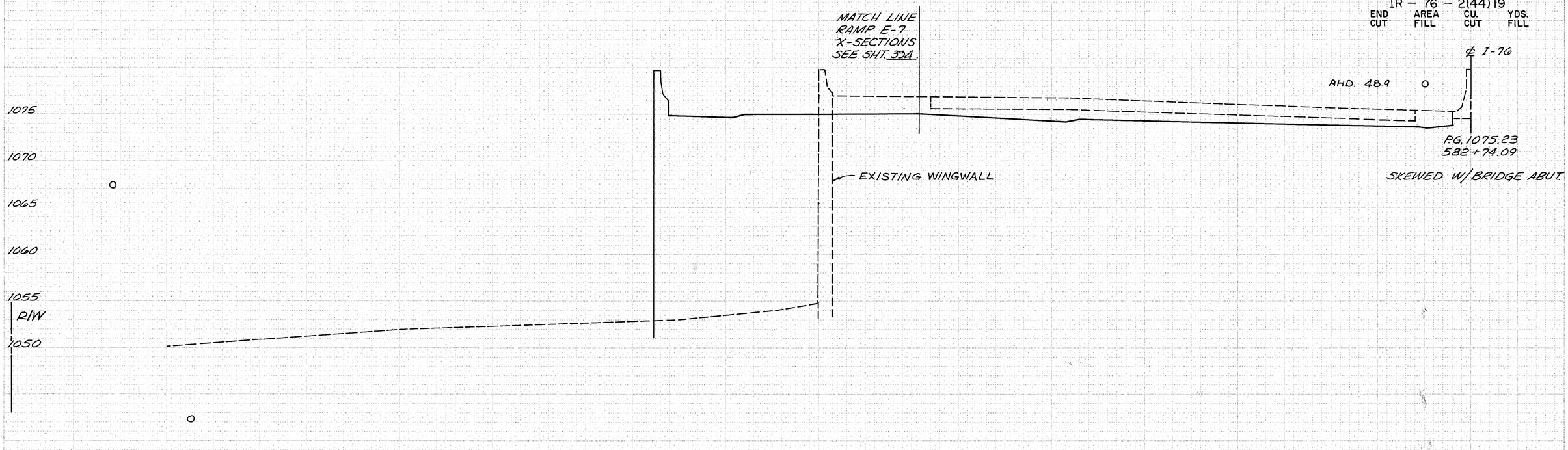

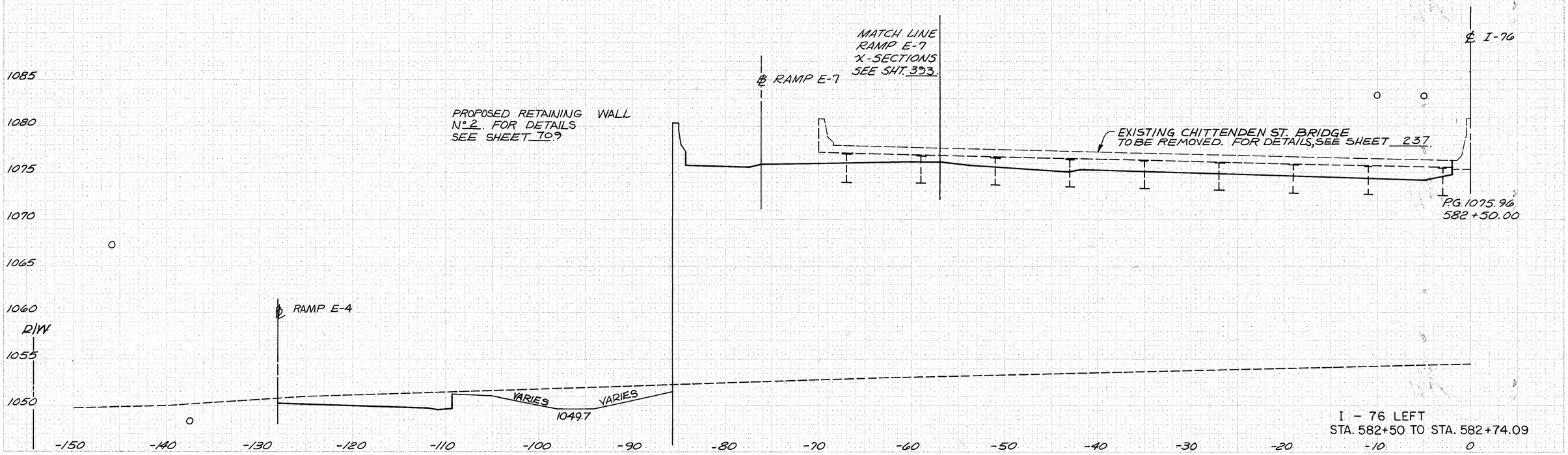

I – 76 LEFT
STA. 582+50 TO STA. 582+74.09

K&E PLATE 3, CROSS SECTION
KEUFFEL & ESSER CO.

SEEDING
END SQ.
WIDTH YARDS

CALCULATED BY BJB DATE 3/90
CHECKED BY DSB DATE 7/90

FHWA REG	STATE	PROJECT
5	OHIO	

274
12 14

SUM – 76 – 11.57
IR – 76 – 2(44)19

END CUT | AREA FILL | CU. CUT | YDS. FILL

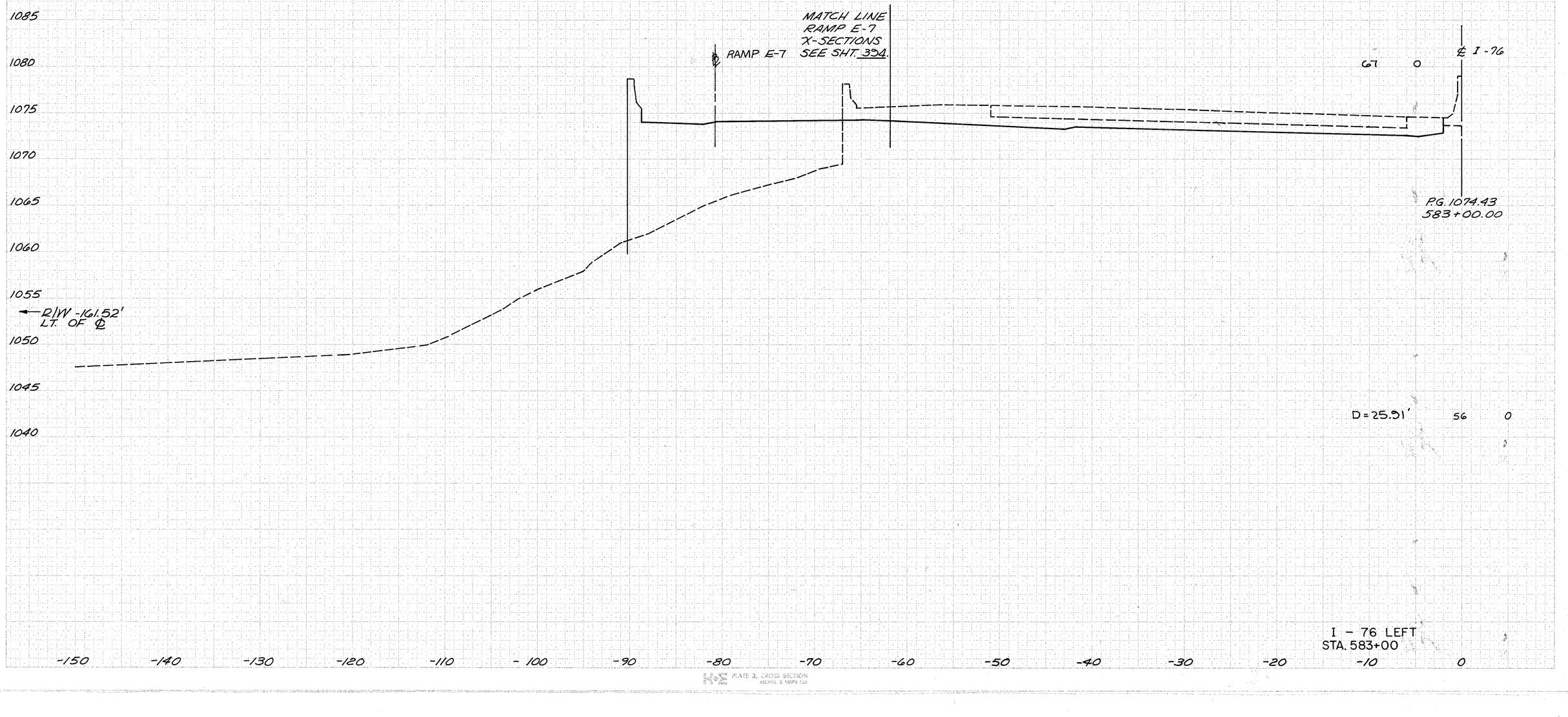

PLATE 3, CROSS SECTION
KEPPEL & RAMPE CO.

CALCULATED BY BTB DATE 3/90
CHECKED BY DSB DATE 7/90

FHWA REG	STATE	PROJECT
5	OHIO	

275/1214

SUM - 76 - 11.57
IR - 76 - 2(44)19

SEEDING
END WIDTH — SQ. YARDS

END CUT — AREA FILL — CU. YDS. CUT — CU. YDS. FILL

MATCH LINE RAMP 'E-7' X-SECTIONS SEE SHT. 395.

℄ RAMP E-7

9:1 — 6:1

1069.9

℄ I-76

55 0

PG. 1071.12
584+00.00

15

1070
1065
1060
1055
1050

← R/W -178.72' LT. OF ℄

64

33 0

℄ I-76

℄ RAMP E-7

6:1 — 10:1

1073.0

52 0

PG. 1072.81
583+50.00

MATCH LINE RAMP 'E-7' X-SECTIONS SEE SHT. 395.

8

1070
1065
1060
1055
1050

110 0

← R/W -169.63' LT. OF ℄

22

-150 -140 -130 -120 -110 -100 -90 -80 -70 -60 -50 -40 -30 -20 -10 0

I - 76 LEFT
STA 583+50 TO STA 584+00

PLATE 3. CROSS SECTION
ROPER & EISEL CO.

SEEDING
END WIDTH | SQ. YARDS

CALCULATED BY BJB DATE 3/90
CHECKED BY DSB DATE 7/90

FHWA REG	STATE	PROJECT
5	OHIO	

276
1214

SUM - 76 - 11.57
IR - 76 - 2(44)19

END CUT	AREA FILL	CU. CUT	YDS. FILL
54	48		
104	46		
105	2		
58	2		
39			
181			
26			
114			

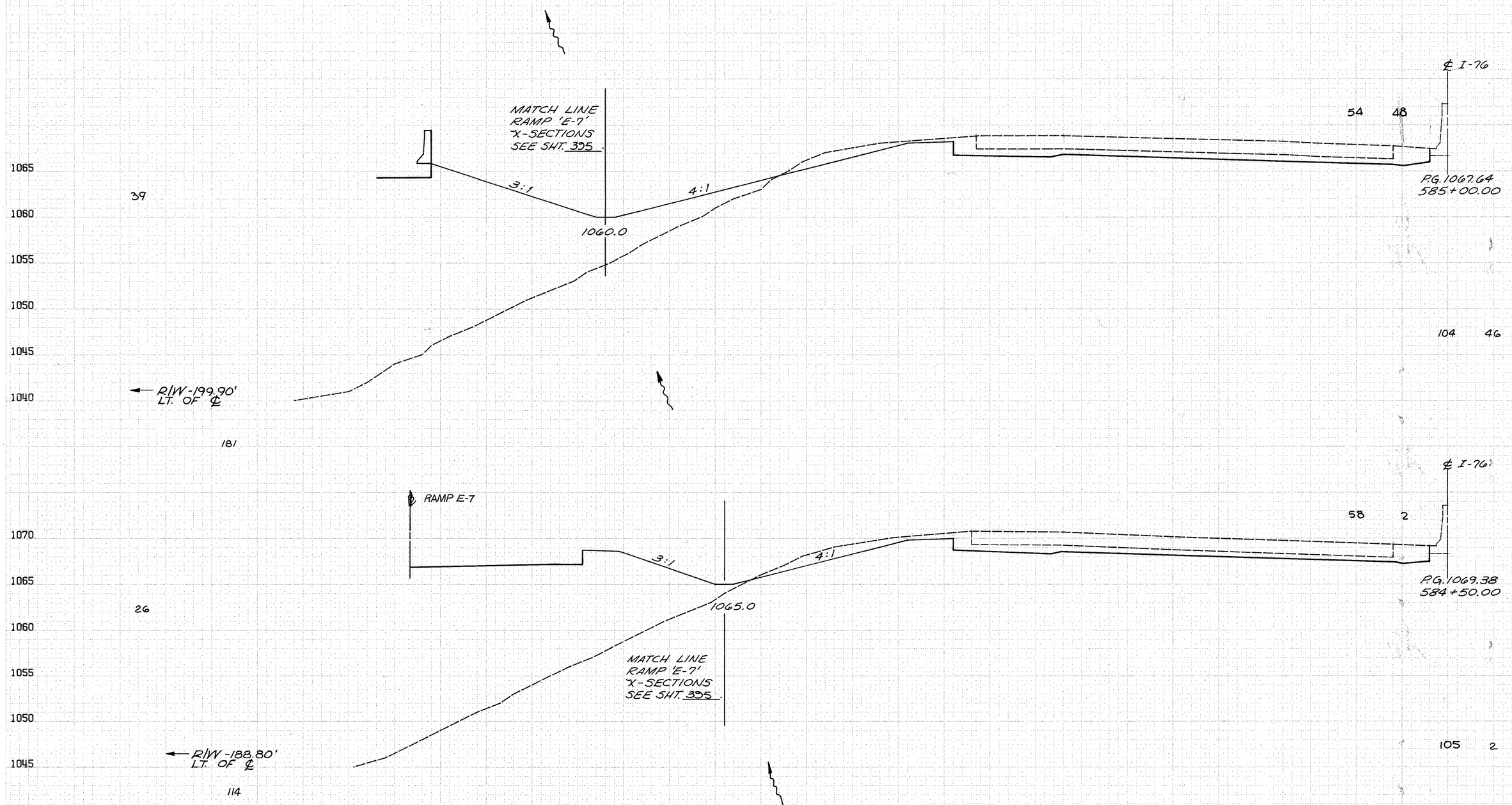

I - 76 LEFT
STA 584+50 TO STA 585+00

PLATE 3, CROSS SECTION
KELFOIL & ASSOC. CO.

CALCULATED BY BJB DATE 3/90
CHECKED BY DSB DATE 7/90

FHWA REG	STATE	PROJECT
5	OHIO	

277 / 1214

SUM - 76 - 11.57
IR - 76 - 2(44)19

END	AREA	CU.	YDS.
CUT	FILL	CUT	FILL

SEEDING

END WIDTH	SQ. YARDS

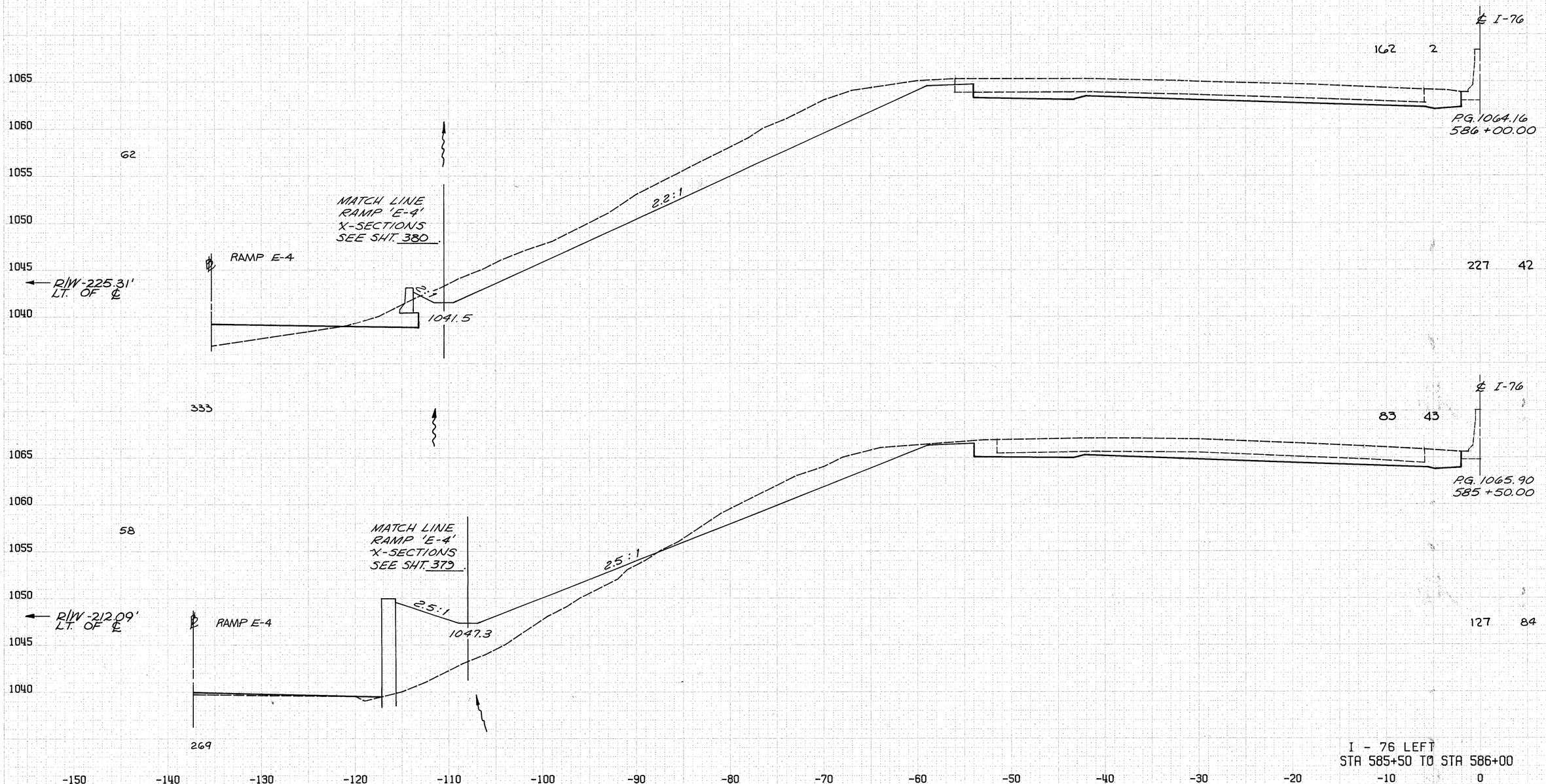

I - 76 LEFT
STA 585+50 TO STA 586+00

PLATE 3. CROSS SECTION
KELLER & GUILL CO.

CALCULATED BY BJB DATE 3/90
CHECKED BY DSB DATE 7/90

FHWA REG	STATE	PROJECT
5	OHIO	

278
1214

SUM - 76 - 11.57
IR - 76 - 2(44)19

SEEDING
END WIDTH — SQ. YARDS

END CUT	AREA FILL	CU. CUT	YDS. FILL
350	8		
G24	14		
548	11		
268	5		
398	7		

EXIST. RAMP 'E-7'
MATCH LINE RAMP E-4 X-SECTIONS SEE SHT. 381.
RAMP E-4
← R/W -270.44' LT. OF ℄
2:1
6:1
1039.1
℄ I-76
STA. 587+00
EXIST. INLET No. I-3850
P.G. 1058.94
587+50.00
P.G. 1060.68
587+00.00
50
289
54
MATCH LINE
← R/W -255.00' LT. OF ℄
1039.0
311
MATCH LINE RAMP E-4 X-SECTIONS SEE SHT. 380.
58
RAMP E-4
← R/W -239.61' LT. OF ℄
2:0"
4'-0"
ROUNDING
6:1
24:1
1039.4
333
P.G. 1062.42
586+50.00

* NOTE ~ SLOPE DETAIL DIMENSIONS ARE TYPICAL AS SHOWN STA. 586+50 TO STA. 593+00

I - 76 LEFT
STA 586+50 TO STA 587+50

1055 1050 1045 1060 1055 1050 1045 1040 1060 1055 1050 1045 1040

-150 -140 -130 -120 -110 -100 -90 -80 -70 -60 -50 -40 -30 -20 -10 0

PLATE 3, CROSS SECTION
KOPPEL & ZEIS CO.

SEEDING
END WIDTH SQ YARDS

CALCULATED BY BJB DATE 3/90
CHECKED BY DSB DATE 7/90

FHWA REG	STATE	PROJECT	279 / 1214
5	OHIO		

SUM - 76 - 11.57
IR - 76 - 2(44)19

END CUT	AREA FILL	CU. CUT	YDS. FILL
201	4		
		451	8
286	5		
		590	11
		351	7
		649	14

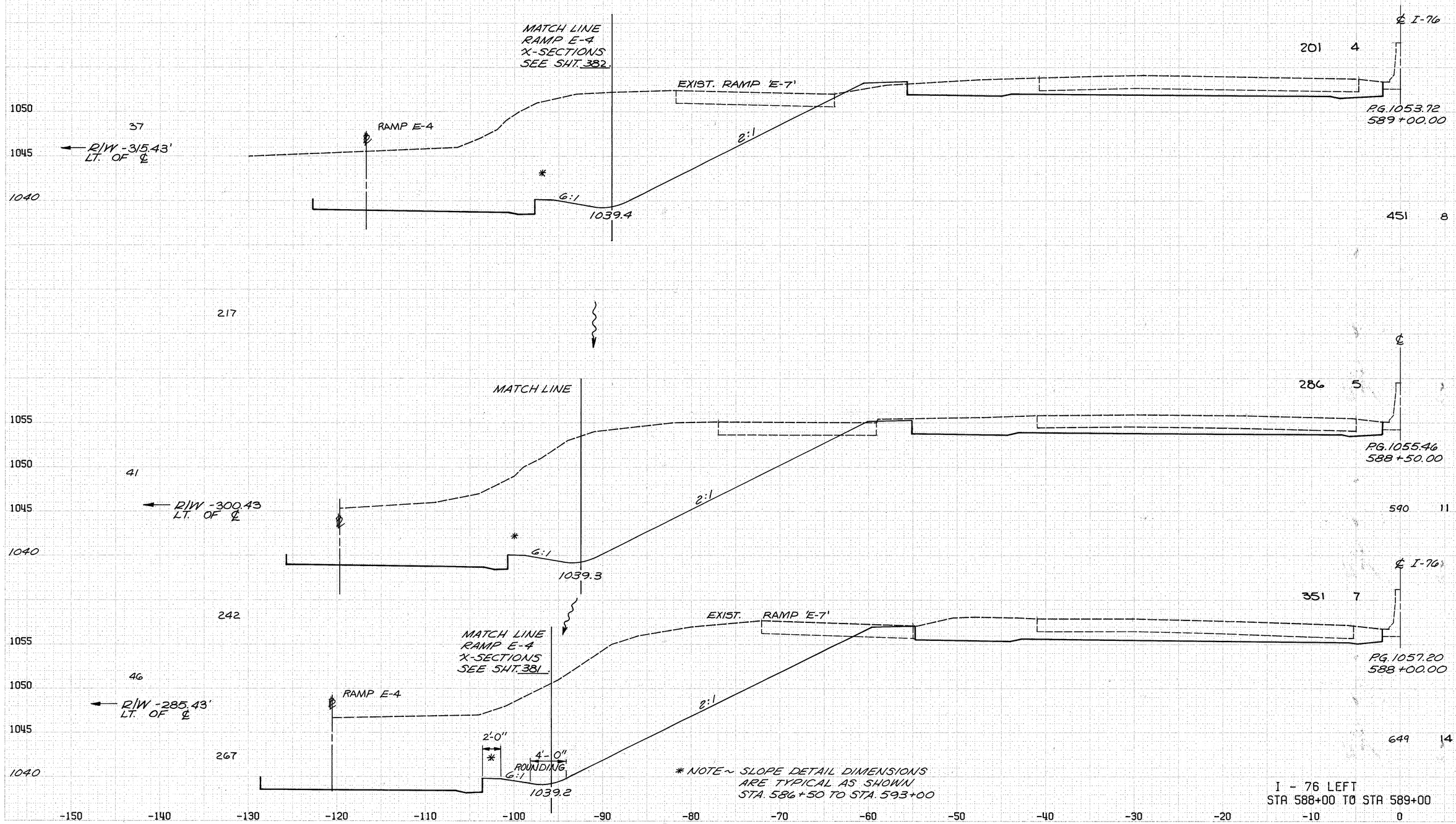

* NOTE ~ SLOPE DETAIL DIMENSIONS ARE TYPICAL AS SHOWN STA. 586+50 TO STA. 593+00

I - 76 LEFT
STA 588+00 TO STA 589+00

PLATE 3, CROSS SECTION
REUPKE & EGGER CO.

CALCULATED BY RJB DATE 3/90
CHECKED BY DSB DATE 7/90

FHWA REG	STATE	PROJECT	280 12.14
5	OHIO		

SUM - 76 - 11.57
IR - 76 - 2(44)19

SEEDING

	END WIDTH	SQ. YARDS
1045		
	20	
1040		
	← R/W -259.11' LT. OF ℄	
		122
1045		
	24	
1040	← R/W -244.06' LT. OF ℄	
		144
1045	28	
	← R/W -229.01' LT. OF ℄	
1040		
		164
1050		
	31	
1045	← R/W -213.97' LT. OF ℄	
1040		
		183
1050		
	35	
1045	← R/W -198.92' LT. OF ℄	
1040		
		200

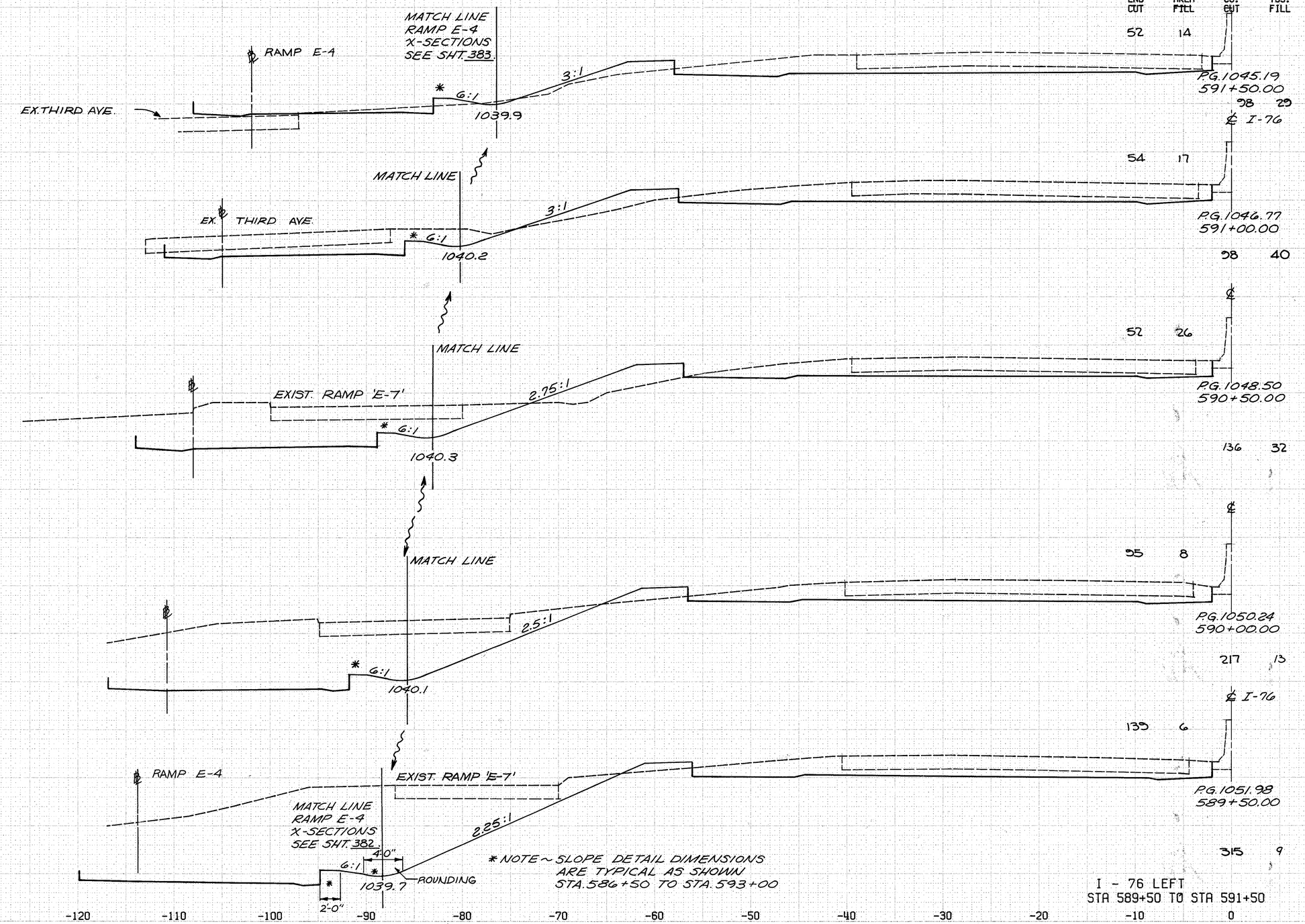

* NOTE ~ SLOPE DETAIL DIMENSIONS ARE TYPICAL AS SHOWN STA. 586+50 TO STA. 593+00

I - 76 LEFT
STA 589+50 TO STA 591+50

PLATE 3. CROSS SECTION

CALCULATED BY BJ& DATE 3/90
CHECKED BY DSB DATE 7/90

FHWA REG	STATE	PROJECT
5	OHIO	

281
1214

SUM - 76 - 11.57
IR - 76 - 2(44)19

SEEDING
END WIDTH — SQ. YARDS

END CUT AREA FILL — CU. CUT YDS. FILL

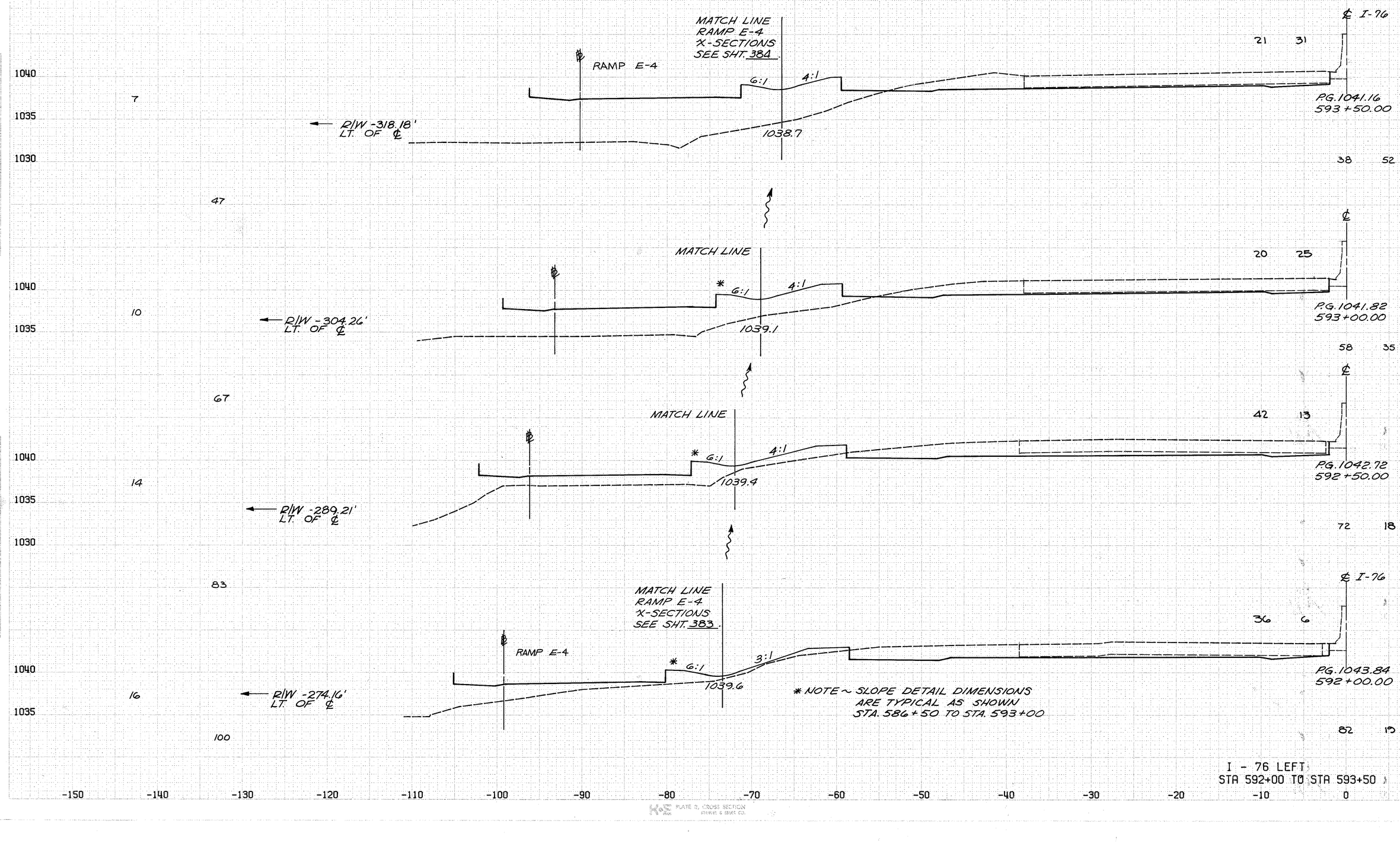

* NOTE ~ SLOPE DETAIL DIMENSIONS ARE TYPICAL AS SHOWN STA. 586+50 TO STA. 593+00

I - 76 LEFT
STA 592+00 TO STA 593+50

PLATE 9, CROSS SECTION
BUSKIRK & BIXLER CO.

CALCULATED BY BJB DATE 3/90
CHECKED BY DSB DATE 7/90

FHWA REG	STATE	PROJECT
5	OHIO	

282
1214

SUM - 76 - 11.57
IR - 76 - 2(44)19

END CUT	AREA FILL	CU. CUT	YDS. FILL

SEEDING
END WIDTH — S.Q. YARDS

MATCH LINE
RAMP E-7
X-SECTIONS
SEE SHT. 402.

1025
1020 ← R/W -267.28' LT. OF ℄
1015 EX. THIRD AVE.
1016.4
7.5:1
C C
-190 -180 -170 -160 -150
1035
1030
86
2:1
1025 C
1020
7.5:1
447
B
1025 C
MATCH LINE
RAMP E-7
X-SECTIONS
SEE SHT. 402.
← R/W -261.00' LT. OF ℄
1020
4:1
B
1015 1016.8
-170 -160 -150 -140
2.5:1
1030
B
75
1025
4:1
1020 B
411
MATCH LINE
RAMP E-7
X-SECTIONS
SEE SHT. 402.
→ AHEAD
A
← R/W -328.00' LT. OF ℄
1025
1020
EX. THIRD AVE.
1017.8
A
1030 -170 -160 -150
3:1
70 AHD.
0 BK.
1025 A
19
1020
A
-150 -140 -130 -120 -110 -100 -90 -80 -70 -60 -50 -40 -30 -20 -10 0

℄ I-76
134 668
P.G. 1040.54
595+00.00
223 1132

STA. 594+63
INLET NO. I-3B50 A.P.P.
GUTTER ELEV. = 1040.12
(REMOVE EXISTING INLET)
℄
107 554
P.G. 1040.52
594+50.00
153 577

AHD. 55 480
BK. 16 22
STA. 594+00
INLET No. I-3B50 A.P.P.
GUTTER EL. = 1040.12
℄ I-76
MATCH LINE
RAMP E-4
X-SECTIONS
SEE SHT. 384.
← BACK
P.G. 1040.73
593+99.00
PROP. 15" S.T.M.
15" N.E. = 1034.40
6" U.D. = 1035.15
35 45

I - 76 LEFT
STA. 593+99 TO STA. 595+00

PLATE 8, CROSS SECTION
KRUPPEL & ESSER CO.

SEEDING
END SQ.
WIDTH YARDS

CALCULATED BY BJB DATE 3/90
CHECKED BY DSB DATE 7/90

FHWA REG	STATE	PROJECT
5	OHIO	

283
1214

SUM - 76 - 11.57
IR - 76 - 2(44)19

END CUT	AREA FILL	CU. CUT	YDS. FILL

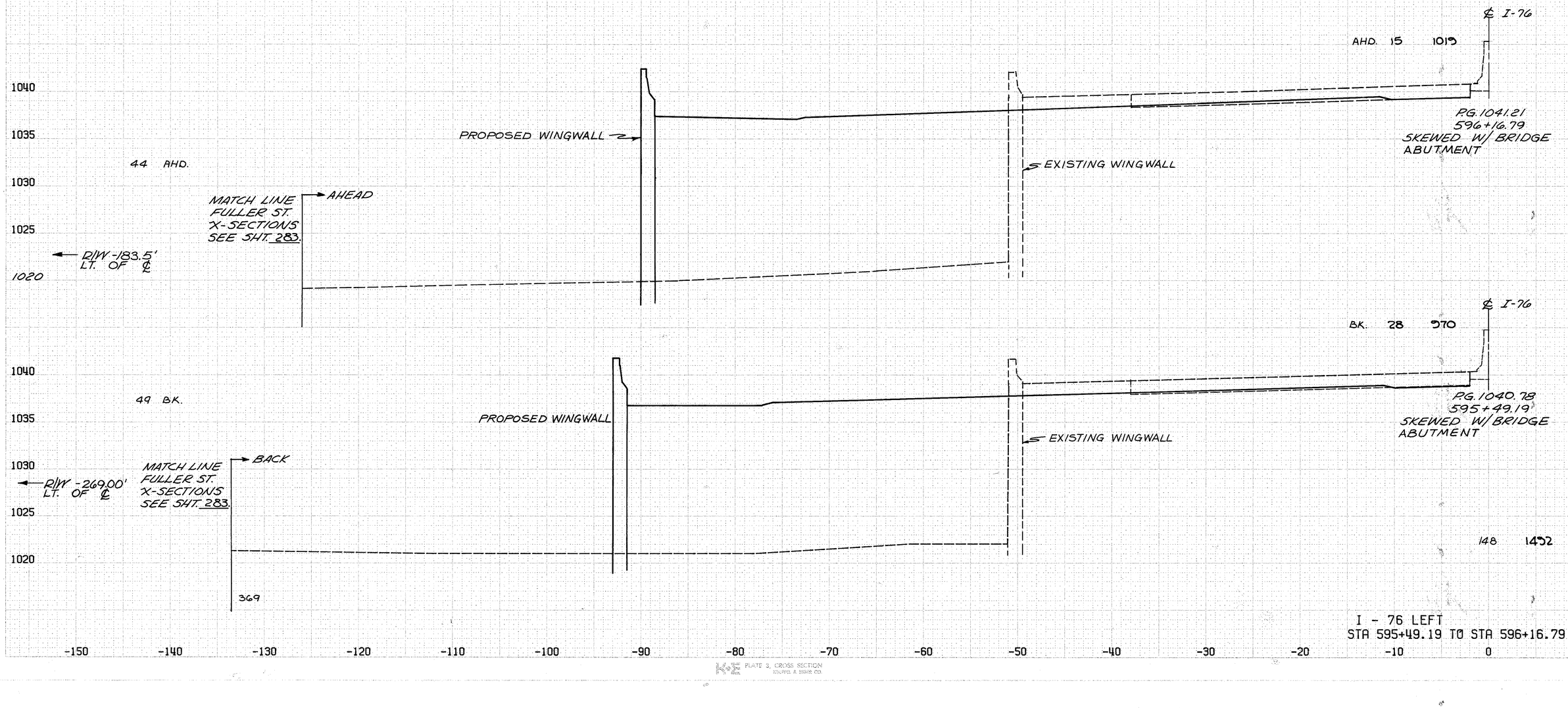

I - 76 LEFT
STA 595+49.19 TO STA 596+16.79

ORIGINAL SURVEY NOTE BOOK(S) PROTRACTED FIELD PLATE TRIPLATE AREAS JACOBS CHECKED BY DATE NO. BY DATE
K+E PLATE 3, CROSS SECTION KEUFFEL & ESSER CO.

CALCULATED BY BSB DATE 3/90
CHECKED BY DSB DATE 7/90

FHWA REG	STATE	PROJECT
5	OHIO	

284
1214

SUM - 76 - 11.57
IR - 76 - 2(44)19

END CUT	AREA FILL	CU. CUT	YDS. FILL

SEEDING

END WIDTH	SQ. YARDS

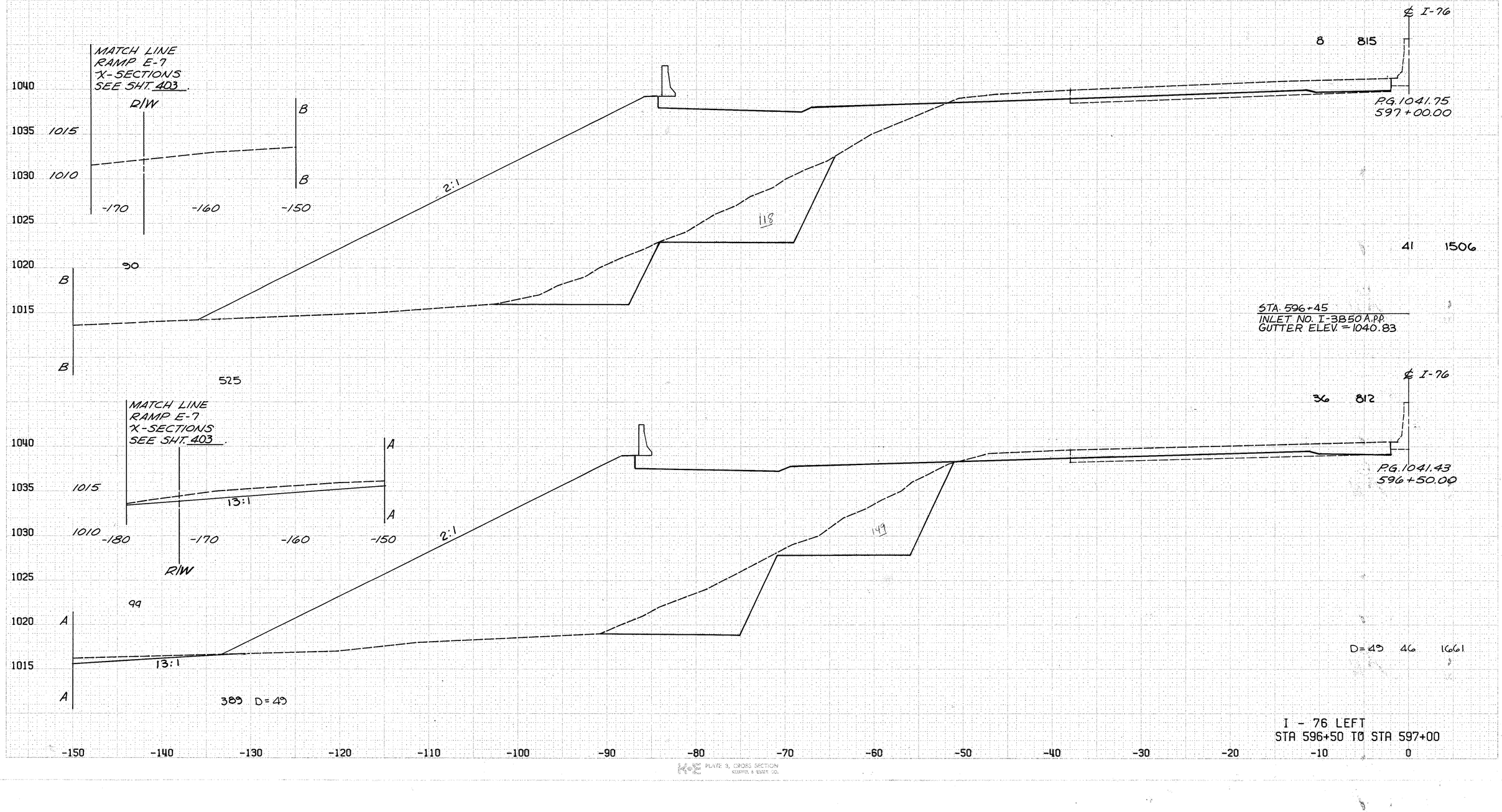

I - 76 LEFT
STA 596+50 TO STA 597+00

PLATE 3, CROSS SECTION
KLOFFER & ESSER CO.

SEEDING
END SQ.
WIDTH YARDS

CALCULATED BY BJB DATE 3/90
CHECKED BY DSB DATE 7/90

FHWA REG	STATE	PROJECT
5	OHIO	

285
1214

SUM - 76 - 11.57
IR - 76 - 2(44)19

END CUT	AREA FILL	CU. YDS. CUT	CU. YDS. FILL
13	754		
24	1482		
19	1502		
13	807		
472			
489			
84			
86			

℄ I-76

P.G. 1042.39
598+00.00

PROP. BARRIER FOR SIGN BASE

℄ I-76

P.G. 1042.07
597+50.00

199

182

2:1

RIW

B

A

EX. THIRD AVE.

1040
1035
1030
1025
1020
1015
1010
1005

1010
1005
1015
1010
1005

-170 -160 -150

-150 -140 -130 -120 -110 -100 -90 -80 -70 -60 -50 -40 -30 -20 -10 0

I - 76 LEFT
STA 597+50 TO STA 598+00

PLATE 3, CROSS SECTION
KELLFOLD & SMITH CO.

CALCULATED BY BSB DATE 3/90
CHECKED BY DSB DATE 7/90

FHWA REG	STATE	PROJECT
5	OHIO	

286/1214

SUM - 76 - 11.57
IR - 76 - 2(44)19

SEEDING

END WIDTH	SQ. YARDS

END CUT AREA	FILL AREA	CU. YDS. CUT	CU. YDS. FILL
21	442		
32	1165		
14	816		
25	1491		

℄ I-76

PROPOSED WINGWALL

P.G. 1043.03
599+00.00

P.G. 1042.71
598+50.00

1040
1035
1030
1025
1020
1015
1010
1005

76
193
2:1
R/W
EX. THIRD AVE.
439

82
240
2:1
24:1
R/W
EX. THIRD AVE.
461

-150 -140 -130 -120 -110 -100 -90 -80 -70 -60 -50 -40 -30 -20 -10 0

I - 76 LEFT
STA 598+50 TO STA 599+00

PLATE 3, CROSS SECTION
KOUFFEL & ESSER CO.

CALCULATED BY BTS DATE 3/90
CHECKED BY DSB DATE 7/90

FHWA REG	STATE	PROJECT
5	OHIO	

287
1214

SUM - 76 - 11.57
IR - 76 - 2(44)19

SEEDING
END WIDTH — SQ. YARDS

50

END CUT	AREA FILL	CU. CUT	YDS. FILL
78	541		
214	835		
153	361		
161	744		

PROPOSED WINGWALL
EXISTING WINGWALL
P.G. 1043.67
600 +00.00

℄ I-76

R/W
2:1
24:1
EX. THIRD AVE.
317

PROPOSED WINGWALL
EXISTING PAVED GUTTER TO BE REMOVED
P.G. 1043.35
599 +50.00

64
2:1
3' MAX.
7'
R/W
EX. THIRD AVE.
389

1040
1035
1030
1025
1020
1015
1010
1005

-150 -140 -130 -120 -110 -100 -90 -80 -70 -60 -50 -40 -30 -20 -10 0

I - 76 LEFT
STA 599+50 TO STA 600+00

PLATE 3, CROSS SECTION
KRUMM & HSIN CO.

CALCULATED BY BSB DATE 3/90
CHECKED BY DSB DATE 7/90

FHWA REG	STATE	PROJECT
5	OHIO	

288 / 1214

SUM - 76 - 11.57
IR - 76 - 2(44)19

SEEDING
END WIDTH SQ. YARDS

ENG CUT	AREA FILL	SQ. CUT	YDS. FILL

℄ I-76

AHD. 32 1020

PROPOSED WINGWALL

EXISTING WINGWALL

PG. 1036.1
608+69.03
1035.8

SKEWED WITH ABUTMENT

AHD. 47

R/W

EX. THIRD AVE.

℄ I-76

BK. 12 1248

PG. 1044.02
600+55.23
1043.8

SKEWED WITH ABUTMENT

PROPOSED WINGWALL

EXISTING WINGWALL

D = 42"

92 1392

BK. 20

R/W

215

1040
1035
1030
1025
1020
1015
1010
1005

-150 -140 -130 -120 -110 -100 -90 -80 -70 -60 -50 -40 -30 -20 -10 0

I - 76 LEFT
STA 600+55.23 TO STA 608+69.03

K&E PLATE 3, CROSS SECTION
KEUFFEL & ESSER CO.

SEEDING
END SQ.
WIDTH YARDS

CALCULATED BY BJB DATE 3/90
CHECKED BY DSB DATE 7/90

FHWA REG	STATE	PROJECT	289 / 1214
5	OHIO		

SUM - 76 - 11.57
IR - 76 - 2(44)19

END CUT	AREA FILL	CU. CUT	YDS. FILL
5	681		
10	654		
35	1904		
18	1273		

D=45' D=60'

FINAL SURVEY — SURVEYED / PLOTTED / CHECKED / NOTE BOOK / AREAS / AREAS CHECKED — BY / DATE

℄ I-76

P.G. 1035.03
609+50.00
1034.7

MATCH LINE
THIRD AVE. X-SECTIONS
SEE SHEET 462.

56

2:1

2%

R/W -167.99'
LT. OF ℄

1030
1025
1020
1015
1010

℄ I-76

P.G. 1035.71
609+00.00
1035.2

270

MATCH LINE
THIRD AVE. X-SECTIONS
SEE SHEET 461.

41

1.55:1

4%

R/W

E/P 382 AVE.

88

1035
1030
1025
1020
1015
1010
1005

-150 -140 -130 -120 -110 -100 -90 -80 -70 -60 -50 -40 -30 -20 -10 0

I - 76 LEFT
STA 609+00 TO STA 609+50

PLATE 2. CROSS SECTION
KNIGHT & SEGER CO.

CALCULATED BY BJB DATE 3/90
CHECKED BY DSB DATE 7/90

FHWA REG	STATE	PROJECT
5	OHIO	

290
1214

SUM - 76 - 11.57
IR - 76 - 2(44)19

SEEDING
END WIDTH | SQ. YARDS

END CUT	AREA FILL	CU. CUT	YDS. FILL
		℄ I-76	
	SKEWED WITH ABUTMENT		
		P.G. 1033.60 610+80.96 1033.6	
	BK. 14 357		
		53	567
		D=75'	D=52'
240 D=45'			
71		24	607
		P.G. 1034.42 610+00.00 1034.2	
		31	1193

BACK
PROPOSED WINGWALL
EXISTING WINGWALL
BK. 25
R/W -206.00' LT. OF ℄
R/W -189.13' LT. OF ℄
MATCH LINE THIRD ST. X-SECTIONS SEE SHEET 4&2.
2:1
18:1
33
353

1030
1025
1020
1015
1010

-150 -140 -130 -120 -110 -100 -90 -80 -70 -60 -50 -40 -30 -20 -10 0

I - 76 LEFT
STA 610+00 TO STA 610+80.96

ORIGINAL SURVEY | SURVEYED BY | DRAWN BY | TRACED BY | CHECKED BY | DATE | NOTE: WHERE THERE ARE NO REVISIONS, THIS PLAT IS THE FINAL AS-BUILT RECORD. | NO. | REVISIONS | BY | DATE

FINAL SURVEY | SURVEYED BY | DRAWN BY | TRACED BY | CHECKED BY | DATE | NOTE: WHERE THERE ARE NO REVISIONS, THIS PLAT IS THE FINAL AS-BUILT RECORD. | NO. | REVISIONS | BY | DATE

CALCULATED BY GJB DATE 3/90
CHECKED BY DSB DATE 7/90

FHWA REG	STATE	PROJECT
5	OHIO	

291
12.14

SUM - 76 - 11.57
IR - 76 - 2(44)19

END CUT	AREA FILL	CU. YDS. CUT	CU. YDS. FILL

SEEDING
END WIDTH SQ. YARDS

5 +32 AHD.
0 +32 BK.

← R/W -387.52' LT. OF ℄

1030
1025
1020
1030

MATCH LINE
RAMP E-12 X-SECTIONS
SEE SHEET 434

℄ RAMP E-12

EX. RAMP 'E-13'

℄ I-76

25 37

PG. 1032.11
613+00.00

46 44

MATCH LINE

25 11

PG. 1032.42
612+50.00

34 11

0

RAMP E-12

MATCH LINE
RAMP E-12 X-SECTIONS
SEE SHEET 433

AHEAD

PROP. BARRIER
@ SIGN BASE

AHD. 20 3
BK. 20 438

PG. 1032.67
612+08.65
NOSE STATION
RAMP E-12

113 1285

← R/W -401.83' LT. OF ℄

1030

0 AHD.
81 BK.

2:1

← R/W -390.00' LT. OF ℄

BACK

AHEAD

90

℄ I-76

AHD. 71 388.0

1030

378 D=84

PROPOSED WINGWALL

1025

MATCH LINE
MARTHA AVE. X-SECTIONS
SEE SHEET 463

EXISTING WINGWALL

PG. 1033.01
611+55.38
SKEWED WITH ABUTMENT

0 AHD.

1020

← R/W -384.00' LT. OF ℄

1015

EX. RAMP E-12

1010

-150 -140 -130 -120 -110 -100 -90 -80 -70 -60 -50 -40 -30 -20 -10 0

I - 76 LEFT
STA 611+55.38 TO STA 613+00

K&E PLATE 3, CROSS SECTION
KEUFFEL & ESSER CO.

FHWA REG	STATE	PROJECT	292 1214
5	OHIO		

CALCULATED BY GJS DATE 3/90
CHECKED BY DSB DATE 7/90

SUM - 76 - 11.57
IR - 76 - 2(44)19

SEEDING
END WIDTH — SQ. YARDS

END CUT	AREA FILL	CU. YDS. CUT	CU. YDS. FILL
26	498		
46	741		
24	302		
41	450		
20	183		
41	260		
24	38		
45	125		

℄ I-76

P.G. 1030.87
615+00.00

P.G. 1031.18
614+50.00

P.G. 1031.49
614+00.00

P.G. 1031.80
613+50.00

1030
1025
1020
1015

65

R/W - 331.20' LT. OF ℄

4:1

20:1

1015.4

314

48

R/W - 345.09' LT. OF ℄

3.5:1

15:1

EXIST. RAMP E-13

1019.7

220

31

R/W - 358.98' LT. OF ℄

3:1

7:1

1023.7

MATCH LINE
RAMP E-12 X-SECTIONS
SEE SHEET 434

114

10

R/W - 373.21' LT. OF ℄

16:1

6:1

1030.5

EXIST. RAMP E-13

15

-150 -140 -130 -120 -110 -100 -90 -80 -70 -60 -50 -40 -30 -20 -10 0

I - 76 LEFT
STA 613+50 TO STA 615+00

PLATE 3, CROSS SECTION
KELTNER & FISHER CO.

FHWA REG	STATE	PROJECT	293 / 1214
5	OHIO		

CALCULATED BY BSB DATE 3/90
CHECKED BY DSB DATE 7/90

SUM - 76 - 11.57
IR - 76 - 2(44)19

END CUT	AREA FILL	CU. YDS. CUT	CU. YDS. FILL
24	760		
46	1340		
26	687		
48	1097		

SEEDING
END WIDTH SQ. YARDS

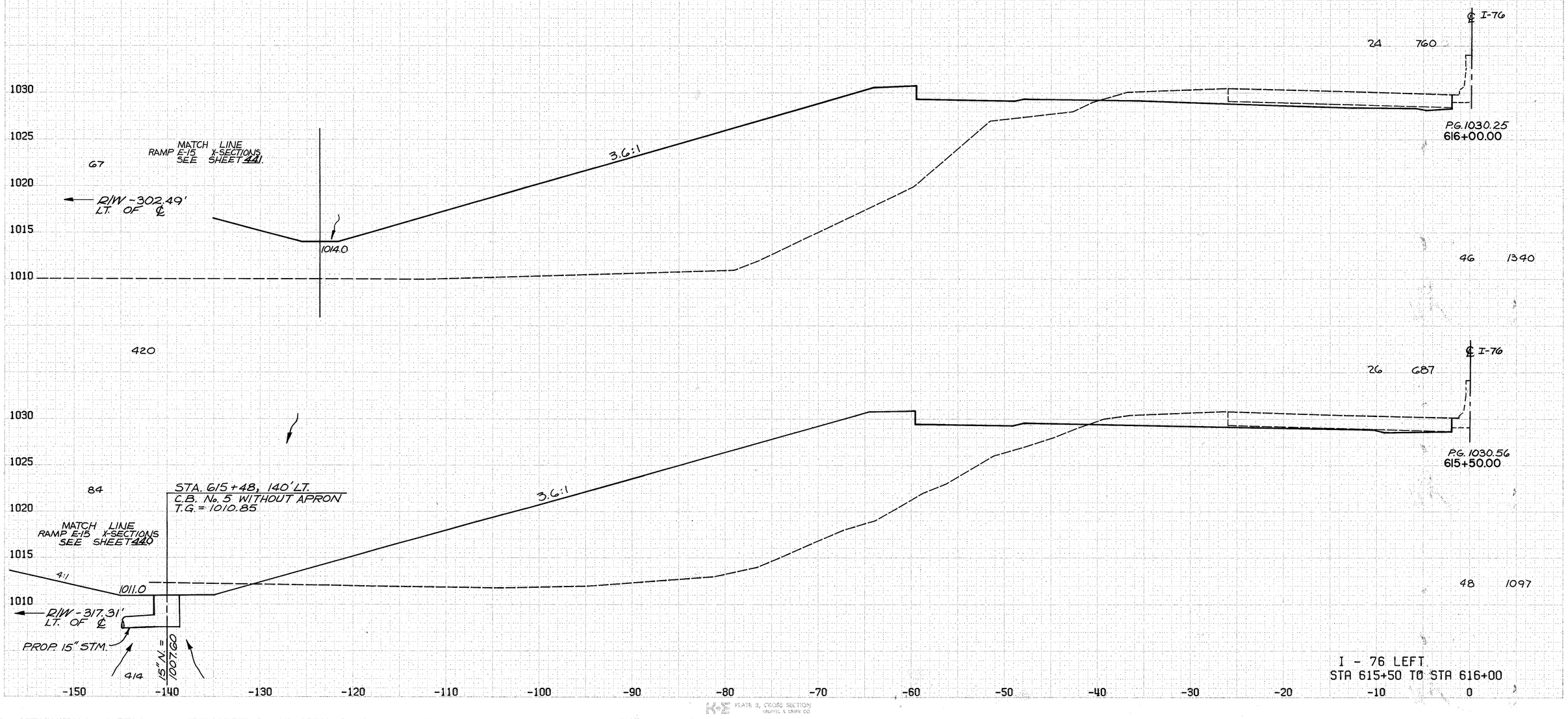

I - 76 LEFT
STA 615+50 TO STA 616+00

PLATE 3, CROSS SECTION
REUPEL & DEER CO.

CALCULATED BY BTB DATE 3/90
CHECKED BY DSB DATE 7/90

FHWA REG	STATE	PROJECT
5	OHIO	

294
1214

SUM - 76 - 11.57
IR - 76 - 2(44)19

SEEDING
END WIDTH | SQ. YARDS

END CUT	AREA FILL	CU. YDS. CUT	CU. YDS. FILL
BK 13	307		
		12	732
		25	1647
		25	1306
		15	678
		36	1332

BACK

MATCH LINE
RAMP E-15 X-SECTIONS
SEE SHEET 442

3:1

1020.8

BK 35

← R/W -264.07' LT. OF ℄

℄ I-76

PG. 1029.25
617+54.25

EXIST. STRUCTURE TO BE REMOVED
FOR DETAILS, SEE SHEET 240

SKEWED W/ ABUTMENT

D = 54.25

220

EXISTING WINGWALL

44 ← R/W -275.81' LT. OF ℄

MATCH LINE

1018.4

PG. 1029.63
617+00.00

256

48 ← R/W -288.61' LT. OF ℄

1017.4

320

1025
1020
1015
1010
1030

-150 -140 -130 -120 -110 -100 -90 -80 -70 -60 -50 -40 -30 -20 -10 0

I - 76 LEFT
STA 616+50 TO STA 617+54.25

PG. 1029.94
616+50.00

PLATE 3, CROSS SECTION
KRIEGEL & KELLY CO.

CALCULATED BY BSB DATE 3/90
CHECKED BY DSB DATE 7/90

FHWA REG	STATE	PROJECT
5	OHIO	

295
12/4

SUM - 76 - 11.57
IR - 76 - 2(44)19

SEEDING
END WIDTH SQ. YARDS

END CUT AREA FILL CU. YDS. CUT FILL

℄ I-76

16 353

P.G. 1027.85
619+00.00

27 783

13 453

P.G. 1028.54
618+50.00

D = 54.25' 27 1499

AHD 14 999 ℄ I-76

P.G. 1029.03
STA. 617+95.75

SKEWED W/ABUTMENT

EXIST. STRUCTURE TO BE REMOVED
FOR DETAILS, SEE SHEET 240

R/W - 235.01' LT. OF ℄
2:1
3:1
1024.5

MATCH LINE
RAMP E-15 X-SECTIONS
SEE SHEET 443

R/W - 243.69' LT. OF ℄
3:1
3:1
1023.0

MATCH LINE

R/W - 253.37' LT. OF ℄
3:1
3:1
1021.8

MATCH LINE
RAMP E-15 X-SECTIONS
SEE SHEET 442

AHEAD

EXIST. RAMP E-10

AHD 30

20
26
128
169

1025
1020
1015
1010
1025
1020
1015
1010
1025
1020
1015
1010
1005

-150 -140 -130 -120 -110 -100 -90 -80 -70 -60 -50 -40 -30 -20 -10 0

I - 76 LEFT
STA. 617+95.75 TO STA. 619+00

PLATE 3, CROSS SECTION
KEUFFEL & ESSER CO.

CALCULATED BY BSB DATE 3/90
CHECKED BY DSB DATE 7/90

FHWA REG	STATE	PROJECT
5	OHIO	

296
1214

SUM - 76 - 11.57
IR - 76 - 2(44)19

SEEDING
END WIDTH SQ. YARDS

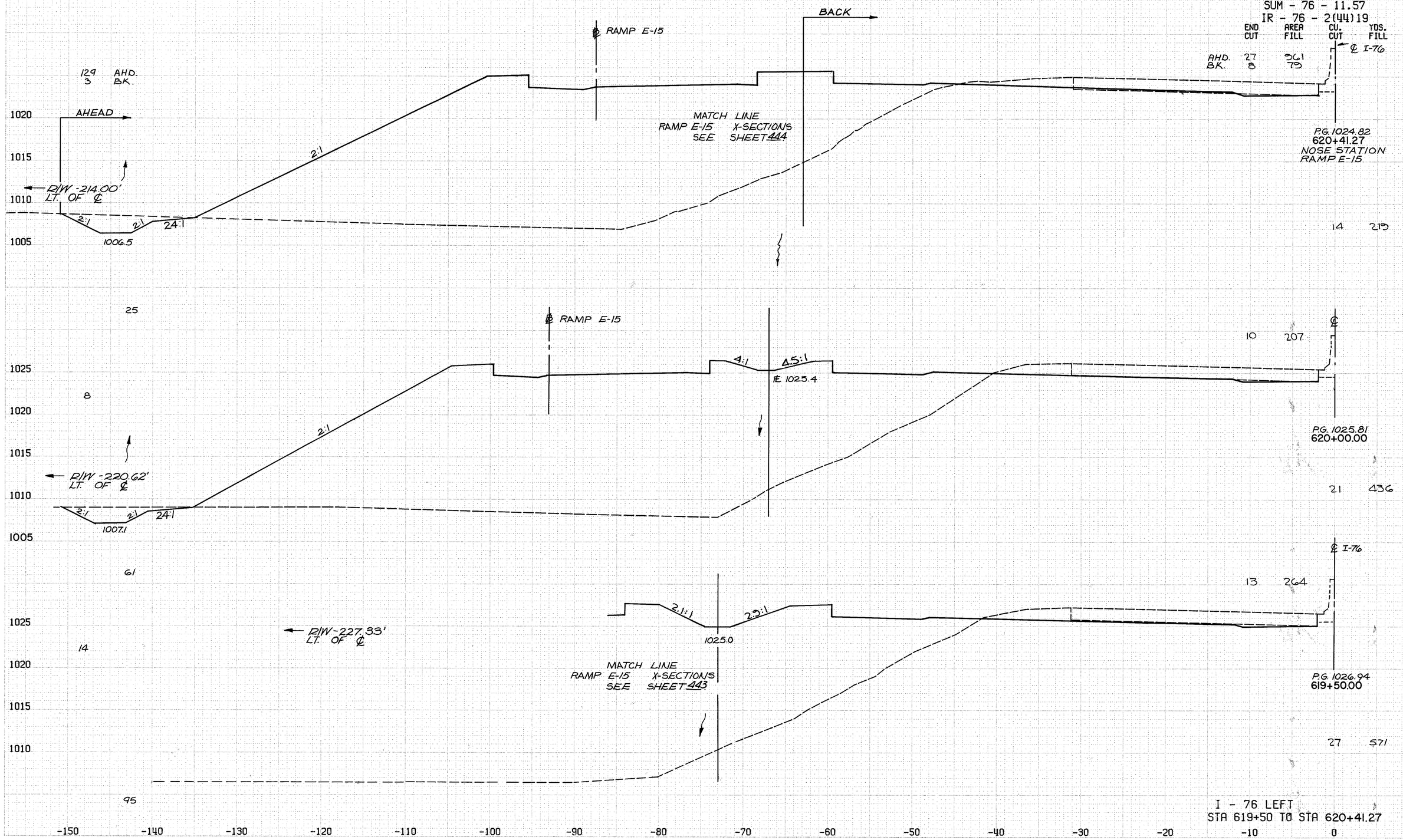

I - 76 LEFT
STA 619+50 TO STA 620+41.27

K&E PLATE 5, CROSS SECTION
KEUFFEL & ESSER CO.

CALCULATED BY BJB DATE 3/90
CHECKED BY DSB DATE 7/90

FHWA REG	STATE	PROJECT
5	OHIO	

297
1214

SUM - 76 - 11.57
IR - 76 - 2(44)19

SEEDING
END SQ.
WIDTH YARDS

END CUT	AREA FILL	CU. YDS. CUT	CU. YDS. FILL
36	706		
56	1407		
25	814		
51	1627		
30	343		
D=58.73'	G2	2071	

℄ I-76

PG 1021.01
622+00.00

PG 1022.21
621+50.00

PG 1023.41
621+00.00

128

127

125

708

700

829

1020
1015
1010
1005

2:1

24:1

1001.0

1000.5

1005.0

R/W-203.41' LT. OF ℄

R/W-206.29' LT. OF ℄

R/W-210.11' LT. OF ℄

STA. 621+50, 140' LT.
C.B. No. 5 WITHOUT APRON
T.G. = 1000.25

15"℄ = 996.93

EXISTING RETAINING WALL TO BE REMOVED

-150 -140 -130 -120 -110 -100 -90 -80 -70 -60 -50 -40 -30 -20 -10 0

I - 76 LEFT
STA 621+00 TO STA 622+00

K&E PLATE 3, CROSS SECTION

CALCULATED BY BJB DATE 3/90
CHECKED BY DSB DATE 7/90

FHWA REG	STATE	PROJECT
5	OHIO	

298
12.14

SUM - 76 - 11.57
IR - 76 - 2(44)19

SEEDING
END WIDTH 50. YARDS

END CUT	AREA FILL	CU. CUT	YDS. FILL
	STA. 624+00, ℄ EXIST. INLET		℄ I-76
	25	447	
	624+00.00 P.G. 1017.93		
		℄ 40	977
	18	608.0	
	PG 1018.17 623+50.00		
	41		1189
	STA. 623+00, ℄ EXIST. INLET		℄
	26	676	
	PG 1018.80 623+00.00		
	56		1259
	STA. 622+50, ℄ EX. INLET		℄ I-76
	34	684	
	PG 1019.81 622+50.00		
	65		1287

65 372 R/W 4:1 2:1 2:1 1004.5 EXIST. RAMP E-15

69 465 R/W STA. 623+50, 128' LT. I-76 C.B. REMOVED 3.5:1 2:1 2:1 1003.5

95 625 R/W -167.50' LT. OF ℄ 3:1 2:1 1003.0 EXIST. RAMP E-15

130 717 R/W -201.26' LT. OF ℄ 2.5:1 2:1 1001.5 EXISTING RETAINING WALL TO BE REMOVED

1015
1010
1005

-150 -140 -130 -120 -110 -100 -90 -80 -70 -60 -50 -40 -30 -20 -10 0

I - 76 LEFT
STA 622+50 TO STA 624+00

PLATE 3, CROSS SECTION
KELLETT & BAKER CO.

CALCULATED BY BJB DATE 3/90
CHECKED BY DSB DATE 7/90

FHWA REG	STATE	PROJECT
5	OHIO	

299
1214

SUM - 76 - 11.57
IR - 76 - 2(44)19

SEEDING
END WIDTH | SQ. YARDS

END CUT | AREA FILL | CU. CUT | YDS. FILL

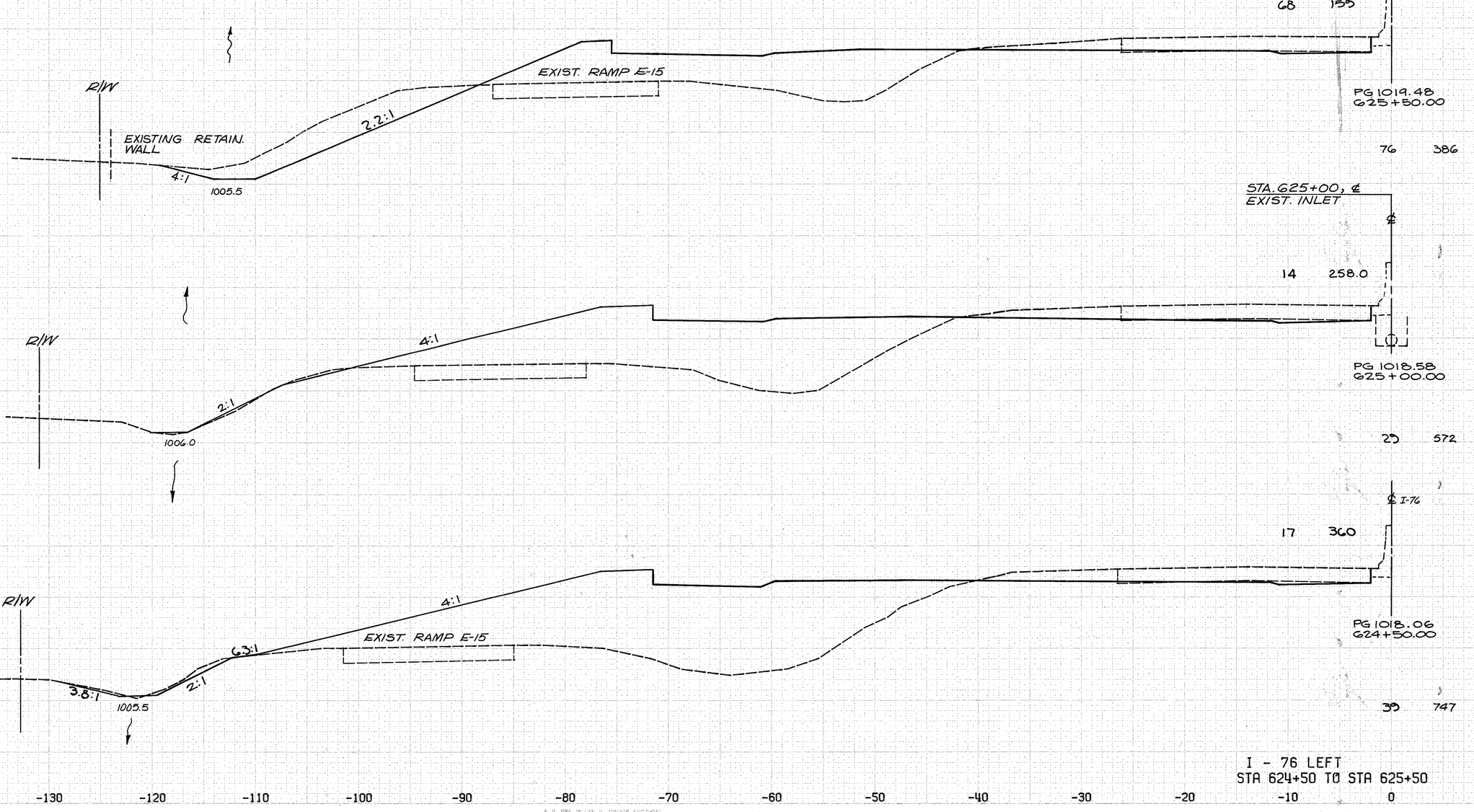

I - 76 LEFT
STA 624+50 TO STA 625+50

PLATE 3, CROSS SECTION
KRUPPEL & KOSER CO.

CALCULATED BY BJB DATE 3/90
CHECKED BY DSB DATE 7/90

FHWA REG	STATE	PROJECT
5	OHIO	

300
1214

SUM - 76 - 11.57
IR - 76 - 2(44)19

SEEDING
END WIDTH — SQ. YARDS

END CUT	AREA FILL	CU. CUT	YDS. FILL
196	12		
361	22		
194	12		
294	26		
AHD 124	16		
BACK 124	85		
178	230		

* PROPOSED RETAIN. WALL N° 11 FOR DETAILS, SEE SHEET 115.

EXIST. RAMP E-15

EX. RETAINING WALL

EX. 12" STM. TO BE REMOVED.

BEGIN RETAINING WALL NO. 11 STA. 626+00

NOTE: QUANTITY BREAK LINE - QBL SEE NOTE SHEET 89.

PG 1022.75
627+00.00

PG 1021.66
626+50.00

PG 1020.57
626+00.00

1004.3

1004.7

1005.1

I - 76 LEFT
STA 626+00 TO STA 627+00

PLATE 3, CROSS SECTION
HUNTER & ISERK CO.

FHWA REG	STATE	PROJECT	301 / 1214
5	OHIO		

CALCULATED BY BJB DATE 3/90
CHECKED BY DSB DATE 7/90

SUM - 76 - 11.57
IR - 76 - 2(44)19

SEEDING
END WIDTH — SQ. YARDS

END CUT	AREA FILL	CU. YDS. CUT	CU. YDS. FILL
69	23		
170	44		
115	9		
245	24		
150	17		
320	27		

* PROPOSED RETAIN. WALL N° 11 FOR DETAILS, SEE SHEET 715

℄ I-76

PG 1025.46
628+50.00

PG 1024.79
628+00.00

PG 1023.84
627+50.00

EXIST. RETAIN. WALL

4:1

1005.0

1003.5

1003.9

QBL

R/W

STA. 628+00, 91' LT.
C.B. No. 5 WITHOUT APRON
T.G. = 1003.25

15" ℄ = 1000.56

NOTE: QUANTITY BREAK LINE QBL SEE NOTE SHEET 89 .

30 172 32 200 40 214

1020 1015 1010 1005

-150 -140 -130 -120 -110 -100 -90 -80 -70 -60 -50 -40 -30 -20 -10 0

I - 76 LEFT
STA 627+50 TO STA 628+50

PLATE 3. CROSS SECTION
RUFFEL & BERRY CO.

CALCULATED BY BJB DATE 3/90
CHECKED BY DSB DATE 7/90

FHWA REG	STATE	PROJECT
5	OHIO	

302
1214

SUM - 76 - 11.57
IR - 76 - 2(44)19

END CUT	AREA FILL	CU. CUT	YDS. FILL

SEEDING
END WIDTH | SQ. YARDS

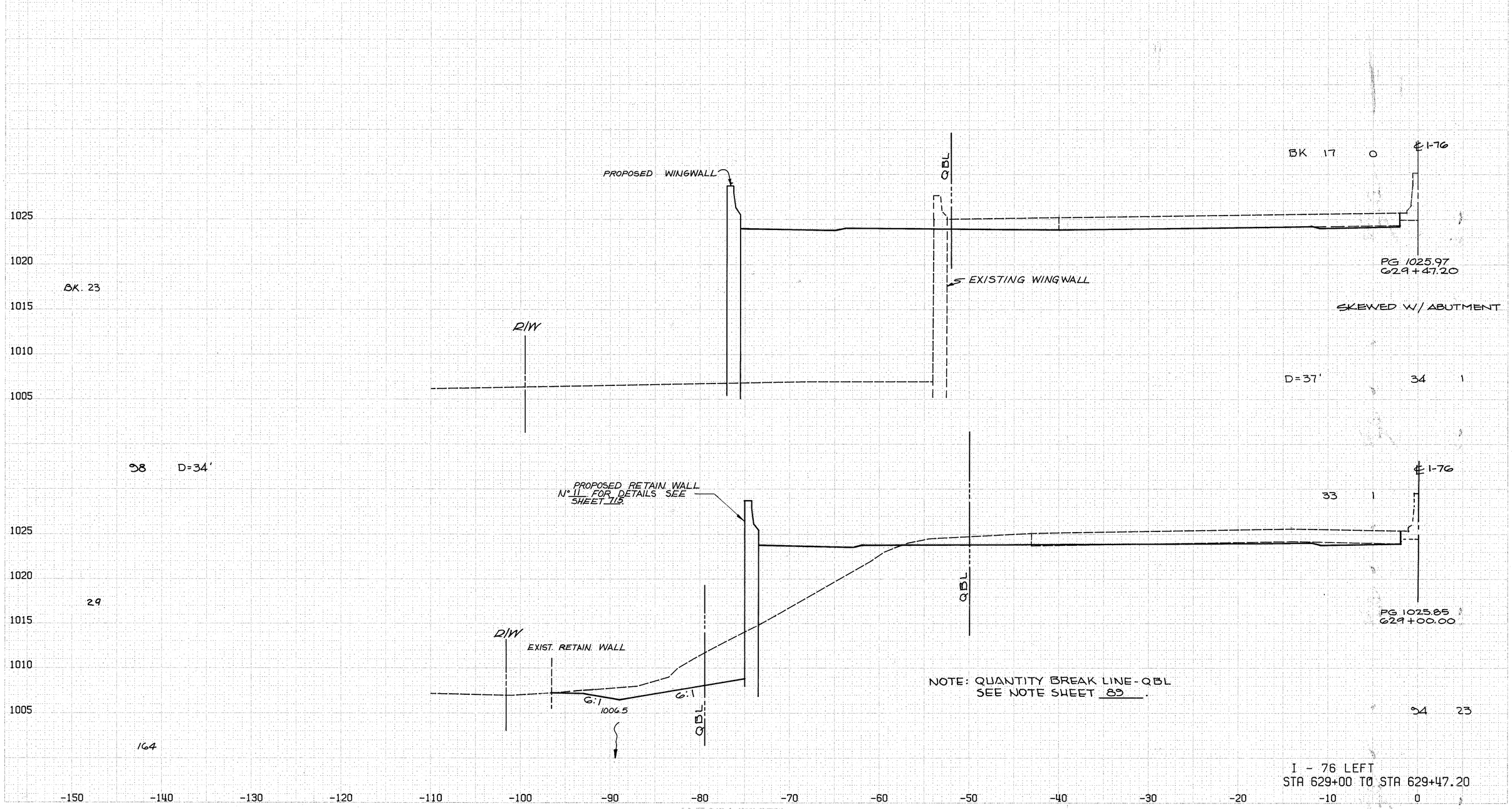

I - 76 LEFT
STA 629+00 TO STA 629+47.20

CALCULATED BY BJB DATE 3/90
CHECKED BY DSB DATE 7/90

FHWA REG	STATE	PROJECT
5	OHIO	

303
1214

SUM - 76 - 11.57
IR - 76 - 2(44)19

SEEDING
END WIDTH — SQ. YARDS

END CUT | AREA FILL | CU. YDS. CUT | CU. YDS. FILL

℄ I-76

9 4

P.G. 1024.6
631+00.00
1024.1

13 12

D= 53'

23 92

AHD 18 85

℄ I-76

P.G. 1025.76
630+05.59
1025.6

SKEWED W/ABUTMENT

8 9

P.G. 1025.35
630+50.00
1024.9

56

10

59

10

10

PAVED GUTTER TYPE 1-2

R/W

Q B L

1006.5

* PROPOSED RETAIN WALL N°12 FOR DETAILS, SEE SHEET 116.

BLDG.

EXISTING RETAIN. WALL TO BE REMOVED

1007.0

PROPOSED WINGWALL

EXISTING WINGWALL

1007.1

NOTE: QUANTITY BREAK LINE - Q B L SEE NOTE SHEET 85.

1020
1015
1010
1005
1025
1020
1015
1010
1005

-150 -140 -130 -120 -110 -100 -90 -80 -70 -60 -50 -40 -30 -20 -10 0

I - 76 LEFT
STA 630+05.59 TO STA 631+00

K+E PLATE 3, CROSS SECTION
KEUFFEL & ESSER CO.

CALCULATED BY BSB DATE 3/90
CHECKED BY DSB DATE 7/90

FHWA REG	STATE	PROJECT
5	OHIO	

304
1214

SUM - 76 - 11.57
IR - 76 - 2(44)19

SEEDING
END WIDTH SQ. YARDS

END CUT	AREA FILL	CU. CUT	YDS. FILL
13	2		
		28	7
17	6		
		21	8
		6	3
		14	7

PROPOSED RETAIN. WALL N°12, FOR DETAILS SEE SHEET 716.

PAVED GUTTER TYPE 1-2

PROPOSED RETAIN. WALL N°12, FOR DETAILS SEE SHEET 716.

EXIST. RETAIN. WALL TO BE REMOVED

℄ I-76

PG. 1021.33
632+50.00
1020.9

STA. 632+00, ℄ EXIST. INLET

PG. 1022.47
632+00.00
1021.9

PG. 1023.62
631+50.00
1023.2

1005.5

1005.2

1006.0

R/W

QBL

8
50
10
56
10
56

NOTE: QUANTITY BREAK LINE - QBL
SEE NOTE SHEET 89.

I - 76 LEFT
STA 631+50 TO STA 632+50

1020 1015 1010 1005

-150 -140 -130 -120 -110 -100 -90 -80 -70 -60 -50 -40 -30 -20 -10 0

PLATE 3, CROSS SECTION
GRUPPER & BEHR CO.

CALCULATED BY GTB DATE 3/90
CHECKED BY DSB DATE 7/90

FHWA REG	STATE	PROJECT
5	OHIO	

305
12/14

SUM - 76 - 11.57
IR - 76 - 2(44)19

SEEDING
END WIDTH — SQ. YARDS

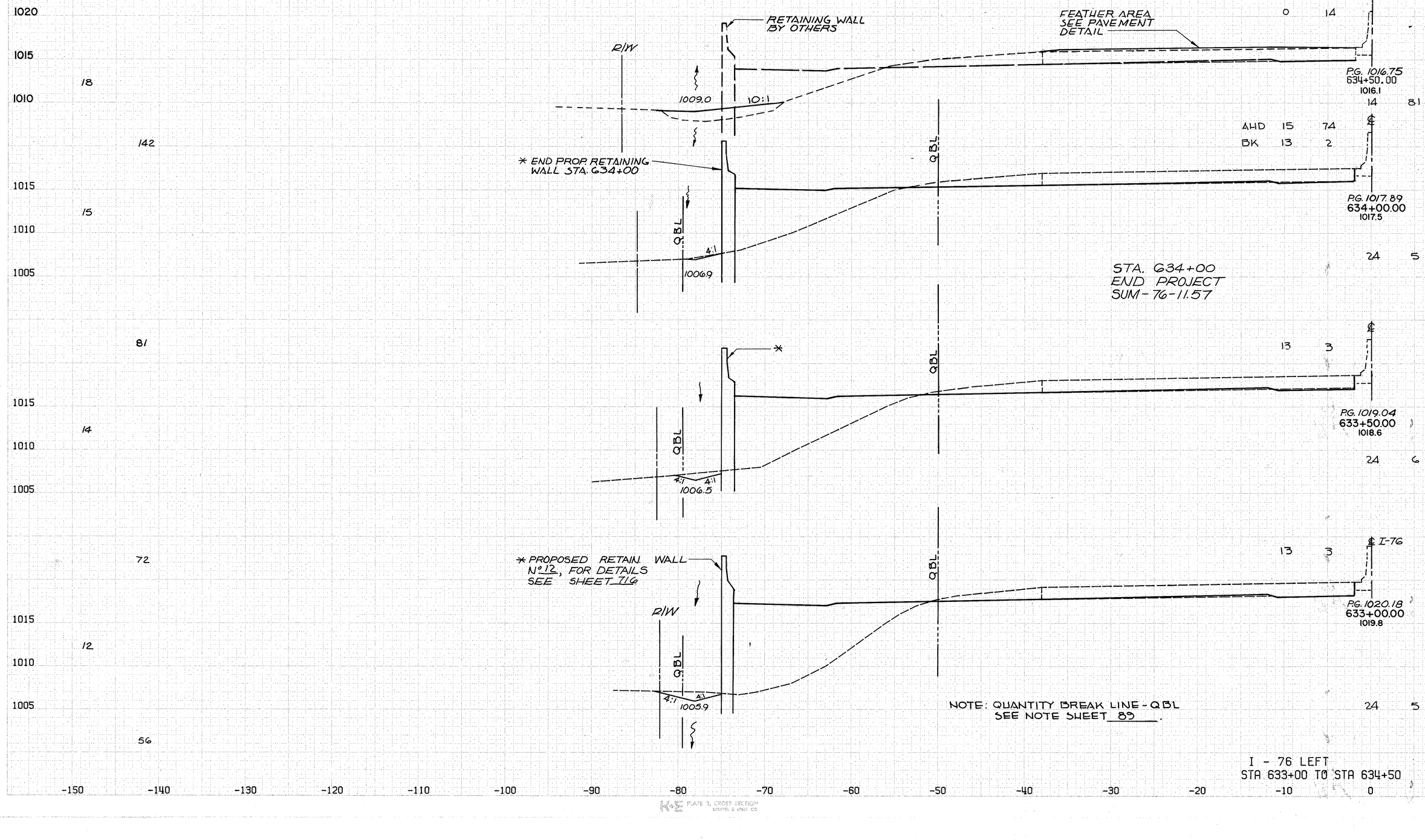

I - 76 LEFT
STA 633+00 TO STA 634+50

K&E PLATE 3, CROSS SECTION KEUFFEL & ESSER CO.

CALCULATED BY BJB DATE 3/90
CHECKED BY DSB DATE 7/90

FHWA REG	STATE	PROJECT
5	OHIO	

306
1214

SUM - 76 - 11.57
IR - 76 - 2(44)19

SEEDING
END WIDTH SQ. YARDS

END CUT AREA FILL CU. YDS. CUT CU. YDS. FILL

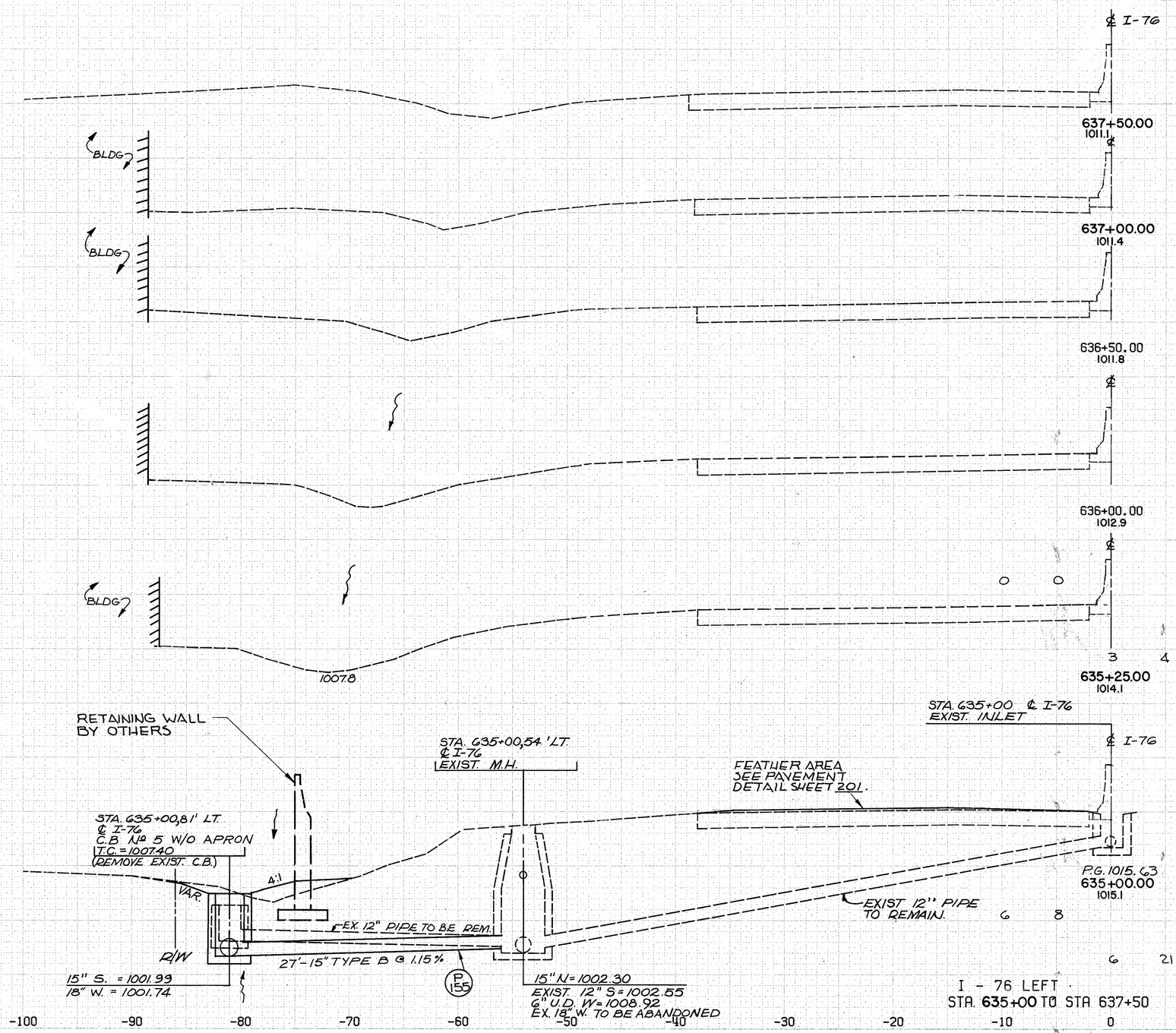

I - 76 LEFT
STA. 635+00 TO STA 637+50

CALCULATED BY PRPDATE 3/90
CHECKED BY DSBDATE 7/90

FHWA REG	STATE	PROJECT
5	OHIO	

307 / 1214

SUM - 76 - 11.57
IR - 76 - 2(44)19

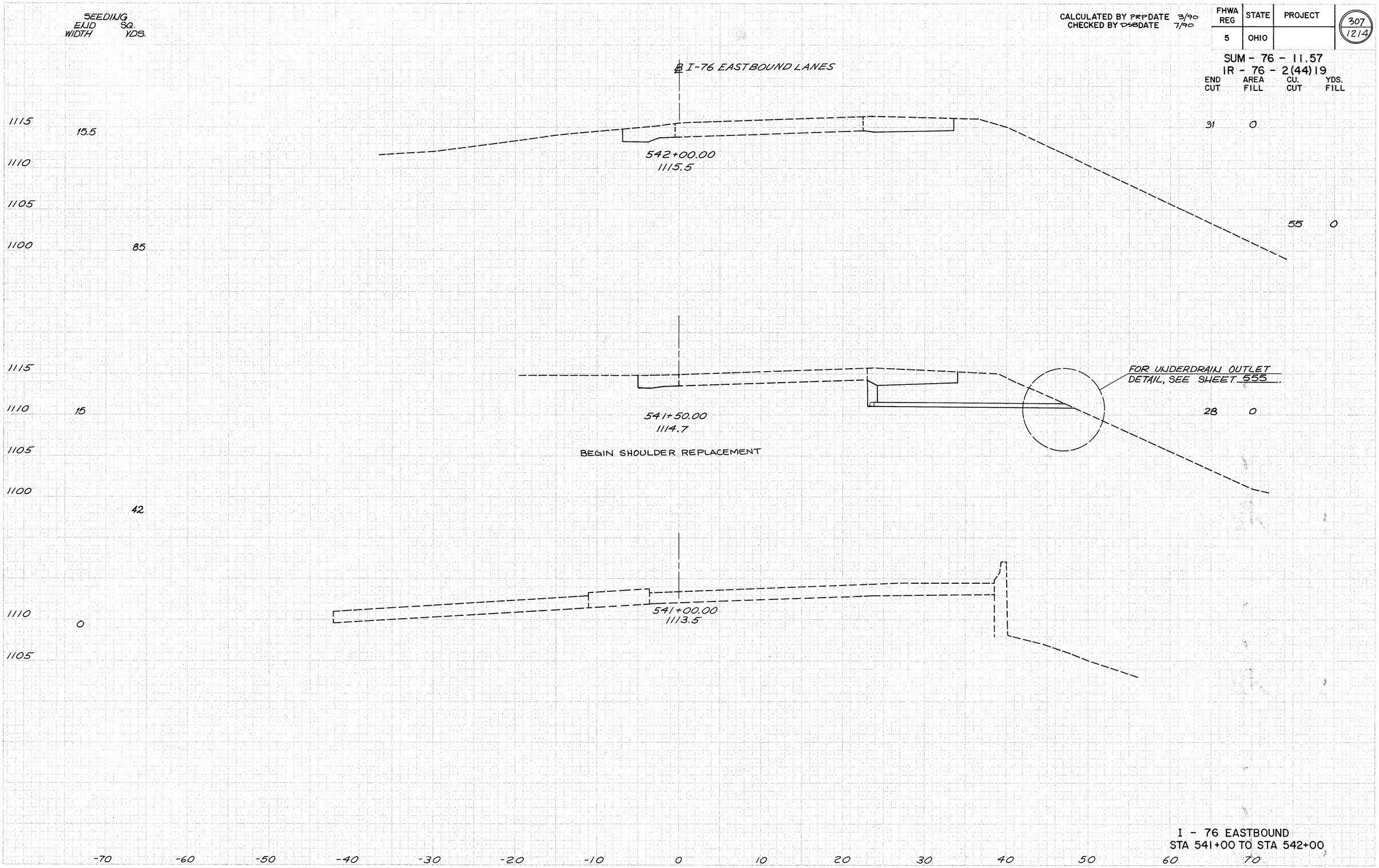

I - 76 EASTBOUND
STA 541+00 TO STA 542+00

PLATE 3, CROSS SECTION
KEPPER & KEPPER CO.

SEEDING
END WIDTH | SQ. YDS.

CALCULATED BY PRP DATE 3/90
CHECKED BY DSB DATE 7/90

FHWA REG	STATE	PROJECT
5	OHIO	

308
12/14

SUM - 76 - 11.57
IR - 76 - 2(44)19

END CUT	AREA FILL	CU. CUT	YDS. FILL
31	0		
56	0		
30	0		
60	0		
35	0		
61	0		

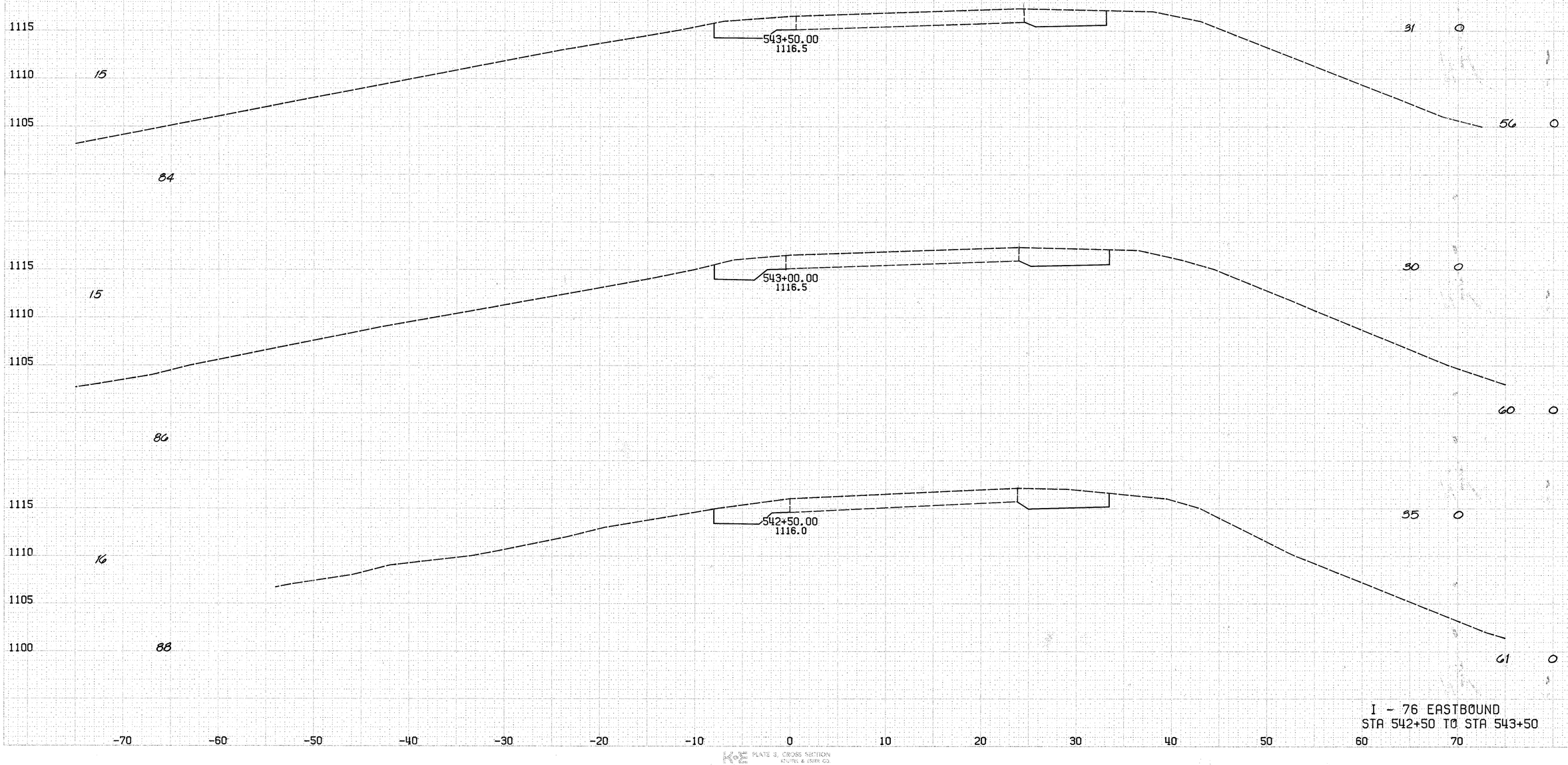

I - 76 EASTBOUND
STA 542+50 TO STA 543+50

PLATE 3, CROSS SECTION
KOEBEL & ESSER CO.

CALCULATED BY PRP DATE 3/90
CHECKED BY DSB DATE 7/90

FHWA REG	STATE	PROJECT
5	OHIO	

309
1214

SUM - 76 - 11.57
IR - 76 - 2(44)19

SEEDING AND WIDTH / SQ. YDS.

END CUT AREA	END FILL AREA	CU. YDS. CUT	CU. YDS. FILL
30	0		
55	0		
29	0		
59	0		
34	0		
60	0		
30	0		
56	0		

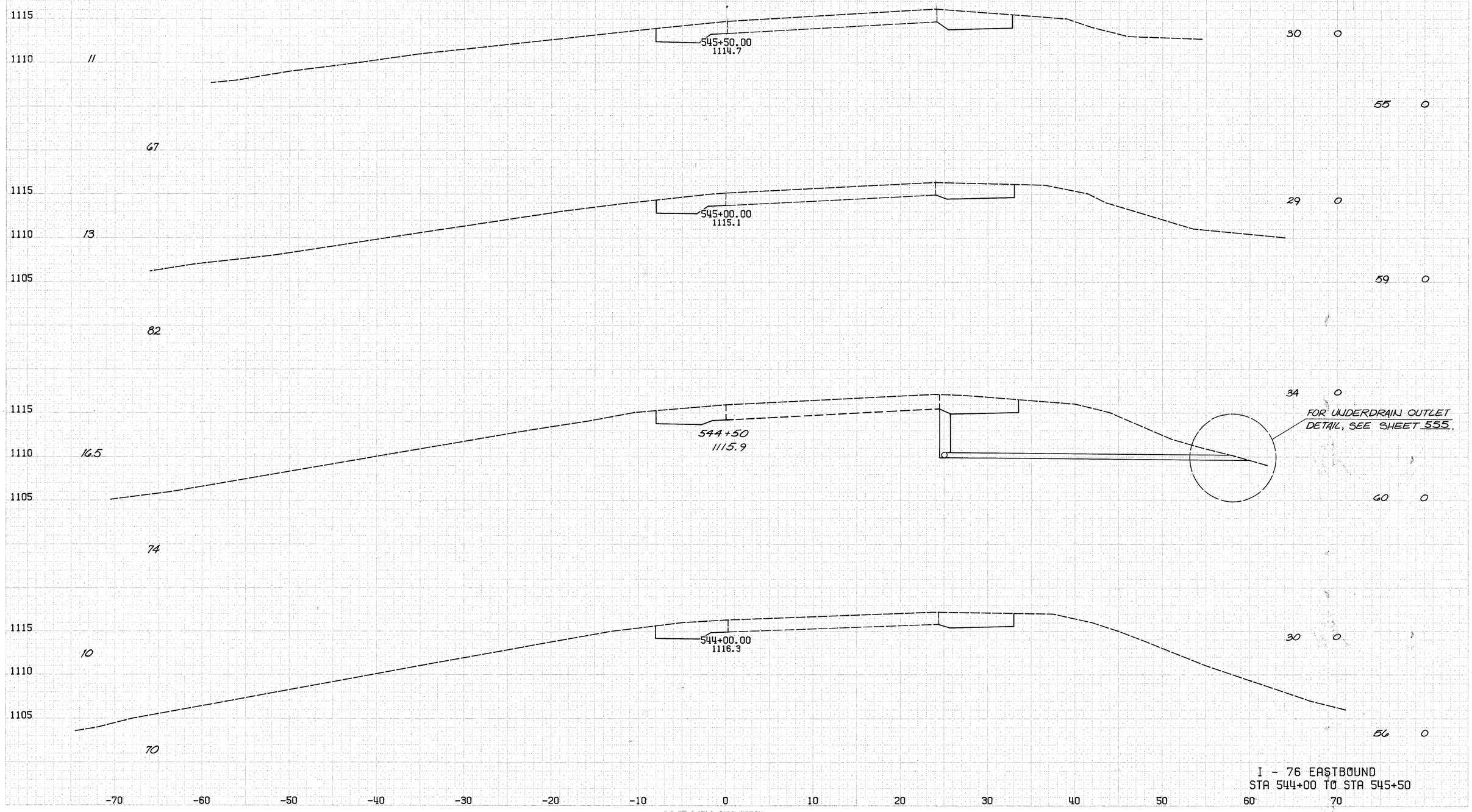

I - 76 EASTBOUND
STA 544+00 TO STA 545+50

K&E PLATE 3, CROSS SECTION
KEUFFEL & ESSER CO.

SEEDING
EUD SQ.
WIDTH YDS.

CALCULATED BY PRP DATE 3/90
CHECKED BY DSB DATE 7/90

FHWA REG	STATE	PROJECT	310 1214
5	OHIO		

SUM - 76 - 11.57
IR - 76 - 2(44)19

END CUT	AREA FILL	CU. CUT	YDS. FILL
14	0		
27	0		
15	0		
35	0		
23	0		
49	0		

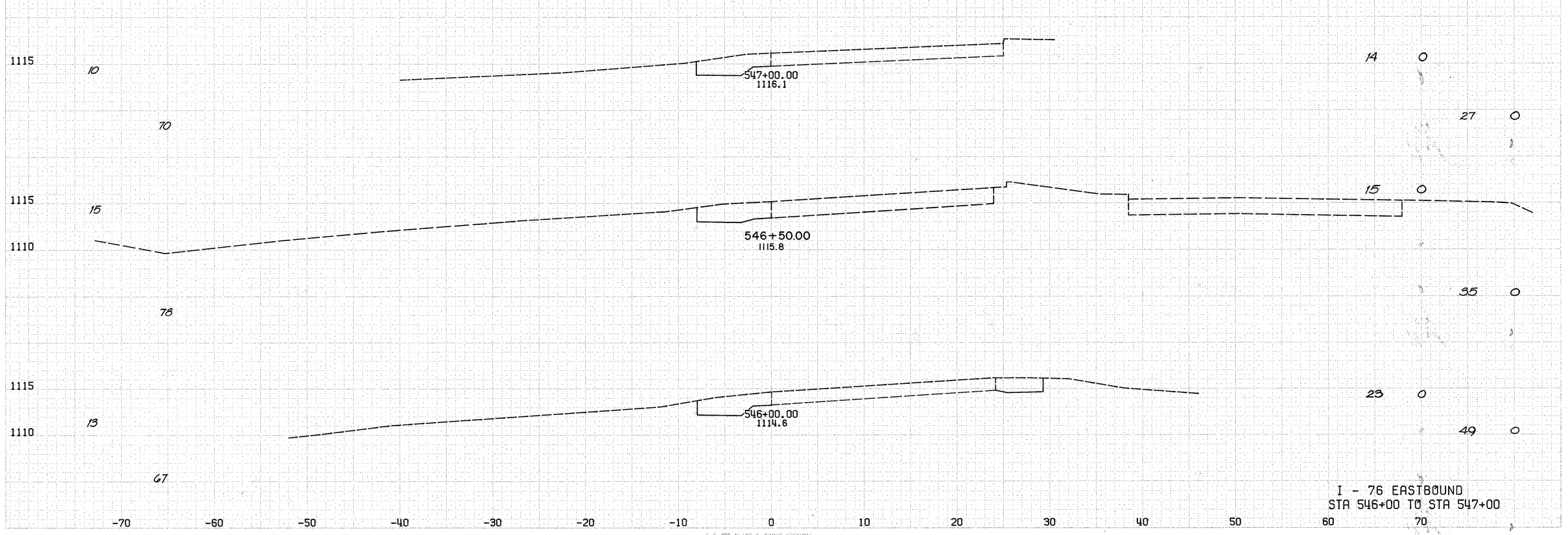

I - 76 EASTBOUND
STA 546+00 TO STA 547+00

PLATE 3, CROSS SECTION
KRUMPE & ERKER CO.

CALCULATED BY PRP DATE 3/90
CHECKED BY DSB DATE 7/90

FHWA REG	STATE	PROJECT
5	OHIO	

311 / 1214

SUM - 76 - 11.57
IR - 76 - 2(44)19

SEEDING
END WIDTH — SQ. YDS.

END BENCHING
STA. 548+75±

BEGIN BENCHING
STA. 548+25±

2:1
3' MAX.
7' TYPICAL

END CUT	AREA FILL	CU. YDS. CUT	CU. YDS. FILL
56	1118.9	155	208
200			
		172	193
16	1118.0	30	0
89		60	0
16	1117.1	34	0
73		45	0

548+50.00
548+00.00
547+50.00

1115
1110
1105
1100

-20 -10 0 10 20 30 40 50 60 70 80 90 100 110 120

I - 76 EASTBOUND
STA 547+50 TO STA 548+50

PLATE 5, CROSS SECTION
KOMEX KEISER CO.

SEEDING
END SQ.
WIDTH YDS.

CALCULATED BY PRP DATE 3/90
CHECKED BY DSB DATE 7/90

FHWA REG	STATE	PROJECT
5	OHIO	

312
1214

SUM – 76 – 11.57
IR – 76 – 2(44)19

END CUT	AREA FILL	CU. CUT	YDS. FILL

FINAL SURVEY PLOTTED NOTE BOOK/TEMPLATE AREAS CHECKED

ORIGINAL SURVEY PLOTTED NOTE BOOK/TEMPLATE AREAS CHECKED

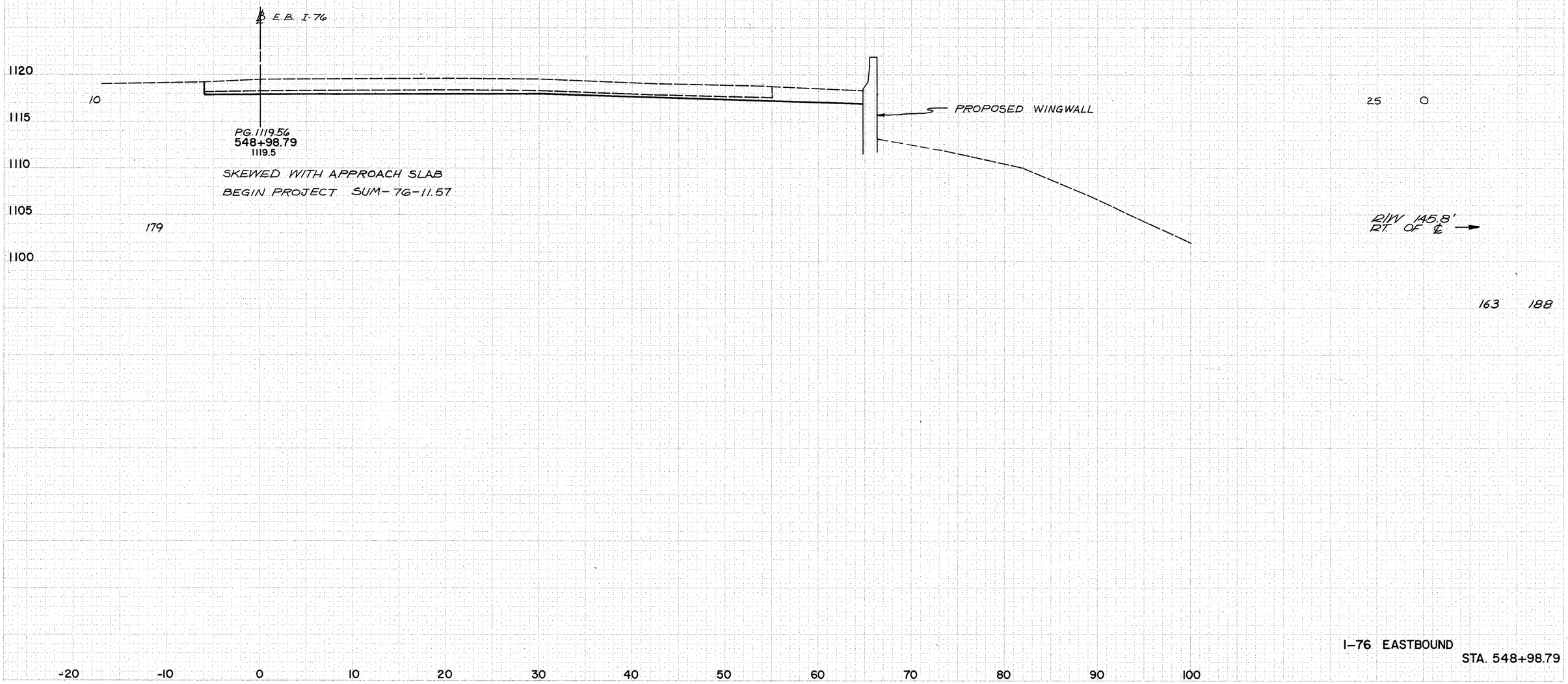

I-76 EASTBOUND
STA. 548+98.79

K&E PLATE 3, CROSS SECTION
KEUFFEL & ESSER CO.

CALCULATED BY BJB DATE 3/90
CHECKED BY DSB DATE 7/90

FHWA REG	STATE	PROJECT
5	OHIO	

313
1214

SUM - 76 - 11.57
IR - 76 - 2(44)19

SEEDING
END WIDTH — SQ. YARDS

E.B.-I-76

AHEAD

1120
1115
1110
1105
1100

10
SEEDING STATION
543 + 61

P.G. 1121.16
549+85.04
1121.0
SKEWED WITH ABUTMENT

	END CUT	AREA FILL	CU. YDS. CUT	YDS. FILL
EARTHWORK STATION CUT 549 + 79 FILL 549 + 95	AHD.	52	0	

R/W 144.00'
RT. OF ℄ →

BACK ℄ E.B. I-76

BACK

1120
1115
1110
1105

10
PROPOSED WINGWALL

P.G. 1120.01
549+23.79
1120.0
SKEWED WITH ABUTMENT

PROPOSED WINGWALL

	BK.	31	0	
		28	26	0

R/W 144.20'
RT. OF ℄ →

-20 -10 0 10 20 30 40 50 60 70 80 90 100 110 120

I - 76 EASTBOUND
STA. 549+23.73 TO STA. 549+85.04

K&S PLATE 3, CROSS SECTION
KTUFFEL & ESSER CO.

ORIGINAL SURVEY — SURVEYED, PLOTTED, TEMP. I.P., NOTE BOOK, PAGE NO., AREAS CHECKED, BY, DATE, IND.

FINAL SURVEY — SURVEYED, PLOTTED, TEMP. I.P., NOTE BOOK, PAGE NO., AREAS CHECKED, BY, DATE, IND.

CALCULATED BY BJB DATE 3/90
CHECKED BY DSB DATE 7/90

FHWA REG	STATE	PROJECT	314 / 1214
5	OHIO		

SUM - 76 - 11.57
IR - 76 - 2(44)19

END	AREA	CU.	YDS.
CUT	FILL	CUT	FILL

SEEDING
END WIDTH | SQ. YARDS

E.B-I-76

P.G. 1123.23
551+00.00
1123.2

73

155 3

EXISTING R/W

2:1

3:1

1100.5

408

P.G. 1122.33
550+50.00
1122.3

74

232 5

2:1

96 4

2:1

5:1

1099.5

END BENCHING
550+50 ±

205

E.B-I-76

P.G. 1121.88
550+25.00
1121.8

77

123 63

3' MAX.

7'

2:1

183 132

3:1

1099.0

200 73

BEGIN BENCHING
550+00 ±

309 D= 64'

1125
1120
1115
1110
1105
1100

-20 -10 0 10 20 30 40 50 60 70 80 90 100 110 120

I - 76 EASTBOUND
STA 550+25 TO STA 551+00

PLATE 3, CROSS SECTION
KRUFFEL & ESSER CO.

CALCULATED BY BJB DATE 3/90
CHECKED BY DSB DATE 7/90

FHWA REG	STATE	PROJECT
5	OHIO	

315 / 1214

SUM - 76 - 11.57
IR - 76 - 2(44)19

SEEDING

END	SQ. YARDS
WIDTH	

E.B. I-76

PG. 1125.95
552+50.00
1125.8

68

3'MAX.

7'

2:1

6:1

1105.0

END CUT	AREA FILL	CU. CUT	YDS. FILL
211	156		

EXISTING R/W

381

PG. 1125.05
552+00.00
1125.0

69

3'MAX.

7'

2:1

6:1

1104.0

END CUT	AREA FILL	CU. CUT	YDS. FILL
366	260		
184	124		

EXISTING R/W

BEGIN BENCHING
551+75 ±

386

E.B. I-76

PG. 1124.14
551+50.00
1124.14

70

END CUT	AREA FILL	CU. CUT	YDS. FILL
252	120		
88	5		

EXISTING R/W

2:1

5:1

1103.0

397

I - 76 EASTBOUND
STA 551+50 TO STA 552+50

1125
1120
1115
1110
1105

-20 -10 0 10 20 30 40 50 60 70 80 90 100 110 120

PLATE 3, CROSS SECTION

SEEDING
END SQ.
WIDTH YARDS

CALCULATED BY BTB DATE 3/90
CHECKED BY DSB DATE 7/90

FHWA REG	STATE	PROJECT	316 / 1214
5	OHIO		

SUM - 76 - 11.57
IR - 76 - 2(44)19

END CUT	AREA FILL	CU. CUT	YDS. FILL

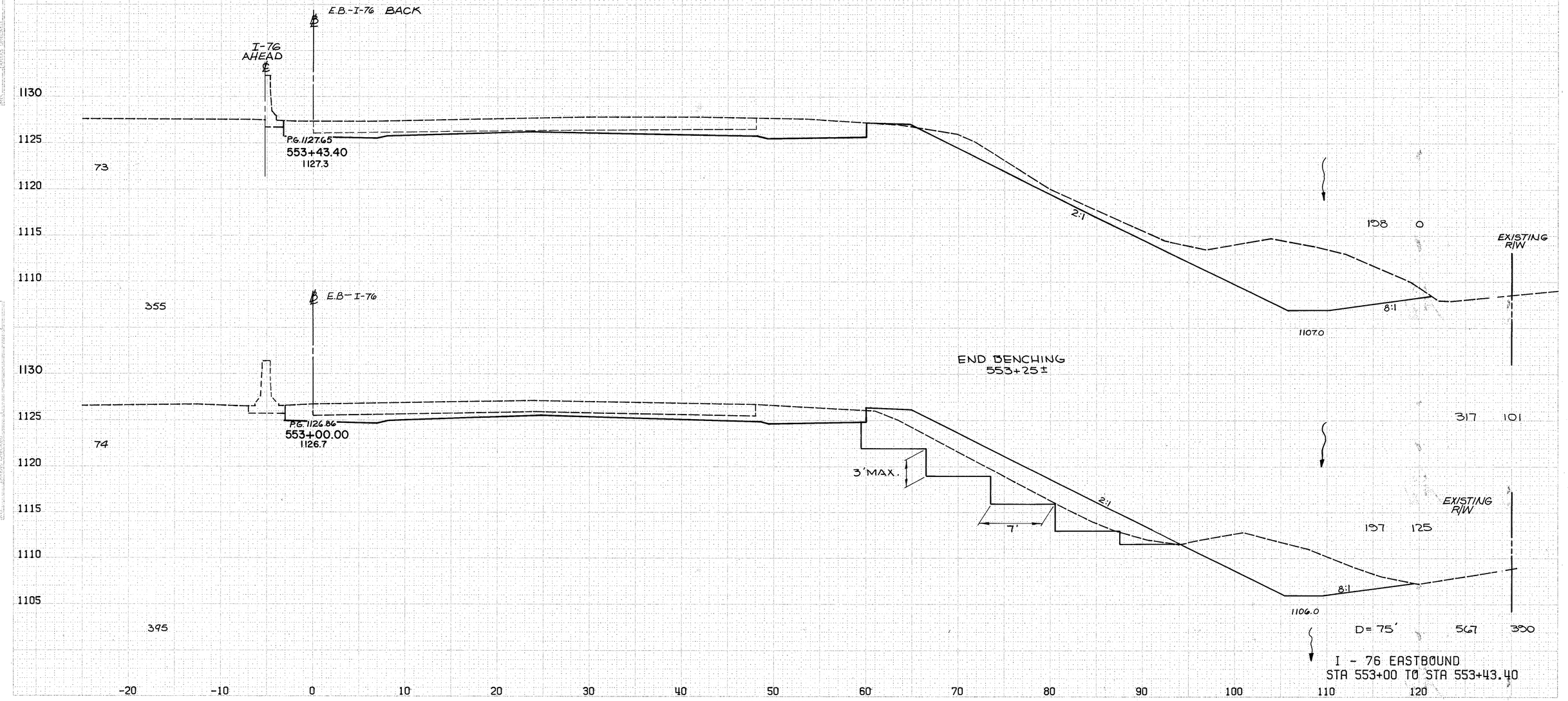

I - 76 EASTBOUND
STA 553+00 TO STA 553+43.40

PLATE 3, CROSS SECTION
KAUFFEL & BIBER CO.

CALCULATED BY BSB DATE 3/90
CHECKED BY DSB DATE 7/90

FHWA REG	STATE	PROJECT	317 / 1214
5	OHIO		

SUM - 76 - 11.57
IR - 76 - 2(44)19

SEEDING

END	SQ. YARDS
WIDTH	

END BENCHING
555+25±

I-76
P.G. 1130.47
555+00.00
1130.3
64
361
3' MAX.
7'
2.5:1
2:1
1112.0
R/W
120 84
236 179

P.G. 1129.57
554+50.00
1129.3
66
370
3' MAX.
7'
2.5:1
2:1
1110.0
135 109
307 208

I-76
P.G. 1128.67
554+00.00
1128.5
67
440
3' MAX.
7'
2:1
BEGIN BENCHING
553+60±
5:1
1108.0
R/W
196 115
413 121

1130
1125
1120
1115
1110

0 10 20 30 40 50 60 70 80 90 100 110 120 130 140 150

I - 76 (RIGHT)
STA 554+00 TO STA 555+00

PLATE 3, CROSS SECTION

CALCULATED BY BJB DATE 3/90
CHECKED BY DSB DATE 7/90

FHWA REG	STATE	PROJECT	318 / 1214
5	OHIO		

SUM - 76 - 11.57
IR - 76 - 2(44)19

SEEDING
END SQ.
WIDTH YARDS

END CUT	AREA FILL	CU. YDS. CUT	CU. YDS. FILL
78	17		
141	44		
74	30		
133	96		
129	106		
70	74		
69	41		
175	116		

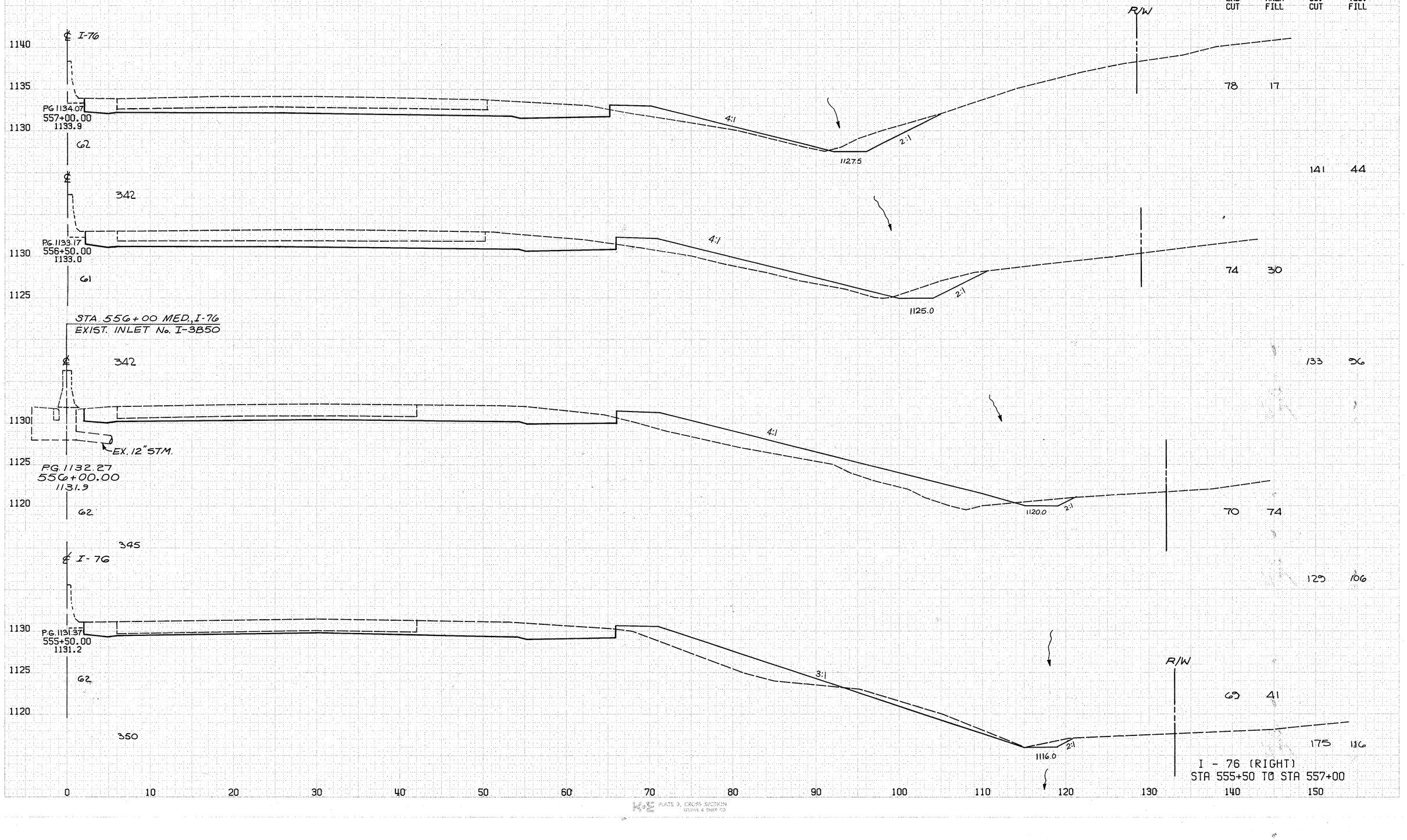

PLATE 3, CROSS SECTION

SEEDING
END SQ.
WIDTH YARDS

CALCULATED BY BJB DATE 3/90
CHECKED BY DSB DATE 7/90

FHWA REG	STATE	PROJECT
5	OHIO	

319
1214

SUM - 76 - 11.57
IR - 76 - 2(44)19

END CUT	AREA FILL	CU. CUT	YDS. FILL
75	4		
128	13		
63	10		
110	19		
56	10		
124	25		

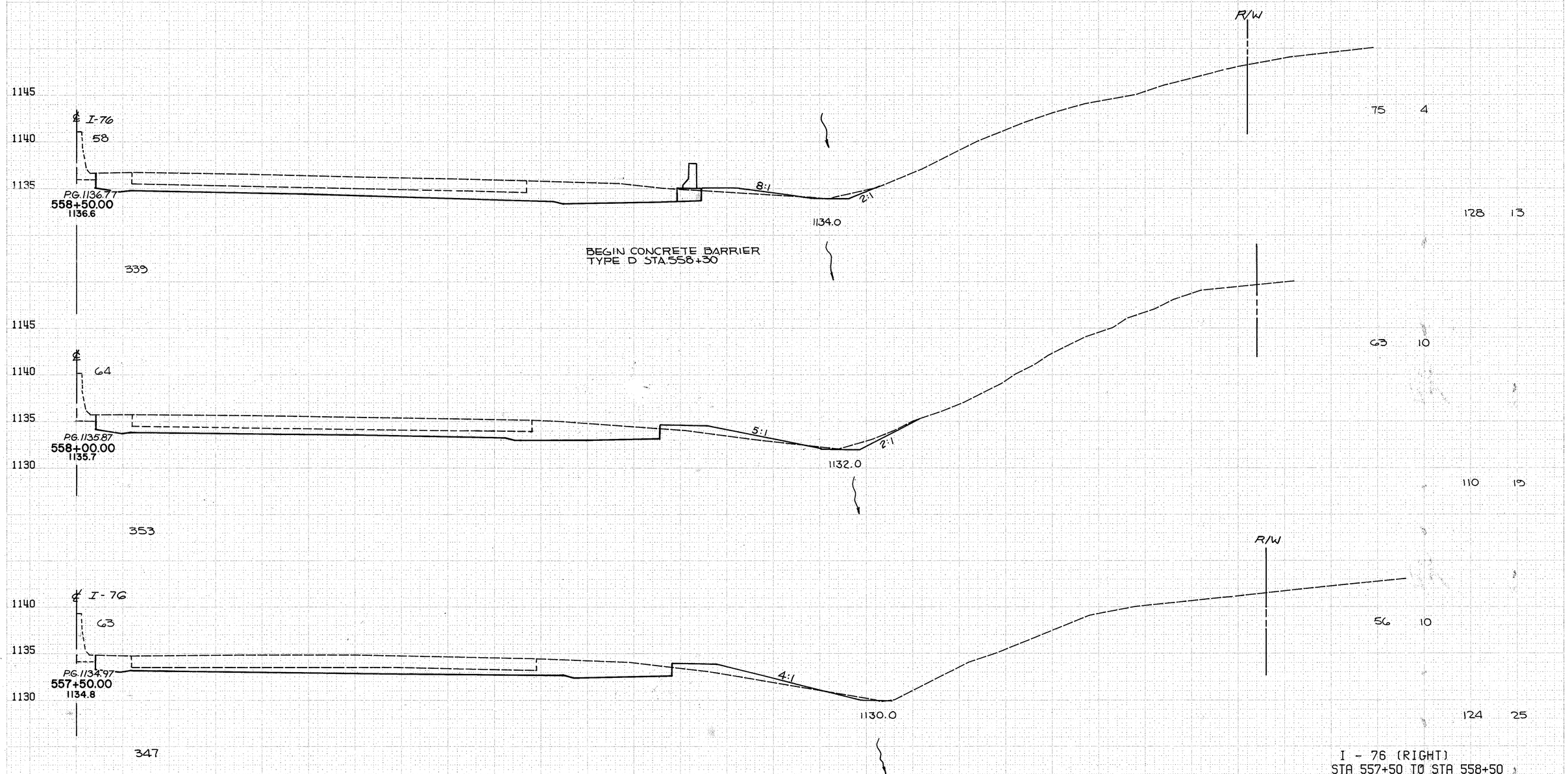

I - 76 (RIGHT)
STA 557+50 TO STA 558+50

K&S PLATE 3, CROSS SECTION
KEUFFEL & SLESS CO.

SEEDING
END SQ.
WIDTH YARDS

CALCULATED BY BTB DATE 3/90
CHECKED BY DSB DATE 7/90

FHWA REG	STATE	PROJECT
5	OHIO	

320
1214

SUM - 76 - 11.57
IR - 76 - 2(44)19

END CUT	AREA FILL	CU. CUT	YDS. FILL
50	303	59	325
86	146	72	136
1	2	0	4

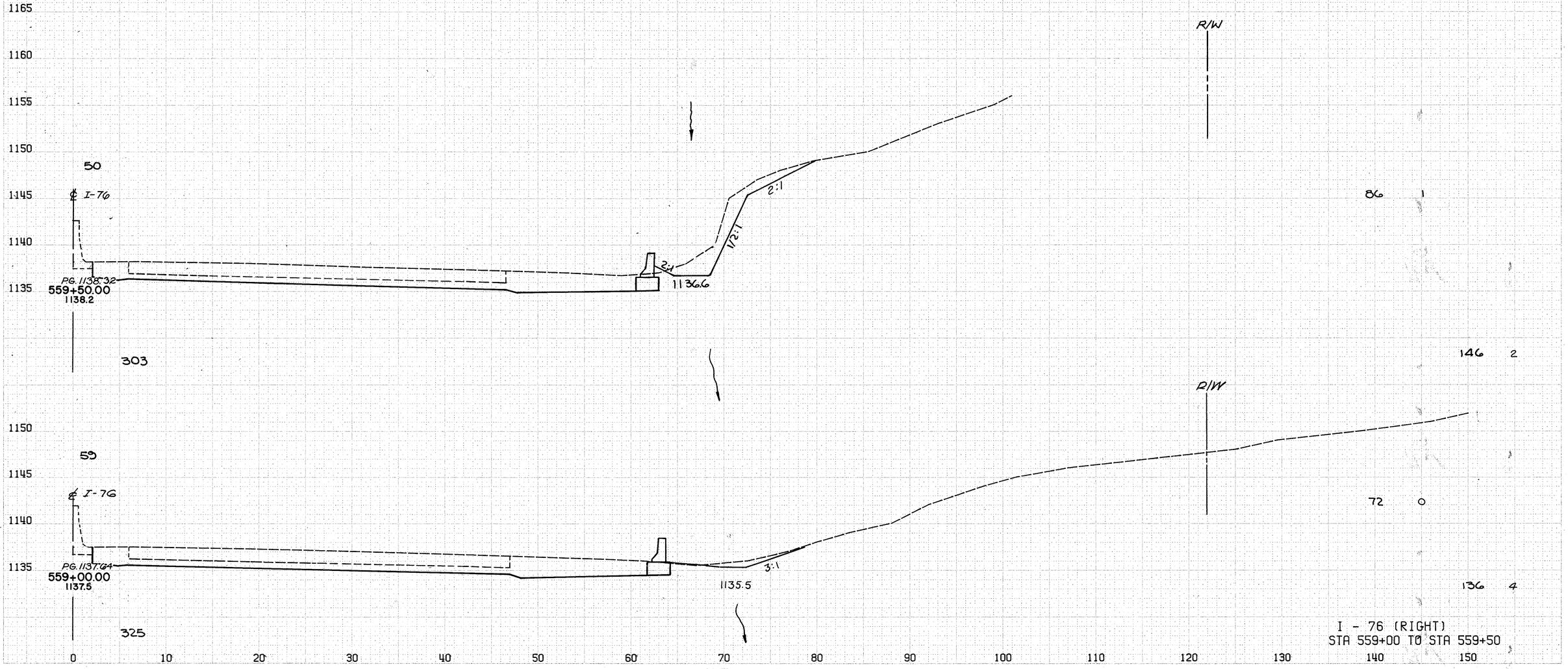

I - 76 (RIGHT)
STA 559+00 TO STA 559+50

K&E PLATE 3, CROSS SECTION
KRUPPEL & ESSER CO.

SEEDING
END 50
WIDTH YARDS

CALCULATED BY BTS DATE 3/90
CHECKED BY DSB DATE 7/90

FHWA REG	STATE	PROJECT
5	OHIO	

321
1214

SUM - 76 - 11.57
IR - 76 - 2(44)19

END CUT	AREA FILL	CU. CUT	YDS. FILL
42		122	1
239		218	1
44		103	0
261		175	1

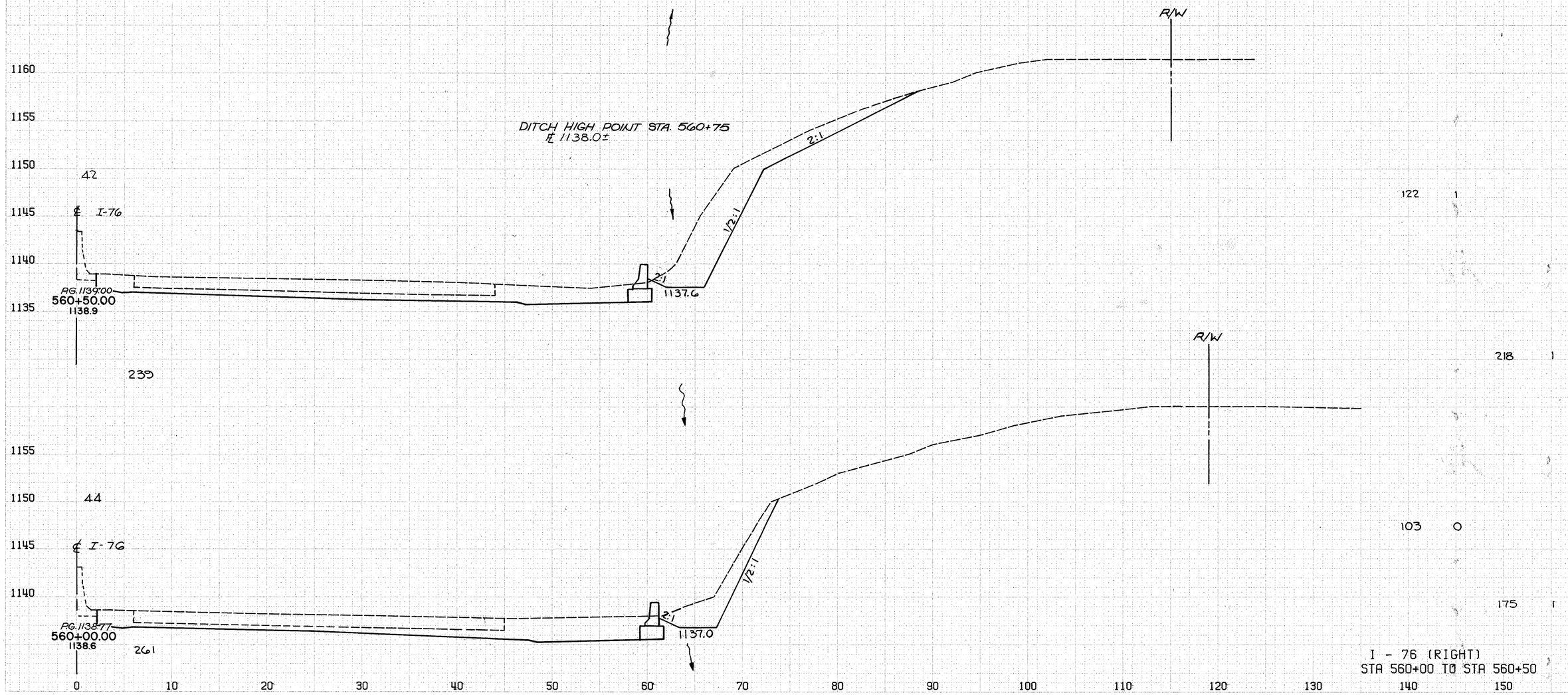

I - 76 (RIGHT)
STA 560+00 TO STA 560+50

PLATE 3, CROSS SECTION
KLEPPER & ESSER CO.

SEEDING
END SQ.
WIDTH YARDS

CALCULATED BY BJB DATE 3/90
CHECKED BY DSB DATE 7/90

FHWA REG	STATE	PROJECT	322 1214
5	OHIO		

SUM - 76 - 11.57
IR - 76 - 2(44)19

END CUT	AREA FILL	CU. YDS. CUT	CU. YDS. FILL
30	254	0	
183	427	0	
36	207	0	
217	314	1	

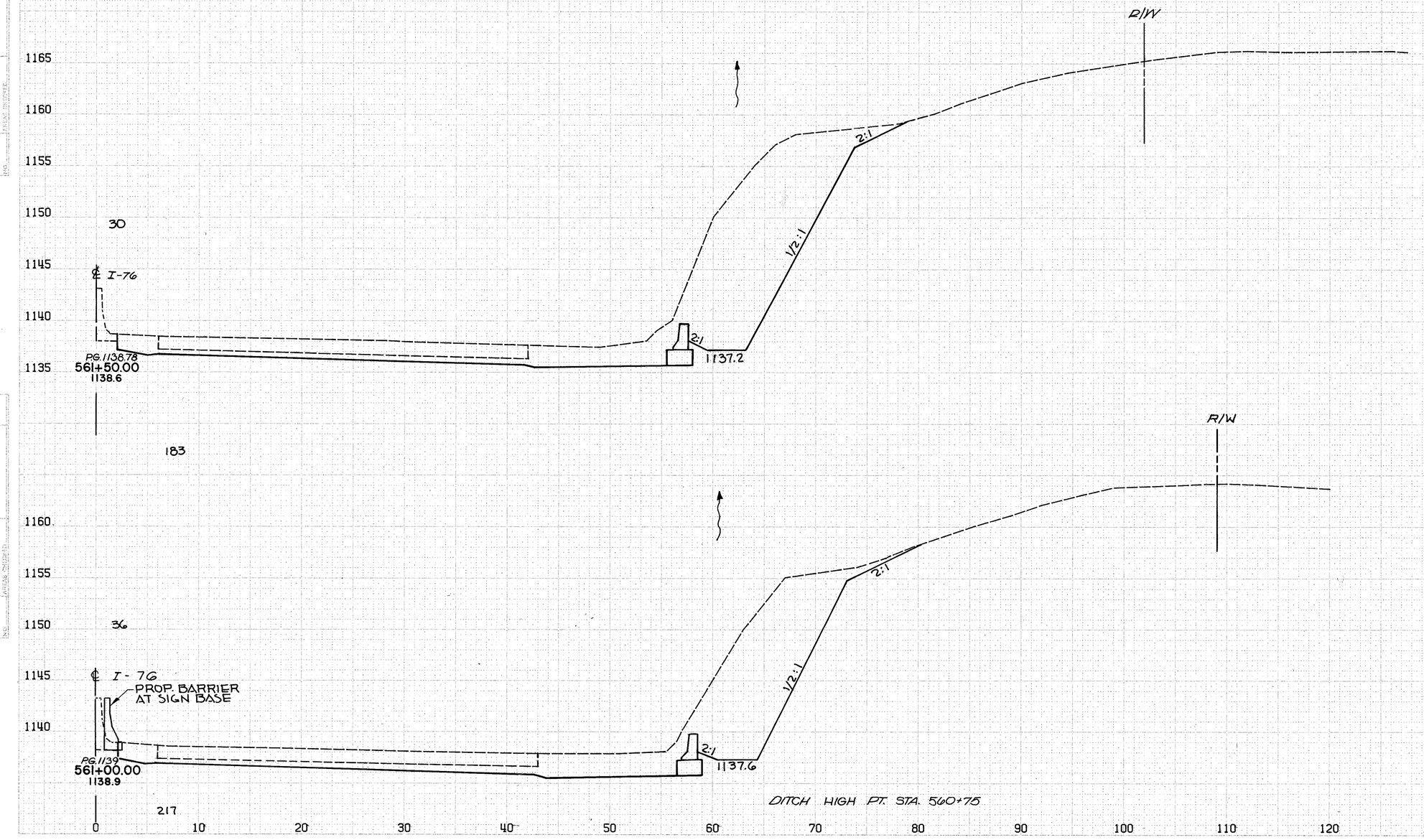

DITCH HIGH PT. STA. 560+75

I - 76 (RIGHT)
STA 561+00 TO STA 561+50

PLATE 3, CROSS SECTION
KOPPERS & RHEE CO.

CALCULATED BY BJB DATE 3/90
CHECKED BY DSB DATE 7/90

FHWA REG	STATE	PROJECT	323 / 1214
5	OHIO		

SUM - 76 - 11.57
IR - 76 - 2(44)19

SEEDING
END WIDTH SQ. YARDS

END CUT	AREA FILL	CU. CUT	YDS. FILL
20	369	0	
119	624	0	
23	305	0	
147	516	0	

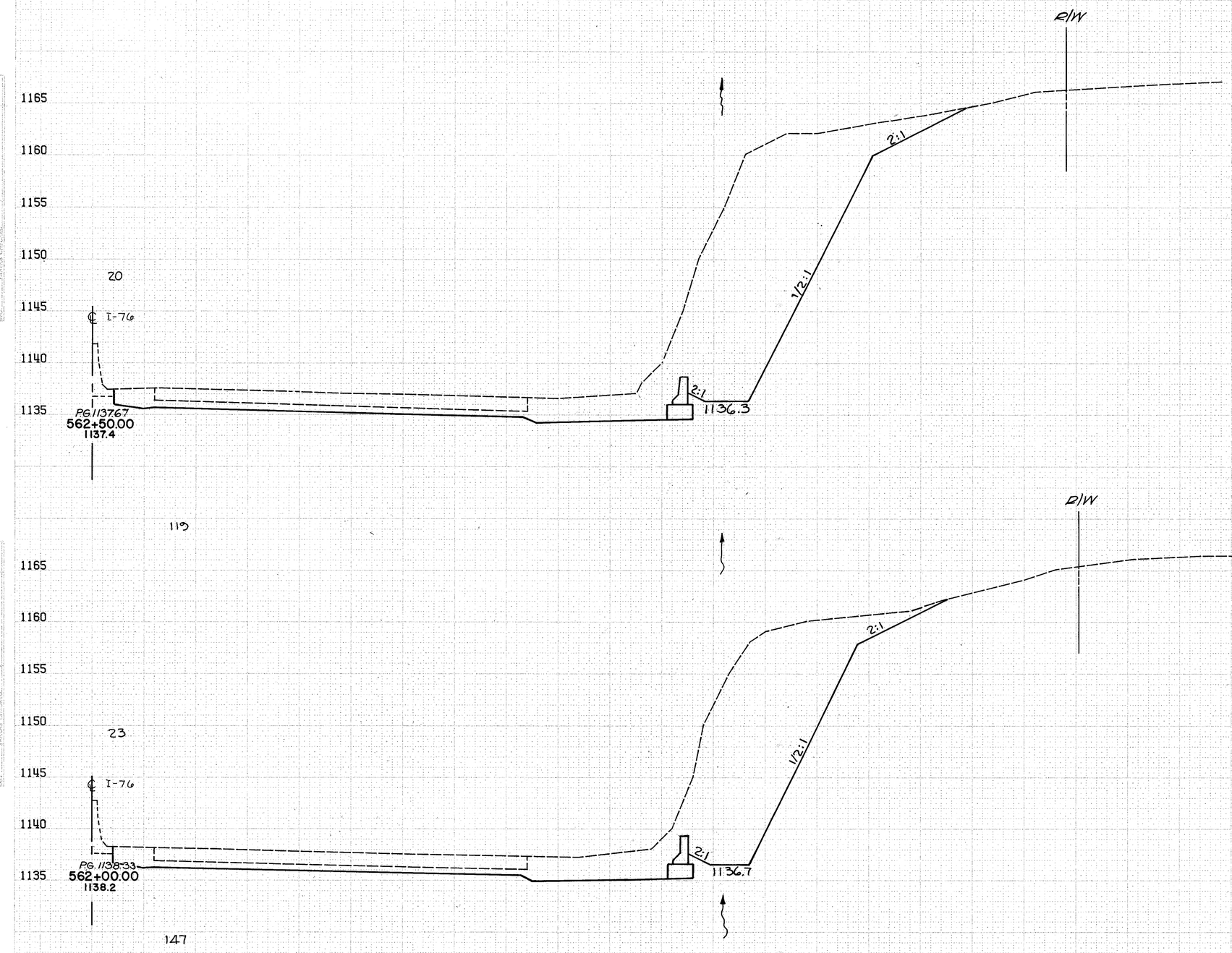

I - 76 (RIGHT)
STA 562+00 TO STA 562+50

PLATE 3, CROSS SECTION

CALCULATED BY BSB DATE 3/90
CHECKED BY DSB DATE 7/90

FHWA REG	STATE	PROJECT	324 / 214
5	OHIO		

SUM - 76 - 11.57
IR - 76 - 2(44)19

SEEDING
END WIDTH — SQ. YARDS

END CUT — AREA FILL — CU. YDS. CUT — CU. YDS. FILL

449 0

758 0

370 0

684 0

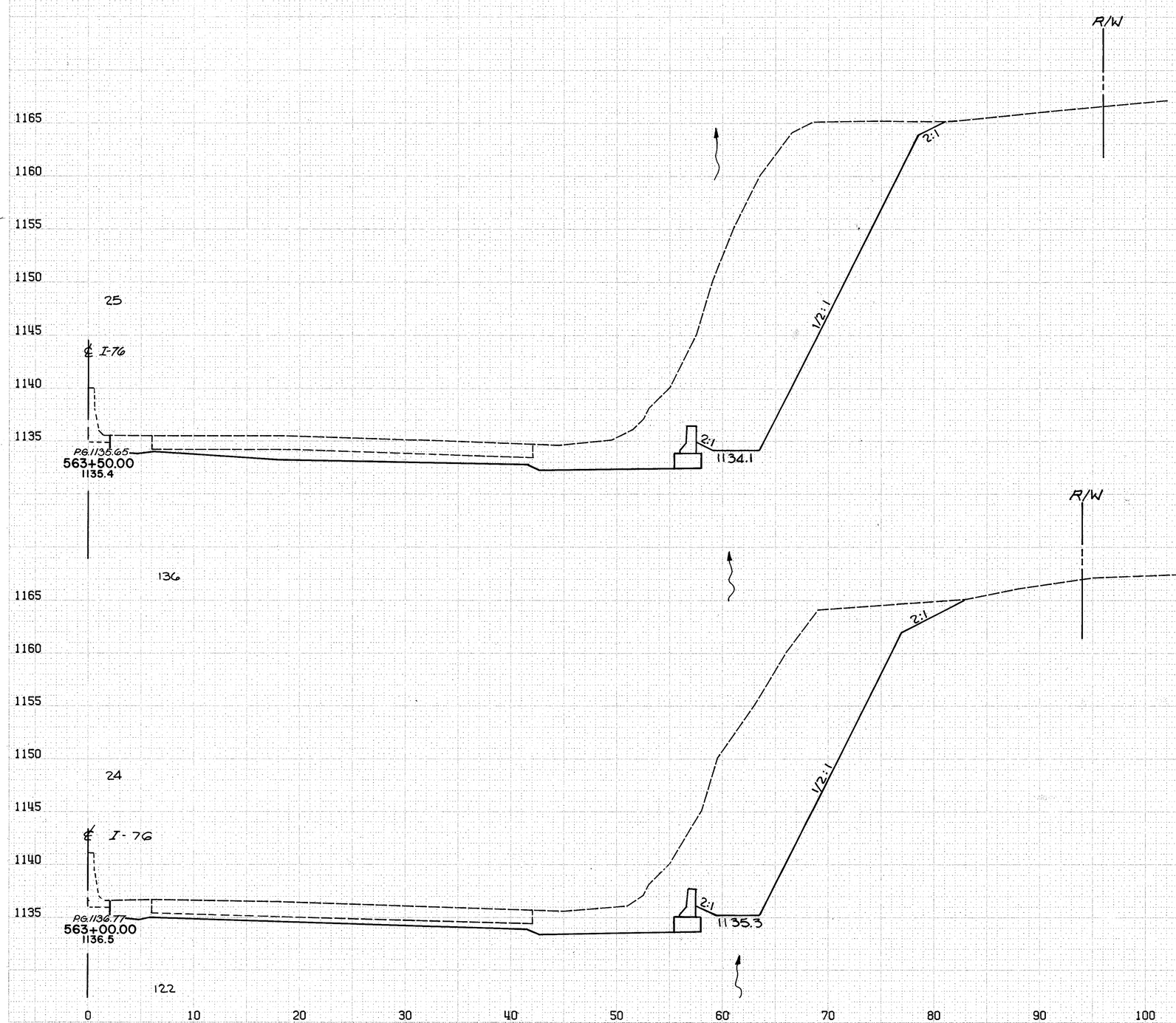

I - 76 (RIGHT)
STA 563+00 TO STA 563+50

PLATE 3, CROSS SECTION
KRUSTEL & EISER CO.

CALCULATED BY BJB DATE 3/90
CHECKED BY DSB DATE 7/90

FHWA REG	STATE	PROJECT	325 / 1214
5	OHIO		

SUM - 76 - 11.57
IR - 76 - 2(44)19

SEEDING
END SQ.
WIDTH YARDS

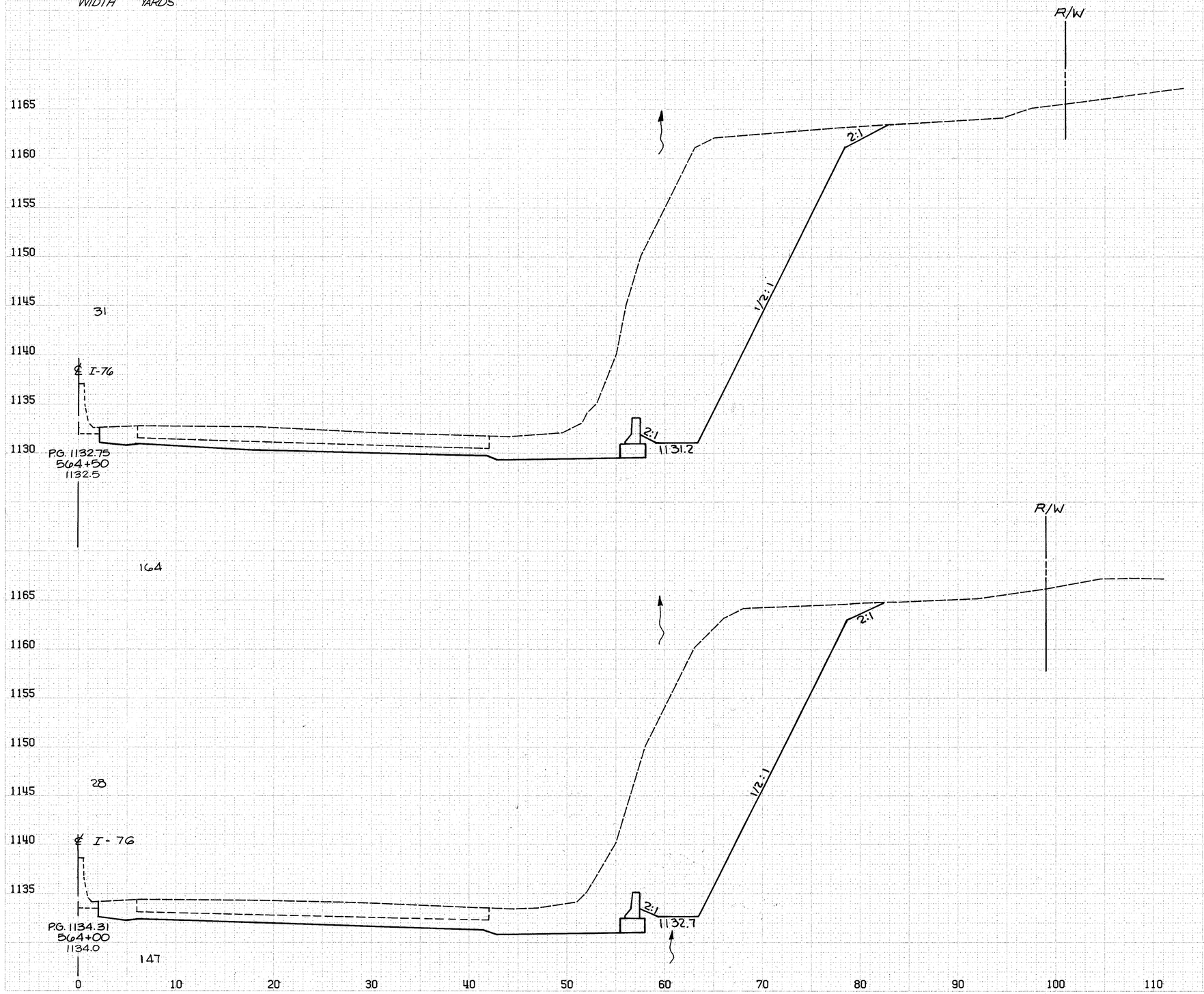

END CUT	AREA FILL	CU. CUT	YDS. FILL
525	0		
344	0		
454	0		
873	0		

I - 76 (RIGHT)
STA 564+00 TO STA 564+50

PLATE 3, CROSS SECTION
KEUFFEL & ESSER CO.

CALCULATED BY BJB DATE 3/90
CHECKED BY DSB DATE 7/90

FHWA REG	STATE	PROJECT
5	OHIO	

326
1214

SUM - 76 - 11.57
IR - 76 - 2(44)19

SEEDING
END SQ.
WIDTH YARDS

END CUT	AREA FILL	CU. YDS. CUT	CU. YDS. FILL
		533	0
		998	0
		545	0
		991	0

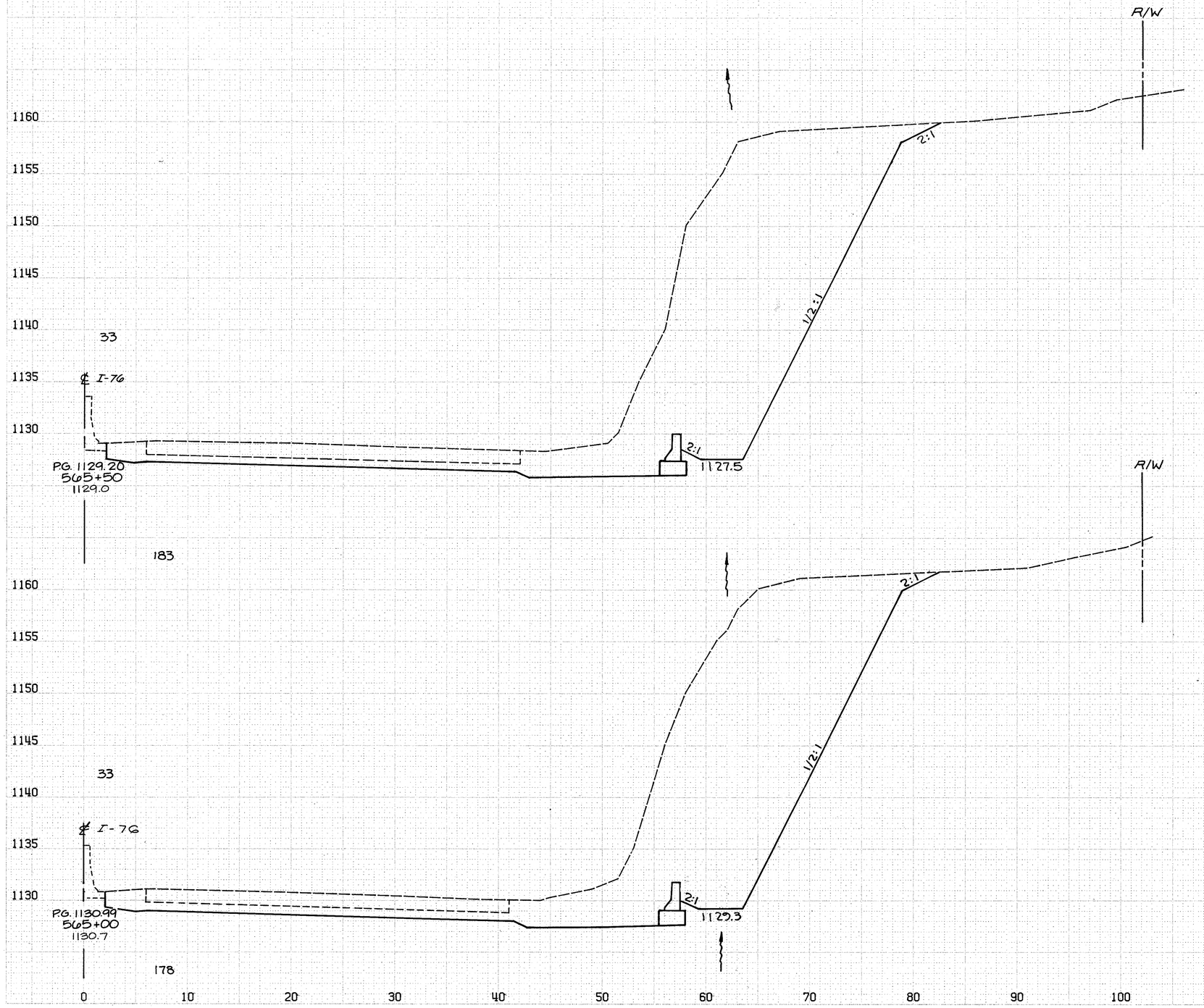

I - 76 (RIGHT)
STA 565+00 TO STA 565+50

K-2 PLATE 3. CROSS SECTION

CALCULATED BY BJB DATE 3/90
CHECKED BY DSB DATE 7/90

FHWA REG	STATE	PROJECT	327 / 1214
5	OHIO		

SUM - 76 - 11.57
IR - 76 - 2(44)19

SEEDING
END WIDTH — SQ. YARDS

END CUT	AREA FILL	CU. YDS. CUT	CU. YDS. FILL
178	32	534	0
181	32	1071	0
		623	0
		1070	0

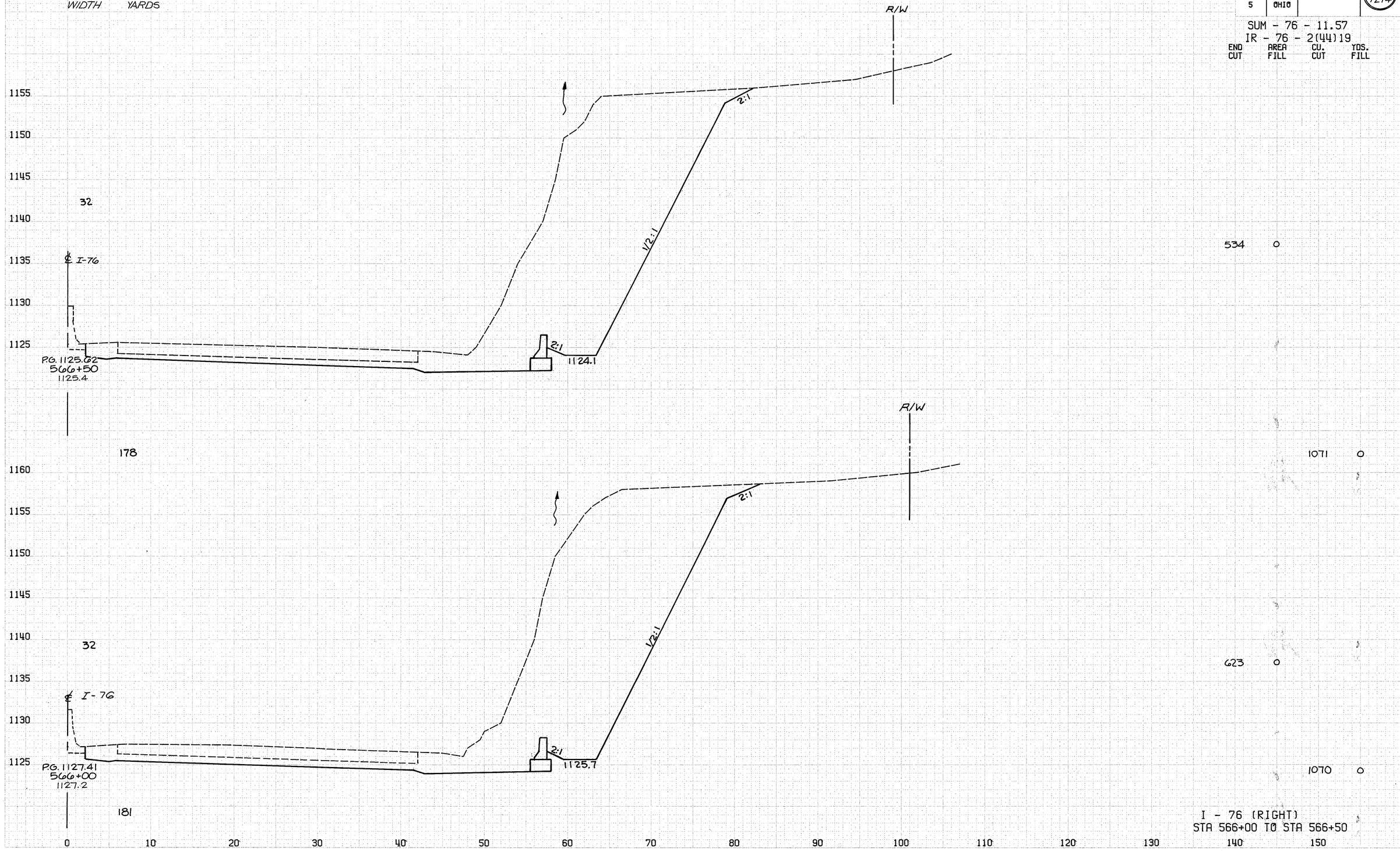

I - 76 (RIGHT)
STA 566+00 TO STA 566+50

PLATE 9, CROSS SECTION
KEUFFEL & ESSER CO.

CALCULATED BY BJB DATE 3/90
CHECKED BY DSB DATE 7/90

FHWA REG	STATE	PROJECT	328 / 1214
5	OHIO		

SUM - 76 - 11.57
IR - 76 - 2(44)19

SEEDING
END WIDTH — SQ YARDS

END CUT — AREA FILL — CU. YDS. CUT — CU. YDS. FILL

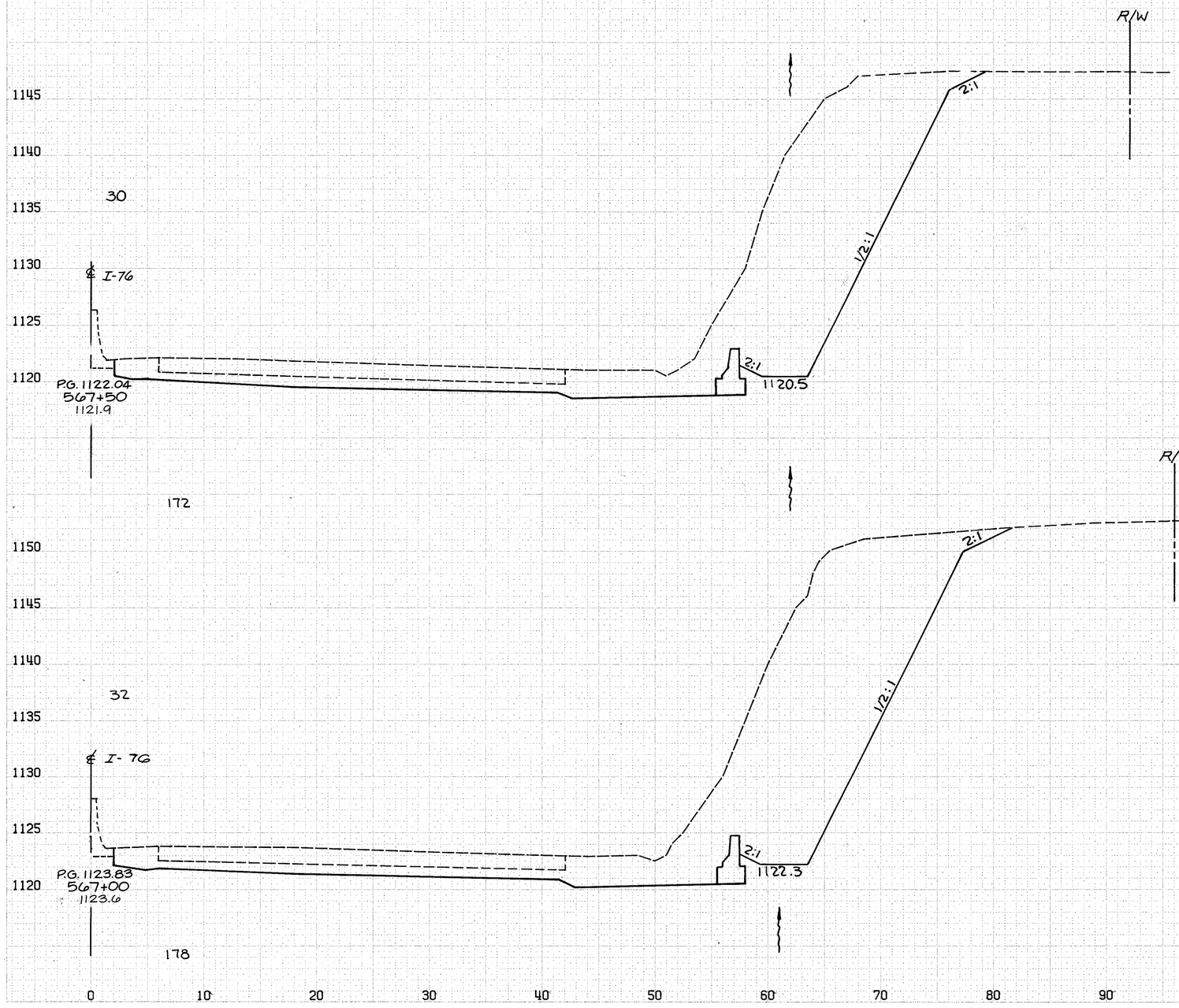

354 0

718 0

421 0

884 0

I - 76 (RIGHT)
STA 567+00 TO STA 567+50

FINAL SURVEY — ORIGINAL SURVEY — NOTE SHEET — NO. — BY — DATE — CORRECTIONS PLOTTED — TEMPLATE — AREAS — VOLUMES CHECKED

CALCULATED BY BJB DATE 3/90
CHECKED BY DSB DATE 7/90

FHWA REG	STATE	PROJECT	329 / 1214
5	OHIO		

SUM - 76 - 11.57
IR - 76 - 2(44)19

SEEDING
END SQ.
WIDTH YARDS

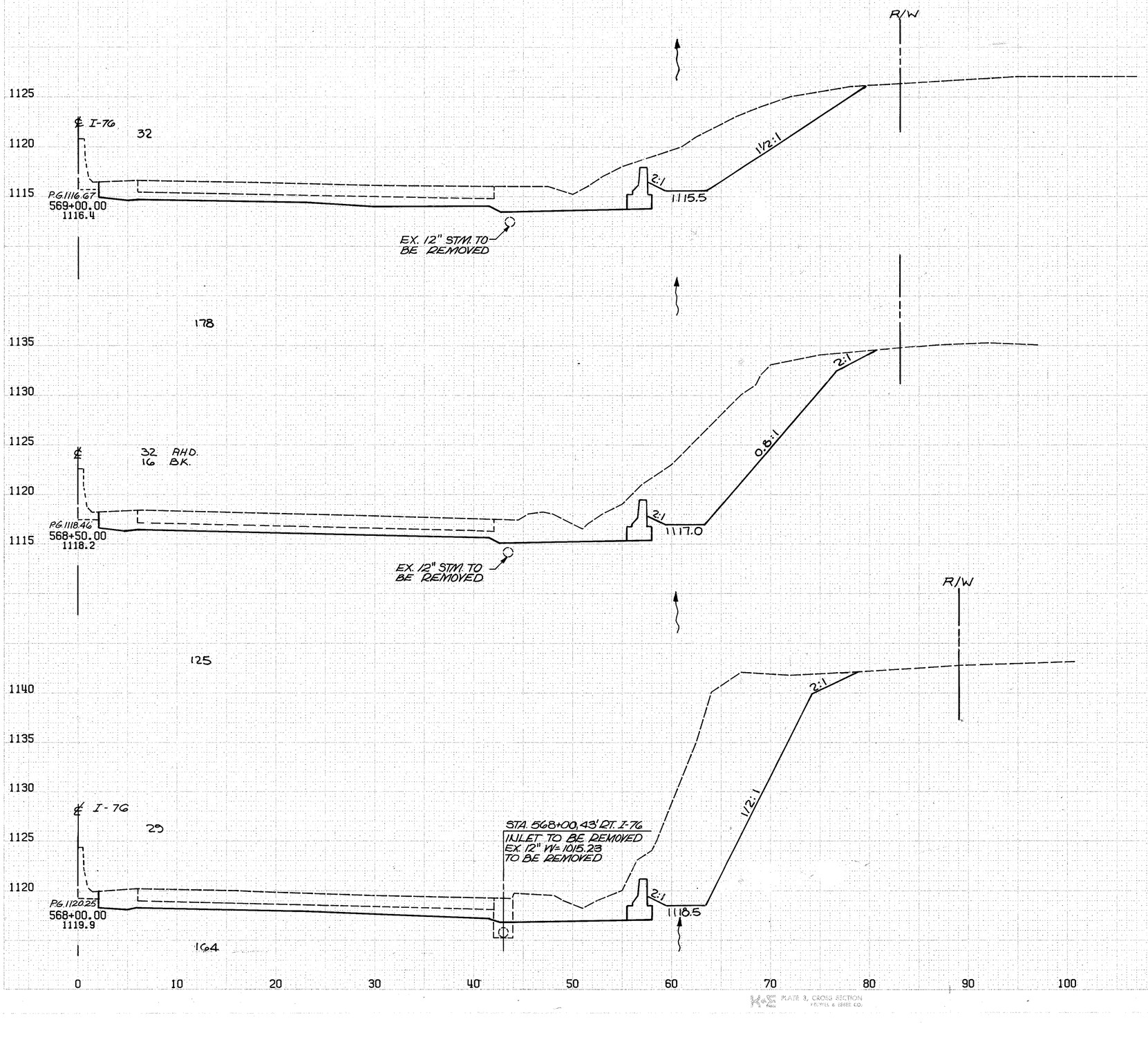

END CUT	AREA FILL	CU. CUT	YDS. FILL
192	0		
		388	0
227	0		
		466	0
276	0		
		583	0

I - 76 (RIGHT)
STA 568+00 TO STA 569+00

K&E PLATE 3, CROSS SECTION
KEUFFEL & ESSER CO.

CALCULATED BY BJB DATE 3/90
CHECKED BY DSB DATE 7/90

FHWA REG	STATE	PROJECT	330 / 1214
5	OHIO		

SUM - 76 - 11.57
IR - 76 - 2(44)19

SEEDING
END WIDTH — SQ. YARDS

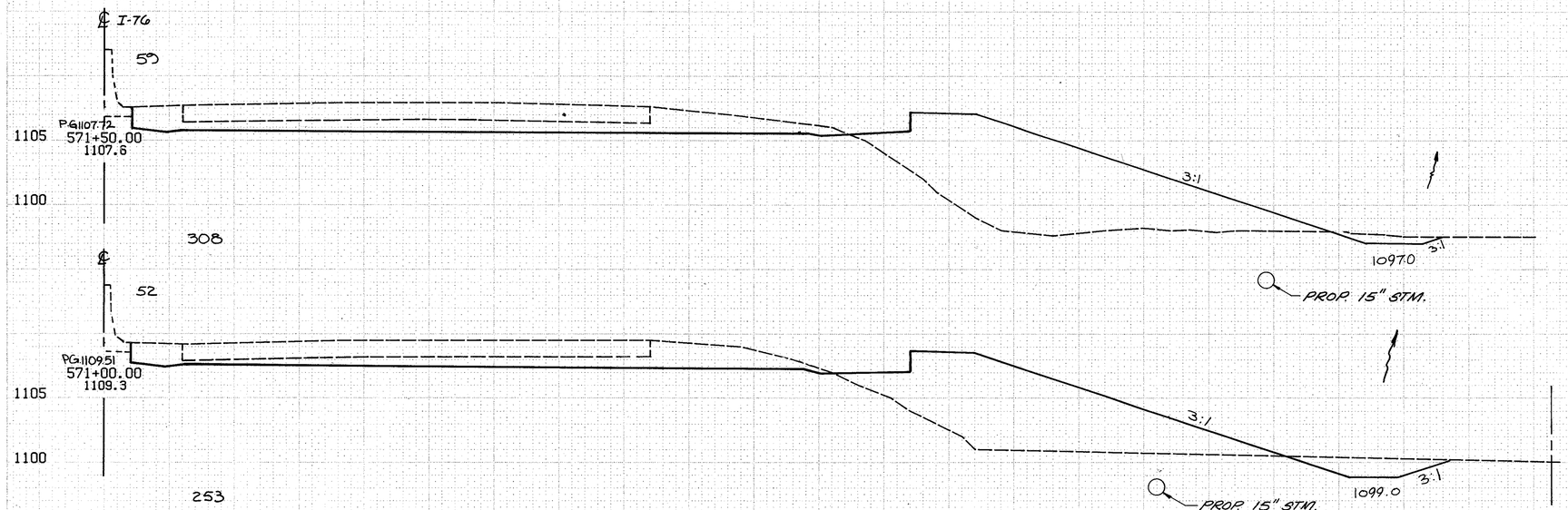

R/W

END CUT	AREA FILL	CU. CUT	YDS. FILL
56	166		
		109	272
62	128		

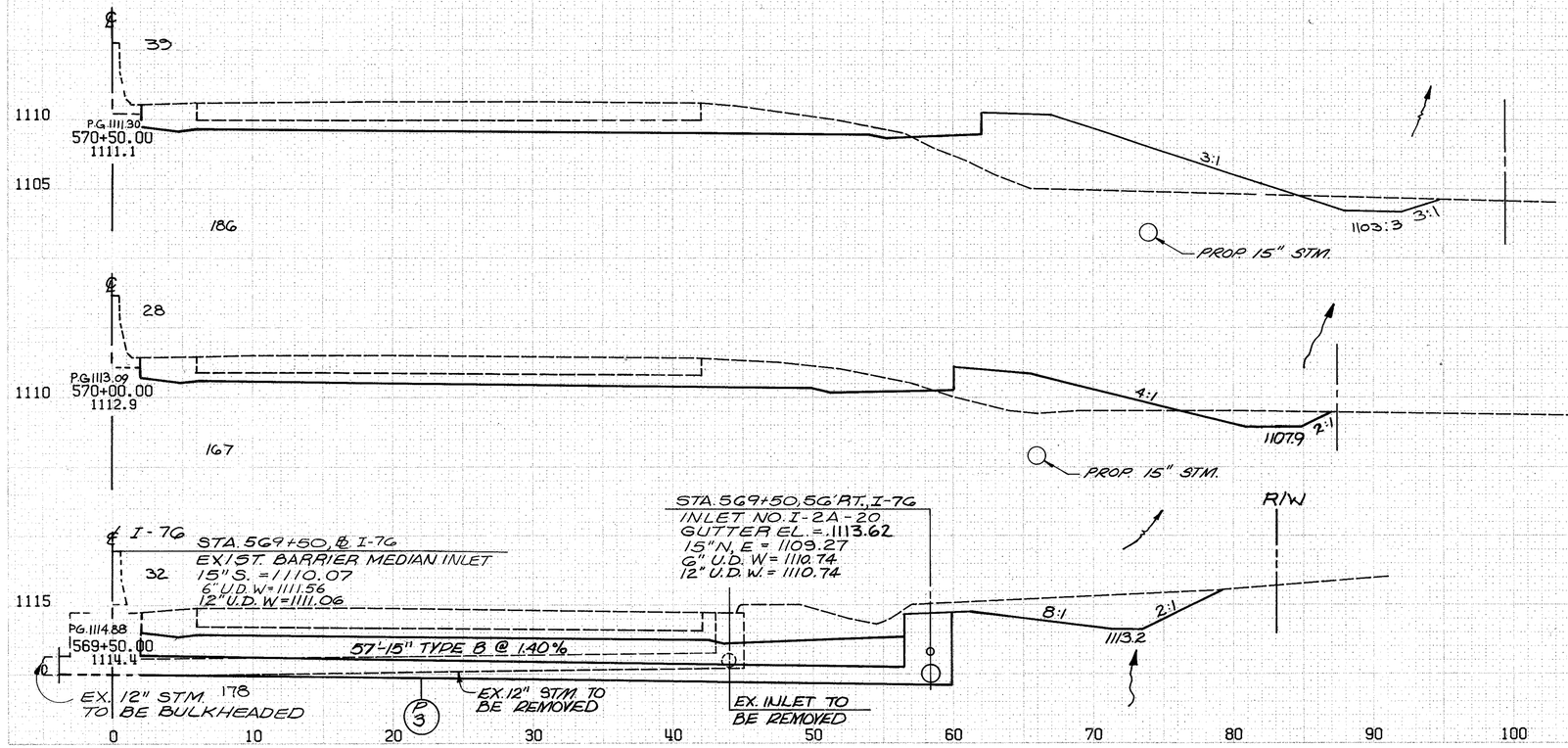

END CUT	AREA FILL	CU. CUT	YDS. FILL
117	193		
64	80		
120	103		
66	31		
147	29		
93	0		
264	0		

I - 76 (RIGHT)
STA 569+50 TO STA 571+50

K&E PLATE 3, CROSS SECTION
KEUFFEL & ESSER CO.

SEEDING
END SQ.
WIDTH YARDS

CALCULATED BY BJB DATE 3/90
CHECKED BY DSB DATE 7/90

FHWA REG	STATE	PROJECT	331 / 1214
5	OHIO		

SUM - 76 - 11.57
IR - 76 - 2(44)19

END CUT AREA FILL CU. CUT YDS. FILL

BEGIN CONC. BARRIER
TYPE D AS PER PLAN
STA. 573+25

℄ I-76

1100
1095
1090
1085

PG. 1102.35
573+00.00
1102.1

60

336

STA. 573+00, 112.5' RT. I-76
C.B. No. 5 WITHOUT APRON
T.G. = 1085.65

62 269

R/W

3:1 EXIST. L.A.

PROPOSED CURB, TYPE 6

EX. TALBOT AVE.

1085.9 3:1

111 452

EX. 24" COMB.
TO REMAIN

21" E = 1081.19
15" W = 1081.69
EX. 24" COMB. N+S = 1076.2±

℄

1100
1095
1090

PG 1104.14
572+50.00
1103.9

61

336

3:1

58 219

2 STY. FR.

3:1

1091.0

PROP. 15" STM.

103 378

℄ I-76

1105
1100
1095

PG 1105.93
572+00.00
1105.7

60

331

3:1

EXIST. L.A.

1094.3

3:1

R/W

53 189

101 329

PROP. 15" STM.

I - 76 (RIGHT)
STA 572+00 TO STA 573+00

0 10 20 30 40 50 60 70 80 90 100 110 120 130 140 150

PLATE 3, CROSS SECTION
TRUPPEL & LEGER CO.

SEEDING
END SQ.
WIDTH YARDS

CALCULATED BY BJB DATE 3/90
CHECKED BY DSB DATE 7/90

FHWA REG	STATE	PROJECT	332 / 12/4
5	OHIO		

SUM - 76 - 11.57
IR - 76 - 2(44)19

END	AREA	CU.	YDS.
CUT	FILL	CUT	FILL

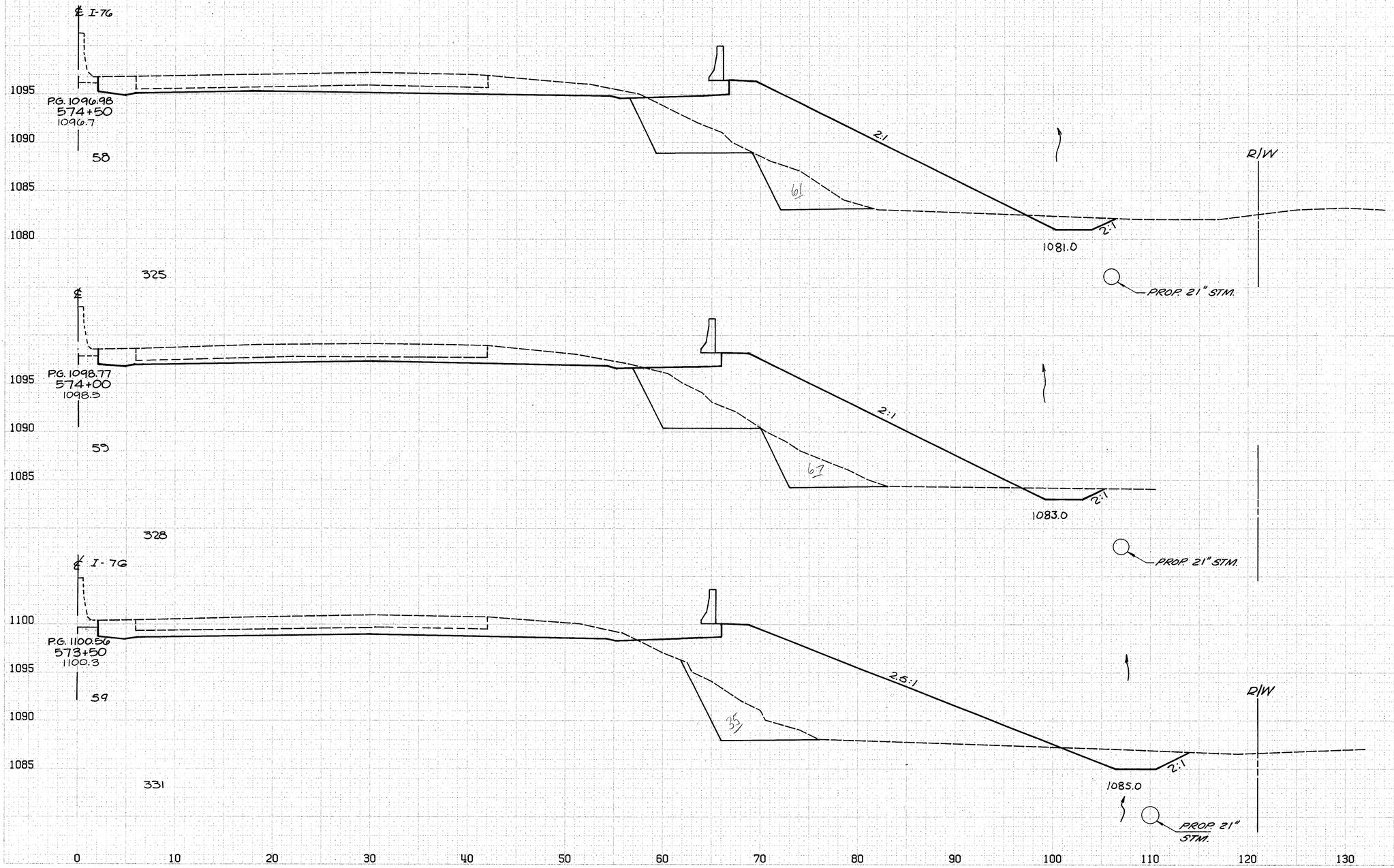

I - 76 (RIGHT)
STA 573+50 TO STA 574+50

KUFFEL & ESSER CO.

CALCULATED BY BJB DATE 3/90
CHECKED BY DSB DATE 7/90

FHWA REG	STATE	PROJECT	333 / 12/14
5	OHIO		

SUM - 76 - 11.57
IR - 76 - 2(44)19

SEEDING
END SQ.
WIDTH YARDS

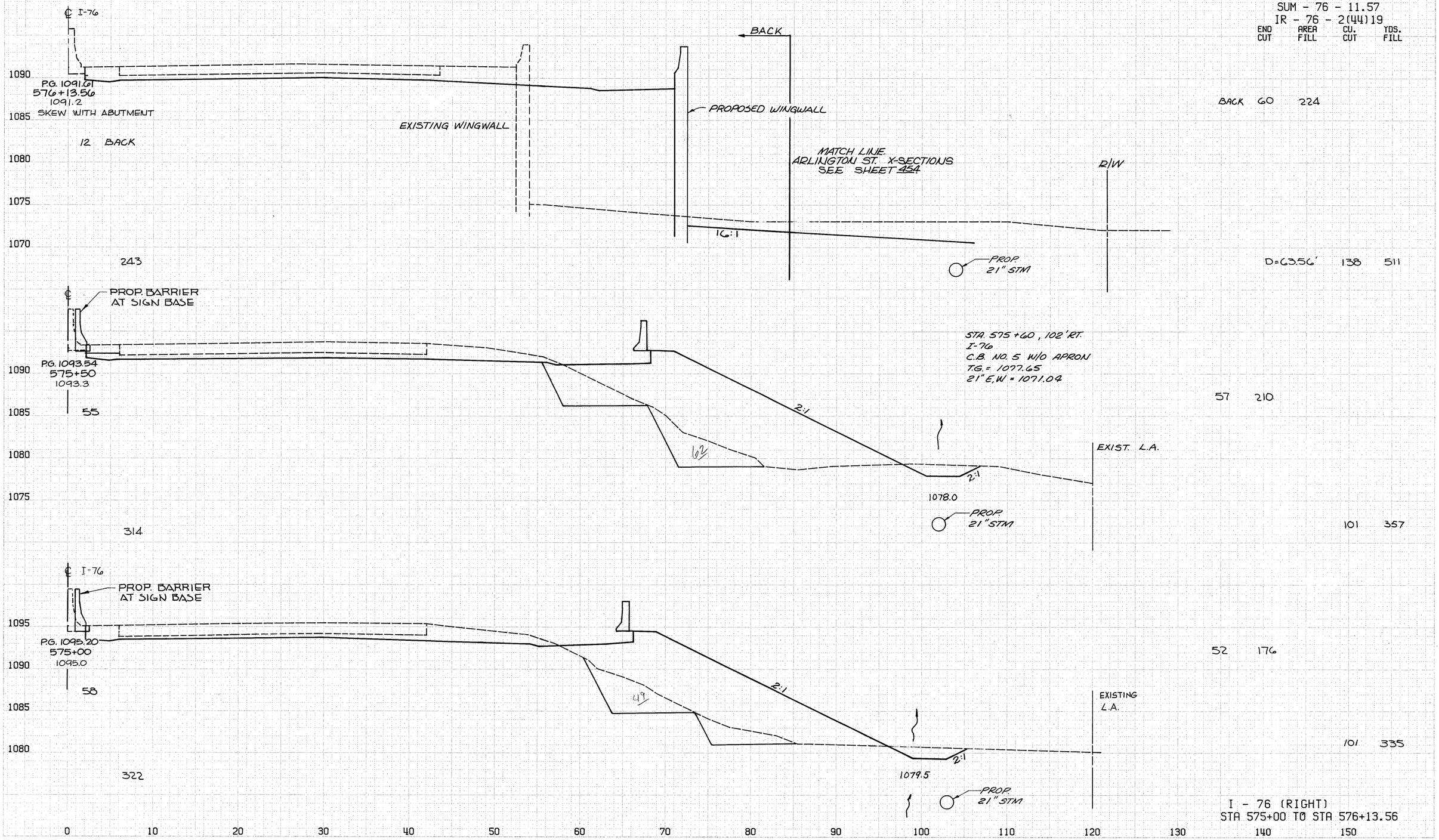

STA. 575+60, 102' RT.
I-76
C.B. NO. 5 W/O APRON
T.G. = 1077.65
21" E,W = 1071.04

END CUT	AREA FILL	CU. CUT	YDS. FILL
BACK 60		224	
D=63.56'		138	511
57		210	
101		357	
52		176	
101		335	

I - 76 (RIGHT)
STA 575+00 TO STA 576+13.56

PLATE 3, CROSS SECTION
KLEPPER & KESSEY CO.

CALCULATED BY BJB DATE 3/90
CHECKED BY DSB DATE 7/90

FHWA REG	STATE	PROJECT	334 / 1214
5	OHIO		

SUM - 76 - 11.57
IR - 76 - 2(44)19

END CUT	AREA FILL	CU. CUT	YDS. FILL
61	0		
116	0		
AHD 64	0		
BK 129	0		
D=56.59	218	26	
79	25 AHD		

SEEDING
END SQ
WIDTH YARDS

℄ I-76

1085 P.G. 1087.00
578+00.00
1086.6

1080 12

1075

1070

MATCH LINE
RAMP 'E-8'
X-SECTIONS
SEE SHEET 404.

℄ RAMP 'E-8'

PROPOSED RETAINING WALL
NO. 3 FOR DETAILS
SEE SHEET 707.

R/W 221.56'
RT. OF ℄

44

AHEAD

℄

P.G. 1088.15
1085 577+50.00
1087.9

NOSE STATION
RAMP E-8

4 AHD.
37 BK.

SEEDING STATIONS
577+50 AHD.
577+43 BK.

1080

1075

1070

MATCH LINE
RAMP 'E-8'
X-SECTIONS
SEE SHEET 404.

QBL

℄ RAMP 'E-8'

BACK

MATCH LINE
RAMP 'E-G'
X-SECTIONS
SEE SHEET 385.

R/W 221.50'
RT. OF ℄

℄ RAMP 'E-G'

24:1

237

℄ I-76

P.G. 1089.48
576+93.41
1089.2

SKEWED WITH ABUTMENT

49 AHD.

1085

1080

1075

1070

QBL

EXISTING WINGWALL

PROPOSED WINGWALL

PROP.
24" STM.

NOTE: QUANTITY BREAK LINE QBL
SEE NOTE SHEET 89.

R/W 217.00'
RT. OF ℄

MATCH LINE
RAMP 'E-G'
X-SECTIONS
SEE SHEET 385.

℄ RAMP 'E-G'

40:1

QBL

PROP.
24" STM.

I - 76 (RIGHT)
STA 576+93.41 TO STA 578+00

0 10 20 30 40 50 60 70 80 90 100 110 120 130 140 150

PLATE 8, CROSS SECTION
FRUNZI & ZISSA CO.

CALCULATED BY BJB DATE 3/90
CHECKED BY DSB DATE 7/90

FHWA REG	STATE	PROJECT	335 / 1214
5	OHIO		

SUM - 76 - 11.57
IR - 76 - 2(44)19

SEEDING
END WIDTH — SQ. YARDS

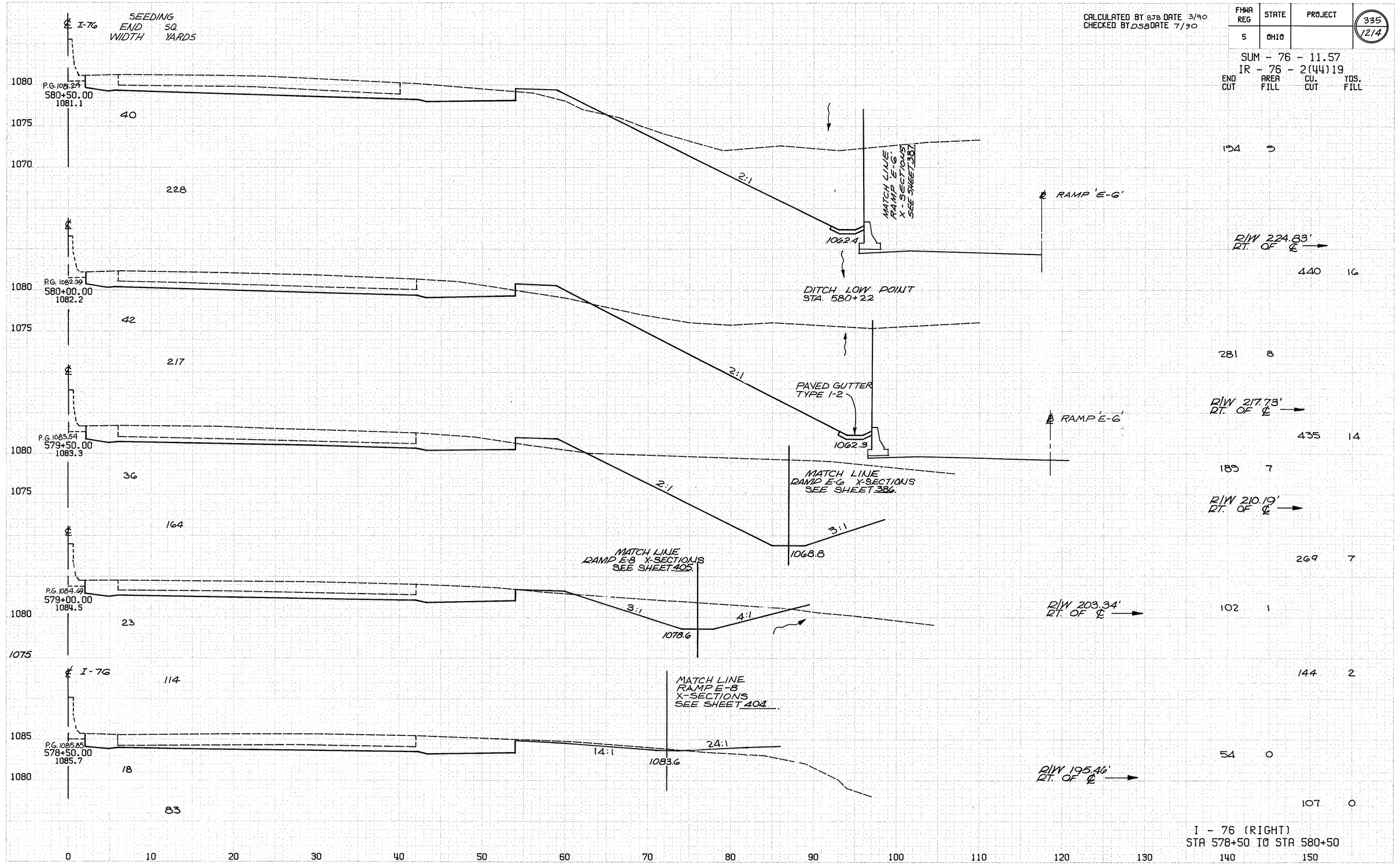

END CUT	AREA FILL	CU. CUT	YDS. FILL
		194	5
R/W 224.83' RT. OF ℄ →			
		440	16
		281	8
R/W 217.73' RT. OF ℄ →			
		435	14
		185	7
R/W 210.19' RT. OF ℄ →			
		269	7
R/W 203.34' RT. OF ℄ →		102	1
		144	2
		54	0
R/W 195.46' RT. OF ℄ →			
		107	0

I - 76 (RIGHT)
STA 578+50 TO STA 580+50

PLATE 3, CROSS SECTION

CALCULATED BY BJB DATE 3/90
CHECKED BY DSB DATE 7/90

FHWA REG	STATE	PROJECT	336 / 1214
5	OHIO		

SUM - 76 - 11.57
IR - 76 - 2(44)19

END CUT	AREA FILL	CU. CUT	YDS. FILL

SEEDING

END	SQ. YARDS
WIDTH	

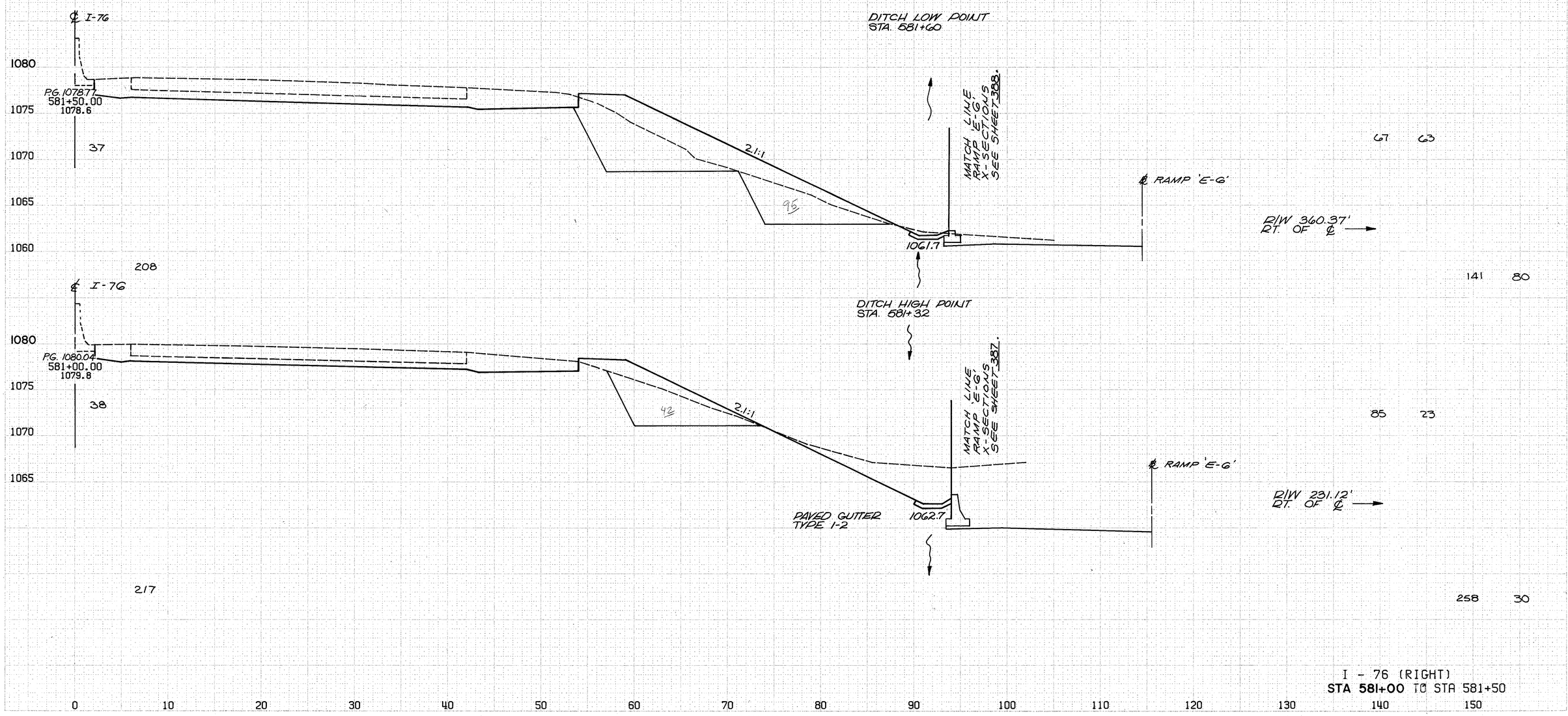

I - 76 (RIGHT)
STA 581+00 TO STA 581+50

PLATE 5, CROSS SECTION
GRAVEL & PAINT CO.

CALCULATED BY BJB DATE 3/90
CHECKED BY DSB DATE 7/90

FHWA REG	STATE	PROJECT	337 / 1214
5	OHIO		

SUM - 76 - 11.57
IR - 76 - 2(44)19

SEEDING
END WIDTH — SQ. YARDS

END CUT — AREA FILL — CU. CUT — YDS. FILL

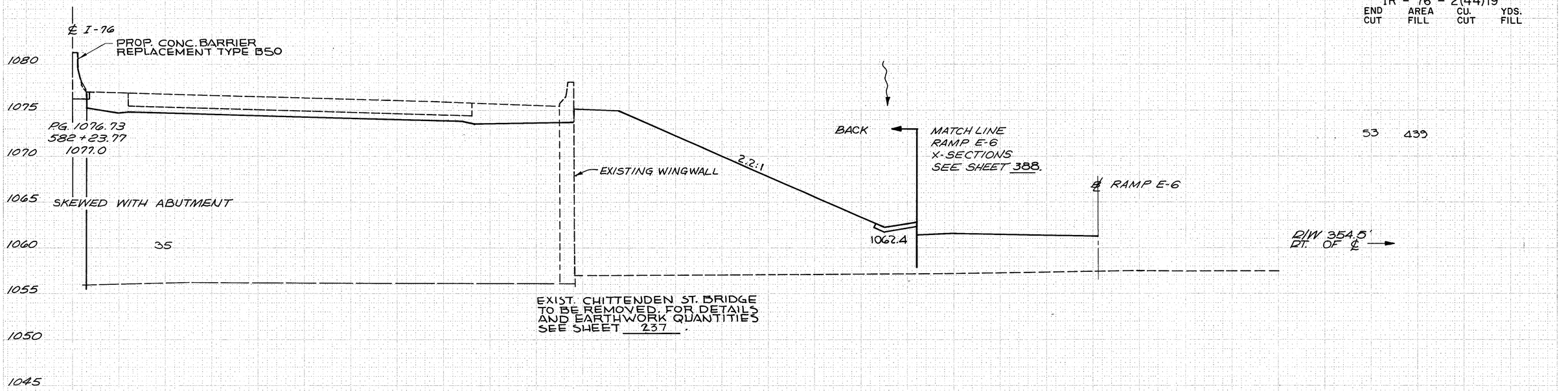

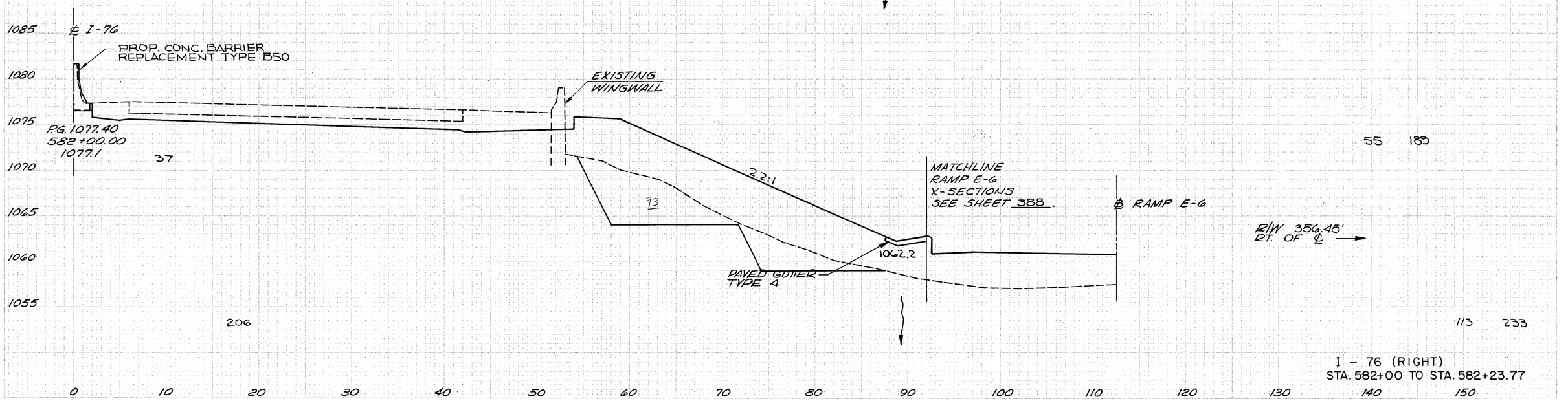

I - 76 (RIGHT)
STA. 582+00 TO STA. 582+23.77

PLATE 3, CROSS SECTION
KLEPPER + DAVIS CO.

CALCULATED BY BJB DATE 3/90
CHECKED BY DJB DATE 7/90

FHWA REG	STATE	PROJECT	338 12.14
5	OHIO		

SUM – 76 – 11.57
IR – 76 – 2(44)19

END CUT	AREA FILL	CU. CUT	YDS. FILL

SEEDING
END WIDTH — SQ. YARDS

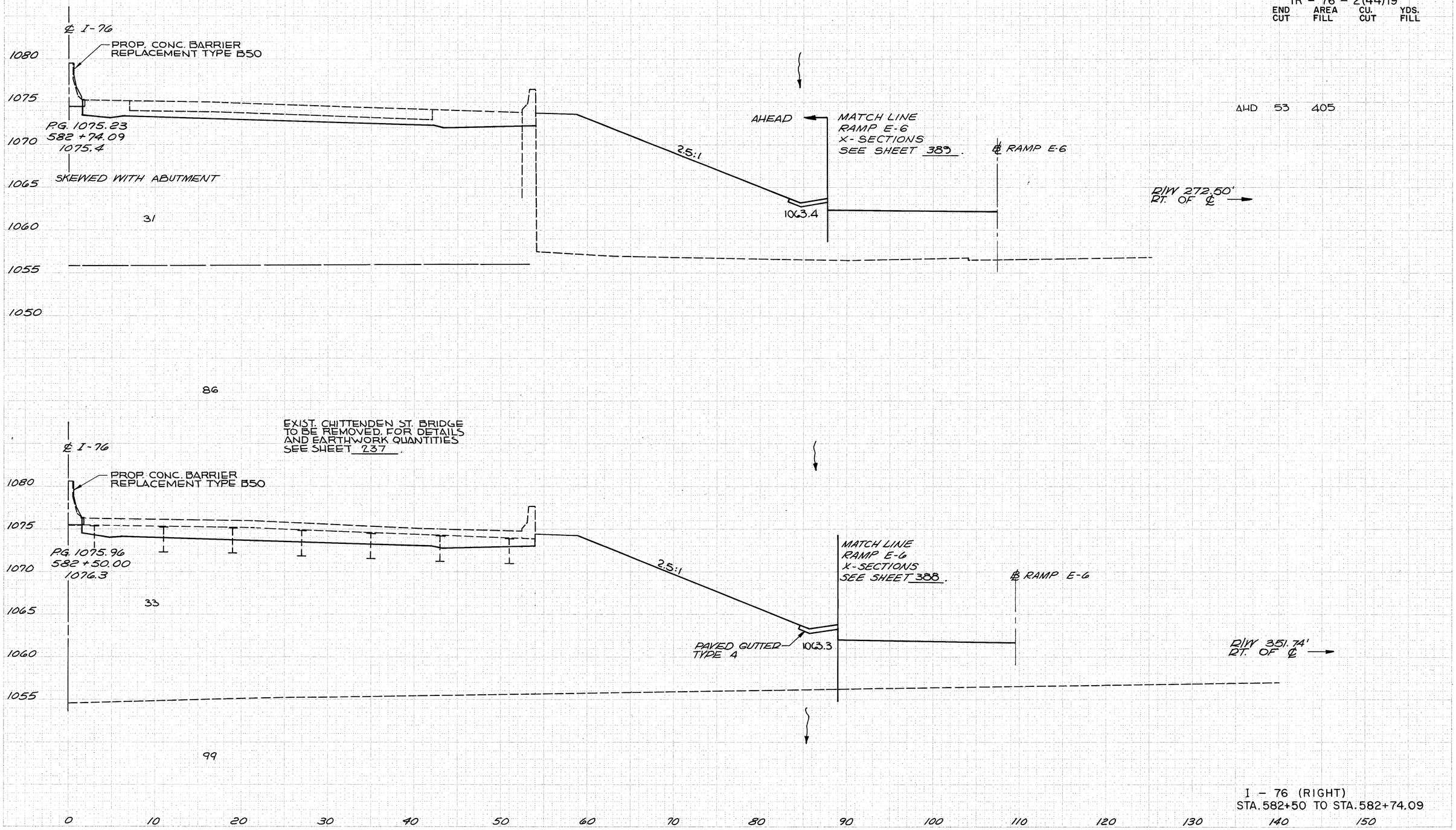

I – 76 (RIGHT)
STA. 582+50 TO STA. 582+74.09

PLATE 3, CROSS SECTION
KEIFFEL & KOSER CO.

SEEDING
END WIDTH SQ. YARDS

CALCULATED BY BJB DATE 3/90
CHECKED BY DSB DATE 7/90

FHWA REG	STATE	PROJECT
5	OHIO	

389
1214

SUM - 76 - 11.57
IR - 76 - 2(44)19

END CUT	AREA FILL	CU. CUT	YDS. FILL

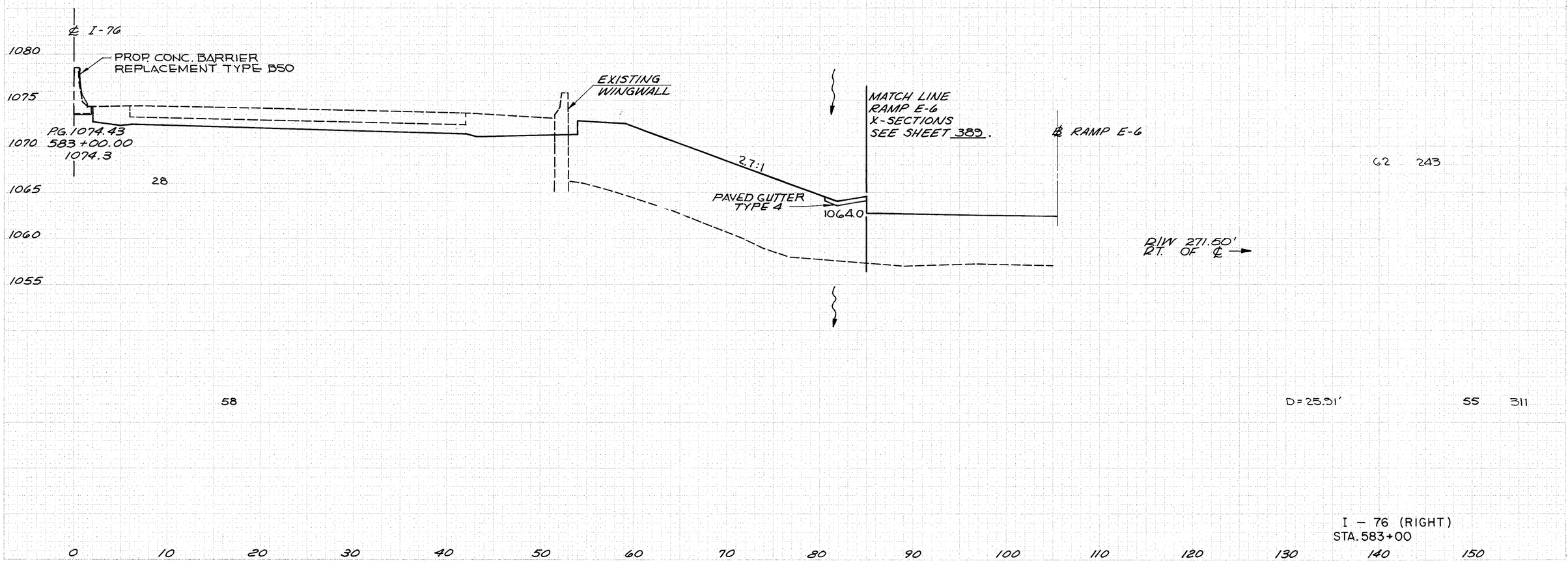

PLATE 3, CROSS SECTION
KRUPP & KEUR CO.

CALCULATED BY BJB DATE 3/90
CHECKED BY DSB DATE 7/90

FHWA REG	STATE	PROJECT	340 / 1214
5	OHIO		

SUM - 76 - 11.57
IR - 76 - 2(44)19

SEEDING
END SQ.
WIDTH YARDS

END CUT AREA FILL CU. CUT YDS. FILL

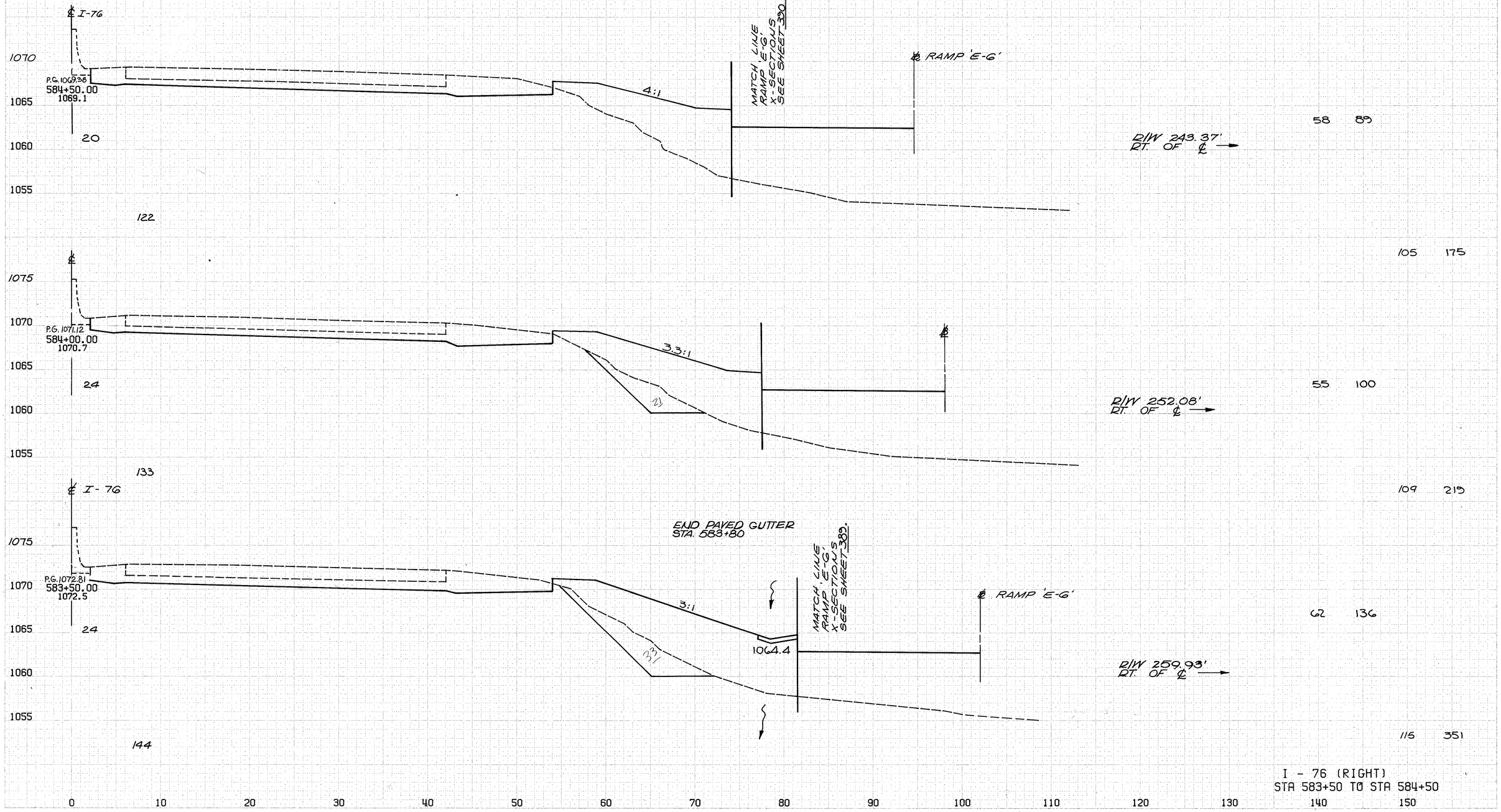

I - 76 (RIGHT)
STA 583+50 TO STA 584+50

PLATE 3, CROSS SECTION
GUPPEL & BISSER CO.

CALCULATED BY BJB DATE 3/90
CHECKED BY DSB DATE 7/90

FHWA REG	STATE	PROJECT
5	OHIO	

341
1214

SUM - 76 - 11.57
IR - 76 - 2(44)19

SEEDING
END AREA
WIDTH SQ. YARDS

END AREA
CUT FILL

CU. YDS.
CUT FILL

℄ I-76

1065
1060
1055

P.G. 1062.42
586+50.00
1062.1

0 +40 RHD.
6 +40 BK.

MATCH LINE
RAMP E-G
X-SECTIONS
SEE SHEET 331.

℄ RAMP 'E-G'

58 13

RIW 229.85'
RT. OF ℄

EXIST. RAMP E-6

℄ 38

1065
1060
1055

P.G. 1064.16
586+00.00
1063.8

11

22:1

℄

106 38

RIW 230.75'
RT. OF ℄

EXIST. RAMP E-6

℄ 70

1065
1060
1055

P.G. 1065.90
585+50.00
1065.5

14

8.3:1

℄

92 69

43 47

RIW 235.38'
RT. OF ℄

℄ I-76 86

1070
1065
1060
1055

P.G. 1067.64
585+00.00
1067.4

17

103

4.7:1

MATCH LINE
RAMP E-G
X-SECTIONS
SEE SHEET 330.

℄ RAMP 'E-G'

85 105

45 66

RIW 239.08'
RT. OF ℄

99 144

0 10 20 30 40 50 60 70 80 90 100 110 120 130 140 150

I - 76 (RIGHT)
STA 585+00 TO STA 586+50

FHWA REG	STATE	PROJECT
5	OHIO	

342
12/14

CALCULATED BY BJB DATE 3/90
CHECKED BY DSB DATE 7/90

SUM - 76 - 11.57
IR - 76 - 2(44)19

SEEDING
END WIDTH SQ. YARDS

I-76

EXIST. RAMP E-6

MATCH LINE
RAMP E-8 X-SECTIONS
SEE SHEET 412.

RIW 211.26'
RT. OF ℄

E.S. RAMP E-8'

END CUT	AREA FILL	CU. YDS. CUT	CU. YDS. FILL
138	8		
118	8		
116	3		
BK. 51	0		
		50	0
56	0		
		106	0
58	0		
101	0		
51	0		
94	2		
51	2		
101	14		

NOSE STATION
RAMP E-6

MATCH LINE
RAMP 'E-6'
X-SECTIONS
SEE SHEET 392.

RAMP 'E-6'

MATCH LINE
RAMP E-8 X-SECTIONS
SEE SHEET 412.

AH'D.

RIW 216.00'
RT. OF ℄

AHD.
BK.

RIW 213.84'
RT. OF ℄

RIW 218.42'
RT. OF ℄

RIW 223.23'
RT. OF ℄

RIW 227.83'
RT. OF ℄

MATCH LINE
RAMP 'E-6'
X-SECTIONS
SEE SHEET 411.

I-76
STA. 587+00
EXIST. INLET No. I-3B50

EX. 12" STM.

EXIST. RAMP E-6

P.G. 1053.72	589+00.00	1053.4	37	
P.G. 1054.59	588+75.00	1054.5	38 AHD. 0 BK.	104
P.G. 1055.40	588+50.00	1055.1	0	0
P.G. 1057.20	588+00.00	1056.8	0	0
P.G. 1058.94	587+50.00	1058.6	0	0
P.G. 1060.68	587+00.00	1060.0	0	0

11.5:1 3:1 1050.40

12.5:1 7.5:1 1051.30

9.2:1 7.8:1 1049.3

1055 1050 1060

0 10 20 30 40 50 60 70 80 90 100 110 120 130 140 150

I - 76 (RIGHT)
STA 587+00 TO STA 589+00

PLATE 3, CROSS SECTION

SEEDING
END SQ.
WIDTH YARDS

CALCULATED BY BJB DATE 3/90
CHECKED BY DSB DATE 7/90

FHWA REG	STATE	PROJECT
5	OHIO	

343
1214

SUM - 76 - 11.57
IR - 76 - 2(44)19

END CUT | AREA FILL | CU. CUT | YDS. FILL

℄ I-76

P.G. 1043.84
592+00.00
1043.4
1040
35
195

MATCH LINE
RAMP E-8 X-SECTIONS
SEE SHEET 414.

RAMP E-8

3.6:1
8:1
1036.1

RIW 409.38'
RT. OF ℄

43 76

147 78

℄
P.G. 1045.19
591+50.00
1044.9
1045
35
195

3.3:1
1038.2

RIW 452.94'
RT. OF ℄

116 8

221 11

STA. 590+90 68' RT. I-76
C.B. TO BE REMOVED

℄
P.G. 1046.77
591+00.00
1046.6
1045
35
195

4.6:1
EX. 15" STM.
(TO BE REMOVED)
1040.4

RIW 413.80'
RT. OF ℄

123 4

251 4

℄
P.G. 1048.5
590+50.00
1048.3
1045
35
195

5.2:1
1042.6

RIW 428.71'
RT. OF ℄

191 0

362 0

℄
P.G. 1050.24
590+00.00
1049.8
1050
35
195

5.5:1
1044.8

RIW 395.41'
RT. OF ℄

200 0

343 5

℄ I-76

EXIST RAMP E-6

P.G. 1051.98
589+50.00
1051.6
1050
37
206

MATCH LINE
RAMP E-8 X-SECTIONS
SEE SHEET 413.

RAMP E-8

7.3:1
8:1
1047.1

RIW 218.11'
RT. OF ℄

170 5

285 12

0 10 20 30 40 50 60 70 80 90 100 110 120 130 140 150

I - 76 (RIGHT)
STA 589+50 TO STA 592+00

PLATE 3. CROSS SECTION
ARMPRIEST & BROWN CO.

CALCULATED BY BJB DATE 3/90
CHECKED BY DSB DATE 7/90

FHWA REG	STATE	PROJECT	344 / 1214
5	OHIO		

SUM - 76 - 11.57
IR - 76 - 2(44)19

SEEDING
END WIDTH SQ. YARDS

END CUT AREA FILL CU. CUT YDS. FILL

I-76 STA. 594+00

INLET No. I-3B50
GUTTER EL. = 1040.12

1040
1035
1030

P.G. 1040.72
594+00.00
1039.9

15" NE = 1034.40
6" U.D. = 1035.15

37

189

MATCH LINE
RAMP E-8 X-SECTIONS
SEE SHEET 414.

℄ RAMP E-8

2.5:1

24:1

24 302

EXIST. FOURTH ST.

R/W 291.71'
RT. OF ℄

56 461

1040
1035
1030

P.G. 1041.16
593+50.00
1040.6

31

2.5:1

24:1

36 196

EXIST. FOURTH ST.

R/W 340.31'
RT. OF ℄

161

70 275

1040
1035

P.G. 1041.82
593+00.00
1041.3

27

2.4:1

15:1

1032.4

40 101

R/W 364.92'
RT. OF ℄

I-76

170

53 152

1040
1035

P.G. 1042.72
592+50.00
1042.2

34

MATCH LINE
RAMP E-8
X-SECTIONS
SEE SHEET 414.

℄ RAMP E-8

2.5:1

8:1

1033.8

60 63

R/W 379.65'
RT. OF ℄

192

95 125

0 10 20 30 40 50 60 70 80 90 100 110 120 130 140 150

I - 76 (RIGHT)
STA 592+50 TO STA 594+00

PLATE 5, CROSS SECTION

CALCULATED BY BJB DATE 3/90
CHECKED BY DSB DATE 7-90

FHWA REG	STATE	PROJECT
5	OHIO	

345
1214

SUM - 76 - 11.57
IR - 76 - 2(44)19

END	AREA		CU.	YDS.
CUT	FILL		CUT	FILL

SEEDING
END WIDTH SQ. YARDS

℄ I-76

1040
1035
1030
1025

P.G. 1040.78
595+49.19
1040.4

SKEWED WITH ABUTMENT

46 BK.

EXISTING WINGWALL

PROPOSED WINGWALL

2:1

4.6:1

BACK

MATCH LINE
RAMP E-8 X-SECTIONS
SEE SHEET 415.

℄ RAMP E-8

EXIST. FOURTH ST.

BK. 42 588

D=49.13 72 936

R/W 251.00'
RT. OF ℄

251

℄

1040
1035
1030
1025

P.G. 1040.54
595+00.00
1040.1

46

2.5:1

24:1

37 440

R/W 263.79'
RT. OF ℄

250

STA. 594+63
INLET NO. I-3B50 APP.
GUTTER ELEV. = 1040.12
(REMOVE EXISTING INLET)

59 731

℄ I-76

1040
1035
1030

P.G. 1040.52
594+50.00
1040.0

44

2.6:1

MATCH LINE
RAMP E-8 X-SECTIONS
SEE SHEET 415.

℄ RAMP E-8

EXIST. FOURTH ST.

24:1

27 345

R/W 277.21'
RT. OF ℄

47 603

225

0 10 20 30 40 50 60 70 80 90 100 110 120 130 140 150

I - 76 (RIGHT)
STA 594+50 TO STA 595+49.19

PLATE 3, CROSS SECTION
KOFFEL & ASSOC. CO.

CALCULATED BY BJB DATE 3/90
CHECKED BY DSB DATE 7/90

FHWA REG	STATE	PROJECT
5	OHIO	

346 / 1214

SUM - 76 - 11.57
IR - 76 - 2(44)19

SEEDING
END SQ.
WIDTH YARDS

END CUT AREA FILL CU. CUT YDS. FILL

℄ I-76

EX. RAMP 'E-8'

P.G. 1041.75
597+00.00
1041.2

61

132 19

2:1

8:1

MATCH LINE
RAMP E-8B X-SECTIONS
SEE SHEET 413.

1022.4

8:1

RIW 219.58'
RT. OF ℄

325

STA. 596+45
INLET NO. I-3B50
GUTTER ELEV. = 1040.83

EX. RAMP 'E-8'

P.G. 1041.43
596+50.00
1040.5

56

123 225

2:1

7 224

8:1

8:1

1023.5

RAMP
E-8B

RIW 228.00'
RT. OF ℄

201

℄ I-76

P.G. 1041.21
596+16.79
1040.8

SKEWED WITH ABUTMENT

53

EXISTING WINGWALL

D=33.21'

21 381

2:1

9:1

MATCH LINE
RAMP E-8B X-SECTIONS
SEE SHEET 413.

AHD. 27 356

RAMP
E-8B

1023.9

RIW 232.80'
RT. OF ℄

1040
1035
1030
1025

0 10 20 30 40 50 60 70 80 90 100 110 120 130 140 150

I - 76 (RIGHT)
STA 596+16.79 TO STA 597+00

PLATE 8, CROSS SECTION
PEPPEL & BEALS CO.

CALCULATED BY BJB DATE 3/90
CHECKED BY DSB DATE 7/90

FHWA REG	STATE	PROJECT
5	OHIO	

347
1214

SUM - 76 - 11.57
IR - 76 - 2(44)19

END	AREA	CU.	YDS.
CUT	FILL	CUT	FILL

℄ I-76

SEEDING
END SQ.
WIDTH YARDS

P.G. 1042.71
598 +50.00
1042.3

76

420

EXIST RAMP E-8

MATCH LINE
RAMP E-8B X-SECTIONS
SEE SHEET 420.

476 123

R/W 220.22'
RT. OF ℄

2:1

8:1

8:1

1018.5

856 174

P.G. 1042.39
598 +00.00
1042.0

75

448 65

R/W 212.43'
RT. OF ℄

1019.9

397

701 30

℄ I-76

PROP. BARRIER
AT SIGN BASE

P.G. 1042.07
597 + 50.00
1041.6

68

EXIST. RAMP E-8

309 32

MATCH LINE
RAMP E-8B X-SECTIONS
SEE SHEET 419.

2:1

8:1

8:1

R/W 212.13'
RT. OF ℄

1021.2

358

408 47

1040
1035
1030
1025
1020

0 10 20 30 40 50 60 70 80 90 100 110 120 130 140 150

I - 76 (RIGHT)
STA 597+50 TO STA 598+50

PLATE 3, CROSS SECTION
KEUFFEL & ESSER CO.

CALCULATED BY BJB DATE 3/90
CHECKED BY DSB DATE 7/90

FHWA REG	STATE	PROJECT	348 1214
5	OHIO		

SUM - 76 - 11.57
IR - 76 - 2(44)19

SEEDING
END WIDTH — SQ. YARDS

END CUT — AREA FILL — CU. YDS. CUT — CU. YDS. FILL

℄ I-76

EXISTING WINGWALL

PG 1043.67
600+00.00
1043.5

76

422

2:1

8:1

226 449

MATCH LINE
RAMP E-88 X-SECTIONS
SEE SHEET 421.

EXIST. RAMP E-8

R/W 310.75'
RT. OF ℄

489 689

PG 1043.35
599+50.00
1043.2

76

422

302 295

R/W 241.83'
RT. OF ℄

644 460

℄ I-76

PG 1043.03
599+00.00
1042.7

76

422

EXIST. RAMP E-8

354 202

R/W 228.98'
RT. OF ℄

2:1

8:1

MATCH LINE
RAMP E-88 X-SECTIONS
SEE SHEET 420.

806 301

1040
1035
1030
1025

0 10 20 30 40 50 60 70 80 90 100 110 120 130 140 150

I - 76 (RIGHT)
STA 599+00 TO STA 600+00

PLATE 5, CROSS SECTION
KLINGEL & ASSOC. CO.

CALCULATED BY BJB DATE 3/90
CHECKED BY DSB DATE 7/90

FHWA REG	STATE	PROJECT
5	OHIO	

349
1214

SUM - 76 - 11.57
IR - 76 - 2(44)19

SEEDING

END	WIDTH	SQ. YARDS

END CUT | AREA FILL | CU. YDS. CUT | CU. YDS. FILL

℄ I-76

PG. 1036.17
608 + 69.03
1035.7

SKEWED WITH ABUTMENT

24 AHD.

SEEDING STATION
609 + 05

MATCH LINE
RAMP 'E-9'
X-SECTIONS
SEE SHT. 423.

1034.4

EXISTING WINGWALL

AHD. 4 653

RIW 197.60'
RT. OF ℄

℄ I-76

PG. 1044.02
600 + 55.23
1043.7

SKEWED WITH ABUTMENT

PROPOSED PARAPET

EXISTING WINGWALL

25 BK.

310

BK. 14 636

RIW 309.00'
RT. OF ℄

D=55.23' 245 1110

1035
1030
1025
1020
1015
1010
1005
1040
1035
1030
1025
1020

0 10 20 30 40 50 60 70 80 90 100 110 120 130 140 150

I - 76 (RIGHT)
STA 600+55.23 TO STA 608+69.03

PLATE 3. CROSS SECTION
KRUEGER & SEGER CO.

CALCULATED BY BJB DATE 3/90
CHECKED BY DSB DATE 7/90

FHWA REG	STATE	PROJECT
5	OHIO	

350 / 1214

SUM - 76 - 11.57
IR - 76 - 2(44)19

END	AREA	CU.	YDS.
CUT	FILL	CUT	FILL

SEEDING
END SQ.
WIDTH YARDS

℄ I-76

1035
1030
1025

P.G. 1034.42
610+00.00
1034.0

41

195

5.7:1

5:1

1027.2

MATCH LINE
RAMP E-9 X-SECTIONS
SEE SHEET 423.

RIW 257.60'
RT. OF ℄

36 116

69 165

℄ I-76

1035
1030
1025
1020
1015

P.G. 1035.03
609+50.00
1034.6

29

8.5:1

8:1

1031.7

MATCH LINE
RAMP E-9 X-SECTIONS
SEE SHEET 423.

EXISTING WINGWALL

38 62

RIW 189.08'
RT. OF ℄

133

63 1072

0 10 20 30 40 50 60 70 80 90 100 110 120 130 140 150

I - 76 (RIGHT)
STA 609+50 TO STA 610+00

PLATE 2, CROSS SECTION
NOTES & PARTS LIST

CALCULATED BY BJB DATE 3/90
CHECKED BY DSB DATE 7/90

FHWA REG	STATE	PROJECT	351 12.14
5	OHIO		

SUM - 76 - 11.57
IR - 76 - 2(44)19

END CUT	AREA FILL	CU. CUT	YDS. FILL

SEEDING
END SQ.
WIDTH YARDS

℄ I-76

1030
1025
1020
1015

P.G. 1033.01
611+55.38
1032.0

26 AHD.

SEEDING STA.
611 + 93

SKEWED WITH ABUTMENT

STA. 610+80% TO STA. 611+55.38
MARTHA AVE. BRIDGE

EXISTING WINGWALL

PROPOSED WINGWALL

EARTHWORK STA.
FILL 611 + 86
CUT 611 + 92

AHD. 46 377

MATCH LINE
MARTHA AVE. X-SECTIONS
SEE SHEET 468.

22.4:1

R/W 369.00'
RT. OF ℄

℄

P.G. 1033.00
610+80.96
1032.8

13 BK.

SEEDING STA.
611 + 16

SKEWED WITH ABUTMENT

EXISTING WINGWALL

PROPOSED WINGWALL

BK. 11 476

MATCH LINE
MARTHA AVE. X-SECTIONS
SEE SHEET 468.

45:1

R/W 645.00'
RT. OF ℄

257

℄ I-76

PROP. CONC. BARRIER
REPLACEMENT TYPE B50

78 1045
D=48' D=55'

P.G. 1033.89
610+50.00
1033.3

57

77 480

MATCH LINE
RAMP E-9 X-SECTIONS
SEE SHEET 424.

4.6:1

1022.5

R/W 322.73'
RT. OF ℄

272

105 552

I - 76 (RIGHT)
STA 610+50 TO STA 611+55.38

0 10 20 30 40 50 60 70 80 90 100 110 120 130 140 150

PLATE 3, CROSS SECTION
GEUPEL & SHAW CO.

SEEDING
END SQ.
WIDTH YARDS

CALCULATED BY BJB DATE 3/90
CHECKED BY DSB DATE 7/90

FHWA REG	STATE	PROJECT	352 / 1214
5	OHIO		

SUM - 76 - 11.57
IR - 76 - 2(44)19

END	AREA	CU.	YDS.
CUT	FILL	CUT	FILL

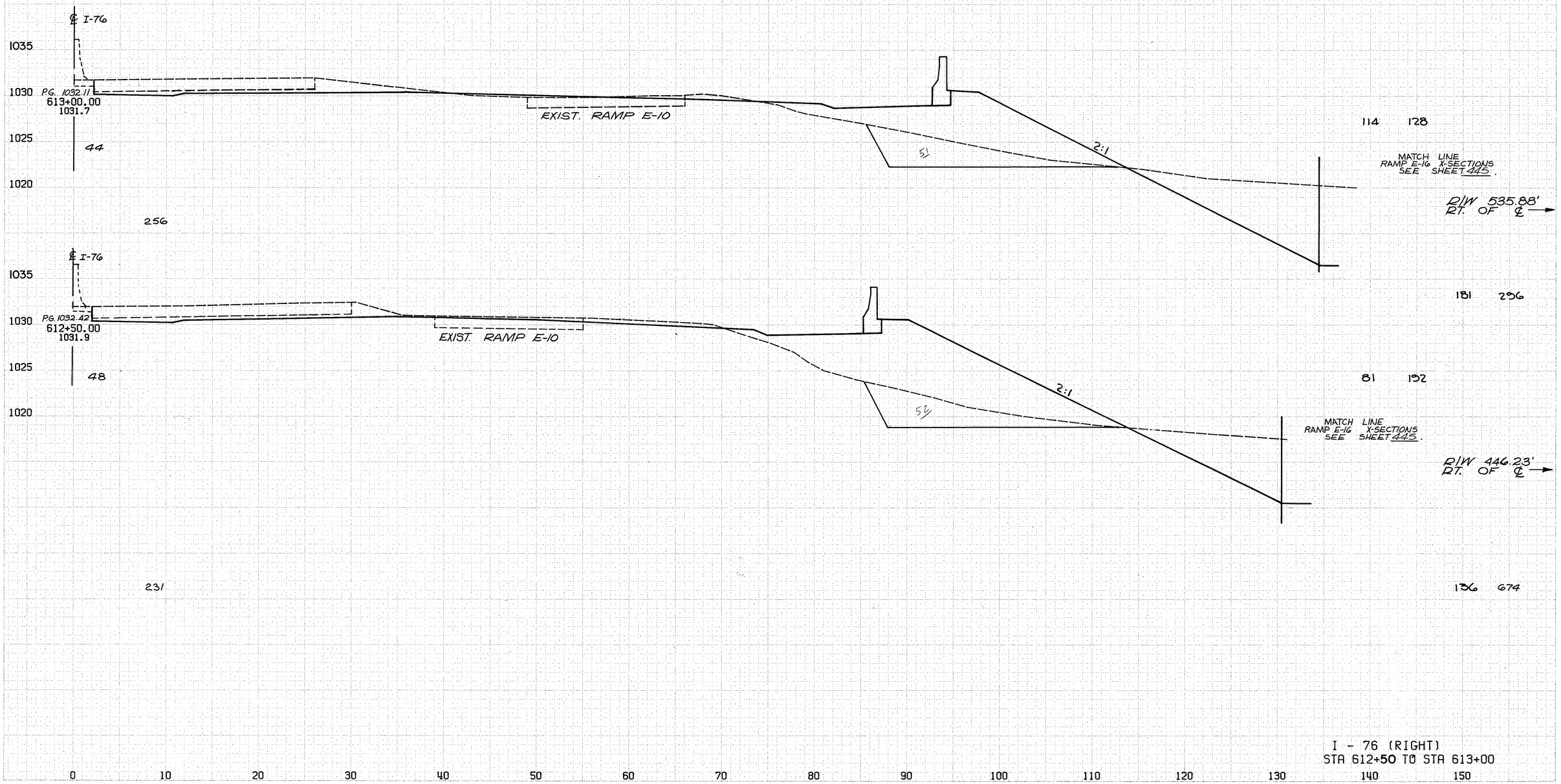

I - 76 (RIGHT)
STA 612+50 TO STA 613+00

PLATE 3, CROSS SECTION
KAUFFMAN & KOBER CO.

CALCULATED BY BJB DATE 3/90
CHECKED BY DSB DATE 7/90

FHWA REG	STATE	PROJECT
5	OHIO	

353 / 1214

SUM - 76 - 11.57
IR - 76 - 2(44)19

SEEDING
END WIDTH — SQ. YARDS

END CUT — AREA FILL — CU. YDS. CUT — CU. YDS. FILL

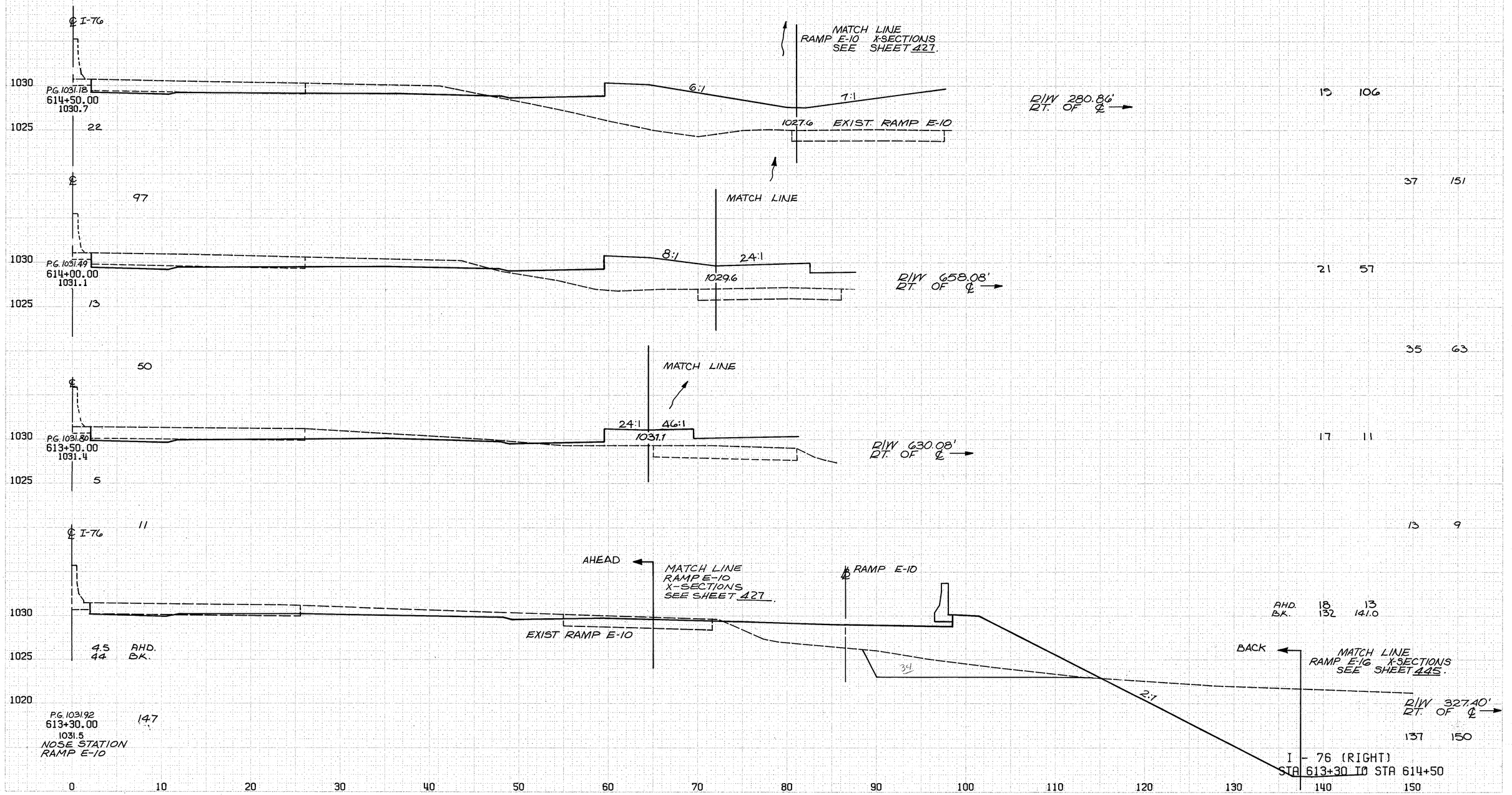

PLATE 3 CROSS SECTION
GRUPPE & ERGER CO.

CALCULATED BY BJB DATE 3/90
CHECKED BY DSB DATE 7/90

FHWA REG	STATE	PROJECT	354 / 1214
5	OHIO		

SUM - 76 - 11.57
IR - 76 - 2(44)19

SEEDING
END WIDTH — SQ. YARDS

END CUT — AREA FILL — CU. YDS. CUT — CU. YDS. FILL

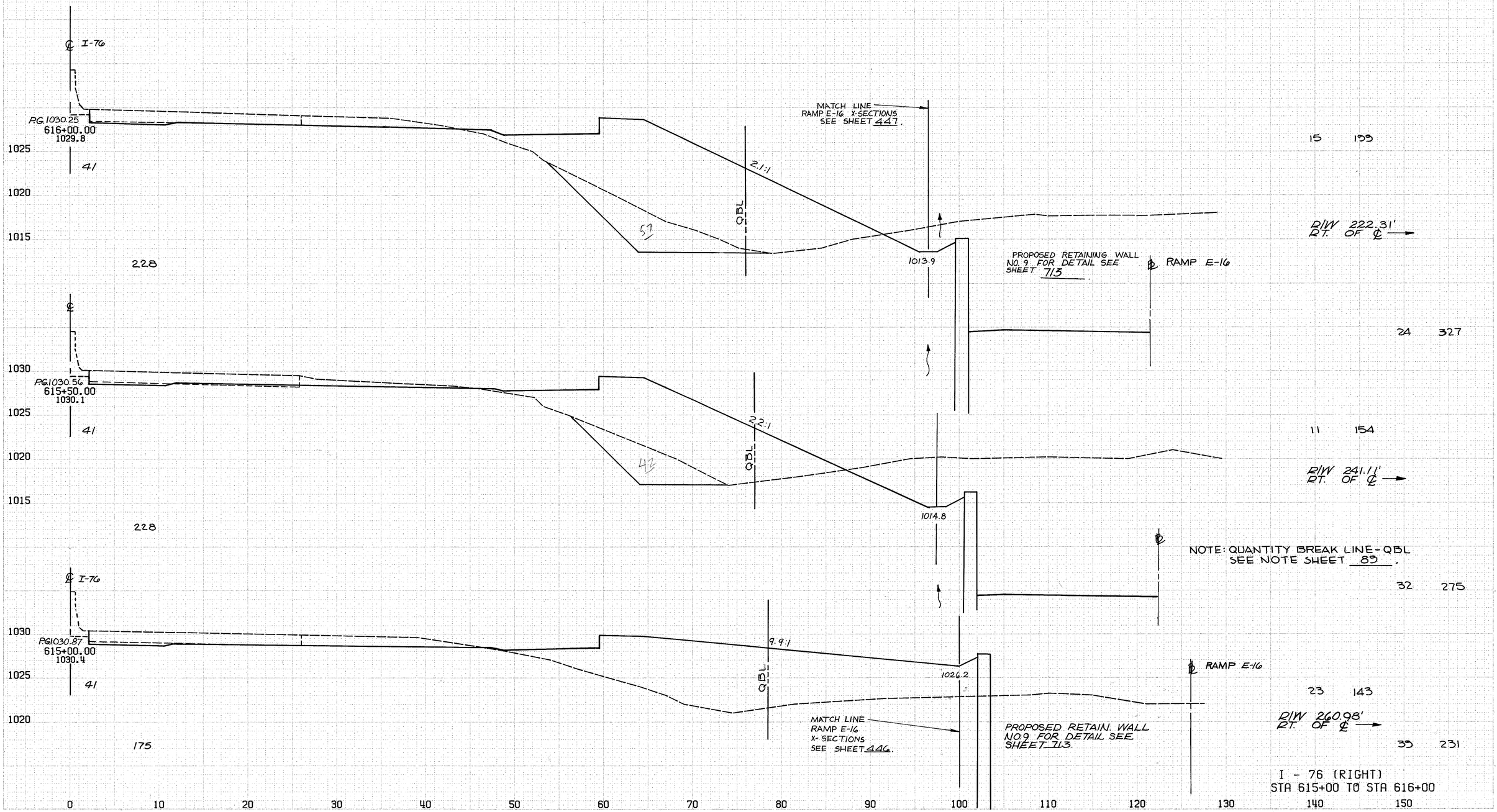

I - 76 (RIGHT)
STA 615+00 TO STA 616+00

PLATE 9, CROSS SECTION
PEURIFOY & BAKER CO.

CALCULATED BY BJB DATE 3/90
CHECKED BY DSB DATE 7/90

FHWA REG	STATE	PROJECT	355 / 1214
5	OHIO		

SUM - 76 - 11.57
IR - 76 - 2(44)19

END CUT	AREA FILL	CU. YDS. CUT	CU. YDS. FILL
38	1096		
15	365		
33	574		
21	255		
33	420		

SEEDING

END WIDTH	SQ. YARDS
46	250
44	239
42	231

℄ I-76

P61029.25
617+54.25
1028.9

SKEWED W/ABUTMENT

EXIST. STRUCTURE TO BE REMOVED
FOR DETAILS AND EARTHWORK
QUANTITIES SEE SHEET 240.

BACK

END WALL, BEGIN TYPE 'D' BARRIER
STA 17+75, RAMP E-16
STA 617+54, I-76

MATCH LINE
RAMP E-16 X-SECTIONS
SEE SHEET 448.

QBL

2:1

℄ RAMP E-16

BACK 23 726

1010.2

P/W 226.00'
RT. OF ℄

L = 54.25'

P61029.63
617+00.00
1029.1

1011.5

P/W 215.08'
RT. OF ℄

NOTE: QUANTITY BREAK LINE - QBL
SEE NOTE SHEET 89.

℄ I-76

PG 1029.94
616+50.00
1029.5

MATCH LINE RAMP E-16
X-SECTIONS
SEE SHEET 447.

1012.7

℄ RAMP E-16

PROP. RETAINING WALL No. 9
FOR DETAILS, SEE SHEET 713

P/W 203.24'
RT. OF ℄

1025
1020
1015
1010

0 10 20 30 40 50 60 70 80 90 100 110 120 130 140 150

I - 76 (RIGHT)
STA 616+50 TO STA 617+54.25

PLATE 3, CROSS SECTION
KRAMM & BYRN CO.

CALCULATED BY BTB DATE 3/90
CHECKED BY DSB DATE 7/90

FHWA REG	STATE	PROJECT
5	OHIO	

356
1214

SUM - 76 - 11.57
IR - 76 - 2(44)19

END CUT	AREA FILL	CU. CUT	YDS. FILL
19	558		
28	977		
11	497		
D=54.25'	24	1238	
AHD	13	735	

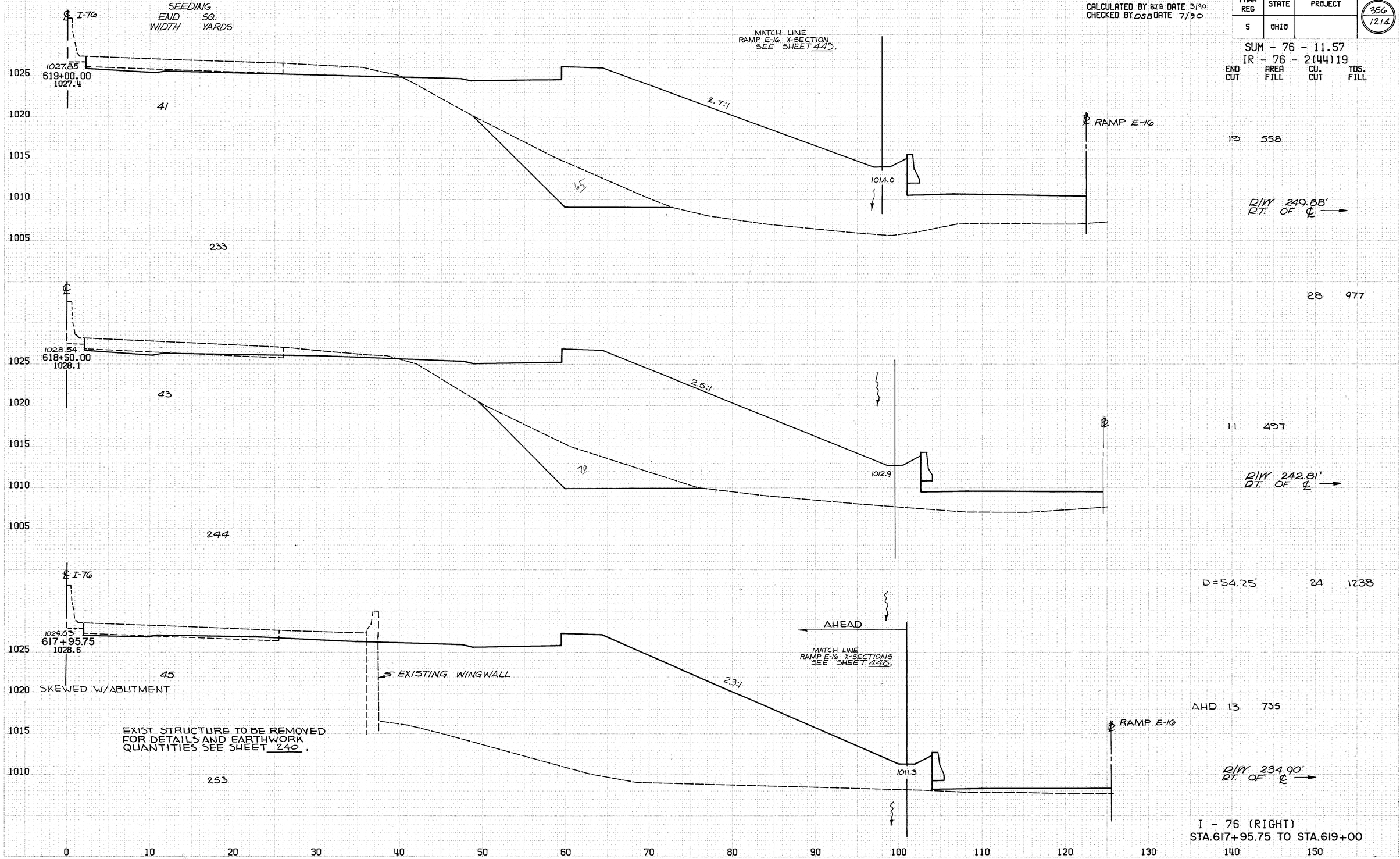

I - 76 (RIGHT)
STA.617+95.75 TO STA.619+00

K&S PLATE 3, CROSS SECTION
KEUFFEL & ESSER CO.

CALCULATED BY BJB DATE 3/90
CHECKED BY DSB DATE 7/90

FHWA REG	STATE	PROJECT	357 12.14
5	OHIO		

SUM - 76 - 11.57
IR - 76 - 2(44)19

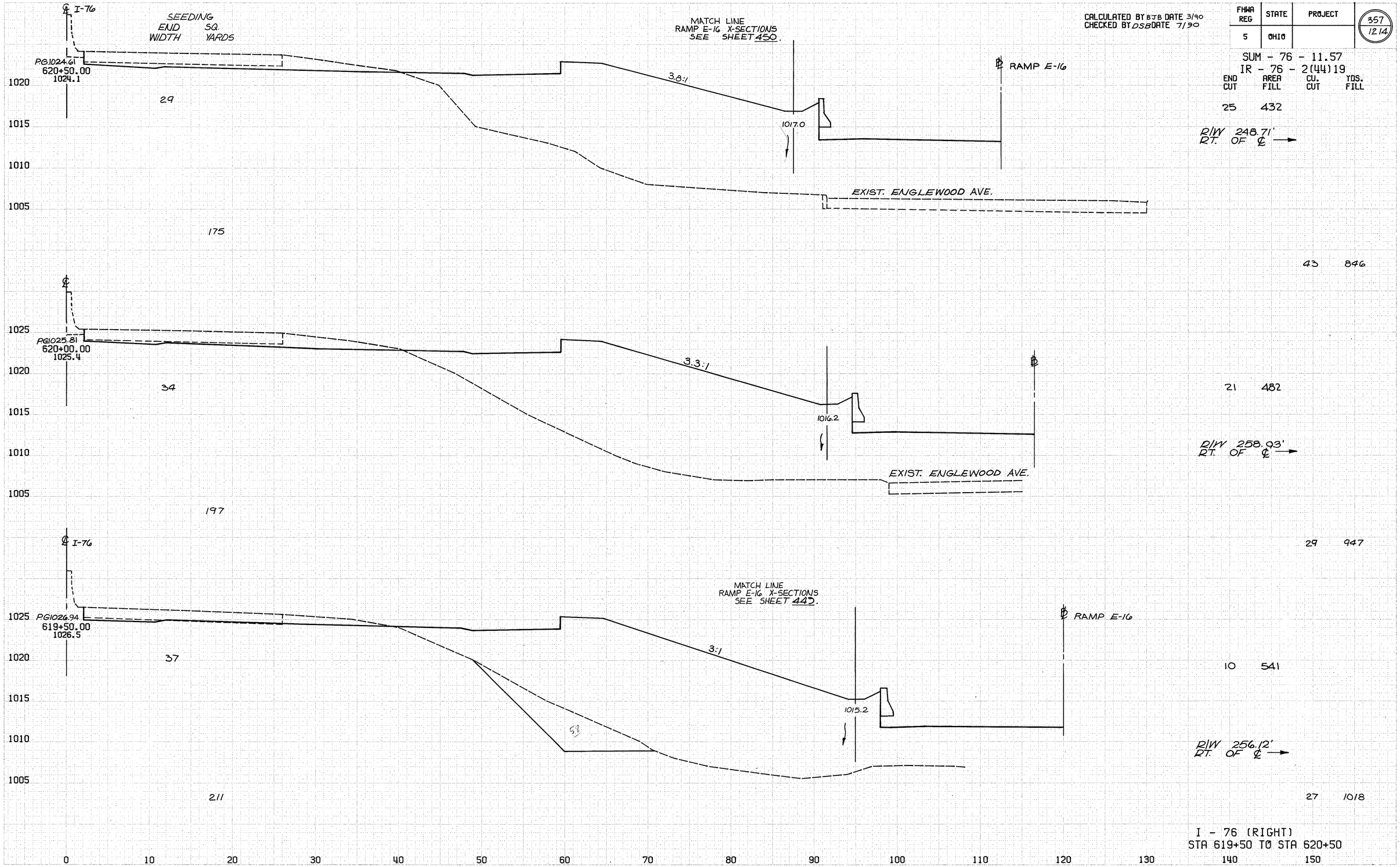

END CUT	AREA FILL	CU. YDS. CUT	CU. YDS. FILL
25	432		
43	846		
21	482		
29	947		
10	541		
27	1018		

R/W 248.71' RT. OF ℄ →

R/W 258.93' RT. OF ℄ →

R/W 256.12' RT. OF ℄ →

I - 76 (RIGHT)
STA 619+50 TO STA 620+50

PLATE 3, CROSS SECTION
KENTUCKY & RIVER CO.

CALCULATED BY BJB DATE 3/90
CHECKED BY DSB DATE 7/90

FHWA REG	STATE	PROJECT	358 / 1214
5	OHIO		

SUM - 76 - 11.57
IR - 76 - 2(44)19

SEEDING
END WIDTH — SQ. YARDS

END CUT — AREA FILL — CU. CUT — YDS. FILL

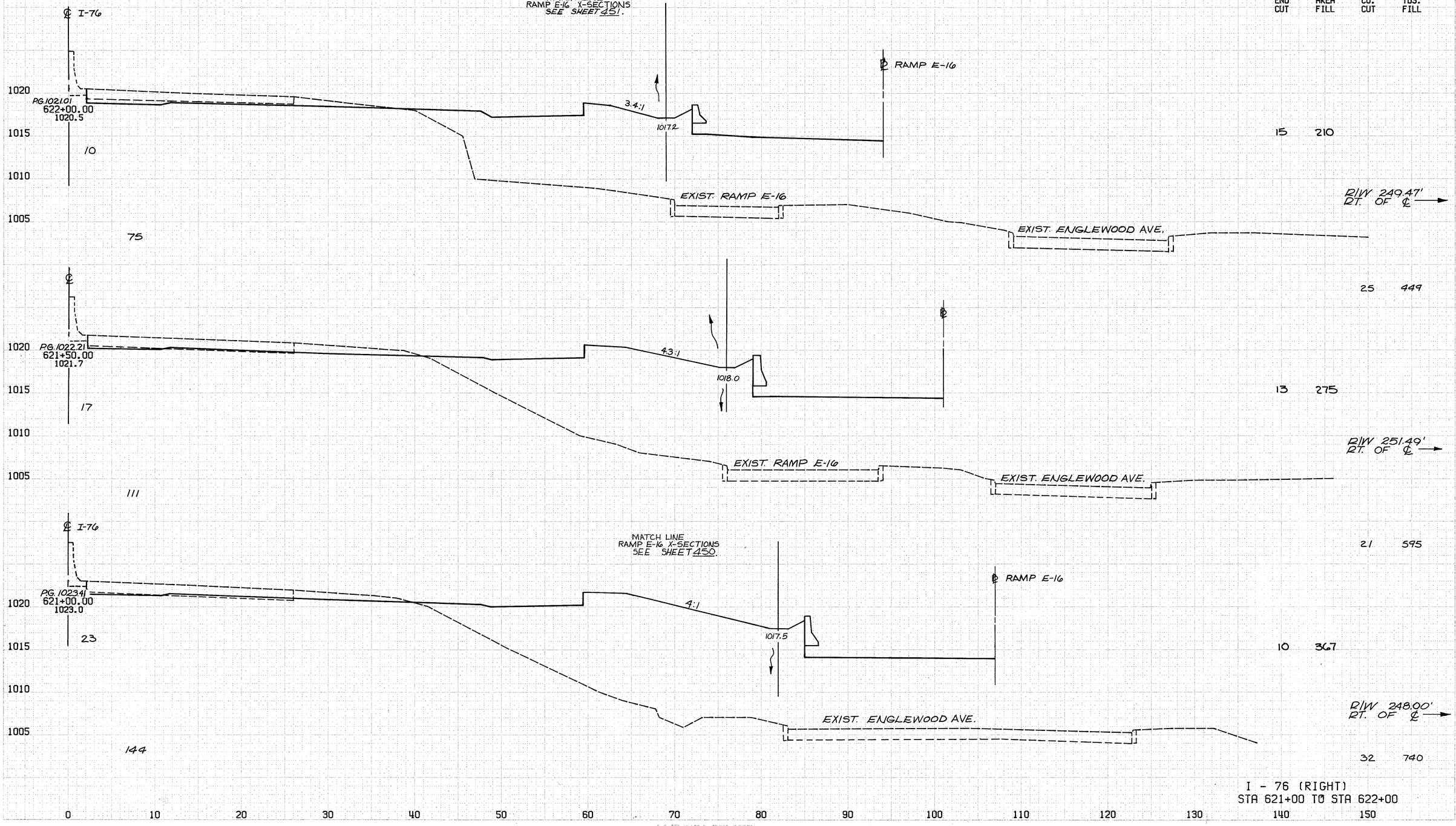

I - 76 (RIGHT)
STA 621+00 TO STA 622+00

SEE PLATE 5, CROSS SECTION
KRUPPEL & KOAPP CO.

CALCULATED BY BJB DATE 3/90
CHECKED BY ASB DATE 7/90

FHWA REG	STATE	PROJECT
5	OHIO	

359
1214

SUM - 76 - 11.57
IR - 76 - 2(44)19

END CUT	AREA FILL	CU. CUT	YDS. FILL
16	50		
30	102		
16	60		
	251.54' RT. OF ℄		
25	160		
11	113		
	250.91' RT. OF ℄		
24	299		

SEEDING
END WIDTH — SQ. YARDS

℄ I-76

MATCH LINE
RAMP E-16
X-SECTIONS
SEE SHEET 452.

℄ RAMP E-16

EXIST. RAMP E-16

D/W

EXIST. ENGLEWOOD AVE.

P.G. 1018.17
623+50.00
1017.7

STA. 623+00, ℄
EXIST. INLET

P.G. 1018.80
623+00.00
1018.1

RT. OF ℄ →

STA. 622+50, ℄
EXIST. INLET

℄ I-76

MATCH LINE
RAMP E-16
X-SECTIONS
SEE SHEET 451.

℄ RAMP E-16

3:1

1016.6

P.G. 1019.81
622+50.00
1019.2

AHD.
BK.

EXISTING PAVED GUTTER
TO BE REMOVED

EXIST. RAMP E-16

EXIST. ENGLEWOOD AVE.

1020
1015
1010
1005
1000

0 10 20 30 40 50 60 70 80 90 100 110 120 130 140 150

I - 76 (RIGHT)
STA 622+50 TO STA 623+50

ORIGINAL SURVEY — SURVEYED / PLOTTED / NOTE BOOK / AREAS
FINAL SURVEY — SURVEYED / PLOTTED / NOTE BOOK / AREAS CHECKED
NO. / BY / DATE

PLATE 3, CROSS SECTION
KRUFFF & ESSEX CO.

CALCULATED BY BJB DATE 3/90
CHECKED BY DSB DATE 7/90

FHWA REG	STATE	PROJECT
5	OHIO	

360
12.14

SUM - 76 - 11.57
IR - 76 - 2(44)19

	END CUT	AREA FILL	CU. CUT	YDS. FILL
	63	3		
	119	8		
	65	6		
	95	19		
AHD	38	14		
BK	21	7		
	25	31		
	24	70		

℄ I-76

SEEDING
END WIDTH SQ. YARDS

PG. 1019.48
625+50.00
1019.1

EXIST. E-16

PROPOSED RETAINING WALL
NO. 13 FOR DETAILS
SEE SHEET 717.

℄ ENGLEWOOD AVE

24:1

R/W

PROP. 12" W.M.

STA. 625+00, ℄
EXIST. INLET

PG. 1018.58
625+00.00
1018.1

AHEAD

BACK

MATCH LINE
RAMP E-16
X-SECTION
SEE SHEET 452.

℄ RAMP E-16

PG. 1018.06
624+50.00
1017.7
NOSE STATION
RAMP E-16

21 AHD.
0 BK.

STA. 624+00, ℄
EXIST. INLET

℄ I-76

PG. 1017.93
624+00.00
1017.4

EXISTING PAVED GUTTER
TO BE REMOVED

EXIST. E-16

QUANTITY BREAK LINE - QBL
SEE NOTE SHEET 89.

I - 76 (RIGHT)
STA 624+00 TO STA 625+50

0 10 20 30 40 50 60 70 80 90 100 110 120 130 140 150

1015 1010 1005

PLATE 3, CROSS SECTION

CALCULATED BY BJB DATE 3/90
CHECKED BY DSB DATE 7/90

FHWA REG	STATE	PROJECT	361 12.14
5	OHIO		

SUM - 76 - 11.57
IR - 76 - 2(44)19

END CUT	AREA FILL	CU. CUT	YDS. FILL
0	128	23	
10	128	23	
20	128	23	
30	128	23	
40	128	23	
50	128	23	
60	128	23	
70	128	23	
80	128	23	
90	128	23	
100	128	23	
110	128	23	
120	128	23	
130	128	23	
140	128	23	
150	128	23	

SEEDING
END WIDTH | SQ. YARDS

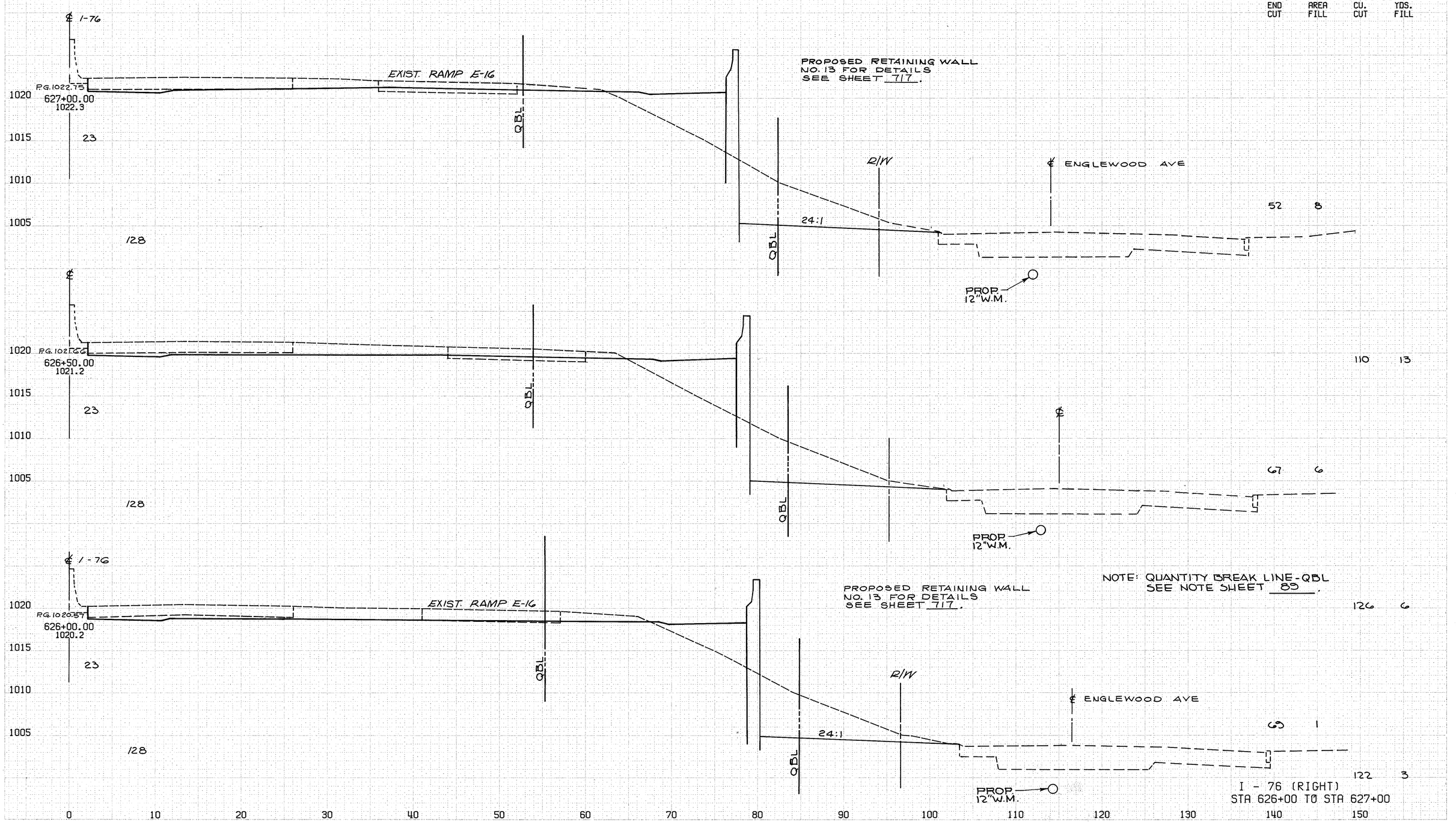

PLATE 3, CROSS SECTION
REVISED 6-1996 CO.

CALCULATED BY BJB DATE 3/90
CHECKED BY DSB DATE 7/90

FHWA REG	STATE	PROJECT
5	OHIO	

362
12.14

SUM - 76 - 11.57
IR - 76 - 2(44)19

SEEDING
END WIDTH | SQ. YARDS

END CUT | AREA FILL | CU. YDS. CUT | CU. YDS. FILL

℄ I-76
P.G. 1025.46
628+50.00
1024.3
1020
1015
1010
1005
23
128
QBL

PROPOSED RETAINING WALL NO. 13 FOR DETAILS SEE SHEET 717.

R/W
℄ ENGLEWOOD AVE.
24:1
46 16
PROP. 12"W.M.

℄ I-76
P.G. 1024.79
628+00.00
1024.3
EXIST. RAMP E-16
23
128
QBL

54 24

PROP. 12"W.M.

℄ I-76
P.G. 1023.84
627+50.00
1023.3
EXIST. RAMP E-16
23
128
QBL

PROPOSED RETAINING WALL NO. 13 FOR DETAILS SEE SHEET 717

NOTE: QUANTITY BREAK LINE - QBL SEE NOTE SHEET 89.

56 10

R/W
℄ ENGLEWOOD AVE.
24:1
60 5
PROP. 12"W.M.

107 14
104 12

I - 76 (RIGHT)
STA 627+50 TO STA 628+50

0 10 20 30 40 50 60 70 80 90 100 110 120 130 140 150

PLATE 3, CROSS SECTION
GEUPEL & HEER CO.

SEEDING
END SQ.
WIDTH YARDS

CALCULATED BY BJB DATE 3/90
CHECKED BY DSB DATE 7/90

FHWA REG	STATE	PROJECT	363 1214
5	OHIO		

SUM - 76 - 11.57
IR - 76 - 2(44)19

END CUT	AREA FILL	CU. CUT	YDS. FILL

FINAL SURVEY NOTE BOOKS — DATE — BY — CHKD — PLANIMETER — AREAS — MISC. — ORIGINAL SURVEY NOTE BOOKS — DATE — BY — CHKD — PLANIMETER — AREAS — MISC. — NUMBERS CHECKED

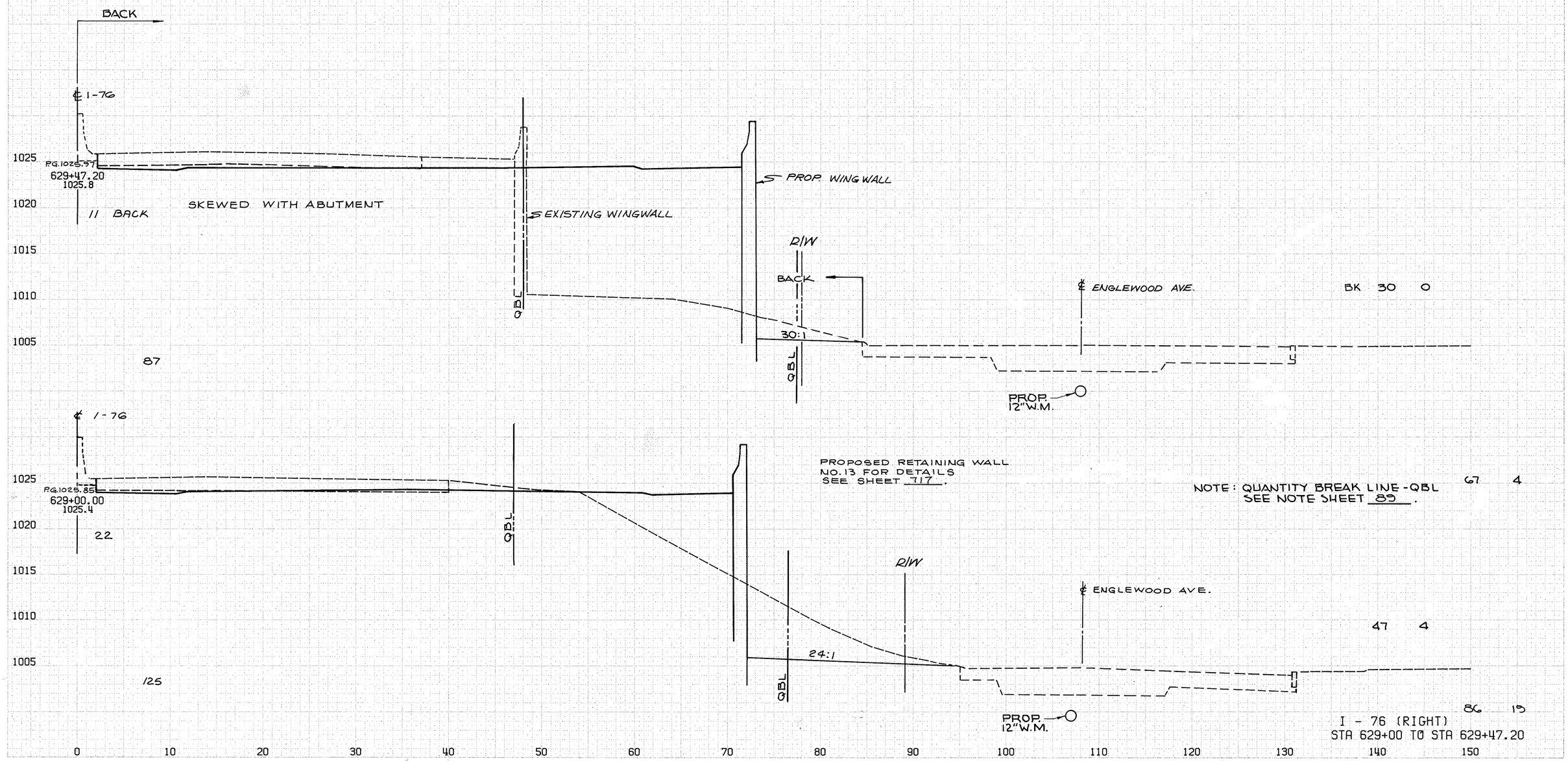

PLATE 9, CROSS SECTION
KRUEGER & DEERE CO.

CALCULATED BY BJB DATE 3/90
CHECKED BY DSB DATE 7/90

FHWA REG	STATE	PROJECT	364 1214
5	OHIO		

SUM - 76 - 11.57
IR - 76 - 2(44)19

SEEDING

	END WIDTH	SQ. YARDS	END CUT AREA	END FILL AREA	CU. CUT	YDS. FILL
℄ I-76						
P.G. 1024.02 631+00.00 1024.0						
	30	161				
					15	49
P.G. 1025.35 630+50.00 1024.8						
	28					
					32	103
	22	123				
					19	62
P.G. 1025.76 630+05.59 1125.6						
					38	87
BEGIN NEW PAVEMENT ENGLEWOOD AVE. ℄ STA. 37+46			AHD	27		44

PROPOSED RETAIN. WALL Nº 14, FOR DETAILS SEE SHEET 119.

R/W

℄ ENGLEWOOD AVE.

12:1

QBL

4"G.

ELEC.

10"W.M. TO BE ABD.

PROP. 12"W.M.

P.G. 1005.12
38+30.94
1005.6

24"STM.

10"SAN.

6"G.

PROPOSED RETAIN. WALL Nº 14, FOR DETAILS SEE SHEET 119.

℄ ENGLEWOOD AVE.

15:1

QBL

4"G.

ELEC.

10"W.M. TO BE ABD.

PROP. 12"W.M.

P.G. 1005.20
37+79.97
1005.6

24"STM.

10"SAN.

6"G.

AHEAD

℄ I-76

SKEWED WITH ABUTMENT

PROPOSED WINGWALL

EXISTING WINGWALL

QBL

NOTE: QUANTITY BREAK LINE - QBL SEE NOTE SHEET 89.

R/W

℄ ENGLEWOOD AVE.

13:1

QBL

ELEC.

10"W.M. TO BE ABD.

PROP. 12" W.M.

P.G. 1005.23
37+46
1005.2

24"STM.

EX. 10"SAN. INV. 993.9±

6"G.

SAWCUT JOINT MEET EXIST. WALK

1-76 (RIGHT) — ENGLEWOOD AVE.
STA 630+05.59 TO STA 631+00

0 10 20 30 40 50 60 70 80 90 100 110 120 130 140 150

SEE PLATE 3, CROSS SECTION KAUFFEL & PEERS CO.

ORIGINAL SURVEY / FINAL SURVEY — DATE, BY, DESCRIPTION, NO.

CALCULATED BY DSB DATE 3/90
CHECKED BY DSB DATE 7/90

FHWA REG	STATE	PROJECT	365 / 1214
5	OHIO		

SUM - 76 - 11.57
IR - 76 - 2(44)19

SEEDING

END WIDTH	SQ. YARDS
34	186
33	178
31	170

END CUT	AREA FILL	CU. CUT	YDS. FILL
12	49		
27	50		
17	48		
31	89		
16	48		
29	30		

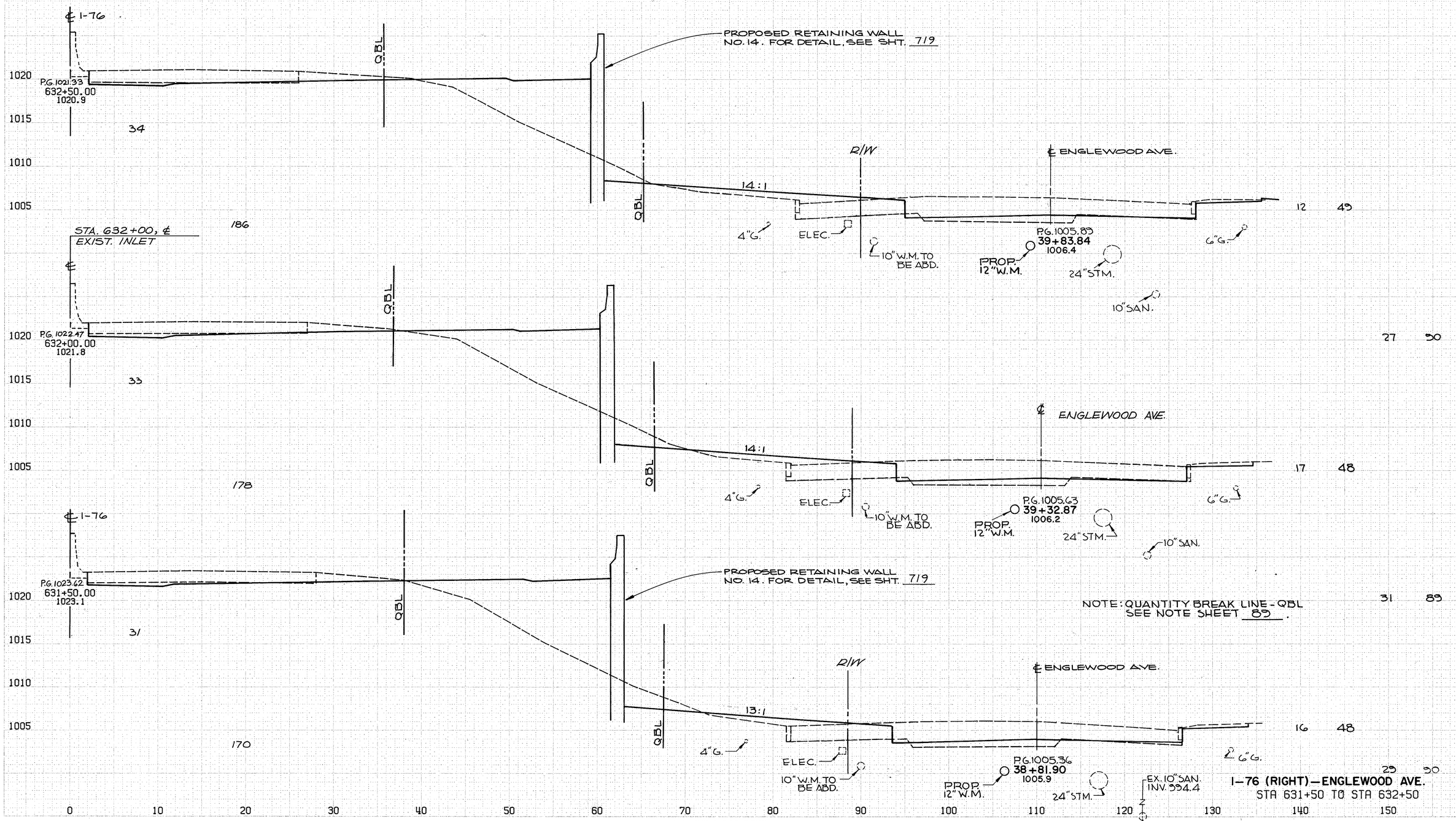

NOTE: QUANTITY BREAK LINE - QBL
SEE NOTE SHEET 89.

I-76 (RIGHT) — ENGLEWOOD AVE.
STA 631+50 TO STA 632+50

PLATE 3, CROSS SECTION
KRUTTER & OSSER CO.

CALCULATED BY BJB DATE 3/90
CHECKED BY DSB DATE 7/90

FHWA REG	STATE	PROJECT
5	OHIO	

366 / 12.14

SUM - 76 - 11.57
IR - 76 - 2(44)19

SEEDING
END WIDTH — SQ. YARDS

℄ I-76

TEMPORARY PAVEMENT

FEATHER AREA

	END CUT	AREA FILL	CU. CUT	YDS. FILL
	14	195		
	31	291		
AHD.	19	119		
BK	18	47		
	33	83		
	18	43		
	26	83		
	10	47		
	20	89		

1015
1010
1005

P.G. 1016.75
634+50.00
1016.3

24

136

2:1

R/W

24:1

℄ ENGLEWOOD AVE.

4"G.

ELEC.

10"W.M. TO BE ABD.

P.G. 1006.35
41+87.76
1007.4

PROP. 12"W.M.

24"STM

10"SAN.

AHEAD

BACK

P.G. 1017.89
634+00.00
1017.5

25

END PROJECT
SUM-76-11.57

QBL

147

BACK

12:1

℄ ENGLEWOOD AVE.

4"G.

ELEC.

10"W.M. TO BE ABD.

P.G. 1006.69
41+36.84
1007.2

PROP. 12"W.M.

24"STM.

6"G.

10"SAN.

P.G. 1019.04
633+50.00
1018.6

28

167

15:1

℄ ENGLEWOOD AVE.

4"G.

ELEC.

10"W.M TO BE ABD.

P.G. 1006.42
40+85.88
1006.9

PROP. 12"W.M.

24"STM

6"G.

℄ I-76

P.G. 1020.18
633+00.00
1019.7

32

PROPOSED RETAINING WALL NO. 14. FOR DETAIL, SEE SHT. 719

10"SAN

NOTE: QUANTITY BREAK LINE - QBL
SEE NOTE SHEET 89 .

183

R/W

℄ ENGLEWOOD AVE.

15:1

4"G.

ELEC.

10"W.M TO BE ABD.

P.G. 1006.16
40+34.88
1006.6

PROP. 12"W.M.

24"STM.

EX. 10"SAN. INV. 395.2

6"G.

0 10 20 30 40 50 60 70 80 90 100 110 120 130 140 150

I-76 (RIGHT) — ENGLEWOOD AVE.
STA 633+00 TO STA 634+50

PLATE 3, CROSS SECTION
KILPATRICK & EDDY CO

SEEDING
END WIDTH — SR. YARDS

CALCULATED BY B/B DATE 3/90
CHECKED BY DSB DATE 7/90

FHWA REG	STATE	PROJECT	367 / 1214
5	OHIO		

SUM - 76 - 11.57
IR - 76 - 2(44)19

END CUT AREA	FILL AREA	CU. CUT YDS.	FILL YDS.
14	60		
		23	123
11	73		
		24	161
15	101		
		27	223
14	140		
		24	269
12	150		
		24	319

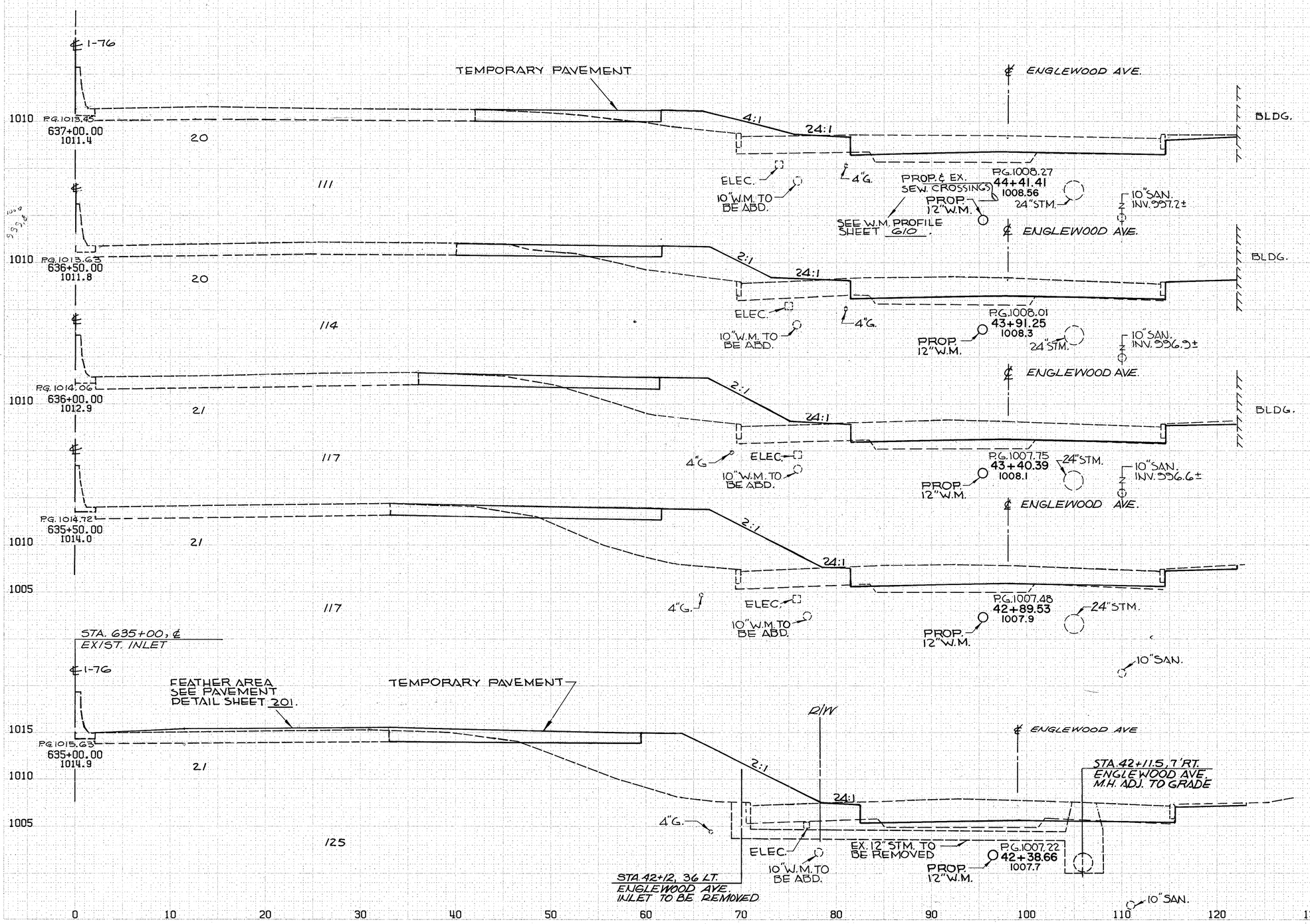

I - 76 (RIGHT)
STA 635+00 TO STA 637+00

PLATE 3, CROSS SECTION

CALCULATED BY BJB DATE 3/90
CHECKED BY DSB DATE 7/90

FHWA REG	STATE	PROJECT	368 12.14
5	OHIO		

SUM - 76 - 11.57
IR - 76 - 2(44)19

SEEDING
END WIDTH — SQ. YARDS

END CUT	AREA FILL	CU. CUT	YDS. FILL
BLDG	1	21	
		3	38
	2	20	
		3	56
	1	40	
		4	84
	3	51	
		7	89
	5	45	
		18	100
BLDG.	14	63	
		26	114

℄ I-76

1010 P.G. 1017.30
640+00.00
1013.1

20
120

EXIST. RAMP
20:1
4"G.
ELEC.
10"W.M. TO BE ABD.
℄ ENGLEWOOD AVE
P.G. 1009.71
47+41.40
1009.9
18"STM.
PROP. 12"W.M.
8"SAN. INV. 998.7±

1010 P.G. 1016.15
639+50.00
1012.0

23
136

16:1
4"G.
ELEC.
10"W.M. TO BE ABD.
℄ ENGLEWOOD AVE.
P.G. 1009.51
46+91.41
1009.8
18"STM.
PROP. 12"W.M.
8"SAN. INV. 998.5±
℄ ENGLEWOOD AVE.

1010 P.G. 1015.13
639+00.00
1011.5

26
136

19:1
ELEC.
10"W.M. TO BE ABD.
4"G.
P.G. 1009.30
46+41.41
1009.6
18"STM.
PROP. 12"W.M.
8"SAN. INV. 998.2±
℄ ENGLEWOOD AVE.

END TEMPORARY PAVEMENT STA. 638+58

STA. 46+10, 35' LT.
ENGLEWOOD AVE.
INLET TO BE REMOVED

STA. 46+00, 7' LT.
ENGLEWOOD AVE.
EXISTING M.H.

1010 P.G. 1014.34
638+50.00
1011.1

23
125

18:1
4"G.
ELEC.
10"W.M. TO BE ABD.
EX. 12"STM. TO BE REMOVED
P.G. 1009.05
45+91.41
1009.3
18"STM.
PROP. 12"W.M.
8"SAN. INV. 998.0±
℄ ENGLEWOOD AVE.

1010 P.G. 1013.80
638+00.00
1010.7

22
℄ I-76
122

17:1
ELEC.
10"W.M. TO BE ABD.
4"G.
P.G. 1008.79
45+41.41
1009.1
18"STM.
PROP. 12"W.M.
8"SAN. INV. 997.7±
℄ ENGLEWOOD AVE.

TEMPORARY PAVEMENT

1010 P.G. 1013.50
637+50.00
1011.0

22
117

14:1
ELEC.
10"W.M. TO BE ABD.
4"G.
P.G. 1008.53
44+91.41
1008.8
18"STM.
PROP. 12"W.M.
8"SAN. INV. 997.5±

0 10 20 30 40 50 60 70 80 90 100 110 120 130 140 150

I - 76 (RIGHT)
STA 637+50 TO STA 640+00

PLATE 3, CROSS SECTION
KRUMPE & GRAM CO.

CALCULATED BY BJB DATE 3/90
CHECKED BY DSB DATE 7/90

FHWA REG	STATE	PROJECT
5	OHIO	

369
12.14

SUM - 76 - 11.57
IR - 76 - 2(44)19

END CUT	AREA FILL	CU. CUT	YDS. FILL
0	0		
D=11.41'	1	5	
3	23		
D=88.59'	11	75	
5	41		

SEEDING
END WIDTH SQ. YARDS

1020
1015
1010

P.G. 1023.05
642+50.00
1018.9

℄ I-76

℄ ENGLEWOOD AVE

PROP. 12"W.M.

1020
1015

P.G. 1021.90
642+00.00
1017.7

3 +83.5 BACK

1010

℄ I-76

21

℄

PROP. 12"W.M.

1020
1015

P.G. 1020.75
641+50.00
1016.5

8

1010

℄ ENGLEWOOD AVE.

℄ I-76

58

END NEW PAVEMENT
RELOCATED ENGLEWOOD AVE.
STA. 48+80. FEATHER TO
STA. 49+30. SEE PAVEMENT
DETAIL SHEET 164 .

PROP. 12"W.M.

1015

P.G. 1019.60
641+00.00
1015.5

13

1010

℄ I-76

81

℄ ENGLEWOOD AVE.

18:1

4"G.

ELEC.

10"W.M.TO BE ABAND.

P.G. 1010.01
48+41.41
1010.2

PROP. 12"W.M.

8" SAN. INV. 999.4±

BLDG.

℄ ENGLEWOOD AVE.

1015

P.G. 1018.45
640+50.00
1014.3

16

1010

100

22:1

ELEC.

4"G.

10" W.M. TO BE ABAND.

P.G. 1009.27
47+91.41
1009.9

PROP. 12"W.M.

8"STM.

8"SAN. INV. 999.2±

BLDG.

I - 76 (RIGHT)
STA 640+50 TO STA 642+50

10 20 30 40 50 60 70 80 90 100 110 120 130 140 150

PLATE 5, CROSS SECTION
KRUPPEL & BROCK CO.

ORIGINAL SURVEY		BY	DATE
	SURVEYED		
	PLOTTED		
NOTE BOOK	TEMPLATE		
	AREAS		
NO.	AREAS CHECKED		

FINAL SURVEY		BY	DATE
	SURVEYED		
	PLOTTED		
NOTE BOOK	TEMPLATE		
	AREAS		
NO.	AREAS CHECKED		

SEEDING END WIDTH	SEEDING SQ. YARDS		END CUT	AREA FILL	CU. CUT	YDS. FILL
		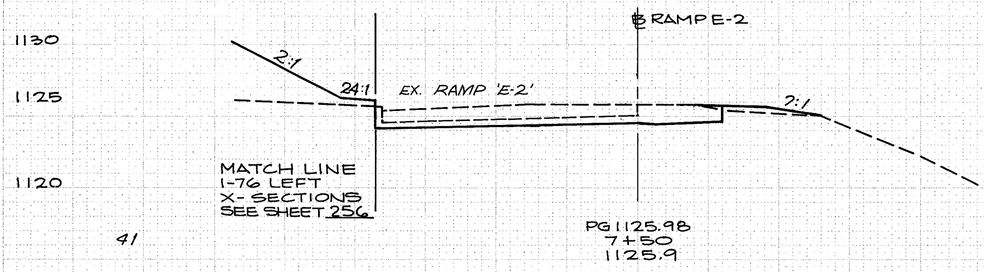				
41	239			16.0 3.0	30	6
		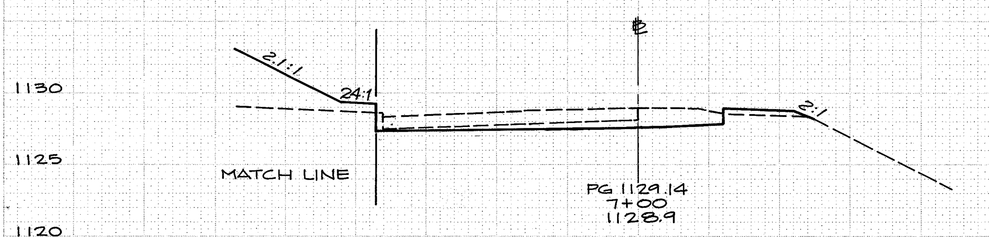				
45	258			16.0 3.0	75	100
		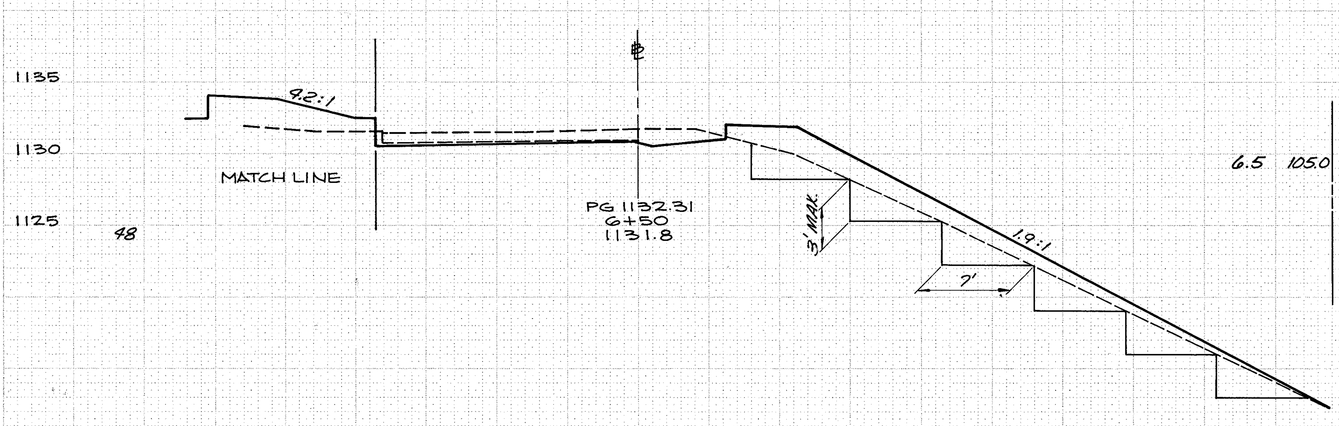				
48	236			6.5 105.0	149	270
		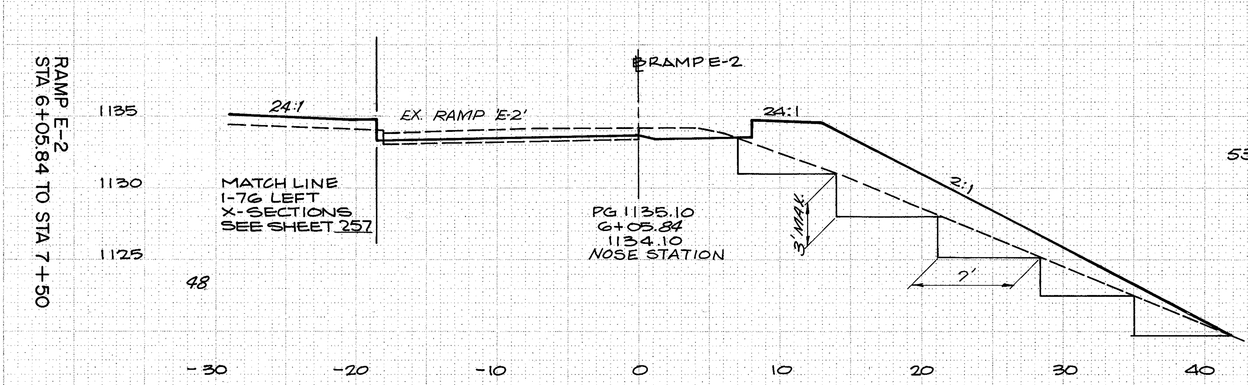				
48				53.0 109.0		

D=68.61'

EXIST. R/W

RAMP E-2
STA 6+05.84 TO STA 7+50

CALCULATED BY BSB DATE 3/90
CHECKED BY DSB DATE 7/90

SUM - 76 - 11.57
IR - 76 - 2(44)19

FHWA REG	5
STATE	OHIO
PROJECT	

370
12/4

PLATE 3, CROSS SECTION
FORM 408 REG.

ORIGINAL SURVEY	SURVEYED	BY	DATE
	PLOTTED		
NOTE BOOK	TEMPLATE		
NO.	AREAS		
	AREAS CHECKED		

FINAL SURVEY	SURVEYED	BY	DATE
	PLOTTED		
NOTE BOOK	TEMPLATE		
NO.	AREAS		
	AREAS CHECKED		

SEEDING

END WIDTH	SQ. YARDS		END CUT	AREA FILL	CU. CUT	YDS. FILL
1120						
1115						
1110						
32			20.0	0		
	186				42	0
1120						
1115			25.0	0		
1110						
35						
	197				49	2
1125						
1120			28.0	2.0		
1115						
36						
	208				46	3
1130			R/W			
1125			22.0	1.0	35	4
1120						
39						
	220					

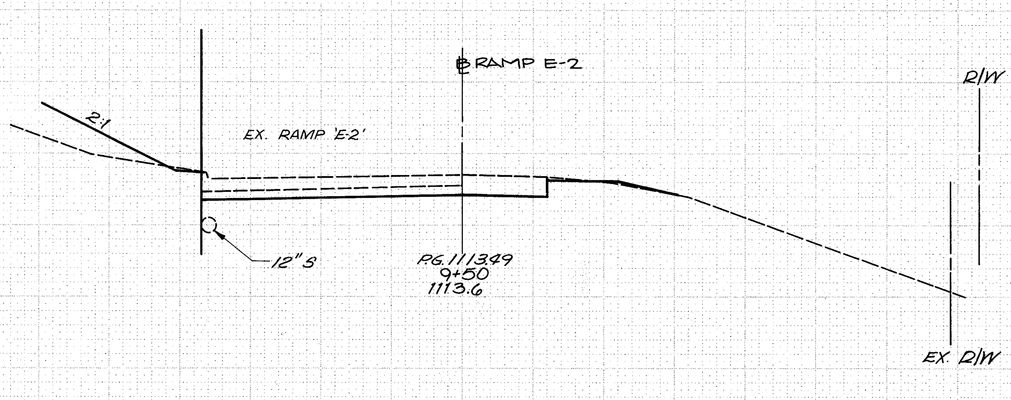

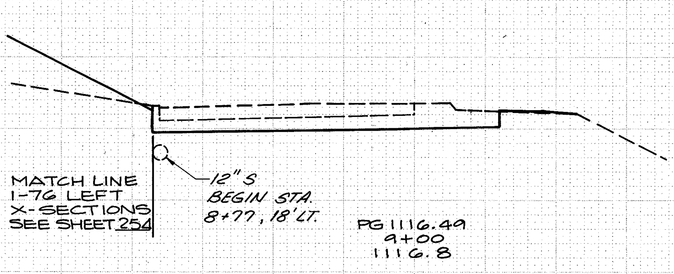

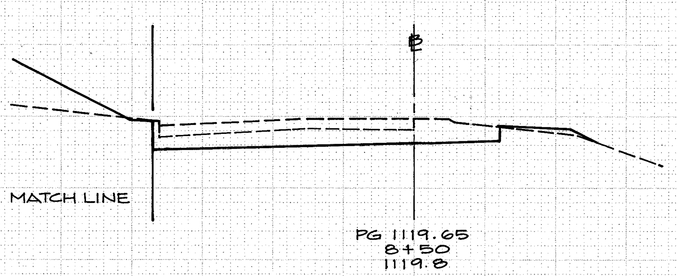

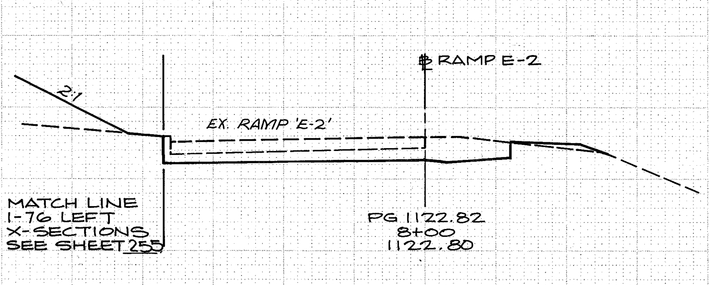

RAMP E-2
STA 8+00 TO STA 9+50

-30 -20 -10 0 10 20 30 40

CALCULATED BY RZB DATE 3/90
CHECKED BY DSBRATE 7/90

FHWA REG	STATE	PROJECT
5	OHIO	SUM - 76 - 11.57 IR - 76 - 2(441)19

371
12.14

ORIGINAL SURVEY		BY	DATE
	SURVEYED		
	PLOTTED		
NOTE BOOK	TEMPLATE		
	AREAS		
NO.	AREAS CHECKED		

FINAL SURVEY		BY	DATE
	SURVEYED		
	PLOTTED		
NOTE BOOK	TEMPLATE		
	AP'RS		
NO.	AREAS CHECKED		

PLATE 3, CROSS SECTION
SCALE: 1" = 50'-0"

RAMP E-2
STA. 10+00 TO STA. 11+50

SEEDING END WIDTH	SEEDING SQ. YARDS		END CUT	AREA FILL	CU. CUT	YDS. FILL
26	150	MATCHLINE I-76 LEFT X-SECTIONS SHEET 252.	17	2	30	2
28	147		15	0	35	2
25	147		23	2	40	4
28	167	MATCHLINE I-76 LEFT X-SECTIONS SHEET 254.	20	2	37	0

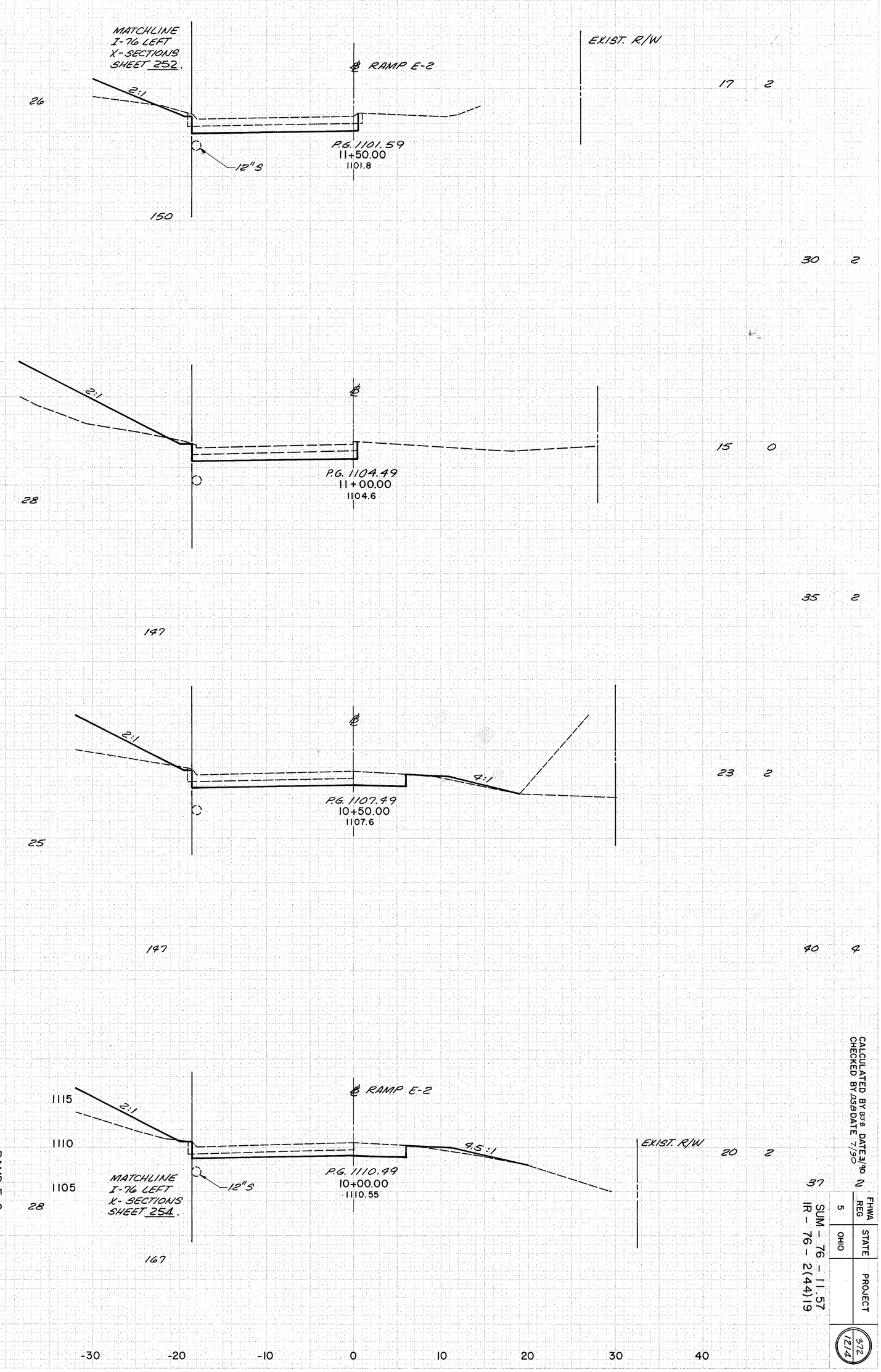

CALCULATED BY GSB DATE 3/90
CHECKED BY DSB DATE 7/90

FHWA REG	STATE	PROJECT
5	OHIO	SUM – 76 – 11.57 IR – 76 – 2(44)19

372
1214

ORIGINAL SURVEY	SURVEYED	BY	DATE
	PLOTTED		
NOTE BOOK	TEMPLATE		
	AREAS		
NO.	AREAS CHECKED		

FINAL SURVEY	SURVEYED	BY	DATE
	PHOTOS		
NOTE BOOK	TEMPLATE		
	AREAS		
NO.	AREAS CHECKED		

SEEDING END WIDTH	SEEDING SQ. YARDS	END CUT	AREA FILL	CU. YDS. CUT	CU. YDS. FILL

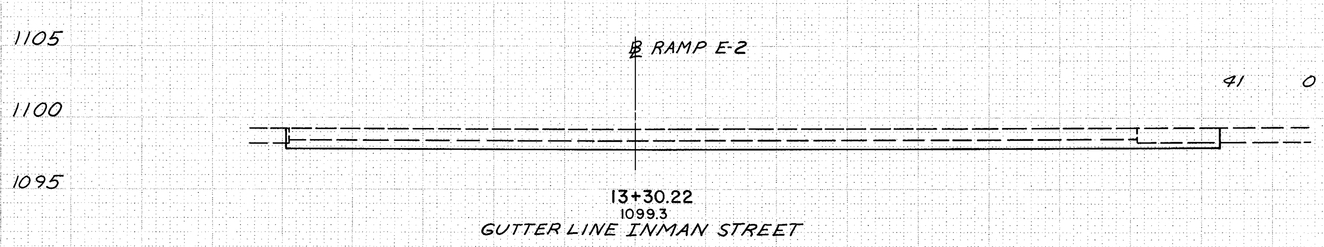

		41	0		
		D=30.22		27	4

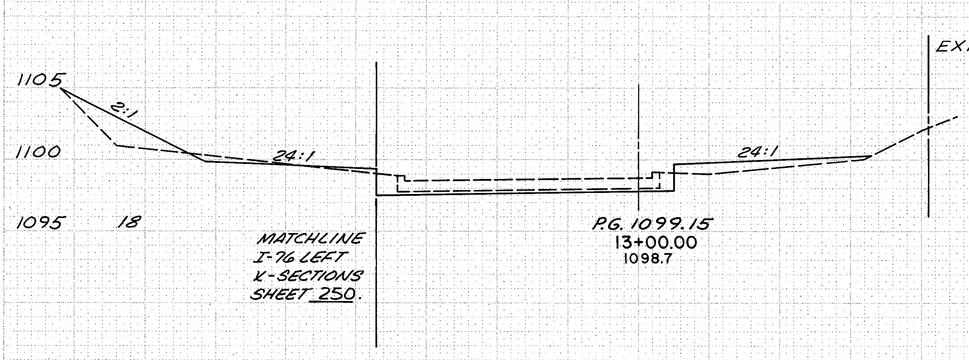

		8	8		
114				22	9

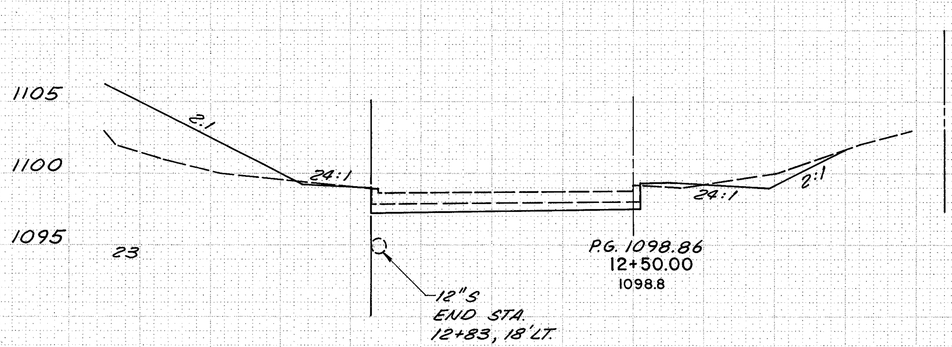

		16	2		
133				31	2

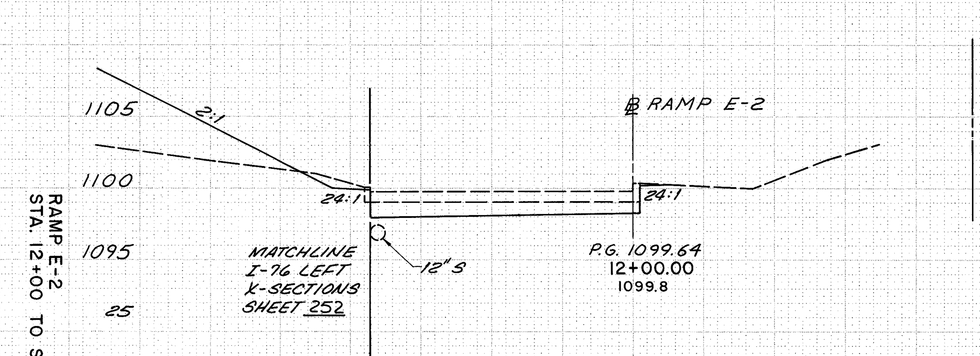

		17	0		
142				31	0

-30 -20 -10 0 10 20 30 40

RAMP E-2
STA. 12+00 TO STA. 13+30.22

CALCULATED BY BSB DATE 3/90
CHECKED BY DSS DATE 7/90

FHWA REG	STATE	PROJECT
5	OHIO	SUM – 76 – 11.57 IR – 76 – 2(44)19

373
1214

CALCULATED BY BJB DATE 3/90
CHECKED BY DSB DATE 7/90

FHWA REG	STATE	PROJECT	374 12.14
5	OHIO		

SUM - 76 - 11.57
IR - 76 - 2(44)19

SEEDING END WIDTH	SEEDING SQ. YARDS	END CUT AREA	END CUT CU. YDS.	END FILL AREA	END FILL CU. YDS.
		344	0		
		483	0		
		178	0		
		235	0		
		25	0		
		103	0		
		27	0		
47					
	256				
45					
	244				
43					
	130				
0					

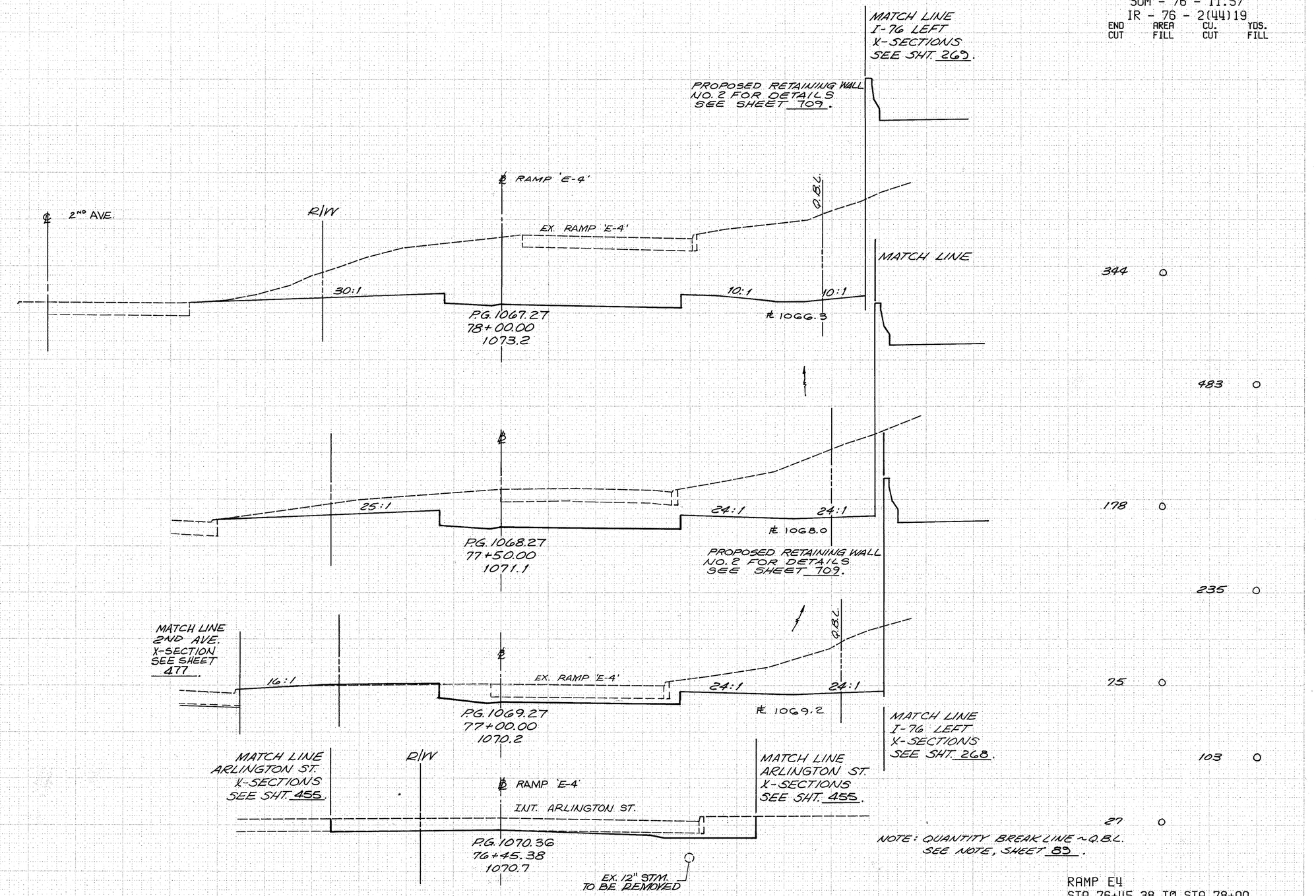

RAMP E4
STA 76+45.38 TO STA 78+00

PLATE 3, CROSS SECTION
KEMPER & EVANS CO.

CALCULATED BY BJB DATE 3/90
CHECKED BY DSB DATE 7/90

FHWA REG	STATE	PROJECT	375 / 1214
5	OHIO		

SUM - 76 - 11.57
IR - 76 - 2(44)19

SEEDING
END WIDTH — SQ. YARDS

END CUT — AREA FILL — CU. YDS. CUT — CU. YDS. FILL

MATCH LINE I-76 X-SECTIONS SEE SHEET 270.

℄ RAMP 'E-4'
EX. RAMP 'E-4'
Q.B.L.
R/W
E/P 2ND AVE.
19.4:1
3:1
3:1
℄ 1060.4
PROPOSED RETAINING WALL NO. 2 FOR DETAILS SEE SHEET 709.
P.G. 1062.35
79+50.00
1075.8

43 — 737 — 0

239 — 1289 — 0

℄ RAMP 'E-4'
EX. RAMP 'E-4'
Q.B.L.
R/W
E/P 2ND AVE.
15:1
4:1
4:1
℄ 1062.5
MATCH LINE I-76 X-SECTIONS SEE SHEET 265.
P.G. 1064.25
79+00.00
1077.2

43 — 655 — 0

242 — 1100 — 0

℄ RAMP 'E-4'
EX. RAMP 'E-4'
Q.B.L.
R/W
E/P 2ND AVE.
12.1:1
5:1
5:1
℄ 1064.5
PROPOSED RETAINING WALL NO. 2 FOR DETAILS SEE SHEET 709.
P.G. 1065.98
78+50.00
1075.7
NOTE: QUANTITY BREAK LINE ≈ Q.B.L. SEE NOTE, SHEET 85.

44 — 533 — 0

253 — 812 — 0

1080
1075
1070
1065
1060

-70 -60 -50 -40 -30 -20 -10 0 10 20 30 40 50 60 70

RAMP E4
STA 78+50 TO STA 79+50

PLATE 3, CROSS SECTION
KLOEL & BISER CO.

SEEDING
END SQ.
WIDTH YARDS

CALCULATED BY BTB DATE 3/90
CHECKED BY DSB DATE 7/90

FHWA REG	STATE	PROJECT	376 / 1214
5	OHIO		

SUM - 76 - 11.57
IR - 76 - 2(44)19

END CUT	AREA FILL	CU. CUT	YDS. FILL

FINAL SURVEY — SURVEYED, PLOTTED, TEMPLATE, AREAS CHECKED

ORIGINAL SURVEY — SURVEYED, PLOTTED, TEMPLATE, AREAS CHECKED

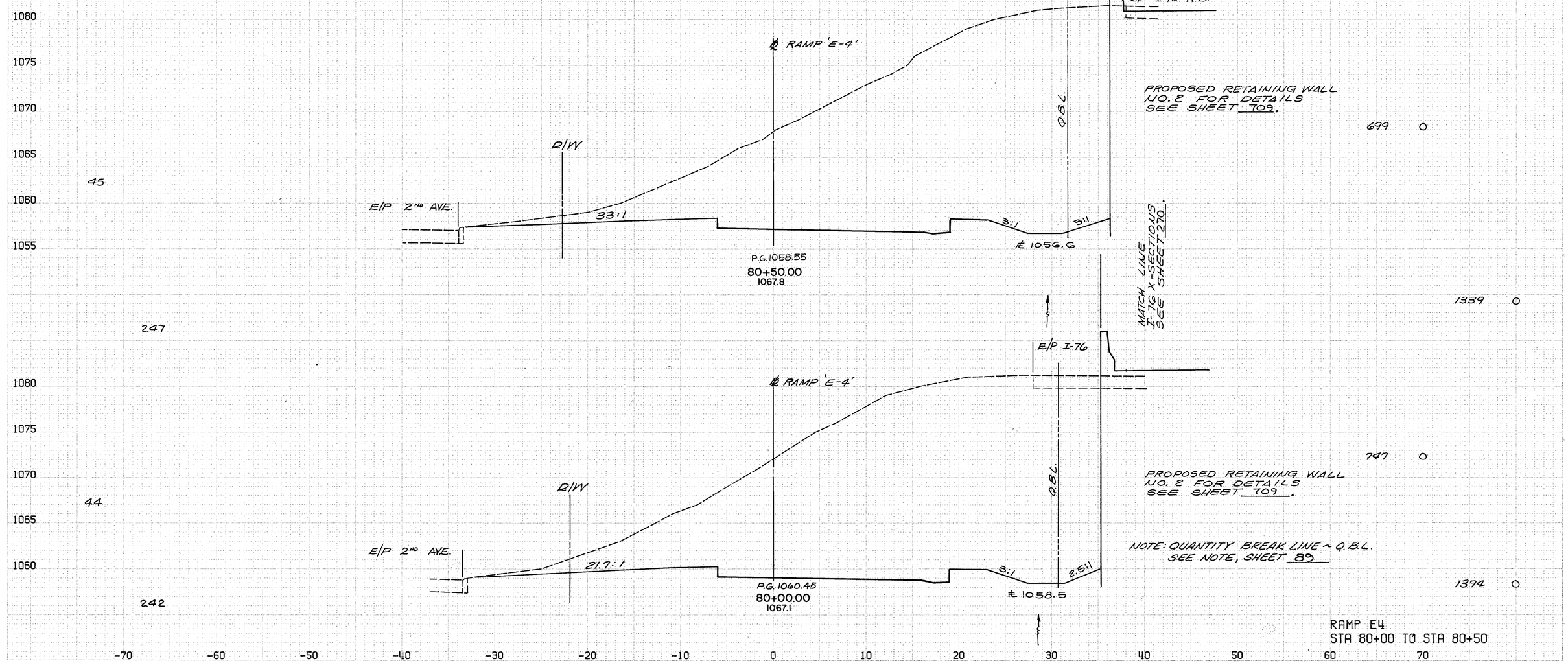

RAMP E4
STA 80+00 TO STA 80+50

PLATE 3, CROSS SECTION
KEUFFEL & ESSER CO.

FHWA REG	STATE	PROJECT	377 / 1214
5	OHIO		

CALCULATED BY BJB DATE 3/90
CHECKED BY DSB DATE 7/90

SUM - 76 - 11.57
IR - 76 - 2(44)19

END CUT	AREA FILL	CU. CUT	YDS. FILL
		24	40
		578	38
		600	0
		1163	0
		656	0
		1255	0

SEEDING

END WIDTH	SQ. YARDS
55	
	297
52	
	278
48	
	258

MATCH LINE RAMP E-7 X-SECTIONS SEE SHT. 393.

PROPOSED RETAINING WALL Nº 2 FOR DETAILS SEE SHEET 709.

MATCH LINE

PROPOSED RETAINING WALL Nº 2 FOR DETAILS SEE SHEET 709.

MATCH LINE RAMP E-7 X-SECTIONS SEE SHT. 393.

NOTE: QUANTITY BREAK LINE ~ Q.B.L. SEE NOTE, SHEET 89.

RAMP E4
STA 81+00 TO STA 82+00

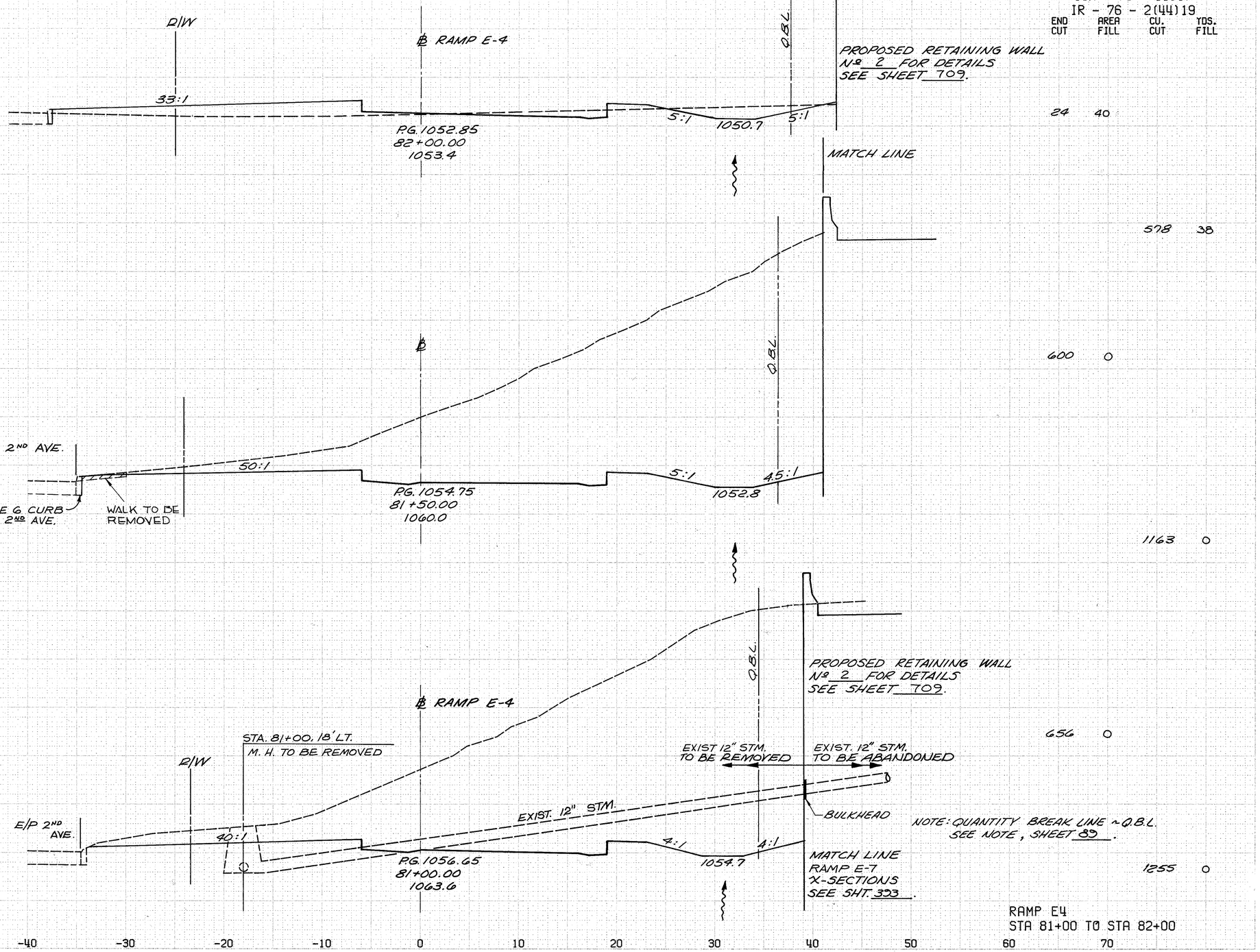

CALCULATED BY BJB DATE 3/90
CHECKED BY DSB DATE 7/90

FHWA REG	STATE	PROJECT	378 12/14
5	OHIO		

SUM - 76 - 11.57
IR - 76 - 2(44)19

SEEDING
END WIDTH | SQ. YARDS

END CUT	AREA FILL	CU. CUT	YDS. FILL
35	25.6		
170	54		
148	31.8		
271	59		
145	31.2		
208	56		
80	28.7		
96	64		

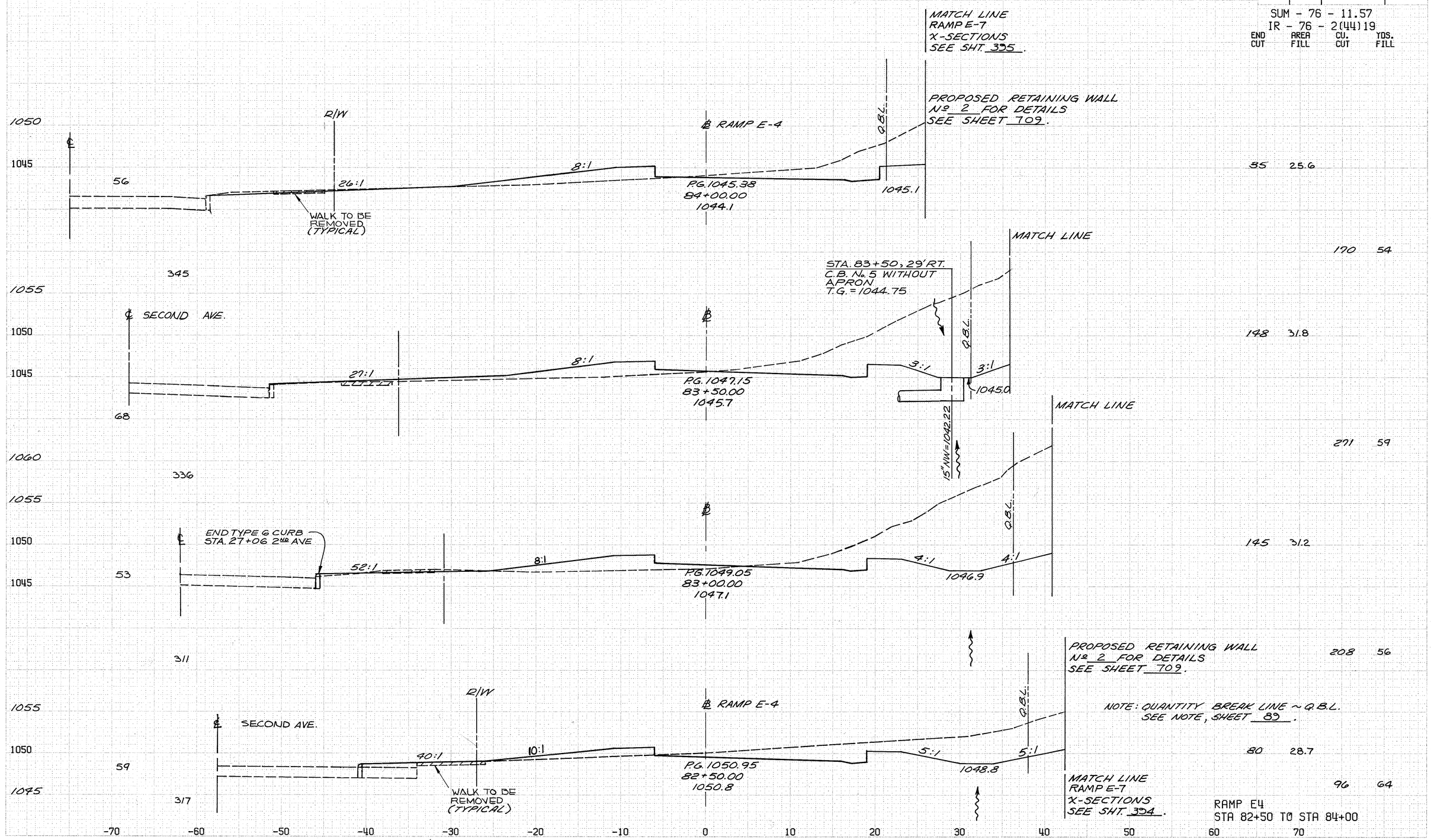

PLATE 5, CROSS SECTION
KRUMPE & PRIOR CO.

SEEDING
END SQ.
WIDTH YARDS

CALCULATED BY BTB DATE 3/90
CHECKED BY DSB DATE 7/90

FHWA REG	STATE	PROJECT
5	OHIO	

379
1214

SUM - 76 - 11.57
IR - 76 - 2(44)19

END CUT	AREA FILL	CU. CUT	YDS. FILL
0	58		
2	84		
2	32		
D=55° 24	39		
AHD. 22	6		
BK. 28	24		
53	42		

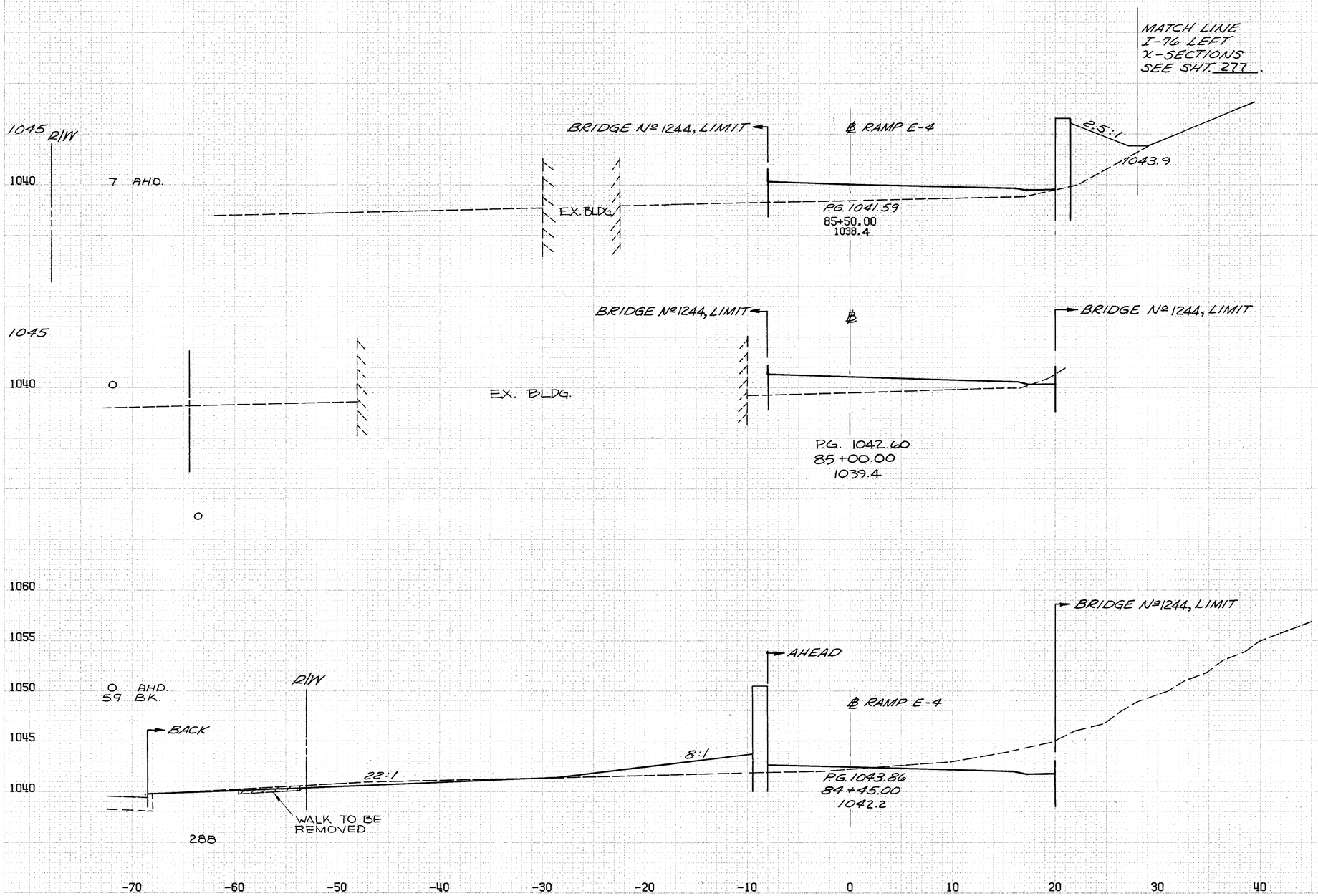

RAMP E4
STA 84+45 TO STA 85+50

PLATE 3, CROSS SECTION
KEUFFEL & ESSER CO.

CALCULATED BY BJB DATE 3/90
CHECKED BY DSB DATE 7/90

FHWA REG	STATE	PROJECT	380 / 1214
5	OHIO		

SUM - 76 - 11.57
IR - 76 - 2(44)19

END CUT	AREA FILL	CU. CUT	YDS. FILL

SEEDING

END WIDTH	SQ. YARDS

153 69

29

MATCH LINE RAMP 'E-7' X-SECTIONS SEE SHT. 358.

PROPOSED RETAINING WALL Nº 5, FOR DETAILS SEE SHEET 712.

℄ RAMP 'E-4'

Q.B.L.

4:1

1040.5

P.G. 1040.34
86+50.00
1039.3

2'-0"

4' ROUNDING

1039.4

205 89

114

MATCH LINE RAMP 'E-7' X-SECTIONS SEE SHT. 357.

* NOTE: SLOPE DETAIL DIMENSIONS ARE TYPICAL AS SHOWN STA. 86+50 TO STA. 93+92.

68 27

12

PROPOSED RETAINING WALL Nº 5, FOR DETAILS SEE SHEET 712.

Q.B.L.

℄ RAMP E-4

6:1 2:1 2:1

1041.6

1041.3

NOTE: QUANTITY BREAK LINE ~ Q.B.L. SEE NOTE, SHEET 85.

P.G. 1040.84
86+00.00
1038.8

MATCH LINE I-76 LEFT X-SECTIONS SEE SHT. 277.

63 79

53

1060
1055
1050
1045
1040
1035

-70 -60 -50 -40 -30 -20 -10 0 10 20 30 40 50 60 70

RAMP E4
STA 86+00 TO STA 86+50

PLATE 2, CROSS SECTION
KRUEGER & SPARK CO.

CALCULATED BY BJB DATE 3/90
CHECKED BY DSB DATE 7/90

FHWA REG	STATE	PROJECT	381 12.14
5	OHIO		

SUM - 76 - 11.57
IR - 76 - 2(44)19

SEEDING
END WIDTH — SQ. YARDS

MATCH LINE
RAMP 'E-7'
X-SECTION
SEE SHT. 399.

℄ RAMP 'E-4'

MATCH LINE
I-76 LEFT
X-SECTIONS
SEE SHT. 279.

END CUT	AREA FILL	CU. CUT	YDS. FILL
	409	24	

1055
1050
1045
1040

38

2.5:1

6:1

2:1

P.G. 1040.25
88+00.00
1046.0

1039.2

211

AHEAD

MATCH LINE

END RETAINING WALL
No. 5 STA. 87+60

BACK

Q.B.L.

38

2.9:1

2:1

P.G. 1040.11
87+50.00
1043.6

1039.1

MATCH LINE

D=90'		56	84
AHD	287	90	
BK	287	56	
D=60'		567	156

211

MATCH LINE
RAMP 'E-7'
X-SECTIONS
SEE SHT. 398.

1060
1055
1050
1045
1040
1035

PROPOSED RETAINING WALL
No. 5, FOR DETAILS SEE
SHEET 712.

Q.B.L.

38

3.5:1

℄ RAMP 'E-4'

DITCH LOW POINT
STA. 87+25

MATCH LINE
I-76 LEFT
X-SECTIONS
SEE SHT. 278.

2'-0" *

4' ROUNDING *

6:1

2:1

P.G. 1040.10
87+00.00
1042.3

1039.0

*NOTE: SLOPE DETAIL DIMENSIONS
ARE TYPICAL AS SHOWN
STA. 86+50 TO STA. 93+92.

	223	84	
	8	142	

NOTE: QUANTITY BREAK LINE ~ Q.B.L.
SEE NOTE SHEET 89.

186

RAMP E4
STA 87+00 TO STA 88+00

-70 -60 -50 -40 -30 -20 -10 0 10 20 30 40 50 60 70

PLATE 2, CROSS SECTION
KRUMEL & KRUEK CO.

CALCULATED BY BJB DATE 3/90
CHECKED BY DSB DATE 7/90

FHWA REG	STATE	PROJECT	382 / 1214
5	OHIO		

SUM - 76 - 11.57
IR - 76 - 2(44)19

SEEDING
END WIDTH — SQ. YARDS

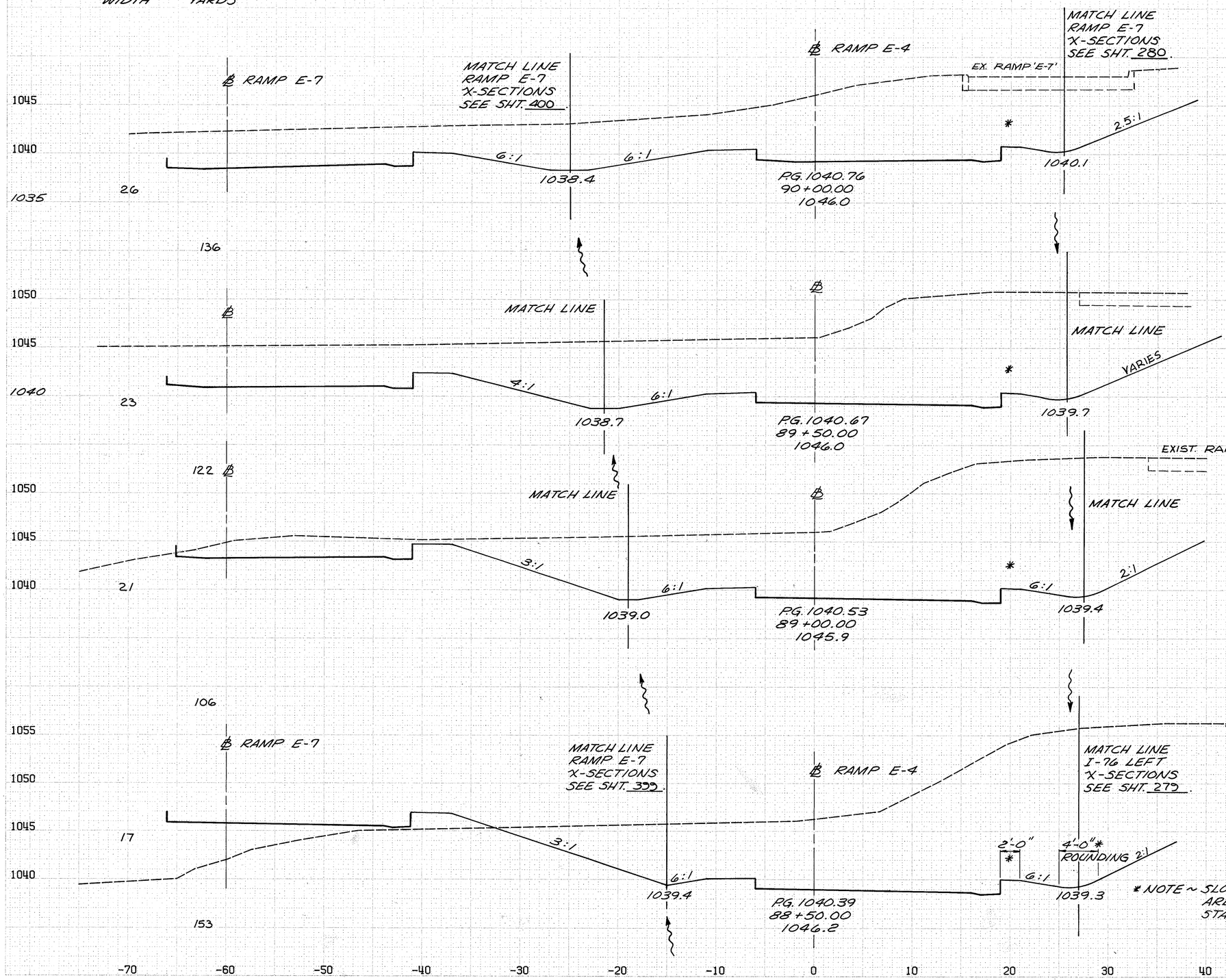

END CUT	AREA FILL	CU. CUT	YDS. FILL
311	0		
		657	0
399	0		
		777	0
490	0		
		794	0
418	0		
		766	22

* NOTE ~ SLOPE DETAIL DIMENSIONS ARE TYPICAL AS SHOWN STA. 86+50 TO STA. 93+92.

RAMP E4
STA 88+50 TO STA 90+00

K&E PLATE 5, CROSS SECTION

CALCULATED BY BJB DATE 3/90
CHECKED BY DSB DATE 7/90

FHWA REG	STATE	PROJECT	383 / 1214
5	OHIO		

SUM - 76 - 11.57
IR - 76 - 2(44)19

SEEDING

END WIDTH	SQ. YARDS
55	295
51	258
42	208
33	175
30	157

END CUT	AREA FILL	CU. CUT	YDS. FILL
60	123		
		197	196
153	89		
		270	98
139	17		
		299	16
184	0		
		332	0
175	0		
450	0		

MATCH LINE RAMP E-7 X-SECTIONS SEE SHT. 401.
MATCH LINE I-76 LEFT X-SECTIONS SEE SHT. 281.
MATCH LINE RAMP E-7 X-SECTIONS SEE SHT. 400.
MATCH LINE I-76 LEFT X-SECTIONS SEE SHT. 280.
MATCH LINE

℄ RAMP E-4
P.G. 1039.83
92+50.00
1037.6

P.G. 1040.20
92+00.00
1037.2

P.G. 1040.48
91+50.00
1040.0

P.G. 1040.67
91+00.00
1042.3

P.G. 1040.76
90+50.00
1043.9

EX. 3RD AVE.
EX. HART AVE.
EX. INT. RAMP 'E-7' & 3RD AVE.

12"S
12"S TO REMAIN SEE DRAINAGE SHEET 502.
4"G

1025.9
1028.2
1031.4
1033.8
1036.3
1039.4
1039.6
1039.9
1040.2
1040.3

* NOTE ~ SLOPE DETAIL DIMENSIONS ARE TYPICAL AS SHOWN STA. 86+50 TO STA. 93+92.

RAMP E4
STA 90+50 TO STA 92+50

PLATE 3, CROSS SECTION
KLOVEL & ASSN CO.

CALCULATED BY BJB DATE 3/90
CHECKED BY DSB DATE 7/90

FHWA REG	STATE	PROJECT	384 / 1214
5	OHIO	(	

SUM - 76 - 11.57
IR - 76 - 2(44)19

SEEDING
END WIDTH — SQ. YARDS

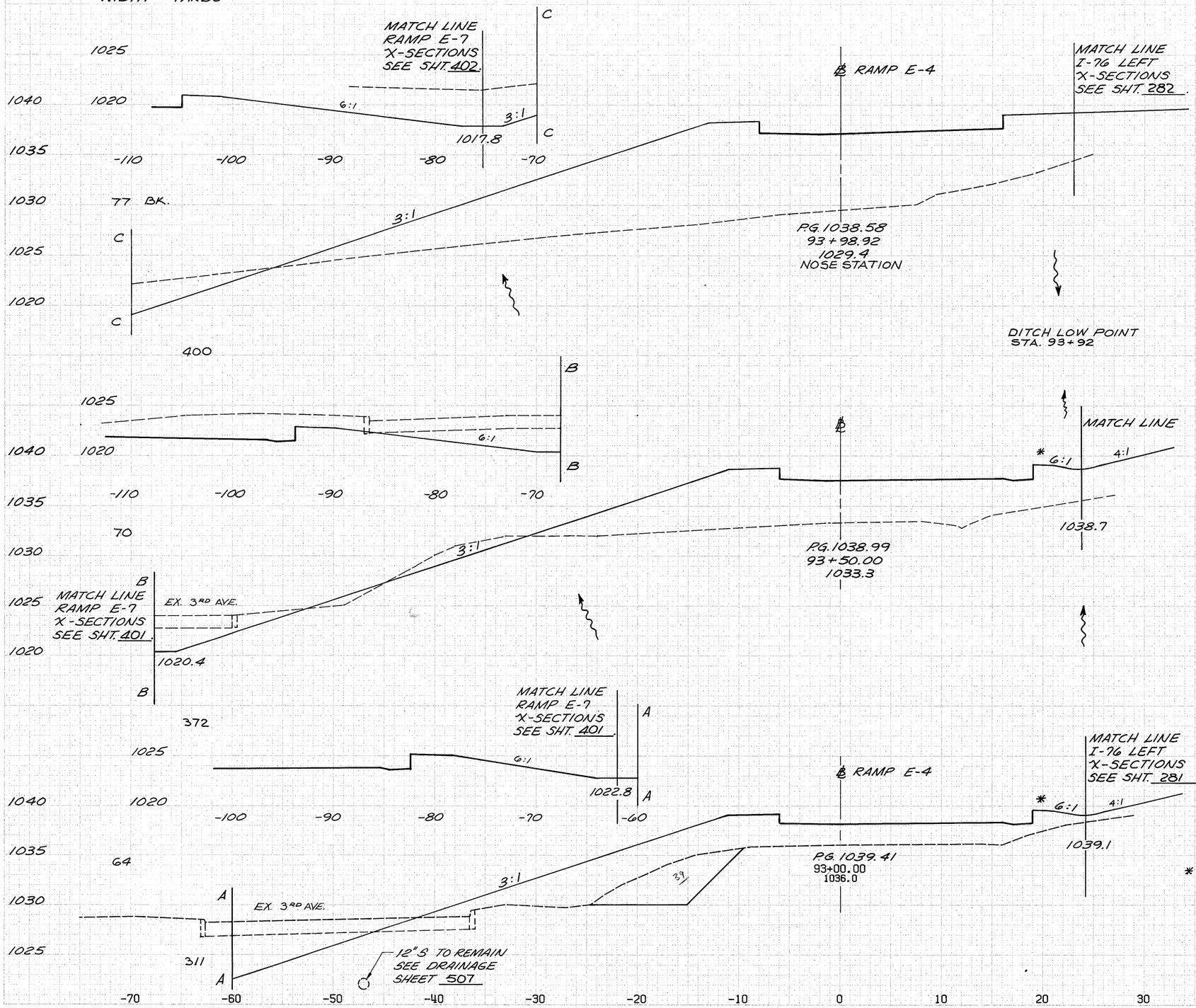

END CUT	AREA FILL	CU. CUT	YDS. FILL
41	418		
		D=48.92 65	573
30	215		
		65	353
40	166		
		93	268

* NOTE ~ SLOPE DETAIL DIMENSIONS ARE TYPICAL AS SHOWN STA. 86+50 TO STA. 93+92.

RAMP E4
STA 93+00 TO STA 93+98.92

PLATE 3, CROSS SECTION

CALCULATED BY BJB DATE 3/90
CHECKED BY DSB DATE 7/90

FHWA REG	STATE	PROJECT
5	OHIO	

385/1214

SUM - 76 - 11.57
IR - 76 - 2(44)19

END CUT	AREA FILL	CU. CUT	YDS. FILL

SEEDING
END WIDTH | SQ. YARDS

1075
1070
1065

79

PROPOSED RETAINING WALL NO. 3 FOR DETAILS SEE SHEET 711.

MATCH LINE RAMP E-6 X-SECTIONS SEE SHEET 405.

℄ RAMP E-6

PAVED PARKING LOT

P.G. 1063.55
78+50.00
1068.7

24:1
8:1
6:1
1061.0

PROP. 24" STM.

R/W

393 0

917

646 0

STA. 78+00, 33' LT.
RAMP E-6
M.H. NO. 1
T.G. = 1066.80

1070
1065

71

24:1

P.G. 1065.41
78+00.00
1070.1

8:1
6:1
1064.6

305 0

PROPOSED RETAINING WALL NO. 3 FOR DETAILS SEE SHEET 711.

24" W.E. = 1058.70

MATCH LINE I-76 X-SECTIONS SEE SHEET 404.

522 0

1070
1065

61

24:1

PAVED PARKING LOT

P.G. 1067.70
77+50.00
1071.2

24:1
8:1
6:1
1066.8

259 0

PROP. 24" STM.

MATCH LINE ARLINGTON ST. X-SECTIONS SEE SHEET 454.

161

MATCH LINE ARLINGTON ST. X-SECTIONS SEE SHEET 454.

260 0

R/W

1070 0

℄ RAMP E-6

37 0

PROP. 24" STM.

P.G. 1069.47
77+02.53
1069.8

GUTTER LINE ARLINGTON ST.

RAMP E6
STA 77+02.53 TO STA 78+50

-70 -60 -50 -40 -30 -20 -10 0 10 20 30 40 50 60 70

PLATE 3, CROSS SECTION
NEUPRA & REBER CO.

SEEDING
END SQ.
WIDTH YARDS

CALCULATED BY BJB DATE 3/90
CHECKED BY DSB DATE 7/90

FHWA REG	STATE	PROJECT	386 / 1214
5	OHIO		

SUM - 76 - 11.57
IR - 76 - 2(44)19

END CUT | AREA FILL | CU. YDS. CUT | CU. YDS. FILL

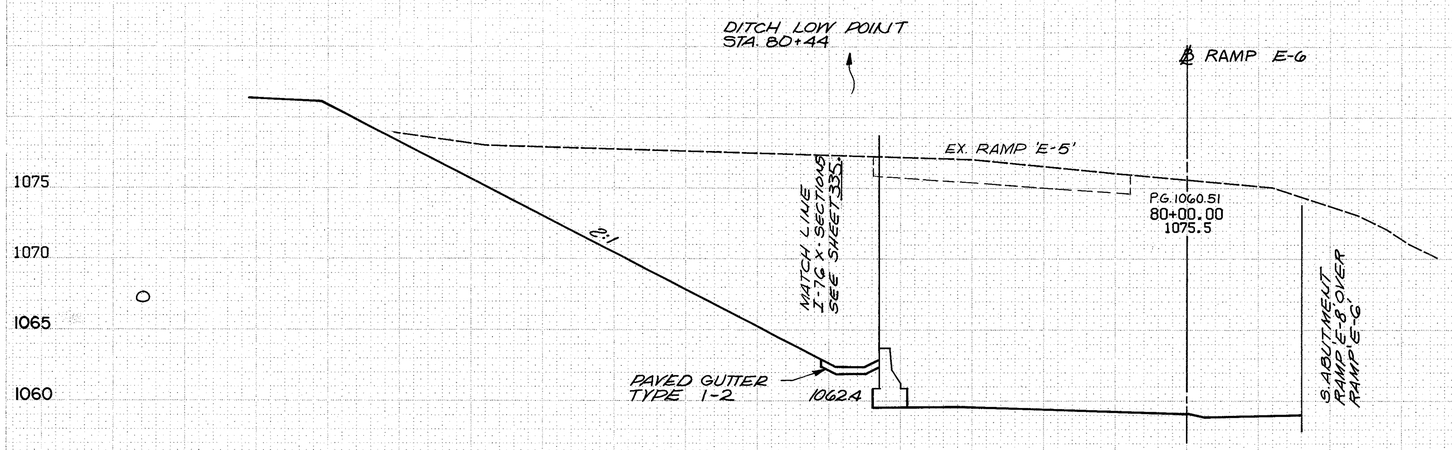

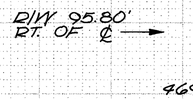

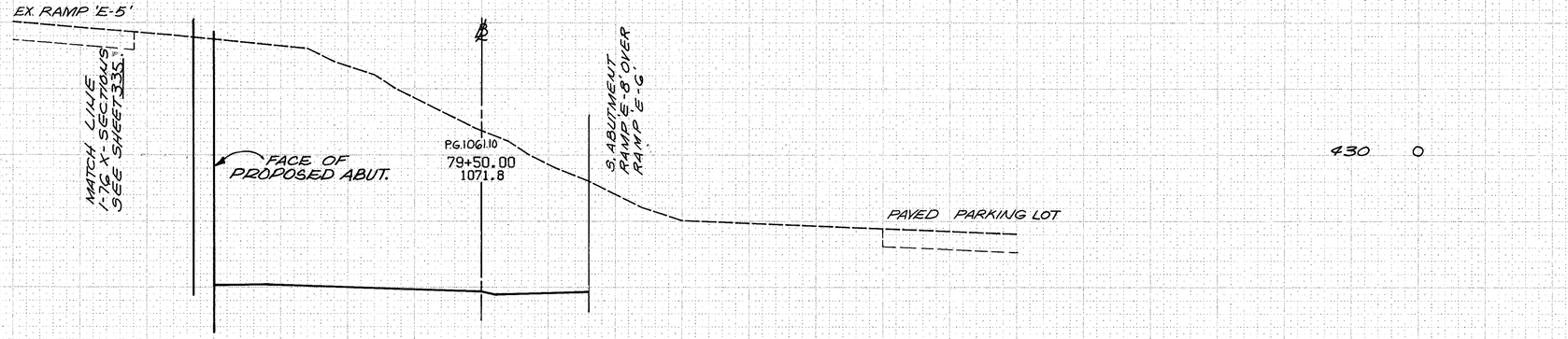

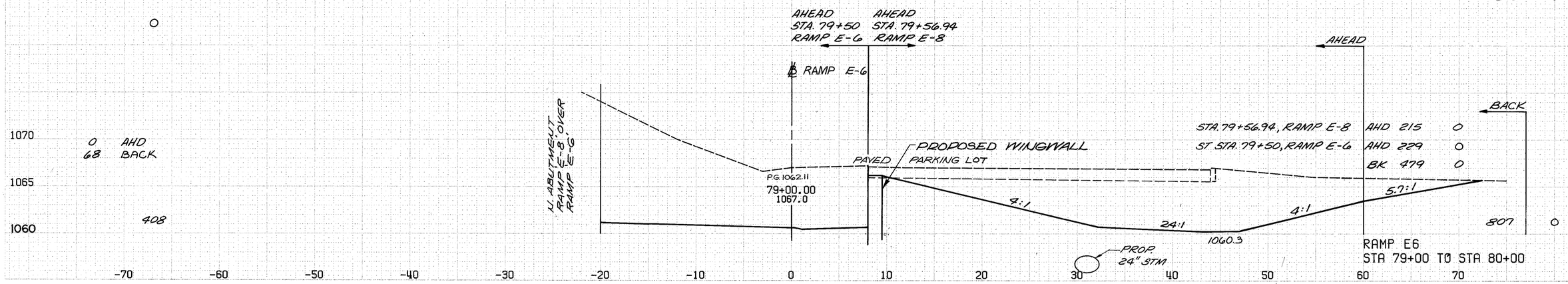

RAMP E6
STA 79+00 TO STA 80+00

SEEDING
END WIDTH | SQ. YARDS

CALCULATED BY BJB DATE 3/90
CHECKED BY DSB DATE 7/90

FHWA REG	STATE	PROJECT
5	OHIO	

387
12/14

SUM - 76 - 11.57
IR - 76 - 2(44)19

END CUT	AREA FILL	CU. CUT	YDS. FILL
17	401	401	0
58	816	816	0
4	480	480	0
11	879	879	0

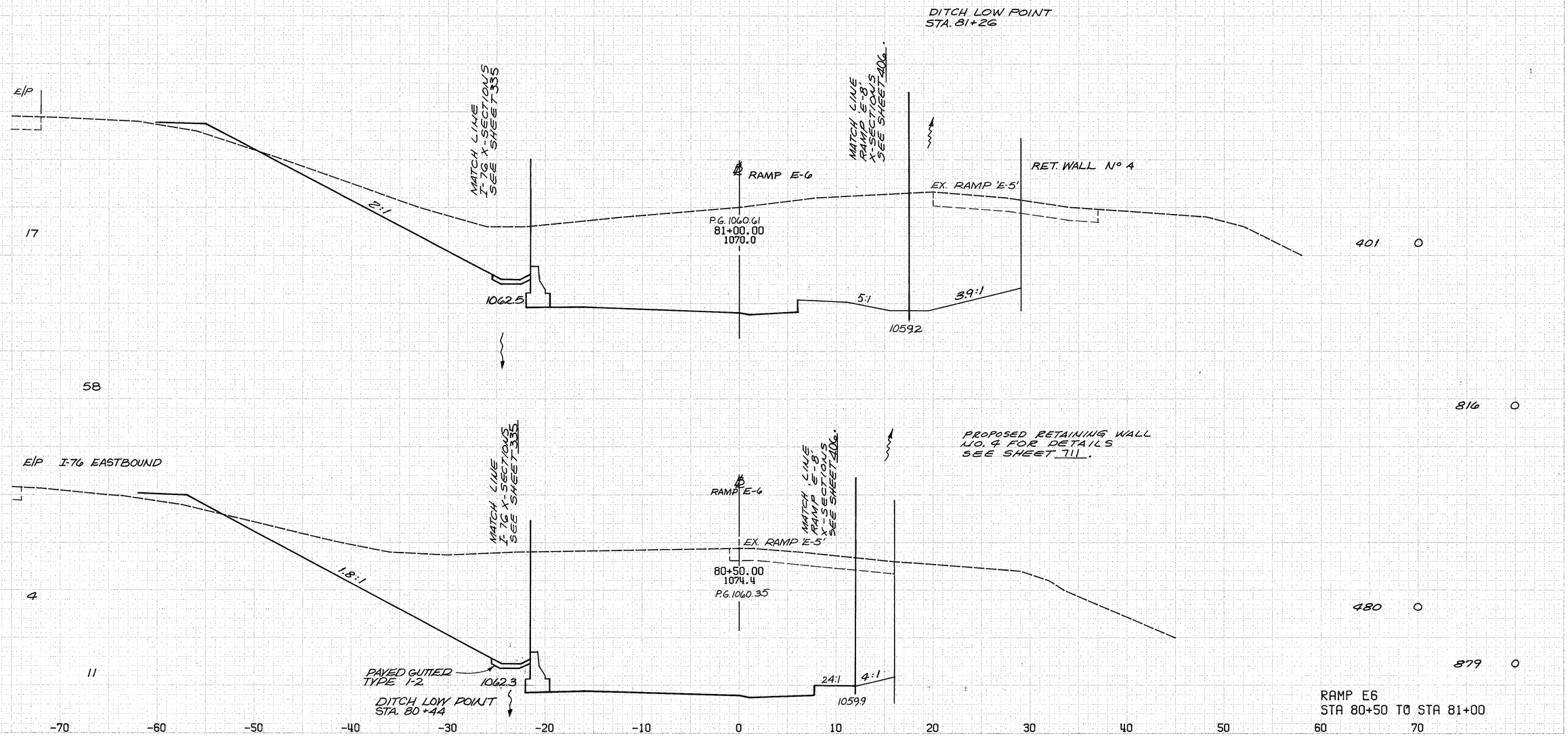

RAMP E6
STA 80+50 TO STA 81+00

PLATE 3, CROSS SECTION
SEIBERT & PEPER CO.

CALCULATED BY BJB DATE 3/90
CHECKED BY DSB DATE 7/90

FHWA REG	STATE	PROJECT
5	OHIO	

388
12.14

SUM - 76 - 11.57
IR - 76 - 2(44)19

SEEDING
END WIDTH — SQ. YARDS

1070
1065
1060
1055

18

2.4:1

MATCH LINE I-76 X-SECTIONS SEE SHEET 331

℄ RAMP E-6

8:1

MATCH LINE RAMP E-8 X-SECTIONS SEE SHEET 205

2.5:1

1063.1

1061.3

INT. CHITTENDEN ST.

P.G. 1063.03
82+50.00
1056.9

END CUT	AREA FILL	CU. CUT	YDS. FILL
0	222		

97

0 303

E/P

1075
1070
1065
1060

17

2.2:1

PAVED GUTTER TYPE 4

1062.3

℄

8.5:1

3.6:1

1060.4

RET. WALL N° 4

0 105

P.G. 1062.20
82+00.00
1058.1

89

141 98

LOW POINT
STA. 81+75

PROPOSED RETAINING WALL NO. 4 FOR DETAILS SEE SHEET 711.

E/P I-76 EASTBOUND

1075
1070
1065
1060

15

2.1:1

MATCH LINE I-76 X-SECTIONS SEE SHEET 330.

℄ RAMP E-6

MATCH LINE RAMP E-8 X-SECTIONS SEE SHEET 207.

152 0

EX. RAMP E-5'

PAVED GUTTER TYPE 1-2

89

1063.1

P.G. 1061.30
81+50.00
1063.1

7.6:1

3.7:1

1059.8

512 0

RAMP E6
STA 81+50 TO STA 82+50

-70 -60 -50 -40 -30 -20 -10 0 10 20 30 40 50 60 70

PLATE 9, CROSS SECTION
KAUFFEL & ESSER CO.

CALCULATED BY BJB DATE 3/90
CHECKED BY DSB DATE 7/90

F.A. REG	STATE	PROJECT
5	OHIO	

389
12/14

SUM - 76 - 11.57
IR - 76 - 2(44)19

END	AREA	CU.	YDS.
CUT	FILL	CUT	FILL

SEEDING
END WIDTH — SQ. YARDS

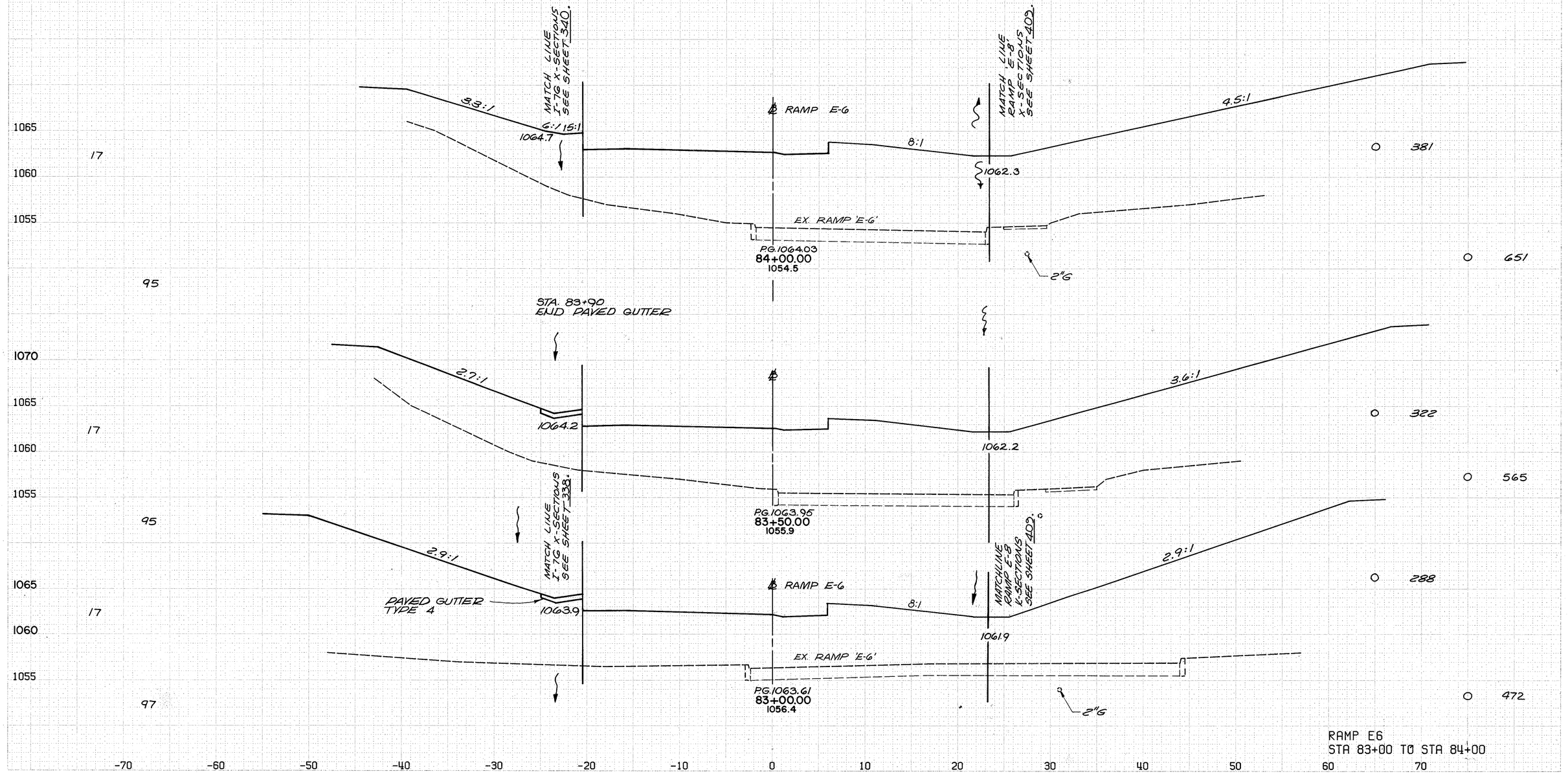

RAMP E6
STA 83+00 TO STA 84+00

CALCULATED BY BJB DATE 3/90
CHECKED BY DSB DATE 7/90

FHWA REG	STATE	PROJECT
5	OHIO	

390
1214

SUM - 76 - 11.57
IR - 76 - 2(44)19

END CUT	AREA FILL	CU. CUT	YDS. FILL
0	417		
0	790		
0	436		
0	788		
0	415		
0	737		

SEEDING
END WIDTH | SQ. YARDS
24 | 125
21 | 108
18 | 97

MATCH LINE I-76 X-SECTIONS SEE SHEET 341.

℄ RAMP E-6

8.3:1 | 10:1 | 6.5:1

1060.6

MATCH LINE RAMP E-6 X-SECTIONS SEE SHEET 411.

EX. RAMP 'E-6'

P.G. 1062.76
85+50
1053.4

4.7:1 | 9:1 | 6.9:1

1061.5

P.G. 1063.43
85+00
1053.1

2"G
END STA.
85+00

MATCH LINE I-76 X-SECTIONS SEE SHEET 340.

8:1 | 8.6:1 | 5.7:1

1062.1

MATCH LINE RAMP 'E-8' X-SECTIONS SEE SHEET 410.

EX. RAMP 'E-6'

P.G. 1063.86
84+50
1053.4

2"G

RAMP E6
STA 84+50 TO STA 85+50

1065
1060
1055

-70 -60 -50 -40 -30 -20 -10 0 10 20 30 40 50 60 70

PLATE 2, CROSS SECTION
FEUPPEL & BAER CO.

CALCULATED BY BJB DATE 3/90
CHECKED BY DSB DATE 7/90

FHWA REG	STATE	PROJECT
5	OHIO	

391
1214

SUM - 76 - 11.57
IR - 76 - 2(44)19

END CUT	AREA FILL	CU. CUT	YDS. FILL

SEEDING
END WIDTH — SQ. YARDS

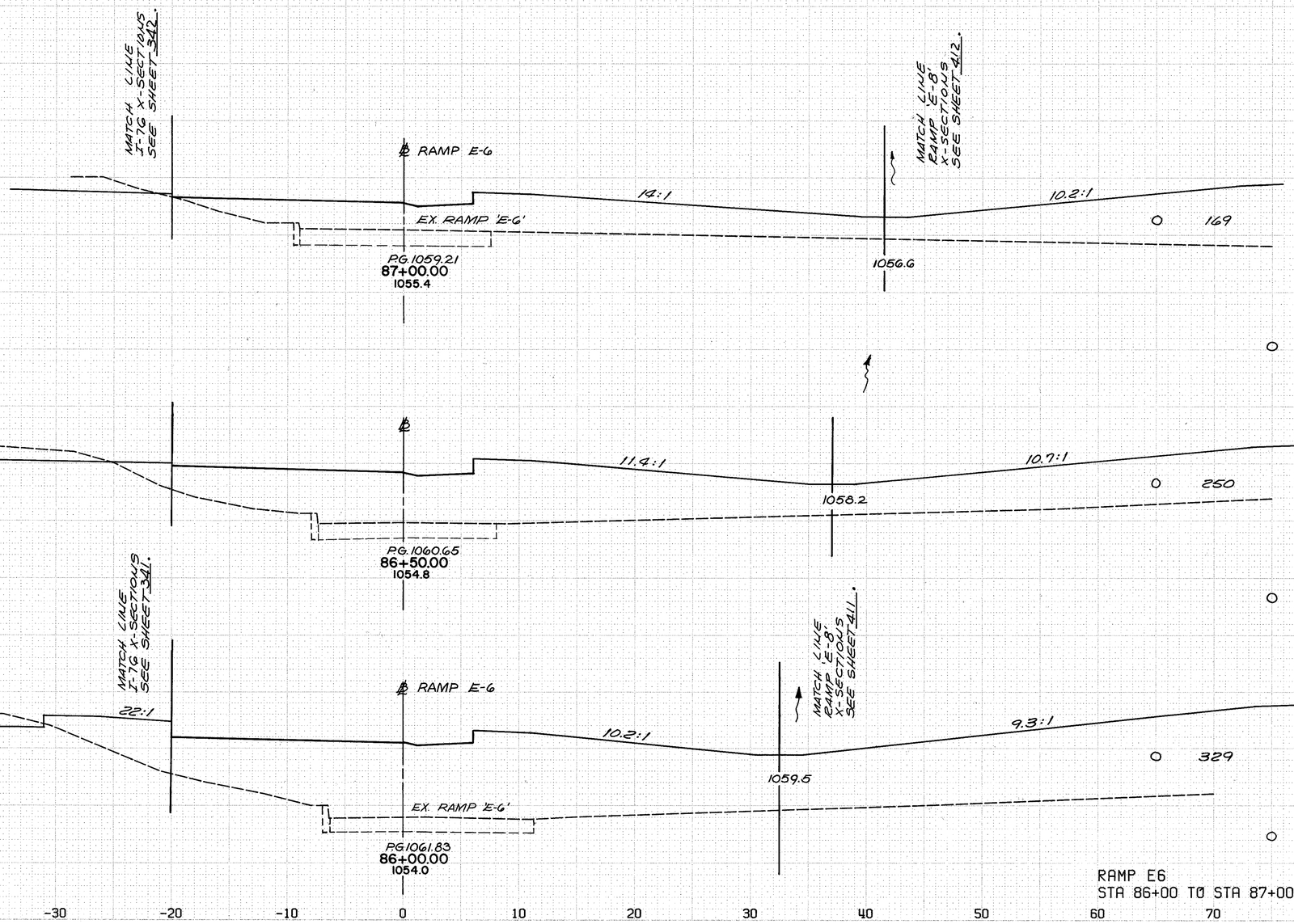

RAMP E6
STA 86+00 TO STA 87+00

PLATE 3, CROSS SECTION
KLEPPEL & ESSER CO.

CALCULATED BY BJB DATE 3/90
CHECKED BY DSB DATE 7/90

FHWA REG	STATE	PROJECT	392 / 1214
5	OHIO		

SUM - 76 - 11.57
IR - 76 - 2(44)19

END CUT	AREA FILL	CU. CUT	YDS. FILL
	SEEDING END WIDTH	SQ. YARDS	
1055			
	38		
1050			
	101		
1055			
	40		
1050			
	225		
1060			
	41		
1055			
	220		
1060			
	38		
1055			
	203		

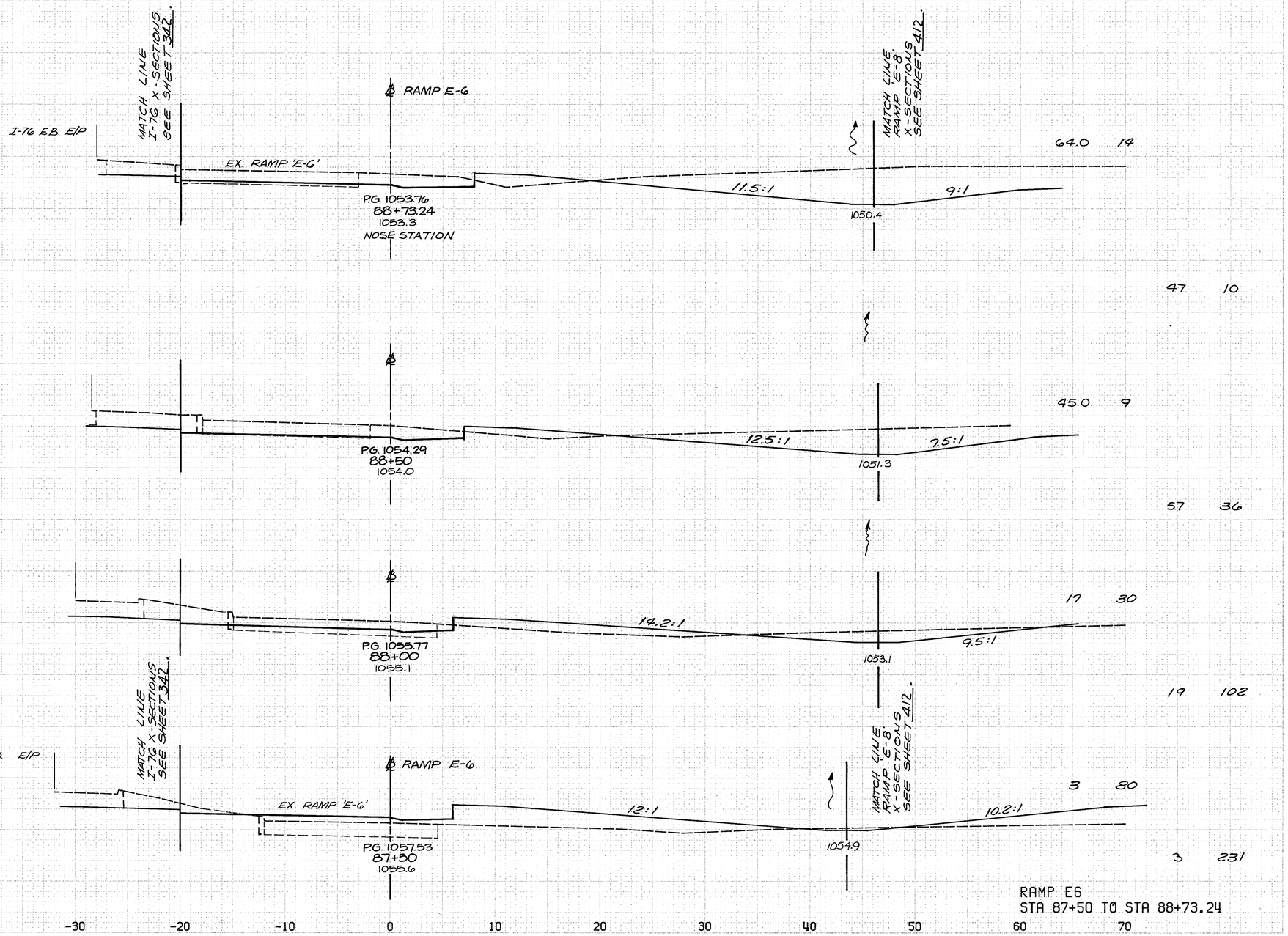

RAMP E6
STA 87+50 TO STA 88+73.24

PLATE 9. CROSS SECTION

CALCULATED BY BJB DATE 3/90
CHECKED BY DSB DATE 7/90

FHWA REG	STATE	PROJECT
5	OHIO	

393
12/14

SUM - 76 - 11.57
IR - 76 - 2(44)19

SEEDING
END WIDTH — SQ. YARDS

END AREA
CUT — FILL — CU. YDS. CUT — FILL

1080
1075
1070
1065
1060
1055

MATCH LINE RAMP E-4 X-SECTIONS SEE SHT. 377.
℄ RAMP E-7
Q.B.L.
MATCH LINE I-76 LEFT X-SECTIONS SEE SHT. 272.
PG. 1079.30
82+00.00
1079.3
℄ I-76
PROPOSED RETAINING WALL Nº 2 FOR DETAILS SEE SHEET 709.
5:1
44:1

MATCH LINE RAMP E-4 X-SECTIONS SEE SHT. 377.
℄ RAMP E-7
Q.B.L.
MATCH LINE I-76 LEFT X-SECTIONS SEE SHT. 272.
PG. 1080.66
81+50.00
1080.2
℄
PROPOSED RETAINING WALL Nº 2 FOR DETAILS SEE SHEET 709.
4:1
4:1

MATCH LINE RAMP E-4 X-SECTIONS SEE SHT. 376.
℄ RAMP E-7
Q.B.L.
MATCH LINE I-76 LEFT X-SECTIONS SEE SHT. 271.
EX. RAMP E-4'
PG. 1082.00
80+90.31
1081.5
NOSE STATION
℄ I-76
NOTE: QUANTITY BREAK LINE ~ Q.B.L. SEE NOTE, SHEET 89.
PROPOSED RETAINING WALL Nº 2 FOR DETAILS SEE SHEET 709.
3:1
2.9:1

-70 -60 -50 -40 -30 -20 -10 0 10 20 30 40 50 60 70

RAMP E7
STA 80+90.31 TO STA 82+00

PLATE 3. CROSS SECTION

CALCULATED BY BJB DATE 3/90
CHECKED BY DSB DATE 7/90

FHWA REG	STATE	PROJECT	394 / 1214
5	OHIO		

SUM - 76 - 11.57
IR - 76 - 2(44)19

END CUT	AREA FILL	CU. CUT	YDS. FILL

SEEDING
END WIDTH — SQ. YARDS

4 + 35 AHD.
0 + 35 BK.

MATCH LINE RAMP E-4 X-SECTIONS SEE SHT. 378.

℄ RAMP E-7

MATCH LINE I-76 LEFT X-SECTIONS SEE SHT. 274.

℄ I-76

Q.B.L.

EXISTING WINGWALL

PROPOSED RETAINING WALL Nº 2 FOR DETAILS SEE SHEET 709.

P.G. 1075.97
83+00.00
1060.5

0 32

0 107

0 83

MATCH LINE RAMP E-4 X-SECTIONS SEE SHT. 377.

MATCH LINE I-76 LEFT X-SECTIONS SEE SHT. 273.

℄ RAMP E-7

EXISTING CHITTENDEN ST. STRUCTURE TO BE REMOVED. FOR DETAILS, SEE SHEET 237.

℄ I-76

PROPOSED RETAINING WALL Nº 2 FOR DETAILS SEE SHEET 709.

Q.B.L.

0 77

NOTE: QUANTITY BREAK LINE ~ Q.B.L. SEE NOTE, SHEET 89.

P.G. 1077.74
82+50.00
1052.7

4.3:1 4.2:1 4.4:1 5:1

1075
1070
1065
1060
1055
1050

-70 -60 -50 -40 -30 -20 -10 0 10 20 30 40 50 60 70

RAMP E7
STA 82+50 TO STA 83+00

PLATE 3, CROSS SECTION
KRIEBEL & ASSOCIATES CO.

CALCULATED BY BJB DATE 3/90
CHECKED BY DSB DATE 7/90

FHWA REG	STATE	PROJECT
5	OHIO	

395
1214

SUM - 76 - 11.57
IR - 76 - 2(44)19

SEEDING
END WIDTH — SQ. YARDS

END CUT — AREA FILL — CU. YDS. CUT — CU. YDS. FILL

MATCH LINE RAMP 'E-4' X-SECTIONS SEE SHT. 378.

℄ RAMP E-7

MATCH LINE I-76 LEFT X-SECTIONS SEE SHT. 275.

EX. I-76 W.B.

Q.B.L.

4:1

1070.7

0 28

2 28

PG. 1071.81
84+00.00
1060.0

PROPOSED RETAINING WALL Nº 2 FOR DETAILS SEE SHEET 709.

2 2

MATCH LINE RAMP E-4 X-SECTIONS SEE SHT. 378.

℄ RAMP E-7

MATCH LINE I-76 LEFT X-SECTIONS SEE SHT. 274.

EX. I-76 W.B.

Q.B.L.

6:1

1074.0

2 32

PG. 1073.99
83+50.00
1065.6

PROPOSED RETAINING WALL Nº 2 FOR DETAILS SEE SHEET 709.

NOTE: QUANTITY BREAK LINE ~ Q.B.L. SEE NOTE, SHEET 89.

9

42

6

8

1070
1065
1060
1055
1050
1045

-70 -60 -50 -40 -30 -20 -10 0 10 20 30 40 50 60 70

RAMP E7
STA 83+50 TO STA 84+00

PLATE 3, CROSS SECTION
MORRIS & FISHER CO.

CALCULATED BY BJB DATE 3/90
CHECKED BY DSB DATE 7/90

FHWA REG	STATE	PROJECT	396 12.14
5	OHIO		

SUM - 76 - 11.57
IR - 76 - 2(44)19

END CUT	AREA FILL	CU. CUT	YDS. FILL

SEEDING.

END WIDTH	SQ. YARDS

AHEAD

MATCH LINE RAMP 'E-4' X-SECTIONS SEE SHT. 379.

2:1

1045
1065
1040
1060
1055
1050
1045
1040

A
A
A

-90 -80

G4 AHEAD 2:1

℄ RAMP 'E-7'

Q.B.L.

AHEAD

MATCH LINE RAMP 'E-4' X-SECTIONS SEE SHT. 380.

℄ PROPOSED WINGWALL

AHD 0 2127

PG. 1063.38
85+72.60
SKEWED W/ BRIDGE ABUTMENT

NOTE: QUANTITY BREAK LINE ~ Q.B.L.
SEE NOTE, SHEET 89.

A
1060
1055
1050
1045
1040
2:1
A

MATCH LINE I-76 LEFT X-SECTIONS SEE SHT. 277.

80 90 100 110

MATCH LINE RAMP E-4 X-SECTIONS SEE SHT 378.

BACK

1070
1065
1060
1055
1050
1045

18 BACK

℄ RAMP 'E-7'

℄ PROPOSED WINGWALL

Q.B.L.

2:1

A

℄ PROPOSED WINGWALL

BK 0 2008

D=120' 0 4524

A

PG. 1068.35
84+71.60
1051.8
SKEWED W/ BRIDGE ABUTMENT

233

RAMP E7
STA. 84+71.60 TO STA. 85+72.60

-70 -60 -50 -40 -30 -20 -10 0 10 20 30 40 50 60 70

PLATE 2, CROSS SECTION
KILPATRICK & ASSOC. CO.

CALCULATED BY BJB DATE 3/90
CHECKED BY DSB DATE 7/90

FHWA REG	STATE	PROJECT
5	OHIO	

397
1214

SUM - 76 - 11.57
IR - 76 - 2(44)19

END	AREA	CU.	YDS.
CUT	FILL	CUT	FILL

SEEDING

END WIDTH	SQ. YARDS

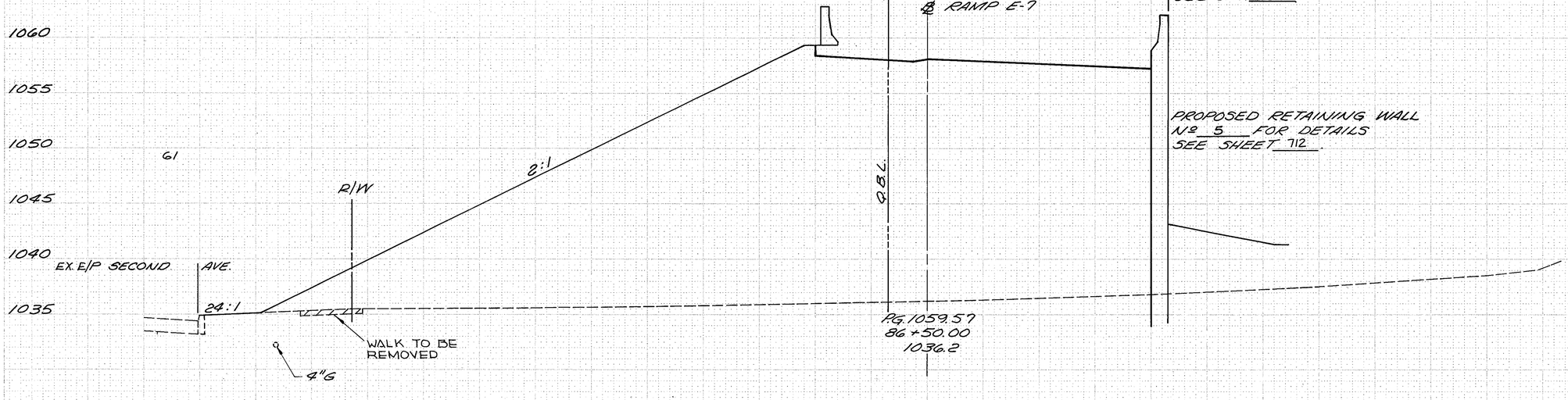

0 736

0 693

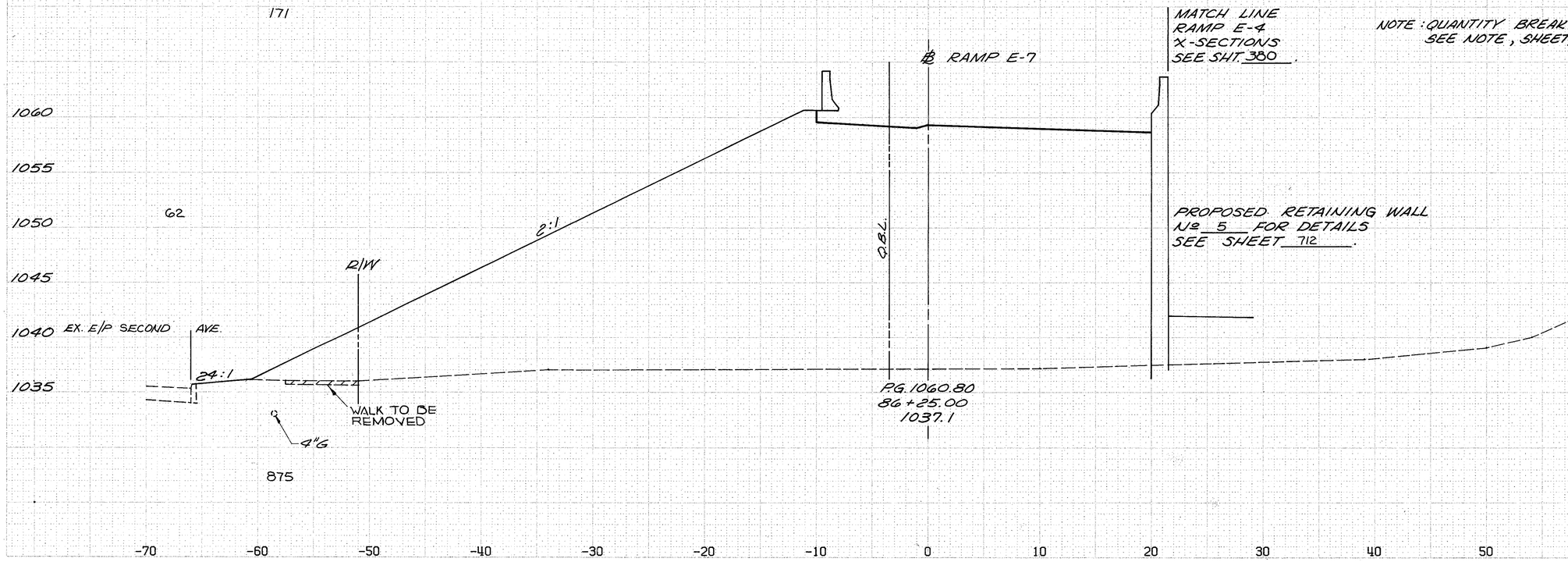

0 761

D=74° 0 3958

RAMP E7
STA. 86+25 TO STA. 86+50

FLATE 3. CROSS SECTION
CRAIG & DEER CO.

CALCULATED BY BJB DATE 3/90
CHECKED BY DSB DATE 7/90

FHWA REG	STATE	PROJECT
5	OHIO	

398
1214

SUM - 76 - 11.57
IR - 76 - 2(44)19

END CUT	AREA FILL	CU. CUT	YDS. FILL
AHD 4	970		
BK 4	591		
2	691		
2	1266		
0	676		
0	1308		

SEEDING
END WIDTH — SQ. YARDS

503

408

65

82

350

D=60° 7 1424

NOTE: QUANTITY BREAK LINE ~ Q.B.L.
SEE NOTE, SHEET 89.

RAMP E7
STA 87+00 TO STA 88+00

PLATE 3. CROSS SECTION
KRUPPEL & ASSOC. CO.

CALCULATED BY BJB DATE 3/90
CHECKED BY DJB DATE 7/90

FHWA REG	STATE	PROJECT	399 / 12.14
5	OHIO		

SUM - 76 - 11.57
IR - 76 - 2(44)19

SEEDING

END WIDTH	SQ. YARDS
40	503
141	845
163	778
117	600

END CUT	AREA FILL	CU. YDS. CUT	CU. YDS. FILL
130	0		
		265	21
156	23		
		194	336
53	340		
		49	818
0	593		
		D=40' 3	1076

EXISTING R/W

℄ RAMP E-7

MATCH LINE
RAMP E-4
X-SECTIONS
SEE SHT. 382.

MATCH LINE

MATCH LINE
RAMP E-4
X-SECTIONS
SEE SHT. 382.

MATCH LINE
RAMP E-4
X-SECTIONS
SEE SHT. 381.

℄ RAMP E-4

93:1

4:1

P.G. 1042.35
90+00.00
1043.0

1038.7

7:1

3:1

P.G. 1044.81
89+50.00
1045.0

1039.0

7.3:1

R/W -119.57'
LT. OF ℄

4:1

3:1

P.G. 1047.27
89+00.00
1039.9

1039.4

22:1

R/W -124.26'
LT. OF ℄

4:1

2.5:1

P.G. 1049.73
88+50.00
1041.7

22:1

4:1

1035 R/W
1030

-100 -90 -80

A A

A A

1045
1040
1035
1030

-70 -60 -50 -40 -30 -20 -10 0 10 20 30 40 50 60 70

RAMP E-7
STA 88+50 TO STA 90+00

PLATE 3, CROSS SECTION
KOEFFEL & ESSER CO.

CALCULATED BY BJB DATE 3/90
CHECKED BY DSB DATE 7/90

FHWA REG	STATE	PROJECT
5	OHIO	

400 / 1214

SUM - 76 - 11.57
IR - 76 - 2(44)19

SEEDING

END WIDTH	SQ. YARDS
93	461
73	394
69	342
54	261

END CUT	AREA FILL	CU. CUT	YDS. FILL
266	0	531	0
307	0	423	0
150	0	197	14
63	15	180	14

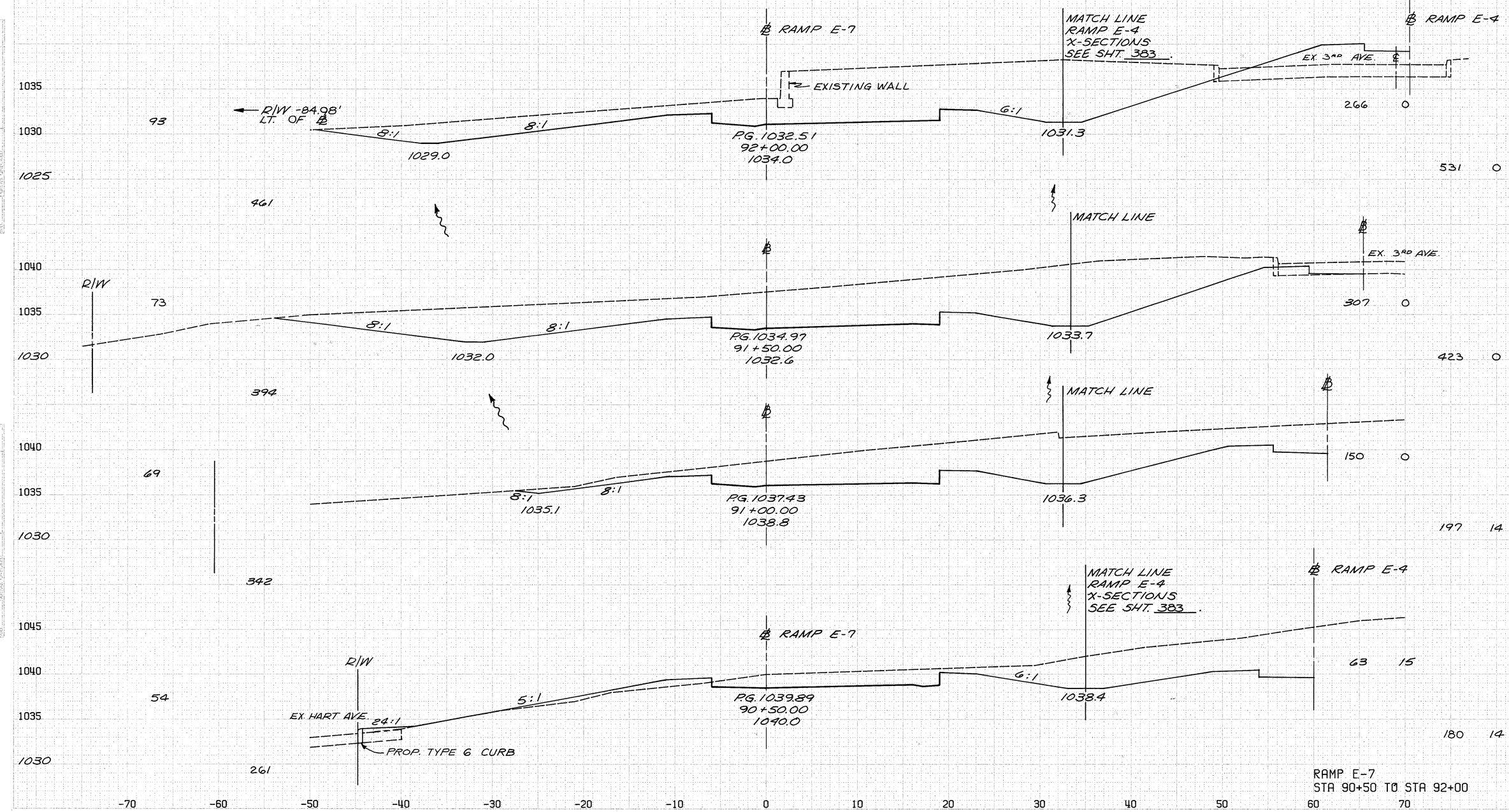

RAMP E-7
STA 90+50 TO STA 92+00

PLATE 5, CROSS SECTION
ARMPEL & BARR CO.

SEEDING
END WIDTH 50. YARDS

CALCULATED BY BJB DATE 3/90
CHECKED BY DSB DATE 7/90

FHWA REG	STATE	PROJECT
5	OHIO	

401
12.14

SUM - 76 - 11.57
IR - 76 - 2(44)19

END CUT	AREA FILL	CU. CUT	YDS. FILL
133	706	346	2
121	647	301	2
112	611	381	0
108	558	471	0

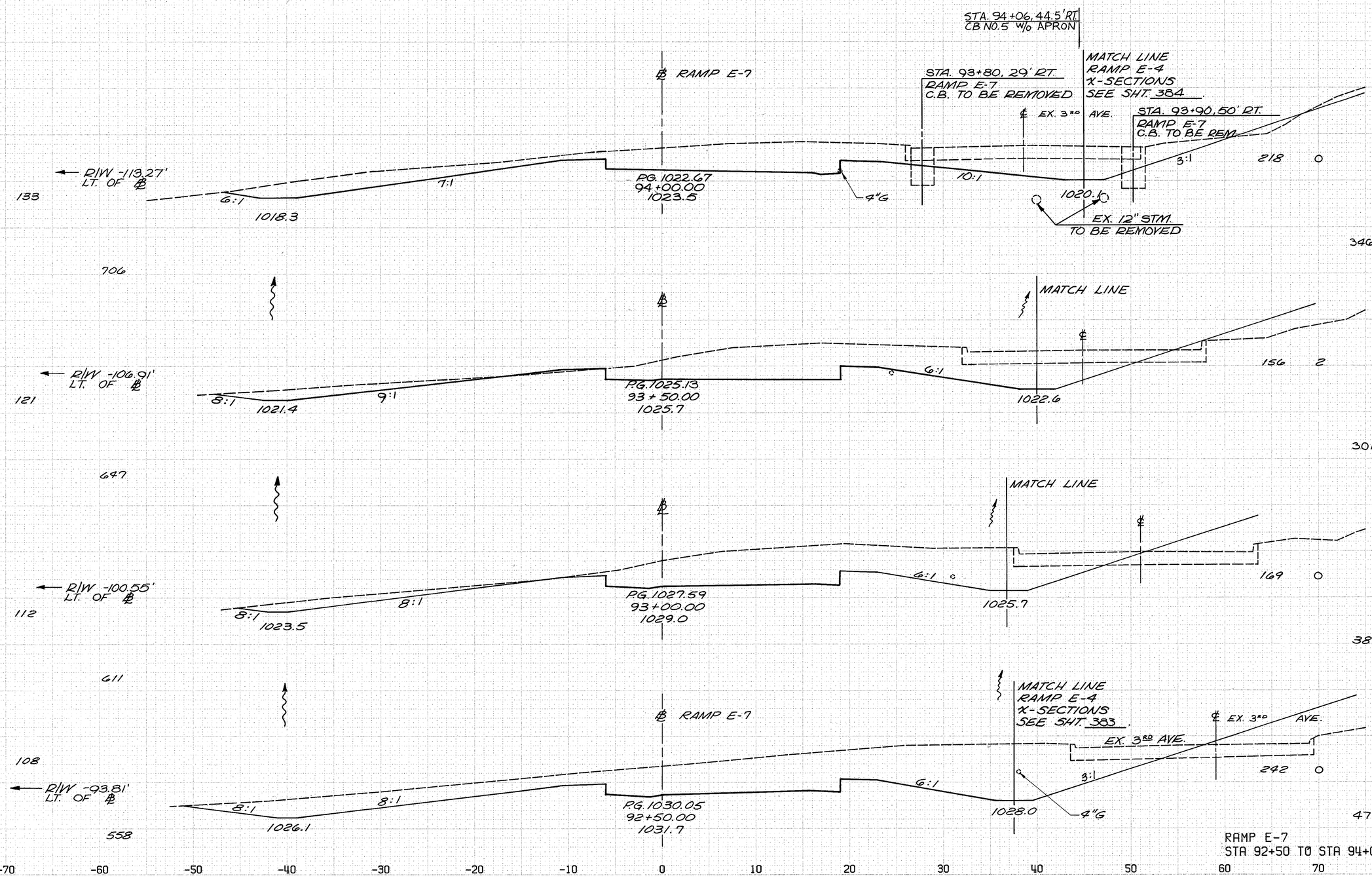

RAMP E-7
STA 92+50 TO STA 94+00

PLATE 3, CROSS SECTION
COMPS. & DATA CO.

CALCULATED BY BJB DATE 3/90
CHECKED BY DSB DATE 7/90

FHWA REG	STATE	PROJECT
5	OHIO	

402 / 12.14

SUM - 76 - 11.57
IR - 76 - 2(44)19

SEEDING

END WIDTH	SQ. YARDS
21 AHEAD	165 8
52 BACK	80 8
347	208 8
73	144 0
608	252 24
146	128 26
775	320 24

END CUT	AREA FILL	CU. CUT	YDS. FILL
98	0		

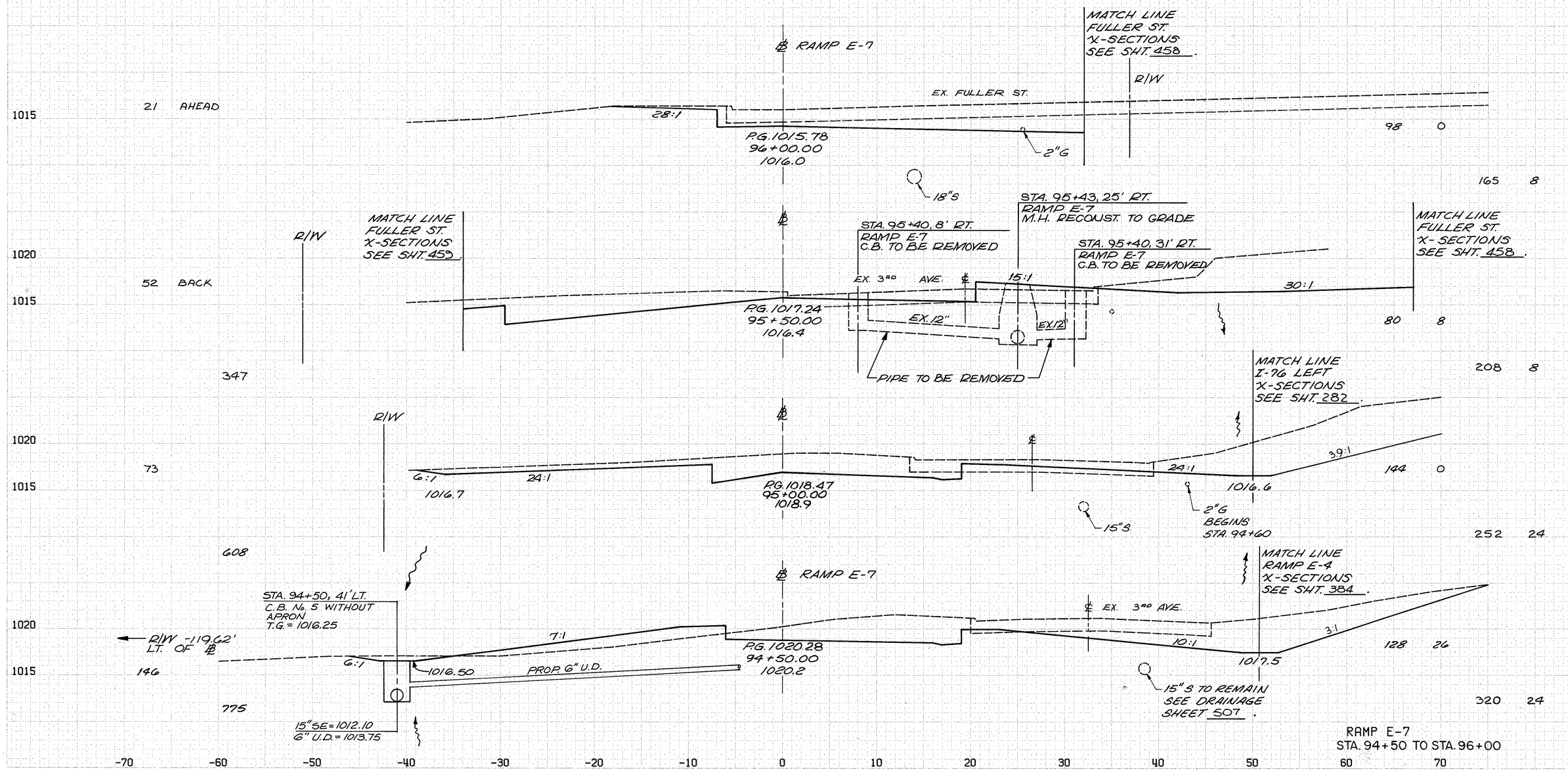

RAMP E-7
STA. 94+50 TO STA. 96+00

KRUPP & ESSER CO.

SEEDING.
END WIDTH SQ. YARDS

CALCULATED BY BJB DATE 3/90
CHECKED BY DSB DATE 7/90

FHWA REG	STATE	PROJECT	403 / 12.14
5	OHIO		

SUM - 76 - 11.57
IR - 76 - 2(44)19

END CUT	AREA FILL	CU. CUT	YDS. FILL
7	65	89	40
22	120	44	132

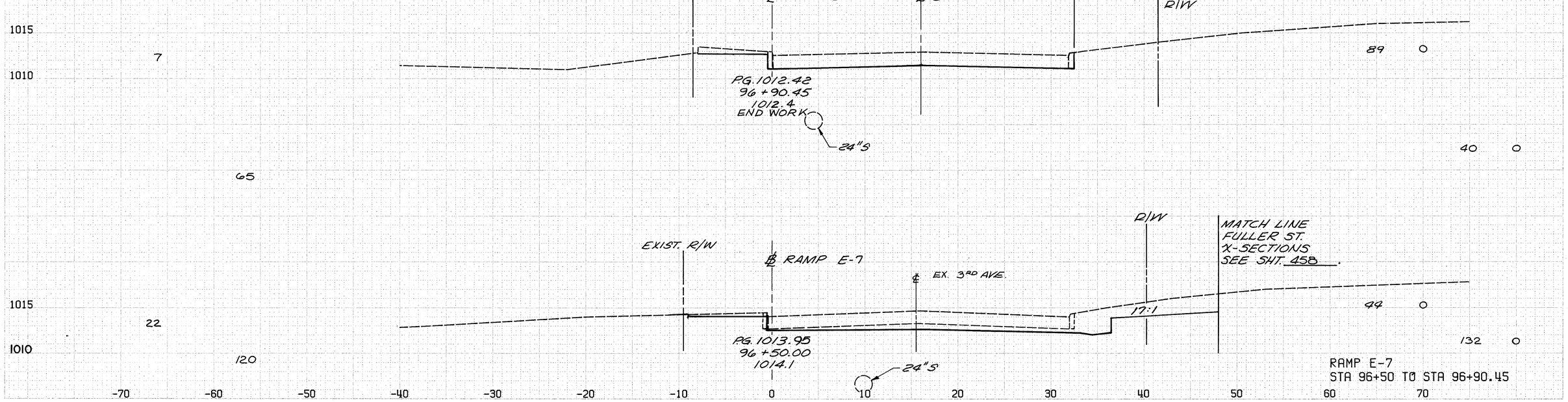

RAMP E-7
STA 96+50 TO STA 96+90.45

PLATE 3. CROSS SECTION
KEUFFEL & ESSER CO.

CALCULATED BY BJB DATE 3/90
CHECKED BY DSB DATE 7/90

FHWA REG	STATE	PROJECT	404 1214
5	OHIO		

SUM - 76 - 11.57
IR - 76 - 2(44)19

SEEDING
END WIDTH | SQ. YARDS

END CUT | AREA FILL | CU. YDS. CUT | CU. YDS. FILL

1080
1075
1070
1085
1080
1075
1070
1085
1080
1075
1070

MATCH LINE
E.P. I-76 (RIGHT)
EX. RAMP 'E-5'
1085.1
℄ B.L.
℄
PROPOSED RETAINING WALL NO.3, FOR DETAILS SEE SHEET 711
PG 1084.93
78+00.00
1076.0
℄ B.L.
MATCH LINE RAMP E-6 X-SECTIONS SEE SHEET 385.
EX. PAVED PARKING
℄ RAMP E-6
24:1

25
177
68 0
250 0
AHD 63 0
37

℄ I-76
AHEAD
MATCH LINE I-76 X-SECTIONS SEE SHEET 334
EX. RAMP 'E-5'
℄ B.L.
℄ RAMP E-8
PROPOSED RETAINING WALL NO.3, FOR DETAILS SEE SHEET 711
NOTE: QUANTITY BREAK LINE ~ Q.B.L. SEE NOTE, SHEET 89.
PG 1086.45
77+48.65
1078.0
℄ B.L.
MATCH LINE RAMP E-6 X-SECTIONS SEE SHEET 385
EX. PAVED PARKING
℄ RAMP E-6
24:1

RAMP E8
STA 77+48.65 TO STA 78+00

-70 -60 -50 -40 -30 -20 -10 0 10 20 30 40 50 60 70

PLATE 3, CROSS SECTION
KRUPPEL & OSER CO.

CALCULATED BY BJB DATE 3/90
CHECKED BY DSB DATE 7/90

FHWA REG	STATE	PROJECT
5	OHIO	

405
12.14

SUM - 76 - 11.57
IR - 76 - 2(44)19

SEEDING
END SQ.
WIDTH YARDS

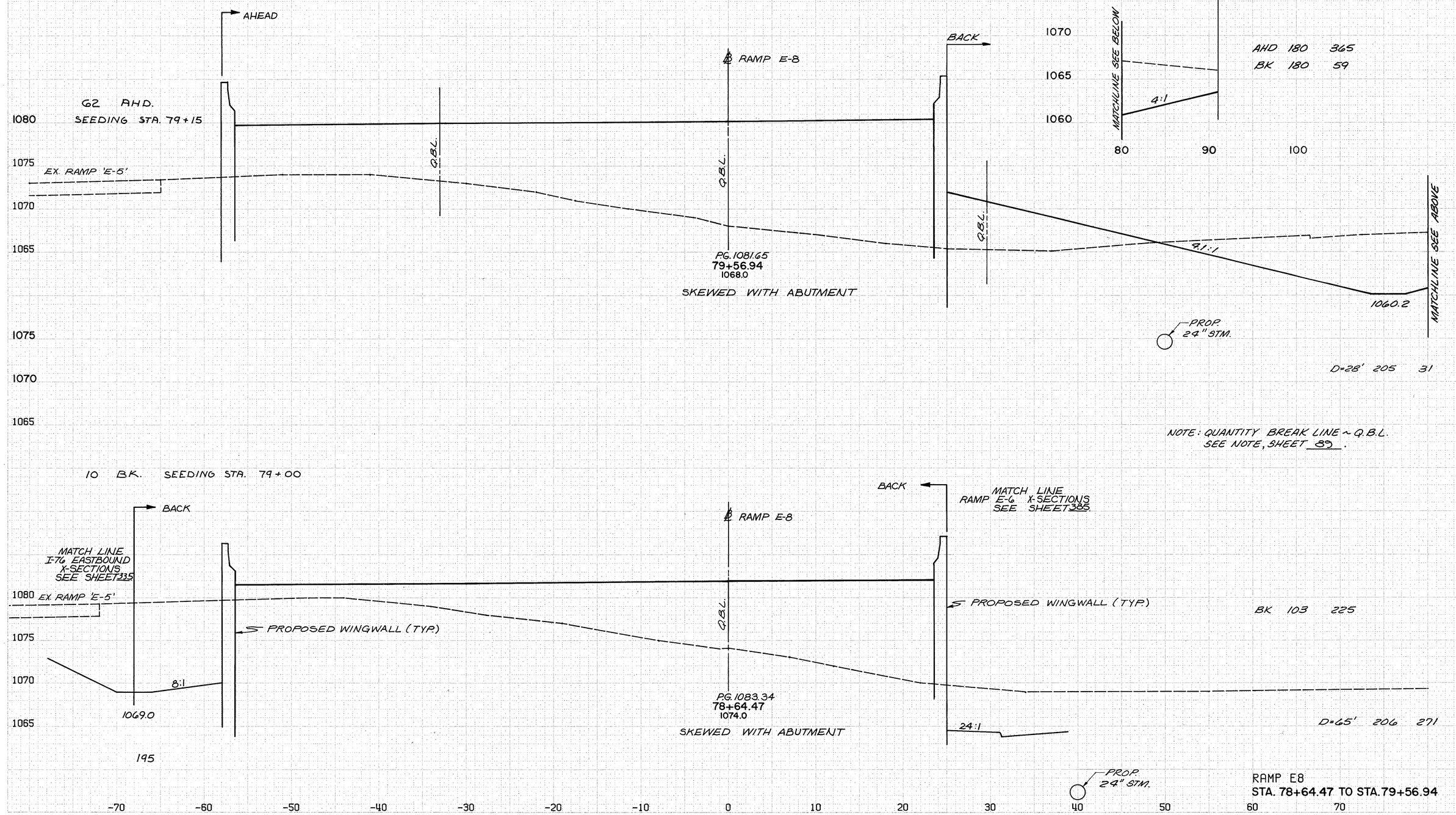

END CUT	AREA FILL	CU. CUT	YDS. FILL
AHD	180	365	
BK	180	59	

D=28' 205 31

NOTE: QUANTITY BREAK LINE ~ Q.B.L.
SEE NOTE, SHEET 89.

BK 103 225

D=65' 206 271

RAMP E8
STA. 78+64.47 TO STA. 79+56.94

PLATE 3, CROSS SECTION
KLEMPEL & BADGLEY CO

CALCULATED BY BJB DATE 3/90
CHECKED BY DSB DATE 7/90

FHWA REG	STATE	PROJECT
5	OHIO	

406
12.14

SUM - 76 - 11.57
IR - 76 - 2(44)19

END CUT	AREA FILL	CU. CUT	YDS. FILL

SEEDING
END SQ.
WIDTH YARDS

FINAL SURVEY NOTE BOOK — DATE — BY — CHKD. — TEMPLATE — AREAS — AREAS CHECKED

ORIGINAL SURVEY NOTE BOOK — DATE — BY — CHKD. — TEMPLATE — AREAS — AREAS CHECKED

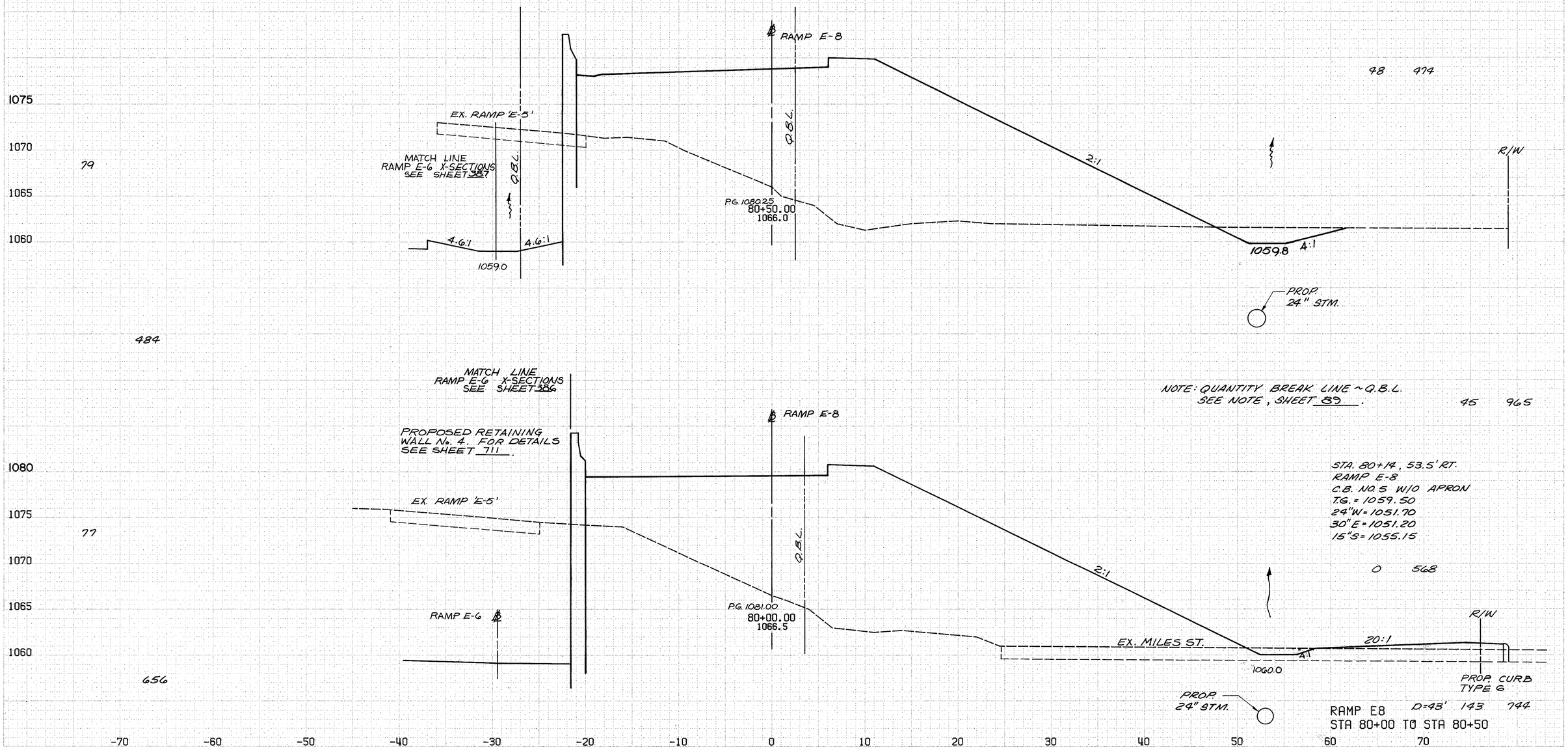

RAMP E8 D=43° 143 744
STA 80+00 TO STA 80+50

K&E PLATE 3, CROSS SECTION
KEUFFEL & ESSER CO.

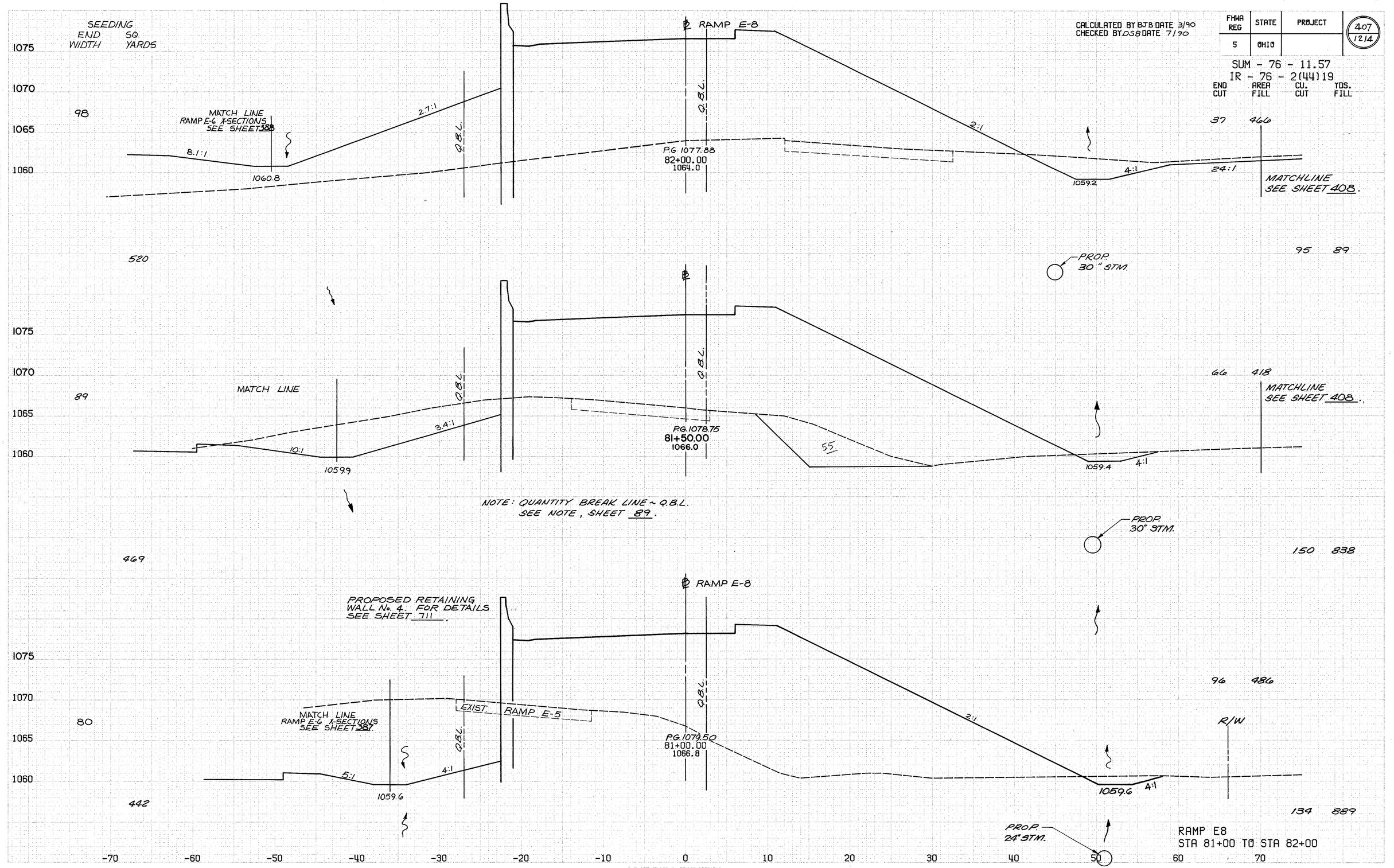
SEEDING
END WIDTH
SQ. YARDS
CALCULATED BY BJB DATE 3/90
CHECKED BY DSB DATE 7/90
FHWA REG 5
STATE OHIO
PROJECT
407
1214
SUM - 76 - 11.57
IR - 76 - 2(44)19
END CUT
AREA FILL
CU. YDS. CUT
YDS. FILL
℄ RAMP E-8
1075
1070
1065
1060
98
MATCH LINE
RAMP E-6 X-SECTIONS
SEE SHEET 388
8.1:1
2:1
1060.8
Q.B.L.
P.G. 1077.88
82+00.00
1064.0
2:1
4:1
24:1
1059.2
37 466
MATCHLINE
SEE SHEET 408.
520
95 89
PROP.
30" STM.
1075
1070
1065
1060
89
MATCH LINE
3.4:1
10:1
1059.9
P.G. 1078.75
81+50.00
1066.0
55'
1059.4
4:1
66 418
MATCHLINE
SEE SHEET 408.
NOTE: QUANTITY BREAK LINE ~ Q.B.L.
SEE NOTE, SHEET 89.
469
PROP.
30" STM.
150 838
℄ RAMP E-8
PROPOSED RETAINING
WALL No. 4. FOR DETAILS
SEE SHEET 711.
1075
1070
1065
1060
80
MATCH LINE
RAMP E-6 X-SECTIONS
SEE SHEET 387
EXIST. RAMP E-5
5:1
4:1
1059.6
P.G. 1079.50
81+00.00
1066.8
2:1
1059.6
4:1
R/W
96 486
442
134 889
PROP.
24" STM.
RAMP E8
STA 81+00 TO STA 82+00
-70 -60 -50 -40 -30 -20 -10 0 10 20 30 40 50 60 70

CALCULATED BY BJB DATE 3/90
CHECKED BY DSB DATE 7/90

FHWA REG	STATE	PROJECT
5	OHIO	

408
12.14

SUM - 76 - 11.57
IR - 76 - 2(44)19

SEEDING
END WIDTH | SQ. YARDS

END CUT AREA | FILL CU. | CUT YDS. | FILL

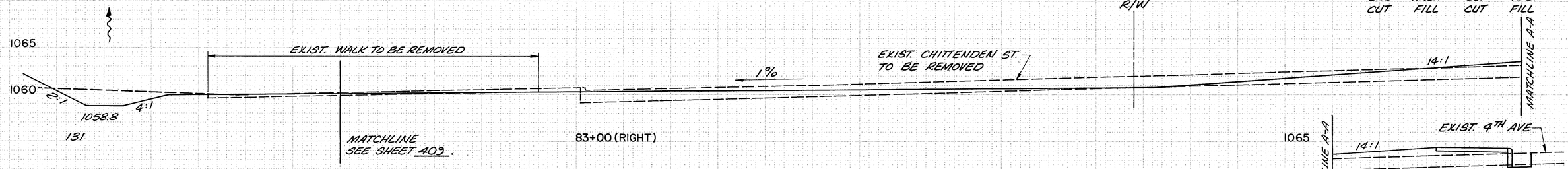

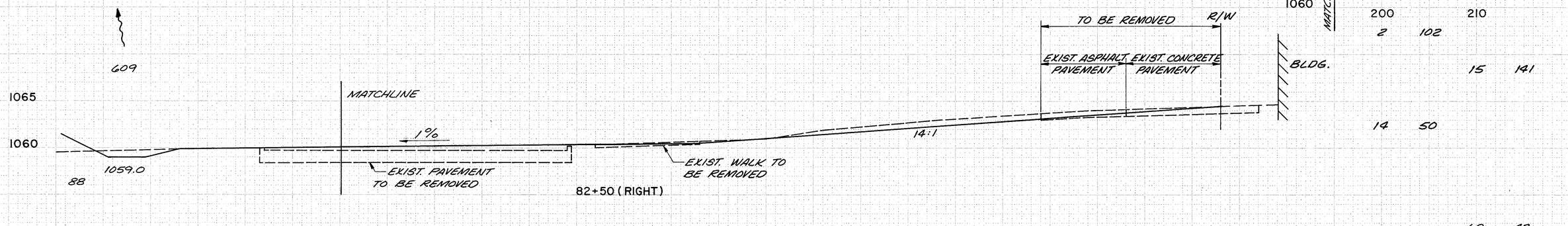

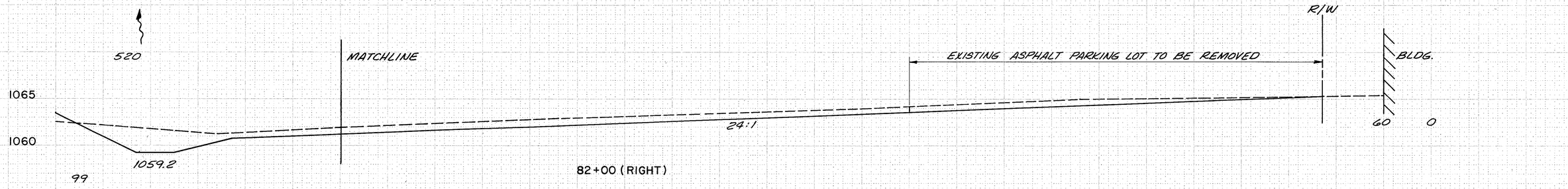

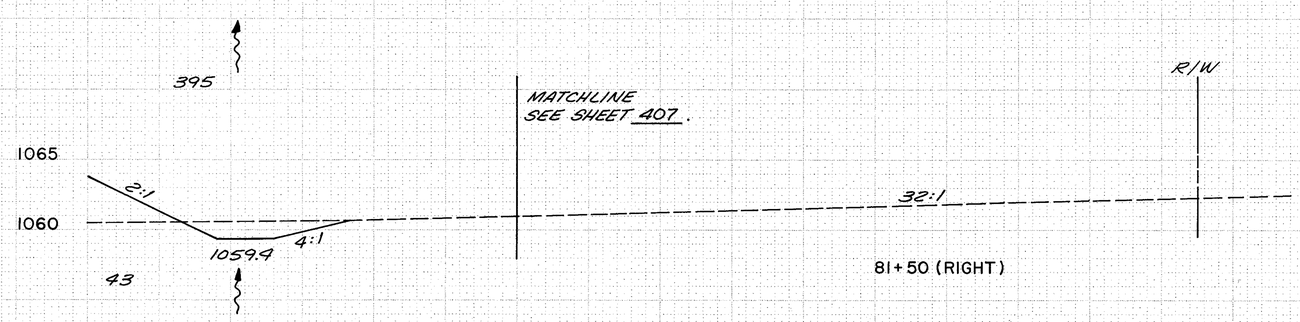

RAMP E-8 (RIGHT)
STA. 81+50 TO STA. 83+00

40 50 60 70 80 90 100 110 120 130 140 150 160 170 180 190

PLATE 3, CROSS SECTION

CALCULATED BY BTB DATE 3/90
CHECKED BY DSB DATE 7/90

FHWA REG	STATE	PROJECT	409 12.14
5	OHIO		

SUM - 76 - 11.57
IR - 76 - 2(44)19

SEEDING

END WIDTH	SQ. YARDS	END CUT AREA	FILL	CU. CUT	YDS. FILL
130	881	8	1185		
114	619	12	1125		
109	575	5	1400		
		16	2326		
		39	1728		

℄ RAMP E-8 AHEAD

℄ RAMP E-8 BACK

℄ RAMP E-8

1070
1065
1060
1055

130
4.2:1
8.1:1
1062.3
MATCH LINE
RAMP E-6 X-SECTIONS
SEE SHEET 389
2"G
D=65.02'
881
2:1
1058.6
4:1
PG. 1073.23
83+65.02
1058.4
R/W
D=65.02' 24 2782

PROP. 30" STM.

1075
1070
1065
1060

114
3:1
8.1:1
1062.0
MATCH LINE
2"G
619
PG. 1075.38
83+00.00
1060.1
2:1
1058.8
1%
STA. 83+00, 95' RT.
RAMP E-8
C.B. NO. 5 W/O APRON
T.G. = 1058.55
30"W,E = 1043.62
MATCHLINE
SEE SHEET 408.

1075
1070
1065
1060
1055

109
2.3:1
MATCH LINE
RAMP E-6 X-SECTIONS
SEE SHEET 388
8.1:1
1061.7
CHITTENDEN ST.
575
PG. 1076.75
82+50.00
1058.2
2:1
1059.0
4:1
1%
EX. RAMP 'E-5' (TO BE REMOVED)
MATCHLINE
SEE SHEET 408.

PROP. 30" STM.

RAMP E8
STA 82+50 TO STA 83+65.02

-70 -60 -50 -40 -30 -20 -10 0 10 20 30 40 50 60 70

PLATE 3, CROSS SECTION
GIUFFRE & BRUNI CO.

SEEDING
END WIDTH | SQ. YARDS

CALCULATED BY BJB DATE 3/90
CHECKED BY DSB DATE 7/90

FHWA REG	STATE	PROJECT	410 / 1214
5	OHIO		

SUM - 76 - 11.57
IR - 76 - 2(44)19

END CUT AREA FILL | CU. YDS. CUT | CU. YDS. FILL

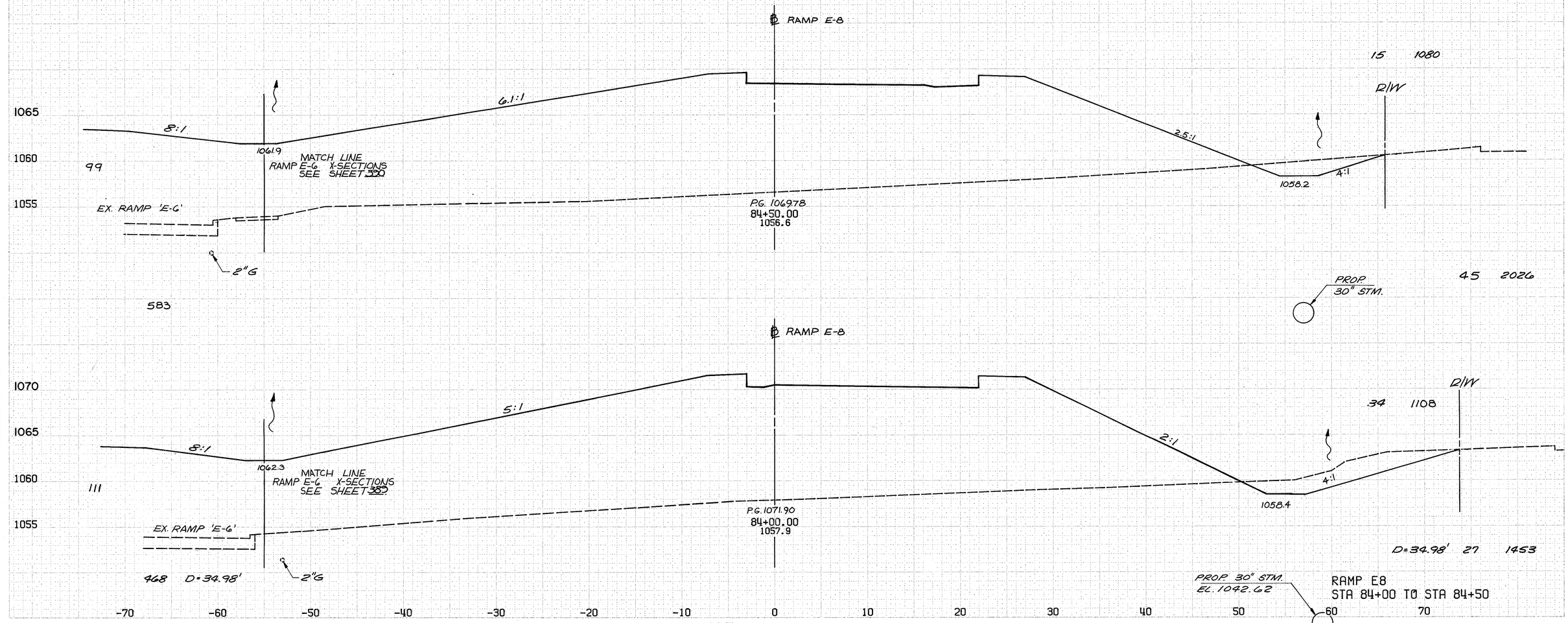

PLATE 5, CROSS SECTION

FHWA REG	STATE	PROJECT	411 1214
5	OHIO		

CALCULATED BY BJB DATE 3/90
CHECKED BY DSB DATE 7/90

SUM - 76 - 11.57
IR - 76 - 2(44)19

SEEDING
END WIDTH SQ. YARDS

END CUT AREA FILL CU. YDS. CUT CU. YDS. FILL

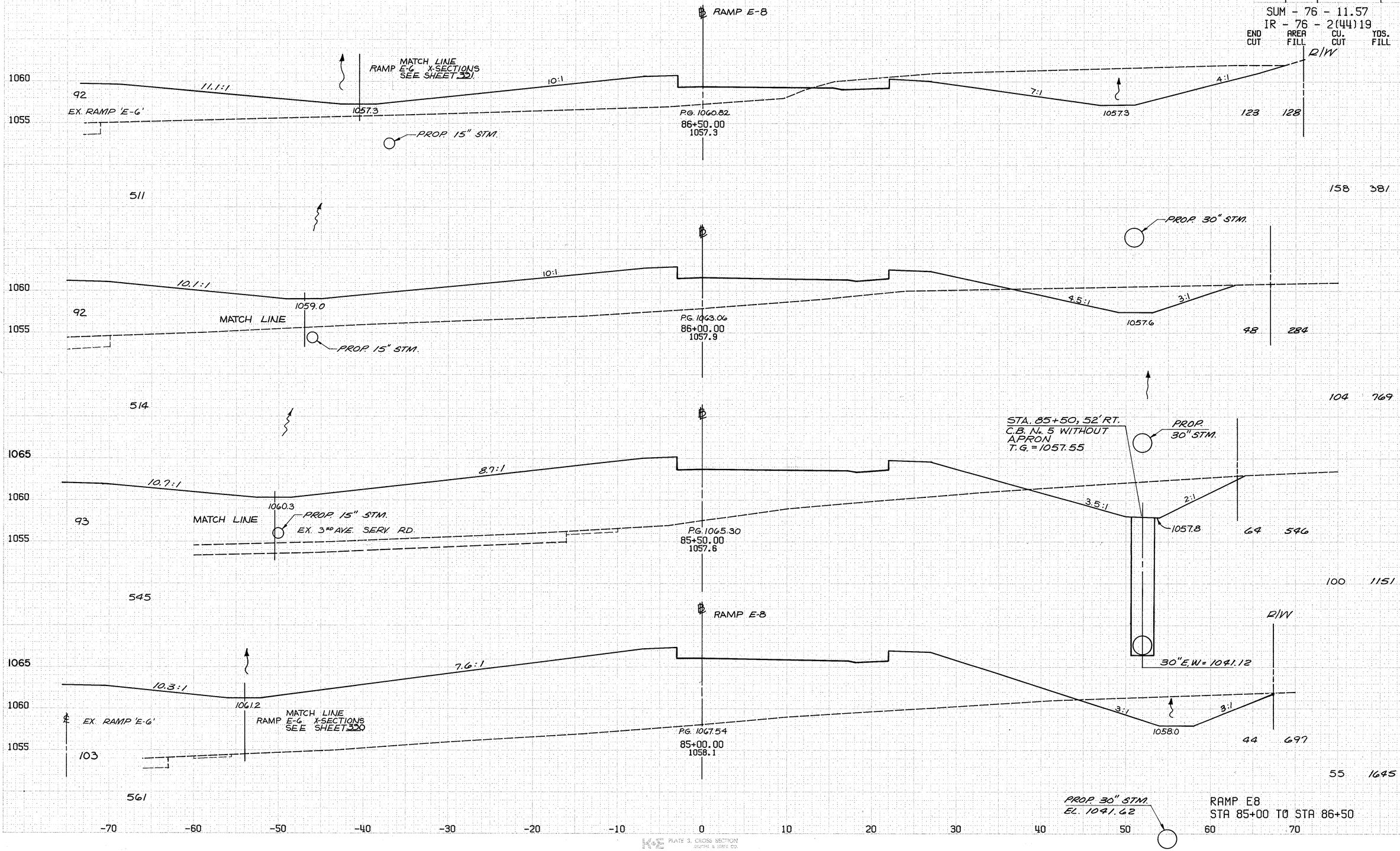

RAMP E8
STA 85+00 TO STA 86+50

PLATE 3. CROSS SECTION

SEEDING
END WIDTH | SQ. YARDS

CALCULATED BY BJB DATE 3/90
CHECKED BY DSB DATE 7/90

FHWA REG	STATE	PROJECT
5	OHIO	

412
12.14

SUM - 76 - 11.57
IR - 76 - 2(44)19

END CUT	AREA FILL	CU. CUT	YDS. FILL
66		355	0
378		545	0
70		234	0
397		325	13
73		117	14
433		198	70
83		97	62
468		204	176

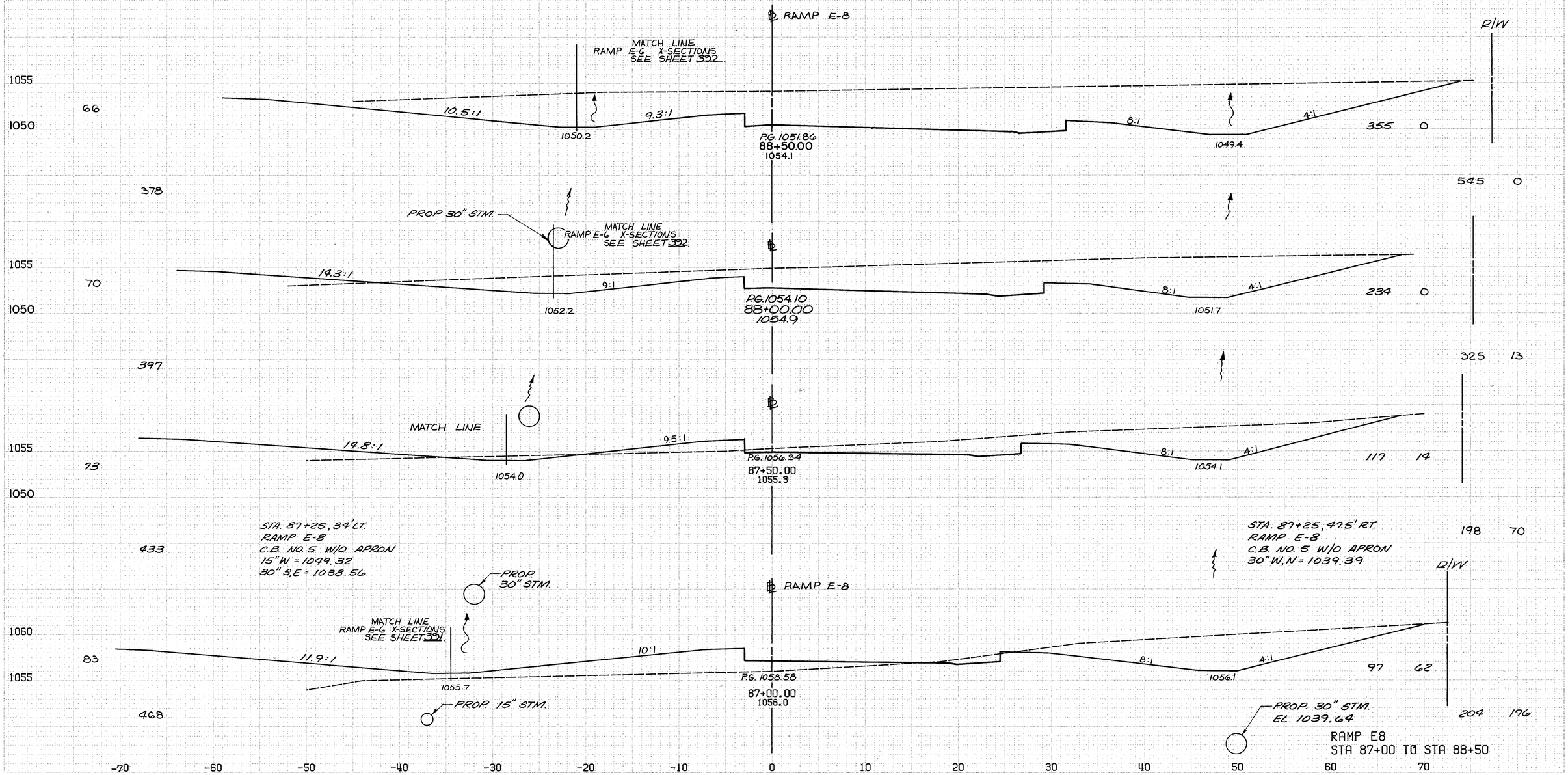

RAMP E8
STA 87+00 TO STA 88+50

CALCULATED BY BJB DATE 3/90
CHECKED BY DSB DATE 7/90

FHWA REG	STATE	PROJECT	413 / 1214
5	OHIO		

SUM - 76 - 11.57
IR - 76 - 2(44)19

	SEEDING END WIDTH	SEEDING SQ. YARDS	END CUT	AREA FILL	CU. YDS. CUT	CU. YDS. FILL
1045						
	60					
1040						
1035						
		258				
1045						
	33					
1040						
		150				
1050						
	21 AHD. 68 BK.					
1045						
		376				
1050						
	67					
1045						
		356				
1050						
	61					
1045						
		353				

MATCH LINE
I-76 X-SECTIONS
SEE SHEET 343

℄ RAMP E-8

9.7:1

8:1

1039.0

PG. 1040.66
91+00.00
1042.4

EX. 15" STM. TO BE REMOVED

1038.6

8:1

8:1

R/W 276.41'
RT. OF ℄

9"G

127 O

407 O

PROP. 30" STM.

MATCH LINE

MATCH LINE
RAMP E-8A X-SECTIONS
SEE SHEET 416

9.8:1

1041.25

PG. 1042.90
90+50.00
1047.4

8:1

1040.9

R/W 290.62'
RT. OF ℄

312 O

521 O

PROP. 30" STM.

MATCH LINE

AHEAD

MATCH LINE
RAMP E-8A X-SECTIONS
SEE SHEET 416

5.1:1

1043.5

PG. 1045.14
90+00.08
1049.8
NOSE STATION
RAMP E-8A

RAMP E-8A

8:1

1042.2

A

A

BACK

A

2:1

1045

R/W 273.89'
RT. OF ℄

A

1040

80

90

AHD. 251 O
BK. 571 O

STA. 89+92, 20' LT.
RAMP E-8
C.B. NO. 5 W/O APRON

MATCH LINE

PROP. 30" STM.

6:1

1045.7

PG. 1047.38
89+50.00
1050.9

RAMP E-8A

8:1

4:1

10444

493 O

985 O

R/W 226.73'
RT. OF ℄

MATCH LINE
I-76 X-SECTIONS
SEE SHEET 343

PROP. 30" STM.

℄ RAMP E-8

7.7:1

8:1

1048.0

PG. 1049.62
89+00.00
1052.8

8:1

8:1

4:1

1047.0

397 O

824 O

R/W

696 O

PROP 30" STM.
EL. 1036.53

RAMP E8
STA 89+00 TO STA 91+00

-70 -60 -50 -40 -30 -20 -10 0 10 20 30 40 50 60 70

PLATE 2, CROSS SECTION
KLOMAN & GREB CO.

CALCULATED BY BJB DATE 3/90
CHECKED BY DSB DATE 7/90

FHWA REG	STATE	PROJECT
5	OHIO	

414 / 1214

SUM - 76 - 11.57
IR - 76 - 2(44)19

SEEDING

	END WIDTH	SQ. YARDS
1035		
	64	
1030		
1025		
	375	
1035		
	71	
1030		
	356	
1035		
	57	
1030		
	311	
1035		
	55	
1030		
	308	
1040		
	56	
1035		
	322	

MATCH LINE I-76 X-SECTIONS SEE SHEET 344

℄ RAMP E-8

2.5:1

24:1

EX. FOURTH AVE

8:1

4:1

4"G

10278

PG. 1029.60
93+50.00
1031.1

PROP. 30" STM.

END CUT	AREA FILL	CU. CUT	YDS. FILL
		186	0
		342	0
		183	0
		349	3
		194	3
		397	3
		235	0
		470	0
		273	0
		370	0

R/W 174.10' RT. OF ℄

MATCH LINE

2.4:1

24:1

1032.4

PG. 1031.70
93+00.00
1033.9

1030.0

PROP. 30" STM.

R/W 230.39' RT. OF ℄

STA. 92+50, 22' LT.
C.B. No. 5 WITHOUT APRON
T.G. = 1031.95

STA. 92+50, 46.5' RT.
C.B. NO. 5 W/O APRON
T.G. = 1031.95

MATCH LINE

2.5:1

8:1

1032.2

PG. 1033.94
92+50.00
1036.4

4"G

END STA. 92+93

69'~15" TYPE 'B' @ 0.94%

15"S = 1026.83
30"E.W = 1024.71
6"U.D. = 1028.15

1032.2

FOR CONTINUATION SEE SHEET 541.

4"G

15"N.S. = 1027.98
6"U.D. = 1028.23

R/W 244.42' RT. OF ℄

P 72

MATCH LINE

3.2:1

1034.5

PG. 1036.18
92+00.00
1039.2

1034.5

PROP. 30" STM.

R/W 258.45' RT. OF ℄

MATCH LINE I-76 X-SECTIONS SEE SHEET 343

℄ RAMP E-8

℄ 4th AVE.

3.9:1

8:1

1036.9

PG. 1038.42
91+50.00
1041.4

8:1

4:1

1036.6

4"G

R/W 314.68' RT. OF ℄

PROP. 30" STM.

RAMP E8
STA 91+50 TO STA 93+50

-70 -60 -50 -40 -30 -20 -10 0 10 20 30 40 50 60 70

K&S PLATE 3, CROSS SECTION
KRUEGER & SISER CO.

CALCULATED BY BJB DATE 3/90
CHECKED BY DSB DATE 7/90

FHWA REG	STATE	PROJECT
5	OHIO	

415
12.14

SUM - 76 - 11.57
IR - 76 - 2(44)19

SEEDING
END WIDTH — SQ. YARDS

END CUT — AREA FILL — CU. CUT — YDS. FILL

1025
1020

MATCH LINE
FULLER ST. X-SECTIONS
SEE SHEET 457

℄ RAMP E-8

95+80.21
1024.78

4"G

PROP. 30" STM.

MATCH LINE
FULLER ST. X-SECTIONS
SEE SHEET 457

0 — 97

285 — 103

R/W 107.90'
RT. OF ℄ →

163

1030
1025
1020

97

EX. FOURTH AVE.

8:1

PG. 1025.16
95+50.00
1027.2

PROP. 30" STM.

8:1

2:1

1023.5

509 — 87

784 — 90

R/W 116.28'
RT. OF ℄ →

433

1030
1025
1020

59

2.5:1

24:1

MATCH LINE
I-76 X-SECTIONS
SEE SHEET 345

PG. 1025.76
95+00.00
1026.0

PROP. 30" STM.

8:1

3:1

1024.1

338 — 10

R/W 130.74'
RT. OF ℄ →

331

1030
1025
1020

60

2.4:1

PG. 1026.63
94+50.00
1027.0

PROP. 30" STM.

4:1

1024.8

550 — 14

256 — 5

406 — 7

R/W 145.19'
RT. OF ℄ →

322

1030
1025

56

2.5:1

24:1

MATCH LINE
I-76 X-SECTIONS
SEE SHEET 344

℄ RAMP E-8

EX. FOURTH AVE.

PG. 1027.91
94+00.00
1029.1

PROP. 30" STM.

4"G

8:1

4:1

1026.1

183 — 3

342 — 3

R/W 159.65'
RT. OF ℄ →

333

-70 -60 -50 -40 -30 -20 -10 0 10 20 30 40 50 60 70

RAMP E8
STA 94+00 TO STA 95+80.21

PLATE 3. CROSS SECTION
KEITH & EBER CO.

CALCULATED BY BJB DATE 3/90
CHECKED BY DJB DATE 7/90

FHWA REG	STATE	PROJECT
5	OHIO	

416 / 1214

SUM - 76 - 11.57
IR - 76 - 2(44)19

SEEDING
END WIDTH — SQ. YARDS

END CUT — AREA FILL — CU. YDS. CUT — CU. YDS. FILL

PLATE 5, CROSS SECTION

CALCULATED BY [illegible] DATE 3/90
CHECKED BY [illegible] DATE 7/90

FHWA REG	STATE	PROJECT	417 1214
5	OHIO		

SUM-76-11.57
IR-76-2(44)19

SEEDING
END SQ.
WIDTH YARDS

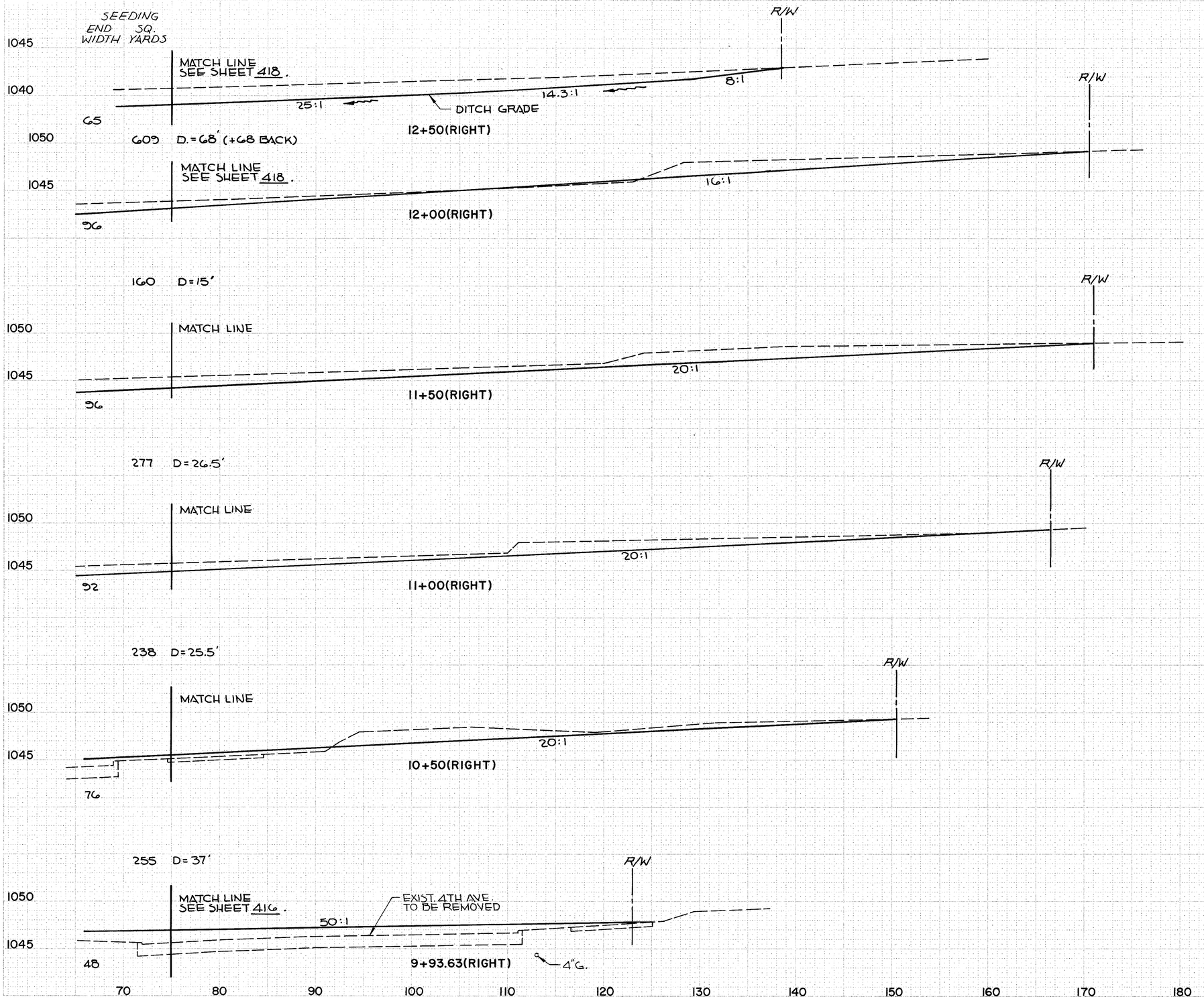

END CUT	AREA FILL	CU. CUT	YDS. FILL
71	0		
		110	1
48	1		
CUT D=13'		40	1
77	0		
CUT D=27'		67	0
56	0		
CUT D=27', FILL D=33'		47	6
38	10		
CUT D=41', FILL D=35'		75	25
0	89		

RAMP E-8A (RIGHT)
STA. 9+93.63 TO STA. 12+50

PLATE 3. CROSS SECTION
KELLER & GIBSON CO.

CALCULATED BY BJB DATE 3/90
CHECKED BY DSB DATE 7/90

FHWA REG	STATE	PROJECT
5	OHIO	

418 / 1214

SUM - 76 - 11.57
IR - 76 - 2(44)19

SEEDING END WIDTH	SEEDING SQ. YARDS	END CUT AREA	END FILL AREA	CU. YDS. CUT	CU. YDS. FILL
0		23	0		
53				11	2
42		4	4		
250				8	17
48		5	14		
439				121	14
110		126	1		
611				373	1
603		277	0		
		CUT D=44	FILL D=50	421	3

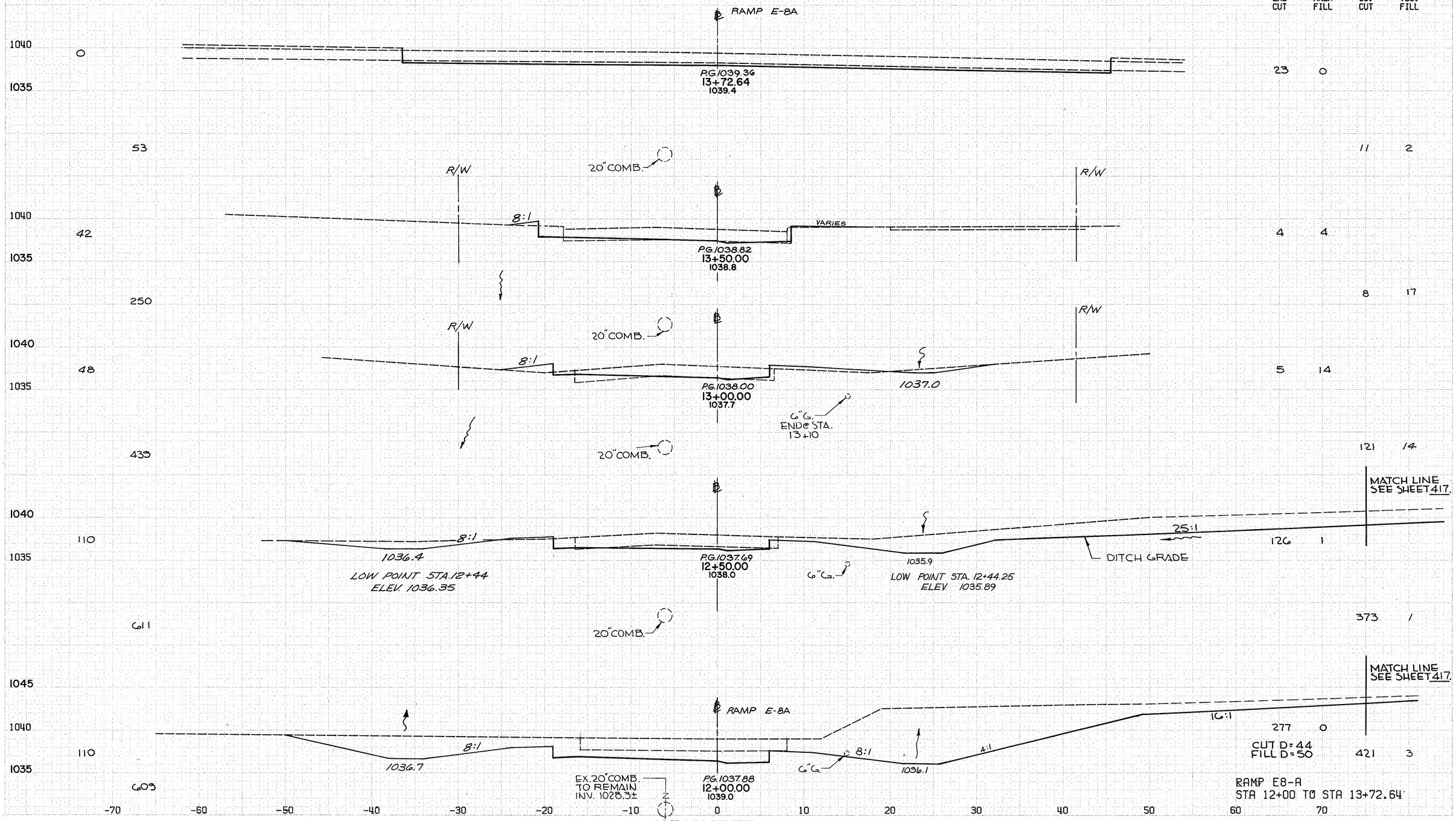

PLATE 3, CROSS SECTION

SEEDING
END SQ.
WIDTH YARDS

CALCULATED BY B.J.B. DATE 3/90
CHECKED BY D.S.B. DATE 7/90

FHWA REG	STATE	PROJECT
5	OHIO	

419
1214

SUM - 76 - 11.57
IR - 76 - 2(44)19

END CUT	AREA FILL	CU. CUT	YDS. FILL
136	0		
189	1		
68	1		
156	10		
100	10		
31	46		
62	350		
64	132		
48	306		
0			

1035
1030
1025
1020

MATCH LINE
I-76 X-SECTIONS
SEE SHEET 347

℄ RAMP E-8B

R/W

8:1
8:1
6:1

1020.9

P.G. 1021.75
101+50.00
1023.2

PROP. 30" STM.

MATCH LINE

1022.1

P.G. 1022.95
101+00.00
1023.7

PROP. 30" STM.

8:1

MATCH LINE
I-76 X-SECTIONS
SEE SHEET 346

8:1
11:1

1023.2

P.G. 1024.03
100+50.00
1024.4

MATCH LINE
FULLER ST. X-SECTIONS
SEE SHEET 457

PROP. 30" STM.

℄ RAMP E-8B

P.G. 1024.63
100+12.94
1024.2

4"G.

PROP. 30" STM.

MATCH LINE
FULLER ST. X-SECTIONS
SEE SHT. 457.

A
A
80
R/W
90
A
A

-70 -60 -50 -40 -30 -20 -10 0 10 20 30 40 50 60 70

RAMP E8-B
STA 100+12.94 TO STA 101+50

PLATE 3, CROSS SECTION

CALCULATED BY BJB DATE 3/90
CHECKED BY DSB DATE 7/90

FHWA REG	STATE	PROJECT
5	OHIO	

420 / 1214

SUM - 76 - 11.57
IR - 76 - 2(44)19

SEEDING
END SQ.
WIDTH YARDS

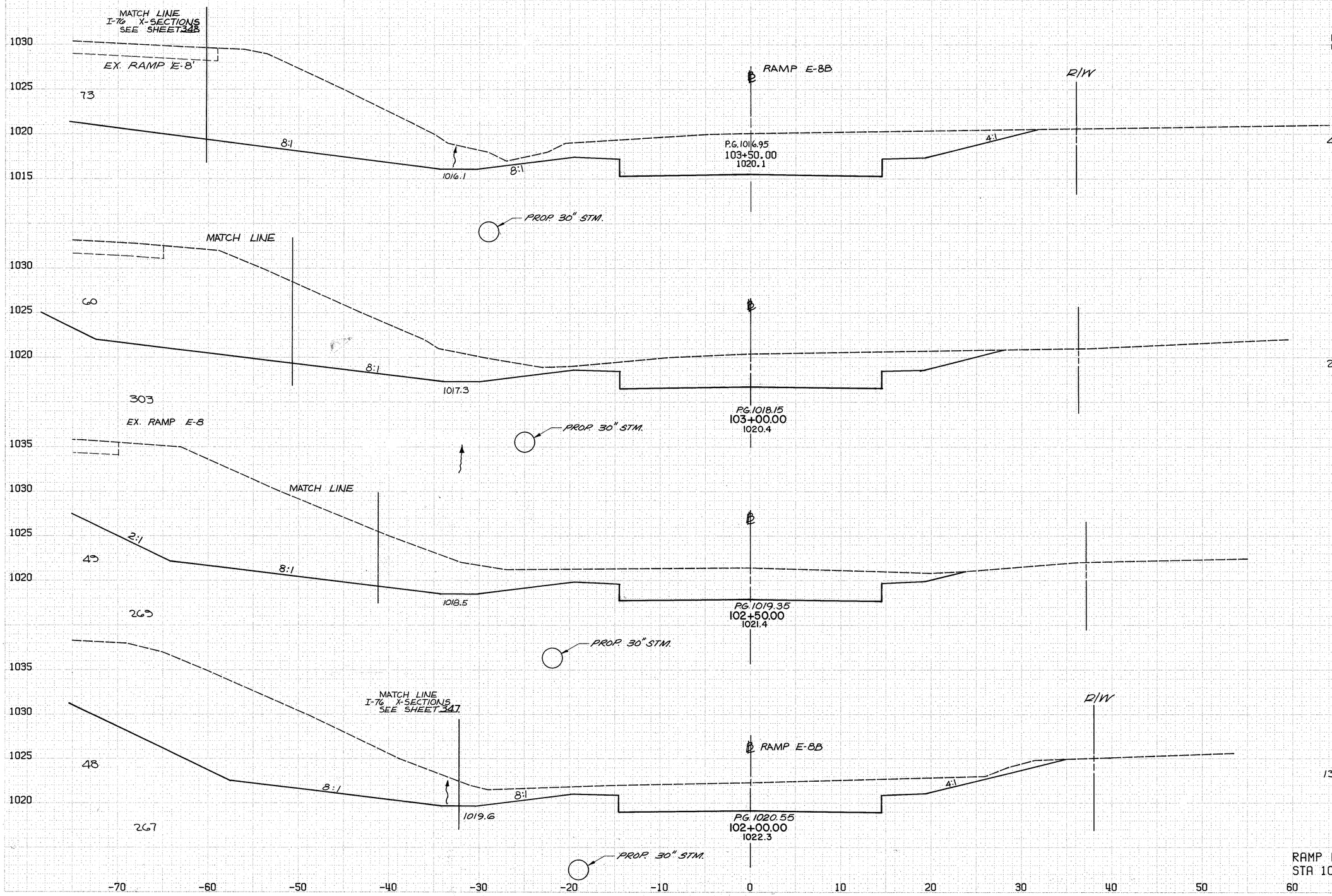

END CUT	AREA FILL	CU. CUT	YDS. FILL
405	0		
		620	0
265	0		
430	0		
139	0		
		312	0
138	0		
		254	0

RAMP E8-B
STA 102+00 TO STA 103+50

PLATE 9, CROSS SECTION
FISHER & ERNST CO.

CALCULATED BY BJB DATE 3/90
CHECKED BY DSB DATE 7/90

FHWA REG	STATE	PROJECT
5	OHIO	

421
1214

SUM - 76 - 11.57
IR - 76 - 2(44)19

SEEDING
END SQ.
WIDTH YARDS

END CUT | AREA FILL | CU. CUT | YDS. FILL

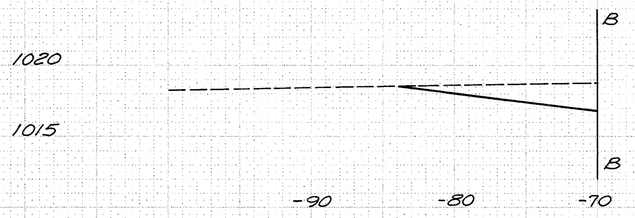

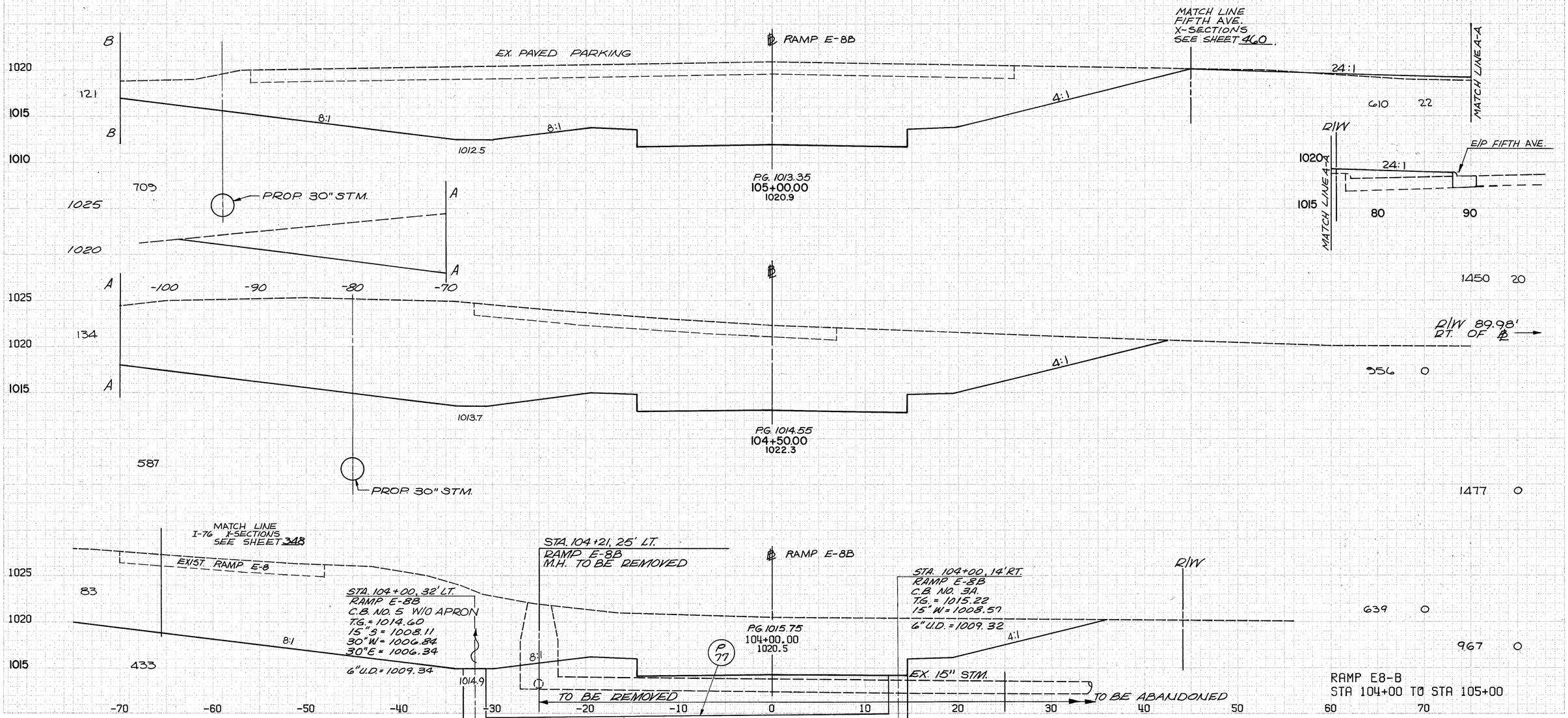

RE PLATE 3, CROSS SECTION

CALCULATED BY BTB DATE 3/90
CHECKED BY DSB DATE 7/90

FHWA REG	STATE	PROJECT
5	OHIO	

422
12.14

SUM - 76 - 11.57
IR - 76 - 2(44)19

SEEDING
END WIDTH SQ. YARDS

END CUT | AREA FILL | CU. CUT | YDS. FILL

℄ RAMP E-8B

1010
1005

PG. 1009.84
106+98.34
1010.0

26 0

R/W

395

705 0

℄ PARKING LOT

STAIRS TO BE REMOVED

1015
1010

25:1
37:1
6:1
24:1

142

1009.8

12"W.M.

766 0

PG. 1010.03
106+50.00
1018.9

1525 0

739

DITCH LOW POINT
STA. 106+25
C.B. NO. 5 W/O APRON
TG = 1009.95
15" N = 1000.73
15"SE = 1002.48

℄ RAMP E-8B

R/W

MATCH LINE
FIFTH AVE.
X-SECTIONS
SEE SHEET 460.

℄ FIFTH AVE.

A MATCH LINE

1020
1015

8:1
8:1
5:1

124

1010.1

881 0

PG. 1010.95
106+00.00
1020.2

1450 0

A MATCH LINE

10:1

-95 -85 -75

PROP. 30" STM.

684

R/W

MATCH LINE
FIFTH AVE.
X-SECTIONS
SEE SHEET 460.

℄ RAMP E-8B

PARKING LOT

1020
1015
1010

8:1
8:1
5:1
24:1

122

1011.3

E/P FIFTH AVE.

728 0

PG. 1012.15
105+50.00
1020.7

1235 20

675

PROP. 30" STM.

-70 -60 -50 -40 -30 -20 -10 0 10 20 30 40 50 60 70

RAMP E8-B
STA 105+50 TO STA 106+98.34

PLATE 3, CROSS SECTION
KEUFFEL & ESSER CO.

CALCULATED BY BJB DATE 3/90
CHECKED BY DSB DATE 7/90

FHWA REG	STATE	PROJECT
5	OHIO	

423
1214

SUM - 76 - 11.57
IR - 76 - 2(44)19

END CUT	AREA FILL	CU. CUT	YDS. FILL

SEEDING

END SQ. WIDTH YARDS

MATCH LINE I-76 EASTBOUND X-SECTIONS SEE SHEET 350.

EX. RAMP 'E-9'

5.8:1

1026.0

71

℄ RAMP 'E-9'

PG. 1032.08
10+00.00
1011.7

311 D=55'

R/W

8 318

℄ AKRON-BARBERTON BELT R.R.

I I

℄ RAMP E-9

AHEAD

D=65' 8 3451

38:1

1032.0

PROPOSED WINGWALL

31

MATCH LINE I-76 EASTBOUND X-SECTIONS SEE SHEET 349.

AHD. 0 1943

EARTHWORK STA. 9+35

EX. RAMP 'E-9'

PG. 1033.39
9+45.00
1004.5

SKEWED WITH BRIDGE ABUTMENT

RAMP E9
STA 9+45 TO STA 10+00

1030 1025 1020 1015 1010 1005 1000

-70 -60 -50 -40 -30 -20 -10 0 10 20 30 40 50 60 70

PLATE 3, CROSS SECTION
KISHPAUGH & COTOR CO.

CALCULATED BY BTB DATE 3/90
CHECKED BY DSB DATE 7/90

FHWA REG	STATE	PROJECT
5	OHIO	

424
12.14

SUM - 76 - 11.57
IR - 76 - 2(44)19

END CUT	AREA FILL	CU. CUT	YDS. FILL

SEEDING
END WIDTH 80. YARDS

MATCH LINE MARTHA AVE X-SECTIONS SEE SHEET 350.

℄ RAMP 'E-9'

EX. RAMP E-9'

5:1

2:1

126

P.G. 1028.93
11+00.00
1015.6

R/W

6 862

731

MATCH LINE I-76 EASTBOUND X-SECTIONS SEE SHEET 351.

℄ RAMP 'E-9'

EX. RAMP 'E-9'

5.1:1

2:1

137

536

P.G. 1030.62
10+50.00
1014.1

R/W

41 1913

38 1204

43 1965

268

1030
1025
1020
1015
1010
1005
1000

-70 -60 -50 -40 -30 -20 -10 0 10 20 30 40 50 60 70

RAMP E9
STA 10+50 TO STA 11+00

PLATE 2. CROSS SECTION
CRIPPLE & PRIOR CO.

CALCULATED BY BJB DATE 3/90
CHECKED BY DSB DATE 7/90

FHWA REG	STATE	PROJECT	425 / 12.14
5	OHIO		

SUM - 76 - 11.57
IR - 76 - 2(44)19

SEEDING
END WIDTH 59 SQ. YARDS

END CUT	AREA FILL	CU. CUT	YDS. FILL
20	115		
46	304		
30	213		
56	552		
31	383		
64	355		
38	648		
41	1398		

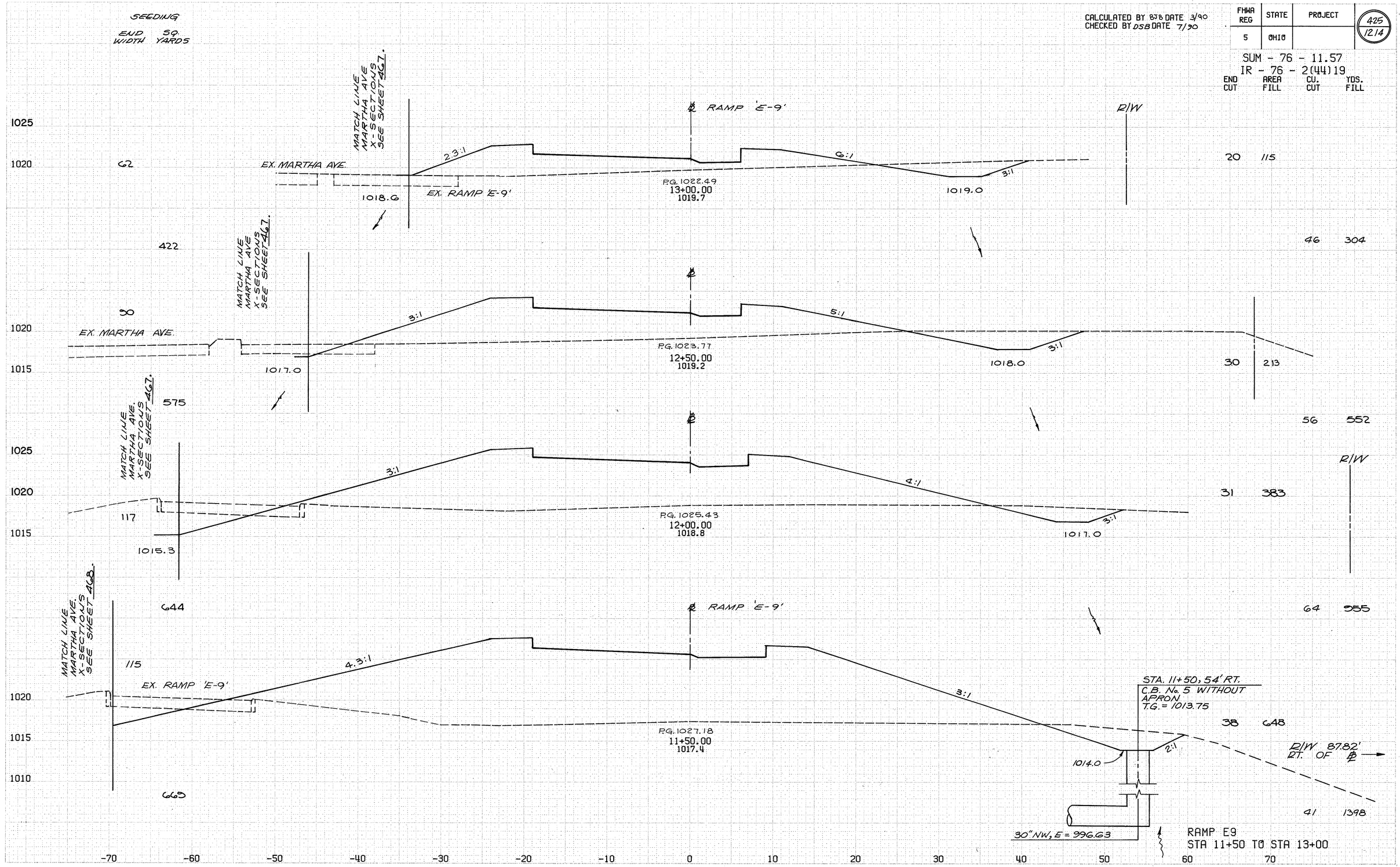

PLATE 3, CROSS SECTION
KRUTTER & ENGEL CO.

CALCULATED BY BJB DATE 3/90
CHECKED BY DSB DATE 7/90

FHWA REG	STATE	PROJECT	426 1214
5	OHIO		

SUM - 76 - 11.57
IR - 76 - 2(44)19

SEEDING

	END WIDTH	SQ. YARDS
1025		
1020	27	
		38
1025		
1020	35	
		144
1025		
1020	17	
		108
1025		
1020	22	
		175
1025		
1020	41	
		286

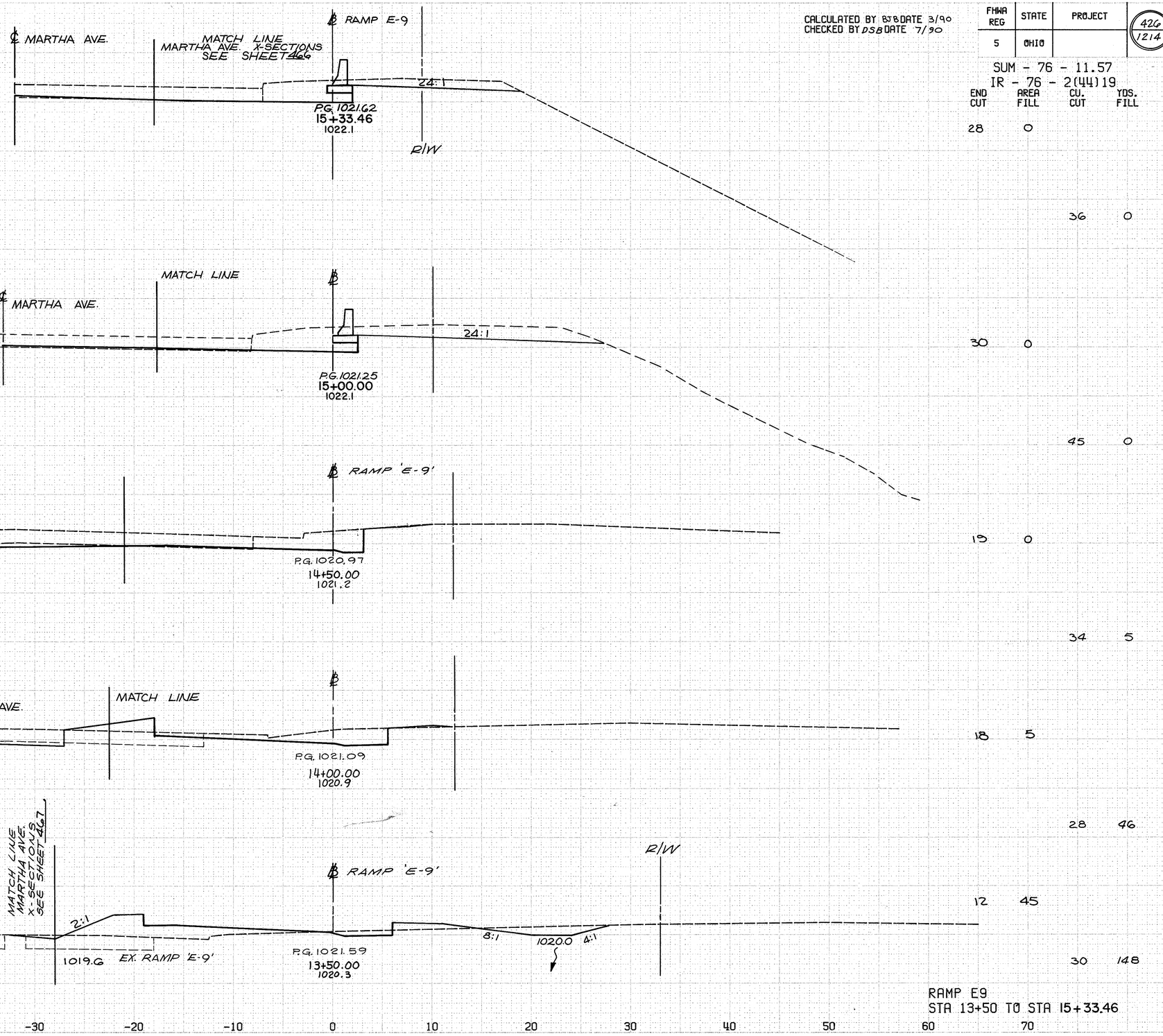

END CUT	AREA FILL	CU. CUT	YDS. FILL
28	0		
		36	0
30	0		
		45	0
19	0		
		34	5
18	5		
		28	46
12	45		
		30	148

RAMP E9
STA 13+50 TO STA 15+33.46

-70 -60 -50 -40 -30 -20 -10 0 10 20 30 40 50 60 70

CALCULATED BY BJB DATE 3/90
CHECKED BY DSB DATE 7/90

FHWA REG	STATE	PROJECT
5	OHIO	

427 / 1214

SUM - 76 - 11.57
IR - 76 - 2(44)19

END	AREA	CU.	YDS.
CUT	FILL	CUT	FILL

SEEDING

END WIDTH | SQ. YARDS

NOTE: QUANTITY BREAK LINE-QBL
SEE NOTE SHEET 89.

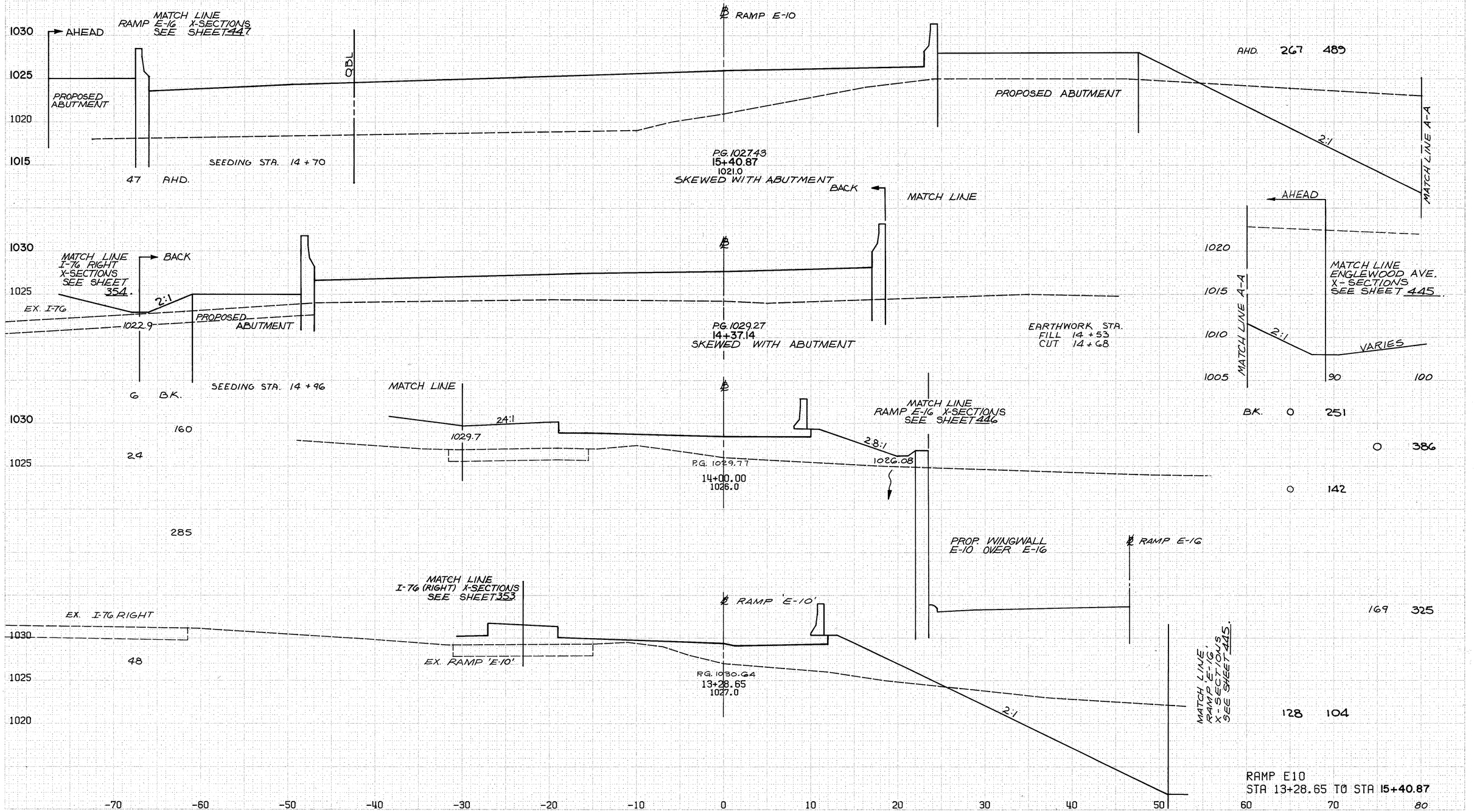

RAMP E10
STA 13+28.65 TO STA 15+40.87

SEEDING

END AREA SQ. YARDS
WIDTH

CALCULATED BY BJB DATE 3/90
CHECKED BY DSB DATE 7/90

FHWA REG	STATE	PROJECT
5	OHIO	

428
1214

SUM - 76 - 11.57
IR - 76 - 2(44)19

END CUT AREA	FILL AREA	CU. CUT YDS.	FILL YDS.
665	1234	674	

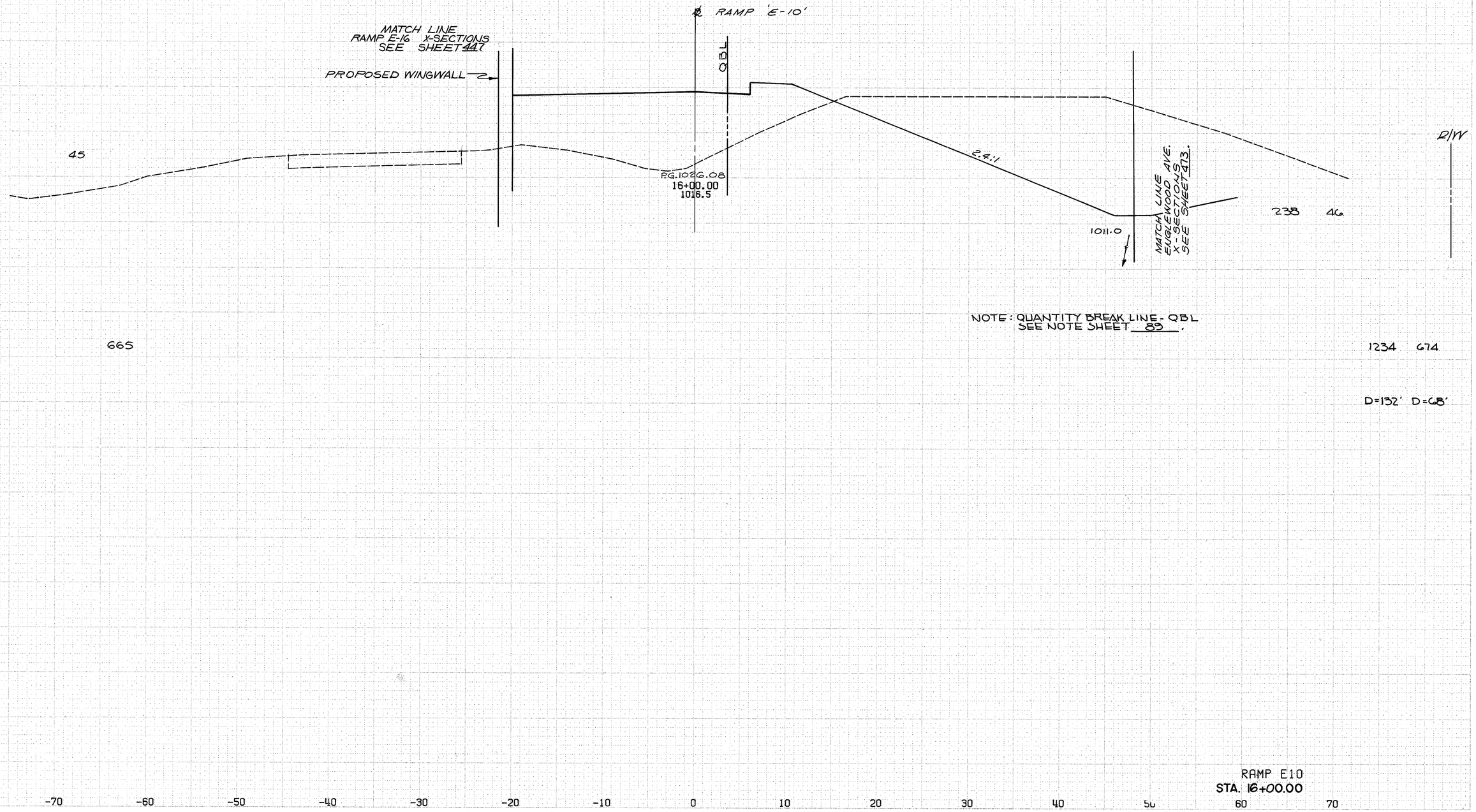

NOTE: QUANTITY BREAK LINE - QBL
SEE NOTE SHEET 89 .

1234 674

D=132' D=68'

RAMP E10
STA. 16+00.00

PLATE 3, CROSS SECTION
KRUMPE & SIEMS CO.

CALCULATED BY BJB DATE 3/90
CHECKED BY DSB DATE 7/90

FHWA REG	STATE	PROJECT
5	OHIO	

429
1214

SUM - 76 - 11.57
IR - 76 - 2(44)19

END	AREA	CU.	YDS.
CUT	FILL	CUT	FILL

SEEDING
END SQ.
WIDTH YARDS

PROPOSED RETAINING WALL
NO.10 FOR DETAILS
SEE SHEET 713.

STA. 17+50, 20' LT., RAMP E-10
INLET No. I-3 AS PER PLAN
GUT. EL. = 1020.78

℄ RAMP 'E-10'

STA. 17+50, 41.5' RT. RAMP E-10
C.B. NO. 2-3
T.G. = 1007.00

MATCH LINE
RAMP 'E-16'
X-SECTIONS
SEE SHEET 448.

QBL

34'-15" TYPE B, 707.13 @ 2.00 %

P 130

1015.25

23'-15" TYPE B, 707.13 @ 49.74 %

2:1

LA R/W

MATCH LINE
ENGLEWOOD AVE.
X-SECTIONS
SEE SHEET 422.

℄ PROP. DRIVEWAY

℄ RAMP 'E-16'

4.8:1

4.5:1

1006.7

P.G. 1021.66

17+50.00
1007.6

EX. CAMBRIDGE ST.

1007.0

6" U.D. W. = 1019.70
15" S. = 1015.92

1003.81

48'-15" TYPE 'B' @ 2.60 %
(FOR CONT. SEE SEWER
PROFILE SHEET No. 541.)

3'-15" TYPE B, 707.13 @ 2.00 %

P 134

15" N.S. = 1003.75
12" W. = 1004.00

PROP. 12" W.M.

1020
1015
1010
1005

54 270 6 361 10 648

MATCH LINE
RAMP 'E-16'
X-SECTIONS
SEE SHEET 448.

℄ RAMP 'E-16'

QBL

2:1

MATCH LINE

LA R/W

1005.6

P.G. 1023.29

17+00.00
1008.5

1010.0

PROP.
12" W.M.

1020
1015
1010
1005

43 5 339 5 584

NOTE: QUANTITY BREAK LINE QBL
SEE NOTE SHEET 89.

PROPOSED RETAINING WALL
NO.10 FOR DETAILS
SEE SHEET 713.

℄ RAMP 'E-10'

MATCH LINE
RAMP 'E-16'
X-SECTIONS
SEE SHEET 448.

QBL

2:1

MATCH LINE
ENGLEWOOD AVE.
X-SECTIONS
SEE SHEET 474.

LA R/W

℄ ENGLEWOOD AVE

1012.0

P.G. 1024.76

16+50.00
1010.0

℄ RAMP 'E-16'

4.8:1

6:1

1006.0

PROP.
12" W.M.

1020
1015
1010
1005

225 5 292 225 313 38 231

-70 -60 -50 -40 -30 -20 -10 0 10 20 30 40 50 60 70

RAMP E10
STA 16+50 TO STA 17+50

PLATE 3, CROSS SECTION
KRAMER & ESSER CO.

CALCULATED BY BJB DATE 3/90
CHECKED BY DSB DATE 7/90

FHWA REG	STATE	PROJECT
5	OHIO	

430 / 1214

SUM - 76 - 11.57
IR - 76 - 2(44)19

SEEDING

END WIDTH | SQ. YARDS

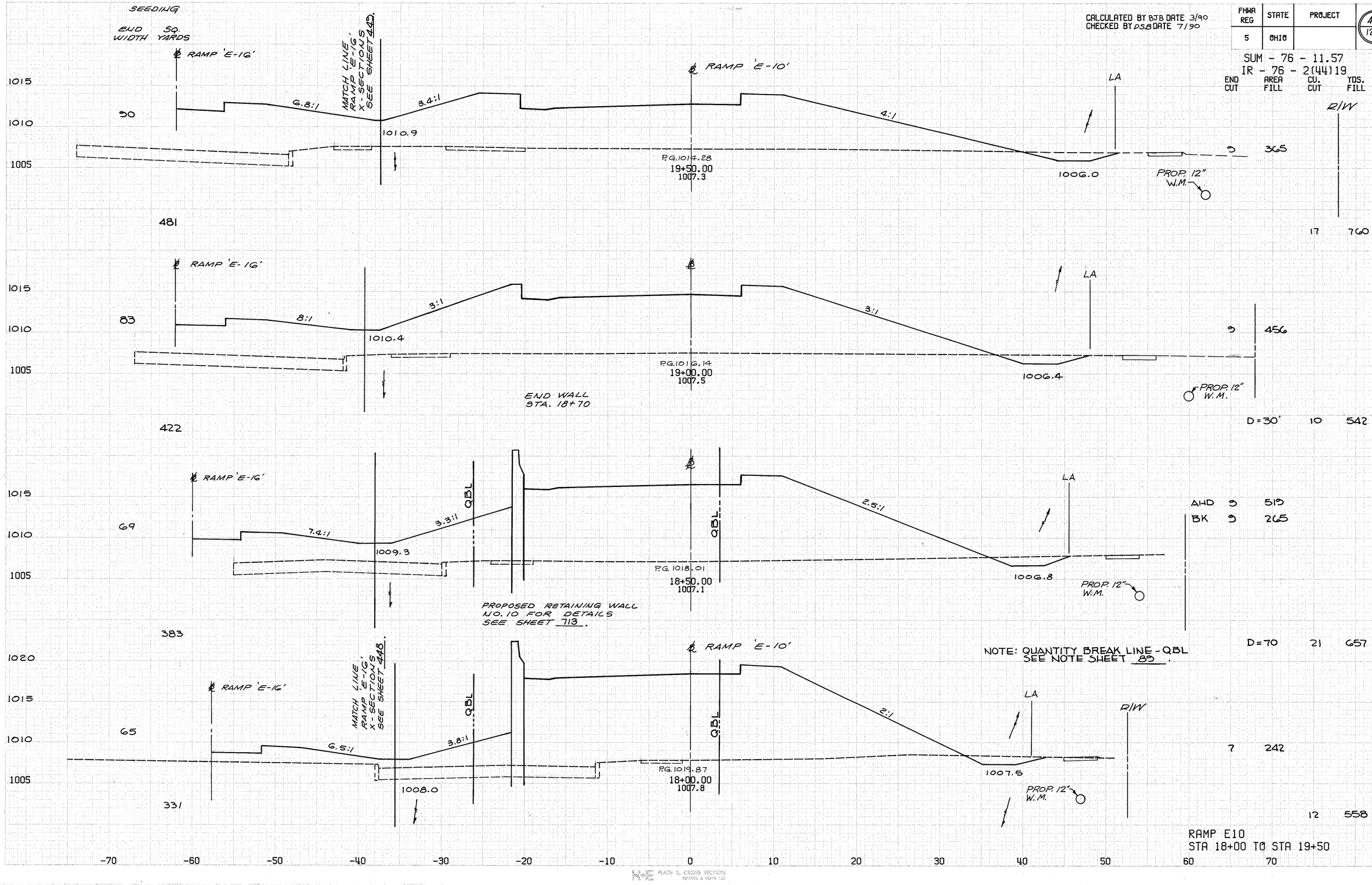

	END CUT	AREA FILL	CU. CUT	YDS. FILL
	9	365		
R/W				
	17	760		
	D=30'	10	542	
AHD	9	519		
BK	9	265		
	D=70	21	657	
	7	242		
	12	558		

NOTE: QUANTITY BREAK LINE - QBL SEE NOTE SHEET 85.

RAMP E10
STA 18+00 TO STA 19+50

PLATE 3, CROSS SECTION
RUSSELL & ASSOC. CO.

CALCULATED BY BJB DATE 3/90
CHECKED BY DSB DATE 7/90

FHWA REG	STATE	PROJECT	431 / 1214
5	OHIO		

SUM - 76 - 11.57
IR - 76 - 2(44)19

SEEDING
END WIDTH 50 YARDS

RAMP 'E-16'

MATCH LINE RAMP 'E-16' X-SECTIONS SEE SHEET 451.

RAMP 'E-10'

END CUT	AREA FILL	CU. CUT	YDS. FILL
406	70	9	185
436	76	49	233
475	81	59	271
500	90	25	526
		7	342
		15	655

1015 / 1010 / 1005

2:1 · 8:1 · 7:1 · 4:1 · 6.5:1 · 3.7:1 · 7.7:1 · 5:1 · 5.1:1 · 5.3:1 · 4.2:1

1007.5 · 1008.0 · 1010.0 · 1010.8

P.G. 1006.82
21+50.00
1003.0

P.G. 1008.69
21+00.00
1007.2

P.G. 1010.55
20+50.00
1006.2

P.G. 1012.42
20+00.00
1006.0

1002.0 · 1004.0 · 1004.5 · 1005.0

4"G.

LA

R/W 94.70' RT. OF ℄

R/W 90.50' RT. OF ℄

R/W

PROP. 12" W.M.

STA. 20+00, 26' LT.
M.H. No. 1
T.C. = 1012.40

STA. 20+00, 19' LT.
INLET No. I-2A-10
GUTTER EL. = 1011.90

15" S.E. = 1006.84

6'-5" TYPE 'C' @ 1.00%

15" N. = 1006.90
6" U.D. = 1007.65

RAMP E10
STA 20+00 TO STA 21+50

-70 -60 -50 -40 -30 -20 -10 0 10 20 30 40 50 60 70

CALCULATED BY BJB DATE 3/90
CHECKED BY DSB DATE 7/90

FHWA REG	STATE	PROJECT	432 / 1214
5	OHIO		

SUM - 76 - 11.57
IR - 76 - 2(44)19

SEEDING

END WIDTH	SQ. YARDS

END CUT	AREA FILL	CU. CUT	YDS. FILL

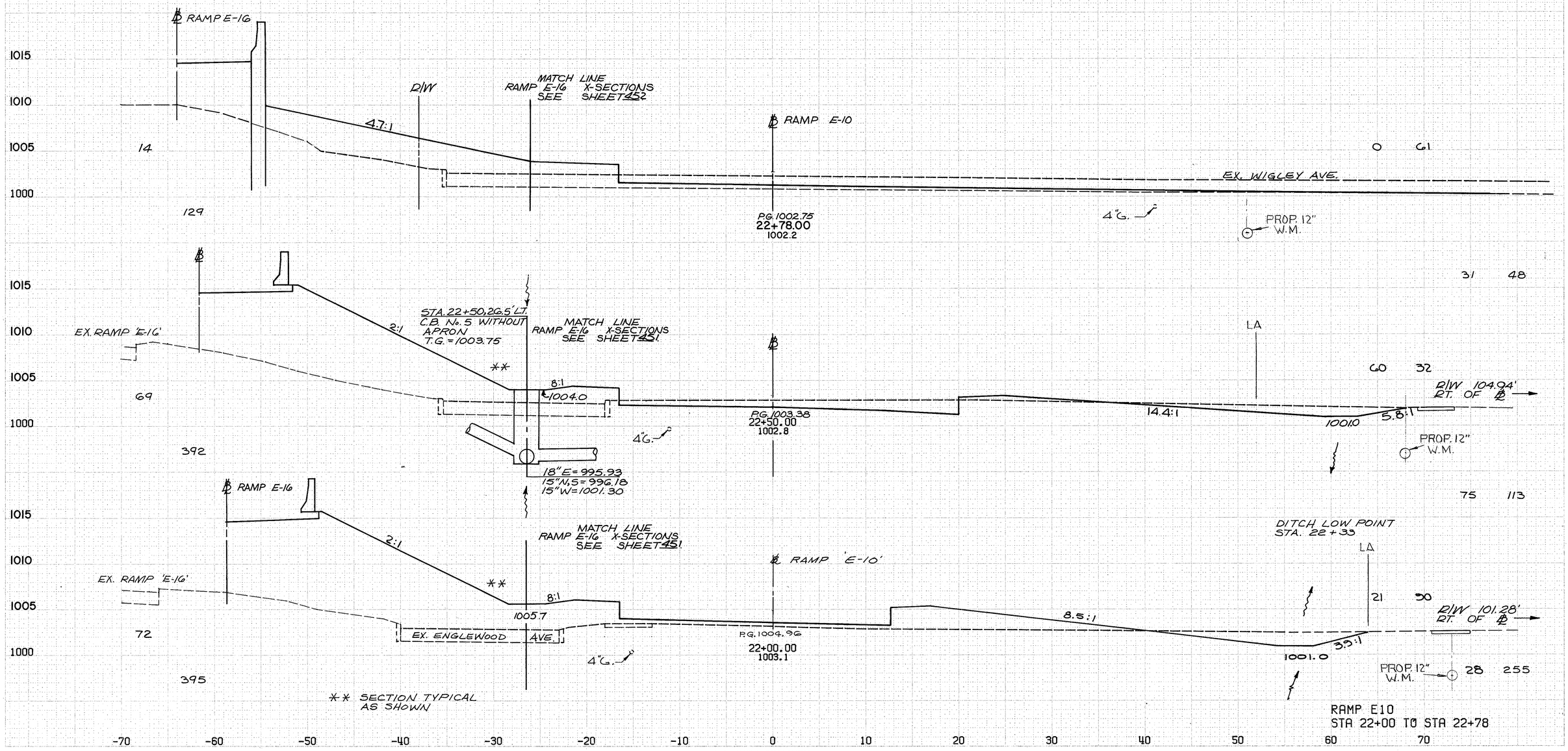

RAMP E10
STA 22+00 TO STA 22+78

PLATE 5, CROSS SECTION
KRUEGER & EISER CO.

CALCULATED BY BJB DATE 3/90
CHECKED BY DSB DATE 7/90

FHWA REG	STATE	PROJECT	433/1214
5	OHIO		

SUM - 76 - 11.57
IR - 76 - 2(44)19

END CUT	AREA FILL	CU. CUT	YDS. FILL

SEEDING
END SQ.
WIDTH YARDS

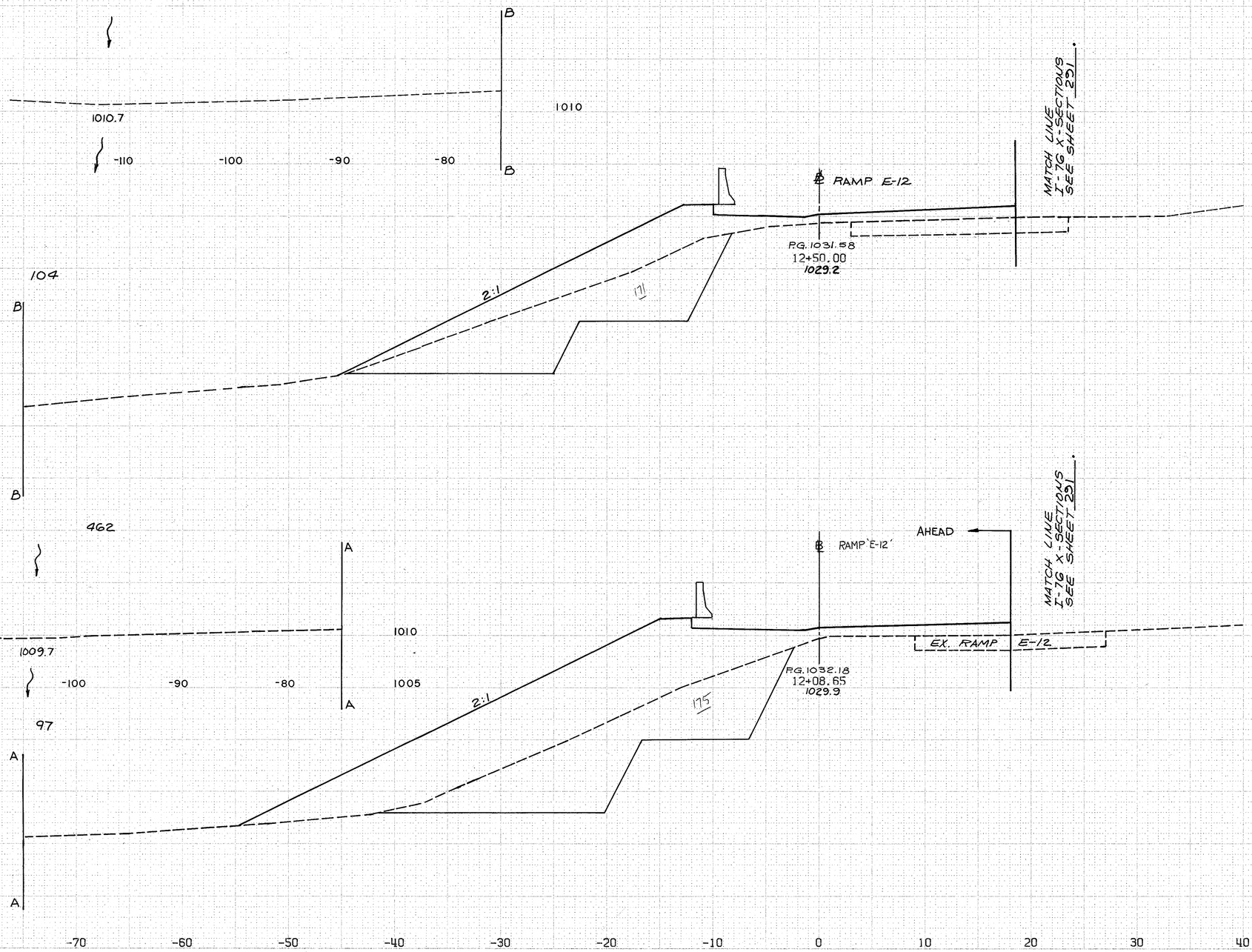

RAMP E12
STA 12+08.65 TO STA 12+50

PLATE 3, CROSS SECTION

CALCULATED BY BJB DATE 3/90
CHECKED BY DSB DATE 7/90

FHWA REG	STATE	PROJECT
5	OHIO	

434
12.14

SUM - 76 - 11.57
IR - 76 - 2(44)19

SEEDING
END SQ.
WIDTH YARDS

RAMP E-12

EX. RAMP E-12

PG 1025.87
14+50.00
1018.9

PG 1027.74
14+00.00
1021.9

PG 1029.31
13+50.00
1024.7

PG 1030.60
13+00.00
1027.5

END CONC. BARRIER TYPE D AS PER PLAN STA. 13+00. FOR BARRIER FLAIR DETAIL SEE SHEET 151.

RAMP 'E-12'

MATCH LINE STA. 16+50 RAMP E-12

MATCH LINE STA. 16+50 RAMP E-12'

MATCH LINE 4-4

MATCH LINE 3-3

MATCH LINE 2-2

MATCH LINE 1-1

MATCH LINE 5-5

MATCH LINE I-76 LEFT X-SECTIONS SEE SHEET 229

MATCH LINE I-76 LEFT X-SECTIONS SEE SHEET 232

MATCH LINE RAMP E-13 X-SECTIONS SEE SHEET 440

MATCH LINE

4'-0" DITCH

6.6:1
5.5:1
3:1
35:1

D = 60.5'

END CUT	AREA FILL	CU. CUT	YDS. FILL
		18	777
		7	445
		12	667
		6	274
		6	442
		0	203
		0	315

RAMP E12
STA 13+00 TO STA 14+50

CALCULATED BY BJB DATE 3/90
CHECKED BY DSB DATE 7/90

FHWA REG	STATE	PROJECT	435 12.14
5	OHIO		

SUM - 76 - 11.57
IR - 76 - 2(44)19

SEEDING
END SQ.
WIDTH YARDS

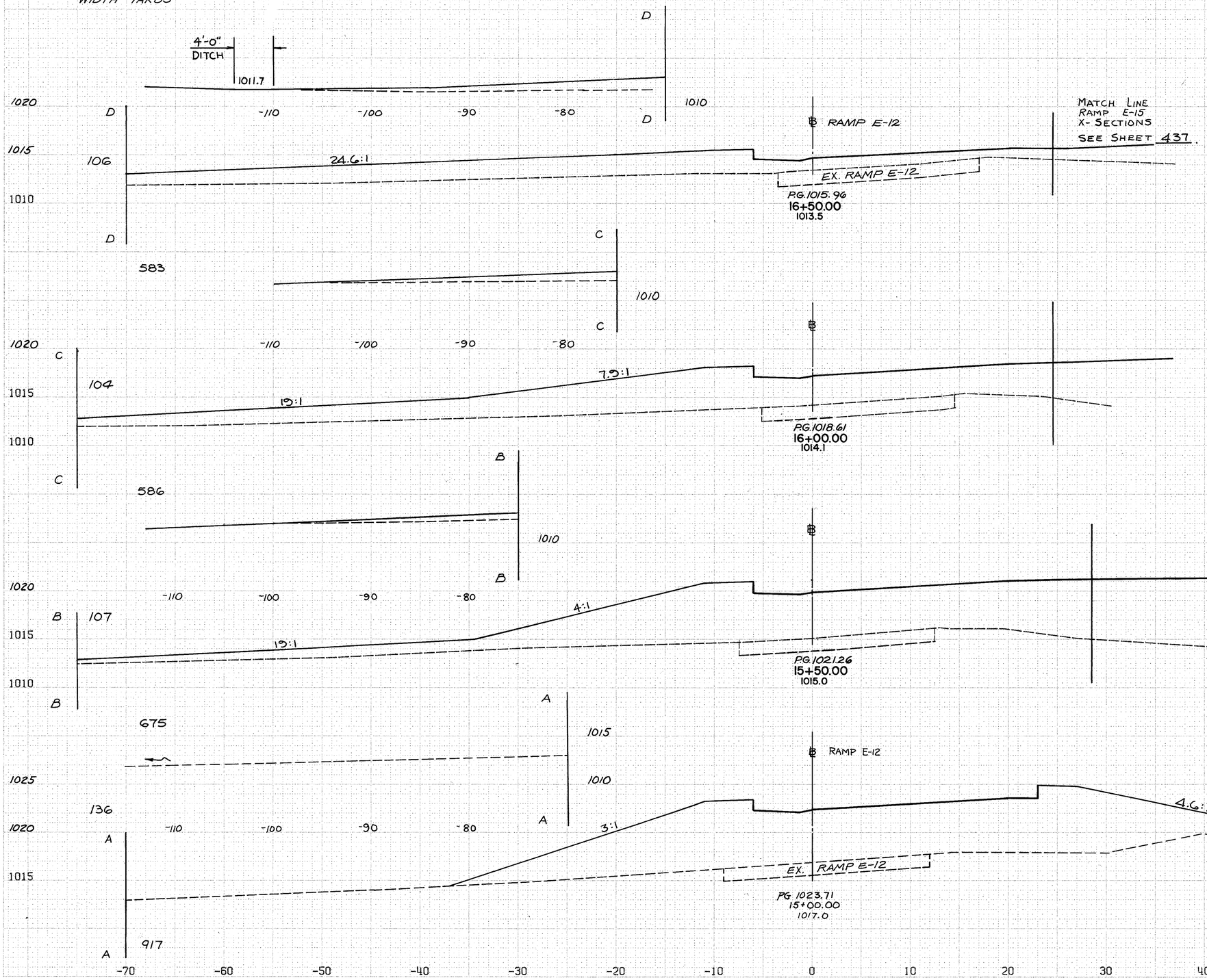

END CUT	AREA FILL	CU. CUT	YDS. FILL
0	214		
		D=40' 0	379
0	297		
		D=45' 0	539
0	350		
		0	725
0	433		
		D=55.5' 20	1333

RAMP E12
STA 15+00 TO STA 16+50

PLATE 3, CROSS SECTION
HARPER & ESSER CO.

CALCULATED BY BJB DATE 3/90
CHECKED BY DSB DATE 7/90

FHWA REG	STATE	PROJECT
5	OHIO	

436 / 1214

SUM - 76 - 11.57
IR - 76 - 2(44)19

SEEDING
END SQ.
WIDTH YARDS

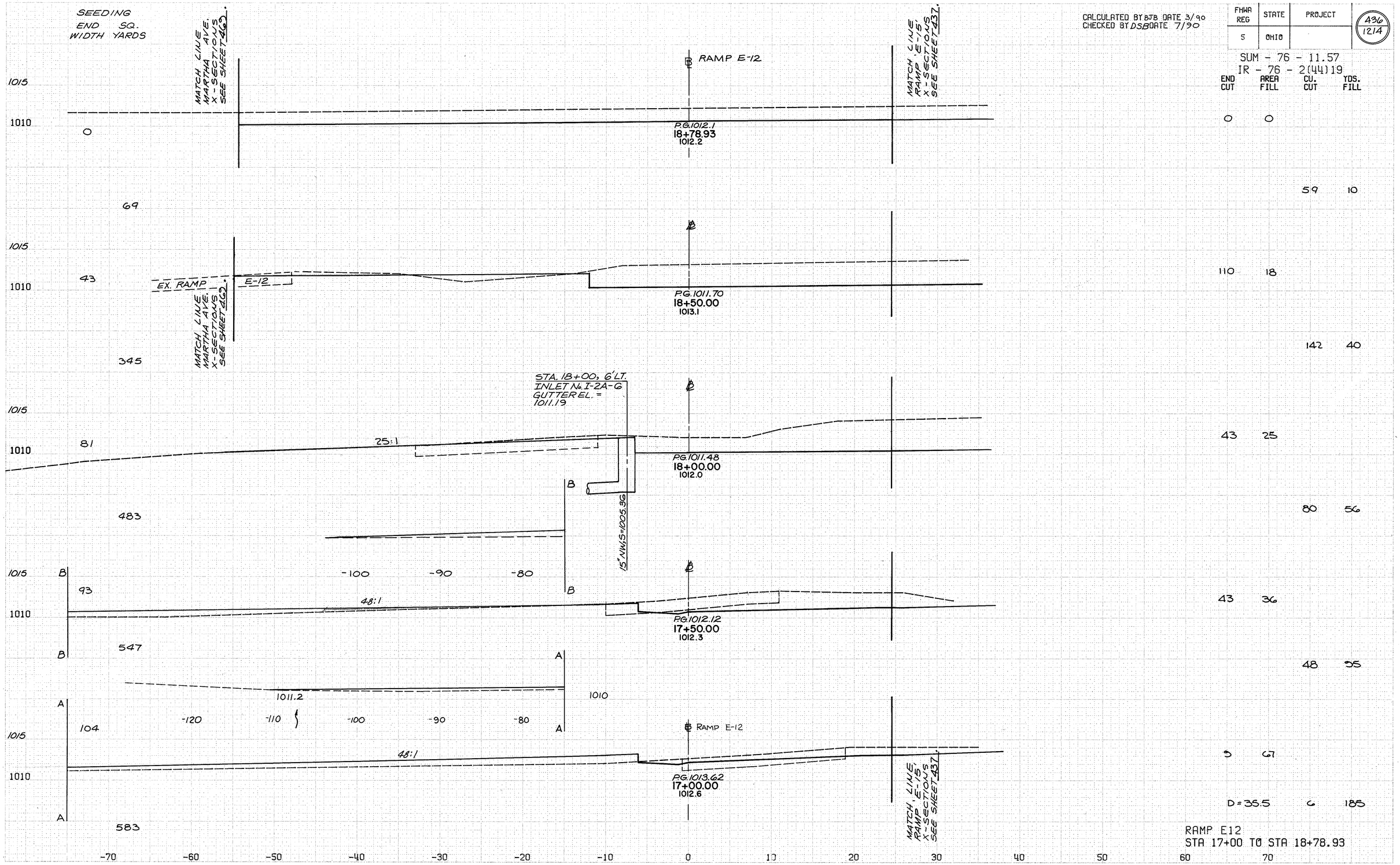

END CUT	AREA FILL	CU. CUT	YDS. FILL
0	0		
		59	10
110	18		
		142	40
43	25		
		80	56
43	36		
		48	55
9	67		
		D = 35.5	6 185

RAMP E12
STA 17+00 TO STA 18+78.93

PLATE 8, CROSS SECTION
KEMPER & EWIN CO.

CALCULATED BY BJB DATE 3/90
CHECKED BY DSB DATE 7/90

FHWA REG	STATE	PROJECT
5	OHIO	

437
12 14

SUM - 76 - 11.57
IR - 76 - 2(44)19

SEEDING

END WIDTH	SQ YDS.
1020	
1015	51
1010	
	258
1015	42
1010	
	158
1015	15
1010	
	100
1015	21
1010	
	163
1015	40
1010	
	56
1010	
0	
1015	A
1010	A

END CUT	AREA FILL	CU. CUT	YDS. FILL
0	75		
26	72		
28	3		
97	3		
77	0		
208	0		
148	0		
271	0		
145	0		
68	0		
0	0		

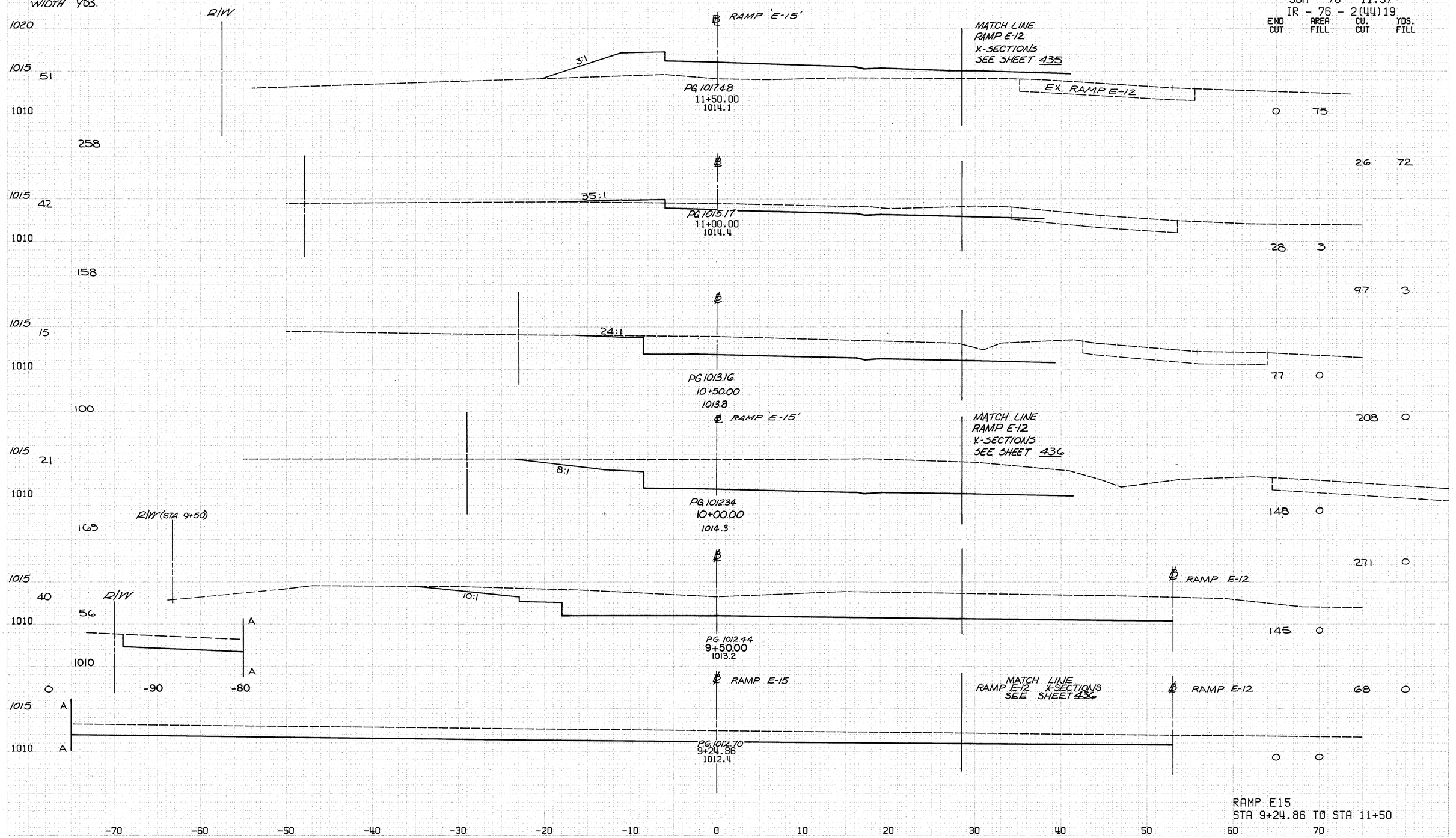

RAMP E15
STA 9+24.86 TO STA 11+50

PLATE 2 CROSS SECTION

CALCULATED BY BJB DATE 3/90
CHECKED BY DSB DATE 7/90

FHWA REG	STATE	PROJECT
5	OHIO	

438
1214

SUM - 76 - 11.57
IR - 76 - 2(44)19

SEEDING
END WIDTH SQ. YDS.

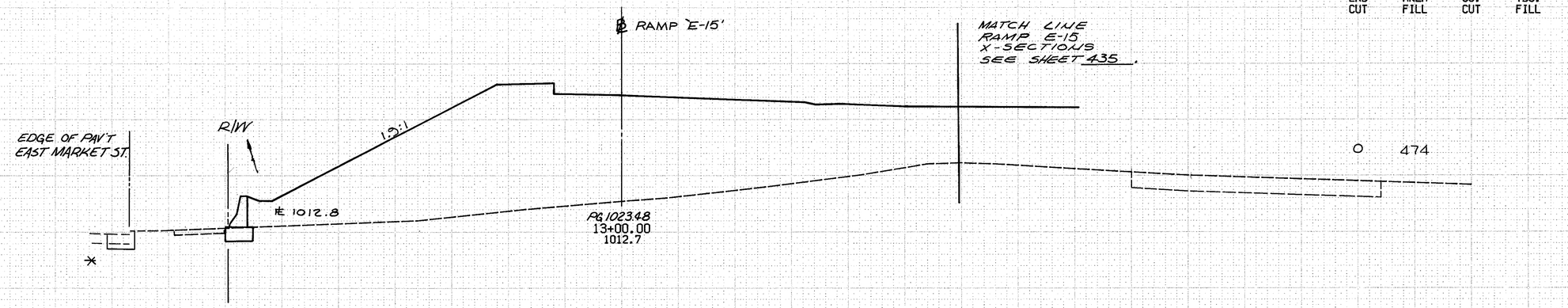

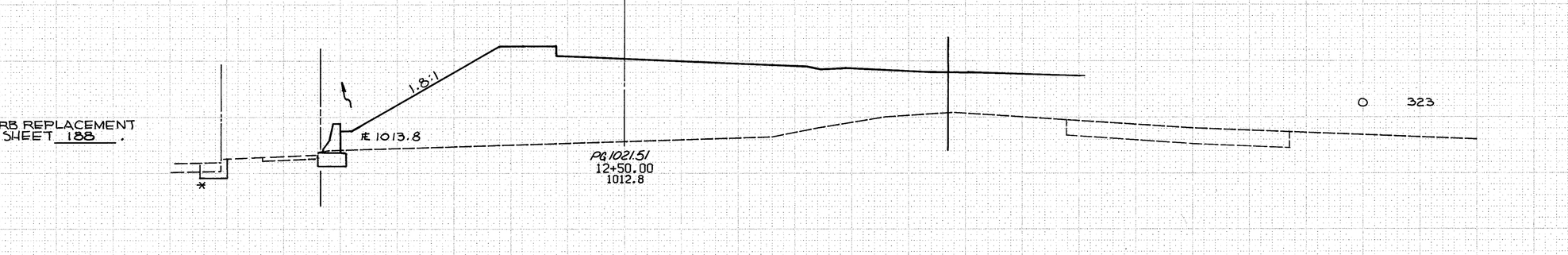

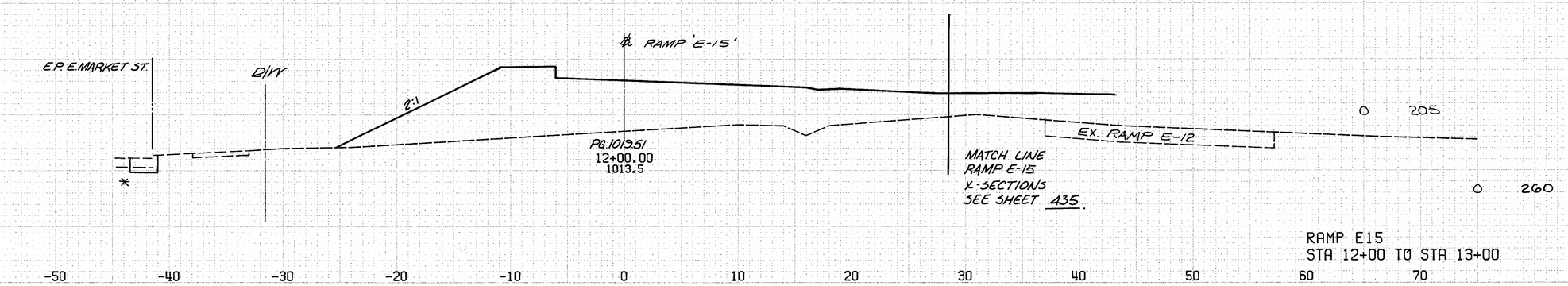

RAMP E15
STA 12+00 TO STA 13+00

-70 -60 -50 -40 -30 -20 -10 0 10 20 30 40 50 60 70

PLATE 3, CROSS SECTION
KEUFFEL & ESSER CO.

CALCULATED BY BJB DATE 3/90
CHECKED BY DSB DATE 7/90

FHWA REG	STATE	PROJECT
5	OHIO	

439
12.14

SUM - 76 - 11.57
IR - 76 - 2(44)19

SEEDING
END WIDTH — SQ. YDS.

END CUT	AREA FILL	CU. CUT	YDS. FILL
4	835		
4	1473		
0	756		
0	1139		

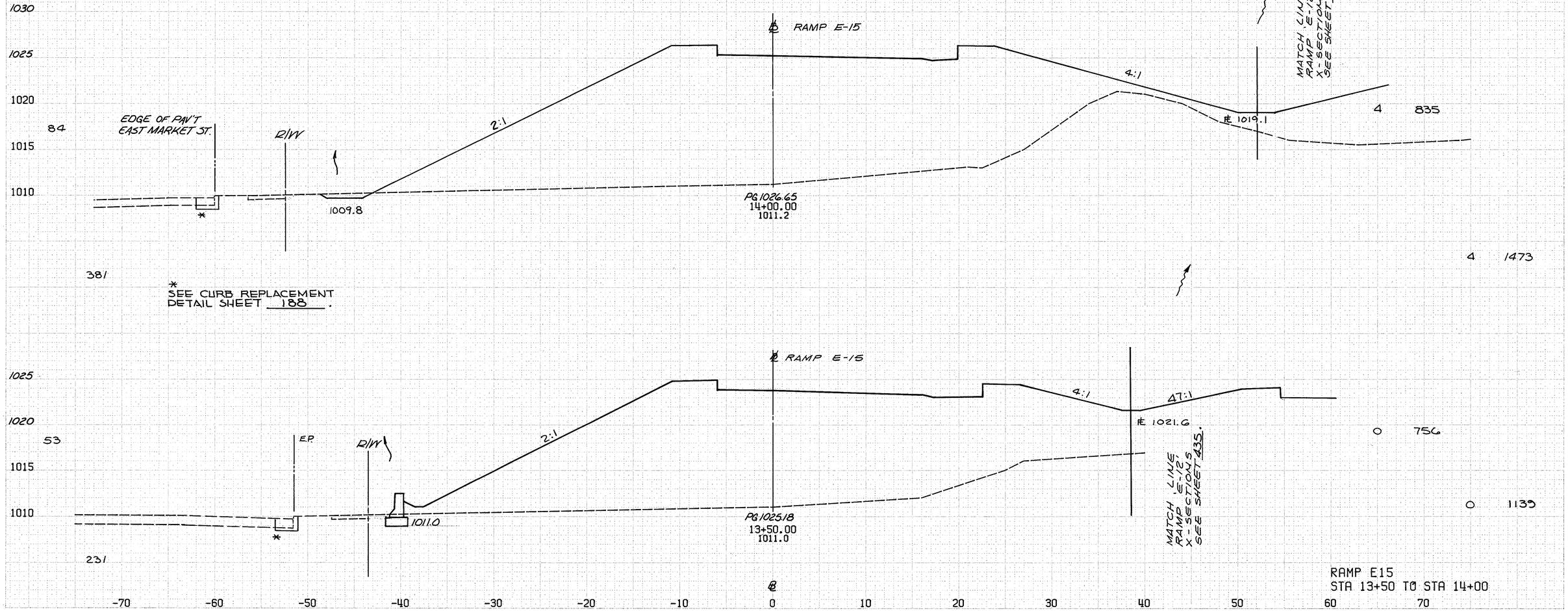

RAMP E15
STA 13+50 TO STA 14+00

PLATE 3, CROSS SECTION
KOPPEL & GRAY CO.

FHWA REG	STATE	PROJECT
5	OHIO	

440
12/14

CALCULATED BY BJS DATE 3/90
CHECKED BY DSB DATE 7/90

SUM - 76 - 11.57
IR - 76 - 2(44)19

SEEDING
END SQ.
WIDTH YARDS

1030
1025
1020
1015
1010

149

RIW

2:1

2:1 24:1

1008.10

℄ RAMP E-15

P.G. 1029.63
15+50.00
1010.1

MATCH LINE
I-76 LEFT X-SECTIONS
SEE SHEET 233.

4:1

B B

END CUT	AREA FILL	CU. CUT	YDS. FILL
1015			
B			
	1011.1	VAR.	

80 90 100

1556

35 2451

797

1030
1025
1020
1015
1010

138

E.P.

2:1

1010.5

℄

4:1

MATCH LINE
RAMP E-12 X-SECTIONS
SEE SHEET 434

A A

1015
1010

VARIES

1013.0

90 100

P.G. 1028.87
15+00.00
1014.1

29 1051

1013.0

32 1895

697

* SEE CURB REPLACEMENT DETAIL SHEET 188.

1025
1020
1015
1010

113

E.P. MARKET ST.

RIW

STA. 14+50, 49' LT.
C.B.N. 5 WITHOUT APRON
T.G. = 1009.35

2:1

1009.6

15"N = 1001.89
15"S = 1005.92

547

℄ RAMP 'E-15'

P.G. 1027.88
14+50.00
1011.8

6 996

4:1

MATCH LINE
RAMP E-12 X-SECTIONS
SEE SHEET 434

VARIES

1015.9

3 1695

RAMP E15
STA 14+50 TO STA 15+50

-70 -60 -50 -40 -30 -20 -10 0 10 20 30 40 50 60 70

K-5 PLATE 3, CROSS SECTION
KRUEGER & DEER CO.

CALCULATED BY BJB DATE 3/90
CHECKED BY DSB DATE 7/90

FHWA REG	STATE	PROJECT
5	OHIO	

441 / 1214

SUM - 76 - 11.57
IR - 76 - 2(44)19

SEEDING
END SQ.
WIDTH YARDS

END CUT | AREA FILL | CU. CUT | YDS. FILL

℄ RAMP 'E-15'

1030
1025
1020
1015
1010

157
2:1
24:1
2:1
2:1
1007.6
←R/W -105.09' LT. OF ℄
PG 1030.46
17+00.00
1008.9
3.6:1
MATCH LINE I-76 X-SECTIONS SEE SHEET 234
VARIES
℄ 1018.8
11 1854

850
155
2:1
24:1
2:1
1007.8
←R/W -96.60' LT. OF ℄
PG 1030.42
16+50.00
1008.9
4.4:1
℄ 1017.7
10 2021

861
155
2:1
24:1
2:1
1007.9
←R/W -87.76' LT. OF ℄
PG 1030.14
16+00.00
1009.5
844
4:1
1015
1010
MATCH LINE
A
4:1
℄ 1014.0
MATCH LINE I-76 X-SECTIONS SEE SHEET 233
VAR.
19 3608
80
90
10 1875
A 18 3214

RAMP E15
STA 16+00 TO STA 17+00

-70 -60 -50 -40 -30 -20 -10 0 10 20 30 40 50 60 70

PLATE 3, CROSS SECTION
SEIPLE & RIGEN CO.

CALCULATED BY BJB DATE 3/90
CHECKED BY DSB DATE 7/90

FHWA REG	STATE	PROJECT
5	OHIO	

442 / 1214

SUM - 76 - 11.57
IR - 76 - 2(44)19

SEEDING
END SQ
WIDTH YARDS

END CUT	AREA FILL	CU. CUT	YDS. FILL
135		8	1325
775		15	2776
144		8	1673
808		15	3224
147		8	1809
828		18	3392

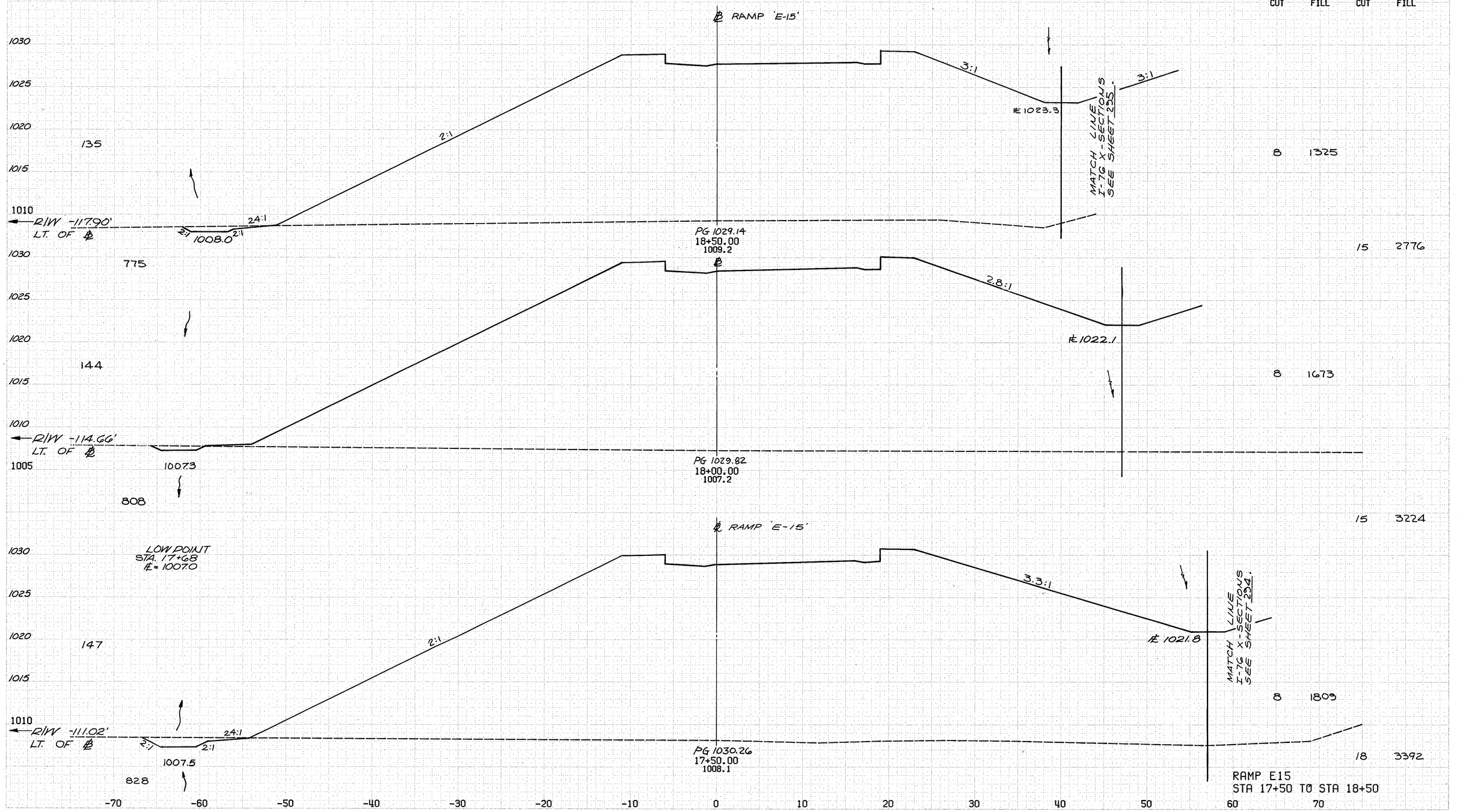

RAMP E15
STA 17+50 TO STA 18+50

PLATE 3, CROSS SECTION

CALCULATED BY BJB DATE 3/90
CHECKED BY DSB DATE 7/90

FHWA REG	STATE	PROJECT
5	OHIO	

443
1214

SUM - 76 - 11.57
IR - 76 - 2(44)19

END CUT	AREA FILL	CU. CUT	YDS. FILL
8	888		
13	1733		
12	584		
21	1947		
10	1119		
17	2263		

SEEDING
END SQ.
WIDTH YARDS

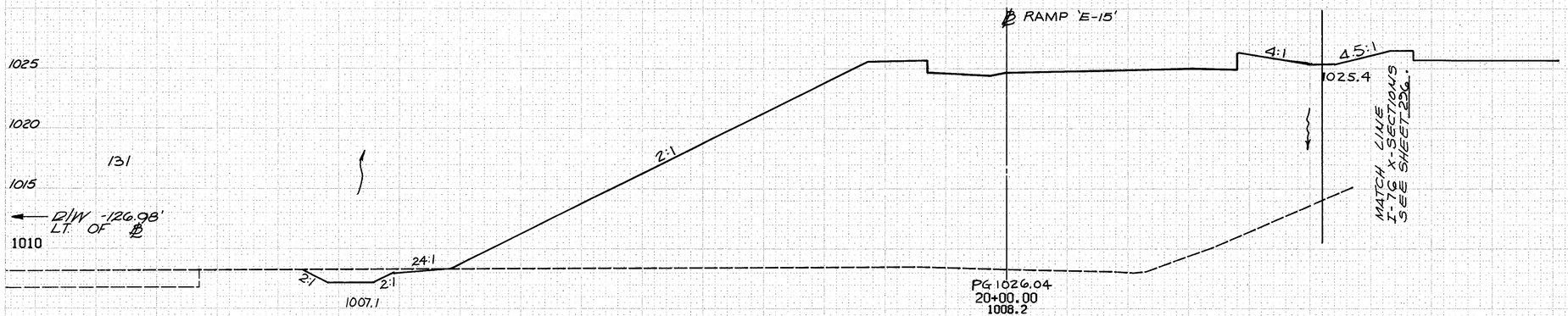

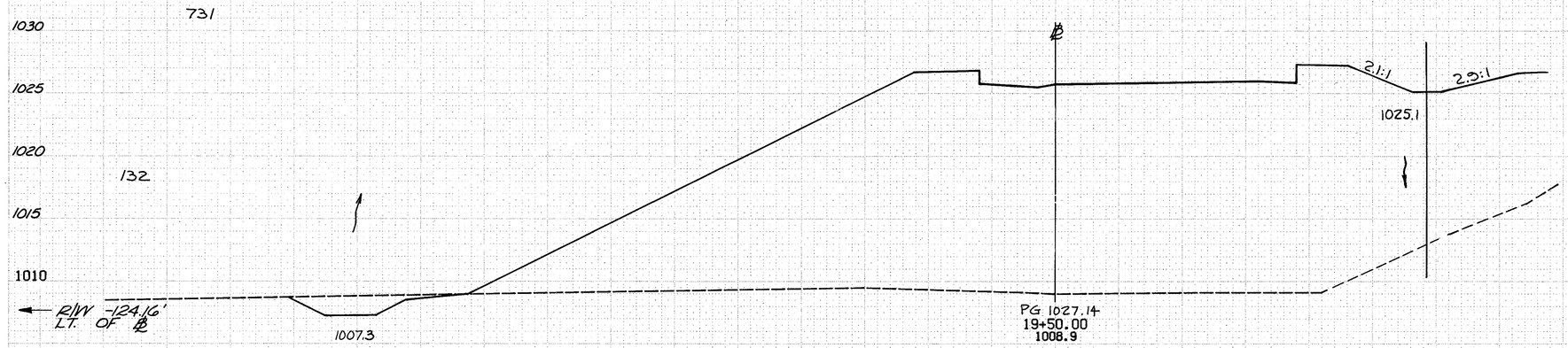

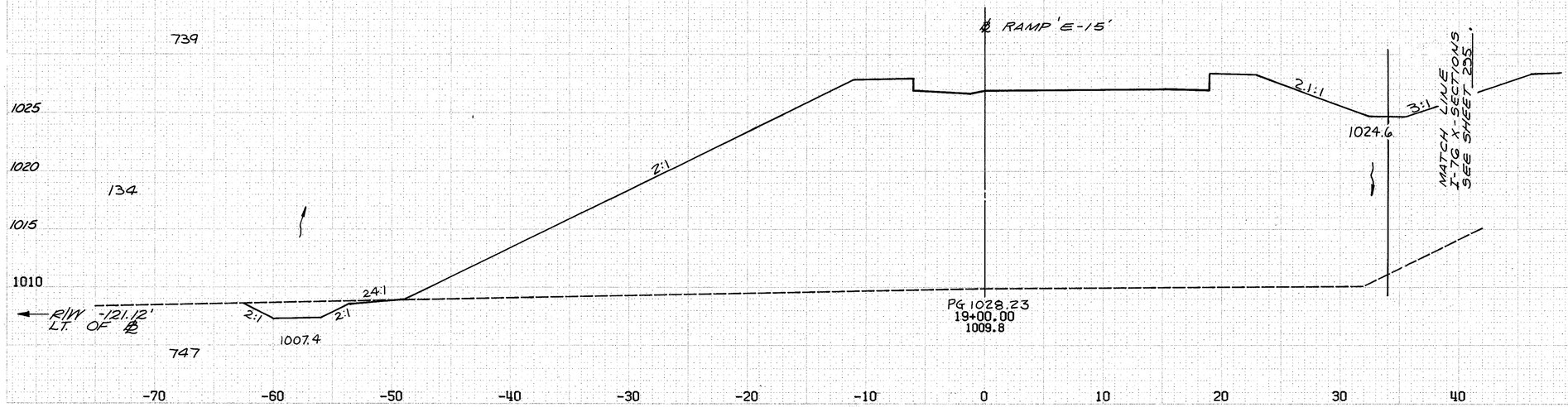

RAMP E15
STA 19+00 TO STA 20+00

-70 -60 -50 -40 -30 -20 -10 0 10 20 30 40 50 60 70

K&E PLATE 3, CROSS SECTION
CRUPPER & FISHER CO

SEEDING
END SQ.
WIDTH YARDS

CALCULATED BY BJB DATE 3/90
CHECKED BY DSB DATE 7/90

FHWA REG	STATE	PROJECT	444 12.14
5	OHIO		

SUM - 76 - 11.57
IR - 76 - 2(44)19

END CUT	AREA FILL	CU. CUT	YDS. FILL

ORIGINAL SURVEY: ESTIMATED, FIELD, FROM TO, DATE, NOTE BOOK, INSPECTOR, AREAS CHECKED, DATE

FINAL SURVEY: ESTIMATED, PLOTTED, FROM TO, DATE, NOTE BOOK, INSPECTOR, AREAS CHECKED, DATE

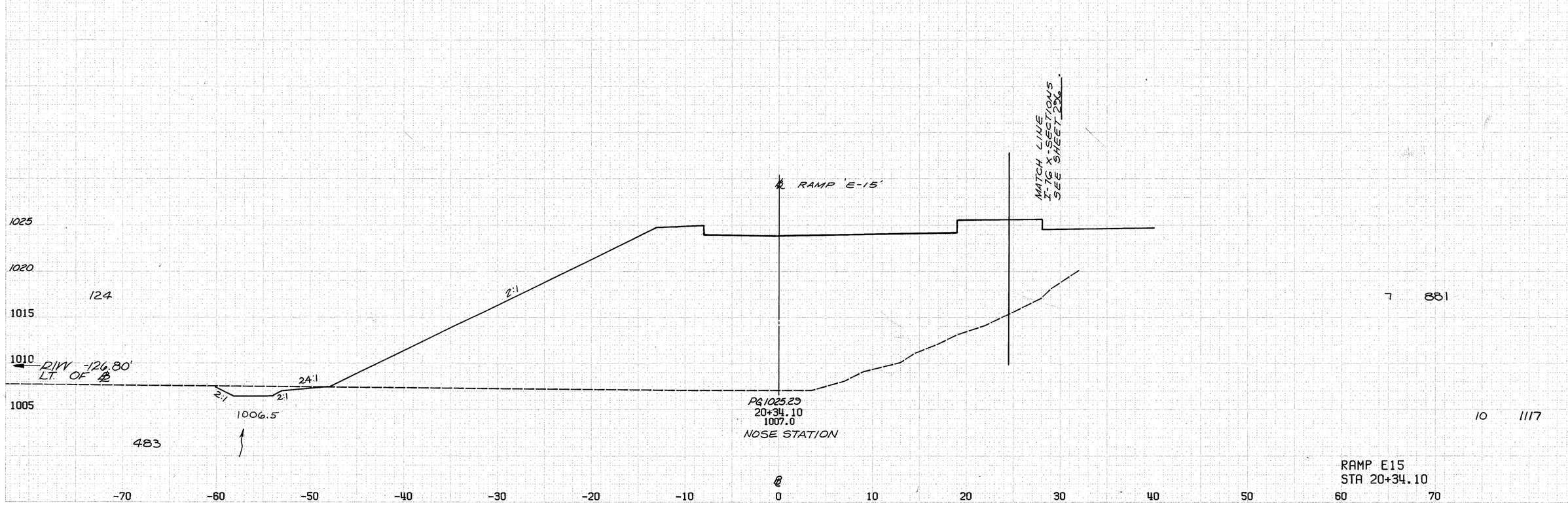

K-E PLATE 9, CROSS SECTION
KEUFFEL & ESSER CO

CALCULATED BY BJ & DATE 3/90
CHECKED BY DSB DATE 7/90

FHWA REG	STATE	PROJECT
5	OHIO	

445 / 1214

SUM - 76 - 11.57
IR - 76 - 2(44)19

END	AREA	CU.	YDS.
CUT	FILL	CUT	FILL

SEEDING
END SQ
WIDTH YARDS

MATCH LINE
RAMP E-10 X-SECTIONS
SEE SHEET 427.

℄ RAMP E-16

1025
1020
1015
1010

73
2:1
1025.7
PROPOSED WINGWALL
PG1009.03
14+00.00
1023.9
RIW 150.59' RT. OF ℄
4"G.
1427 0

422
8:1
1008.2
9.3:1
2364 0

1025
1020
1015
1010

79
10:1
1011.8
PG.1011.12
13+50.00
1021.1
RIW 153.41' RT. OF ℄
1126 0

11.6:1
1010.4
1757 0

472

MATCH LINE
I-76 E.B.
X-SECTIONS
SEE SHT. 352.

1020
1015
1010

91
2:1
1010.7
8.6:1
PG.1013.46
13+00.00
1019.1
8:1
1012.6
14.5:1
RIW 154.11' RT. OF ℄
772 0

895 0

253

MATCH LINE
MARTHA AVE.
X-SECTIONS
SEE SHEET 468.

℄ RAMP E-16

MATCH LINE
MARTHA AVE. X-SECTIONS
SEE SHEET 467.

RIW 153.90' RT. OF ℄

1015

0
PG.1015.50
12+47.21
1016.7
143 0

-70 -60 -50 -40 -30 -20 -10 0 10 20 30 40 50 60 70

RAMP E16
STA 12+47.21 TO STA 14+00

PLATE 3, CROSS SECTION
KOKOSING & ESSEX CO.

FHWA REG	STATE	PROJECT	446 / 1214
5	OHIO		

SUM - 76 - 11.57
IR - 76 - 2(44)19

CALCULATED BY BJB DATE 3/90
CHECKED BY DSB DATE 7/90

SEEDING
END SQ.
WIDTH YARDS

3

8

0 AHD.
73 BK.

403

403

MATCH LINE
I-76 X-SECTIONS
SEE SHEET 354

℄ RAMP E-16

1021.2

RETAINING WALL #9

QBL

FACE OF BRIDGE ABUT.

P.G. 1005.76
15+50.00
1021.1

NOTE: QUANTITY BREAK LINE - QBL
SEE NOTE SHEET 89 .

END CUT	AREA FILL	CU. CUT	YDS. FILL
400	0		
		868	0

MATCH LINE
ENGLEWOOD AVE. X-SECTIONS
SEE SHEET 473

RIW 136.74'
RT. OF ℄

AHD. 537 0
BK. 1354 0

EX. RAMP 'E-10'

AHEAD

2.5:1

8:1

WINGWALL

1008.2

2542 0

P.G. 1006.35
15+00.00
1024.3

MATCH LINE
RAMP E-10 X-SECTIONS
SEE SHEET 427

℄ RAMP E-16

℄ JOHNS AVE.

MATCH LINE
ENGLEWOOD AVE. X-SECTIONS
SEE SHEET 472

RIW 145.07'
RT. OF ℄

4" G.

6" W.M.

1351 0

8" SAN. TO BE REMOVED

SEE DRAINAGE SHEET 518 .

STA. 14+50, 26' RT.
C.B. No. 5 WITHOUT APRON
T.G. = 1006.17

5.5:1

8:1

6" U.D.

1006.5

2572 0

P.G. 1007.44
14+50.00
1022.9

18" N = 999.21
24" SW = 998.71
6" U.D. = 1002.55

RAMP E16
STA 14+50 TO STA 15+50

1025
1020
1015
1010
1005
1000

-70 -60 -50 -40 -30 -20 -10 0 10 20 30 40 50 60 70

PLATE 3. CROSS SECTION
KS RUFFEL & ERGER CO.

FHWA REG	STATE	PROJECT	447 / 1214
5	OHIO		

CALCULATED BY BJB DATE 3/90
CHECKED BY DSB DATE 7/90

SUM - 76 - 11.57
IR - 76 - 2(44)19

END	AREA		CU.	YDS.
CUT		FILL	CUT	FILL
339	0			
677	0			
392	0			
733	0			

SEEDING
END SQ.
WIDTH YARDS

10
36
3
17

MATCH LINE
I-76 X-SECTIONS
SEE SHEET 354

MATCH LINE
I-76 X-SECTIONS
SEE SHEET 354

MATCH LINE
RAMP E-10 X-SECTIONS
SEE SHEET 428

RAMP E-16

PROP. RETAINING WALL
No. 10. FOR DETAILS
SEE SHEET 713

EX. RAMP 'E-10'

2:1

1013.1

QBL

4:1 4:1

1006.3

PG. 1006.08
16+50.00
1016.5

2:1

1014.3

PROP. RETAINING WALL
No. 9. FOR DETAILS
SEE SHEET 713

STA. 16+00, 3' RT.
M.H. No. 1
T.C.=1005.53

STA. 16+00, 11' RT.
INLET, No. I-3
AS PER PLAN No. 1
GUTTER EL.=1005.00

PROP. ABUTMENT

RAMP E-16

PG. 1005.61
16+00.00
1019.6

18"E.W.=100.63
15"S.=100.20
6"U.D.=100.09
15"N.=100.28

NOTE: QUANTITY BREAK LINE - QBL
SEE NOTE SHEET 89.

RAMP E16
STA 16+00 TO STA 16+50

1025
1020
1015
1010
1005
1000

-70 -60 -50 -40 -30 -20 -10 0 10 20 30 40 50 60 70

PLATE 3, CROSS SECTION
KEIFER & ASSOC. CO.

SEEDING
END SQ.
WIDTH YARDS

CALCULATED BY BJB DATE 3/90
CHECKED BY DSB DATE 7/90

FHWA REG	STATE	PROJECT	448 12.14
5	OHIO		

SUM - 76 - 11.57
IR - 76 - 2(44)19

END CUT | AREA FILL | CU. YDS. CUT | CU. YDS. FILL

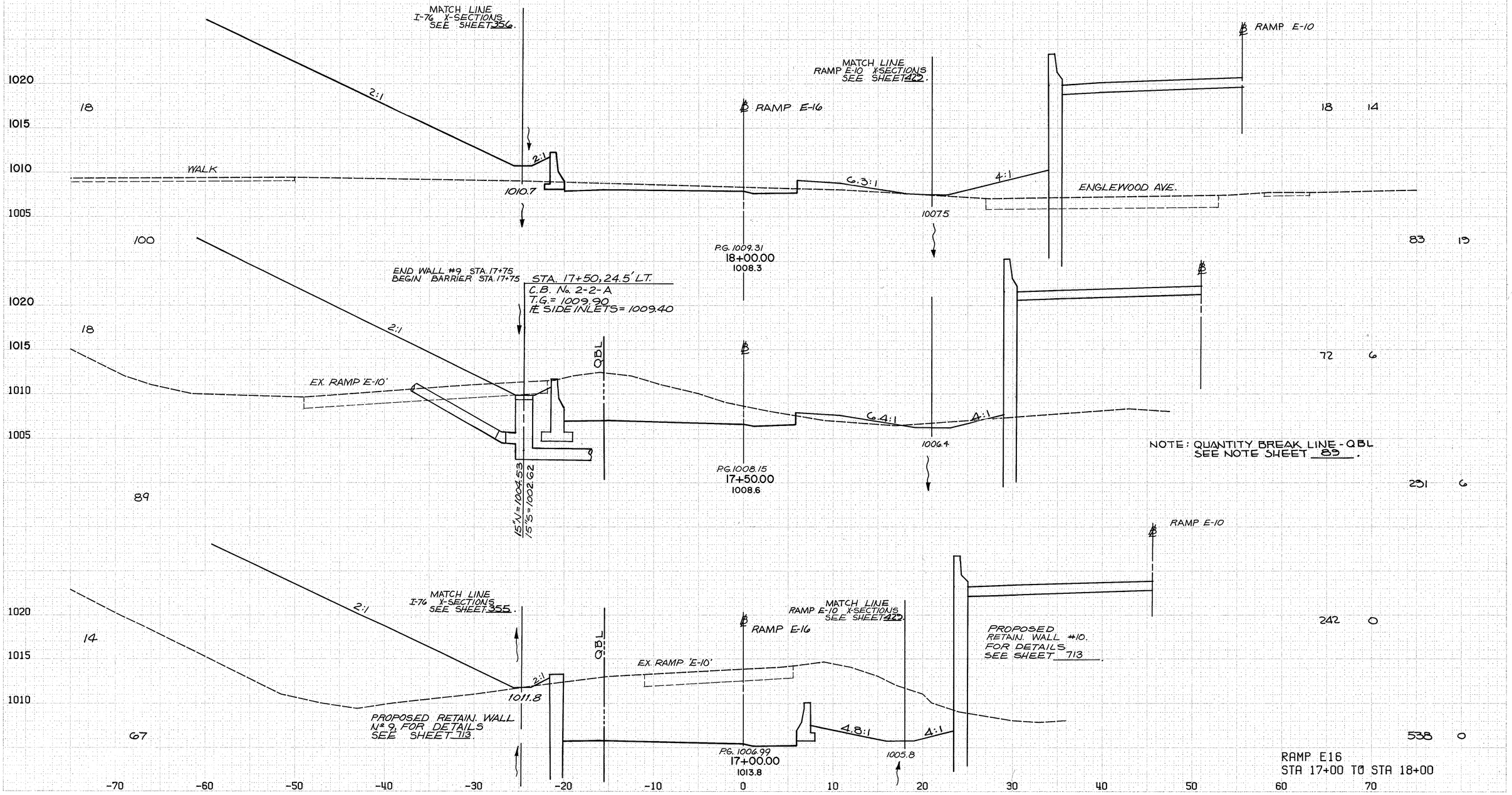

RAMP E16
STA 17+00 TO STA 18+00

PLATE 3, CROSS SECTION
KELLER & PEARL CO.

CALCULATED BY BJB DATE 3/90
CHECKED BY DSB DATE 7/90

FHWA REG	STATE	PROJECT	449 / 12.14
5	OHIO		

SUM - 76 - 11.57
IR - 76 - 2(44)19

SEEDING
END WIDTH — SQ. YARDS

END CUT	AREA FILL	CU. YDS. CUT	CU. YDS. FILL
RAMP E-10			
0	259		
0	421		
0	156		
0	283		
0	110		
17	115		

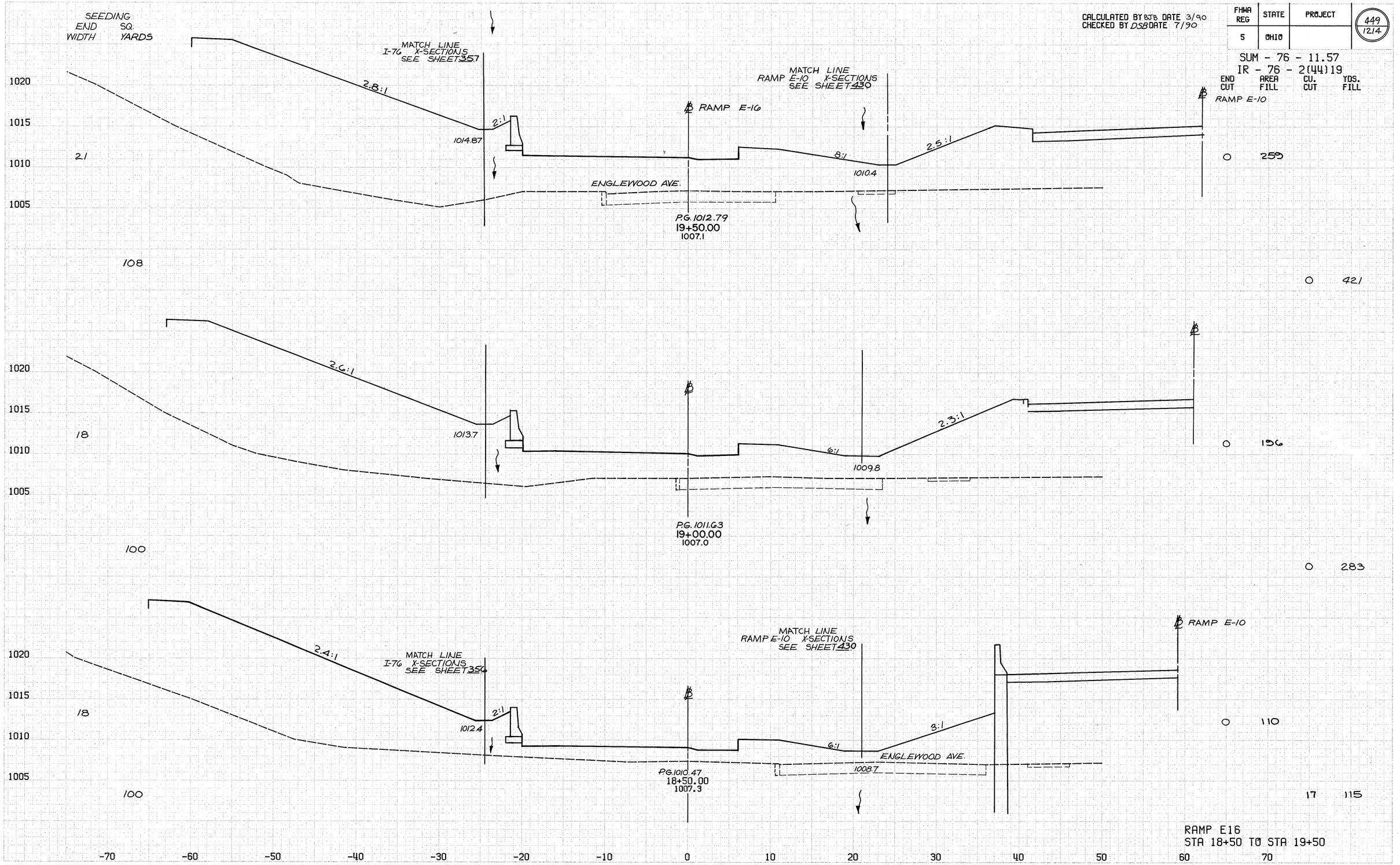

RAMP E16
STA 18+50 TO STA 19+50

PLATE 9, CROSS SECTION

FHWA REG	STATE	PROJECT	450 / 1214
5	OHIO		

CALCULATED BY BJB DATE 3/90
CHECKED BY DSB DATE 7/90

SUM - 76 - 11.57
IR - 76 - 2(44)19

END CUT	AREA FILL	CU. CUT	YDS. FILL
0	452		
0	791		
0	402		
0	671		
0	323		
0	535		

SEEDING
END SQ.
WIDTH YARDS

MATCH LINE
I-76 X-SECTIONS
SEE SHEET 358.

MATCH LINE
RAMP E-10 X-SECTIONS
SEE SHEET 431.

MATCH LINE
I-76 X-SECTIONS
SEE SHEET 357.

MATCH LINE
RAMP E-10 X-SECTIONS
SEE SHEET 431.

1015
1010
1005

21

4:1
2:1
1017.4
ENGLEWOOD AVE.
P.G. 1015.34
21+00.00
1005.8
2.4:1
1009.1
7.3:1
℄ RAMP E-10
4"G.

128

1020
1015
1010
1005

25

3.3:1
1016.8
P.G. 1014.73
20+50.00
1006.8
3.8:1
8:1
1010.6
4"G.

133

I-76

1020
1015
1010
1005

23

3.3:1
2:1
1016.0
℄ RAMP E-16
ENGLEWOOD AVE.
P.G. 1013.88
20+00.00
1007.0
6.7:1
5:1
1011.0
℄ RAMP E-10

122

-70 -60 -50 -40 -30 -20 -10 0 10 20 30 40 50 60 70

RAMP E16
STA 20+00 TO STA 21+00

PLATE 3 CROSS SECTION
KEMPPEL & ENDER CO.

CALCULATED BY BJB DATE 3/90
CHECKED BY DSB DATE 7/90

FHWA REG	STATE	PROJECT
5	OHIO	

461
12.14

SUM - 76 - 11.57
IR - 76 - 2(44)19

END CUT	AREA FILL	CU. CUT	YDS. FILL

SEEDING
END WIDTH SQ. YARDS

26 RHD.
30 BK.

MATCH LINE
I-76 X-SECTIONS
SEE SHEET 359

℄ RAMP E-16

LOW PT. STA. 22+75
EL=1004.00

MATCH LINE
RAMP E-10 X-SECTIONS
SEE SHEET 432.

℄ RAMP E-10

1016.6

EX. RAMP 'E-16'

PG 1015.68
22+50.00
1008.0

2:1

3:1

1004.8

ENGLEWOOD AVE.

4"G.

1010
1005
1000

0 409

161

0 825

MATCH LINE
I-76 X-SECTIONS
SEE SHEET 358

END BARRIER
STA. 22+20

3:1
2:1
1017.5

PAVED GUTTER
TO BE REMOVED

PG 1015.80
22+00.00
1006.0

4:1
1005.6

4"G.

1015
1010
1005

28

0 486

142

0 884

MATCH LINE
I-76 X-SECTIONS
SEE SHEET 358

℄ RAMP E-16

MATCH LINE
RAMP E-10 X-SECTIONS
SEE SHEET 431.

3:1
2:1
1017.0

EX. RAMP 'E-16'

PG 1015.69
21+50.00
1006.1

ENGLEWOOD AVE.

2:1

3.3:1

4"G.

℄ RAMP E-10

1020
1015
1010
1005

23

122

0 469

* TYPICAL AS SHOWN

0 853

RAMP E16
STA 21+50 TO STA 22+50

-70 -60 -50 -40 -30 -20 -10 0 10 20 30 40 50 60 70

PLATE 9, CROSS SECTION

FHWA REG	STATE	PROJECT	452 / 1214
5	OHIO		

CALCULATED BY BJB DATE 3/90
CHECKED BY DSB DATE 7/90

SUM - 76 - 11.57
IR - 76 - 2(44)19

SEEDING

END WIDTH	SQ. YARDS
23	125
22	108
17	128
29	153

MATCH LINE
I-76 EASTBOUND
X-SECTIONS
SEE SHEET 360.

℄ RAMP E-16

PG. 1017.04
24+50.00
1014.3
NOSE STATION

PROPOSED RETAIN. WALL
Nº 13, FOR DETAILS
SEE SHEET 717.

QBL

24:1

℄ ENGLEWOOD AVE.
STA. 31+80.19

ELEC.

10" W.M. TO BE ABAND.

PG. 1016.32
24+00.00
1013.0

MEET EXIST. FULL DEPTH PAVEMENT STA. 31+70.00

℄ ENGLEWOOD AVE.
STA. 31+31.84

ELEC.

10" W.M. TO BE ABAND.

4"G.

15" STM.

12" SAN.

NOTE: QUANTITY BREAK LINE - QBL
SEE NOTE SHEET 89.

PG. 1015.85
23+50.00
1011.2

℄ ENGLEWOOD AVE.
STA. 30+83.37

PROP. 15" STM.

15" STM.

12" SAN.

SEE DRAINAGE SHEET 527.

MATCH LINE
I-76 EASTBOUND
X-SECTION
SEE SHEET 359.

EX. RAMP 'E-16'

PAVED GUTTER TO BE REMOVED

PG. 1015.64
23+00.00
1009.7

BEGIN RETAINING WALL NO. 13 STA. 22+83

RET. WALL Nº 13

MATCH LINE
RAMP E-10 X-SECTIONS
SEE SHEET 432

℄ RAMP E-10

PROP. 18" STM.

PROP. 15" STM.

48" STM.

END CUT	AREA FILL	CU. YDS. CUT	YDS. FILL
23	10		
		68	19
50	11		
		131	24
90		100	
91	15		
		113	136
0	55		
		D=67'	
		D=33' 0	308

RAMP E16
STA 23+00 TO STA 24+50

-70 -60 -50 -40 -30 -20 -10 0 10 20 30 40 50 60 70 80

PLATE 3. CROSS SECTION
KEUFFEL & ESSER CO.

CALCULATED BY BJS DATE 3/90
CHECKED BY DSB DATE 7/90

FHWA REG	STATE	PROJECT	453 / 12.14
5	OHIO		

SUM - 76 - 11.57
IR - 76 - 2(44)19

SODDING

END WIDTH	SQ. YARDS	END CUT	AREA FILL	CU. YDS. CUT	CU. YDS. FILL
24		94	0		
103				115	0
13		30	0		
50				42	0
5		15	0		
12		13	0		
2 AHD.		9	0		

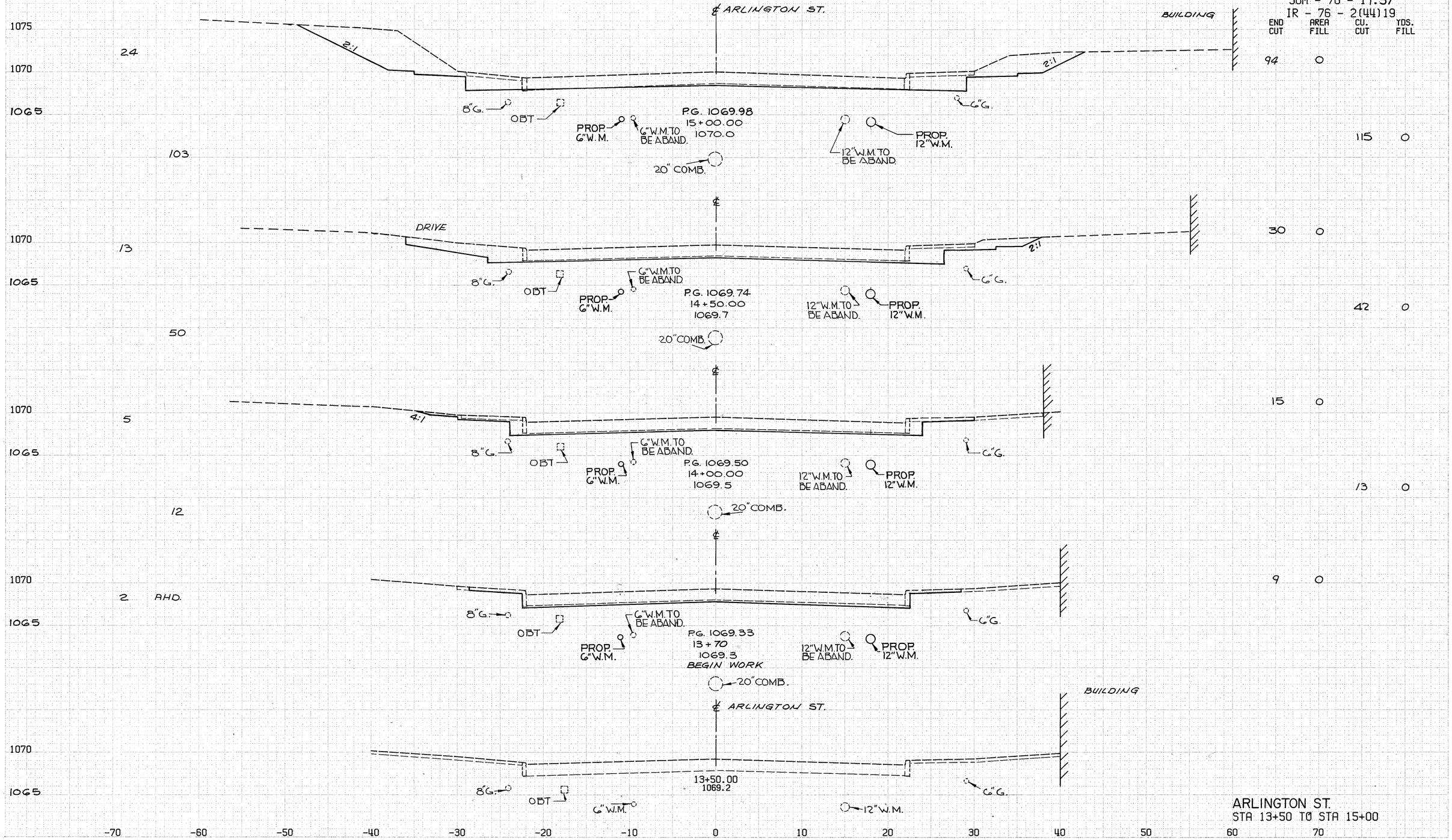

1075 1070 1065 1070 1065 1070 1065 1070 1065 1070 1065

-70 -60 -50 -40 -30 -20 -10 0 10 20 30 40 50 60 70

ARLINGTON ST.
STA 13+50 TO STA 15+00

CALCULATED BY BJB DATE 3/90
CHECKED BY DSB DATE 7/90

FHWA REG	STATE	PROJECT	454 / 1214
5	OHIO		

SUM - 76 - 11.57
IR - 76 - 2(44)19

SODDING
END 50
WIDTH YARDS

END CUT	AREA FILL	CU. YDS. CUT	FILL
122	0		
		236	0
133	0		
D=34' 128	0		
70	0		
D=51' 202	0		
50	0		
D=25' 67	0		

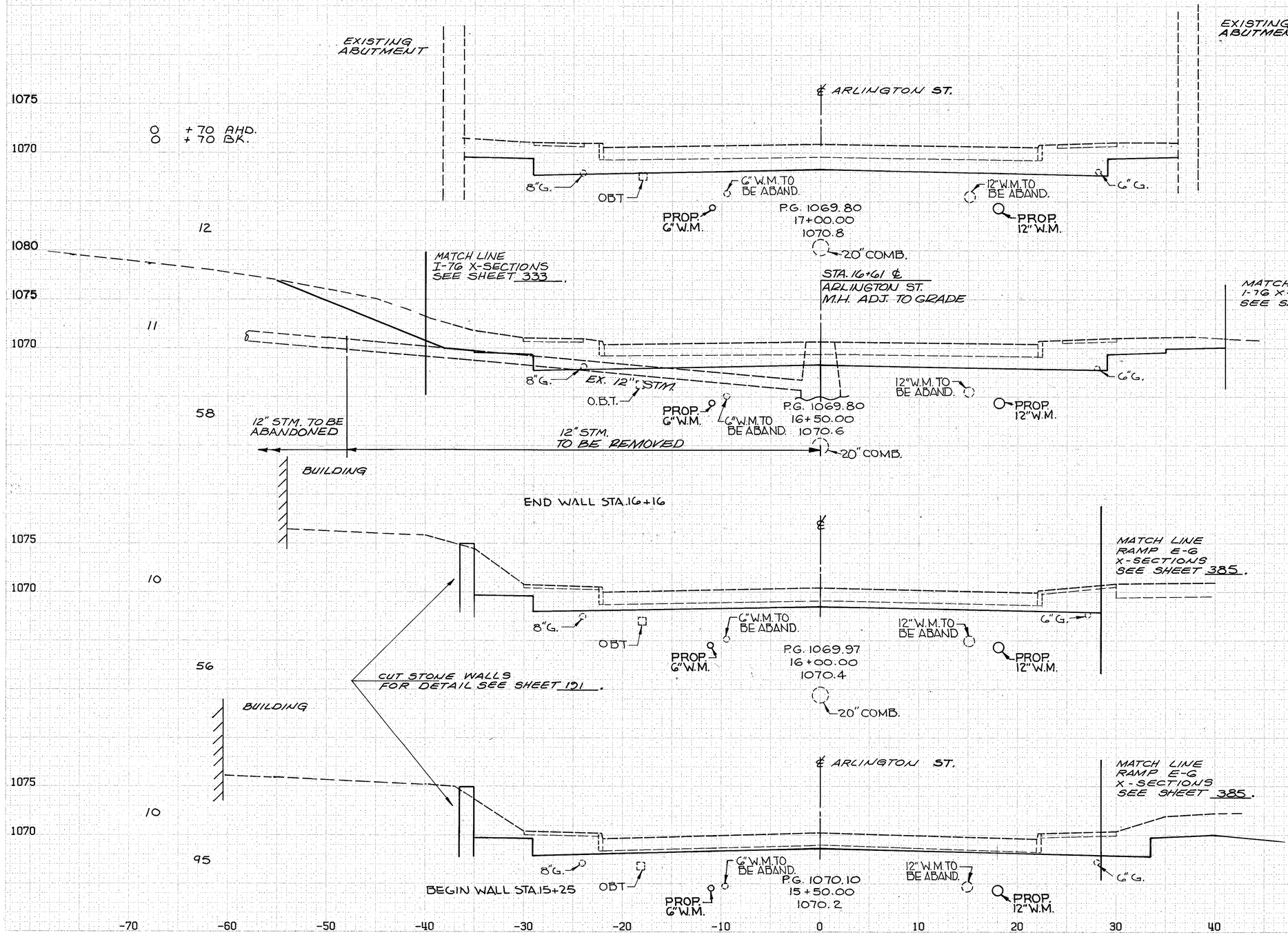

ARLINGTON ST.
STA 15+50 TO STA 17+00

PLATE 5, CROSS SECTION
KOKOSING & BRIER CO.

CALCULATED BY BJB DATE 3/90
CHECKED BY DSB DATE 7/90

FHWA REG	STATE	PROJECT
5	OHIO	

455 / 12.14

SUM - 76 - 11.57
IR - 76 - 2(44)19

SODDING
END SQ.
WIDTH YARDS

END CUT	AREA FILL	CU. CUT	YDS. FILL
40	0		
		66	0
31	0		
		81	0
57	0		
		164	0
120	0		
		231	0
129	0		
		233	0

℄ ARLINGTON ST.

1075
1070
0
0
8"G. OBT 4"W.M. 8"SAN. P.G. 1072.10 19+50.00 1072.1 12"W.M.TO BE ABAND. PROP. 12"W.M. 6"G.

MATCH LINE 2ND AVE. X-SECTIONS SEE SHEET 477.

1075
1070
0 + 15 AHD.
4 + 15 BK.
8"G. OBT PROP. 12"STM. PROP. 6"W.M. P.G. 1071.44 19+00.00 1071.8 12"COMB. 12"W.M.TO BE ABAND. PROP. 12"W.M. 6"G.
10

MATCH LINE I-76 LEFT X-SECTIONS SEE SHEET 267.

STA. 18+41
℄ ARLINGTON ST.
M.H. ADJ. TO GRADE

MATCH LINE RAMP E-4 X-SECTIONS SEE SHEET 374.

1075
1070
1065
0 + 75 AHD.
0 + 75 BK.
8"G. OBT 6"W.M.TO BE ABAND. EX.12"STM.TO BE REMOVED OBT 6"G.
P.G. 1070.78 18+50.00 1071.6
W 44 PROP.6" W.M.MARTIN AVE. SEE W.M. PROF. SHEET 604.
PROP.6"W.M. ARLING. 12"COMB
12"W.M.TO BE ABAND.
PROP. 12"W.M. ARLINGTON ST. SEE W.M. PROFILE SHEET 605.

1075
1070
EXISTING ABUTMENT
8"G. OBT EX.12" STM. TO BE REMOVED PROP. 6"W.M. 6"W.M.TO BE ABAND. P.G. 1070.29 18+00.00 1071.3 20"COMB. 12"W.M.TO BE ABAND. PROP. 12"W.M. 6"G. EXISTING ABUTMENT

℄ ARLINGTON ST.

1075
1070
8"G. OBT 6"W.M.TO BE ABAND. PROP. 6"W.M. P.G. 1069.96 17+50.00 1071.0 20"COMB. 12"W.M.TO BE ABAND. PROP. 12"W.M. 6"G.

-70 -60 -50 -40 -30 -20 -10 0 10 20 30 40 50 60 70

ARLINGTON ST.
STA 17+50 TO STA 19+50

PLATE 3, CROSS SECTION
CENTER & SPEER CO.

SEEDING

END SQ.
WIDTH YARDS

CALCULATED BY BJB DATE 3/90
CHECKED BY DSB DATE 7/90

FHWA REG	STATE	PROJECT	456 / 1214
5	OHIO		

SUM - 76 - 11.57
IR - 76 - 2(44)19

END CUT AREA	FILL AREA	CU. YDS. CUT	FILL

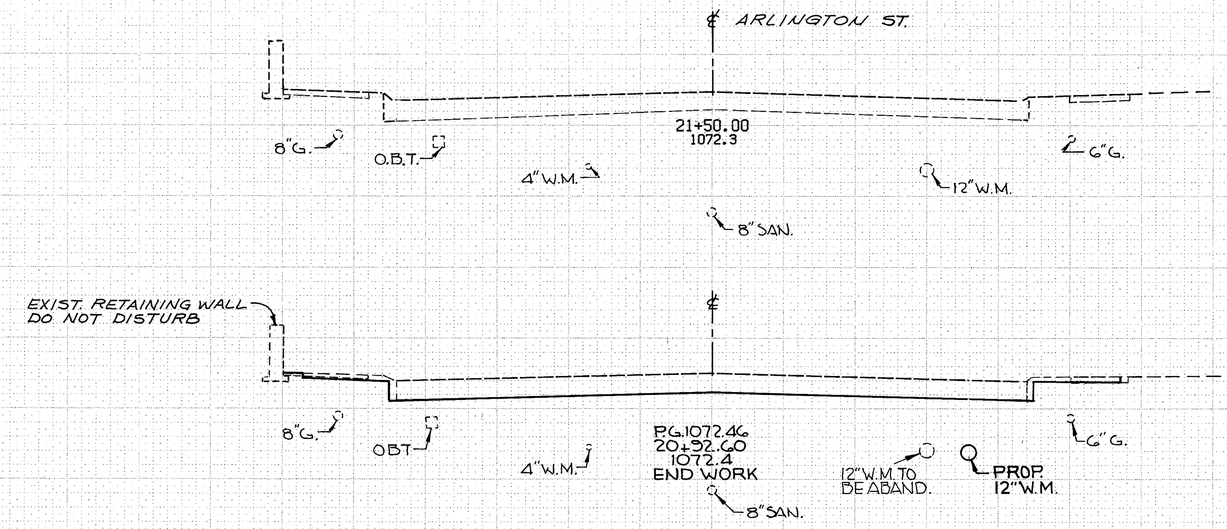

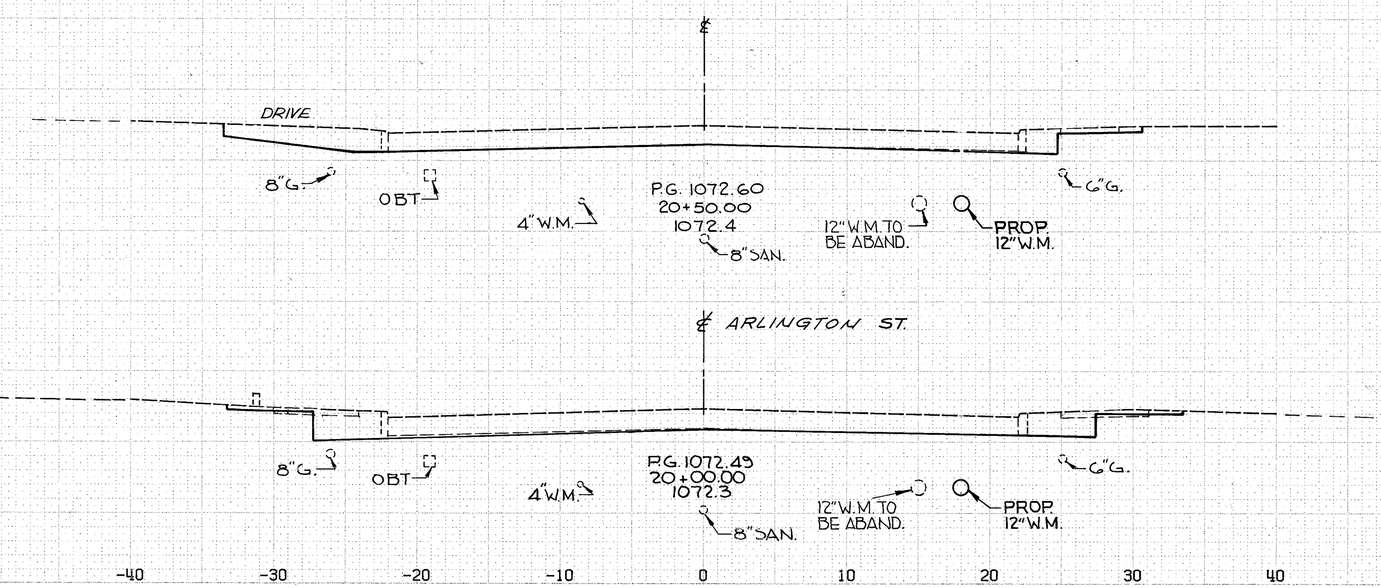

ARLINGTON ST.
STA 20+00 TO STA 21+50

PLATE 3, CROSS SECTION
KEUFFEL & ESSER CO

ORIGINAL SURVEY	SURVEYED	BY	DATE
	PLOTTED		
FIELD BOOK	TEMPLATE		
NO.	AREAS CHECKED		

FINAL SURVEY	SURVEYED	BY	DATE
	PLOTTED		
NOTE BOOK	TEMPLATE		
NO.	AREAS CHECKED		

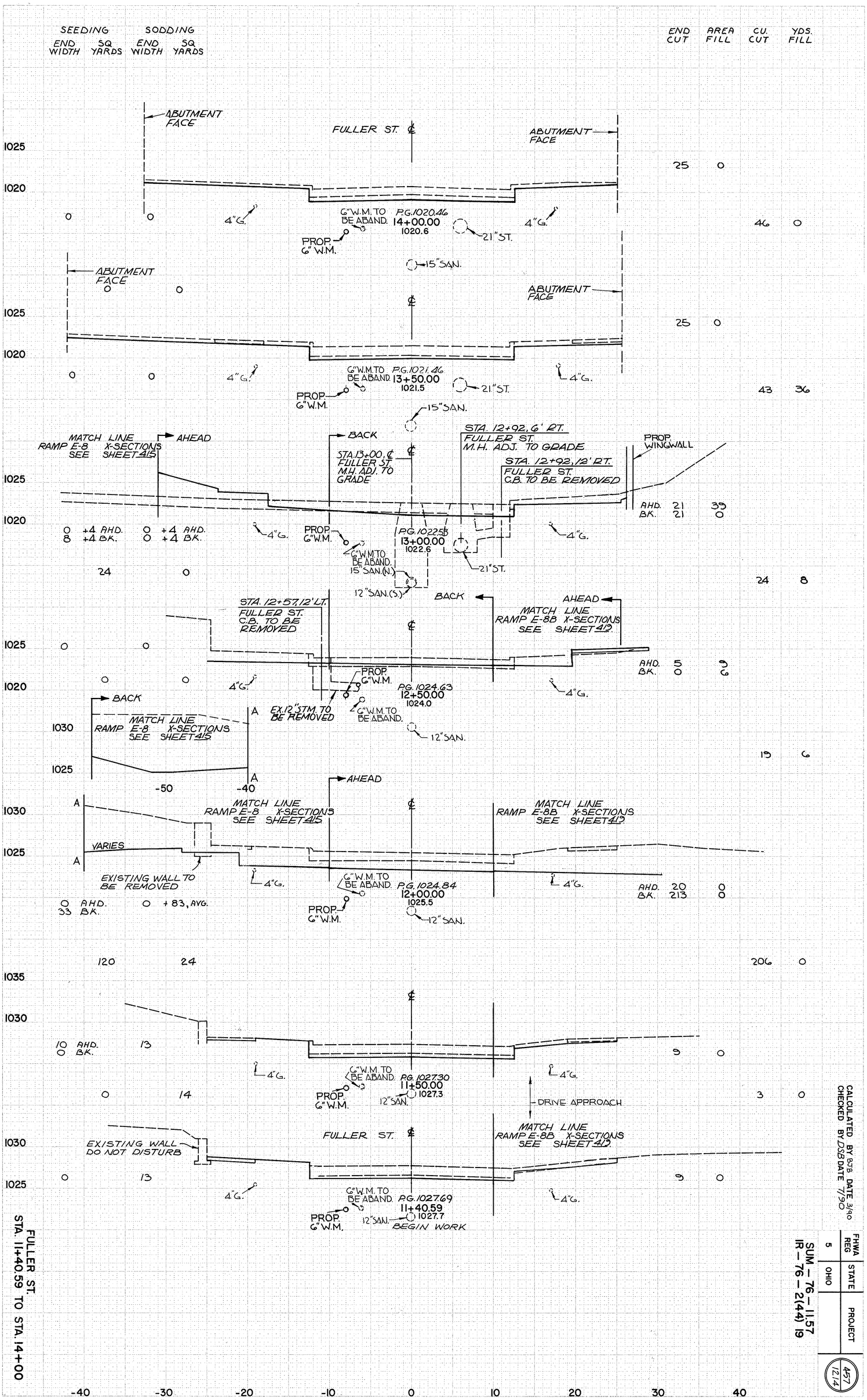

FULLER ST.
STA. 11+40.59 TO STA. 14+00

CALCULATED BY BJB DATE 3/90
CHECKED BY DSB DATE 7/90

FHWA REG	STATE	PROJECT
5	OHIO	SUM – 76 – 11.57 IR – 76 – 2(144) 19

457
12.14

ORIGINAL SURVEY		BY	DATE
	SURVEYED		
	PLOTTED		
NOTE BOOK	TEMPLATE		
	AREAS		
NO.	AREAS CHECKED		

FINAL SURVEY		BY	DATE
	SURVEYED		
	PLOTTED		
NOTE BOOK	TEMPLATE		
	AREAS		
NO.	AREAS CHECKED		

SEEDING
END WIDTH | SQ YARDS

SODDING
END WIDTH | SQ YARDS

END CUT | AREA FILL | CU. YDS. CUT | CU. YDS. FILL

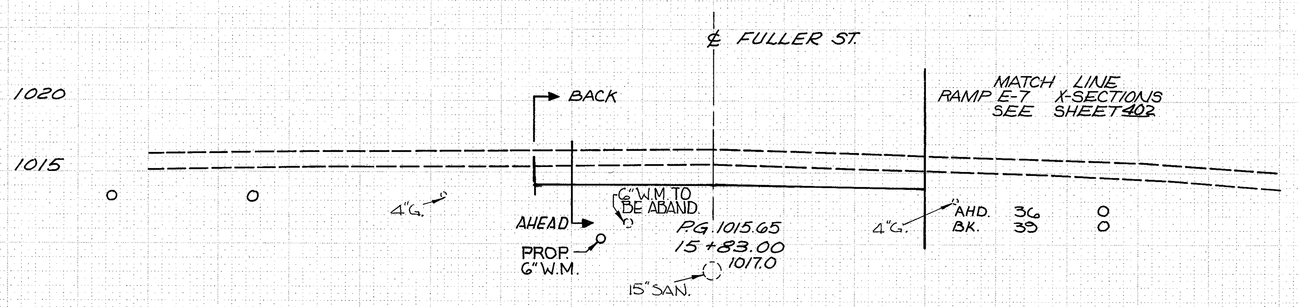

116 0

86 0

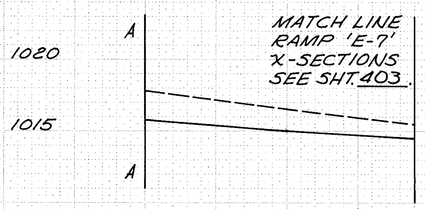

40 50 60

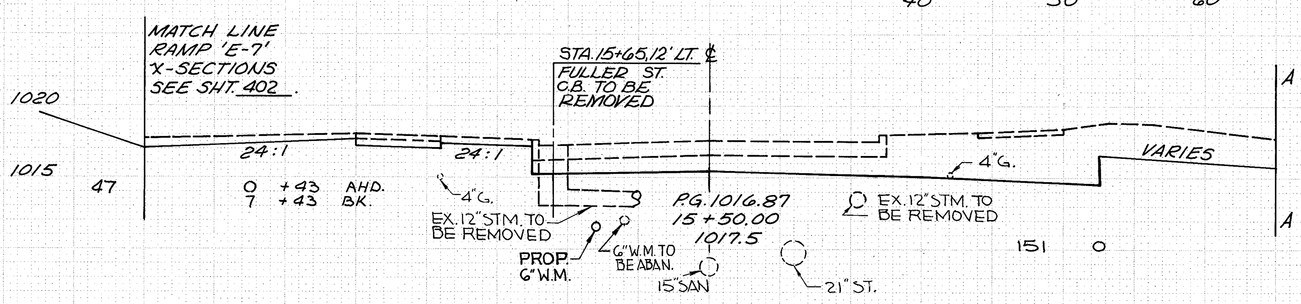

203 70

152 19

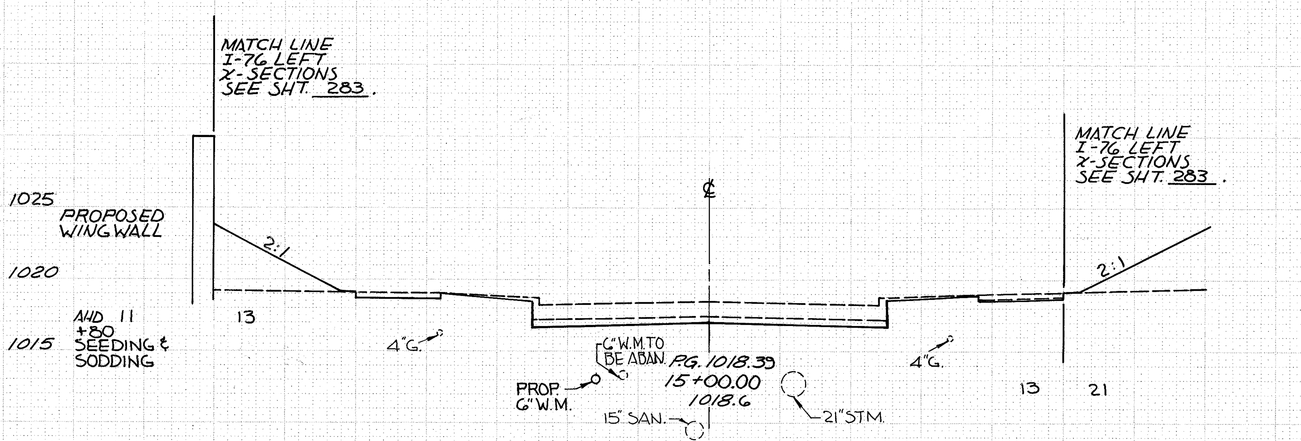

32 19

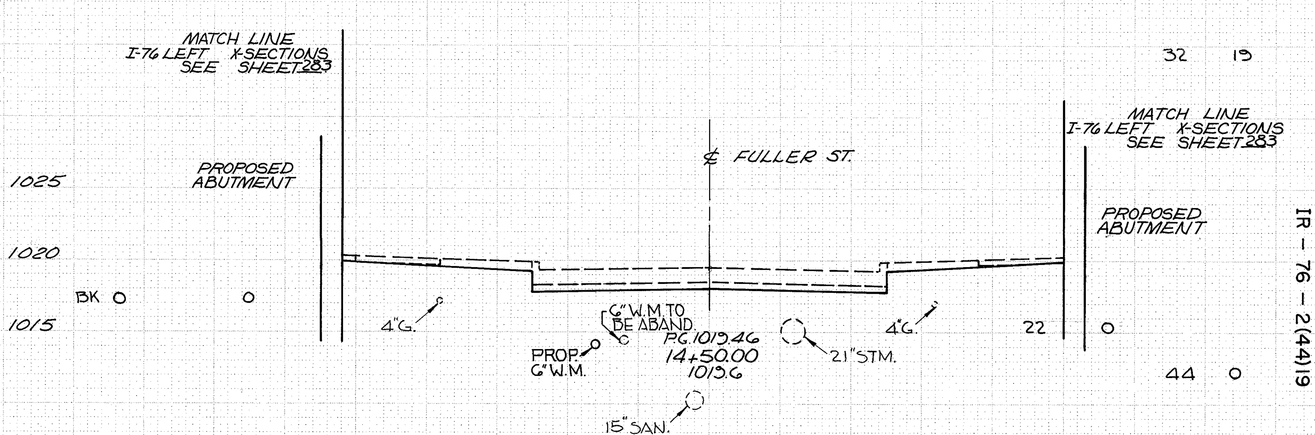

FULLER ST.
STA. 14+50 TO STA. 15+83

CALCULATED BY GTB DATE 3/90
CHECKED BY DSB DATE 7/90

FHWA REG	STATE	PROJECT
5	OHIO	SUM – 76 – 11.57 IR – 76 – 2(44)19

458
12/14

ORIGINAL SURVEY		BY	DATE
	SURVEYED		
NOTE BOOK	PLOTTED		
	TOPOGRAPHY		
NO.	AREAS		
	AREAS CHECKED		

FINAL SURVEY		BY	DATE
	SURVEYED		
NOTE BOOK	PLOTTED		
	TOPOGRAPHY		
NO.	AREAS		
	AREAS CHECKED		

SODDING

END WIDTH	SQ. YARDS

END CUT	AREA FILL	CU. CUT	YDS. FILL

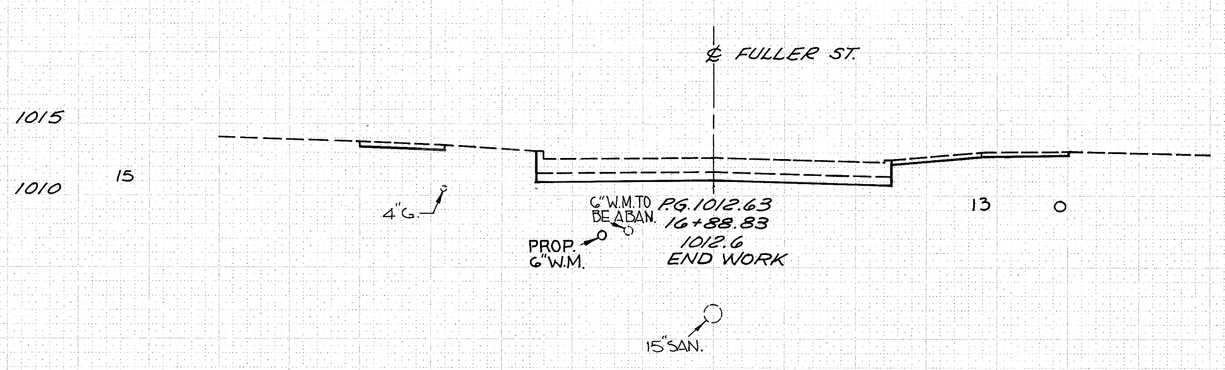

74 13 3

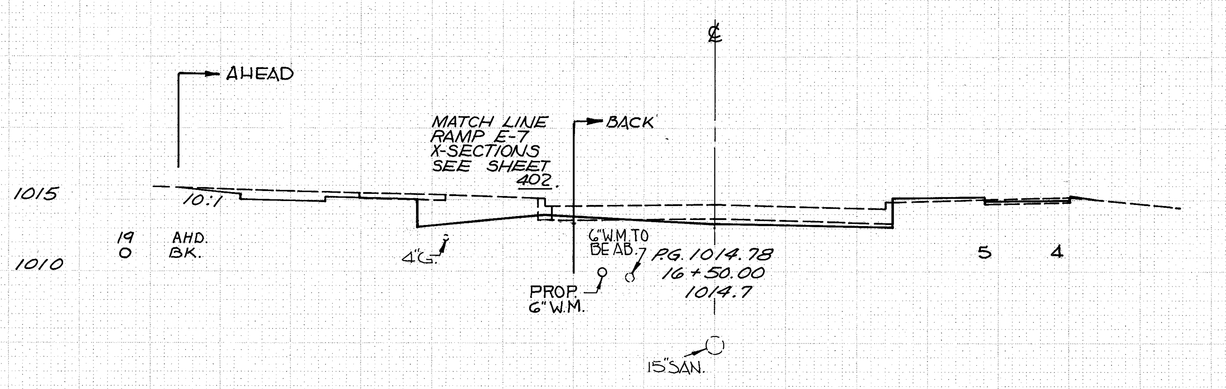

0 4 14

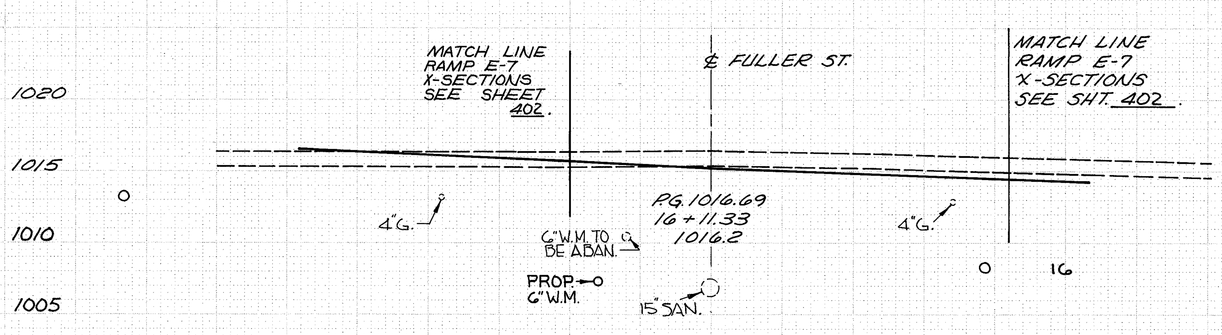

19 8

-40 -30 -20 -10 0 10 20 30 40

FULLER ST.
STA. 16+11.33 TO STA. 16+88.83

CALCULATED BY BTB DATE 3/90
CHECKED BY DSB DATE 7/90

FHWA REG	STATE	PROJECT
5	OHIO	SUM – 76 – 11.57 IR – 76 – 2(44)19

459
12.14

ORIGINAL SURVEY		BY	DATE
	SURVEYED		
	PLOTTED		
NOTE BOOK	TEMPLATE		
	AREAS		
NO.	AREAS CHECKED		

FINAL SURVEY		BY	DATE
	SURVEYED		
	PLOTTED		
NOTE BOOK	TEMPLATE		
	AREAS		
NO.	AREAS CHECKED		

SEEDING
END SQ.
WIDTH YARDS

END AREA CU. YDS.
CUT FILL CUT FILL

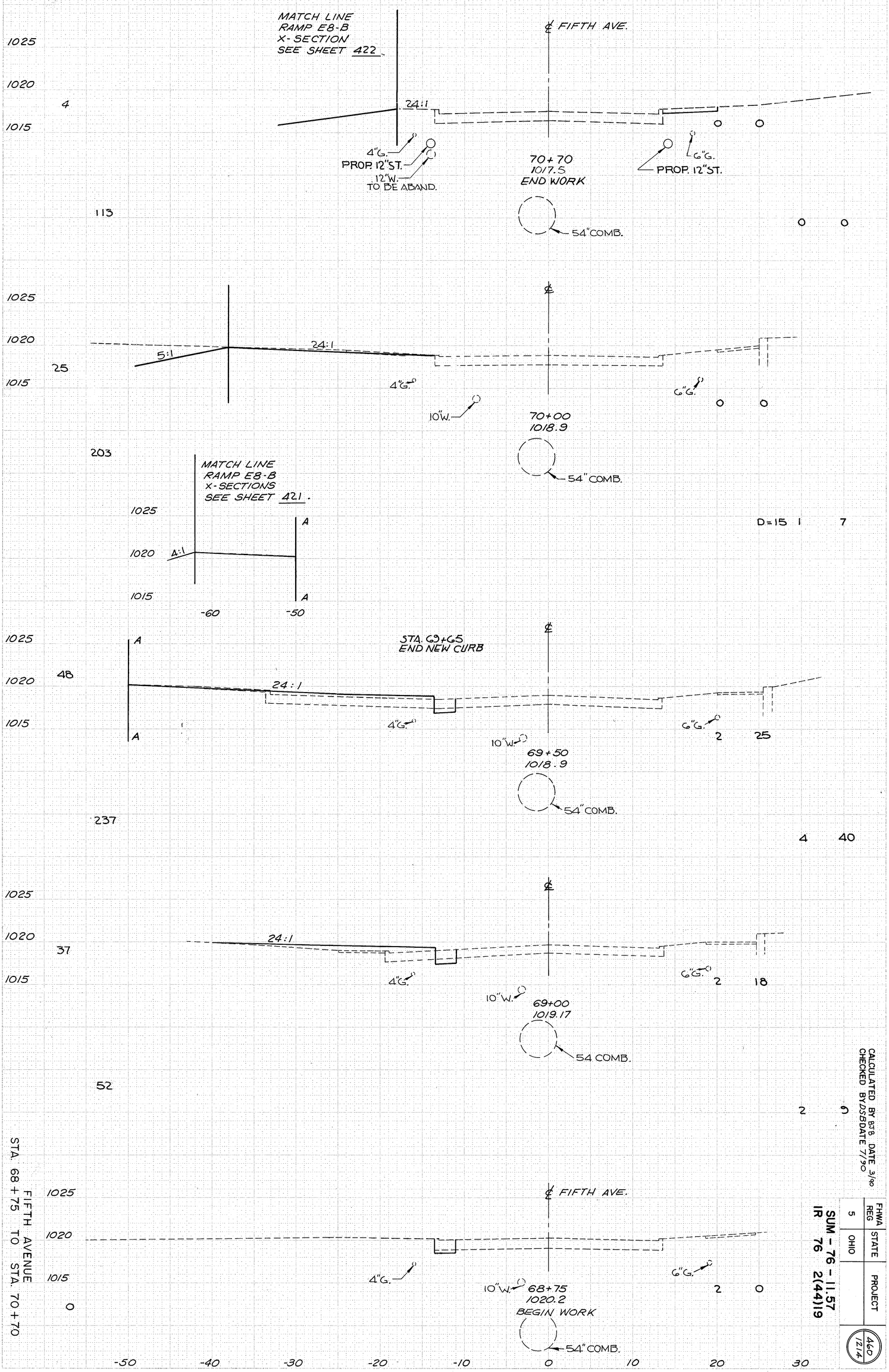

CALCULATED BY BJB DATE 3/90
CHECKED BY DSB DATE 7/90

FHWA REG	STATE	PROJECT
5	OHIO	SUM – 76 – 11.57 IR 76 2(441)9

460
1214

CALCULATED BY BJB DATE 3/90
CHECKED BY DSB DATE 7/90

FHWA REG	STATE	PROJECT
5	OHIO	

461 / 7214

SUM - 76 - 11.57
IR - 76 - 2(44)19

SEEDING
END WIDTH — SQ. YARDS

END AREA
CUT — FILL

CU. YDS.
CUT — FILL

MATCH LINE
I-76 LEFT X-SECTIONS
SEE SHEET 288

AHD. 32 — 0
BK. 38 — 0

AHEAD
BACK
℄ 3RD AVE.
4:1
12" ST.
PG. 1007.63
34+91.81
1008.3
BEGIN FULL DEPTH PAVEMENT

1015
1010
1005

34
183
253
32
59
157
10

61 — 33
28 — 36
32 — 54
71 — 22
54 — 17
0 — 0

1.25:1
MATCH LINE
I-76 LEFT X-SECTIONS
SEE SHEET 289

12" ST.
PG. 1005.60
34+50
1005.9

10.4:1
3.1:1
BRIDGE ABUTMENT

PG. 1003.91
34+00.00
1004.0
12" ST.
℄ 3RD AVE.

PG. 1002.85
33+59.00
1002.9
BEGIN WORK
12" ST.

1000

-70 -60 -50 -40 -30 -20 -10 0 10 20 30 40 50 60 70

3RD AVE.
STA 33+59 TO STA 34+91.81

PLATE 3, CROSS SECTION
KRUMPE & GEES CO.

ORIGINAL SURVEY
SURVEYED
DRAWN
TRACED
NOTE REVISIONS
NO.
DATE
BY
FINAL SURVEY
SURVEYED
DRAWN
CHECKED
NOTE REVISIONS
NO.
DATE
BY

SEEDING
END SQ.
WIDTH YARDS

CALCULATED BY BJB DATE 3/90
CHECKED BY DSB DATE 7/90

FHWA REG	STATE	PROJECT	A62 1214
5	OHIO		

SUM - 76 - 11.57
IR - 76 - 2(44)19

END CUT	AREA FILL	CU. CUT	YDS. FILL

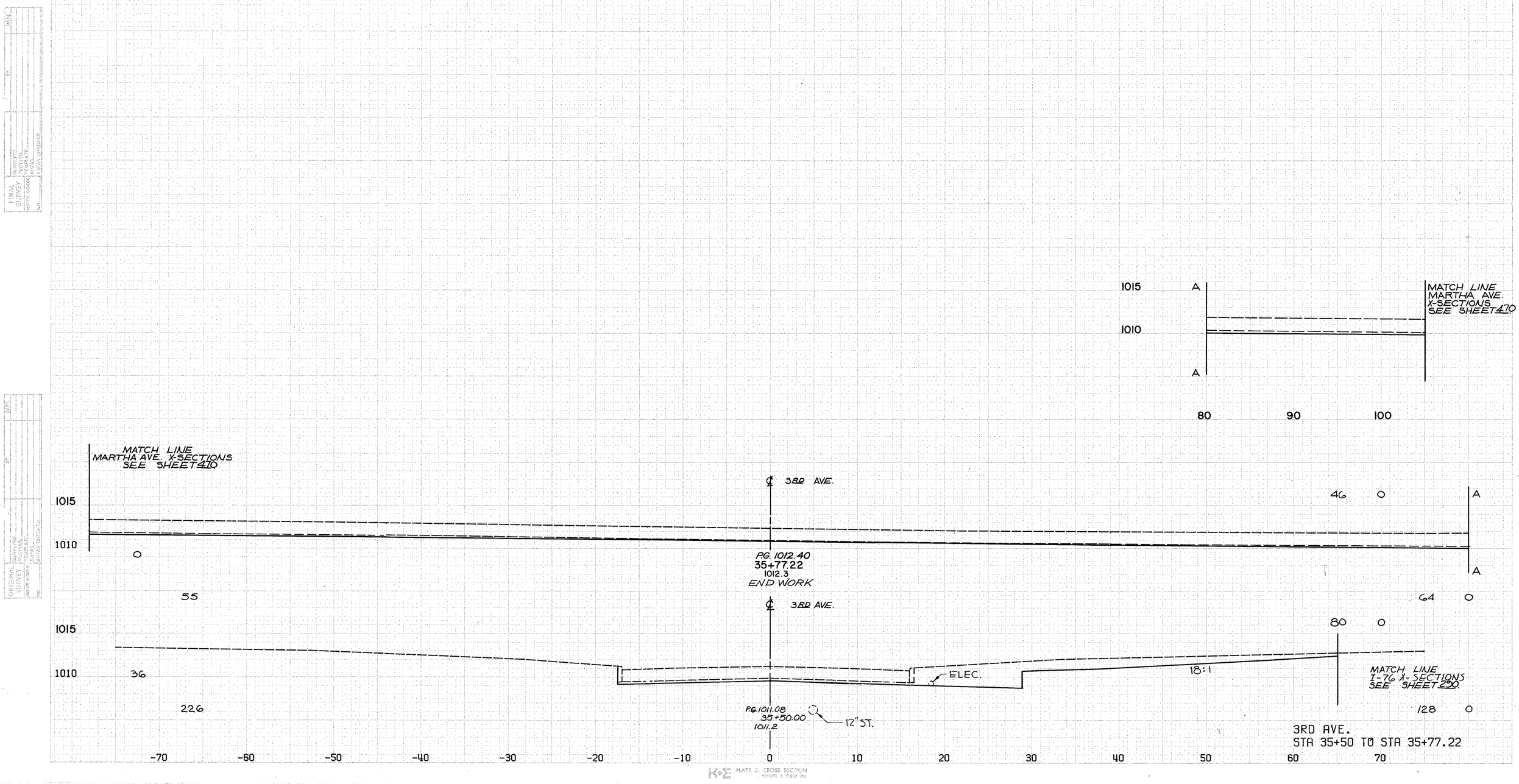

3RD AVE.
STA 35+50 TO STA 35+77.22

PLATE 3, CROSS SECTION

SEEDING
END SQ.
WIDTH YARDS

CALCULATED BY BJB DATE 3/90
CHECKED BY DSB DATE 7/90

FHWA REG	STATE	PROJECT
5	OHIO	

463
1214

SUM - 76 - 11.57
IR - 76 - 2(44)19

END CUT	AREA FILL	CU. CUT	YDS. FILL
		10	0
		13	0
		7	0

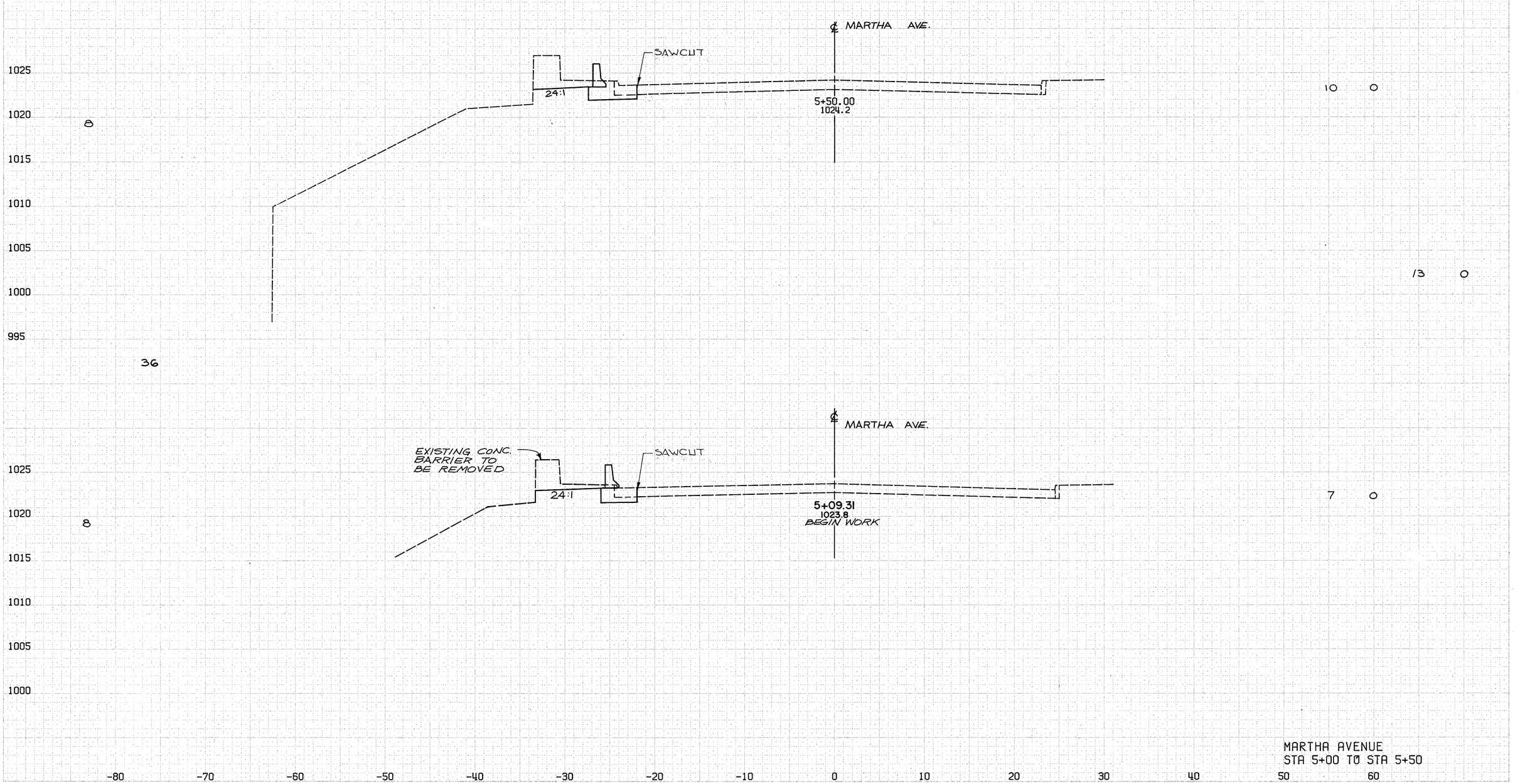

MARTHA AVENUE
STA 5+00 TO STA 5+50

PLATE 3, CROSS SECTION
KEUFFEL & ESSER CO.

SEEDING
END SQ.
WIDTH YARDS

CALCULATED BY BJB DATE 3/90
CHECKED BY DSB DATE 7/90

FHWA REG	STATE	PROJECT
5	OHIO	

464
1214

SUM - 76 - 11.57
IR - 76 - 2(44)19

END CUT	AREA FILL	CU. YDS. CUT	CU. YDS. FILL
2	11	28	
16	0		
24	0		
10	0		
19	0		

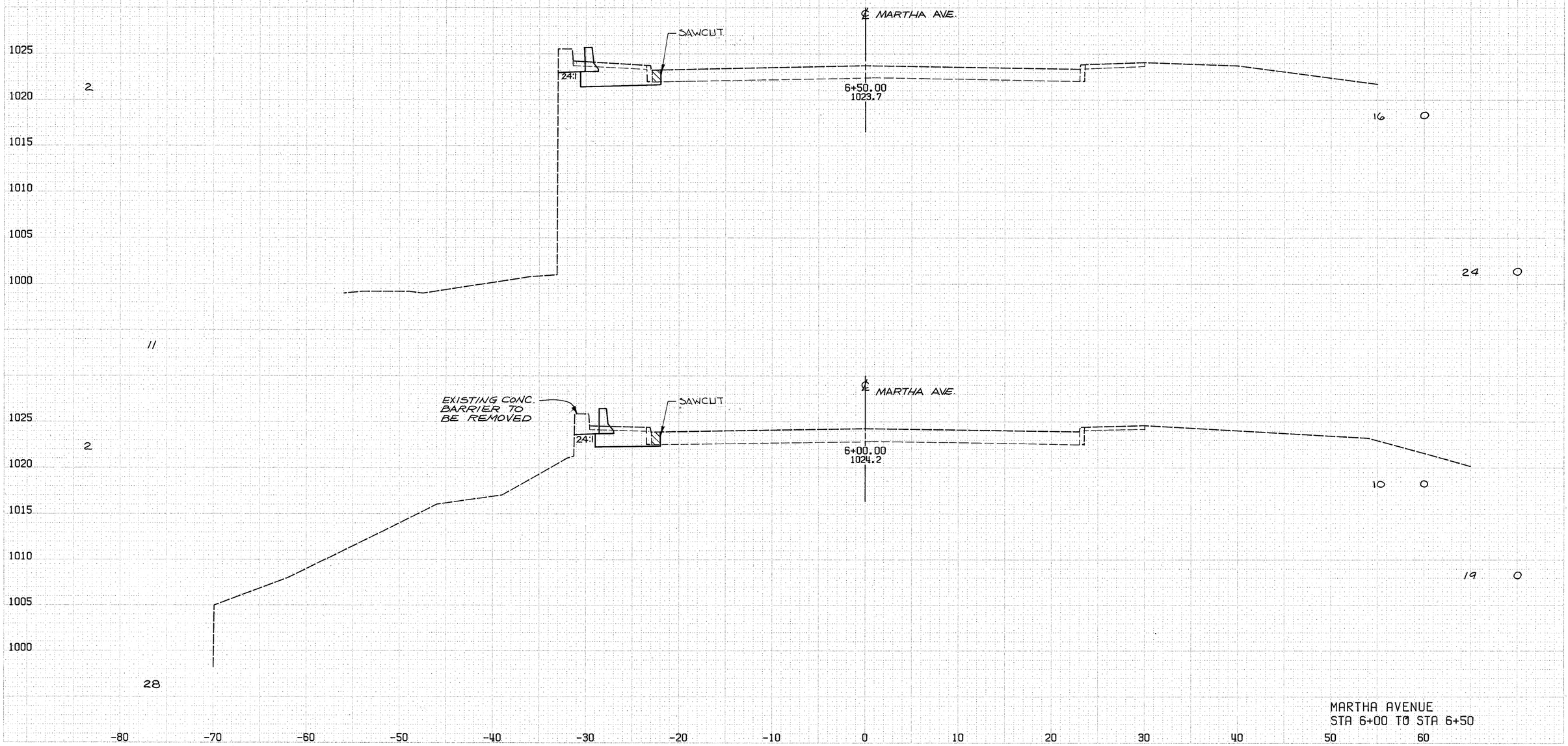

MARTHA AVENUE
STA 6+00 TO STA 6+50

PLATE 3, CROSS SECTION
KEATING & DAER CO.

SEEDING
END SQ.
WIDTH YARDS

CALCULATED BY BJB DATE 3/90
CHECKED BY DSB DATE 7/90

FHWA REG	STATE	PROJECT
5	OHIO	

465
1214

SUM - 76 - 11.57
IR - 76 - 2(44)19

END CUT	AREA FILL	CU. CUT	YDS. FILL
22	97	30	0
13	42	17	0
		44	0
		31	0

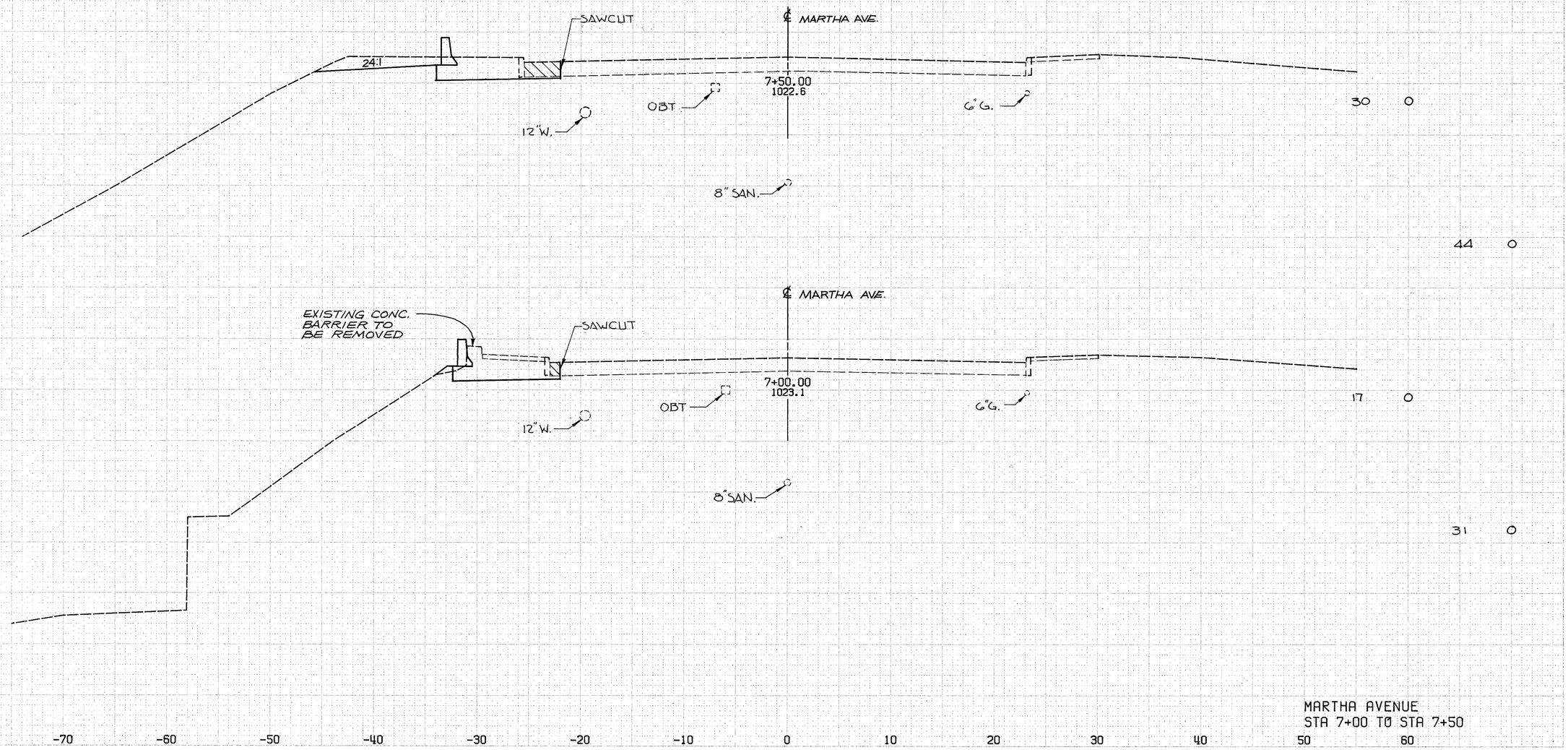

MARTHA AVENUE
STA 7+00 TO STA 7+50

PLATE 3, CROSS SECTION
KOPPEL & BAKER CO.

CALCULATED BY BJB DATE 3/90
CHECKED BY DSB DATE 7/90

FHWA REG	STATE	PROJECT
5	OHIO	

406 / 1214

SUM - 76 - 11.57
IR - 76 - 2(44)19

SEEDING
END SQ.
WIDTH YARDS

END CUT	AREA FILL	CU. CUT	YDS. FILL
14	6		
		14	6
10	0		
		17	0
10	0		
		7	0
25			
		10	0
AHD. 10 BK. 00		AHD. 15 BK. 15	0 0
		23	0

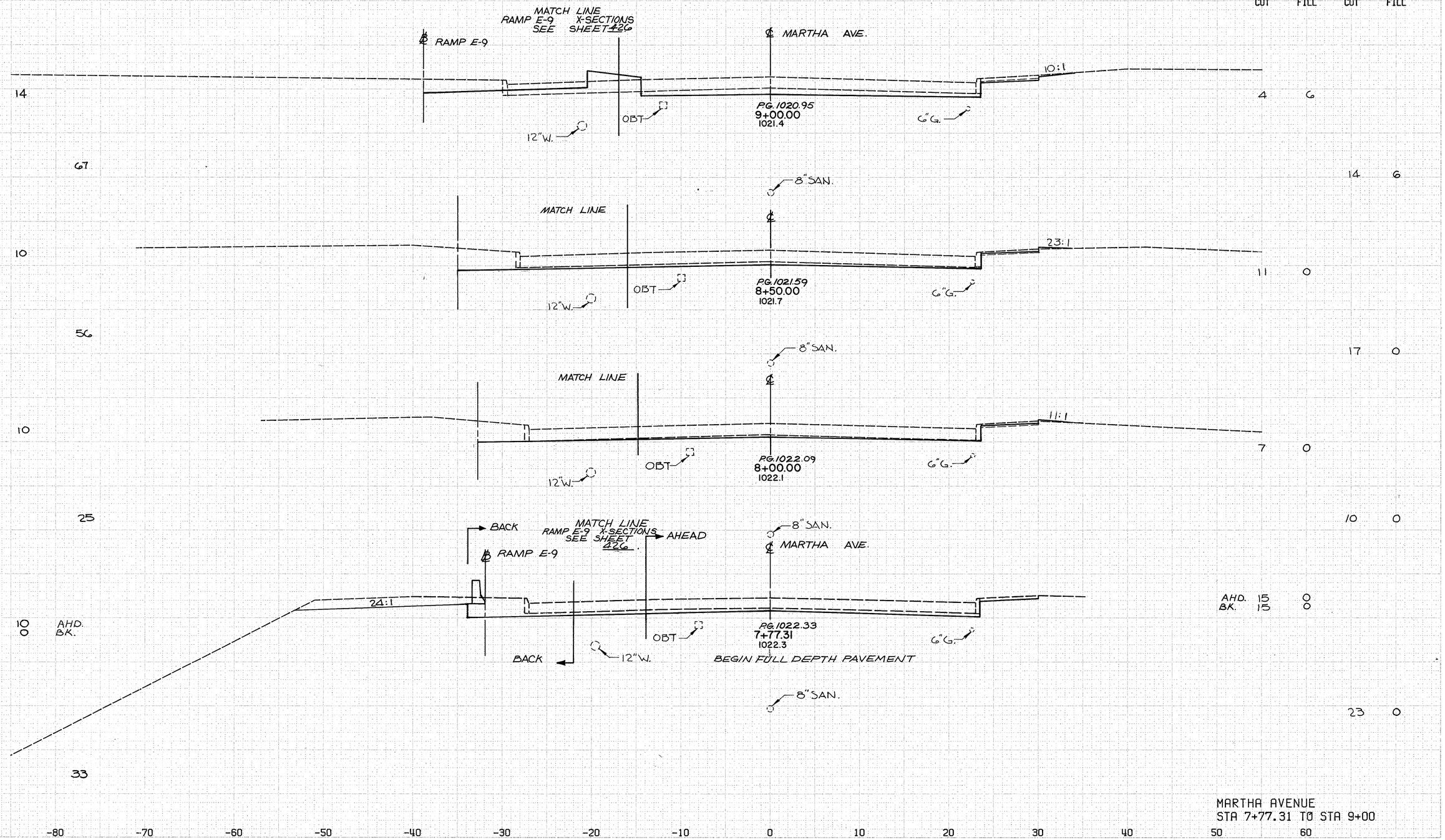

MARTHA AVENUE
STA 7+77.31 TO STA 9+00

PLATE 3, CROSS SECTION
KRUPPEL & KOCH CO.

CALCULATED BY BJB DATE 3/90
CHECKED BY DSB DATE 7/90

FHWA REG	STATE	PROJECT
5	OHIO	

467
1214

SUM - 76 - 11.57
IR - 76 - 2(44)19

END CUT	AREA FILL	CU. CUT	YDS. FILL
163	0		
		244	0
AHD. 100	0		
BK. 172	0		
		280	0
		207	2
AHD. 94	2		
BK 63	2		
		99	7
		44	6
		44	11

SEEDING
END WIDTH — SQ. YARDS

1020
1015
1025
1020
1025
1020
1025
1020

MATCH LINE
RAMP E-9 X-SECTIONS
SEE SHEET 425

EX. RAMP E-9'

20

4:1
8:1
10149

℄ MARTHA AVE.

OBT
PROP. 12"W.M.
12"W.M. TO BE ABD.
PG.1015.84
11+50.00
1017.2
6"W.M. ABD.
8"SAN.
℄ 21"ST.
INV.999.7 *
ELEC.

MATCH LINE
RAMP E-16 X-SECTIONS
SEE SHEET 425

* FOR DRAINAGE PROFILE
SEE SHEET 543 .

95

14 AHD.
33 BK.

4:1
10116.0

OBT
PROP. 12"W.M.
12"W.M. TO BE ABD.
PG.1016.89
11+00.00
1018.3
6"W.M. ABD.
8"SAN.
℄ 21"ST.
INV.998.5 *
ELEC.

AHEAD
BACK
2.3:1

181

3:1
8:1
1017.5

OBT
PROP. 12"W.M.
12"W.M. TO BE ABD.
PG.1017.94
10+50.00
1019.4
6"W.M. ABD.
8"SAN.
INV.1006.45
PROP. 12"ST.
ELEC.

MATCH LINE
50:1

32

167

28 AHD.
7 BK.

E-9
EX. RAMP E-9
3:1
8:1
1018.7

12"W.M.
OBT
PG.1018.99
10+00.00
1020.3
PROP. 12"ST.
8"SAN.
INV.1006.88
ELEC.
6"G.

AHEAD
BACK
MATCH LINE
30:1

33

RAMP E-9

MATCH LINE
RAMP E-9 X-SECTIONS
SEE SHEET 426

℄ MARTHA AVE.

MARTHA AVE.
ENGLEWOOD AVE. X-SECTIONS
SEE SHEET 41

5

3:1
8:1
1019.7
8:1
1020.0

12"W.M.
OBT
PG.1020.04
9+50.00
1021.0
8"SAN.
INV.1007.30
6"G.

53

-80 -70 -60 -50 -40 -30 -20 -10 0 10 20 30 40 50 60

MARTHA AVENUE
STA 9+50 TO STA 11+50

PLATE 3, CROSS SECTION
KOUFMAN & ROLER CO.

SEEDING
END SQ.
WIDTH YARDS

CALCULATED BY BJB DATE 3/90
CHECKED BY DSB DATE 7/90

FHWA REG	STATE	PROJECT
5	OHIO	

468 / 1214

SUM - 76 - 11.57
IR - 76 - 2(44)19

END CUT	AREA FILL	CU. CUT	YDS. FILL
62	0		
		144	0
		93	0
		295	0
		226	0
		435	0
		244	0
		377	0

EXISTING ABUTMENT

℄ MARTHA AVE.

EXISTING ABUTMENT

1010

OBT

PROP. 12"W.M.

12"W.M. TO BE ADD.

P.G. 1011.74
13+50.00
1012.74

6"W.M. ADD.

ELEC.

12"ST. TO BE ABD.

PROP 21"ST.

EX. 15" SAN. INV. 992.2±

PROPOSED ABUTMENT

1020

0 AHD.
12 BK.

MATCH LINE
I-76 X-SECTIONS
SEE SHEET 351

℄ MARTHA AVE.

206

1013.0

OBT

PROP. 12"W.M.

12"W.M. TO BE ADD.

P.G. 1012.69
13+00.00
1013.7

6"W.M. ADD.

ELEC.

MATCH LINE
RAMP E-9 X-SECTIONS
SEE SHEET 424

PROP 21"ST.

PROP 15" SAN. INV. 991.99 *

DITCH LOW POINT
STA. 12+55.41' LT.
C.B. NO.5 W/O APRON
T.G. = 1012.17
INV. 15" = 1008.92

MATCH LINE
I-76 X-SECTIONS
SEE SHEET 352

14.8:1

1015

62

℄ MARTHA AVE.

1012.8

OBT

PROP. 12"W.M.

12"W.M. TO BE ADD

P.G. 1013.74
12+50.00
1015.0

6"W.M. ADD.

ELEC.

PROP. 15" ST.

* FOR DRAINAGE PROFILE SEE SHEET 550.

270

MATCH LINE
RAMP E-9 X-SECTIONS
SEE SHEET 424

EX. 15" SAN. INV. 996.8±

PROP. 21"ST.

1020

℄ MARTHA AVE.

MATCH LINE
RAMP E-16 X-SECTIONS
SEE SHEET 445

35

1015

153

1013.7

OBT

PROP. 12"W.M.

12"W.M. TO BE ADD.

P.G. 1014.79
12+00.00
1016.1

6"W.M ADD.

ELEC.

PROP. 15" ST.

℄ EX. 8" SAN. INV. = 998.7±

℄ PROP. 21" ST. INV. = 1000.82 *

MARTHA AVENUE
STA 12+00 TO STA 13+50

-80 -70 -60 -50 -40 -30 -20 -10 0 10 20 30 40 50 60

PLATE 3. CROSS SECTION
KEUFFEL & ESSER CO.

CALCULATED BY BJB DATE 3/90
CHECKED BY DJB DATE 7/90

FHWA REG	STATE	PROJECT
5	OHIO	

469 / 1214

SUM - 76 - 11.57
IR - 76 - 2(44)19

END	AREA	CU.	YDS.
CUT	FILL	CUT	FILL

SEEDING
END WIDTH — SQ. YARDS

34 AHD.
57 BK.

1010

MATCH LINE
I-76 LEFT
SEE SHEET 230.

24:1

℄ MARTHA AVE.

AHEAD

BACK

AHD. 27 0
BK. 38 6

EX. RAMP 'E-12'

48:1

OBT
12"W.M.

PG. 1011.96
15+50.00
1012.0

6"W.M.
ABD.

ELEC.

MATCH LINE
RAMP E-12 X-SECTIONS
SEE SHEET 236.

℄ 15" SAN.
INV. = 992.9±

80 285

450

MATCH LINE
I-76 LEFT
SEE SHEET 230.

2:1

105

1010

℄

MATCH LINE
I-76 X-SECTIONS
SEE SHEET 231

12.8:1

OBT
12"W.M.

PG. 1011.46
15+00.00
1011.5

ELEC.
6"W.M.
ABD.

ELEC.

48 302

℄ 15" SAN.
INV. = 992.7

412

67 280

1015

PROPOSED ABUTMENT

PROPOSED ABUTMENT

142 + 70 AHD.
0 + 70 BK.

1010

℄

1011.0

24 0

12"ST.

OBT
12"W.M.

PG. 1011.11
14+50.00
1011.4

6"W.M.
ABD.

ELEC.

I-76 MATCH LINE
LEFT X-SECTIONS
SEE SHEET 231

℄ 15" SAN.
INV. = 992.5

PROP.
18" ST.

0

74 0

EXISTING ABUTMENT

℄ MARTHA AVE.

EXISTING ABUTMENT

1010

0

56 0

12"ST.

OBT
12"W.M.

PG. 1011.21
14+00.00
1011.9

6"W.M.
ABD.

ELEC.

109 0

℄ 15" SAN.
INV. = 992.3

PROP.
21" ST.

MARTHA AVENUE
STA 14+00 TO STA 15+50

-80 -70 -60 -50 -40 -30 -20 -10 0 10 20 30 40 50 60

PLATE 5, CROSS SECTION
EDWIN A. EVANS CO.

SEEDING
END SQ.
WIDTH YARDS

CALCULATED BY BJB DATE 3/90
CHECKED BY DSB DATE 7/90

FHWA REG	STATE	PROJECT
5	OHIO	

470
1214

SUM - 76 - 11.57
IR - 76 - 2(44)19

END CUT	AREA FILL	CU. YDS. CUT	CU. YDS. FILL
20	0		
37	0		
19	0		
36	0		
20	0		
32	0		
14	0		
38	0		
95			

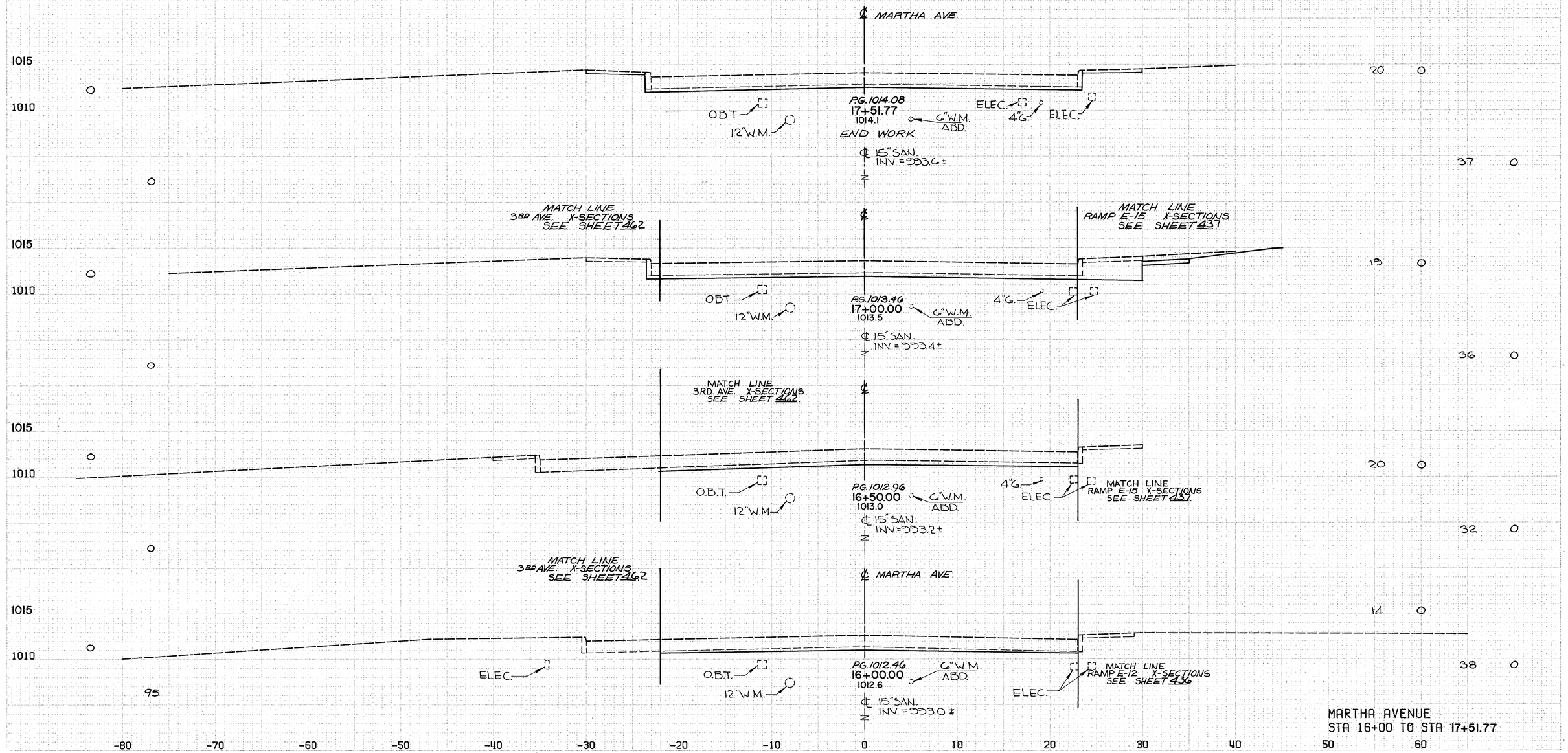

MARTHA AVENUE
STA 16+00 TO STA 17+51.77

PLATE 3, CROSS SECTION
KOMTEK & ISAAK CO.

CALCULATED BY BJB DATE 3/90
CHECKED BY PSB DATE 7/90

FHWA REG	STATE	PROJECT	471 / 1214
5	OHIO		

SUM-76-11.57
IR-76-2(44)19

END	AREA	CU.	YDS.
CUT	FILL	CUT	FILL

SEEDING
END SQ.
WIDTH YARDS

BACK

MATCH LINE
RAMP E-16 X-SECTIONS
SEE SHEET 445.

LA R/W

AHEAD

STA. 21+03.00
MEET EXIST.
FULL DEPTH
PAVEMENT

℄ ENGLEWOOD AVE.

1020
1015

83

16:1

4"G.

AHD 291 5
BK. 304 5

PG. 1021.23
21+03.00
1021.2

PROP. 12"W.M.

6"W.M. TO BE ABD.

8"SAN.

571

625 5

LA R/W

AHEAD

MATCH LINE
RAMP E-16 X-SECTIONS
SEE SHEET 445.

BACK

1020
1015

24.3:1

4.1

4"G.

4"G.

111 AHD.
15 BK.

AHD. 333 0
BK. 74 0

PG. 1019.91
20+50.00
1020.8

PROP. 12"W.M.

6"W.M. TO BE ABD.

8"SAN.

80 0

23

MATCH LINE
MARTHA AVE. X-SECTIONS
SEE SHEET 467

LA R/W

℄ ENGLEWOOD AVE.

MATCH LINE
MARTHA AVE. X-SECTIONS
SEE SHEET 466.

1020
1015

0

4"G.

PROP. 12"ST.

PROP. 12"ST.

PG. 1019.39
20+23.00
1020.2

6"W.M. TO BE ABD.

PROP. 12"W.M.

4"G.

85 0

8"SAN.

ENGLEWOOD AVE.
STA. 20+23 TO STA. 21+03

-130 -120 -110 -100 -90 -80 -70 -60 -50 -40 -30 -20 -10 0 10 20 30

PLATE 3. CROSS SECTION
ROUTES A ASSOC. CO.

SEEDING
END SQ.
WIDTH YARDS

CALCULATED BY BJB DATE 3/90
CHECKED BY DSB DATE 7/90

FHWA REG	STATE	PROJECT
5	OHIO	

472
12/14

SUM-76-11.57
IR-76-2(44) 19

END CUT	AREA FILL	CU. CUT	YDS. FILL

ORIGINAL SURVEY: SURVEYED BY ... DRAWN BY ... DATE ... PLOTTED BY ... DATE ... FINAL SURVEY: SURVEYED BY ... DRAWN BY ... DATE ... PLOTTED BY ... DATE ... NOTE BOOK ... PAGE NO. ... AREAS CHECKED ... DATE ... BY ...

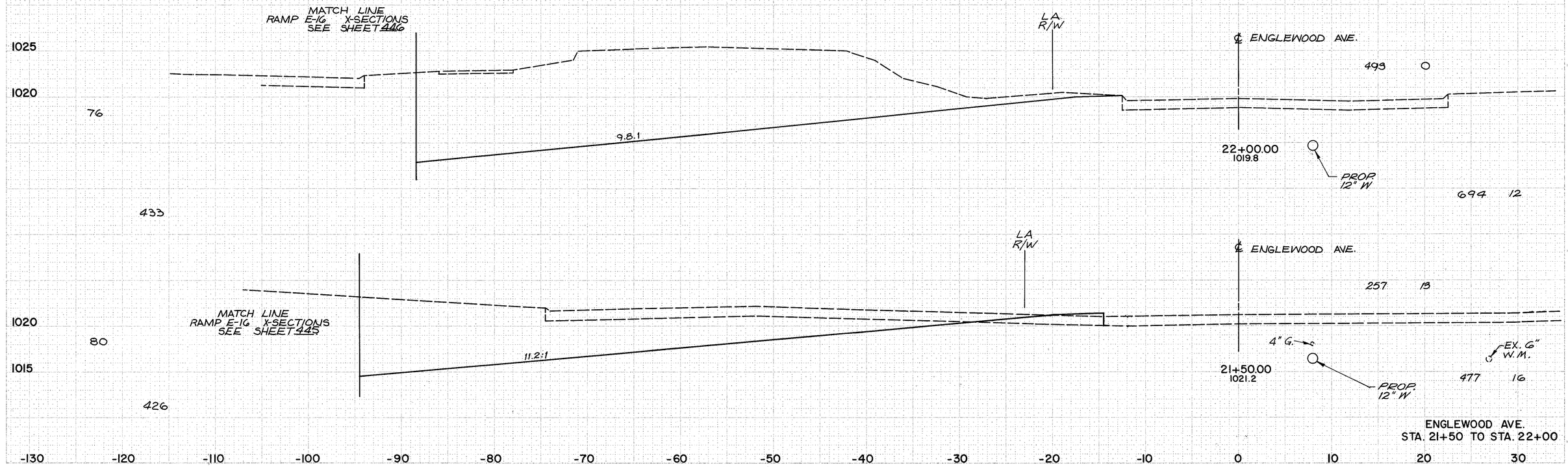

PLATE 3, CROSS SECTION
KNAPPEL & GRIER CO.

CALCULATED BY BJB DATE 3/90
CHECKED BY DSB DATE 7/90

FHWA REG	STATE	PROJECT
5	OHIO	

473
1214

SUM – 76 – 11.57
IR – 76 – 2(44) 19

END	AREA	CU.	YDS.
CUT	FILL	CUT	FILL

SEEDING
END WIDTH — SQ. YARDS

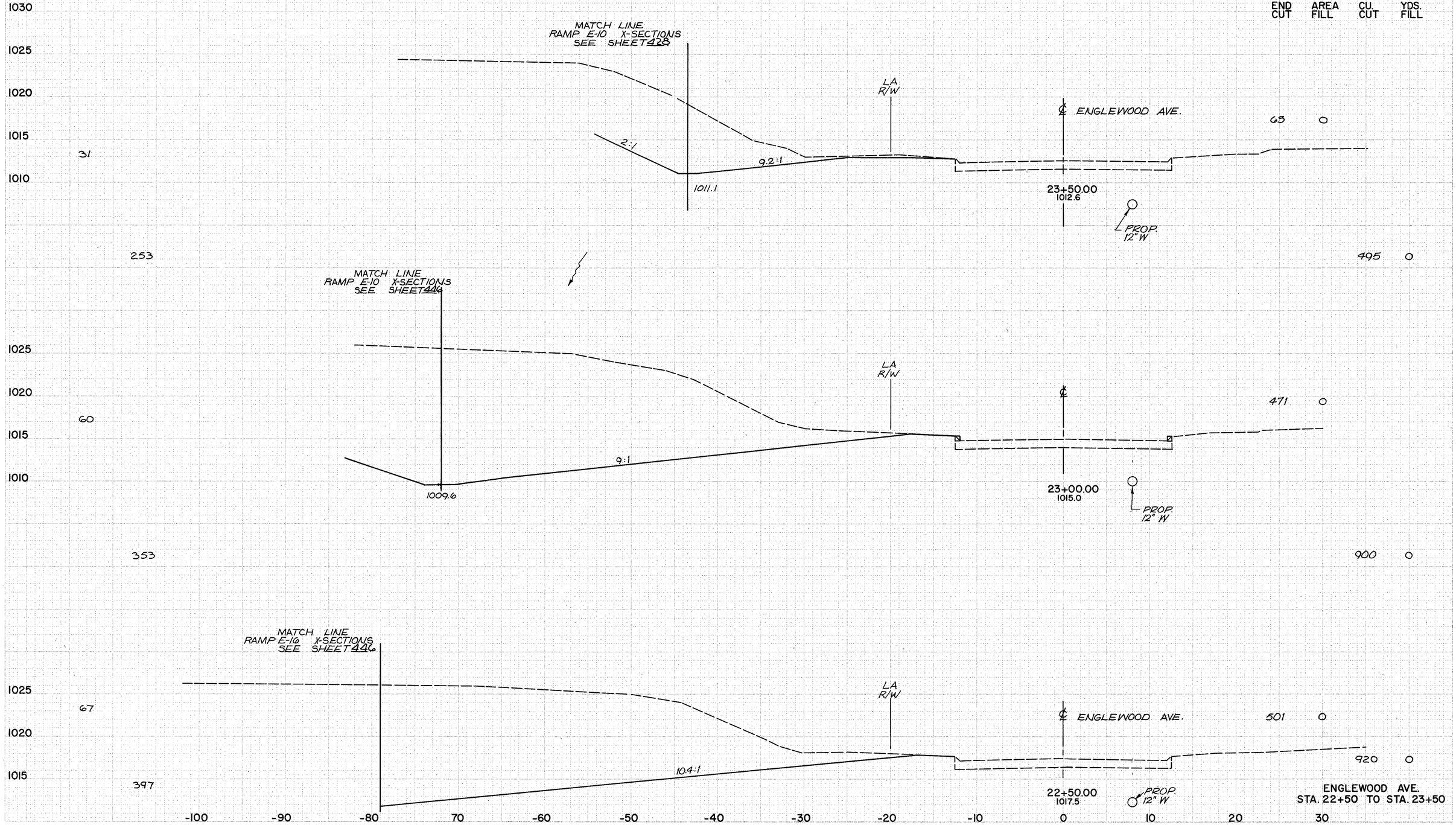

ENGLEWOOD AVE.
STA. 22+50 TO STA. 23+50

PLATE 9, CROSS SECTION
KOPPERS A BAKER CO.

ORIGINAL SURVEY	SURVEYED	BY	DATE
	PLOTTED		
NOTE BOOK	TEMPLATE		
	AREAS		
NO.	AREAS CHECKED		

FINAL SURVEY	SURVEYED	BY	DATE
	PLOTTED		
NOTE BOOK	TEMPLATE		
	AREAS		
NO.	AREAS CHECKED		

SEEDING

END WIDTH	SQ YARDS

END CUT	AREA FILL	CU. YDS. CUT	CU. YDS. FILL

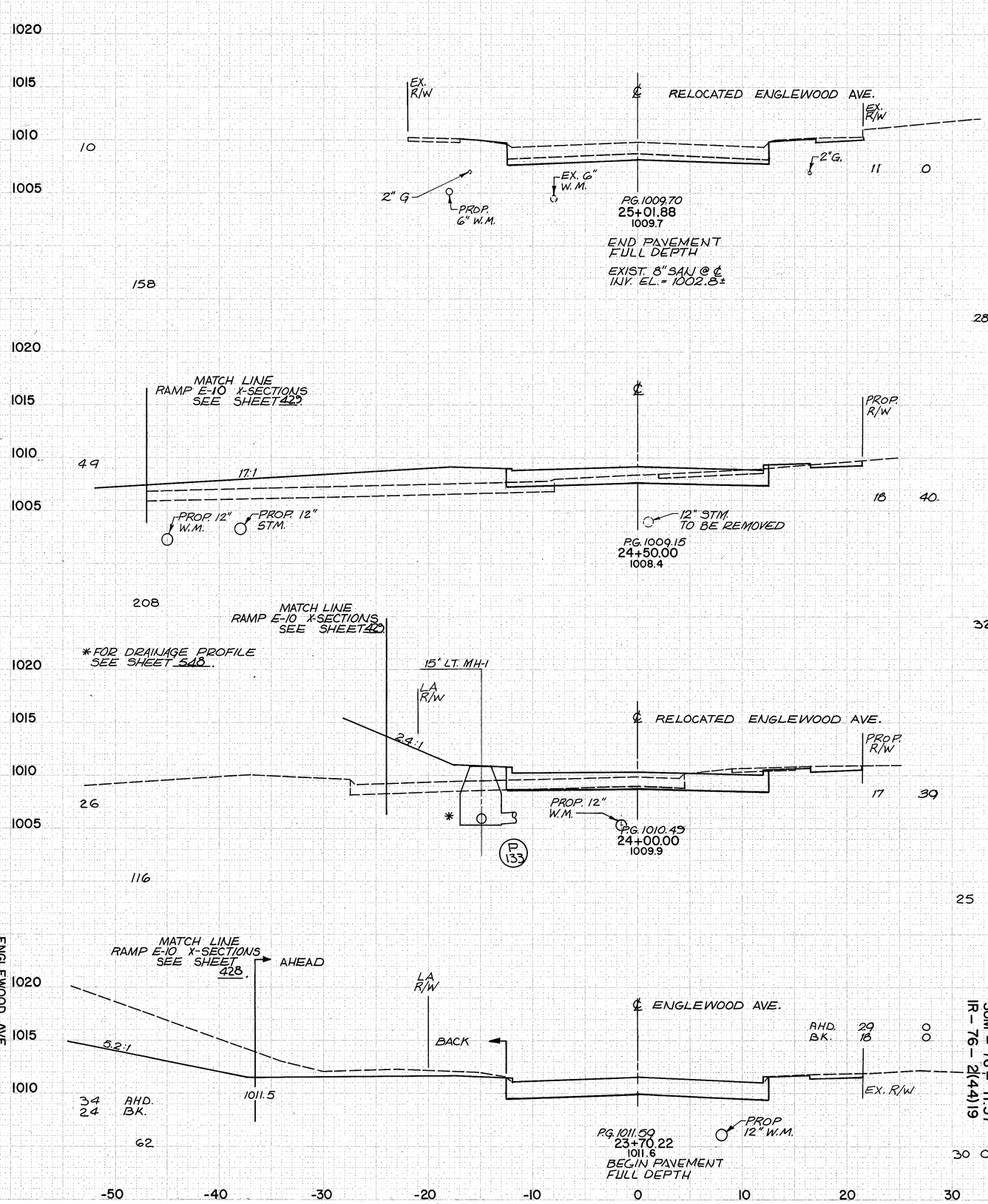

ENGLEWOOD AVE.
STA 23+70.22 TO STA. 25+01.88

CALCULATED BY BSB DATE 3/90
CHECKED BY JSB DATE 7/90

FHWA REG	STATE	PROJECT
5	OHIO	SUM – 76 – 11.57 IR – 76 – 2(44)19

12/4 474

ORIGINAL SURVEY		BY	DATE
	SURVEYED		
	PLOTTED		
NOTE BOOK	TRIPLATE		
	AREAS		
NO.	AREAS CHECKED		

FINAL SURVEY		BY	DATE
	SURVEYED		
	PLOTTED		
NOTE BOOK	TRIPLATE		
	AREAS		
NO.	AREAS CHECKED		

SEEDING

END WIDTH	SQ YARDS
60	268
67	364
64	320
51	142

END AREA CU. YDS.

CUT	FILL
0	126
165	0
109	0
222	0
131	0
169	0
51	0
4	48
4	0

N. END PEDESTRIAN BRIDGE
STA. 12+54.55 SCHOOL ROAD
PROP. ELEV. 1161.33

℄ PROFILE SCHOOL ROAD

1160

(SKEWED)
℄ INTERSECTION SCHOOL RD. STA. 12+83.92
P.G. 1161.78
50+00.00
1158.05

℄ SCHOOL WALK

E.P. SCHOOL RD.

1160

2:1

40

(SKEWED)
P.G. 1161.54
49+88.00
1157.11

2:1

MATCH LINE
MAINLINE
X-SECTIONS
SEE SHEET 258

1155

1150

2:1

48

2:1

MATCH LINE
MAINLINE
X-SECTIONS
SEE SHEET 258

P.G. 1154.80
49+50.00
1151.45

1145

1140

2:1

56

2:1

P.G. 1145.33
49+00.00
1142.75

1135

2:1

22

2:1

1130

P.G. 1137.07
48+50.00
1135.10

℄ SCHOOL WALK

MATCH LINE
MAINLINE
X-SECTIONS
SEE SHEET 257

1130

1125

48+00.00
1128.20
MEET EXIST. WALK

-40 -30 -20 -10 0 10 20 30 40

SCHOOL WALK
STA. 48+00 TO STA. 50+00

CALCULATED BY BSB DATE 2/90
CHECKED BY DSB DATE 7/90

FHWA REG	STATE	PROJECT
5	OHIO	SUM - 76 - 11.57 IR - 76 - 2 (44)19

475 12/14

ORIGINAL SURVEY		BY	DATE
	SURVEYED		
	PLOTTED		
NOTE BOOK	TRAPLATE		
	AREAS		
NO.	AREAS CHECKED		

FINAL SURVEY		BY	DATE
	SURVEYED		
	PLOTTED		
NOTE BOOK	TRAPLATE		
	AREAS		
NO.	AREAS CHECKED		

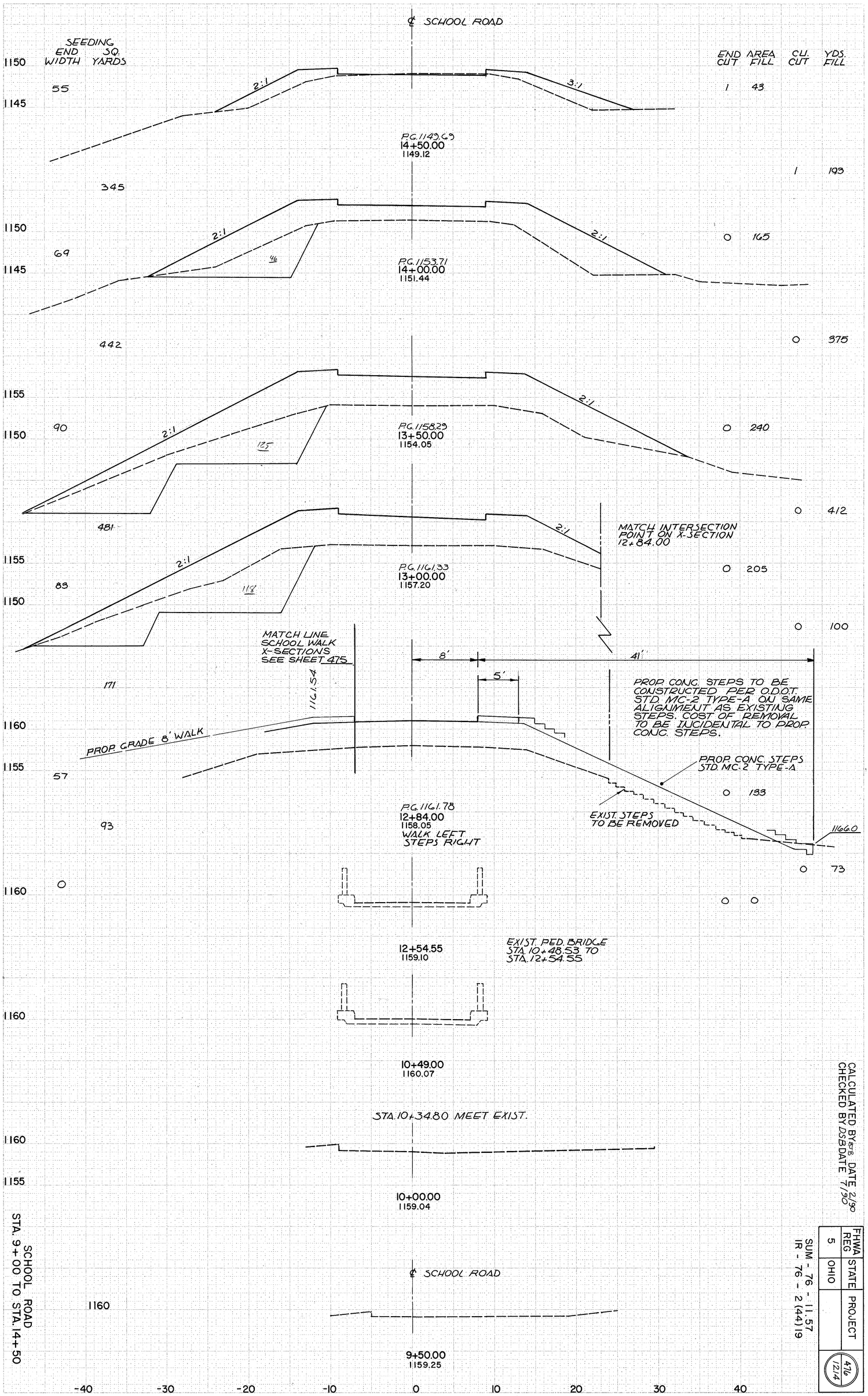

SCHOOL ROAD
STA. 9+00 TO STA. 14+50

CALCULATED BY RSB DATE 2/90
CHECKED BY DSB DATE 7/90

FHWA REG	STATE	PROJECT
5	OHIO	SUM - 76 - 11.57 IR - 76 - 2 (44) 19

47A/1214

ORIGINAL SURVEY — BY — DATE — PROPOSED — PLANNED — FIELD BOOK — PLOTTED — CHECKED — AREAS COMPUTED

FINAL SURVEY — BY — DATE — PROPOSED — PLANNED — FIELD BOOK — PLOTTED — CHECKED — AREAS COMPUTED

SODDING

END WIDTH	SQ. YARDS
57	
10	

END CUT AREA	CU. YDS. FILL	CU. YDS. CUT	CU. YDS. FILL
0		0	
0		2	
11		1	
28		0	

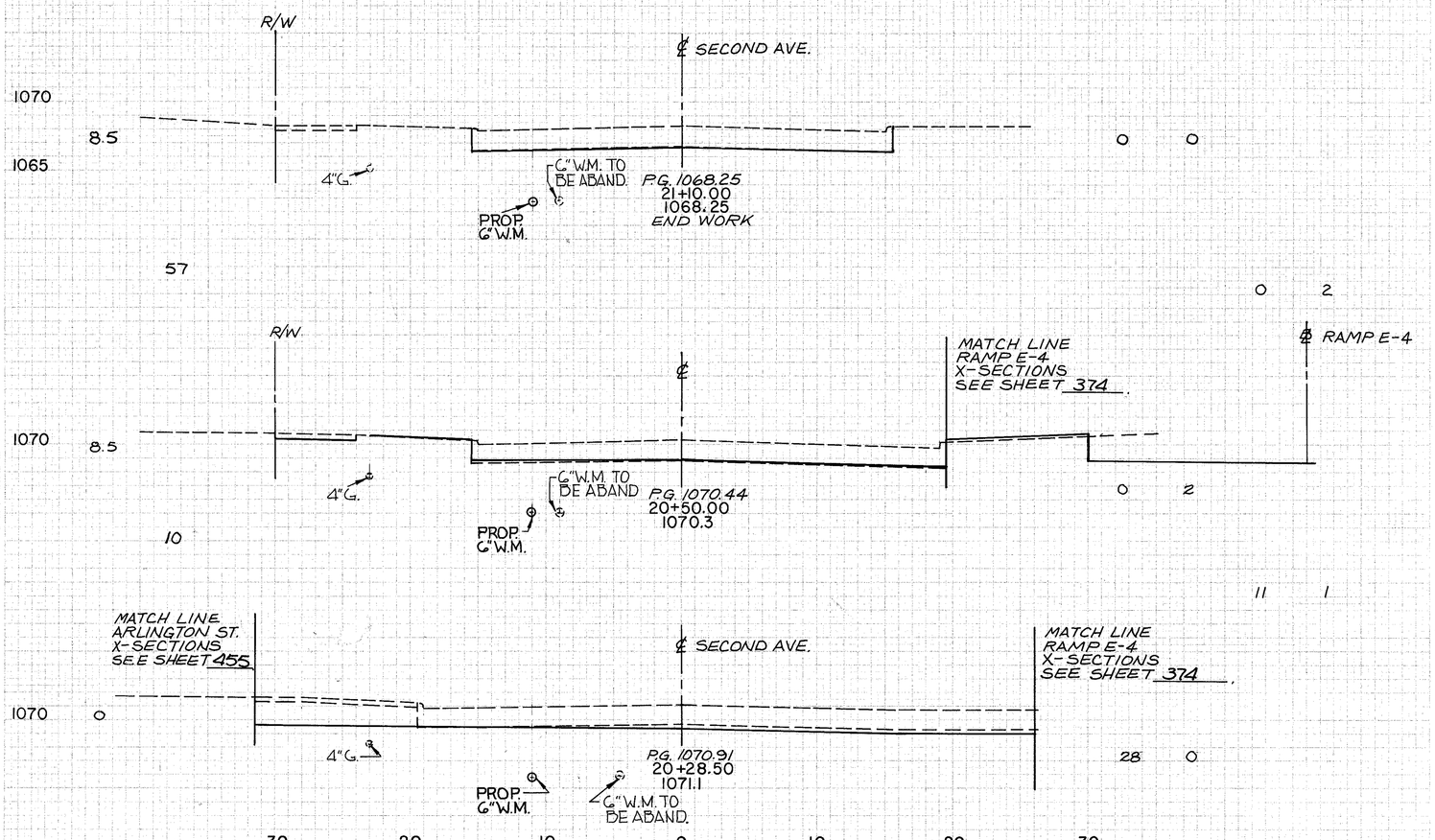

SEEDING

END WIDTH	SQ. YARDS
208	
20	
14	
14	40

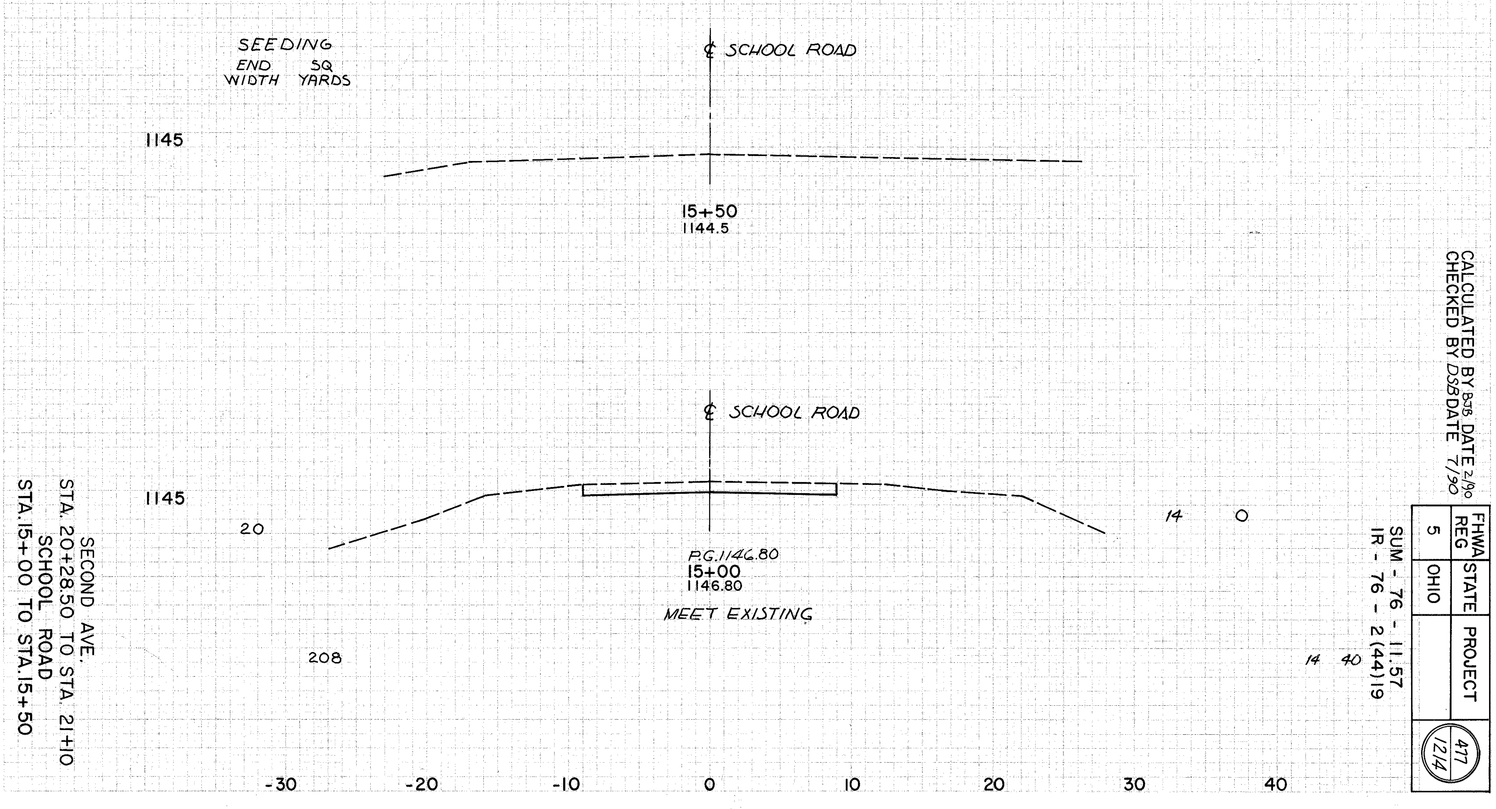

SECOND AVE.
STA. 20+28.50 TO STA. 21+10
SCHOOL ROAD
STA. 15+00 TO STA. 15+50

CALCULATED BY BJS DATE 2/90
CHECKED BY DSS DATE 7/90

FHWA REG	STATE	PROJECT
5	OHIO	SUM - 76 - 11.57 IR - 76 - 2 (44) 19

477
1214

AA B/P# 71942R

CALC. BY. DATE	SUM - 76 - 11.57	OHIO	478 / 1214
CHKD. BY. DATE	FED. PROJECT IR-76-2(44)19	F.H.W.A. REGION 5	
	SUMMIT COUNTY		

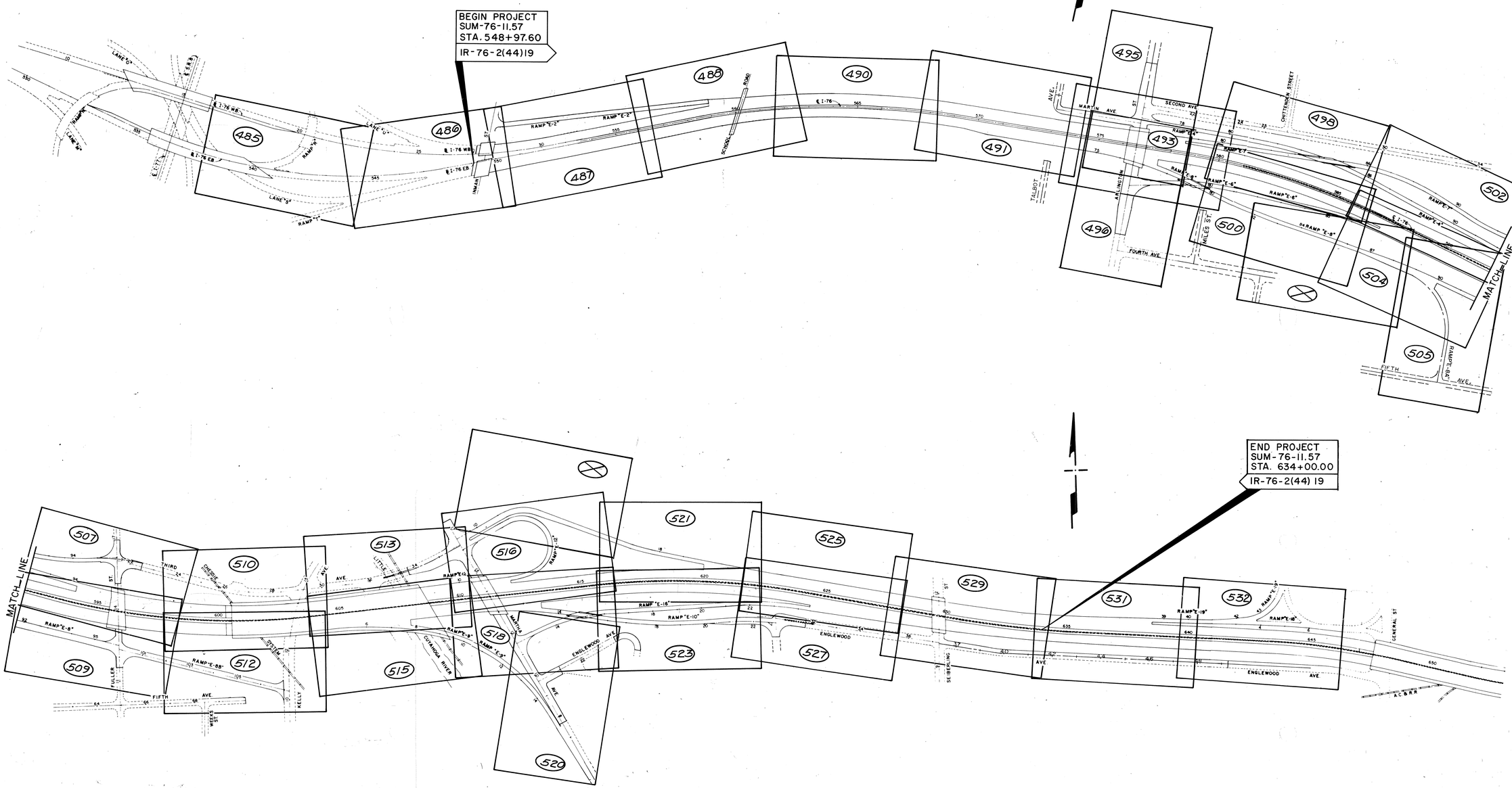

DRAINAGE **KEY MAP**

DRAINAGE SUBSUMMARY

CALC. BY EJK DATE 3/91
CHKD. BY DJB DATE 3/91

SUM-76-11.57
FED. PROJECT IR-76-2(44)19
SUMMIT COUNTY

OHIO
F.H.W.A. REGION 5

479
1214

SHEET NUMBER																							PARTICIPATION			ITEM	ITEM EXT.	GRAND TOTAL	UNIT	DESCRIPTION
482	483	484	489	492	494	497	499	501	503	506	508	511	514	517	519	522	524	526	528	530	533	555A								
																													DRAINAGE	
				226	38	195	60			190	152	44	105				73	120	28		132					202		1363	L.F.	PIPE REMOVED, 24" AND UNDER
							1				1		1													202		3	EA.	MANHOLE REMOVED
				1		1				3	6	2	1				2	1	1							202		18	EA.	CATCH BASIN REMOVED
						1															4					202		5	EA.	INLET REMOVED
				1				1		2	1			1	2		1		1	2						202		12	EA.	MANHOLE ABANDONED
				2	1	2	1	6	2	2		3	3	7	2	4	8	2		1						202		46	EA.	CATCH BASIN ABANDONED
							2	2						1	1			2	1	2						202		11	EA.	INLET ABANDONED
												1														202		1	EA.	MANHOLE ABANDONED, AS PER PLAN
1115	1690	420																								207		3225	L.F.	FILTER FABRIC FENCE
48	200	144																								207		392	EA.	STRAW OR HAY BALES
456	256	444																								207		1156	C.Y.	TEMPORARY BENCHES, DIKES DAMS, AND SEDIMENT BASINS
																						77				305		77	S.Y.	8" CONCRETE BASE
																						2.6				404		2.6	C.Y.	ASPHALT CONCRETE, AC-20
																						6				407		6	GAL.	TACK COAT
																		2								601		2	C.Y.	ROCK CHANNEL PROTECTION, TYPE C WITH FILTER
6	4	7																								601		17	C.Y.	ROCK CHANNEL PROTECTION, TYPE C WITHOUT FILTER
					24			155												120						601		299	L.F.	PAVED GUTTER, TYPE 1-2
								211																		601		211	L.F.	PAVED GUTTER, TYPE 4
			326	832																						601		1158	S.Y.	CRUSHED AGGREGATE SLOPE PROTECTION, AS PER PLAN
										1.5								0.3								602		1.8	C.Y.	CONCRETE MASONRY
						9																				603		9	L.F.	6" CONDUIT, TYPE B
						32		18	20	25				59		61	31		31							603		277	L.F.	6" CONDUIT, TYPE B, 707.17 NON-PERFORATED, ASTM 3034, SDR 35 OR SS931
			233	166	206	90	88	139	83	144	233	187	87	110	86	83	40	63	100	50	212					603		2400	L.F.	6" CONDUIT, TYPE F, 707.17 NON-PERFORATED, ASTM 3034, SDR 35 OR SS931
													108													603		108	L.F.	12" CONDUIT, TYPE B
						296	19				28			38	17	195	101			82	154					603		930	L.F.	12" CONDUIT, TYPE B, 706.02
										10																603		10	L.F.	12" CONDUIT, TYPE C
																	83									603		83	L.F.	12" CONDUIT, TYPE C, 706.02
													51													603		51	L.F.	12" CONDUIT, TYPE C, 707.13
			18	26																						603		44	L.F.	12" CONDUIT, TYPE F, 707.17, NONPERFORATED, ASTM 3034 SDR35 OR SS931
				95	170		254	152	32	150	384	126	74	123	163		48		152	154	27					603		2104	L.F.	15" CONDUIT, TYPE B
							62		192		106	75		174					24							603		633	L.F.	15" CONDUIT, TYPE B, 706.02
											98				143		161									603		402	L.F.	15" CONDUIT, TYPE B, 707.13
														168												603		168	L.F.	15" CONDUIT, TYPE B, 706.02 OR 707.13
																	38									603		38	L.F.	15" CONDUIT, TYPE B, 706.02, D-LOAD 3000
				350				261	90	205	184	31	87	80		122	272									603		1682	L.F.	15" CONDUIT, TYPE C
															135				63							603		198	L.F.	15" CONDUIT, TYPE C, 706.02
											53				118			34	28							603		233	L.F.	15" CONDUIT, TYPE C, 707.13

DRAINAGE SUBSUMMARY

CALC. BY EJK DATE 3/91	SUM-76-11.57	OHIO
CHKD. BY TJB DATE 3/91	FED. PROJECT IR-76-2(44)19	F.H.W.A. REGION 5
	SUMMIT COUNTY	

480 / 1214

SHEET NUMBER																									PARTICIPATION			ITEM	ITEM EXT.	GRAND TOTAL	UNIT	DESCRIPTION
489	492	494	497	499	501	503	506	508	511	514	517	519	522	524	526	528	530	533														
																															DRAINAGE cont.	
70											94	164		125			258											603		711	L.F.	18" CONDUIT, TYPE B
											55																	603		55	L.F.	18" CONDUIT, TYPE B, 706.02
					85													8										603		93	L.F.	18" CONDUIT, TYPE B, 706.02, D-LOAD 3000
	258	74														31		282										603		645	L.F.	18" CONDUIT, TYPE C
											205							26										603		231	L.F.	21" CONDUIT, TYPE B, 706.02
												123																603		123	L.F.	21" CONDUIT, TYPE B, 706.02, D-LOAD 1500
		222																										603		222	L.F.	24" CONDUIT, TYPE B
												207																603		207	L.F.	24" CONDUIT, TYPE B, 706.02, D-LOAD 1500
		151																										603		151	L.F.	24" CONDUIT, TYPE C
					94																							603		94	L.F.	24" CONDUIT, TYPE C, 706.02, D-LOAD 1250, OR 707.13
									275	72																		603		347	L.F.	30" CONDUIT, TYPE B
												45																603		45	L.F.	30" CONDUIT, TYPE B, 706.02, D-LOAD 1500
												132																603		132	L.F.	30" CONDUIT, TYPE B, 706.02, D-LOAD 2500
										60																		603		60	L.F.	30" CONDUIT, TYPE B, 706.02, D-LOAD 3000 UNDER R.R. W/CASING PIPE, AS PER PLAN
							83																					603		83	L.F.	30" CONDUIT, TYPE B, 706.02 D-LOAD 1250, OR 707.13
							258		472																			603		730	L.F.	30" CONDUIT, TYPE C
					622		270			225																		603		1117	L.F.	30" CONDUIT, TYPE C, 706.02, D-LOAD 1250, OR 707.13
												163																603		163	L.F.	30" CONDUIT, TYPE C, 706.02, D-LOAD 1500
														1														604		1	EA.	CATCH BASIN NO. 2-2-A
																1	1											604		2	EA.	CATCH BASIN NO. 2-2-B
														1														604		1	EA.	CATCH BASIN NO. 2-3
					1	1			1	1	1																	604		5	EA.	CATCH BASIN NO. 3
										2																		604		2	EA.	CATCH BASIN NO. 3A
	2	1		1	6	1	4	4	3	2	2	4	2	1		2	1	1										604		37	EA.	CATCH BASIN NO. 5 WITHOUT APRON
					2		2					1																604		5	EA.	CATCH BASIN NO. 5A WITHOUT APRON
2											1																	604		3	EA.	CATCH BASIN ADJUSTED TO GRADE
											1																	604		1	EA.	INLET NO. 2-6, AS PER PLAN
											1																	604		1	EA.	INLET NO. 2-A-6, AS PER PLAN
					1									1														604		2	EA.	INLET NO. 2-A-10, AS PER PLAN
									1																			604		1	EA.	INLET NO. 2-A-12, AS PER PLAN
	1																											604		1	EA.	INLET NO. 2-A-20, AS PER PLAN
												2																604		2	EA.	INLET NO. 3, AS PER PLAN, No. 1
					1	1		1		1					1	1												604		6	EA.	INLET NO. 3A, AS PER PLAN
		1		1				3						1														604		6	EA.	INLET NO. 3B50, AS PER PLAN
			6	1				1	1	2	4	1	2	4	1	3	4	6										604		36	EA.	INLET, CITY OF AKRON NO. 3
	1																											604		1	EA.	INLET ADJUSTED TO GRADE
										1																		604		1	EA.	JUNCTION CHAMBER, AS PER PLAN
		3				1		3	3	1	2	4	1	4			1	1										604		24	EA.	MANHOLE, NO. 1
										1		3			1													604		5	EA.	MANHOLE, NO. 3
										1																		604		1	EA.	MANHOLE, NO. 5, CITY OF AKRON
			4				1	1	1		1			1		1	2	4										604		16	EA.	MANHOLE ADJUSTED TO GRADE
1	1					1		1					1			1												604		6	EA.	MANHOLE RECONSTRUCTED TO GRADE
										1																		604		1	EA.	MANHOLE RECONSTRUCTED, AS PER PLAN

DRAINAGE SUBSUMMARY

CALC. BY EJK DATE 3/91
CHKD. BY DSB DATE 3/91

SUM-76-11.57
FED. PROJECT IR-76-2(44)19

OHIO
F.H.W.A. REGION 5

SUMMIT COUNTY

481
1214

SHEET NUMBER																			PARTICIPATION			ITEM	ITEM EXT.	GRAND TOTAL	UNIT	DESCRIPTION
489	492	494	497	499	501	503	506	508	511	514	517	519	522	524	526	528	530	533								
																										DRAINAGE cont.
5511	7571	2379	1412	1954	2082	1894	1490	2071	2061	815	2497	1876	2292	2146	1064	1538	2505	1414				605		44,572	L.F.	6" SHALLOW PIPE UNDERDRAINS, AS PER PLAN
492	1186																					605		1678	L.F.	6" SHALLOW PIPE UNDERDRAINS, 707.15, AS PER PLAN
		230			104	290	857		630	623												605		2734	L.F.	6" DEEP PIPE UNDERDRAINS, AS PER PLAN
559	50	85	175	33		109	89	30		452	320	177	131		123	247	114					605		2694	L.F.	6" UNCLASSIFIED PIPE UNDERDRAINS, AS PER PLAN
792																						605		792	L.F.	12" SHALLOW PIPE UNDERDRAINS, AS PER PLAN
50	1477																					605		1527	L.F.	12" UNCLASSIFIED PIPE UNDERDRAINS, AS PER PLAN
		4			26																	660		30	S.Y.	SODDING
93	22	100			75			61			105	32		12								660		500	S.Y.	REINFORCED SODDING
743	827	125		317	700	190	668	459	375	250	514	535	417	520		250	125					670		7015	S.Y.	DITCH EROSION PROTECTION
5	2	1						1	2			1	1		1			1				SPECIAL		15	EA.	PRECAST REINFORCED CONCRETE OUTLET
								143														SPECIAL		143	L.F.	FILL AND PLUG EXISTING CONDUIT
																										SANITARY SEWER Y060
						1		1	2		1	2	2		1	1	1					202		12	EA.	MANHOLE ABANDONED
					284																	603		284	L.F.	8" CONDUIT, TYPE C, 706.08 WITH 706.12 JOINTS
					273																	603		273	L.F.	12" CONDUIT, TYPE B, 706.03, D-LOAD 2750 WITH 706.11 JOINTS
												28										603		28	L.F.	15" CONDUIT, TYPE B, 706.03 WITH 706.11 JOINTS
				180																		603		180	L.F.	18" CONDUIT, TYPE B, 706.03, D-LOAD 3000 WITH 706.11 JOINTS
												230										603		230	L.F.	18" CONDUIT, TYPE B, 706.03, D-LOAD 3250 WITH 706.11 JOINTS
				1	2							2										604		5	EA.	MANHOLE NO. 3 WITH 706.11 JOINTS
								1	1						1	1	1	3				604		8	EA.	MANHOLE ADJUSTED TO GRADE
												1	1	1								604		3	EA.	MANHOLE RECONSTRUCTED TO GRADE

AA B/Pe 719428

DRAINAGE SCHEMATIC PLAN AND TEMPORARY SOIL EROSION AND SEDIMENT CONTROL PLAN

CALC. BY. KDK DATE 9/89	SUM-76-11.57	OHIO
CHKD. BY. DSB DATE 7/90	FED. PROJECT IR-76-2(44)19	F.H.W.A. REGION 5

SUMMIT COUNTY

482 / 1214

BEGIN PROJECT
SUM-76-11.57
STA. 548+97.60
IR-76-2(44)19

STRAW OR HAY BALE DITCH CHECKS AS SHOWN ON STANDARD DRAWING MC-11 SHALL BE SPECIFIED WITH SMALL PITS EXCAVATED BEHIND THEM AT ALL SIGNIFICANT CHANGES IN THE DITCH GRADE. DITCH CHECKS SHALL BE PLACED SO THAT NO CHECK IS WITHIN THE BACKWATER OF A DOWNSTREAM CHECK.

LOCATIONS AND QUANTITIES FOR THE DITCH CHECKS HAVE NOT BEEN SHOWN ON THE TEMPORARY EROSION AND SEDIMENT CONTROL PLAN. AN ESTIMATED QUANTITY OF STRAW OR HAY BALES TO PROVIDE FOR THE DITCH CHECKS HAS BEEN INCLUDED IN THE TEMPORARY SOIL EROSION AND SEDIMENT CONTROL NOTE ON SHEET 90.

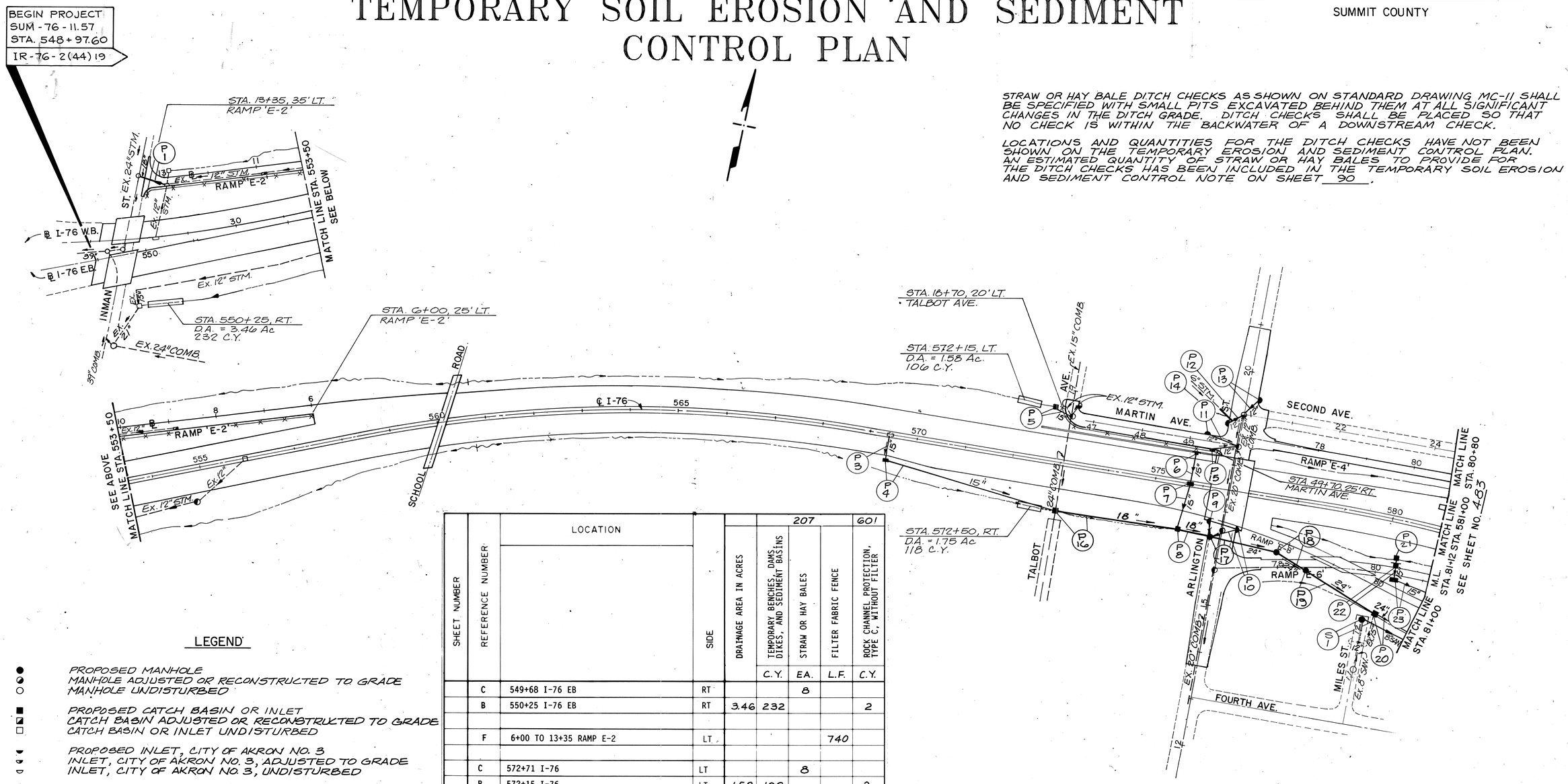

LEGEND

- PROPOSED MANHOLE
- MANHOLE ADJUSTED OR RECONSTRUCTED TO GRADE
- MANHOLE UNDISTURBED
- PROPOSED CATCH BASIN OR INLET
- CATCH BASIN ADJUSTED OR RECONSTRUCTED TO GRADE
- CATCH BASIN OR INLET UNDISTURBED
- PROPOSED INLET, CITY OF AKRON NO. 3
- INLET, CITY OF AKRON NO. 3, ADJUSTED TO GRADE
- INLET, CITY OF AKRON NO. 3, UNDISTURBED
- EXISTING PIPE
- PROPOSED PIPE
- SEDIMENT BASIN ... (B)
- DIRECTION OF FLOW
- D.A. DRAINAGE AREA
- 8 STRAW OR HAY BALES PER CATCH BASIN ... (C)
- FILTER FABRIC FENCE ... (F)

SHEET NUMBER	REFERENCE NUMBER	LOCATION	SIDE	DRAINAGE AREA IN ACRES	207 TEMPORARY BENCHES, DAMS, DIKES, AND SEDIMENT BASINS C.Y.	207 STRAW OR HAY BALES EA.	207 FILTER FABRIC FENCE L.F.	601 ROCK CHANNEL PROTECTION, TYPE C, WITHOUT FILTER C.Y.
	C	549+68 I-76 EB	RT			8		
	B	550+25 I-76 EB	RT	3.46	232			2
	F	6+00 TO 13+35 RAMP E-2	LT				740	
	C	572+71 I-76	LT			8		
	B	572+15 I-76	LT	1.58	106			2
	F	18+70 TALBOT AVE TO 49+70 MARTIN AVE	LT/RT				375	
	C	573+00 I-76	RT			8		
	B	572+50 I-76	RT	1.75	118			2
	C	575+50 I-76	RT			8		
	C	80+44 RAMP E-6	LT			8		
	C	80+14 RAMP E-8	RT			8		
		TOTALS		-	456	48	1115	6

P-NUMBERS NOT USED:
P-2

SCALE IN FEET
0 100 200 300

DRAINAGE SCHEMATIC PLAN

REFERENCE NUMBER	LOCATION	SIDE	DRAINAGE AREA IN ACRES	207 TEMPORARY BENCHES, DAMS, DIKES, AND SEDIMENT BASINS C.Y.	207 FILTER FABRIC FENCE L.F	601 ROCK CHANNEL PROTECTION, TYPE C, WITHOUT FILTER C.Y.
B	12+00 RAMP E-8A	RT	1.13	76		1
B	92+10 RAMP E-8	LT	1.16	78		1
B	105+70 RAMP E-8B	LT	1.52	102		2
F	84+50 RAMP E-4 TO 91+00 RAMP E-7	LT			710	
F	94+50 RAMP E-8 TO 13+15 FULLER ST	LT			150	
F	13+15 FULLER ST TO 100+30 RAMP E-8B	RT/LT			60	
F	14+80 FULLER ST TO 600+00 I-76	RT/LT			420	
F	106+50 RAMP E-8B TO 11+25 KELLY AVE	LT			75	
F	33+50 THIRD AVE TO 610+50 I-76	RT			275	
	TOTALS		–	256	1690	4

REFERENCE NUMBER	LOCATION	SIDE	DRAINAGE AREA IN ACRES	207 STRAW OR HAY BALES EA.
C	83+50 RAMP E-4	RT		8
C	81+26 TO 81+77 RAMP E-6	RT/LT		16
C	RAMP E-8 AND RAMP E-8A	RT/LT		104
C	87+25 RAMP E-4	RT		8
C	593+92 I-76 TO 15+75 FULLER ST	LT		32
C	600+00 I-76	LT		8
C	104+00 TO 106+25 RAMP E-8B	LT		16
C	9+75 RAMP E-9	RT		8
	TOTALS		–	200

CALC. BY KDK DATE 8/89
CHKD. BY TSB DATE 1/90

SUM-76-11.57
FED. PROJECT IR-76-2(44)19
SUMMIT COUNTY

OHIO
F.H.W.A. REGION 5

483
1214

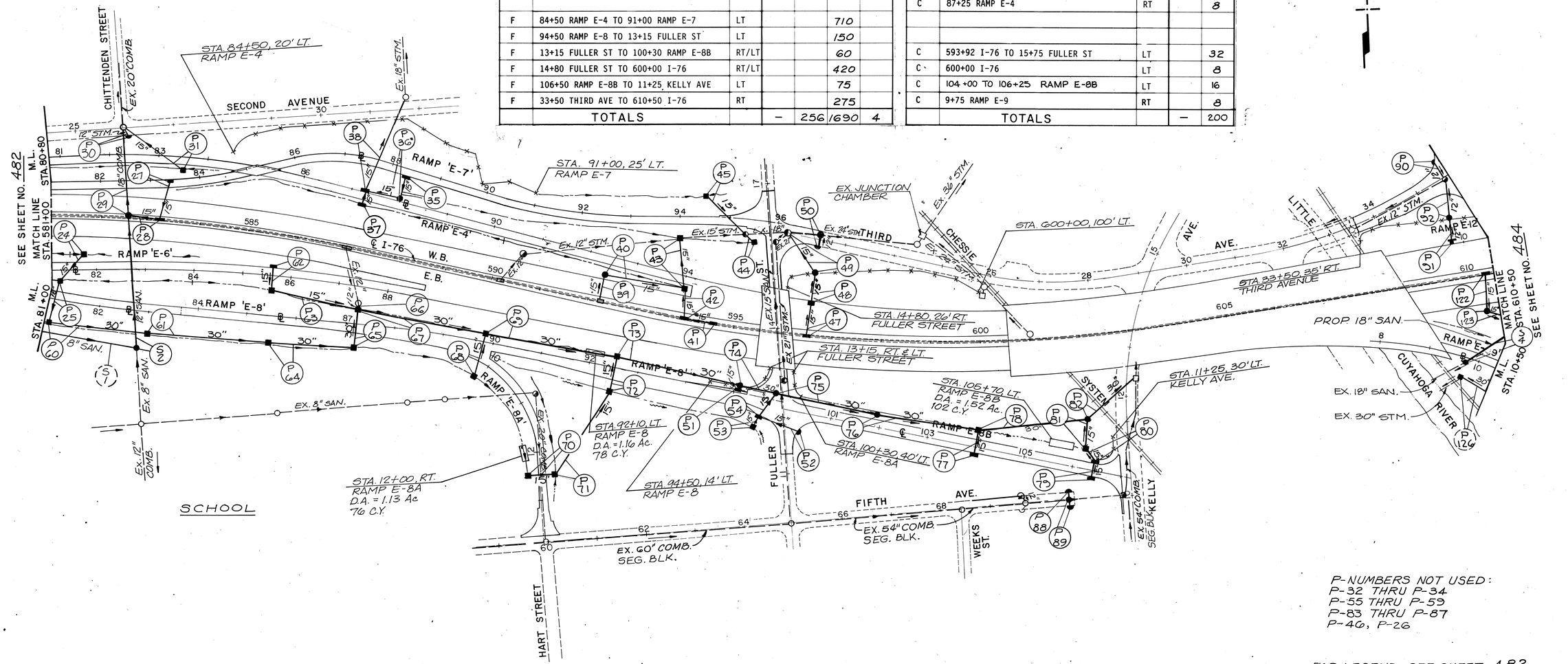

P-NUMBERS NOT USED:
P-32 THRU P-34
P-55 THRU P-59
P-83 THRU P-87
P-46, P-26

FOR LEGEND, SEE SHEET 482.

SCALE IN FEET
0 100 200 300

DRAINAGE SCHEMATIC PLAN

CALC. BY. KDK DATE 6/89	SUM-76-11.57	OHIO
CHKD. BY. DSB DATE 7/90	FED. PROJECT IR-76-2(44)19	F.H.W.A. REGION 5

484
1214

SUMMIT COUNTY

REFERENCE NUMBER	LOCATION	SIDE	DRAINAGE AREA IN ACRES	207 TEMPORARY BENCHES, DAMS, DIKES, AND SEDIMENT BASINS C.Y.	207 FILTER FABRIC FENCE L.F.	601 ROCK CHANNEL PROTECTION, TYPE C, WITHOUT FILTER C.Y.
B	615+90 I-76	LT	1.10	74		1
B	17+70 RAMP E-12	LT	1.75	118		2
B	610+90 I-76	RT	1.00	67		1
B	12+00 RAMP E-9	RT	1.19	80		1
B	21+50 RAMP E-10	RT	1.56	105		2
F	11+00 TO 12+50 RAMP E-15	LT			170	
F	42+00 TO 44+50 ENGLEWOOD AVE	LT			250	
	TOTALS		—	444	420	7

REFERENCE NUMBER	LOCATION	SIDE	207 STRAW OR HAY BALES EA.
C	14+50 RAMP E-15 TO 621+50 I-76	LT	32
C	15+20 MARTHA AVE	RT	8
C	12+55 MARTHA AVE	LT	8
C	11+50 RAMP E-9	RT	8
C	12+20 MARTHA AVE	RT	8
C	14+50 TO 17+50 RAMP E-16	RT/LT	24
C	17+50 22+50 RAMP E-10	RT/LT	32
C	628+00 TO 635+00 I-76	LT	24
	TOTALS		144

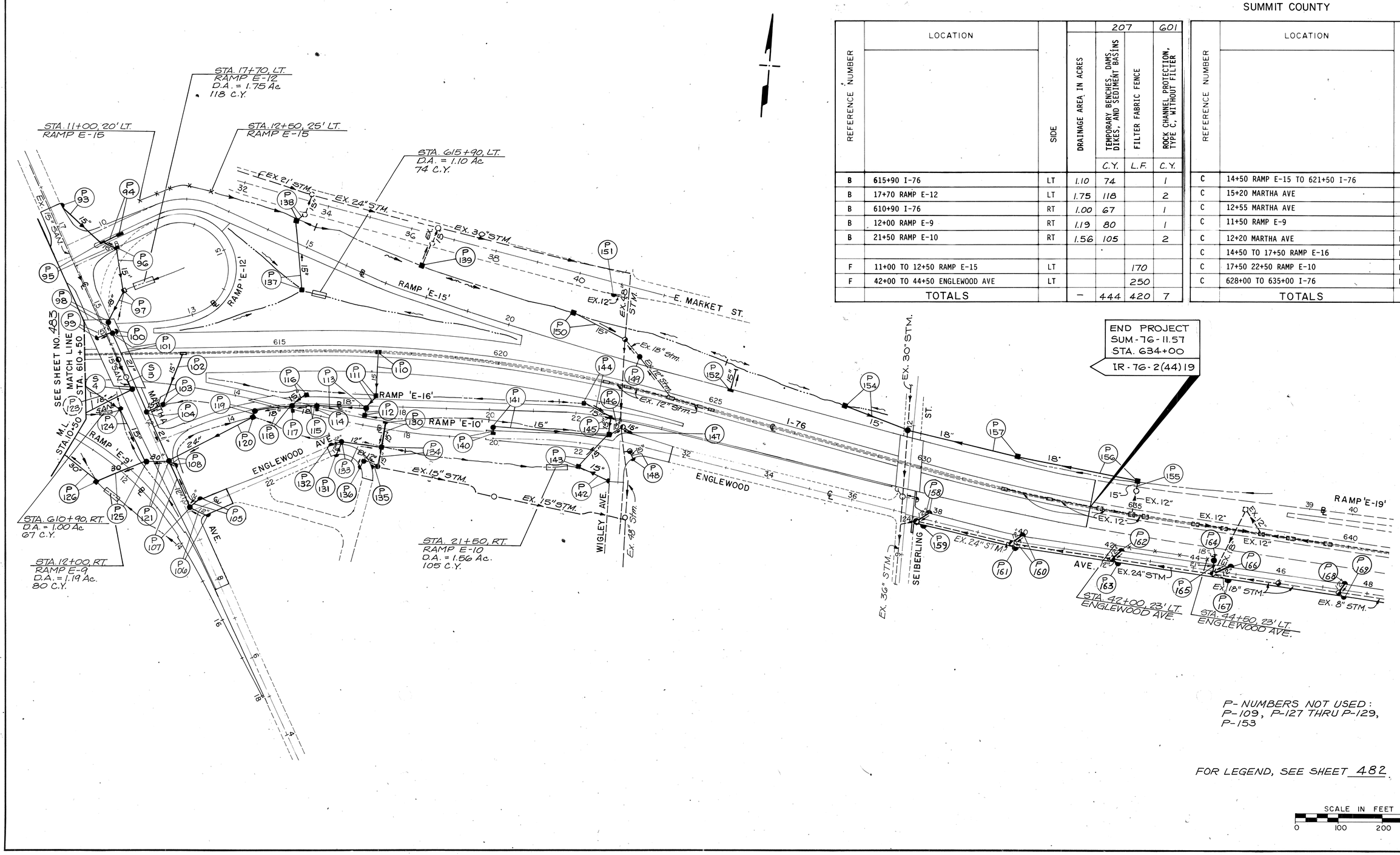

P- NUMBERS NOT USED:
P-109, P-127 THRU P-129,
P-153

FOR LEGEND, SEE SHEET 482

SCALE IN FEET
0 100 200 300

DRAINAGE SCHEMATIC PLAN

AA B/P# 71942R

CALC. BY. DATE	SUM-76-11.57	OHIO
CHKD. BY. DATE	FED. PROJECT IR-76-2(44)19	F.H.W.A. REGION 5

SUMMIT COUNTY

485
1214

48" COMB

EX. 6" U.D.

1-76 WEST BOUND

17 18 19 20 21

12" S

EX. 6" U.D.

EX. 6" U.D.

5 4

STA. 41+23.98 RAMP 'R' BACK
STA. 2+84.03 RAMP 'R' AHEAD

EX. RAMP 'R'

3

COMB 15"

42" COMB

ELEC

41

39 40

539 540

541 542 543

EX. 6" U.D.

EX. 6" U.D.

1-76 EAST BOUND

U1

543+29.85
EL.=1112.91
UNCLASSIFIED PIPE UNDERDRAIN

(U2)

MATCH LINE STA. 544+00
SEE SHEET 486

STA 541+50, 48' RT.
PRECAST REINFORCED
CONCRETE OUTLET

WALL

12" S

12" S

6" U.D.

EX. LANE 'S'

FOR QUANTITIES, SEE SHEET 489
FOR ROADWAY PLAN, SEE SHEET 117

8" SAN

EX. 6" U.D.

EX. RAMP 'T'

EX. 6" U.D.

12"

LEGEND

- (P) PROPOSED DRAINAGE
- (AB) ABANDON
- (R) REMOVE
- (D) ADJUST TO GRADE
- (U) UNDERDRAIN
- (S) SANITARY SEWER
- (EC) EROSION CONTROL
- DITCH EROSION PROTECTION
- REINFORCED SODDING

0 20 40 60
SCALE IN FEET

STA. 538+00 TO STA. 544+00
DRAINAGE

AA B.P# 71942R

CALC. BY. DATE	SUM-76-11.57	OHIO
CHKD. BY. DATE	FED. PROJECT IR-76-2(44)19	F.H.W.A. REGION 5

SUMMIT COUNTY

486
1214

W 12"

NORTH SERVICE ROAD

EX. LANE 'U'

COMB 48"

COMB 30"

EX. G" U.D.

I-76 WEST BOUND

23

24

STA. 24+45 ±
UNDERDRAIN OUTLET
INTO EX/ST. MANHOLE
EL. = 1106.54

25

U 1

26

27

28

EC 1

12" W

STREET

G" G

24" COMB

MATCH LINE STA. 28+25

EC 2

COMB 48"

548

549

MATCH LINE STA. 544+00
SEE SHEET 485

546

547

246' UNCLASSIFIED PIPE UNDERDRAIN

I-76 EAST BOUND

STA. 545+74.67
EL. = 1111.19

STA. 544+50
EL. = 1109.94

U 2

STA 544+50.61' RT.
PRECAST REINFORCED
CONCRETE OUTLET

15" COMB

12" S

EX. RAMP 'T'

EC 3

12" S (TO REMAIN)

STA. 549+68, 96' RT.
℄ I-76, E.B.
EXIST. ABANDONED C.B.

15" S

STA. 549+68, 132' RT.
℄ I-76 E.B.
EXIST INLET MANHOLE

MATCH LINE STA. 550+00
SEE SHEET 487

SOUTH SERVICE ROAD

W 6"

12" S

12" W

39" COMB

INMAN

6" W

6" G

24" COMB

21" S (TO REMAIN)

FOR ROADWAY PLAN, SEE SHEET 118.
FOR LEGEND, SEE SHEET 485.
FOR QUANTITIES, SEE SHEET 489.

0 20 40 60
SCALE IN FEET

STA. 544+00 TO STA. 550+00
DRAINAGE

AA, B, Pg 71942R

CALC. BY. DATE	SUM-76-11.57	OHIO
CHKD. BY. DATE	FED. PROJECT IR-76-2(44)19	F.H.W.A. REGION 5

SUMMIT COUNTY

487
1214

STA. 13+89, ℄ INMAN STREET EXISTING M.H.

COMB 24"

12" W

STA. 12+83, 18' LT. ℄ RAMP 'E-2' EXIST. C.B. No. 3

P1

15"

18"

12"

13

12

10

9

8

VARIES

24:1

STA. 8+77, 18' LT. ℄ RAMP 'E-2'
EX. C.B. ADJ. TO GRADE
EX. T.G. = 1117.81
NEW T.G. = 1117.50

C1

24:1

INMAN STREET

8" W

COMB 24"

12" W

U3

S 12"

D2

RAMP 'E-2'

S 12" (TO REMAIN)

D3

U9

U8

EX. 12" S (TO REMAIN)

2:1

24:1

STA. 10+78, 18' LT. RAMP 'E-2'
EX. C.B. ADJ. TO GRADE
EX. T.G. = 1105.97
NEW T.G. = 1105.36

MATCH LINE STA. 7+65

MATCH LINE STA. 28+25

U2

I-76 WEST BOUND

U4

STA. 556+00 ℄ I-76
EX. INLET NO. I-3B50

EX. ℄ W.B.

29 EX. U.D.

30

31

℄ I-76

EX. U.D.

555

554

553

552

551

EX. ℄ E.B.

EX. U.D.

STA. 550+22, 15' LT. ℄ I-76 E.B.
EXIST. INLET I-3D50

U5

I-76 EAST BOUND

MATCH LINE STA. 556+00 SEE SHEET 488

MATCH LINE STA. 550+00 SEE SHEET 486

U6

UNCLASS. U.D.

S 12" (TO REMAIN)

12" U.D.

S 12" (TO REMAIN)

DITCH EROSION PROTECTION

8' (TYP.)

EC1

STA. 554+80, 72' RT. I-76
M.H. RECONST TO GRADE
EX. T.C. = 1128.5 ±
NEW T.C. = 1129.36
℄ 6" U.D. = 1124.50

D1

U7

2.5:1

3:1

4:1

4:1

2:1

3:1

5:1

3:1

5:1

7:1

6:1

8:1

8:1

5:1

2:1

2:1

FOR ROADWAY PLAN, SEE SHEET 119
FOR QUANTITIES, SEE SHEET 489
FOR LEGEND, SEE SHEET 485

0 20 40 60
SCALE IN FEET

STA. 550+00 TO STA. 556+00
DRAINAGE

CALC. BY. DATE	SUM-76-11.57	OHIO
CHKD. BY. DATE	FED. PROJECT IR-76-2(44)19	F.H.W.A. REGION 5

488
1214

SUMMIT COUNTY

MATCH LINE STA. 556+00 SEE SHEET 487

MATCH LINE STA. 7+65

RAMP 'E-2'

℄ SCHOOL WALK

℄ EXIST. LA

℄ SCHOOL ROAD

MATCH LINE STA. 14+50

MATCH LINE STA. 14+50

MATCH LINE STA. 562+00 SEE SHEET 490

℄ I-76

I-76 WEST BOUND

I-76 EAST BOUND

63' UNCLASSIFIED U.D.

50' UNCLASSIFIED U.D.

50' UNCLASSIFIED U.D.

50' UNCLASSIFIED U.D.

EX U.D.

EX U.D.

EX U.D.

EX U.D.

12" U.D.

12" U.D.

12" U.D.

U1

U2

U3

U4

U5

U6

U7

U8

U9

U10

U11

U12

U13

EC1

EC2

EC3

U2 314 LF 6" SHALLOW PIPE UNDERDRAIN
50 LF 12" UNCLASS.
424 LF 12" SHALLOW

REINFORCED SODDING

DITCH EROSION PROTECTION

CRUSHED AGGREGATE SLOPE PROTECTION, AS PER PLAN FOR DETAIL, SEE SHEET 16

CRUSHED AGGREGATE SLOPE PROTECTION, AS PER PLAN FOR DETAIL, SEE SHEET 16

6" SHALLOW PIPE U.D. USING 707.15 CONDUIT

6" SHALLOW PIPE U.D. USING 707.15 CONDUIT

6" TYP. PAVEMENT SLOPE OF 1% MIN.

6" TYP. PAVEMENT SLOPE OF 1% MIN.

15' TYP.

15' TYP.

15' TYP.

SCHOOL ROAD

SCHOOL

STEPS

OVERHEAD SIGN

TENNIS COURTS

FOR ROADWAY PLAN, SEE SHEET 120.
FOR QUANTITIES, SEE SHEET 489
FOR LEGEND, SEE SHEET 485.

0 20 40 60
SCALE IN FEET

STA. 556+00 TO STA. 562+00
DRAINAGE

DRAINAGE SUBSUMMARY

CALC. BY. EJK DATE 3/21
CHKD. BY. DSB DATE 3/21

SUM-76-11.57
FED. PROJECT IR-76-2(44)19

OHIO
F.H.W.A. REGION 5

489
1214

SUMMIT COUNTY

SHEET No.	REFERENCE No.	LOCATION STATION TO STATION	SIDE	DRAINAGE 601 CRUSHED AGGREGATE SLOPE PROTECTION, AS PER PLAN S.Y.		603 6" CONDUIT, TYPE F, 707.17, NON-PERFORATED ASTM 3034 SDR 35 OR SS931 L.F.	603 18" CONDUIT, TYPE B L.F.	603 12" CONDUIT, TYPE F, 707.17 NON-PERFORATED ASTM 3034 SDR 35 OR SS931 L.F.		604 MANHOLE RECONSTRUCTED TO GRADE EA.	604 CATCH BASIN ADJUSTED TO GRADE EA.			605 6" UNCLASSIFIED PIPE UNDERDRAINS, AS PER PLAN L.F.	605 6" SHALLOW PIPE UNDERDRAINS, AS PER PLAN L.F.	605 6" SHALLOW PIPE UNDERDRAINS, 707.15, AS PER PLAN L.F.	605 12" UNCLASSIFIED PIPE UNDERDRAINS, AS PER PLAN L.F.	605 12" SHALLOW PIPE UNDERDRAINS, AS PER PLAN L.F.	605 12" BENDS AND BRANCHES 90°	605 12" BENDS AND BRANCHES 'T'		605 6" BENDS AND BRANCHES 45°	605 6" BENDS AND BRANCHES 90°	605 6" BENDS AND BRANCHES 'T'	605 6" BENDS AND BRANCHES '+'			660 REINFORCED SODDING S.Y.		670 DITCH EROSION PROTECTION S.Y.		SPEC. PRECAST REINFORCED CONCRETE OUTLET EA.			PROFILE SHEET No.
485	U-1	541+50 TO 543+28.85 I-76 EB	RT			25									189																			
486	U-1	24+45 TO 27+14 I-76 WB	RT												271								1											
486	U-2	543+30.85 TO 546+30 I-76 EB	RT			36								246	56									1										
486	EC-1	26+90 I-76 WB	LT																										40					
486	EC-2	548+91 I-76 EB	LT																										11					
486	EC-3	548+32 I-76 EB	RT																										30					
487	P-1	12+83 TO 13+50 RAMP E-2	LT/RT				70																											534
487	D-1	554+80 I-76	RT							1																								
487	D-2	10+78 RAMP E-2	LT								1																							
487	D-3	8+77 RAMP E-2	LT								1																							
487	EC-1	549+95 TO 556+00 I-76	RT																											538				
487	U-1	12+83 TO 13+37 RAMP E-2	LT			10									44																			
	U-2	28+70 I-76 WB TO 556+00 I-76	LT			25									529																	1		
	U-3	10+81 TO 12+83 RAMP E-2	LT			10									192																			
	U-4	550+22 TO 555+97 I-76	MED			10									565									1										
	U-5	550+22 TO 555+97 I-76	MED			10									600									1	1									
	U-6	550+02 TO 554+78 I-76 EB	RT			25								37	441												1					1		
	U-7	554+80 TO 556+00 I-76	RT					18										120		1														
	U-8	7+65 TO 8+77 RAMP E-2	LT			10									105																			
487	U-9	8+80 TO 10+78 RAMP E-2	LT			10									191																			
488	U-1	556+00 TO 557+54 I-76	LT												154																			
	U-2	556+00 TO 560+74 I-76	RT												314		50	424		9														
	U-3	557+57 TO 560+74 I-76	LT			22								50	270								1									1		
	U-4	560+76 TO 562+00 I-76	LT												124																			
	U-5	560+76 TO 562+00 I-76	RT												292			124		8														
	U-6	556+00 TO 560+74 I-76	MED			10								113	360									1										
	U-7	556+00 TO 560+74 I-76	MED			10								113	392									1										
	U-8	560+76 TO 562+00 I-76	MED												141			124		3														
	U-9	560+76 TO 562+00 I-76	MED												124																			
	U-10	6+08 TO 7+65 RAMP E-2	LT			20									157																			
	U-11	558+30 TO 560+74 I-76	RT													244							1	1										
	U-12	560+76 TO 562+00 I-76	RT													124																		
488	U-13	560+76 TO 562+00 I-76	LT													124																		
488	EC-1	556+00 TO 558+30 I-76	RT																										12		205			
488	EC-2	560+25 TO 562+00 I-76	LT	127																														
488	EC-3	559+25 TO 562+00 I-76	RT	199																														
TOTALS				326		233	70	18		1	2			559	5511	492	50	792		XX			XXXX					93		743		5			

DRAINAGE SUBSUMMARY

AA. B. Pe 71942R

CALC. BY. DATE	SUM-76-11.57	OHIO
CHKD. BY. DATE	FED. PROJECT IR-76-2(44)19	F.H.W.A. REGION 5

490
12.14

SUMMIT COUNTY

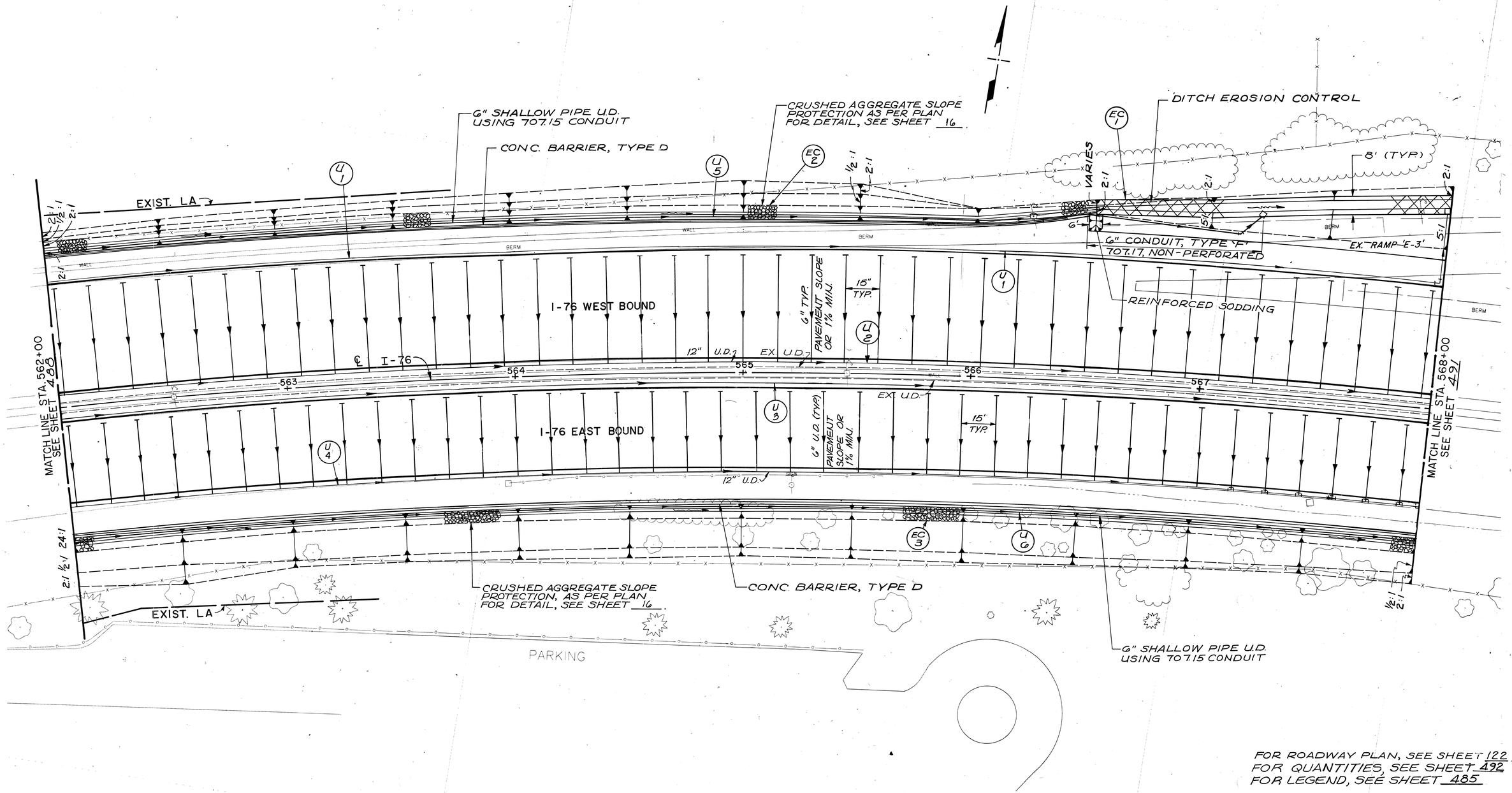

FOR ROADWAY PLAN, SEE SHEET 122
FOR QUANTITIES, SEE SHEET 492
FOR LEGEND, SEE SHEET 485

0 20 40 60
SCALE IN FEET

STA. 562+00 TO STA. 568+00
DRAINAGE

AA B/P# 71942R

CALC. BY. DATE	SUM-76-11.57	OHIO
CHKD. BY. DATE	FED. PROJECT IR-76-2(44)19	F.H.W.A. REGION 5

491 / 1214

SUMMIT COUNTY

STA. 18+71, 13' LT. TALBOT AVE. EXIST. INLET

COST OF INLET REMOVAL TO BE INCLUDED WITH NEW PIPE

STA. 18+71, 18' RT. TALBOT AVE. INLET ADJ. TO GRADE EX. GUTTER EL. = 1088.14 NEW GUTTER EL. = 1088.03

STA. 572+71, 112' LT. C.B. No. 5 WITHOUT APRON

STA. 573+04, 93' LT., I-76 M.H. RECONST. TO GRADE

DITCH EROSION PROTECTION

EVERGREENS

O.B.T.

EXIST. R/W

EXIST. LA R/W

EX. RAMP 'E-3' TO BE ABANDONED & PLUGGED

TO BE ABD. & PLUGGED

RETAINING WALL No. 1

TALBOT AVENUE

MARTIN AVENUE

8" SAN.

PROP. 6" WATER MAIN

B-1

B-2

B-3

I-76 WEST BOUND

I-76 EAST BOUND

℄ I-76

EX. U.D.

TO BE REMOVED

PAVEMENT SLOPE OR 1% MIN.

6" U.D. TYP.

12" U.D.

STA. 569+50 ℄ I-76 EX. INLET No. 3B50 EXIST. INV. = 1110.07 +30

COST OF INLET AND PIPE REMOVAL TO BE INCLUDED WITH NEW PIPE

REINFORCED SODDING

6" SHALLOW PIPE U.D. USING 707.15 CONDUIT

STA. 569+50, 56' RT. INLET No. 2-A-20 AS PER PLAN DITCH EROSION PROTECTION

CRUSHED AGGREGATE SLOPE PROTECTION AS PER PLAN, FOR DETAIL SEE SHEET 16.

STA. 573+00, 112.5' RT. I-76 C.B. No. 5 WITHOUT APRON

PROP. 8" ENCASED WATER MAIN

24" COMB.

18" COMB.

15" COMB.

6" W

3" G

OVERHEAD SIGN

WALL

WALK

STEP

FOR QUANTITIES, SEE SHEET 492
FOR LEGEND, SEE SHEET 485
FOR WATER MAIN PLAN, SEE SHEET 573
FOR ROADWAY PLANS, SEE SHEET 123

MATCH LINE STA. 568+00 SEE SHEET 490

MATCH LINE STA. 574+00 SEE SHEET 493

0 20 40 60
SCALE IN FEET

STA. 568+00 TO STA. 574+00

DRAINAGE

DRAINAGE SUBSUMMARY

CALC. BY EJK DATE 3/91 | CHKD. BY DSB DATE 3/91 | SUM-76-11.57 | FED. PROJECT IR-76-2(44)19 | OHIO | F.H.W.A. REGION 5 | 492 1214

SUMMIT COUNTY

SHEET No.	REFERENCE No.	LOCATION STATION TO STATION	SIDE	DRAINAGE 202 PIPE REMOVED, 24" AND UNDER L.F.	202 CATCH BASIN REMOVED EA.	202 CATCH BASIN ABANDONED EA.	202 MANHOLE ABANDONED EA.	601 CRUSHED AGGREGATE SLOPE PROTECTION, AS PER PLAN S.Y.	603 6" CONDUIT, TYPE F, 707.17, NON-PERFORATED ASTM 3034 SDR 35 OR SS931 L.F.	603 12" CONDUIT, TYPE F, 707.17, NON-PERFORATED ASTM 3034 SDR 35 OR SS931 L.F.	603 18" CONDUIT, TYPE C L.F.	603 15" CONDUIT, TYPE B L.F.	603 15" CONDUIT, TYPE C L.F.	604 INLET ADJUSTED TO GRADE EA.	604 MANHOLE RECONSTRUCTED TO GRADE EA.	604 CATCH BASIN NO. 5 WITHOUT APRON EA.	604 INLET NO. 2-A-20, AS PER PLAN EA.	605 6" SHALLOW PIPE UNDERDRAINS, 707.15, AS PER PLAN L.F.	605 6" UNCLASSIFIED PIPE UNDERDRAINS, AS PER PLAN L.F.	605 6" SHALLOW PIPE UNDERDRAINS, AS PER PLAN L.F.	605 6" BENDS AND BRANCHES 45°	90°	'T'	'+'	605 12" UNCLASSIFIED PIPE UNDERDRAINS, AS PER PLAN L.F.	605 12" BENDS AND BRANCHES 45°	'T'	660 REINFORCED SODDING S.Y.	670 DITCH EROSION PROTECTION S.Y.	SPEC. PRECAST REINFORCED CONCRETE OUTLET EA.	PROFILE SHEET No.
490	U-1	562+00 TO 568+00 I-76	LT						33													612		1									1	
	U-2	562+00 TO 568+00 I-76	MED																			1950					600		41					
	U-3	562+00 TO 568+00 I-76	MED																			600												
	U-4	562+00 TO 568+00 I-76	RT																			1440					591		40					
	U-5	562+00 TO 567+21 I-76	LT						80											450													1	
	U-6	562+00 TO 568+00 I-76	RT																	600														
	EC-1	566+50 TO 568+00 I-76	LT																											6		128		
	EC-2	562+00 TO 566+50 I-76	LT					325																										
490	EC-3	562+00 TO 568+00 I-76	RT					434																										
491	AB-1	569+50 I-76	LT			1																												
	AB-2	571+32 TO 571+44 I-76	LT			1																												
	AB-3	571+44 I-76	LT				1																											
	R-1	568+00 TO 569+50 I-76	RT	148	1																													
	R-2	569+50 I-76	LT	78																														
	P-3	569+50 I-76	MED/RT									57																						330
	P-4	569+50 TO 573+00 I-76	RT										350					1																534
	P-5	572+71 TO 573+04 I-76	LT									38			1	1																		534
	P-16	573+00 TO 575+60 I-76	RT								258					1																		534A
	D-1	18+71 TALBOT AVE	RT											1																				
	U-1	568+02 TO 574+00 I-76	LT																		50	554												
	U-2	568+00 TO 569+50 I-76	MED							10												423			9		140	1						
	U-3	569+58 TO 574+00 I-76	MED																			442												
	U-4	568+00 TO 569+50 I-76	MED						10													140	1											
	U-5	569+58 TO 574+00 I-76	MED																			442												
	U-6	568+00 TO 569+50 I-76	RT							16												252			7		146	1						
	U-7	569+54 TO 574+00 I-76	RT																			448												
	U-8	18+71 TO 19+00 TALBOT AVE	LT						10													19												
	U-9	18+71 TO 19+00 TALBOT AVE	RT						10													19												
	U-10	18+66 TALBOT AVE TO 47+46 MARTIN AVE	LT/RT																			143												
	U-11	18+66 TALBOT AVE TO 47+46 MARTIN AVE	RT/LT																			87												
	U-12	568+00 TO 569+50 I-76	RT						23											136														
	EC-1	569+00 TO 571+45 I-76	RT																											16		257		
	EC-2	568+00 TO 569+00 I-76	RT					73																										
491	EC-3	568+00 TO 571+15 I-76	LT																													192		
TOTALS				226	1	2	1	832	166	26	258	95	350	1	1	2	1			1186	50	7571				1477			22		827		2	

CALC. BY. DATE	SUM-76-11.57	OHIO
CHKD. BY. DATE	FED. PROJECT IR-76-2(44)19	F.H.W.A. REGION 5

SUMMIT COUNTY

493
1214

R/W
EXIST. R/W
4" G
G" W
8" SAN.
PROP. 6" W.M.
SECOND AVENUE
B-7
TO BE PLUGGED
MATCH LINE STA. 79+76.50 SEE SHEET 498
RAMP 'E-4'
FOR CONT. OF U.D. SEE SHT 495
24:1
10:1
5:1
4:1
3:1
RETAINING WALL No. 2
TO BE ABANDONED
MATCH LINE STA. 580+00 SEE SHEET 500
6" CONDUIT, TYPE 'F' 707.17 NON-PERF.
RAMP 'E-8'
UNCLASS. U.D.
RETAINING WALL No. 3
RAMP 'E-6'
DEEP U.D.
B-5
B-6
STA. 78+00, 33' LT. E-6 M.H. NO. 1
STA. 78+68, 11 RT. E-6 M.H. NO. 1
I-76
EX. U.D.
6" S
OBT
STREET
4" W
8" SAN.
12" S
12" W.M.
VARIES
O.B.T.
EXIST. R/W
3" G
RELOC. 6" W.M.
TO BE ABANDONED
MARTIN AVENUE
RETAINING WALL No. 1
STA. 575+75, 68' LT. INLET No. 3, AS PER PLAN
I-76 WEST BOUND
STA. 575+80 ℄ I-76
INLET No. 3850, A.P.P.
REMOVE EX. INLET
I-76 EAST BOUND
TO BE ABD. & PLUGGED
TO BE REMOVED
B-4
EXIST. LA
STA. 575+60, 102' RT. C.B. No. 5 WITHOUT APRON
STA. 16+42, 20' LT. ARLINGTON ST. M.H. NO. 1
STONE WALL
PROP. 6" W.M.
PROP. 12" W.M.
8" G
ARLINGTON
20" COMB.
16" COMB.
17" COMB.
MATCH LINE STA. 574+00 SEE SHEET 497
FOR CONT. OF U.D. SEE SHT. 496
PAVED PARKING
CURBED
GUIDE RAIL
SIGN
HYD.
SCALE IN FEET 0 20 40 60

FOR QUANTITIES, SEE SHEET 494
FOR LEGEND, SEE SHEET 485
FOR WATER MAIN PLAN, SEE SHEET 574
FOR ROADWAY PLAN, SEE SHEET 125

STA. 574+00 TO STA. 580+00
DRAINAGE

* FOR INLET No.3, AS PER PLAN, QUANTITIES, SEE RETAINING WALL SHEET 708.

DRAINAGE SUBSUMMARY

CALC. BY EJK DATE 3/91
CHKD. BY DSB DATE 3/91

SUM-76-11.57
FED. PROJECT IR-76-2(44)19
SUMMIT COUNTY

OHIO
F.H.W.A. REGION 5

494
1214

SHEET No.	REFERENCE No.	LOCATION STATION TO STATION	SIDE	202 PIPE REMOVED, 24" AND UNDER LF.	202 CATCH BASIN ABANDONED EA.	601 PAVED GUTTER, TYPE 1-2 LF.	603 6" CONDUIT, TYPE F, 707.17, NON-PERFORATED ASTM 3034 SDR 35 OR SS931 LF.	603 15" CONDUIT, TYPE B LF.	603 18" CONDUIT, TYPE C LF.	603 24" CONDUIT, TYPE B LF.	603 24" CONDUIT, TYPE C LF.	604 CATCH BASIN NO. 5 WITHOUT APRON EA.	604 INLET NO. 3, AS PER PLAN * EA.	604 INLET NO. 3850, AS PER PLAN EA.	604 MANHOLE No. 1 EA.	605 6" UNCLASSIFIED PIPE UNDERDRAINS, AS PER PLAN LF.	605 6" SHALLOW PIPE UNDERDRAINS, AS PER PLAN LF.	605 6" DEEP PIPE UNDERDRAINS, AS PER PLAN LF.	605 6" BENDS AND BRANCHES 45°	90°	'T'	'+'	660 REINFORCED SODDING S.Y.	660 SODDING S.Y.	670 DITCH EROSION PROTECTION S.Y.	SPEC. PRECAST REINFORCED CONCRETE OUTLET EA.	PROFILE SHEET No.
493	AB-1	575+55 I-76	RT		1																					
	R-1	16+61 ARLINGTON ST	LT	38																						
	P-6	575+75 TO 575+80 I-76	LT/MED					65					*													536
	P-7	575+60 TO 575+80 I-76	RT/MED					105						1												536
	P-8	575+60 I-76 TO 16+42 ARLINGON ST	RT/LT						74			1												125		534A
	P-17	16+42 ARLINGTON TO 78+00 RAMP E-6	LT/LT							140					1											
	P-18	78+00 RAMP E-6 TO 78+68 RAMP E-8	LT/RT							82					1											
	P-19	78+68 RAMP E-6 TO 80+14 RAMP E-8	RT/RT								151				1											534A
	EC-1	78+50 RAMP E-8 TO 79+96 RAMP E-6	LT																			100				
	EC-2	79+96 TO 80+20 RAMP E-6	LT			24																	4			
	U-1	574+00 TO 575+75 I-76	LT				15										168		1		1					
	U-2	574+00 TO 575+60 I-76	RT				43										160			1		1				
	U-3	574+00 TO 575+80 I-76	MED				10										170		1			1				
	U-4	574+00 TO 575+80 I-76	MED				10										170		1		1					
	U-5	577+30 TO 580+00 I-76	LT														274				1					
	U-6	577+55 TO 580+00 I-76	RT														245				1					
	U-7	577+30 TO 580+00 I-76	MED														270					1				
	U-8	577+30 TO 580+00 I-76	MED														270				1					
	U-9	577+28 I-76 TO 78+90 RAMP E-8	RT				98									60			1	1	1				1	
	U-10	77+60 TO 80+20 RAMP E-6	RT				10									25		230	2		1					
	U-11	77+00 TO 79+75 RAMP E-4	RT														275									
	U-12	47+46 TO 49+37 MARTIN AVE	LT				10										181									
493	U-13	47+46 TO 49+52 MARTIN AVE	RT				10										196									
		TOTALS		38	1	24	206	170	74	222	151	1	*	1	3	85	2379	230					100	4	125	1	

CALC BY DATE	SUM-76-11.57	OHIO
CHKD BY DATE	FED. PROJECT IR-76-2(44)19	F.H.W.A. REGION 5

SUMMIT COUNTY

495
1214

I-76 ℄

RETAINING WALL No 1

EXIST. L.A. R/W

24:1

MARTIN AVENUE

48

49

575

576

577

578

6" W TO BE ABANDONED

RELOC. 6" W.M.

8" SAN.

EXIST. R/W

OBT

STA. 49+52, 14 RT.
MARTIN AVE INLET, CITY OF AKRON No. 3
GUTTER ELEV. = 1069.50

STA. 49+37, 14' LT. MARTIN AVE.
INLET, CITY OF AKRON, NO. 3

STA. 18+84, 28.5' LT. ARLINGTON ST.
INLET, CITY OF AKRON, NO. 3

EXISTING WALL NOT TO BE DISTURBED

10'-UNCLASSIFIED U.D.

R/W

8" G

OBT

PROP. 6" W.M.

6" W

20" COMB.

ARLINGTON STREET

TO BE ABANDONED

TO BE PLUGGED

4" W

4" W (ABANDONED)

8" SAN.

MEET EXIST U.D.

12" W

PROP. 12" W.M.

6" G

O.B.T.

COST OF REMOVAL TO BE INCLUDED WITH NEW PIPE.

STA. 18+41, ℄ ARLINGTON
EXIST. M.H. ADJ. TO GRADE
EXIST. T.C. = 1071.54
NEW T.C. = EL. 1070.68

STA. 19+43, 28.5' RT. ARLINGTON ST.
INLET, CITY OF AKRON, NO. 3

STA. 19+07, ℄ ARLINGTON ST.
EXIST. M.H. ADJ. TO GRADE
EXIST. T.C. = 1071.84
NEW T.C. = EL. 1071.50

FOR CON'T OF U.D SEE SHEET 493

SEE SHEET No 496 MATCH LINE STA. 17+00

B-5

RAMP 'E-8'

RETAINING WALL No. 2

RAMP 'E-4'

SECOND AVENUE

PROP. 6" W.M.

EXIST. L.A. R/W

EXIST. R/W

6" SAN.

10'-UNCLASSIFIED U.D.

MEET EXIST U.D.

* FULLY ENCASE THE Y-BRANCH WITH A MINIMUM OF 6" OF CLASS 'C' CONCRETE. THE COST OF THE ENCASEMENT SHALL BE INCLUDED WITH THE 6" CONDUIT TYPE 'B'

'U' NUMBERS NOT USED:
U-6
U-9

FOR ROADWAY PLAN, SEE SHEET 127
FOR QUANTITIES, SEE SHEET 497
FOR LEGEND, SEE SHEET 485
FOR WATER MAIN PLAN, SEE SHEET 577

0 20 40 60
SCALE IN FEET

ARLINGTON STREET
STA. 17+00 TO STA. 20+92.60
DRAINAGE

CALC BY DATE	SUM-76-11.57	OHIO
CHKD BY DATE	FED PROJECT IR-76-2(44)19	CROSS REGION 5

496
1214

SUMMIT COUNTY

B-4

STA. 16+42, 20' LT. ℄ ARLINGTON ST. M.H. No. 1

STA. 15 + 72, ℄ ARLINGTON ST.
M.H. ADJUSTED TO GRADE
EX. T.C. = 1070.34
NEW T.C. = 1070.06

STA. 16+75, 28.5' LT.
ARLINGTON ST.
INLET CITY OF AKRON, NO. 3

STA. 16+75, 28.5' RT.
ARLINGTON ST.
INLET CITY OF AKRON, NO. 3

STA. 16+61, ℄ ARLINGTON
EXIST. M.H. ADJ. TO GRADE
EXIST. T.C. = 1070.67
NEW T.C. = 1069.79

(D 2) STA. 16+61, ℄ ARLINGTON ST.
M.H. ADJUSTED TO GRADE
EX. T.C. = 1070.67
NEW T.C. = 1069.79

EXIST. R/W — R/W — EXIST. R/W

ARLINGTON STREET

PROP. 6" W.M.

PROP. 12" W.M.

TO BE ABANDONED

TO BE PLUGGED

EXIST. LA

RAMP 'E-6'

RAMP 'E-8'

FOR CON'T OF U.D. SEE SHEET 493

MATCH LINE STA. 17+00 SEE SHEET 495

B-5

B-6

FOR ROADWAY PLAN, SEE SHT. 128
FOR WATER MAIN PLAN, SEE SHT. 575
FOR QUANTITIES, SEE SHEET 497
FOR LEGEND, SEE SHEET 485

0 20 40 60
SCALE IN FEET

ARLINGTON STREET
STA. 13+70 TO STA. 17+00
DRAINAGE

DRAINAGE SUBSUMMARY

CALC. BY EJK DATE 3/91
CHKD. BY DSB DATE 3/91

SUM-76-11.57
FED. PROJECT IR-76-2(44)19

OHIO
F.H.W.A. REGION 5

SUMMIT COUNTY

497
1214

SHEET No.	REFERENCE No.	LOCATION STATION TO STATION	SIDE	DRAINAGE 202 PIPE REMOVED, 24" AND UNDER LF.	202 CATCH BASIN REMOVED EA.	202 CATCH BASIN ABANDONED EA.	202 INLET REMOVED EA.	603 6" CONDUIT, TYPE B, 707.17 NON-PERFORATED ASTM 3034, SDR 35 OR SS931 LF.	603 6" CONDUIT, TYPE B LF.	603 6" CONDUIT, TYPE F, 707.17, NON-PERFORATED ASTM 3034 SDR 35 OR SS931 LF.	603 12" CONDUIT, TYPE B, 706.02 LF.	604 MANHOLE ADJUSTED TO GRADE EA.	604 INLET, CITY OF AKRON NO. 3 EA.	605 6" UNCLASSIFIED PIPE UNDERDRAINS, AS PER PLAN LF.	605 6" SHALLOW PIPE UNDERDRAINS, AS PER PLAN LF.	605 6" BENDS AND BRANCHES 45°	90°	'T'	'+'	PROFILE SHEET No.
495	R-1	18+03 TO 18+41 ARLINGTON ST	LT	56																
	R-2	18+41 ARLINGTON ST TO																		
		76+87 RAMP E-4	RT	69	1															
	R-3	49+30 MARTIN AVE TO																		
		18+41 ARLINGTON ST	RT/℄	70			1													
	AB-1	18+95 ARLINGTON ST	LT			1														
	P-11	49+37 MARTIN AVE TO																		536
		18+41 ARLINGTON ST	LT								65	1	1							
	P-12	18+84 TO 19+07 ARLINGTON ST	LT								38		1							
	P-13	19+07 TO 19+43 ARLINGTON ST	RT								47	1	1							
	P-14	18+90 TO 18+95 ARLINGTON ST	LT						9											
	P-15	49+52 MARTIN AVE TO																		
		18+41 ARLINGTON ST	RT/℄								50		1							536
	U-5	17+00 ARLINGTON ST TO																		
		49+57 MARTIN AVE	LT/RT												130					
	U-7	17+00 TO 18+35 ARLINGTON ST	RT												135					
	U-8	76+48 TO 77+00 RAMP E-4	RT												50	2				
	U-10	20+50 TO 21+00 SECOND AVE	RT											10	55					
	U-11	21+00 SECOND AVE TO																		
		19+38 ARLINGTON ST	LT/RT											10	77					
	U-12	19+43 TO 20+45 ARLINGTON ST	RT							10					92					
	U-13	18+84 TO 20+45 ARLINGTON ST	LT							10					152					
	U-14	49+42 MARTIN AVE TO																		
		18+84 ARLINGTON ST	LT							10					34					
	U-15	20+47 TO 20+93 ARLINGTON ST	LT											10	36					
495	U-16	20+47 TO 20+93 ARLINGTON ST	RT											10	36					
496	AB-1	16+43 TO 16+61 ARLINGTON ST	RT			1														
	P-9	16+42 TO 16+75 ARLINGTON ST	LT								35		1							536
	P-10	16+42 TO 16+75 ARLINGTON ST	LT/RT								61		1							536
	D-1	15+72 ARLINGTON ST	℄									1								
	D-2	16+61 ARLINGTON ST	℄									1								
	U-1	13+09 TO 15+48 ARLINGTON ST	LT							10					229					
	U-2	13+30 TO 15+38 ARLINGTON ST	RT							10					199					
	U-3	15+40 ARLINGTON ST TO																		
		77+60 RAMP E-6	RT											85				1		
	U-4	77+12 TO 77+60 RAMP E-6	LT/RT					32						50			1			
	U-5	15+50 TO 16+75 ARLINGTON ST	LT							10					115					
	U-6	16+75 TO 17+00 ARLINGTON ST	LT							10					15					
	U-7	16+23 TO 16+75 ARLINGTON ST	RT							10					42					
496	U-8	16+75 TO 17+00 ARLINGTON ST	RT							10					15					
TOTALS				195	1	2	1	32	9	90	296	4	6	175	1412					

CALC. BY. DATE	SUM-76-11.57	OHIO
CHKD. BY. DATE	FED. PROJECT IR-76-2(44)19	F.H.W.A REGION 5

SUMMIT COUNTY

498
1214

STA. 25+98.5, ℄ SECOND AVE.
EXIST. MANHOLE

STA. 26+06, 16' RT. ℄ SECOND AVENUE
INLET, CITY OF AKRON Nº 3

STREET

AVENUE

SECOND

8" I.P.G.

8" W COMB

20" W

4" G

6" I.P.G.

6" W

8" SAN.

12" S

EXIST. LA R/W

EXIST. LA

10"-6" CONDUIT TYPE F
707.17, NON-PERFORATED

TO BE ABANDONED & PLUGGED

TO BE ABANDONED

REMOVED

RAMP 'E-4'

RAMP 'E-7'

STA. 83+50, 29' RT.
C.B. Nº 5 W/O APRON

UNCLASS. U.D.

STA. 83+37, 8' LT.
INLET Nº 3
AS PER PLAN

10"-6" CONDUIT TYPE F
707.17, NON-PERFORATED

PROP. 16" ENCASED
WATER MAINS

6" CONDUIT
TYPE 'F' 707.17
NON-PERFORATED

TO BE ABANDONED & PLUGGED

RETAINING WALL Nº 2

I-76 WEST BOUND

I-76 EAST BOUND

I-76 ℄

EX. U.D.

STA. 583+10, ℄ I-76
INLET Nº 3 B50
AS PER PLAN

* STA. 582+48, 3.5' LT.
℄ I-76
M.H. Nº 3 W/ 706.11
JOINTS

DITCH EROSION PROTECTION

LA R/W

VARIES

2:1

2.5:1

24:1

10:1

8:1

6:1

4:1

3:1

4.5:1

5:1

MATCH LINE
STA. 79+77
SEE SHEET 493

MATCH LINE
STA. 29+75

MATCH LINE
STA. 86+25

MATCH LINE
STA. 86+00

MATCH LINE
STA. 580+00
SEE SHEET 493

MATCH LINE
STA. 586+00
SEE SHEET 502

MATCH SHEET 500

* THE MANHOLE SHALL BE COMPLETED TO A LEVEL ABOVE THE TOP OF THE CONCRETE FILL PRIOR TO THE PLACEMENT OF THE CONCRETE FILL

FOR QUANTITIES, SEE SHEET 499
FOR LEGEND, SEE SHEET 485
FOR WATERMAIN PLAN, SEE SHEET 578
FOR ROADWAY PLAN, SEE SHEET 130

0 20 40 60
SCALE IN FEET

WEST BOUND
STA. 580+00 TO STA. 586+00
DRAINAGE

* FOR INLET No. 3, AS PER PLAN, QUANTITIES, SEE RETAINING WALL SHEET 708.

DRAINAGE SUBSUMMARY

CALC. BY. EJK DATE 3/91
CHKD. BY. TDB DATE 3/91

SUM-76-11.57
FED. PROJECT IR-76-2(44)19
SUMMIT COUNTY

OHIO
F.H.W.A. REGION 5

499
1214

SHEET No.	REFERENCE No.	LOCATION STATION TO STATION	SIDE	DRAINAGE 202 PIPE REMOVED, 24" AND UNDER L.F.	202 CATCH BASIN ABANDONED EA.	202 MANHOLE REMOVED EA.	202 INLET ABANDONED EA.	603 6" CONDUIT, TYPE F, 707.17, NON-PERFORATED ASTM 3034 SDR 35 OR SS931 L.F.	603 12" CONDUIT, TYPE B, 706.02 L.F.	603 15" CONDUIT, TYPE B L.F.	603 15" CONDUIT, TYPE B, 706.02 L.F.	603 18" CONDUIT, TYPE B, 706.03, D-LOAD 3000 W/706.11 JOINTS L.F.	604 CATCH BASIN NO. 5 WITHOUT APRON EA.	604 INLET NO. 3, AS PER PLAN * EA.	604 INLET NO. 3650, AS PER PLAN EA.	604 INLET, CITY OF AKRON NO. 3 EA.	604 MANHOLE NO. 3 W/706.11 JOINTS EA.	605 6" UNCLASSIFIED PIPE UNDERDRAINS, AS PER PLAN L.F.	605 6" SHALLOW PIPE UNDERDRAINS, AS PER PLAN L.F.	605 6" BENDS AND BRANCHES 45°	90°	'T'	'+'	670 DITCH EROSION PROTECTION S.Y.	PROFILE SHEET No.
498	AB-1	581+97 I-76	℄				1																			
	AB-2	81+90 RAMP E-4	LT		1																					
	AB-3	82+35 RAMP E-4	LT				1																			
	R-1	81+02 TO 81+25 RAMP E-4	LT/RT	60		1																				
	P-27	83+37 RAMP E-7 TO 583+10 I-76	LT/℄							90					*											538
	P-28	582+48 TO 583+10 I-76	LT/℄								62					1										538
	P-29	582+48 I-76 TO 25+98.5 SECOND AVE	LT/℄									180					1									537
	P-30	25+98.5 TO 26+07 SECOND AVE	℄/LT						19									1								538
	P-31	25+98.5 SECOND AVE TO 83+50 RAMP E-4	℄/RT							164				1											159	538
	U-1	79+77 TO 83+50 RAMP E-4	RT					10												613						
	U-2	582+90 TO STA 583+10 I-76	MED					10												10	1					
	U-3	580+00 I-76 TO 83+37 RAMP E-7	LT					10												327	1					
	U-4	83+37 TO 83+80 RAMP E-7	LT					10											33		1		1			
	U-5	580+90 TO 586+00 I-76	LT					10												506						
	U-6	580+00 TO 582+48 I-76	MED					38												212	1					
	U-7	583+14 TO 586+00 I-76	MED																	286						
498	EC-1	583+75 TO 586+00 I-76	LT																						158	
TOTALS				60	1	1	2	88	19	254	62	180	1	*	1	1	1	33	1954					317	

CALC. BY. DATE	SUM-76-11.57	OHIO
CHKD. BY. DATE	FED. PROJECT IR-76-2(44)19	F.H.W.A. REGION 5

SUMMIT COUNTY

500
1214

MATCH SHEET 498

MATCH LINE STA. 580+00 SEE SHEET 493

MATCH LINE STA. 586+00 SEE SHEET 504

MATCH LINE STA. 80+20

MATCH LINE STA. 80+00

MATCH LINE STA. 86+00 SEE SHEET 504

I-76 WEST BOUND

I-76 EAST BOUND

I-76

RAMP 'E-6'

RAMP 'E-8'

6" CONDUIT, TYPE 'F'
707.17
NON-PERFORATED

STA. 80+44, 20' LT, RAMP 'E-6'
INLET 3A, AS PER PLAN

STA. 80+44, 23.5' LT.
RAMP 'E-6'
C.B. No. 5, WITHOUT APRON

STA. 81+26, 23' RT, RAMP 'E-6'
C.B. No. 5 WITHOUT APRON

STA. 81+77, 22.5' LT.
RAMP 'E-6'
C.B. No. 5
WITHOUT APRON

STA. 85+60, 20' LT.
RAMP 'E-6'
INLET 2-A-10
AS PER PLAN

PAVED GUTTER TYPE 1-2

PAVED GUTTER TYPE 4

CONC. BARRIER TYPE D

4:1 RETAINING WALL No. 4

TO BE ABANDONED AND PLUGGED

TO BE ABANDONED & PLUGGED AT MANHOLE

TO BE ABANDONED & PLUGGED EX.

TO BE ABANDONED

TO BE ABD & PLUGGED

ABANDONED

STA. 82+74, 35' RT.
RAMP 'E-6'
M.H. TO BE REMOVED
COST TO BE INCLUDED
WITH NEW CONDUIT.

STA. 85+46, 52' LT.
RAMP 'E-8'
C.B. NO. 5 WITHOUT APRON

STA. 80+44, 8' RT RAMP 'E-6'
C.B. No. 3

STA. 80+14, 53.5' RT.
RAMP 'E-8'
C.B. No. 5
WITHOUT APRON

STA. 11+75, 14' RT.
℄ MILES STREET
EXISTING INLET

STA. 12+19, ℄ MILES STREET
M.H. No. 3
W/ TOG.11 JOINTS

STA. 81+05, 51' RT.
℄ RAMP E-8
C.B. No. 5
WITHOUT APRON

STA. 83+00, 45' RT.
RAMP 'E-8'
C.B. No. 5A
WITHOUT APRON

STA. 85+50, 52' RT.
RAMP 'E-8'
C.B. No. 5A
WITHOUT APRON

STA 82+77, 77' RT.
RAMP 'E-8'
M.H. No. 3
W/ TOG.11 JOINTS

PROP. 16" ENCASED WATER MAINS

PROP. HYD.

RELOC. 8" SAN.

EXIST. LA

R/W

LA

CHITTENDEN

MILES

THIRD

ROAD

SERVICE AVE.

ASPHALT PARKING

GAR.

FOR ROADWAY PLAN, SEE SHEET 131
FOR QUANTITIES, SEE SHEET 501.
FOR LEGEND, SEE SHEET 485
FOR WATERMAIN PLAN, SEE SHEET 579

SECTION A-A

SECTION B-B

0 20 40 60
SCALE IN FEET

EAST BOUND
STA. 580+00 TO STA. 586+00
DRAINAGE

DRAINAGE SUBSUMMARY

CALC. BY. EJK DATE 3/91 | CHKD. BY. DSB DATE 3/91 | SUM-76-11.57 | FED. PROJECT IR-76-2(44)19 | OHIO | F.H.W.A. REGION 5 | 501/1214

SUMMIT COUNTY

SHEET No.	REFERENCE No.	LOCATION STATION TO STATION	SIDE	DRAINAGE 202 CATCH BASIN ABANDONED EA.	202 MANHOLE ABANDONED EA.	202 INLET ABANDONED EA.	601 PAVED GUTTER, TYPE 1-2 L.F.	601 PAVED GUTTER, TYPE 4 L.F.	603 6" CONDUIT, TYPE B, 707.17 NON-PERFORATED ASTM 3034, SDR 35 OR SS931 L.F.	603 6" CONDUIT, TYPE F, 707.17, NON-PERFORATED ASTM 3034 SDR 35 OR SS931 L.F.	603 15" CONDUIT, TYPE B L.F.	603 15" CONDUIT, TYPE C L.F.	603 18" CONDUIT, TYPE B, 706.02, D-LOAD 3000 L.F.	603 24" CONDUIT, TYPE C, 706.02 1250 D-LOAD, OR 707.13 L.F.	603 30" CONDUIT, TYPE C, 706.02 1250 D-LOAD, OR 707.13 L.F.	604 CATCH BASIN NO. 3 EA.	604 CATCH BASIN NO. 5 WITHOUT APRON EA.	604 CATCH BASIN NO. 5A WITHOUT APRON EA.	604 INLET NO. 2-A-10, AS PER PLAN EA.	604 INLET NO. 3A, AS PER PLAN EA.	605 6" SHALLOW PIPE UNDERDRAINS, AS PER PLAN L.F.	605 6" DEEP PIPE UNDERDRAINS, AS PER PLAN L.F.	605 6" BENDS AND BRANCHES 45°	90°	'T'	'+'	660 REINFORCED SODDING S.Y.	660 SODDING S.Y.	670 DITCH EROSION PROTECTION S.Y.	SANITARY 603 8" CONDUIT, TYPE C, 706.08 WITH 706.12 JOINTS L.F.	603 12" CONDUIT, TYPE B, 706.03, 2750 D-LOAD WITH 706.11 JOINTS L.F.	604 MANHOLE NO. 3 WITH 706.11 JOINTS EA.	PROFILE SHEET No.
500	AB-1	81+45 RAMP E-8	RT	1																														
	AB-2	82+50 RAMP E-8	RT	1																														
	AB-3	82+40 RAMP E-8	LT			1																												
	AB-4	80+05 RAMP E-8	RT		1																													
	AB-5	82+32 RAMP E-6	LT	1																														
	AB-6	82+83 RAMP E-8	LT			1																												
	AB-7	85+05 AND 85+07 RAMP E-6	LT/RT	2																														
	AB-8	85+75 RAMP E-6	RT	1																														
	P-20	80+14 TO 81+05 RAMP E-8	RT												94			1															125	
	P-21	80+44 TO 80+94 RAMP E-6	LT								5							1																536
	P-22	80+44 RAMP E-6	LT/RT								26										1													
	P-23	80+44 TO 81+26 RAMP E-6	RT									82					1																	
	P-24	81+26 TO 81+77 RAMP E-6	LT/RT								68							1																
	P-25	81+26 TO 82+74 RAMP E-6	RT										85					1														125		
	P-26	82+74 RAMP E-6 TO 582+47 I-76	RT/LT																															536
	P-60	80+14 TO 83+00 RAMP E-8	RT													200		1														75		534A
	P-61	83+00 TO 85+46 RAMP E-8	RT/LT													250			1													125		534A
	P-62	85+60 RAMP E-6 TO 85+50 RAMP E-8	LT/RT								53									1														541
	P-63	85+46 TO 87+25 RAMP E-8	LT									179						1														125		534B
	P-64	85+50 TO 87+25 RAMP E-8	RT													172			1													125		534B
	U-1	580+00 TO 582+48 I-76	MED							40													210		1									
	U-2	583+10 TO 586+00 I-76	MED																				290											
	U-3	580+00 I-76 TO 85+60 RAMP E-6	RT/LT							25													554		1									
	U-4	585+50 TO 586+00 I-76	RT																				50											
	U-5	80+20 TO 80+44 RAMP E-6	RT							10														15	1									
	U-6	81+26 TO 83+90 RAMP E-6	RT							44													225		1									
	U-7	83+92 TO 86+00 RAMP E-6	RT																				208											
	U-8	80+67 TO 86+00 RAMP E-8	LT/RT						18														533			2	1							
	U-9	80+44 TO 81+47 RAMP E-6	RT							10														89	1									
	U-10	582+90 TO 583+10 I-76	MED							10													12		1									
	EC-1	80+20 TO 81+75 RAMP E-6	LT				155																								26			
	EC-2	82+42 RAMP E-8	LT																												29			
	EC-3	81+79 TO 83+90 RAMP E-6	LT					211																										
	EC-4	80+14 RAMP E-8	LT																												46			
	S-1	12+19 MILES ST TO 82+77 RAMP E-8	℄/RT																														284	
500	S-2	82+74 RAMP E-6 TO 82+77 RAMP E-8	RT																															273
	TOTALS			6	1	2	155	211	18	139	152	261	85	94	622	1	6	2	1	1	2082	104					75	26	700	284	273	2	

CALC. BY. DATE	SUM-76-11.57	OHIO	502 / 1214
CHKD. BY. DATE	FED. PROJECT IR-76-2(44)19	F.H.W.A. REGION 5	

SUMMIT COUNTY

STA. 31+75, 22' LT, SECOND AVE. EXISTING MANHOLE

AVENUE

SECOND

LA R/W

ELEC.

ELEC. 3" G TO BE ABANDONED

HART AVENUE

B-15

B-14

B-12

MATCH LINE STA. 29+75

MATCH LINE STA. 86+25

MATCH LINE STA. 86+00

MATCH LINE STA. 92+50

MATCH LINE STA. 92+04

STA. 88+35, 20.5' RT. & RAMP 'E-7' INLET No. 3A AS PER PLAN

STA. 87+25, 8' LT., RAMP 'E-4' C.B. No. 3

RAMP 'E-7'

RAMP 'E-4'

RETAINING WALL #5

CONCRETE BARRIER

STA. 87+85, 11' LT., & RAMP 'E-4' M.H. No. 1 W/FLAT SLAB TOP

83'-DITCH EROSION PROTECTION

STA. 87+25, 26' RT. RAMP E-4' C.B. No. 5 WITHOUT APRON

EX. RAMP 'E-7'

TO BE ABANDONED AND PLUGGED

ABANDONED

THIRD AVENUE

TO BE ABANDONED

TO REMAIN

STA. 590+52.5, 60.5' LT. I-76 M.H. RECONST. TO GRADE EX. T.C. = 1045.80 NEW T.C. = 1047.83

STA. 587+00, MED., I-76 EXIST. INLET

STA. 590+15, MED., I-76 EXIST. INLET

I-76 WEST BOUND

I-76 EAST BOUND

I-76

39' UNCLASS. U.D.

40' UNCLASS. U.D.

54' UNCLASS. U.D.

EX. U.D.

EX. 6" U.D.

8" SAN.

4" G

6" IPG

12" S

15"

18" S

6" W

8" SAN.

VARIES

2:1

3:1

4:1

7:1

24:1

6:1

8:1

2.5:1

3.5:1

12" S TO REMAIN

12" S TO BE SLUGGED & ABD & VARIES

MATCH LINE STA. 498 SEE SHEET

MATCH LINE STA. 507 SEE SHEET

MATCH SHEET 504.

FOR QUANTITIES, SEE SHEET 503.
FOR LEGEND, SEE SHEET 485.
FOR ROADWAY PLAN, SEE SHEET 134
FOR WATER MAIN PLAN, SEE SHEET 582.

0 20 40 60
SCALE IN FEET

WEST BOUND
STA. 586+00 TO STA. 592+00
DRAINAGE

DRAINAGE SUBSUMMARY

CALC. BY KDK DATE 6/90
CHKD. BY TSB DATE 7/90

SUM-76-11.57
FED. PROJECT IR-76-2(44)19

OHIO
F.H.W.A. REGION 5

503
1214

SUMMIT COUNTY

SHEET No.	REFERENCE No.	LOCATION STATION TO STATION	SIDE	DRAINAGE 202 CATCH BASIN ABANDONED EA.	603 6" CONDUIT, TYPE B, 707.17 NON-PERFORATED ASTM 3034, SDR 35 OR SS931 LF.	603 6" CONDUIT, TYPE F, 707.17, NON-PERFORATED ASTM 3034 SDR 35 OR SS931 LF.	603 15" CONDUIT, TYPE B LF.	603 15" CONDUIT, TYPE B, 706.02 LF.	603 15" CONDUIT, TYPE C LF.	604 MANHOLE NO. 1 EA.	604 MANHOLE RECONSTRUCTED TO GRADE EA.	604 CATCH BASIN NO. 3 EA.	604 CATCH BASIN NO. 5 WITHOUT APRON EA.	604 INLET NO. 3A, AS PER PLAN EA.	605 6" UNCLASSIFIED PIPE UNDERDRAINS, AS PER PLAN LF.	605 6" SHALLOW PIPE UNDERDRAINS, AS PER PLAN LF.	605 6" DEEP PIPE UNDERDRAINS, AS PER PLAN LF.	605 6" BENDS AND BRANCHES 45°	90°	'T'	'+'	670 DITCH EROSION PROTECTION S.Y.	SANITARY 202 MANHOLE ABANDONED EA.	PROFILE SHEET No.
502	AB-1	589+20 I-76	LT	/																				
	AB-2	590+50 I-76	LT																				/	
	AB-3	29+82 SECOND AVE TO																						
		86+07 RAMP E-4	RT/RT	/																				
	D-1	590+52.5 I-76	LT								/													
	P-35	88+35 RAMP E-7 TO 87+90 RAMP E-4	RT/LT						30					/										537
	P-36	87+25 TO 87+85 RAMP E-7	LT						60	/														
	P-37	87+25 RAMP E-4	LT/RT				32						/								190			
	P-38	87+25 RAMP E-4 TO																						
		31+75 SECOND AVE	LT					192				/												537
	U-1	86+93 TO 88+35 RAMP E-7	RT			10										130		/		/				
	U-2	88+54 TO 92+50 RAMP E-7	RT/LT		20											402			2					
	U-3	86+00 TO 87+25 RAMP E-4	RT			15										110		/						
	U-4	87+25 TO 90+25 RAMP E-4	RT			18											290	/						
	U-5	90+25 TO 92+04 RAMP E-4	LT													180								
	U-6	586+00 TO 590+52.5 I-76	LT			20										441		/						
	U-7	590+40 TO 592+00 I-76	LT													160								
	U-8	586+00 TO 587+00 I-76	MED			10									39	56		/						
	U-9	587+05 TO 590+15 I-76	MED			10									40	265		/						
502	U-10	590+21 TO 592+00 I-76	MED												30	150								
TOTALS				2	20	83	32	192	90	1	1	1	1	1	109	1894	290				190	1		

CALC. BY. DATE	SUM-76-11.57	OHIO
CHKD. BY. DATE	FED. PROJECT IR-76-2(44)19.	F.H.W.A. REGION 5

504
1214

SUMMIT COUNTY

MATCH SHEET 502

STA. 586+00
MATCH LINE
SEE SHEET 500

STA. 592+00
MATCH LINE
SEE SHEET 509

I-76 WEST BOUND

I-76 EAST BOUND

39' UNCLASS. U.D.

STA. 587+00, ℄ I-76
EXISTING INLET

EX. U.D.

TO REMAIN

ABD. 8" SAN.

40' UNCLASS. U.D.

EX. 6" U.D.

8" SAN.

RAMP 'E-6'

EX. RAMP 'E-6'

B-11

10'-6" CONDUIT, TYPE F
707.17 NON-PERFORATED

TO BE ABANDONED

TO BE ABANDONED & PLUGGED

REMOVED

STA. 89+92, 20' LT.,
RAMP E-8
C.B. No. 5 WITHOUT APRON

STA. 87+25, 34' LT.
RAMP 'E-8'
C.B. No. 5A
WITHOUT APRON

RAMP 'E-8'

100' DITCH EROSION PROTECTION

LA R/W

STA. 87+25, 47.5' RT
RAMP 'E-8'
C.B. No. 5A
WITHOUT APRON

STA. 87+44, 33' RT.
RAMP 'E-6'
M.H. TO BE ABD.
CONNECT 12" THRU

STA. 9+85, 24' RT.
℄ RAMP 'E-8A'
C.B. No. 5 WITHOUT APRON

RAMP 'E-8A'

MATCH LINE
STA. 10+50
SEE SHEET 505

B-10

B-13

THIRD AVENUE SERVICE ROAD

MATCH LINE
STA. 86+00 (500)

MATCH LINE STA. 86+00 (500)

MATCH LINE STA. 92+00 (509)

FOURTH AVENUE

HART STREET

8" SAN. TO REMAIN

6" W TO BE ABANDONED

6" W TO REMAIN

8" SAN.

4" G

6" G W TO REMAIN

20" COMB

12" S

15" S

30"

VARIES

TO BE PLUGGED

TO BE ABD

FOR QUANTITIES, SEE SHEET 506.
FOR LEGEND, SEE SHEET 485.
FOR ROADWAY PLAN, SEE SHEET 135
FOR WATER MAIN PLAN, SEE SHEET 583

0 20 40 60
SCALE IN FEET

EAST BOUND
STA. 586+00 TO STA. 592+00
DRAINAGE

AA B/P# 71942R

CALC. BY. DATE	SUM-76-11.57	OHIO
CHKD. BY. DATE	FED. PROJECT IR-76-2(44)19	F.H.W.A. REGION 5

505 / 1214

STA 10+95, 32' LT
℄ RAMP 'E-8A'
M.H. ADJ. TO GRADE
EXIST. T.C. = 1040.21
NEW T.C. = 1039.40

MATCHLINE A-A
SEE SHEET 502

STA. 12+97, 6' LT.
℄ RAMP 'E-8A'
M.H. TO BE ABANDONED
(CONNECT EX. 20" THRU)

STA. 12+44, 36.5' LT.
RAMP 'E-8A'
C.B. No 5
WITHOUT APRON

100' DITCH EROSION PROTECTION

TO BE REMOVED

15"S

8"W

20" COMB. (TO REMAIN)

RAMP 'E-8A'

TO BE ENCASED FOR DETAIL SEE SHEET 541.

(TO REMAIN) 20" COMB

TO BE ABD.

MATCH LINE STA. 10+50 SEE SHT 59A

6"W

8" SAN.

TO BE ABANDONED

AVENUE

FOURTH

TO REMAIN

LA R/W

EXIST. R/W

VARIES

5'0"S.E.G. BLK. COMB.

AVENUE

HART ST.

24"S

6"W

STA. 59+94, ℄ FIFTH AVE. EXIST. M.H.

10"W

MEET EXIST. U.D.

10' UNCLASS U.D.

TO BE ABANDONED

STA. 12+44, 23.5' RT
℄ RAMP 'E-8A'
C.B No. 5 WITHOUT APRON

24:1
20:1
16:1
12:1
9:1
7.5:1

FIFTH

59

58

4" G

12"S

RAZED BUILDING

FOR QUANTITIES, SEE SHEET 506.
FOR LEGEND, SEE SHEET 485.
FOR ROADWAY PLANS, SEE SHEET 136
FOR WATER MAIN PLAN, SEE SHEET 584
FOR PROFILE SEE SHEET 13.

0 20 40 60
SCALE IN FEET

RAMP 'E-8A'
STA. 10+50 TO STA. 13+85.65
DRAINAGE

DRAINAGE SUBSUMMARY

CALC. BY: EJK DATE: 3/97
CHKD. BY: DSB DATE: 3/97

SUM-76-11.57
FED. PROJECT IR-76-2(44)19

OHIO
F.H.W.A. REGION 5

506
1214

SUMMIT COUNTY

SHEET No.	REFERENCE No.	LOCATION STATION TO STATION	SIDE	DRAINAGE 202 PIPE REMOVED, 24" AND UNDER (LF.)	202 CATCH BASIN REMOVED (EA.)	202 CATCH BASIN ABANDONED (EA.)	202 MANHOLE ABANDONED (EA.)	602 CONCRETE MASONRY (C.Y.)	603 6" CONDUIT, TYPE B, 707.17, NON-PERFORATED ASTM 3034, SDR 35 OR SS931 (LF.)	603 6" CONDUIT, TYPE F, 707.17, NON-PERFORATED ASTM 3034 SDR 35 OR SS931 (LF.)	603 12" CONDUIT, TYPE C (LF.)	603 15" CONDUIT, TYPE B (LF.)	603 15" CONDUIT, TYPE C (LF.)	603 30" CONDUIT, TYPE C (LF.)	603 30" CONDUIT, TYPE B 706.02, 1250 D-LOAD OR 707.13 (LF.)	603 30" CONDUIT, TYPE C 706.02, 1250 D-LOAD OR 707.13 (LF.)	604 MANHOLE ADJUSTED TO GRADE (EA.)	604 CATCH BASIN NO. 5 WITHOUT APRON (EA.)	604 CATCH BASIN NO. 5A WITHOUT APRON (EA.)	605 6" UNCLASSIFIED PIPE UNDERDRAINS, AS PER PLAN (LF.)	605 6" SHALLOW PIPE UNDERDRAINS, AS PER PLAN (LF.)	605 6" DEEP PIPE UNDERDRAINS, AS PER PLAN (LF.)	605 6" BENDS AND BRANCHES 45°	605 6" BENDS AND BRANCHES 90°	605 6" BENDS AND BRANCHES "T"	670 DITCH EROSION PROTECTION (S.Y.)	PROFILE SHEET No.
504	AB-1	87+45 RAMP E-6	RT				1								83				1								84	541
	P-65	87+25 RAMP E-8	LT/RT								10					270			1								125	541
	P-66	87+20 TO 87+25 RAMP E-8	LT									90						1								125	5348
	P-67	87+25 TO 89+92 RAMP E-8	LT											258				1								125	535
	P-68	89+85 RAMP E-8A TO 89+92 RAMP E-8	RT/LT															1								125	5348
	P-69	89+92 TO 92+50 RAMP E-8	LT																								
	U-1	586+00 TO 587+00 I-76	MED							10											39	57		1			
	U-2	587+05 TO 590+15 I-76	MED							10											40	268		1			
	U-3	590+21 TO 592+00 I-76	MED																			180					
	U-4	586+00 TO 588+64 I-76	RT						25	10												253			1	1	
	U-5	86+00 RAMP E-6 TO 592+00 I-76	RT							10												590					
	U-6	86+00 TO 87+25 RAMP E-8	RT							27												122			1		
	U-7	87+28 RAMP E-8 TO 10+50 RAMP E-8A	RT							25													313		1		
	U-8	90+02 TO 92+00 RAMP E-8	RT																				199				
504	U-9	91+38 TO 92+00 RAMP E-8	LT																				62				
505	AB-1	12+87 RAMP E-8A	LT			1																					
	AB-2	12+97 RAMP E-8A	LT				1																				
	AB-3	12+90 RAMP E-8A	RT			1																					
	R-1	10+70 TO 11+00 RAMP E-8A	LT/RT	70	2																						
	P-70	12+44 RAMP E-8A	RT/LT					1.5				60						1								125	541
	P-71	12+44 RAMP E-8A TO 92+50 RAMP E-8	LT/RT										205					1								84	541
	U-1	10+50 TO 12+44 RAMP E-8A	RT							26													178	1			
	U-2	12+44 TO 13+58 RAMP E-8A	RT							26													105	3			
	U-3	13+60 TO 13+72 RAMP E-8A	RT																		10	20					
505	D-1	10+95 RAMP E-8A	LT														1										
TOTALS				190	3	2	2	1.5	25	144	10	150	205	258	83	270	1	4	2	89	1490	857				668	

AA B.Pe 71942R

CALC. BY. DATE	SUM-76-11.57	OHIO
CHKD. BY. DATE	FED. PROJECT IR-76-2(44)19	F.H.W.A. REGION 5

SUMMIT COUNTY

507
1214

LA R/W

STA. 95+43, 25' RT.
℄ RAMP 'E-7'
M.H. RECONST. TO GRADE

STA. 94+06, 44.5 RT.
℄ RAMP 'E-7'
C.B. No. 5 WITHOUT APRON
(REMOVE EX1ST. M.H.)

STA. 94+50, 41' LT.
RAMP 'E-7'
C.B. No 5
WITHOUT APRON

6" CONDUIT TYPE F CASING NON-PERFORATED

MEET EXISTING U.D. W/ 10' UNCLASS. U.D.

STA. 15+98, 1' LT.
℄ FULLER STREET
M.H. ADJUST TO GRADE
EX. T.C. = 1010.32
NEW T.C. = 1010.18

HIGH POINT
℄ = 1012.77

STA. 15+76, 7' RT., FULLER ST.
EX. M.H. RECONSTRUCTED TO GRADE
EX. T.C. = 1016.79
NEW T.C. = 1015.71

STA. 96+08, 13' RT. RAMP E-7'
EX. M.H. ADJ. TO GRADE

EX. 24" STM. TO REMAIN

THIRD AVENUE

STA 96+86, 5.5' RT. ℄ RAMP 'E-7'
M.H. No 1

STA. 96+88, 32' RT.
℄ RAMP 'E-7'
INLET, CITY OF AKRON No. 3

STA. 15+09, 8' RT.,
FULLER ST.
M.H. NO. 1

LA R/W

MATCH LINE STA. 92+50

RAMP 'E-7'

RAMP 'E-4'

SAN. 8" TO BE ABANDONED

12" S TO REMAIN

100' DITCH EROSION PROTECTION

STA. 15+78, 37' LT. FULLER ST.
C.B. NO. 5 WITHOUT APRON

PROP. 6" W.M.

FULLER STREET

4" G

6" W

15" S

12" S TO BE ABD.

FILL & PLUG EXIST. CONDUIT

CONC. BARRIER

STA. 59G+52, 845' LT., I-76
INLET No. 3A
AS PER PLAN

EX. 12" STM. TO BE ABANDONED

MATCH LINE STA. 598+00 SEE SHEET 510

STA. 592+25, 62' LT., I-76
M.H. NO. 1

STA. 593+92, 65' LT. I-76
C.B. NO. 5 WITHOUT APRON

STA. 594+63, ℄ I-76
INLET No. 3B50
AS PER PLAN
(REMOVE EXIST. INLET)

I-76 WEST BOUND

℄ I-76

STA. 59G+45, MED.
INLET NO. 3B50 AS PER PLAN
(REMOVE EXIST. INLET)

EX. U.D.

EX. G" U.D.

54' UNCLASS. U.D.

STA. 592+25, ℄ I-76
EXIST. INLET

STA. 594+00, ℄ I-76
INLET No. 3B50, A.P.P.
(REMOVE EXIST. INLET)

I-76 EAST BOUND

MATCH LINE STA. 592+00 SEE SHEET 502

MATCH LINE STA. 92+04 SEE SHEET 509

MATCH SHEET 509.

BERM

WALL

SIDEWALK

STEPS

FOR ROADWAY PLAN, SEE SHEET 138
FOR QUANTITIES, SEE SHEET 508
FOR LEGEND, SEE SHEET 485.
FOR WATER MAIN PLAN SEE SHEET 585
FOR PAVEMENT DETAILS, SEE SHEET 205

0 20 40 60
SCALE IN FEET

WEST BOUND
STA. 592+00 TO STA. 598+00
DRAINAGE

DRAINAGE SUBSUMMARY

CALC. BY. KDK DATE 4/92
CHKD. BY. DSR DATE 7/92

SUM-76-11.57
FED. PROJECT IR-76-2(44)19

OHIO
F.H.W.A. REGION 5

508
1214

SUMMIT COUNTY

SHEET No.	REFERENCE No.	LOCATION STATION TO STATION	SIDE	DRAINAGE 202 PIPE REMOVED, 24" AND UNDER L.F.	202 CATCH BASIN REMOVED EA.	202 MANHOLE ABANDONED EA.	202 MANHOLE REMOVED EA.	603 6" CONDUIT, TYPE F, 707.17, NON-PERFORATED ASTM 3034 SDR 35 OR SS931 L.F.	603 12" CONDUIT, TYPE B, 706.02 L.F.	603 15" CONDUIT, TYPE B L.F.	603 15" CONDUIT, TYPE B, 706.02 L.F.	603 15" CONDUIT, TYPE B, 707.13 L.F.	603 15" CONDUIT, TYPE C L.F.	603 15" CONDUIT, TYPE C, 707.13 L.F.	604 MANHOLE ADJUSTED TO GRADE EA.	604 MANHOLE RECONSTRUCTED TO GRADE EA.	604 CATCH BASIN NO. 5 WITHOUT APRON EA.	604 INLET NO. 3A, AS PER PLAN EA.	604 INLET NO. 3850, AS PER PLAN EA.	604 INLET, CITY OF AKRON NO. 3 EA.	604 MANHOLE NO. 1 EA.	605 6" UNCLASSIFIED PIPE UNDERDRAINS, AS PER PLAN L.F.	605 6" SHALLOW PIPE UNDERDRAINS, AS PER PLAN L.F.	605 6" BENDS AND BRANCHES 45°	90°	'T'	'+'	660 REINFORCED SODDING S.Y.	670 DITCH EROSION PROTECTION S.Y.	SPEC. FILL AND PLUG EXISTING CONDUIT L.F.	PRECAST REINFORCED CONCRETE OUTLET EA.	SANITARY 202 MANHOLE ABANDONED EA.	SANITARY 604 MANHOLE ADJUSTED TO GRADE EA.	PROFILE SHEET No.
507	AB-1	92+25 RAMP E-4	LT																															1		
	AB-2	594+00 I-76	MED			1																														
																						1														
	R-1	93+80 TO 94+07 RAMP E-7	RT	30	1																															
	R-2	93+90 TO 94+07 RAMP E-7	RT	19	1																															
	R-3	94+07 TO 94+10 RAMP E-7	RT	15			1																													
	R-4	95+40 RAMP E-7	RT	18	1																															
	R-5	95+40 RAMP E-7	RT	7	1																															
	R-6	15+35 TO 15+76 FULLER ST	RT	41	1																															
	R-7	15+65 TO 15+76 FULLER ST	LT/RT	22	1																															
	R-8	596+26 TO 596+52 I-76	LT																														143			
	D-1	15+98 FULLER ST	LT																																1	
	D-2	15+76 FULLER ST	RT														1																			
	P-39	592+25 I-76	LT/MED							60																										539
	P-40	592+25 TO 593+92 I-76	LT										167								1															
	P-41	594+00 TO 594+63 I-76	MED							63										1																
	P-42	593+92 TO 594+00 I-76	LT/MED							65										1																
	P-43	593+92 I-76 TO 94+06 RAMP E-7	LT/RT									98					2																250			
	P-44	15+78 FULLER ST TO																																		
		95+43 RAMP E-7	LT										17				1																84			
	P-45	94+50 TO 95+43 RAMP E-7	LT/RT							114							1																125			
	P-47	596+45 TO 596+52 I-76	MED/LT							82										1																
	P-48	15+09 FULLER ST TO 596+52 I-76	RT/LT											53					1																	
	P-49	96+08 RAMP E-7 TO																																		
		15+09 FULLER ST	RT								106					1					1															539
	P-50	96+86 TO 96+88 RAMP E-7	RT						28											1	1															540
	U-1	92+50 TO 94+50 RAMP E-7	LT					38																199		1										
	U-2	94+75 RAMP E-7 TO																																		
		16+89 FULLER ST	LT																					10	114											
	U-3	13+90 TO 15+75 FULLER ST	LT					22																	185		1									
	U-4	93+75 TO 95+43 RAMP E-7	RT					22																	200	2	1									
	U-5	92+04 RAMP E-4 TO 595+09 I-76	LT					27																	300			1	1					1		
	U-6	592+00 TO 592+25 I-76	LT					12																	18	1										
	U-7	592+30 TO 593+92 I-76	LT					15																	155	1										
	U-8	596+52 TO 598+00 I-76	LT					15																	135	1			1							
	U-9	592+00 TO 592+25 I-76	MED					12																10		1										
	U-10	592+30 TO 594+00 I-76	MED					17																	155	1										
	U-11	594+03 TO 594+62 I-76	MED					10																	53	1										
	U-12	594+63 TO 595+15 I-76	MED					10																	49	1		1								
	U-13	596+45 TO 598+00 I-76	MED					13																	142	1		1								
	U-14	13+85 FULLER ST TO																																		
		96+88 RAMP E-7	RT					10																	223											
	U-15	16+89 FULLER ST TO																																		
		96+92 RAMP E-7	RT/LT																					10	55											
	U-16	95+95 TO 96+86 RAMP E-7	LT					10																	88	1										
507	EC-1	594+23 I-76	LT																													61				
TOTALS				152	6	1	1	233	28	384	106	98	184	53	1	1	4	1	3	1	3	30	2071					61	459	143	1	1	1		

DRAINAGE SUBSUMMARY

CALC. BY. DATE	SUM-76-11.57	OHIO
CHKD. BY. DATE	FED. PROJECT IR-76-2(44)19	F.H.W.A. REGION 5

509 / 1214

SUMMIT COUNTY

MATCH SHEET 507

MATCH LINE SEE SHEET 509

STA. 592+00

STA. 598+00

SEE SHEET 512

MATCH LINE

I-76 WEST BOUND

I-76 EAST BOUND

I-76

BERM

OVERHEAD SIGN

EX. 6" U.D.

EX. U.D.

593

594

595

596

597

12" S

15"

15" DRAIN

14" SAN

15"

STA. 13+00, ℄ FULLER ST
M.H. ADJ. TO GRADE
EXIST. T.C. = 1022.51
NEW T.C. = 1022.53

STA. 96+12, 18' LT.
RAMP 'E-8'
M.H. NO. 1

TO BE PLUGGED

4" G

6" W

21" S

8" (ABANDONED) SAN

EX. RAMP

STA. 101+90, 18' LT.
℄ RAMP 'E-8B'
M.H. NO. 1
T.C. = 1021.11

VARIES

30"

24"

B-16

B-17

93

94

95

8" SAN

6" W

4" G

12" S

TO BE ABD. & PLUGGED

STA. 92+50, 22' LT.
RAMP 'E-8'
C.B. NO. 5
WITHOUT APRON

TO BE ABANDONED?

RAMP 'E-8'

STA. 95+10, 8' LT.
RAMP 'E-8'
INLET 2-A-12
AS PER PLAN

STA. 95+78, 15' LT.
RAMP E-8 = STA. 12+68,
12' LT., FULLER ST.
M.H. NO. 1

STA. 12+92, 6' RT.
FULLER STREET
EXISTING MANHOLE
ADJUST TO GRADE
EXIST. T.C. = 1022.63
NEW T.C. = 1022.65

RAMP 'E-8B'
TYPE 2 CURB & GUTTER

FOURTH AVENUE

STA. 92+50, 96.5' RT.
RAMP 'E-8
C.B. NO. 5 W/O. APRON

STA. 95+54, 64' RT.
RAMP 'E-8'
C.B. NO. 5
WITHOUT APRON

STA. 95+60, 40' RT.
RAMP 'E-8'
C.B. NO. 3

STA. 11+85, 22' RT.
FULLER STREET
CITY OF AKRON
INLET NO. 3

EXIST. LA

LA R/W

MEET EXISTING U.D.

FULLER STREET

8:1

4:1

2:1

12:1

16:1

24:1

STEPS

STAIRS

WALK

CURB

MATCHLINE A-A
SEE SHEET 505

MATCH LINE STA. 102+00 (5/12)

FOR QUANTITIES, SEE SHEET 511
FOR LEGEND, SEE SHEET 429
FOR ROADWAY PLAN,
SEE SHEET 138
FOR WATER MAIN PLAN,
SEE SHEET 586

0 20 40 60
SCALE IN FEET

EAST BOUND
STA. 592+00 TO STA. 598+00
DRAINAGE

AA B/P# 71942R

CALC. BY. DATE	SUM-76-11.57	OHIO
CHKD. BY. DATE	FED. PROJECT IR-76-2(44)19	F.H.W.A. REGION 5

510
12/14

SUMMIT COUNTY

12" CIP (ABAN.)

60" 57" BS (ABAN.)

LITTLE CUYAHOGA INTERCEPTOR

STA. 15+17±, 77'± LT.
KELLY AVE.
REMOVE EXISTING FRAME AND BACK CAP OFF THE TOP OF THE OPENING IN THE 24" SANITARY SEWER BY PLACING A SPLIT PIECE OF PIPE OVER THE TOP OF SANITARY SEWER AND FILLING ABOVE WITH CONCRETE TO MATCH THE TRUNK SEWER INVERT. AN ALTERNATE METHOD MAY BE USED AS APPROVED BY THE ENGINEER. FOR DETAILS SEE SHEET 555B.

EXISTING BRICK WALL TO BE REMOVED

EXIST. SENSOR WIRE

EXIST R/W

EXIST R/W

BALTIMORE & OHIO RAILROAD

PAVED PARKING

R.R. SIGNAL BOX

R.R. SIGNAL BOX

THIRD AVENUE

KELLY AVENUE

LA R/W

TO BE ABD. & PLUGGED

PROP. AERIAL EASEMENT LINE

PROP 6'-6" STWL

EX. 6'-6" COMB.

12" W

10" FP (GOODYEAR)

I-76 WEST BOUND

I-76

I-76 EAST BOUND

EX. U.D.

MATCH LINE SEE SHEET 507
STA. 598+00

MATCH LINE SEE SHEET 513
STA. 604+00

FOR QUANTITIES, SEE SHEET 511.
FOR LEGEND, SEE SHEET 485.
FOR ROADWAY PLAN, SEE SHEET 142.

0 20 40 60
SCALE IN FEET

MATCH SHEET 512.

WEST BOUND
STA. 598+00 TO STA. 604+00
DRAINAGE

DRAINAGE SUBSUMMARY

CALC. BY EJK DATE 3/91
CHKD. BY LSB DATE 3/91

SUM-76-11.57
FED. PROJECT IR-76-2(44)19

OHIO
F.H.W.A. REGION 5

511
1214

SUMMIT COUNTY

SHEET No.	REFERENCE No.	LOCATION STATION TO STATION	SIDE	DRAINAGE 202 PIPE REMOVED, 24" AND UNDER (LF.)	202 CATCH BASIN ABANDONED (EA.)	202 CATCH BASIN REMOVED (EA.)	202 MANHOLE ABANDONED, AS PER PLAN (EA.)	603 6" CONDUIT, TYPE F, 707.17, NON-PERFORATED ASTM 3034 SDR 35 OR SS031 (LF.)	603 15" CONDUIT, TYPE B (LF.)	603 15" CONDUIT, TYPE B, 706.02 (LF.)	603 15" CONDUIT, TYPE C (LF.)	603 30" CONDUIT, TYPE B (LF.)	603 30" CONDUIT, TYPE C (LF.)	604 MANHOLE ADJUSTED TO GRADE (EA.)	604 CATCH BASIN NO. 5 WITHOUT APRON (EA.)	604 INLET NO. 2-A-12, AS PER PLAN (EA.)	604 INLET, CITY OF AKRON NO. 3 (EA.)	604 MANHOLE NO. 1 (EA.)	604 CATCH BASIN NO. 3 (EA.)	605 6" SHALLOW PIPE UNDERDRAINS, AS PER PLAN (LF.)	605 6" DEEP PIPE UNDERDRAINS, AS PER PLAN (LF.)	605 6" BEADS AND BRANCHES 45°	90°	'T'	'+'	60°	670 DITCH EROSION PROTECTION (S.Y.)	SPEC. PRECAST REINFORCED CONCRETE OUTLET (EA.)	SANITARY 202 MANHOLE ABANDONED (EA.)	604 MANHOLE ADJUSTED TO GRADE (EA.)	PROFILE SHEET No.
509	AB-1	93+84 RAMP E-8	RT																										1	
	AB-2	94+40 RAMP E-8	LT																										1	
	AB-3	95+40 RAMP E-8 TO 12+92 FULLER ST	LT/RT		2																									
	R-1	12+55 RAMP E-8 TO 12+92 FULLER ST	LT/RT	38		1																								
	R-2	12+92 FULLER ST	RT	6		1																								
	P-51	95+10 TO 95+12 RAMP E-8	LT								8						1													540
	P-52	11+85 FULLER ST TO 95+60 RAMP E-8	RT							75							1													540
	P-53	95+54 TO 95+60 RAMP E-8	RT								23					1												125				540
	P-54	95+60 RAMP E-8 TO 12+68 FULLER ST	RT						57										1												540
	P-72	92+50 RAMP E-8	LT/RT						69							1												125				414
	P-73	92+50 TO 95+12 RAMP E-8	LT										262			1												125				534B
	P-74	95+12 RAMP E-8 TO 95+78 RAMP E-8	LT									65						1													534C
	P-75	95+78 RAMP E-8 TO 101+90 RAMP E-8B	LT									210						1													534C
	P-76	101+90 TO 104+00 RAMP E-8B	LT										210					1													534C
	D-1	13+00 FULLER ST	℄																											1	
	D-2	12+92 FULLER ST.	RT												1																
	U-1	592+00 TO 594+63 I-76	MED					14												259		1									
	U-2	594+63 TO 595+15 I-76	MED					14												46		1			1						
	U-3	592+83 TO 594+75 I-76	RT					24												197			1					1			
	U-4	595+75 TO 595+17 I-76	RT																	42											
	U-5	596+45 TO 598+00 I-76	MED					10												146		1			1						
	U-6	596+60 TO 598+00 I-76	RT					25												144			1					1			
	U-7	92+00 TO 95+10, RAMP E-8	LT					30													282	2				1					
	U-8	92+00 TO 95+60, RAMP E-8	RT					20													348	2				1					
	U-9	95+26 RAMP E-8 TO 13+90 FULLER ST	LT																	141											
	U-10	11+40 FULLER ST TO 95+60 RAMP E-8	LT/RT																	88											
	U-11	12+53 TO 13+85 FULLER ST	RT																	132		1									
	U-12	100+13 TO 102+00 RAMP E-8B	LT																	187											
	U-13	100+41 TO 102+00 RAMP E-8B	RT																	164											
	U-14	11+40 TO 11+85 FULLER ST	RT					10												35											
509	U-15	592+00 TO 592+81 I-76	RT					40												81			1								
510	U-1	598+00 TO 599+90 I-76	LT																	185				1							
	U-2	598+00 TO 600+14 I-76	MED																	214											
	D-1	15+17 KELLY AVE.	LT.				1																								
510	AB-1	599+90 I-76	LT		1																										
TOTALS				44	3	2	1	187	126	75	31	275	472	1	3	1	1	3	1	2061	630						375	2	2	1	

AA B/P# 71942R

CALC. BY. DATE	SUM-76-11.57	OHIO
CHKD. BY. DATE	FED. PROJECT IR-76-2(44)19	F.H.W.A. REGION 5

SUMMIT COUNTY

512 / 1214

MATCH SHEET 510

MATCH LINE STA. 598+00 SEE SHEET 509

MATCH LINE STA. 604+00 SEE SHEET 458

I-76 WEST BOUND

I-76 EAST BOUND

℄ I-76

599 600 601 602 603

WALL

EX. U.D.

ABANDONED

SAN. 8"

EXIST. R/W

SENSOR WIRE

13

15" SAN. (UNDER 6'-6" STM.)

STA. 12+95, RT.
KELLY AVE.
JUNCTION CHAMBER AS PER PLAN. FOR DETAILS, SEE SHEET 555A.

PROP. AERIAL EASEMENT LINE

STA. 11+72, 25' RT.
KELLY AVE.
REMOVE CONCRETE OR BRICK FROM EXISTING 15" SAN. PLACE RACK AND FRAME OVER EXISTING 15" SAN. LAY BRICK WALL, 18"± HIGH (MORTAR TO BOTTOM OF EXISTING SEG. BLK. SEWER). FOR FOR DETAILS SEE SHEET 555B.

EX. RAMP 'E-8'

2:1

8:1

4:1

24:1

5:1

STA. 102+00 (509)

STA. 104+00, 32' LT.
RAMP E-8B
C.B. NO. 5 W/O APRON

STA. 106+18, 91' LT.
RAMP E-8B
M.H. NO. 3

STA. 106+25, 32' LT.
RAMP E-8B
C.B. NO. 5 W/O APRON

50' UNCLASSIFIED UNDERDRAIN

30"

15"

103 ℄ RAMP 'E-8B'

104 105 106 107

TO BE REMOVED

TO BE ABANDONED

TO BE JACKED

TO BE PLUGGED

LA R/W

CSX RAILROAD

12 AVENUE

BALTIMORE & OHIO RAILROAD

10 KELLY

FIFTH AVENUE

69 AVENUE

67 68 70 71

STA. 104+00, 14' RT.
RAMP E-8B
C.B. NO. 3A

B-18

PAVED PARKING

70' UNCLASSIFIED U.D.

STA. 106+45, 14' RT.
RAMP E-8B, C.B. NO. 3

STA. 106+45, 14' LT.
RAMP E-8B
C.B. NO. 3A

STA. 70+65, 13' LT.
& FIFTH AVE.
INLET, CITY OF AKRON NO. 3

70' UNCLASSIFIED UNDERDRAIN

STA. 69+68 ℄
FIFTH AVE.
EXIST. C.B.

STA. 70+66, ℄
FIFTH AVE.
M.H. CITY OF AKRON NO. 5

STA 70+65, 13' RT.
& FIFTH AVE.
INLET, CITY OF AKRON NO. 3

UNCLASS U.D. TO BE PLUGGED

12" W.M. TO REMAIN

STA. 10+00, 22.5' LT.
KELLY AVE.
M.H. ADJ. TO GRADE
EX. T.C. = 1012.31
NEW T.C. = 1012.10

SPLICE INTO EXISTING SENSOR WIRE. FOR CONNECTION CONTACT CITY OF AKRON SEWER MAINTENANCE.

GOODYEAR UTILITIES MUST BE MAINTAINED AT ALL TIMES.

FOR ROADWAY PLAN, SEE SHEET 143
FOR WATERMAIN PLAN, SEE SHEET 588
FOR QUANTITIES, SEE SHEET 514
FOR LEGEND, SEE SHEET 485

SCALE IN FEET 0 20 40 60

EAST BOUND
STA. 598+00 TO STA. 604+00
DRAINAGE

A.A. B. P# 71942R

CALC. BY.		SUM-76-11.57	OHIO	513
DATE				1214
CHKD. BY.		FED. PROJECT IR-76-2(44)19	F.H.W.A. REGION 5	
DATE				

SUMMIT COUNTY

+56 LT.
BEGIN U.D.
1008.15

MEET EXIST. U.D. W/ 10' UNCLASS. U.D

STA. 35+66, 6' RT.
THIRD AVE.
EXISTING M.H.
ADJ. TO GRADE

UNCLASS. U.D.

+48, RT.
BEGIN U.D.
1007.15

STA. 609+80.
126' LT.
I-76
M.H. No. 1

STA. 33+54, 16' RT.
℄ THIRD AVENUE
EXIST. INLET
6" U.D. OUTLET = 999.20

CONC. BARRIER, TYPE D

UNCLASS. U.D.

STA. 609+75, 775' LT.
I-76
INLET No. 3A
AS PER PLAN

UNCLASSIFIED U.D.

6" U.D.

MATCH LINE STA. 610+00 SEE SHEET 516

MATCH LINE STA. 604+00 SEE SHEET 510

AVENUE

12" C.I.P. (ABAN.)

57" B.S. (ABAN.)

60"

LITTLE CUYAHOGA RIVER

AKRON BARBERTON BELT

KELLY AVENUE

MARTHA AVENUE

THIRD

EXIST. R/W

PROP. AERIAL EASEMENT LINE

INTERCEPTOR

RAILROAD

I-76 WEST BOUND

I-76 EAST BOUND

℄ I-76

L.A. R/W

EXIST. R/W

FOR QUANTITIES, SEE SHEET 514
FOR LEGEND, SEE SHEET 485
FOR ROADWAY PLAN, SEE SHEET 145

MATCH SHEET 515.

0 20 40 60
SCALE IN FEET

WEST BOUND
STA. 604+00 TO STA. 610+00
DRAINAGE

DRAINAGE SUBSUMMARY

CALC. BY: EJK DATE: 3/91
CHKD. BY: TSB DATE: 3/91

SUM-76-11.57
FED. PROJECT IR-76-2(44)19

OHIO
F.H.W.A. REGION 5

514 / 1214

SUMMIT COUNTY

SHEET No.	REFERENCE No.	LOCATION STATION TO STATION	SIDE	DRAINAGE 202 PIPE REMOVED, 24" AND UNDER LF.	202 CATCH BASIN REMOVED EA.	202 CATCH BASIN ABANDONED EA.	202 MANHOLE REMOVED EA.	603 6" CONDUIT, TYPE F, 707.17, NON-PERFORATED ASTM 3034 SDR 35 OR SS931 LF.	603 12" CONDUIT, TYPE B LF.	603 12" CONDUIT, TYPE C, 707.13 LF.	603 15" CONDUIT, TYPE B LF.	603 15" CONDUIT, TYPE C LF.	603 30" CONDUIT, TYPE C, 706.02, 1250 D-LOAD OR 707.13 LF.	603 30" CONDUIT, TYPE B LF.	603 30" CONDUIT, TYPE B, 706.02 D-LOAD 3000 UNDER R.R. W/ CASING PIPE, AS PER PLAN EA.	603 MANHOLE RECONSTRUCTED, AS PER PLAN EA.	604 CATCH BASIN NO. 3 EA.	604 CATCH BASIN NO. 3A EA.	604 CATCH BASIN NO. 5 WITHOUT APRON EA.	604 INLET NO. 3A, AS PER PLAN EA.	604 INLET, CITY OF AKRON NO. 3 EA.	604 JUNCTION CHAMBER, AS PER PLAN EA.	604 MANHOLE NO. 1 EA.	604 MANHOLE NO. 3 EA.	604 MANHOLE NO. 5 CITY OF AKRON EA.	605 6" UNCLASSIFIED PIPE UNDERDRAINS, AS PER PLAN LF.	605 6" SHALLOW PIPE UNDERDRAINS, AS PER PLAN LF.	605 6" DEEP PIPE UNDERDRAINS AS PER PLAN LF.	605 6" BENDS AND BRANCHES 45°	90°	"T"	"Y"	670 DITCH EROSION PROTECTION S.Y.	PROFILE SHEET No.
512	AB-1	104+40 RAMP E-8B TO 69+68 FIFTH AVE	RT			1																												
	AB-2	106+62 RAMP E-8B	RT			1																												
	AB-3	106+80 RAMP E-8B	RT			1																												
	D-1	11+72 KELLY AVE.	RT													1																		
	R-1	103+67 TO 104+21 RAMP E-8B	LT	53	1																													
	R-2	104+21 TO 104+40 RAMP E-8B	LT/RT	52			1																											
	P-77	104+00 RAMP E-8B	RT								46							1																535
	P-78	104+00 TO 106+25 RAMP E-8B	LT									225						1															125	534C
	P-79	106+45 RAMP E-8B	LT/RT								28						1																	535
	P-80	106+45 TO 106+25 RAMP E-8B	LT									28						1																
	P-81	106+25 TO 106+18 RAMP E-8B	LT									59						1															125	535
	P-82	106+18 RAMP E-8B TO 12+45 KELLY AVE	LT/RT											72	60								1		1								534C
	P-88	70+65 FIFTH AVE	LT						14												1												542
	P-89	70+65 FIFTH AVE	RT						14												1				1								542
	U-1	598+00 TO 600+15 I-76	MED																									215				1		
	U-2	598+00 TO 600+15 I-76	RT																									215				1		
	U-3	102+00 TO 106+45 RAMP E-8B	LT					17																			120		315	1				
	U-4	102+00 TO 104+00 RAMP E-8B	RT					10																			50		140	1				
	U-5	104+05 TO 106+45 RAMP E-8B	RT					10																			70		168	1				
	U-6	106+52 RAMP E-8B TO 11+05 KELLY AVE	LT					10																				50		1				
512	U-7	106+45 RAMP E-8B TO 9+53 KELLY AVE	RT/LT					10																			90							
513	P-91	609+75 TO 609+80 I-76	LT							51											1												544
	P-92	36+66 THIRD AVE TO 609+80 I-76	RT/LT						80															1									544
	U-1	33+54 TO 35+48 THIRD AVE	RT					10																				188						
	U-2	34+92 TO 35+56 THIRD AVE	LT																								10	52						
	U-3	608+73 TO 609+75 I-76	LT					10																				95		1				
	U-4	609+75 TO 610+00 I-76	LT					10																			18			1				
513	U-5	609+06 TO 610+00 I-76	MED																								94				1			
TOTALS				105	1	3	1	87	108	51	74	87	225	72	60	1	1	2	2	1	2	1	1	1	1	452	815	623	XX	XX	XX	XX	250	

AA B/P# 21942R

CALC. BY. DATE	SUM-76-11.57	OHIO
CHKD. BY. DATE	FED. PROJECT IR-76-2(44)19	F.H.W.A. REGION 5

SUMMIT COUNTY

515
1214

MATCH SHEET 513

LITTLE

LITTLE CUYAHOGA

I-76 WEST BOUND

I-76 EAST BOUND

I-76 ℄

STA. 604+00

MATCH LINE SEE SHEET 512

10" F.P.

12" F.P. (GOODYEAR)

WALL

605 606 607 608 609

STA. 610+00

MATCH LINE SEE SHEET 518

EX. 6" UD

UNCLASS. U.D.

U 3

U 1

UNCLASS. U.D.

STA. 9+78, 26' RT.
RAMP E-9
M.H. No 3
W/TOG.11 JOINTS

21" S (TO REMAIN)

P 124 TO BE PLUGGED

AB 1

S 4

EX. 18" SAN TO BE ABANDONED

18" SAN

RAMP 'E-9'

PROP. AERIAL EASEMENT LINE

INTERCEPTOR

AKRON

STA. 9+75, 39' RT.
℄ RAMP 'E-9'
C.B. No. 5A WITHOUT APRON
(REMOVE EXIST. C.B.)

MATCH LINE STA. 10+25

P 126

U 2

EX. 18" SAN TO REMAIN

EX. 30" STM. TO REMAIN

EX. 30" STM. TO BE ABD.

30"

BARBERTON

CUYAHOGA RIVER

RAILROAD

BELT

EXIST. LA

BALTIMORE & OHIO RAILROAD

TANK

TANK

TANK

WALL

OVERHEAD WIRES

FOR QUANTITIES, SEE SHEET 517.
FOR LEGEND, SEE SHEET 485.
FOR ROADWAY PLAN, SEE SHEET 146

0 20 40 60
SCALE IN FEET

EAST BOUND
STA. 604+00 TO STA. 610+00
DRAINAGE

AA B/P# 71942R

CALC. BY. DATE	SUM-76-11.57	OHIO	516
CHKD. BY. DATE	FED. PROJECT IR-76-2(44)19	F.H.W.A. REGION 5	1214

SUMMIT COUNTY

STA. 17+44, 23' RT.
MARTHA AVE.
OBT CITY OF AKRON
INLET No 3

STA. 35+63, 31' LT.
3RD AVE.
CITY OF AKRON
INLET No 3
COST OF EXIST. INLET AND PIPE REMOVAL TO BE INCLUDED W/ NEW PIPE

STA. 35+67, 15' RT.
3RD AVE.
EXIST. M.H. ADJ. TO GRADE

STA. 9+75, 27' RT.
RAMP 'E-15'
C.B. No. 3

STA. 10+25, 27' RT.
RAMP 'E-15'
INLET No 2-G
AS PER PLAN

STA. 18+00, 6' LT.
RAMP 'E-12'
INLET No 2-A-G
AS PER PLAN

STA. 15+20, 94' RT.
MARTHA AVE.
EXIST. CATCH BASIN
ADJUST TO GRADE

STA. 14+80, 10' RT.
MARTHA AVE
M.H. No 1

STA. 14+25, 10' RT.
MARTHA AVE.
M.H. No 1

STA. 14+25, 23' LT.
MARTHA AVE.
CITY OF AKRON
INLET No 3

STA. 14+25, 23' RT.
MARTHA AVE.
CITY OF AKRON
INLET No 3

TYPE 'D' BARRIER

STA. 14+70, 74' LT.
RAMP 'E-15'
EXIST. M.H.

STA. 14+50, 49' LT.
RAMP 'E-15'
C.B. No 5
WITHOUT APRON

STA. 615+48, 140' LT.
I-76
C.B. No 5
WITHOUT APRON

TO BE ABD. AND PLUGGED

100' DITCH EROSION PROTECTION

CONC. BARRIER TYPE D

MATCH LINE STA. 610+00
SEE SHEET 515

MATCH LINE STA. 616+00
SEE SHEET 521

MATCH SHEET 518

I-76 WEST BOUND

I-76 EAST BOUND

I-76

FOR QUANTITIES, SEE SHEET 517
FOR LEGEND, SEE SHEET 485
FOR WATERMAIN PLAN, SEE SHEET 589
FOR ROADWAY PLAN, SEE SHEET 148

SCALE IN FEET 0 20 40 60

WEST BOUND
STA. 610+00 TO STA. 616+00

DRAINAGE

DRAINAGE SUBSUMMARY

CALC. BY. KDV DATE 6/26
CHKD. BY. DSB DATE 7/09

SUM-76-11.57
FED. PROJECT IR-76-2(44)19

OHIO
F.H.W.A. REGION 5

517
1214

SUMMIT COUNTY

SHEET No.	REFERENCE No.	LOCATION STATION TO STATION	SIDE	DRAINAGE 202 CATCH BASIN ABANDONED EA.	202 MANHOLE ABANDONED EA.	202 INLET ABANDONED EA.		603 6" CONDUIT, TYPE B, 707.17 NON-PERFORATED ASTM 3034, SOR 35 OR SS931 L.F.	603 6" CONDUIT, TYPE F, 707.17, NON-PERFORATED ASTM 3034 SOR 35 OR SS931 L.F.	603 12" CONDUIT, TYPE B, 706.02 L.F.	603 15" CONDUIT, TYPE B L.F.	603 15" CONDUIT, TYPE B, 706.02 L.F.	603 15" CONDUIT, TYPE B, 706.02 OR 707.13 L.F.	603 15" CONDUIT, TYPE C L.F.	603 18" CONDUIT, TYPE B L.F.	603 18" CONDUIT, TYPE B, 706.02 L.F.	603 21" CONDUIT, TYPE B, 706.02 L.F.		604 CATCH BASIN ADJUSTED TO GRADE EA.	604 MANHOLE ADJUSTED TO GRADE EA.	604 CATCH BASIN NO. 3 EA.	604 CATCH BASIN NO. 5 WITHOUT APRON EA.	604 INLET NO. 2-A-6, AS PER PLAN EA.	604 INLET, CITY OF AKRON NO. 3 EA.	604 MANHOLE NO. 1 EA.	604 INLET NO. 2-6, AS PER PLAN EA.		605 6" UNCLASSIFIED PIPE UNDERDRAINS, AS PER PLAN L.F.	605 6" SHALLOW PIPE UNDERDRAINS, AS PER PLAN L.F.	605 6" BENDS AND BRANCHES 45°	90°	'T'	'Y'		660 REINFORCED SODDING S.Y.			670 DITCH EROSION PROTECTION S.Y.			SANITARY 202 MANHOLE ABANDONED EA.			PROFILE SHEET No.
515	AB-1	10+00 RAMP E-9	LT	1																																							
	U-1	609+28 TO 610+00 I-76	RT																								63	9				1											
	U-2	9+84 TO 10+25 RAMP E-9	RT																									41				1										
515	U-3	609+07 TO 610+00 I-76	MED																								48	43				1										
516	AB-1	15+16 TO 15+25 MARTHA AVENUE	RT	2																																						
	AB-2	15+85 MARTHA AVENUE	RT	1																																						
	AB-3	14+49 MARTHA AVE	LT			1																																						
	AB-4	13+95 MARTHA AVE	LT		1																																						
	AB-5	14+64 RAMP E-12	RT	1																																						
	AB-6	15+02 RAMP E-15	RT																																						1		
	AB-7	15+03 RAMP E-15	RT	1																																						
	AB-8	14+75 RAMP E-15	LT	1																																						
	P-90	35+63 TO 35+64 THIRD AVE	LT/RT							38									1			1																				544
	P-93	17+44 MARTHA AVE TO 9+75 RAMP E-15	RT/RT								125											1																				543
	P-94	9+75 TO 10+25 RAMP E-15	RT								50													1																		546
	P-95	9+75 RAMP E-15 TO 18+00 RAMP E-12	RT/LT								44									1																						543
	P-96	18+00 RAMP E-12 TO 15+20 MARTHA AVE	LT/RT										80								1																					543
	P-97	14+53 TO 15+20 MARTHA AVE	RT											94					1																				84			543
	P-98	14+25 TO 14+53 MARTHA AVE	RT												55								1																		543
	P-99	14+25 MARTHA AVE	LT/RT								35											1																				544
	P-100	14+25 MARTHA AVE	RT								14											1																				544
	P-101	12+20 TO 14+25 MARTHA AVE	RT													205							1																		543
	P-137	615+48 I-76 TO 14+50 RAMP E-15	LT/LT									168									1																				544
	P-138	14+50 TO 14+70 RAMP E-15	LT								29										1																				544
	U-1	35+63 THIRD AVE TO 17+52 MARTHA AVE	LT						10																			84													
	U-2	17+44 TO 17+52 MARTHA AVE	RT						10																																
	U-3	16+70 TO 17+52 MARTHA AVE	RT					39																				94			1									
	U-4	9+75 TO 10+19 RAMP E-15	RT						10																			38		1											
	U-5	9+75 TO 15+50 RAMP E-15	RT					20	10																			495		1	2										
	U-6	11+53 TO 18+00 RAMP E-12	LT						10																			630		1		1									
	U-7	610+00 TO 610+16 I-76	LT																								16					1									
	U-8	610+00 TO 610+35 I-76	MED						10																		28		1		1										
	U-9	612+10 TO 616+00 I-76	LT																									392													
	U-10	612+00 TO 616+00 I-76	MED																									400													
	U-11	14+25 TO 15+94 MARTHA AVE	LT						10																		165														
	U-12	13+92 TO 14+25 MARTHA AVE	LT						10																			23													
	U-13	18+00 TO 18+64 RAMP E-12	RT						10																			56													
	U-14	14+25 TO 15+79 MARTHA AVE	RT						10																			148													
	U-15	13+70 TO 14+25 MARTHA AVE	RT						10																			44													
516	EC-1	13+00 RAMP "E-12"	RT																																				105			
		TOTALS		7	1	1		59	110	38	123	174	168	80	94	55	205		1	1	1	2	1	4	2	1		320	2497							105			514			1		

DRAINAGE SUBSUMMARY

AA B.P# 71942R

MATCH SHEET 516

CALC. BY. DATE	SUM-76-11.57	OHIO
CHK'D. BY. DATE	FED. PROJECT IR-76-2(44)19	F.H.W.A. REGION 5

SUMMIT COUNTY

518
1214

MATCH LINE STA. 610+00 SEE SHEET 515

MATCH LINE STA. 616+00 SEE SHEET 523

STA. 610+28, 74' RT. ℄ I-76 M.H. Nº 1

STA. 610+35, ℄ I-76 EX. INLET Nº 3050 PLUG EXIST. 12"

UNCLASS. U.D.

EX. 6" U.D.

611 612 613 614 615

STA. 13+60, 1' LT. ℄ MARTHA AVE. EX. M.H. RECONST. TO GRADE EX. T.C. = 1012.56 NEW T.C. = 1011.59

77' UNCLASSIFIED U.D.

STA. 612+75 ℄ I-76 EX. INLET NO. 3050

I-76 WEST BOUND

I-76

I-76 EAST BOUND

EX. 6" U.D. (TO REMAIN)

berm

15" SAN. TO REMAIN

EX. 12" TO BE ABANDONED AND PLUGGED

STA. 13+18, 1' LT. MARTHA AVE. M.H. TO BE ABD. (CONNECT THRU.)

12" TO BE ABD. AND PLUGGED

LTO TO BE ABD.

UNCLASS U.D. TO BE PLUGGED

EX. 18" SAN. TO BE ABANDONED & PLUGGED

EX. 30" STM. TO BE ABAND. & PLUGGED

EX. 24" STM. TO BE ABAN.

STA. 12+90, 1' LT. MARTHA AVE. M.H. Nº 3 W/ 106.11 JOINTS

STA. 12+55.41' LT. MARTHA AVE C.B. Nº 5 WITHOUT APRON

18" SAN.

EX. RAMP 'E-10'

RAMP 'E-10'

VARIES

STA. 15+45, 3' RT. RAMP E-16 M.H. Nº 1

STA. 15+75, 20' LT. RAMP E-16 INLET Nº 3 AS PER PLAN

STA. 16+00, 3' RT. RAMP E-16 M.H. Nº 1 RETAINING WALL Nº 9

STA. 12+20, 47' RT. MARTHA AVE. C.B. Nº 5 WITHOUT APRON

100' EROSION DITCH PROTECTION

STA. 12+20, 10' RT. MARTHA AVE. M.H. Nº 3

STA. 14+60, 3' RT. RAMP E-16 M.H. Nº 1

RAMP 'E-16'

100' DITCH EROSION PROTECTION

STA. 15+45, 10.5' RT. RAMP E-16 INLET Nº 3 AS PER PLAN

STA. 16+00, 11' RT. RAMP E-16 INLET Nº 3 AS PER PLAN

STA. 14+30, 26' RT. RAMP E-16 C.B. Nº 5 WITHOUT APRON

STA. 10+97, 10' RT MARTHA AVE. M.H. Nº 3

B-20

MARTHA AVENUE

8" SAN. TO REMAIN

8" SAN. TO BE ABANDONED - 12" WATER LINE RELOC.

OBL'W RELOC.

EX. 12" STM. TO BE ABANDONED AND PLUGGED @ C.B.

RAMP 'E-9'

STA. 11+20, 29' LT. MARTHA AVE M.H. Nº 3

STA. 11+50, 54' RT. RAMP E-9 C.B. Nº 5 WITHOUT APRON

EXIST. LA

LITTLE CUYAHOGA INTERCEPTOR

STA. 10+87, 23' RT. MARTHA AVE. CITY OF AKRON INLET Nº 3 (INCLUDE COST OF EXIST. INLET REMOVAL.)

TO BE ABD. & PLUGGED

EX. 8" SAN. TO BE REMOVED UNDER ITEM

JOHNS AVENUE

8" SAN. TO BE ABANDONED

4" G

W 6"

ENGLEWOOD AVENUE

LA R/W

MATCH LINE STA. 10+25

MATCH LINE STA. 12+40 SEE SHT. 520

MATCH LINE STA. 10+50

MATCH LINE STA. 16+25

FOR ROADWAY PLAN, SEE SHEET 150
FOR QUANTITIES, SEE SHEET 519
FOR LEGEND, SEE SHEET 485
FOR WATERMAIN PLAN SEE SHEET 591

0 20 40 60
SCALE IN FEET

EAST BOUND
STA. 610+00 TO STA. 616+00
DRAINAGE

✳ FOR INLET No. 3, AS PER PLAN, QUANTITIES, SEE RETAINING WALL SHEET 708.

DRAINAGE SUBSUMMARY

CALC. BY KDK DATE 6/90
CHKD. BY DSB DATE 7/90

SUM-76-11.57
FED. PROJECT IR-76-2(44)19

OHIO
F.H.W.A. REGION 5

519
1214

SUMMIT COUNTY

SHEET No.	REFERENCE No.	LOCATION: STATION TO STATION	SIDE	DRAINAGE 202: CATCH BASIN ABANDONED (EA.)	202: MANHOLE ABANDONED (EA.)	202: INLET ABANDONED (EA.)	603: 6" CONDUIT, TYPE F, 707.17, NON-PERFORATED ASTM 3034 SDR 35 OR SS931 (L.F.)	603: 12" CONDUIT, TYPE B, 706.02 (L.F.)	603: 15" CONDUIT, TYPE B (L.F.)	603: 15" CONDUIT, TYPE C, 706.02 (L.F.)	603: 15" CONDUIT, TYPE B, 707.13 (L.F.)	603: 15" CONDUIT, TYPE C, 707.13 (L.F.)	603: 18" CONDUIT, TYPE B (L.F.)	603: 21" CONDUIT, TYPE B, 706.02, D-LOAD 1500 (L.F.)	603: 24" CONDUIT, TYPE B, 706.02, D-LOAD 1500 (L.F.)	603: 30" CONDUIT, TYPE B, 706.02 D-LOAD 2500 (L.F.)	603: 30" CONDUIT, TYPE B, 706.02 D-LOAD 1500 (L.F.)	603: 30" CONDUIT, TYPE C, 706.02, D-LOAD 1500 (L.F.)	604: CATCH BASIN NO. 5 WITHOUT APRON (EA.)	604: CATCH BASIN NO. 5A WITHOUT APRON (EA.)	604: INLET NO. 3, AS PER PLAN, No. 1 (EA.)	604: INLET NO. 3, AS PER PLAN ✳ (EA.)	604: INLET, CITY OF AKRON NO. 3 (EA.)	604: MANHOLE NO. 1 (EA.)	604: MANHOLE NO. 3 (EA.)	605: 6" UNCLASSIFIED PIPE UNDERDRAINS, AS PER PLAN (L.F.)	605: 6" SHALLOW PIPE UNDERDRAINS, AS PER PLAN (L.F.)	605: 6" BENDS AND BRANCHES 45°	90°	'T'	'+'	660: REINFORCED SODDING (S.Y.)	670: DITCH EROSION PROTECTION (S.Y.)	SPEC.: PRECAST REINFORCED CONCRETE OUTLET (EA.)	SANITARY 202: MANHOLE ABANDONED (EA.)	603: 15" CONDUIT, TYPE B, 706.03 WITH 706.11 JOINTS (L.F.)	603: 18" CONDUIT, TYPE B, 706.03, D-LOAD 3250 WITH 706.11 JOINTS (L.F.)	604: MANHOLE No. 3 WITH 706.11 JOINTS (EA.)	604: MANHOLE RECONSTRUCTED TO GRADE (EA.)	PROFILE SHEET No.
518	AB-1	610+90 I-76	RT	1																																				
↑	AB-2	10+88 MARTHA AVE	LT	1																																				
	AB-3	13+05 MARTHA AVE	LT		1																																		
	AB-4	12+81 MARTHA AVE	RT			1																																	
	AB-5	12+60 MARTHA AVE	RT		1																																		
	AB-6	13+18 MARTHA AVE	LT																																			1		
	AB-7	14+75 RAMP E-16	LT																																			1		
	P-102	12+20 MARTHA AVE TO 612+75 I-76	RT/MED								143																													546
	P-103	12+20 MARTHA AVE	RT						37											1																117					546
	P-104	10+97 TO 12+20 MARTHA AVE	RT											123																									543
	P-108	10+87 TO 10+97 MARTHA AVE	RT					17																	1															545
	P-114	16+00 RAMP E-16	RT						8																1															546
	P-115	15+45 TO 16+00 RAMP E-16	RT										55														1													545
	P-116	15+45 TO 15+75 RAMP E-16	LT						37																	✳													546
	P-117	15+45 RAMP E-16	RT						8																1															546
	P-118	14+60 TO 15+45 RAMP E-16	RT										84														1													545
	P-119	14+50 TO 14+60 RAMP E-16	RT										25														1													545
	P-120	10+97 TO 14+50 RAMP E-16	RT												207					1															168					543
	P-121	10+97 TO 11+20 MARTHA AVE	RT														45											1												543
	P-122	610+25 TO 610+28 I-76	RT/MED						73																															546
	P-123	610+28 I-76 TO 12+55 MARTHA AVE	RT/LT									118															1													546
	P-124	11+20 TO 12+55 MARTHA AVE	LT							135										1															125					546
	P-125	11+50 RAMP E-9 TO 11+20 MARTHA AVE	RT/LT													132												1												543
	P-126	9+78 TO 11+50 RAMP E-9	RT															163	1	1															125					543
	U-1	610+00 TO 610+73 I-76	RT																															73			1			
	U-2	610+00 TO 610+35 I-76	MED				10																											27		1				
	U-3	612+77 TO 616+00 I-76	MED																																325					
	U-4	613+34 TO 616+00 I-76	RT																																265					
	U-5	12+14 TO 13+80 RAMP E-10	RT																																163			1	1	
	U-6	10+25 TO 12+40 RAMP E-9	RT																																215					
	U-7	10+50 TO 10+87 MARTHA AVE	RT				10																												27					
	U-8	10+93 MARTHA AVE TO																																						
		14+50 RAMP E-16	RT				16																												218		1			
	U-9	14+65 TO 15+45 RAMP E-16	RT				10																												70					
	U-10	15+50 TO 16+00 RAMP E-16	RT				10																												40					
	U-11	16+00 TO 16+25 RAMP E-16	RT				10																												15					
	U-12	11+13 TO 13+92 MARTHA AVE	LT																																278					
	U-13	11+74 TO 13+70 MARTHA AVE	RT																																198					
	U-14	10+50 TO 11+20 MARTHA AVE	LT				10																												62	1				
	U-15	611+88 TO 612+75 I-76	MED				10																											77		1		1		
	S-3	12+90 TO 13+18 MARTHA AVE	LT																																				28			
	S-4	12+90 MARTHA AVE TO																																								
		9+78 RAMP E-9	LT/RT																																					230	2		550
↓	D-1	13+60 MARTHA AVE	LT																																						1	
518	EC-1	10+97 RAMP E-9	RT																																32					
	TOTALS			2	2	1	86	17	163	135	143	118	164	123	207	132	45	163	4	1	2	✳	1	4	3	177	1876	XXXXX	32		535		1		2		28	230	2	1	

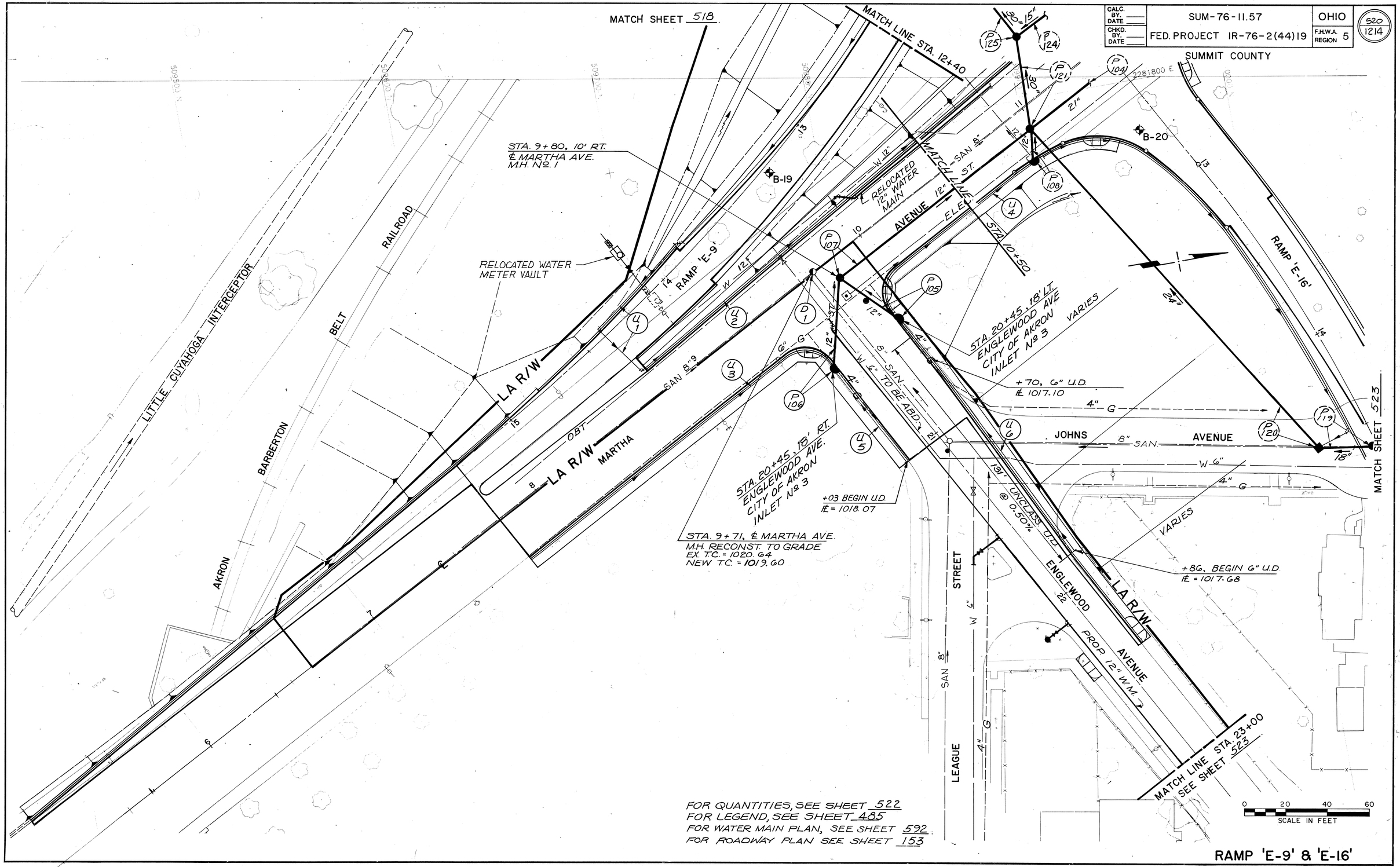
MATCH SHEET 518
MATCH LINE STA. 12+40
CALC. BY
CHKD. BY
DATE
SUM-76-11.57
FED. PROJECT IR-76-2(44)19
OHIO
F.H.W.A. REGION 5
520
1214
SUMMIT COUNTY
2281800 E
STA. 9+80, 10' RT.
℄ MARTHA AVE.
M.H. No. 1
B-19
B-20
RELOCATED WATER METER VAULT
RELOCATED 12" WATER MAIN
MATCH LINE
ELEV. 1020.64
STA. 10+50
RAMP 'E-9'
RAMP 'E-16'
LITTLE CUYAHOGA INTERCEPTOR
RAILROAD
BELT
BARBERTON
AKRON
LA R/W
MARTHA
OBT
SAN 8"
W 12"
W 6"
G 6"
STA. 20+45, 18' LT.
ENGLEWOOD AVE
CITY OF AKRON
INLET No 3
VARIES
+70, 6" U.D.
℄ 1017.10
4" G
JOHNS AVENUE
8" SAN
W 6"
18"
MATCH SHEET 523
+03 BEGIN U.D.
℄ = 1018.07
STA. 20+45, 18' RT.
ENGLEWOOD AVE.
CITY OF AKRON
INLET No 3
STA. 9+71, ℄ MARTHA AVE.
M.H. RECONST. TO GRADE
EX. T.C. = 1020.64
NEW T.C. = 1019.60
191' UNCLASS. U.D. @ 0.50%
+86, BEGIN 6" U.D.
℄ = 1017.68
ENGLEWOOD AVENUE
PROP 12" W.M.
LEAGUE STREET
SAN 8"
W 6"
4" G
MATCH LINE STA. 23+00
SEE SHEET 523
FOR QUANTITIES, SEE SHEET 522
FOR LEGEND, SEE SHEET 485
FOR WATER MAIN PLAN, SEE SHEET 592
FOR ROADWAY PLAN SEE SHEET 153
0 20 40 60
SCALE IN FEET
RAMP 'E-9' & 'E-16'
DRAINAGE

CALC. BY.		SUM-76-11.57	OHIO	521
CHKD. BY.		FED. PROJECT IR-76-2(44)19	F.H.W.A. REGION 5	1214
DATE		SUMMIT COUNTY		

EAST MARKET STREET

LA R/W

STA. 17+62, 120' LT. RAMP E-15 EX. M.H.

STA. 17+68, 63' LT. RAMP E-15 C.B. No. 5 WITHOUT APRON

STA. 621+50, 140' LT. ℄ I-76, C.B. No. 5 WITHOUT APRON

MATCH LINE STA. 15+50

MATCH LINE STA. 40+60

EX. RAMP 'E-10'

RAMP 'E-15'

DETROIT STREET

TO BE ABANDONED & PLUGGED

TO BE PLUGGED

TO BE ABANDONED

STA. 617+25, ℄ I-76 INLET No. 3850 AS PER PLAN

I-76 WEST BOUND

I-76

I-76 EAST BOUND

EX. U.D.

PAVED PARKING

berm

VARIES

VAR.

B-24

MATCH LINE STA. 616+00 SEE SHEET 516

MATCH LINE STA. 622+00 SEE SHEET 525

FOR QUANTITIES, SEE SHEET 524.
FOR LEGEND, SEE SHEET 485.
FOR ROADWAY PLAN, SEE SHEET 155.
FOR WATERMAIN PLAN, SEE SHEET 594

MATCH SHEET 523

SCALE IN FEET 0 20 40 60

WEST BOUND
STA. 616+00 TO STA. 622+00
DRAINAGE

DRAINAGE SUBSUMMARY

CALC. BY KDK DATE 6/90
CHKD. BY DJB DATE 7/90

SUM-76-11.57
FED. PROJECT IR-76-2(44)19

OHIO
F.H.W.A. REGION 5

522
1214

SUMMIT COUNTY

SHEET No.	REFERENCE No.	LOCATION: STATION TO STATION	SIDE	DRAINAGE 202: CATCH BASIN ABANDONED (EA.)			DRAINAGE 603: 6" CONDUIT, TYPE B, 707.17, NON-PERFORATED ASTM 3034, SDR 35 OR SS931 (L.F.)	6" CONDUIT, TYPE F, 707.17, NON-PERFORATED ASTM 3034, SDR 35 OR SS931 (L.F.)	12" CONDUIT, TYPE B, 706.02 (L.F.)	15" CONDUIT, TYPE C (L.F.)			DRAINAGE 604: CATCH BASIN NO. 5 WITHOUT APRON (EA.)	INLET, CITY OF AKRON NO. 3 (EA.)	MANHOLE NO. 1 (EA.)	MANHOLE RECONSTRUCTED TO GRADE (EA.)			DRAINAGE 605: 6" UNCLASSIFIED PIPE UNDERDRAINS, AS PER PLAN (L.F.)	6" SHALLOW PIPE UNDERDRAINS, AS PER PLAN (L.F.)	6" BENDS AND BRANCHES: 45°	90°	"T"	"Y"			DRAINAGE 670: DITCH EROSION PROTECTION (S.Y.)			DRAINAGE SPEC.: PRECAST REINFORCED CONCRETE OUTLET (EA.)									SANITARY 202: MANHOLE ABANDONED (EA.)			SANITARY 604: MANHOLE RECONSTRUCTED TO GRADE (EA.)			PROFILE SHEET No.
520	P-105	20+45 ENGLEWOOD AVE	RT/LT						34					1																												545
↑	P-106	20+45 ENGLEWOOD AVE TO																																											
		10+87 MARTHA AVE	LT/RT						44					1																												545
	P-107	9+80 MARTHA AVE	RT						117						1																												545
	D-1	9+71 MARTHA AVE	℄																																							1		
	U-1	12+40 TO 14+40 RAMP E-9	RT					29													200	2	2																		
	U-2	8+76 TO 10+50 MARTHA AVE	LT																		174																				
	U-3	7+78 MARTHA AVE TO																																								
		20+45 ENGLEWOOD AVE	RT/RT					10													175																				
	U-4	20+41 ENGLEWOOD AVE TO																																							
		10+50 MARTHA AVE	LT/RT					10													100																				
↓	U-5	20+45 TO 21+03 ENGLEWOOD AVE	RT					10													48																				
520	U-6	20+45 TO 21+86 ENGLEWOOD AVE	LT					10												131																				
521	AB-1	17+75 RAMP E-15	LT																																				1			
↑	AB-2	620+55 I-76	LT																																				1			
	AB-3	617+64 I-76	LT	1																																						
	AB-4	617+83 I-76	LT	1																																						
	AB-5	620+35 I-76	LT	1																																						
	AB-6	620+68 I-76	LT	1																																						
	P-139	17+60 TO 17+67 RAMP E-15	LT									1																														544
	P-150	621+50 TO 622+67 I-76	LT							122		1			1																											548
	U-1	15+50 TO 16+82 RAMP E-15	LT																		125																				
	U-2	16+84 TO 20+28 RAMP E-15	LT																		352			1																
	U-3	616+00 I-76 TO 20+28 RAMP E-15	LT				61														445	1														1				
	U-4	616+00 TO 617+25 I-76	MED					14													116	1																		
↓	U-5	618+11 TO 622+00 I-76	MED																		392																				
521	U-6	620+40 TO 622+00 I-76	LT																		165																				
TOTALS				4			61	83	195	122			2	2	1	1			131	2292													417			1					2			1		

AA B/Pe 71942R

CALC. BY.		SUM-76-11.57	OHIO
DATE			
CHKD. BY.		FED. PROJECT IR-76-2(44)19	F.H.W.A. REGION 5
DATE			

SUMMIT COUNTY

523
1214

MATCH SHEET 521

MATCH LINE STA. 616+00 SEE SHEET 518

MATCH LINE STA. 622+00 SEE SHEET 527

I-76 WEST BOUND

I-76 EAST BOUND

I-76

STA. 617+25, ℄ I-76
INLET No. 3850
AS PER PLAN.

EX. U.D.

TO BE ABANDONED & PLUGGED 12" S

15" S

SAN. 8" TO BE ABANDONED

150' DITCH EROSION PROTECTION TYP.

STA. 17+50, 24.5' LT.
RAMP E-16
C.B. No 2-2-A
TO BE PLUGGED & ABD.

RETAINING WALL No. 9

VARIES

2:1

2.5:1

3:1

4:1

5:1

6:1

7.5' TYP.

TO BE PLUGGED

TO BE PLUGGED AND ABANDONED

TO BE PLUGGED AND ABAND.

12" S

15" TO BE ABANDONED & PLUG

STA. 17+25, 3' RT.
RAMP E-16
M.H. No. 1

TO BE ABD & PLUGGED

RAMP 'E-16'

STA. 20+00, 26' LT.
RAMP E-10
M.H. No. 1

RETAINING WALL No. 10

STA. 17+25, 19' RT.
RAMP E-16
C.B. No. 5
WITHOUT APRON

STA. 17+50, 20' LT.
RAMP 'E-10'
INLET No. 3 AS PER PLAN

RAMP 'E-10'

STA. 20+00, 19' LT.
RAMP E-10
INLET No 2-A-10 A.P.P. 20

STA. 23+70, 12' LT.
ENGLEWOOD AVE.
CITY OF AKRON
INLET No 3

TO BE PLUGGED

STA. 17+50, 41.5' RT.
RAMP 'E-10'
C.B. No 2-3

STA. 24+74, 22' LT.
ENGLEWOOD AVE.
EXIST. M.H.
- ADJUST TO GRADE

STREET

DETROIT

LA R/W

R/W

EXIST R/W

ENGLEWOOD AVENUE

PROP. 12" W.M.

PROP. C"W.M

TO REMAIN

CAMBRIDGE STREET

EX. C"W.M

EX. R/W

STA. 24+75, 12' LT.
℄ ENGLEWOOD AVE.
CITY OF AKRON
INLET No 3

STA. 24+60.5, 12' LT.
℄ ENGLEWOOD AVE.
SAN. M.H., RECONST. TO GRADE.
EX T.C. = 1008.15 NEW T.C. = 1008.79

STA. 24+59, 1' LT.
℄ ENGLEWOOD AVE.
M.H. No. 1
(REMOVE EXIST C.B.)

STA. 24+00, 15' LT.
℄ ENGLEWOOD AVE
M.H. No. 1

STA. 24+75, 12' RT.
℄ ENGLEWOOD AVE.
INLET, CITY OF AKRON
No. 3

MATCH LINE STA. 16+00

MATCH LINE STA. 16+25

MATCH LINE STA. 22+00

MATCH LINE STA. 21+50

MATCH LINE STA. 23+00

FOR ROADWAY PLAN, SEE SHEET 157
FOR WATER MAIN PLAN, SEE SHT. 525
FOR QUANTITIES SEE SHEET 528
FOR LEGEND SEE SHEET 485

0 20 40 60
SCALE IN FEET

EAST BOUND
STA. 616+00 TO STA. 622+00
DRAINAGE

✳ FOR INLET No. 3, AS PER PLAN, QUANTITIES, SEE RETAINING WALL SHEET 708.

DRAINAGE SUBSUMMARY

CALC. BY KDK DATE 6/90
CHKD. BY DSB DATE 7/90

SUM-76-11.57
FED. PROJECT IR-76-2(44)19

OHIO
F.H.W.A. REGION 5

524
1214

SUMMIT COUNTY

SHEET No.	REFERENCE No.	LOCATION STATION TO STATION	SIDE	DRAINAGE 202 PIPE REMOVED, 24" AND UNDER (LF.)	202 CATCH BASIN REMOVED (EA.)	202 CATCH BASIN ABANDONED (EA.)	202 MANHOLE ABANDONED (EA.)	603 6" CONDUIT, TYPE B, 707.17 NON-PERFORATED ASTM 3034, SDR 35 OR SS931 (LF.)	603 6" CONDUIT, TYPE F, 707.17, NON-PERFORATED ASTM 3034 SDR 35 OR SS931 (LF.)	603 12" CONDUIT, TYPE B, 706.02 (LF.)	603 12" CONDUIT, TYPE C, 706.02 (LF.)	603 15" CONDUIT, TYPE B (LF.)	603 15" CONDUIT, TYPE B, 706.02, D-LOAD 3000 (LF.)	603 15" CONDUIT, TYPE C (LF.)	603 15" CONDUIT, TYPE B, 707.13 (LF.)	603 18" CONDUIT, TYPE B (LF.)	604 MANHOLE ADJUSTED TO GRADE (EA.)	604 CATCH BASIN NO. 2-2-A (EA.)	604 CATCH BASIN NO. 2-3 (EA.)	604 CATCH BASIN NO. 5 WITHOUT APRON (EA.)	604 INLET NO. 2-A-10, AS PER PLAN (EA.)	604 INLET NO. 3, AS PER PLAN,✳ (EA.)	604 INLET NO. 3850, AS PER PLAN (EA.)	604 INLET, CITY OF AKRON NO. 3 (EA.)	604 MANHOLE NO. 1 (EA.)	605 6" SHALLOW PIPE UNDERDRAINS, AS PER PLAN (LF.)	605 6" BENDS AND BRANCHES 45°	605 6" BENDS AND BRANCHES 90°	605 6" BENDS AND BRANCHES 'T'	660 REINFORCED SODDING (S.Y.)	670 DITCH EROSION PROTECTION (S.Y.)	SANITARY 604 MANHOLE RECONSTRUCTED TO GRADE (EA.)	PROFILE SHEET No.
523	AB-1	616+65 I-76	RT			1																											
	AB-2	17+60 RAMP E-16	RT			1																											
	AB-3	17+52 RAMP E-10	RT			1																											
	AB-4	19+45 RAMP E-16	LT			1																											
	AB-5	20+32 RAMP E-16	LT				1																										
	AB-6	21+12 RAMP E-16	LT			1																											
	AB-7	19+95 TO 20+13 RAMP E-16	RT/LT			2																											
	AB-8	21+20 RAMP E-16	LT			1																											
	R-1	23+95 TO 24+08 ENGLEWOOD AVE	LT	22	1																												
	R-2	24+08 TO 24+58 ENGLEWOOD AVE	LT	51	1																												
	P-110	617+25 I-76 TO 17+50 RAMP E-16	MED/LT												101							1										545
	P-111	17+25 TO 17+50 RAMP E-16	LT/RT										38					1													395		545
	P-112	17+25 RAMP E-16	RT											16						1											125		545
	P-113	16+00 TO 17+25 RAMP E-16	RT													125									1								545
	P-130	17+50 RAMP E-10	LT/RT												60						✳												429
	P-131	23+70 TO 24+00 ENGLEWOOD AVE	LT/RT							41													1										548
	P-132	23+70 TO 24+00 ENGLEWOOD AVE	LT							39													1										548
	P-133	24+00 ENGLEWOOD AVE TO																															
		17+50 RAMP E-10	LT/RT								74														1								548
	P-134	17+50 RAMP E-10 TO																															
		24+74 ENGLEWOOD AVE	RT/LT									48							1														547
	P-135	24+74 TO 24+75 ENGLEWOOD AVE	LT								9							1					1										547
	P-136	24+75 TO 24+59 ENGLEWOOD AVE	RT/LT							21													1	1									547
	P-140	20+00 RAMP E-10	LT											6							1												547
	P-141	20+00 TO 22+50 RAMP E-10	LT											250											1								547
	U-1	616+00 TO 617+25 I-76	MED								10																		116	1				
	U-2	618+06 TO 622+00 I-76	MED																										394					
	U-3	616+00 TO 622+00 I-76	RT																										600					
	U-4	16+25 TO 17+20 RAMP E-16	RT																										95					
	U-5	17+25 TO 21+98 RAMP E-16	RT								10																		463					
	U-6	16+38 TO 17+50 RAMP E-10	LT								10																		101			1		
	U-7	17+54 TO 20+00 RAMP E-10	LT								10																		235	2				
	U-8	20+05 TO 20+75 RAMP E-10	LT/RT						31																				67		1			
	U-9	20+75 TO 21+50 RAMP E-10	RT																										75		1			
	D-1	24+60.5 ENGLEWOOD AVE	LT																														1	
523	EC-1	21+20 RAMP E-16	RT																													12		
	TOTALS			73	2	8	1		31	40	101	83	48	38	272	161	125			1	1	1	1	1	✳	1	4	4		2146			12		520	1	

AA B.P# 71942R

CALC. BY. DATE	SUM-76-11.57	OHIO	525 1214
CHKD. BY. DATE	FED. PROJECT IR-76-2(44)19	F.H.W.A. REGION 5	

SUMMIT COUNTY

MATCH LINE STA. 40+60

STA. 41+09, 22.5' RT. CITY OF AKRON INLET No. 3

EAST MARKET STREET

ELINOR AVENUE

STA. 41+52, 22' RT. ℄ EAST MARKET STREET M.H. RECONSTRUCT. TO GRADE EX. T.C. = 1005.90 NEW T.C. = 1006.35

LA R/W

AVENUE

WIGLEY

STA. 625+40 107.5' LT. ℄ I-76 HEADWALL, HW-4A

STA. 623+11, 76' LT ℄ I-76 M.H. No. 3 (REMOVE EXIST. C.B.) T.C. = 1018.84 INV. 18" N.W. = 998.59)

STA. 622+67, 106' LT. ℄ I-76 M.H. RECONSTRUCT. TO GRADE EX. T.C. = 1004.27 NEW T.C. = 1010.00

G24+00, MED. I-76 EX. INLET No. 3D50

STA. 625+40, 73.5' LT. I-76 INLET No. 3A AS PER PLAN

STA. 626+75, ℄ I-76 INLET TO BE ABD. BLOCK OFF INLET WINDOWS

I-76 WEST BOUND

I-76 EAST BOUND

RETAINING WALL NO. 11

EXIST. LA

TO BE ABANDONED

TO REMAIN

TO BE REMOVED

EX. U.D.

EX. RAMP 'E-1'

PAVED GUTTER

MATCH LINE STA. 622+00 SEE SHEET 521

MATCH LINE STA. 628+00 SEE SHEET 529

MATCH SHEET 527.

FOR QUANTITIES, SEE SHEET 530
FOR LEGEND, SEE SHEET 485
FOR ROADWAY PLAN, SEE SHEET 159
FOR WATER MAIN PLAN, SEE SHEET 596

0 20 40 60
SCALE IN FEET

WEST BOUND
STA. 622+00 TO STA. 628+00
DRAINAGE

DRAINAGE SUBSUMMARY

CALC. BY KDK DATE 6/90 | CHKD. BY DSB DATE 7/90 | SUM-76-11.57 | FED. PROJECT IR-76-2(44)19 | OHIO | F.H.W.A. REGION 5 | 526 1214

SUMMIT COUNTY

SHEET No.	REFERENCE No.	LOCATION STATION TO STATION	SIDE	202 PIPE REMOVED, 24" AND UNDER LF.	202 INLET ABANDONED EA.	202	202 CATCH BASIN REMOVED EA.	202 CATCH BASIN ABANDONED EA.	202	202	601 ROCK CHANNEL PROTECTION, TYPE C WITH FILTER C.Y.	601	601	602 CONCRETE MASONRY C.Y.	602	602	603 6" CONDUIT, TYPE F, 707.17, NON-PERFORATED ASTM 3034 SDR 35 OR SS931 LF.	603 15" CONDUIT, TYPE C, 707.13 LF.	603	603	604 INLET NO. 3A, AS PER PLAN EA.	604 INLET, CITY OF AKRON NO. 3 EA.	604 MANHOLE NO. 3 EA.	604	604	605 6" UNCLASSIFIED PIPE UNDERDRAINS, AS PER PLAN LF.	605 6" SHALLOW PIPE UNDERDRAINS, AS PER PLAN LF.	605 6" BENDS AND BRANCHES 45°	605 6" BENDS AND BRANCHES "T"	605	605	SPEC PRECAST REINFORCED CONCRETE OUTLET EA.	SPEC	SPEC	SANITARY 202 MANHOLE ABANDONED EA.	SANITARY 202	SANITARY 604 MANHOLE ADJUSTED TO GRADE EA.	SANITARY 604	PROFILE SHEET No.
525	AB-1	41+05 MARKET ST	RT		1																																	
	AB-2	623+00 I-76	LT					1																														
	AB-3	626+75 I-76	℄		1																																	
	AB-4	622+65 I-76	LT																																1			
	AB-5	627+00 I-76	LT					1																														
	R-1	623+00 TO 623+50 I-76	LT	50			1																															
	R-2	626+21 TO 626+75 I-76	LT/MED	70																																		
	P-149	623+11 I-76	LT																				1															548
	P-151	41+09 MARKET ST	RT																			1															548
	P-152	625+40 I-76	LT								2			0.3				34			1																548
	U-1	622+00 TO 624+26 I-76	LT														33										232		1			1					
	U-2	624+26 TO 625+49 I-76	LT																								123										
	U-3	622+00 TO 624+00 I-76	MED														10								53	139	1										
	U-4	624+00 TO 628+00 I-76	MED														10								70	319	1										
	U-5	625+40 TO 628+00 I-76	LT														10									251	1										
525	D-1	41+50 MARKET	RT																																		1	
		TOTALS		120	2		1	2			2			0.3			63	34			1	1	1		123	1064					1			1		1	

AA B/P# 71942R

CALC. BY. DATE	SUM-76-11.57	OHIO
CHKD. BY. DATE	FED. PROJECT IR-76-2(44)19	F.H.W.A. REGION 5

SUMMIT COUNTY

527
1214

MATCH SHEET 525

MATCH LINE STA. 622+00 SEE SHEET 523

MATCH LINE STA. 628+00 SEE SHEET 529

MATCH LINE STA. 22+00

MATCH LINE STA. 21+50

TO BE ABANDONED

UNCLASSIFIED U.D.

I-76 WEST BOUND

I-76 EAST BOUND

I-76

STA. 624+00, ℄ I-76
EX. INLET No. 3850

STA. 622+11, 67' RT.
I-76
C.B. No 2-2-B

STA. 22+73, 8' RT.
RAMP E-16
INLET No. 3A
AS PER PLAN

STA. 30+49, 13' LT.
ENGLEWOOD AVE.
CITY OF AKRON
INLET No 3

STA. 22+74, 41.5' LT.
RAMP E-10
M.H. RECONSTR.
TO GRADE.

RAMP 'E-16'

EX. RAMP 'E-16'

STA. 22+50.265' LT.
RAMP E-10
C.B. No 5
WITHOUT APRON

RAMP 'E-10'

STA. 22+33, 58' RT.
RAMP E-10
C.B. No 5
WITHOUT APRON

PROP. 12" W.M.

STA. 9+05, 19' LT.
WIGLEY AVE.
CITY OF AKRON
INLET No 3

WIGLEY AVENUE

31+70
BEGIN U.D.
℄ = 1000.08

TO BE ABD.

RETAINING WALL No. 13

LA R/W

ENGLEWOOD AVENUE

PROP. 12" W.M.7

B-27

STA. 30+82, 14' RT.
ENGLEWOOD AVE.
EXIST. M.H.
ADJUST TO GRADE

31+70
BEGIN U.D.
℄ = 999.31

STA. 31+00, 30' RT.
℄ ENGLEWOOD AVE.
INLET, CITY OF AKRON
No. 3

COST OF INLET AND PIPE REMOVAL TO BE INCLUDED WITH NEW PIPE

9+02
BEGIN U.D.
℄ = 999.12

R/W

PAVED PARKING

* TO BE PLUGGED AND CONDUITS TO BE ABANDONED.

** STA. 30+63, 20' RT.
℄ ENGLEWOOD AVE.
M.H. ADJ. TO GRADE
EX. T.C. = 1002.52
NEW T.C. = 1002.40

FOR QUANTITIES, SEE SHEET 528
FOR LEGEND, SEE SHEET 485.
FOR WATER MAIN PLAN, SEE SHEET 598.
FOR ROADWAY PLAN, SEE SHEET 160

0 20 40 60
SCALE IN FEET

EAST BOUND
STA. 622+00 TO STA. 628+00
DRAINAGE

DRAINAGE SUBSUMMARY

CALC. BY KDK DATE 6/98
CHKD. BY DSB DATE 7/98

SUM-76-11.57
FED. PROJECT IR-76-2(44)19

OHIO
F.H.W.A. REGION 5

528
1214

SUMMIT COUNTY

SHEET No.	REFERENCE No.	LOCATION STATION TO STATION	SIDE	DRAINAGE 202 PIPE REMOVED, 24" AND UNDER (LF.)	202 CATCH BASIN REMOVED (EA.)	202 INLET ABANDONED (EA.)	202 MANHOLE ABANDONED (EA.)	603 6" CONDUIT, TYPE B, 707.17 NON-PERFORATED ASTM 3034, SDR 35 OR SS931 (LF.)	603 6" CONDUIT, TYPE F, 707.17, NON-PERFORATED ASTM 3034 SDR 35 OR SS931 (LF.)	603 15" CONDUIT, TYPE B (LF.)	603 15" CONDUIT, TYPE B, 706.02 (LF.)	603 15" CONDUIT, TYPE C, 707.13 (LF.)	603 15" CONDUIT, TYPE C, 706.02 (LF.)	603 18" CONDUIT, TYPE C (LF.)	604 MANHOLE ADJUSTED TO GRADE (EA.)	604 MANHOLE RECONSTRUCTED TO GRADE (EA.)	604 CATCH BASIN NO. 2-2-B (EA.)	604 CATCH BASIN NO. 5 WITHOUT APRON (EA.)	604 INLET NO. 3A, AS PER PLAN (EA.)	604 INLET, CITY OF AKRON NO. 3 (EA.)	605 6" UNCLASSIFIED PIPE UNDERDRAINS, AS PER PLAN (LF.)	605 6" SHALLOW PIPE UNDERDRAINS, AS PER PLAN (LF.)	605 6" BENDS AND BRANCHES 45°	605 6" BENDS AND BRANCHES 'T'	670 DITCH EROSION PROTECTION (S.Y.)	SANITARY 202 MANHOLE ABANDONED (EA.)	SANITARY 604 MANHOLE ADJUSTED TO GRADE (EA.)	PROFILE SHEET No.
527	AB-1	22+68 RAMP E-16	RT				1																					
	AB-2	22+42 RAMP E-10	LT			1																						
	AB-3	22+75 RAMP E-10	LT																								1	
	R-1	30+90 ENGLEWOOD AVE	LT	28	1																							
	P-142	9+05 WIGLEY AVE TO 22+33																										
		RAMP E-10	LT/RT										50							1								547
	P-143	22+33 TO 22+50 RAMP E-10	RT/LT							88								1						125				547
	P-144	622+11 I-76 TO 22+75 RAMP E-16	RT							64							1											547
	P-145	22+73 RAMP E-16 TO 22+50																										547
		RAMP E-10	RT/LT									28								1								547
	P-146	22+50 TO 22+74 RAMP E-10	LT											31		1			1							125			547
	P-147	22+74 RAMP E-10 TO																											547
		30+49 ENGLEWOOD AVE	LT										13								1								547
	P-148	30+82 TO 31+00 ENGLEWOOD AVE	RT								24				1						1								547
	D-1	30+62 ENGLEWOOD AVE	RT																									1	
	U-1	622+00 TO 624+00 I-76	MED						10														50	140	1				
	U-2	624+00 TO 628+00 I-76	MED						10														74	320	1				
	U-3	622+00 TO 622+11 I-76	RT						20																1				
	U-4	622+13 TO 624+48 I-76	RT					31															123	112		2			
	U-5	22+00 TO 22+73 RAMP E-16	RT						10															65	1				
	U-6	22+73 TO 628+00 I-76	RT						10															515	1				
	U-7	9+02 WIGLEY AVE TO																											
		31+00 ENGLEWOOD AVE	RT						10															61					
	U-8	31+00 TO 31+70 ENGLEWOOD AVE	LT						10															60					
	U-9	21+50 RAMP E-10 TO																											
		9+05 ENGLEWOOD AVE	RT						10															150					
527	U-10	30+49 TO 31+70 ENGLEWOOD AVE	LT						10															115					
	TOTALS			28	1	1	1	31	100	152	24	28	63	31		1	1	1	2	1	3		247	1538			250	1	1	

DRAINAGE SUBSUMMARY

AA B.P# 71942R

CALC. BY. DATE	SUM-76-11.57	OHIO
CHKD. BY. DATE	FED. PROJECT IR-76-2(44)19	F.H.W.A. REGION 5
	SUMMIT COUNTY	

529
1214

STA. 628+00.91 'LT. I-76
C.B. Nº 5 WITHOUT APRON

STA. 11+94, 8' LT.
SEIBERLING ST.
M.H. Nº 1

STA. 11+94, 1' LT.
℄ SEIBERLING STREET
M.H. TO BE ABANDONED

STA. 11+75, 8' LT.
℄ SEIBERLING STREET
M.H. TO BE ABANDONED
(CONNECT 30" THRU)

STA. 632+14, 84 LT. I-76
C.B. Nº 2-2-B

END PROJECT
SUM-76-11.57
STA. 634+00
IR-76-2(44)19

EXIST. R/W

EXIST. R/W

8" G

SEG. BLK.

SEIBERLING

30" W

12" W

EXIST. LA

RETAINING WALL Nº. 11

RETAINING WALL Nº. 12

PAVED GUTTER TYPE 12

TO BE ABD. & PLUGGED

TO BE ABANDONED

TO BE ABANDONED AND PLUGGED @ M.H.

R/W

LA

24"

18"

15"

12"

PAVED PARKING

PAVED PARKING LOT

steps

berm

I-76 WEST BOUND

I-76 EAST BOUND

I-76

EX. U.D.

TO REMAIN

UNCLASS U.D.

STA. 10+35, 20' RT.
℄ SEIBERLING ST.
EXIST. INLET
IE 6" UD = 1001.67

STA. 37+70
BEGIN U.D.
IE = 1001.90

STA. 37+75, 16' LT.
℄ RELOC. ENGLEWOOD AVE.
INLET CITY OF AKRON Nº. 3

STA. 40+00, 16' LT.
℄ RELOC. ENGLEWOOD AVE.
INLET CITY OF AKRON No. 3

RETAINING WALL Nº. 13

RETAINING WALL Nº. 14

4" I.P.G.

LA R/W

ELEC.

PROP. 12" W.M.

SAN 12"

SAN 10"

SAN 8"

2" G

PROP. 12" W.M.

RELOCATED ENGLEWOOD AVENUE

EXIST. R/W

STREET

MATCH LINE STA. 35+50

MATCH LINE STA. 628+00
SEE SHEETS 525 & 527.

MATCH LINE STA. 634+00
SEE SHEET 531.

EX. RAMP 'E-16'

STA. 37+60.5, 7' RT. ℄
ENGLEWOOD AVE.
M.H. ADJUSTED TO GRADE
EX. T.C. = 1005.07
NEW T.C. = 1004.97

STA 37+70, 16' RT. ℄
RELOC. ENGLEWOOD AVE.
INLET, CITY OF AKRON Nº3
(REMOVE EXIST. INLET)

STA. 39+77.5, 12' RT. ℄
ENGLEWOOD AVE.
M.H. ADJUSTED TO GRADE
EX. T.C. = 1005.88
NEW T.C. = 1005.60

STA. 39+82, 7' RT. ℄
ENGLEWOOD AVE.
M.H. ADJUSTED TO GRADE
EX. T.C. = 1006.09
NEW T.C. = 1005.73

STA. 39+88.5, 16' RT. ℄
ENGLEWOOD AVE.
INLET, CITY OF AKRON Nº3
(REMOVE EXIST. INLET.)

0 20 40 60
SCALE IN FEET

FOR QUANTITIES, SEE SHEET 530
FOR LEGEND, SEE SHEET 485
FOR ROADWAY PLAN, SEE SHEET 162
FOR WATER MAIN PLAN SEE SHEET 599

STA. 628+00 TO STA. 634+00

DRAINAGE

DRAINAGE SUBSUMMARY

CALC. BY: KDK DATE: 6/92
CHKD. BY: DSB DATE: 7/90

SUM-76-11.57
FED. PROJECT IR-76-2(44)19

OHIO
F.H.W.A. REGION 5

530
1214

SUMMIT COUNTY

SHEET No.	REFERENCE No.	LOCATION STATION TO STATION	SIDE	DRAINAGE 202 INLET ABANDONED EA.	202 MANHOLE ABANDONED EA.	202 CATCH BASIN ABANDONED EA.	601 PAVED GUTTER, TYPE 1-2 L.F.	603 6" CONDUIT, TYPE F, 707.17, NON-PERFORATED ASTM 3034 SDR 35 OR SS351 L.F.	603 12" CONDUIT, TYPE B, 706.02 L.F.	603 15" CONDUIT, TYPE B L.F.	603 18" CONDUIT, TYPE B L.F.	604 MANHOLE ADJUSTED TO GRADE EA.	604 CATCH BASIN NO. 2-2-B EA.	604 CATCH BASIN NO. 5 WITHOUT APRON EA.	604 INLET, CITY OF AKRON NO. 3 EA.	604 MANHOLE No. 1 EA.	605 6" UNCLASSIFIED PIPE UNDERDRAINS, AS PER PLAN L.F.	605 6" SHALLOW PIPE UNDERDRAINS, AS PER PLAN L.F.	605 6" BENDS AND BRANCHES 45°	605 6" BENDS AND BRANCHES 'Y'	670 DITCH EROSION PROTECTION S.Y.	SANITARY 202 MANHOLE ABANDONED EA.	SANITARY 604 MANHOLE ADJUSTED TO GRADE EA.	PROFILE SHEET No.
529	AB-1	11+75 SEIBERLING ST	LT		/																			
	AB-2	37+63 ENGLEWOOD AVE	LT	/																				
	AB-3	632+50 I-76	LT		/																			
	AB-4	632+50 I-76	LT			/																		
	AB-5	40+00 ENGLEWOOD AVE	LT	/																				
	AB-6	11+94 SEIBERLING ST	LT																				/	
	P-154	628+00 I-76 TO																						
		11+94 SEIBERLING ST	LT							154				1							125			549
	P-157	11+94 SEIBERLING ST TO																						
		632+14 I-76	LT				120				258		1			/								549
	P-158	37+60.5 TO 37+75 ENGLEWOOD AVE	RT/LT						28			1			/									542
	P-159	37+60.5 TO 37+70 ENGLEWOOD AVE	RT						13						/									542
	P-160	39+82 TO 40+00 ENGLEWOOD AVE	RT/LT						29			1			/									542
	P-161	39+82 TO 39+88.5 ENGLEWOOD AVE	RT						12						/									542
	D-1	39+77.5 ENGLEWOOD AVE	RT																				/	
	U-1	628+00 TO 629+05 I-76	LT															105	1					
	U-2	628+00 TO 629+18 I-76	MED															118	1					
	U-3	628+00 TO 629+20 I-76	MED															120	1					
	U-4	628+00 TO 629+28 I-76	RT															128	1					
	U-5	630+30 TO 634+00 I-76	LT															367	1					
	U-6	630+39 TO 634+00 I-76	MED														42	319	1					
	U-7	630+43 TO 634+00 I-76	MED														42	315	1					
	U-8	630+51 TO 634+00 I-76	RT															353	1					
	U-9	37+75 TO 39+95 ENGLEWOOD AVE	LT					10										210						
	U-10	40+00 TO 41+38 ENGLEWOOD AVE	LT					10										128						
	U-11	37+70 TO 39+83 ENGLEWOOD AVE	RT					10										203						
	U-12	39+88.5 TO 41+38 ENGLEWOOD AVE	RT					10										139						
529	U-13	10+35 SEIBERLING TO						10									30							
		37+70 ENGLEWOOD	RT/LT																					
TOTALS				2	2	1	120	50	82	154	258	2	1	1	4	1	114	2505			125	1	1	

AA B/Pn 71942R

CALC. BY.		SUM-76-11.57	OHIO
CHKD. BY.		FED. PROJECT IR-76-2(44)19	F.H.W.A. REGION 5
DATE			

531
1214

SUMMIT COUNTY

ramp <<<<<

6" CONDUIT, TYPE F, 707.17
NON-PERFORATED.

STA. 635+00, 81' LT. I-76
C.B. NO. 5 WITHOUT APRON
(REMOVE EXIST. C.B)

EXIST. LA

P 156

18"

U 1

P 155

18" S TO BE ABANDONED AND PLUGGED

STA. 635+00, 54' LT. I-76
EXISTING MANHOLE

berm

B-29

15" S

6" W

berm

EX. RAMP 'E-19'

berm

MATCH LINE STA. 634+00
SEE SHEET 529

U 2

12" S TO REMAIN

STA. 634+00 TO STA. 635+25
FEATHER W/ASPHALT @1"/25'
TO MEET EXISTING

I-76 WEST BOUND

12" S

636

I-76 12" S 637

12" S

12" S

639 12" S

638

EX. U.D.

EX. U.D. TO REMAIN

U 3

I-76 EAST BOUND

PROP. 18" CONDUIT
TO BE CONSTRUCTED IN
ODOT PROJ. SUM-76-13.41

8" SAN

STA. 44+75, 16' LT.
& RELOC. ENGLEWOOD AVE.
INLET, CITY OF AKRON No. 3

18" S

MATCH LINE STA. 640+00
SEE SHEET 532

U 4

END RAMP 'E' TAPER
STA. 634+50

TEMPORARY PAVEMENT
CLASS 'A' FLEXIBLE

STA. 42+25, 16' LT.
& RELOC. ENGLEWOOD AVE.
INLET, CITY OF AKRON No. 3

12'

24:1

4" I.P.G.

10" W

ELEC.

LA R/W

VARIES

P 164

5:1

R 4

B-28

VAR.

10" W

ELEC.

4" I.P.G.

LA R/W

VARIES

24:1

U 7

R 1

P 162

P 1

U 5

PROPOSED 12" WATER MAIN

42

43

RELOCATED ENGLEWOOD AVENUE

44

45

47

P 165

P 166

U 6

D 3

R 2

12" S

24" S

SAN. 10"

24" S

SAN. 10"

18" S

SAN. 8"

18" S

6" G

WALK

WALK

U 8

P 163

U 9

D 2

P 167

U 10

R 3

STA. 42+11.5, 7' RT. ℄
ENGLEWOOD AVE.
M.H. ADJ. TO GRADE

PAVED PARKING LOT

STA. 42+22, 12' RT. ℄
ENGLEWOOD AVE.
M.H. ADJ. TO GRADE
EX. T.C. = 1007.32
NEW T.C. = 1006.88

STA. 42+25, 16' RT. ℄
ENGLEWOOD AVE.
INLET
CITY OF AKRON NO. 3

STA. 44+43, 20' LT. ℄
ENGLEWOOD AVE.
M.H. NO. 1

STA. 44+46, 6' RT. ℄
ENGLEWOOD AVE.
M.H. ADJ. TO GRADE

STA. 44+49, 11' RT. ℄
ENGLEWOOD AVE.
M.H. ADJ. TO GRADE
EX. T.C. = 1008.42
NEW T.C. = 1008.09

STA. 44+77.5, 16' RT. ℄
ENGLEWOOD AVE.
INLET, CITY OF AKRON No. 3
(REMOVE EXIST. INLET)

STA. 46+00, 7' RT.
ENGLEWOOD AVE.
M.H. ADJ. TO GRADE
EXIST. T.C. = 1009.02
NEW T.C. = 1008.95

STA. 46+00, 16' RT. ℄
ENGLEWOOD AVE.
INLET, CITY OF AKRON
No. 3

* PLUG THE CONDUIT OPENING WITH A PRECAST CONCRETE STOPPER OR BRICK MASONRY TO ALLOW FOR THE FUTURE CONNECTION IN PROJECT SUM-76-13.41. THE COST OF THE PLUG SHALL BE INCLUDED WITH THE NEW CONDUIT.

FOR ROADWAY PLAN
SEE SHEET 163

FOR QUANTITIES
SEE SHEET 533

FOR LEGEND
SEE SHEET 485
FOR WATER MAIN PLAN,
SEE SHEET 601.

0 20 40 60
SCALE IN FEET

STA. 634+00 TO STA. 640+00
DRAINAGE

AA B.P.: 71942R

CALC. BY. DATE	SUM-76-11.57	OHIO
CHKD. BY. DATE	FED. PROJECT IR-76-2(44)19	F.H.W.A. REGION 5

532
1214

SUMMIT COUNTY

FOR ROADWAY PLAN, SEE SHEET 164
FOR WATERMAIN PLAN, SEE SHEET 602
FOR QUANTITIES, SEE SHEET 533
FOR LEGEND, SEE SHEET 485

MATCH LINE STA. 640+00
SEE SHEET 531

I-76 WEST BOUND

I-76

I-76 EAST BOUND

RAMP 'E-19'

RAMP 'E-18'

EX RAMP 'E-20'

HOLMES STREET

END WORK
I-76
STA 644+67

STA. 47+50, 16' LT.
& RELOC. ENGLEWOOD AVE.
INLET CITY OF AKRON N° 3.

STA. 47+44, 7' RT.
ENGLEWOOD AVE.
M.H. ADJ. TO GRADE
EX. T.C.=1009.78
NEW T.C.=1009.50

STA. 47+53, 16' RT.
ENGLEWOOD AVE.
INLET, CITY OF AKRON
N° 3 (REMOVE
EXIST. INLET)

STA. 47+70, 11' RT.
ENGLEWOOD AVE.
M.H. ADJ. TO GRADE
EX. T.C.=1009.97
NEW T.C.=1009.58

END PAVEMENT
STA. 48+80

RELOCATED ENGLEWOOD AVENUE

PROP. 12" W.M.

LA R/W

PAVED PARKING LOT

B-30

B-31

SCALE IN FEET
0 20 40 60

STA. 640+00 TO STA. 646+00
DRAINAGE

FACTORY

DRAINAGE SUBSUMMARY

CALC. BY KDK DATE 6/98
CHKD. BY DSB DATE 7/98

SUM-76-11.57
FED. PROJECT IR-76-2(44)19

OHIO
F.H.W.A. REGION 5

533
12/14

SUMMIT COUNTY

SHEET No.	REFERENCE No.	LOCATION STATION TO STATION	SIDE	DRAINAGE 202 PIPE REMOVED, 24" AND UNDER (LF.)	202 INLET REMOVED (EA.)	603 6" CONDUIT, TYPE F, 707.17, NON-PERFORATED, ASTM 3034 SDR 35 OR SS931 (LF.)	603 12" CONDUIT, TYPE B, 706.02 (LF.)	603 15" CONDUIT, TYPE B (LF.)	603 18" CONDUIT, TYPE C (LF.)	603 18" CONDUIT, TYPE B, 706.02, D-LOAD 3000 (LF.)	603 21" CONDUIT, TYPE B, 706.02 (LF.)	604 MANHOLE ADJUSTED TO GRADE (EA.)	604 CATCH BASIN NO. 5 WITHOUT APRON (EA.)	604 INLET, CITY OF AKRON NO. 3 (EA.)	604 MANHOLE NO. 1 (EA.)	605 6" SHALLOW PIPE UNDERDRAINS, AS PER PLAN (LF.)	605 6" BENDS AND BRANCHES 45°	605 6" BENDS AND BRANCHES 90°	SPEC. PRECAST REINFORCED CONCRETE OUTLET (EA.)	SANITARY 604 MANHOLE ADJUSTED TO GRADE (EA.)	PROFILE SHEET No.
531	R-1	42 TO 42+20 ENGLEWOOD AVE	RT/LT	37	1																
	R-2	46+00 TO 46+10 ENGLEWOOD AVE	RT/LT	38	1																
	R-3	46+00 ENGLEWOOD AVE	RT	9	1																
	R-4	44+78 ENGLEWOOD AVE	LT	48	1																
	P-155	635+00 I-76	LT					27													549
	P-156	632+14 TO 635+00. I-76	LT						282				1								549
	P-162	42+11.5 TO 42+25 ENGLEWOOD AVE	RT/LT				27							1							548
	P-163	42+11.5 TO 42+28 ENGLEWOOD AVE	RT				19					1		1							548
	P-164	44+43 ENGLEWOOD AVE	LT							8											549
	P-165	44+43 TO 44+46 ENGLEWOOD AVE	LT/RT								26	1			1						549
	P-166	44+46 TO 44+75 ENGLEWOOD AVE	RT/LT				37							1							549
	P-167	44+46 TO 44+77.5 ENGLEWOOD AVE	RT				34							1							549
	D-1	42+22 ENGLEWOOD AVE	RT																	1	
	D-2	44+49 ENGLEWOOD AVE	RT																	1	
	D-3	46+00 ENGLEWOOD AVE	RT									1									
	U-1	634+00 TO 635+00 I-76	LT			100										5	1				
	U-2	634+00 TO 634+20 I-76	MED			15										5	1				
	U-3	634+00 TO 634+20 I-76	MED			15										5	1				
	U-4	634+00 TO 634+05 I-76	RT			22										5		1	1		
	U-5	42+25 TO 44+70 ENGLEWOOD AVE	LT			10										235					
	U-6	44+75 TO 47+41 ENGLEWOOD AVE	LT			10										256					
	U-7	41+38 TO 42+20 ENGLEWOOD AVE	LT													82					
	U-8	41+38 TO 42+23 ENGLEWOOD AVE	RT													88					
	U-9	42+28 TO 44+72 ENGLEWOOD AVE	RT			10										234					
531	U-10	44+75.5 TO 47+41 ENGLEWOOD AVE	RT			10										256					
532	P-168	47+44 TO 47+50 ENGLEWOOD AVE	RT/LT				24					1		1							548
	P-169	47+44 TO 47+53 ENGLEWOOD AVE	RT				13							1							548
	D-1	47+70 ENGLEWOOD AVE	RT																	1	
	U-1	47+50 TO 48+80 ENGLEWOOD AVE	LT			10										120					
	U-2	47+41 TO 47+45 ENGLEWOOD AVE	LT													4					
	U-3	47+41 TO 47+48 ENGLEWOOD AVE	RT													7					
532	U-4	47+53 TO 48+80 ENGLEWOOD AVE	RT			10										117					
	TOTALS			132	4	212	154	27	282	8	26	4	1	6	1	1414			1	3	

CALC. BY.		SUM-76-11.57	OHIO
CHKD. BY.		FED. PROJECT IR-76-2(44)19	F.H.W.A. REGION 5
DATE			

534
1214

SUMMIT COUNTY

STA. 12+83, 18' LT.
RAMP 'E-2'
EXISTING C.B.

STA. 13+89
℄ INMAN STREET
EXISTING M.H.

℄ EXIST. 8" WATER
(TO REMAIN)

EXIST. GRADE

EXIST. 15"
(TO BE REMOVED)

EX. 12"

70'-18" TYPE 'B'
@ 2.84%

18" W = 1093.18
EX. 12" E = 1093.22
EX. 12" S = 1094.40
EX. 12" N = 1094.06
6" U.D. = 1094.15
EX. 15" W = 1093.22 (REMOVED)

P 1

18" E = 1091.19
EX. 24" N, S = 1090.69
EX. 15" E = 1092.5 (REMOVED)

FOR P-3 SEE SHEET 330.

STA. 572+71, 112' LT. I-76
C.B. No. 5 W/O APRON
T.G. = 1088.50

STA. 573+04, 93' LT. I-76
M.H. RECONSTRUCT TO GRADE
EXIST. T.C. = 1089.40
NEW T.C. = 1088.29

℄ RELOC. 6" WATER

EX. 6" W.
(TO BE ABD.)

P 5

15" NW = 1080.94
EX. 15" N = 1078.25
EX. 24" S = 1078.00
EX. 15" W TO BE ABD.
AND PLUGGED

15" SE = 1081.70

38'-15" TYPE 'B'
@ 2.00%

STA. 569+50, 56' RT. ℄ I-76
INLET, No. 2-A-20, AS PER PLAN
GUTTER ELEV. = 1113.62

EXIST. GRADE

PROPOSED GRADE

15" N, E = 1109.27
12" U.D. W = 1110.74 (SHOULDER)
6" U.D. W = 1110.74 (BARRIER)

350'-15" TYPE C @ 7.88%

P 4

HOUSE

STA. 573+00, 112.5' RT. ℄ I-76
C.B. No. 5 W/O APRON
T.G. = 1085.65

℄ TALBOT AVE.

FOR CONTINUATION
SEE SHEET 534A.

15" W = 1081.69
18" E = 1081.44

P 16

EX. 24" N, S = 1076.15

SCALE IN FEET
HORIZ. 0 20 40 60
VERT. 0 5 10 15

DRAINAGE PROFILE

CALC. BY. DATE	SUM - 76-11.57	OHIO
CHKD. BY. DATE	FED. PROJECT IR-76-2(44)19	F.H.W.A. REGION 5

534A
1214

SUMMIT COUNTY

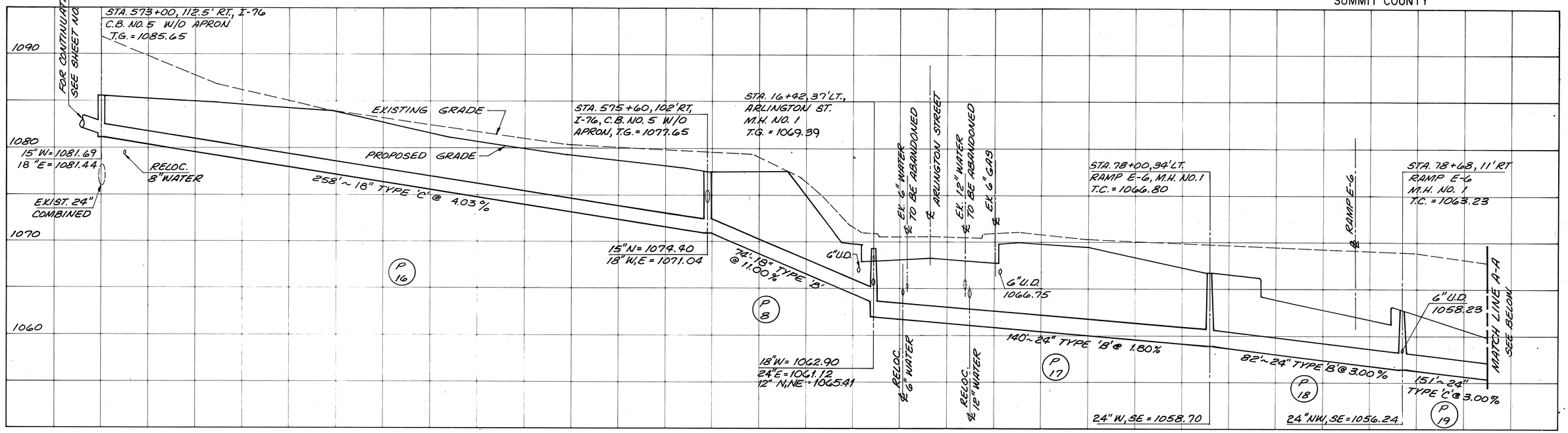

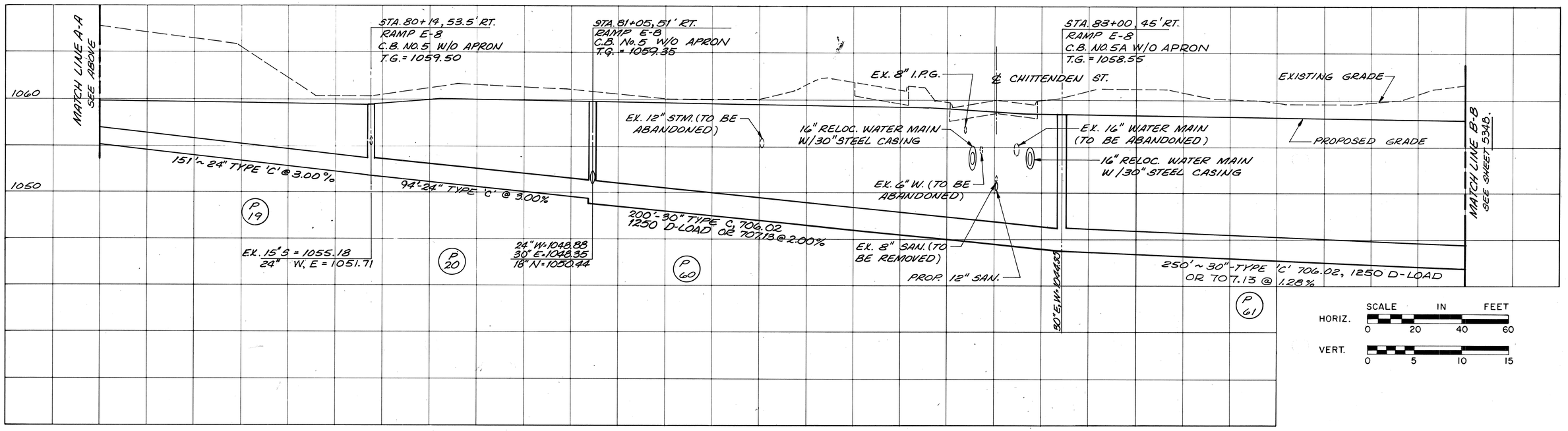

SCALE IN FEET

HORIZ. 0 20 40 60

VERT. 0 5 10 15

DRAINAGE PROFILE

CALC. BY. DATE	SUM - 76-11.57	OHIO	534B 1214
CHK'D. BY. DATE	FED. PROJECT IR-76-2(44)19	F.H.W.A. REGION 5	

SUMMIT COUNTY

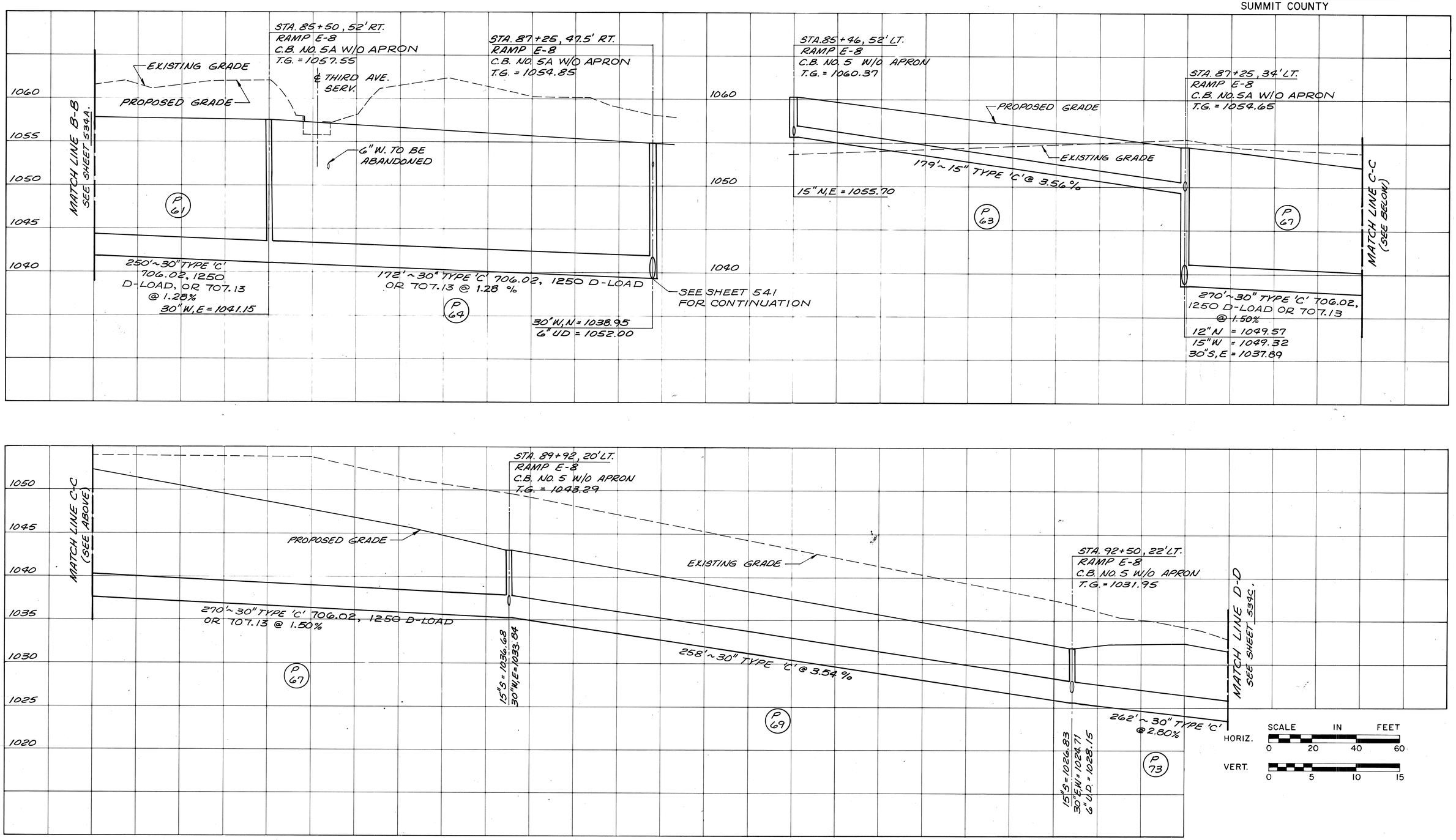

DRAINAGE PROFILE

CALC. BY. DATE	SUM - 76 - 11.57	OHIO
CHKD. BY. DATE	FED. PROJECT IR-76-2(44)19	F.H.W.A. REGION 5

534C
12 14

SUMMIT COUNTY

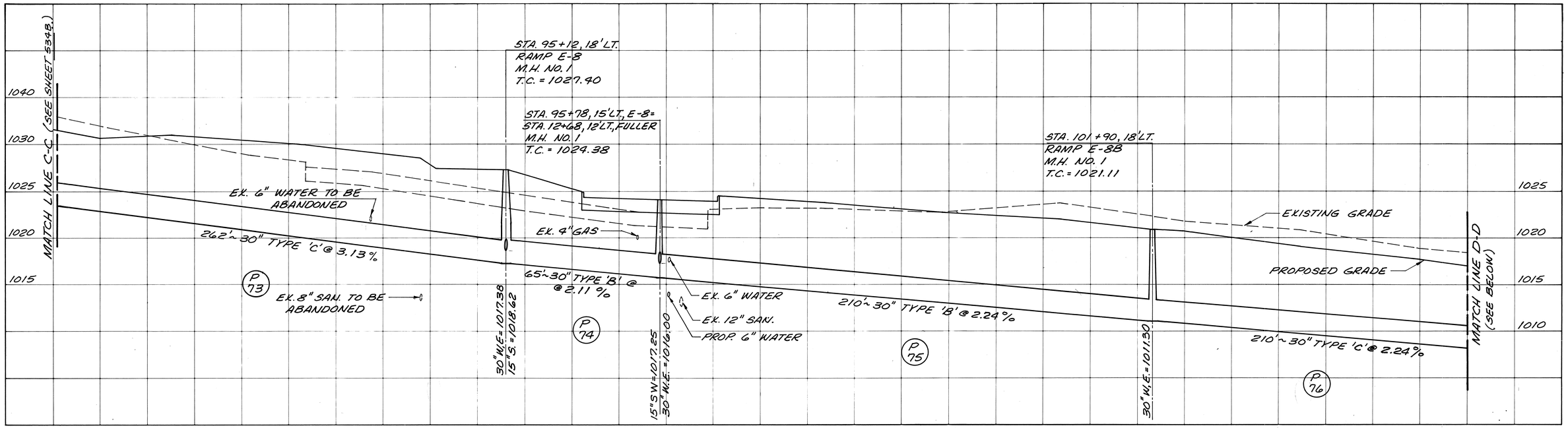

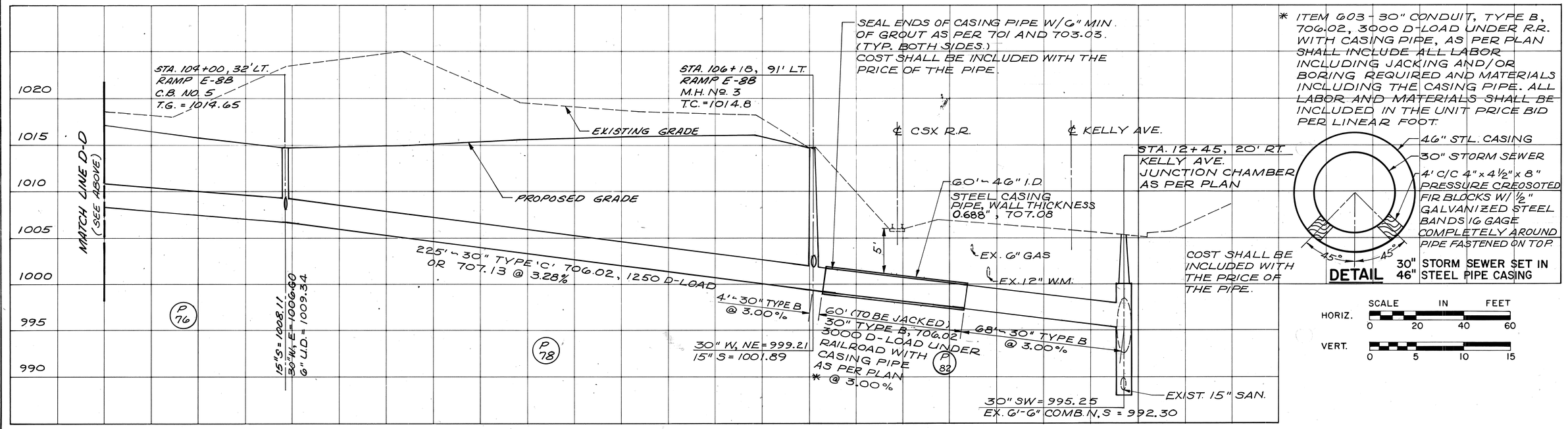

* ITEM 603 - 30" CONDUIT, TYPE B, 706.02, 3000 D-LOAD UNDER R.R. WITH CASING PIPE, AS PER PLAN SHALL INCLUDE ALL LABOR INCLUDING JACKING AND/OR BORING REQUIRED AND MATERIALS INCLUDING THE CASING PIPE. ALL LABOR AND MATERIALS SHALL BE INCLUDED IN THE UNIT PRICE BID PER LINEAR FOOT.

DETAIL 30" STORM SEWER SET IN 46" STEEL PIPE CASING

COST SHALL BE INCLUDED WITH THE PRICE OF THE PIPE.

SCALE IN FEET

HORIZ. 0 20 40 60

VERT. 0 5 10 15

DRAINAGE PROFILE

CALC. BY. DATE	SUM - 76 - 11.57	OHIO
CHKD. BY. DATE	FED. PROJECT IR-76-2(44)19	F.H.W.A. REGION 5

535
1214

SUMMIT COUNTY

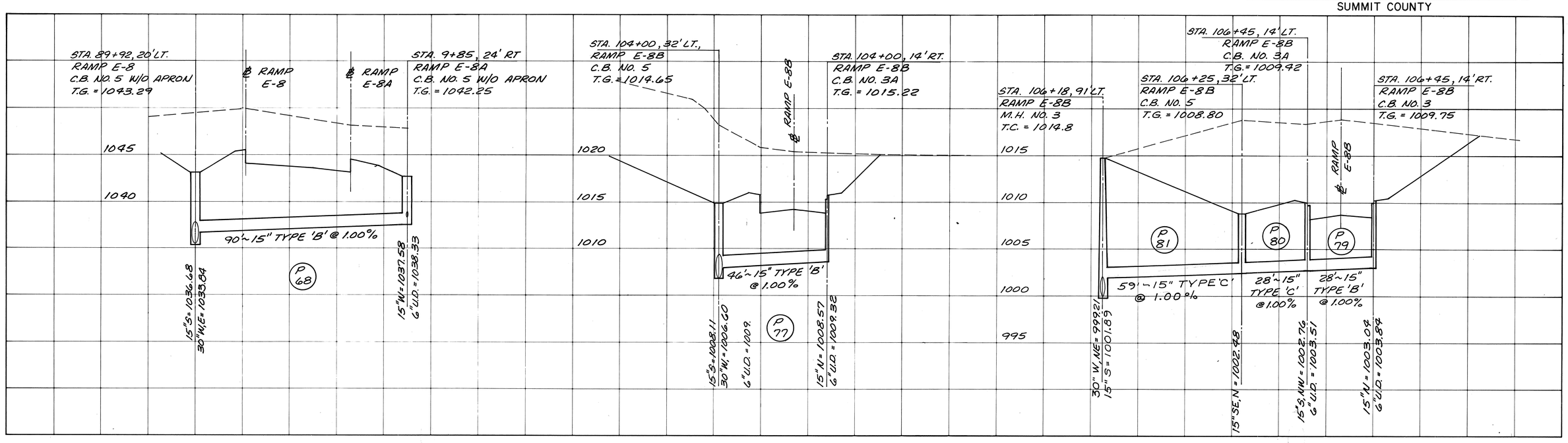

HORIZ. SCALE IN FEET 0 20 40 60

VERT. 0 5 10 15

DRAINAGE PROFILE

CALC. BY.		SUM-76-11.57	OHIO	530
CHKD. BY.		FED. PROJECT IR-76-2(44)19	F.H.W.A. REGION 5	1214
DATE				

SUMMIT COUNTY

STA. 49+37, 14' LT.
℄ MARTIN AVE.
INLET, CITY OF AKRON
No. 3
GUTTER ELEV. = 1070.28

STA. 18+41, ℄ ARLINGTON ST.
EXIST. M.H. ADJ. TO GRADE
EXIST. T.C. = 1071.54
NEW T.C. = 1070.68

P 11

EXIST. O.B.T.
EX. 8" G.

PROP. 6" W

12" NW = 1066.19
12" SW = 1065.83
EX. 20" S = 1060.57
EX. 12" N = 1060.93
EX. 8" W = 1061.26

EX. 6" W TO BE ABANDONED

EX. 6" W TO BE ABANDONED

65'-12" TYPE 'B', 706.02 @ 1.00%

12" SE = 1066.84
6" U.D. = 1067.70

STA. 18+84, 28.5' LT.
℄ ARLINGTON STREET
INLET, CITY OF AKRON No. 3
GUTTER ELEV. = 1070.27

STA. 19+07
℄ ARLINGTON STREET
M.H. ADJ. TO GRADE
EX. T.C. = 1071.84
NEW T.C. = 1071.50

P 12

EX. 12" STM. TO BE ABD.

P 13

STA. 19+43, 28.5' RT.
℄ ARLINGTON STREET
INLET, CITY OF AKRON, No. 3
GUTTER ELEV. = 1070.91

EXIST. 6" G

12" S.W. = 1067.74
6" U.D. = 1068.24

OBT

EX. 8" G

PROP. 12" W.

EX. 12" W. TO BE ABD.

EXIST. 6" W TO BE ABANDONED

47'-12" TYPE 'B' 706.02 @ 1.05%

12" SW = 1066.72
12" NE = 1067.25
EX. 12" S = 1061.43

38'-12" TYPE B, 706.02 @ 1.00%

12" NE = 1067.10
6" U.D. N, S = 1067.60
6" NW = 1067.85

STA. 18+95, 28' LT.
℄ ARLINGTON ST.
C.B. TO BE ABAND.
CONNECT 6" THRU

STA. 18+90, 22' LT.
℄ ARLINGTON ST.
PROP. Y-BRANCH

6" CONC. ENCASEMENT

6" SE = 1068.0±
EX. 6" NW = 1068±

6" NW = 1067.50
12" NE = 1067.00

P 14

9'-6" TYPE B @ 5.56%

STA. 49+52, 14' RT.
℄ MARTIN AVE.
INLET, CITY OF AKRON, No. 3
GUTTER ELEV. = 1069.50

STA. 18+41, ℄ ARLINGTON ST.
EX. M.H. ADJ. TO GRADE
EX. T.C. = 1071.54
NEW T.C. = 1070.68

EX. 8" GAS

EX. O.B.T.

12" NE = 1066.33
6" UD W = 1066.83

P 15

12" SW = 1065.83
EX. 20" S = 1060.57
EX. 12" N = 1060.93
EX. 8" W = 1061.26
12" NW = 1066.19

EX. 6" W TO BE ABD.

50'-12" TYPE 'B', 706.02 @ 1.00%

STA. 575+75.68' LT. I-76
INLET No. 3 AS PER PLAN
GUTTER ELEV. 1092.20

STA. 575+80, MED. I-76
INLET No. 3850 AS PER PLAN
GUTTER ELEV. = 1092.43
(REMOVE EXIST. INLET)

STA. 575+60, 102' RT. I-76
C.B. No. 5, W/O APRON
T.G. 1077.65

RETAINING WALL No. 1

EX. 12" STM. TO BE ABD.

PROP. U.D. OUTLET

P 6

P 7

65'-15" TYPE 'B' @ 1.00%

105'-15" TYPE 'B' @ 11.53%

6" U.D. = 1087.79
15" S = 1084.04

15" N.S = 1084.39
6" U.D. = 1087.24

EX. 12" STM.

6" U.D. N = 1075.90
15" N = 1074.40
18" W, E = 1071.04

STA. 16+42.21' LT.
℄ ARLINGTON ST.
M.H. No. 1
EX. T.C. = 1070.20
NEW T.C. = 1069.39

℄ ARLINGTON ST.

P 10

EX. 6" G.

EX. 6" W TO BE ABD.

PROP. 6" W

O.B.T.

12" NE, N = 1065.41
18" W = 1062.90
24" E = 1061.12

12" S.W. = 1065.71
6" U.D. = 1066.21

PROP. 12" W.

EX. 12" W. TO BE ABD.

61'-12" TYPE 'B', 706.02 @ 0.50%

STA. 16+75, 28.5' RT.
℄ ARLINGTON ST.
INLET CITY OF AKRON
No. 3
GUTTER ELEV. = 1068.88

STA. 16+75, 28.5' LT.
℄ ARLINGTON ST.
INLET CITY OF AKRON
No. 3
GUTTER EL. = 1068.88

P 9

STA. 16+42.21' LT.
℄ ARLINGTON ST.
M.H. No. 1
EX. T.C. = 1070.20
NEW T.C. = 1069.39

6" U.D. = 1066.21
12" S.E. = 1065.71

EX. 8" G

35'-12" TYPE 'B', 706.02 @ 0.86%

12" NE, N = 1065.41
18" W = 1062.90
24" E = 1061.12

SCALE IN

HORIZ. 0 20 40 60

VERT. 0 5 10 15

DRAINAGE PROFILE

CALC. BY. DATE	SUM-76-11.57	OHIO
CHKD. BY. DATE	FED. PROJECT IR-76-2(44)19	F.H.W.A. REGION 5

537
1214

SUMMIT COUNTY

STA. 80+44, 23.5' LT.
℄ RAMP 'E-6'
C.B. Nº 5 W/O APRON
T.G. = 1062.04

STA. 80+44, 20' LT.
℄ RAMP 'E-6'
INLET Nº. 3A, AS PER PLAN
GUTTER ELEV = 1060.45

STA. 80+44, 8' RT.
℄ RAMP 'E-6'
C.B. Nº. 3
T.G. = 1059.85

RAMP 'E-6' ℄

RETAINING WALL Nº. 4

P 21

P 22

15" N, E = 1053.18
6" U.D. = 1053.94

26'-15" TYPE 'B' @ 11.50 %

15" N, S = 1056.17

5'-15" TYPE 'B' @ 11.50 %

15" S = 1056.75

STA. 80+44, 8' RT.
℄ RAMP 'E-6'
C.B. Nº 3
T.G. = 1059.85

82'-15" TYPE 'C' @ 2.00%

P 23

15" N, E = 1053.18
6" U.D. = 1053.94

STA. 81+26, 23' RT.
℄ RAMP 'E-6'
C.B. Nº 5 W/O APRON
T.G. = 1058.78

15" W = 1051.54
15" NE = 1055.50
6" U.D. = 1056.25
18" S = 1051.29

℄ RAMP E-8

STA. 81+05.51' RT.
RAMP E-8'
C.B. Nº 5 W/O APRON
T.G. 1059.60

STA. 81+26, 23' RT.
℄ RAMP E-6
C.B. Nº 5 W/O APRON
T.G. = 1058.78

P 25

P 24

EX. 15" STM. TO BE ABD.

FOR CONTINUATION SEE BELOW

85'-18" TYPE, 706.02 3000 D-LOAD @ 1.00%

18" S = 1051.29
15" NE = 1055.50
15" W = 1051.54
6" U.D. = 1056.25

18" N = 1050.44
24" W = 1048.88
30" E = 1048.35

* STA. 582+48, 3.5' LT. ℄ I-76
M.H. Nº. 3 W/ 706.11 JOINTS
T.C. = 1075.91

℄ I-76

* MANHOLE SHALL BE COMPLETED TO A LEVEL ABOVE THE TOP OF THE CONCRETE FILL PRIOR TO THE PLACEMENT OF THE CONCRETE FILL.

℄ RAMP 'E-7'

RETAINING WALL Nº. 2

STA. 25+98.5, ℄ SECOND AVE.
EXISTING MANHOLE

℄ RAMP 'E-4'

PROP. 16" WATER MAIN

REMOVE EXISTING 18"

180'-18" TYPE B, 706.03 3000 D-LOAD W/ 706.11 JOINTS @ 2.00 %

EX. 20" @ 2.00%

PROP. 18" S = 1040.10
EX. 20" N = 1039.78
PROP 15" SE = 1040.24
12" SE = 1046.24
EX. 8" W = 1040.56

P 29

1070.25±

1062.5±

CONCRETE FILL
SEE CHITTENDEN ST. BRIDGE REMOVAL PLAN SHEET 237.

PROPOSED GRADE

℄ RAMP 'E-6'

EXISTING GRADE

STA. 82+74, 35' RT.
℄ RAMP E-6
M.H. TO BE REMOVED
COST TO BE INCLUDED WITH NEW CONDUIT

REMOVE EXIST. 18" CONDUIT. COST TO BE INCLUDED WITH NEW CONDUIT.

EX. 6" WATER TO BE ABD.

273'-12" TYPE B, 706.03, 2750 D-LOAD W/ 706.11 JOINTS @ 2.50 %

S 2

12" S = 1044.20
18" N = 1043.70
15" E = 1058.38
6" U.D. = 1071.40
EX. 18" N,S TO BE REMOVED

℄ RAMP E-8

STA. 82+77.77' RT.
℄ RAMP E-8
M.H. Nº 3 W/706.11 JOINTS. T.C. = 1060.50

REMOVE EXIST. 8" CONDUIT. COST TO BE INCLUDED WITH NEW CONDUIT.

12" N = 1051.02
8" W = 1051.35
EX. 8" S = 1051.78

PROP. 24" STM.

EX. 8" SAN. TO REMAIN

P 24

STA. 81+77, 22.5' LT.
℄ RAMP 'E-6'
C.B. Nº. 5 W/O APRON
T.G. = 1061.61

℄ RAMP 'E-6'

68'-15" TYPE 'B' @ 2.00%

15" SW = 1056.86

STA. 81+26, 23' RT.
℄ RAMP 'E-6'
C.B. Nº. 5 W/O APRON
T.G. = 1058.78

P 25

FOR CONTINUATION SEE ABOVE

15" NE = 1055.50
15" W = 1051.54
6" U.D. = 1056.25
18" S = 1051.29

SCALE IN FEET
HORIZ. 0 20 40 60
VERT. 0 5 10 15

DRAINAGE PROFILE

* MANHOLE SHALL BE COMPLETED TO A LEVEL ABOVE THE TOP OF THE CONCRETE FILL PRIOR TO THE PLACEMENT OF THE CONCRETE FILL.

CALC. BY. DATE	SUM-76-11.57	OHIO	538
CHKD. BY. DATE	FED. PROJECT IR-76-2(44)19	F.H.W.A. REGION 5	1214

SUMMIT COUNTY

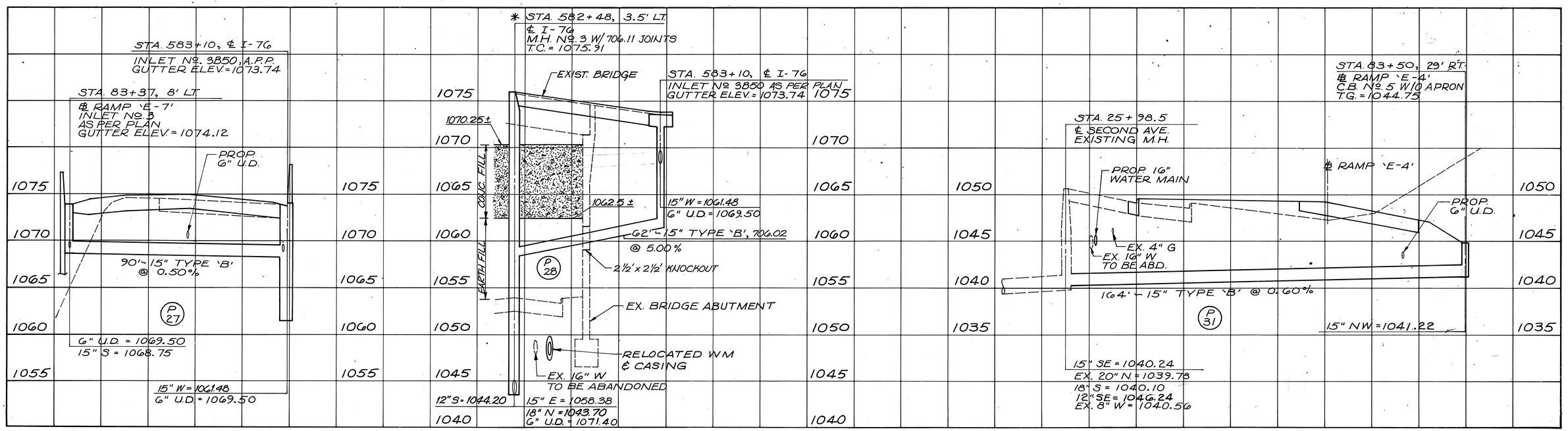

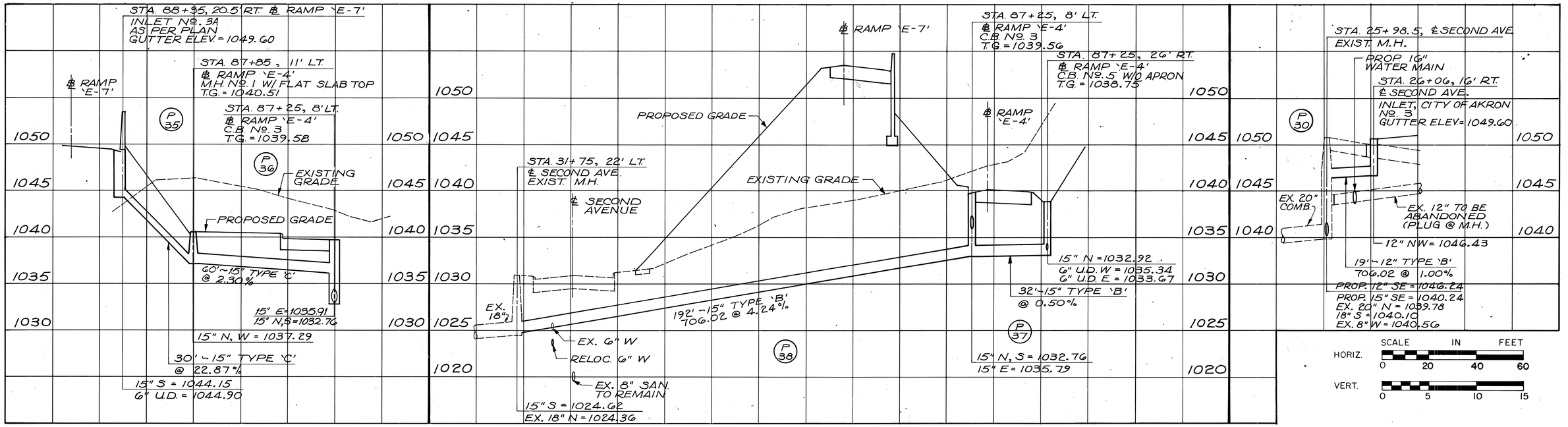

DRAINAGE PROFILE

CALC. BY.		SUM-76-11.57	OHIO
CHKD. BY.		FED. PROJECT IR-76-2(44)19	F.H.W.A. REGION 5

539
1214

SUMMIT COUNTY

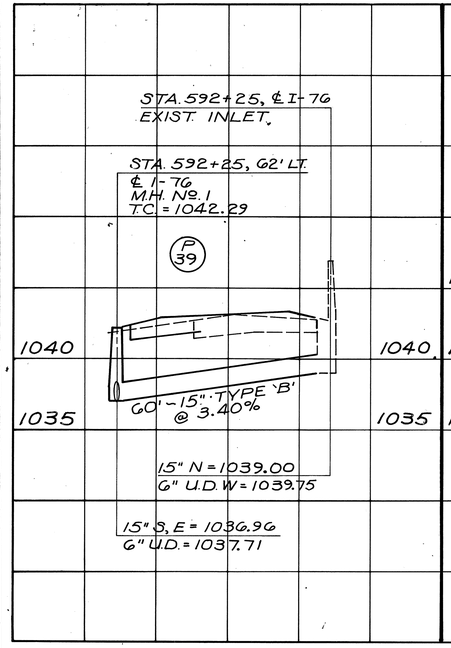

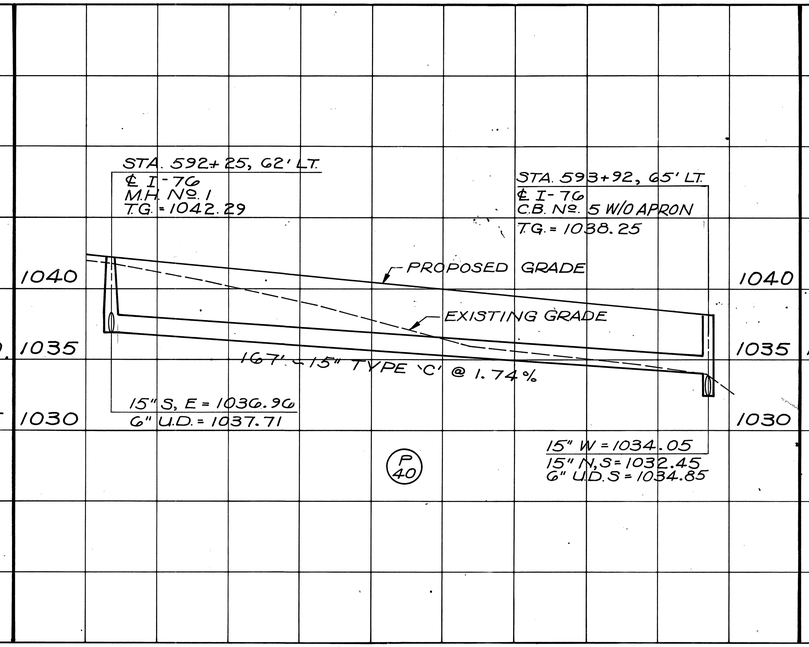

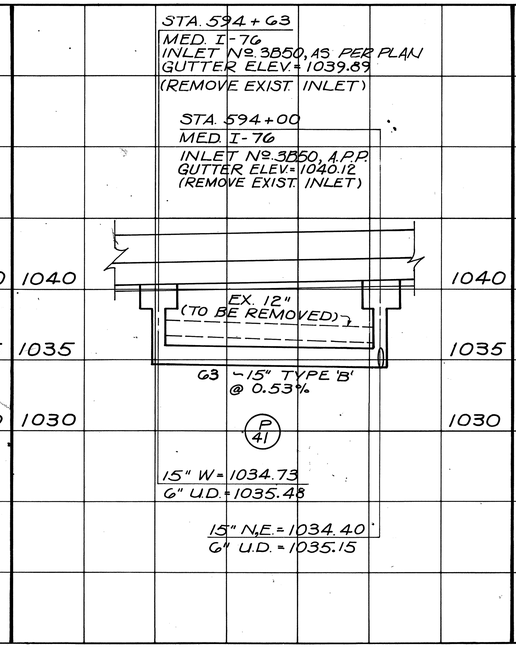

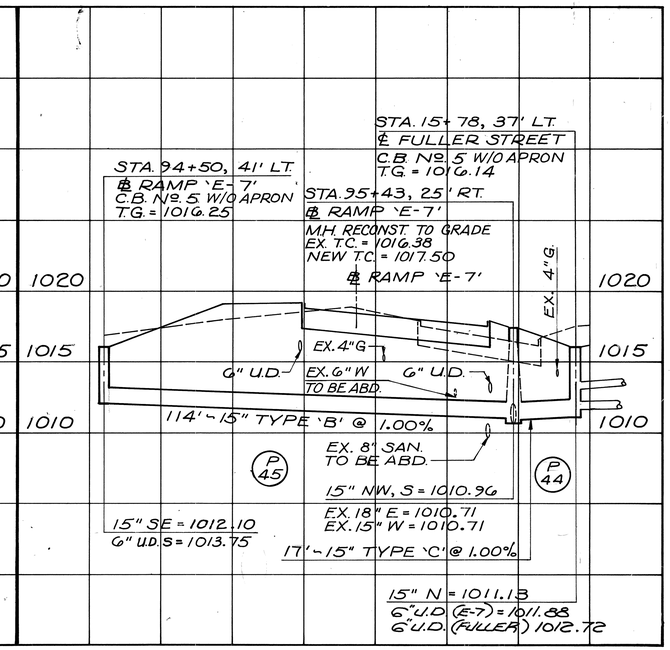

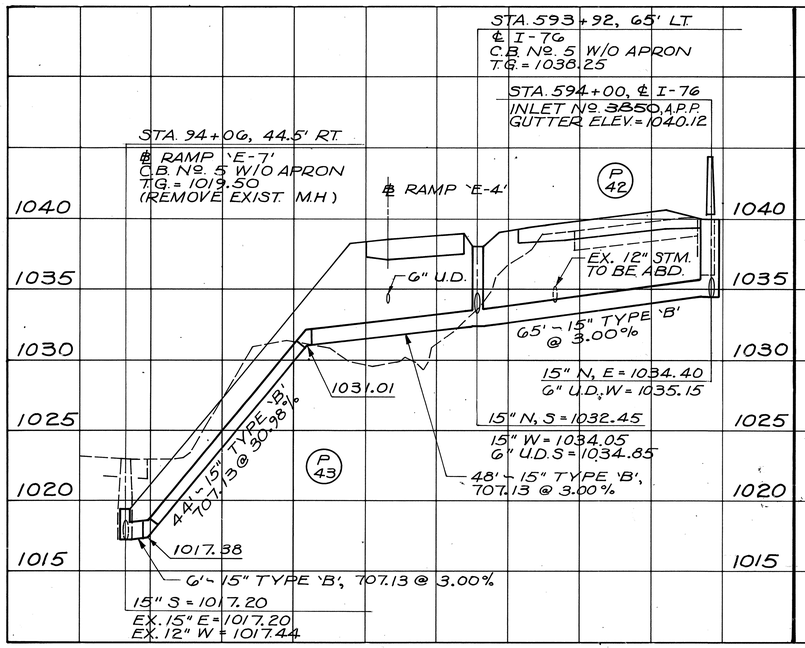

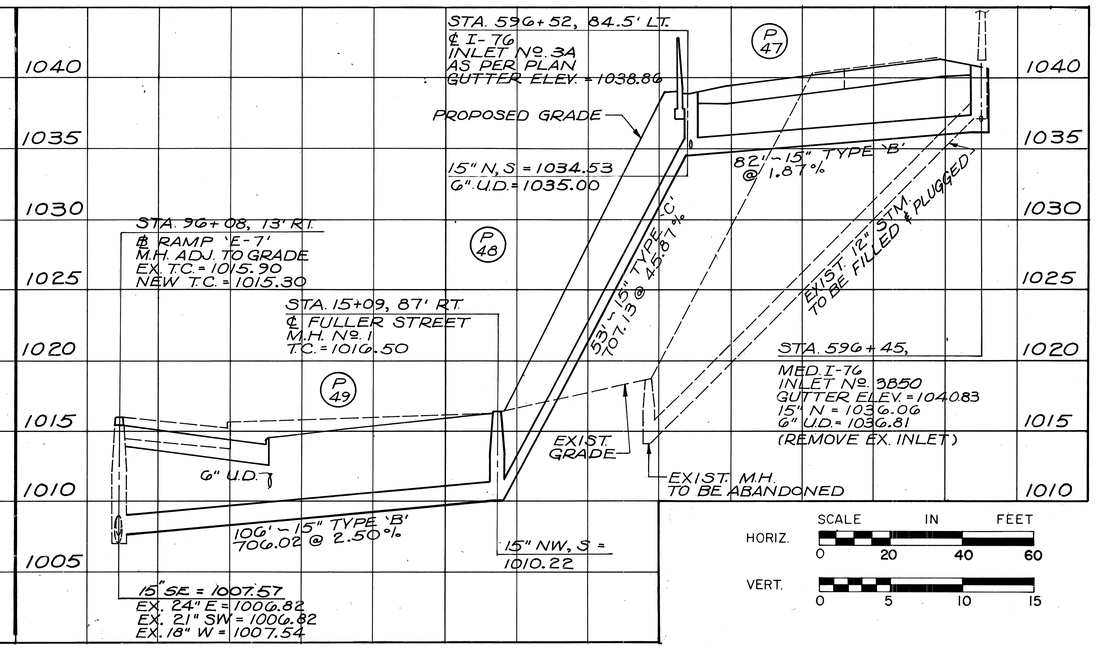

DRAINAGE PROFILE

CALC. BY. DATE	SUM-76-11.57	OHIO	540 / 1214
CHKD. BY. DATE	FED. PROJECT IR-76-2(44)19	F.H.W.A. REGION 5	

SUMMIT COUNTY

STA. 95+12, 18' LT.
RAMP 'E-8'
M.H. NO. 1
T.C. = 1027.40

STA. 95+10, 8' LT.
RAMP 'E-8'
INLET 2-A-12 AS PER PLAN
GUTTER EL = 1025.33

EXIST. 4" GAS

8'~15" TYPE 'C'
@ 0.50%

P 51

15"S = 1018.62
30" W,E = 1017.38

15"N = 1019.06
6" UD W = 1019.41

1040
1035
1030
1025
1020
1015

STA. 95+78, 15' LT. RAMP E-8 =
STA. 12+68, 12' LT. FULLER
M.H. NO. 1, T.C. = 1024.38

STA. 12+92, 6' RT.
FULLER STREET
EXISTING MANHOLE
ADJUST TO GRADE
EXIST. T.C. = 1022.63
NEW T.C. = 1022.65

STA. 95+60, 40' RT.
RAMP 'E-8'
C.B. No. 3
T.G. = 1024.80

STA. 95+54, 64' RT.
RAMP 'E-8'
C.B. NO. 5 W/O APRON
T.G. = 1023.25

℄ RAMP E-8

EX. 4" GAS

EX. 6" WATER

57'~15" TYPE 'B'
@ 1.54%

23'~15" TYPE 'C'
@ 1.00%

PROP. 6" W

EXIST. 12" SAN.
TO REMAIN

P 53

P 54

15"SW = 1017.25
30" W,E = 1016.00

15"NE = 1018.13
15" SE = 1021.19
15" SW = 1020.02
6" UD W = 1018.98
6" UD E = 1021.80

15"NE = 1020.25

1035
1030
1025
1020
1015
1010

STA. 95+60, 40' RT.
RAMP 'E-8'
C.B. No. 3
T.G. = 1024.80

STA. 11+85, 22' RT.
FULLER STREET
CITY OF AKRON
INLET NO. 3
GUTTER EL. = 1026.20

℄ FULLER

EX. 4" GAS

PROP. 12" W.M.
EX. 6" W.M.
TO BE ABAND.
EX. 12" SAN.
TO REMAIN

75'~15" TYPE 'B'
706.02 @ 1.00%

P 52

15"NE = 1018.13
15" SE = 1021.19
15" SW = 1020.02
6" UD W = 1018.88
6" UD E = 1021.80

15" NW = 1021.94
6" UD S = 1022.44

1030
1025
1020
1015
1010

STA. 9+86, 5.5' RT. ℄
RAMP E-7
M.H. No. 1
T.C. = 1012.70

STA. 96+68, 32' RT.
℄ RAMP 'E-7'
INLET, CITY OF AKRON No. 3
GUTTER ELEV. = 1012.20

12" N = 1009.03
6" U.D. = 1009.53

28'~12" TYPE 'B', 706.02 @ 1.00%

12" S = 1008.75
EX. 24" E,W = 1004.58

P 50

1015
1010
1005

SCALE IN FEET

HORIZ. 0 20 40 60

VERT. 0 5 10 15

CALC. BY. DATE	SUM-76-11.57	OHIO	541 12.14
CHKD. BY. DATE	FED. PROJECT IR-76-2(44)19	F.H.W.A. REGION 5	

SUMMIT COUNTY

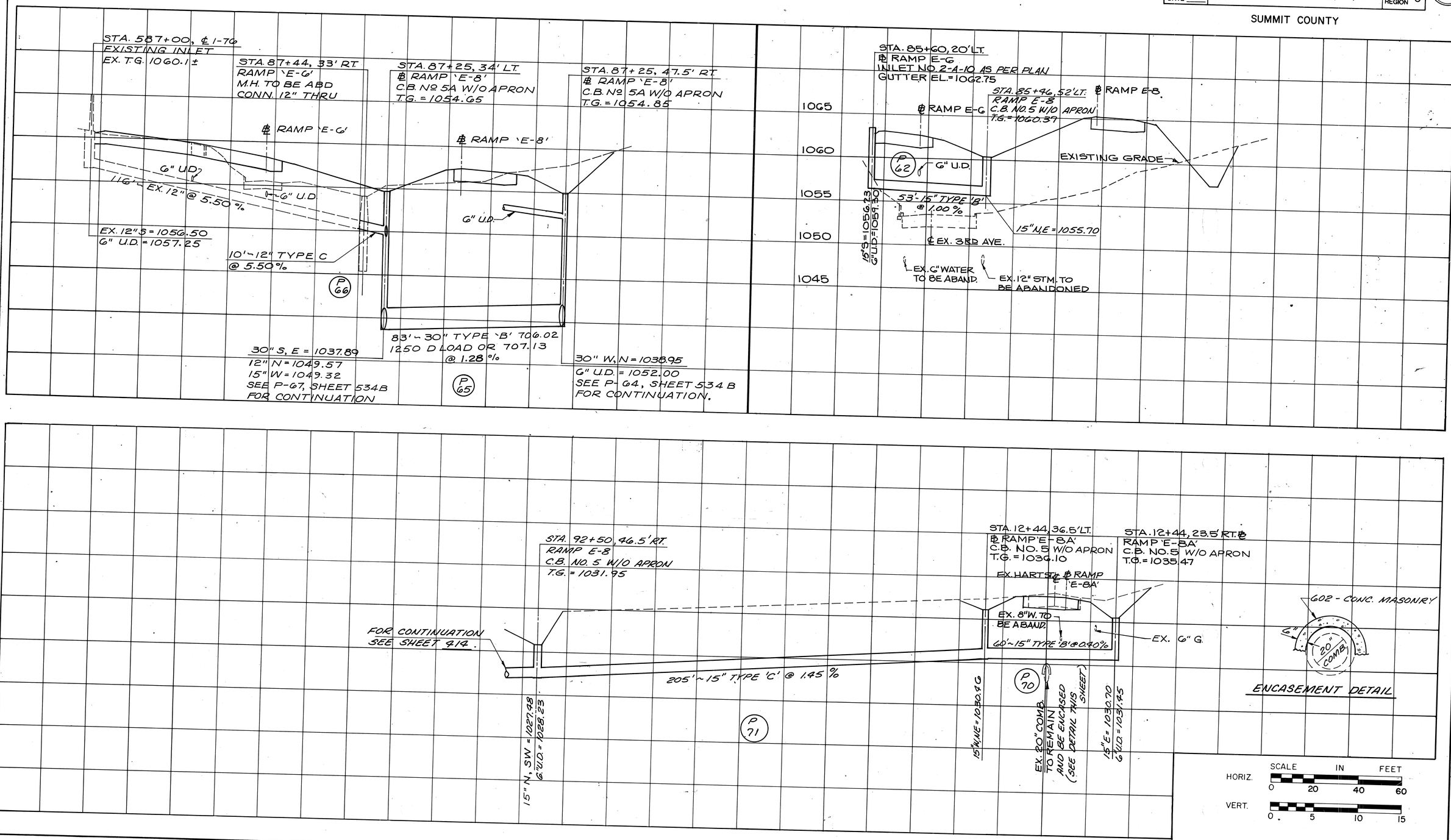

CALC. BY. DATE	SUM-76-11.57	OHIO
CHKD. BY. DATE	FED. PROJECT IR-76-2(44)19	F.H.W.A. REGION 5

542
1214

SUMMIT COUNTY

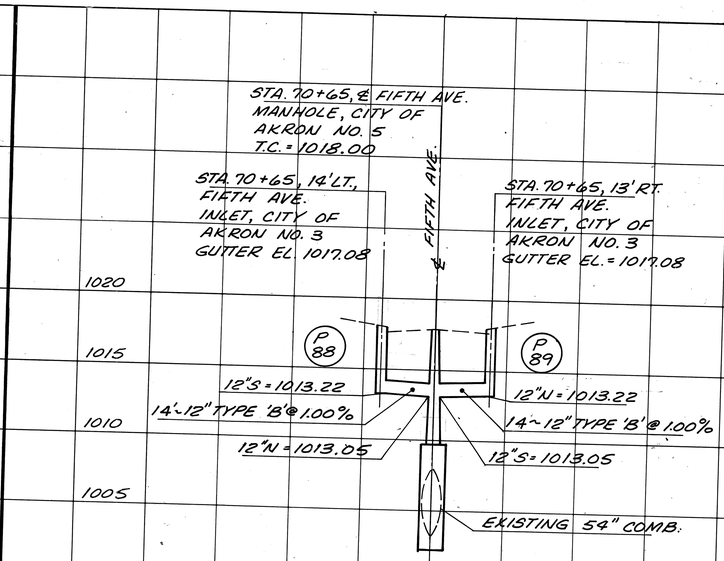

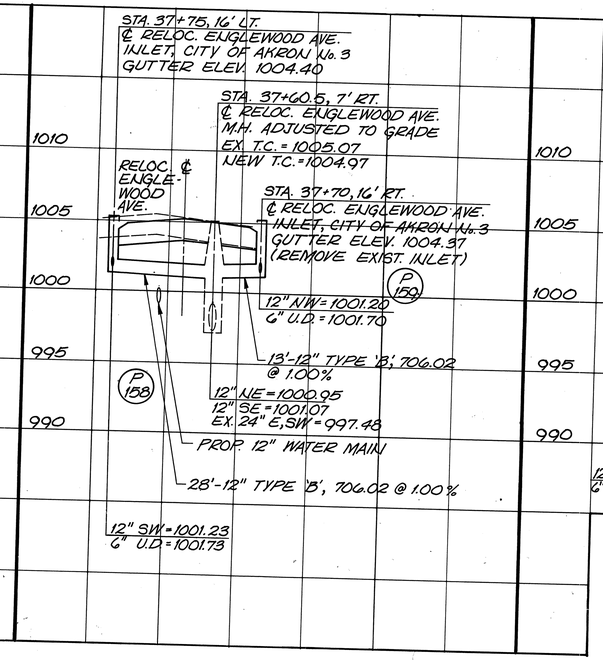

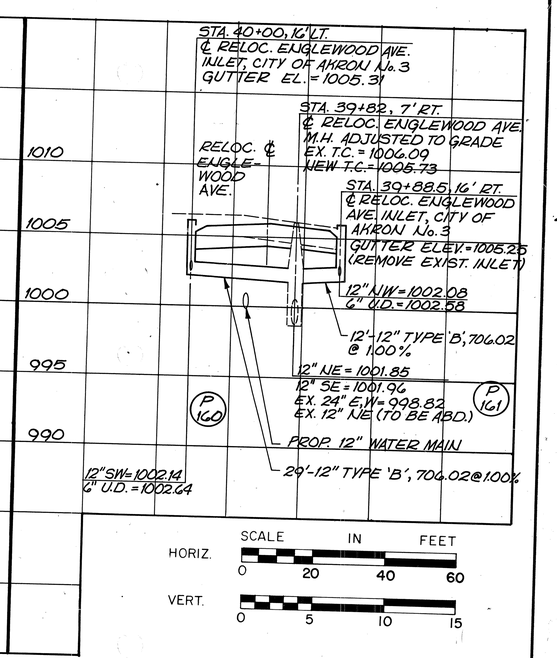

SCALE IN FEET

HORIZ. 0 20 40 60

VERT. 0 5 10 15

AA B.Pe 71942R

CALC. BY. DATE	SUM-76-11.57	OHIO	543
CHKD. BY. DATE	FED. PROJECT IR-76-2(44)19	F.H.W.A. REGION 5	1214

SUMMIT COUNTY

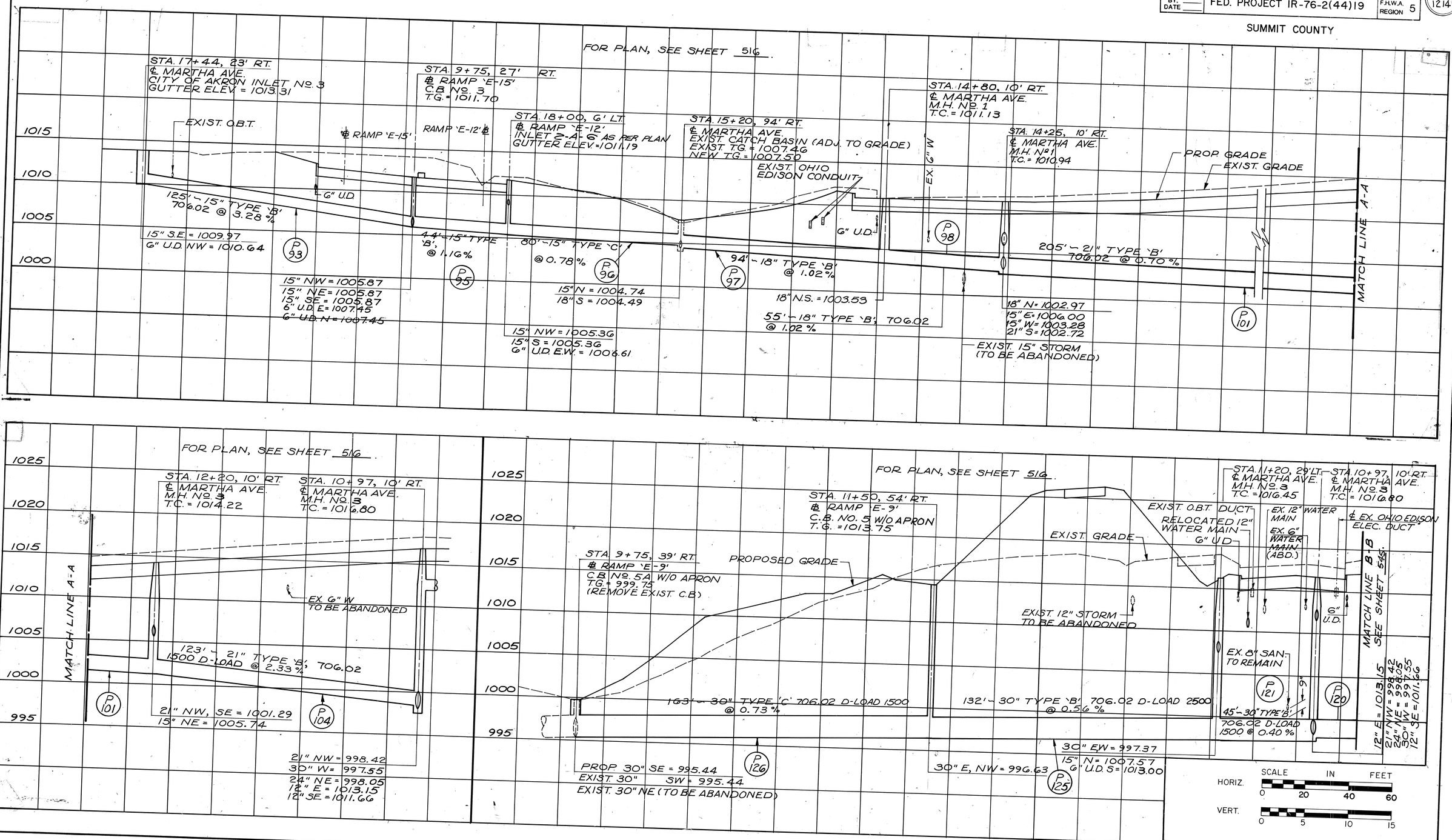

CALC. BY. DATE	SUM-76-11.57	OHIO
CHKD. BY. DATE	FED. PROJECT IR-76-2(44)19	F.H.W.A. REGION 5

544
1214

SUMMIT COUNTY

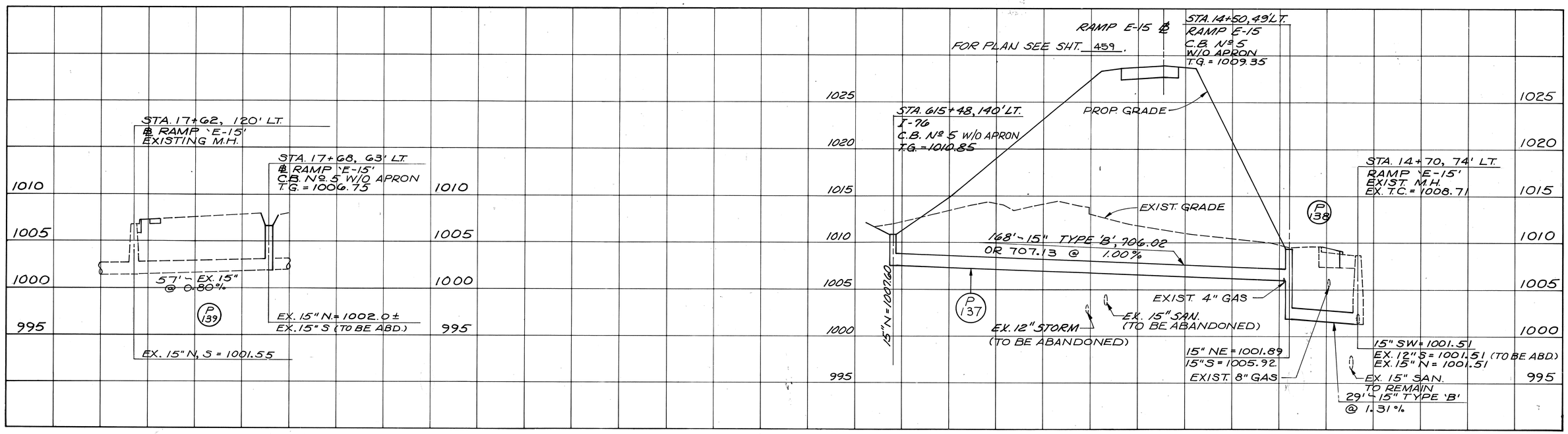

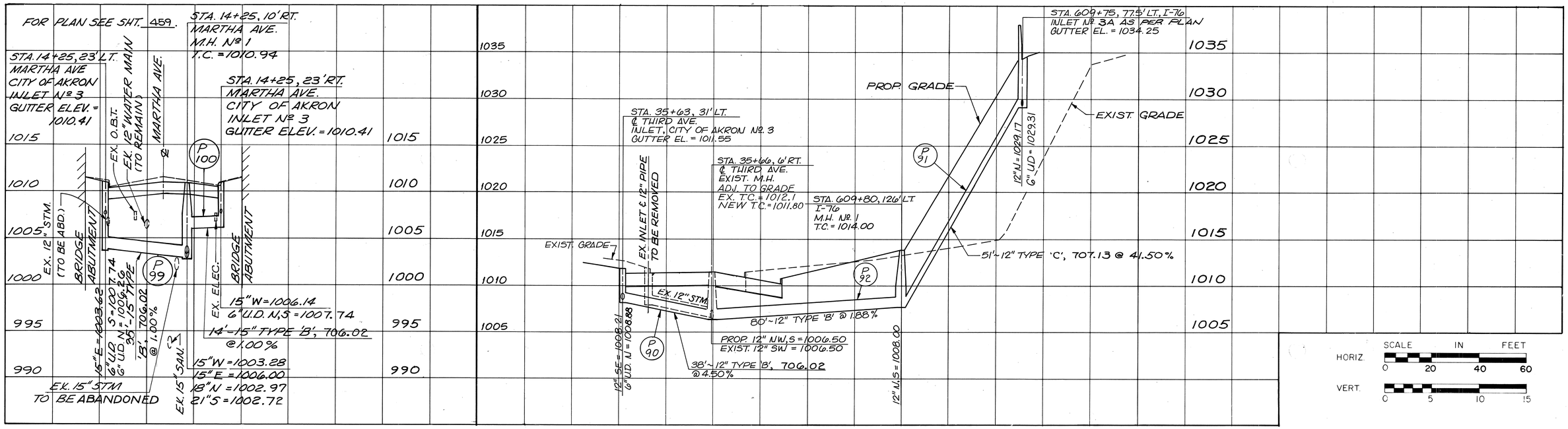

DRAINAGE PROFILE

CALC BY DATE	SUM-76-11.57	OHIO	545
CHKD BY DATE	FED. PROJECT IR-76-2(44)19	F.H.W.A. REGION 5	1214

SUMMIT COUNTY

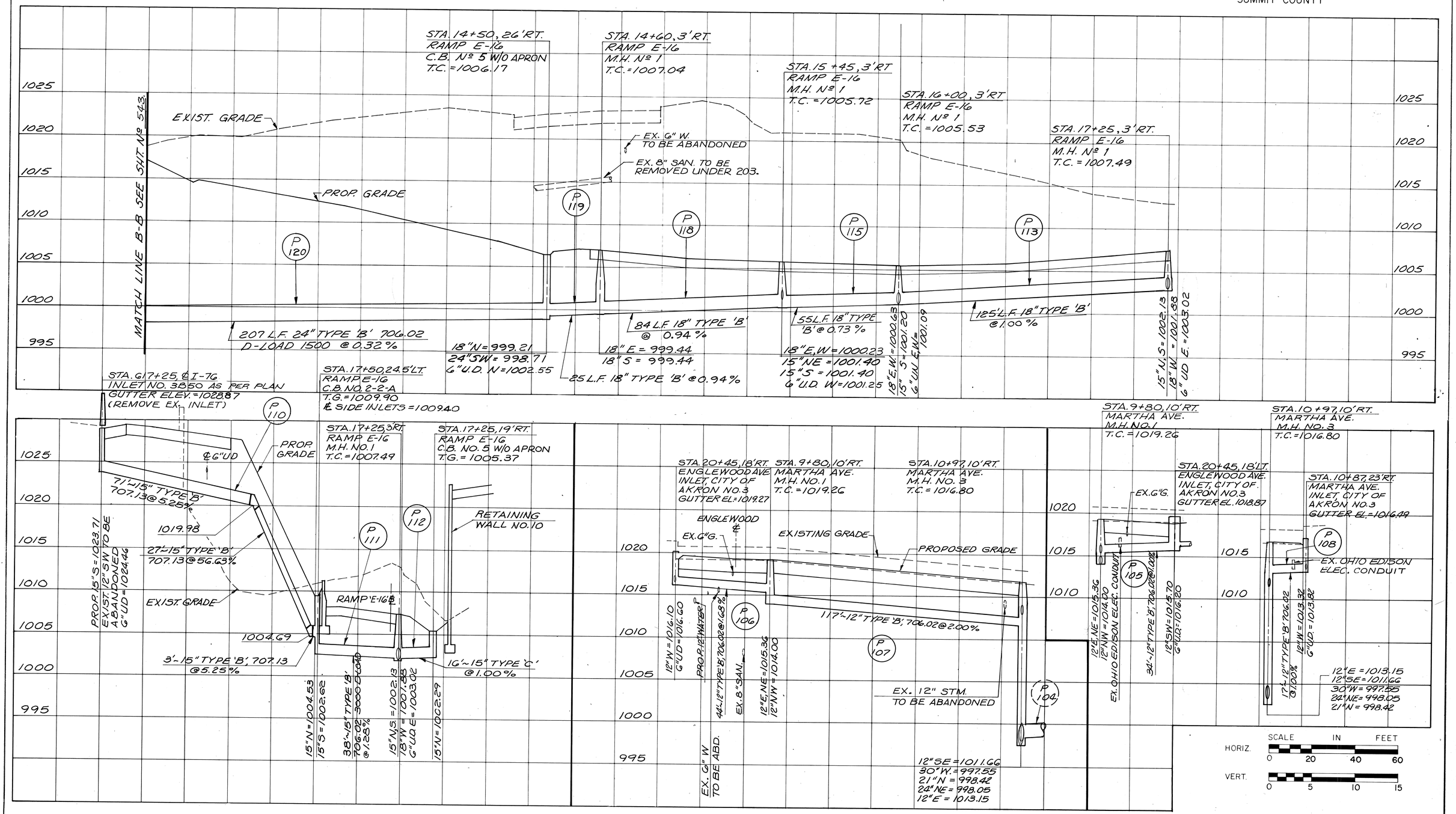

AA B, P# 71942R

CALC. BY. DATE	SUM-76-11.57	OHIO
CHKD. BY. DATE	FED. PROJECT IR-76-2(44)19	F.H.W.A. REGION 5

546 / 1214

SUMMIT COUNTY

STA. 610+35, ℄ I-76
EXIST. INLET No. 3050
GUTTER ELEV. = 1033.46

STA. 610+28, 74' RT. ℄ I-76
M.H. No. 1
T.C. = 1033.43

PROP. GRADE

6" U.D.

73'-15" TYPE 'B' @ 5.84%

P 122

15" S = 1029.60
6" U.D. = 1030.10

118'-15" TYPE 'C', 709.13 @ 13.92%

15" N = 1025.34
15" SE = 1025.34
6" U.D. NE = 1028.00

P 123

STA. 12+55, 41' LT.
℄ MARTHA AVE.
C.B. No. 5 W/O APRON
T.G. = 1012.17

STA. 11+20, 29' LT.
℄ MARTHA AVE.
M.H. No. 3
T.C. = 1016.45

EXIST. GRADE

PROP. GRADE

135'-15" TYPE 'C', 706.02 @ 1.00%

15" S = 1008.92
15" NW = 1008.92

P 124

EX. 30" STM. TO BE ABANDONED

FOR PLAN SEE SHEET 5B

15" N = 1007.57
30" E, W = 997.37

STA. 16+00, 11' RT.
℄ RAMP 'E-16'
INLET No. 3, AS PER PLAN T.G. = 1005.00

STA. 16+00, 3' RT.
℄ RAMP 'E-16'
M.H. No. 1
T.C. = 1005.53

BRIDGE ABUTMENT

15" N = 1001.28

18" E, W = 1000.63
15" S = 1001.20
6" U.D. E, W = 1001.09

P 114

8'-15" TYPE 'B' @ 1.00%

STA. 6+12+75
℄ I-76
EXIST. INLET
GUTTER ELEV. = 1031.66

EXIST. GRADE

104'-15" TYPE 'B' 707.13 @ 5.00%

6" U.D.

PROP. GRADE

1023.38

PROP. 15" S = 1028.58
EXIST. 12" S (TO BE ABANDONED)
6" U.D. W = 1029.08

P 102

35'-15" TYPE 'B' 707.13 @ 4.93%

STA. 12+20, 47' RT.
℄ MARTHA AVE.
C.B. No. 5 W/O APRON
T.G. = 1010.17

6" U.D.

EX. OHIO EDISON ELEC. CONDUIT

STA. 12+20, 10' RT.
℄ MARTHA AVE.
M.H. No. 3
T.C. = 1014.22

1002.12

4'-15" TYPE 'B' 707.13 @ 5.00%

15" N = 1005.92
15" W = 1005.92

37'-15" TYPE 'B' @ 0.50%

P 103

21" NW, SE = 1001.29
15" E = 1005.74

STA. 15+45, 10.5' RT.
℄ RAMP 'E-16'
INLET No. 3 AS PER PLAN, T.G. = 1005.20

STA. 15+45, 3' RT.
℄ RAMP 'E-16'
M.H. No. 1
T.C. = 1005.72

STA. 15+75, 20' LT.
℄ RAMP 'E-16'
INLET No. 3 AS PER PLAN

GUTTER ELEV. = 1005.83

EX. GRADE

BRIDGE ABUTMENT

RETAINING WALL No. 9

PROP. GRADE

15" SW = 1001.77

37'-15" TYPE 'B' @ 1.00%

P 116

15" N = 1001.48

18" E, W = 1000.23
15" NE, S = 1001.40
6" U.D. W = 1001.25

P 117

8'-15" TYPE 'B' @ 1.00%

FOR PLAN, SEE SHEET 5B

STA. 9+75, 27' RT.
℄ RAMP 'E-15'
C.B. No. 3
T.G. = 1011.70

STA. 10+25, 27' RT.
℄ RAMP 'E-15'
INLET 2-6 AS PER PLAN
GUTTER ELEV. = 1011.87

PROP. GRADE

EXIST. GRADE

6" U.D. E = 1007.62
15" W = 1006.04

P 94

50'-15" TYPE 'B' @ 0.34%

15" NW = 1005.87
15" E = 1005.87
15" SE = 1005.87
6" U.D. E = 1007.45
6" U.D. N = 1007.45

SCALE IN FEET

HORIZ. 0 20 40 60

VERT. 0 5 10 15

DRAINAGE PROFILE

CALC. BY. DATE	SUM-76-11.57	OHIO	547
CHKD. BY. DATE	FED. PROJECT IR-76-2(44)19	F.H.W.A. REGION 5	12.14

SUMMIT COUNTY

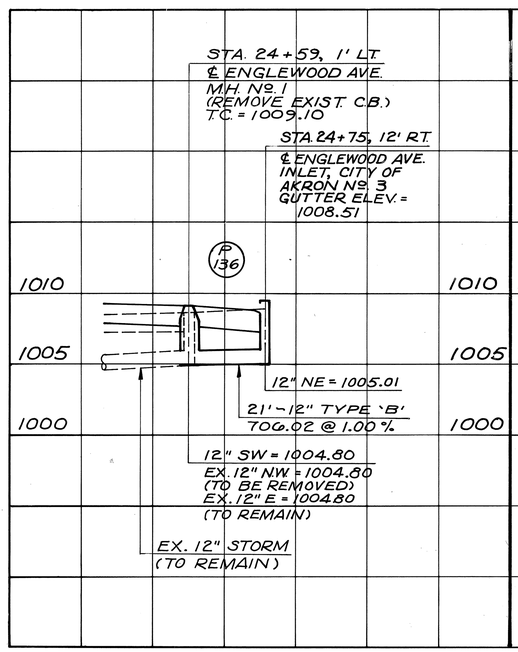

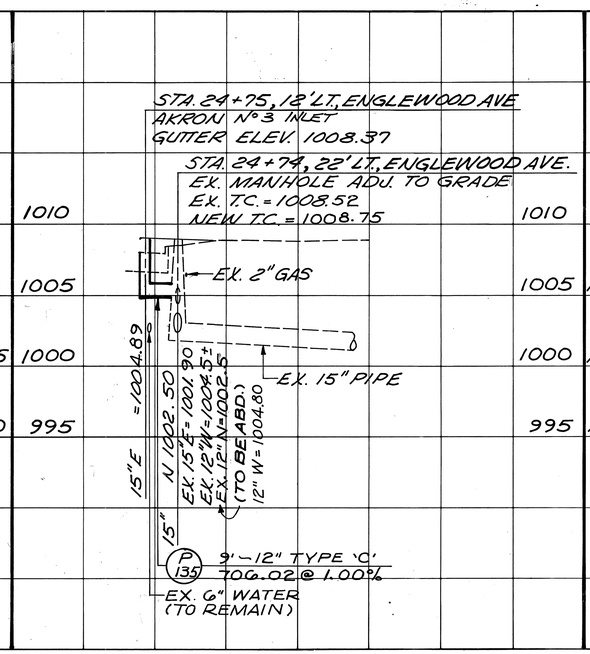

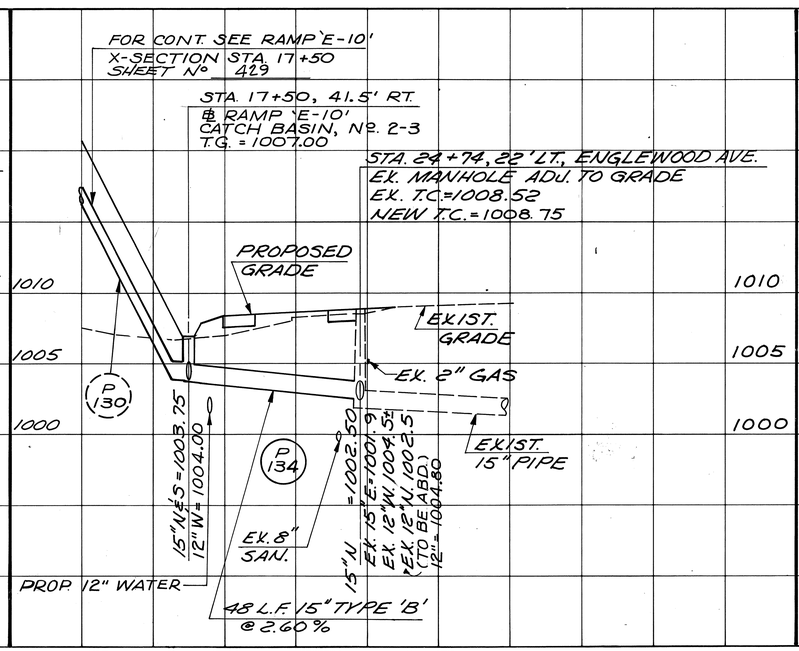

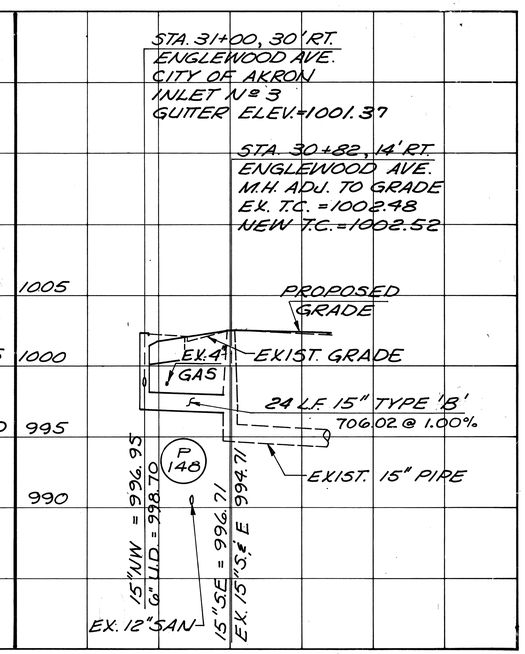

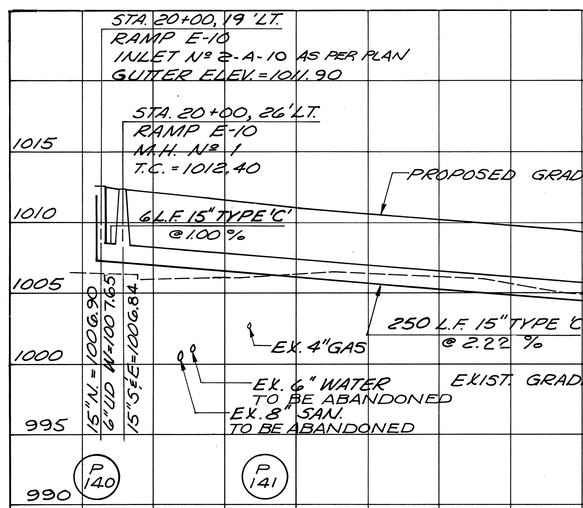

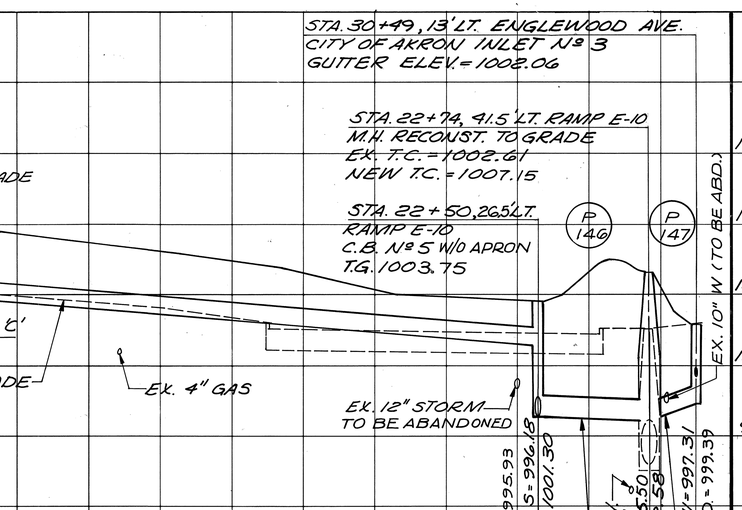

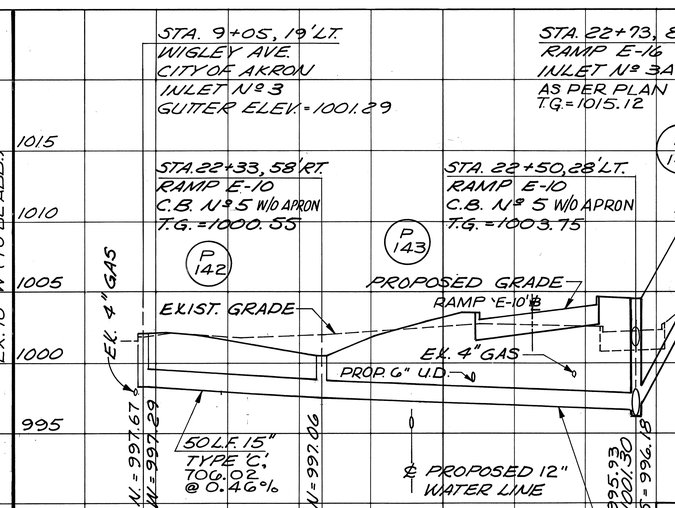

SCALE IN FEET

HORIZ. 0 20 40 60

VERT. 0 5 10 15

DRAINAGE PROFILE

CALC. BY: DATE	SUM-76-11.57	OHIO	548
CHKD. BY: DATE	FED. PROJECT IR-76-2(44)19	F.H.W.A. REGION 5	1214

SUMMIT COUNTY

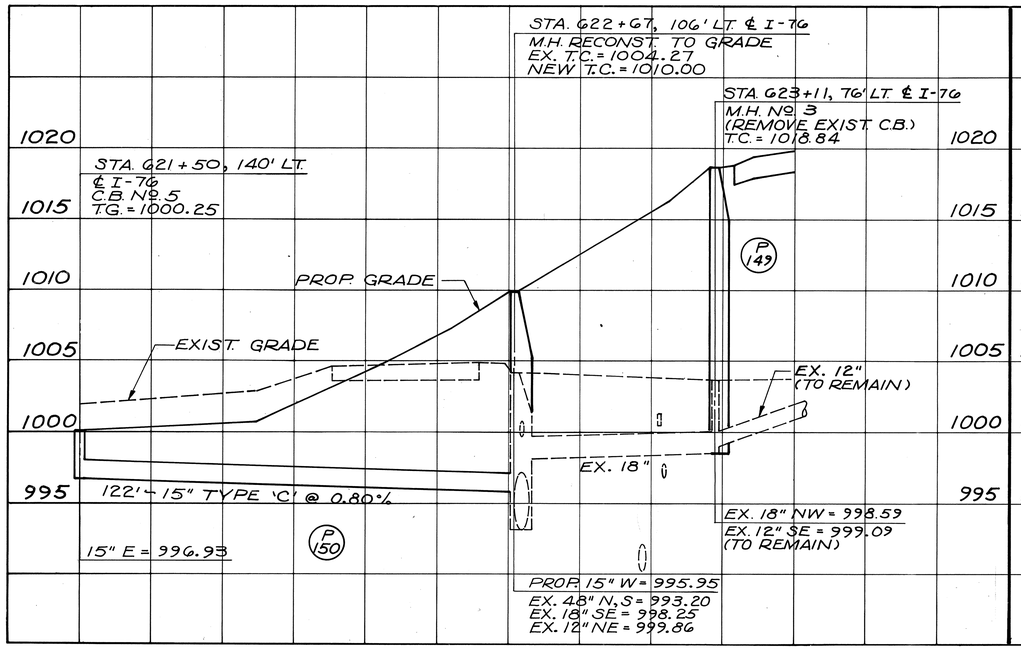

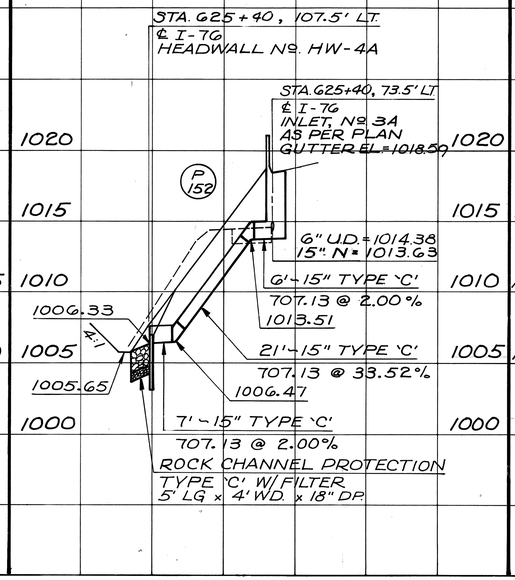

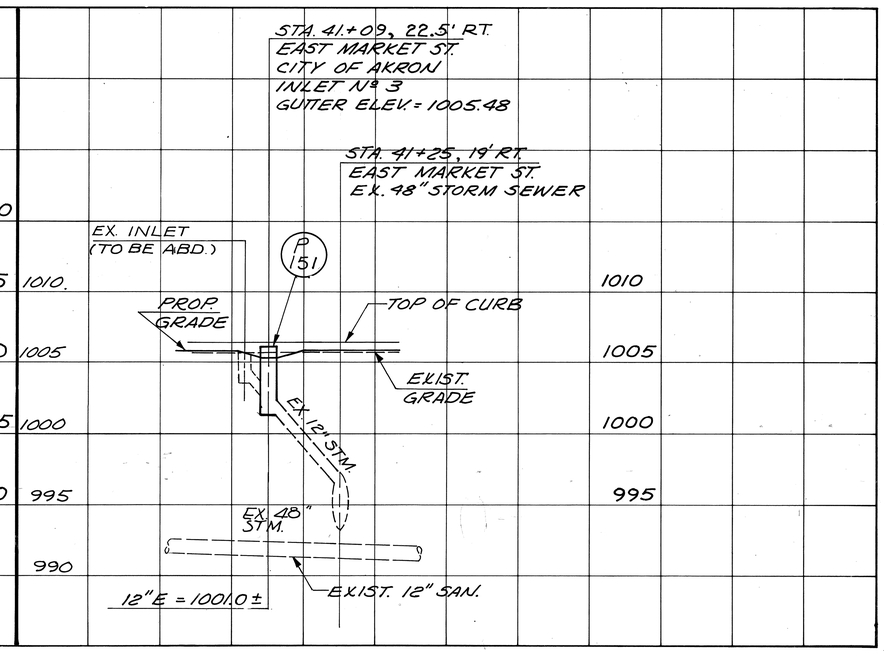

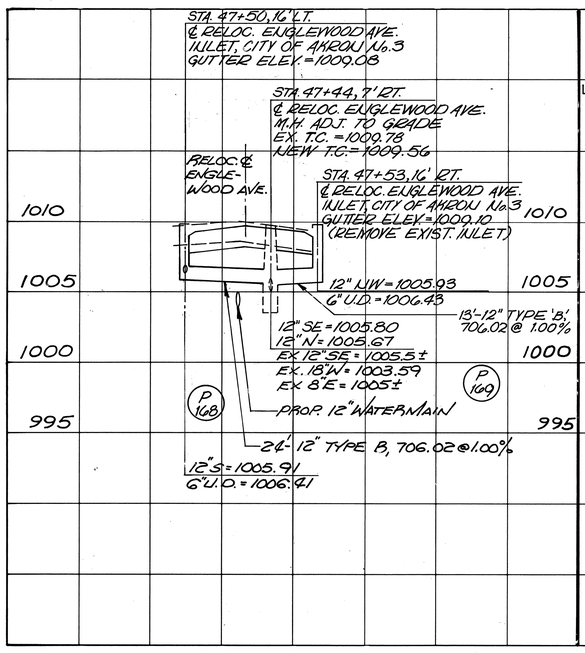

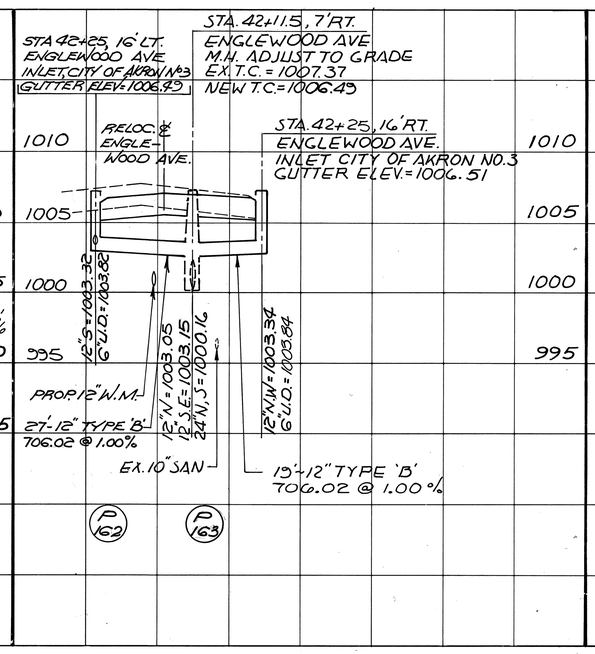

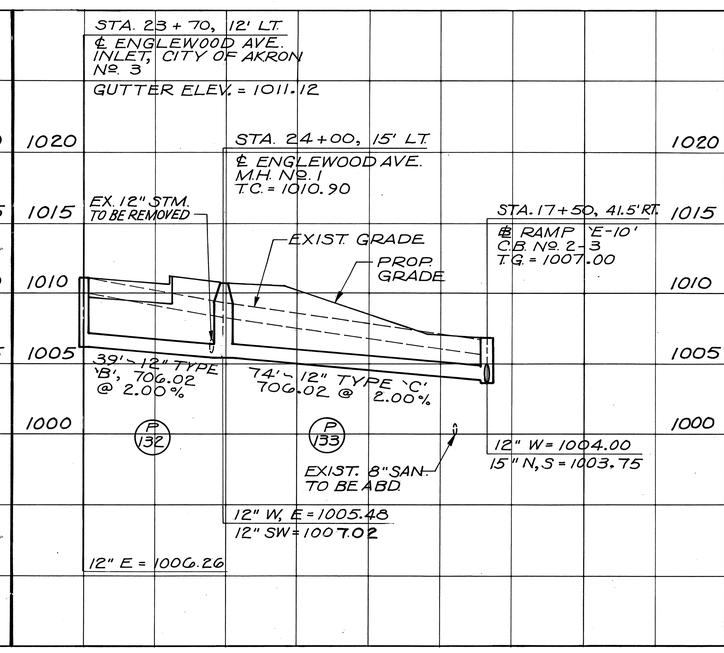

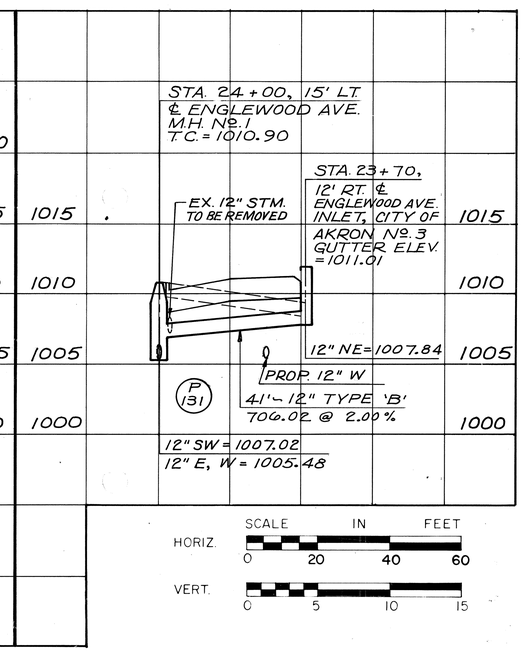

SCALE IN FEET

HORIZ. 0 20 40 60

VERT. 0 5 10 15

DRAINAGE PROFILE

CALC. BY.		SUM-76-11.57	OHIO	549
CHKD. BY.		FED. PROJECT IR-76-2(44)19	F.H.W.A. REGION 5	1214

SUMMIT COUNTY

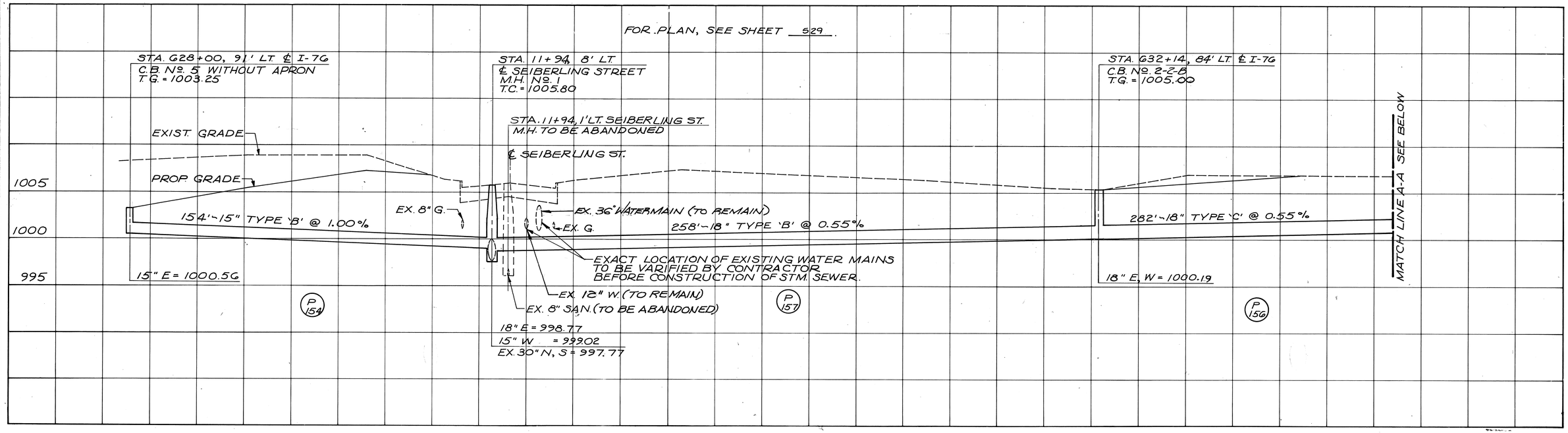

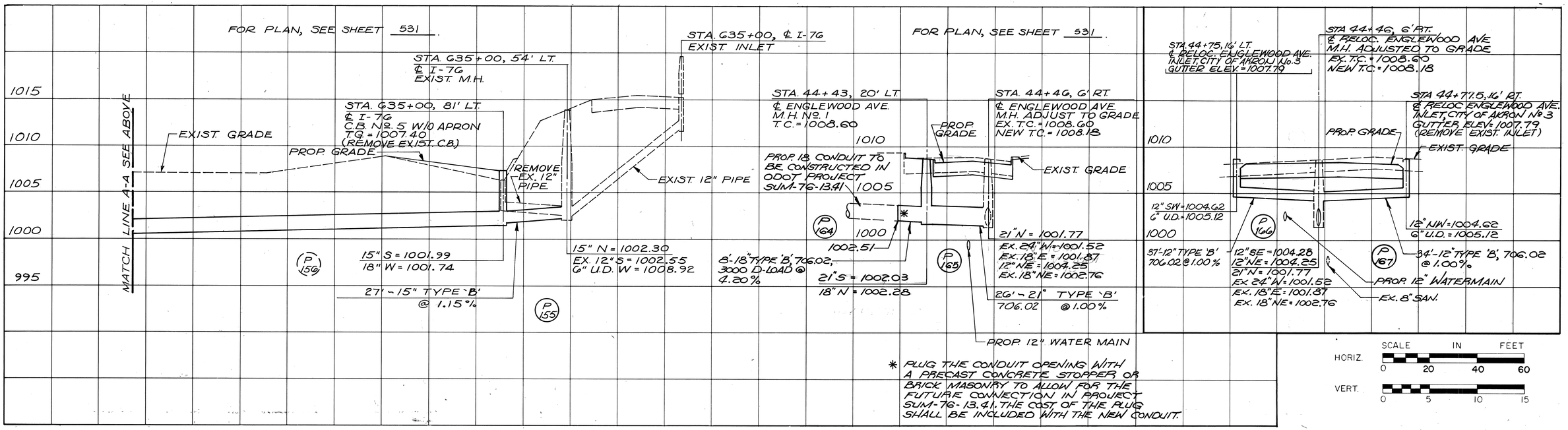

DRAINAGE PROFILE

AA B.P# 71942R

CALC. BY. DATE	SUM-76-11.57	OHIO	550
CHKD. BY. DATE	FED. PROJECT IR-76-2(44)19	F.H.W.A. REGION 5	1214

SUMMIT COUNTY

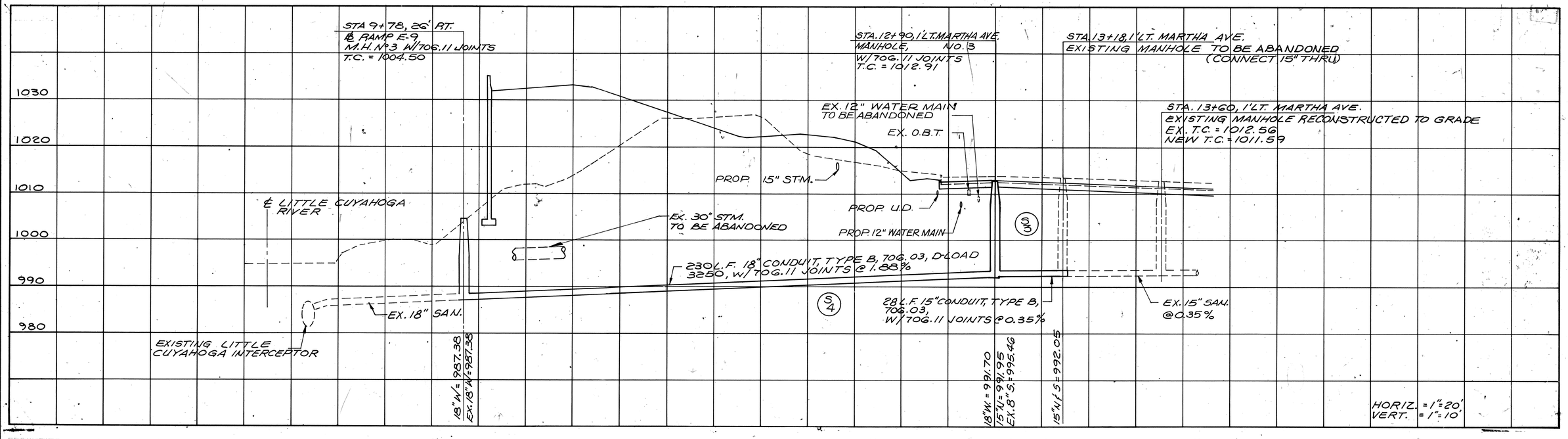

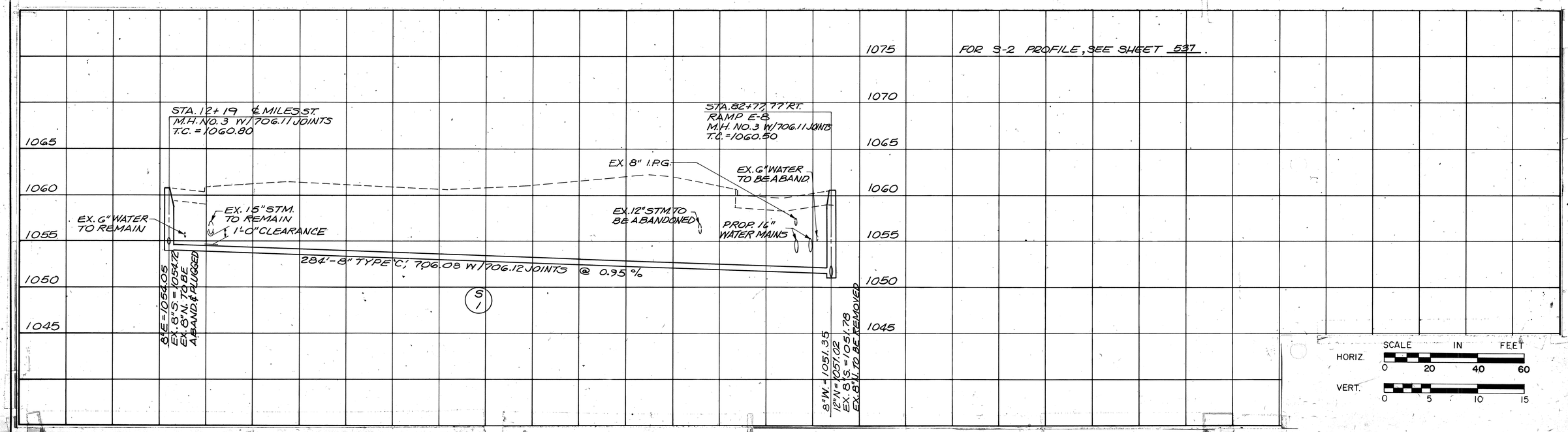

SANITARY
DRAINAGE PROFILE

CALC. BY. DATE	SUM-76-11.57	OHIO
CHKD. BY. DATE	FED. PROJECT IR-76-2(44) 19	F.H.W.A. REGION 5

551
12.14

NO. 3 INLET CASTINGS	WITH 6"x18" CURB			W/COMB. CURB & GUTTER			T-PLATE	
MANUFACTURER	CATALOG NUMBER FRAME	CATALOG NUMBER COVER	WT./LBS	CATALOG NUMBER FRAME	CATALOG NUMBER COVER	WT/LBS	CATALOG NUMBER	WT/LBS
EAST AKRON CASTING CO.	122	116-A	515	125	116-A	515	123	160
NEENAH FOUNDRY CO.	R-3326		525	R-3326-A		525	R-3326-007	
EAST JORDAN IRON WORKS, INC.	7265		515	7266		515		160

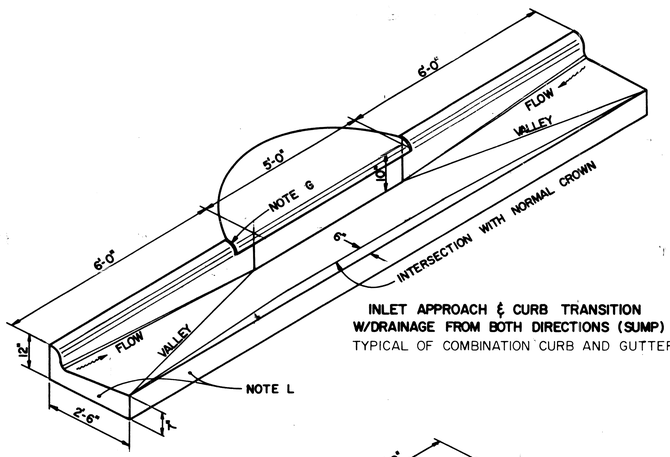

INLET APPROACH & CURB TRANSITION W/DRAINAGE FROM BOTH DIRECTIONS (SUMP)
TYPICAL OF COMBINATION CURB AND GUTTER

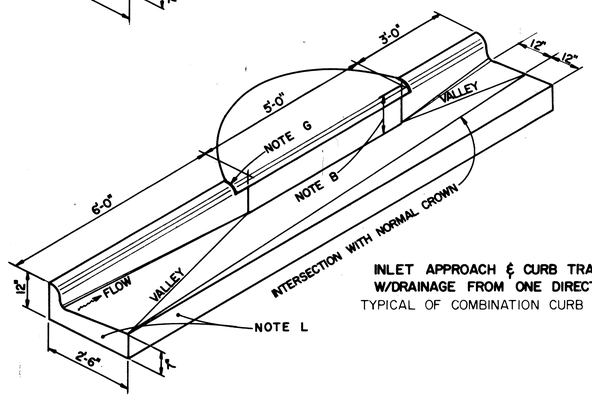

INLET APPROACH & CURB TRANSITION W/DRAINAGE FROM ONE DIRECTION
TYPICAL OF COMBINATION CURB AND GUTTER

TOP VIEW

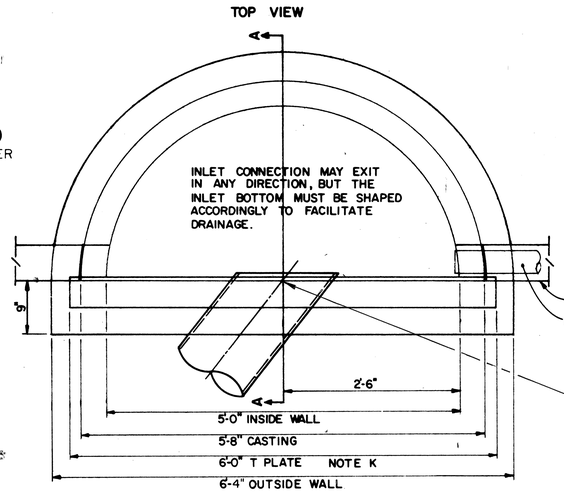

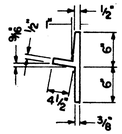

T-PLATE SECTION

LOCATION OF GRATE ELEVATION, STATION AND OFFSET

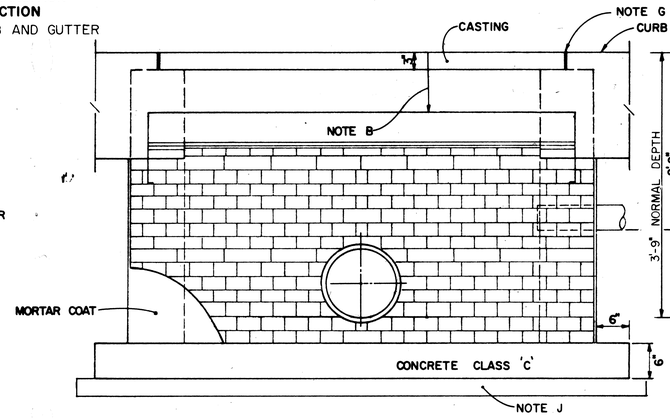

NO. 3 INLET
FRONT VIEW

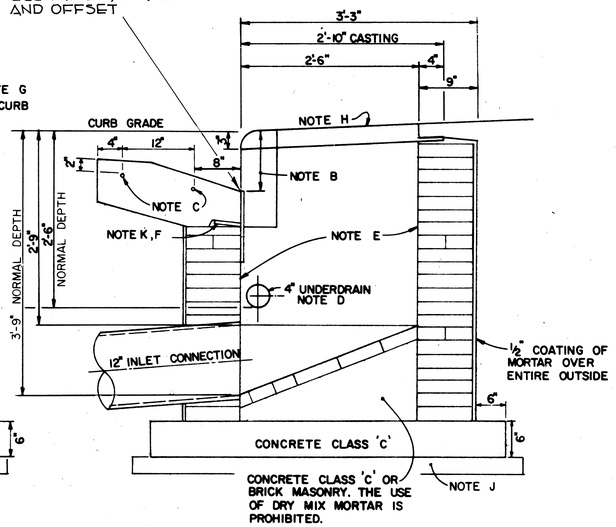

SECTION A-A

SUMMIT COUNTY

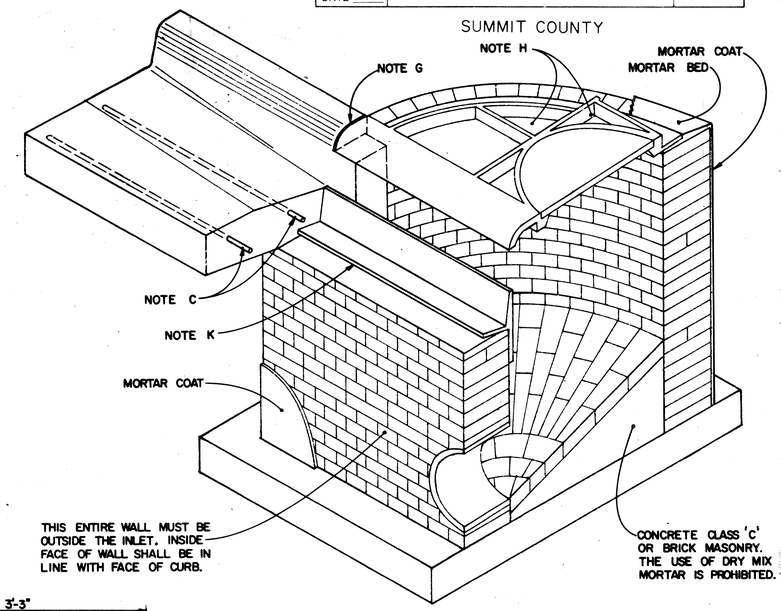

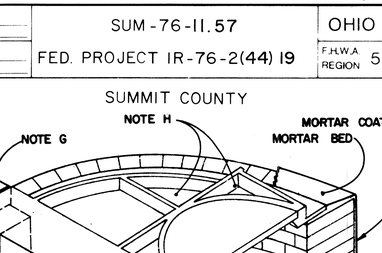

ISOLATION JOINT

A. MATERIAL SHALL BE CAST IRON MEETING THE REQUIREMENTS OF 711.12. CASTINGS SHALL BE FREE FROM BLOWHOLES AND OTHER DEFECTS, SHALL BE CLEANED OF ALL SCALE AND GREASE, AND SHALL RECEIVE TWO COATS OF BITUMINOUS PAINT. UPON COMPLETION OF ALL WORK, THE PICKHOLE AND LID SEAT SHALL BE THOROUGHLY CLEANED OF ALL DIRT, CONCRETE OR OTHER DEBRIS TO INSURE A FIRM SEAT AND EASE OF REMOVAL.

B. 10" FOR GRADES OF 5% AND UNDER, 11" FOR GRADES OVER 5%.

C. 2 NO. 5 REINFORCING RODS PLACED THE FULL LENGTH OF THE INLET APPROACH SLAB. MAINTAIN 2" MINIMUM COVER ON ALL REINFORCING STEEL.

D. INSTALL UNDERDRAIN PIPE THROUGH INLET WALL ON UPHILL SIDE, OR ON BOTH SIDES IF INLET IS IN A SUMP.

E. 8" BRICK WALL LAID UP IN PORTLAND CEMENT MORTAR. EVERY SEVENTH COURSE TO BE A STRETCHER COURSE.

F. THE T-PLATE MUST BE MORTARED INTO THE BRICKWORK SO AS TO BECOME PART OF THE INLET WALL, PRIOR TO PLACING THE CONCRETE GUTTER. IN NO CASE SHALL THE T-PLATE BE INSTALLED IN CONJUNCTION WITH THE PLACEMENT OF THE GUTTER.

G. DO NOT FILL WITH MORTAR. PROVIDE PREMOLDED EXPANSION MATERIAL, MINIMUM 1/2" THICK, AT EACH END OF THE CASTING, TO BE INCLUDED IN THE COST OF THE INLET. NOTCH IN CURB SHALL BE SAWCUT.

H. THE CASTING SHALL BE SET TO THE SIDEWALK SLOPE ON A FULL BED OF MORTAR. THE SPACE BETWEEN THE WEBS IS TO BE FILLED WITH CLASS 'C' CONCRETE AND FINISHED IN LIKE MANNER AS THE SIDEWALK.

I. IN CASE OF CONFLICT WITH EXISTING UTILITIES, NOTIFY THE RESPECTIVE OWNERS FOR POSSIBLE RELOCATION OF LINES. DO NOT INCORPORATE UTILITY LINES INTO ANY PART OF THE INLET.

J. No. 57 SLAG, MINIMUM 3" THICK.

K. WHERE A CONCRETE GUTTER IS TO BE CONSTRUCTED IN CONJUNCTION WITH THE INLET THE T-PLATE MAY BE ELIMINATED, BUT A TEMPORARY FORM MUST BE CORRECTLY UTILIZED TO PLACE AND FINISH THE CONCRETE.

L. IN CONCRETE PAVEMENTS, PLACE ISOLATION JOINT WITH 1" PREMOLDED EXPANSION MATERIAL AS SHOWN.

604 INLET
CITY OF AKRON
NO. 3

DRAINAGE DETAILS

AA B/P# 71942R

CALC. BY. DATE	SUM-76-11.57	OHIO	552 / 1214
CHKD. BY. DATE	FED. PROJECT IR-76-2(44)19	F.H.W.A. REGION 5	

SUMMIT COUNTY

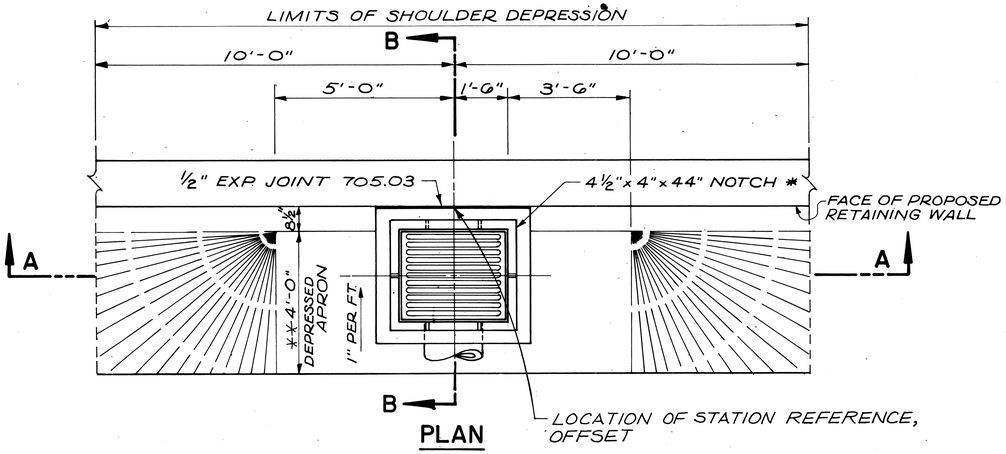

PLAN

INLET Nº 3, AS PER PLAN (Nº 1 AND 2)

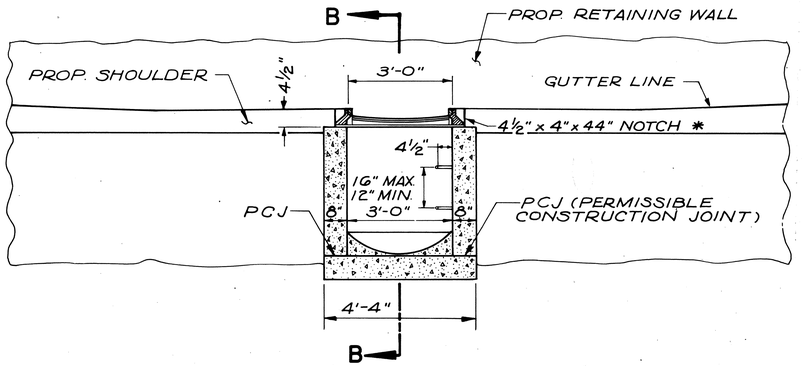

SECTION 'A-A'

INLET Nº 3, AS PER PLAN (Nº 1)

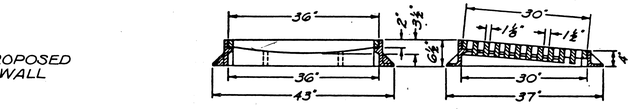

CASTING DETAILS

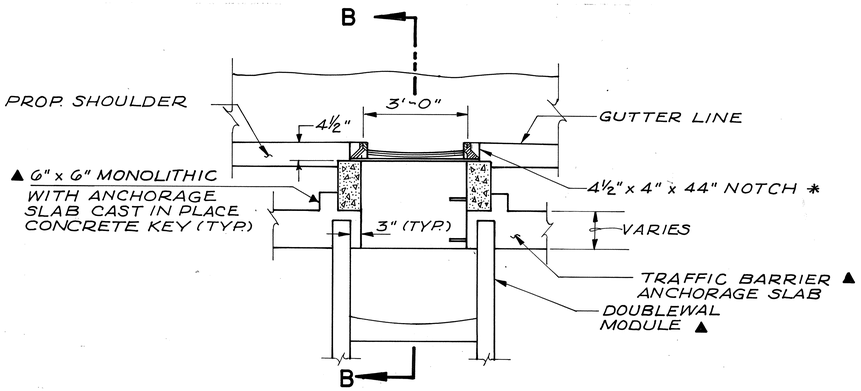

SECTION 'A-A'

INLET Nº 3, AS PER PLAN (Nº 2) ●

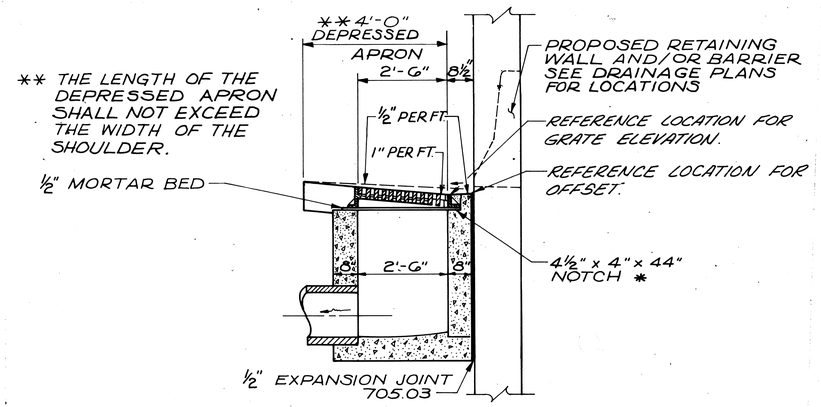

SECTION 'B-B'

INLET Nº 3, AS PER PLAN (Nº 1)

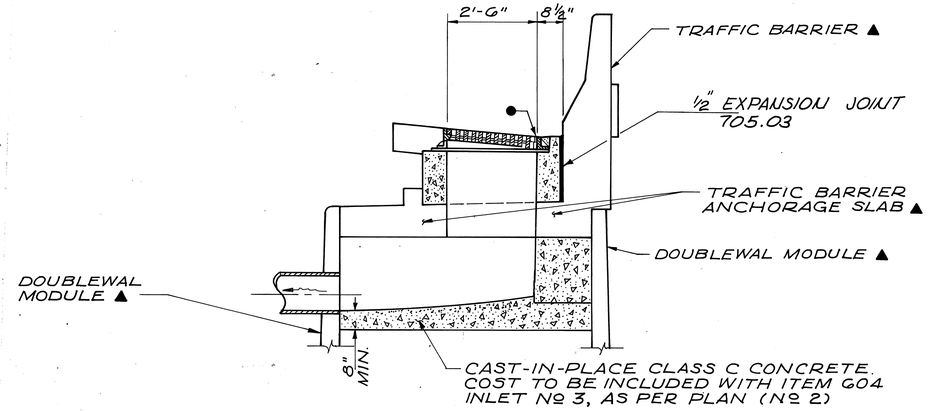

SECTION 'B-B'

INLET Nº 3, AS PER PLAN (Nº 2) ●

NOTES

WALLS: THE SECTIONS BETWEEN THE BASE AND THE UPPER PERMISSIBLE CONSTRUCTION JOINT MAY BE BUILT OF BRICK, CONCRETE BLOCK OR CAST-IN-PLACE CONCRETE, 8" NOMINAL THICKNESS FOR DEPTHS OF 12' OR LESS.

THE UNIT ABOVE THE UPPER PERMISSIBLE CONSTRUCTION JOINT MAY BE PRECAST OR CAST-IN-PLACE.

CONCRETE FOR PRECAST OR CAST-IN-PLACE CONSTRUCTION SHALL MEET THE REQUIREMENTS OF 511 CLASS C.

IF A SKEWED PIPE PROTRUDES MORE THAN 2" INSIDE A WALL, THE PIPE SHALL BE TRIMMED FLUSH AND FINISHED TO PROVIDE A NEAT APPEARANCE.

STEPS SHALL BE ACCORDANCE WITH STANDARD DRAWING MH-1.

INLETS OVER 12' IN DEPTH SHALL BE BUILT OF CLASS C CONCRETE REINFORCED BY PLACING 1/2" BARS 12" . CENTER-TO-CENTER BOTH VERTICALLY AND HORIZONTALLY WITH A 2" CLEARANCE FROM INSIDE FACE OF THE WALL.

IF DESIGN 1, REINFORCED EARTH, OR DESIGN 2, RETAINED EARTH RETAINING WALLS ARE CONSTRUCTED, THE INLET NO. 3, AS PER PLAN NO. 1 SHALL BE USED WITHIN THE WALL LIMITS. IF DESIGN 3, DOUBLEWAL RETAINING WALLS ARE CONSTRUCTED, THE INLET NO. 3, AS PER PLAN NO. 2 SHALL BE USED WITHIN THE WALL LIMITS.

* AFTER CASTING IS PLACED, FILL NOTCH W/ CLASS 'C' CONCRETE.

● FOR DETAILS, CALL OUTS AND DIMENSIONS NOT SHOWN, SEE INLET Nº 3, AS PER PLAN Nº 1.

▲ FOR TRAFFIC BARRIER DETAIL, ANCHORAGE SLAB DETAIL, DOUBLEWALL MODULE DETAIL AND KEY DETAIL SEE SHEET 803 .

NOT TO SCALE

INLET Nº 3
AS PER PLAN, (Nº 1 & 2)
DRAINAGE DETAILS

CALC. BY. DATE	SUM-76-11.57	OHIO	553
CHKD. BY. DATE	FED. PROJECT IR-76-2(44)19	F.H.W.A. REGION 5	12.14

SUMMIT COUNTY

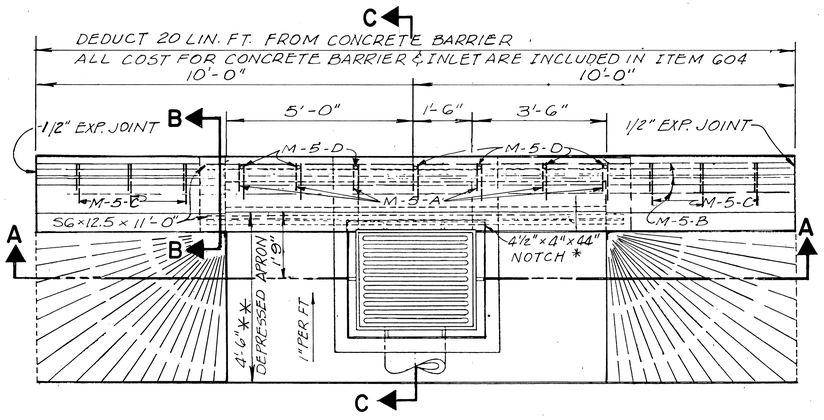

PLAN

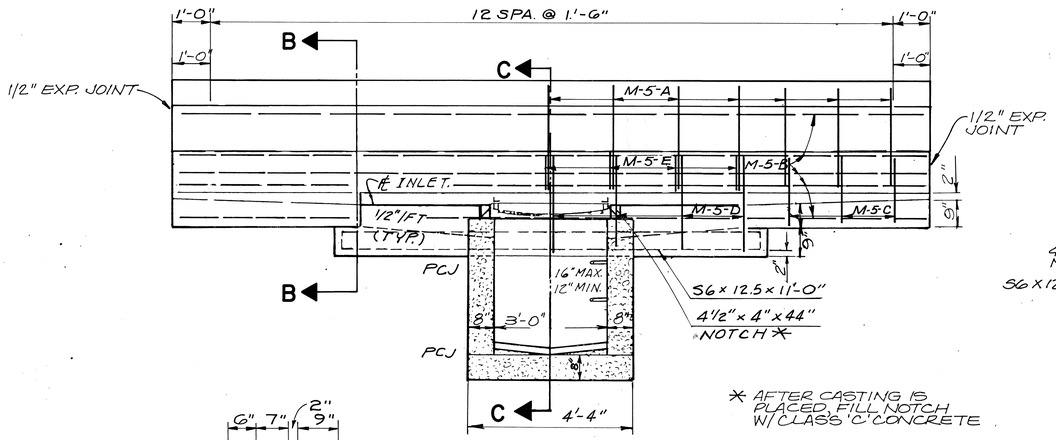

* AFTER CASTING IS PLACED, FILL NOTCH W/ CLASS 'C' CONCRETE

ELEVATION 'A-A'

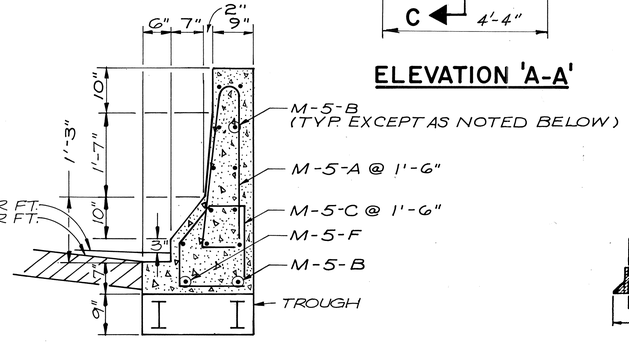

SECTION 'B-B'

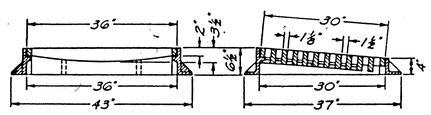

CASTING DETAILS

NOTES

WALLS: THE SECTIONS BETWEEN THE BASE AND THE UPPER PERMISSIBLE CONSTRUCTION JOINT MAY BE BUILT OF BRICK, CONCRETE BLOCK OR CAST-IN-PLACE CONCRETE, 8" NOMINAL THICKNESS FOR DEPTHS OF 12' OR LESS.

THE UNIT ABOVE THE UPPER PERMISSIBLE CONSTRUCTION JOINT MAY BE PRECAST OR CAST-IN-PLACE.

CONCRETE FOR PRECAST OR CAST-IN-PLACE CONSTRUCTION SHALL MEET THE REQUIREMENTS OF 511 CLASS C.

IF A SKEWED PIPE PROTRUDES MORE THAN 2" INSIDE A WALL, THE PIPE SHALL BE TRIMMED FLUSH AND FINISHED TO PROVIDE A NEAT APPEARANCE.

STEPS SHALL BE ACCORDANCE WITH STANDARD DRAWING MH-1.

INLETS OVER 12' IN DEPTH SHALL BE BUILT OF CLASS C CONCRETE REINFORCED BY PLACING 1/2" BARS 12" CENTER-TO-CENTER BOTH VERTICALLY AND HORIZONTALLY WITH A 2" CLEARANCE FROM INSIDE FACE OF THE WALL.

** *THE LENGTH OF THE DEPRESSED APRON SHALL NOT EXCEED THE WIDTH OF THE SHOULDER.*

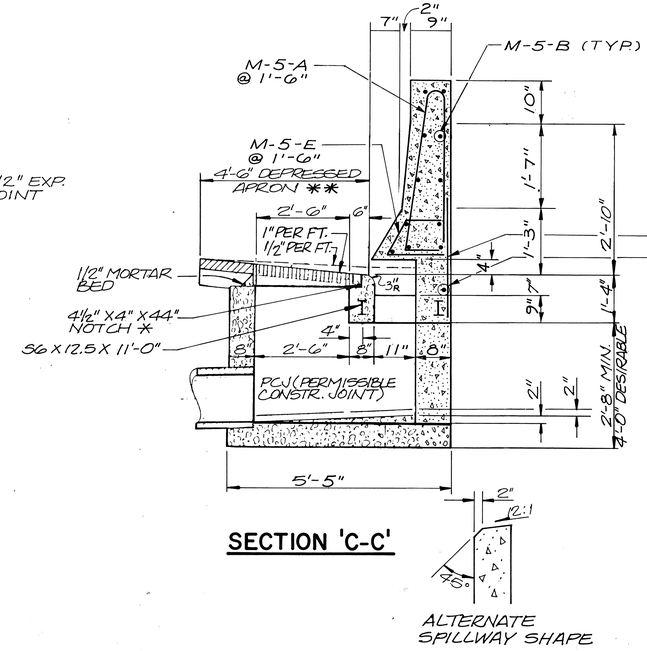

ALTERNATE SPILLWAY SHAPE

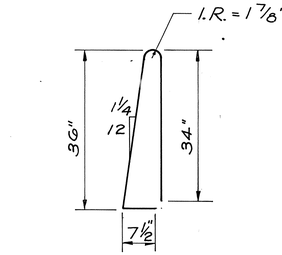

M-5-A

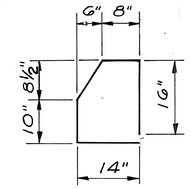

M-5-C

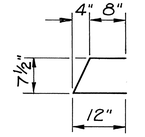

M-5-E

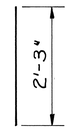

M-5-D (STRAIGHT BAR)

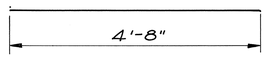

M-5-F (STRAIGHT BAR)

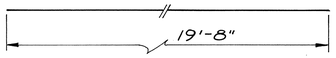

M-5-B (STRAIGHT BAR)

STEEL LIST												
M-5-A		M-5-B		M-5-C		M-5-D		M-5-E		M-5-F		SG×12.5
NO.	L.F.	NO.	L.F.	NO.	L.F.	NO.	L.F.	NO.	L.F.	NO.	L.F.	NO.	L.F.
13	6'-8"	12	19'-8"	6	4'-11"	7	2'-3"	7	2'-5"	2	4'-8"	2	11'-0"

ALL REINFORCING STEEL SHALL BE EPOXY-COATED IN ACCORDANCE WITH SECTION 509.10 OF THE SPECIFICATIONS. THE COST OF THIS COATING SHALL BE INCLUDED IN THE UNIT PRICE BID FOR ITEM-604 INLET NO. 3A AS PER PLAN.

INLET Nº. 3A , AS PER PLAN
NOT TO SCALE

CALC. BY. DATE	SUM-76-11.57	OHIO	554
CHKD. BY. DATE	FED. PROJECT IR-76-2(44) 19	F.H.W.A. REGION 5	1214

TYPICAL CONNECTION TO EXISTING SEGMENTAL BLOCK SEWER.
TYPICAL OF CONNECTION TO EXISTING BRICK SEWER, EXCEPT CONCRETE SHELL IS NOT REQUIRED IF SEWER IS IN GOOD CONDITION. ONLY ENCASEMENT OF STUB AND CONNECTION IS REQUIRED.

STEP 1 — PLACE 6" THICK REINFORCED CONCRETE SHELL COMPLETELY OVER SEWER MIN. 12" EACH SIDE OF NEW PIPE CONNECTION.
STEP 2 — CORE DRILL AND INSTALL VITRIFIED STUB.

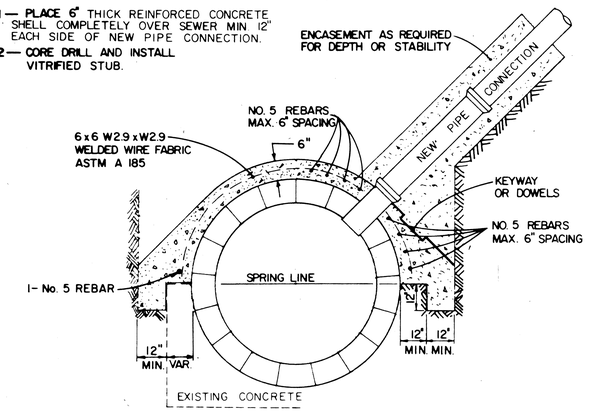

WHERE A CONCRETE HAUNCH DOES EXIST, THICKEN REINFORCED CONCRETE SHELL TO UNDISTURBED GROUND. DO NOT DISTURB CONCRETE HAUNCH.

WHERE NO CONCRETE HAUNCH EXISTS, THICKEN REINFORCED CONCRETE SHELL TO UNDISTURBED GROUND. DO NOT DISTURB GROUND BELOW SPRING LINE.

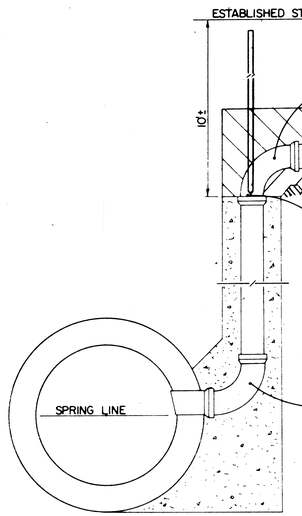

CONNECTION TO BRICK OR LARGER CONCRETE SEWER WHEN LATERAL STACK IS BEING CONSTRUCTED WITH MAIN SEWER.

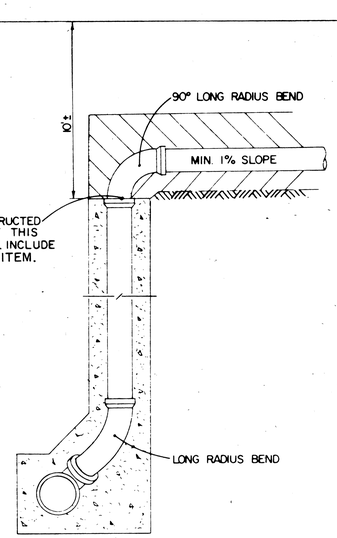

CONNECTION TO SMALLER CONCRETE AND VITRIFIED SEWER WHEN LATERAL STACK IS BEING CONSTRUCTED WITH MAIN SEWER.

SUMMIT COUNTY ORDINANCE GRADE

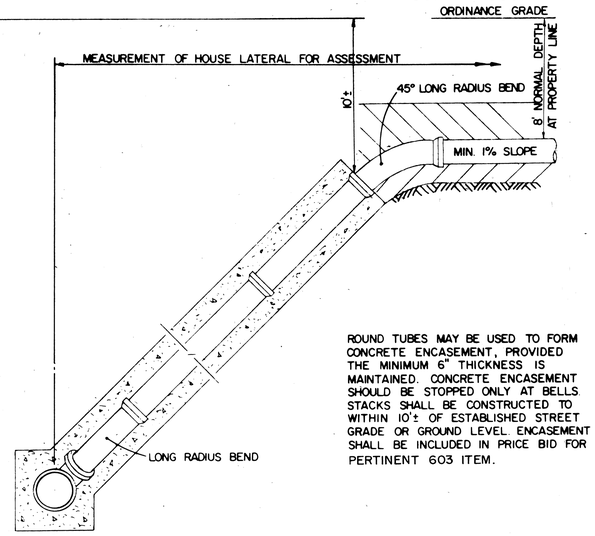

CONNECTION TO CONCRETE AND VITRIFIED SEWER WHEN LATERAL IS BEING CONSTRUCTED ON EXISTING SEWER.

ROUND TUBES MAY BE USED TO FORM CONCRETE ENCASEMENT, PROVIDED THE MINIMUM 6" THICKNESS IS MAINTAINED. CONCRETE ENCASEMENT SHOULD BE STOPPED ONLY AT BELLS. STACKS SHALL BE CONSTRUCTED TO WITHIN 10'± OF ESTABLISHED STREET GRADE OR GROUND LEVEL. ENCASEMENT SHALL BE INCLUDED IN PRICE BID FOR PERTINENT 603 ITEM.

METHODS OF CONSTRUCTING SANITARY LATERALS WHEN DEPTH OF SEWER IS 14' OR GREATER

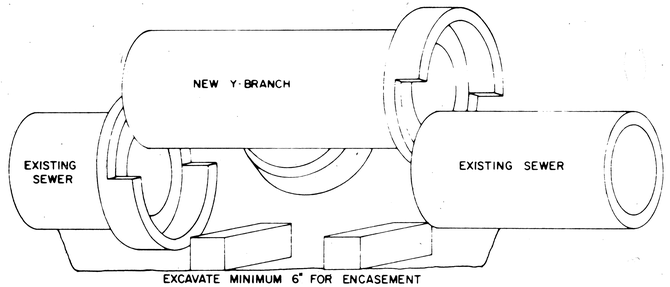

EXCAVATE MINIMUM 6" FOR ENCASEMENT

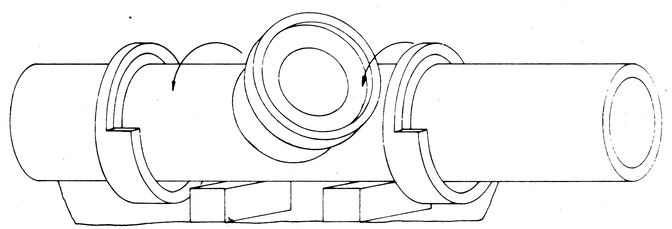

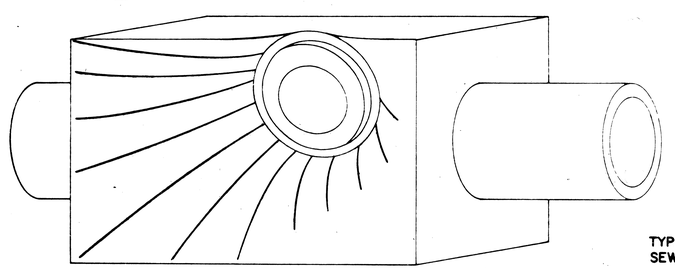

SAWCUT AND REMOVE THE UPPER HALF OF THE BELL OF THE NEW Y-BRANCH. SAWCUT AND REMOVE THE UPPER HALF OF THE BELL OF THE EXISTING SEWER PIPE OR NEW SHORT. PLACE THE NEW Y-BRANCH ON SUITABLE BLOCKING WITH THE "Y" ON THE OPPOSITE SIDE OF THE SEWER FROM THE PROPOSED LATERAL.

ROTATE THE Y-BRANCH 180°, BRINGING THE "Y" INTO THE CORRECT POSITION FOR THE PROPOSED LATERAL, WITH THE STUB TURNED SLIGHTLY UPWARDS. THE GOOD PORTION OF THE BELL OF EACH PIPE WILL NOW BE AT THE BOTTOM OF EACH JOINT. ALIGN INVERTS OF ALL PIPE AND PLACE JUTE PACKING INTO VOID AREAS IN THE BELLS.

FULLY ENCASE THE NEW Y-BRANCH WITH CLASS "C" CONCRETE 6" THICK, COMPLETELY COVERING BOTH BELLS OF THE SEWER AND THE BARREL AND BELL OF THE STUB.

STANDARD FOR INSTALLING Y-BRANCH IN VITRIFIED PIPE FOR SANITARY OR STORM LATERAL.

AN ACCEPTABLE ALTERNATE IS TO USE MANUFACTURED RUBBER COUPLINGS AS SUPPLIED BY LOGAN CLAY PIPE CO., OR EQUAL. APPROVED BY THE ENGINEER

TYPICAL Y-BRANCH INSTALLATION OR SEWER RECONSTRUCTION REPAIR METHOD

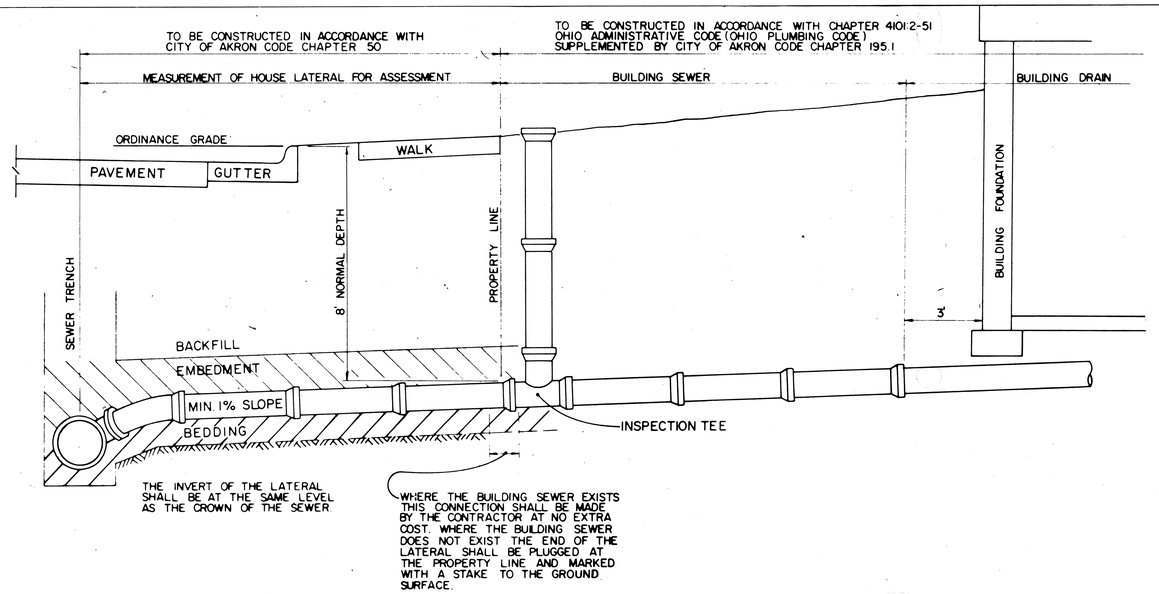

THE INVERT OF THE LATERAL SHALL BE AT THE SAME LEVEL AS THE CROWN OF THE SEWER.

WHERE THE BUILDING SEWER EXISTS THIS CONNECTION SHALL BE MADE BY THE CONTRACTOR AT NO EXTRA COST. WHERE THE BUILDING SEWER DOES NOT EXIST THE END OF THE LATERAL SHALL BE PLUGGED AT THE PROPERTY LINE AND MARKED WITH A STAKE TO THE GROUND SURFACE.

ALL CONCRETE SHALL BE CLASS 'C' 499.03
ALL REINFORCING STEEL SHALL HAVE MINIMUM 2" COVER.
ALL BEDDING SHALL BE CLASS 'B' MEETING THE REQUIREMENTS OF 703.04, AS PER 603.04
ALL EMBEDMENT SHALL MEET THE REQUIREMENTS OF 703.04

ALL BACKFILL SHALL MEET THE REQUIREMENTS OF 603.08
WHERE THE SAME PIPE MATERIAL IS NOT USED FOR THE ENTIRE LATERAL LENGTH, MANUFACTURED FITTINGS MUST BE USED TO CONNECT DIFFERENT MATERIALS.

DRAINAGE DETAILS

AA B.P# 71942R

CALC. BY. ____ DATE ____	SUM-76-11.57	OHIO	555 1214
CHKD. BY. ____ DATE ____	FED. PROJECT IR-76-2(44)19	F.H.W.A. REGION 5	

SUMMIT COUNTY

The Concrete outlet shall meet the requirements of Item 604 in the Construction & Materials Specifications. Payment shall be made on an Each basis. Payment shall include the cost of the Sod & Wire Cloth.

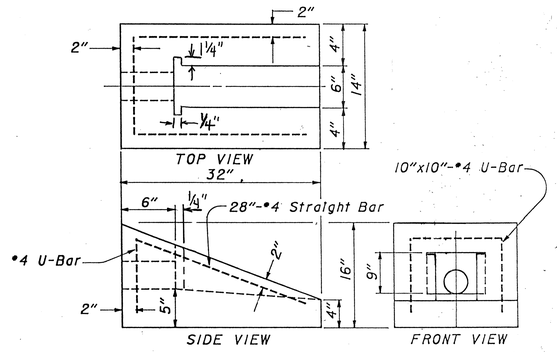

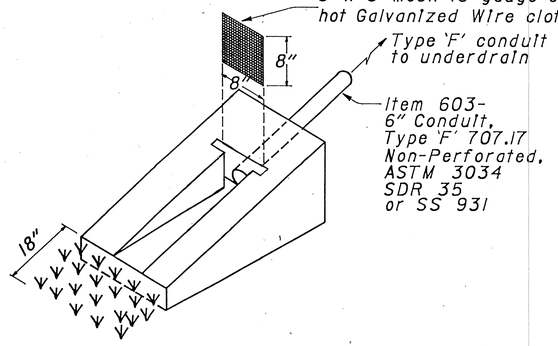

NOTE: The Sod shall be in accordance with Item 660 and staked at each corner approximately 3 inches in from the edge.

ITEM SPECIAL PRECAST REINFORCED CONCRETE OUTLET

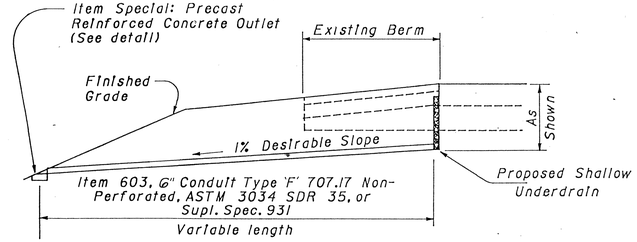

NOTE: For underdrain outlets into catch basins the above Type 'F' Conduit shall be used entirely between the underdrain & catch basin.

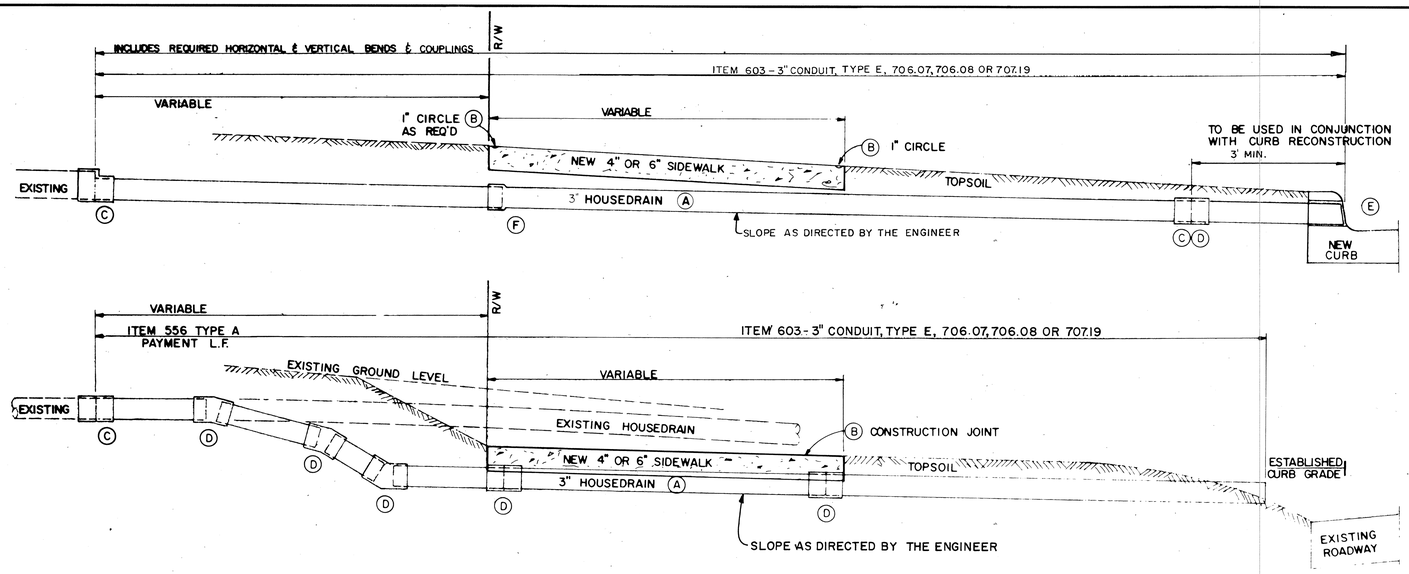

HOUSEDRAINS

HOUSEDRAINS

(A) HOUSEDRAINS MUST BE LAID ON UNDISTURBED OR COMPACTED GROUND ON A CONTINUOUS SLOPE FROM R/W TO CURB. CAUTION SHALL BE EXERCISED TO PREVENT THE PIPE FROM SAGGING OR BEING CRUSHED UNDER THE CONCRETE.

(B) WHERE HOUSEDRAINS CROSS UNDER WALKS, THE WALK SHALL BE MARKED WITH A 1" DIAMETER CIRCLE ON THE FRONT EDGE OVER THE PIPE. WHERE THE PIPE IS SKEWED 5° OR MORE BOTH EDGES OF THE WALK SHALL BE MARKED WITH A CIRCLE
WHERE ANY PORTION OF THE PIPE IS EMBEDDED IN THE CONCRETE, A CONSTRUCTION JOINT SHALL BE SAWCUT 2" INTO THE WALK DIRECTLY OVER THE PIPE

(C) CONNECTIONS TO EXISTING DRAIN PIPES SHALL INCLUDE ALL SUITABLE FITTINGS AND JOINTING AS NECESSARY.

(D) COUPLINGS SHALL BE PROVIDED AS SHOWN. BELL END PIPE MAY BE USED IN LIEU OF COUPLINGS, AS DIRECTED BY THE ENGINEER.

(E) HOLES SIZED COMPATIBLY TO THE PIPE SHALL BE PROVIDED THROUGH THE FINISHED CURB ONLY BY DRILLING. KEEP PIPE RECESSED 1/2".

(F) PIPE SHALL TERMINATE WITH BELL OR COUPLING (PLUGGED) WHEN THERE IS NO EXISTING HOUSEDRAIN TO CONNECT.

532011

DRAINAGE DETAILS

CALC. BY EJK DATE 4/91	SUM-76-11.57	OHIO	555A 12/14
CHKD. BY DJB DATE 4/91	FED. PROJECT IR-76-2(44)19	F.H.W.A. REGION 5	

SUMMIT COUNTY

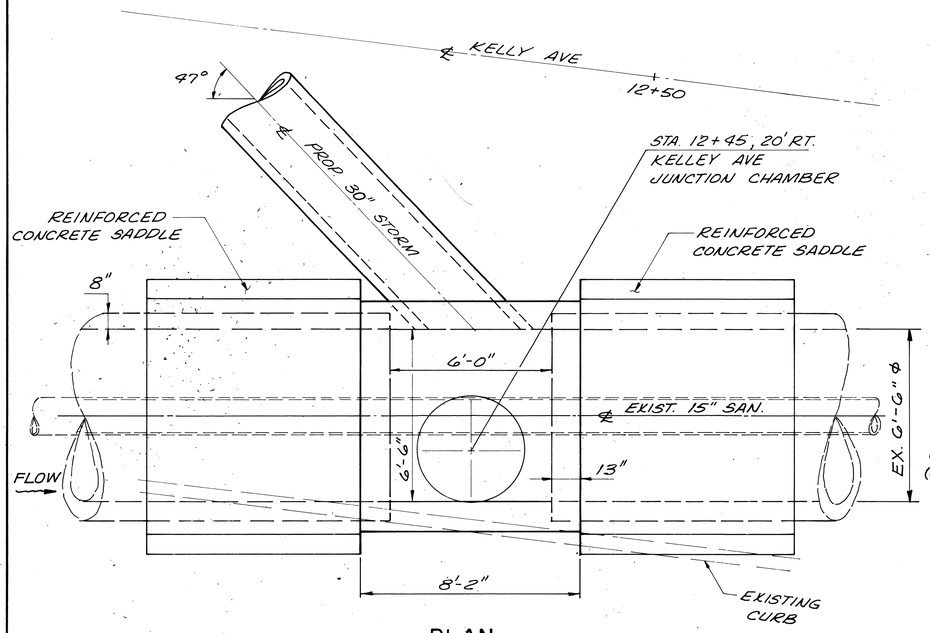

PLAN

(W/O CONCRETE CONE)
SCALE: 3/8" = 1'-0"

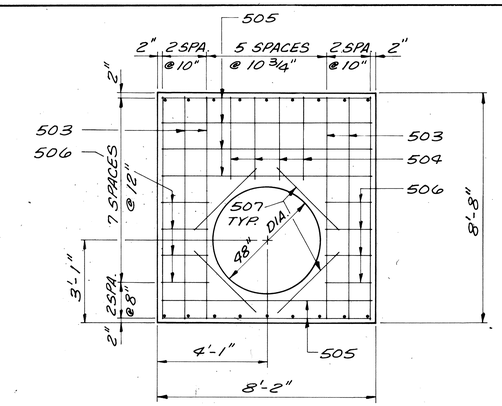

REINFORCING DETAILS - TOP SLAB

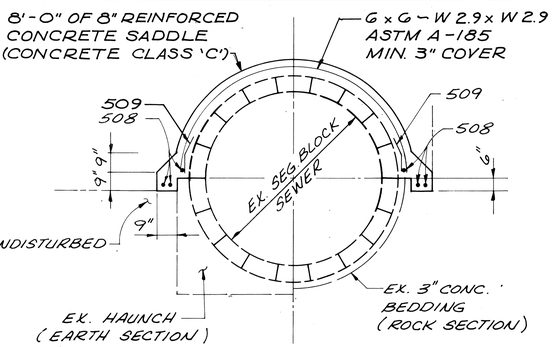

FRAME & COVER SHALL BE A NEENAH R1771 FRAME WITH A SOLID LID, OR EAST AKRON CASTING CO. NO. 100 FRAME WITH A NO. 102 LID OR EQUAL.

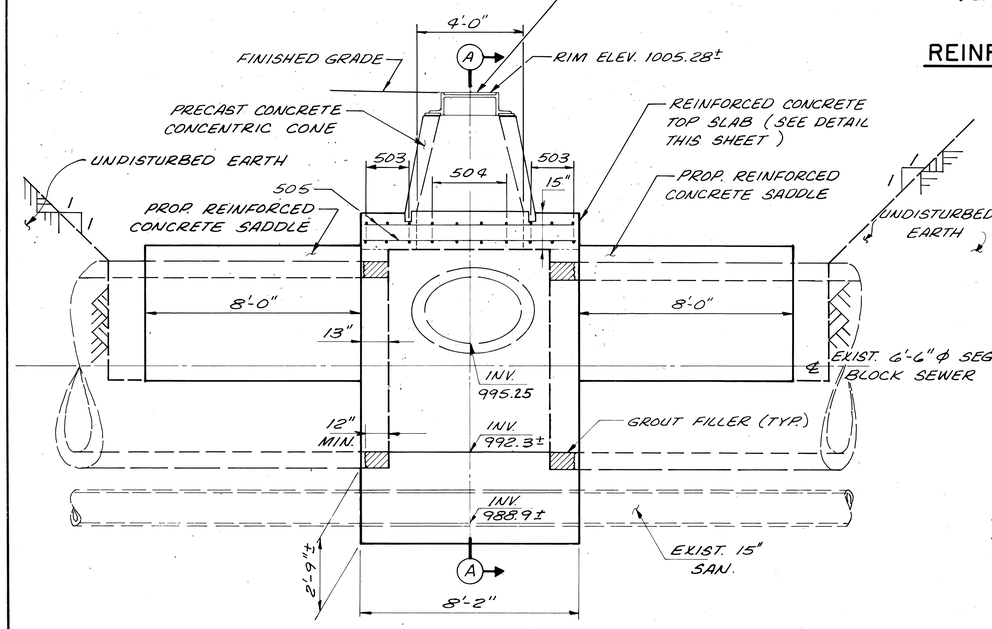

ELEVATION

SCALE: 3/8" = 1'-0"

REINFORCED CONCRETE SADDLE DETAIL

(2 REQUIRED) SCALE: 3/8" = 1'-0"

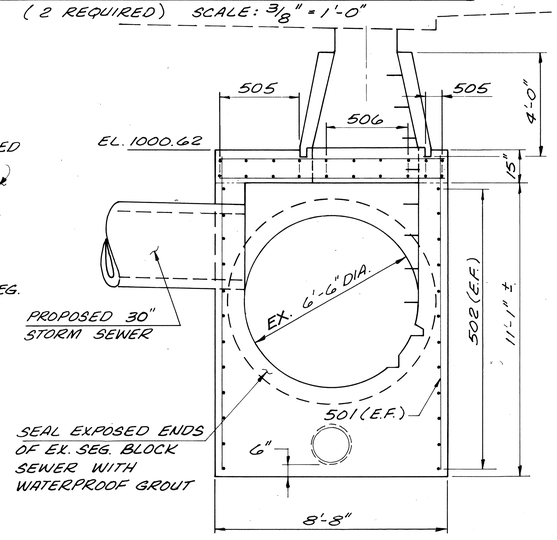

SECTION A-A

SCALE: 3/8" = 1'-0"

* INFORMATION ONLY

REINFORCING SCHEDULE (TOP SLAB)

BAR MARK	SIZE	NO.	LENGTH	POSITION	TYPE	WT. LBS.	CONC. C.Y.	SPACING
501	5/8"	18	11'-11"	VERTICAL BARS IN SIDE WALLS	STRAIGHT	223.9		11 1/2" C/C
502	5/8"	24	7'-8"	HORIZONTAL BARS IN SIDE WALLS	STRAIGHT	192.1		11 5/8" C/C
503	5/8"	12	8'-4"	LONG LONGITUDINAL BARS TOP AND BOTTOM FACE	STRAIGHT	104.4		10" C/C
504	5/8"	8	3'-3"	SHORT LONGITUDINAL BARS TOP AND BOTTOM FACE	STRAIGHT	27.1		10 3/4" C/C
505	5/8"	12	7'-10"	LONG TRANSVERSE BARS TOP AND BOTTOM FACE	STRAIGHT	98.1		AS SHOWN
506	5/8"	16	1'-9"	SHORT TRANSVERSE BARS TOP AND BOTTOM FACE	STRAIGHT	29.2		12" C/C
507	5/8"	8	3'-3"	DIAGONAL BARS AROUND 48" OPENING, TOP AND BOTTOM FACE	STRAIGHT	27.1		—
				CLASS 'C' CONCRETE FOR JUNCTION CHAMBER *			15.52	
					TOTAL	701.9	15.52	

* INFORMATION ONLY

REINFORCING SCHEDULE (CONCRETE SADDLE)

BAR MARK	SIZE	NO.	LENGTH	POSITION	TYPE	WEIGHT	SPACING	CLASS 'C' CONC.
508	5/8"	6	7'-6"	LONGITUDINAL BARS NEAR SPRINGLINE	STRAIGHT	46.9#	AS SHOWN	
509	5/8"	32	1'-6"	CORNER BENT BAR, VERTICAL	BENT	50.1#	6" C/C	
			8'-0"	MESH OVER CROWN, 10'-6" WIDE		35.3#		
				CONCRETE SADDLE *				6.3 C.Y.
					TOTAL	132.3#		6.3 C.Y.

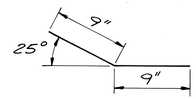

BAR 509

NOTES:

1. ALL CONCRETE SHALL BE CLASS 'C' CONCRETE.
2. ALL REINFORCING STEEL DEFORMED BARS SHALL HAVE A YIELD STRENGTH OF 60,000 PSI AND A MINIMUM COVER OF 3" OF CONCRETE.
3. WELDED SMOOTH WIRE FABRIC SHALL HAVE A YIELD STRENGTH OF 65,000 PSI AND A MINIMUM COVER OF 3" OF CONCRETE.
4. PAYMENT FOR THE REINFORCED CONCRETE SADDLES, INCLUDING REINFORCING STEEL AND CONCRETE SHALL BE PAID FOR UNDER ITEM 604, JUNCTION CHAMBER, AS PER PLAN.
5. FOR FRAME AND COVER, SHALL BE AS NOTED.
6. REINFORCED CONCRETE SADDLE SHALL BE CONSTRUCTED BEFORE REMOVING ANY PORTION OF THE EXISTING SEGMENTAL BLOCK SEWER.
7. FOR PAVEMENT REPLACEMENT, SEE DETAIL SHEET NO. 188. FOLLOWING ESTIMATED QUANTITIES HAVE BEEN INCLUDED FOR PAVEMENT REPLACEMENT IN THE VICINITY OF THE JUNCTION CHAMBER.
   - ITEM 305 - 8" CONCRETE BASE 77 SQ. YD.
   - ITEM 404 - ASPH. CONCRETE, AC-20 2.6 CU. YDS.
   - ITEM 407 - TACK COAT 6 GAL.

JUNCTION CHAMBER AS PER PLAN

DRAINAGE DETAILS

CALC. BY DATE	SUM-76-11.57	OHIO	5558
CHKD. BY DATE	FED. PROJECT IR-76-2(44)19	F.H.W.A. REGION 5	1214

SUMMIT COUNTY

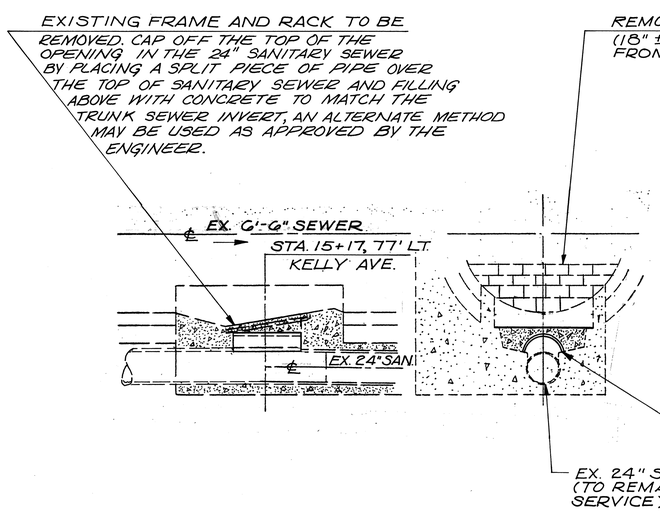

ITEM 202 - MANHOLE ABANDONED
AS PER PLAN
(NOT TO SCALE)

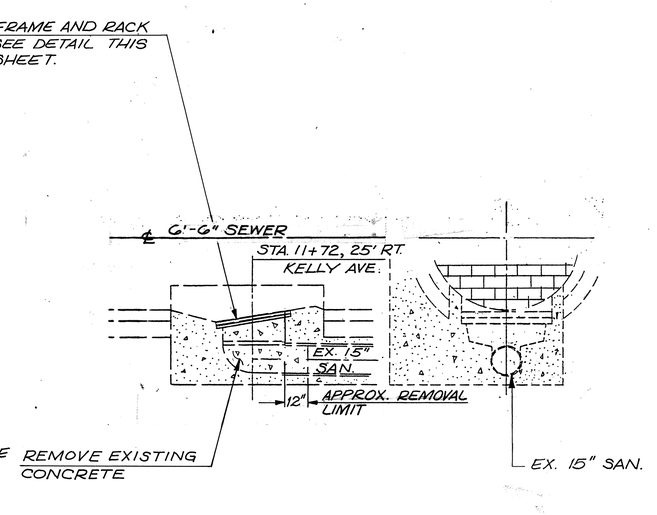

ITEM 604 - MANHOLE RECONSTRUCTED
AS PER PLAN
(NOT TO SCALE)

ITEM 202 - MANHOLE ABANDONED, AS PER PLAN

MANHOLE ABANDONED, AS PER PLAN, SHALL BE THE REMOVAL OF FRAME AND RACK, AND 18" HIGH BRICK WALL, AND INSTALLATION OF SPLIT PIECE OF PIPE OR AN ALTERNATE METHOD APPROVED BY THE ENGINEER, AS SHOWN ON MANHOLE ABANDONED DETAIL. SEE THIS SHEET.

UNIT PRICE BID FOR ITEM 202 - MANHOLE ABANDONED, AS PER PLAN, SHALL INCLUDE ALL LABOR AND MATERIALS REQUIRED.

ITEM 604 - MANHOLE RECONSTRUCTED, AS PER PLAN

MANHOLE RECONSTRUCTED, AS PER PLAN, SHALL BE THE REMOVAL OF EXISTING CONCRETE, PLACEMENT OF FRAME AND RACK (SEE DETAIL THIS SHEET), AND CONSTRUCTION OF A BRICK WALL (18" HIGH, 10' DOWNSTREAM OF RACK) AS SHOWN ON MANHOLE RECONSTRUCTED DETAIL. SEE THIS SHEET.

UNIT PRICE BID FOR ITEM 604 - MANHOLE RECONSTRUCTED, AS PER PLAN, SHALL INCLUDE ALL LABOR AND MATERIALS REQUIRED.

RACK SHALL BE GALOK RECTANGULAR ALUMINUM SWAGED GRATING TYPE S194 AS MANUFACTURED BY IKG INDUSTRIES, OR APPROVED EQUAL. GRATING SHALL BE CONSTRUCTED OF STRAIGHT, PARALLEL BEARING BARS 1 3/16" ON CENTER, 1" DEPTH AND 3/16" THICKNESS AND CROSS BARS PERPENDICULAR TO BEARING BARS AT 4" ON CENTER, SECURED BY MECHANICAL LOCKING. END BANDING BARS, 1" DEPTH AND 3/16" THICKNESS SHALL BE WELDED TO RACK ABOUT 4" ON CENTER FOR ENTIRE END OF EACH PANEL. MATERIAL FOR BEARING BARS SHALL BE ALUMINUM ALLOY 6063-T6 AND FOR CROSS BARS SHALL BE 6063-T5.

EACH GRATING SECTION SHALL BE PROVIDED WITH FOUR IKG TYPE C SADDLE CLIP ANCHORS (OR APPROVED EQUAL) DESIGNED TO FIT TWO BEARING BARS AND FOUR 1/4"Ø SELF DRILLING FASTENERS.

SUPPORT FRAME SHALL BE CONSTRUCTED OF FOUR 2" X 2" X 5/16" ANGLES OF ALUMINUM ALLOY 6061-T6. THESE ANGLES SHALL BE FIELD CUT TO DIMENSIONS SHOWN AND ATTACHED TO EXISTING CONCRETE BY 12 HILTI KWIK BOLT 3/8"Ø ANCHORS (OR APPROVED EQUAL), 3 EACH SIDE, EMBEDDED 4 1/2" MINIMUM INTO EXISTING CONCRETE. EACH ANCHOR BOLT SHALL HAVE A 1" DIAMETER NEOPRENE WASHER BETWEEN THE STEEL WASHER AND THE ALUMINUM ANGLE.

BACKS OF ALUMINUM SUPPORT FRAME ANGLES THAT WILL BE IN CONTACT WITH CONCRETE SHALL BE PROVIDED WITH TWO HEAVY COATS OF ASPHALTIC OR ZINC CHROMATE PAINT PRIOR TO THEIR INSTALLATION.

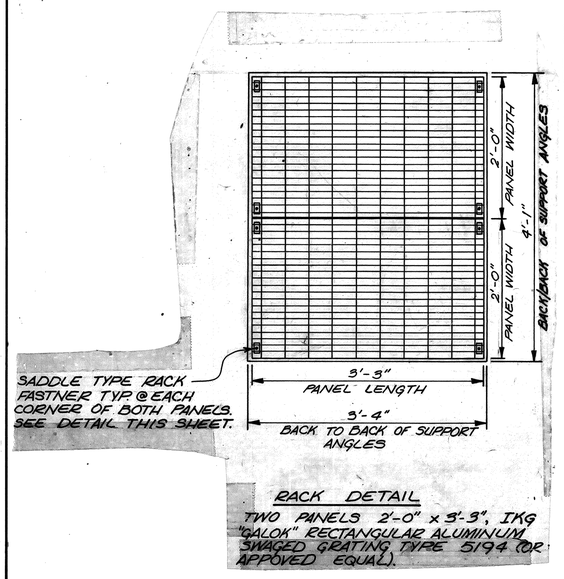

RACK DETAIL
TWO PANELS 2'-0" x 3'-3", IKG "GALOK" RECTANGULAR ALUMINUM SWAGED GRATING TYPE S194 (OR APPOVED EQUAL).

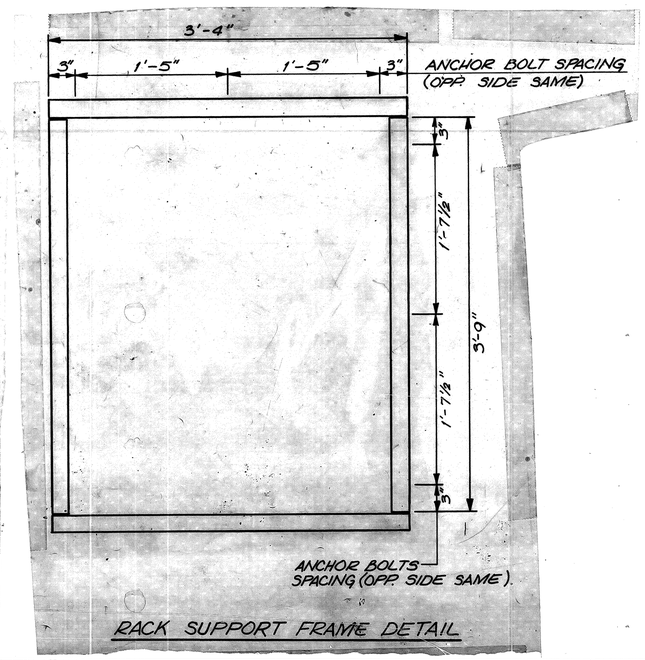

RACK SUPPORT FRAME DETAIL

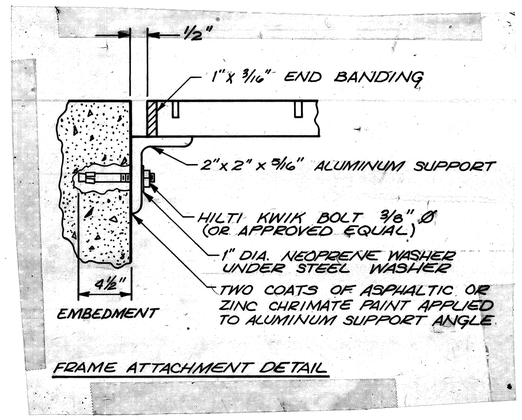

FRAME ATTACHMENT DETAIL

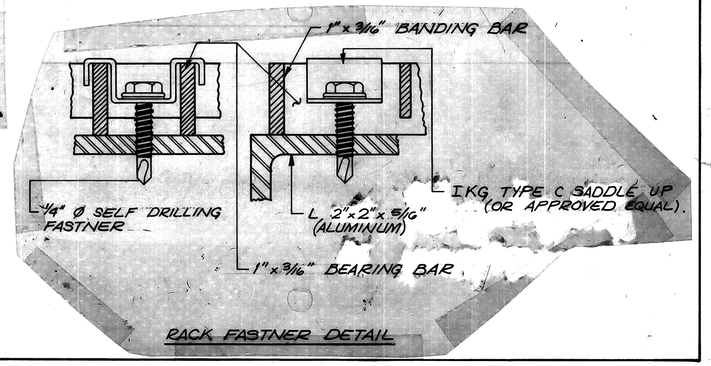

RACK FASTNER DETAIL

DRAINAGE DETAILS

GENERAL NOTES

SUM-76-11.57
FED. PROJECT IR-76-2(44)19
SUMMIT COUNTY

556
1214

REFERENCE: REFERENCE SHALL BE MADE TO SUPPLEMENTAL SPECIFICATION 943 - WOOD FIBER MULCHING MATERIAL DATED JUNE 10, 1987 AND STANDARD DRAWING LA-2 DATED JUNE 1, 1979.

PLANTING DETAIL:

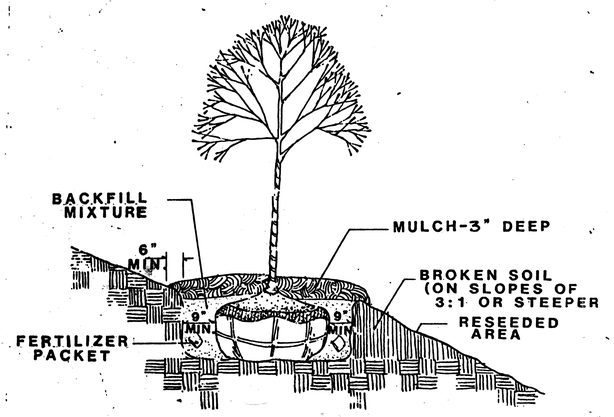

THE TOP OF THE ROOT BALL SHALL BE SET AT THE NORMAL GROUND LINE.

ON SLOPES WHERE HEAVY CLAY AND IMPERMEABLE SOILS ARE PRESENT, THE DOWNHILL SIDE OF THE POCKET HOLE SHALL BE BROKEN OR LOOSENED AND RETURNED TO ITS NATURAL GRADE TO PROVIDE DRAINAGE FOR THE HOLE.

PLANTING HOLE AND BED PREPARATION
AFTER THE LAYOUT IS APPROVED BY THE ENGINEER, SHRUB AND GROUND COVER BEDS SHALL BE CULTIVATED TO A MINIMUM DEPTH OF SIX (6) INCHES BY A PLOW, HARROW OR DISC, OR OTHER METHOD APPROVED BY THE ENGINEER. THE CULTIVATION SHALL TAKE PLACE AS FAR IN ADVANCE OF THE PLANTING OPERATION AS POSSIBLE. WHERE SHRUBS ARE SHOWN, INDIVIDUAL HOLES SHALL BE DUG ON CENTERS AS SHOWN ON THE PLANS. THESE HOLES SHALL ALLOW FOR A MINIMUM OF NINE (9) INCHES OF BACKFILL MIXTURE AROUND THE SIDES OF THE BALLS, THE BOTTOM OF THE HOLE SHALL BE NO DEEPER THAN THE BALL TO BE PLANTED. THE MATERIAL REMOVED FROM THE HOLES SHALL BE TAKEN FROM THE PROJECT IF IT IS FOUND TO BE UNACCEPTABLE FOR USE AS BACKFILL AS DETERMINED BY THE ENGINEER. THE PLANT SHALL THEN BE SET AND THE HOLE FILLED WITH BACKFILL MIXTURE, AND THE PLANTING OPERATION PERFORMED AS SPECIFIED IN ITEMS 662.17 AND 662.18. ALL EXCESS DIRT SHALL BE REMOVED FROM THE SITE.

EXISTING TREES AND SHRUBS SHALL TAKE PRIORITY OVER PROPOSED PLANTINGS. THE LOCATIONS OF THE PROPOSED TREES AND SHRUBS ARE APPROXIMATE AND MAY BE REARRANGED AT THE DIRECTION OF THE ENGINEER WHEN OBSTRUCTIONS ARE ENCOUNTERED.

IF AN AUGER IS USED IN DIGGING POCKET HOLES AND POLISHED (SHINY) SIDES OCCUR IN CLAY OR HEAVY SOIL, THE USE OF SUCH AN AUGER SHALL BE DISCONTINUED AND THE HOLES SHALL BE DUG WITH A BACKHOE OR ANOTHER APPROVED METHOD.

BACKFILL NO. 1: THE BACKFILL MIXTURE USED TO FILL POCKET HOLES IN LIGHT AND MEDIUM SOILS (SAND AND AVERAGE) SHALL CONSIST BY VOLUME OF TWO PARTS *SOIL CONDITIONER, TWO PARTS COMPRESSED SPHAGNUM PEAT OR THREE PARTS SEDGE PEAT, AND TWO PARTS APPROVED TOPSOIL.

BACKFILL NO. 2: THE BACKFILL MIXTURE USED TO FILL POCKET HOLES IN HEAVY SOILS (CLAY AND SHALE) SHALL CONSIST BY VOLUME OF ONE PART *SOIL CONDITIONER, ONE PART COMPRESSED SPHAGNUM PEAT OR TWO PARTS SEDGE PEAT, AND TWO PARTS APPROVED TOPSOIL.

INCORPORATE THOROUGHLY INTO THE BACKFILL MIXTURES FIVE POUNDS OF COMMERCIAL FERTILIZER (0-20-20) PER CUBIC YARD. THE ENGINEER, AFTER CONSULTATION WITH THE LANDSCAPE ARCHITECT, SHALL DETERMINE THE LOCATIONS WHERE THE BACKFILL MIXTURES SHALL BE USED.

SOIL CONDITIONER
SOIL CONDITIONER SHALL CONSIST OF CITY OF AKRON COMPOST OR APPROVED EQUAL.

TOPSOIL TESTING
TOPSOIL SHALL BE FREE OF JOHNSON GRASS AND CONFORM TO ITEM 653 AS DETERMINED BY THE ENGINEER.

PLANTING PERIOD OF ESTABLISHMENT
BEFORE FINAL INSPECTION, ALL PLANTINGS SHALL BE IN PLACE AND UNDER THE CARE OF THE CONTRACTOR FOR A PERIOD OF ESTABLISHMENT. THIS PERIOD SHALL BEGIN IMMEDIATELY UPON COMPLETION OF THE PLANTING OPERATION FOR ANY PLANT OR SPECIES GROUP AND CONTINUE UNTIL OCTOBER 1. IN NO CASE SHALL IT BE LESS THAN ONE GROWING SEASON, JUNE 1 TO OCTOBER 1.

DURING THIS PERIOD OF ESTABLISHMENT, IT SHALL BE THE CONTRACTOR'S RESPONSIBILITY TO FOLLOW SUCH HORTICULTURAL PRACTICES AS REQUIRED TO ASSURE THE VIGOR AND GROWTH OF THE TRANSPLANTED MATERIAL. THIS CARE SHALL INCLUDE WATERING, REMULCHING, RESTAKING, GUYING AND CULTIVATING. THERE SHALL BE A MINIMUM OF TWO WEEDING AND MOWING (BED EDGES, AROUND TREES AND GUY STAKES) PROGRAMS OF SUCH INTENSITY AS TO COMPLETELY RID THE PLANTED AND MULCHED AREAS OF WEEDS AND GRASSES. THE FIRST PROGRAM SHALL BEGIN ON OR ABOUT JUNE 15 AND THE OTHER APPROXIMATELY EIGHT WEEKS LATER.

EACH PLANT SHALL HAVE SUFFICIENT WATER TO KEEP IT IN A HEALTHY, GROWING CONDITION. IF LOCAL WEATHER CONDITIONS WARRANT, THE ENGINEER MAY REQUIRE WEEKLY WATERING. A SCHEDULE FOR WATERING EACH PLANT AND MAINTENANCE AS DESCRIBED IN THE PROCEEDING PARAGRAPH SHALL BE SUPPLIED TO AND APPROVED BY THE ENGINEER BEFORE PLANTING BEGINS. SOIL MOISTURE SHALL BE MEASURED IN EACH PLANTING ZONE BY A SOIL MOISTURE METER APPROVED BY THE ENGINEER. WATERING SHALL BE DONE ACCORDING TO THE WATERING TABLE WHEN INDICATED BY METER READINGS. THE WATER SHALL BE APPLIED IN SUCH A MANNER AS TO SATURATE THE ROOT AND MULCHED AREA OF EACH PLANT WITHOUT CAUSING RUN-OFF (SEE WATERING TABLE). IN CASE OF FALL PLANTINGS, THESE WATERINGS SHALL CONTINUE UNTIL SOIL FREEZES UP AND RECOMMENCE AFTER THE SPRING THAW, UNLESS OTHERWISE DIRECTED.

ON OR ABOUT SEPTEMBER 15, THE ENGINEER SHALL INSPECT THE PLANTING AND SUPPLY THE CONTRACTOR WITH A LISTING OF THOSE PLANTS HAVING DIED, DIED BACK BEYOND NORMAL PRUNING LINES, OR WHICH ARE MISSING FROM THE PLANTING. THE CONTRACTOR SHALL MAKE THE REPLANTING AS REQUIRED AND IN ACCORDANCE WITH THE SPECIFICATIONS FOR THE ORIGINAL MATERIAL. THESE REPLACEMENTS ARE NOT SUBJECT TO THE PERIOD OF ESTABLISHMENT, HOWEVER, PLANTS PLANTED INITIALLY IN THE FALL WHICH HAVE DIED BEFORE THE SPRING PLANTING SEASON SHALL BE REPLACED IMMEDIATELY AND ARE SUBJECT TO THE ESTABLISHMENT PERIOD.

AFTER REPLACEMENTS HAVE BEEN PLANTED, THE FINAL INSPECTION SHALL BE MADE AND THE ACTUAL COUNT OF LIVE PLANTS OF EACH VARIETY AND SPECIES LISTED FOR PAYMENT.

ITEM 661.21 - WATERING
WATER SHALL BE FURNISHED BY THE CONTRACTOR AND ALL PLANT MATERIAL SHALL BE WATERED THOROUGHLY AT THE TIME OF PLANTING REGARDLESS OF AMPLE MOISTURE CONTENT OF THE SURROUNDING SOIL. SUSPENSION OF WATERING OPERATIONS BECAUSE OF RAINFALL WILL BE DETERMINED BY THE ENGINEER IN CONSULTATION WITH THE LANDSCAPE ARCHITECT. AN AVERAGE OF ONE INCH OF RAINFALL PER WEEK SHALL BE CONSIDERED ADEQUATE. DETERMINATION OF RAINFALL SHALL BE BASED UPON THE USE OF A RAIN GAUGE APPROVED BY THE PROJECT ENGINEER, AND LOCATED WITHIN THE LIMITS OF THE PROJECT.

WATERING TABLE

SHRUBS 2'-3' SIZE	4 GAL. PER PLANT
SHRUBS 3'-4' SIZE	6 GAL. PER PLANT
TREES 4'-5' SIZE	9 GAL. PER PLANT
TREES 1-1/2" - 2-1/2"CAL.	20 GAL. PER PLANT

THE METHOD OF MEASUREMENT FOR SUMMER WATERING SHALL BE BY APPROVED METERING FROM TANKS OR BY INDIVIDUALLY MEASURED CONTAINERS TO EACH PLANT TO BE WATERED. PAYMENT FOR PLANTING PERIOD OF ESTABLISHMENT SHALL BE INCLUDED IN THE UNIT PRICE BID FOR ITEMS 661, 662 AND 663 AND IS CONSIDERED TO BE 15% OF THE COST FOR THE ITEM.

MULCH
MULCH SHALL BE AS PER ITEM 661.04 WITH THE FOLLOWING EXCEPTIONS: WOOD SHAVINGS OR PEAT MOSS OR CORN COBS SHALL NOT BE USED AS A TOP MULCH. WOOD CHIPS SHALL BE AGED (STOCKPILED) AT LEAST SIX MONTHS PRIOR TO PLACEMENT AROUND PLANTS. MULCH SHALL BE SIX INCHES LOOSE MEASUREMENT AFTER MULCHING. COMMERCIAL FERTILIZER (12-12-12) SHALL BE APPLIED AS SPECIFIED IN ITEM 662.18.

PRUNING
ALL PLANTS SHALL BE PRUNED WITHIN SEVEN DAYS AFTER PLANTING. THE PRUNING SHALL BE DONE ACCORDING TO SELECTED TYPICAL PLANTS OF EACH SPECIES PRUNED AND USED AS A SAMPLE AS DIRECTED BY THE ENGINEER.

ANY CANDLE GROWTH ON NEEDLE EVERGREENS WHICH EXCEED THREE INCHES AT PLANTING TIME SHALL BE CUT BACK TO THAT LENGTH IMMEDIATELY.

STAKING MATERIALS
ALL TREES SHALL BE STAKED AS SHOWN IN THE STANDARD DRAWING LA-2. STAKING OF SMALL ORNAMENTAL TREES SHALL BE SIMILAR TO THAT OF EVERGREENS.

FERTILIZER
FOUR OUNCE (8-YEAR) COMMERCIAL FERTILIZED PACKETS USED IN PLANTING OPERATION SHALL BE DELIVERED DRY IN ORIGINAL, UNOPENED CONTAINERS. FERTILIZER ANALYSIS SHALL BE 16% NITROGEN, 8% PHOSPHORIC ACID AND 16% POTASH. FERTILIZER SHALL BE OF A SLOW RELEASE TYPE IN A POLYETHYLENE PERFORATED PACKET WITH MICROPORE HOLES.

THE PACKETS SHALL BE PLACED SIX TO EIGHT INCHES DEEP AND EVENLY SPACED AROUND THE PERIMETER OF THE PLANTING HOLE, ADJACENT TO THE BALL OR ROOT MASS BUT NOT IN DIRECT CONTACT WITH THE ROOTS. THE PACKETS SHALL NOT BE CUT, RIPPED OR DAMAGED.

EACH SHRUB OR TREE SHALL BE FERTILIZED ACCORDING TO THE FOLLOWING SCHEDULE:

SHRUBS 2' - 3'	2 PACKETS
SHRUBS 3' - 4'	3 PACKETS
TREES 4' - 5'	3 PACKETS
TREES 1-1/2" - 2" CAL.	2 PACKETS
TREES 2" - 2'1/2" CAL.	3 PACKETS

IF IT BECOMES NECESSARY TO REMOVE AND REPLACE MISSING, DEAD OR UNHEALTHY PLANTS, ALL OLD PACKETS SHALL BE REPLACED WITH NEW PACKETS.

THE FOUR OUNCE 16-8-16 FERTILIZER PACKETS SHALL BE DESIGNATED BY THE MANUFACTURER TO BE EFFECTIVE FOR EIGHT YEARS. PACKETS SUCH AS "EEESY GROW" (SPECIALTY FERTILIZER, INC., BOX 355, SUFFERN, NEW YORK 10901, [914] 357-7722); "THE UNIQUE FEEDER" (UNIQUE FERTILIZER, INC., P.O. BOX 99, DEPTFORD, NEW JERSEY 08096, [609] 848-4444); OR AN APPROVED EQUAL SHALL BE USED.

HERBICIDES
THE MONTH PRIOR TO CULTIVATION AND PLANTING ALL SHRUB BEDS WILL BE TREATED WITH "ROUNDUP" BRAND HERBICIDE OR AN APPROVED EQUAL. AFTER PLANTING AND FERTILIZING HAVE BEEN COMPLETED AND APPROVED, THE SHRUB BEDS WILL BE TREATED WITH "SURFLAN" BRAND HERBICIDE OR AN APPROVED EQUAL. THE RATE AND METHOD OF APPLICATION SHALL BE IN STRICT CONFORMANCE WITH THE MANUFACTURER'S PRODUCT LABEL AND CONSISTENT WITH CURRENT PRACTICES FOR ROADSIDE MANAGEMENT. THIS WORK SHALL BE ACCOMPLISHED UNDER THE DIRECT SUPERVISION OF A PESTICIDE APPLICATOR LICENSED BY THE STATE OF OHIO, AND PROVIDED BY THE CONTRACTOR.

STORAGE AREAS
THE CONTRACTOR MAY STORE PLANT MATERIALS AND EQUIPMENT 30 FEET FROM PAVEMENT, BEHIND GUARDRAIL AND WITHIN OR ADJACENT TO THE PROJECT LIMITS BY OBTAINING OFFICIAL PERMISSION OF THE ENGINEER. NO PEDESTRIAN OR VEHICULAR TRAFFIC MAY BE IMPEDED NOR HAZARDOUS CONDITION CREATED AS A RESULT OF SUCH STORAGE. THESE AREAS MUST BE COORDINATED WITH AREAS DESCRIBED IN THE MAINTENANCE OF TRAFFIC NOTES.

THE STORAGE OF ALL DUG PLANTS SHALL CONFORM TO 661.14 WHETHER WITHIN THE PROJECT, ADJACENT THERETO, OR AT SOME OTHER LOCATION. THESE AREAS SHALL BE DESIGNATED PRIOR TO ACTUAL PLANT STORAGE AND SHALL BE OPEN TO INSPECTION UPON REQUEST OF THE ENGINEER.

SCHEDULING
ALL DIGGING AND PLANTING OF DECIDUOUS PLANTS SHALL BE DONE AFTER OCTOBER 1 AND BEFORE JUNE 1. EVERGREENS SHALL BE DUG AND PLANTED AFTER MARCH 15 AND BEFORE JUNE 1.

ITEMS 622 AND 663
ALL TREES AND SHRUBS SHALL BE SPECIMEN (NO. 1 GRADE) PLANTS WITH GROWTH AND BRANCHING HABIT TYPICAL OF THE SPECIES SPECIFIED. NO PARK GRADE (NO. 2 OR 3 GRADE) PLANTS WILL BE ACCEPTED.

BEFORE STARTING CONSTRUCTION, CONTRACTOR SHALL STAKE INDIVIDUAL TREE LOCATIONS, SHRUB BED LOCATIONS, AND GROUNDCOVER AREAS FOR APPROVAL BY THE ENGINEER. COST OF STAKING LOCATIONS SHALL BE PAID FOR UNDER COST OF TREE OR SHRUB ITEM.

NO TREES ARE TO BE PLANTED WITHIN DITCH LINES, OR CLOSER THAN 30' TO THE EDGE OF PAVEMENT. LOCATION OF DRAINAGE DITCHES ARE ONLY APPROXIMATE. ADJUST PLANT MATERIAL ACCORDINGLY IN FIELD.

SEEDING
QUANTITIES FOR SEEDING ARE CALCULATED FOR THE SOIL AREAS BETWEEN THE RIGHT-OF-WAY FENCE LINES, BETWEEN THE RIGHT-OF-WAY LINES IN UNFENCED AREAS, AND WITHIN THE WORK LIMITS FOR AREAS OUTSIDE THE RIGHT-OF-WAY LINES COVERED BY WORK AGREEMENT OR SLOPE EASEMENT.

ITEM 659 - AGRICULTURAL LIMING, AS PER PLAN
THE LOCATION AND NEED FOR AGRICULTURAL LIMING WILL BE DETERMINED BY LABORATORY TESTS, AFTER ROUGH GRADING OPERATIONS HAVE BEEN PERFORMED. QUANTITIES OF AGRICULTURAL LIMING, AS SHOWN ON THE PLANS, ARE SUFFICIENT FOR THE ENTIRE PROJECT, BUT WILL BE NON-PERFORMED FOR THOSE AREAS WHERE TESTS SHOW THAT THE LIMING IS NOT REQUIRED.

ALL TREES, SHRUBS, AND SIGNS PLANTED OR INSTALLED BEHIND GUARDRAIL SHALL BE A MINIMUM OF 6.5' FROM FACE OF GUARD-RAIL.

ALL TREES PLANTED ON THE MAINLINE SHALL BE A MINIMUM OF 31' FROM EDGE OF PAVEMENT. THE EXCEPTION IS TREES PLANTED BEHIND GUARDRAIL, CONCRETE BARRIER, AND RETAINING WALL.

GENERAL NOTES

ITEM 659 - SEEDING AND MULCHING, AS PER PLAN
TWO INCHES OF CITY OF AKRON COMPOST SHALL BE DISKED INTO THE TOP 4" - 6" OF SOIL. AN APPROVED EQUAL MATERIAL WILL BE ACCEPTABLE.

COST FOR THIS OPERATION SHALL BE INCLUDED IN ITEM 659 - SEEDING AND MULCHING, AS PER PLAN.

MATERIAL CAN BE OBTAINED FROM THE CITY OF AKRON COMPOSTING FACILITY, 2677 RIVERVIEW ROAD, AKRON, OHIO 44313, PHONE: (216) 864-2621.

~~ITEM 659 - SEEDING AND MULCHING, AS PER PLAN~~
~~ALL AREAS TO BE SEEDED WITH BIRDSFOOT TREFOIL SHALL BE SEEDED AT A RATE OF 1-1/2 POUNDS PER 1000 SQUARE FEET WITH THE FOLLOWING MIXTURE:~~

~~33 PERCENT BIRDSFOOT TREFOIL (LOTUS CORNICULATUS L. VIKING)~~

~~PERCENT PERENNIAL RYEGRASS (LOLIUM PERENNE)~~

CLEARING AND GRUBBING
CLEARING AND GRUBBING REQUIRED FOR THE PURPOSE OF LANDSCAPING SHALL BE PERFORMED AS DIRECTED BY THE ENGINEER. NO SEPARATE PAYMENT WILL BE MADE FOR THIS WORK, BUT THE COST IS TO BE INCLUDED IN THE COST OF ITEM 201 - CLEARING AND GRUBBING OF THE ROADWAY PLAN.

SPECIFICATIONS FOR WILDFLOWER SEEDING AND MULCHING

ITEM SPECIAL-WILDFLOWER SEEDING AND MULCHING

PART 1 - DESCRIPTION
PART 2 - MATERIAL
PART 3 - SEED BED PREPARATION
PART 4 - SEEDING AND MULCHING
PART 5 - METHOD OF MEASUREMENT
PART 6 - BASIS FOR PAYMENT

PART 1 - DESCRIPTION. THIS ITEM SHALL CONSIST OF FURNISHING ALL LABOR, TOOLS, MACHINERY, MATERIALS AND PROCESSES REQUIRED FOR THE PLANTING OF WILDFLOWER SEED AS SPECIFIED HEREIN AND AS SHOWN ON THE PLANS.

PART 2 - MATERIALS. ALL SEED SHALL MEET THE REQUIREMENTS OF A CERTIFIED SEED TEST LABORATORY, INCLUDING THE TESTING AND LABELING OF THE BULK SEED.

SEED SHALL BE OF THE PREVIOUS SEASON CROP AND THE ANALYSIS SHOWN ON THE SEED CONTAINER SHALL BE DATED WITHIN SEVEN MONTHS PRIOR TO THE PLANTING DATE.

EACH SEED SPECIES SHALL BE SHIPPED IN INDIVIDUAL SEED CONTAINERS. SEED CONTAINER SHALL BE CLEARLY LABELED AND SHALL BE FREE OF NOXIOUS WEEDS AND AT LEAST 90% SPECIFIED WILDFLOWER VARIETIES. THE SEED TAGS ON EACH CONTAINER SHALL INDICATE THE BOTANICAL NAME, COMMON NAME, PURITY, GERMINATION PERIOD, AND SHALL VERIFY THAT THE ENCLOSED SEED MEETS ALL REQUIREMENTS OF A CERTIFIED SEED TESTING LABORATORY AS WELL AS THE OHIO DEPARTMENT OF TRANSPORTATION.

AFTER ALL SEED HAS BEEN TESTED, THE CERTIFIED RESULTS SHALL BE GIVEN TO THE ENGINEER PRIOR TO PLANTING.

THE SEED MIXTURE, INDIVIDUAL RATES OF PLANTING AND THE MINIMUM ACCEPTABLE RATE OF GERMINATION FOR EACH SEED SPECIES (AS TESTED BY A CERTIFIED SEED TESTING LABORATORY) WILL BE INCLUDED IN THE PLANS.

THE MULCHING MATERIALS SHALL BE A WOOD CELLULOSE MULCH IN ACCORDANCE WITH SUPPLEMENTAL SPECIFICATION 943.

WILDFLOWER SEEDING MIXTURE

SPECIES	RATE/ACRE	MIN. GERMINATION
COREPSIS LANCEOLATA--LANCED LEAF	10 LBS.	85%
DELPHINUM AJACIS--ROCKET LARKSPUR	2 LBS.	80%
ECHINACEA PURPUREA--PURPLE CONEFLOWER	12 LBS.	85%
HESPERIS MATRONALIS--DAMES ROCKET	2 LBS.	75%
PAPAVER RHOEAS--CORN POPPY	2 LBS.	75%
RATIBIDA COLUMNIFERA--PRAIRE CORNFLOWER	2 LBS.	70%
RUDBECKIA HIRTA--BLACKEYED SUSAN	2 LBS.	70%

PART 3 - SEED BED PREPARATION. ALL AREAS TO BE SEEDED ON NEW CONSTRUCTION PROJECTS SHALL BE FREE OF FOREIGN MATERIALS AND ROCK THREE INCHES OR GREATER IN ANY DIMENSION AND SHALL BE SATISFACTORILY SHAPED AND FINISHED AS PROVIDED IN 203.

AREAS OF EXISTING GRASS-COVERED SITES TO BE SEEDED WITH WILDFLOWERS SHALL FIRST BE MOWED TO A HEIGHT OF ONE INCH. ALL GRASS CUTTINGS SHALL THEN BE REMOVED PRIOR TO TREATING THE AREAS WITH AN ALL-PURPOSE POST-EMERGENCY HERBICIDE APPLIED ACCORDING TO THE MANUFACTURER'S INSTRUCTIONS. THE HERBICIDE SHALL BE LEFT UNDISTURBED ON THE VEGETATION FOR A PERIOD OF TEN DAYS, AFTER WHICH ALL DEAD PLANT MATERIALS SHALL BE REMOVED.

AREAS TO BE SEEDED SHALL HAVE A SMOOTH SURFACE, EQUIVALENT TO THAT PRODUCED BY HAND RAKING. PAYMENT FOR THE WORK NECESSARY FOR PROPER PREPARATION OF THE SEED BED WILL BE INCLUDED IN THE UNIT PRICE FOR 203.

PART 4 - WILDFLOWER SEEDING AND MULCHING. THE WILDFLOWER SEED SHALL BE UNIFORMLY AND EVENLY DISTRIBUTED OVER THE AREAS INDICATED ON THE PLANS OR AS DIRECTED BY THE ENGINEER.

THE AMOUNT AND TYPE SEED PLANTED PER ACRE SHALL CONFORM TO THE RATES INDICATED IN A SEED MIXTURE NOTE ON THE PLANS.

WILDFLOWER SEEDING SHALL BE DONE IN THE PERIOD AFTER MARCH 1 AND BEFORE APRIL 30 OR IN THE PERIOD AFTER SEPTEMBER 1 AND BEFORE NOVEMBER 30. THE OPERATION OF PLANTING THE SEED SHALL NOT BE ATTEMPTED WHEN THE GROUND IS FROZEN OR MUDDY, OR WHEN THE SOIL OR WEATHER CONDITIONS WOULD PREVENT THE PROPER SOIL PREPARATION AND SUBSEQUENT OPERATIONS AS SPECIFIED.

THE WILDFLOWER SEED SHALL BE PLANTED [redacted] BY A DRILL TYPE SEEDER SPECIFICALLY CALIBRATED FOR EACH SEED TYPE. IF THE DRILL TYPE SEEDER IS USED, SEED TYPES MUST NOT BE MIXED WITH OTHER TYPES. HOWEVER, SEEDS OF LIKE SIZE AND SHAPE MAY BE MIXED FOR THE PLANTING OPERATION WITH THE APPROVAL OF THE ENGINEER.

THE METHOD OF PLANTING USED SHALL INSURE THAT THE SEED WILL MAKE DIRECT POSITIVE CONTACT WITH THE SOIL BUT NOT BE PLANTED DEEPER THAN THE DEPTH RECOMMENDED FOR THE SEED SIZE OF THE PARTICULAR SPECIES BEING PLANTED. THE METHOD OF INSTALLATION SHALL BE CAPABLE OF PLANTING THE SEED IN ALL AREAS SHOWN ON THE PLANS.

WITHIN 48 HOURS AFTER ANY GIVEN AREA IS SEEDED, WOOD CELLULOSE MULCHING MATERIAL SHALL BE PLACED EVENLY OVER THE ENTIRE SEED BED. THE WOOD CELLULOSE MULCH AND ITS RATE OF APPLICATION SHALL CONFORM TO SUPPLEMENTAL SPECIFICATION 943.

THE CONTRACTOR SHALL MAINTAIN ALL SEEDED AND MULCHED AREAS UNTIL THE FINAL INSPECTION. MAINTENANCE SHALL INCLUDE REPAIRING ANY AREAS DAMAGED FOLLOWING THE WILDFLOWER SEEDING AND MULCHING OPERATION DUE TO WIND, WATER, FIRE OR OTHER CAUSES. DAMAGED AREAS SHALL BE REPAIRED TO RE-ESTABLISH THE CONDITION AND GRADING OF THE AREA PRIOR TO SEEDING AND SHALL THEN BE RESEEDED AND REMULCHED, TO THE SATISFACTION OF THE ENGINEER.

PART 5 - METHOD OF MEASUREMENT. MEASUREMENT OF WILDFLOWER SEEDING AND MULCHING WILL BE THE ACTUAL NUMBER OF ACRES SEEDED, MULCHED, COMPLETED AND ACCEPTED.

PART 6 - BASIS OF PAYMENT. PAYMENT FOR ACCEPTED QUANTITIES WILL BE MADE AT THE CONTRACT PRICE FOR:

ITEM	UNIT	DESCRIPTION
SPECIAL	ACRE	WILDFLOWER SEEDING AND MULCHING

ITEM SPECIAL - PREPARATION OF CROWNVETCH PLANTING SITES
ALL VEGETATION ON AREAS NOTED ON PRINTS OR AS DETERMINED BY THE ENGINEER TO BE PLANTED WITH CROWNVETCH SHALL BE CONTROLLED WITH A POST-EMERGENT HERBICIDE SUCH AS ROUNDUP, OR APPROVED EQUAL AS DETERMINED BY THE ENGINEER PRIOR TO PLANTING CROWNVETCH. HERBICIDE SHALL BE APPLIED AT THE RATE RECOMMENDED BY THE MANUFACTURER. CROWNVETCH SHALL NOT BE PLANTED UNTIL COMPLETE CONTROL OF NUISANCE VEGETATION HAS BEEN DETERMINED BY THE ENGINEER. MORE THAN ONE APPLICATION MAY BE REQUIRED TO ACHIEVE DESIRED RESULTS.

NUISANCE VEGETATION CONTROLLED UNDER THIS ITEM MAY BE LEFT IN PLACE AND/OR USED FOR MULCHING IF APPROVED BY THE ENGINEER.

METHOD OF MEASUREMENT. QUANTITY TO BE PAID FOR SHALL BE THE AREA PREPARED FOR THE CROWNVETCH PLANTING SITES, AS MEASURED AND DETERMINED BY THE ENGINEER.

BASIS OF PAYMENT. PAYMENT FOR ACCEPTED QUANTITIES WILL BE MADE AT THE CONTRACT PRICE FOR:

ITEM	UNIT	DESCRIPTION
ITEM SPECIAL	ACRE	PREPARATION OF CROWNVETCH PLANTING SITES

ITEM SPECIAL - PLANTING CROWNVETCH
DESCRIPTION. THIS ITEM SHALL CONSIST OF FURNISHING AND PLANTING CROWNVETCH CROWNS OR PLANTS IN AREAS NOTED OR SHOWN ON PLANS AND/OR AS SPECIFIED, OR AS DIRECTED BY THE ENGINEER. INCLUDED IN THIS WORK IS THE FURNISHING AND INCORPORATING OF LIME, FERTILIZER, INSTALLING PLANTS, MULCH, WATER, CLEAN-UP AND ALL INCIDENTALS NECESSARY TO COMPLETE THIS ITEM.

LIME. CONTRACTOR SHALL APPLY AGRICULTURAL LIMESTONE ACCORDING TO THE RATE AND METHOD DETERMINED BY THE SOIL ANALYSIS AND RECOMMENDATIONS AND/OR AS DIRECTED BY THE ENGINEER.

FERTILIZER. CONTRACTOR SHALL APPLY 5-10-10 AT 800 POUNDS PER ACRE EVENLY OVER THE AREA(S) PROPOSED FOR PLANTING.

CROWNS AND PLANTS. CROWNS SHALL BE ONE TO TWO YEAR-OLD SEEDLINGS PRODUCED FOR THE PURPOSE OF TRANSPLANTING. PLANTS SHALL BE WELL ROOTED IN INDIVIDUAL GROWING CELLS.

PLANTING. CROWNS AND/OR PLANTS DELIVERED TO THE PLANTING SITE SHALL BE SET IN THE SHADE AND KEPT WATERED UNTIL PLANTED. PLANTING SHALL BE ACCOMPLISHED BY USING A NARROW SHOVEL OR SIMILAR TOOL FOR CROWNS, AND A 3"-4" AUGER OR SIMILAR TOOL FOR PLANTS, BOTH CAPABLE OF MAKING A SUFFICIENTLY DEEP HOLE TO ACCOMMODATE THE ENTIRE ROOT SYSTEM WITHOUT BENDING OR WRAPPING OF ROOTS. SOIL AROUND CROWN OR PLANT SHALL THEN BE TAMPED AFTER PLANTING, MAKING SURE ENTIRE ROOT SYSTEM OR BALL HAS COMPLETE CONTACT WITH SURROUNDING SOIL. ON SLOPES, LEAVE A DEPRESSION OR "RAIN POCKET" ABOVE CROWN OR POT TO CATCH RAIN WATER.

MULCHING. ON COMPLETTION OF A GIVEN AREA, THE CROWNS OR PLANTS SHALL BE MULCHED WITH ONE AND A HALF (1 1/2) INCHES OF STRAW OR HAY MULCH. MULCH SHALL BE HELD IN PLACE WITH AN ASPHALT SPRAY.

CROWNVETCH - THE INTENT OF THIS PLAN IS THAT ALL AREAS DESIGNATED FOR SEEDING AND MULCHING SHALL FIRST BE PLANTED WITH CROWNVETCH CROWNS OR PLANTS, AND THEN, BE SEEDED AS INDICATED IN ITEM 659.

QUANTITIES FOR PLANTING AND SEEDING OF CROWNVETCH ARE CALCULATED FOR THE SOIL AREAS BETWEEN THE RIGHT-OF-WAY FENCE LINES, BETWEEN THE RIGHT-OF-WAY LINES IN UNFENCED AREAS, AND WITHIN THE WORK LIMITS FOR AREAS THE RIGHT-OF-WAY LINES COVERED BY WORK AGREEMENT OR SLOPE EASEMENT.

WATERING. CONTRACTOR SHALL WATER CROWNS OR PLANTS WITHIN 2 HOURS OF PLANTING A GIVEN AREA OF 10,000 SQUARE FEET OR AN AREA DETERMINED BY THE ENGINEER TO BE WATERED. WATERING SHALL BE OF AN AMOUNT AND METHOD TO MOISTEN THE ENTIRE ROOT SYSTEM. TWO DAYS AFTER PLANTING, CROWNVETCH SHALL BE WATERED A SECOND TIME, TO A FULL DEPTH OF THE ROOT SYSTEM.

GUARANTEE. ALL CROWNS AND PLANTS SHALL BE GUARANTEED FOR ONE YEAR AFTER PRELIMINARY ACCEPTANCE OF THE PLANT MATERIAL. SHOULD REPLACEMENT FALL DUE DURING A NON-PLANTING SEASON, THE CONTRACTOR MAY REQUEST PERMISSION TO DEFER PLANTING UNTIL THE PROPER SEASON. CONTRACTOR SHALL REPLACE ALL DEAD CROWNS OR PLANTS DURING THE ONE-YEAR GUARANTEE PERIOD, WHEN 3 OR MORE PLANTS WITHIN ANY 100 SQUARE FOOT AREA HAVE DIED.

FINAL INSPECTION AND ACCEPTANCE. UPON COMPLETION OF THE ONE YEAR GUARANTEE PERIOD, THE ENGINEER SHALL MAKE A FINAL INSPECTION. ALL PLANTS NOT FOUND IN A HEALTHY, VIABLE CONDITION, FREE OF INSECTS AND DISEASES, SHALL BE REPLACED BY THE CONTRACTOR. THE CONTRACTOR, ON BEING NOTIFIED IN WRITING, SHALL COMPLETE REPLACEMENTS AND OTHER NOTED WORK IN A REASONABLE PERIOD OF TIME AS DETERMINED BY THE ENGINEER. COMPLETION OF CORRECTIONAL WORK TO THE SATISFACTION OF THE ENGINEER WILL CONSTITUTE FINAL ACCEPTANCE.

METHOD OF MEASUREMENT. QUANTITIES TO BE PAID FOR SHALL BE THE NUMBER OF CROWNS OR PLANTS PLANTED, FERTILIZED, LIMED, WATERED AND MULCHED, COMPLETED IN PLACE, AS MEASURED BY THE ENGINEER.

BASIS OF PAYMENT. PAYMENT FOR ACCEPTED QUANTITIES WILL BE MADE AT THE CONTRACTOR PRICE FOR:

ITEM	UNIT	DESCRIPTION
ITEM SPECIAL	EACH	PLANTING CROWNVETCH

ITEM 630 - SIGN, FLAT SHEET, AS PER PLAN

SIGN DETAIL #R-154C
#TC-41.20 3/26/79

LANDSCAPING GENERAL SUMMARY

CALC. BY TK DATE 11-89	SUM-76-1157	OHIO
CHK'D BY SL DATE 7-90	FED. PROJECT IR-76-2(44)19	FHWA REGION 5

SUMMIT COUNTY

558 1214

ITEM	SHEET NUMBER 559	560	561	562	563	564	565	566	567
659	6,765	16,054	11,214	31,718	39,474	8,157	22,821	22,405	2,300
SPEC	—	—	1.3	—	—	—	—	—	—
659	338	692	561	1,586	1,974	408	1,141	1,120	115
659	1	1	1	3	4	1	2	2	1
659	3	6	5	14	18	4	10	10	1
659	15	30	24	69	84	18	49	48	6
659	61	124	101	285	351	73	205	202	26
660	—	—	6666	—	—	—	—	—	—
661	37	—	37	87	59	7	41	—	—
662	—	—	—	—	—	—	—	55	5
662	181	—	133	486	224	51	375	152	—
663	43	58	55	254	346	63	351	162	9
663	13	19	26	144	38	3	—	100	7
663	11	24	24	67	126	11	57	83	9
663	72	144	126	149	184	23	209	128	—
SPEC.	1.4	3.3	1.8	6.6	1	1.7	4.7	4.6	0.5
SPEC.	3,805	9,030	4,808	17,841	1,795	4,589	12,837	12,603	1,294
630	39	38.5	44	72	126.5	27.5	66	49.5	22
630	11	10.5	12	20	34.5	7.5	18	13.5	6

ITEM	ITEM EXT.	GRAND TOTAL	UNIT	DESCRIPTION
659	10001	160,908	SQ YD	SEEDING & MULCHING, AS PER PLAN * See Sheet 557
SPEC	6591020Z	1.3	ACRE	WILDFLOWER SEEDING AND MULCHING
659	14000	7,935	SQ YD	REPAIR SEEDING AND MULCHING *
659	20000	16	TON	COMMERCIAL FERTILIZER *
659	30000	71	TON	AGRICULTURAL LIMING, AS PER PLAN * See Sht. 556
659	35000	343	MGAL	WATER *
659	40000	1,428	MSQFT	MOWING *
660	30000	6666	SQ YD	SODDING *
661	00500	268	CU YD	MULCH
662	11500	60	EACH	DECIDUOUS SHRUB, 2'-3' HEIGHT, B&B 12"
662	12000	1,602	EACH	DECIDUOUS SHRUB, 3'-4' HEIGHT, No. 5 Cont.
663	12000	1,341	EACH	DECIDUOUS FLOWERING TREE, 2"-2½" CALIPER, B&B 28"
663	21000	350	EACH	DECIDUOUS SHADE TREE, 2"-2 1/2" CALIPER, B&B 28"
663	21500	412	EACH	DECIDUOUS SHADE TREE, 2 1/2" - 3" CALIPER, B&B 32"
663	33000	1,035	EACH	EVERGREEN TREE, 6'-7' HEIGHT, B&B 24"
661	99910	25.6	ACRE	PREPARATION OF CROWNVETCH PLANTING SITES, SEE SHEET 557
661	99900	68,602	EACH	PLANTING CROWNVETCH, 2" OR 2 YR. PEAT POT OR CROWN, 4' O.C., SEE SHT. 557
630	02100	485	LIN FT	GROUND MOUNTED SUPPORT, NO. 2 POST
630	80101	133	SQ FT	SIGN, FLAT SHEET, AS PER PLAN, SEE SHEET 557

* QUANTITIES CARRIED UNDER "EROSION CONTROL" ON GENERAL SUMMARY SHEET 94.

REVISED 8-18-92

AA B/P# 71942R

CALC. BY. TK DATE 11-89	SUM-76-11.57	OHIO	559
CHKD. BY. SL DATE 7-90	FED. PROJECT-IR-76-2(44)19	F.H.W.A. REGION 5	1214

SUMMIT COUNTY

PAY ITEM	DESCRIPTION	SYMBOL	BOTANICAL NAME	COMMON NAME	QUANTITY
ITEM 659,	SEEDING & MULCHING, APP.				6,765 SQ YD
ITEM 659,	REPAIR SEEDING & MULCHING				338 SQ YD
ITEM 659,	COMMERCIAL FERTILIZER				1 TON
ITEM 659,	AGRICULTURAL LIMING				3 TON
ITEM 659,	WATER				15 M GAL
ITEM 659,	MOWING				61 CU YD
ITEM 661,	MULCH				37 CU YD
DECIDUOUS SHRUBS					
ITEM 662,	SIZE 3'-4', CONDITION B & B 14" OR NO. 5 CONT.	F`NS'	FORSYTHIA `NORTHERN SUN'	NORTHERN SUN FORSYTHIA	181
DECIDUOUS FLOWERING TREES					
ITEM 663,	SIZE 2" - 2 1/2" CAL., CONDITION B & B 28"	M`RJ'	MALUS `RED JEWEL'	RED JEWEL CRABAPPLE	43
DECIDUOUS SHADE TREES					
ITEM 663,	SIZE 2 1/2" - 3" CAL., CONDITION B & B 32"	FA`CC'	FRAXINUS AMERICANA `CHAMPAIGN COUNTY'	CHAMPAIGN COUNTY WHITE ASH	11
ITEM 663,	SIZE 2" - 2 1/2" CAL., CONDITION B & B 28"	PX`R'	POPLULUS X `ROBUSTA'	ROBUSTA POPLAR	13
EVERGREEN TREES					
ITEM 663,	SIZE 6'-7', CONDITION B & B 24"	PN	PINUS NIGRA	AUSTRIAN PINE	72
ITEM 630,	GROUND MOUNTED SUPPORT, NO. 2 POST				39 LIN FT
ITEM 630,	SIGN, FLAT SHEET, AS PER PLAN				11 SQ FT
ITEM SPEC.,	PREPARATION OF CROWNVETCH PLANTING SITES				14 ACRE
ITEM SPEC.,	PLANTING CROWNVETCH, 4' O.C.		CORONILLA VARIA 'PENNGIFT'	PENNGIFT CROWN-VETCH	3,805

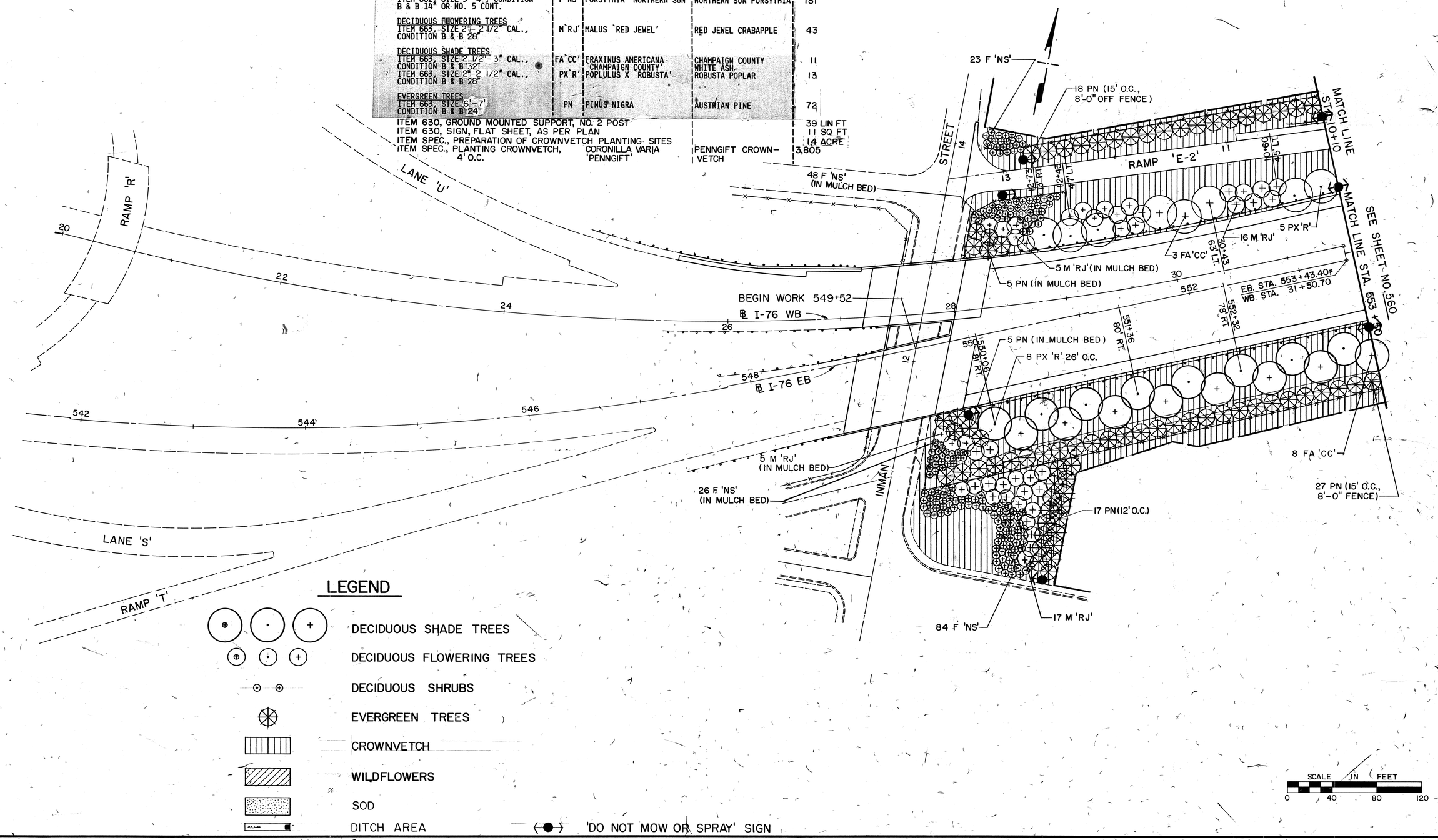

LEGEND

- DECIDUOUS SHADE TREES
- DECIDUOUS FLOWERING TREES
- DECIDUOUS SHRUBS
- EVERGREEN TREES
- CROWNVETCH
- WILDFLOWERS
- SOD
- DITCH AREA
- 'DO NOT MOW OR SPRAY' SIGN

SCALE IN FEET
0 40 80 120

AA-BAN 7148R

CALC. BY. TK DATE 11-89	SUM-76-11.57 FED. PROJECT IR-76-2(44)19	OHIO F.H.W.A. REGION 5	560 1214
CHKD. BY. SL DATE 7-90			

SUMMIT COUNTY

PAY ITEM	DESCRIPTION	SYMBOL	BOTANICAL NAME	COMMON NAME	QUANTITY
ITEM 659,	SEEDING & MULCHING, APP				16,054 SQ YD
ITEM 659,	REPAIR SEEDING & MULCHING				692 SQ YD
ITEM 659,	COMMERCIAL FERTILIZER				1 TON
ITEM 659,	AGRICULTURAL LIMING				6 TON
ITEM 659,	WATER				30 M GAL
ITEM 659,	MOWING				124 M SQ FT
DECIDUOUS FLOWERING TREES					
ITEM 663, 2"-2 1/2" CAL., CONDITION B & B 28"		M`IM'	MALUS `INDIAN MAGIC'	INDIAN MAGIC CRABAPPLE	58
DECIDUOUS SHADE TREES					
ITEM 663, SIZE 2 1/2"-3" CAL., CONDITION B & B 32"		FA`CC'	FRAXINUS AMERICANA `CHAMPAIGN COUNTY'	CHAMPAIGN COUNTY WHITE ASH	19
ITEM 663, SIZE 2"-2 1/2" CAL., CONDITION B & B 28"		PX`R'	POPULUS X `ROBUSTA'	ROBUSTA POPLAR	19
ITEM 663, SIZE 2 1/2"-3" CAL., CONDITION B & B, 32"		UX`H'	ULMUS X HOMESTEAD	HOMESTEAD ELM	5
EVERGREEN TREES					
ITEM 663, SIZE 6'-7' CONDITION B & B 24"		PN	PINUS NIGRA	AUSTRIAN PINE	144
ITEM 630, GROUND MOUNTED SUPPORT, NO. 2 POST.					38.5 LIN FT
ITEM 630, SIGN, FLAT SHEET, AS PER PLAN.					10.5 SQ FT
ITEM SPEC., PREPARATION OF CROWNVETCH PLANTING SITES.					3.3 ACRE
ITEM SPEC., PLANTING CROWNVETCH 4'-0" O.C.			CORONILLA VARIA 'PENNGIFT'	PENNGIFT CROWNVETCH	9,030

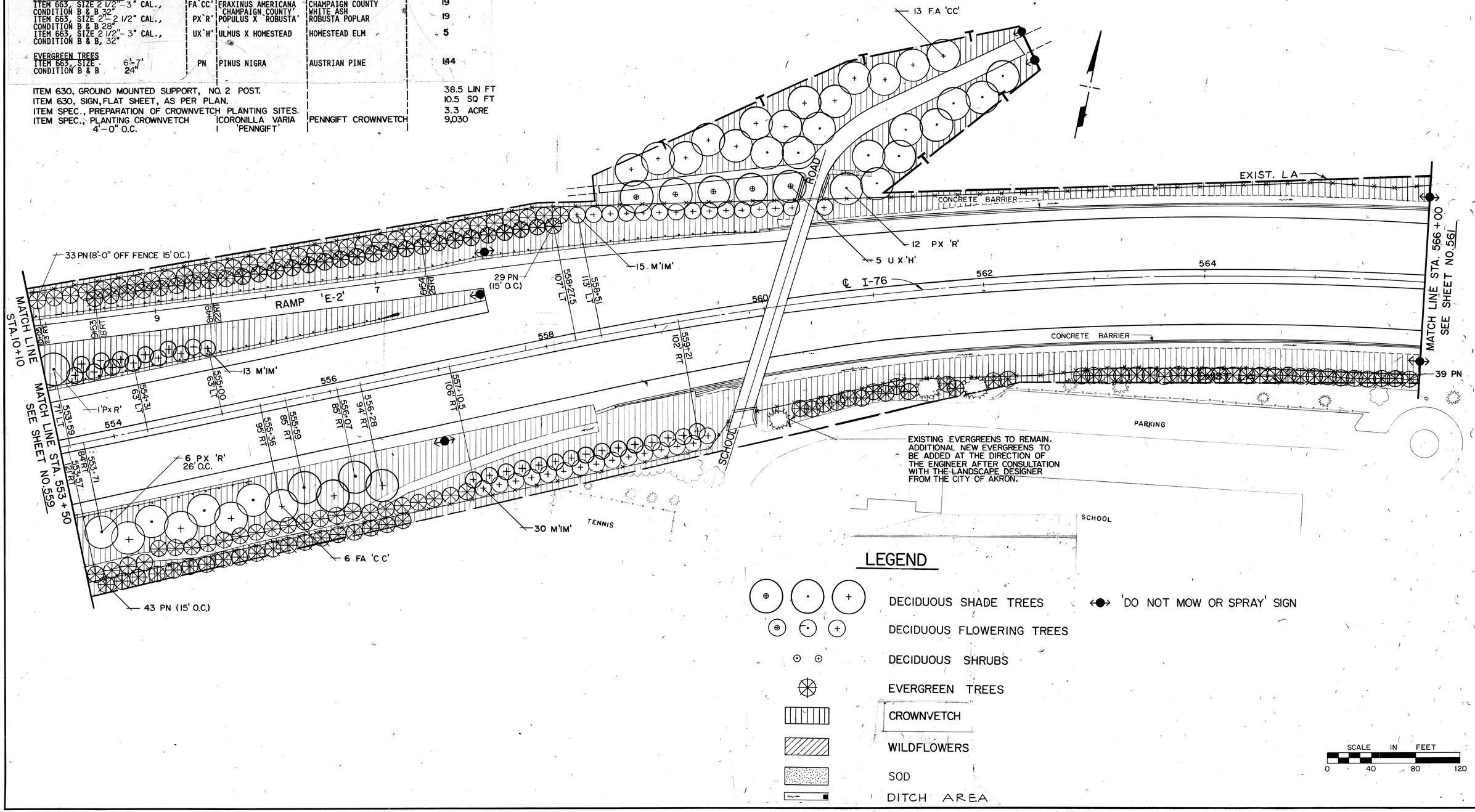

LEGEND

- DECIDUOUS SHADE TREES
- DECIDUOUS FLOWERING TREES
- DECIDUOUS SHRUBS
- EVERGREEN TREES
- CROWNVETCH
- WILDFLOWERS
- SOD
- DITCH AREA
- 'DO NOT MOW OR SPRAY' SIGN

SCALE IN FEET
0 40 80 120

AA B/P+ 71942R

PAY ITEM DESCRIPTION	SYMBOL	BOTANICAL NAME	COMMON NAME	QUANTITY
ITEM 659, SEEDING & MULCHING, APP				11,214 SQ YD
ITEM 659, REPAIR SEEDING & MULCHING				561 SQ YD
ITEM 659, COMMERCIAL FERTILIZER				1 TON
ITEM 659, AGRICULTURAL LIMING				5 TON
ITEM 659, WATER				24 M GAL
ITEM 659, MOWING				101 M SQ F
ITEM 660, SODDING				666 SQ YD
ITEM 661, MULCH				37 CU YD
DECIDUOUS SHRUBS				
ITEM 662, SIZE 3'-4' CONDITION B & B 14" OR NO. 5 CONT.	F`NS'	FORSYTHIA `NORTHERN SUN'	NORTHERN SUN FORSYTHIA	123
ITEM 662, SIZE 3'-4' CONDITION B & B OR NO. 5 CONT.	VD	VIBURNUM DENTATUM	ARROW-WOOD VIRBURNUM	10
DECIDUOUS FLOWERING TREES				
ITEM 663, 2"-2 1/2" CAL., CONDITION B & B 28"	M`HG'	MALUS `HARVEST GOLD'	HARVEST GOLD CRABAPPLE	4
ITEM 663, SIZE 2"-2 1/2" CAL., CONDITION B & B 28"	M`RB'	MALUS `RED BARON'	RED BARON CRABAPPLE	35
ITEM 663, SIZE 2"-2 1/2" CAL., CONDITION B & B 28"	M`RJ'	MALUS `RED JEWEL'	RED JEWEL CRABAPPLE	16
~~ITEM 663, SIZE 1 3/4"-2" CAL., CONDITION B & B 24"~~	~~PC`A'~~	~~CYRUS CALLERYANA `ARISTOCRAT'~~	~~ARISTOCRAT CALLERY PEAR~~	~~7~~
DECIDUOUS SHADE TREES				
ITEM 663, SIZE 2 1/2-3" CAL., CONDITION B & B 32"	FA`CC'	FRAXINUS AMERICANA `CHAMPAIGN COUNTY'	CHAMPAIGN COUNTY WHITE ASH	24
ITEM 663, SIZE 2"-2 1/2" CAL., CONDITION B & B 28"	PN`C'X`C'	POPULUS N.E.17 (NIGRA CHARK-OWIENSIS X CAUDINA) (MALE)	CHARKOWIENSIS HYBRID POPLAR	3
ITEM 663, SIZE 2"-2 1/2" CAL.,	PX`R'	POPULUS X ROBUSTA	ROBUSTA POPLAR	23
EVERGREEN TREES				
ITEM 663, SIZE 6'-7' CONDITION B & B 24"	PN	PINUS NIGRA	AUSTRIAN PINE	126
ITEM SPEC., WILDFLOWER SEEDING AND MULCHING			WILDFLOWER SEEDING AND MULCHING	1.3 ACRE

PAY ITEM DESCRIPTION	BOTANICAL NAME	COMMON NAME	QUANTITY
ITEM 630, GROUND MOUNTED SUPPORT, NO. 2 POST			44 LIN FT
ITEM 630, SIGN, FLAT SHEET, AS PER PLAN			12 SQ FT
ITEM SPEC, PREPARATION OF CROWNVETCH PLANTING SITES			1.8 ACRE
ITEM SPEC, PLANTING, CROWNVETCH 4'-0" O.C.	CORONILLA VARIA 'PENNGIFT'	PENNGIFT CROWNVETCH	4,808

CALC. BY TK DATE 11-89	SUM-76-11.57	OHIO	561
CHKD. BY SL DATE 7-90	FED. PROJECT IR-76-2(44)19	F.H.W.A. REGION 5	1214

SUMMIT COUNTY

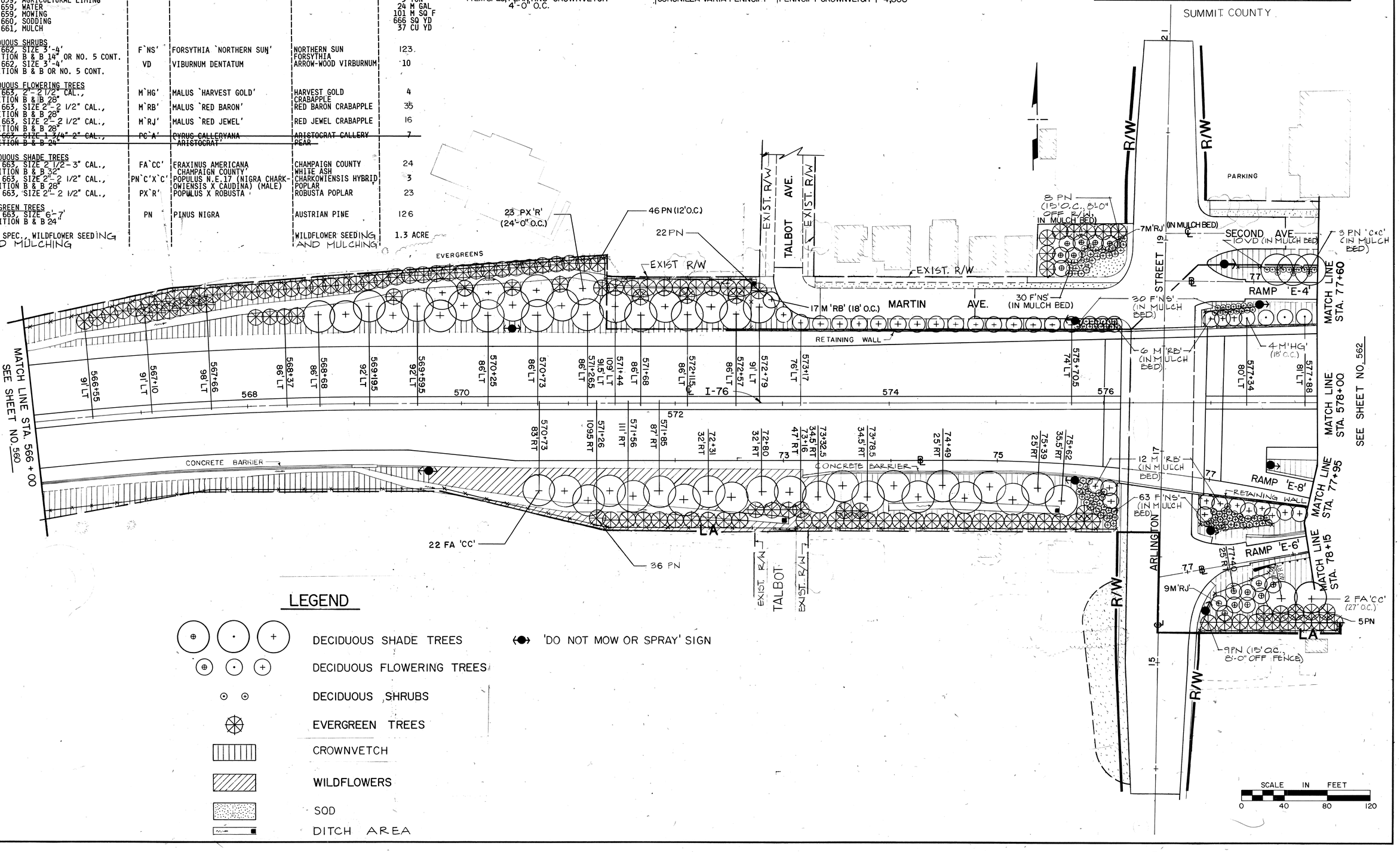

LEGEND

- DECIDUOUS SHADE TREES
- DECIDUOUS FLOWERING TREES
- DECIDUOUS SHRUBS
- EVERGREEN TREES
- CROWNVETCH
- WILDFLOWERS
- SOD
- DITCH AREA
- 'DO NOT MOW OR SPRAY' SIGN

SCALE IN FEET
0 40 80 120

PAY ITEM	DESCRIPTION	SYMBOL	BOTANICAL NAME	COMMON NAME	QUANTITY
ITEM 659,	SEEDING & MULCHING, APP				31,718 SQ YD
ITEM 659,	REPAIR SEEDING & MULCHING				1,586 SQ YD
ITEM 659,	COMMERCIAL FERTILIZER				3 TON
ITEM 659,	AGRICULTURAL LIMING				14 TON
ITEM 659,	WATER				69 M GAL
ITEM 659,	MOWING				285 M SQ FT
ITEM 661,	MULCH				87 CU YD
DECIDUOUS SHRUBS					
ITEM 662, SIZE 3'-4'		CA`S'	CORNUS ALBA `SIBIRICA'	SIBERIAN DOGWOOD	260
CONDITION B & B OR NO. 5 CONT.					
ITEM 662, SIZE 3'-4'		VD	VIBURNUM DENTATUM	ARROW-WOOD VIBURNUM	226
CONDITION B & B OR NO. 5 CONT.					
ITEM 630, GROUND MOUNTED SUPPORT, NO. 2 POST					72 LIN FT
ITEM 630, SIGN, FLAT SHEET, AS PER PLAN					20 SQ FT
ITEM SPEC., PREPARATION OF CROWNVETCH PLANTING SITES					6.6 ACRE
ITEM SPEC., PLANTING CROWNVETCH, 4'-0" O.C.		CORONILLA VARIA 'PENNGIFT'		PENNGIFT CROWN-VETCH	17,841

PAY ITEM	DESCRIPTION	SYMBOL	BOTANICAL NAME	COMMON NAME	QUANTITY
DECIDUOUS FLOWERING TREES					
ITEM 663, SIZE 2"-2 1/2" CAL.,		CV`WK'	CRATAEGUS VIRIDIS 'WINTER KING'	WINTER KING HAWTHORN	55
CONDITION B & B 28"					
ITEM 663, SIZE 2"-2 1/2" CAL.,		PC`A'	PYRUS CALLERYANA 'ARISTOCRAT'	ARISTOCRAT CALLERY PEAR	44
CONDITION B & B 28"					
ITEM 663, SIZE 2"-2 1/2" CAL.,		M`HG'	MALUS `HARVEST GOLD'	HARVEST GOLD CRABAPPLE	46
CONDITION B & B 28"					
ITEM 663, SIZE 2"-2 1/2" CAL.,		M`IM'	MALUS `INDIAN MAGIC'	INDIAN MAGIC CRABAPPLE	50
CONDITION B & B 28"					
ITEM 663, SIZE 2"-2 1/2" CAL.,		M`RB'	MALUS `RED BARON'	RED BARON CRABAPPLE	30
CONDITION B & B 28"					
ITEM 663, SIZE 2"-2 1/2" CAL.,		SAJ`SS'	SYRINGA AMURENSIS JAPONICA 'SUMMER SNOW'	SUMMER SNOW JAPANESE TREE LILAC	29
CONDITION B & B 28"					
DECIDUOUS SHADE TREES					
ITEM 663, SIZE 2 1/2"- 3" CAL.,		FA`CC'	FRAXINUS AMERICANA 'CHAMPAIGN COUNTY'	CHAMPAIGN COUNTY WHITE ASH	17
CONDITION B & B 32"					
ITEM 663, SIZE 2 1/2"- 3" CAL.,		GTI`S'	GLEDITSIA TRIACANTHOS 'SKYLINE'	SKYLINE HONEYLOCUST	50
CONDITION B & B 32"					
ITEM 663, SIZE 2"-2 1/2" CAL.,		PN`C'X`C'	POPULUS N.E.17 (NIGRA CHARKOWIENSIS X CAUDINA) (MALE)	CHARKOWIENSIS HYBRID POPLAR	122
CONDITION B & B 28"					
ITEM 663, SIZE 2"-2 1/2" CAL.,		PX`R'	POPULUS X ROBUSTA (DELTOIDES X NIGRA) (MALE)	ROBUSTA POPLAR	22
CONDITION B & B 28"					
EVERGREEN TREES					
ITEM 663, SIZE 6'-7'		PN	PINUS NIGRA	AUSTRIAN PINE	149
CONDITION B & B 24"					

CALC. BY TK DATE 11-89
CHKD. BY SL DATE 7-90

SUM-76-11.57
F.E.D. PROJECT IR-76-2(44)19

OHIO
F.H.W.A. REGION 5

562
1214

SUMMIT COUNTY

CHITTENDEN STREET

SECOND AVENUE

20 VD (IN MULCH BED, 6' O.C.)
80 CA'S' (IN MULCH BED, 6' O.C.)
100 VD (6' OC, IN MULCH BED)
80 CA'S' (IN MULCH BED, 6' O.C.)
33 VD (IN MULCH BED, 6' OC)
78 PN'C'X'C' (15' O.C., 3'-0" OFF FENCE IN MULCH BED).
10 PN (15' O.C., 8'-0" OFF FENCE)
5 PX'R'
36 CV'WK'
51 PN
29 M'HG' (18' OC, 7' OFF WALL)
(18' O.C. 4' OFF WALL)
23 GTI'S' (24' O.C.)
25 M'IM'
13 PC'A'
30 M'RB'
27 GTI'S'
19 CV'WK' (14' O.C.)
31 PC'A'
17 M'HG'
3 PX'R' 23' O.C.
24 VD (6' O.C.)
22 PN
44 PN (15' O.C., 8'-0" OFF FENCE)
29 SAJ'SS'
17 FA'CC'
14 PX'R'
49 VD (6' O.C.)
100 CA'S' (6' O.C.)
44 PN'C'X'C' (15' O.C., 3' OFF FENCE).

RAMP 'E-4'
RAMP 'E-7'
RAMP 'E-6'
RAMP 'E-8'
I-76
CONCRETE BARRIER
TRAVEL LANES
RETAINING WALL
PARKING
EXIST. R/W
MILES STREET
EXIST. R/W
L.A. R/W

MATCH LINE STA. 77+60
MATCH LINE STA. 78+10
MATCH LINE STA. 578+00
MATCH LINE STA. 90+50
MATCH LINE STA. 590+00
MATCH LINE STA. 89+70

SEE SHEET NO. 561
SEE SHEET NO. 563

SCALE IN FEET
0 40 80 120

NOTE: SEE SHEET 561 FOR LEGEND.

AA B/P# 71948R

CALC. BY. TK DATE 11-89	SUM-76-11.57	OHIO	563
CHKD. BY. SL DATE 7-90	FED. PROJECT IR-76-2(44)19	F.H.W.A. REGION 5	1214

SUMMIT COUNTY

PAY ITEM	DESCRIPTION	SYMBOL	BOTANICAL NAME	COMMON NAME	QUANTITY
ITEM 659,	SEEDING & MULCHING, A.P.P.				39,474 SQ YD
ITEM 659,	REPAIR SEEDING & MULCHING,				1,974 SQ YD
ITEM 659,	COMMERCIAL FERTILIZER				4 TON
ITEM 659,	AGRICULTURAL LIMING				18 TON
ITEM 659,	WATER				84 M GAL
ITEM 659,	MOWING				351 M SQ FT
ITEM 661,	MULCH				59 CU YD
DECIDUOUS SHRUBS					
ITEM 662,	SIZE 3'-4'	FORS	FORSYTHIA 'NORTHERN SUN' (FLOWER HARDY VARIETY)	NORTHERN SUN FORSYTHIA	200
CONDITION B & B OR NO. 5 CONT.		VD	VIBURNUM DENTATUM	ARROW-WOOD VIBURNUM	24
ITEM 662,	SIZE 3'-4'				
CONDITION B & B OR NO. 5 CONT.					
ITEM SPEC.,	PREP OF CROWNVETCH PLANTING SITES				1 ACRE
ITEM SPEC.,	PLANTING CROWNVETCH 4" -0" O.C.		CORONILLA VARIA 'PENNGIFT'	PENNGIFT CROWN-VETCH	1,795
ITEM 630,	GROUND MOUNTED SUPPORT, NO. 2 POST				126.5 LIN FT
ITEM 630,	SIGN, FLAT SHEET, AS PER PLAN				34.5 SQ FT

Key	SYMBOL	BOTANICAL NAME	COMMON NAME	QUANTITY
DECIDUOUS FLOWERING TREES				
ITEM 663, SIZE 2 1/2"-3" CAL., CONDITION B & B 28"	KP	KOELREUTERIA PANICULATA	GOLDEN RAIN TREE	15
ITEM 663, SIZE 2 1/2"-3" CAL., CONDITION B & B 28"	M'HG'	MALUS 'HARVEST GOLD'	HARVEST GOLD CRABAPPLE	95
ITEM 663, SIZE 2 1/2"-3" CAL., CONDITION B & B 28"	M'IM'	MALUS 'INDIAN MAGIC'	INDIAN MAGIC CRABAPPLE	57
ITEM 663, SIZE 2 1/2"-3" CAL., CONDITION B & B 28"	M'RB'	MALUS 'RED BARON'	RED BARON CRABAPPLE	108
ITEM 663, SIZE 2 1/2"-3" CAL., CONDITION B & B 28"	PC'A'	PYRUS CALLERYANA ARISTOCRAT	ARISTOCRAT CALLERY PEAR	71
DECIDUOUS SHADE TREES				
ITEM 663, SIZE 2 1/2"-3" CAL., CONDITION B & B 32"	AP	ACER PLATANOIDES	NORWAY MAPLE	32
ITEM 663, SIZE 2 1/2"-3" CAL., CONDITION B & B 32"	AP'D'	ACER PLATANOIDES 'DEBORAH'	DEBORAH NORWAY MAPLE	26
ITEM 663, SIZE 2 1/2"-3" CAL., CONDITION B & B 32"	AR	ACER RUBRUM	RED MAPLE	44
ITEM 663, SIZE 2 1/2"-3" CAL., CONDITION B & B 32"	FA'CC'	FRAXINUS AMERICANA 'CHAMPAIGN COUNTY'	CHAMPAIGN COUNTY WHITE ASH	9
ITEM 663, SIZE 2 1/2" CAL., CONDITION B & B 32"	PN'C'X'C'	POPULUS N.E. 17 (NIGRA CHARKOWIENSIS X CAUDINA) (MALE)	CHARKOWIENSIS' HYBRID POPLAR	6
ITEM 663, SIZE 2 1/2" CAL., CONDITION B & B 28"	PX'R'	POPULUS X ROBUSTA (DELTOIDES X NIGRA) (MALE)	ROBUSTA POPLAR	32
ITEM 663, SIZE 2-2 1/2" CAL., CONDITION B & B 28"	UP	ULMUS PARVIFOLIA	CHINESE ELM	15
ITEM 663, SIZE 2 1/2"-3" CAL., CONDITION B & B 32"	PN	PINUS NIGRA	AUSTRIAN PINE	184
EVERGREEN TREES				
ITEM 665, SIZE 5'-6' CONDITION B & B 14"				

SCALE IN FEET 0 40 80 120

REVISED 8-18-92

NOTE: SEE SHEET 561 FOR LEGEND.

AA B/Pv 71942R

CALC. BY. TK DATE 11-89	SUM-76-11.57	OHIO
CHK'D. BY. SL DATE 7-90	FED. PROJECT IR-76-2(44)19	F.H.W.A. REGION 5

564 / 1214

SUMMIT COUNTY

LEGEND

DECIDUOUS SHADE TREES

DECIDUOUS FLOWERING TREES

DECIDUOUS SHRUBS

EVERGREEN TREES

'DO NOT MOW OR SPRAY' SIGN

CROWNVETCH

WILDFLOWERS

SOD

DITCH AREA

PARKING

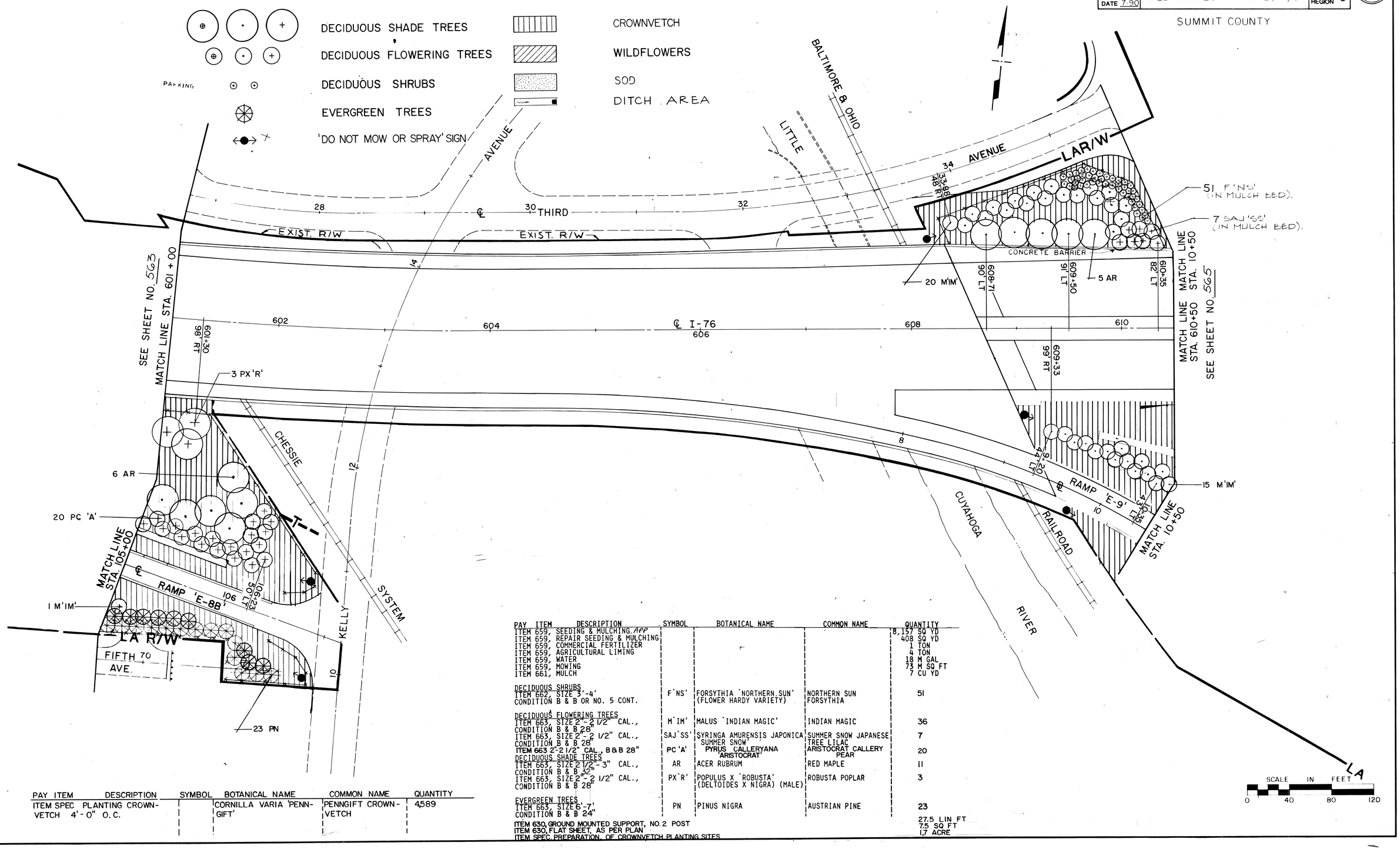

PAY ITEM	DESCRIPTION	SYMBOL	BOTANICAL NAME	COMMON NAME	QUANTITY
ITEM 659,	SEEDING & MULCHING, AS PER PLAN				8,157 SQ YD
ITEM 659,	REPAIR SEEDING & MULCHING				408 SQ YD
ITEM 659,	COMMERCIAL FERTILIZER				1 TON
ITEM 659,	AGRICULTURAL LIMING				4 TON
ITEM 659,	WATER				18 M GAL
ITEM 659,	MOWING				73 M SQ FT
ITEM 661,	MULCH				7 CU YD
DECIDUOUS SHRUBS					
ITEM 662, SIZE 3'-4' CONDITION B & B OR NO. 5 CONT.		F`NS'	FORSYTHIA `NORTHERN SUN' (FLOWER HARDY VARIETY)	NORTHERN SUN FORSYTHIA	51
DECIDUOUS FLOWERING TREES					
ITEM 663, SIZE 2"-2 1/2" CAL., CONDITION B & B 28"		M`IM'	MALUS `INDIAN MAGIC'	INDIAN MAGIC	36
ITEM 663, SIZE 2"-2 1/2" CAL., CONDITION B & B 28"		SAJ`SS'	SYRINGA AMURENSIS JAPONICA 'SUMMER SNOW'	SUMMER SNOW JAPANESE TREE LILAC	7
ITEM 663 2"-2 1/2" CAL., B&B 28"		PC 'A'	PYRUS CALLERYANA 'ARISTOCRAT'	ARISTOCRAT CALLERY PEAR	20
DECIDUOUS SHADE TREES					
ITEM 663, SIZE 2 1/2"-3" CAL., CONDITION B & B 32"		AR	ACER RUBRUM	RED MAPLE	11
ITEM 663, SIZE 2"-2 1/2" CAL., CONDITION B & B 28"		PX`R'	POPULUS X `ROBUSTA' (DELTOIDES X NIGRA) (MALE)	ROBUSTA POPLAR	3
EVERGREEN TREES					
ITEM 663, SIZE 6-7' CONDITION B & B 24"		PN	PINUS NIGRA	AUSTRIAN PINE	23
ITEM 630, GROUND MOUNTED SUPPORT, NO. 2 POST					27.5 LIN FT
ITEM 630, FLAT SHEET, AS PER PLAN					7.5 SQ FT
ITEM SPEC. PREPARATION, OF CROWNVETCH PLANTING SITES					1.7 ACRE

PAY ITEM	DESCRIPTION	SYMBOL	BOTANICAL NAME	COMMON NAME	QUANTITY
ITEM SPEC	PLANTING CROWN-VETCH 4'-0" O.C.		CORNILLA VARIA 'PENN-GIFT'	PENNGIFT CROWN-VETCH	4.589

CALC. BY TK DATE 11-89	SUM-76-11.57	OHIO
CHKD. BY SL DATE 7-90	FED. PROJECT IR-76-2(44)19	F.H.W.A. REGION 5

SUMMIT COUNTY

565
1214

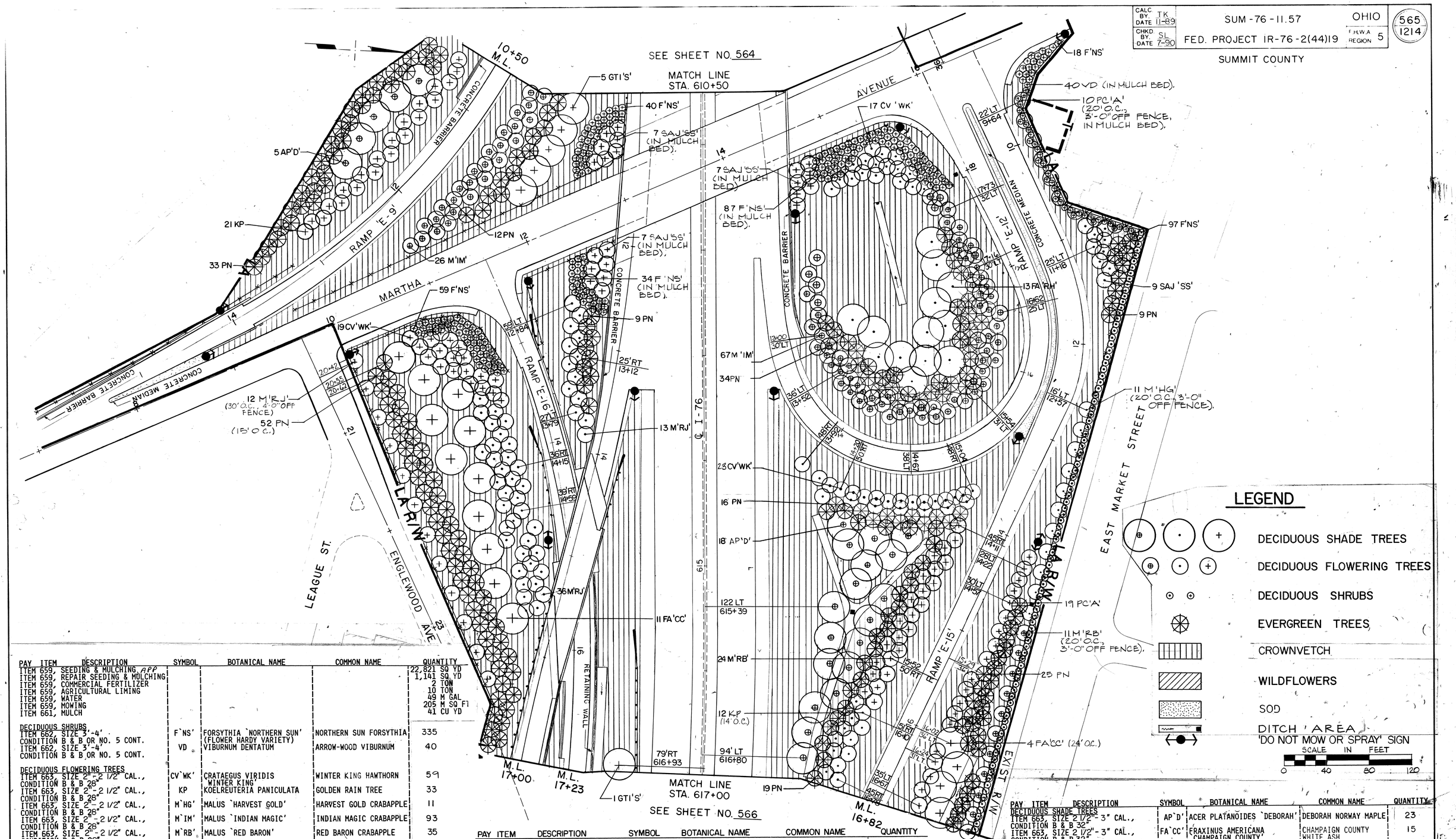

LEGEND

- DECIDUOUS SHADE TREES
- DECIDUOUS FLOWERING TREES
- DECIDUOUS SHRUBS
- EVERGREEN TREES
- CROWNVETCH
- WILDFLOWERS
- SOD
- DITCH AREA
- 'DO NOT MOW OR SPRAY' SIGN

SCALE IN FEET
0 40 80 120

PAY ITEM	DESCRIPTION	SYMBOL	BOTANICAL NAME	COMMON NAME	QUANTITY
ITEM 659,	SEEDING & MULCHING, APP				22,821 SQ YD
ITEM 659,	REPAIR SEEDING & MULCHING				1,141 SQ YD
ITEM 659,	COMMERCIAL FERTILIZER				2 TON
ITEM 659,	AGRICULTURAL LIMING				10 TON
ITEM 659,	WATER				49 M GAL
ITEM 659,	MOWING				205 M SQ FT
ITEM 661,	MULCH				41 CU YD
	DECIDUOUS SHRUBS				
ITEM 662, SIZE 3'-4'		F`NS'	FORSYTHIA `NORTHERN SUN' (FLOWER HARDY VARIETY)	NORTHERN SUN FORSYTHIA	335
CONDITION B & B OR NO. 5 CONT.					
ITEM 662, SIZE 3'-4'		VD	VIBURNUM DENTATUM	ARROW-WOOD VIBURNUM	40
CONDITION B & B OR NO. 5 CONT.					
	DECIDUOUS FLOWERING TREES				
ITEM 663, SIZE 2"-2 1/2" CAL.,		CV`WK'	CRATAEGUS VIRIDIS `WINTER KING'	WINTER KING HAWTHORN	59
CONDITION B & B 28"					
ITEM 663, SIZE 2"-2 1/2" CAL.,		KP	KOELREUTERIA PANICULATA	GOLDEN RAIN TREE	33
CONDITION B & B 28"					
ITEM 663, SIZE 2"-2 1/2" CAL.,		M`HG'	MALUS `HARVEST GOLD'	HARVEST GOLD CRABAPPLE	11
CONDITION B & B 28"					
ITEM 663, SIZE 2"-2 1/2" CAL.,		M`IM'	MALUS `INDIAN MAGIC'	INDIAN MAGIC CRABAPPLE	93
CONDITION B & B 28"					
ITEM 663, SIZE 2"-2 1/2" CAL.,		M`RB'	MALUS `RED BARON'	RED BARON CRABAPPLE	35
CONDITION B & B 28"					
ITEM 663, SIZE 2"-2 1/2" CAL.,		M`RJ'	MALUS `RED JEWEL'	RED JEWEL CRABAPPLE	68
CONDITION B & B 28"					
ITEM 663, SIZE 2"-2 1/2" CAL.,		PC`A'	PYRUS CALLERYANA `ARISTOCRAT'	ARISTOCRAT CALLERY PEAR	29
CONDITION B & B 28"					
ITEM 663, SIZE 2"-2 1/2" CAL.,		SAJ`SS'	SYRINGA AMURENSIS JAPONICA `SUMMER SNOW'	SUMMER SNOW JAPANESE TREE LILAC	30
CONDITION B & B 28"					

PAY ITEM	DESCRIPTION	SYMBOL	BOTANICAL NAME	COMMON NAME	QUANTITY
ITEM 630,	GROUND MOUNTED SUPPORT, NO. 2 POST				66 LIN FT
ITEM 630,	FLAT SHEET, AS PER PLAN				18 SQ FT
ITEM SPEC.	PREPARATION OF CROWNVETCH PLANTING SITES				4.7 ACRE
ITEM SPEC.	PLANTING CROWNVETCH, 4'-0" O.C.	CORONILLA VARIA `PENNGIFT'		PENNGIFT CROWN-VETCH	12,837

PAY ITEM	DESCRIPTION	SYMBOL	BOTANICAL NAME	COMMON NAME	QUANTITY
	DECIDUOUS SHADE TREES				
ITEM 663, SIZE 2 1/2"-3" CAL.,		AP`D'	ACER PLATANOIDES `DEBORAH'	DEBORAH NORWAY MAPLE	23
CONDITION B & B 32"					
ITEM 663, SIZE 2 1/2"-3" CAL.,		FA`CC'	FRAXINUS AMERICANA `CHAMPAIGN COUNTY'	CHAMPAIGN COUNTY WHITE ASH	15
CONDITION B & B 32"					
ITEM 663, SIZE 2 1/2"-3" CAL.,		FA`RH'	FRAXINUS AMERICANA `ROSE HILL'	ROSE HILL WHITE ASH	13
CONDITION B & B 32"					
ITEM 663, SIZE 2 1/2"-3" CAL., B & B		GTI'S'	GLEDITSIA TRIANCANTHOS INERMIS `SKYLINE'	SKYLINE HONEY-LOCUST	6
	EVERGREEN TREES				
ITEM 663, SIZE 6'-7'		PN	PINUS NIGRA	AUSTRIAN PINE	209
CONDITION B & B 24"					

AA B/Pn 71942R

CALC. BY. TK DATE 11-89	SUM-76-11.57	OHIO
CHKD. BY. SL DATE 7-90	FED. PROJECT IR-76-2(44)19	F.H.W.A. REGION 5

566
1214

SUMMIT COUNTY

LEGEND

- DECIDUOUS SHADE TREES
- DECIDUOUS FLOWERING TREES
- DECIDUOUS SHRUBS
- EVERGREEN TREES
- 'DO NOT MOW OR SPRAY' SIGN
- CROWNVETCH
- WILDFLOWERS
- SOD
- DITCH AREA

EAST MARKET STREET

PARKING

PARKING

PARKING

20 M 'RB' (20' O.C., 3'-0" OFF FENCE)

78 PN

25 FA 'CC'

L.A. R/W

92 CA'S'

12 M 'HG' (20' O.C., 3'-0" OFF FENCE).

38 PN 'C' X 'C' (15' O.C., 3'-0" OFF FENCE)

30 MP

60 CA'S'

MATCH LINE STA. 16+85

18 RAMP 'E-15' 20

29 PC 'A' 40' LT

20+57 19' LT

20+91 94' LT

621+34 84' LT

622+00

12 KP

34 AP 'D'

21 CV 'WK'

624+55 80' LT

624+84 89' LT

12 PC 'A' 84' LT

625+64 83' LT

626+45 79' LT

627+29

628+44 79' LT

25 MP

25 PX 'R'

CONCRETE BARRIER

RETAINING WALL

4 KP

1 PN

1 AP 'D'

620

622

℄ I-76

624

626

628

618

617+08 73' RT

617+93 73' RT

618+32 72' RT

620+59 78' RT

7 GTI 'S'

8 M 'RB'

24

RETAINING WALL

57 PN 'C' X 'C' (15' O.C., 3'-0" OFF R.O.W.)

MATCH LINE STA. 629+00

SEE SHEET NO. 567

MATCH LINE STA. 617+00

SEE SHEET NO. 565

23 KP

5 GTI 'S'

CONCRETE BARRIER

RAMP 'E-16' 20

18

616+58 58' LT

617+64 58' LT

RETAINING WALL

RAMP 'E-10' 20

18

22

21 M 'RB'

621+15 42' RT

621+42 42' LT

622+42

622+91 30' LT

623+23 40' RT

624+16 30' LT

ENGLEWOOD

MATCH LINE STA. 17+20

MATCH LINE STA. 17+00

L.A.

R/W

R/W

12 PN

7 AP 'D'

4 AP 'D'

37 PN (15' O.C., 5'-0" OFF FENCE OR R/W)

WIGLEY AVE.

PAY ITEM	DESCRIPTION	SYMBOL	BOTANICAL NAME	COMMON NAME	QUANTITY
ITEM 659,	SEEDING & MULCHING, APP				22,405 SQ YD
ITEM 659,	REPAIR SEEDING & MULCHING				1,120 SQ YD
ITEM 659,	COMMERCIAL FERTILIZER				2 TON
ITEM 659,	AGRICULTURAL LIMING				10 TON
ITEM 659,	WATER				48 M GAL
ITEM 659,	MOWING				202 M SQ FT
	DECIDUOUS SHRUBS				
ITEM 662,	SIZE 3'-4'	CA`S'	CORNUS ALBA `SIBIRICA'	SIBERIAN DOGWOOD	152
CONDITION	B & B OR NO. 5 CONT.				
ITEM 662,	SIZE 2'-3'	MP	MYRICA PENNSYLVANICA	NORTHERN BAYBERRY	55
CONDITION	B & B 12" OR NO. 3 CONT.				
	DECIDUOUS FLOWERING TREES				
ITEM 663,	SIZE 2"-2 1/2" CAL.,	CV`WK'	CRATEGUS VIRIDIS `WINTER KING'	WINTER KING HAWTHORN	21
CONDITION	B & B 28"				
ITEM 663,	SIZE 2"-2 1/2" CAL.,	KP	KOELREUTERIA PANICULATA	GOLDEN RAIN TREE	39
CONDITION	B & B 28"				
ITEM 663,	SIZE 2"-2 1/2" CAL.,	M`HG'	MALUS `HARVEST GOLD'	HARVEST GOLD CRABAPPLE	12
CONDITION	B & B 28"				
ITEM 663,	SIZE 2"-2 1/2" CAL.,	M`RB'	MALUS `RED BARON'	RED BARON CRABAPPLE	49
CONDITION	B & B 28"				
ITEM 663,	SIZE 2"-2 1/2" CAL.,	PC`A'	PYRUS CALLERYANA `ARISTOCRAT'	ARISTOCRAT CALLERY PEAR	41
CONDITION	B & B 28"				
	DECIDUOUS SHADE TREES				
ITEM 663,	SIZE 2 1/2"-3" CAL.,	AP`D'	ACER PLATANOIDES `DEBORAH'	DEBORAH NORWAY MAPLE	46
CONDITION	B & B 32"				
ITEM 663,	SIZE 2 1/2"-3" CAL.,	GTI`S'	GLEDITSIA TRIACANTHOS INERMIS `SKYLINE'	SKYLINE HONEYLOCUST	12
CONDITION	B & B 32"				
ITEM 663,	SIZE 2 1/2"-3" CAL.,	FA`CC'	FRAXINUS AMERICANA `CHAMPAIGN COUNTY'	CHAMPAIGN COUNTY WHITE ASH	25
CONDITION	B & B 32"				
ITEM 663,	SIZE 2"-2 1/2" CAL.,	PN`C'X`C'	POPULUS N.E.17 (NIGRA CHARKOWIENSIS X CAUDINA) (MALE)	CHARKOWIENSIS HYBRID POPLAR	75
CONDITION	B & B 28"				
ITEM 663,	SIZE 2"-2 1/2" CAL.,	PX`R'	POPULUS X `ROBUSTA' (DELTOIDES X NIGRA) (MALE)	ROBUSTA POPLAR	25
CONDITION	B & B 28"				
~~ITEM 663,~~	~~SIZE 2"-2 1/2" CAL.,~~	~~UX`H'~~	~~ULMUS X `HOMESTEAD'~~	~~HOMESTEAD ELM~~	~~3~~
	EVERGREEN TREES				
ITEM 663,	SIZE 6'-7'	PN	PINUS NIGRA	AUSTRIAN PINE	128
CONDITION	B & B 24"				

PAY ITEM	DESCRIPTION	SYMBOL	BOTANICAL NAME	COMMON NAME	QUANTITY
ITEM 630,	GROUND MOUNTED SUPPORT, NO. 2 POST				49.5 LIN FT
ITEM 630,	SIGN, FLAT SHEET, AS PER PLAN				13.5 SQ FT
ITEM SPEC.,	PREPARATION OF CROWNVETCH PLANTING SITES				4.6 ACRE
ITEM SPEC.,	PLANTING CROWNVETCH, 4'-0" O.C.	CORONILLA VARIA 'PENNGIFT'		PENNGIFT CROWN VETCH	12,603

SCALE IN FEET
0 40 80 120

AA B/P# 71942R

CALC. BY. TK DATE 11-89	SUM 76-11.57	OHIO
CHKD. BY. SL DATE 7-90	FED. PROJECT IR-76-2(44)19	F.H.W.A. REGION 5

567
1214

SUMMIT COUNTY

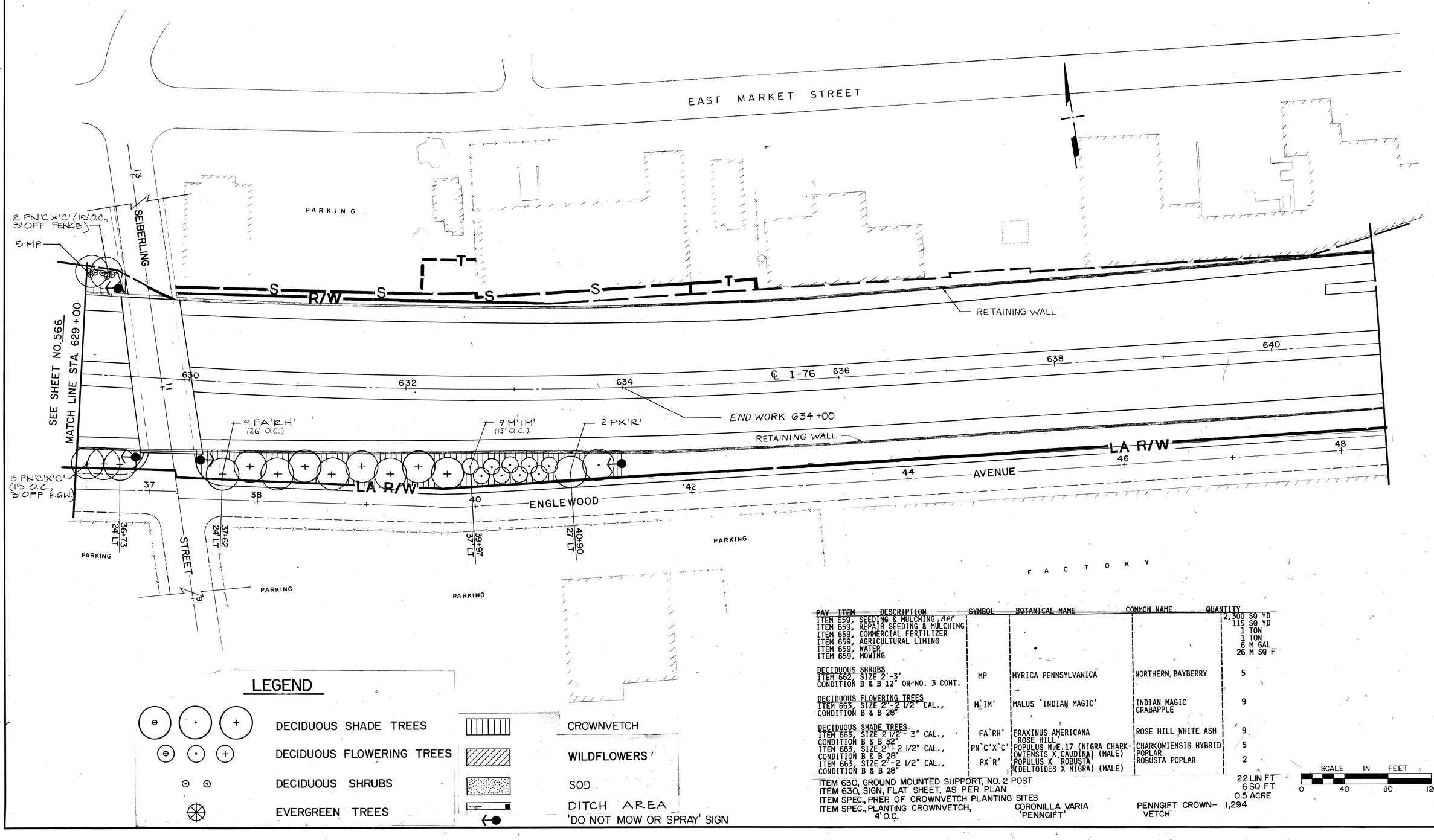

LEGEND

- DECIDUOUS SHADE TREES
- DECIDUOUS FLOWERING TREES
- DECIDUOUS SHRUBS
- EVERGREEN TREES
- CROWNVETCH
- WILDFLOWERS
- SOD
- DITCH AREA
- 'DO NOT MOW OR SPRAY' SIGN

PAY ITEM	DESCRIPTION	SYMBOL	BOTANICAL NAME	COMMON NAME	QUANTITY
ITEM 659,	SEEDING & MULCHING, AS PER PLAN				2,300 SQ YD
ITEM 659,	REPAIR SEEDING & MULCHING				115 SQ YD
ITEM 659,	COMMERCIAL FERTILIZER				1 TON
ITEM 659,	AGRICULTURAL LIMING				1 TON
ITEM 659,	WATER				6 M GAL
ITEM 659,	MOWING				26 M SQ F
DECIDUOUS SHRUBS					
ITEM 662, SIZE 2'-3'		MP	MYRICA PENNSYLVANICA	NORTHERN, BAYBERRY	5
CONDITION B & B 12" OR NO. 3 CONT.					
DECIDUOUS FLOWERING TREES					
ITEM 663, SIZE 2"-2 1/2" CAL.,		M`IM'	MALUS `INDIAN MAGIC'	INDIAN MAGIC CRABAPPLE	9
CONDITION B & B 28"					
DECIDUOUS SHADE TREES					
ITEM 663, SIZE 2 1/2"-3" CAL.,		FA`RH'	FRAXINUS AMERICANA `ROSE HILL'	ROSE HILL WHITE ASH	9
CONDITION B & B 32"					
ITEM 663, SIZE 2"-2 1/2" CAL.,		PN`C'x`C'	POPULUS N.E.17 (NIGRA CHARK-OWIENSIS X CAUDINA) (MALE)	CHARKOWIENSIS HYBRID POPLAR	5
CONDITION B & B 28"					
ITEM 663, SIZE 2"-2 1/2" CAL.,		PX`R'	POPULUS X `ROBUSTA' (DELTOIDES X NIGRA) (MALE)	ROBUSTA POPLAR	2
CONDITION B & B 28"					
ITEM 630, GROUND MOUNTED SUPPORT, NO. 2 POST					22 LIN FT
ITEM 630, SIGN, FLAT SHEET, AS PER PLAN					6 SQ FT
ITEM SPEC., PREP. OF CROWNVETCH PLANTING SITES					0.5 ACRE
ITEM SPEC., PLANTING CROWNVETCH, 4' O.C.			CORONILLA VARIA 'PENNGIFT'	PENNGIFT CROWN-VETCH	1,294

SCALE IN FEET
0 40 80 120

CALC. BY DATE	SUM-76-11.57	OHIO	568
CHKD. BY DATE	FED. PROJECT IR-76-2(44)19	F.H.W.A. REGION 5	1214

SUMMIT COUNTY

WATERWORKS GENERAL NOTES

SCOPE OF WORK

THE WORK CONTEMPLATED UNDER THIS CONTRACT COMPRISES THE FURNISHING AND INSTALLING WATER MAINS AND SERVICE BRANCHES WITH ALL APPURTENANCES, COMPLETE IN ALL DETAILS, TESTED AND READY FOR OPERATION. THE CONTRACTOR SHALL PERFORM ALL THE WORK AND FURNISH ALL THE LABOR AND MATERIALS NECESSARY, UNLESS OTHERWISE NOTED, FOR THE PROPER AND FINAL COMPLETION OF THIS CONTRACT IN THE MANNER AND UNDER THE CONDITIONS HEREIN SPECIFIED AND PROVIDED AND IN ACCORDANCE WITH THE CONTRACT DRAWINGS.

SPECIFICATIONS

THESE SPECIFICATIONS AND OTHER CONTRACT DOCUMENTS AS WELL AS THE OHIO DEPARTMENT OF TRANSPORTATION CONSTRUCTION AND MATERIAL SPECIFICATIONS (JANUARY 1, 1991), OHIO DEPARTMENT OF TRANSPORTATION SUPPLEMENTAL SPECIFICATIONS 814 (JANUARY 21, 1988) AND 915 (JANUARY 21, 1988)

SHALL GOVERN THIS PROJECT.

DEFINITIONS

WHEREVER IN THESE SPECIFICATIONS OR IN OTHER CONTRACT DOCUMENTS THE FOLLOWING TERMS OR PRONOUNS IN PLACE OF THEM ARE USED, THE INTENT AND MEANING SHALL BE INTERPRETED AS FOLLOWS:

THE STATE
THE STATE IS THE STATE OF OHIO ACTING THROUGH ITS AUTHORIZED REPRESENTATIVE.

ENGINEER
THE ENGINEER IS DIVISION DEPUTY DIRECTOR OR DIVISION ENGINEER, THE DIVISION CONSTRUCTION ENGINEER OR THE DIVISION MAINTENANCE ENGINEER OR THE PROJECT ENGINEER ASSIGNED TO ADMINISTER THE CONTRACT.

THE CITY
THE CITY IS THE DIRECTOR, DEPARTMENT OF PUBLIC SERVICE OF THE CITY OF AKRON.

STATUS OF CITY INSPECTOR

INSPECTORS AS DESIGNATED BY THE DIRECTOR OF PUBLIC SERVICE SHALL BE AUTHORIZED TO INSPECT ALL WORK DONE AND MATERIALS FURNISHED. SUCH INSPECTION MAY EXTEND TO ALL OR ANY PART OF THE WATERWORKS, AND TO THE PREPARATION OR MANUFACTURE OF THE MATERIALS TO BE USED IN THE WATERWORKS. THE CITY INSPECTORS AS DESIGNATED BY THE DIRECTOR OF PUBLIC SERVICE SHALL MAKE WORK INSTRUCTIONS THROUGH THE PROJECT ENGINEER.

MATERIALS

THE CONTRACTOR SHALL FURNISH THE ENGINEER ALL DETAILED DRAWINGS, MANUFACTURER'S CERTIFICATIONS, AND ALL OTHER REQUIREMENTS AS PER

ODOT SUPPLEMENTAL SPECIFICATION 915.

DIMENSIONS, DETAILED DRAWINGS AND ELEVATIONS

FIGURED DIMENSIONS ON DRAWINGS SHALL TAKE PRECEDENCE OVER MEASUREMENTS BY SCALE, AND DETAILED DRAWINGS ARE TO TAKE PRECEDENCE OVER GENERAL DRAWINGS AND SHALL BE CONSIDERED AS EXPLANATORY OF THEM AND NOT AS INDICATING EXTRA WORK. IF ANY OF THE DETAILED DRAWINGS SHOW ELABORATE OR MORE EXPENSIVE WORK THAN IS SPECIFIED BY THE CONTRACT DRAWINGS, THE CONTRACTOR SHALL GIVE WRITTEN NOTICE TO THE ENGINEER WITHIN TEN DAYS AFTER THE RECEIPT OF SUCH DETAILED DRAWINGS IN ORDER THAT THE DRAWINGS MAY BE AMENDED OR THE ADDITIONAL EXPENSE OF SUCH WORK MAY BE ADJUSTED AND AUTHORIZED. IF THE ENGINEER DOES NOT RECEIVE SUCH WRITTEN NOTICE FROM THE CONTRACTOR WITHIN TEN DAYS AFTER DETAILED DRAWINGS HAVE BEEN RECEIVED BY THE CONTRACTOR, IT IS HEREBY AGREED THAT THE CONTRACTOR ACCEPTS THE DRAWINGS AND WILL EXECUTE THEM WITHOUT CLAIM FOR EXTRA COMPENSATION.

FLOODS AND FREEZING WEATHER

PROPER FACILITIES SHALL BE PROVIDED FOR PROTECTING THE WORK FROM DAMAGE BY FLOOD, RAIN, OR FROST AND WORK DONE IN FREEZING WEATHER SHALL BE DONE IN SUCH MANNER AS THE ENGINEER MAY APPROVE. VALVES AND HYDRANTS SHALL BE PROTECTED FROM FREEZING UNTIL BACKFILLED IN THE COMPLETED WORK.

FLOATING

THE CONTRACTOR SHALL TAKE EVERY PRECAUTION AGAINST THE FLOATING OF THE PIPE DUE TO WATER COMING INTO THE TRENCH, OR THROUGH CAVING IN, FLUSHING OR PUDDLING. IN CASE OF SUCH FLOATING, THE CONTRACTOR SHALL REPLACE THE PIPE AT HIS OWN EXPENSE AND MAKE WHOLLY GOOD ANY INJURY OR DAMAGE WHICH MAY HAVE RESULTED.

EXISTING BUILDING REMOVALS

IN AREAS WHERE THE PROPOSED WATER MAIN OR APPURTENANCES CROSS AREAS WHERE EXISTING BUILDINGS HAVE BEEN REMOVED PREVIOUS TO THIS CONTRACT, ANY EXISTING FOUNDATIONS, FLOORS, FLOOR SLABS, BASEMENT, PIT, WELL OR CISTERN WALLS, ETC., ENCOUNTERED DURING EXCAVATION SHALL BE REMOVED TO A MINIMUM OF ONE FOOT BELOW THE BOTTOM OF PIPE AND TWO FEET OF EITHER SIDE OF PIPE UNLESS OTHERWISE DIRECTED BY THE ENGINEER. BACKFILLING SHALL BE AS PER 814.06. NO ADDITIONAL PAYMENT SHALL BE MADE TO THE CONTRACTOR FOR THIS REMOVAL BUT SHALL BE INCLUDED IN THE UNIT PRICE BID FOR ITEM 814 - WATER MAIN BY TYPE AND SIZE.

OPENING AND CLOSING VALVES

THE OPENING AND CLOSING OF ALL VALVES ON EXISTING MAINS FOR MAKING CONNECTIONS, TESTS, OR FOR ANY OTHER CAUSE SHALL BE DONE BY THE CITY AND SUFFICIENT NOTICE SHALL BE GIVEN TO THE CITY, BY THE CONTRACTOR, SO THAT THE WORK MAY BE DONE WITH A MINIMUM OF INCONVENIENCE TO THE PUBLIC AS DETERMINED BY THE CITY AND MINIMUM DELAY TO THE CONTRACTOR. THIS MAY INCLUDE MAKING CONNECTIONS TO EXISTING WATER MAINS AT NIGHT.

CHANGES IN WATER MAINS

WHEREVER IT BECOMES NECESSARY, IN THE OPINION OF THE ENGINEER, TO CHANGE THE LOCATION OR ELEVATION OF WATER MAINS AND WHERE CONNECTIONS ARE TO BE MADE BETWEEN EXISTING DISTRIBUTION MAINS AND WATER MAINS UNDER THIS CONTRACT, THE CONTRACTOR SHALL REMOVE AND DISPOSE OF ALL EXISTING WATERLINE MATERIALS REQUIRED TO MAKE THE CONNECTION AND SHALL FURNISH AND INSTALL COMPLETE ALL THE DUCTILE IRON PIPE, FITTINGS, AND VALVES TO MAKE THE CONNECTIONS INDICATED. THE CONTRACTOR SHALL ALSO FURNISH ALL NECESSARY LABOR, MATERIALS, TOOLS, AND EQUIPMENT AND MAKE THE EXCAVATION, BACKFILL, AND REPAVING FOR SUCH CONNECTIONS. PAYMENT FOR THIS WILL BE INCLUDED IN PRICE BID UNDER APPROPRIATE ITEM FOR SIZE OF WATER MAIN OR CONNECTION TO BE INSTALLED.

MAINTENANCE OF SERVICE AND CONNECTING RELOCATED MAINS

THE CONTRACTOR SHALL SUBMIT FOR APPROVAL BY THE ENGINEER A SEQUENCE OF CONSTRUCTION FOR THE WATER MAIN WORK SHOWN ON THE PLANS. SPECIAL CARE SHALL BE USED TO AVOID ANY DAMAGE WHICH MIGHT REQUIRE SHUTTING DOWN THE EXISTING MAIN UNTIL THE NEW MAIN IS READY TO BE PLACED IN SERVICE.

WHEN THE NEW MAINS HAVE BEEN TESTED AND CHLORINATED AND ARE READY TO BE CONNECTED TO THE OLD MAIN, THE CONTRACTOR SHALL MAKE SUCH CONNECTIONS AT A TIME DESIGNATED BY THE CITY (BETWEEN 8:00AM AND 3:00PM WEEKDAYS). CITY FORCES SHALL OPERATE ALL VALVES (SEE 'OPENING AND CLOSING VALVES' SHEET 568).
PRIOR TO SHUTTING DOWN THE EXISTING MAINS, THE CONTRACTOR SHALL TAKE SUITABLE PRECAUTIONS TO ASSURE A MINIMUM INTERRUPTION TO SERVICES, INCLUDING THE FOLLOWING:

1. PERFORM ALL NECESSARY EXCAVATION TO EXPOSE THE EXISTING MAIN SUFFICIENTLY FOR THE OPERATION OF THE PIPE SAW.
2. REMOVE THE CAP OR PLUG FROM THE END OF THE NEW MAIN.
3. SWAB THE INSIDE OF ALL PIPES, BENDS, AND SLEEVES TO BE USED IN CONNECTION THOROUGHLY WITH A CHLORINE SOLUTION OF AT LEAST 100 P.P.M.
4. MAKE UP AS MUCH OF THE CONNECTION AS POSSIBLE OUTSIDE THE DITCH TO ELIMINATE THE NEED FOR MAKING MOST OF THE NECESSARY JOINTS DURING THE SHUTDOWN. BY CAREFUL MEASUREMENT, ALL PIPE CUTS CAN BE MADE BY THE CONTRACTOR PRIOR TO SHUTTING DOWN.
5. HAVE SUFFICIENT MANPOWER AND EQUIPMENT ON THE SITE TO PERFORM THE OPERATION IN A MINIMUM OF TIME.

INCIDENTAL WORK

ATTENTION IS CALLED TO THE FACT THAT THE WORK ON THIS CONTRACT INCLUDES CERTAIN PERFORMANCES AS INCIDENTAL TO THE ITEMIZED REQUIREMENTS HEREOF AND, THOUGH NOT EXCLUSIVE, INCLUDE THE FOLLOWING:

A. TO PERFORM ALL EXCAVATION, BACKFILLING, SHEETING, BRACING, AND RESTORATION OF EXISTING FACILITIES. FOR THE PERFORMANCES HEREIN DESCRIBED AND FOR OTHER INCIDENTAL PERFORMANCES OF LIKE NATURE, THE STATE WILL MAKE NO SPECIFIC OR SEPARATE PAYMENT OF ALLOWANCE, BUT THE COST THEREOF SHALL BE INCLUDED IN THE PRICES STIPULATED TO BE PAID FOR THE VARIOUS ITEMS OF THE WORK TO BE DONE UNDER THIS CONTRACT.

1. EXCAVATION

ALL PROVISIONS OF THE OHIO DEPARTMENT OF TRANSPORTATION SUPPLEMENTAL SPECIFICATION 814.04 SHALL APPLY WITH THE FOLLOWING ADDITIONS:

a) THE USE OF EXCAVATING MACHINERY WILL BE PERMITTED EXCEPT IN PLACES WHERE OPERATION OF SAME WILL CAUSE DAMAGE TO TREES, BUILDINGS, OR EXISTING STRUCTURES ABOVE OR BELOW GROUND, IN WHICH CASE, HAND METHODS SHALL BE EMPLOYED.

b) TREES, FENCES, POLES, AND ALL OTHER PROPERTY SHALL BE PROTECTED UNLESS THEIR REMOVAL IS AUTHORIZED. ANY PROPERTY DAMAGED SHALL BE RESTORED BY THE CONTRACTOR TO THE SATISFACTION OF THE ENGINEER.

2. BACKFILLING

ALL PROVISIONS OF OHIO DEPARTMENT OF TRANSPORTATION SUPPLEMENTAL SPECIFICATION 814.08 SHALL APPLY.

DWN. BY : T.K.I.		REV. BY :	
DATE : 4/91		DATE :	
CAD DWG. FILE :	1157WN11		

WATERWORKS GENERAL NOTES

CALC. BY DATE	SUM-76-11.57	OHIO	569
CHKD. BY DATE	FED. PROJECT IR-76-2(44)19	F.H.W.A. REGION 5	1214

SUMMIT COUNTY

INCIDENTAL WORK (CONT.)

B. HYDROSTATIC TESTS: ALL PROVISIONS OF THE OHIO DEPARTMENT OF TRANSPORTATION SUPPLEMENTAL SPECIFICATION 814.09 SHALL APPLY WITH THE FOLLOWING ADDITIONS:

1. AFTER THE PIPE HAS BEEN LAID AND THE MIDDLE PORTION OF EACH LENGTH BACKFILLED, LEAVING THE JOINTS EXPOSED, THE MAINS SHALL BE SLOWLY FILLED WITH WATER AND TESTED UNDER LOCAL LINE PRESSURE. WHILE UNDER THIS PRESSURE, THE MAIN SHALL BE INSPECTED FOR POOR JOINTS AND DEFECTIVE PIPE. IF THE MAIN, AS LAID, IS FOUND SATISFACTORY BY THE ENGINEER, THE TRENCH MAY BE BACKFILLED; OTHERWISE THE DEFECTIVE JOINTS SHALL BE REPAIRED OR DEFECTIVE PIPE REPLACED AND THE TEST REPEATED.

   AFTER THE MAIN HAS BEEN FILLED WITH WATER AND WHEN, IN THE OPINION OF THE ENGINEER, FURTHER TESTING IS REQUIRED, A LEAKAGE TEST SHALL BE MADE UNDER A PRESSURE OF 50 POUNDS PER SQUARE INCH GREATER THAN MAXIMUM STATIC LINE PRESSURE. THE DURATION OF THE TEST SHALL BE 30 MINUTES AND THE LEAKAGE DURING THE TEST SHALL NOT EXCEED 50 GALLONS PER INCH DIAMETER PER MILE OF PIPE PER 24 HOURS. IN THE EVENT THAT THE MAIN FAILS TO MEET THE TEST REQUIREMENTS, THE ENGINEER MAY ORDER THE CONTRACTOR TO EXPOSE THE JOINTS AND DO OTHER WORK TO BRING THE LEAKAGE WITHIN THE SPECIFIED LIMIT.

   THE MAIN SHALL BE TESTED IN LENGTHS OF NOT MORE THAN 2,000 FEET. THE CONTRACTOR SHALL FURNISH THE NECESSARY PUMPS, PIPE, AND CONNECTIONS FOR MAKING THE TESTS AND SHALL INSTALL AND REMOVE THE TEMPORARY BULKHEADS. THE CITY WILL FURNISH GAUGES AND MEASURING DEVICES FOR THE TEST AND WILL MAKE ALL TAPS INTO THE PIPE, BUT THE CONTRACTOR SHALL FURNISH ALL ASSISTANCE NECESSARY FOR CONDUCTING THE TEST.

   THE CONTRACTOR SHALL BE RESPONSIBLE FOR ANY DAMAGE TO THE TRENCH, PIPING OF ANY APPURTENANCES WHICH MAY ARISE FROM OR IN CONNECTION WITH THE TESTS AND ALL DAMAGED PIPE OR APPURTENANCES SHALL BE REPLACED BY THE CONTRACTOR IMMEDIATELY.

C. PRELIMINARY FLUSHING: BEFORE BEING PLACED IN SERVICE, ALL DIRT AND FOREIGN MATTER SHALL BE REMOVED FROM THE NEW WATER MAIN OR EXTENSIONS TO EXISTING MAINS BY A THOROUGH FLUSHING THROUGH THE HYDRANTS OR BY OTHER APPROVED MEANS. EACH VALVED SECTION OR NEWLY LAID PIPE SHALL BE FLUSHED INDEPENDENTLY. THIS SHALL BE DONE AFTER THE HYDROSTATIC TEST AND MAY BE DONE BEFORE OR AFTER THE TRENCH HAS BEEN BACKFILLED.

D. CHLORINATION: FOLLOWING PRELIMINARY FLUSHING, THE NEWLY LAID WATER PIPE SHALL BE CHLORINATED IF NECESSARY AS DETERMINED BY THE CITY. THE PROCESS OF CHLORINATING, THE METHOD OF PROCEDURE, THE CHLORINATING AGENT, AND THE RATE OF APPLICATION SHALL BE DETERMINED BY THE CITY. THE CITY WILL FURNISH THE NECESSARY LABOR AND MATERIAL REQUIRED FOR SUCH CHLORINATION AND INSTALL THE NECESSARY TAPS AT THE ENDS OF THE WATER MAIN SECTIONS TO BE CHLORINATED. NO CHARGE WILL BE ASSESSED THE CONTRACTOR FOR ANY MATERIAL, LABOR, TOOLS, EQUIPMENT, AND INCIDENTALS FURNISHED BY THE CITY OF AKRON, DIVISION OF WATER, FOR THE CHLORINATION AND THE SAMPLING OF THE WATER. THE CONTRACTOR SHALL FURNISH THE NECESSARY LABOR FOR EXCAVATING AND BACKFILLING WHICH WILL BE REQUIRED FOR THE INSTALLATION OF TAPS FOR INJECTING THE CHLORINE SOLUTION, OPERATING PUMPS, AND FLUSHING MAINS.

E. FINAL FLUSHING AND TEST: FOLLOWING CHLORINATION, ALL TREATED WATER SHALL BE THOROUGHLY FLUSHED FROM THE NEWLY LAID PIPE AT ITS EXTREMITIES UNTIL THE REPLACEMENT WATER THROUGHOUT ITS LENGTH SHALL, UPON TEST, BOTH CHEMICALLY AND BACTERIOLOGICALLY, BE PROVEN EQUAL TO THE WATER QUALITY SERVED THE PUBLIC FROM THE EXISTING WATER SUPPLY SYSTEM.

F. PAINTING: THE FOLLOWING PAINTING PROVISIONS SHALL APPLY:

1. IT IS THE INTENTION OF THESE SPECIFICATIONS TO PROVIDE THAT ALL METAL WORK SUBJECT TO CORROSION SHALL BE SATISFACTORILY PROTECTED BY A DURABLE COATING OF PAINT OR OTHER APPROVED MATERIAL AND THAT ALL METAL SURFACES NOT BURIED IN EARTH, OR IN CONCRETE, SHALL BE LEFT CLEAN AND WELL PAINTED AT THE COMPLETION OF THE CONTRACT. UNLESS OTHERWISE SPECIFIED, THE PROTECTION SHALL BE AT LEAST THAT GIVEN BY THREE (3) COATS OF COAL TAR ENAMEL PAINT. THE FIRST COAT IS TO BE APPLIED AT THE SHOP BEFORE THE METAL HAS RUSTED AND AFTER ALL GREASE, DIRT, AND SCALE HAS BEEN REMOVED. BOLTS AND NUTS SHALL NOT BE SHOP COATED, BUT SHALL RECEIVE THREE (3) COATS OF COAL TAR ENAMEL PAINT AFTER INSTALLATION.

2. ALL METAL WORK WHICH HAS NOT BEEN COATED BEFORE THE ARRIVAL ON THE JOB SHALL BE GIVEN A TEMPORARY PROTECTIVE COATING OF SUCH A NATURE AS TO PERMIT THE READY ADHERENCE OF FUTURE COATINGS. THE TEMPORARY COATING SHALL BE A GOOD GRADE ASPHALTIC PAINT OR OTHER APPROVED MATERIAL.

3. ALL SURFACES OF METAL WHICH WILL BE IN CONTACT AFTER ASSEMBLING SHALL BE PAINTED, AT LEAST ONE COAT, BEFORE ASSEMBLING. THE FINAL COAT OF PAINT ON ALL EXPOSED WORK SHALL BE GIVEN SHORTLY BEFORE THE COMPLETION OF THE CONTRACT.

FOR THE PERFORMANCE DESCRIBED IN PARAGRAPHS A THROUGH F, THE STATE WILL MAKE NO SPECIFIC OR SEPARATE PAYMENT OR ALLOWANCES, BUT THE COST THEREOF SHALL BE INCLUDED IN THE PRICES STIPULATED TO BE PAID FOR THE VARIOUS 814 ITEMS.

LAYING PIPE

ALL PROVISIONS OF OHIO DEPARTMENT OF TRANSPORTATION SUPPLEMENTAL SPECIFICATION 814.06 SHALL APPLY WITH THE FOLLOWING ADDITIONS:

A. WHEREVER NECESSARY TO DEFLECT PIPE FROM A STRAIGHT LINE, EITHER IN THE VERTICAL OR HORIZONTAL PLANE TO AVOID OBSTRUCTIONS, TO PLUMB STEMS, OR FOR OTHER REASONS, THE DEGREE OF DEFLECTION SHALL BE APPROVED BY THE ENGINEER.

B. BEFORE LAYING DUCTILE IRON PIPE, ALL LUMPS, BLISTERS, AND EXCESS COAL TAR COATING SHALL BE REMOVED FROM THE BELL AND SPIGOT ENDS OF EACH PIPE. THE PIPE ENDS SHALL THEN BE KEPT CLEAN UNTIL JOINTS ARE MADE.

DUCTILE IRON PIPE AND FITTINGS

ALL DUCTILE IRON PIPE AND FITTINGS SHALL CONFORM TO ODOT SUPPLEMENTAL SPECIFICATION 915.01.

A. WHERE FITTINGS ARE SHOWN WHICH ARE NOT COVERED BY THE ABOVE SPECIFICATIONS, SUCH PARTICULARS AS ARE LACKING, SHALL CONFORM TO THE DIMENSIONS AND OTHERWISE MEET THE SPECIFICATIONS FOR THE RESPECTIVE TYPE WHICH ARE CARRIED IN THE LATEST REVISIONS TO THE CURRENT EDITION OF THE "HANDBOOK OF CAST IRON PIPE" BY THE CAST IRON PIPE RESEARCH ASSOCIATION OR WHICH ARE OTHERWISE SHOWN ON THE CONTRACT DRAWINGS.

B. WHEREVER CHANGES IN LINE AND GRADES OF THE MAIN AS SHOWN ON THE DRAWINGS ARE NOT STANDARD FITTING DEFLECTIONS, THE CONTRACTOR WILL BE PERMITTED TO SUBMIT DETAILS FOR APPROVAL BY THE ENGINEER USING COMBINATIONS OF STANDARD FITTINGS AND SMALL DEFLECTIONS IN THE ADJOINING LENGTHS OF PIPE NOT TO EXCEED THE PIPE MANUFACTURER'S RECOMMENDATION.

C. PLUGS FOR BELL AND SPIGOT PIPE SHALL BE SOLID PLUGS.
D. CLOSURE PIECES SHALL BE ACCURATELY MEASURED AND CUT IN THE FIELD AND INSTALLED USING SOLID TYPE PATTERN SLEEVES AS SHOWN OR AS REQUIRED.

JOINTS

PIPE JOINT SHALL BE ~~AS PER ODOT SUPPLEMENTAL SPECIFICATION 814.07 WITH THE FOLLOWING ADDITIONS:~~ VOID

A. ~~GASKETS AND LUBRICANT FURNISHED UNDER THESE SPECIFICATIONS FOR PUSH-ON JOINTS SHALL BE AS 715.02 OF THE CITY OF AKRON CONSTRUCTION AND MATERIAL SPECIFICATIONS.~~

ITEM 814 - FIRE HYDRANT, AS PER PLAN

ALL PROVISIONS OF ODOT SUPPLEMENTAL SPECIFICATION 814.14 SHALL APPLY WITH THE FOLLOWING ADDITIONS:

A. THE CITY SHALL PROVIDE THE CONTRACTOR WITH A NEW OR REFURBISHED HYDRANT AT NO EXPENSE TO THE CONTRACTOR. THE CONTRACTOR SHALL PICK UP HYDRANTS AT THE WATER DISTRIBUTION FACILITY ON JOHNSTON STREET. THE CONTRACTOR SHALL SET THE HYDRANT AT THE LOCATION SHOWN ON THE CONTRACT DRAWINGS, FURNISHING ALL MATERIAL, LABOR, TOOLS, AND EQUIPMENT REQUIRED FOR THE PROPER COMPLETION OF THE WORK INCLUDED UNDER THIS CONTRACT.

ITEM 814 - FIRE HYDRANT, REMOVED AND RESET, AS PER PLAN

ALL PROVISIONS OF ODOT SUPPLEMENTAL SPECIFICATION 814.15 SHALL APPLY WITH THE FOLLOWING ADDITIONS:

A. ALL HYDRANTS DESIGNATED TO BE REMOVED AND RESET SHALL BE REMOVED BY THE CONTRACTOR AND DELIVERED TO THE WATER DISTRIBUTION FACILITY AT 565 JOHNSTON ST. BY THE CONTRACTOR. THE CITY SHALL PROVIDE THE CONTRACTOR WITH A NEW OR REFURBISHED HYDRANT AT NO EXPENSE TO THE CONTRACTOR. THE CONTRACTOR SHALL PICK UP HYDRANTS AT THE WATER DISTRIBUTION FACILITY ON JOHNSTON STREET. THE CONTRACTOR SHALL SET THE HYDRANT AT THE LOCATION SHOWN ON THE CONTRACT DRAWINGS, FURNISHING ALL MATERIAL, LABOR, TOOLS, AND EQUIPMENT REQUIRED FOR THE PROPER COMPLETION OF THE WORK INCLUDED UNDER THIS CONTRACT. NO EXISTING HYDRANTS SHALL BE RESET.

TEMPORARY PLUGS

WHEN THE CONTRACTOR INSTALLS A WATER MAIN PLUG AND SUBSEQUENTLY REMOVES THE SAME PLUG UNDER PHASE CONSTRUCTION, SAID PLUG SHALL BE CLASSIFIED AS A TEMPORARY PLUG.

TEMPORARY PLUGS WILL NOT BE PAID FOR UNDER A SEPARATE PAY ITEM.

PAYMENT FOR TEMPORARY PLUGS SHALL BE INCLUDED IN THE UNIT PRICE BID FOR LINEAL FEET OF ITEM 814 - WATER MAINS TYPE AND SIZE SPECIFIED ON THE PLANS.

ITEM 814 - CUTTING AND PLUGGING EXISTING WATER MAINS AND BRANCHES

THE WORK INCLUDED UNDER THIS ITEM CONSISTS OF THE PLUGGING OF THE EXISTING WATER MAINS AND BRANCHES AT THE LOCATIONS SHOWN ON THE PLANS OR AS ORDERED BY THE ENGINEER. THE CONTRACTOR SHALL FURNISH AND HAUL THE CAULK TYPE CAST IRON PLUGS AND STEEL CLAMPS AND ACCESSORIES FOR THE LOCATIONS SHOWN ON THE PLANS OR AS REQUIRED BY THE ENGINEER FOR THE PROPER COMPLETION OF THE WORK UNDER THIS CONTRACT. THE CONTRACTOR SHALL DO ALL THE NECESSARY EXCAVATION, BACKFILLING, CUTTING AND REMOVAL OF A SECTION OF PIPE, INSTALLATION THE CAST IRON PLUG AND CLAMPS AND ACCESSORIES, SURFACE RESTORATION AND CONCRETE PIERS AND WOOD BACKING.

THE UNIT PRICE BID FOR EACH ITEM 814 - CUTTING AND PLUGGING EXISTING WATER MAINS AND BRANCHES, OF THE SIZES SHOWN SHALL CONSTITUTE FULL COMPENSATION FOR THE HAULING AND DELIVERING THE CAST IRON PLUG AND STEEL CLAMPS AND ACCESSORIES TO THE PROPER LOCATION INCLUDING PERFORMING ALL EXCAVATION, BACKFILLING, CUTTING OF EXISTING PIPE INSTALLATION OF THE PLUG, SURFACE RESTORATION, AND CONCRETE PIERS AND WOOD BACKING AND THE FURNISHING OF ALL LABOR, EQUIPMENT, AND SMALL TOOLS NECESSARY TO COMPLETE THE WORK AS SPECIFIED.

ITEM 814 - SERVICE STOP AND SERVICE BOX REMOVED AND RESET, AS PER PLAN

THE WORK OF REMOVING AND RESETTING A STOP AND BOX WILL BE PERFORMED BY THE CITY. THE CONTRACTOR SHALL PERFORM ALL NECESSARY EXCAVATION, BACKFILLING, AND SURFACE RESTORATION REQUIRED. THE CONTRACTOR SHALL GIVE THE CITY SUFFICIENT NOTICE SO THAT THE WORK MAY BE PERFORMED WITH A MINIMUM OF INCONVENIENCE TO THE PUBLIC AND DELAY TO THE CONTRACTOR. BASIS OF PAYMENT SHALL BE MADE PER EACH ITEM 814 - SERVICE STOP AND SERVICE BOX REMOVED AND RESET, AS PER PLAN.

DWN. BY: T.K.I.	REV. BY:		
DATE: 4/91	DATE:		
CAD DWG. FILE: 1157WNT2			

CALC. BY DATE	SUM-76-11.57	OHIO
CHKD. BY DATE	FED. PROJECT IR-76-2(44)19	F.H.W.A. REGION 5

SUMMIT COUNTY

570
1214

WATERWORKS GENERAL NOTES

ITEM 814 - METER AND CHAMBER REMOVED AND RESET, AS PER PLAN

THE WORK OF REMOVING AND RESETTING A METER OF ALL COPPER SERVICES WILL BE PERFORMED BY THE CITY. THE CONTRACTOR SHALL PERFORM ALL NECESSARY EXCAVATION, BACKFILLING, AND SURFACE RESTORATION REQUIRED. THE CONTRACTOR SHALL GIVE THE CITY THREE (3) WORKING DAYS NOTICE SO THAT THE WORK MAY BE PERFORMED WITH A MINIMUM OF INCONVENIENCE TO THE PUBLIC AND DELAY TO THE CONTRACTOR. BASIS OF PAYMENT SHALL BE MADE PER EACH ITEM 814 - METER AND CHAMBER REMOVED AND RESET, AS PER PLAN.

ITEM 814 - METER VAULT, AS PER PLAN

THE CONTRACTOR SHALL CONSTRUCT A METER VAULT AS SHOWN ON SHEET 614. THE CONTRACTOR SHALL PERFORM ALL NECESSARY EXCAVATION, BACKFILLING, AND SURFACE RESTORATION REQUIRED. THE CONTRACTOR SHALL ALSO REMOVE THE EXISTING METER VAULT AS PER SPECIFICATION 202. BASIS OF PAYMENT SHALL BE MADE PER EACH ITEM 814 - METER VAULT, AS PER PLAN, AND SHALL BE FULL COMPENSATION FOR MATERIALS AND LABOR INCLUDING EXCAVATION, BACKFILL, REMOVAL, AND DISPOSAL OF THE EXISTING VAULT AND ALL INCIDENTALS REQUIRED TO MAKE THIS ITEM COMPLETE.

PLAIN CONCRETE MASONRY

THE CONTRACTOR SHALL FURNISH ALL NECESSARY LABOR, MATERIALS, TOOLS, AND EQUIPMENT FOR THE CONSTRUCTION, COMPLETE, OF ALL MISCELLANEOUS MASONRY STRUCTURES, INCLUDING ALL ANCHORS AND PIERS AT PIPE BENDS AND UNDER LINE VALVES, AND OTHER APPURTENANT WORK TOGETHER WITH THE HAULING, MIXING, PLACING, ALL AS SPECIFIED, REQUIRED OR SHOWN ON THE CONTRACT DRAWINGS.

THE MATERIAL FURNISHED BY THE CONTRACTOR FOR THE VARIOUS KINDS OF MASONRY CONSTRUCTION TO BE CONSTRUCTED SHALL BE AS PER ODOT SPECIFICATION 499 CLASS C.

PAYMENT FOR CONCRETE MASONRY SHALL BE INCLUDED WITH THE PERTINENT ITEM 814 AND NO SEPARATE PAYMENT WILL BE MADE.

VALVES

ALL PROVISIONS OF ODOT SUPPLEMENTAL 814.13 SHALL APPLY WITH THE FOLLOWING ADDITIONS:

A. AFTER THE VALVES ARE SET IN PLACE AND READY TO OPERATE, THE CONTRACTOR SHALL TEST THEM UNDER WORKING PRESSURE AND CONDITIONS HEREIN SPECIFIED UNDER THE NOTE HYDROSTATIC TESTS ON SHEET 569 AND ANY VALVE FOUND TO LEAK SHALL BE MADE WATERTIGHT AND IF FOUND TO BE OF FAULTY DESIGN, SHALL BE SATISFACTORILY REPAIRED OR REPLACED BY THE CONTRACTOR.

WATER SERVICE CONNECTIONS

WATER SERVICE CONNECTIONS SHALL BE MADE BY THE CITY. THE CITY OF AKRON WATER DEPARTMENT SHALL MAKE ALL TAPS TO THE WATER MAIN FOR SERVICE CONNECTIONS AND PERFORM ALL COPPER WORK REQUIRED AT NO CHARGE TO THE CONTRACTOR. THE CONTRACTOR SHALL GIVE THE CITY THREE (3) WORKING DAYS NOTICE SO THAT THIS WORK MAY BE DONE WITH A MINIMUM OF INCONVENIENCE TO THE PUBLIC AND DELAY TO THE CONTRACTOR. ALL OTHER PORTIONS OF THE WORK INCLUDING EXCAVATION, BACKFILL, AND RESTORATION OF THE EXISTING AREA SHALL BE PERFORMED BY THE CONTRACTOR. THE UNIT PRICE BID FOR ITEM 814 - 1" COPPER SERVICE BRANCH, AS PER PLAN, SHALL BE FULL COMPENSATION FOR ALL LABOR AND MATERIALS REQUIRED TO MAKE THIS ITEM COMPLETE.

~~SURVEY~~

~~THE CONTRACTOR SHALL PROVIDE TO THE CITY OF AKRON A COPY OF THE FIELD SURVEY OF THE PROPOSED LINE AND GRADE OF ALL NEW WATER MAINS. ALL PROPOSED LINES AND GRADE SHALL BE SUBJECT TO APPROVAL OF THE CITY OF AKRON.~~

VOID

~~NO SEPARATE PAYMENT SHALL BE MADE FOR THIS WORK. FIELD SURVEY SHALL BE CONSIDERED INCIDENTAL AND INCLUDED IN THE UNIT PRICE BID FOR ITEM 814 - WATER MAINS BY TYPE AND SIZE.~~

ITEM 814 - DISCONNECT WATER SERVICE, AS PER PLAN

WATER SERVICE CONNECTIONS WHICH ARE TO BE ABANDONED SHALL BE DISCONNECTED FROM ACTIVE WATER MAINS AND PLUGGED AT THE WATER MAIN BY THE CITY OF AKRON, THE CONTRACTOR SHALL PERFORM ALL OTHER PORTIONS OF THE WORK INCLUDING EXCAVATION AND BACKFILL, RESTORATION OF THE EXISTING AREA, AND PROVIDE ALL OTHER LABOR AND MATERIALS REQUIRED. THE UNIT PRICE BID FOR ITEM 814 - DISCONNECT WATER SERVICE, AS PER PLAN, SHALL BE FULL COMPENSATION FOR ALL LABOR AND MATERIALS REQUIRED TO MAKE THIS ITEM COMPLETE.

AIR RELEASE VALVES

MANUAL AIR RELEASE VALVES SHALL BE FURNISHED AND INSTALLED BY THE CITY. THE CONTRACTOR SHALL GIVE THE CITY THREE (3) WORKING DAYS' NOTICE SO THAT THIS WORK MAY BE DONE WITH A MINIMUM OF INCONVENIENCE TO THE PUBLIC AND DELAY TO THE CONTRACTOR. THE CONTRACTOR SHALL PROVIDE ALL NECESSARY EXCAVATION AND BACKFILL AS REQUIRED. THIS WORK SHALL BE CONSIDERED INCIDENTAL TO THE WATERLINE WORK AND SHALL BE INCLUDED IN ITEM 814 - WATER MAIN BY TYPE AND SIZE.

JOINTS

Pipe joints shall be as per ODOT supplemental specification 814.07 with the following additions:

A. Push-on joints: All bell and spigot pipe of diameters 4 through 12 inches shall be joined using plain or locking rubber gaskets, gasket lubricant, and two brass wedges per joint in accordance with the manufacturer's instructions. The circumference of the spigot end of the pipe to be inserted in the bell shall be beveled to prevent cutting the rubber gasket. When necessary, pipe cuts shall be made at right angles to the pipe axis. Fittings for sizes 4 through 12 inch shall be restrained using locking rubber gaskets.

B. Gaskets and lubricant furnished under these specifications for push-on joints shall be manufactured in accordance with the latest revision of AWWA C-111.

C. Mechanical joints: All mechanical joint pipe and fittings 16 inches in diameter shall be joined using plain gaskets, gasket lubricant, and alloyed ductile iron bolts and nuts. in accordance with the manufacturer's instructions. All mechanical joint fittings shall have restrained ductile iron glands that clamp to the spigot pipe without set screws.

D. Butterfly valves shall be installed using mechanical joint by shouldered Victaulic adapters and Style 44N Victaulic couplings. Adapters for butterfly valves shall be mechanical joint using plain gaskets, lubricant, alloyed ductile iron bolts and nuts, and restrained ductile iron glands that clamp to the spigot pipe without set screws.

E. All pipe and fittings shall be encased with polyethylene sheeting or tubing. Hardwood blocking is required for all fitting diameters 4 through 8 inches, and concrete blocking and strapping is required for all fitting diameters 12 inches and over. All sizes and types of valves and fittings, excluding sleeves, tees and crosses, shall have restrained pipe joints 30 feet on each side of the valve or fitting.

F. Connection closures shall be made using solid sleeves with mechanical joints and alloyed ductile iron bolts and nuts or solid sleeves suitable for caulking in order to accommodate any out-of-roundness or unusual outer diameter of the existing pipe being connected. Permanent caps shall be restrained mechanical joint or be suitable for caulking. Permanent plugs shall be restrained push-on or be suitable for caulking.

GATE VALVES

A. The valves shall be resilient wedge with push-on ends to allow the use of a restraining rubber gasket, inside screw design, and non-rising stem intended for ordinary water works purposes. Valves will be installed in a vertical position and designed to operate equally well with pressure on either side of the gate. Valves are to open by turning the red two inch square AWWA operating nut to the right (clockwise).

B. Sealing mechanism shall provide zero leakage at waterworks pressure against line flow from either direction and be designed such that no exposed metal seams, edges, screws, etc., are within the waterway in the closed position. The rubber covered gate shall not be wedged into a pocket or slide across the seating surface to obtain a tight closure.

The O-ring seal stuffing box shall be bronze bushed to allow repacking if necessary while the valve is in the fully open position under waterworks pressure.

C. The stem shall be protected from external grit or dirt by a weathershield and an upper O-ring above the stem collar. Another O-ring shall be provided underneath the stem collar to seal the bearing surfaces from line content. The area between the O-rings shall be filled with lubricant. Anti-friction washers shall be provided at the stem collar.

D. All bolts and nuts shall be zinc-plated steel or 316 stainless steel. Minimum bolt diameter shall be 5/8 inch. If unable to furnish the 5/8 inch bolts specified above, 1/2 inch diameter stainless steel bolts and nuts must be furnished.

BUTTERFLY VALVES

A. Valves shall be designed to work with the shaft in a horizontal position, have enclosed gears, and be manually operated through a valve box by turning a red two (2) inch square AWWA operating nut with a stainless steel or brass retaining nut to the right or clockwise to open. Valves shall be equipped with corrosion resistant discs, stainless steel shafts, nylon bearings, and replaceable rubber seats. Valve bodies are to be prepared with shouldered ends for Victaulic couplings.

B. Butterfly valves shall be furnished with Victaulic couplings suitable for use with shouldered ends. Bolts shall be construction grade unpassivated 316 stainless steel.

DWN. BY: T.K.I.	REV. BY:		
DATE: 4/91	DATE:		
CAD DWG. FILE: 1157WNT3			

▲ 54.0 % PROJECT 46.0 % CITY
■ 72.9 % PROJECT 20.1 % CITY
∗ 100% CITY OF AKRON

WATERWORK GENERAL SUMMARY

CALC. BY CDB DATE 8/31
CHKD. BY DSB DATE 8/31

SUM-76-11.57
FED. PROJECT IR-76-2(44)19
SUMMIT COUNTY

OHIO
F.H.W.A. REGION 5

571
1214

SHEET NUMBER												PARTICIPATION				ITEM	ITEM EXT.	GRAND TOTAL	UNIT	DESCRIPTION
		574	576A		580	587	593	597	600		603	100% PROJECT	100% CITY	▲ 54.0% PROJ. 46.0% CITY	■ 72.9% PROJ. 20.1% CITY					
																				WATERWORK Y-060
		1 / 3∗	2		5	8	4	5	12∗		5∗	24	20∗	—	—	202	75610	45	EA.	VALVE BOX REMOVED
		—	3		3	3	3	6	—			18	—	—	—	202	98100	18	EA.	SERVICE BOX REMOVED
		—	—		—	—	—	—	10∗		—		10∗	—	—	814	00104	10	L.F.	4" WATER MAIN DUCTILE IRON PIPE ANSI CLASS 53, PUSH-ON JOINTS AND FITTINGS
		42 / 51∗	705		343 / 192∗	452 / 186∗	111	178	—		8∗	1831	437∗	—	—	814	00604	2268	L.F.	6" WATER MAIN DUCTILE IRON PIPE ANSI CLASS 53, PUSH-ON JOINTS AND FITTINGS
		53∗	—		—	—	—	—	114∗		92∗	—	259∗	—	—	814	01204	259	L.F.	8" WATER MAIN DUCTILE IRON PIPE ANSI CLASS 53, PUSH-ON JOINTS AND FITTINGS
		276∗	—		—	—	—	—	—		—	—	276∗	—	—	814	01404	276	L.F.	8" WATER MAIN DUCTILE IRON PIPE ANSI CLASS 53,
																				BOLTLESS RESTRAIINED JOINTS AND FITTIINGS
		—	—		—	—	—	—	6∗				6∗	—	—	814	01804	6	L.F.	10" WATER MAIN DUCTILE IRON PIPE ANSI CLASS 53, PUSH-ON JOINTS AND FITTINGS
		—	743		—	—	413 / 318■	—	70∗		—	1156	70∗	—	318■	814	02404	4411	L.F.	12" WATER MAIN DUCTILE IRON PIPE ANSI CLASS 53, PUSH-ON JOINTS AND FITTINGS
		—	—		586 / 549▲	—	—	—	105∗		—	586	105∗	549▲	—	814	03204	1240	L.F.	16" WATER MAIN DUCTILE IRON PIPE ANSI CLASS 53,
																				BOLTLESS RESTRAINED JOINTS AND FITTINGS
		—	—		414 / 414▲	—	—	—	—		—	414	—	414▲	—	814	06712	828	L.F.	30" STEEL PIPE ENCASEMENT, OPEN CUT
		174∗	—		—	—	—	—	—		—	—	174∗	—	—	814	07302	174	L.F.	18" STEEL PIPE ENCASEMENT, BORED OR JACKED
		—	—		—	—	—	—	1∗		—	—	1∗	—	—	814	07700	1	EA.	4" GATE VALVE AND VALVE BOX
		3 / 2∗	3		3	3	5	4	—		1∗	21	3∗	—	—	814	07800	24	EA.	6" GATE VALVE AND VALVE BOX
		3∗	—		—	—	—	—	6∗		5∗	—	14∗	—	—	814	07900	14	EA.	8" GATE VALVE AND VALVE BOX
		—	1		1	—	—	2■	3∗		2∗	2	5∗	—	2■	814	08100	9	EA.	12" GATE VALVE AND VALVE BOX
		—	—		3 / 2▲	1	—	—	2∗		—	4	2∗	2▲	—	814	98000	8	EA.	16" BUTTERFLY VALVE W/VICTAULIC JOINTS AND VALVE BOX
		—	—		—	—	1	—	—		—	1	—	—	—	814	09200	1	EA.	12" CUTTING IN SLEEVE, VALVE AND VALVE BOX
		1 / 2∗	2		1	3	5	3	1∗		1∗	15	4∗	—	—	814	10501	19	EA.	FIRE HYDRANT REMOVED AND RESET, AS PER PLAN (SEE SHEET 569)
		—	—		—	—	—	—	3∗		3∗	—	6∗	—	—	814	98000	6	EA.	8" FIRE HYDRANT AS PER PLAN (SEE SHEET 569)
		—	—		1	3	—	—	3∗		1∗	4	4∗	—	—	814	10700	8	EA.	FIRE HYDRANT REMOVED AND DISPOSED OF
		—	—		—	—	4	—	—		—	4	—	—	—	814	10800	4	EA.	VALVE BOX ADJUSTED TO GRADE
		—	1		—	—	2	—	—		—	3	—	—	—	814	10900	3	EA.	SERVICE BOX ADJUSTED TO GRADE
		—	—		—	—	1	—	—		—	1	—	—	—	814	98000	1	EA.	METER VAULT, AS PER PLAN (SEE SHEET 570)
		4∗	4		4	—	1	5	—		—	14	4∗	—	—	814	98000	18	EA.	SERVICE STOP AND SERVICE BOX REMOVED AND RESET, AS PER PLAN (SEE SHEET 569)
		—	1		1	—	—	—	—		—	2	—	—	—	814	98000	2	EA.	METER AND CHAMBER REMOVED AND RESET, AS PER PLAN (SEE SHEET 570)
		—	—		—	—	—	1	—		—	1	—	—	—	202	98600	1	EA.	CURB METER PIT ABANDONED
		108∗	90		95	—	44	69	—		—	298	108∗	—	—	814	04901	406	L.F.	1" COPPER SERVICE BRANCH, AS PER PLAN (SEE SHEET 570)
		—	1		3	3	3	5	—		—	15	—	—	—	814	98000	15	EA.	DISCONNECT WATER SERVICE, AS PER PLAN (SEE SHEET 570)
		—	—		1	1	—	1	—		—	3	—	—	—	814	98000	3	EA.	CUTTING AND PLUGGING EXISTING 6" WATER MAIN
		—	—		—	2	—	—	—		—	2	—	—	—	814	98000	2	EA.	CUTTING AND PLUGGING EXISTING 8" WATER MAIN
		—	—		—	—	—	1	—		—	1	—	—	—	814	98000	1	EA.	CUTTING AND PLUGGING EXISTING 12" WATER MAIN

AA B/P# 71942R

CALC. BY. DATE	SUM - 76 - 11.57	OHIO	572 / 1214
CHKD. BY. DATE	FED. PROJECT IR-76-2(44)19	F.H.W.A. REGION 5	

SUMMIT COUNTY

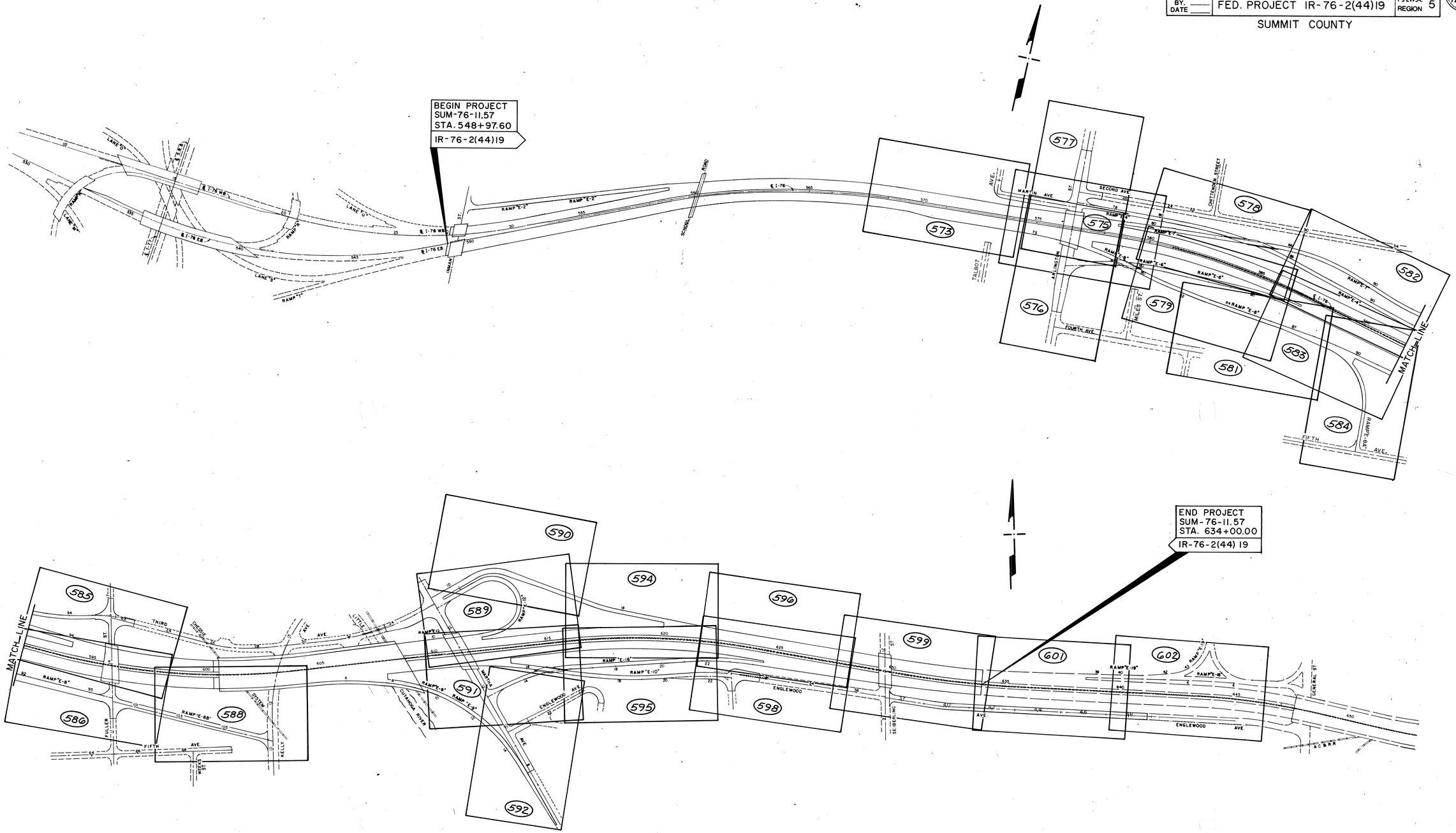

WATERWORK **KEY MAP**

AA B/P# 71942R

CALC. BY. R.V. DATE 2-68	SUM-76-11.57	OHIO
CHKD. BY. ____ DATE ____	FED. PROJECT IR-76-2(44)19	F.H.W.A. REGION 5

573
1214

SUMMIT COUNTY

FOR COMPLETE WATER MAIN SPECIFICATIONS, SEE SHEETS 568 THRU 570.

FOR PROFILE OF PROP. 6" & 8" WATER MAIN WORK, SEE SHEET 604.

FOR DETAIL OF 8" WATER MAIN IN 18" STEEL CASING, SEE SHEET 613.

FOR ROADWAY PLAN, SEE SHEET 123.

FOR WATER MAIN QUANTITIES, SEE SHEET 574.

FOR DRAINAGE PLAN, SEE SHEET 491.

FOR WATER SERVICE HOUSE CONNECTIONS DETAIL SEE SHEET 613.

100% PROJECT
100% CITY
EX. R/W
O.B.T.
15" COMB.
EX. 6" W.M.
3" G
AVENUE 19
EX. R/W
6"-45° HORIZ. BEND
W.S.
WALL
W 6
W 10
W 11
#1059
W 9
EXIST. HYD. REMOVE AND RESET
#1063
W 3
6" WATER SERVICE TO CHILDREN'S HOME
EXIST. HYDRANT REMOVED AND RESET
W 1
O.B.T.
EVERGREENS
3" G
100% CITY
W.M. STA. 3+75
BEGIN WATER MAIN RELOCATION
TALBOT AVE. STA. 19+16±, 3' RT. ℄
6"x8" REDUCER
EX. W. METER
6"x24" OFFSET BEND
W 2
W 5
EX. WALK
R/W
3" G
W 7
12" S
MARTIN AVENUE
W 6"
47
8"
COMB.
W 4
TALBOT AVE., ℄ STA. 18+40.44 =
MARTIN AVE., ℄ STA. 46+49.92
W 14
EX. RETAINING WALL (TO BE REMOVED)
EX. RAMP 'E-3'
15" S
EX. L.A R/W
PROP. RETAINING WALL NO. 1
W 44
8"x6" CROSS
BERM
I-76 WEST BOUND
12" S
℄ I-76
EX. U.D.
569
570
571
572
573
8" W.M. STA. 11+50± = STA. 573+12±, ℄ I-76
MATCH LINE STA. 574+00 SEE SHEET 574
I-76 EAST BOUND
12" S
BERM
17
W 13
W 12
REMOVE EXIST. HYDRANT RESET AT STA. 15+95, 15' RT. TALBOT AVE.
W 16
MATCH STA. 15+80 BELOW
W 8
W 18
W 13
8"x6" REDUCER
6"-45° HORIZ. BEND
℄ TALBOT AVE.
24" COMB.
3" G
W 6"
EX. R/W
℄ EX. L.A R/W
15" STM.
W.S.
TO BE TAKEN
#330
℄ L.A R/W
W 17
100% CITY
END WATER MAIN RELOCATION
W. STA. 13+39± = TALBOT AVE. STA. 15+60±, 3' RT. ℄
#342
STEPS
COMB. 24"
TALBOT AVE.
16
W 15
18" STM.
℄ EX. L.A
W 16
0 20 40 60
SCALE IN FEET
MATCH STA. 15+80 ABOVE

STA. 568+00 TO STA. 574+00

WATER MAIN PLAN

* 100% CITY OF AKRON

WATERWORKS SUBSUMMARY

CALC. BY C.DB DATE 8/91
CHKD. BY D.S.B DATE 8/91

SUM-76-11.57
FED. PROJECT IR-76-2(44)19
SUMMIT COUNTY

OHIO
F.H.W.A. REGION 5

574
1214

SHEET No.	REFERENCE No.	STATION TO STATION	SIDE	202 VALVE BOX REMOVED EACH	814 6" WATER MAIN DUCTILE IRON PIPE ANSI CLASS 53, PUSH-ON JOINTS AND FITTINGS L.F.	814 8" WATER MAIN DUCTILE IRON PIPE ANSI CLASS 53, PUSH-ON JOINTS AND FITTINGS L.F.	814 8" WATER MAIN DUCTILE IRON PIPE ANSI CLASS 53, BOLTLESS-RESTRAINED JOINTS AND FITTINGS L.F.	814 18" STEEL PIPE ENCASEMENT, BORED OR JACKED L.F.	814 6" GATE VALVE AND VALVE BOX EACH	814 8" GATE VALVE AND VALVE BOX EACH	814 FIRE HYDRANT REMOVED AND RESET, AS PER PLAN EACH	814 1" COPPER SERVICE BRANCH, AS PER PLAN L.F.	814 SERVICE STOP AND SERVICE BOX REMOVED AND RESET AS PER PLAN EACH
573	W-1	571+45 I-76	LT		26				1		1		
	W-2	571+64 I-76	LT		16				1				
	W-3	47+50 MARTIN AVE	LT									25*	1*
	W-4	572+80 I-76	LT	1									
	W-5	18+65 TALBOT AVE	RT	1*									
	W-6	19+11 TALBOT AVE	RT									21*	1*
	W-7	46+27 MARTIN AVE	LT						1				
	W-8	15+63 TALBOT AVE	LT									27*	1*
	W-9	46+88 MARTIN AVE	LT	1*	8*				1*		1*		
	W-10	18+49 TO 19+16 TALBOT AVE	RT		16*	53*							
	W-11	18+72 TALBOT AVE	RT							1*			
	W-12	16+48 TO 18+22 TALBOT AVE	RT					174*					
	W-13	15+60 TO 18+49 TALBOT AVE	RT		13*		276*						
	W-14	18+30 TALBOT AVE	RT							1*			
	W-15	16+12 TALBOT AVE	RT							1*			
	W-16	15+95 TALBOT AVE	RT		14*				1*		1*		
	W-17	16+08 TALBOT AVE	LT									35*	1*
573	W-18	15+75 TALBOT AVE	RT	1*									
		* 100% CITY		3*	51*	53*	276*	174*	2*	3*	2*	108*	4*
		100% PROJECT		1	42	—	—	—	3	—	1	—	—

DWN. BY : T.K.L.
DATE : 8-21-91
CAD DWG. FILE : 1157WSU1

REV. BY :
DATE :

AA B/P# 71942R

CALC. BY R.V. DATE 2-88	SUM-76-11.57	OHIO	575 / 1214
CHKD. BY ____ DATE ____	FED. PROJECT IR-76-2(44) 19	F.H.W.A. REGION 5	

EX. R/W
O.B.T.
3"G
PROP. 6" W.M.
6" TO BE ABANDONED
8" COMB.
48 W 49
MARTIN AVENUE
100% CITY
100% PROJECT
12"
12" S
12" W
6" G
O.B.T.
77
78
RAMP 'E-4'
SUMMIT COUNTY
W 36
RETAINING WALL Nº 2
RETAINING WALL Nº 1
FOR ARLINGTON STREET WATER MAINS SEE SHEETS 576 & 577.
MATCH LINE STA. 574+00 SEE SHEET 573.
I-76 WEST BOUND
I-76 EAST BOUND
15"
575
576
577
578
I-76
579
EX. U.D.
EX. R/W
PROP. 6" W.M.
PROP. 12" W.M.
17
18
20" COMB.
W
S
BERM
75
76
77
W 31
EXIST. LA R/W
EX. RAMP 'E-5'
RAMP 'E-8'
78
RETAINING WALL NO. 3
8" SAN
MATCH LINE STA. 580+00 SEE SHEETS 578 & 579.
18"
24"
EXIST. LA
340
W 24
W 29
O.B.T.
8" G
6" W
20" COMB.
16
ARLINGTON
TO BE ABANDONED
W 20
W 34
HYD.
BILLBOARD
CURBED
PAVED PARKING
RAMP 'E-6'
79
80
RETAINING WALL Nº 4
B-6
6" G
343
TO BE TAKEN
W 28
W 33
R/W
28.5
15
12" W
TO BE TAKEN # 272
W 15
EXIST. HYDRANT REMOVE AND RESET
EX. LA
LA
W 19
8" SAN
276
279
PROPOSED LOCATION FOR INSTALLING HYDRANT & VALVE MILES ST. STA. 12+20± RT. ℄. CUT EXIST. PIPE AND INSTALL 6"-90° BEND AND 15 LF 6"Ø W.M.
MILES ST. 12-8"
6" W
SCALE IN # FEET
0 20 40 60

FOR WATER MAIN QUANTITIES, SEE SHEET 576A.
FOR DRAINAGE PLAN, SEE SHEET 493

STA. 574+00 TO STA. 580+00

WATER MAIN PLAN

CALC BY RV DATE 2-88	SUM-76-11.57	OHIO
CHKD BY — DATE —	FED. PROJECT IR-76-2(44)19	F.H.W.A. REGION 5

576
1214

SUMMIT COUNTY

6"x24" OFFSET BEND

BEGIN WATER MAIN RELOCATION
W.M. STA. 8+83 = ARLINGTON ST.
STA. 13+60, 5' LT. ℄.

#364 #360 #340

EXIST. L.A.

I-76 ℄

EX. L.A. R/W

EXIST R/W — R/W — EX. R/W

PROP. 6" W.M. — OBT (U G) — TO BE ABANDONED

ARLINGTON STREET

PROP. 12" W.M. — TO BE ABANDONED

MATCH LINE STA. 17+00
SEE SHEET 577

EXIST R/W — R/W — EX. R/W

WATER METER TO BE RELOC. SEE DETAIL SHT. 613.

#365 #367 #359 #357 #355 #355½ #343 TO BE TAKEN

12"x24" OFFSET BEND

BEGIN WATER MAIN RELOCATION
W.M. STA. 8+70, = ARLINGTON ST.
STA. 13+60, 16' RT. ℄

FOURTH AVE.

RAMP 'E-6'

RAMP 'E-8'

EXIST L.A.

REMOVE EXIST. HYDRANT. RESET AT STA. 31+38, 30' RT. ℄ ENGLEWOOD AVE.

CURB BOXES AT THE FOLLOWING ADDRESSES TO BE RELOCATED BEHIND THE CURB LINE 2' MIN. SEE DETAIL SHEET 613.

ARLINGTON ST.	LT.	RT.
	#340	#357, 359 W/METER
	#360	#355
		#355½

FOR WATER MAIN PROFILES SEE SHEET 605.
FOR WATER MAIN QUANTITIES, SEE SHEET 576A.
FOR DRAINAGE PLAN, SEE SHEET 496.

0 20 40 60
SCALE IN FEET

ARLINGTON STREET
WATER MAIN PLAN

WATERWORKS SUBSUMMARY

CALC. BY: CDB DATE 8/91
CHKD. BY: TSB DATE 8/91

SUM-76-11.57
FED. PROJECT IR-76-2(44)19
SUMMIT COUNTY

OHIO
F.H.W.A. REGION 5

576A
1214

| SHEET No. | REFERENCE No. | STATION TO STATION | SIDE | 202 | | | | 814 | | | |

AA B P4 711428

CALC. BY R.V. DATE 2-88	SUM-76-11.57	OHIO	577 1214
CHKD. BY DJB DATE 7/89	FED. PROJECT IR-76-2(44)19	F.H.W.A. REGION 5	

SUMMIT COUNTY

ARLINGTON STREET
WATER MAIN PLAN

EXIST. LA
I-76 ℄
EXIST. L.A. R/W
MARTIN AVE.
48
49
575
576
577
578
#1069
#1073
#1077
#302
EX. R/W
100% CITY
100% PROJECT
W 35
W 48
W 47
W 44
W 46
W 43
W 42
W 45
W 29
W 41
W 37
W 38
W 39
W 40
W 31
W 36
W 33
12" S
8" G
6" W
20" COMB.
12" COMB.
8" COMB.
OBT
WALK
DRIVE
SIGN
PUMPS
SERVICE STATION
WALL
12" STM.
8" SAN.
4" W
6" G
ARLINGTON STREET
18
19
20
21
22
PROP. 6" W.M.
TO BE ABANDONED
PROP. 12" W.M.
12"x12"x6" TEE
6"~45° HORIZ. BEND
WATER METER TO BE RELOC. SEE DETAIL SHT. 613.
R/W
EXIST. R/W
19" STONE WALL
(ABANDONED)
END WATER MAIN RELOCATION W.M. STA. 16+13 = ARLINGTON ST. STA. 21+03, 16' RT. ℄
12"x24" OFFSET BEND
EXIST. HYDRANT REMOVED AND RESET
REMOVE EXIST. HYDRANT RESET AT STA. 15+12 35' RT. ℄ ARLINGTON ST.
SECOND AVENUE
PROP. 6" W.M.
6"x24" OFFSET BEND
END WATER MAIN RELOCATION W.M. STA. 15+55.6 = SECOND AVE. STA. 21+20±, 3' LT.± ℄
RAMP 'E-8'
RAMP 'E-4'
EXIST. LA R/W
EXIST. R/W
SEE SHEET 576 MATCH LINE STA. 17+00
B-5
2278405 E

FOR WATER MAIN PROFILES SEE SHEETS 604 & 605.
FOR WATER MAIN QUANTITIES, SEE SHEET 580.
FOR DRAINAGE PLAN, SEE SHEET 495.
FOR WATER SERVICE HOUSE CONNECTIONS DETAIL SEE SHEET 613.

0 20 40 60
SCALE IN FEET

CALC. BY. R.V. DATE 2-88	SUM-76-11.57	OHIO	578 / 1214
CHKD. BY. ____ DATE ____	FED. PROJECT IR-76-2(44)19	F.H.W.A. REGION 5	

SUMMIT COUNTY

STA. 19+12, CHITTENDEN ST., 45'± LT. ℄ DISCONNECT EXIST. 6" PIPE SOUTH END OF CROSS AND INSTALL PLUG W/ CONC. PIER

W.M. STA. 0+00
BEGIN WATERMAIN RELOCATION
CHITTENDEN ST., STA. 19+08, 10' RT. ℄

W 49 · W 58 · W 59 · W 55 · W 53 · W 54 · W 56 · W 57 · W 50 · W 51 · W 52

STREET · 8" I.P.G · 6" W COMB · 20" W · 16" W · 4" G · 6" I.P.G · 6" W · 8" SAN · EXIST. R/W · EX. R/W · LA R/W

16"x16"x16" TEE
16"~45° HORIZ. BEND
16"~90° BEND
16"~45° HORIZ. BEND
15" STM.
12" S

SECOND AVENUE · EXIST. LA R/W · RAMP 'E-4' · RAMP 'E-7' · PROP. RETAINING WALL NO. 2

#1178 TO BE TAKEN · #1182 TO BE TAKEN · #1186 TO BE TAKEN

MATCH LINE STA. 79+77 SEE SHEET 575.
MATCH LINE STA. 29+75 SEE SHEET 582.
MATCH LINE STA. 86+25 SEE SHEET 582.
MATCH LINE STA. 86+00 SEE SHEET 582.
MATCH LINE STA. 580+00 SEE SHEET 575.
MATCH LINE SEE SHEET 579.

ALL EXIST. ABUTMENT FOOTINGS W/PILINGS TO REMAIN (2)

I-76 WEST BOUND · I-76 EAST BOUND · I-76 ℄ · EX. U.D. · WALL · BERM · CHITTENDEN · 8" I.P.G.

PARTICIPATION
W53 AND W54
___% CITY
___% PROJECT

ALL 16" WATER MAIN SHALL BE BOLTLESS RESTRAINED JOINT PIPE.

FOR WATER MAIN PROFILE, SEE SHEET 606.
FOR WATER MAIN QUANTITIES, SEE SHEET 580.
FOR DRAINAGE PLAN, SEE SHEET 498.

NOTE: CONTRACTOR TO INSTALL 30" W.M. CASINGS PRIOR TO DEMOLITION OF BRIDGE OVER CHITTENDEN ST. FOR BRIDGE REMOVAL PLANS, SEE SHEETS 237-239.

0 20 40 60
SCALE IN FEET

WEST BOUND
STA. 580+00 TO STA. 586+00
WATER MAIN PLAN

CALC. BY R.V. DATE 2-88	SUM-76-11.57	OHIO
CHKD. BY ____ DATE ____	FED. PROJECT IR-76-2(44)19	F.H.W.A. REGION 5

SUMMIT COUNTY

579
1214

I-76 WEST BOUND

I-76 EAST BOUND

MATCH LINE SEE SHEET 575

STA. 580+00

MATCH LINE SEE SHEET 578

EX. UD

ALL EXIST. ABUTMENTS FOOTINGS W/PILINGS TO REMAIN

ALL EXIST. ABUTMENTS FOOTINGS W/PILINGS TO REMAIN

℄ I-76

STA. 586+00

MATCH LINE SEE SHEET 583

STREET

6" W COMB.

18" W

16" W

EX. LA R/W

W 60

RAMP 'E-6'

EX. RAMP 'E-6'

PROP. RETAINING WALL No 4

B-8

B-9

EXIST. THIRD AVENUE

6" W

8" SAN.

2" G

12" S

15" STM.

15" S

#1154 TO BE TAKEN

#1156 TO BE TAKEN

#1158 TO BE TAKEN

#1160 TO BE TAKEN

#1166 TO BE TAKEN

EX. LA

SERVICE ROAD

RAMP 'E-8'

B-10

W 53

W 54

W 56

W 57

W 13

EX. LA.

24" STM.

RAMP 'E-5'

12" SAN.

LA R/W

30" STM.

THIRD

MATCH LINE STA. 86+00

RELOCATED 8" SAN. 2

#275

ST.

EXIST. R/W

SAN. 6" W

MILES

EXIST. LA

CHITTENDEN

PARTICIPATION
W53 AND W54
____ % CITY
____ % PROJECT

8" W

8" SAN.

I.P.G.

W G1

W G2

16"x16"x16" TEE

16"x30" BEND

EXIST. LA

MATCH LINE STA. 13+75
SEE SHEET 581.

ASPHALT PARKING

MATCH LINE
SEE SHEET 581.

NOTE: CONTRACTOR TO INSTALL 30" W.M. CASINGS PRIOR TO DEMOLITION OF BRIDGE OVER CHITTENDEN STREET. SEE BRIDGE REMOVAL PLANS SHEETS 237-239.

FOR WATER MAIN PROFILE, SEE SHEET 606.
FOR WATER MAIN QUANTITIES, SEE SHEET 580
FOR DRAINAGE AND SANITARY PLAN, SEE SHEET 500.

0 20 40 60
SCALE IN FEET

ALL 16" WATER MAIN SHALL BE BOLTLESS RESTRAINED JOINT PIPE.

EASTBOUND
STA. 580+00 TO STA. 586+00
WATER MAIN PLAN

▲ _____% PROJECT _____% CITY
* 100% CITY

WATERWORKS SUBSUMMARY

CALC. BY. CDB DATE 8/91
CHKD. BY. DSB DATE 8/91

SUM-76-11.57
FED. PROJECT IR-76-2(44)19
SUMMIT COUNTY

OHIO
F.H.W.A. REGION 5

580
1214

| SHEET No. | REFERENCE No. | STATION TO STATION | SIDE | 202 VALVE BOX REMOVED EACH | 202 SERVICE BOX REMOVED EACH | 202 | 202 | 814 DISCONNECT WATER SERVICE AS PER PLAN EACH | 814 | 814 6" WATER MAIN DUCTILE IRON PIPE ANSI CLASS 53, PUSH-ON JOINTS AND FITTINGS L.F. | 814 | 814 16" WATER MAIN DUCTILE IRON PIPE ANSI CLASS 53, BOLTLESS-RESTRAINED JOINTS AND FITTINGS L.F. | 814 | 814 30" STEEL ENCASEMENT PIPE OPEN CUT L.F. | 814 | 814 | 814 | 814 | 814 6" GATE VALVE AND VALVE BOX EACH | 814 12" GATE VALVE AND VALVE BOX EACH | 814 | 814 16" BUTTERFLY VALVE W/METALLIC JOINTS AND VALVE BOX EACH | 814 | 814 | 814 FIRE HYDRANT REMOVED AND DISPOSED OF EACH | 814 | 814 FIRE HYDRANT REMOVED AND RESET AS PER PLAN EACH | 814 | 814 1" COPPER SERVICE BRANCH, AS PER PLAN L.F. | 814 | 814 SERVICE STOP AND SERVICE BOX REMOVED AND RESET AS PER PLAN EACH | 814 METER AND CHAMBER REMOVED AND RESET, AS PER PLAN EACH | 814 | 814 | 814 CUTTING AND PLUGGING EXISTING 6" WATER MAIN EACH | 814 | 814 | 814 | 814 | 814 | 814 | 814 |
|---|---|---

AA B/P# 71942R

CALC. BY. RV DATE 2-88	SUM-76-11.57	OHIO
CHKD. BY. ____ DATE ____	FED. PROJECT IR-76-2(44)19	F.H.W.A. REGION 5

SUMMIT COUNTY

581
12.14

THIRD AVENUE SERVICE ROAD

UNDERBED

ASPHALT PARKING

MATCH LINE
SEE SHEET 579.

MATCH LINE STA. 13+75
SEE SHEET 579

EXIST. R/W

W 66

W 64

W 56

W 63

W 65

6" COMB

16" W

CHITTENDEN

EX. R/W

16"-45° HORIZ. BENDS

6" W

8" SAN.

26

27

28

29

30

6" W

8" SAN.

8" SAN.

FOURTH AVENUE

WALK

WALL

STEPS

WALK

WALK

END 16" WATER MAIN RELOCATION
W.M. STA. 5+86 = CHITTENDEN ST.
STA. 13+35, 7± RT. ℄

8" I.P.

6" W

12+50

6" COMB

16" W

4" W.S.

EXIST. AIR RELEASE VALVE

REMOVE EX. 6"x6" CROSS AND INSTALL A 6"x30° BEND AND SOLID SLEEVE

NOTE: ALL 16" WATER MAIN SHALL BE BOLTLESS RESTRAINED JOINT PIPE.

SCHOOL

SCHOOL

MATCH LINE STA. 31+00
SEE SHEET 583

FOR WATER MAIN PROFILE, SEE SHEET 606.
FOR WATER MAIN QUANTITIES, SEE SHEET 587.

SCALE IN FEET
0 20 40 60

CHITTENDEN STREET & FOURTH AVENUE WATER MAIN PLAN

CALC. BY. R.V. DATE 2-88	SUM-76-11.57	OHIO
CHKD. BY. DATE	FED. PROJECT IR-76-2(44)19	F.H.W.A. REGION 5

582/1214

SUMMIT COUNTY

STA. 19+08, 5' LT. @ HART AVE. REMOVE EXIST. 6" WM S. SIDE OF TEE AND INSTALL 8" PLUG WITH CONC. PIER.

MATCH LINE STA. 29+75 SEE SHEET 578

MATCH LINE STA. 86+25

MATCH LINE STA. 86+00

MATCH LINE STA. 586+00 SEE SHEET 578

MATCH LINE STA. 92+57 SEE SHEET 585

MATCH LINE STA. 92+04

MATCH LINE STA. 592+00 SEE SHEET 585

MATCH LINE 'A'

SECOND AVENUE

THIRD AVENUE

HART AVENUE

LA R/W

EXIST. R/W

EX. R/W

#1226

#1136 TO BE TAKEN

W 67

W 68

W 69

W 70

W 71

15" STM.

PROP. RETAINING WALL No 5

RAMP 'E-7'

RAMP 'E-4'

EX. RAMP 'E-7'

EX. LA

B-12

I-76 WEST BOUND

I-76 EAST BOUND

I-76

EX. UD.

EX. 6" UD.

ELEC.

W.S.

FOR WATER MAIN QUANTITIES, SEE SHEET 587.
FOR DRAINAGE PLAN, SEE SHEET 502.
FOR 6" WATER MAIN PROFILE, SEE SHEET 612.

MATCH SHEET 583.

0 20 40 60
SCALE IN FEET

WEST BOUND
STA. 586+00 TO STA. 592+00
WATER MAIN PLAN

MATCH SHEET 582

CALC. BY R.V. DATE 2-88	SUM-76-11.57	OHIO
CHKD. BY ____ DATE ____	FED. PROJECT IR-76-2(44)19	F.H.W.A. REGION 5

583
1214

SUMMIT COUNTY

STA. 586+00 SHEET 579

MATCH LINE SEE SHEET

STA. 592+00 SHEET 586

MATCH LINE SEE SHEET

I-76 WEST BOUND

I-76 EAST BOUND

℄ I-76

587 588 589 590 591

EX. U.D.

EX. U.D.

EX. 6" U.D.

TO REMAIN

8" SAN (ABD.)

8" SAN

12" S

RAMP 'E-6'

EX. RAMP 'E-6'

B-11

MATCH LINE STA. 86+00

87 88

℄

12" S TO BE ABD & PLUGGED

12" S TO BE ABANDONED

12" S

15"

30"

EX. R/W

30"

90 91

89

88

87

℄

RAMP 'E-8'

30"

MATCH LINE STA. 86+00

B-10

THIRD AVENUE SERVICE ROAD

6" W

8" SAN

30"

LA R/W

FOR WATER MAIN QUANTITIES, SEE SHEET 587
FOR DRAINAGE PLAN, SEE SHEETS 504 & 505.

MATCH LINE STA. 31+00 SHEET 58

6" W TO BE ABANDONED

TO REMAIN

FOURTH AVENUE

32

WV 72

TO BE TAKEN #1213

TO BE TAKEN #1215

#1219

TO BE TAKEN #1221

RAMP 'E-8A'

10

15"

MATCH LINE STA. 10+50 SHEET 584

EX. R/W

4" G

6" SAN

33

12" S

TO BE TAKEN

TO BE TAKEN #1237

#1233

#1233

B-13

EX. R/W

6" W (TO BE ABD.) (TO BE REMOVED)

6" W

8" SAN TO BE ABD.

12"

12" S

20" COMB

TO REMAIN

HART STREET

EX. R/W

#1214 TO BE TAKEN

#1216 TO BE TAKEN

#1218 TO BE TAKEN

#1224 TO BE TAKEN

MATCH LINE STA. 92+00

0 20 40 60
SCALE IN FEET

EAST BOUND
STA. 586+00 TO STA. 592+00

WATER MAIN PLAN

AA B/P# 71942R

CALC. BY. R.V. DATE 2-88	SUM-76-11.57	OHIO
CHK'D. BY. ____ DATE ____	FED. PROJECT IR-76-2(44)19	F.H.W.A. REGION 5

584
1214

LA R/W

W 75 — W 76 — PLUG EXISTING CROSS 10"x8"

EXIST. R/W

#1233

AVENUE

50'S

10"W

60

24"S

HART ST.

8"W

TO BE ABD.

15"

#1301
TO BE TAKEN

REMOVE EXIST. HYDRANT. RESET AT STA. 68+50, 16' LT. FIFTH AVE. SHT. No. 588.

W 87

TO BE REMOVED

15"S

TO BE ABANDONED

8"SAN.

6"W

(TO REMAIN) RAMP 'E-8A'

20"S

8"W

12

13

34

12"S

12"S

MATCH LINE STA. 10+50 SEE SHEET 583

G 6"

#1225
TO BE TAKEN

W 73

W 74

W 73

W.S.

TO BE CAPPED

#1308
TO BE TAKEN

TO BE TAKEN

LA R/W

REMOVE EXIST. HYD. RESET AT STA. 59+15 16' LT. & FIFTH AVE.

#1224 TO BE TAKEN

#1218 TO BE TAKEN

#1216 TO BE TAKEN

#1214 TO BE TAKEN

TO BE TAKEN #1221

TO BE TAKEN #1219

TO BE TAKEN #1215

TO BE TAKEN #1213

STA. 59+15 ± , 6' LT. & FIFTH AVE. CUT EXIST. 10" Ø W.M. AND INSTALL 10"X10"X6" TEE W/3LF 10"Ø NIPPLE W/SOLID SLEEVE AND 10 LF-6"Ø W.M.

EXIST. R/W

FIFTH

59

58

4" G

33

8"SAN.

6"W

FOURTH

STEPS

RAZED BUILDING

32

TO REMAIN

LA R/W

FOR WATER MAIN QUANTITIES, SEE SHEET 587.
FOR DRAINAGE PLAN, SEE SHEET 505.

0 20 40 60
SCALE IN FEET

RAMP 'E-8A'
STA. 10+50 TO STA. 13+85.65
WATER MAIN PLAN

AA. B.P# 71942R

CALC. BY. R.V. DATE 2-88	SUM-76-11.57	OHIO
CHKD. BY. ____ DATE ____	FED. PROJECT IR-76-2(44)19	F.H.W.A. REGION 5

SUMMIT COUNTY

585
1214

BEGIN WATER MAIN RELOCATION
W.M. STA. 0+00 = FULLER ST.
STA. 17+00, 6' LT. ℄

6"x24" OFFSET BEND

LA R/W

REMOVE EXIST. HYDRANT
RESET AT STA. 16+84, 17' LT.
℄ FULLER ST.

CONSTRUCTION LIMITS

TO BE TAKEN

#1263

EX. R/W

EX. 24" STORM TO REMAIN

AVENUE

MATCH LINE STA. 92+50

RAMP E-7

TO BE ABANDONED

TO REMAIN

THIRD

#1268 TO BE TAKEN

#1270 TO BE TAKEN

#1274 TO BE TAKEN

100% PROJECT

PROP. 6" W.M.

FULLER

SAN. 15"

MATCH LINE STA. 92+04

RAMP 'E-4'

STA. 592+00

SEE SHEET 582

12" S TO BE ABANDONED

15" S TO BE ABD.

℄ I-76

I-76 WEST BOUND

I-76 EAST BOUND

EX. 6" U.D.

EX. U.D.

MATCH SHEET 586

FOR 6" WATER MAIN PROFILE, SEE SHEET 612.
FOR WATER MAIN QUANTITIES, SEE SHEET 587.
FOR DRAINAGE PLAN, SEE SHEET 507.

STA. 598+00

MATCH LINE

0 20 40 60
SCALE IN FEET

WEST BOUND
STA. 592+00 TO STA. 598+00

WATER MAIN PLAN

AA B/P# 71942R

CALC. BY. RV DATE 2-88	SUM-76-11.57	OHIO	586 / 1214
CHKD. BY. DATE	FED. PROJECT IR-76-2(44)19	F.H.W.A. REGION 5	

SUMMIT COUNTY

MATCH SHEET 585

MATCH LINE STA. 592+00 SEE SHEET 583

MATCH LINE STA. 598+00 SEE SHEET 586

I-76 WEST BOUND

I-76 EAST BOUND

BERM

DRAIN

WALL

EX. 6" U.D.

593

594

595

596

597

12"-S

15"

EX. U.D.

OVERHEAD SIGN

14" SAN

15" S

100% CITY

100% PROJECT

I-76 ℄

8" SAN

EX. RAMP 'E-8'

PROP. 6" WATER MAIN

W 80

W 81

W 82

W 83

4" G

6" W

21" S

REMOVE EXIST. HYDRANT RESET AT STA. 11+40, 19' LT. ℄ FULLER ST.

B-16

B-17

EXIST. LA R/W

30"

W 6" SAN 8"

93

94

95

AVENUE

TO BE ABANDONED 8" SAN

RAMP 'E-8'

#1243 TO BE TAKEN

#1247 TO BE TAKEN

#1238 TO BE TAKEN

#1242 TO BE TAKEN

#1250 TO BE TAKEN

#1254 TO BE TAKEN

#1258 TO BE TAKEN

#1260 TO BE TAKEN

#1264 TO BE TAKEN

#1268 TO BE TAKEN

#1272 TO BE TAKEN

#310 TO BE TAKEN

#314

FOURTH

CONSTRUCTION LIMITS

STAIRS

STEPS

12" S

STREET

FULLER

EX. R/W

LA R/W

EXIST. LA

101 ℄ RAMP 'E-8B'

MATCH LINE STA. 102+00

6"x24" OFFSET BEND

END WATER MAIN RELOCATION W.M. STA. 5+74.8 = FULLER ST. STA. 11+32, 6 ± LT. ℄

FOR 6" WATER MAIN PROFILE, SEE SHEET G12
FOR WATER MAIN QUANTITIES, SEE SHT. 587
FOR DRAINAGE PLAN, SEE SHEET 509.

0 20 40 60
SCALE IN FEET

EAST BOUND
STA. 592+00 TO STA. 598+00

WATER MAIN PLAN

* 100% CITY OF AKRON

WATERWORKS SUBSUMMARY

CALC. BY. CDB DATE 2/91
CHKD. BY. DJB DATE 2/91

SUM-76-11.57
FED. PROJECT IR-76-2(44)19
SUMMIT COUNTY

OHIO
F.H.W.A. REGION 5

587
1214

SHEET No.	REFERENCE No.	STATION TO STATION	SIDE	202				814																																					
				VALVE BOX REMOVED	SERVICE BOX REMOVED			DISCONNECT WATER SERVICE AS PER PLAN		6" WATER MAIN DUCTILE IRON PIPE ANSI CLASS 53, PUSH-ON JOINTS AND FITTINGS									6" GATE VALVE AND VALVE BOX		16" BUTTERFLY VALVE W/MCTAULIC JOINTS AND VALVE BOX				FIRE HYDRANT REMOVED AND DISPOSED OF		FIRE HYDRANT REMOVED AND RESET, AS PER PLAN			CUTTING AND PLUGGING EXISTING 6" WATER MAIN		CUTTING AND PLUGGING EXISTING 8" WATER MAIN															
				EACH	EACH			EACH		L.F.									EACH		EACH				EACH		EACH			EACH		EACH													
581	W-63	13+49 CHITTENDEN ST	RT																		1																								
↑	W-64	13+05 CHITTENDEN ST	LT																											1														
↓	W-65	26+13 FOURTH AVE	LT	1																					1																			
581	W-66	13+33 CHITTENDEN ST	LT	1																																								
582	W-67	30+53 SECOND AVE	RT		1			1																																			
↑	W-68	90+95 RAMP E-7	RT																						1																			
	W-69	33+91 SECOND AVE	LT																																					1			
↓	W-70	18+72 HART AVE	LT	1																																							
582	W-71	31+51 TO 31+84 SECOND AVE	LT							35																																	
583	W-72	32+37 FOURTH AVE	LT																						1																			
584	W-73	59+15 FIFTH AVE	LT							10									1								1																
↑	W-74	59+53 FIFTH AVE	LT		1			1																																			
↓	W-75	13+65 RAMP E-8A	LT	1																																							
584	W-76	59+89 FIFTH AVE	LT																																					1			
585	W-77	16+84 FULLER ST	LT							8									1								1																
↑	W-78	95+47 RAMP E-7	RT	1																																							
↓	W-79	95+62 RAMP E-7	RT	1																																							
585	W-80	11+32 TO 17+00 FULLER ST	LT							186*/389																																	
586	W-81	95+52 RAMP E-8	LT	2																																							
↑	W-82	11+49 FULLER ST	LT							10									1								1																
586	W-83	11+43 FULLER ST	RT		1			1																																			
		* 100% CITY		—	—			—		186*									—		—				—		—			—		—											
		100% PROJECT		8	3			3		452									3		1				3		3			1		2											

DWN. BY : T.K.I.
DATE : 8-21-91
CAD DWG. FILE : 115YWSU3
REV. BY :
DATE :

CALC. BY R.V. DATE 2-88	SUM-76-11.57	OHIO
CHKD. BY — DATE —	FED. PROJECT IR-76-2(44)19	F.H.W.A. REGION 5

588
12/4

SUMMIT COUNTY

I-76 WEST BOUND

I-76 EAST BOUND

I-76

MATCH LINE STA. 598+00 SEE SHEET 586

MATCH LINE STA. 604+00

PT STA. 603+87.59

599 600 601 602 603

WALL

EX. U.D.

SAN. 8"

6" G

13" COMB.

REMOVE EXIST. HYDRANT RESET AT STA. 10+94, 30' LT. ℄ KELLY AVE.

W 85

W 84

TO BE CAPPED

PROP. AERIAL EASEMENT BALTIMORE & OHIO RAILROAD

EX. R/W

30"

12" AVENUE

EXIST. 15" SAN. (UNDER 6'-6" STM.)

6'-6" COMB.

EX. RAMP 'E-8'

MATCH LINE STA. 102+00

103 104 105 106 107

℄ RAMP 'E-8B'

15" S

TO BE REMOVED

TO BE ABANDONED

LA R/W

PAVED PARKING

W 87

W 90

W 93

W 92

W 86

W 88

W 89

W 91

EX. R/W

4" G

12" S

W 10"

54" COMB.

FIFTH AVENUE

68 69 70 71

12" W.M. TO REMAIN

12" ST.

G" G

12" COMB.

W.S.

#1344 TO BE TAKEN

KELLY AVENUE

10 KELLY COMB.

6'-6" COMB.

EX. W.M. ENCASM'T.

W 6"

W 12"

12" S

PROP 12" W.M.

54"

9

11

REMOVE VALVE & VALVE BOX - REPLACE W/10'-12" W.M. & 12"Ø SOLID SLEEVE ALSO, COST OF REMOVAL TO BE INCLUDED IN COST OF PIPE ITEM 814 12" WATERMAIN.

FOR WATER MAIN QUANTITIES, SEE SHEET 593

SEE DETAIL 'A'

DETAIL 'A'

0 20 40 60
SCALE IN FEET

EAST BOUND
STA. 598+00 TO STA. 604+00
WATER MAIN PLAN

AA B/Pn.31942R

CALC. BY. R.V. DATE 2-88	SUM-76-11.57	OHIO	589 1214
CHKD. BY. DATE	FED. PROJECT IR-76-2(44)19	F.H.W.A. REGION 5	

SUMMIT COUNTY

STA 17+10 8"LT.℄ MARTHA AVE. CUT EXIST. 12"PIPE AND INSTALL 12"x6"TEE & 21 LF ~ 6"Ø W.M. & 5 L.F.~12"Φ W.M. WITH SOLID SLEEVE.

MATCH SHEET 590

#1400 TO BE TAKEN

#1370 TO BE TAKEN

#1404 TO BE TAKEN

#1416 TO BE TAKEN

LA R/W

SAN. 15"

8" G EX R/W

15" SAN.

6" A-W

4" G

12" S

15" S

RAMP 'E-12'

RAMP 'E-15'

EX. RAMP 'E-12'

EX. RAMP 'E-13'

B-21

B-22

R/W

AVENUE

ELEC. (ABD) W "G"

ELEC.

OBT.

W 94

W 95

W 96

TO BE CAPPED

REMOVE EXIST. HYDRANT RESET AT STA. 17+10,29'LT. @ MARTHA AVE.

MARTHA W 12"

15" SAN

EX. R/W

18"

21"

EX. 6" U.D.

I-76 WEST BOUND

I-76 EAST BOUND

I-76

BERM

berm

MATCH LINE STA. 610+00

MATCH LINE STA. 15+50

MATCH LINE STA. 616+00 SEE SHEET 594

MATCH SHEET 591

FOR DRAINAGE PLAN, SEE SHEET 516

FOR WATER MAIN QUANTITIES, SEE SHEET 593

0 20 40 60 SCALE IN FEET

WEST BOUND
STA. 610+00 TO STA. 616+00

WATER MAIN PLAN

CALC. BY. R.V. DATE 2-88	SUM-76-11.57	OHIO
CHKD. BY. ____ DATE ____	FED. PROJECT IR-76-2(44) 19	F.H.W.A. REGION 5

590
1214

SUMMIT COUNTY

IRENE AVENUE

8" SAN. S
18"
6" W
8" SAN. S
6" W
21" S
12" W
8" SAN.
SAN. JOHNS AVENUE
15" S
24" S
6" W
29
30
EAST
31
MARKET
STREET
32
33
34
W 97
12" W
15" SAN.
15" SAN.
15" SAN.
15" SAN.
12" S
6" W
WALK
WM.
W.S.
W.S.
EX. R/W
8" SAN.
15"
8" G
EX R/W
WM.
12" S
15" S
12" S
15" SAN.
W 98
4" G
4" G
#1364
#1368
#1372
#1400 TO BE TAKEN
#1416 TO BE TAKEN
12
13
RAMP 'E-15'
14
15
LA R/W
RAMP 'E-12'
16
11
B-21
17
15
#1404 TO BE TAKEN
B-22
#1370 TO BE TAKEN
10
12" S
12" S
FOR WATER MAIN QUANTITIES SEE SHEET 593.
MATCH SHEET 589.

SCALE IN FEET
0 20 40 60

WATER MAIN PLAN

AA B.P# 71942R

CALC. BY. RV. DATE 2-88	SUM-76-11.57	OHIO
CHKD. BY. ____ DATE ____	FED. PROJECT IR-76-2(44)19	F.H.W.A. REGION 5

591
12.14

SUMMIT COUNTY

FOR DRAINAGE PLAN, SEE SHEET 518.
FOR WATER MAIN QUANTITIES, SEE SHEET 593.
FOR WATER MAIN PROFILE, SEE SHEET 607.

MATCH SHEET 589.

END 12" WATER MAIN RELOCATION
W.M. STA. 3+95 = MARTHA AVE.,
STA. 13+88, 8' LT. ℄

(2) 12"-45° HORIZ. BENDS

MATCH LINE STA. 610+00

I-76 WEST BOUND

I-76

I-76 EAST BOUND

MATCH LINE STA. 616+00
SEE SHEET 595

EX. 6" U.D.

TO BE ABD. & PLUGGED

12" S

8" SAN.

EX. RAMP 'E-10'

RAMP 'E-10'

18" SAN.

RELOC. 12" W.M.

6" W (ABD)

21" ELEC.

15"

EXIST. LA 7

MARTHA AVE.

SAN 21

EX. RAMP 'E-9'

MATCH LINE STA. 10+25

SAN 18"

30" S

TO BE ABD. & PLUGGED

RAMP 'E-9'

EXIST. LA 7

12"x12"x6" TEE

MATCH LINE STA. 12+40
SEE SHT. 592

W 12"

30"

EXIST. LA R/W

EX. R/W

MATCH LINE STA. 10+50
592
SEE SHEET

RAMP 'E-16'

REMOVE EXIST. HYDRANT
RESET AT STA. 22+12, 21' RT.
ENGLEWOOD AVE.
SHT. No. 592.

24"

B-20

4" G

EXIST. R/W

JOHNS AVENUE

8" SAN.

W 6"

EXIST. LA R/W

#49 TO BE TAKEN

TO BE TAKEN

W.S.

MATCH LINE STA. 16+25

MATCH LINE STA. 16+00

MATCH LINE STA. 23+00

LA R/W

ENGLEWOOD AVENUE

22

W 106

W 100

W 101

W 99

0 20 40 60
SCALE IN FEET

EAST BOUND
STA. 610+00 TO STA. 616+00
WATER MAIN PLAN

AA B/P# 71942R

CALC. BY. RV. DATE 2-88	SUM-76-11.57	OHIO
CHKD. BY. ____ DATE ____	FED. PROJECT IR-76-2(44)19	F.H.W.A. REGION 5

592
1214

SUMMIT COUNTY

MATCH LINE STA. 12+40

(2) 12"-45° HORIZ. BEND

BEGIN 12" WATER MAIN RELOCATION, W.M. STA 0+00 = MARTHA AVE., STA. 10+00, 22' LT. ℄

EXTEND WATER SERVICE AND RELOCATE METER VAULT W/ VALVES TO STA. 3+03, 65' LT. ℄ MARTHA AVE. TO ℄ M.H. TOP SEE DETAIL SHT. 614.

BACKFLOW VALVES ON CONCRETE PAD

WATER METER VAULT

W 102

B-19

W 101

PROP 12" W.M.

MATCH LINE STA. 10+50 SEE SHT 591

B-20

EXIST. R/W

RAMP 'E-9'

RAMP 'E-16'

AVENUE

10 8" SAN

12" STORM

ELEC.

BEGIN 12" WATER MAIN CONSTRUCTION W.M. STA. 0+00 = ENGLEWOOD AVENUE STA. 20+24, 6' RT. ℄ & REMOVE EXISTING 12"x6" REDUCER AND INSTALL 12"x24" OFFSET BEND.

12" STM

12" W

6" G

8" SAN

W 6" TO BE ABAND.

4" G

EXIST. R/W

JOHNS AVENUE

8" SAN

W 6"

4" G

EXIST. LA R/W

MATCH SHEET 595

W 107

W 103

W 105

W 104

12" x 12" x 6" TEE

#49 TO BE TAKEN

TO BE TAKEN

CUT EXIST. 6" W.M. AND CONNECT 6"-45° HORIZ. BEND W/3 L.F. 6"Ø NIPPLE WITH SOLID SLEEVE.

8% CITY PROJECT

W 108

W 106

STREET

LEAGUE

8" SAN

W 6"

4" G

ENGLEWOOD AVENUE

PROP 12" W.M.

LA R/W

MATCH LINE STA 23+00 SEE SHEET 595

FOR WATER MAIN PROFILE MARTHA AVE., SEE SHT. 607.
FOR WATER MAIN PROFILE ENGLEWOOD AVE., SEE SHT. 608.
FOR WATER MAIN QUANTITIES, SEE SHEET 593.
FOR DRAINAGE PLAN, SEE SHEET 520.

LA R/W

EXIST. R/W

RAILROAD

BELT

BARBERTON

AKRON

MARTHA

509500 N

509800 N

2281800 E

2282100 E

0 20 40 60
SCALE IN FEET

Rev.

RAMP 'E-9' & 'E-16'
WATER MAIN PLAN

■ _____% PROJECT _____% CITY

WATERWORKS SUBSUMMARY

CALC. BY CDB DATE 8/91
CHKD. BY DSB DATE 8/91

SUM-76-11.57
FED. PROJECT IR-76-2(44)19
SUMMIT COUNTY

OHIO
F.H.W.A. REGION 5

593
1214

SHEET No.	REFERENCE No.	STATION TO STATION	SIDE	202					814																																			
				VALVE BOX REMOVED	SERVICE BOX REMOVED				DISCONNECT WATER SERVICE AS PER PLAN			6" WATER MAIN DUCTILE IRON PIPE ANSI CLASS 53, PUSH-ON JOINTS AND FITTINGS	12" WATER MAIN DUCTILE IRON PIPE ANSI CLASS 53, PUSH-ON JOINTS AND FITTINGS					VALVE BOX ADJUSTED TO GRADE	6" GATE VALVE AND VALVE BOX		12" CUTTING-IN SLEEVE, VALVE AND VALVE BOX						FIRE HYDRANT REMOVED AND RESET, AS PER PLAN			1" COPPER SERVICE BRANCH, AS PER PLAN	SERVICE BOX ADJUSTED TO GRADE	SERVICE STOP AND SERVICE BOX REMOVED AND RESET, AS PER PLAN		METER VAULT, AS PER PLAN											
				EACH	EACH				EACH			L.F.	L.F.						EACH	EACH		EACH						EACH			L.F.	EACH	EACH		EACH										
588	W-84	12+44 KELLY AVE	LT	1																																							
	W-85	10+94 KELLY AVE	LT									7	3							1							1																
	W-86	10+14 KELLY AVE	LT																1																								
	W-87	68+50 FIFTH AVE	LT																							1																
	W-88	70+19 FIFTH AVE	RT																										1												
	W-89	70+52 FIFTH AVE	RT																										1												
	W-90	70+79 FIFTH AVE	LT																1																								
	W-91	70+97 FIFTH AVE	RT		1				1																																	
	W-92	9+83 KELLY AVE	LT										10																													
588	W-93	9+44 KELLY AVE	LT																			1																				
589	W-94	17+10 MARTHA AVE	LT									21	5							1							1																
	W-95	15+80 MARTHA AVE	LT	1																																						
589	W-96	15+85 MARTHA AVE	LT																1																								
590	W-97	32+82 E. MARKET ST	RT		1				1																																	
590	W-98	34+16 E. MARKET ST	RT		1				1																																	
591	W-99	11+59 MARTHA AVE	LT	1																																						
	W-100	10+84 MARTHA AVE	LT									50								1							1																
591	W-101	10+00 TO 13+88 MARTHA AVE	LT										395																													
592	W-102	9+03 MARTHA AVE	LT																												44		1		1							
	W-103	9+63 MARTHA AVE	LT																1																								
	W-104	21+33 ENGLEWOOD AVE	LT	1																																						
	W-105	21+58 ENGLEWOOD AVE	LT									20																														
	W-106	22+12 ENGLEWOOD AVE	LT									13								1							1																
	W-107	20+24 TO 52+08 ENGLEWOOD AVE	L/R										3185■																													
592	W-108	21+58 ENGLEWOOD AVE	RT																	1																								
		■ _____% PROJECT _____% CITY		—	—				—			—	3185■						—	—							—			—	—	—		—										
		100% PROJECT		4	3				3			111	413						4	5		1					5			44	2	1		1										

DWN. BY : T.K.J.
DATE : 8-21-91
CAD DWG. FILE : 1157WSU3

REV. BY :
DATE :

AA B/Pe 71942R

CALC. BY. RV DATE 2/88	SUM-76-11.57	OHIO
CHKD. BY. DATE	FED. PROJECT IR-76-2(44)19	F.H.W.A. REGION 5

SUMMIT COUNTY

594
1214

W-6"
W 12"
15" SAN.
8" G
EAST
35
36
37
MARKET
38
STREET
39
40
12" SAN.
30" S
4" W
PAVED P
WALL
WALK
EXIST. R/W
SAN 12"
12" S
15" S
4" G
W 109
W 112
W 113
W 114
W 118
12" W
MATCH LINE STA. 15+50
MATCH LINE STA. 40+60
#1416
TO BE TAKEN
#1454
TO BE TAKEN
#1458
TO BE TAKEN
#1462
TO BE TAKEN
#1474
TO BE TAKEN
#1476 #1478 #1480
TO BE TAKEN
#1488
#1494 #1496
TO BE TAKEN
#1500
TO BE TAKEN
#12
TO BE TAKEN
LA R/W
W 110
W 111
W 115
W 116
W 117
W 119
PLUG TEE
EXIST R/W
CAMBRIDGE STREET
EX. RAMP E-10
13/8" G
PAVED PARKING
REMOVE EXIST. HYDRANT RESET AT STA. 36+67, 30' RT. @ MARKET ST.
REMOVE EXIST. HYDRANT RESET AT STA. 52+08, 225'± LT. @ ENGLEWOOD AVE. SMT No. 602.
DETROIT STREET
W.S.
SAN
EXIST. LA
RAMP 'E-15'
B-24
16
17
18
19
20
21
WALL
berm
I-76 WEST BOUND
I-76 EAST BOUND
I-76
617
618
619
620
621
EX. U.D.
MATCH LINE STA. 616+00 SEE SHEET 589
MATCH LINE STA. 622+00 SEE SHEET 596

FOR WATER MAIN QUANTITIES, SEE SHEET 597
FOR ROADWAY PLAN, SEE SHEET 155
FOR DRAINAGE PLAN, SEE SHEET 521

MATCH SHEET 595

0 20 40 60
SCALE IN FEET

WEST BOUND
STA. 616+00 TO STA. 622+00

WATER MAIN PLAN

AA B/P# 71942R

CALC. BY. RV DATE 2-68	SUM-76-11.57	OHIO
CHKD. BY. ____ DATE ____	FED. PROJECT IR-76-2(44)19	F.H.W.A. REGION 5

SUMMIT COUNTY

595 / 1214

MATCH SHEET 594

MATCH LINE STA. 616+00 SEE SHEET 597

MATCH LINE STA. 622+00 SEE SHEET 598

I-76 WEST BOUND

I-76

I-76 EAST BOUND

617 618 619 620 621

EX. U.D. EX. U.D. EX. U.D.

berm berm

12" S

8" SAN TO BE ABANDONED

12" S (ABD.) W 6"

RET. WALL NO. 9

B-23

15" S

EXIST. LA. R/W

S 15"

RAMP 'E-16'

17 18 19 27 28 21 20 29

MATCH LINE STA. 16+25

MATCH LINE STA. 22+00

ENGLEWOOD

RET. WALL NO. 10

EX. R/W

TO BE TAKEN

RAMP 'E-10'

4" G

15" STM.

MATCH LINE STA. 21+50

EQUATION
STA. 24+09, 8' RT. ℄ ENGLEWOOD AVE. EXT.
STA. 16+82.17, 53.05' RT. ℄ RAMP 'E-10' =
STA. 3+85 W.M.

12"–22½° HORIZ. BEND

12" STM.

W 124

12"x12"x6" TEE

11¼°–12" HORIZ. BEND

EXIST. R/W

#47 TO BE TAKEN

#44 TO BE TAKEN

#43 TO BE TAKEN

#48 TO BE TAKEN

#45 TO BE TAKEN

#39 TO BE TAKEN

#40 TO BE TAKEN

W.S.

LA R/W

ENGLEWOOD AVENUE

8'

PROP. 12" W.M.

W 125

6"–11¼° HORIZ. BEND

W 124 #51

W 123

TO REMAIN

PROP. 6" W.M.

W 122 #55

W 121

EXIST. HYDRANT REMOVED AND RESET

6"–45° HORIZ. BENDS

CUT EXIST. 6" W.M. AND CONNECT 6"–45° HORIZ. BEND

W 120 #59

W 119

W 107

W 127

W 132

CUT EXIST. W.M. & CONNECT 6"–45° BEND

W 131

12"x12"x6" TEE

6"–11¼° HORIZ. BEND

W 128

W 129

W 130 #49

EXIST. HYDRANT REMOVED AND RESET

PROP. 12" W.M.

12" SAN

6"–45° HORIZ. BENDS

PROP. 6" W.M.

#53

% CITY

% PROJECT

EQUATION
STA. 23+70, 8' RT. ℄ ENGLEWOOD AVE. =
STA. 16+51.64, 75.3' RT. ℄ RAMP 'E-10' =
STA. 3+45 W.M.

MATCH LINE STA. 22+92 SEE SHEET 599

CAMBRIDGE STREET

EX. 6" W.M.

EXIST. R/W

2" G

8" SAN

S 15"

S 21"

W 119 TO 125 AND W127, 128, 129, 130 & 132
100% PROJECT

FOR WATER SERVICE HOUSE CONNECTIONS DETAIL SEE SHEET 613.
FOR WATER MAIN PROFILES, SEE SHEETS 607 & 608.
FOR WATER MAIN QUANTITIES, SEE SHEET 597
FOR DRAINAGE PLAN, SEE SHEET 523.

0 20 40 60
SCALE IN FEET

EAST BOUND
STA. 616+00 TO STA. 622+00
WATER MAIN PLAN

AA B.Pe 71942R

CALC. BY. RV DATE 2-88	SUM-76-11.57	OHIO
CHKD. BY. DATE	FED. PROJECT IR-76-2(44)19	F.H.W.A. REGION 5

SUMMIT COUNTY

596 / 1214

MATCH LINE STA. 40+60

STA. 41+37.63 ℄ MARKET ST. = STA. 13+65.72 ℄ WIGLEY ST.

STA. 41+54.5 ±, 14' ± RT ℄ MARKET ST. REMOVE EXIST. 12" PIPE FROM S. SIDE OF 12"×12" TEE AND INSTALL 12" PLUG W/ CONC. PIER

W 133

W 134

W 135

EAST MARKET STREET

ELINOR AVENUE

EXIST. R/W

LA R/W

1500

1510

TO BE TAKEN

WIGLEY STREET

WATER METER

EX. R/W

EX. LA R/W

EX. RAMP 'E-15'

EXIST. LA

I-76 WEST BOUND

I-76 EAST BOUND

I-76

B-26

EX. U.D

PAVED GUTTER

berm

PARKING

WALK

MATCH LINE STA. 622+00 SEE SHEET 594

MATCH LINE STA. 628+00 SEE SHEET 599

FOR WATER MAIN QUANTITIES, SEE SHEET 597.

MATCH SHEET 598.

0 20 40 60
SCALE IN FEET

WEST BOUND
STA. 622+00 TO STA. 628+00
WATER MAIN PLAN

▲ _____% CITY OF AKRON

WATERWORKS SUBSUMMARY

CALC. BY: CDB DATE: 3/91
CHKD. BY: DSB DATE: 8/91

SUM-76-11.57
FED. PROJECT IR-76-2(44)19
SUMMIT COUNTY

OHIO
F.H.W.A. REGION 5

597
1214

SHEET No.	REFERENCE No.	STATION TO STATION	SIDE	202 VALVE BOX REMOVED EACH	202 SERVICE BOX REMOVED EACH	814 DISCONNECT WATER SERVICE AS PER PLAN EACH	814 6" WATER MAIN DUCTILE IRON PIPE ANSI CLASS 53, PUSH-ON JOINTS AND FITTINGS L.F.	814 6" GATE VALVE AND VALVE BOX EACH	814 12" GATE VALVE AND VALVE BOX EACH	814 FIRE HYDRANT REMOVED AND RESET, AS PER PLAN EACH	814 CURB METER PIT ABANDONED EACH	814 1" COPPER SERVICE BRANCH, AS PER PLAN L.F.	814 SERVICE STOP AND SERVICE BOX REMOVED AND RESET AS PER PLAN EACH	814 CUTTING AND PLUGGING EXISTING 6" WATER MAIN EACH	814 CUTTING AND PLUGGING EXISTING 12" WATER MAIN
594	W-109	35+03 MARKET ST	RT		1	1									
	W-110	36+67 MARKET ST	RT							1					
	W-111	36+75 MARKET ST	RT	1											
	W-112	37+03 MARKET ST	RT		1	1									
	W-113	37+38 MARKET ST	RT		1	1									
	W-114	38+46 MARKET ST	RT		1	1									
	W-115	39+30 MARKET ST	RT	1											
	W-116	10+81 DETROIT ST	RT	1											
	W-117	39+30 MARKET ST	RT											1	
594	W-118	40+35 MARKET ST	RT		1	1									
595	W-119	8+78 CAMBRIDGE ST	RT	1											
	W-120	8+67 CAMBRIDGE ST	RT									14	1		
	W-121	9+00 CAMBRIDGE ST	RT				13	1		1					
	W-122	9+05 CAMBRIDGE ST	RT									5	1		
	W-123	8+67 TO 9+63 CAMBRIDGE ST	RT				100								
	W-124	9+36 CAMBRIDGE ST	RT									5	1		
	W-125	9+52 CAMBRIDGE ST	RT					1							
	W-126	9+63 CAMBRIDGE ST	RT						1 ■						
	W-127	6+02 DETROIT ST	LT									30	1		
	W-128	6+18 DETROIT ST	RT					1							
	W-129	6+11 DETROIT ST	RT				15	1		1					
	W-130	6+16 DETROIT ST	RT									15	1		
	W-131	6+41 DETROIT ST	RT						1 ■						
595	W-132	5+89 TO 6+38 DETROIT ST	RT				50								
596	W-133	41+54 MARKET ST	RT												1
	W-134	13+31 WIGLEY ST	RT	1											
596	W-135	12+65 WIGLEY ST	RT		1						1				
		■ _____% PROJECT _____% CITY		—	—	—	—	—	2 ■	—	—	—	—	—	—
		100% PROJECT		5	6	5	178	4	—	3	1	69	5	1	1

DWN. BY: T.K.I.
DATE: 8-21-91
CAD DWG. FILE: 1157WSU3
REV. BY:
DATE:

CALC. BY. RV DATE 2-88	SUM-76-11.57	OHIO
CHKD. BY. DATE	FED. PROJECT IR-76-2(44)19	F.H.W.A. REGION 5

SUMMIT COUNTY

598 / 1214

MATCH SHEET 596

MATCH LINE STA. 622+00 SEE SHEET 595

MATCH LINE STA. 628+00 SEE SHEET 599

MATCH LINE STA. 22+00

MATCH LINE STA. 21+50

MATCH LINE STA. 35+50

EXIST. LA R/W

EXIST. LA

I-76 WEST BOUND

I-76 EAST BOUND

I-76

EX. U.D.

12" S

623

624

625

626

627

8" SAN. S

48"

ELEC.

EX. RAMP 'E-16'

RAMP 'E-16'

24

12"~11¼° HORIZ. BEND

15" STM.

RET. WALL NO. 13

EXIST. LA R/W

B-25

B-27

AVENUE

12"~45° HORIZ. BEND

W 138

W 139

W 143

W 144

W 147

W 148

LA R/W

12"x12"x8" TEE

12"x12"x4" TEE

12"x12"x8" TEE

12" ENGLEWOOD

PROP. 12" W.M.

W 142

W 107

W 151

W 149

W 150

W 145

W 146

W 140

W 141

W 137

W 136

W 152

RAMP 'E-10'

EXIST. R/W

TO BE TAKEN

#44

#1474

AUTO SPRINKLERS

WATER MH.

AUTO. SPRINKLER

PAVED PARKING

WIGLEY AVENUE

PROP 12" W.M.

12"~22½° HORIZ. BEND

12"~11¼° HORIZ. BEND

CUT EXIST. 4" W.M. & CONNECT 4"x24" OFFSET BEND

CUT EXIST 8" W.M. & CONNECT 8"x24" OFFSET BEND

CUT EXIST. 10" W.M. AND CONNECT 10"~24" OFFSET BEND

CUT EXIST. 8" W.M. & CONNECT 8"x24" OFFSET BEND

12"x10" REDUCER

EXIST. R/W

100% CITY

___% CITY

___% PROJECT

FOR WATER MAIN PROFILE ON ENGLEWOOD AVE., SEE SHEETS 608 & 609

FOR WATER MAIN QUANTITIES, SEE SHEET 600

FOR DRAINAGE PLAN, SEE SHEET 527

0 20 40 60

SCALE IN FEET

EAST BOUND
STA. 622+00 TO STA. 628+00
WATER MAIN PLAN

AA. B. P# 71942R

CALC. BY R.V. DATE 2.88	SUM-76-11.57	OHIO
CHKD. BY ____ DATE ____	FED. PROJECT IR-76-2(44)19	F.H.W.A. REGION 5

599
1214

SUMMIT COUNTY

FOR WATER MAIN QUANTITIES, SEE SHEET 600.
FOR WATER MAIN PROFILE ON ENGLEWOOD AVENUE, SEE SHEETS 609 & 610.
FOR WATER MAIN PROFILE ON SEIBERLING STREET, SEE SHEET 611.
FOR DRAINAGE PLAN, SEE SHEET 529.

END PROJECT SUM-76-11.57 STA. 634+00
IR-76-2(44)19

PAVED PARKING
PAVED PARKING LOT
steps
EXIST. LA
PROP. RET. WALL Nº 11
PROP. RET. WALL. Nº 12
EXIST. LA
R/W
SEIBERLING
EXIST. R/W
EXIST. R/W
8" G
13
36" W
12" W
30" S
15" S
24" S
18" S
berm
overhead sign
1-76 WEST BOUND
1-76 EAST BOUND
1-76
MATCH LINE STA. 628+00 SEE SHEETS 596 & 598
MATCH LINE STA. 634+00 SEE SHEET 601
MATCH LINE STA. 35+50
629
630
631
632
633
EX. U.D.
12" S
12" ⌐ 45° HORIZ. BEND
16"x12" REDUCER
EX. RAMP 'E-16'
BEGIN WATER MAIN RELOCATION W.M. STA. 0+00 = SEIBERLING ST. STA. 10+83, 7' RT. ℄
12" ⌐ 45° HORIZ. BEND
RET. WALL NO. 13
RET. WALL NO. 14
EXIST. LA R/W
LA R/W
ELEC.
10" W
SAN 12"
2" G
EXIST. R/W
16" ⌐ 11¼° HORIZ. BEND
12" x 16" CROSS
16" ⌐ 11¼° HORIZ. BEND
16"x16"x8" TEE
W 150
W 153
W 154
W 155
W 156
W 157
W 158
W 159
W 160
W 161
W 162
W 163
W 164
W 107
4" I.P.G
ELEC. 10"
PROP 12" W.M.
RELOCATED
ENGLEWOOD
AVENUE
SAN 10"
12"x12"x8" TEE
STREET
10" W
8" G
6" G
SAN 8"
SAN 36"
END WATER MAIN RELOCATION W.M. STA. 1+45 = SEIBERLING ST. STA. 3+46, 21' LT. ℄
DEFLECT JOINTS HORIZONTALLY TO ACCOMMODATE HΔ 6° AT W.M. STA. 13+64 = ENGLEWOOD AVE., STA. 39+93, 2' LT. ℄
PAVED PARKING
PARKING LOT
100% CITY
0 20 40 60
SCALE IN FEET

STA. 628+00 TO STA. 634+00

WATER MAIN PLAN

WATERWORKS SUBSUMMARY

CALC. BY CDB DATE 8/91
CHKD. BY DSB DATE 8/91

SUM-76-11.57
FED. PROJECT IR-76-2(44)19
SUMMIT COUNTY

OHIO
F.H.W.A. REGION 5

600
1214

| SHEET No. | REFERENCE No. | STATION TO STATION | SIDE | 202 | 814 | | |

AA B/Pw 71942R

CALC. BY. RV DATE 2-88	SUM-76-11.57	OHIO	601 12/14
CHKD. BY. DATE	FED. PROJECT IR-76-2(44)19	F.H.W.A. REGION 5	

SUMMIT COUNTY

FOR WATER MAIN QUANTITIES, SEE SHEET 603.
FOR WATER MAIN PROFILE ON ENGLEWOOD AVE., SEE SHEET 610.
FOR DRAINAGE PLAN, SEE SHEET 531.

MATCH LINE STA. 634+00 SEE SHEET 599

MATCH LINE STA. 640+00 SEE SHEET 602

I-76 WEST BOUND

I-76 EAST BOUND

EXIST. LA

RAMP 'E-19'

EX. RAMP 'E-19'

B-29

B-28

berm

EX. U.D.

5" STM.

12" S

15" S

18" S

8" SAN.

I-76

635 636 637 638 639

ENGLEWOOD AVENUE

EXIST. L.A R/W

LA R/W

4" I.P.G.

ELEC.

10" W

12"x12"x8" TEE

GAS LINE (APPROX. LOC.)

GAS LINE MARKER

PROP. 12" W.M.

22 23 24 25 26 27

42 43 44 45 46 47

24" S

10" SAN.

8" SAN.

6" G

WALK

EXIST. R/W

W. METER

W.S.

W 107 W 165 W 166 W 167 W 168 W 169 W 170 W 171

CUT EXIST. 8" W.M. & CONNECT 8"x24" OFFSET BEND

PAVED PARKING LOT

#1560

100% CITY

0 20 40 60
SCALE IN FEET

STA. 634+00 TO STA. 640+00
WATER MAIN PLAN

AA B/Ps 21942R

CALC. BY. R.V. DATE 2-88	SUM-76-11.57	OHIO
CHKD. BY. ____ DATE ____	FED. PROJECT IR-76-2(44)19	F.H.W.A. REGION 5

602
1214

SUMMIT COUNTY

WALK
PARKING
EXIST. LA
RAMP 'E-19'
RAMP 'E-20'
EX. RAMP
RAMP 'E-18'
HOLMES STREET
PARKING
30" S
18" SAN.
42" S
12" S
ramp>>>>
W 179
STA. 52+08, LT. ℄ ENGLEWOOD
CUT EXIST. 10" W.M. & INSTALL
6" HYD., 6" VALVE, 10"x6" REDUCER
& 8 L.F. 6" W.M. W/ 3 L.F. 10"Ø
SOLID SLEEVE.
EXIST. DELIVERY ENTRANCE
EXIST. LA
15" ST.
12" S
41
42
43
44
1
2
3
4
5
6
12" S
12" RCP
berm
I-76 WEST BOUND
I-76
I-76 EAST BOUND
641
642
643
644
645
EX. U.D.
MATCH LINE STA. 640+00
SEE SHEET 601
B-30
END PAVEMENT
STA. 48+80
4" I.P.G.
EXIST. LA R/W
12"x12"x8" TEE
W 172
12"x12"x8" TEE
W 107
ELEC.
10" W
LA R/W
GAS LINE MARKER AND GAS VALVE
GAS LINE MARKER
W 177
W 178
EXIST. LA R/W
ELEC.
10" SAN.
B-31
12"
48
ENGLEWOOD
28
49
PROP. 12" W.M.
29
8" W
50
30
AVENUE
51
31
52
53
12" W
24" S
8" S
18" SAN.
8" SAN.
SAN 8"
WALK
EXIST. R/W
W.S.
EXIST. R/W
W 173
W 175
W 174
W 176
CUT EXIST. 8" W.M. & CONNECT 8" x 24" OFF-SET BEND
100% CITY
PAVED PARKING LOT
FACTORY
FOR WATER MAIN QUANTITIES, SEE SHT. 603
FOR WATER MAIN PROFILE ON ENGLEWOOD AVE., SEE SHTS 610 & 611.
END W.M. STA. 31+85 = ENGLEWOOD AVE. STA. 52+08, 4' RT. ℄
REMOVE EXIST. 12" x 10" CROSS AND INSTALL 12" x 12" x 10" TEE W/ 3 L.F. 12" ℄ NIPPLE W/ SOLID SLEEVE.
18" SAN.
10" W
6" I.P.G.
10" G
O.B.T.
39" S
0 20 40 60
SCALE IN FEET

STA. 640+00 TO STA. 646+00
WATER MAIN PLAN

WATERWORKS SUBSUMMARY

CALC. BY: CDB DATE 8/91
CHKD. BY: DSB DATE 8/91

SUM-76-11.57
FED. PROJECT IR-76-2(44)19
SUMMIT COUNTY

OHIO
F.H.W.A. REGION 5

603
1214

| SHEET No. | REFERENCE No. | STATION TO STATION | SIDE | 202 | | | 814 | | |

AA B.Pe 71942R

CALC. BY. R.V. DATE 2-88	SUM-76-11.57	OHIO	604
CHKD. BY. ____ DATE ____	FED. PROJECT IR-76-2(44)19	F.H.W.A. REGION 5	1214

SUMMIT COUNTY

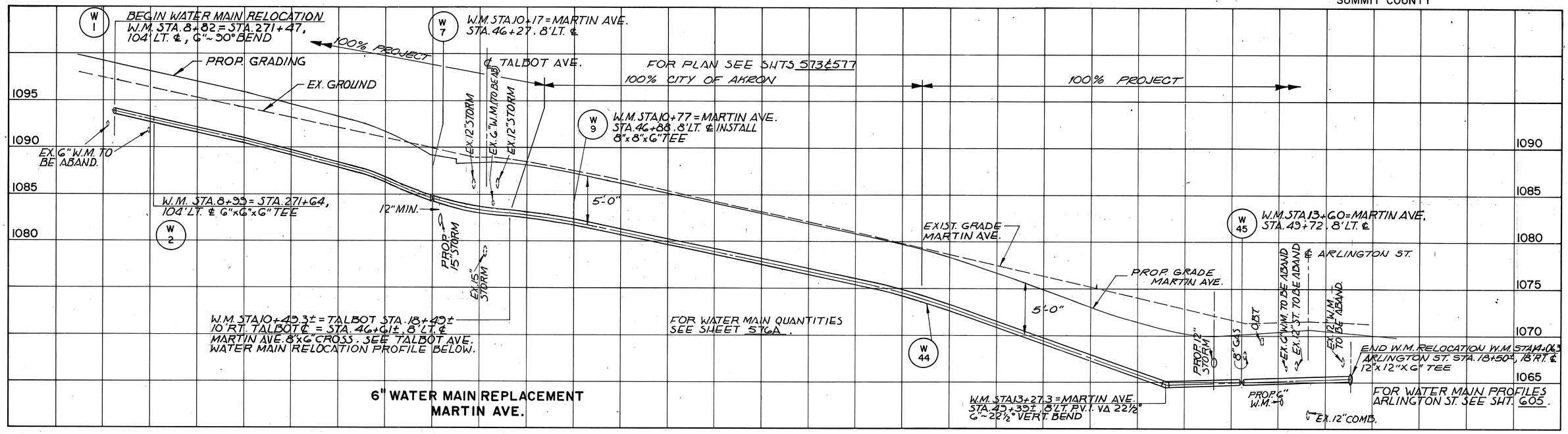

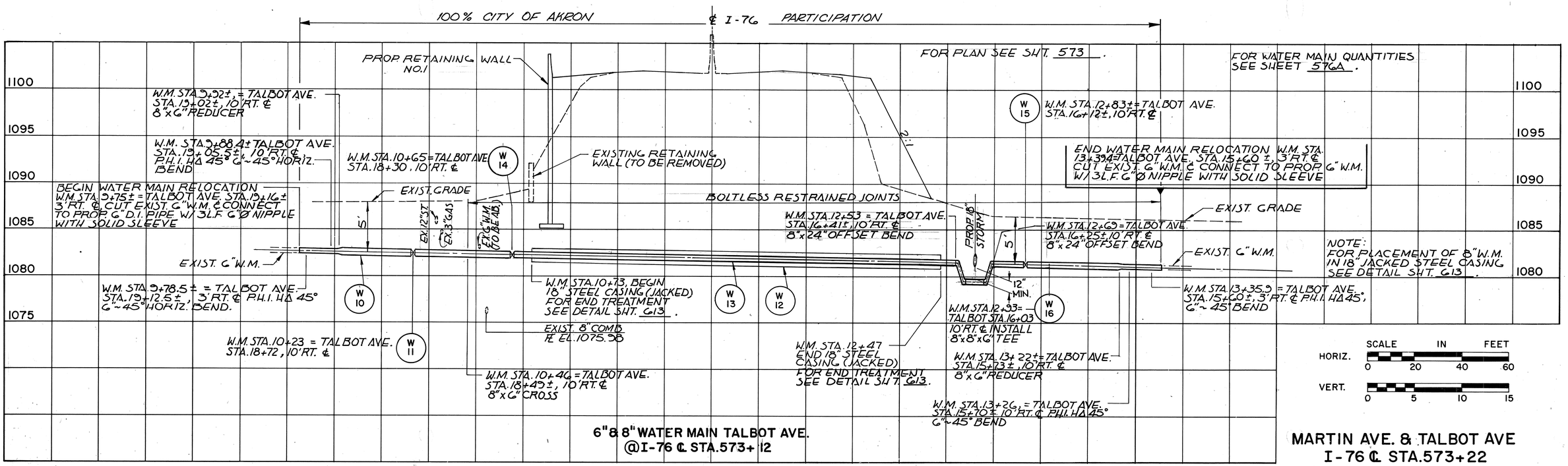

AA B/P# 71942R

CALC. BY. DATE	SUM-76-11.57	OHIO
CHKD. BY. DATE	FED. PROJECT IR-76-2(44)19	F.H.W.A. REGION 5

605 / 1214

SUMMIT COUNTY

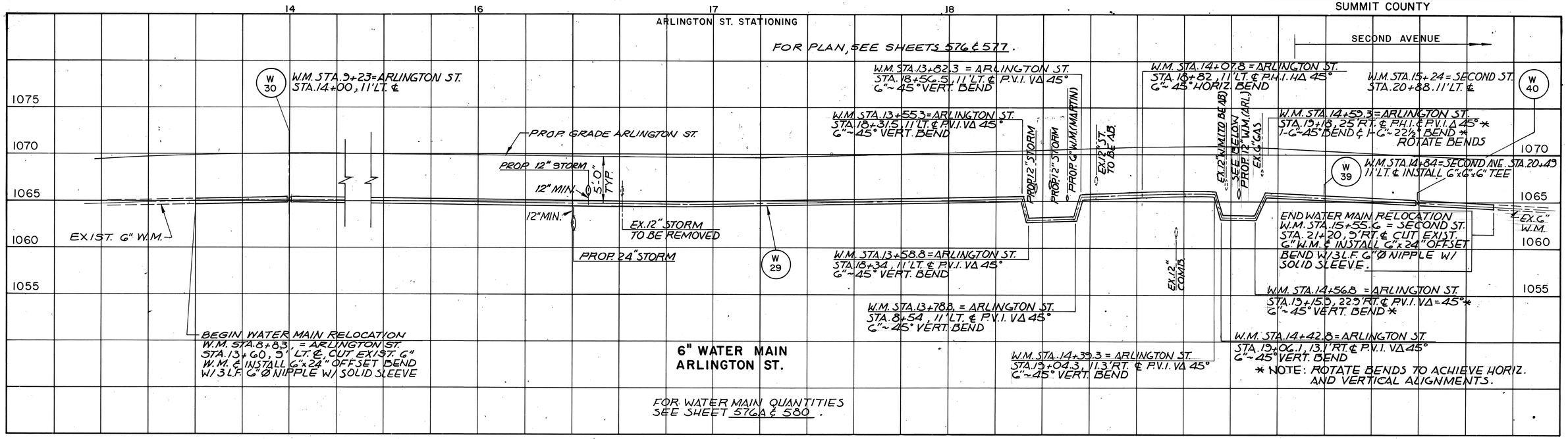

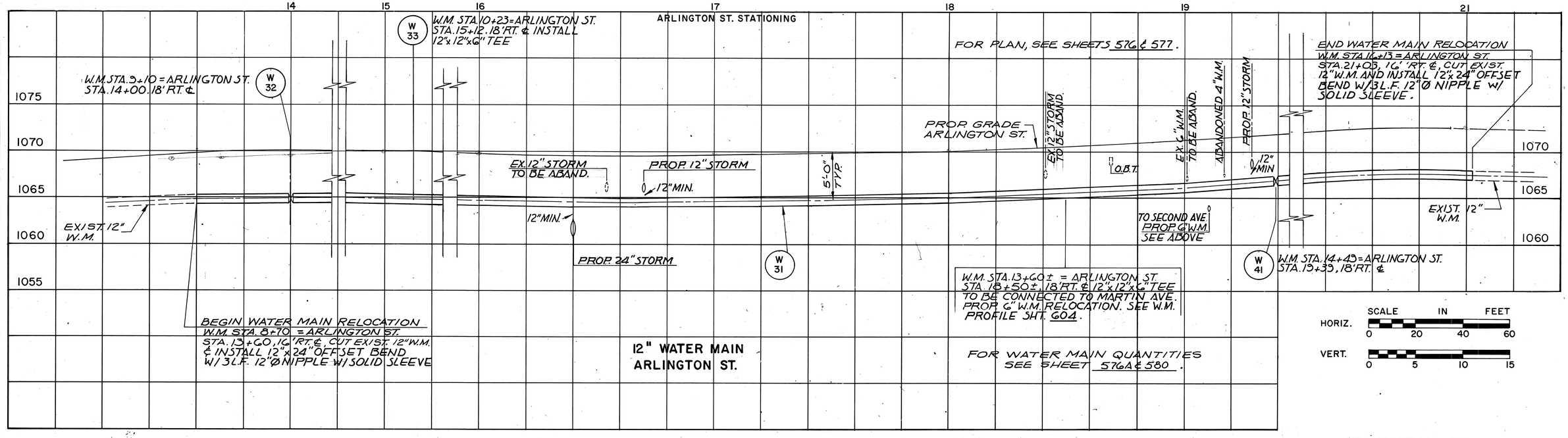

ARLINGTON ST.
WATER MAIN PROFILE

CALC. BY R.V. DATE 2-88	SUM-76-11.57	OHIO
CHKD. BY ___ DATE ___	FED. PROJECT IR-76-2(44) 19	F.H.W.A. REGION 5

606 / 1214

SUMMIT COUNTY

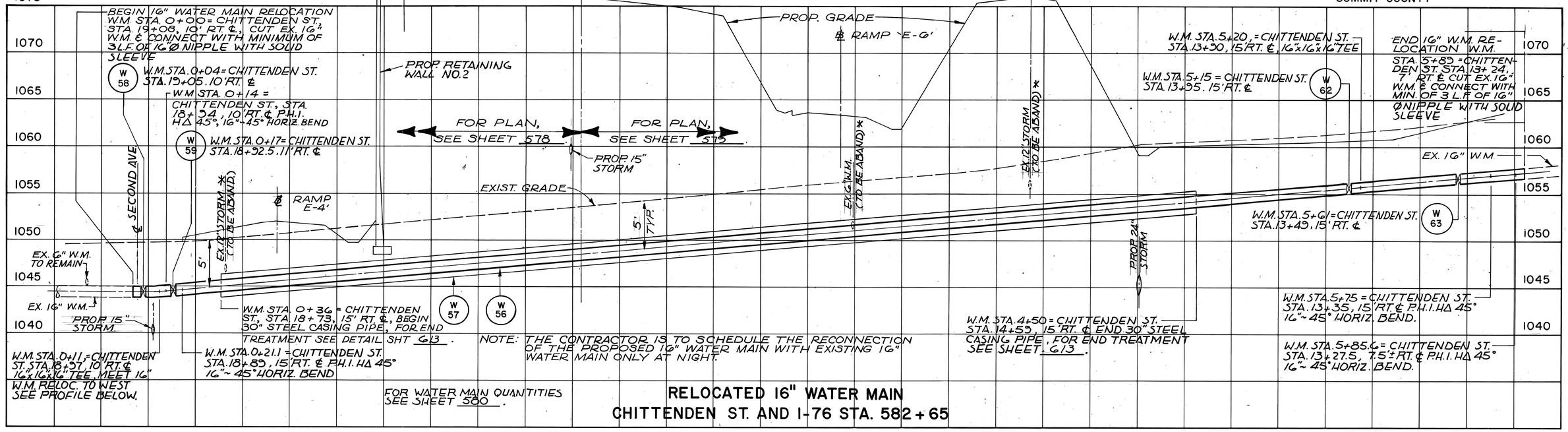

RELOCATED 16" WATER MAIN
CHITTENDEN ST. AND I-76 STA. 582+65

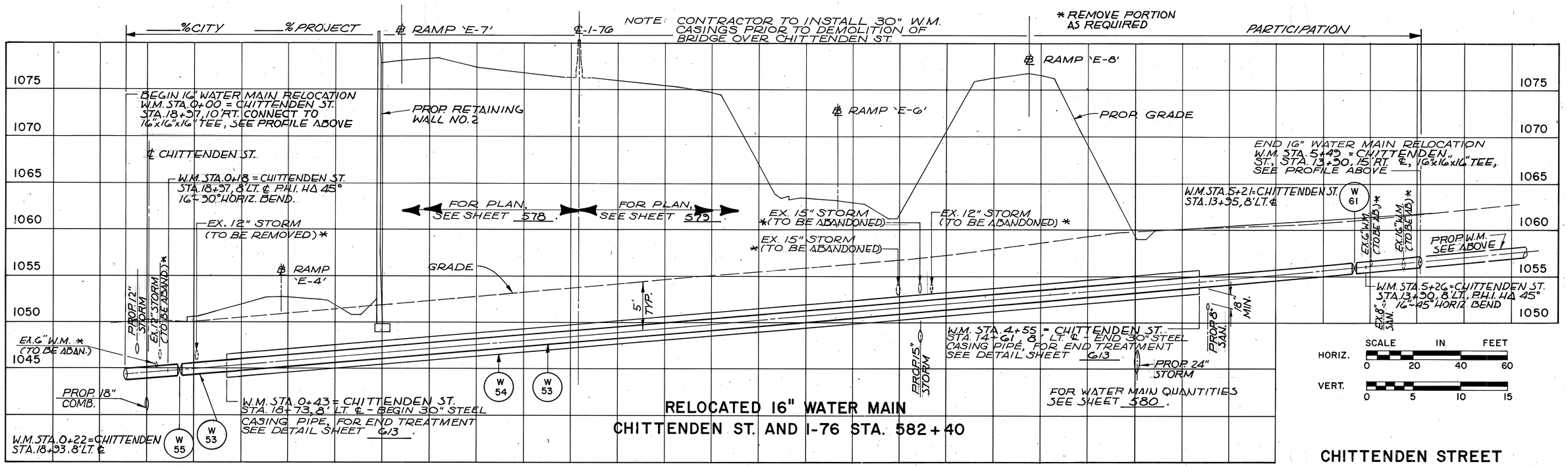

RELOCATED 16" WATER MAIN
CHITTENDEN ST. AND I-76 STA. 582+40

NOTE: THE CONTRACTOR IS TO SCHEDULE THE RECONNECTION OF THE PROPOSED 16" WATER MAIN WITH EXISTING 16" WATER MAIN ONLY AT NIGHT.

CHITTENDEN STREET AND I-76 WATER MAIN PROFILE

CALC. BY. R.V. DATE 2-88	SUM-76-11.57	OHIO
CHKD. BY. DATE	FED. PROJECT IR-76-2(44)19	F.H.W.A. REGION 5

607
1214

SUMMIT COUNTY

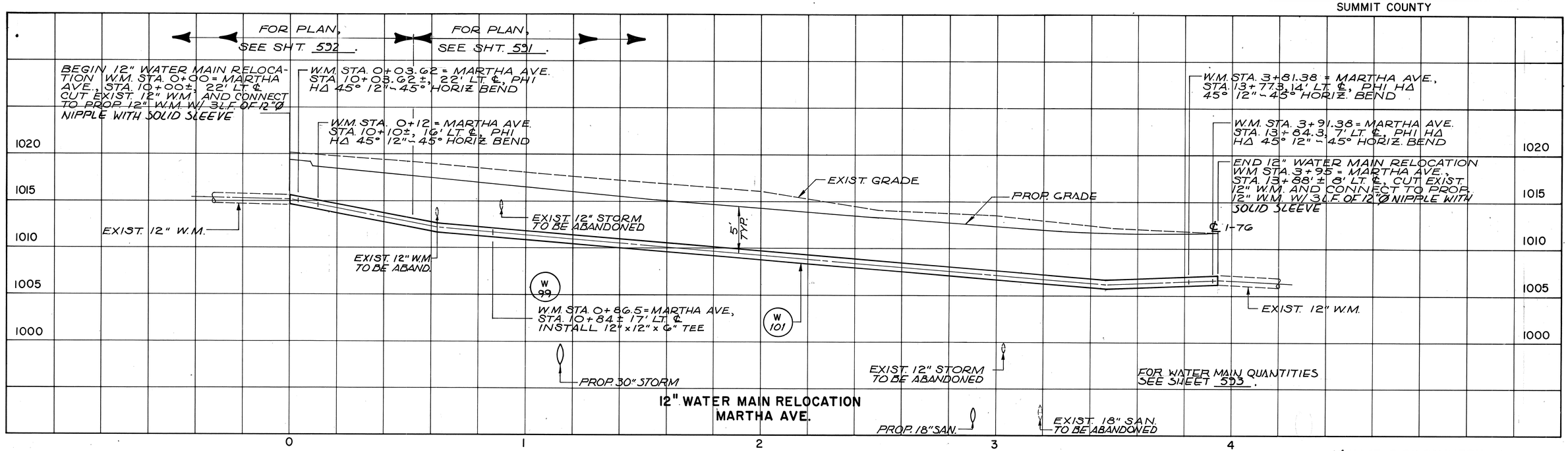

12" WATER MAIN RELOCATION
MARTHA AVE.

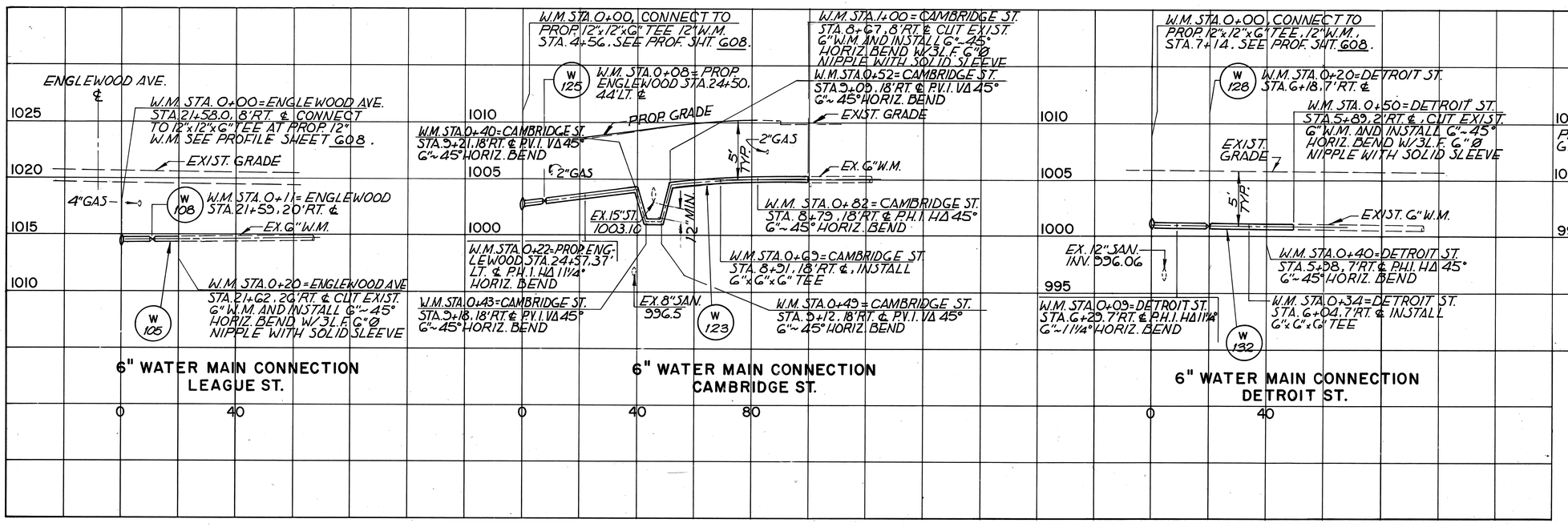

6" WATER MAIN CONNECTION
LEAGUE ST.

6" WATER MAIN CONNECTION
CAMBRIDGE ST.

6" WATER MAIN CONNECTION
DETROIT ST.

12" WATER MAIN CONNECTION
WIGLEY AVE.

SCALE IN FEET
HORIZ. 0 20 40 60
VERT. 0 5 10 15

WATER MAIN PROFILE

CALC. BY. R.V. DATE 2-88	SUM-76-11.57	OHIO
CHKD. BY. ____ DATE ____	FED. PROJECT IR-76-2(44)19	F.H.W.A. REGION 5

608
1214

SUMMIT COUNTY

BEGIN 12" WATER MAIN CONSTRUCTION W.M. STA. 0+00 = ENGLEWOOD AVE. STA. 20+24, 6' RT. ℄, REMOVE EXISTING 12"x6" REDUCER AND INSTALL 12"x24" OFFSET BEND.

MARTHA AVE. ℄

FOR PLAN, SEE SHT. 592.

FOR PLAN, SEE SHT. 595.

W 105 — W.M. STA. 1+34 = ENGLEWOOD AVE. STA. 21+58, 8' RT. ℄ INSTALL 12"x12"x6" TEE EXTEND 6" W.M. TO S.E.

% CITY OF AKRON % PROJECT

PROP. GRADE

EXIST. GRADE

EXIST. 12" W.M.

EX. 6" GAS

PROP. 12" STORM

12" MIN.

EXIST. 6" W.M. (TO BE REMOVED)

EXIST. 4" GAS

W.M. STA. 3+45 = ENGLEWOOD AVE., STA. 23+70, 8' RT. ℄ = STA. 16+51.64, 75.90 RT. ℄ RAMP "E-10"

W.M. STA. 4+56 = RAMP "E-10" STA. 17+51, 44' RT. ℄, INSTALL 12"x12"x6" TEE EXTEND 6" W.M. TO SOUTH

EX. 6" W.M. (TO BE ABAND.)
PROP. 15" STORM
EX. 12" STORM (TO BE ABAND)

EXIST. 2" GAS

W 126 — W.M. STA. 4+63 = RAMP "E-10" STA. 17+59, 43' RT. ℄

PROP. 12" STORM

EX. 12" STORM TO BE REMOVED

5' TYP.

12" MIN.

EXIST. 8" SAN.

W 107

W 106 — W.M. STA. 1+87 = ENGLEWOOD AVE. STA. 22+12, 8' RT. ℄, INSTALL 12"x12"x6" TEE

THE EXACT ELEVATION OF THE EXIST. 12" W.M. IN ENGLEWOOD AVENUE IS UNKNOWN. PRECAUTIONARY MEASURES ARE TO BE TAKEN BEFORE PROPOSED WORK BEGINS. THE EXIST. 12" W.M. IS TO BE UNCOVERED AND THE EXACT ELEVATION SHOULD BE VERIFIED PRIOR TO CONSTRUCTION.

W.M. STA. 3+85 = ENGLEWOOD AVE. STA. 24+09, 8' RT. ℄ EXT. PH I HA 27° 12"~22½° HORIZ. BEND

EX. 8" SAN. TO BE ABAND.

MATCH BELOW

W.M. STA. 4+66 = RAMP "E-10" STA. 17+62, 43' RT. ℄ PH I HA 12° 12"~11¼° HORIZ. BEND

FOR WATER MAIN QUANTITIES SEE SHEETS 593 & 597.

1020 1015 1010 1005 1000

0 1 2 3 4 5

ACHIEVE HORIZONTAL & VERTICAL ALIGNMENT WITH JOINT DEFLECTIONS

FOR PLAN, SEE SHT. 595.

FOR PLAN, SEE SHT. 598.

W.M. STA. 5+94 = RAMP E-10 STA. 18+86, 60' RT. ℄ P.H.I. HA 9° 12"~11¼° HORIZ. BEND

℄ DETROIT ST.

W.M. STA. 7+14 = RAMP "E-10" STA. 20+03, 64' RT. ℄ INSTALL 12"x12"x6" TEE EXTEND 6" W.M. TO SOUTH

W 131 — W.M. STA. 7+31 = RAMP "E-10" STA. 20+20, 65' RT. ℄

W.M. STA. 9+58 = RAMP E-10 STA. 22+57±, 64' RT. ℄ 12"x24" OFFSET BEND

100% CITY OF AKRON

EXIST. 4" GAS

W.M. STA. 9+84 = RAMP "E-10" STA. 22+81, 50' RT. ℄ 12"x12"x12" TEE (EXTEND W.M. TO SOUTH)

EXIST GRADE

MATCH ABOVE

5' TYP.

W 107

EXIST. 6" W.M. (TO BE REMOVED)

EXIST. 8" SAN. E 936.25

W.M. STA. 9+47 = RAMP E-10 STA. 22+48±, 69' RT. ℄ 12"x24" OFFSET BEND

PROP. 15" STORM

5' TYP.

12" MIN.

MATCH LINE SEE SHT. 605

EXIST. 10" W.M. (TO BE ABAND.)

W.M. STA. 9+45 = RAMP E-10 STA. 22+45±, 63.5 RT. ℄ P.H.I. HA = 22½°, 12"~22½° HORIZ. BEND

% CITY OF AKRON % PROJECT

FOR WATER MAIN QUANTITIES SEE SHEETS 597.

1010 1005 1000 995

5 6 7 8 9 10

SCALE IN FEET
HORIZ. 0 20 40 60
VERT. 0 5 10 15

ENGLEWOOD AVE.
WATER MAIN PROFILE

CALC. BY R.V. DATE 2-88	SUM-76-11.57	OHIO	609 / 1214
CHKD. BY ____ DATE ____	FED. PROJECT IR-76-2(44)19	F.H.W.A. REGION 5	

SUMMIT COUNTY

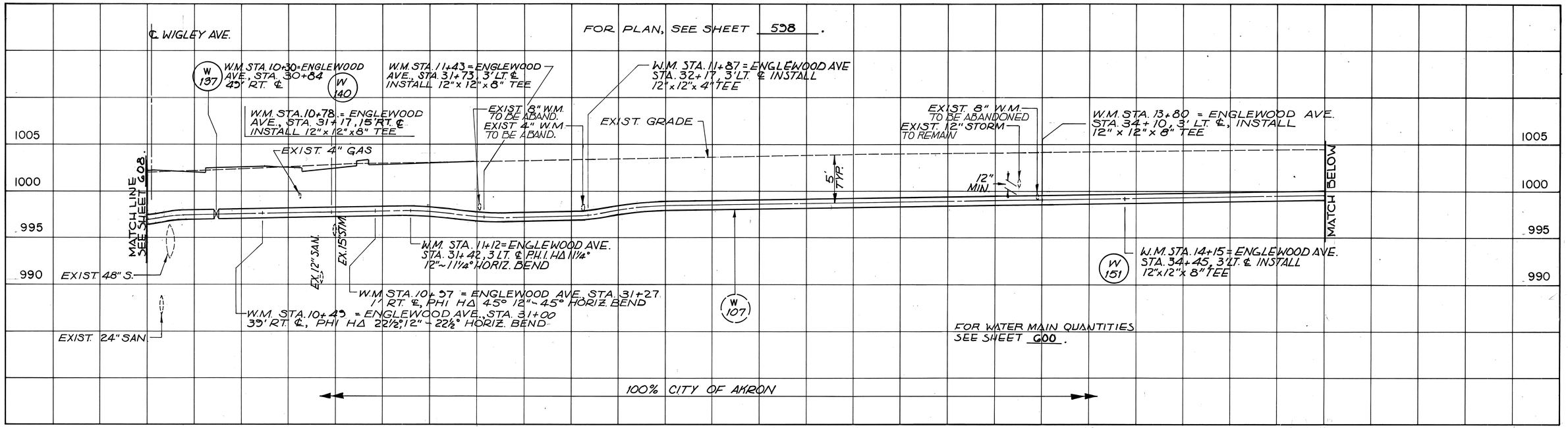

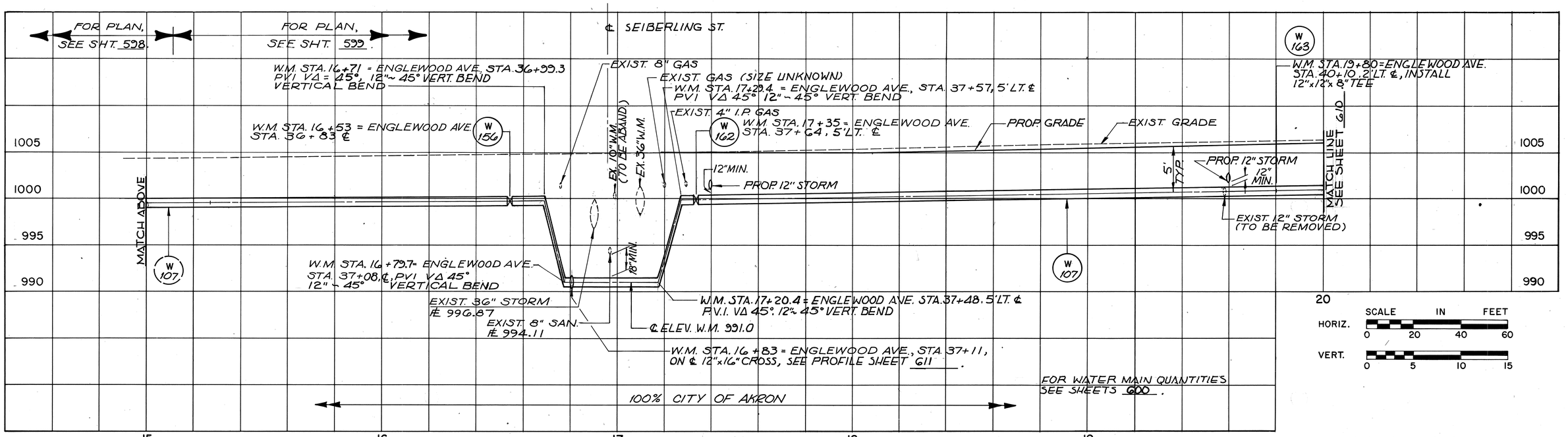

ENGLEWOOD AVE.

WATER MAIN PROFILE

AA B.P.# 71942R

CALC. BY. R.V. DATE 2-88	SUM-76-11.57	OHIO	610 / 1214
CHKD. BY. ____ DATE ____	FED. PROJECT IR-76-2(44)19	F.H.W.A. REGION 5	

SUMMIT COUNTY

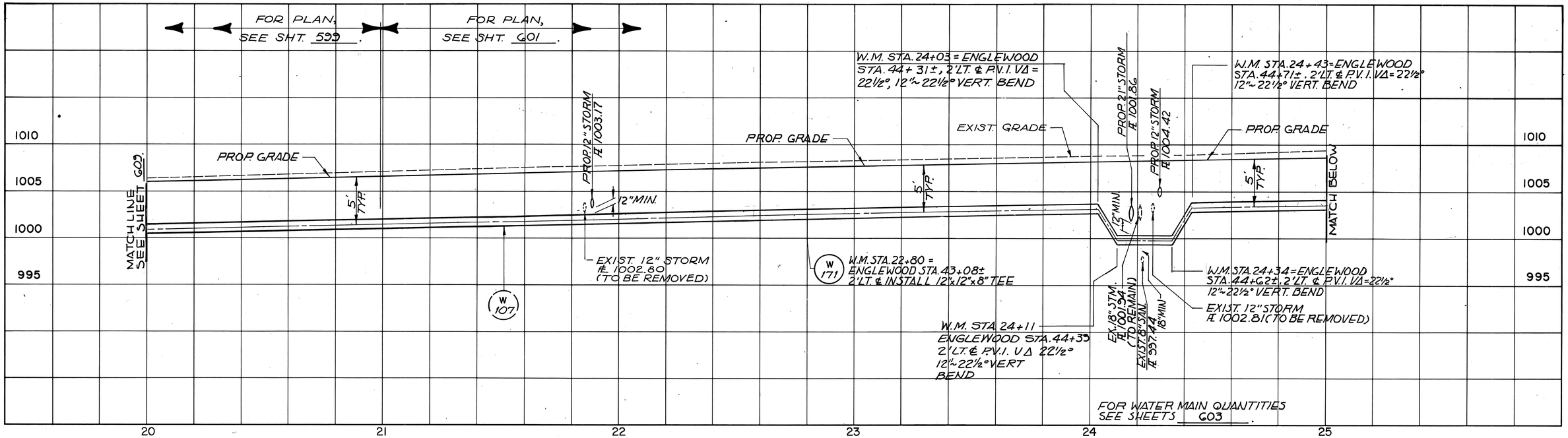

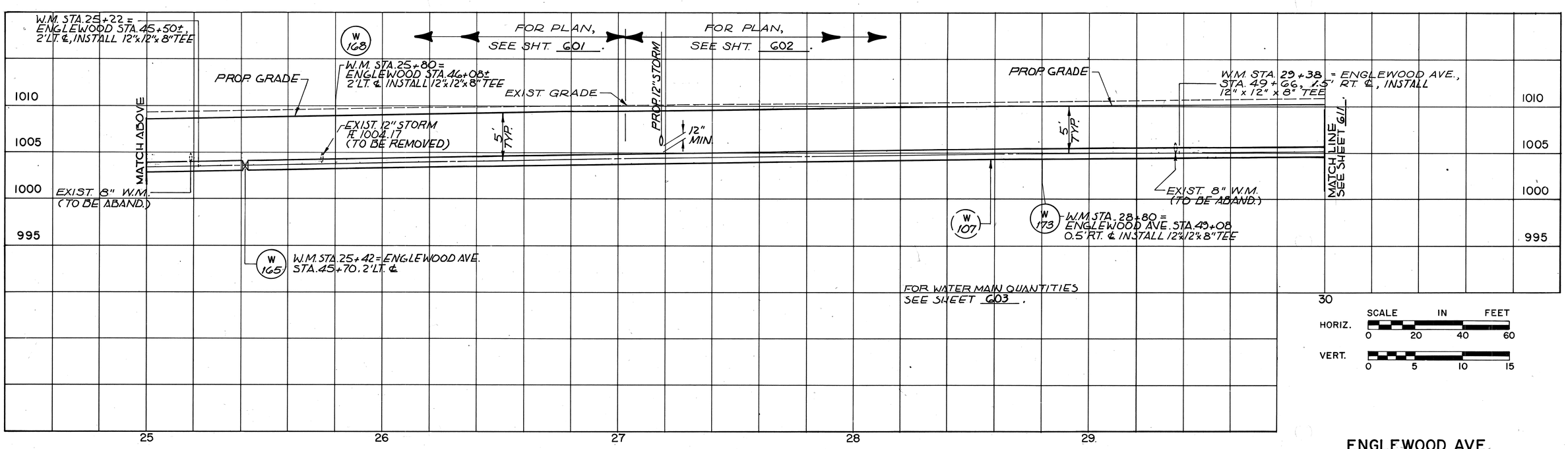

ENGLEWOOD AVE.
WATER MAIN PROFILE

CALC. BY. DATE	SUM-76-11.57	OHIO	611
CHKD. BY. DATE	FED. PROJECT IR-76-2(44)19	F.H.W.A. REGION 5	1214

SUMMIT COUNTY

FOR PLAN SEE SHEET 602 .

W.M. STA. 31+49 = ENGLEWOOD AVE. STA. 51+77.3.5'RT. ℄ P.V.I. VΔ = 45° 12"~45° VERTICAL BEND

W.M. STA. 31+38 = ENGLEWOOD AVE. STA. 51+66,3.5'RT. ℄

W 176

W.M. STA. 31+79 = ENGLEWOOD AVE. STA. 52+02.5, 4'RT. ℄ P.V.I. VΔ 45° 12"~45° VERT. BEND

END 12" WATER MAIN RELOCATION W.M. STA. 31+85 = SEIBERLING STREET STA. 52+08, 4'RT. ℄, REMOVE EXIST. 12"x10" CROSS AND INSTALL 12"x12"x10" TEE W/3 L.F. 12"Ø NIPPLE WITH SOLID SLEEVE.

EXIST. GRADE

PROP. GRADE

MATCH LINE SEE SHEET 610

5' TYP.

O.B.T.

1010

1005

1000

995

EXIST. 42" STORM Æ 1002.21

EXIST. 12" W.M.

EXIST. 10" W.M.

18" MIN. CLEARANCE

EXIST. 18" SAN. Æ 998.35

W 107

THE EXACT ELEVATION OF THE EXISTING 12" WATER MAIN IN ENGLEWOOD IS UNKNOWN. PRECAUTIONARY MEASURES ARE TO BE TAKEN BEFORE PROPOSED WORK BEGINS. THE EXISTING 12" WATER MAIN IS TO BE UNCOVERED AND THE EXACT ELEVATION VERIFIED PRIOR TO CONSTRUCTION.

W.M. STA. 31+57.5 = ENGLEWOOD AVE. STA. 51+83.3.5'RT. ℄, P.V.I. VΔ 45° 12"~45° VERTICAL BEND

W.M. STA. 31+70.5 = ENGLEWOOD AVE. STA. 51+96.4'RT. ℄ P.V.I. VΔ 45° 12"~45° VERTICAL BEND

100% CITY OF AKRON

FOR WATER MAIN QUANTITIES SEE SHEET 600 .

ENGLEWOOD AVE.

30 31 32

100% CITY OF AKRON

W.M. STA. 0+14 = SEIBERLING ST. STA. 10+72, 0.4'LT ℄ P.V.I. VΔ 45° 12"~45° VERTICAL BEND

W.M. STA. 0+84 = SEIBERLING ST. STA. 10+07.15'LT. ℄ P.H.I. HΔ 11¼° 16"~11¼° HORIZ. BEND

FOR PLAN SEE SHT. 599 .

W.M. STA. 1+20 = SEIBERLING ST. STA. 9+71, 21'LT. ℄ P.H.I. HΔ 11¼° 16"~11¼° HORIZ. BEND.

℄ ENGLEWOOD AVE.

W.M. STA. 1+323 = SEIBERLING ST. STA. 9+58.7, 21'LT. ℄ P.V.I. VΔ 45° 16"~45° VERTICAL BEND.

BEGIN WATER MAIN RELOCATION W.M. STA. 0+00 = SEIBERLING ST. STA. 10+83±7'RT ℄ CUT EXIST. 12" W.M. & CONNECT TO PROP. 12" W.M. W/3 L.F. 12"Ø NIPPLE WITH SOLID SLEEVE.

1010

1005

1000

995

EXIST. GRADE

EX. 30" STM. 997.05

EX. 12" STM.

EX. 10" W.M. TO BE AB.

EX. 12" SAN. 993.74

EX. 12" STM.

EX. 8" GAS

END WATER MAIN RELOCATION W.M. STA. 1+45± = SEIBERLING ST. STA. 9+46±, 21'LT. ℄ CUT EXIST. 16" W.M. & CONNECT TO PROP. 16" W.M. W/3 L.F. 16"Ø NIPPLE WITH SOLID SLEEVE.

EXIST. 12" W.M.

EXISTING 16" W.M.

W.M. STA. 0+03.6 = SEIBERLING ST. STA. 10+79.4, 7'RT. ℄ P.H.I. HΔ 45° 12"~45° HORIZ. BEND.

18" MIN. CL.

EX. 8" SAN. 994.91

W.M. STA. 1+39 = SEIBERLING ST. STA. 9+52, 21'LT. INSTALL 16"x16"x8" TEE

W 159

W.M. STA. 0+23 = SEIBERLING ST. STA. 10+65.6, 2.8'LT. ℄ P.V.I. VΔ 45° 12"~45° VERTICAL BEND.

W.M. STA. 1+24 = SEIBERLING ST. STA. 9+67, 21'LT. ℄ P.V.I. VΔ 45° 16"~45° VERTICAL BEND.

℄ ELEV. 991.0

W.M. STA. 0+35 = SEIBERLING ST. STA. 10+57, 15'LT. ℄ P.H.I. HΔ 45° 12"~45° HORIZ. BEND.

W 157

W.M. STA. 0+96 = SEIBERLING ST. STA. 9+95, 16.5'LT. ℄

W.M. STA. 0+40 = SEIBERLING ST. STA. 10+52, 15'LT. ℄ 12"x16" REDUCER

W 158

W.M. STA. 0+88 12"x16" CROSS, SEE ENGLEWOOD W.M. PROFILE SHEET 605 .

FOR WATER MAIN QUANTITIES SEE SHEET 600 .

W.M. STA. 0+78 = SEIBERLING ST. STA. 10+14, 15'LT. ℄

W 154

16"&12" WATER MAIN CONNECTION SEIBERLING STREET

THE EXACT ELEVATION OF THE EXISTING 12"&16" WATER MAINS IN SEIBERLING ST. IS UNKNOWN. PRECAUTIONARY MEASURES ARE TO BE TAKEN BEFORE PROPOSED WORK BEGINS. THE EXISTING 12"&16" WATER MAINS ARE TO BE UNCOVERED AND THE EXACT ELEVATION VERIFIED PRIOR TO CONSTRUCTION.

0 1

SCALE IN FEET

HORIZ. 0 20 40 60

VERT. 0 5 10 15

WATER PROFILE

AA B/P# 71942R

CALC. BY. DATE	SUM-76-11.57	OHIO
CHKD. BY. DATE	FED. PROJECT IR-76-2(44)19	F.H.W.A. REGION 5

G12 12/14

SUMMIT COUNTY

6" WATER MAIN RELOCATION SECOND AVE.

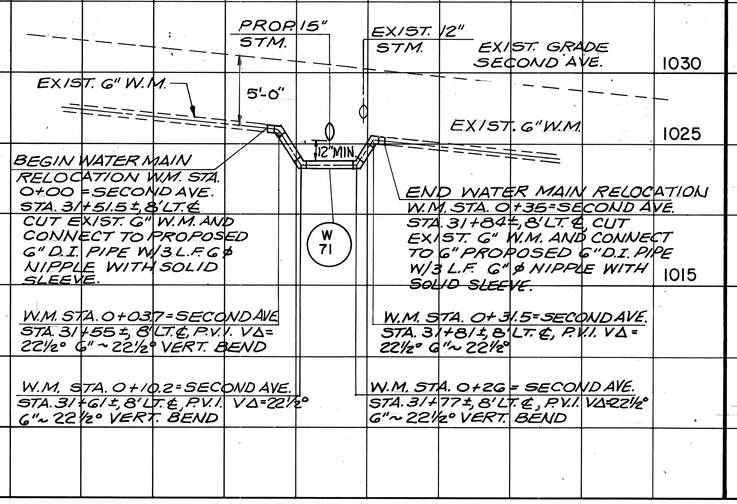

6" WATER MAIN RELOCATION FULLER ST.

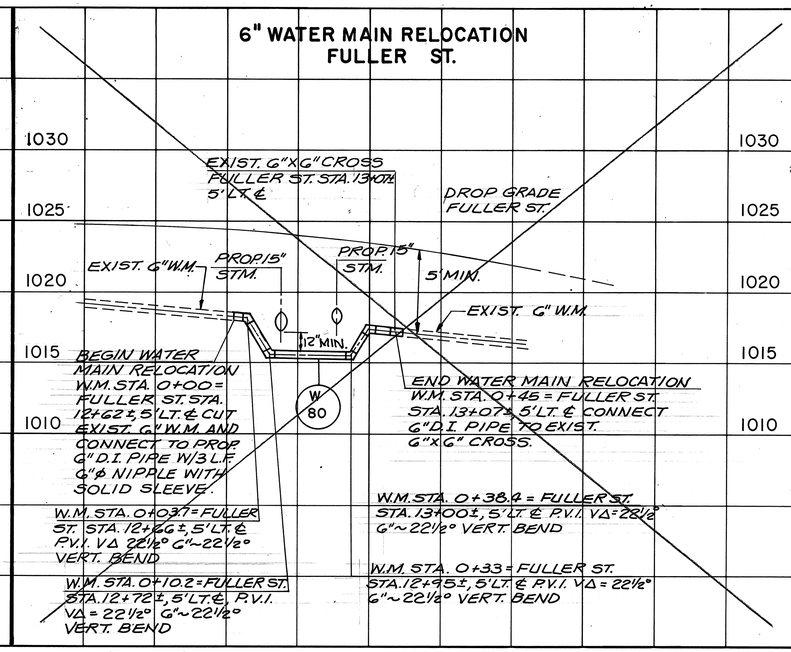

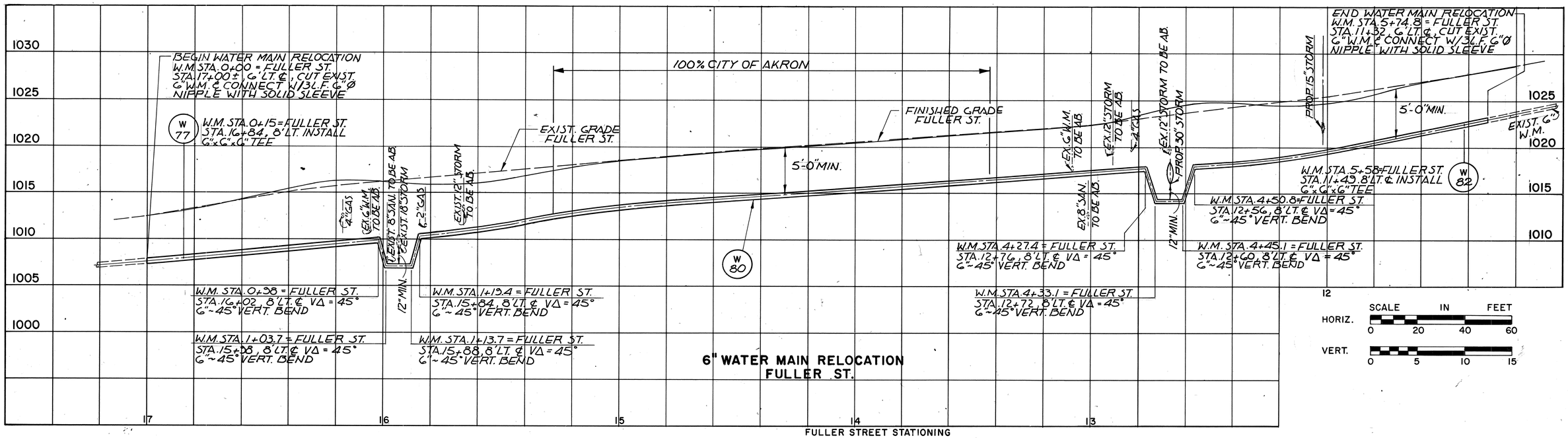

6" WATER MAIN RELOCATION FULLER ST.

FULLER STREET STATIONING

WATER MAIN PROFILE

CALC. BY. DATE	SUM-76-11.57	OHIO	613/1214
CHKD. BY. DATE	FED. PROJECT IR-76-2(44)19	F.H.W.A. REGION 5	

SUMMIT COUNTY

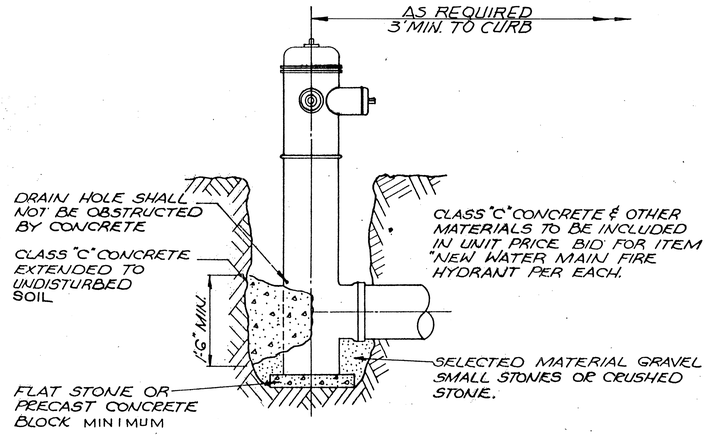

DETAIL
FIRE HYDRANT SETTING

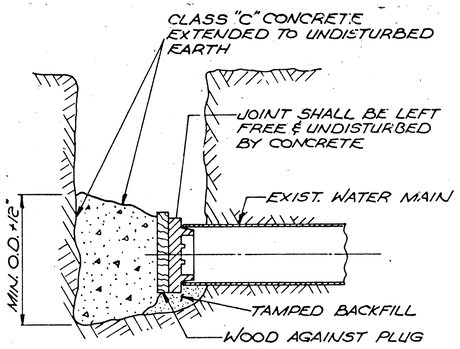

DETAIL
REACTION BACKING AT PLUG OR CAP

CLASS "C" CONCRETE TO BE INCLUDED IN UNIT PRICE BID FOR ITEM 814 "WATER MAIN, CUT & PLUG" PER EACH.

CLASS "C" CONCRETE TO BE INCLUDED IN UNIT PRICE BID FOR ITEM 814 NEW WATER MAIN PER LIN. FT.

PIPE SIZE	BEND ANGLE	DIMENSIONS "S"	DIMENSIONS "T"
6"	11¼°	1'-8"	2'-0"
	22½°	1'-8"	2'-0"
	45°	1'-8"	2'-0"
12"	11¼°	2'-0"	2'-3"
	22½°	2'-9"	2'-3"
	45°	3'-0"	2'-3"
16"	11¼°	3'-3"	2'-6"
	45°	3'-6"	2'-6"
	90°	3'-6"	2'-8"

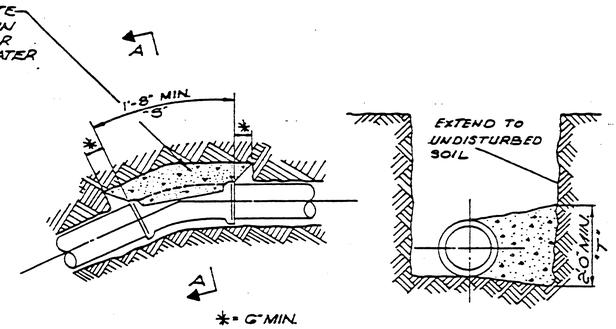

NOTE: JOINTS SHALL NOT BE OBSTRUCTED BY CONCRETE.

SECTION A-A

DETAIL
HORIZ. CONCRETE THRUST BLOCK
TO BE USED WHERE REACTION BACKING IS REQUIRED FOR BEND.

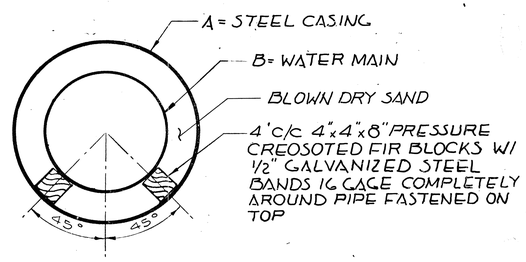

DETAIL W.M SET IN STEEL PIPE CASING

LOCATION	A	B
TALBOT AVE.	18"	8"
CHITTENDEN ST.	30"	16"

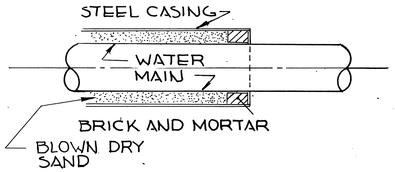

DETAIL - END TREATMENT
STEEL CASING AND WATER MAIN

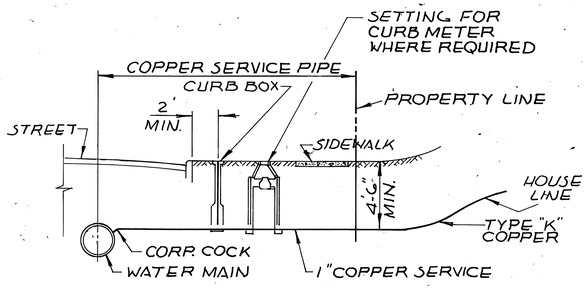

DETAIL
WATER SERVICE HOUSE CONNECTIONS

NOTE: TAPS AND ALL COPPER WORK FOR WATER SERVICE CONNECTIONS SHALL BE DONE BY THE CITY OF AKRON WATER DEPARTMENT AT NO CHARGE TO THE CONTRACTOR.

PIPE SIZE	BEND ANGLE	DIMENSIONS X	DIMENSIONS Y	DIMENSIONS Z
6"	11¼°	2'-6"	2'-6"	3'-0"
	22½°	2'-6"	2'-6"	3'-0"
	45°	2'-6"	2'-6"	3'-0"
12"	11¼°	2'-6"	3'-0"	3'-0"
	22½°	2'-6"	3'-0"	3'-0"
	45°	3'-6"	3'-0"	3'-6"
16"	11¼°	3'-0"	3'-4"	3'-9"
	45°	5'-6"	3'-9"	4'-6"

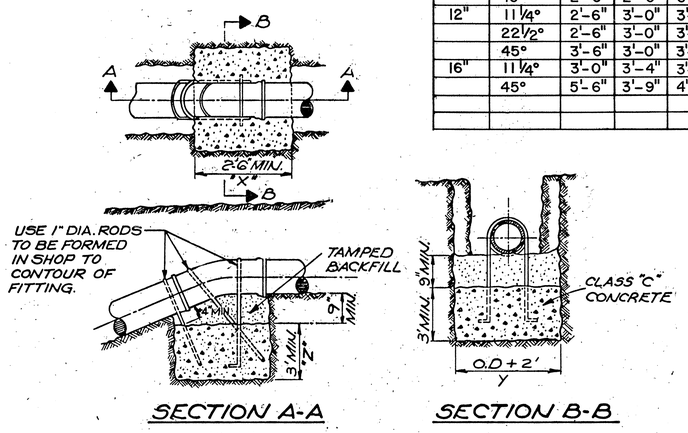

SECTION A-A SECTION B-B

DETAIL
REACTION ANCHORAGE
TO BE USED WHERE REACTION BACKING IS REQUIRED FOR VERTICAL BENDS
NO SCALE

FOR PAVEMENT REPLACEMENT DETAIL SEE SHEET 188 .

AA B/P# 21942R

CALC. BY. DATE	SUM-76-11.57	OHIO
CHKD. BY. DATE	FED. PROJECT IR-76-2(44)19	F.H.W.A. REGION 5

614
1214

SUMMIT COUNTY

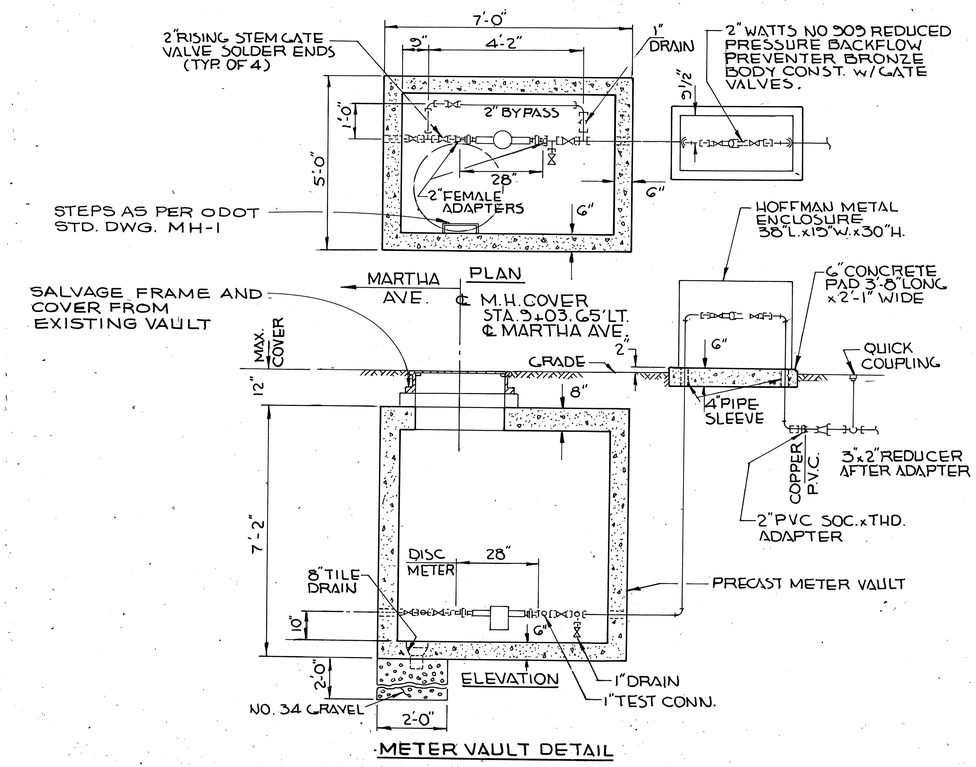

METER VAULT DETAIL

WATER DETAILS

TRAFFIC CONTROL GENERAL NOTES

TRAFFIC CONTROL STANDARD CONSTRUCTION DRAWINGS

REFERENCES TO SUPPLEMENTAL SPECIFICATIONS 857, 858, 859, 957, 958, 959 AND 861/961 ON THE TRAFFIC CONTROL STANDARD CONSTRUCTION DRAWINGS IN THIS PLAN SHALL BE CONSIDERED TO READ AS RESPECTIVE REFERENCES TO ITEM 630, 631, 632, 633, 730, 731, 732, AND 733.

ITEM 614 - TEMPORARY MAINTENANCE OF TRAFFIC SIGNAL INSTALLATIONS

INCIDENTAL TO THE REQUIREMENTS FOR MAINTAINING TRAFFIC IN ACCORDANCE WITH 614.03, EXISTING TRAFFIC SIGNALS SHALL BE MAINTAINED UNTIL THE NEW TRAFFIC SIGNAL INSTALLATION IS IN OPERATION.

THE CONTRACTOR SHALL BE RESPONSIBLE FOR MAINTAINING TRAFFIC SIGNAL INSTALLATIONS UNDER THE FOLLOWING CONDITIONS:

A) EXISTING SIGNAL INSTALLATIONS WHICH THE PLANS REQUIRE THE CONTRACTOR TO ADJUST, MODIFY, ADD ONTO OR REMOVE, OR WHICH THE CONTRACTOR ACTUALLY ADJUSTS, MODIFIES OR OTHERWISE DISTURBS. THE CONTRACTOR SHALL BE RESPONSIBLE FOR THE ENTIRE INSTALLATION (AT AN INTERSECTION) FROM THE TIME HIS OPERATIONS FIRST DISTURBS THE INSTALLATION UNTIL THE INSTALLATION HAS BEEN SUBSEQUENTLY REMOVED OR MODIFIED AND THE WORK IS ACCEPTED.

B) NEW SIGNAL INSTALLATIONS OR DEVICES, INSTALLED BY THE CONTRACTOR. THE CONTRACTOR SHALL BE RESPONSIBLE FOR MAINTENANCE OF THESE FROM THE TIME OF INSTALLATION UNTIL THE WORK IS ACCEPTED.

THE NORMAL MAINTENANCE OF EXISTING SIGNALS SHALL BE THE RESPONSIBILITY OF THE CITY OF AKRON. OUTAGES, OTHER THAN THAT OF NORMAL WEAR, SHALL BE THE RESPONSIBILITY OF THE CONTRACTOR.

THE CONTRACTOR SHALL CORRECT AS QUICKLY AS POSSIBLE ALL OUTAGES OR MALFUNCTIONS. HE SHALL PROVIDE THE CITY OF AKRON AND THE ENGINEER SUCH ADDRESSES AND PHONE NUMBERS WHERE HIS MAINTENANCE FORCES CAN BE CONTACTED. THE CONTRACTOR SHALL PROVIDE ONE OR MORE PERSONS TO RECEIVE ALL CALLS AND DISPATCH THE NECESSARY MAINTENANCE FORCES TO CORRECT OUTAGES. SUCH A PERSON OR PERSONS MAY BE USED TO PERFORM OTHER DUTIES AS LONG AS PROMPT ATTENTION IS GIVEN TO THESE CALLS AND A PERSON IS READILY AVAILABLE CONTINUOUSLY 24 HOURS A DAY, 7 DAYS A WEEK. ALL OUTAGES SHALL BE CORRECTED TO THE SATISFACTION OF THE ENGINEER WITH THE SIGNAL BACK IN SERVICE WITHOUT UNDUE DELAY AFTER THE CONTRACTOR HAS BEEN NOTIFIED OF THE OUTAGE. IF THE SIGNAL CANNOT IMMEDIATELY BE PLACED BACK INTO SERVICE, POLICE PROTECTION FOR THE INTERSECTION SHALL BE PROVIDED AT THE CONTRACTOR'S EXPENSE.

IN THE EVENT NEW SIGNALS ARE DAMAGED PRIOR TO ACCEPTANCE ALL DAMAGED EQUIPMENT EXCEPT POLES AND CONTROL EQUIPMENT SHALL BE REPLACED BY THE CONTRACTOR TO THE SATISFACTION OF THE ENGINEER WITH THE SIGNAL BACK IN SERVICE WITHOUT UNDUE DELAY AFTER THE CONTRACTOR'S NOTIFICATION OF THE OUTAGE. IF THE SIGNAL CANNOT IMMEDIATELY BE PLACED BACK INTO SERVICE, POLICE PROTECTION FOR THE INTERSECTION SHALL BE PROVIDED AT THE CONTRACTOR'S EXPENSE.

IF POLES AND/OR CONTROL EQUIPMENT ARE DAMAGED AND MUST BE REPLACED, THE CONTRACTOR SHALL MAKE TEMPORARY REPAIRS AS NECESSARY TO BRING THE SIGNAL BACK INTO FULL OPERATION WITHOUT UNDUE DELAY AND SHALL MAKE PERMANENT REPAIRS OR REPLACEMENT AS SOON THEREAFTER AS POSSIBLE.

NONE OF THE ABOVE SHALL BE CONSTRUED AS COLLECTIVE OR CONSECUTIVE OUTAGE TIME PERIODS AT ANY ONE LOCATION. THAT IS, WHERE MORE THAN ONE OUTAGE OCCURS AT ANY ONE LOCATION, THEN THE ALLOTTED TIME LIMIT SHALL BE FOR THE WORST SINGLE OUTAGE.

WHERE OUTAGES ARE THE DIRECT RESULT OF A VEHICLE ACCIDENT THE RESPONSE OF THE CONTRACTOR SHALL BE AS OUTLINED ABOVE. THE CONTRACTOR SHALL BE RESPONSIBLE FOR COLLECTION OF ANY COMPENSATION FOR THIS WORK FROM THOSE PARTIES RESPONSIBLE FOR THE DAMAGE.

WHERE THE CONTRACTOR HAS FAILED TO OR CANNOT RESPOND TO AN OUTAGE OR SIGNAL EQUIPMENT MALFUNCTION, AT THESE LOCATIONS WITHIN HIS RESPONSIBILITY, WITHIN PERIODS AS SPECIFIED ABOVE, THE ENGINEER MAY INVOKE THE PROVISIONS OF SECTION 105.15 AND ANY SUBSEQUENT BILLINGS TO THE CITY OF AKRON FOR POLICE SERVICES AND MAINTENANCE SERVICES BY CITY FORCES SHALL BE DEDUCTED FROM MONIES DUE OR TO BECOME DUE THE CONTRACTOR IN ACCORDANCE WITH PROVISIONS OF SECTION 105.15.

THE CONTRACTOR SHALL PROVIDE THE MAINTENANCE SERVICE ENTIRELY WITH HIS FORCES OR HE MAY CHOOSE TO ENTER INTO A COOPERATIVE UNDERSTANDING WITH THE LOCAL MAINTAINING AGENCY TO PROVIDE THE MAINTENANCE IN THE FOLLOWING METHODS (OR ANOTHER METHOD AS MAY BE AGREED BY THE CONTRACTOR, LOCAL AGENCY AND THE ENGINEER):

1. _____ AM TO _____ PM WEEKDAYS WITH THE CITY OF AKRON PROVIDING COVERAGE FROM _____ PM TO _____ AM WEEKDAYS, AND WEEKENDS AT THE CONTRACTOR'S EXPENSE AS PREVIOUSLY PROVIDED HEREIN.

2. COMPLETE CITY MAINTENANCE AT THE CONTRACTOR'S EXPENSE, AS PREVIOUSLY PROVIDED HEREIN.

THE CONTRACTOR SHALL INFORM THE ENGINEER, IN WRITING, OF THE MAINTENANCE METHOD SELECTED.

THE CONTRACTOR SHALL BE RESPONSIBLE FOR ANY DAMAGE TO ANY TRAFFIC SIGNAL COMPONENTS REQUIRED TO BE HANDLED DURING THE RELOCATION OF POLES AND REVISIONS TO THE SIGNAL SYSTEM.

WHEN A TRAFFIC SIGNAL MUST BE TAKEN OUT OF SERVICE BY THE CONTRACTOR, DUE TO CONSTRUCTION PROCEDURES, THIS OUTAGE SHALL NOT EXCEED 6 HOURS AND SHALL NOT INCLUDE THE HOURS OF 7 A.M. TO 9:30 A.M. AND 3 P.M. TO 6 P.M. ON WEEKDAYS. ANY SIGNALIZED INTERSECTION, WHERE THE SIGNAL IS OUT OF SERVICE DUE TO CONSTRUCTION PROCEDURES, OR DUE TO AN OUTAGE OR MALFUNCTION OF EQUIPMENT AS DESCRIBED ABOVE, SHALL BE PROTECTED BY OFF-DUTY CITY OF AKRON POLICE, HIRED BY THE CONTRACTOR.

ANY VEHICULAR TRAFFIC SIGNAL HEAD, EITHER NEW OR EXISTING WHICH WILL BE OUT OF OPERATION SHALL BE COVERED IN THE MANNER DESCRIBED IN 632.24.

ALL COSTS RESULTING FROM THE ABOVE REQUIREMENTS SHALL BE CONSIDERED TO BE INCLUDED IN THE LUMP SUM PRICE BID FOR ITEM 614 - MAINTENANCE OF TRAFFIC.

SEE MAINTENANCE OF TRAFFIC GENERAL NOTES SHEET NO. 21

ITEM 625 - POWER SUPPLY FOR TRAFFIC SIGNALS

ELECTRIC POWER SHALL BE OBTAINED FROM THE OHIO EDISON COMPANY AT THE LOCATION INDICATED ON THE PLANS. POWER SUPPLIED SHALL BE 120 VOLTS.

OHIO EDISON COMPANY
111 CASCADE PLAZA
AKRON, OHIO 44308
(216) 384-5095

ITEM 625 - PULL BOX, CONCRETE, BY SIZE, AS PER PLAN

CONCRETE PULLBOXES SHALL BE FURNISHED AND INSTALLED WHERE INDICATED ON THE PLANS. SIZE, MANUFACTURING DETAILS, AND COVER MATERIAL SHALL BE AS DETAILED ON SHEET G71.

PAYMENT WILL BE AT THE CONTRACT UNIT PRICE FOR EACH CONCRETE PULLBOX, BY SIZE, FURNISHED AND INSTALLED, INCLUDING AGGREGATE.

625 EACH PULL BOX, CONCRETE, BY SIZE, AS PER PLAN

ITEM 625 - CONDUIT, 713.07, BY SIZE, TYPE DB, CONCRETE ENCASED, AS PER PLAN

THIS ITEM SHALL CONSIST OF FURNISHING AND INSTALLING 2" AND 3" PLASTIC CONDUIT AT THE LOCATIONS SHOWN ON THE CONTRACT PLANS.

THE CONDUITS SHALL BE OF THE KIND, SIZE, AND LENGTH CALLED FOR ON THE PLANS, CONFORMING TO THESE SPECIFICATIONS AT SUCH PLACES AS ARE DESIGNATED ON THE PLANS AND IN CONFORMITY WITH THE LINES AND GRADES GIVEN.

THIS ITEM COVERS THE FOLLOWING TYPE OF PLASTIC DUCT FOR INSTALLATION UNDERGROUND FOR TRAFFIC SIGNAL WIRE AND CABLE.

TYPE DB, DESIGNED TO BE ENCASED IN CONCRETE WHEN INSTALLED.

PLASTIC DUCTS SHALL BE MADE OF PVC COMPOUNDS CAPABLE OF MEETING THE PERFORMANCE REQUIREMENTS OF THIS SPECIFICATION. THE COMPOUNDS MAY CONTAIN STABILIZERS, LUBRICANTS, DYES, PIGMENTS, AND FILLERS. REGROUND MATERIAL MAY BE USED PROVIDED THE END PRODUCT MEETS THE REQUIREMENTS OF NEMA STANDARD TC-6 1971 FOR UNDERGROUND PLASTIC UTILITIES DUCT.

PLASTIC DUCTS MAY HAVE BELL ENDS IN ACCORDANCE WITH THE DIMENSIONS SPECIFIED IN ASTM D-2672, D-2750, FOR PROVIDING TIGHT JOINTS BETWEEN SECTIONS.

THE CONDUITS AND FITTINGS SHALL BE FREE FROM ALL SUBSTANCES THAT INJURIOUSLY AFFECT ANY WIRE OR CABLE COVERING AS IS USED ON RUBBER COVERED WIRE, POLYCHLOROPRENE-SHEATHED CABLE AND WEATHERPROOF WIRE.

CONDUITS AND FITTINGS SHALL BE SO JOINTED BY MEANS OF A SPECIAL SOLVENT WELDING CEMENT OR OTHER APPROVED METHODS AS TO PROVIDE A WATERTIGHT AND ROOTPROOF JOINT.

ALL PLASTIC CONDUITS SHALL BE ENCASED IN CLASS "C" CONCRETE ENVELOPED WITH A MINIMUM 3" THICK COVER ON ALL SIDES. CLASS "C" CONCRETE SHALL CONFORM TO CITY OF AKRON CONCRETE SPECIFICATION EXCEPT FOR THE FOLLOWING: PORTLAND CEMENT SHALL BE TYPE 1A OR TYPE 1, COARSE AGGREGATE SHALL BE NO. 6 (SEE AKRON GRADATION TABLE) GRADE A LIMESTONE OR SILICA PEA GRAVEL.

ALL PLASTIC CONDUIT SHALL BE PROVIDED WITH A TERMINAL ADAPTER, FOR CONNECTION TO METAL CONDUIT, RIGHT AT THE CONCRETE LINE WHEN THEY EXIST FROM THE CONCRETE ENVELOPE. ALL TERMINAL ADAPTERS THAT DO NOT HAVE METAL CONDUIT EXTENSIONS SHALL BE PROVIDED WITH CONDUIT CAPS THREADED IN PLACED.

ALL DUCTS THAT ARE TO BE TEMPORARILY TERMINATED BELOW GRADE SHALL BE PLUGGED WITH PLASTIC CAPS OF THE SAME MATERIALS AS THE DUCT.

ALL NEW CONDUIT SHALL BE PROVIDE WITH 1/4" JET LINE TWISTED POLY PULL ROPE T.S. 1,000 LBS.

WHEN EACH SECTION OF THE CONDUIT IS APPROVED BY THE ENGINEER, THE CONTRACTOR SHALL BE PERMITTED TO PULL WIRES ACCORDING TO THESE PLANS AND SPECIFICATIONS.

MEASUREMENT

THE QUANTITY TO BE PAID FOR UNDER THIS ITEM SHALL BE THE NUMBER OF LINEAR FEET OF DUCT RUN INSTALLED IN PLACE, COMPLETED, ACCEPTED AND READY FOR SERVICE. THE NUMBER OF LINEAR FEET WILL BE DETERMINED FROM THE ENGINEER'S FINAL MEASUREMENT FOR PAYMENT. ALL BENDS ARE PAID FOR AS LINEAR FEET OF DUCT RUN.

PAYMENT

THE QUANTITY MEASURED AS PROVIDED ABOVE SHALL BE PAID FOR AT THE CONTRACT PRICE BID PER LINEAR FOOT FOR:

ITEM 625 - CONDUIT, 713.07, BY SIZE, TYPE DB, CONCRETE ENCASED, AS PER PLAN

THE PRICE PAID SHALL CONSTITUTE FULL COMPENSATION FOR FURNISHING ALL LABOR, MATERIALS, EQUIPMENT, TOOLS, AND INCIDENTALS NECESSARY TO COMPLETE THIS ITEM AS SPECIFIED INCLUDING ALL EXCAVATION, ENCASEMENT, AND BACKFILLING.

AA B/P# 71942R

TRAFFIC CONTROL GENERAL NOTES

CALC. BY. DATE	SUM-76-11.57	OHIO	
CHKD. BY. DATE	FED. PROJECT IR-76-2(44)19	F.H.W.A. REGION 5	616 1214

ITEM 630 - REMOVAL OF GROUND MOUNTED SIGN AND STORAGE

IN ADDITION TO THE REQUIREMENTS OF 630.12, ALL SIGNS REMOVED SHALL BE SUITABLY PROTECTED UNTIL DELIVERED TO THE CITY OF AKRON, TRAFFIC ENGINEERING DIVISION, 1420 TRIPLETT BOULEVARD, BY THE CONTRACTOR. PAYMENT FOR THIS WORK SHALL BE MADE AT THE CONTRACT BID PRICE PER EACH, ITEM 630 - REMOVAL OF GROUND MOUNTED SIGN AND STORAGE.

ITEM 630 - REMOVAL OF GROUND MOUNTED POST SUPPORT AND STORAGE

IN ADDITION TO THE REQUIREMENTS OF 630.12, ALL GROUND MOUNTED POST SUPPORTS REMOVED SHALL BE SUITABLY PROTECTED UNTIL DELIVERED TO THE CITY OF AKRON, TRAFFIC ENGINEERING DIVISION, 1420 TRIPLETT BOULEVARD, BY THE CONTRACTOR. PAYMENT FOR THIS WORK SHALL BE MADE AT THE CONTRACT BID PRICE PER EACH, ITEM 630 - REMOVAL OF GROUND MOUNTED POST SUPPORT AND STORAGE.

ITEM 630 - REMOVAL OF GROUND MOUNTED BEAM SUPPORT AND STORAGE

IN ADDITION TO THE REQUIREMENTS OF 630.12, ALL GROUND MOUNTED BEAM SUPPORTS REMOVED SHALL BE SUITABLY PROTECTED UNTIL DELIVERED TO THE CITY OF AKRON, TRAFFIC ENGINEERING DIVISION, 1420 TRIPLETT BOULEVARD, BY THE CONTRACTOR. PAYMENT FOR THIS WORK SHALL BE MADE AT THE CONTRACT BID PRICE PER EACH, ITEM 630 - REMOVAL OF GROUND MOUNTED BEAM SUPPORT AND STORAGE.

ITEM 630 - REMOVAL OF OVERHEAD MOUNTED SIGN AND STORAGE

ALL OVERHEAD MOUNTED SIGNS REMOVED SHALL BE STORED ON THE PROJECT FOR SALVAGE BY THE STATE OF OHIO.

ITEM 630 - REMOVAL OF OVERHEAD SIGN SUPPORT AND STORAGE, TYPE TC-7.65, 12.30, 18.24

ALL OVERHEAD SIGN SUPPORTS REMOVED SHALL BE STORED ON THE PROJECT FOR SALVAGE BY THE STATE OF OHIO.

ITEM 630 - REMOVAL OF OVERHEAD MOUNTED SIGN AND STORAGE, AS PER PLAN

IN ADDITION TO THE REQUIREMENTS OF ITEM 630.12, THE MESSENGER WIRE, SUPPORTING THE SIGNS, SHALL ALSO BE REMOVED. ALL SIGNS AND MESSENGER WIRE REMOVED SHALL BE SUITABLY PROTECTED UNTIL DELIVERED TO THE CITY OF AKRON, TRAFFIC ENGINEERING DIVISION, 1420 TRIPLETT BOULEVARD, BY THE CONTRACTOR. ALL LABOR, MATERIALS, EQUIPMENT, TOOLS, AND HARDWARE NECESSARY TO PERFORM THE REQUIRED WORK SHALL BE INCLUDED IN THE CONTRACT BID PRICE FOR EACH ITEM 630 - REMOVAL OVERHEAD MOUNTED SIGN AND STORAGE, AS PER PLAN.

ITEM 631 - REMOVAL OF LUMINAIRE, BALLAST, DISCONNECT SWITCH, AND PHOTOELECTRIC CONTROL AND STORAGE

ALL ITEMS REMOVED SHALL BE STORED ON THE PROJECT FOR SALVAGE BY THE STATE OF OHIO.

ITEM 631 - BALLAST, INTEGRAL, BY TYPE

BALLAST FOR MERCURY VAPOR LUMINARIES SHALL BE MOUNTED WITHIN THE LUMINAIRE HOUSING (INTEGRAL) OR MOUNTED IN A WEATHERPROOF HOUSING ATTACHED TO OR BESIDE THE LUMINAIRE (CONTIGUOUS). BALLAST HOUSINGS SHALL BE OF CORROSION RESISTANT MATERIALS.

ITEM 631 - BALLAST WIRING ENCLOSURE, TYPE B

TYPE B ENCLOSURES SHALL BE FURNISHED AND INSTALLED AS DETAILED ON SHEET NO. 640 ALL LABOR, MATERIALS, EQUIPMENT, TOOLS, AND HARDWARE NECESSARY TO PERFORM THE REQUIRED WORK SHALL BE INCLUDED IN THE CONTRACT BID PRICE PER EACH ITEM 631 - BALLAST WIRING ENCLOSURE, TYPE B

ITEM 632 - SIGNAL SUPPORT, TYPE TC-81.20, DESIGN 4, 37-FOOT ARM, AS PER PLAN

IN ADDITION TO THE REQUIREMENTS OF ITEM 632.15, FOUR ARMS, LUMINAIRE ATTACHMENT ASSEMBLIES, AND SIGN ATTACHMENT ASSEMBLIES, AS DETAILED ON SHEET NO. 637, SHALL BE FURNISHED AND INSTALLED FOR THE ATTACHMENT OF TWO GUIDE SIGNS. ALL LABOR, MATERIALS, EQUIPMENT, TOOLS, AND HARDWARE NECESSARY TO PERFORM THE REQUIRED WORK SHALL BE INCLUDED IN THE CONTRACT BID PRICE FOR EACH ITEM 632 - SIGNAL SUPPORT, TYPE TC-81.20, DESIGN 4, 37-FOOT ARM, AS PER PLAN.

ITEM 632 - POWER CABLE, 2-CONDUCTOR NO. 4 AWG

THE SERVICE FEE CHARGED BY OHIO EDISON COMPANY FOR ELECTRICAL HOOK-UP AT EACH INTERSECTION SHALL BE AS FOLLOWS:

ARLINGTON STREET AT RAMP "E-4" = $70.00
MARTHA AVENUE AT RAMP "E-15" = $70.00
SEIBERLING STREET AT ENGLEWOOD AVENUE = $70.00

THESE FEES ARE INCIDENTAL TO THE CONTRACT BID PRICE PER LINEAR FOOT OF ITEM 632 - POWER CABLE, 2-CONDUCTOR NO. 4 AWG.

ITEM 632 - INTERCONNECT CABLE, INTEGRAL MESSENGER WIRE TYPE, 12-CONDUCTOR NO. 14 AWG STRANDED, AS PER PLAN

IN ADDITION TO THE REQUIREMENTS OF 632.22, STANDOFFS, AS DETAILED ON SHEET NO. 671, SHALL BE FURNISHED AND INSTALLED. ACCEPTABLE DEVICES SHALL BE CAPABLE OF 15" EXTENSION FROM A WALL AND CONSTRUCTED OF .25" X 1.50" STEEL STOCK, SUCH AS ANIXTER-PRUZAN PART NO. P-1592, CABLE TV SUPPLY PART NO. 600EB, OR APPROVED EQUAL. ALL LABOR, MATERIALS, EQUIPMENT, TOOLS, AND HARDWARE NECESSARY TO PERFORM THE REQUIRED WORK SHALL BE INCLUDED IN THE CONTRACT BID PRICE FOR LINEAR FEET OF ITEM 632 - INTERCONNECT CABLE, INTEGRAL MESSENGER WIRE TYPE, 12-CONDUCTOR NO. 14 AWG STRANDED, AS PER PLAN

ITEM 632 - REMOVAL OF TRAFFIC SIGNAL INSTALLATION

THE CONTRACTOR SHALL NOTIFY THE CITY OF AKRON, DIVISION OF TRAFFIC ENGINEERING, AT 375-2851, FORTY-EIGHT HOURS BEFORE REMOVAL OF ANY EXISTING TRAFFIC SIGNAL EQUIPMENT. THE CITY WILL RECEIVE ALL EXISTING TRAFFIC SIGNAL EQUIPMENT. ALL REMOVALS SHALL BE PERFORMED IN THE PRESENCE OF A DESIGNATED REPRESENTATIVE OF THE CITY OF AKRON, DIVISION OF TRAFFIC ENGINEERING. ITEMS SHALL BE SUITABLY PROTECTED UNTIL DELIVERED TO TRAFFIC ENGINEERING DIVISION, 1420 TRIPLETT BOULEVARD, BY THE CONTRACTOR. IN ACCORDANCE WITH 614.03, ITEMS SHALL NOT BE REMOVED UNTIL A NEW OR TEMPORARY SIGNAL INSTALLATION IS IN OPERATION.

EQUIPMENT REMOVED SHALL BE AS FOLLOWS:

1. ARLINGTON STREET AND RAMP E-4/SECOND AVENUE
   FOUR SIGNAL POLES,
   MESSENGER WIRE AND ATTACHMENTS, NINE VEHICULAR SIGNALS, CONTROLLER, ALL SIGNAL CABLE, INTERCONNECT CABLE, AND ANY OTHER ITEMS AS DIRECTED BY THE ENGINEER. (Carried to Sub-Summary)

2. CHITTENDEN STREET AND FOURTH AVENUE

   MESSENGER WIRE AND ATTACHMENTS, ONE SIGNAL POLE, THREE VEHICULAR SIGNALS, CONTROLLER, ALL SIGNAL CABLE, AND ANY OTHER ITEMS AS DIRECTED BY THE ENGINEER. (Carried to General Summary)

3. KELLY AVENUE AND FIFTH AVENUE

   MESSENGER WIRE AND ATTACHMENTS, ONE SIGNAL POLE, TWO VEHICULAR SIGNALS, CONTROLLER, ALL SIGNAL CABLE, AND ANY OTHER ITEMS AS DIRECTED BY THE ENGINEER. (Carried to General Summary)

4. MARTHA AVENUE AND THIRD AVENUE

   TWO SIGNAL POLES AND MAST ARMS, TWO PEDESTALS, SIX VEHICULAR SIGNALS, TWO PEDESTRIAN SIGNALS, CONTROLLER, ALL SIGNAL CABLE, INTERCONNECT CABLE, AND ANY OTHER ITEMS AS DIRECTED BY THE ENGINEER. (Carried to Sub-Summary)

5. ENGLEWOOD AVENUE AND SEIBERLING STREET

   MESSENGER WIRE AND ATTACHMENTS, THREE VEHICULAR SIGNALS, CONTROLLER, ALL SIGNAL CABLE, INTERCONNECT CABLE, AND ANY OTHER ITEMS AS DIRECTED BY THE ENGINEER. (Carried to Sub-Summary)

*6.
PAYMENT WILL BE AT THE CONTRACT UNIT PRICE FOR EACH ITEM 632 TRAFFIC SIGNAL INSTALLATION REMOVED.

*6. E. Market St. and Ramp E-10

messenger wire and attachments, three vehicular signals, controller, all signal cable and any other items as Directed by the Engineer.
(Carried to the General summary)

ITEM 633 - CONTROLLER, ACTUATED, NO. OF PHASES, SOLID STATE DIGITAL MICROPROCESSOR, AS PER PLAN

ALL CONTROLLER CABINETS SHALL HAVE A NATURAL ALUMINUM FINISH.
ALL CONTROLLER UNITS (TIMERS) SHALL BE 8 PHASE MICROPROCESSORS. THE BACK PANEL SHALL BE WIRED FOR 8 LOAD SWITCH SOCKETS FOR 4 PHASE OR LESS, AND 12 LOAD SWITCH SOCKETS FOR MORE THAN 4 PHASE OPERATION. ALL LABOR, MATERIALS, EQUIPMENT, TOOLS, AND HARDWARE NECESSARY TO PERFORM THE REQUIRED WORK SHALL BE INCLUDED IN THE CONTRACT BID PRICE PER EACH ITEM 633 - CONTROLLER, ACTUATED, NO. OF PHASES, SOLID STATE DIGITAL MICROPROCESSOR, AS PER PLAN

ITEM 630 - REMOVAL OF OVERHEAD SIGN SUPPORT AND DISPOSAL, TYPE TC-7.65, AS PER PLAN

THIS ITEM SHALL BE AS PER SECTION 630.12 OF THE SPECIFICATIONS EXCEPT THE MEDIAN SIGN SUPPORT FOUNDATION SHALL NOT BE REMOVED AND THE EXISTING ANCHOR BOLTS SHALL BE SAWED OFF FLUSH WITH THE THE TOP OF THE CONCRETE BARRIER. ALL LABOR AND MATERIALS REQUIRED SHALL BE INCLUDED IN THE UNIT PRICE BID FOR THIS ITEM.

TRAFFIC CONTROL GENERAL SUMMARY

CALC. BY T.K.L. DATE 3-89	SUM-76-11.57	OHIO
CHKD. BY DSB DATE 4/90	FED PROJECT IR-76-2(44)19	F.H.W.A. REGION 5
	SUMMIT COUNTY	

617 / 1214

SHEET NUMBER													PARTICIPATION			ITEM	ITEM EXT.	GRAND TOTAL	UNIT	DESCRIPTION
G41	G42	G43	G53	G54	G55	G56	G57	G58	G62	G66	G70		PROJECT	100% CITY OF AKRON						
																				DELINEATORS
								26					26			620	10300	26	EA.	DELINEATORS, TYPE C, POST MOUNTED
								26					26			620	15300	26	EA.	DELINEATORS, TYPE D, POST MOUNTED
								86					86			802	00100	86	EA.	BARRIER REFLECTOR, TYPE A
								299					299			802	00200	299	EA.	BARRIER REFLECTOR, TYPE B
								51					51			862	00100	51	EA.	RAISED PAVEMENT MARKER
																				PAVEMENT MARKINGS
						11.49							1149			642	00090	11.49	MILES	EDGE LINES
						0.80							0.80			642	00190	0.80	MILES	LANE LINES, 4-INCH
						7.78							7.78			642	00190	7.78	MILES	LANE LINES, 6-INCH
						1.03							.03			642	00290	1.03	MILES	CENTER LINES
						8156							8156			642	00390	8156	L.F.	CHANNELIZING LINES
						626							626			642	00490	626	L.F.	STOP LINES
						1717							1717			642	00590	1717	L.F.	CROSSWALK LINES
							1834						1834			642	00690	1834	L.F.	TRANSVERSE LINES
							923						923			642	00790	923	L.F.	CURB MARKING
							380						380			642	00910	380	S.F.	ISLAND MARKING
							4						4			642	00990	4	EA.	RAILROAD SYMBOL MARKINGS
							12						12			642	01290	12	EA.	LANE ARROWS
							9						9			642	01390	9	EA.	WORD ON PAVEMENT, 72 INCH
																				HIGHWAY LIGHTING
12	9	5							9	5	7		35	12		625	32000	47	EA.	GROUND ROD, 713.16
									6	7	4		6	11		625	30701	17	EA.	PULL BOX, 713.08, 18-INCH,
																				AS PER PLAN (SEE NOTE, SHEET G15)
									1	1	1		1	2		625	30707	3	EA.	PULL BOX, 713.08, 24-INCH,
																				AS PER PLAN (SEE NOTE, SHEET G15)
									418	477	95		418	572		625	29002	990	L.F.	TRENCH, 24-INCH DEEP
											52			52		625	29500	52	L.F.	TRENCH IN PAVED AREAS, TYPE A
									36		92		36	92		625	29600	128	L.F.	TRENCH IN PAVED AREAS, TYPE B
									19		15		19	15		625	25400	34	L.F.	CONDUIT, 713.04, 2-INCH
									445	491	229		445	720		625	25503	1165	L.F.	CONDUIT, 713.07, 3-INCH, CONCRETE ENCASED,
																				AS PER PLAN (SEE NOTE, SHEET G15)
																				TRAFFIC SIGNS AND SUPPORTS
125.8	21.6	5.9											153.3			630	00000	153.3	C.Y.	CONCRETE FOR ANCHOR BASE FOUNDATIONS
8.5	7.8	0.6											16.9			630	00100	16.9	C.Y.	CONCRETE FOR EMBEDDED FOUNDATIONS
			24	36	13								73			630	02100	73	L.F.	GROUND-MOUNTED SUPPORTS, NO. 2 POST
			38	322	353								713			630	03100	713	L.F.	GROUND-MOUNTED SUPPORTS, NO. 3 POST
30	104	118	301	62	83								698			630	04100	698	L.F.	GROUND-MOUNTED SUPPORTS, NO. 4 POST
224	147	28											399			630	06400	399	L.F.	GROUND-MOUNTED SUPPORTS, S4 x 7.7 BEAM
	35												35			630	06500	35	L.F.	GROUND-MOUNTED SUPPORTS, W6 x 9 BEAM

TRAFFIC CONTROL GENERAL SUMMARY

CALC. BY. T.K.L. DATE 3-89
CHKD. BY. DSB DATE 4/90

SUM-76-11.57
FED PROJECT IR-76-2(44)19
SUMMIT COUNTY

OHIO
F.H.W.A. REGION 5

G18
12/4

SHEET NUMBER													PARTICIPATION			ITEM	ITEM EXT.	GRAND TOTAL	UNIT	DESCRIPTION
						G41	G42	G43	G53	G54	G55		PROJECT	100% CITY OF AKRON						
																				TRAFFIC SIGNS AND SUPPORTS cont.
						39	85						124			630	07600	124	L.F.	GROUND-MOUNTED SUPPORTS, W10 x 12 BEAM
						52							62			630	07500	52	L.F.	GROUND-MOUNTED SUPPORTS, W10 x 22 BEAM
									81	81			162			630	08004	162	L.F.	ONE WAY SUPPORTS, NO. 3 POST
									58	116			174			630	08100	174	L.F.	ONE WAY SUPPORTS, NO. 4 POST
						18	14	2					34			630	09000	34	EA.	BREAKAWAY BEAM CONNECTION
							1						1			630	35500	1	EA.	OVERHEAD SIGN SUPPORT, TYPE TC-7.65, DESIGN 6, 59 FOOT SPAN
						1							1			630	36000	1	EA.	OVERHEAD SIGN SUPPORT, TYPE TC-7.65, DESIGN 6, 63 FOOT SPAN
						1							1			630	46500	1	EA.	OVERHEAD SIGN SUPPORT, TYPE TC-7.65, DESIGN 8, 69 FOOT SPAN
						1							1			630	46500	1	EA.	OVERHEAD SIGN SUPPORT, TYPE TC-7.65, DESIGN 8, 69.92 FOOT SPAN
						2							2			630	47000	2	EA.	OVERHEAD SIGN SUPPORT, TYPE TC-7.65, DESIGN 8, 73 FOOT SPAN
						1							1			630	47500	1	EA.	OVERHEAD SIGN SUPPORT, TYPE TC-7.65, DESIGN 8, 75.42 FOOT SPAN
						1							1			630	48000	1	EA.	OVERHEAD SIGN SUPPORT, TYPE TC-7.65, DESIGN 8, 83.42 FOOT SPAN
						1							1			630	48500	1	EA.	OVERHEAD SIGN SUPPORT, TYPE TC-7.65, DESIGN 8, 86 FOOT SPAN
						1							1			630	48500	1	EA.	OVERHEAD SIGN SUPPORT, TYPE TC-7.65, DESIGN 8, 88 FOOT SPAN
						1							1			630	49000	1	EA.	OVERHEAD SIGN SUPPORT, TYPE TC-7.65, DESIGN 8, 92.39 FOOT SPAN
							1	1					2			630	31200	2	EA.	OVERHEAD SIGN SUPPORTS, TYPE TC-9.10 DESIGN 2, 9 FOOT ARM
							1	1					2			630	31200	2	EA.	OVERHEAD SIGN SUPPORTS, TYPE TC-9.10 DESIGN 2, 10 FOOT ARM
							2						2			630	20300	2	EA.	OVERHEAD SIGN SUPPORT, TYPE TC-12.30, DESIGN 3, 13 FOOT ARM
							1	1					2			630	20300	2	EA.	OVERHEAD SIGN SUPPORT, TYPE TC-12.30, DESIGN 3, 16 FOOT ARM
						2							2			630	20800	2	EA.	OVERHEAD SIGN SUPPORT, TYPE TC-12.30, DESIGN 8, 28 FOOT ARM
						1							1			630	21000	1	EA.	OVERHEAD SIGN SUPPORT, TYPE TC-12.30, DESIGN 10, 32 FOOT ARM
							3						3			630	77000	3	EA.	OVERPASS STRUCTURE MOUNTED SIGN SUPPORT, TYPE TC-18.24
								2					2			630	77600	2	EA.	OVERPASS STRUCTURE MOUNTED SIGN SUPPORT, TYPE TC-18.26, DESIGN 6
								2					2			630	75000	2	EA.	SIGN ATTACHMENT ASSEMBLY
								1					1			630	75106	1	EA.	LUMINAIRE SUPPORT ASSEMBLY, TYPE TC-31.21
											2		2			630	79100	2	EA.	SIGN HANGER ASSEMBLY MAST ARM
						1			10		1		12			630	79500	12	EA.	SIGN SUPPORT ASSEMBLY, POLE MOUNTED
						2			1				3			630	79600	3	EA.	SIGN SUPPORT ASSEMBLY, BRIDGE MOUNTED, TYPE 2
						68	19	33	618	368	233		1339			630	80102	1339	S.F.	SIGNS, FLAT SHEET, TYPE G
						4915	1248	553					6716			630	80204	6716	S.F.	SIGNS, EXTRUSHEET, TYPE G

TRAFFIC CONTROL GENERAL SUMMARY

CALC. BY. TKL DATE 3-89	SUM-76-11.57	OHIO
CHKD. BY. DSB DATE 4/90	FED PROJECT IR-76-2(44)19	F.H.W.A. REGION 5
	SUMMIT COUNTY	

619 1214

SHEET NUMBER										PARTICIPATION			ITEM	ITEM EXT.	GRAND TOTAL	UNIT	DESCRIPTION
					626	627	628	629	641	642	643		PROJECT	100% CITY OF AKRON						
																			TRAFFIC SIGNS AND SUPPORTS cont.
					21	41	33	40					135			630	85000	135	EA.	REMOVAL OF GROUND MOUNTED SIGN AND STORAGE
					5			2					7			630	85400	7	EA.	REMOVAL OF GROUND MOUNTED MAJOR SIGN
																				AND DISPOSAL
					16	36	27	15					94			630	86006	94	EA.	REMOVAL OF GROUND MOUNTED POST SUPPORT
																				AND STORAGE
					10			4					14			630	86204	14	EA.	REMOVAL OF GROUND MOUNTED BEAM SUPPORT
																				AND STORAGE
							4						4			630	87001	4	EA.	REMOVAL OF OVERHEAD MOUNTED SIGN AND STORAGE,
																				AS PER PLAN (SEE NOTE, SHEET 616)
					32		5	3					40			630	87400	40	EA.	REMOVAL OF OVERHEAD MOUNTED SIGN AND DISPOSAL
					6								6			630	89802	6	EA.	REMOVAL OF OVERHEAD SIGN SUPPORT AND
																				DISPOSAL, TYPE TC-7.65
					2								2			630	89802	2	EA.	REMOVAL OF OVERHEAD SIGN SUPPORT AND
																				DISPOSAL, TYPE TC-7.65,
																				AS PER PLAN (SEE NOTE, SHEET 616)
					6		1	2					9			630	89706	9	EA.	REMOVAL OF OVERHEAD SIGN SUPPORT AND
																				DISPOSAL, TYPE TC-12.30
							1	1					1			630	89806	1	EA.	REMOVAL OF OVERHEAD SIGN SUPPORT AND
																				DISPOSAL, TYPE TC-18.24
																				SIGN LIGHTING AND ELECTRICAL SIGNS
									13	10	5		28			631	84000	28	EA.	SIGN SERVICE
									26	11	6		43			631	84300	43	EA.	SIGNS WIRED
										3	2		5			631	84400	5	EA.	SIGNS WIRED, OVERPASS STRUCTURE MOUNTED
									13	10	6		29			631	85100	29	EA.	DISCONNECT SWITCH WITH ENCLOSURE, TYPE X
										3	3		6			631	85500	6	EA.	SWITCH ENCLOSURE MOUNTING BRACKET ASSEMBLY
										3	2		5			631	87102	5	EA.	BALLAST, INTEGRAL, TYPE CMRI-100 (480)
									40	9	4		53			631	87202	53	EA.	BALLAST, INTEGRAL, TYPE CMRI-175 (480)
									10				10			631	87302	10	EA.	BALLAST, INTEGRAL, TYPE CMRI-250 (480)
										4	3		7			631	87100	7	EA.	BALLAST, REMOTE, TYPE CMRI-100 (480)
									7				7			631	87200	7	EA.	BALLAST, REMOTE, TYPE CMRI-175 (480)
									1				1			631	70000	1	EA.	BALLAST WIRING ENCLOSURE, TYPE A
										3	2		5			631	70100	5	EA.	BALLAST WIRING ENCLOSURE, TYPE B
										3	2		5			631	71000	5	EA.	BALLAST WIRING ENCLOSURE, MOUNTING
																				BRACKET, TYPE B
										7	5		12			631	89100	12	EA.	MERCURY VAPOR LUMINAIRE, TYPE TC-31.21,
																				WITH 100-WATT LAMP
									47	9	4		60			631	89200	60	EA.	MERCURY VAPOR LUMINAIRE, TYPE TC-31.21,
																				WITH 175-WATT LAMP
									10				10			631	89300	10	EA.	MERCURY VAPOR LUMINAIRE, TYPE TC-31.21,
																				WITH 250-WATT LAMP
					71		1	4					76			631	94200	76	EA.	REMOVAL OF LUMINAIRE AND DISPOSAL
					51		1	3					55			631	94404	55	EA.	REMOVAL OF BALLAST AND DISPOSAL
					14		1	3					18			631	94304	18	EA.	REMOVAL OF DISCONNECT SWITCH AND DISPOSAL
					1								1			631	94420	1	EA.	REMOVAL OF PHOTOELECTRIC CONTROL AND DISPOSAL

TRAFFIC CONTROL GENERAL SUMMARY

CALC. BY TKJ DATE 3-89	SUM-76-11.57	OHIO
CHKD. BY DSB DATE 4/90	FED PROJECT IR-76-2(44)19	F.H.W.A. REGION 5

SUMMIT COUNTY

620 1214

SHEET NUMBER													PARTICIPATION			ITEM	ITEM EXT.	GRAND TOTAL	UNIT	DESCRIPTION
					616		662		666		670		PROJECT	100% CITY OF AKRON						
																				TRAFFIC SIGNAL EQUIPMENT
							4						4			632	03200	4	EA.	VEHICULAR SIGNAL HEAD, OPTICALLY PROGRAMMED,
																				3-SECTION, 12-INCH LENS, 1 WAY
							6		8		8		6	16		632	00300	22	EA.	VEHICULAR SIGNAL HEAD, 3-SECTION, 12-INCH
																				LENS, 1 WAY
							6		4		6		6	10		632	20100	16	EA.	PEDESTRIAN SIGNAL HEAD, TYPE A2
							2		2		2		2	4		632	26000	6	EA.	PEDESTRIAN PUSHBUTTON
							3		4		2		3	6		632	27004	9	EA.	LOOP DETECTOR UNIT
							181		350		157		181	507		632	27500	688	L.F.	LOOP DETECTOR PAVEMENT CUTTING
							7.7		6.7		6.0		7.7	12.7		632	72000	20.4	C.Y.	CONCRETE FOR ANCHOR BASE FOUNDATIONS
							2						2			632	80100	2	EA.	SIGNAL SUPPORT, TYPE TC-81.20, DESIGN 1,
																				15 FOOT ARM
											1			1		632	80100	1	EA.	SIGNAL SUPPORT, TYPE TC-81.20, DESIGN 1,
																				18 FOOT ARM
											1			1		632	80100	1	EA.	SIGNAL SUPPORT, TYPE TC-81.20, DESIGN 1,
																				20 FOOT ARM
											2			2		632	80206	2	EA.	SIGNAL SUPPORT, TYPE TC-81.20, DESIGN 2,
																				30 FOOT ARM
									1					1		632	80300	1	EA.	SIGNAL SUPPORT, TYPE TC-81.20, DESIGN 3,
																				36 FOOT ARM
									3					3		632	80300	3	EA.	SIGNAL SUPPORT, TYPE TC-81.20, DESIGN 3,
																				38 FOOT ARM
							1						1			632	80401	1	EA.	SIGNAL SUPPORT, TYPE TC-81.20, DESIGN 4,
																				37 FOOT ARM, AS PER PLAN (SEE NOTE, SHEET 616)
							1						1			632	80400	1	EA.	SIGNAL SUPPORT, TYPE TC 81.20, DESIGN 4, WITH
																				MAST ARMS TC-81.20 DESIGN 2, 30 FEET AND
																				TC-81.20 DESIGN 3, 34 FEET
							1						1			632	89600	1	EA.	PEDESTAL, 8 FEET
							3				2		3	2		632	70400	5	EA.	CONDUIT RISER, 2-INCH DIAMETER, 713.04
							4		4		4		4	8		632	71000	12	EA.	CABLE SUPPORT ASSEMBLY
							1738		1360		1424		1738	2784		632	40700	4522	L.F.	SIGNAL CABLE, 7-CONDUCTOR NO. 14 AWG
							273		1025		70		273	1095		632	51200	1368	L.F.	INTERCONNECT CABLE, 12 CONDUCTOR NO. 14 AWG,
																				STRANDED
							1386						1386			632	61200	1386	L.F.	INTERCONNECT CABLE, INTEGAL MESSENGER WIRE
																				TYPE, 12 CONDUCTOR NO. 14 AWG STRANDED
							813				475		813	475		632	61201	1288	L.F.	INTERCONNECT CABLE, INTEGAL MESSENGER WIRE
																				TYPE, 12 CONDUCTOR NO. 14 AWG STRANDED,
																				AS PER PLAN (SEE NOTE, SHEET 616)
							414		740		350		414	1090		632	64900	1504	L.F.	LOOP DETECTOR WIRE, TYPE E
							501		538		145		501	683		632	65200	1184	L.F.	LOOP DETECTOR LEAD-IN CABLE
							49		151		100		49	251		632	69200	300	L.F.	POWER CABLE, 2-CONDUCTOR NO. 4 AWG
							10		8		8		10	16		632	26000	26	EA.	COVERING OF VEHICULAR SIGNAL HEAD
					3		1		1		1		1	2		632	90100	6	EA.	REMOVAL OF TRAFFIC SIGNAL INSTALLATION

TRAFFIC CONTROL GENERAL SUMMARY

CALC. BY TKL DATE 3-89	SUM-76-11.57	OHIO
CHKD. BY DSB DATE 4/90	FED PROJECT IR-76-2(44)19	F.H.W.A. REGION 5
	SUMMIT COUNTY	

621
1214

SHEET NUMBER													PARTICIPATION			ITEM	ITEM EXT.	GRAND TOTAL	UNIT	DESCRIPTION
							662		666		670		PROJECT	100% CITY OF AKRON						
																				TRAFFIC SIGNAL CONTROLLERS
							9		9		9		9	18		633	70500	27	S.F.	CONTROLLER WORK PAD
									1		1			2		633	32005	2	EA.	CONTROLLER, ACTUATED, 2 PHASE, SOLID STATE
																				DIGITAL MICROPROCESSOR,
																				AS PER PLAN (SEE NOTE, SHEET 616)
							1						1			633	33001	1	EA.	CONTROLLER, ACTUATED, 3 PHASE, SOLID STATE
																				DIGITAL MICROPROCESSOR,
																				AS PER PLAN (SEE NOTE, SHEET 616)
							1		1		1		1	2		633	63500	3	EA.	COORDINATOR, OFFSET
							1		1		1		1	2		633	64006	3	EA.	PREEMPTION, EMERGENCY
							0.4		0.4		0.4		0.4	0.8		633	70000	1.2	C.Y.	CONCRETE FOR CABINET FOUNDATION

AA B/P# 71942R

CALC. BY. DATE	SUM-76-11.57	OHIO
CHKD. BY. DATE	FED. PROJECT IR-76-2(44)19	F.H.W.A. REGION 5

622
12.14

SUMMIT COUNTY

JOHNSTON ST.
RAMP P
RAMP O
RAMP S
RAMP R
RAMP U
RAMP M
RAMP N
RAMP T
INMAN ST.
MATCH LINE STA 553+50
WB.
EB.
EAST
BY OTHERS
BEGIN PROJECT
SUM-76-11.57
STA. 548+97.60
IR-76-2(44)19

FOR QUANTITIES SEE SHEET 626-629
FOR LEGEND SEE SHEET NO. 630

SCALE IN FEET
0 100 200 300

EXISTING SIGNING PLAN

AA B/P# 71942R

CALC. BY. DATE	SUM-76-11.57	OHIO
CHKD. BY. DATE	FED. PROJECT IR-76-2(44)19	F.H.W.A. REGION 5

623
1214

SUMMIT COUNTY

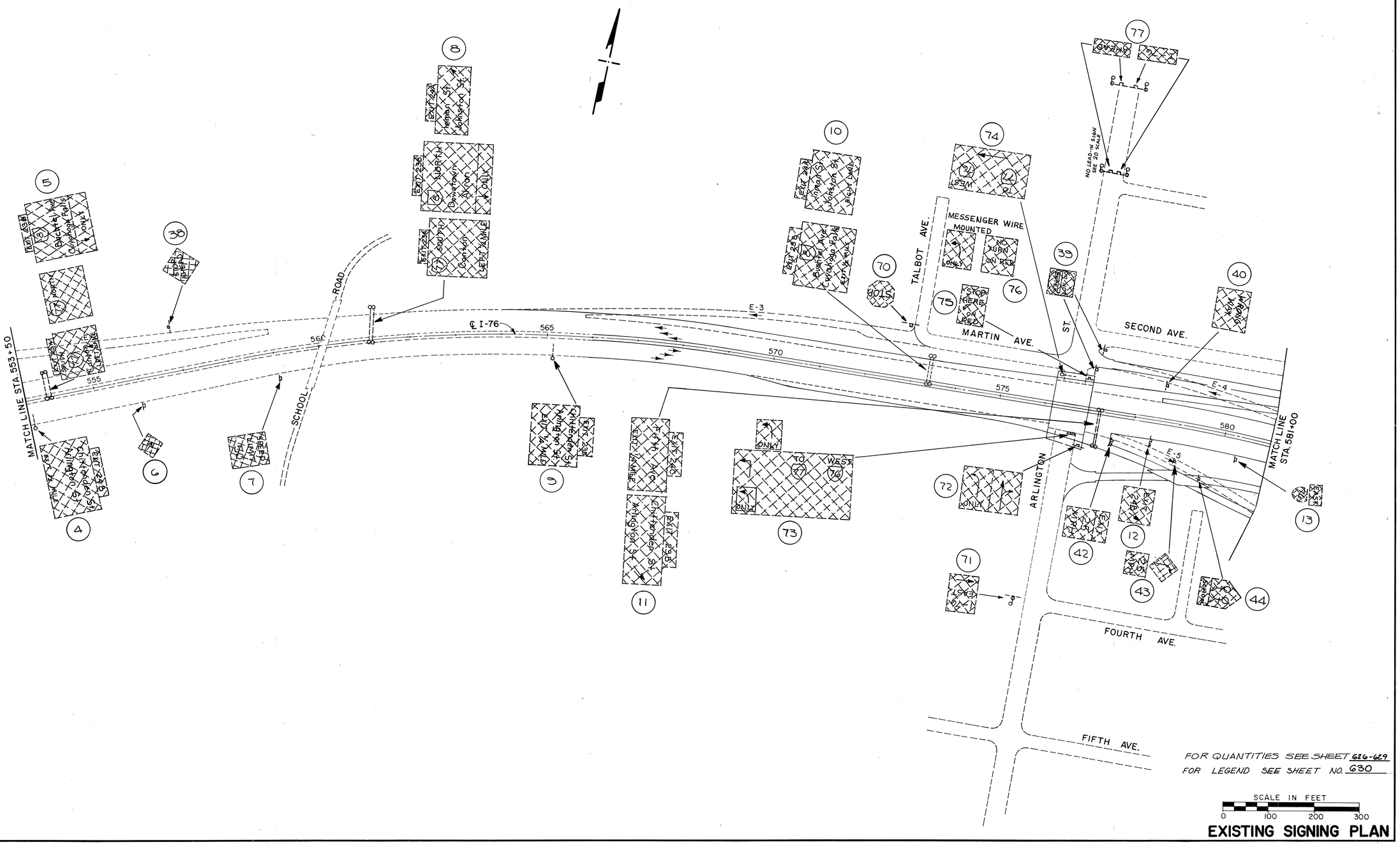

FOR QUANTITIES SEE SHEET 626-629
FOR LEGEND SEE SHEET NO. 630

SCALE IN FEET
0 100 200 300

EXISTING SIGNING PLAN

AA B/P# 71942R

CALC. BY. DATE	SUM-76-11.57	OHIO
CHKD. BY. DATE	FED. PROJECT IR-76-2(44)19	F.H.W.A. REGION 5

624
1214

SUMMIT COUNTY

CHITTENDEN STREET
SECOND AVE.
MATCH LINE STA. 561+00
E-4
E-5
E-6
E-7
E-8
E-9
℄ I-76
585
590
595
600
605
610
HART ST.
FOURTH AVE.
FULLER ST.
THIRD AVE.
CHESSIE SYSTEM
FIFTH AVE.
WEEKS ST.
KELLY AVE.
LITTLE AVE.
MARKET ST.
CUYAHOGA RIVER
MATCH LINE STA. 610+50

FOR QUANTITIES SEE SHEET NO. 626-629

FOR LEGEND SEE SHEET NO. 630

SCALE IN FEET
0 100 200 300

EXISTING SIGNING PLAN

AA B/P# 71942R

CALC. BY. DATE	SUM-76-11.57	OHIO
CHKD. BY. DATE	FED. PROJECT IR-76-2(44)19	F.H.W.A. REGION 5

625
12.14

SUMMIT COUNTY

END PROJECT SUM-76-11.57 STA. 634+00.00	BEGIN PROJECT SUM-76-13.41 STA. 634+00.00
IR-76-2(44)19	IR-76-2(45)21

MATCH LINE STA. 610+50

EAST MARKET ST.

ENGLEWOOD AVE.

MARTHA AVE.

SEIBERLING ST.

EXISTING SIGN SUPPORT TO REMAIN

NO WORK

BY OTHERS

FOR QUANTITIES SEE SHEET NO. 626-629

FOR LEGEND SEE SHEET NO. 630

SCALE IN FEET
0 100 200 300

EXISTING SIGNING PLAN

AA B/P# 71942R

SIGNING QUANTITIES SUB-SUMMARY

CALC. BY TKJ DATE 3/89	SUM-76-11.57	OHIO
CHKD. BY DSB DATE 4/90		F.H.W.A. REGION 5

626 / 1214

* = AS PER PLAN

REFERENCE NUMBER	REFERENCE LETTER	STATION	OFFSET	ITEM 630 REMOVAL OF GROUND MOUNTED SIGN AND STORAGE EACH	ITEM 630 REMOVAL OF GROUND MOUNTED MAJOR SIGN AND DISPOSAL EACH	ITEM 630 REMOVAL OF GROUND MOUNTED POST SUPPORT AND STORAGE EACH	ITEM 630 REMOVAL OF GROUND MOUNTED BEAM SUPPORT AND STORAGE EACH	ITEM 630	ITEM 630 REMOVAL OF OVERHEAD MOUNTED SIGN AND DISPOSAL EACH	ITEM 630 REMOVAL OF OVERHEAD SIGN SUPPORT AND DISPOSAL, TYPE TC-7.65 * EACH	ITEM 630 REMOVAL OF OVERHEAD SIGN SUPPORT AND DISPOSAL, TYPE TC-7.65 EACH	ITEM 630 REMOVAL OF OVERHEAD SIGN SUPPORT AND DISPOSAL, TYPE TC-12.30 EACH			ITEM 631 REMOVAL OF LUMINAIRE AND DISPOSAL EACH	ITEM 631 REMOVAL OF BALLAST AND DISPOSAL EACH	ITEM 631 REMOVAL OF DISCONNECT SWITCH AND DISPOSAL EACH	ITEM 631 REMOVAL OF PHOTOELECTRIC CONTROL AND DISPOSAL EACH
		I-76 WB															
1		25+58	LT. & RT.						3		1				7	4	1	1
		I-76 EB																
2		548+35	RT.	1		2												
3		551+90	RT.	1		2												
		I-76																
4		553+50	RT.						1			1			2	2	1	
5		554+00	LT.						3		1				6	4	1	
6		556+00	RT.	1		1												
7		559+00	RT.	1		1												
8		561+10	LT.						3		1				7	7	1	
9		565+10	RT.						1			1			2	1	1	
10		573+40	LT.						2	1					5	3	1	
11		577+20	RT.						2	1					5	5	1	
12		578+40	RT.		1		2											
13		580+30	RT.	2		1												
14		581+10	LT.	2		1												
15		583+25	LT. & RT.						4		1				9	5	1	
16		586+50	LT.	1														
17		594+50	LT. & RT.						5		1				11	6	1	
18		596+75	RT.		1		2											
19		597+35	RT.	1		1												
20		597+55	RT.	2		1												
21		599+65	LT.	1		1												
22		608+50	RT.						1			1			2	1	1	
23		609+00	RT.		1		2											
24		612+20	RT.						1			1			2	1	1	
25		612+25	RT.		1		2											
26		615+45	LT.	1		1												
27		621+25	RT.						1			1			2	1	1	
28		625+95	RT.	2		1												
29		626+20	LT.	2		1												
30		626+70	RT.	2		2												
31		628+00	LT.		1		2											
32		628+90	LT.						1			1			3	3	1	
33		633+30	LT. & RT.						4		1				8	8	1	
34		633+30	LT.	1														
TOTALS				21	5	16	10		32	2	6	6			71	51	14	1

SUB-SUMMARY

AA B/Fy 7194275

SIGNING QUANTITIES SUB-SUMMARY

CALC. BY: TKL DATE 3/89	SUM-76-11.57	OHIO	627 / 1214
CHKD. BY: DSB DATE 4/90		F.H.W.A. REGION 5	

REFERENCE NUMBER	REFERENCE LETTER	STATION	OFFSET	ITEM 630 REMOVAL OF GROUND MOUNTED SIGN AND STORAGE EACH	ITEM 630 REMOVAL OF GROUND MOUNTED POST SUPPORT AND STORAGE EACH
		RAMP "E-2"			
35		SH'T. NO. 622		2	2
36		↕		1	1
37		SH'T. NO. 622		1	1
38		SH'T. NO. 623		1	1
		RAMP "E-4"			
39		SH'T. NO. 623		2	2
40		SH'T. NO. 623		1	1
41		SH'T. NO. 624		1	2
		RAMP "E-5"			
42		SH'T. NO. 623		1	2
43		↕		2	1
44		SH'T. NO. 623		1	1
45		SH'T. NO. 624		1	1
46		↕		2	1
47				2	1
48				3	1
49		SH'T. NO. 624		1	1
		RAMP "E-6"			
50		SH'T. NO. 624		1	1
51		↕		1	1
52		SH'T. NO. 624		1	1
		RAMP "E-7"			
53		SH'T. NO. 624		1	1
54		SH'T. NO. 624		3	1
		RAMP "E-8"			
55		SH'T. NO. 624		2	1
56		↕		1	1
57				1	2
58				2	2
59				2	1
60		SH'T. NO. 624		1	1
		RAMP "E-9"			
61		SH'T. NO. 625		1	1
		RAMP "E-10"			
62		SH'T. NO. 625		1	2
63		SH'T. NO. 625		1	1
TOTALS				41	36

SUB-SUMMARY

AA B/Pv 71942R

SIGNING QUANTITIES SUB-SUMMARY

CALC. BY. TKI DATE 3/89	SUM-76-11.57	OHIO
CHKD. BY. DSB DATE 4/90		F.H.W.A. REGION 5

628 / 1214

REFERENCE NUMBER	REFERENCE LETTER	STATION	OFFSET	ITEM 630 REMOVAL OF GROUND MOUNTED SIGN AND STORAGE EACH	ITEM 630 REMOVAL OF GROUND MOUNTED POST SUPPORT AND STORAGE EACH	ITEM 630	ITEM 630 REMOVAL OF OVERHEAD MOUNTED SIGN AND DISPOSAL EACH	ITEM 630 REMOVAL OF OVERHEAD MOUNTED SIGN AND STORAGE, AS PER PLAN EACH	ITEM 630	ITEM 630 REMOVAL OF OVERHEAD SIGN SUPPORT AND DISPOSAL, TYPE TC-12.30 EACH	ITEM 630 REMOVAL OF OVERHEAD SIGN SUPPORT AND DISPOSAL, TYPE TC-18.24 EACH	ITEM 630	ITEM 630	ITEM 631 REMOVAL OF LUMINAIRE AND DISPOSAL EACH	ITEM 631 REMOVAL OF BALLAST AND DISPOSAL EACH	ITEM 631 REMOVAL OF DISCONNECT SWITCH AND DISPOSAL EACH
		RAMP "E-12"														
G4		SH'T. NO. 625		2	1											
		RAMP "E-15"														
G5		SH'T. NO. 625		1	2											
G6		↑		1	1											
G7		↓		1	1											
G8		SH'T. NO. 625		2	2											
		RAMP "E-16"														
G9		SH'T. NO. 625		1	1											
		TALBOT AVE.														
70		SH'T. NO. 623		1	1											
		ARLINGTON ST.														
71		SH'T. NO. 623		1												
72		↑		1	1											
73							2				1					
74							1			1				1	1	1
75				1	1											
76		↓					2									
77		SH'T. NO. 623						4								
		CHITTENDEN ST.														
78		SH'T. NO. 624		3	1											
79		↑		2	1											
80				2												
81				3	1											
82				1	2											
83				2	1											
84				1	1											
85				1	2											
86		↓		1	2											
87		SH'T. NO. 624		1	1											
		HART ST.														
88		SH'T. NO. 624		1	1											
89		SH'T. NO. 624		1	1											
		FULLER ST.														
90		SH'T. NO. 624		1	1											
91		SH'T. NO. 624		1	1											
TOTALS				33	27		5	4		1	1			1	1	1

SUB-SUMMARY

AA B/P# 71942R

SIGNING QUANTITIES SUB-SUMMARY

CALC. BY TKL DATE 3/85	SUM-76-11.57	OHIO
CHKD. BY DSB DATE 4/90		F.H.W.A. REGION 5

629 / 1214

REFERENCE NUMBER	REFERENCE LETTER	STATION	OFFSET	ITEM 630 REMOVAL OF GROUND MOUNTED SIGN AND STORAGE EACH	ITEM 630 REMOVAL OF GROUND MOUNTED POST SUPPORT AND STORAGE EACH	ITEM 630 REMOVAL OF GROUND MOUNTED BEAM SUPPORT AND STORAGE EACH	ITEM 630 REMOVAL OF GROUND MOUNTED MAJOR SIGN AND DISPOSAL EACH	ITEM 630 REMOVAL OF OVERHEAD MOUNTED SIGN AND DISPOSAL EACH	ITEM 630	ITEM 630 REMOVAL OF OVERHEAD SIGN SUPPORT AND DISPOSAL, TYPE TC-12.30 EACH	ITEM 630	ITEM 630	ITEM 631 REMOVAL OF LUMINAIRE AND DISPOSAL EACH	ITEM 631 REMOVAL OF BALLAST AND DISPOSAL EACH	ITEM 631 REMOVAL OF DISCONNECT SWITCH AND DISPOSAL EACH
		KELLY AVE.													
92		SH'T. NO. 624		1	1										
93		↑		1	1										
94				1	1										
95				1	1										
96				1											
97				1	1										
98		↓		1	1										
99		SH'T. NO. 624		1	1										
		MARTHA AVE.													
100		SH'T. NO. 625						1					2	1	1
101		↑		1											
102				2	1										
103				1	1										
104		↓						1		1			1	1	1
105		SH'T. NO. 625		2											
		ENGLEWOOD AVE.													
106		SH'T. NO. 625		1	1										
107		↑		1	1										
108				3	1										
109		↓		1		2									
110		SH'T. NO. 625		1	1										
		E. MARKET ST.													
111		SH'T. NO. 625		1											
112		↑						1		1			1	1	1
113				4											
114				4											
115				1	1										
116						2	1								
117		↓					1								
118		SH'T. NO. 625		4	1										
		SEIBERLING ST.													
119		SH'T. NO. 625		3											
120		↕		1											
121		SH'T. NO. 625		1											
TOTALS				40	15	4	2	3		2			4	3	3

SUB-SUMMARY

AA B/P# 71942R

CALC. BY. DATE	SUM-76-11.57	OHIO
CHKD. BY. DATE	FED. PROJECT IR-76-2(44)19	F.H.W.A. REGION 5

630
12.14

SUMMIT COUNTY

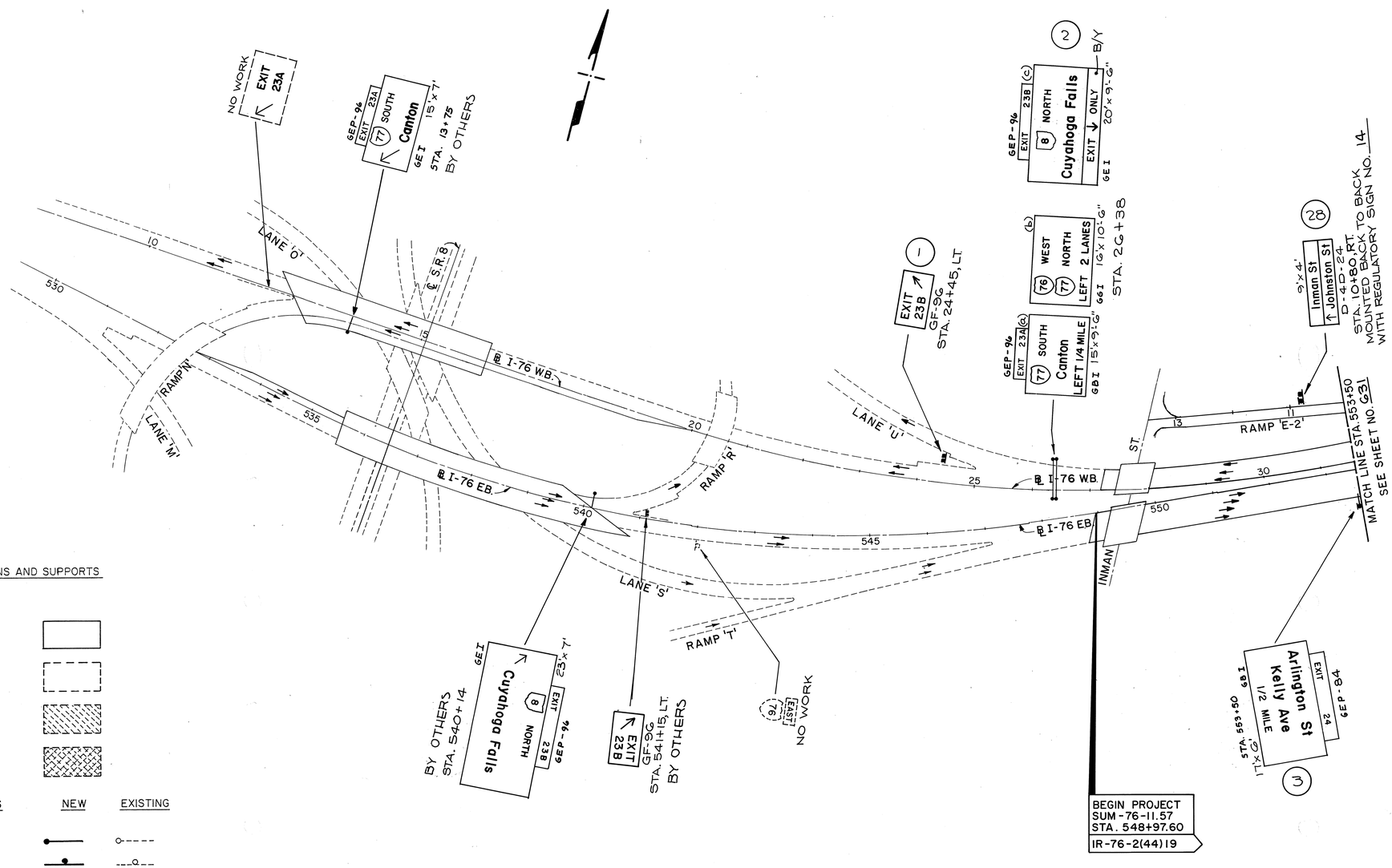

LEGEND FOR SIGNS AND SUPPORTS

SIGNS

- NEW
- EXISTING, TO REMAIN
- EXISTING, TO BE RELOCATED
- EXISTING, TO BE REMOVED

OVERHEAD SUPPORTS	NEW	EXISTING
CANTILEVER		
CENTER MOUNT		
SPAN		
SPAN WIRE		

GROUND MOUNTED SUPPORTS

- SINGLE
- TWO
- SINGLE, BACK TO BACK
- TWO, BACK TO BACK
- STOP, ONE WAY, DO NOT ENTER OR
- BANDED TO POLE

FOR ELEVATION VIEWS SEE SHEET NO. 634-640

FOR QUANTITIES SEE SHEET NO. 641-643

SCALE IN FEET
0 100 200 300

GUIDE SIGN PLAN

AA B/Pa 71942R

CALC. BY. DATE	SUM-76-11.57	OHIO	631
CHKD. BY. DATE	FED. PROJECT IR-76-2(44)19	F.H.W.A. REGION 5	1214

SUMMIT COUNTY

(4) GEP-96 EXIT 23B (b) 8 NORTH Cuyahoga Falls EXIT ONLY 20'x9'-6" B/Y — GB I STA. 554+00

(7) GEP-96 EXIT 24A (c) Inman St. Johnston St. EXIT ONLY 19'x8'-6" B/Y — GE I

GEP-96 EXIT 23B (b) 8 NORTH Cuyahoga Falls EXIT ONLY 20'x9'-6" B/Y — GB I STA. 561+10

GEP-96 EXIT 23A (a) 77 SOUTH Canton LEFT 1/2 MILE 15'x9'-6" — GB I

(2) 76 WEST 77 NORTH LEFT 2 LANES 10'x10'-6" — GG I

(1) EXIT 24A GF-96 STA. 551+30

(9) GC II 10'x5' Univ of Akron EXIT 23B STA. 568+00, LT.

(10) GEP-96 EXIT 24A Inman St. Johnston St. EXIT ONLY 6H I 10'x8'-6" B/Y STA. 575+00

(11) WEST 76 IM-40-36 M-5-36-2 STA. 575+00 POLE MOUNTED

(41) 10'x4' 76 WEST 76 EAST M-528-120 STA. 25+00

(39) BRIDGE MOUNTED 6H III 12'x4'-6" Youngstown EAST 76

(40) GH-I III (a) Barberton WEST 9'x6'-6"; 76 WEST Barberton 9'x6'-6"; GH-I III (b) SIGNAL POLE MOUNTED STA. 19+28, RT.

(42) 92 WEST M-25-42 STA. 21+50, RT.

RAMP 'E-2'

SEE SHEET NO. 630 MATCH LINE STA. 553+50

℄ I-76

SCHOOL ROAD

(5) 76 EAST M-5-36-2 IM-39-36 STA. 559+00, RT.

(6) GBI 11'x6' Arlington St. Kelly Ave 1/4 MILE EXIT 24 GEP-84 STA. 564+25

MARTIN AVE.

SECOND AVE.

RAMP 'E-4'

MATCH LINE STA. 80+80 SEE SHEET NO. 632

MATCH LINE STA. 81+00

MATCH LINE STA. 81+12 STA. 581+00

RAMP 'E-8'

RAMP 'E-6'

ARLINGTON ST.

(12) GBI 16'x10'-6" (a) Martha General. St. Britain Rd. 1/2 MILE EXIT 23A GEP-132

(13) EXIT 24 GF-72 STA. 577+10, RT.

(12) 691 20'x6' 576+50 Arlington St. Kelly Ave. EXIT 24 42-GEP-84

(38) GH III 11'x4'-6" 76 WEST Barberton BRIDGE MOUNTED

FOURTH AVE.

FIFTH AVE.

SIXTH AVE.

(36) 10'x4' WEST 76 EAST 76 M-528-120 STA. 10+95

(37) GH-I III (a) Youngstown EAST 76 10'x6'-6"; 76 EAST Youngstown 10'x6'-6"; GH-I III (b) SEMI-OVERHEAD STA. 15+25

FOR ELEVATION VIEWS SEE SHEET Nº 634-640

FOR QUANTITIES SEE SHEET Nº 641-643

SCALE IN FEET 0 100 200 300

GUIDE SIGN PLAN

AA B/P# 71942R

CALC. BY. DATE	SUM-76-11.57	OHIO
CHKD. BY. DATE	FED. PROJECT IR-76-2(44)19	F.H.W.A. REGION 5

632
1214

SUMMIT COUNTY

SEE SHEET NO. 631
M.L. STA. 80+80
MATCH LINE STA. 581+00
M.L. STA. 81+00

CHITTENDEN STREET
SECOND AVE.
RAMP 'E-7'
RAMP 'E-4'
RAMP 'E-6'
RAMP 'E-8'
RAMP 'E-8A'
RAMP 'E-8B'
℄ I-76
THIRD ST.
FIFTH AVE.
CHITTENDEN ST.
HART ST.
FULLER ST.
WEEKS ST.
CHESSIE SYSTEM
KELLY
MARKET ST.
MARTHA AVE.
LITTLE AVE.
CUYAHOGA RIVER
RAMP 'E-12'
RAMP 'E-9'
M.L. STA. 610+50
SEE SHEET NO. 633

(43) WEST 76 — M-45-42 STA. 27+00, RT.

(14) 15'x8' Downtown Akron 76 WEST FOLLOW STA. 585+00, LT.

(44) Barberton 76 WEST — GH III 9'x9'-6" STA. 38+40

(45) 76 WEST Barberton — GH-1 III 9'x9'-6" SEMI-OVERHEAD STA. 15+65

(29) WEST 76 EAST — IM-40-36, M-5-36-2, IM-26-30 STA. 595+00

(16) EXIT 24B — GF-96 STA. 593+90, LT.

(18) GEP-96 EXIT 24B (c) Arlington St — EXIT ONLY — GE I 16'x8'-6" — B/Y

GEP-96 EXIT 24A (b) Inman St Johnston St 1/2 MILE — GB I 16'x8'-6"

GEP-96 EXIT 23A (a) 77 SOUTH Canton LEFT 1 MILE — GB I 14'x9'-6"

STA. 597+50

(51) 400' FROM INTERSECTION — IM-19-21, M-5-24-2, IM-8-24

(47) WEST 76 EAST — M-52B-120 STA. 14+05

(48) WEST 76 EAST — M-52B-120 STA. 15+40

(20) IM-40-36, M-5-36-2, WEST 76 EAST — STAGE MOUNTED

(50) WEST 76 EAST — M-52B-120 STA. 9+75

(52) IM-24-21, M-5-24-2, IM-8-24

(30) GE III (a) Goodyear Blvd. Kelly Ave. 12'x5'-6" — (b) Arlington St. 11'x4' — STA. 89+40

(31) Goodyear Blvd. Kelly Ave. 10'x4' — STA. 91+50 D-4D-24

(15) M-5-36-2 76 EAST M-39-36 — STA. 553+70

(32) Arlington St. 10'x2' — D-4D-24 STA. 13+00

(46) WEST 76 EAST — M-52B-120 STA. 11+50

(17) Martha Ave. General St. Brittain Rd. — EXITS 25A-B GEP-132 — GB I 16'x10'-6" — EXIT ONLY — B/Y — STA. 597+00

(33) Goodyear Blvd. Kelly Ave. 11'x4' — D-4D-24 STA. 104+00

(19) Martha Ave — GE I 13'x6' — EXIT 25A GEP-96

(9) General St. Brittain Rd — GB I 16'x8'-6" — EXIT ONLY — EXIT 25B GEP-96 — B/Y — STA. 604+70

(21) EXIT 25A — GF-96 STA. 604+15, 9'RT

(9) Youngstown — GG I 25'x9'-6" — 76 EAST

FOR ELEVATION VIEWS SEE SHEET NO. 634-640

FOR QUANTITIES SEE SHEET NO. 641-643

SCALE IN FEET
0 100 200 300

GUIDE SIGN PLAN

AA B/P# 71942R

CALC. BY. ____ DATE ____	SUM-76-11.57	OHIO	633
CHKD. BY. ____ DATE ____	FED. PROJECT IR-76-2(44)19	F.H.W.A. REGION 5	12/14

SUMMIT COUNTY

SEE SHEET NO. G32
MATCH LINE
STA. 610+50

M.L. STA. 10+50

MARKET ST.

MARTHA AVE.

ENGLEWOOD AVE.

RAMP 'E-9'

RAMP 'E-10'

RAMP 'E-12'

RAMP 'E-15'

RAMP 'E-16'

RAMP 'E-19'

I-76

WIGLEY AVE.

SEIBERLING ST.

ENGLEWOOD AVE.

53 — I-76 (76) M-5-24-2 / I-76 (76) M-5-24-2 / I-76 (76) I-24-21

62 — STA. 18+00 M-52B-120 — WEST (76) EAST 10'x4'

54 — I-76 (76) M-5-24-2 / I-76 (76) I-21-21

61 — STA. 15+75 SIGNALS — WEST (76) EAST

35 — Kelly Ave. / Seiberling Blvd. / Goodyear Blvd. — 11'x6' — STA. BACK TO BACK 11+70 — D-42-24 — BACK SIGN NO. 39 — MOUNTED ON SAME STRUCTURE AS SIGN NO. 38 — SEE SHEET NO. G35

GH-1 III — (76) WEST Barberton — 9'x6'-6"

60 — 9'x6'-6"

(76) WEST Barberton

GH1 III SEMI-OVERHEAD STA. 15+60

59 — 12'x4'-6" — (76) EAST Youngstown — GH III BRIDGE MOUNTED

24 — EXIT 25 — GF-72 — STA. G20+30

25 — GEP-84 (b) EXIT 25 — Martha Ave. / Kelly Ave. — EXIT ONLY — GE II 19'x8'-6" — B/Y — STA. G22+00

GEP-96 (a) EXIT 24B — Arlington St — 1/2 MILE — GB I 17'x6'

23 — EXIT 25B — GF-96 — STA. G13+40

615 620 625 630 635 640

26 — GEP-84 (b) EXIT 25 — Martha Ave. / Kelly Ave. — EXIT ONLY — GB I 16'x8'-6" — B/Y — STA. G30+90

GEP-96 (a) EXIT 24B — Arlington St — 3/4 MILE — GB I 17'x6'

GEP-84 (a) EXIT 26 — E Market St / Mogadore Rd — 1 MILE — GB I 17'x12' — STA. G12+00

GEP-96 (a) EXIT 25B — General St. / Brittain Rd. — EXIT ONLY — GE I 18'x8'-6" — B/Y

22

57 — GH-1 III — YOUNGSTOWN EAST (76) — 10'x6'-6" — GH-1 III — (76) EAST Youngstown — SEMI-OVERHEAD STA. 11+80

58 — 11'x4'-6" — (76) WEST Barberton — GH III BRIDGE MOUNTED

56 — 10'x4' — WEST (76) EAST — M-52B-120 STA. 8+92 MOUNT ON EXISTING OVERHEAD SUPPORT

Selberling St. / General St. / Brittain Rd. — D-42-24 — STA. 19+00 — 10'x6' — 34

JCT (76) KEEP RIGHT — 55 — M-45-A2 STA. 5+50

M-5-36-2 (76) EAST / I-M-39-36 — STA. G33+00 — 27

END PROJECT SUM-76-11.57 STA. 634+00.00 IR-76-2(44)19

BY OTHERS STA. G39+25 — GB I 17'x12' — E Market St / Mogadore Rd — 1/2 MILE — GEP-84 EXIT 26 — (18) EAST

FOR ELEVATION VIEWS SEE SHEET NO. G34-G40

FOR QUANTITIES SEE SHEET NO. G41-G43

SCALE IN FEET
0 100 200 300

GUIDE SIGN PLAN

AA B/P# 71942R

CALC. BY. DATE	SUM-76-11.57	OHIO	634 1214
CHKD. BY. DATE	FED. PROJECT IR-76-2(44)19	F.H.W.A. REGION 5	

SUMMIT COUNTY

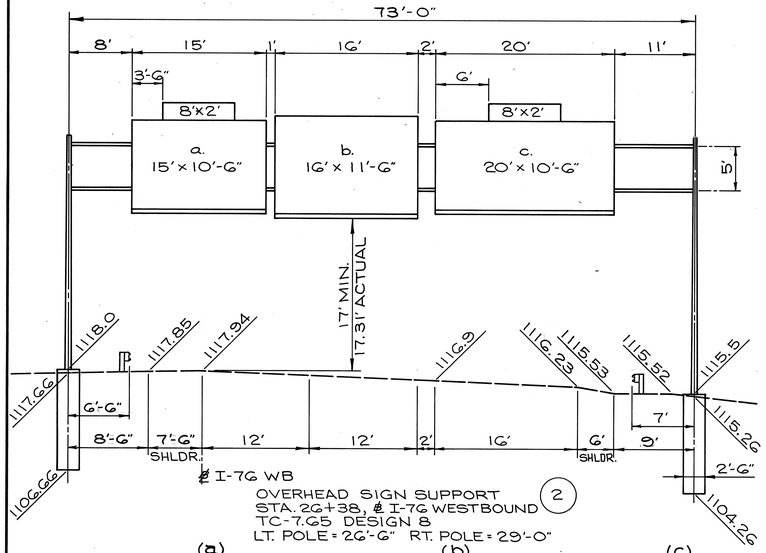

℄ I-76 WB

OVERHEAD SIGN SUPPORT
STA. 26+38, ℄ I-76 WESTBOUND (2)
TC-7.65 DESIGN 8
LT. POLE = 26'-6" RT. POLE = 29'-0"

(a) (15'x10')+(8'x2')=166 SQ.FT. FIXTURES = 2 AT 175 WATTS

(b) 16'x11' = 176 SQ.FT. FIXTURES = 2 AT 250 WATTS

(c) (20'x10')+(8'x2')=216 SQ.FT. FIXTURES = 3 AT 175 WATTS

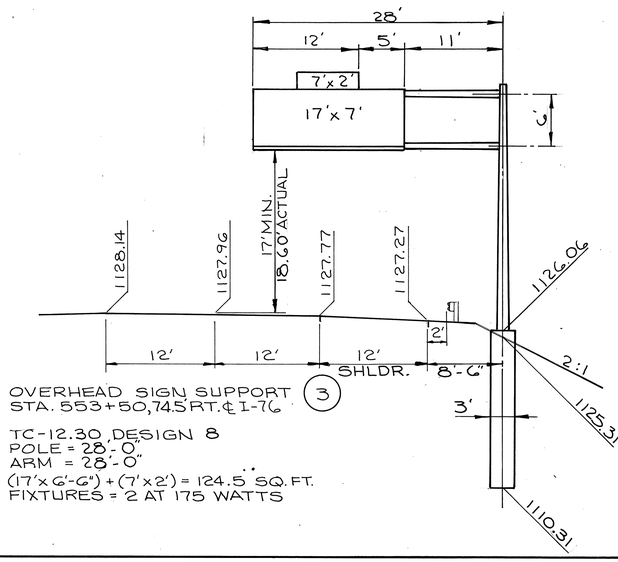

OVERHEAD SIGN SUPPORT (3)
STA. 553+50, 74.5 RT. ℄ I-76

TC-12.30, DESIGN 8
POLE = 28'-0"
ARM = 28'-0"

(17'x6'-6") + (7'x2') = 124.5 SQ.FT.
FIXTURES = 2 AT 175 WATTS

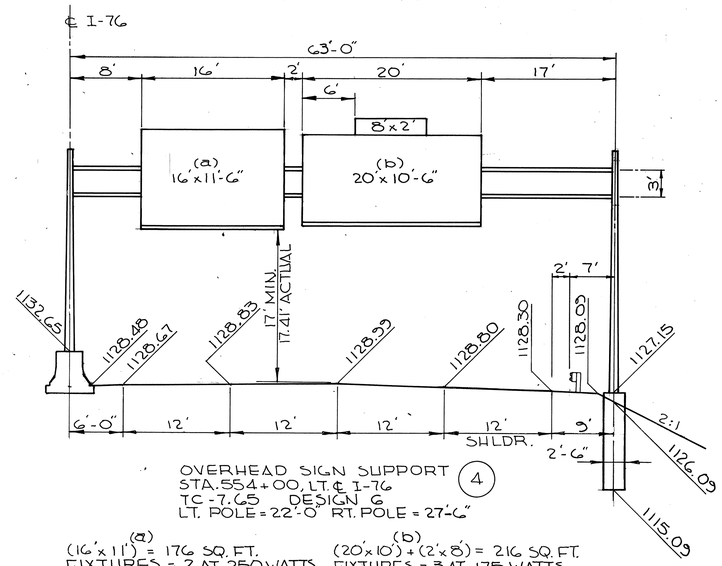

OVERHEAD SIGN SUPPORT (4)
STA. 554+00, LT. ℄ I-76
TC-7.65 DESIGN 6
LT. POLE = 22'-0" RT. POLE = 27'-6"

(a) (16'x11') = 176 SQ. FT. FIXTURES = 2 AT 250 WATTS

(b) (20'x10')+(2'x8') = 216 SQ. FT. FIXTURES = 3 AT 175 WATTS

BRACKETS = 5 HT. = 11'-6"
SPACING = 8 5/8", 37 5/8", 37 5/8", 49 5/8", 49 5/8", 8 5/8"

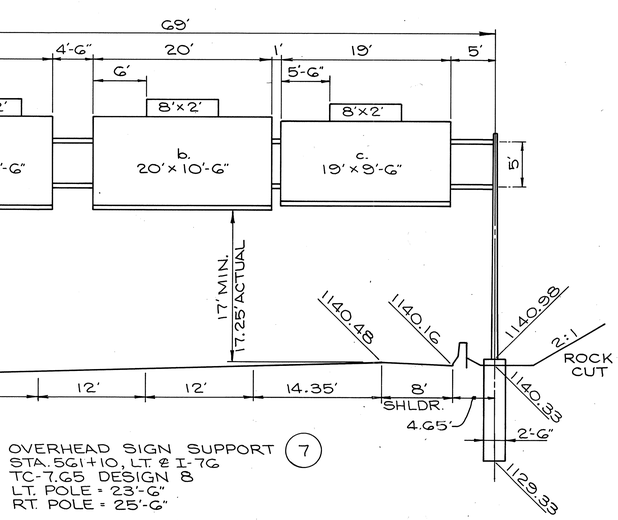

OVERHEAD SIGN SUPPORT (7)
STA. 561+10, LT. ℄ I-76
TC-7.65 DESIGN 8
LT. POLE = 23'-6"
RT. POLE = 25'-6"

a. (15'x10')+(8'x2')=166 SQ.FT. FIXTURES=2 AT 175 WATTS

b. (20'x10')+(8'x2')=216 SQ.FT. FIXTURES=3 AT 175 WATTS

c. (19'x9')+(8'x2')=187 SQ.FT. FIXTURES=2 AT 175 WATTS

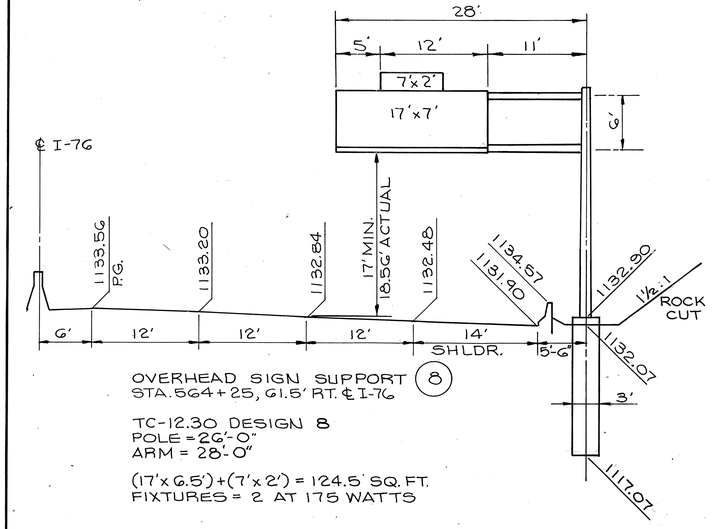

OVERHEAD SIGN SUPPORT (8)
STA. 564+25, 61.5' RT. ℄ I-76

TC-12.30 DESIGN 8
POLE = 26'-0"
ARM = 28'-0"

(17'x6.5') + (7'x2') = 124.5 SQ.FT.
FIXTURES = 2 AT 175 WATTS

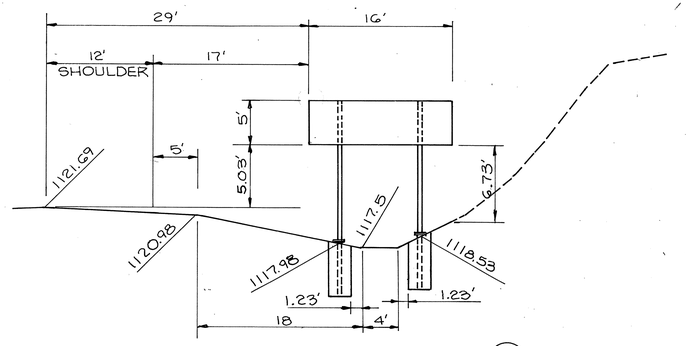

GROUND MOUNTED SIGN SUPPORT (9)
STA. 568+00, 91.5' LT. ℄ I-76
BEAM TYPE = W10x12
LT. BEAM = 79.5' RT. BEAM = 18.95'
SIGN AREA = 80 SQ.FT.

ELEVATION VIEWS

AA B/Pw 71942R

CALC. BY. ____ DATE ____	SUM-76-11.57	OHIO	635 12.14
CHKD. BY. ____ DATE ____	FED. PROJECT IR-76-2(44)19	F.H.W.A. REGION 5	

SUMMIT COUNTY

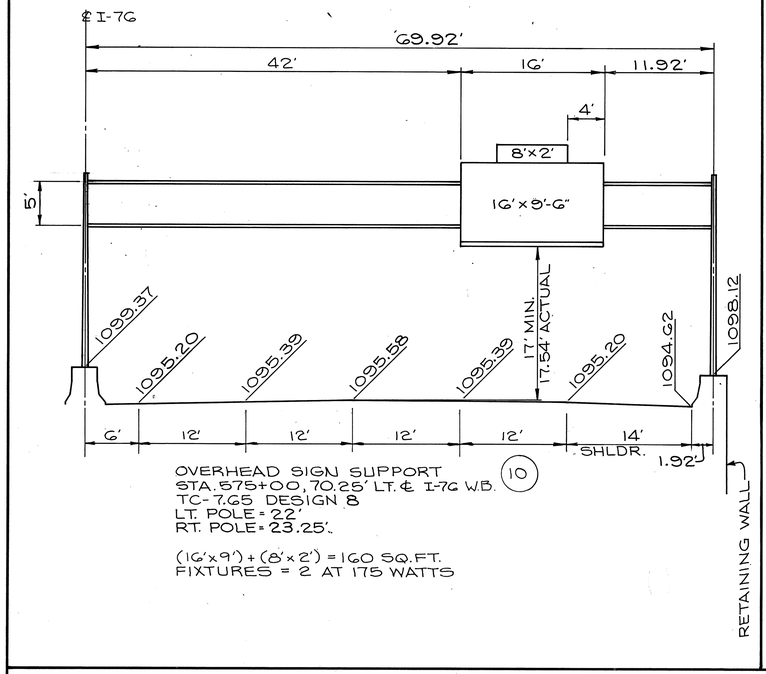

OVERHEAD SIGN SUPPORT (10)
STA. 575+00, 70.25' LT. ℄ I-76 W.B.
TC-7.65 DESIGN 8
LT. POLE = 22'
RT. POLE = 23.25'.

(16'x9') + (8'x2') = 160 SQ. FT.
FIXTURES = 2 AT 175 WATTS

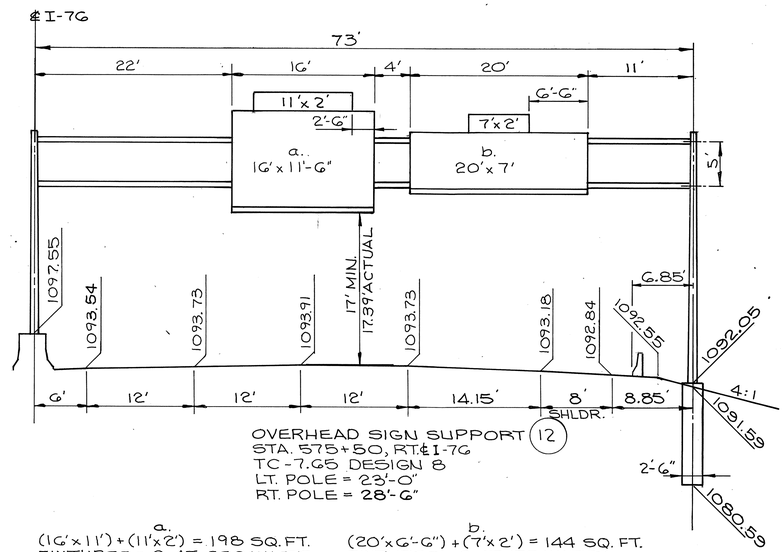

OVERHEAD SIGN SUPPORT (12)
STA. 575+50, RT. ℄ I-76
TC-7.65 DESIGN 8
LT. POLE = 23'-0"
RT. POLE = 28'-6"

a.
(16'x11') + (11'x2') = 198 SQ. FT.
FIXTURES = 2 AT 250 WATTS

b.
(20'x6'-6") + (7'x2') = 144 SQ. FT.
FIXTURES = 3 AT 175 WATTS

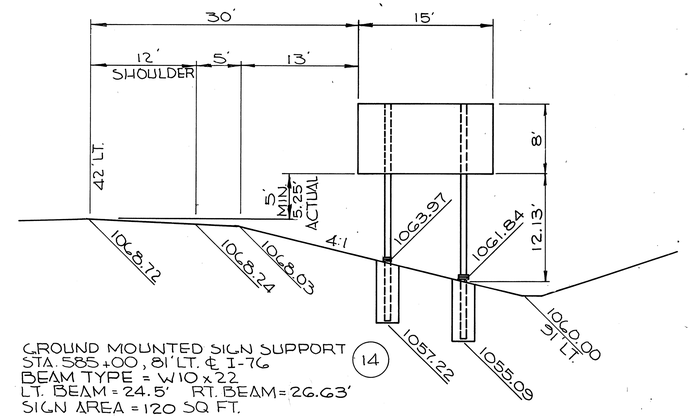

GROUND MOUNTED SIGN SUPPORT (14)
STA. 585+00, 81' LT. ℄ I-76
BEAM TYPE = W10x22
LT. BEAM = 24.5' RT. BEAM = 26.63'
SIGN AREA = 120 SQ FT.

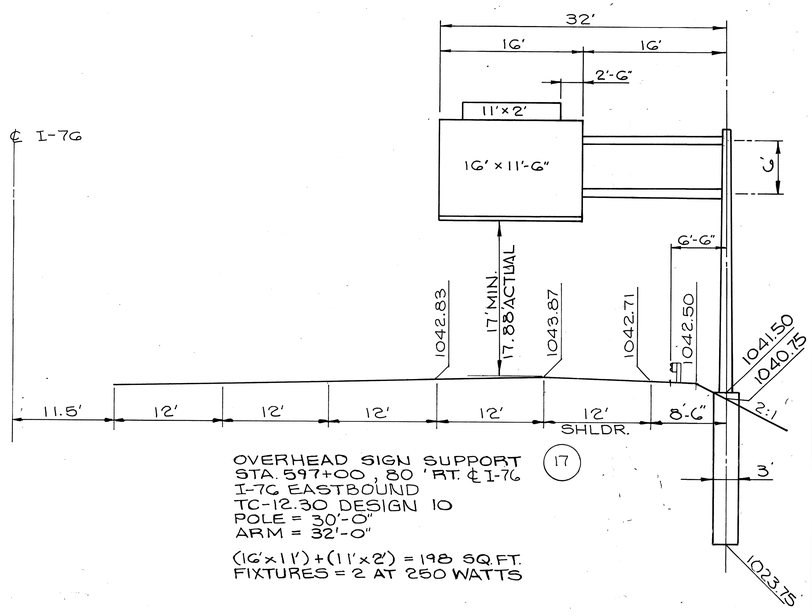

OVERHEAD SIGN SUPPORT (17)
STA. 597+00, 80' RT. ℄ I-76
I-76 EASTBOUND
TC-12.30 DESIGN 10
POLE = 30'-0"
ARM = 32'-0"

(16'x11') + (11'x2') = 198 SQ. FT.
FIXTURES = 2 AT 250 WATTS

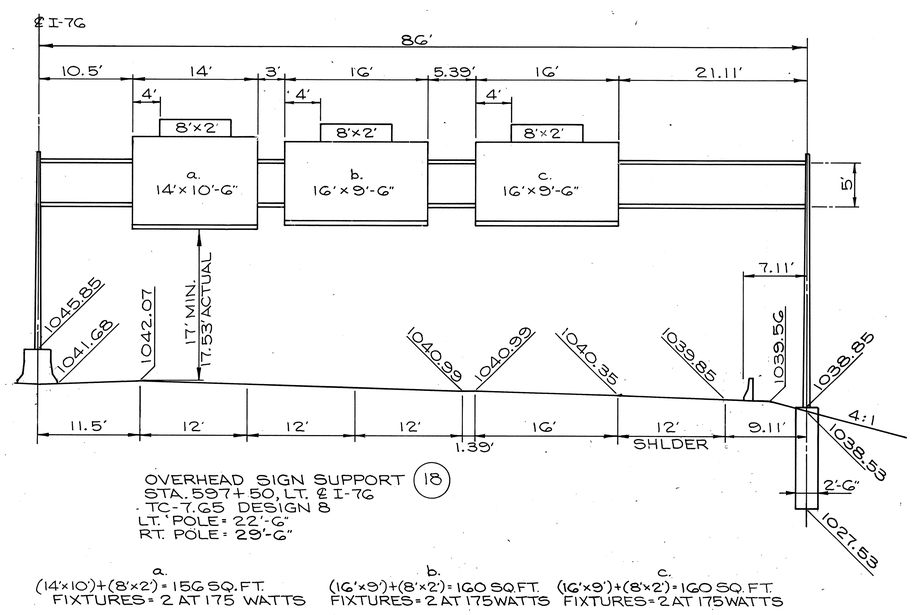

OVERHEAD SIGN SUPPORT (18)
STA. 597+50, LT. ℄ I-76
TC-7.65 DESIGN 8
LT. POLE = 22'-6"
RT. POLE = 29'-6"

a.
(14'x10') + (8'x2') = 156 SQ. FT.
FIXTURES = 2 AT 175 WATTS

b.
(16'x9') + (8'x2') = 160 SQ. FT.
FIXTURES = 2 AT 175 WATTS

c.
(16'x9') + (8'x2') = 160 SQ. FT.
FIXTURES = 2 AT 175 WATTS

ELEVATION VIEWS

AA B/Pe 71942R

CALC. BY. DATE	SUM-76-11.57	OHIO
CHKD. BY. DATE	FED. PROJECT IR-76-2(44)19	F.H.W.A. REGION 5

636
12.14

SUMMIT COUNTY

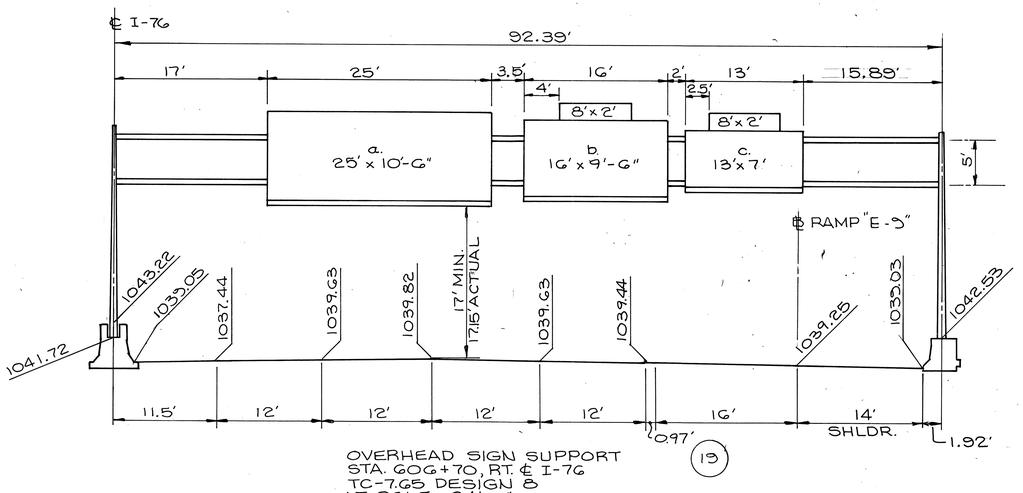

OVERHEAD SIGN SUPPORT
STA. 606+70, RT. ℄ I-76
TC-7.65 DESIGN 8
LT. POLE = 24'-0"
RT. POLE = 23'-2"
(19)

a. 25'x10' = 250 SQ.FT.
FIXTURES = 3 AT 175 WATTS

b. (16'x9') + (8'x2') = 160 SQ.FT.
FIXTURES = 2 AT 175 WATTS

c. (13'x6'-6") + (8'x2') = 100.5 SQ.FT.
FIXTURES = 2 AT 175 WATTS

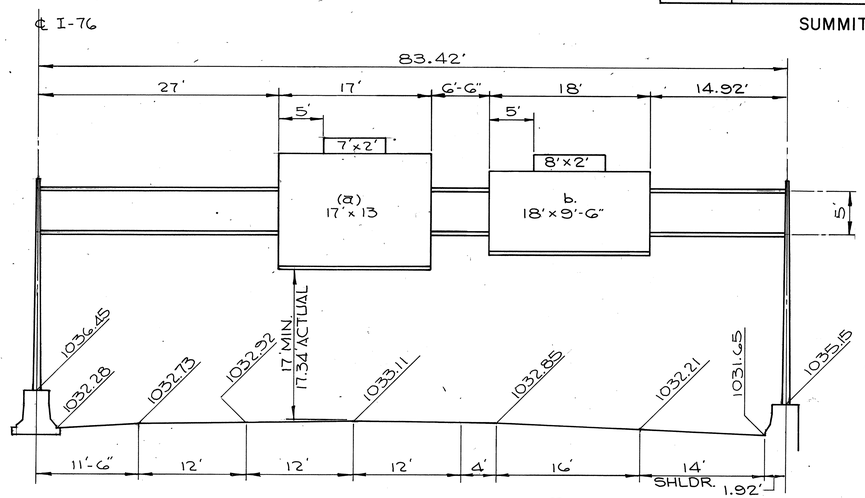

OVERHEAD SIGN SUPPORT
STA. 612+00, RT. ℄ I-76
T.C.-7.65 DESIGN 8
LT. POLE = 24'-0"
RT. POLE = 25'-3 5/8"
(22)

(a) (17'x12'-6") + (7'x2') = 226.5 SQ.FT.
FIXTURES = 2 AT 250 WATTS

(b) (18'x9') + (8'x2') = 178 SQ.FT.
FIXTURES = 2 AT 175 WATTS

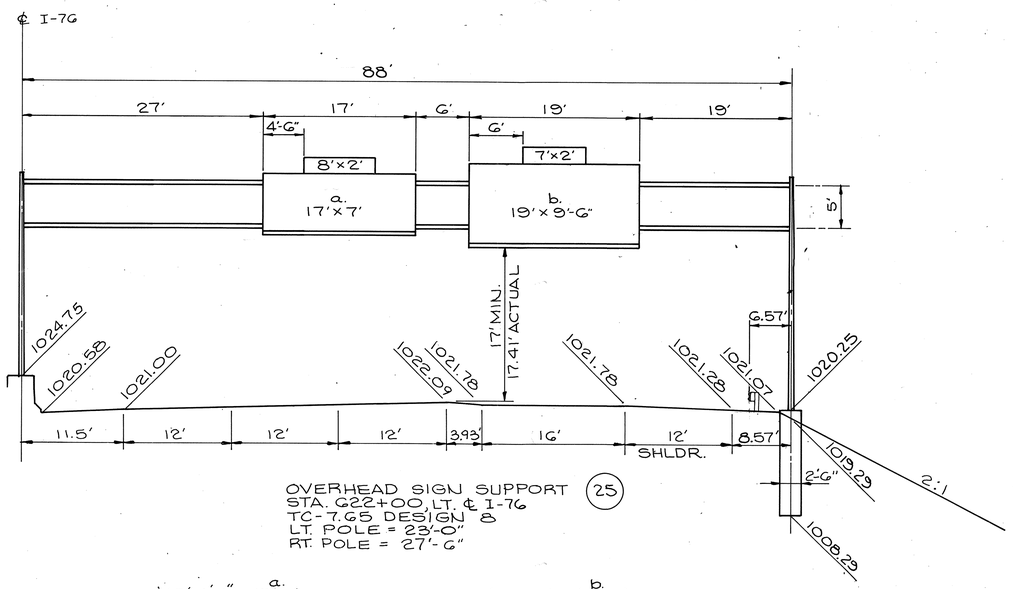

OVERHEAD SIGN SUPPORT
STA. 622+00, LT. ℄ I-76
TC-7.65 DESIGN 8
LT. POLE = 23'-0"
RT. POLE = 27'-6"
(25)

a. (17'x6'-6") + (8'x2') = 126.5 SQ.FT.
FIXTURES = 2 AT 175 WATTS

b. (19'x9') + (7'x2') = 185 SQ.FT.
FIXTURES = 2 AT 175 WATTS

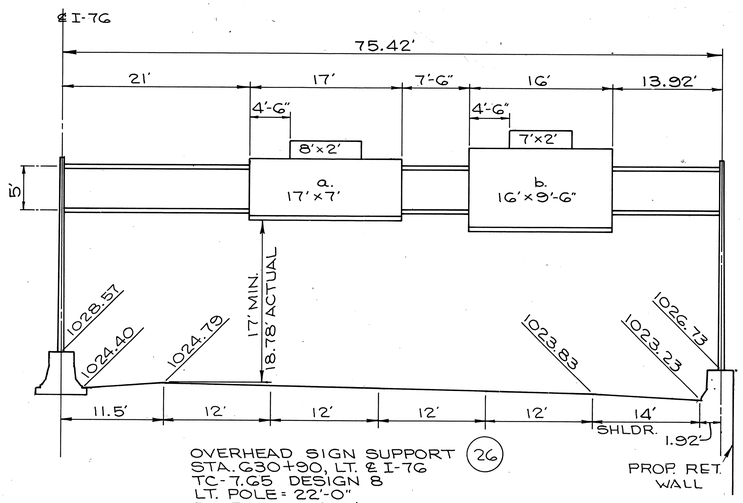

OVERHEAD SIGN SUPPORT
STA. 630+90, LT. ℄ I-76
TC-7.65 DESIGN 8
LT. POLE = 22'-0"
RT. POLE = 23'-10 1/8"
(26)

a. (8'x2') + (17'x6'-6") = 126.5 SQ.FT.
FIXTURES = 2 AT 175 WATTS

b. (16'x9') + (7'x2') = 158 SQ.FT.
FIXTURES = 2 AT 175 WATTS

ELEVATION VIEWS

AA B/P# 71942R

CALC. BY. DATE	SUM-76-11.57	OHIO	637 / 1214
CHKD. BY. DATE	FED. PROJECT IR-76-2(44)19	F.H.W.A. REGION 5	

SUMMIT COUNTY

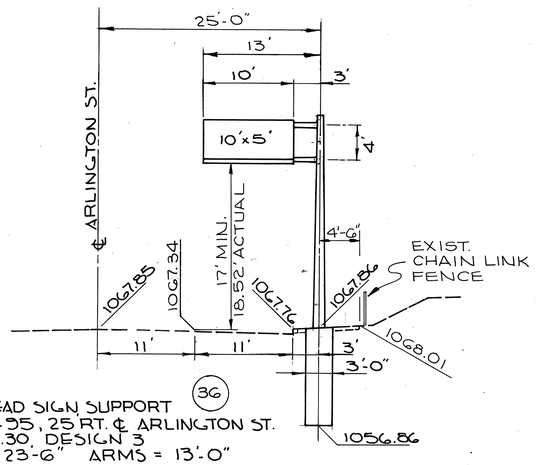

OVERHEAD SIGN SUPPORT (36)
STA. 10+35, 25 RT. ℄ ARLINGTON ST.
T.C.-12.30, DESIGN 3
POLE = 23'-6" ARMS = 13'-0"
10'-0"x 4'-6" = 45 SQ. FT.
FIXTURES = 1 AT 100 WATTS

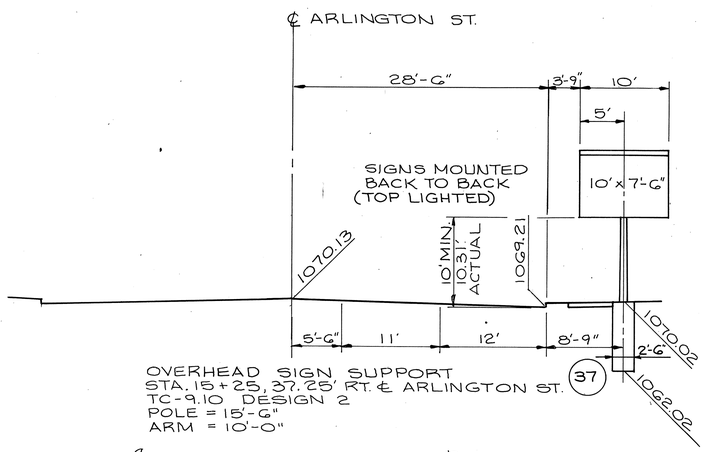

OVERHEAD SIGN SUPPORT (37)
STA. 15+25, 37.25' RT. ℄ ARLINGTON ST.
TC-9.10 DESIGN 2
POLE = 15'-6"
ARM = 10'-0"

a.
10'x7' = 70 SQ. FT.
FIXTURES = 1 AT 175 WATTS

b.
10'x7' = 70 SQ. FT.
FIXTURES = 1 AT 175 WATTS

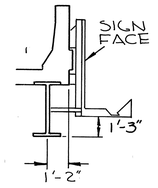

SECTION "A-A"

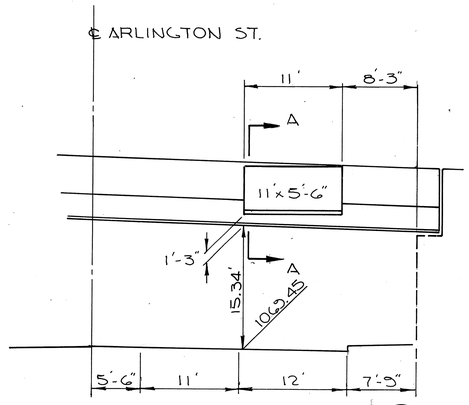

STRUCTURE MOUNTED SIGN SUPPORT (38)
STA. 16+68, RT. ARLINGTON ST.
TC-18.24
11'x5' = 55 SQ. FT.
FIXTURES = 1 AT 100 WATTS

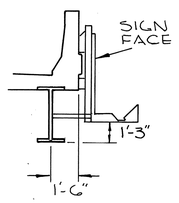

SECTION "A-A"

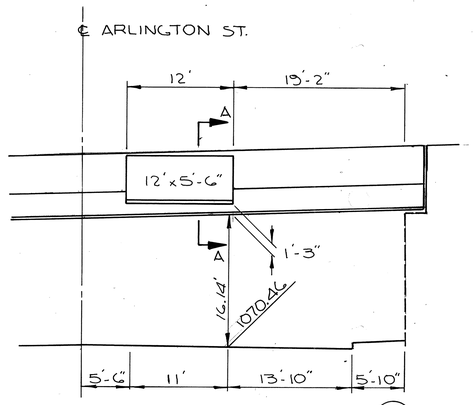

STRUCTURE MOUNTED SIGN SUPPORT (39)
STA. 18+19, LT. ℄ ARLINGTON ST.
TC-18.24
12'x5' = 60 SQ. FT.
FIXTURES = 2 AT 100 WATTS

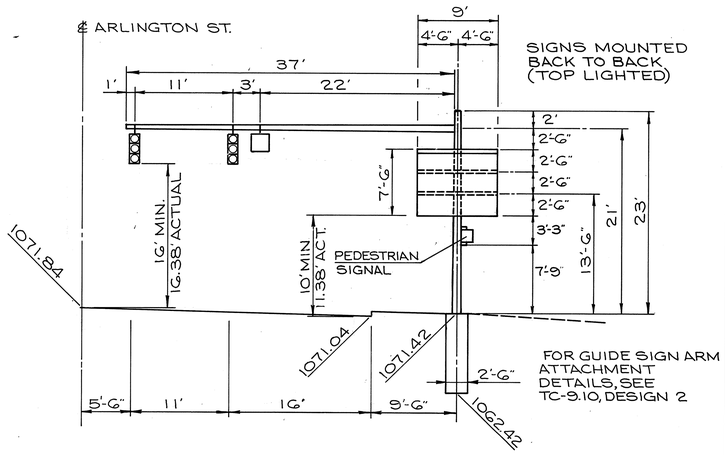

FOR GUIDE SIGN ARM ATTACHMENT DETAILS, SEE TC-9.10, DESIGN 2

TRAFFIC SIGNAL SUPPORT (40)
STA. 19+28, 42' RT. ℄ ARLINGTON ST.
TC-81.20, DESIGN 4, AS PER PLAN
POLE = 23' SIGNAL ARM = 37'
GUIDE SIGN ARMS = 9'

a
9'x7' = 63 SQ. FT.
FIXTURES = 1 AT 175 WATTS

b
9'x7' = 63 SQ. FT.
FIXTURES = 1 AT 175 WATTS

NOTE: SUPPORT QUANTITY LISTED IN TRAFFIC SIGNAL SUB-SUMMARY

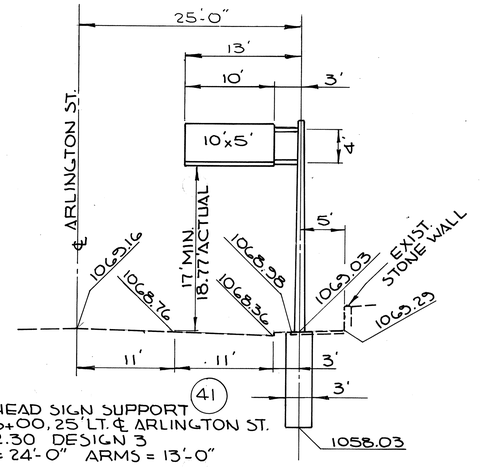

OVERHEAD SIGN SUPPORT (41)
STA. 25+00, 25' LT. ℄ ARLINGTON ST.
T.C.-12.30 DESIGN 3
POLE = 24'-0" ARMS = 13'-0"
10'-0"x 4'-6" = 45 SQ. FT.
FIXTURES = 1 AT 100 WATTS

ELEVATION VIEWS

AA B/Pe 71942R

CALC. BY. DATE	SUM-76-11.57	OHIO
CHKD. BY. DATE	FED. PROJECT IR-76-2(44)19	F.H.W.A. REGION 5

638
1214

SUMMIT COUNTY

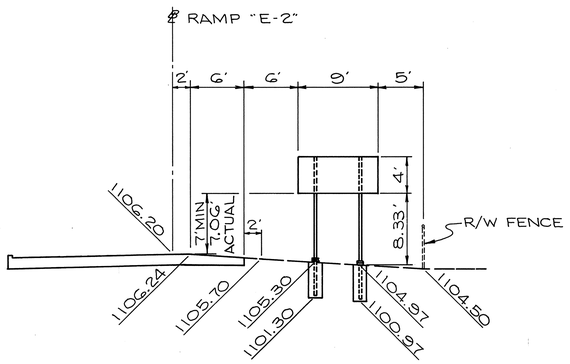

GROUND MOUNTED SIGN SUPPORT (28)
STA. 10+80, 19.5' RT. ℄ RAMP "E-2"
BEAM TYPE = S4 x 7.7
LT. BEAM = 15.75' RT. BEAM = 16.08'
SIGN AREA = 36 SQ. FT.

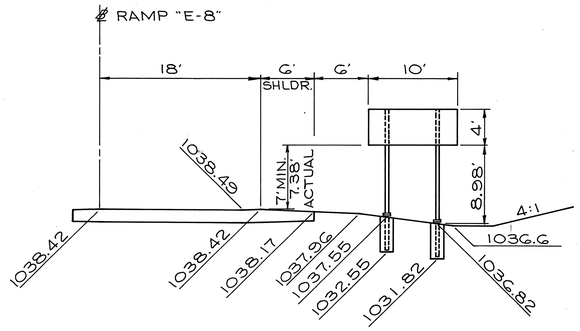

GROUND MOUNTED SIGN SUPPORT (31)
STA. 91+50, 35' RT. ℄ RAMP "E-8"
BEAM TYPE = W6 x 9
LT. BEAM = 17' RT. BEAM = 17.73'
SIGN AREA = 40 SQ. FT.

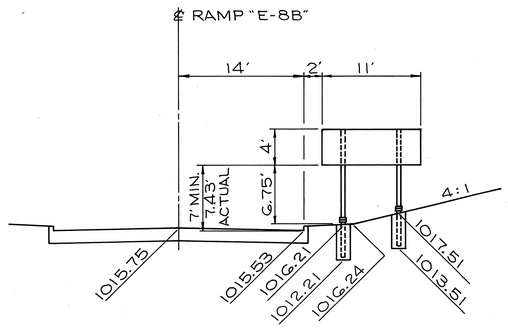

GROUND MOUNTED SIGN SUPPORT (33)
STA. 104+05, 21.5' RT. ℄ RAMP "E-8B"
BEAM TYPE = S4 x 7.7
LT. BEAM = 14.5' RT. BEAM = 13.2'
SIGN AREA = 44 SQ. FT.

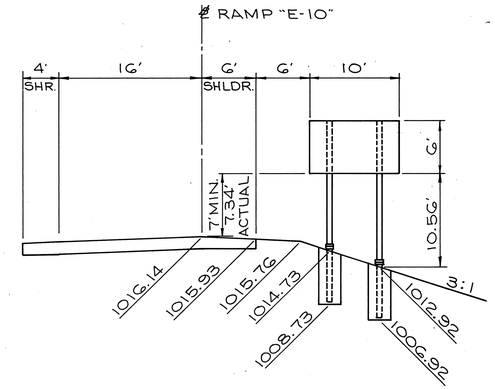

GROUND MOUNTED SIGN SUPPORT (34)
STA. 19+00, 17' RT. ℄ RAMP "E-10"
BEAM TYPE = W10 x 12
LT. BEAM = 20.5' RT. BEAM = 22.31'
SIGN AREA = 60 SQ. FT.

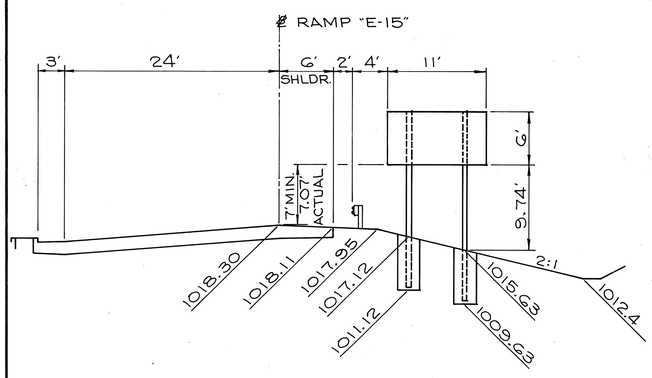

GROUND MOUNTED SIGN SUPPORT (35)
STA. 11+70, 17.5' LT. ℄ RAMP "E-15"
BEAM TYPE = W10 x 12
LT. BEAM = 20' RT. BEAM = 21.49'
SIGN AREA = 66 SQ. FT.

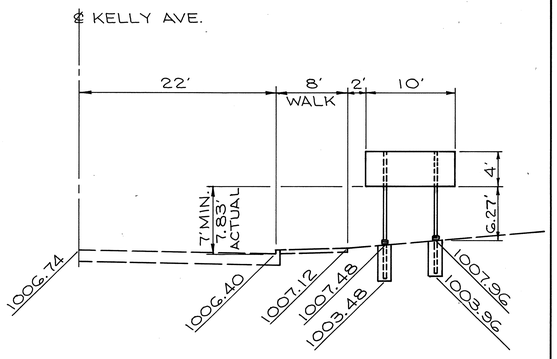

GROUND MOUNTED SIGN SUPPORT (46)
STA. 11+50, 37' RT. ℄ KELLY AVE.
BEAM TYPE = S4 x 7.7
LT. BEAM = 14.5' RT. BEAM = 14.02'
SIGN AREA = 40 SQ. FT.

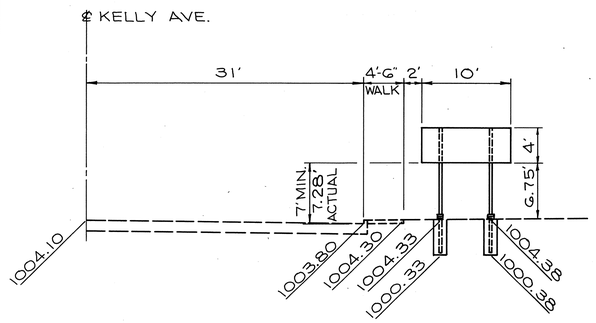

GROUND MOUNTED SIGN SUPPORT (47)
STA. 14+05, 42.5' LT. ℄ KELLY AVE.
BEAM TYPE = S4 x 7.7
LT. BEAM = 14.5' RT. BEAM = 14.5'
SIGN AREA = 40 SQ. FT.

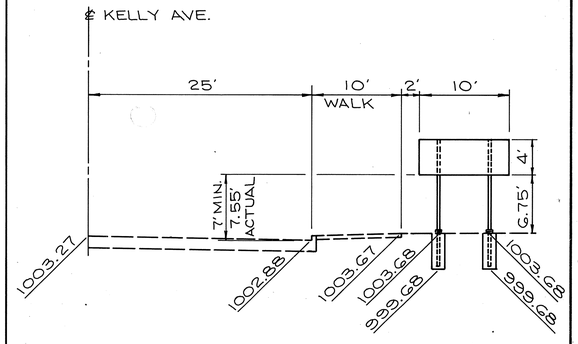

GROUND MOUNTED SIGN SUPPORT (48)
STA. 15+40, 42' RT. ℄ KELLY AVE.
BEAM TYPE = S4 x 7.7
LT. BEAM = 14.5' RT. BEAM = 14.5'
SIGN AREA = 40 SQ. FT.

ELEVATION VIEWS

AA B/Pe 71942R

CALC. BY. DATE	SUM-76-11.57	OHIO	639
CHKD. BY. DATE	FED. PROJECT IR-76-2(44)19	F.H.W.A. REGION 5	12/14

SUMMIT COUNTY

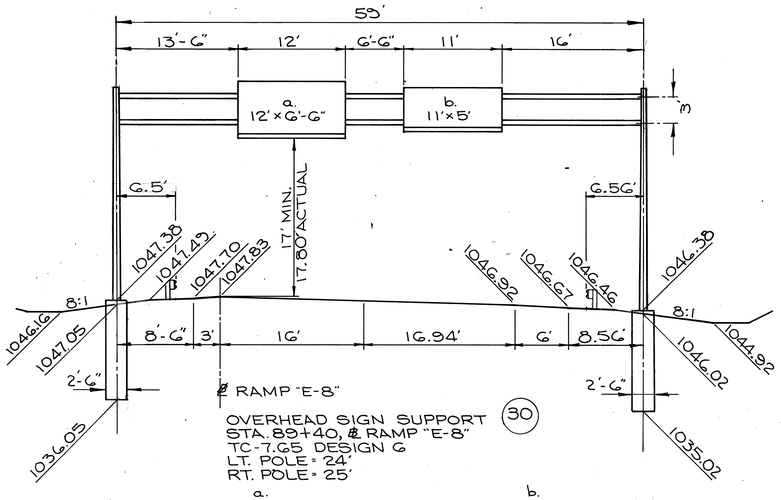

OVERHEAD SIGN SUPPORT (30)
STA. 89+40, ℄ RAMP "E-8"
TC-7.65 DESIGN G
LT. POLE = 24'
RT. POLE = 25'

a. 12'x6' = 72 SQ.FT.
FIXTURES = 2 AT 175 WATTS

b. 11'x4'-6" = 49.5 SQ.FT.
FIXTURES = 1 AT 100 WATTS

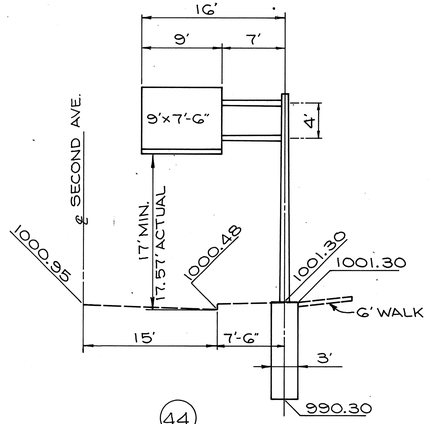

OVERHEAD SIGN SUPPORT (44)
STA. 38+40, 22.5' RT. ℄ SECOND AVE.
TC-12.30 DESIGN 3
POLE = 23'-6"
ARM = 16'
9'x7' = 63 SQ. FT.
FIXTURES = 1 AT 175 WATTS

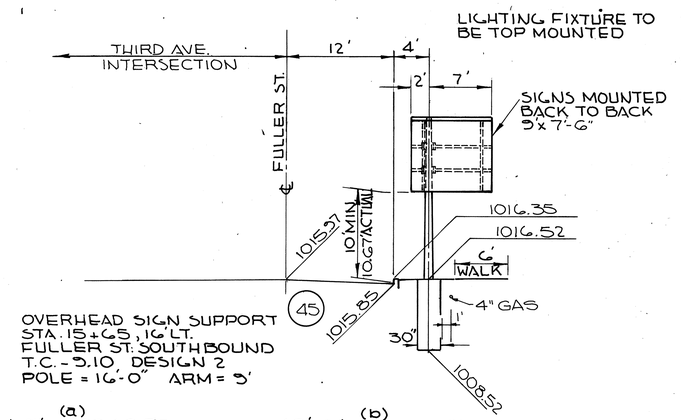

OVERHEAD SIGN SUPPORT (45)
STA. 15+65, 16' LT.
FULLER ST. SOUTHBOUND
T.C.-5.10 DESIGN 2
POLE = 16'-0" ARM = 5'

(a)
(9'x7') = 63 SQ. FT.
FIXTURES = 1 AT 175 WATTS

(b)
(9'x7') = 63 SQ. FT.
FIXTURES = 1 AT 175 WATTS

NO. BRACKETS = 2 HT = 7'-6"
SPACING = 10 3/8", 81 3/8", 16 1/4" (EACH SIGN)

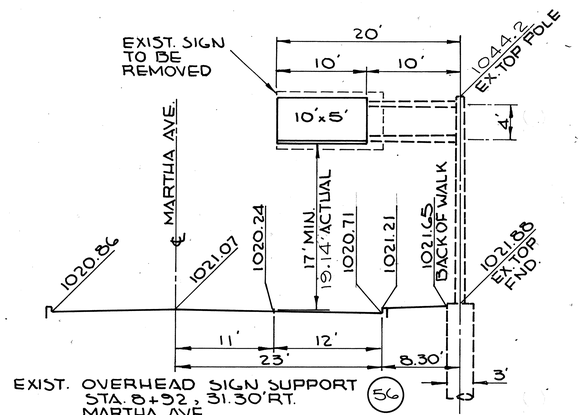

EXIST. OVERHEAD SIGN SUPPORT (56)
STA. 8+92, 31.30' RT.
MARTHA AVE.
T.C.-12.24 DESIGN 2
POLE = 23' (EXIST.)
ARM = 20' (EXIST.)

(10'x4'-6") = 45 SQ.FT.
FIXTURES = 1 AT 100 WATTS

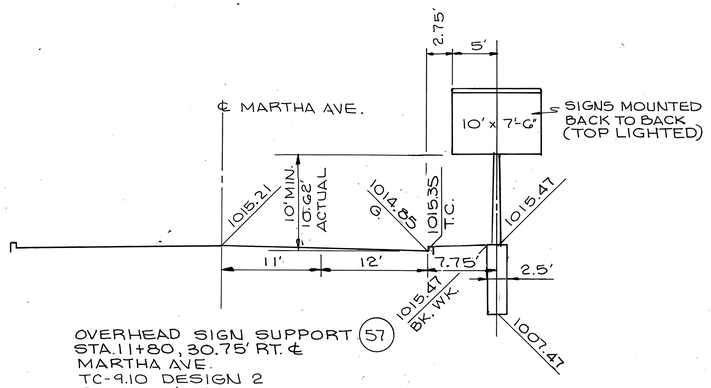

OVERHEAD SIGN SUPPORT (57)
STA. 11+80, 30.75' RT. ℄
MARTHA AVE.
TC-9.10 DESIGN 2
POLE = 16'-0"
ARM = 10'-0"

a
(10'x7') = 70 SQ.FT.
FIXTURES = 1 AT 175 WATTS

b
(10'x7') = 70 SQ.FT.
FIXTURES = 1 AT 175 WATTS

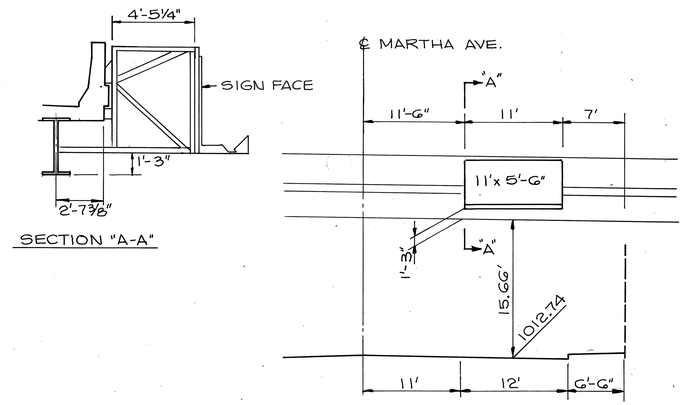

SECTION "A-A"

STRUCTURE MOUNTED SIGN SUPPORT (58)
STA. 12+85, RT. ℄ MARTHA AVE.
TC-18.26 DESIGN G
SKEW = 28°
11'x5' = 55 SQ. FT.
FIXTURES = 1 AT 100 WATTS

ELEVATION VIEWS

AA B.Pe 71442R

CALC. BY. DATE	SUM-76-11.57	OHIO	640
CHKD. BY. DATE	FED. PROJECT IR-76-2(44)19	F.H.W.A. REGION 5	1214

SUMMIT COUNTY

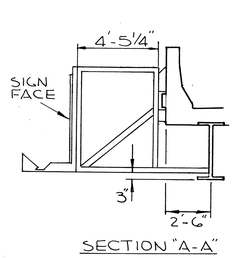

SECTION "A-A"

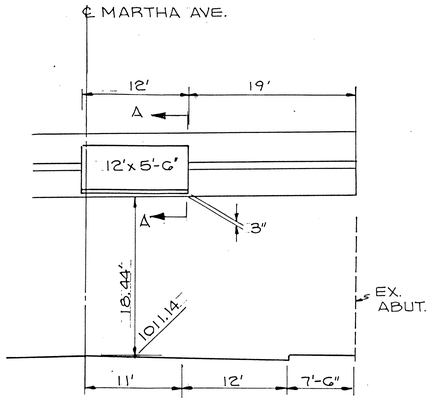

STRUCTURE MOUNTED SIGN SUPPORT (59)
STA. 14+74, LT. ℄ MARTHA AVE.
TC-18.26 DESIGN G
SKEW = 22°
12'x5' = 60 SQ.FT.
FIXTURES = 2 AT 100 WATTS

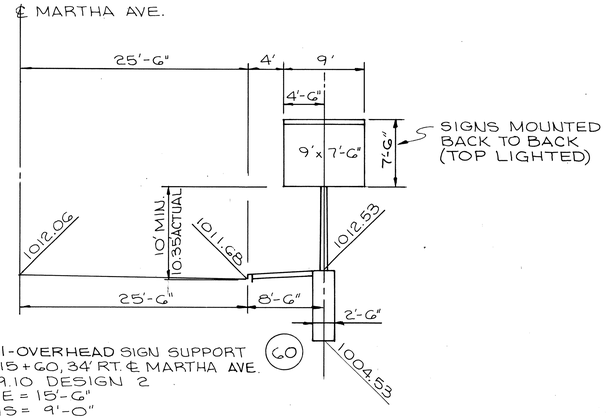

SEMI-OVERHEAD SIGN SUPPORT (60)
STA. 15+60, 34' RT. ℄ MARTHA AVE.
TC-9.10 DESIGN 2
POLE = 15'-6"
ARMS = 9'-0"

a.
9'x7' = 63 SQ.FT.
FIXTURES = 1 AT 175 WATTS

b.
9'x7' = 63 SQ. FT.
FIXTURES = 1 AT 175 WATTS

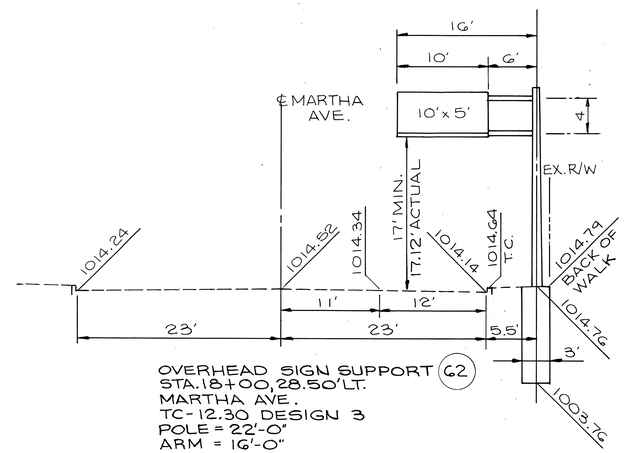

OVERHEAD SIGN SUPPORT (62)
STA. 18+00, 28.50' LT.
MARTHA AVE.
TC-12.30 DESIGN 3
POLE = 22'-0"
ARM = 16'-0"

(10'+4'-6") = 45 SQ.FT.
FIXTURES = 1 AT 100 WATTS

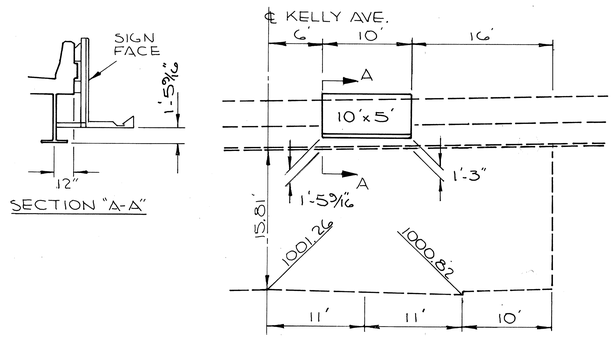

SECTION "A-A"

STRUCTURE MOUNTED SIGN SUPPORT (49)
KELLY AVE. SOUTHBOUND AT
EAST MARKET ST.
TC-18.24 SKEW = 0°
10'x4.5' = 45 SQ.FT.
FIXTURES = 1 AT 100 WATTS

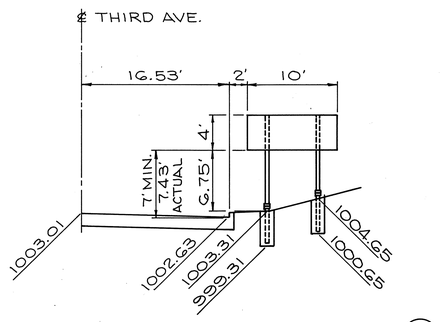

GROUND MOUNTED SIGN SUPPORT (50)
STA. 33+65, 23.53' RT. ℄ THIRD AVE.
BEAM TYPE = S4x7.7
LT. BEAM = 14.5' RT. BEAM = 13.16'
SIGN AREA = 40 SQ. FT.

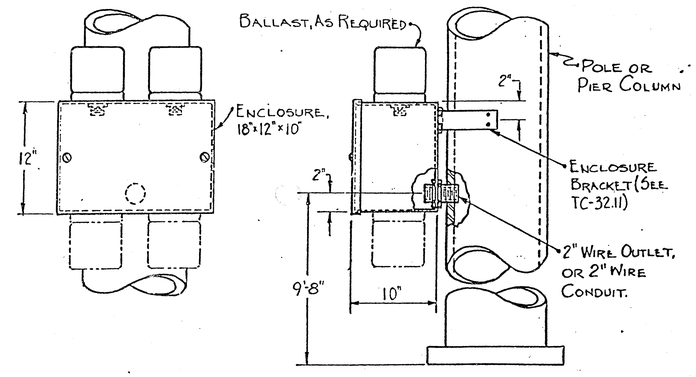

BALLAST ENCLOSURE, TYPE B

ELEVATION VIEWS

AA B/Pv 71942R

SIGNING QUANTITIES SUB-SUMMARY

CALC. BY: TKI DATE 3/89	SUM-76-11.57	OHIO
CHKD. BY: DSB DATE 4/90		F.H.W.A. REGION 5

641 12.14

				ITEM 630																								ITEM 631														ITEM 625	
REFERENCE NUMBER	REFERENCE LETTER	STATION	OFFSET	CONCRETE FOR ANCHOR BASE FOUNDATIONS	CONCRETE FOR EMBEDDED FOUNDATIONS		GROUND-MOUNTED SUPPORTS, NO.4 POST	GROUND-MOUNTED SUPPORTS, S4x7.7 BEAM	GROUND-MOUNTED SUPPORTS, W10x12 BEAM	GROUND-MOUNTED SUPPORTS, W10x22 BEAM	BREAKAWAY BEAM CONNECTION	OVERHEAD SIGN SUPPORT, TYPE TC-7.G5, DESIGN 8, G9.92 FEET SPAN	OVERHEAD SIGN SUPPORT, TYPE TC-7.G5, DESIGN G, G3 FEET SPAN	OVERHEAD SIGN SUPPORT, TYPE TC-7.G5, DESIGN 8, G9 FEET SPAN	OVERHEAD SIGN SUPPORT, TYPE TC-7.G5, DESIGN 8, 73 FEET SPAN	OVERHEAD SIGN SUPPORT, TYPE TC-7.G5, DESIGN 8, 75.42 FEET SPAN	OVERHEAD SIGN SUPPORT, TYPE 7.G5, DESIGN 8, 8G FEET SPAN	OVERHEAD SIGN SUPPORT, TYPE TC-7.G5, DESIGN 8, 83.42 FEET SPAN	OVERHEAD SIGN SUPPORT, TYPE TC-7.G5, DESIGN 8, 88 FEET SPAN	OVERHEAD SIGN SUPPORT, TYPE TC-7.G5, DESIGN 8, 92.39 FEET SPAN	OVERHEAD SIGN SUPPORT, TYPE TC-12.30, DESIGN 10, 32 FEET ARM	OVERHEAD SIGN SUPPORT, TYPE TC-12.30, DESIGN 8, 28 FEET ARM					SIGN SUPPORT ASSEMBLY, POLE MOUNTED	SIGN SUPPORT ASSEMBLY, BRIDGE MOUNTED, TYPE 2	SIGNS, FLAT SHEET, TYPE G	SIGNS, EXTRUSHEET, TYPE G		SIGN SERVICE	SIGNS WIRED	DISCONNECT SWITCH WITH ENCLOSURE, TYPE X		BALLAST, REMOTE TYPE CMRI-175(480)	BALLAST WIRING ENCLOSURE, TYPE A	BALLAST, TYPE CMRI-175(480), INTEGRAL	BALLAST, TYPE CMRI-250(480), INTEGRAL				MURCURY VAPOR LUMINAIRE, TYPE TC-31.21, WITH 175-WATT LAMP	MURCURY VAPOR LUMINAIRE, TYPE TC-31.21, WITH 250-WATT LAMP		GROUND ROD	
				C.Y.	C.Y.		L.F.	L.F.	L.F.	L.F.	EA.	EA.	EA.	EA.	EA.	EA.	EA.	EA.	EA.	EA.	EA.	EA.					EA.	EA.	S.F.	S.F.		EA.	EA.	EA.		EA.	EA.	EA.	EA.				EA.	EA.		EA.	
		I-76WB																																										
1		24+45	LT.		0.54			32			2																			40														
2	a	26+38	LT.	10.8											1															166		1	1	1			2					2		1	
2	b																													176			1					2				2			
2	c																													216			1				3				3			
		I-76																																										
3		553+50	RT.	4.21																									124.5		1	1	1			2					2		1	
4	a	554+00	LT.	14.99									1																176		1	1	1				2					2	1	
4	b																													216			1				3				3			
5		557+30	LT.		0.54			32			2																			40														
6		559+00	RT.				15																							13.5														
7	a	561+10	LT.	14.80																									166		1	1	1			2					2		1	
7	b																													216			1				3				3			
7	c																													187			1				2				2			
8		564+25	RT.	4.24																									124.5		1	1	1			2					2		1	
9		568+00	LT.		2.20				38.45		2																			80														
10		575+00	LT.	9.23								1																		160		1	1	1			2					2		1	
11		575+00	LT.																									1		13.5														
12	a	575+50	RT.	14.71											1															198		1	1	1				2					2	1	
12	b																													144			1				3				3			
13		577+70	RT.		0.54			32			2																			30														
14		585+00	LT.		2.46					51.13	2																			120														
15		593+70	RT.				15																							13.5														
16		593+90	LT.		0.54			32			2																			40														
17		597+00	RT.	4.74																			1							198		1	1	1				2					2	1	
18	a	597+50	LT.	14.65														1												156		1	1	1			2					2		1	
18	b																													160			1				2				2			
18	c																													160			1				2				2			
19	a	606+70	RT.																			1								250		1	1	1	3	1						3			
19	b																													160			1		2						2			
19	c																													100.5			1		2						2			
20		607+00	LT.																									1	13.5															
21		609+15	RT.		0.54			32			2																			40														
22	a	612+00	RT.	9.23															1											226.5		1	1	1				2					2	1	
22	b																													178			1				2				2			
23		613+40	RT.		0.54			32			2																			40														
24		620+30	LT.		0.54			32			2																			30														
25	a	622+00	LT.	14.94																	1									126.5		1	1	1			2					2		1	
25	b																													185			1				2				2			
26	a	630+90	LT.	9.23												1														126.5		1	1	1			2					2		1	
26	b																													158			1				2				2			
27		633+00	RT.																									1	13.5															
TOTALS				125.77	8.44		30	224	38.45	51.13	18	1	1	1	2	1	1	1	1	1	1	2					1	2	67.5	4915		13	26	13		7	1	40	10				47	10		12	

SUB-SUMMARY

AA B/P# 71942R

SIGNING QUANTITIES SUB-SUMMARY

CALC. BY TK.I DATE 3/89	SUM-76-11.57	OHIO	642 12.14
CHKD. BY DSB DATE 4/90		F.H.W.A. REGION 5	

				ITEM 630																			ITEM 631												ITEM 625							
REFERENCE NUMBER	REFERENCE LETTER	STATION	OFFSET	CONCRETE FOR ANCHOR BASE FOUNDATIONS	CONCRETE FOR EMBEDDED FOUNDATIONS		GROUND-MOUNTED SUPPORTS, NO. 4 POST	GROUND-MOUNTED SUPPORTS, S4x7.7 BEAM	GROUND-MOUNTED SUPPORTS, WG x 9 BEAM	BREAKAWAY BEAM CONNECTION	GROUND-MOUNTED SUPPORTS, W10 x 12 BEAM	OVERHEAD SIGN SUPPORT, TYPE TC-7.65, DESIGN G, 59 FEET SPAN	OVERHEAD SIGN SUPPORT, TYPE TC-9.10, DESIGN 2, 9 FEET ARM	OVERHEAD SIGN SUPPORT, TYPE TC-9.10, DESIGN 2, 10 FEET ARM	OVERHEAD SIGN SUPPORT, TYPE TC-12.30, DESIGN 3, 13 FEET ARM	OVERHEAD SIGN SUPPORT, TYPE TC-12.30, DESIGN 3, 16 FEET ARM	OVERPASS STRUCTURE MOUNTED SIGN SUPPORT, TYPE TC-18.24						SIGNS, FLAT SHEET, TYPE G	SIGNS, EXTRUSHEET, TYPE G			SIGN SERVICE	SIGNS WIRED	SIGNS WIRED, OVERPASS STRUCTURE MOUNTED	DISCONNECT SWITCH WITH ENCLOSURE, TYPE X	SWITCH ENCLOSURE MOUNTING BRACKET ASSEMBLY	BALLAST, CMRI-100(480)	BALLAST, TYPE CMRI-100(480), INTEGRAL	BALLAST, TYPE CMRI-175(480), INTEGRAL	MERCURY VAPOR LUMINAIRE, TYPE TC-31.21, WITH 100-WATT LAMP	MERCURY VAPOR LUMINAIRE, TYPE TC-31.21, WITH 175-WATT LAMP		BALLAST WIRING ENCLOSURE, TYPE B	BALLAST WIRING ENCLOSURE MOUNTING BRACKET	GROUND ROD								
				C.Y.	C.Y.		L.F.	L.F.	L.F.	EA.	L.F.	EA.	EA.	EA.	EA.	EA.	EA.						S.F.	S.F.			EA	EA.	EA.	EA.	EA.	EA.	EA.	EA.	EA.		EA.	EA.	EA.							
		RAMP "E-2"																																										
28		10+80	RT.		0.54			31.83		2														36																				
		RAMP "E-7"																																										
29		95+00	LT.				17																	18.5																				
		RAMP "E-8"																																										
30	a	89+40	RT.	9.86								1												72			1	1		1				2		2			1					
30	b																							49.5				1					1		1								
31		91+50	RT.		0.66				34.73	2														40																				
		RAMP "E-8A"																																											
32		13+00	RT.				25																	20																				
		RAMP "E-8B"																																											
33		104+00	RT.		0.54			27.7		2														44																				
		RAMP "E-10"																																											
34		19+00	RT.		2.20					2	42.81													60																				
		RAMP "E-15"																																											
35		11+70	LT.		2.20						41.49													66																				
		ARLINGTON ST.																																											
36		10+95	RT.	2.92											1									45			1	1		1			1		1				1				
37		15+25	RT.	1.48									1											140			1	2		1				2		2			1					
38		16+68	RT.													1								55			1		1	1	1	1			1			1	1	1				
39		18+19	LT.													1								60			1		1	1	1	2			2			1	1	1				
40		19+39	RT.																					126			1	2		1				2		2								
41		25+00	LT.	2.92											1									45			1	1		1			1		1				1				
		SECOND AVE.																																										
42		21+50	RT.				31																	17.5																				
43		27+00	RT.				31																	17.5																				
44		38+40	RT.	2.92													1							63			1	1		1				1		1			1					
		FULLER ST.																																										
45		15+65	LT.	1.48										1										126			1	2		1				2		2			1					
		KELLY AVE.																																										
46		11+50	RT.		0.54			28.52		2														40																				
47		14+05	LT.		0.54			29		2														40																				
48		15+40	RT.		0.54			29		2														40																				
49		E. MARKET	LT.													1								45			1		1	1	1	1			1			1	1	1				
TOTALS				21.58	7.76		104	146.05	34.73	14	84.30	1	1	1	2	1	3						18.5	1247.5			10	11	3	10	3	4	3	9	7	9		3	3	9							

SUB-SUMMARY

AA B/Pn 71942R

SIGNING QUANTITIES SUB-SUMMARY

CALC. BY TKL DATE 3/85	SUM-76-11.57	OHIO	645 1214
CHKD. BY DSB DATE 4/90		F.H.W.A. REGION 5	

REFERENCE NUMBER	REFERENCE LETTER	STATION	OFFSET	ITEM 630																		ITEM 631											ITEM 625											
				CONCRETE FOR ANCHOR BASE FOUNDATIONS	CONCRETE FOR EMBEDDED FOUNDATIONS		GROUND-MOUNTED SUPPORTS, NO.4 POST	GROUND-MOUNTED SUPPORTS, S4x7.7 BEAM		BREAKAWAY BEAM CONNECTION		OVERHEAD SIGN SUPPORT, TYPE TC-9.10, DESIGN 2, 9 FEET ARM	OVERHEAD SIGN SUPPORT, TYPE TC-9.10, DESIGN 2, 10 FEET ARM	OVERHEAD SIGN SUPPORT, TYPE TC-12.30, DESIGN 3, 16 FEET ARM	OVERPASS STRUCTURE MOUNTED SIGN SUPPORT, TYPE TC-18.26, DESIGN 6		SIGN ATTACHMENT ASSEMBLY	LUMINAIRE SUPPORT ASSEMBLY, TYPE TC-31.21		SIGNS, FLAT SHEET TYPE G	SIGNS, EXTRUSHEET TYPE G			SIGN SERVICE	SIGNS WIRED	SIGNS WIRED, OVERPASS STRUCTURE MOUNTED	DISCONNECT SWITCH WITH ENCLOSURE, TYPE X	SWITCH ENCLOSURE MOUNTING BRACKET ASSEMBLY	BALLAST, REMOTE TYPE CMRI-100(480)	BALLAST, TYPE CMRI-100(480), INTEGRAL		BALLAST, TYPE CMRI-175(480), INTEGRAL	MERCURY VAPOR LUMINAIRE, TYPE TC-31.21, WITH 100-WATT LAMP	MERCURY VAPOR LUMINAIRE, TYPE TC-31.21, WITH 175-WATT LAMP		BALLAST WIRING ENCLOSURE, TYPE B	BALLAST WIRING ENCLOSURE MOUNTING BRACKET		GROUND ROD															
				C.Y.	C.Y.		L.F.	L.F.		EA.		EA.	EA.	EA.	EA.		EA.	EA.		S.F.	S.F.			EA.	EA.	EA.	EA.	EA.	EA.	EA.		EA.	EA.		EA.	EA.		EA.														
		THIRD AVE.																																												
50		33+65	RT.		0.54			27.66		2											40																									
		E. MARKET ST.																																												
51		SEE SH'T. ___					15														8.19																									
52		SEE SH'T. ___					15														8.19																									
53		SEE SH'T. ___					15														8.19																									
54		SEE SH'T. ___					15														8.19																									
		MARTHA AVE.																																												
55		5+50	RT.				32														19.25																									
56		8+92	RT.															2	1		45			1		1	1		1			1													
57		11+80	RT.	1.48										1							140			1	2		1				2		1		2				1					
58		12+85	RT.													1					55			1		1	1	1	1			1					1	1	1					
59		14+74	LT.													1					60			1		1	1	1	2			2					1	1	1					
60		15+60	RT.	1.48								1									126			1	2		1				2		2					1						
61		15+75	RT.				26														22.5																									
62		18+00	LT.	2.92											1						45			1	1		1				1		1							1					

AA B/P# 71942R

CALC. BY. DATE	SUM-76-11.57	OHIO	644 1214
CHKD. BY. DATE	FED. PROJECT IR-76-2(44)19	F.H.W.A. REGION 5	

SUMMIT COUNTY

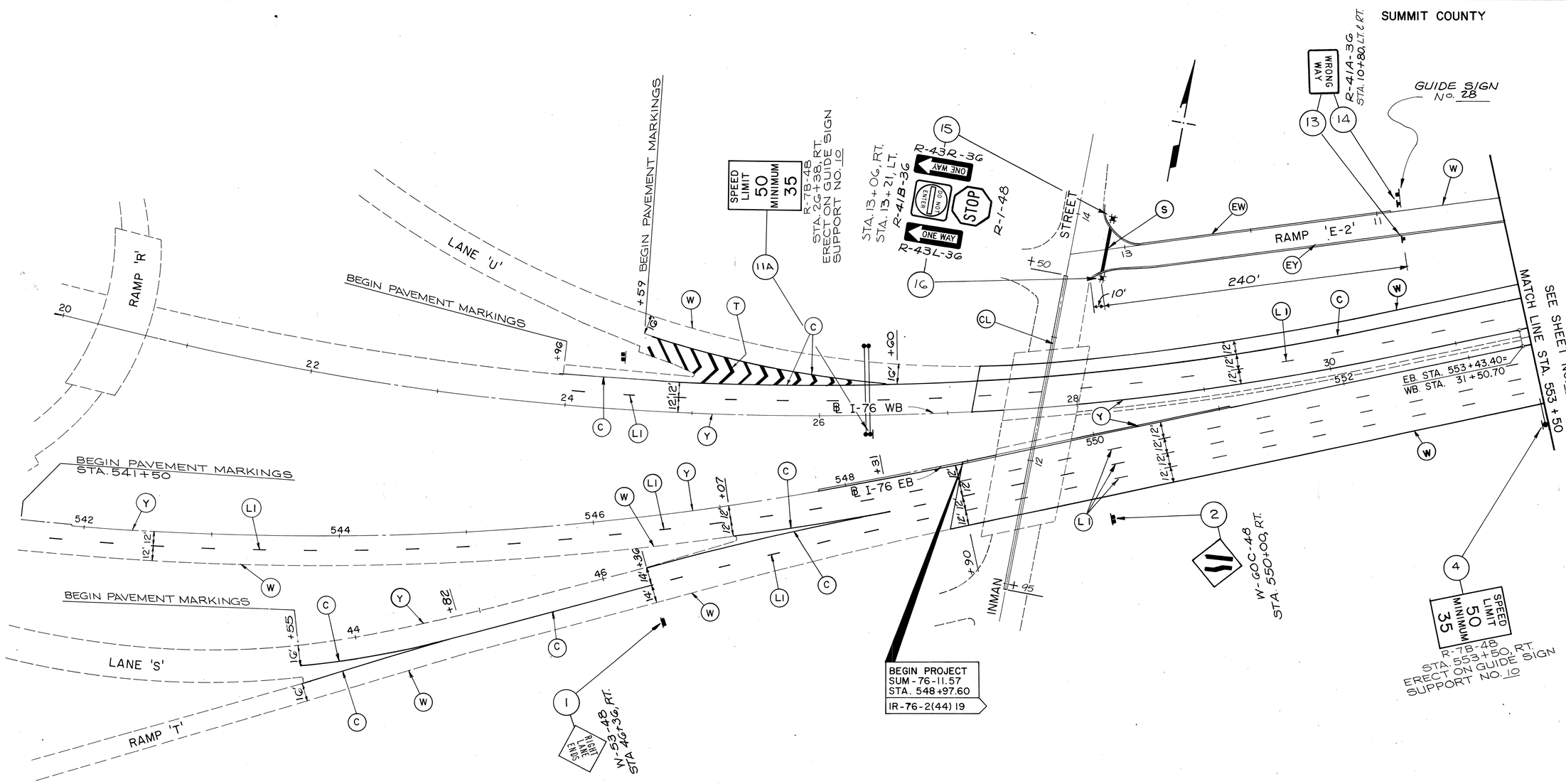

PAVEMENT MARKING LEGEND

(LI) LANE LINE, 6-INCH	(EY) CURB MARKING, YELLOW
(L2) LANE LINE, 4-INCH	(CL) CENTERLINE, DOUBLE YELLOW
(W) EDGE LINE, WHITE	(S) STOP LINE
(Y) EDGE LINE, YELLOW	(CW) CROSSWALK LINE
(C) CHANNELIZING LINE	(A) LANE ARROW
(T) TRANSVERSE LINE	(PA) WORD ON PAVEMENT, 72-INCH
(EW) CURB MARKING, WHITE	

FOR GUIDE SIGN PLAN SEE SHEET No. 630.
FOR LEGENDS, SEE SHEET No. 644.
FOR DELINEATORS SEE SHEET No. 658.
FOR QUANTITIES SEE SHEET No. 653-657

SCALE IN FEET
0 40 80 120

REGULATORY & WARNING SIGNS, AND PAVEMENT MARKING PLAN

CALC. BY. DATE	SUM-76-11.57	OHIO
CHK'D. BY. DATE	FED. PROJECT IR-76-2(44)19	F.H.W.A. REGION 5

645
1214

SUMMIT COUNTY

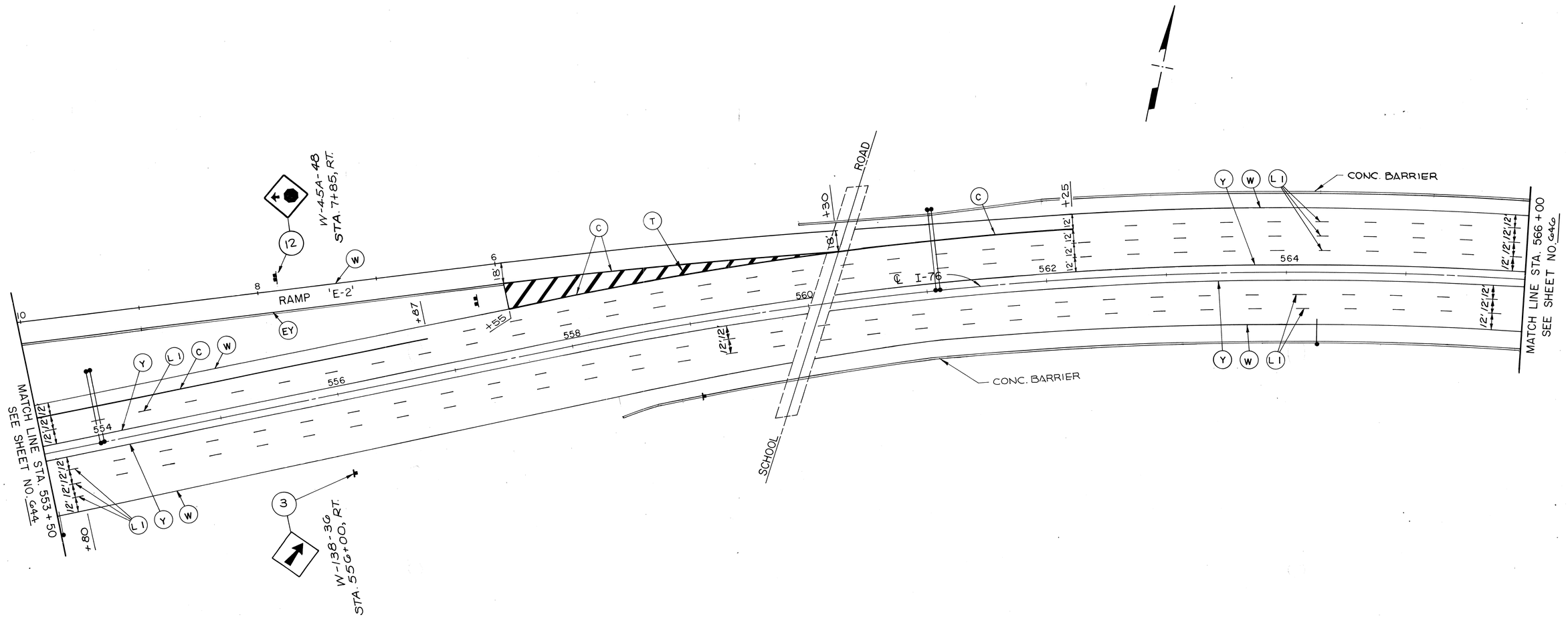

FOR GUIDE SIGN PLAN
SEE SHEET Nº. 631
FOR LEGENDS, SEE SHEET Nº. 644
FOR DELINEATORS SEE SHEET Nº. 658
FOR QUANTITIES SEE SHEET Nº. 653-657

SCALE IN FEET
0 40 80 120

REGULATORY & WARNING SIGNS, AND PAVEMENT MARKING PLAN

AA B/P# 71942R

CALC. BY. DATE	SUM-76-11.57	OHIO	646
CHKD. BY. DATE	FED. PROJECT IR-76-2(44)19	F.H.W.A. REGION 5	1214

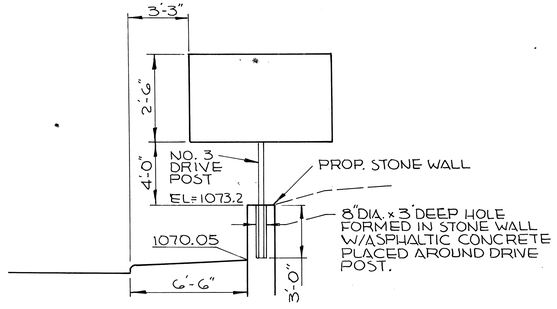

MOUNTING DETAIL
SIGN NO. 56
STA. 16+30, 35.75' LT.
℄ ARLINGTON ST.

SUMMIT COUNTY

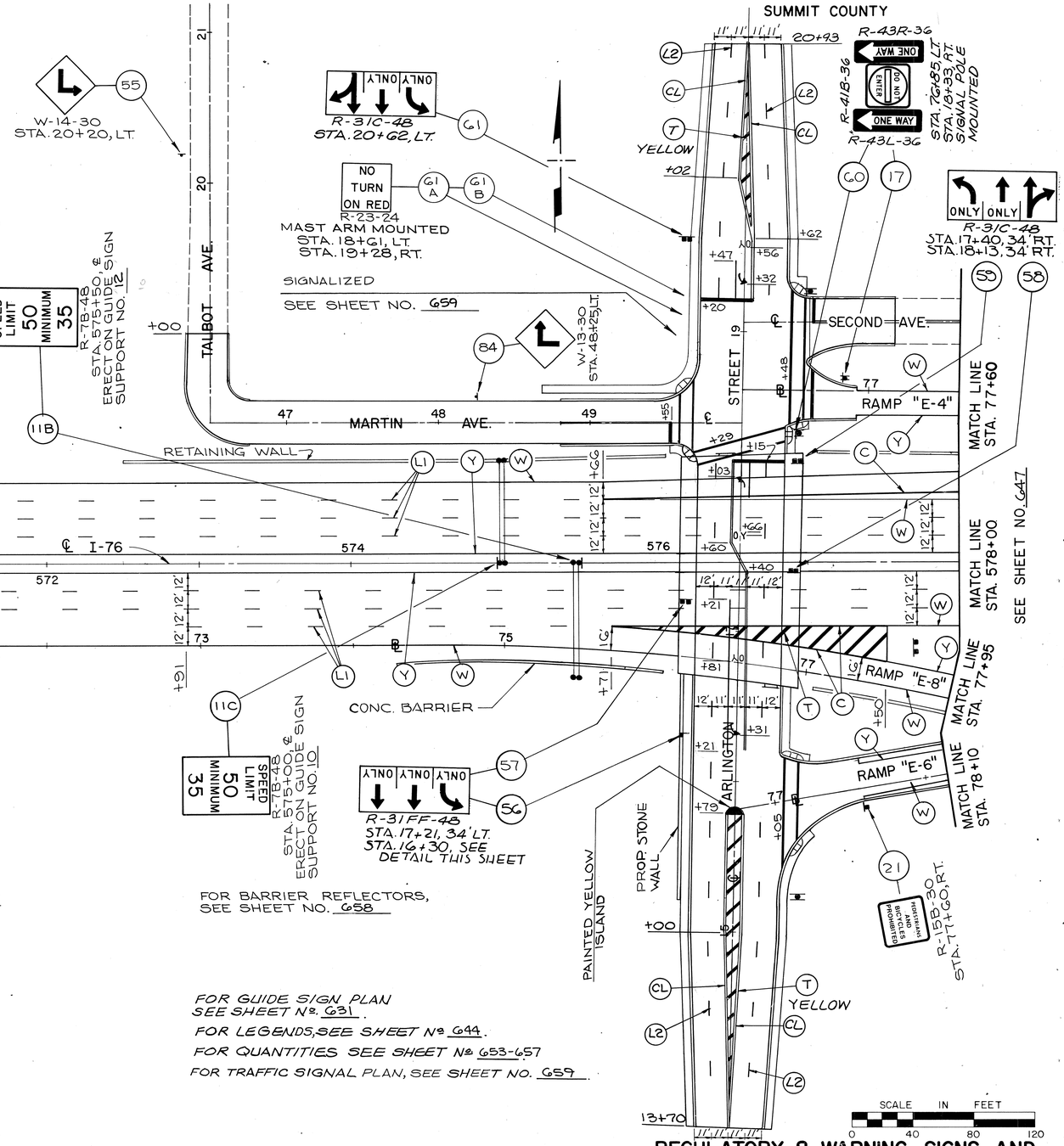

REGULATORY & WARNING SIGNS, AND PAVEMENT MARKING PLAN

AA B, Pg 71942R

CALC. BY. DATE	SUM-76-11.57	OHIO	647
CHKD. BY. DATE	FED. PROJECT IR-76-2(44)19	F.H.W.A. REGION 5	1214

SUMMIT COUNTY

R-41A-36 STA. 78+90, LT & RT.

W-50R-48 STA. 581+40, LT.

W-47-48 STA. 83+00, LT.

CHITTENDEN STREET

SECOND AVENUE

RAMP 'E-4'

RAMP 'E-7'

RAMP 'E-6'

RAMP 'E-8'

RETAINING WALL

RETAINING WALL

RETAINING WALL

STA. 85+03.80 E-4
STA. 85+40.53 E-7

STA. 79+25.25 E-8
STA. 79+43.88 E-6

I-76

MATCH LINE STA. 77+60

MATCH LINE STA. 78+10

MATCH LINE STA. 77+95

SEE SHEET NO. 646

MATCH LINE STA. 578+00

MATCH LINE STA. 90+50

MATCH LINE STA. 590+00

SEE SHEET NO. 648

MATCH LINE STA. 89+70

W-97-48 STA. 78+00, RT.

W-50R-48 STA. 586+25, RT.

W-45A-48 STA. 89+40, RT.

FOR GUIDE SIGN PLAN SEE SHEET Nº 631-632.

FOR DELINEATORS SEE SHEET Nº 658.

FOR QUANTITIES SEE SHEET Nº 653-657

FOR LEGENDS, SEE SHEET Nº 644

SCALE IN FEET
0 40 80 120

REGULATORY & WARNING SIGN, AND PAVEMENT MARKING PLAN

CALC. BY.		SUM-76-11.57	OHIO
CHKD. BY.		FED. PROJECT IR-76-2(44)19	F.H.W.A. REGION 5
DATE			

SUMMIT COUNTY

SEE SHEET NO. 647

MATCH LINE STA. 90+50

MATCH LINE STA. 90+00

MATCH LINE STA. 590+00

MATCH LINE STA. 89+70

RAMP "E-7"

RAMP 'E-4'

RAMP "E-8"

RAMP 'E-8A'

RAMP 'E-8B'

THIRD AVE.

FULLER STREET

CHESSIE SYSTEM

I-76

FIFTH AVE.

WEEKS ST.

MATCH LINE STA. 12+00

MATCH LINE STA. 105+00

MATCH LINE STA. 601+00

SEE SHEET NO. 649

W-7GP-36 STA 24+50 LT.

R-15B-30, LT. STA 54+63

STOP R-1-30 STA. 16+50 LT.

STOP R-1-30 STA. 15+45, RT.

SPEED LIMIT 50 MINIMUM 35 R-7B-48 STA. 55+50 ℄ ERECT ON GUIDE SIGN SUPPORT 18

SPEED LIMIT 50 MINIMUM 35 R-7B-48 STA. 57+50 ℄ ERECT ON GUIDE SIGN SUPPORT NO. 18

STOP R-1-30 STA. 13+00, LT.

STOP R-1-30 STA. 11+80, RT.

R-43L-36 ONE WAY R-43R-36 ONE WAY STA. 100+55, RT.

W-32-48 STA. 10+50, LT.

WRONG WAY R-41A-36 STA. 11+50, LT. & RT.

R-1-48 STOP R-43R-36 ONE WAY R-43L-36 ONE WAY DO NOT ENTER R-41B-36 STA. 13+60, LT. & RT.

WRONG WAY R-41A-36 STA. 94+00, LT. & RT.

W-7GP-36

R-43L-36 ONE WAY R-43R-36 ONE WAY DO NOT ENTER R-41B-36 STA. 95+25, LT. STA. 95+40, RT.

STOP

W-48-30 NO OUTLET STA. 68+75, RT.

FOR GUIDE SIGN PLANS SEE SHEET NO. 632

FOR LEGENDS, SEE SHEET NO. 644

FOR DELINEATORS SEE SHEET NO. 658

FOR QUANTITIES SEE SHEET NO. 653-657

SCALE IN FEET
0 40 80 120

REGULATORY & WARNING SIGN, AND PAVEMENT MARKING PLAN

CALC. BY DATE	SUM-76-11.57	OHIO
CHKD. BY DATE	FED. PROJECT IR-76-2(44)19	FEDERAL REGION 5

649
1214

SUMMIT COUNTY

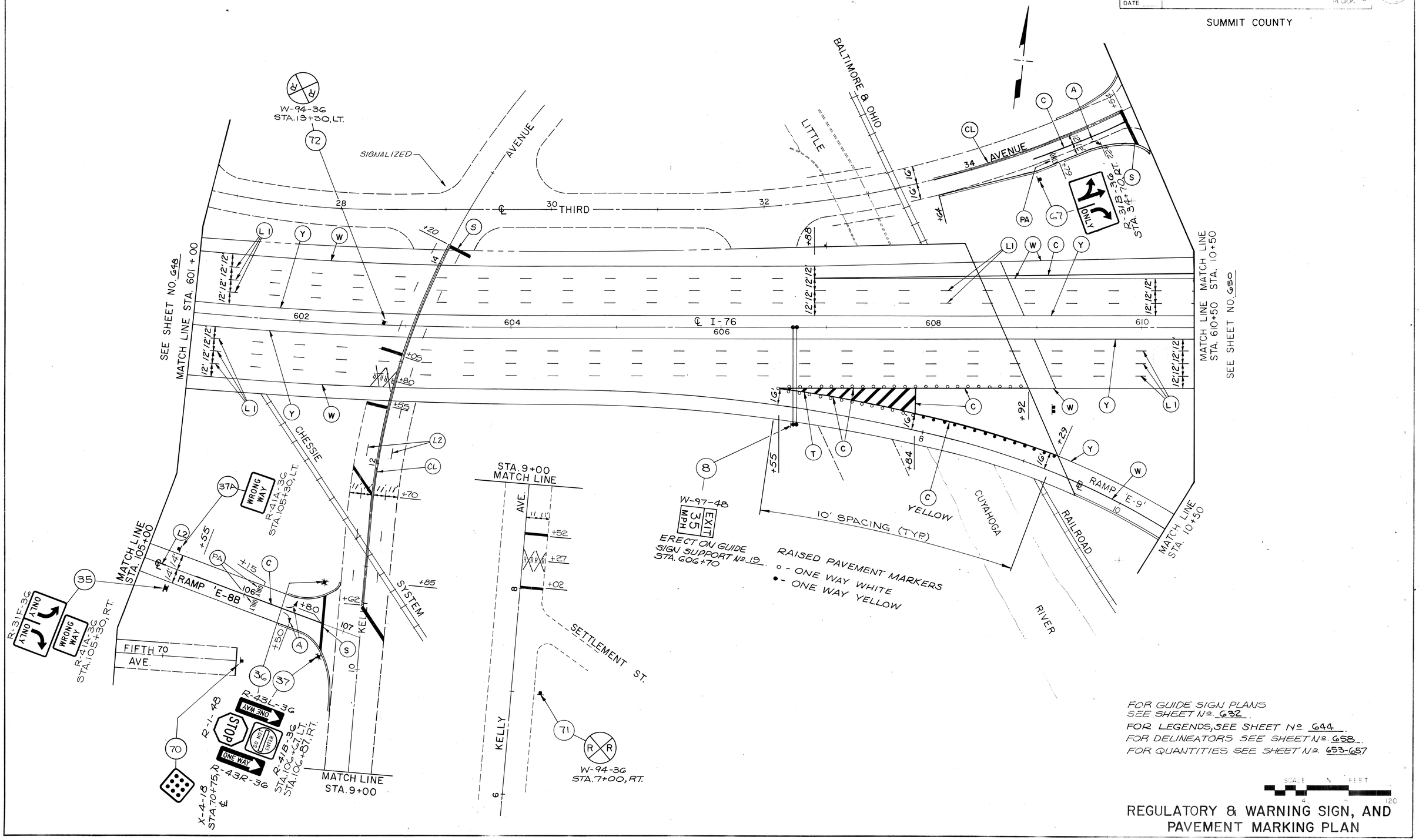

FOR GUIDE SIGN PLANS
SEE SHEET No. 632.
FOR LEGENDS, SEE SHEET No. 644.
FOR DELINEATORS SEE SHEET No. 658.
FOR QUANTITIES SEE SHEET No. 653-657

SCALE IN FEET
0 4 8 120

REGULATORY & WARNING SIGN, AND PAVEMENT MARKING PLAN

AA B/P# 71942R

CALC. BY. DATE	SUM-76-11.57	OHIO
CHKD. BY. DATE	FED. PROJECT IR-76-2(44)19	F.H.W.A. REGION 5

650
1214

SUMMIT COUNTY

MATCH LINE STA. 10+50

SEE SHEET NO. G49

MATCH LINE STA. 610+50

MATCH LINE STA. 10+50

STA. 11+95 LT.

R-3B-36 STA. 9+76, LT.

ONLY

WRONG WAY

R-41A-36 STA. 12+00, LT. & RT.

W-5-36 STA. 9+00, LT.

PAINTED YELLOW ISLAND

YELLOW

RAMP 'E-9'

MARTHA

MATCH LINE STA. 8+00

CONC. BARRIER

RAMP 'E-16'

RAMP 'E-10'

RETAINING WALL 7

I-76

RAMP 'E-12'

RAMP 'E-15'

AVENUE

LEAGUE AVE.

ENGLEWOOD AVE.

MARTHA

MATCH LINE STA. 17+00

MATCH LINE STA. 17+20

MATCH LINE STA. 617+00

SEE SHEET NO. G51

MATCH LINE STA. 16+85

R-15B-30 STA. 12+75, RT.

STA. 18+42, RT. R-3T2-24

KEEP RIGHT

R-15B-30 STA. 18+40, LT.

W-13-36 STA. 17+00, RT.

W-49R-48 STA. 612+60, LT.

W-33-30 STA. 14+00, RT. STA. 14+50, RT. STA. 15+00, RT. STA. 15+50, RT. STA. 16+00, RT. (ANGLE TO DRIVERS EYE)

W-143-24 STA. 16+50, LT.

SIGNALIZED, SEE SHEET NO. G63

R-41B-36

R-43L-36

STA. 9+55, RT.

R-31B-36 STA. 10+25, LT.

R-41A-36 STA. 11+70, LT. MOUNT BACK TO BACK WITH GUIDE SIGN No. 35.

R-31B-36 STA. 12+65, LT.

R-41A-36 STA. 14+20, RT.

R-41A-36

W-47-48 STA. 14+20, LT.

W-2-36

20 MPH

FOR TRAFFIC SIGNAL PLAN SEE SHEET No. G63.

FOR GUIDE SIGN PLANS SEE SHEET No. G33.

FOR DELINEATORS SEE SHEET No. G58.

FOR LEGENDS, SEE SHEET NO. G44.

FOR QUANTITIES SEE SHEET No. G53-G57

SCALE IN FEET

0 40 80 120

REGULATORY & WARNING SIGNS, AND PAVEMENT MARKING PLAN

CALC. BY:		SUM-76-11.57	OHIO
CHKD. BY:		FED. PROJECT IR-76-2(44)19	F.H.W.A. REGION 5

651
1214

SUMMIT COUNTY

MATCH LINE STA. 16+85
SEE SHEET NO. 650

MATCH LINE STA. 617+00

MATCH LINE STA. 17+20

MATCH LINE STA. 17+00

RAMP "E-15"

RAMP "E-16"

RAMP "E-10"

RETAINING WALL

CONC. BARRIER

RETAINING WALL

RETAINING WALL

℄ I-76

620

625

MATCH LINE STA. 629+00
SEE SHEET NO. 652

ENGLEWOOD AVENUE

WIGLEY AVE.

SPEED LIMIT 50 MINIMUM 35
R-7B-48
STA. 622+00, LT.
MOUNT ON GUIDE SIGN
SUPPORT NO. 25

SPEED LIMIT 50 MINIMUM 35
R-7B-48
STA. 622+00, LT.
MOUNT ON GUIDE SIGN
SUPPORT Nº. 25

11E

10

11 W-49R-48 STA. 622+50, RT.

38 R-41A-36 STA. 21+05, LT. — WRONG WAY

39 R-41A-36 STA. 21+05, RT. — WRONG WAY
R-31Z-36 — ONLY

40 R-41B-36 STA. 22+67, LT. — DO NOT ENTER
ONE WAY R-43R-36

41 R-41B-36 STA. 22+65, RT. — DO NOT ENTER
R-43L-36 — ONE WAY
ONE WAY R-43R-36

42 W-32-48 STA. 22+75, LT.

43 W-32-48 STA. 22+85, LT.

76 STOP R-1-30 STA. 9+35, RT.

77 R-38R-24 STA. 30+90, RT.

78 R-1-30 STOP
R-24-24 LEFT TURN ONLY STA. 31+00, LT.

79 W-71-30 STA. 31+70, RT.

81 R-38R-24 STA. 31+95, RT.

FOR GUIDE SIGN PLAN
SEE SHEET NO. 633

FOR DELINEATORS SEE SHEET NO. 658

FOR LEGENDS SEE SHEET NO. 644

FOR QUANTITIES SEE SHEET NO. 653-657

SCALE IN FEET
0 40 80 120

REGULATORY & WARNING SIGN, AND PAVEMENT MARKING PLAN

AA B/P# 71942R

CALC. BY. DATE	SUM-76-11.57	OHIO
CHKD. BY. DATE	FED. PROJECT IR-76-2(44)19	F.H.W.A. REGION 5

652 / 1214

SUMMIT COUNTY

END PROJECT
SUM-76-11.57
STA. 634+00.00
IR-76-2(44)19

FEATHER AREA

END PAVEMENT MARKINGS
STA. 635+25

RETAINING WALL BY OTHERS

SEE SHEET NO. 651
MATCH LINE STA. 629+00

SEIBERLING STREET

RETAINING WALL

ENGLEWOOD AVENUE

SIGNALIZED

NO OUTLET

W-48-30
STA. 36+76, LT.

END PAVEMENT MARKINGS
STA. 637+50

BY OTHERS
SPEED LIMIT
MINIMUM 35
50

R-78-48
STA. 639+25, RT.
ERECT ON GUIDE SIGN

MATCH LINE STA. 48+45

STA. 49+32
END PAVEMENT MARKINGS

FOR TRAFFIC SIGNAL PLAN, SEE SHEET No. 667

FOR GUIDE SIGN PLAN
SEE SHEET No. 633.

FOR LEGENDS, SEE SHEET No. 644.

FOR DELINEATORS SEE SHEET No. 658.

FOR QUANTITIES SEE SHEET No. 653-657

SCALE IN FEET
0 40 80 120

REGULATORY & WARNING SIGN, AND PAVEMENT MARKING PLAN

AA B/P# 71942R

SIGNING QUANTITIES SUB-SUMMARY

CALC. BY. TKI DATE 3/89	SUM-76-11.57	OHIO
CHKD. BY. DSB DATE 4/90		F.H.W.A. REGION 5

653 12/4

REFERENCE NUMBER	REFERENCE LETTER	STATION	OFFSET	ITEM 630 GROUND-MOUNTED SUPPORTS, NO. 2 POST L.F.	GROUND-MOUNTED SUPPORTS, NO. 3 POST L.F.	GROUND-MOUNTED SUPPORTS, NO. 4 POST L.F.		ONE WAY SUPPORTS, NO. 3 POST L.F.	ONE WAY SUPPORTS, NO. 4 POST L.F.		SIGN SUPPORT ASSEMBLY, POLE MOUNTED EACH	SIGN SUPPORT ASSEMBLY, BRIDGE MOUNTED, TYPE 2 EACH		SIGNS, FLAT SHEET TYPE G S.F.	FOR INFORMATION ONLY R-1-48	R-7B-48	R-15B-30	R-41A-36	R-41B-36	R-43L-36	R-43R-36	W-45A-48	W-47-48	W-49R-48	W-50R-48	W-53-48	W-60C-48	W-7GP-36	W-97-48	W-138-36
		I-76																											
1		46+36	RT.			32								16												1			
2		550+00	RT.			32								16													1		
3		556+00	RT.			14.75								9															1
4		553+50	RT.								1			32		1													
5		581+40	LT.			32								16										1	1				
6		586+25	RT.			32								16															
7		597+50	℄								1			32		1												1	
8		606+70	RT.								1			20											1				
9		612+60	LT.			32								16															
10		622+00	℄								1			32		1									1				
11		622+50	RT.			32								16															
11A		26+38	RT.								1			32		1													
11B		575+50	℄								1			32		1													
11C		575+00	℄								1			32		1													
11D		597+50	℄								1			32		1													
11E		622+00	℄								1			32		1													
		RAMP "E-2"																					1						
12		7+85	RT.			32								16			1												
13		10+80	LT.		12.5									6			1												
14		10+80	RT.											6			1												
15		13+06	RT.						29					31		1			1	1	1								
16		13+21	LT.						29					31		1			1	1	1								
		RAMP "E-4"																	1	1	1								
17		76+85	LT.					27						15															
18		78+90	RT.		12.5									6			1												
19		78+90	LT.		12.5									6			1												
20		83+00	LT.			32								16											1				
		RAMP "E-6"															1												
21		77+60	RT.	12										3.75															
		RAMP "E-7"																											
22		94+63	LT.	12										3.75															
		RAMP "E-8"																											
23		78+00	RT.									1		20														1	
24		89+40	RT.								1			16									1						
25		94+00	RT.			14.75								15			1											1	
26		94+00	LT.			14.75								15			1											1	
27		95+25	LT.					27						15					1	1	1								
28		95+40	RT.					27						15					1	1	1								
TOTALS				24	37.5	300.25		81	58		10	1		617.5		28	26	5	5	5			2	1	2	2	1	1	2	2	1

SUB-SUMMARY

AA B/Pw 71942R

SIGNING QUANTITIES SUB-SUMMARY

CALC. BY: TKI DATE 3/89	SUM-76-11.57	OHIO
CHKD. BY: DSB DATE 4/90		F.H.W.A. REGION 5

654 / 1214

REFERENCE NUMBER	REFERENCE LETTER	STATION	OFFSET	ITEM 630 GROUND-MOUNTED SUPPORTS, NO. 2 POST L.F.	GROUND-MOUNTED SUPPORTS, NO. 3 POST L.F.	GROUND-MOUNTED SUPPORTS, NO. 4 POST L.F.		ONE WAY SUPPORTS, NO. 3 POST L.F.	ONE WAY SUPPORTS, NO. 4 POST L.F.			SIGNS, FLAT SHEET, TYPE G S.F.	FOR INFORMATION ONLY R-1-48	R-15B-30	R-31B-36	R-31F-36	R-31Z-36	R-37R-24	R-41A-36	R-41B-36	R-43L-36	R-43R-36			W-2-36	W-13-36	W-32-48	W-33-30	W-47-48	W-143-24		
		RAMP "E-8A"																														
29		10+50	LT.		25							8																1				
30		11+50	LT.		12.5							6							1													
31		11+50	RT.		12.5							6							1													
32		13+60	LT.						29			31	1							1	1	1										
33		13+60	RT.						29			31	1							1	1	1										
		RAMP "E-8B"																														
34		100+55	RT.	11.5								6									1	1										
35		105+30	RT.		26							13.5				1			1													
36		106+67	LT.						29			31	1							1	1	1										
37		106+87	RT.						29			31	1							1	1	1										
37A		105+30	LT.		12.5							6							1													
		RAMP "E-10"																														
38		21+05	LT.		12.5							6							1													
39		21+05	RT.		26							13.5					1		1													
40		22+67	LT.					27				12								1		1										
41		22+65	RT.					27				15								1	1	1										
42		22+75	LT.		25							8																1				
43		22+85	LT.		25							8																1				
		RAMP "E-12"																														
44		14+00 - 16+00	RT.		67.5							37.5																	5			
45		17+00	RT.			14.75						9															1					
46		18+40	LT.	12								3.75		1																		
47		18+42	RT.		13							5						1														
		RAMP "E-15"																														
48		9+55	RT.					27				15									1	1	1									
49		10+25	LT.		26							7.5			1																	
50		11+70	LT.									6							1													
51		12+65	LT.		26							7.5			1																	
52		14+20	LT.			32						22							1											1		
53		16+50	LT.			14.75						13														1					1	
53A		14+20	RT.		12.5							6							1													
		RAMP "E-16"																														
54		12+75	RT.	12								3.75		1																		
		TOTALS		35.5	322	61.5		81	116			368	4	2	2	1	1	1	9	7	7	8			1	1	3	5	1	1		

SUB-SUMMARY

AA B/P# 71942R

SIGNING QUANTITIES SUB-SUMMARY

CALC. BY. ZKL DATE 3/89	SUM-7G-11.57	OHIO
CHKD. BY. DSB DATE 4/90		F.H.W.A. REGION 5

655 12/14

REFERENCE NUMBER	REFERENCE LETTER	STATION	OFFSET	ITEM 630 GROUND-MOUNTED SUPPORTS, NO. 2 POST L.F.	GROUND-MOUNTED SUPPORTS, NO. 3 POST L.F.	GROUND-MOUNTED SUPPORTS, NO. 4 POST L.F.	SIGN SUPPORT ASSEMBLY, POLE MOUNTED EACH	SIGN HANGER ASSEMBLY, MAST ARM EACH	SIGNS, FLAT SHEET, TYPE G S.F.	FOR INFORMATION ONLY R-1-30	R-24-24	R-31B-36	R-31C-48	R-31FF-48	R-31Q-36	R-38R-24	R-41B-36	R-43L-36	R-43R-36	R-23-24	R-41A-36	W-48-30	W-50R-36	W-13-30	W-7GP-36	W-94-36	W-14-30	W-71-30	X-4-18
		TALBOT AVE.																									
55		20+20	LT.		14				6.25																	1		
		ARLINGTON ST.																										
56		16+21	LT.		26				10					1														
57		17+21	LT.		26				10					1														
58		17+40	RT.		26				10				1															
59		18+13	RT.		26				10				1															
60		18+33	RT.				1		15								1	1	1									
61		20+62	LT.		26				10					1														
61	A&B	18+61 19+20	LT. RT.					2	8												2							
		FULLER ST.																										
62		11+80	RT.		13				6.25	1																		
63		13+00	LT.		13				6.25	1																		
64		15+45	RT.		13				6.25	1																		
65		16+50	LT.		13				6.25	1																		
		THIRD AVE.																							1			
66		24+50	LT.			14.75			9																			
67		34+70	RT.		26				7.5			1																
		FIFTH AVE.																										
69		68+75	RT.		14				6.25												1						1	
70		70+75	℄	12.5					2.25																			
		KELLY AVE.																										
71		7+00	RT.			13.5			9																1			
72		13+30	LT.			13.5			9																1			
		MARTHA AVE.																										
73		9+00	LT.			14.75			9														1					
74		11+85	LT.			13			9						1													
75		13+79	LT.			13			9						1													
		WIGLEY AVE.																										
76		9+35	RT.		13				6.25	1																		
		ENGLEWOOD AVE.																										
77		30+95	RT.		13				5							1												
78		31+00	LT.		13				11.25	1	1																	
79		31+70	RT.		13				6.25																		1	
80		36+76	LT.		13				6.25												1							
81		34+34	RT.		13				5							1												
		RAMP "E-9"																										
82		12+00	RT.		12.5				6												1							
83		12+00	LT.		12.5				6												1							
		MARTIN AVE.																										
84		48+25	LT.		14				6.25																		1	
TOTALS				12.5	353	82.5	1	2	232.5	6	1	1	3	2	2	2	1	1	1	2	2	2	1	1	1	2	1	1	1

SUB-SUMMARY

CALC. BY TKI DATE 3/83	SUM-76-11.57	OHIO
CHKD. BY DSB DATE 4/83	FED. PROJECT IR-76-2(44)19	F.H.W.A. REGION 5

656 / 1214

ITEM 621 - EDGE LINES

YELLOW

I-76 WB
23+96 TO 31+51 BASELINE — 755 L.F.

LANE "S"
43+55 TO 46+36 BASELINE — 281 L.F.

I-76 EB
541+50 TO 553+43 BASELINE — 1,193 L.F.

I-76
553+43 TO 635+25 LT & RT (8,182 X 2) — 16,364 L.F.

RAMP "E-4"
76+92 TO 94+00 RT — 1,708 L.F.

RAMP "E-6"
77+60 TO 88+74 LT — 1,114 L.F.

RAMP "E-7"
80+98 TO 95+35 RT — 1,437 L.F.

RAMP "E-8"
77+50 TO 95+20 LT & BASELINE — 1,770 L.F.

RAMP "E-8A"
9+95 TO 13+45 LT — 350 L.F.

RAMP "E-9"
9+29 TO 14+35 LT — 506 L.F.

RAMP "E-10"
13+32 TO 19+83 LT — 651 L.F.

RAMP "E-12"
12+09 TO 18+42 RT — 633 L.F.

RAMP "E-15"
9+61 TO 20+41 RT — 1,080 L.F.

RAMP "E-16"
13+32 TO 24+51 LT — 1,119 L.F.

SUBTOTAL — 28,961 L.F.

WHITE

I-76 WB
24+59 TO 31+51 LT — 692 L.F.

LANE "S"
43+55 TO 46+36 RT — 281 L.F.

I-76 EB
541+50 TO 547+07 RT — 557 L.F.
546+42 TO 553+43 RT — 701 L.F.

I-76
553+43 TO 634+00 LT & RT (8,057 X 2) — 16,114 L.F.
575+66 TO 580+86 LT — 520 L.F.
588+74 TO 593+94 RT — 520 L.F.
606+88 TO 612+09 LT — 521 L.F.
624+51 TO 625+78 RT — 127 L.F.
634+00 TO 637+50 RT — 350 L.F.

RAMP "E-2"
5+95 TO 10+90 BASELINE — 495 L.F.

RAMP "E-4"
76+92 TO 94+00 BASELINE — 1,708 L.F.

RAMP "E-6"
77+60 TO 88+74 BASELINE — 1,114 L.F.

RAMP "E-7"
80+98 TO 94+73 BASELINE — 1,375 L.F.

RAMP "E-8"
77+50 TO 95+20 BASELINE & RT — 1,790 L.F.

RAMP "E-8A"
9+95 TO 13+30 BASELINE — 335 L.F.

RAMP "E-9"
7+84 TO 14+35 BASELINE — 651 L.F.

MARTHA AVENUE
5+09 TO 8+79 LT — 370 L.F.
7+79 TO 8+79 LT — 100 L.F.

RAMP "E-10"
13+32 TO 19+83 BASELINE & RT — 651 L.F.

RAMP "E-12"
12+09 TO 17+95 BASELINE — 586 L.F.

RAMP "E-15"
9+90 TO 20+41 BASELINE — 1,051 L.F.

RAMP "E-16"
13+32 TO 24+51 BASELINE — 1,119 L.F.

SUBTOTAL — 31,728 L.F.

TOTAL ITEM 621 - EDGE LINES
60,689 L.F./5,280 = 11.49 MILE

ITEM 621 - LANE LINES, 4-INCH

ARLINGTON STREET
13+70 TO 20+92 LT & RT (722 X 2) — 1,444 L.F.

RAMP "E-8"
94+00 TO 95+70 RT — 170 L.F.

RAMP "E-8B"
100+35 TO 105+55 CENTERLINE — 520 L.F.

KELLY AVENUE
10+85 TO 14+20 LT & RT (335 X 2) — 670 L.F.

MARTHA AVENUE
7+00 TO 7+79 LT — 79 L.F.
7+79 TO 17+47 RT — 968 L.F.
13+79 TO 17+47 LT — 368 L.F.

SUBTOTAL — 4,219 L.F.

TOTAL ITEM 621 - LANE LINES, 4-INCH
4,219 L.F./5,280 = 0.80 MILES

ITEM 621 - LANE LINES, 6-INCH

I-76 WB
23+96 TO 31+51 LT — 755 L.F.

I-76 EB
541+50 TO 546+00 RT — 450 L.F.
546+00 TO 548+31 RT (231 X 2) — 462 L.F.
548+31 TO 553+43 RT (512 X 3) — 1,536 L.F.

I-76
553+43 TO 556+87 LT — 344 L.F.
556+87 TO 562+25 LT (538 X 2) — 1,076 L.F.
562+25 TO 575+66 LT (1,341 X 3) — 4,023 L.F.
575+66 TO 598+90 LT (2,324 X 2) — 4,648 L.F.
598+90 TO 606+88 LT (798 X 3) — 2,394 L.F.
606+88 TO 622+31 LT (1,543 X 2) — 3,086 L.F.
622+31 TO 633+30 LT (1,099 X 3) — 3,297 L.F.
633+30 TO 634+00 LT (70 X 2) — 140 L.F.
553+43 TO 553+80 RT (37 X 3) — 111 L.F.
553+80 TO 572+91 RT (1,911 X 2) — 3,822 L.F.
572+91 TO 575+71 RT (280 X 3) — 840 L.F.
575+71 TO 593+94 RT (1,823 X 2) — 3,646 L.F.
593+94 TO 611+54 RT (1,760 X 3) — 5,280 L.F.
611+54 TO 625+78 RT (1,424 X 2) — 2,848 L.F.
625+78 TO 628+22 RT (244 X 3) — 732 L.F.
628+22 TO 634+00 RT (578 X 2) — 1,156 L.F.
634+00 TO 635+25 LT & RT (125 X 2) — 250 L.F.

RAMP "E-15"
10+91 TO 12+65 RT — 174 L.F.

SUBTOTAL — 41,070 L.F.

TOTAL ITEM 621 - LANE LINES, 6-INCH
41,070 L.F./5,280 = 7.78 MILE

ITEM 621 - CENTER LINES, DOUBLE YELLOW

INMAN STREET
10+95 TO 13+50 CENTERLINE — 255 L.F.

ARLINGTON STREET
13+70 TO 15+79 LT & RT (209 X 2) — 418 L.F.
16+21 TO 18+13 LT & RT — 192 L.F.
19+22 TO 19+62 — 40 L.F.
19+62 TO 20+92 LT & RT (130 X 2) — 260 L.F.

FULLER STREET
11+40 TO 16+90 — 550 L.F.

KELLY AVENUE
10+62 TO 14+20 CENTERLINE — 358 L.F.

THIRD AVENUE
33+64 TO 35+54 CENTERLINE — 190 L.F.

SECOND AVE.
20+46 TO 21+46 CENTERLINE — 100 L.F.

MARTHA AVENUE
7+79 TO 17+47 CENTERLINE — 968 L.F.

ENGLEWOOD AVENUE
SEE SHEET NO. 34 — 115 L.F.
31+70 TO 49+32 RT — 1,762 L.F.

SEIBERLING STREET
10+41 TO 12+50 CENTERLINE — 209 L.F.

SUBTOTAL — 5,417 L.F.

TOTAL ITEM 621 - CENTER LINES
5,417 L.F./5,280 = 1.03 MILES

ITEM 621 - CHANNELIZING LINES

I-76 WB
23+96 TO 31+51 LT — 755 L.F.
24+59 TO 26+60 LT — 201 L.F.

LANE "S"
43+55 TO 46+36 RT — 281 L.F.
43+55 TO 44+82 RT — 127 L.F.

I-76 EB
46+36 TO 548+31 RT — 197 L.F.
547+07 TO 548+31 RT — 124 L.F.

I-76
553+43 TO 556+87 LT — 344 L.F.
557+55 TO 560+30 LT — 275 L.F.
557+55 TO 562+25 LT — 470 L.F.
575+66 TO 580+86 LT — 520 L.F.
575+71 TO 577+50 RT (179 X 2) — 358 L.F.
588+74 TO 593+94 RT — 520 L.F.
594+00 TO 597+90 LT (390 X 2) — 780 L.F.
606+55 TO 608+92 RT — 237 L.F.
606+55 TO 9+29 RT — 275 L.F.
607+84 RT — 24 L.F.
606+88 TO 612+09 LT — 521 L.F.
611+54 TO 613+32 RT (178 X 2) — 356 L.F.
620+41 TO 622+31 LT (190 X 2) — 380 L.F.
624+51 TO 625+78 RT — 127 L.F.
597+90 TO 599+90 — 200 L.F.

ARLINGTON STREET
16+21 TO 17+21 LT — 100 L.F.
17+88 TO 18+13 RT — 25 L.F.
19+22 TO 19+47 LT — 25 L.F.

RAMP "E-8"
89+36 TO 90+00 RT (64 X 2) — 128 L.F.

RAMP "E-8B"
105+55 TO 106+80 CENTERLINE — 125 L.F.

THIRD AVENUE
34+70 TO 35+52 RT — 82 L.F.

MARTHA AVENUE
7+79 TO 8+79 LT — 100 L.F.
11+79 TO 13+79 LT — 200 L.F.

RAMP "E-10"
21+05 TO 22+65 BASELINE — 160 L.F.

RAMP "E-15"
9+61 TO 11+00 RT — 139 L.F.

SUBTOTAL — 8,156 L.F.

TOTAL ITEM 621 - CHANNELIZING LINES
8,156 L.F.

ITEM 621 - STOP LINES

RAMP "E-2"
13+13 — 35 L.F.

RAMP "E-4"
76+62 — 35 L.F.

RAMP "E-8A"
13+60 — 44 L.F.

RAMP "E-8B"
106+80 — 48 L.F.

RAMP "E-15"
9+61 — 31 L.F.

ARLINGTON STREET
18+15 — 34 L.F.
19+20 — 34 L.F.

MARTIN AVENUE
49+55 — 15 L.F.

MARTHA AVENUE
15+87 — 41 L.F.
16+89 — 25 L.F.

SECOND AVENUE
20+45 — 15 L.F.

FULLER STREET
11+90 — 21 L.F.
12+93 — 29 L.F.
15+47 — 24 L.F.
16+40 — 25 L.F.

KELLY AVENUE
14+20 — 22 L.F.

THIRD AVENUE
35+54 — 35 L.F.

WIGLEY AVENUE
9+35 — 15 L.F.

ENGLEWOOD AVENUE
31+00 — 20 L.F.
36+92 — 18 L.F.
37+66 — 16 L.F.

SEIBERLING STREET
9+57 — 22 L.F.
10+42 — 22 L.F.

SUBTOTAL — 626 L.F.

TOTAL ITEM 621 - STOP LINES
626 L.F.

ITEM 621 - CROSSWALK LINES

ARLINGTON STREET
18+29 — 123 L.F.

MARTIN AVENUE
49+59 — 89 L.F.

RAMP "E-4" AND SECOND AVENUE
76+48 — 163 L.F.

RAMP "E-7"
95+54 — 72 L.F.

RAMP "E-8B"
100+23 — 102 L.F.

FULLER STREET
12+05 — 112 L.F.
12+81 — 105 L.F.
15+61 — 80 L.F.
16+25 — 90 L.F.

THIRD AVENUE
21+63 — 118 L.F.

MARTHA AVENUE
16+75 — 128 L.F.

RAMPS "E-12" AND "E-15"
9+45 — 153 L.F.

ENGLEWOOD AVENUE
37+05 — 103 L.F.
37+53 — 68 L.F.

SEIBERLING STREET
9+74 — 87 L.F.

RAMP "E-6"
77+05 — 124 L.F.

SUBTOTAL — 1,717 L.F.

TOTAL ITEM 621 - CROSSWALK LINES
1,717 L.F.

PAVEMENT MARKING SUB-SUMMARY

CALC. BY. TKL DATE 3/89	SUM-76-11.57	OHIO	657 1214
CHKD. BY. DSB DATE 4/90	FED. PROJECT IR-76-2(44)19	F.H.W.A. REGION 5	

ITEM 621 - TRANSVERSE LINES

I-76 WB		
24+59 TO 26+60		247 L.F.
I-76		
557+55 TO 560+30		200 L.F.
575+71 TO 577+50		181 L.F.
594+00 TO 598+90		473 L.F.
606+55 TO 607+84		141 L.F.
611+54 TO 613+32		183 L.F.
620+41 TO 622+31		194 L.F.
ARLINGTON STREET		
13+70 TO 15+79		135 L.F.
19+62 TO 20+92		40 L.F.
MARTHA AVENUE		
10+00 TO 11+20		40 L.F.
	SUBTOTAL	1,834 L.F.

TOTAL ITEM 621 - TRANSVERSE LINES
1,834 L.F.

ITEM 621 - ISLAND MARKING

ARLINGTON STREET		
15+79		190 S.F.
MARTHA AVENUE		
11+20		190 S.F.
	SUBTOTAL	380 S.F.

TOTAL ITEM 621 - ISLAND MARKING
380 S.F.

ITEM 621 - RAILROAD SYMBOL MARKINGS

KELLY AVENUE		
8+27		2 EACH
12+80		2 EACH
	SUBTOTAL	4 EACH

TOTAL ITEM 621 - RAILROAD SYMBOL MARKINGS
4 EACH

ITEM 621 - LANE ARROWS

ARLINGTON STREET		
16+31		1 EACH
18+03		1 EACH
19+32		1 EACH
THIRD AVENUE		
35+22		1 EACH
MARTHA AVENUE		
12+09		1 EACH
13+09		1 EACH
RAMP "E-10"		
21+37		1 EACH
22+37		1 EACH
RAMP "E-15"		
9+91		1 EACH
10+91		1 EACH
RAMP "E-88"		
106+50		2 EACH
	SUBTOTAL	12 EACH

TOTAL ITEM 621 - LANE ARROWS
12 EACH

ITEM 621 - WORD ON PAVEMENT, 72-INCH

ARLINGTON STREET		
16+81		1 EACH
17+66		1 EACH
19+56		1 EACH
THIRD AVENUE		
34+79		1 EACH
MARTHA AVENUE		
12+59		1 EACH
RAMP "E-10"		
21+87		1 EACH
RAMP "E-15"		
10+41		1 EACH
RAMP "E-88"		
106+15		2 EACH
	SUBTOTAL	9 EACH

TOTAL ITEM 621 - WORD ON PAVEMENT, 72-INCH
9 EACH

ITEM 621 - CURB MARKING

YELLOW

RAMP "E-2"		
5+95 TO 13+18 LT		723 L.F.

WHITE

RAMP "E-2"		
10+95 TO 12+95 BASELINE		200 L.F.
	SUBTOTAL	923 L.F.

TOTAL ITEM 621 - CURB MARKING
923 L.F.

PAVEMENT MARKING SUB-SUMMARY

AA B/P# 71942R

CALC. BY TKI DATE 2/89	SUM-76-11.57	OHIO
CHKD. BY DSB DATE 4/90	FED. PROJECT IR-76-2(44)19	F.H.W.A. REGION 5

658
1214

ITEM 620 - DELINEATORS

LOCATION	SIDE	SPACING	FLEXIBLE POST MOUNTED TYPE	
			C	D
RAMP "E-2"				
12+20	RT.	—	1	
RAMP "E-4"				
77+30 TO 83+30	LT.	200'	4	
87+30 TO 93+30	LT.	200'	4	
RAMP "E-6"				
78+50 TO 86+50	LT.	200'		5
86+50 TO 88+50	RT.	200'	2	
RAMP "E-7"				
82+50 TO 84+50	RT.	200'		2
86+30 TO 87+50	LT.	60'	3	
88+70 TO 90+70	LT.	200'	2	
90+70 TO 94+70	RT.	200'		3
RAMP "E-8"				
86+10	RT.	—	1	
90+65	LT.	—		1
90+65 TO 94+65	RT.	200'	3	
RAMP "E-8A"				
10+25	RT.	—	1	
10+25 TO 11+75	LT.	50'		4
12+75	LT.	—		1
RAMP "E-9"				
9+60 TO 13+60	LT.	80'		6
13+60 TO 15+20	RT.	160'	2	
RAMP "E-10"				
13+70	LT.	—		1
RAMP "E-12"				
14+50 TO 15+00	LT.	50'		2
15+00	RT.	—	1	
RAMP "E-15"				
13+00	LT.	—	1	
RAMP "E-16"				
18+00	RT.	—	1	
22+90	LT.	—		1
		TOTAL	26	26

ITEM 802 - BARRIER REFLECTOR

LOCATION	SIDE	SPACING	TYPE A		TYPE B	
			W	Y	W	Y
I-76 WB						
260+00 TO 311+00	LT.	100'	5		1	
260+00 TO 311+00	RT.	100'		2		4
I-76 EB						
548+00 TO 553+00	LT.	100'				6
548+00 TO 553+00	RT.	100'	5		1	
I-76						
554+00 TO 634+00	MEDIAN	100'				162
554+00 TO 556+75	LT.	100'	4			
558+20 TO 566+20	LT.	100'	2		7	
572+50 TO 580+50	LT.	100'			9	
585+50 TO 590+50	LT.	100'	6			
594+30 TO 612+30	LT.	100'			19	
621+00 TO 634+00	LT.	100'	5		9	
554+00 TO 555+00	RT.	100'	2			
558+30 TO 569+30	RT.	100'			12	
573+30 TO 577+30	RT.	100'			5	
578+80 TO 582+80	RT.	100'	5			
592+25 TO 607+25	RT.	100'	8		8	
609+70 TO 612+70	RT.	100'	2		2	
615+00 TO 619+00	RT.	100'	5			
625+00 TO 634+00	RT.	100'			10	
RAMP "E-2"						
6+20 TO 10+20	RT.	100'	5			
RAMP "E-4"						
84+30 TO 86+00	LT./RT.	100'			3	3
RAMP "E-6"						
77+50 TO 78+50	RT.	100'	2			
RAMP "E-7"						
81+50 TO 85+50	LT.	100'			5	
84+50 TO 87+50	RT.	100'				4
RAMP "E-8"						
78+05 TO 82+05	LT.	100'		1		4
78+30 TO 84+30	RT.	100'	5		2	
87+90 TO 89+65	LT./RT.	87.5'	3	3		
RAMP "E-9"						
8+25 TO 11+00	RT.	70'			5	
RAMP "E-10"						
13+70 TO 18+70	RT.	100'	4		2	
14+70 TO 18+70	LT.	100'				5
RAMP "E-15"						
12+00 TO 20+00	LT.	100'	9			
RAMP "E-16"						
12+90 TO 21+90	LT.	100'		1		9
13+65 TO 16+65	RT.	100'	2		2	
		TOTAL	79	7	102	197

ITEM 862 - RAISED PAVEMENT MARKER

LOCATION	SIDE	SPACING	W	Y
I-76				
606+55 TO 608+85	RT.	10'	24	
606+62 TO 607+82	RT.	10'	13	
RAMP "E-9"				
7+95 TO 9+25	LT.	10'		14
		TOTAL	37	14

DELINEATORS, BARRIER REFLECTORS, AND RAISED PAVEMENT MARKER QUANTITIES

AA B/Pw 71942R

CALC. BY. ____ DATE ____
CHKD. BY. ____ DATE ____
FED

659
1214

LEGEND

- (SP) SIGNAL POLE WITH MAST ARM
- (R) - EXISTING SIGNAL POLE TO BE REMOVED
- (C) CONTROLLER
- (P) PEDESTAL
- (PB) PULL BOX
- (2) VEHICULAR SIGNAL AND REFERENCE NUMBER
- (2) VEHICULAR SIGNAL WITH TURN ARROW AND REFERENCE NUMBER
- (12) PEDESTRIAN SIGNAL AND REFERENCE NUMBER
- L2 LOOP DETECTOR AND REFERENCE NUMBER
- 3"C.-2 3" CONDUIT, 713.07, TYPE "DB", CONCRETE ENCASED

394 / 52 / 446

408 → 494 → 450 / 44 → 20 / 86 / 106 ; 37 / 14 / 51

1990 D.D.H.V.

FOR STANDOFF AND CONDUIT RISER DETAILS, SEE SHEET NO. 671

(8) - POWER SERVICE POLE STA. 18+72, 43' LT. GALV. STEEL CONDUIT RISER TO EXTEND TO WITHIN 6" OF 120 VOLT SECONDARY

R / Y / G — 12" — 1-10

A-2 TYPE: DONT WALK / WALK — 4½" — 11-16

SIGNALS 7,8,9 AND 10 SHALL BE OPTICALLY PROGRAMMED *

SIGNAL FACES

(PB 1) PULL BOX, 24", WITH GROUND ROD STA. 18+63, 46' LT.

(C 1) STA. 18+73, 48' LT. CONTROLLER, PEDESTAL MTD. WITH CONC. WORK PAD

(SP 1) SIGNAL POLE STA. 18+76, 39' LT.

(SP 2) SIGNAL POLE STA. 19+05, 37' LT.

(PB 7) PULL BOX, 18" WITH GROUND ROD STA. 19+70, 30' LT. DRIVEWAY

(PB 2) PULL BOX, 18" STA. 18+23, 41' LT.

(P 1) PEDESTAL, 8' STA. 18+19, 43' LT.

(PB 6) PULL BOX, 18" WITH GROUND ROD STA. 18+10, 31' LT.

STANDOFF AND 2" STEEL CONDUIT RISER WITH SPLICE BOX AT TOP, ATTACHED TO FACE OF ABUTMENT. STA. 18+10, LT.

AERIAL INTERCONNECT TO CONTROLLER AT FIFTH AVE. SEE DETAIL THIS SHEET

APPROXIMATE LOCATION OF RELOCATED UTILITY POLES

2" STEEL CONDUIT RISER WITH SPLICE BOX

APPROXIMATE LOCATION OF RELOCATED UTILITY POLES

AERIAL INTERCONNECT TO CONTROLLER AT JOHNSTON ST. SEE DETAIL THIS SHEET

MEET EXISTING STA. 20+92.60

MARTIN AVE.

LA/R/W

R/W

BRIDGE LIMITS

FACE OF EX. ABUTMENT

2"C. 713.04

UTILITY POLE

ARLINGTON ST. STA. 15+00

FOR CONTINUATION OF PAVEMENT MARKINGS SEE SHEET 646

STANDOFF STA. 16+75, LT.

STANDOFF STA. 17+43, LT.

ONLY

(37) GUIDE SIGNS

(38) BRIDGE MOUNTED GUIDE SIGN

(39) BRIDGE MOUNTED GUIDE SIGN

RAMP E-6

STA. 78+00

FACE OF EX. ABUTMENT

PULL BOX, 18" STA. 18+23, 37' RT. (PB 3)

SIGNAL POLE STA. 18+31, 36.5' RT. (SP 3)

PULL BOX, 18" STA. 18+39, 48' RT. (PB 4)

(40) SIGNAL POLE MOUNTED GUIDE SIGNS, SEE SHEET NO. 637

(SP 4) SIGNAL POLE STA. 19+28, 42' RT.

(PB 5) PULL BOX, 18" STA. 19+26, 48' RT.

RAMP E-4

STA. 77+50

SECOND AVE.

100'

NOTE: ALL 3" CONDUIT SHALL BE 713.07, TYPE "DB", CONCRETE ENCASED.

CONDUIT BETWEEN THE CURB AND PULL BOX FOR LOOP DETECTOR WIRE, SHALL BE A MINIMUM OF 1-INCH

* - OPTICALLY PROGRAMMED SIGNAL HEADS 7, 8, 9, AND 10 SHALL BE MASKED SO THAT INDICATIONS IN HEADS 7 AND 8 ARE NOT VISIBLE FROM SECOND AVE., AND INDICATIONS FROM HEADS 9 AND 10 ARE NOT VISIBLE FROM RAMP "E-4".

SP-1 ARM "A" — 30' (1' / 10' / 3' / 16')

SP-1 ARM "B" — 34' (1' / 11' / 22')

SP-2 — 15' (4' / 10' / 1')

SP-3 — 15' (1' / 11' / 3')

SP-4 — 37' (1' / 11' / 3' / 22')

PEDESTRIAN PUSHBUTTON SIGNS SHALL BE R-73C-9

(A) NO TURN ON RED R-23-24 MAST ARM MOUNTED

CONTRACTOR SHALL TERMINATE INTEGRAL MESSENGER WIRE AT NEW SPLICE BOX ON EXIST. POLE. CITY OF AKRON FORCES WILL MAKE SPLICE AND CONTINUE INTERCONNECT CABLE TO EXIST. CONTROLLER.

ARLINGTON ST. — FIFTH AVE. — JOHNSTON ST. — 9 CASE — ARLINGTON ST.

INTERCONNECT DETAIL

FOR DETECTOR, DISPLAY, POLE, AND TIMING CHARTS, SEE SHEET NO. 660

FOR WIRING DIAGRAM SEE SHEET NO. 661

FOR QUANTITIES SEE SHEET NO. 662

FOR PAVEMENT MARKINGS, AND REGULATORY AND WARNING SIGNS SEE SHEET NO. 646

FOR GUIDE SIGN PLANS SEE SHEET NO. 631

SCALE 0 20 40 60

ARLINGTON ST. AT RAMP E-4

TRAFFIC SIGNAL PLAN

AA B/P# 71962R

CALC. BY. IKL DATE 3/89	SUM-76-11.57	OHIO	660 12/14
CHKD. BY. DSB DATE 4/90	FED. PROJECT IR-76-2(44)19	F.H.W.A. REGION 5	

SUMMIT COUNTY

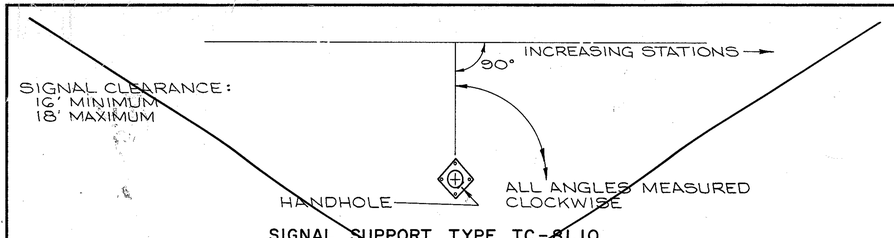

SIGNAL SUPPORT TYPE TC-81.10

POLE NO.	DESIGN NO.	POLE HEIGHT (FT.)	FOUNDATION ELEVATION	GROUND AT FDN. ELEVATION	MESSENGER WIRE ATTACH. HEIGHT	ANGLES (DEG.) HANDHOLE	MESSENGER WIRE	CONTROLLER	POWER SERVICE	CABLE ENTRANCE (12" FROM TOP)	PEDESTRIAN SIGNAL	PEDESTRIAN PUSHBUTTON	PEDESTRIAN SIGNAL	PEDESTRIAN PUSHBUTTON	LUMINAIRE BRACKET

TRAFFIC SIGNAL DETECTORS

DETECTOR	SIZE	Nº OF TURNS	PULSE OR PRESENCE	CALLING RELAY	DELAY OR EXTENSION (SEC.)	DET. UNIT Nº	PHASE	
L1	6'x20'	2	PRESENCE				3+7	
L2	6'x20'	2	PRESENCE				8	
L3	6'x26'	2	PRESENCE				3+7	

DISPLAY CHART

PHASE	2+6				3+7				8				PREEMPTION				
DISPLAY	R/W	C1	C2		R/W	C1	C2		R/W	C1	C2						FLASH
SIGNAL 1,2,3,4	G	Y	R		R	R	R		R	R	R		R				Y
5,6,7,8	R	R	R		G	Y	R		R	R	R		R				R
9,10	R	R	R		R	R	R		G	Y	R		R				R
11,12,13,14	W	FDW	DW		DW	DW	DW		DW	DW	DW		DW				OFF
15,16	DW	DW	DW		W	FDW	DW		DW	DW	DW		DW				OFF
EMERGENCY PREEMPTION CLEARANCE (SEC.)		3				3				3							

PHASING DIAGRAM

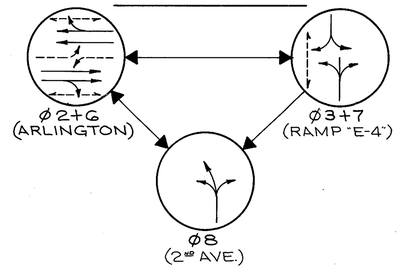

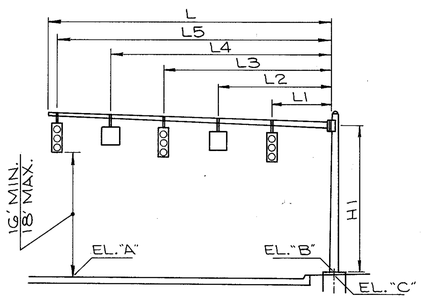

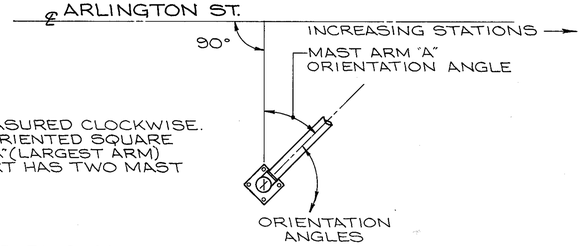

NOTES:
1. ALL ANGLES MEASURED CLOCKWISE.
2. BASE PLATE IS ORIENTED SQUARE TO MAST ARM "A" (LARGEST ARM) EVEN IF SUPPORT HAS TWO MAST ARMS.

SIGNAL SUPPORT TYPE TC-81.20

ARM	POLE NO.	POLE DESIGN NO.	ARM DESIGN NO.	POLE HEIGHT (FT.)	H1	L	L1	L2	L3	L4	L5	ELEVATIONS "A"	"B"	"C"	ARM "A" ANGLE MAST ARM "A" (DEG.)	ANGLES (DEG.) CLOCKWISE FROM ARM "A" HANDHOLE	CONTROLLER	POWER SERVICE	CABLE ENTRANCE (12" FROM TOP)	PEDESTRIAN SIGNAL *	PEDESTRIAN PUSHBUTTON	PEDESTRIAN SIGNAL *	PEDESTRIAN PUSHBUTTON	LUMINAIRE BRACKET	MAST ARM "B"
"A"	SP-1	4	2	23	21.5'	30'	—	16'	19'	—	29'	1071.50	1071.54	1071.54	90	90	—	—	—	90	—	—	—	—	—
"B"			3		20'	34'	—	—	22'	—	33'	1071.10													270
"A"	SP-2	1	1	22	20.5'	15'	—	—	4'	—	14'	1071.93	1071.71	1071.71	270	180	—	—	—	—	—	—	—	90	—
"A"	SP-3	1	1	21	19.5	15'	—	—	3'	—	14'	1070.15	1070.90	1070.90	90	180	—	—	—	90	—	180	270	—	—
"A"	SP-4	4	4	23	21'	37'	—	22'	25'	—	36'	1071.84	1071.42	1071.42	0	180	—	—	—	180	0	—	—	—	—

*- ANGLES GIVEN ARE FOR PEDESTRIAN SIGNAL MOUNTING BRACKETS. AIMING OF PEDESTRIAN SIGNALS SHALL BE AS SHOWN ON THE PLANS.

ALL PEDESTRIAN SIGNAL HEAD BRACKET ARMS SHALL BE ATTACHED TO SIGNAL POLES AS PER NOTE 46. ON STANDARD DRAWING TC-85.10

SIGNAL POLE SP-3 SHALL HAVE A MOUNTING BRACKET FOR EACH PEDESTRIAN SIGNAL HEAD.

TIMING CHART

INTERVAL OR FEATURE		NEMA PHASE NO. 1	2	3	4	5	6	7	8
INTERSECTION MOVEMENT			NB	WB			SB	EB	WB 2ND AVE.
MINIMUM GREEN (INITIAL) (SEC.)			25	6			25	6	6
ADDED INITIAL (SEC.)									
PASSAGE TIME (PRESET GAP) (SEC.)				3				3	3
TIME BEFORE REDUCTION (SEC.)									
MINIMUM GAP (SEC.)									
TIME TO REDUCE (SEC.)									
MAXIMUM GREEN I (SEC.)			HOLD	15			HOLD	15	10
MAXIMUM GREEN II (SEC.)									
YELLOW CHANGE (SEC.)			3	3			3	3	3
ALL RED CLEARANCE (SEC.)			2	2			2	2	2
WALK (SEC.)			13	7			13	7	0
PEDESTRIAN CLEARANCE (SEC.)			14	12			14	12	0
RECALL	MAXIMUM (ON/OFF)		ON	OFF			ON	OFF	OFF
	MINIMUM (ON/OFF)								OFF
	PEDESTRIAN (ON/OFF)		ON				ON		OFF
MEMORY (ON/OFF)				ON				ON	ON
CALL TO NON-ACTUATED	Nº 1								
	Nº 2								

80 SEC. BACKGROUND CYCLE.

ARLINGTON ST. AT RAMP "E-4"

PHASING, TIMING, DETECTORS, AND POLE CHART DETAILS

AA B/P# 71942R

CALC. BY. DATE	SUM-76-11.57	OHIO
CHKD. BY. DATE	FED. PROJECT IR-76-2(44)19	F.H.W.A. REGION 5

SUMMIT COUNTY

6G1 12/4

P 1 PEDESTAL, 8'

PB

11

15

L1

MARTIN AVE.

GROUND ROD FOR GALV. STEEL CONDUIT

2" GALV. STEEL CONDUIT RISER

CONTROLLER C-1

I/C

E

OHIO EDISON CO. POWER SERVICE POLE

2" GALV. STEEL CONDUIT

GROUND ROD FOR GALV. STEEL CONDUIT

2" GALV. STEEL CONDUIT AND 2" GALV. STEEL CONDUIT RISER

PULL BOX, 24" PB 1

PB 7 PULL BOX, 18"

SPLICE BOX

AERIALLY TO CONTROLLER AT FIFTH AVE.

SPLICE BOX

2" GALV. STEEL CONDUIT AND 2" GALV. STEEL CONDUIT RISER

PB 2 PULL BOX, 18"

GROUND ROD FOR GALV. STEEL CONDUIT

PULL BOX, 18" PB 6

SIGNAL POLE SP 2

AERIALLY TO CONTROLLER AT JOHNSTON ST.

OHIO EDISON CO. UTILITY POLE

SIGNAL POLE SP 1

7 8 12 4 3

OPTICALLY PROGRAMMED

9 10

OPTICALLY PROGRAMMED

ARLINGTON STREET

1 2

16 PB 5 6

14

PB 3 PULL BOX, 18"

SIGNAL POLE SP 3

13

RAMP "E-4"

SIGNAL POLE SP 4

AVE.

PULL BOX, 18" PB 5

PB 4 PULL BOX, 18"

L3

SECOND

L2

LEGEND

—E— POWER CABLE, 2-CONDUCTOR NO. 4 AWG

——— SIGNAL CABLE, 7-CONDUCTOR NO. 14 AWG

—I/C— INTERCONNECT CABLE, 12-CONDUCTOR NO. 14 AWG

---------- LOOP DETECTOR WIRE, TYPE E

— — — — LOOP DETECTOR LEAD-IN CABLE

△ VEHICULAR SIGNAL

◺ PEDESTRIAN SIGNAL

PB PEDESTRIAN PUSHBUTTON

WIRING DIAGRAM

CALC. BY. TKJ DATE 3/85	SUM-76-11.57	OHIO
CHKD. BY. DSB DATE 4/90	FED. PROJECT IR-76-2(44)19	F.H.W.A. REGION 5

662 (12/14)

ARLINGTON ST. AT RAMP "E-4"

*-AS PER PLAN

LINE NUMBER	ITEM NUMBERS: REFERENCE NUMBER	LOCATION: FROM	LOCATION: TO	DISTANCE	G25: GROUND ROD (EACH)	G25: PULL BOX, CONCRETE, 18-INCH, AS PER PLAN (EACH)	G25: PULL BOX, CONCRETE, 24-INCH, AS PER PLAN (EACH)	G25: TRENCH (L.F.)	G25: TRENCH IN PAVED AREAS, TYPE B (L.F.)	G25: CONDUIT, 713.07, 3-INCH, TYPE DB, CONCRETE ENCASED, AS PER PLAN (L.F.)	G25: CONDUIT, 2-INCH, 713.04 (L.F.)	G32: VEHICULAR SIGNAL HEAD, OPTICALLY PROGRAMMED, 3-SEC., 12-INCH LENS, 1-WAY (EACH)	G32: VEHICULAR SIGNAL HEAD, 3-SECTION, 12-INCH LENS, 1-WAY (EACH)	G32: PEDESTRIAN SIGNAL HEAD, TYPE A2 (EACH)	G32: PEDESTRIAN PUSHBUTTON (EACH)	G32: LOOP DETECTOR UNIT (EACH)	G32: LOOP DETECTOR PAVEMENT CUTTING (L.F.)		G32: CONCRETE FOR ANCHOR BASE FOUNDATIONS (C.Y.)	G32: SIGNAL SUPPORT, TYPE TC-81.20, DESIGN 1, 15-FEET ARM (EACH)	G32: SIGNAL SUPPORT, TYPE TC-81.20, DESIGN 4, 37-FEET ARM AS PER PLAN (EACH)	G32: SIGNAL SUPPORT, TYPE TC-81.20 DES.4 POLE W/MAST ARMS DES. 2-30 & DES. 3-34 (EACH)			G32: PEDESTAL, 8-FEET (EACH)	G32: CONDUIT RISER, 2-INCH, 713.04 (EACH)	G32: CABLE SUPPORT ASSEMBLY (EACH)	G32: SIGNAL CABLE, 7-CONDUCTOR NO. 14 AWG (L.F.)	G32: INTERCONNECT CABLE, 12-CONDUCTOR NO. 14 AWG (L.F.)	G32: INTERCONNECT CABLE, INTEGRAL MESSENGER WIRE TYPE, 12-CONDUCTOR NO. 14 AWG * (L.F.)	G32: LOOP DETECTOR WIRE, TYPE E (L.F.)	G32: LOOP DETECTOR LEAD-IN CABLE (L.F.)	G32: POWER CABLE, 2-CONDUCTOR NO. 4 AWG (L.F.)		G32: COVERING OF VEHICULAR SIGNAL HEAD (EACH)	G32: REMOVAL OF TRAFFIC SIGNAL INSTALLATION (EACH)	G32: INTERCONNECT CABLE, INTEGRAL MESSENGER WIRE TYPE, 12-CONDUCTOR NO. 14 AWG (L.F.)		G33: CONTROLLER, ACTUATED, 3 PHASE, SOLID STATE, DIGITAL MICROPROCESSOR, * (EACH)	G33: COORDINATOR, OFFSET (EACH)	G33: PREEMPTION EMERGENCY (EACH)	G33: CONCRETE FOR CABINET FOUNDATION (C.Y.)		CONTROLLER WORK PAD (S.F.)	LINE NUMBER
1	C1	18+73		–	1																																					1
2	PB-1	18+73	18+63	10'	1		1	10		20																																	2
3	SP-1	18+63	18+76	15'	1			15		15									2.65			1				1																	3
4	SP-2	18+63	19+05	43'	1			43		43									1.48	1						1																	4
5	PB-2	18+63	18+23	40'		1		40		40																																	5
6	P-1	18+23	18+19	4'	1			4		4									0.36							1																	6
7	PB-3	18+23, LT.	18+23, RT.	78'		1		78		78																																	7
8	SP-3	18+23	18+31	8'	1			8		8									1.48	1						1																	8
9	PB-4	18+23	18+39	19'		1		19		19																																	9
10	PB-5	18+39	19+26	87'		1		51	36	87																																	10
11	SP-4	19+26	19+28	6'	1			6		6									1.66		1						1																11
12	PB-6	18+23, LT.	18+10, LT.	16'	1	1		16		16																																	12
13		18+10	ABUTMENT	5'				5			5																1																13
14		18+63	SERVICE POLE	9'				9			9																1																14
15	PB-7	18+63	19+70	109'	1	1		109		109																																	15
16		19+70	UTILITY POLE	5'				5			5																1																16
17		C-1	SERVICE POLE	19'																																							17
18		C-1	SIGNAL 1 & 2	299'									2																														18
19		C-1	SIGNAL 3 & 4	80'									2																														19
20																																										20
21		C-1	SIGNAL 5 & 6	172'									2																														21
22																																										22
23		C-1	SIGNAL 7 & 8	78'								2																														23
24		C-1	SIGNAL 9 & 10	87'								2																														24
25		C-1	SIGNAL 11	64'										1																													25
26		C-1	SIGNAL 12	35'										1																													26
27		C-1	SIGNAL 13	146'										1																													27
28		C-1	SIGNAL 14	252'										1																													28
29		C-1	SIGNAL 15	64'										1	1																											29
30		C-1	SIGNAL 16	146'										1	1																											30
31		C-1	DETECTOR L1	50'												1	57																									31
32		C-1	DETECTOR L2	234'												1	58																									32
33		C-1	DETECTOR L3	147'												1	66																									33
34		C-1	FIFTH AVE.	887'																																							34
35		C-1	JOHNSTON ST.	1500'																																								35
36																																										36
37																																										37
38																																										38
39																																										39
40																																										40
41																																										41
42																																										42
43																																										43
44																																										44
TOTALS					9	6	1	418	36	445	19	4	6	6	2	3	181		7.63	2	1	1			1	3	4	1738	273	813	414	501	49		10	1	1386		1	1	1	0.36		8.3	

TRAFFIC SIGNAL QUANTITIES SUB-SUMMARY

AA B/P# 71942R

CALC. BY. DATE	SUM-76-11.57	OHIO
CHKD. BY. DATE	FED. PROJECT IR-76-2(44)19	F.H.W.A. REGION 5

663 / 1214

SUMMIT COUNTY

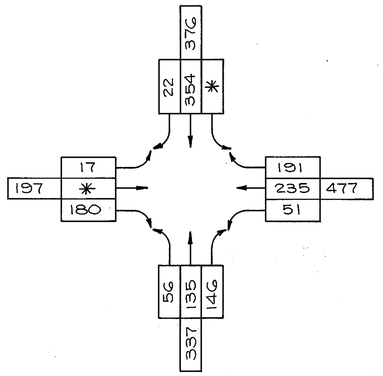

1990 D.D.H.V.

* TRAFFIC TO BE REASSIGNED TO REFLECT NEW GEOMETRY

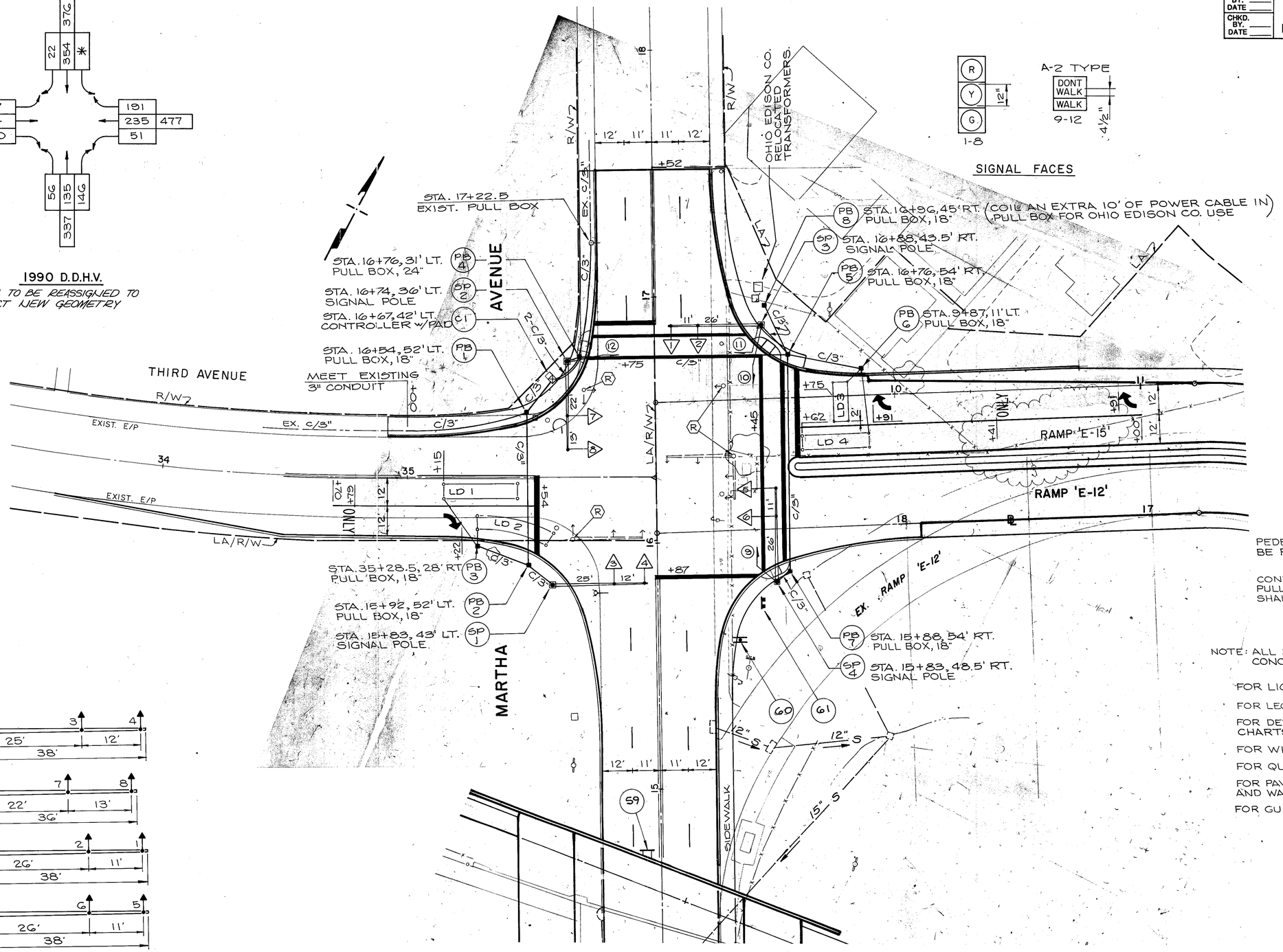

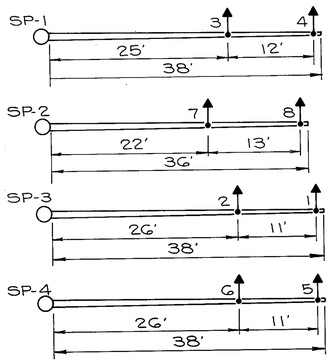

SIGNAL FACES

PARTICIPATION SHALL BE 100% CITY OF AKRON

PEDESTRIAN PUSHBUTTON SIGNS SHALL BE R-73C-9

CONDUIT BETWEEN THE CURB AND PULL BOX FOR LOOP DETECTOR WIRE, SHALL BE A MINIMUM OF 1-INCH.

NOTE: ALL 3" CONDUIT SHALL BE 713.07, TYPE "DB", CONCRETE ENCASED.

FOR LIGHTING PLANS SEE SHEET NO. 694

FOR LEGEND SEE SHEET NO. 659

FOR DETECTOR, DISPLAY, POLE, AND TIMING CHARTS, SEE SHEET NO. 664

FOR WIRING DIAGRAM SEE SHEET NO. 665

FOR QUANTITIES SEE SHEET NO. 666

FOR PAVEMENT MARKINGS, AND REGULATORY AND WARNING SIGNS SEE SHEET NO. 650

FOR GUIDE SIGN PLANS SEE SHEET NO. 633

SCALE
0 20 40 60

MARTHA AVE. AT RAMP E-15

TRAFFIC SIGNAL PLAN

AA B/P# 71942R

CALC. BY. TKL DATE 3/85	SUM-76-11.57	OHIO
CHKD BY. DSS DATE 4/90	FED. PROJECT IR-76-2(44)19	F.H.W.A. REGION 5

664 12/14

SUMMIT COUNTY

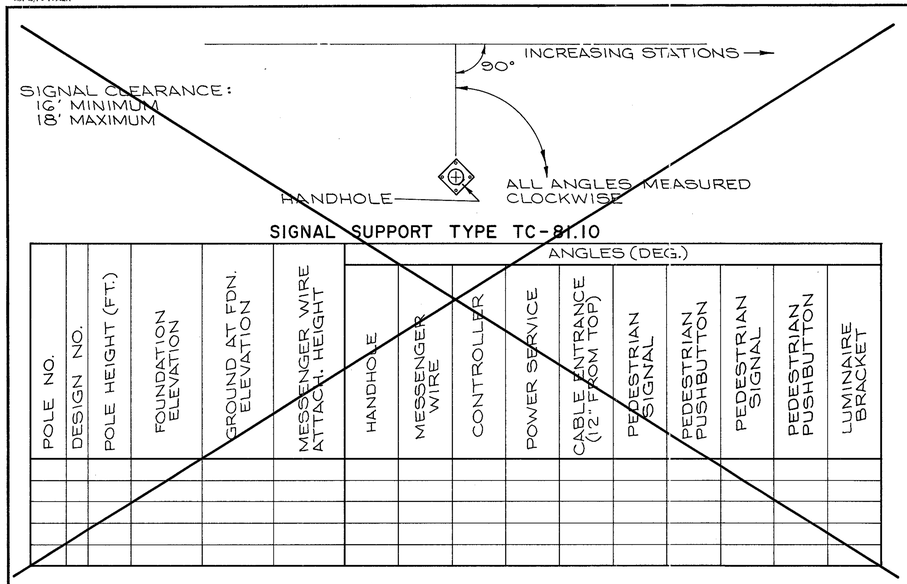

SIGNAL SUPPORT TYPE TC-81.10

POLE NO.	DESIGN NO.	POLE HEIGHT (FT.)	FOUNDATION ELEVATION	GROUND AT FDN. ELEVATION	MESSENGER WIRE ATTACH. HEIGHT	ANGLES (DEG.) HANDHOLE	MESSENGER WIRE	CONTROLLER	POWER SERVICE	CABLE ENTRANCE (12" FROM TOP)	PEDESTRIAN SIGNAL	PEDESTRIAN PUSHBUTTON	PEDESTRIAN SIGNAL	PEDESTRIAN PUSHBUTTON	LUMINAIRE BRACKET

TRAFFIC SIGNAL DETECTORS

DETECTOR	SIZE	Nº OF TURNS	PULSE OR PRESENCE	CALLING RELAY	DELAY OR EXTENSION (SEC.)	DET. UNIT Nº	PHASE	
LD 1	6'x30'	2	PRESENCE				4+8	
LD 2	6'x30'	2	PRESENCE		DELAY 10		4+8	
LD 3	6'x16'	2	PRESENCE		DELAY 10		4+8	
LD 4	6'x30'	2	PRESENCE				4+8	

DISPLAY CHART

PHASE	2+6				4+8				PREEMPTION								
DISPLAY	R/W	C1	C2		R/W	C1	C2										FLASH
SIGNAL 1,2,3,4	G	Y	R		R	R	R		R								Y
5,6,7,8	R	R	R		G	Y	R		R								R
9,10	W	FDW	DW		DW	DW	DW		DW								OFF
11,12	DW	DW	DW		W	FDW	DW		DW								OFF
EMERGENCY PREEMPTION CLEARANCE (SEC.)		3				3											

PHASING DIAGRAM

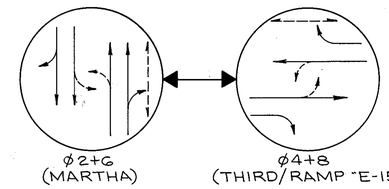

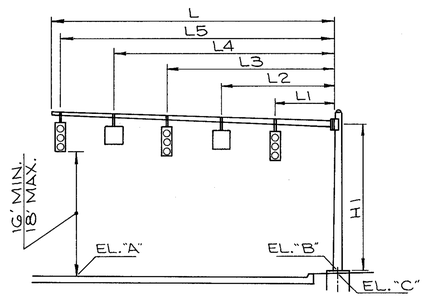

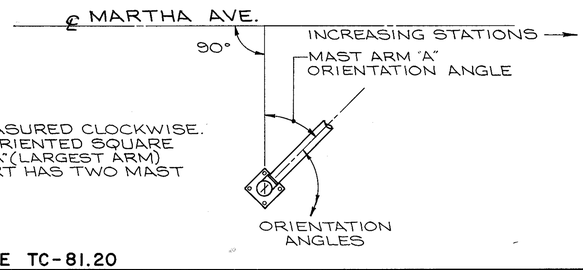

NOTES:
1. ALL ANGLES MEASURED CLOCKWISE.
2. BASE PLATE IS ORIENTED SQUARE TO MAST ARM "A" (LARGEST ARM) EVEN IF SUPPORT HAS TWO MAST ARMS.

SIGNAL SUPPORT TYPE TC-81.20

ARM	POLE NO.	POLE DESIGN NO.	ARM DESIGN NO.	POLE HEIGHT (FT.)	H1	L	L1	L2	L3	L4	L5	ELEVATIONS "A"	"B"	"C"	ARM "A" ANGLE MAST ARM "A" (DEG.)	ANGLES (DEG.) CLOCKWISE FROM ARM "A" HANDHOLE	CONTROLLER	POWER SERVICE	CABLE ENTRANCE (12" FROM TOP)	PEDESTRIAN SIGNAL	PEDESTRIAN PUSHBUTTON	PEDESTRIAN SIGNAL	PEDESTRIAN PUSHBUTTON	LUMINAIRE BRACKET	
"A"	SP-1	3	3	22	21.5'	38'			25'		37'	1012.29	1011.65	1011.65	0	180									0	
"A"	SP-2	3	3	21	19.5'	36'			22'		35'	1011.79	1013.34	1013.34	90	180				180	270					
"A"	SP-3	3	3	22	20.5'	38'			26'		37'	1013.34	1013.38	1013.38	0	180				270	0	180	270			
"A"	SP-4	3	3	22	20.5'	38'			26'		37'	1012.04	1012.44	1012.44	90	180				90	0					

*- ANGLES GIVEN ARE FOR PEDESTRIAN SIGNAL MOUNTING BRACKETS. AIMING OF PEDESTRIAN SIGNALS SHALL BE AS SHOWN ON THE PLANS.

ALL PEDESTRIAN SIGNAL HEAD BRACKET ARMS SHALL BE ATTACHED TO SIGNAL POLES AS PER NOTE 4b ON STANDARD DRAWING TC-85.10.

SIGNAL POLE SP-3 SHALL HAVE A MOUNTING BRACKET FOR EACH PEDESTRIAN SIGNAL HEAD.

TIMING CHART

INTERVAL OR FEATURE		NEMA PHASE NO. 1	2	3	4	5	6	7	8
INTERSECTION MOVEMENT			NB		EB		SB		WB
MINIMUM GREEN (INITIAL) (SEC.)			25		6		25		6
ADDED INITIAL (SEC.)									
PASSAGE TIME (PRESET GAP) (SEC.)					3				3
TIME BEFORE REDUCTION (SEC.)									
MINIMUM GAP (SEC.)									
TIME TO REDUCE (SEC.)									
MAXIMUM GREEN I (SEC.)			HOLD		31		HOLD		31
MAXIMUM GREEN II (SEC.)									
YELLOW CHANGE (SEC.)			3		3		3		3
ALL RED CLEARANCE (SEC.)			2		2		2		2
WALK (SEC.)			13		11		13		11
PEDESTRIAN CLEARANCE (SEC.)			11		10		11		10
RECALL	MAXIMUM (ON/OFF)		ON		OFF		ON		OFF
	MINIMUM (ON/OFF)		OFF		OFF		OFF		OFF
	PEDESTRIAN (ON/OFF)		ON		OFF		ON		OFF
MEMORY (ON/OFF)			OFF		ON		OFF		ON
CALL TO NON-ACTUATED	Nº 1								
	Nº 2								

MARTHA AVE. AT RAMP "E-15" AND THIRD AVE.

PHASING, TIMING, DETECTORS, AND POLE CHART DETAILS

AA B/P# 71942R

CALC. BY. DATE	SUM-76-11.57	OHIO
CHKD. BY. DATE	FED. PROJECT IR-76-2(44)19	F.H.W.A. REGION 5

665 / 1214

SUMMIT COUNTY

TO CONTROLLER AT THE INTERSECTION OF MARTHA AVE. AND E. MARKET ST.

EXISTING PULL BOX

PB 4 PULL BOX, 24"

I/C

AVENUE

PB 11 — SIGNAL POLE SP 3

PULL BOX, 18" PB 8

CONNECTION TO TRANSFORMERS BY OHIO EDISON CO. FORCES. (10' OF EXTRA POWER CABLE COILED IN PULL BOX.)

PULL BOX, 18" PB 5

1 2 10

E

TO CONTROLLER AT THE INTERSECTION OF THIRD AVE. AND KELLY AVE.

CONTROLLER C1

I/C

E E E

PB 6 PULL BOX, 18"

SIGNAL POLE SP 2

PB 12

I/C

PULL BOX, 18" PB 1

7

8

LD3

LD4

THIRD AVENUE

RAMP "E-15"

LD1

LD2

PULL BOX, 18" PB 2

PULL BOX, 18" PB 3

3 4

SP 1 SIGNAL POLE

MARTHA

5

6

9

SP 4 SIGNAL POLE

PB 7 PULL BOX, 18"

LEGEND

- E — POWER CABLE, 2-CONDUCTOR NO. 4 AWG
- SIGNAL CABLE, 7-CONDUCTOR NO. 14 AWG
- I/C — INTERCONNECT CABLE, 12-CONDUCTOR NO. 14 AWG
- LOOP DETECTOR WIRE, TYPE E
- LOOP DETECTOR LEAD-IN CABLE
- △ VEHICULAR SIGNAL
- PEDESTRIAN SIGNAL
- PB PEDESTRIAN PUSHBUTTON

WIRING DIAGRAM

AA B/P# 71642R

CALC. BY. T.K.I. DATE 3/89	SUM-76-11.57	OHIO
CHKD. BY. DSB DATE 4/90	FED. PROJECT IR-76-2(44)19	F.H.W.A. REGION 5

666 1214

PARTICIPATION SHALL BE 100% CITY OF AKRON

MARTHA AVE. AT RAMP "E-15"

*- AS PER PLAN

ITEM NUMBERS					625							632																						633											
LINE NUMBER	REFERENCE NUMBER	LOCATION FROM	LOCATION TO	DISTANCE	GROUND ROD	PULL BOX, CONCRETE, 18-INCH, AS PER PLAN	PULL BOX, CONCRETE, 24-INCH, AS PER PLAN	TRENCH	CONDUIT, 7/8, 3-INCH, TYPE DB, CONCRETE ENCASED, AS PER PLAN			VEHICULAR SIGNAL HEAD, 3-SECTION, 12-INCH LENS, 1-WAY	PEDESTRIAN SIGNAL HEAD, TYPE A2	PEDESTRIAN PUSHBUTTON	LOOP DETECTOR UNIT	LOOP DETECTOR PAVEMENT CUTTING		CONCRETE FOR ANCHOR BASE FOUNDATIONS	SIGNAL SUPPORT, TYPE TC-81.20, DESIGN 3, 36-FEET ARM	SIGNAL SUPPORT, TYPE TC-81.20, DESIGN 3, 38-FEET ARM			CABLE SUPPORT ASSEMBLY		SIGNAL CABLE, 7-CONDUCTOR NO. 14 AWG	INTERCONNECT CABLE, 12-CONDUCTOR NO. 14 AWG	LOOP DETECTOR WIRE, TYPE E	LOOP DETECTOR LEAD-IN CABLE	POWER CABLE, 2-CONDUCTOR NO. 4 AWG		COVERING OF VEHICULAR SIGNAL HEAD	REMOVAL OF TRAFFIC SIGNAL INSTALLATION			CONTROLLER, ACTUATED, 2-PHASE, SOLID STATE DIGITAL MICROPROCESSOR*	COORDINATOR, OFFSET	PREEMPTION EMERGENCY	CONCRETE FOR CABINET FOUNDATION			CONTROLLER WORK PAD				LINE NUMBER
					EACH	EACH	EACH	L.F.	L.F.			EACH	EACH	EACH	EACH	L.F.		C.Y.	EACH	EACH			EACH		L.F.	L.F.	L.F.	L.F.	L.F.		EACH	EACH			EACH	EACH	EACH	C.Y.			S.F.				
1	C1	16+67			1																													1											1
2	PB-1	16+67	16+54	16'		1		16	16																									1	1	0.36				8.3				2
3	—	16+54	35+00 LT.	50'				50	50																																				3
4	PB-2	16+54	15+92	62'		1		62	62																																				4
5	PB-3	15+92	35+28.5 RT.	22'		1		22	22																																				5
6	SP-1	15+92	15+83	13'	1			13	13									1.66		1			1																						6
7	PB-4	16+67	16+76	14'			1	14	28																																				7
8	SP-2	16+76	16+74	5'	1			5	5									1.66	1				1																						8
9	—	16+76	17+22.5	47'				47	47																																				9
10	PB-5	16+76, LT.	16+76, RT.	85'		1		85	85																																				10
11	SP-3	16+76	16+88	16'	1			16	16									1.66		1			1																						11
12	PB-6	16+76	9+87	30'		1		30	30																																				12
13	PB-7	16+76	15+88	88'		1		88	88																																				13
14	SP-4	15+88	15+83	7'	1			7	7									1.66		1			1																						14
15	PB-8	16+76	16+96	22'		1		22	22																																				15
16																																													16
17																																													17
18		C1	POWER SERVICE	121'																																										18
19		C1	SIGNAL 1 & 2	175'								2																																		19
20																																													20
21		C1	SIGNAL 3 & 4	152'								2																																		21
22																																													22
23		C1	SIGNAL 5 & 6	254'								2																																		23
24																																													24
25		C1	SIGNAL 7 & 8	76'								2																																		25
26																																													26
27		C1	SIGNAL 9	204'									1																																	27
28		C1	SIGNAL 10	125'									1																																	28
29		C1	SIGNAL 11	125'									1	1																															29
30		C1	SIGNAL 12	29'									1	1																															30
31		C1	DETECTOR LD1	100'											1	91																													31
32		C1	DETECTOR LD 2	100'											1	76																													32
33		C1	DETECTOR LD 3	129'											1	88																													33
34		C1	DETECTOR LD 4	129'											1	95																													34
35		C1	E. MARKET ST.	290'																																									35
36		C1	KELLY AVE.	675'																																										36
37																																													37
38																																													38
39																																													39
40																																													40
41																																													41
42																																													42
43																																													43
44																																													44
TOTALS					5	7	1	477	491			8	4	2	4	350		6.64	1	3			4		1360	1025	740	538	151		8	1			1	1	1	0.36			8.3				

TRAFFIC SIGNAL QUANTITIES SUB-SUMMARY

AA B/P# 71942R

CALC. BY. DATE	SUM-76-11.57	OHIO
CHKD. BY. DATE	FED. PROJECT IR-76-2(44)19	F.H.W.A. REGION 5

667 / 1214

SUMMIT COUNTY

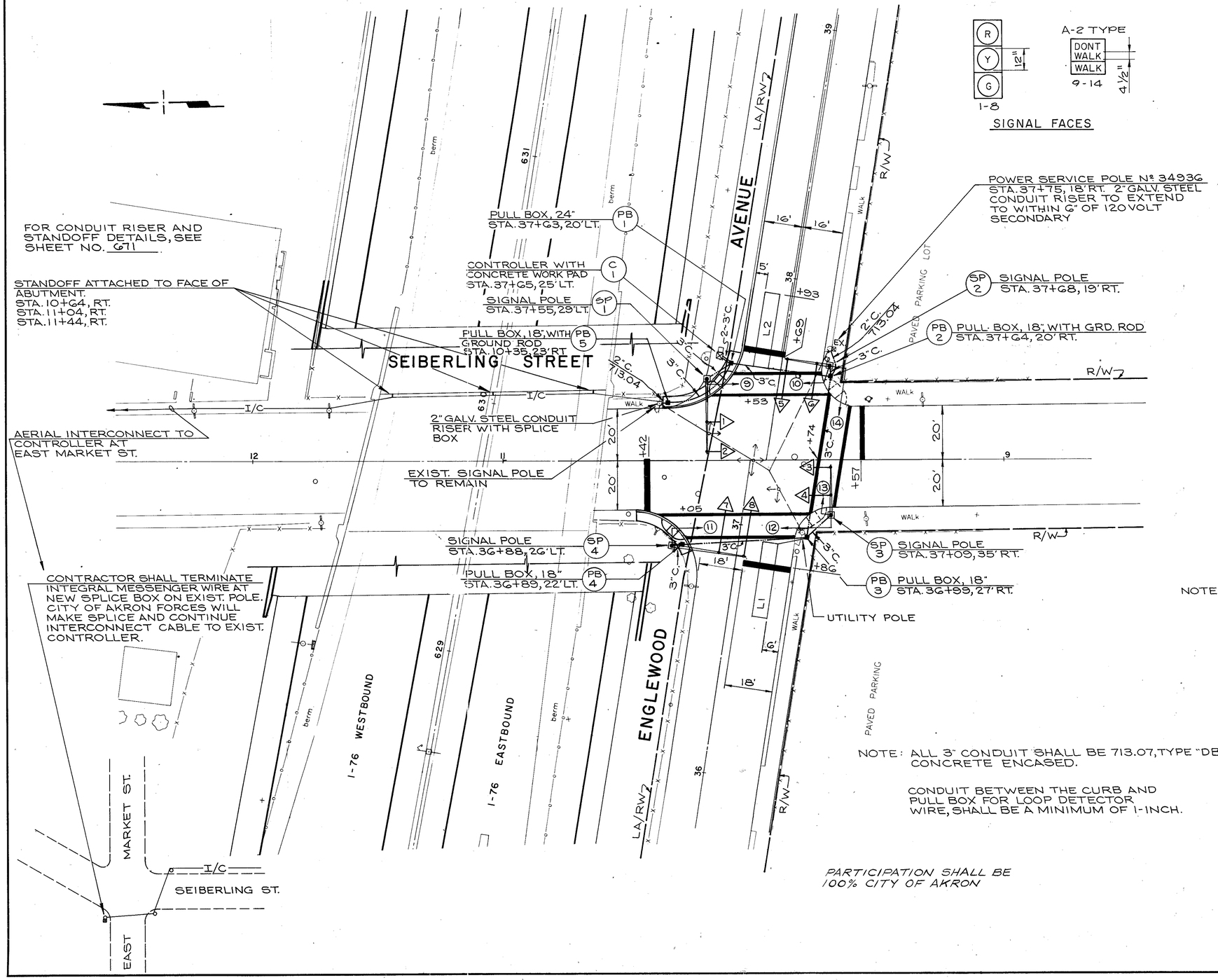

SIGNAL FACES

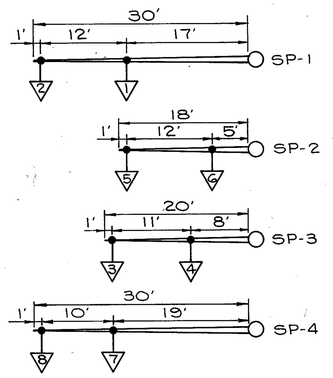

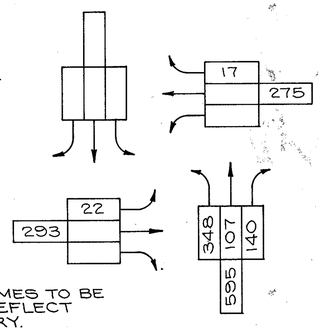

NOTE: TRAFFIC VOLUMES TO BE REVISED TO REFLECT NEW GEOMETRY.

1990 D.D.H.V.

NOTE: ALL 3" CONDUIT SHALL BE 713.07, TYPE "DB" CONCRETE ENCASED.

CONDUIT BETWEEN THE CURB AND PULL BOX FOR LOOP DETECTOR WIRE, SHALL BE A MINIMUM OF 1-INCH.

PARTICIPATION SHALL BE 100% CITY OF AKRON

PEDESTRIAN PUSHBUTTON SIGNS SHALL BE R-73C-9

FOR LEGEND SEE SHEET NO. 669

FOR DETECTOR, DISPLAY, POLE, AND TIMING CHARTS SEE SHEET NO. 668

FOR WIRING DIAGRAM SEE SHEET NO. 669

FOR QUANTITIES SEE SHEET NO. 670

FOR PAVEMENT MARKINGS, AND REGULATORY AND WARNING SIGNS SEE SHEET NO. 682

FOR GUIDE SIGN PLANS SEE SHEET NO. 633

SEIBERLING ST. AT ENGLEWOOD AVE.

SCALE IN FEET
0 20 40 60

TRAFFIC SIGNAL PLAN

AA B/P# 21942R

CALC. BY. TKI DATE 3/89	SUM-76-11.57	OHIO
CHKD. BY. DEB DATE 4/90	FED. PROJECT IR-76-2(44)19	F.H.W.A. REGION 5

668 / 1214

SUMMIT COUNTY

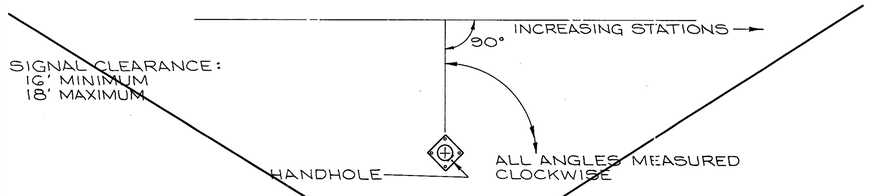

SIGNAL SUPPORT TYPE TC-81.10

POLE NO.	DESIGN NO.	POLE HEIGHT (FT.)	FOUNDATION ELEVATION	GROUND AT FDN. ELEVATION	MESSENGER WIRE ATTACH. HEIGHT	ANGLES (DEG.) HANDHOLE	MESSENGER WIRE	CONTROLLER	POWER SERVICE	CABLE ENTRANCE (12" FROM TOP)	PEDESTRIAN SIGNAL	PEDESTRIAN PUSHBUTTON	PEDESTRIAN SIGNAL	PEDESTRIAN PUSHBUTTON	LUMINAIRE BRACKET

TRAFFIC SIGNAL DETECTORS

DETECTOR	SIZE	Nº OF TURNS	PULSE OR PRESENCE	CALLING RELAY	DELAY OR EXTENSION (SEC.)	DET. UNIT Nº	PHASE	
L1	6'X30'	2	PRESENCE				4+8	
L2	6'X30'	2	PRESENCE				4+8	

DISPLAY CHART

PHASE	2+6				4+8				PREEMPTION								
DISPLAY	R/W	C1	C2		R/W	C1	C2										FLASH
SIGNAL 1,2,3,4	G	Y	R		R	R	R		R								Y
5,6,7,8	R	R	R		G	Y	R		R								R
9,10,11,12	W	FDW	DW		DW	DW	DW		DW								OFF
13,14	DW	DW	DW		W	FDW	DW		DW								OFF
EMERGENCY PREEMPTION CLEARANCE (SEC.)		3				3											

PHASING DIAGRAM

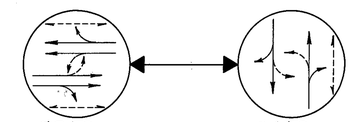

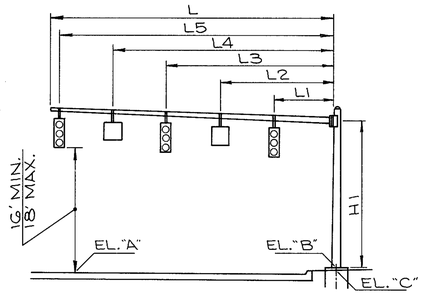

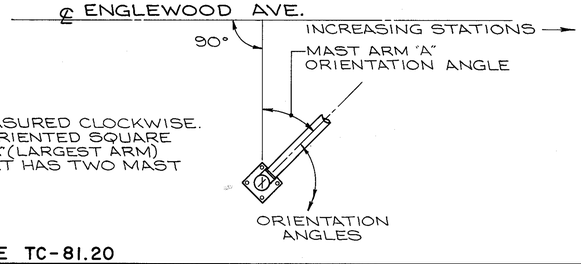

NOTES:
1. ALL ANGLES MEASURED CLOCKWISE.
2. BASE PLATE IS ORIENTED SQUARE TO MAST ARM "A" (LARGEST ARM) EVEN IF SUPPORT HAS TWO MAST ARMS.

SIGNAL SUPPORT TYPE TC-81.20

ARM	POLE NO.	POLE DESIGN NO.	ARM DESIGN NO.	POLE HEIGHT (FT.)	H1	L	L1	L2	L3	L4	L5	ELEVATIONS "A"	"B"	"C"	ARM "A" ANGLE MAST ARM "A" (DEG.)	ANGLES (DEG.) CLOCKWISE FROM ARM "A" HANDHOLE	CONTROLLER	POWER SERVICE	CABLE ENTRANCE (12" FROM TOP)	PEDESTRIAN SIGNAL *	PEDESTRIAN PUSHBUTTON	PEDESTRIAN SIGNAL *	PEDESTRIAN PUSHBUTTON	LUMINAIRE BRACKET	
"A"	SP-1	2	2	21	20'	30'	—	—	17'	—	29'	1005.27	1005.75	1005.75	81	180	—	—	—	0	—	—	—	0	
"A"	SP-2	1	1	21	19.5'	18'	—	—	5'	—	17'	1005.03	1005.24	1005.24	0	180	—	—	—	180	180	270	—	—	
"A"	SP-3	1	1	20	18.5'	20'	—	—	8'	—	19'	1004.28	1005.43	1005.43	81	180	—	—	—	180	—	270	270	—	
"A"	SP-4	2	2	21	19.5'	30'	—	—	19'	—	29'	1005.08	1005.49	1005.49	0	180	—	—	—	260	—	—	—	—	

✱ - ANGLES GIVEN ARE FOR PEDESTRIAN SIGNAL MOUNTING BRACKETS. AIMING OF PEDESTRIAN SIGNALS SHALL BE AS SHOWN ON THE PLANS.

ALL PEDESTRIAN SIGNAL HEAD BRACKET ARMS SHALL BE ATTACHED TO SIGNAL POLES AS PER NOTE 4b. ON STANDARD DRAWING TC-85.10

SIGNAL POLE SP-2 AND SP-3 SHALL HAVE A MOUNTING BRACKET FOR EACH PEDESTRIAN SIGNAL HEAD.

TIMING CHART

INTERVAL OR FEATURE		NEMA PHASE NO. 1	2	3	4	5	6	7	8
INTERSECTION MOVEMENT			SB		WB		NB		EB
MINIMUM GREEN (INITIAL) (SEC.)			30		6		30		6
ADDED INITIAL (SEC.)									
PASSAGE TIME (PRESET GAP) (SEC.)					3				3
TIME BEFORE REDUCTION (SEC.)									
MINIMUM GAP (SEC.)									
TIME TO REDUCE (SEC.)									
MAXIMUM GREEN I (SEC.)			HOLD		15		HOLD		15
MAXIMUM GREEN II (SEC.)									
YELLOW CHANGE (SEC.)			3		3		3		3
ALL RED CLEARANCE (SEC.)			2		2		2		2
WALK (SEC.)			10		8		10		8
PEDESTRIAN CLEARANCE (SEC.)			10		8		10		8
RECALL	MAXIMUM (ON/OFF)		ON		OFF		ON		OFF
	MINIMUM (ON/OFF)		OFF		OFF		OFF		OFF
	PEDESTRIAN (ON/OFF)		ON		OFF		ON		OFF
MEMORY (ON/OFF)			OFF		ON		OFF		ON
CALL TO NON-ACTUATED	Nº 1								
	Nº 2								

D1 = 80 SECOND BACKGROUND CYCLE
D2 = 100 SECOND BACKGROUND CYCLE

SEIBERLING ST. AT ENGLEWOOD AVE.

PHASING, TIMING, DETECTORS, AND POLE CHART DETAILS

AA B/P# 71942R

CALC. BY. DATE	SUM-76-11.57	OHIO
CHKD. BY. DATE	FED. PROJECT IR-76-2(44)19	F.H.W.A. REGION 5

669
1214

SUMMIT COUNTY

AERIALLY TO CONTROLLER AT EAST MARKET ST.

EXISTING SIGNAL POLE

GROUND ROD FOR GALV. STEEL CONDUIT

PULL BOX, 18" PB 5

I/C

SPLICE BOX

2" GALV. STEEL CONDUIT AND 2" GALV. STEEL CONDUIT RISER

CONTROLLER C-1

L2

E

PULL BOX, 24" PB 1

SIGNAL POLE SP 2

OHIO EDISON CO. POLE NO. 34936

2" GALV. STEEL CONDUIT RISER

2" GALV. STEEL CONDUIT

GROUND ROD FOR GALV. STEEL CONDUIT

PULL BOX, 18" PB 2

SEIBERLING STREET

AVENUE

SP 1 SIGNAL POLE

SP 3 SIGNAL POLE

SP 4 SIGNAL POLE

ENGLEWOOD

PULL BOX, 18" PB 4

PULL BOX, 18" PB 3

L1

LEGEND

—E—	POWER CABLE, 2-CONDUCTOR NO. 4 AWG
———	SIGNAL CABLE, 7-CONDUCTOR NO. 14 AWG
—I/C—	INTERCONNECT CABLE, 12-CONDUCTOR NO. 14 AWG
- - - - - -	LOOP DETECTOR WIRE, TYPE E
— — — —	LOOP DETECTOR LEAD-IN CABLE
△	VEHICULAR SIGNAL
◺	PEDESTRIAN SIGNAL
PB	PEDESTRIAN PUSHBUTTON

WIRING DIAGRAM

AA 18/P4 719428

CALC. BY T.K.I. DATE 3/88	SUM-76-11.57	OHIO
CHK'D. BY DSB DATE 4/90	FED. PROJECT IR-76-2(44)19	F.H.W.A. REGION 5

670 12/14

PARTICIPATION SHALL BE 100% CITY OF AKRON

SEIBERLING ST. AT ENGLEWOOD AVE.

*-AS PER PLAN

LINE NUMBER	ITEM NUMBERS: REFERENCE NUMBER	LOCATION: FROM	LOCATION: TO	DISTANCE	G25: GROUND ROD EACH	G25: PULL BOX, CONCRETE, 18-INCH, AS PER PLAN EACH	G25: PULL BOX, CONCRETE, 24-INCH, AS PER PLAN EACH	G25: TRENCH L.F.	G25: TRENCH IN PAVED AREAS, TYPE A L.F.	G25: TRENCH IN PAVED AREAS, TYPE B L.F.	G25: CONDUIT, 713.07, 3-INCH, TYPE DB, CONCRETE ENCASED, AS PER PLAN L.F.	G25: CONDUIT, 713.04, 2-INCH L.F.	G32: VEHICULAR SIGNAL HEAD, 3-SECTION, 12-INCH LENS, 1-WAY EACH	G32: PEDESTRIAN SIGNAL HEAD, TYPE A2 EACH	G32: PEDESTRIAN PUSHBUTTON EACH	G32: LOOP DETECTOR UNIT EACH	G32: LOOP DETECTOR PAVEMENT CUTTING L.F.	G32: CONCRETE FOR ANCHOR BASE FOUNDATIONS C.Y.	G32: SIGNAL SUPPORT, TYPE TC-81.20, DESIGN 1, 18-FEET ARM EACH	G32: SIGNAL SUPPORT, TYPE TC-81.20, DESIGN 2, 30-FEET ARM EACH	G32: SIGNAL SUPPORT, TYPE TC-81.20, DESIGN 1, 20-FEET ARM EACH	G32: CABLE SUPPORT ASSEMBLY EACH	G32: SIGNAL CABLE, 7-CONDUCTOR NO.14 AWG L.F.	G32: INTERCONNECT CABLE, 12-CONDUCTOR NO.14 AWG L.F.	G32: INTERCONNECT CABLE, INTEGRAL MESSENGER WIRE TYPE, 12-CONDUCTOR NO.14 AWG * L.F.	G32: LOOP DETECTOR WIRE, TYPE E L.F.	G32: LOOP DETECTOR LEAD-IN CABLE L.F.	G32: POWER CABLE, 2-CONDUCTOR NO.4 AWG L.F.	G32: COVERING OF VEHICULAR SIGNAL HEAD EACH	G32: REMOVAL OF TRAFFIC SIGNAL INSTALLATION EACH	G32: CONDUIT RISER, 2-INCH DIA., 713.04 EACH	G33: CONTROLLER, ACTUATED, 2 PHASE, SOLID STATE, DIGITAL MICROPROCESSOR EACH	G33: COORDINATOR, OFFSET EACH	G33: PREEMPTION, EMERGENCY EACH	G33: CONCRETE FOR CABINET FOUNDATION C.Y.	G33: CONTROLLER WORK PAD S.F.	LINE NUMBER
1	C1	37+65		–	1																									1		1	1	1	0.36		8.3	1
2	PB-1	37+65	37+63	5'			1	5			10																												2
3	SP-1	37+63	37+55	12'	1			12			12							1.48			1		1																3
4	PB-2	37+63	37+64	40'	1	1		37	3		40																												4
5	SP-2	37+64	37+56	4'	1				4		4							1.48	1				1																5
6	PB-3	37+64	36+99	65'		1			15	50	65																												6
7	SP-3	36+99	37+09	13'	1				13		13							1.48				1	1																7
8	PB-4	36+99	36+89	50'		1		3	5	42	50																												8
9	SP-4	36+89	36+88	4'	1			4			4							1.48			1		1																9
10	PB-5	37+63	10+35	31'	1	1		31			31																												10
11	–	10+35	EX. SIG. POLE	3'				3				3																							1				11
12		37+64	SERVICE POLE	12'					12			12																							1				12
13																																						13
14																																						14
15		C1	SERVICE POLE	57'																													100		1				15
16		C1	SIGNAL 1 & 2	68'									2												93								2						16
17		C1	SIGNAL 3 & 4	163'									2												198								2						17
18		C1	SIGNAL 5 & 6	88'									2												118								2						18
19		C1	SIGNAL 7 & 8	215'									2												255								2						19
20		C1	SIGNAL 9	27'										1											47														20
21		C1	SIGNAL 10	59'										1											84														21
22		C1	SIGNAL 11	174'										1											209														22
23		C1	SIGNAL 12	133'										1											163														23
24		C1	SIGNAL 13	133'										1	1										168														24
25		C1	SIGNAL 14	59'										1	1										89														25
26		C1	DETECTOR L1	110'												1	79											178	130									26
27		C1	DETECTOR L2	5'												1	78											172	15									27
28		C1	E. MARKET ST.	525'																						70	475											28
29																																						29
30																																						30
31																																						31
32																																						32
33																																						33
34																																						34
35																																						35
36																																						36
37																																						37
38																																						38
39																																						39
40																																						40
41																																						41
42																																						42
43																																						43
44																																						44
TOTALS					7	4	1	95	52	92	229	15	8	6	2	2	157		5.92	1		2	1	4	1424	70	475	350	145	100		8	1	2	1	1	1	0.36		8.3	

TRAFFIC SIGNAL QUANTITIES SUB-SUMMARY

AA B/Pw 71942R

CALC. BY. DATE	SUM-76-11.57	OHIO	671 / 1214
CHKD. BY. DATE	FED. PROJECT IR-76-2(44)19	F.H.W.A. REGION 5	

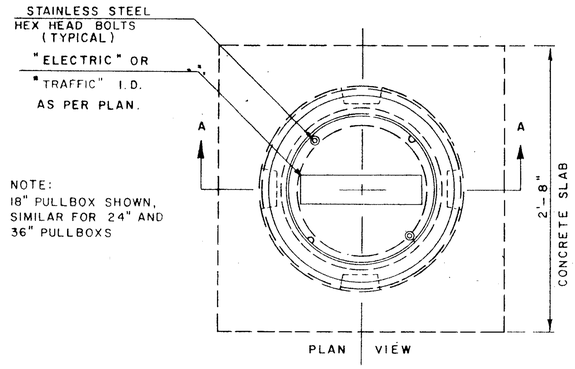

NOTE:
18" PULLBOX SHOWN, SIMILAR FOR 24" AND 36" PULLBOXS

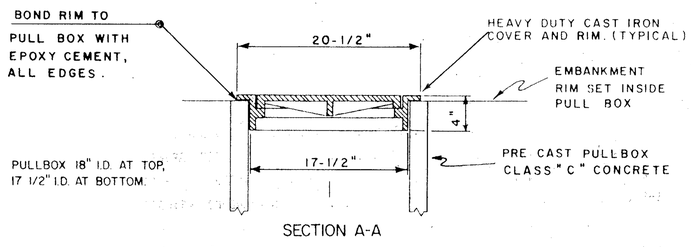

SECTION A-A

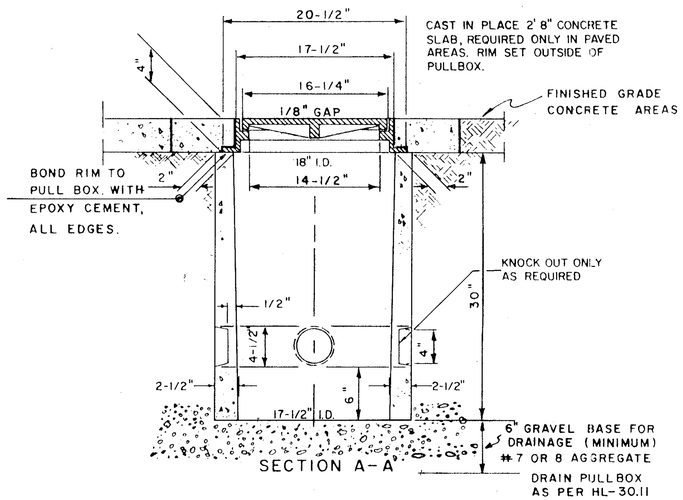

SECTION A-A

CITY OF AKRON
STANDARD
CONCRETE PULLBOX.

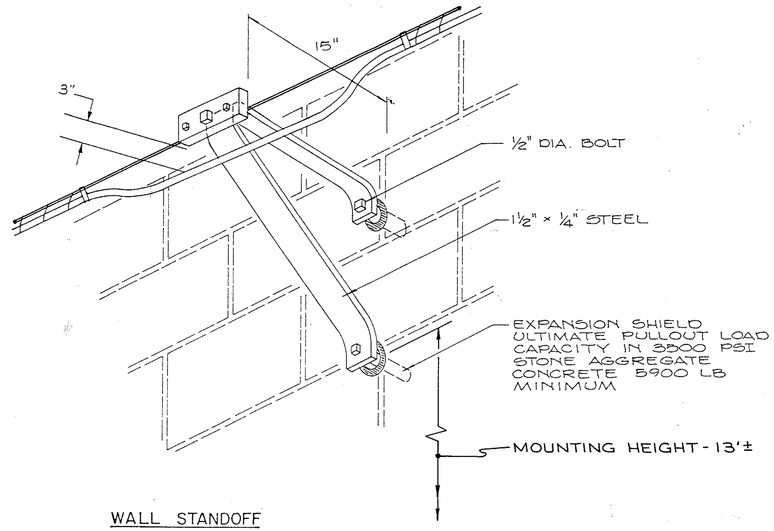

WALL STANDOFF

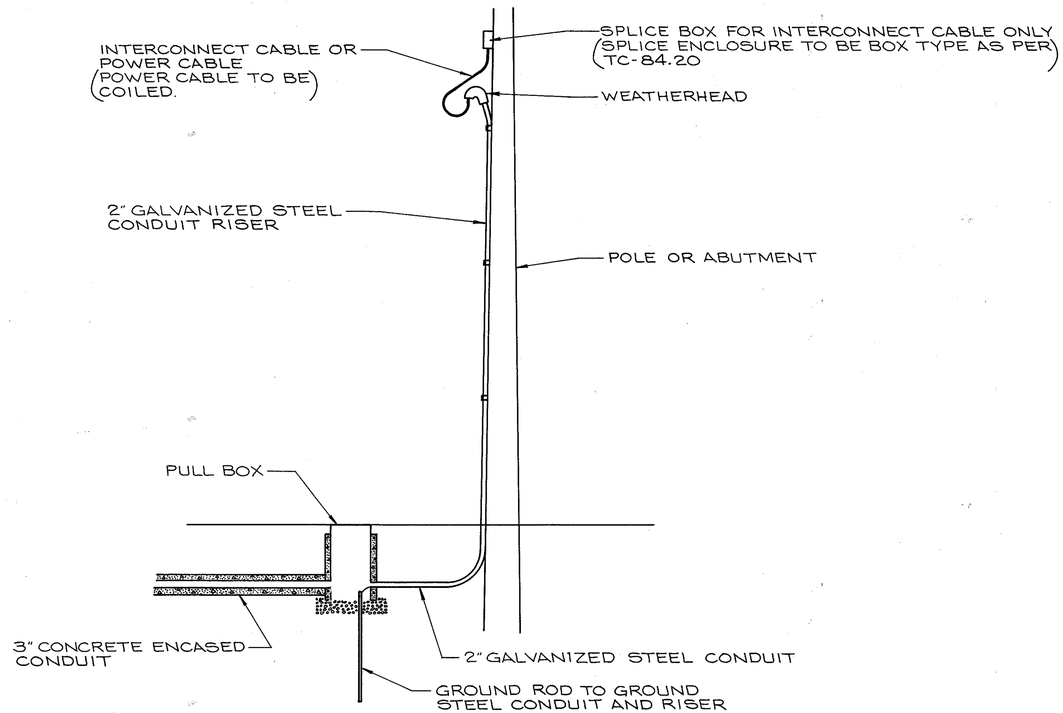

TYPICAL CONDUIT RISER DETAIL

TRAFFIC CONTROL DETAILS

CALC BY ____ DATE ____
CHKD BY ____ DATE ____

SUM-76-11.57

OHIO FHWA REGION 5

671A 1214

PLAN NO.

CENTER OF LANE

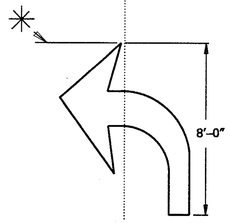

TURN ARROW
(LEFT ARROW SHOWN
RIGHT ARROW OPPOSITE)

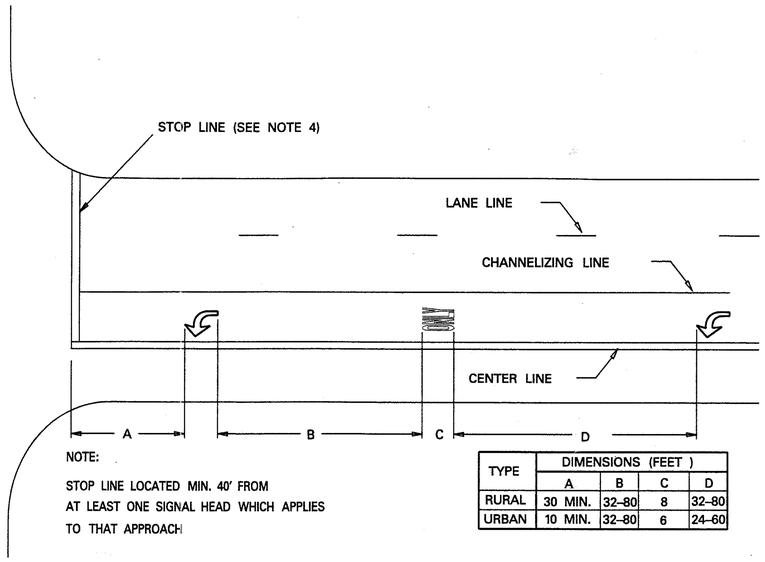

NOTE:

STOP LINE LOCATED MIN. 40' FROM AT LEAST ONE SIGNAL HEAD WHICH APPLIES TO THAT APPROACH

TYPE	DIMENSIONS (FEET)			
	A	B	C	D
RURAL	30 MIN.	32-80	8	32-80
URBAN	10 MIN.	32-80	6	24-60

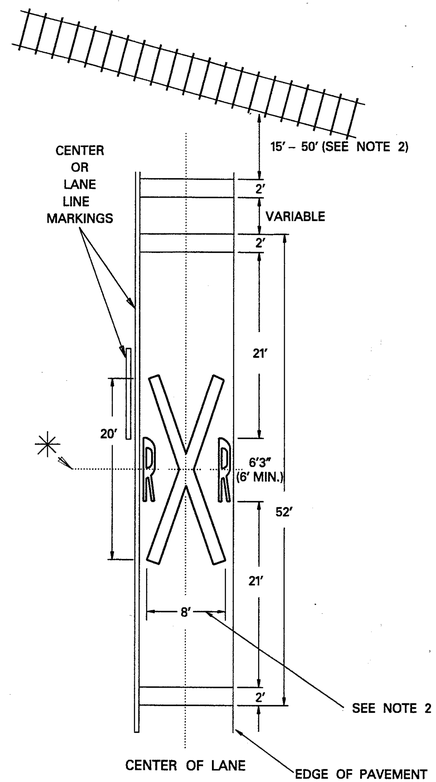

CENTER OF LANE

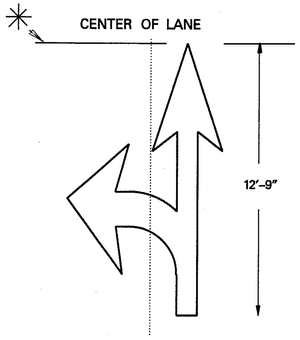

COMBINED ARROW
(THREE HEAD DIRECTIONAL ARROWS CAN BE ACHIEVED BY THE COMBINATION OF TURN ARROWS.)

LANE OR CENTER LINE

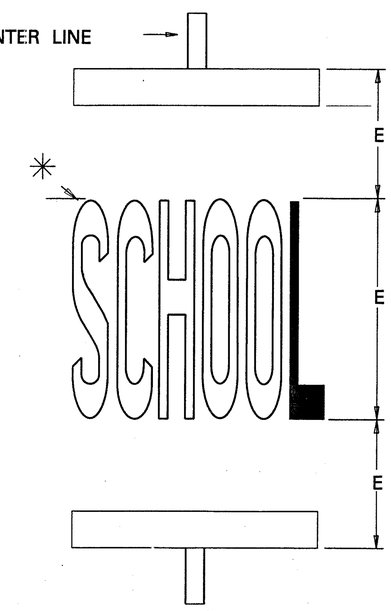

TYPE	INCHES
	E
RURAL	96
URBAN	72

CENTER OF LANE

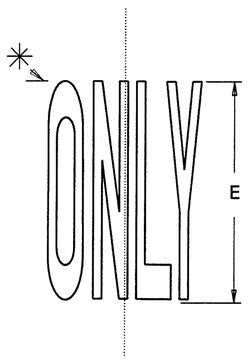

CENTER OF LANE

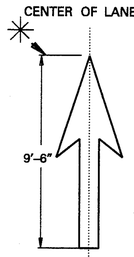

THROUGH ARROW

NOTES:

1. ON MULTI-LANE APPROACHES, THE TRANSVERSE LINES USED WITH THE RAILROAD SYMBOLS SHALL EXTEND ACROSS ALL APPROACH LANES AND SYMBOLS SHALL BE PLACED IN EACH APPROACH LANE.

2. THE RAILROAD SYMBOL SHALL BE LOCATED SO THAT THE W-94, "RAILROAD ADVANCE WARNING SIGN", IS WITHIN THE TWO TRANSVERSE BOUNDARY LINES OF THE RAILROAD SYMBOL. THE STOP LINES SHALL BE LOCATED FOR BEST SIGHT DISTANCE WITHIN 15 FEET TO 50 FEET OF THE NEAR EDGE OF THE TRACKS. STOP LINES SHALL BE PERPENDICULAR TO THE CENTER LINE OF THE ROADWAY. WIDTH OF "X" MAY VARY ACCORDING TO LANE WIDTH.

3. ON MULTI-LANE APPROACHES, THE TRANSVERSE LINES USED WITH THE WORD "SCHOOL" SHALL EXTEND ACROSS ALL APPROACH LANES WITH A SINGLE WORD "SCHOOL" CENTERED ACROSS THE APPROACH LANES. ON TWO LANE ROADWAYS, THE TRANSVERSE LINES SHALL EXTEND ACROSS THE ROADWAY WITH THE WORD "SHOOL" CENTERED ACROSS THE ROADWAY. CENTER OR LANE LINES SHALL NOT PASS THROUGH THE "SCHOOL" MARKING.

4. THE STOP LINE SHOULD BE PLACED WHERE CROSS-CORNER VISION IS MAXIMUM, IN NO CASE MORE THAN 30 FEET OR LESS THAN 4 FEET FROM THE NEAREST EDGE OF THE INTERSECTING ROADWAY. FOR NORMAL INTERSECTIONS A MAXIMUM DISTANCE OF 10 FEET IS RECOMMENDED.

   IF A MARKED CROSSWALK IS PRESENT, THE SLINE SHOULD BE PLACED 4 FEET IN ADVANCE OF AND PARALLELTO THE NEAREST CROSSWALK.

5. FOR TRAFFIC PAINT AND POLYSTER APPLICATION, TEMPLATE GAPS SHALL BE FILLED WITH MARKING MATERIAL IN ACCORDANCE WITH 641.03. FOR EXTRUDED THERMOPLASTIC MATERIAL, THESE GAPS MAY REMAIN UNFILLED IN ACCORDANCE WITH 644.03.

6. USE STANDARD DIMENSIONS CONFORMING TO REQUIREMENTS OF OF OMUTCD SECTION 3B-40 THROUGH 3B-43 INCLUSIVE. (THAT IS THE 1977 METRIC EDITION STANDARD ALPHABETS FOR HIGHWAY SIGNS AND PAVEMENT MARKING WITH ERRATA).

✳ - INDICATES STATION REFERENCE POINT

REV.11-90

AA B/P# 71942R

CALC. BY. ____ DATE ____	SUM-76-11.57	OHIO
CHKD. BY. ____ DATE ____	FED. PROJECT IR-76-2(44)19	F.H.W.A. REGION 5

672 / 1214

SUMMIT COUNTY

BEGIN PROJECT
SUM-76-11.57
STA. 548+97.60

26+38
GS2 (1225W.)
CONNECT TO
CIR. "FTH"-3

13+00
(A) "FTH"-7-1

11+10
(A) "FTH"-7-2

EXIST.
547+00
BB100
"FTH"-3-6

CIR. "FTH"-7

RAMP "E-2"

30 EX. CIR. 5

MATCH LINE STA. 553+50
SEE BELOW

ST. CIR. "FTH"-7

I-76 WB

I-76 EB

CIR. 5

STRUCTURE NO.
SUM-76-1180

EXIST. CIR. 5 "FTH"-5

EXIST.
"FTH"-5-9

RAMP 'T'

PROPOSED CIR. "FTH"-7

EX. CIR. "FTH"-5

S. SERVICE RD.

554+00
GS4 (1025W)
CONNECT TO
CIR. "FTH"-7

9+20
(C) "FTH"-7-3

7+30
(C) "FTH"-7-4

558+20
(D) "FTH"-7-5

561+10
GS 7 (1225W)
CONNECT TO
CIR. "FTH" 7

EXIST.
13+20 'T'
POWER SERVICE
"FTH" W/24" PULL BOX
W/NEW CABLE
SPLICING KITS

CIR. "FTH"-7

RAMP "E-2"

SCHOOL ROAD

I-76

565

EX. CIR. "FTH"-5

570

SEE ABOVE
MATCH LINE STA. 553+50

555 EX. CIR. "FTH"-5

EXIST. CIR. "FTH"-5

ABANDON
CABLE

EXIST.
"FTH"-5-8

EXIST.
"FTH"-5-7

EXIST.
"FTH"-5-1

564+25
GS8 (350W.)
CONNECT TO
CIR. "FTH"-5

EXIST.
"FTH"-5-2

EXIST.
"FTH"-5-3

EXIST.
"FTH"-5-4

53+50
GS 3 (350W)
CONNECT TO
CIR. "FTH"-5

25+00
GS41 (100W.)
CONNECT TO
CIR. "FUL"-2

CIR. "FUL"-2

ST.

19+28
GS40 (350W)
CONNECT TO
CIR. "FUL"-2

BRIDGE MTD.
GS39 (200W.)
CONNECT TO
CIR. "MAR"-6

575+00/"WALL"
GS10 (350W.)
CONNECT TO
CIR. "FTH"-5

77+02
(C) "FUL"-2-10

78+89
(C) "FUL"-2-9

80+86/"WALL"
(B) "FUL"-2-19

MARTIN AVE.

SECOND AVE.

CIR. "FUL"-2

RAMP "E-4"

EX. CIR. "MAR"-6

STRUCTURE NO.
SUM-76-1231

MATCH LINE STA. 581+00
SEE SHEET NO. G73

RAMP "E-8"

RAMP "E-6"

CIR. "FUL"-1

STRUCTURE NO.
SUM-76-1235

MATCH LINE STA. 581+00

STA. 81+12

EXIST.
"FTH"-5-5

EXIST.
"FTH"-5-6

57+50
GS12 (1025W)
CONNECT TO
CIR. "FTH"-5

EXIST.
"MAR"-6-16

EXIST.
"MAR"-6-15

80+40/11' RT.
(C) "FUL"-1-17

FOURTH AVE.

79+93
(C) "FUL"-1-14

ARLINGTON

CIR. "FUL"-1

15+25
GS37 (350W)
CONNECT TO
CIR. "FUL"-1

78+32
(C) "FUL"-1-16

BRIDGE MTD
GS38 (100W)
CONNECT TO
CIR. "FTH"-5

78+00/"WALL"
(B) "FUL"-1-15

10+95
GS36 (100W)
CONNECT TO
CIR. "FUL"-1

FOR LEGEND SEE SHEET G90

SCALE IN FEET
0 100 200 300

STA. 548+97.6 TO STA. 581+00

LIGHTING SCHEMATIC PLAN

AA B/P# 71942R

CALC. BY. DATE		SUM-76-11.57	OHIO
CHKD. BY. DATE		FED. PROJECT IR-76-2(44)19	F.H.W.A. REGION 5

673
1214

SUMMIT COUNTY

SEE SHEET NO. 672 M.L. STA.80+60
MATCH LINE STA.581+00

81+86 (C)"FUL"-1-13
82+49 (C)"FUL"-1-18
83+79 (C)"FUL"-1-12
84+57 (C)"FUL"-1-19
86+66 (C)"FUL"-1-20
87+66 (C)"FUL"-1-10
88+75 (C)"FUL"-1-21
89+80 "FUL"-1-9
89+40 GS30(450W.) CONNECT TO CIR."FUL"-1
12+00 (C)"FUL"-1-8
91+15 (C)"FUL"-1-7
91+15 (C)"FUL"-1-6
94+95 (C)"FUL"-1-5
12+90/40'LT.℄ PROP. POWER SERVICE "FUL" & "FLR" POLE MOUNTED SEPARATELY & METERED SEPARATELY.
100+93 (A)"FUL"-1-1
597+00 GS17(500W.) CONNECT TO CIR."MAR"-6
102+77 (A)"FUL"-1-2
104+61 (A)"FUL"-1-3
106+50 (A)"FUL"-1-4

80+76 (C)"FUL"-2-8
82+52/"WALL" (B)"FUL"-2-18
82+63 (C)"FUL"-2-7
84+16/"WALL" (B)"FUL"-2-17
84+50 (C)"FUL"-2-6 W/GLARE SHIELD
85+92 (C)"FUL"-2-16
86+31 (C)"FUL"-2-5
87+71 (C)"FUL"-2-15
87+71 (C)"FUL"-2-4
89+47 (C)"FUL"-2-14
90+27 (C)"FUL"-2-3
91+23 (C)"FUL"-2-13
92+33 (C)"FUL"-2-2
92+98 (C)"FUL"-2-12
94+74 (C)"FUL"-2-11
38+40 GS44(175W.) CONNECT TO CIR."FUL"-2
594+39 (D)"FUL"-2-1
15+65 GS45(350W.) CONNECT TO CIR."FUL"-2
597+50 GS18(1200W.) CONNECT TO CIR. "MAR"-G
602+85 "MAR"-G-8
606+10 "MAR"-G-7
606+70/"BRIDGE" GS19(1225W.) CONNECT TO CIR."MAR"-6
607+40/"BRIDGE" (B)"MAR"-G-5
9+42/"BRIDGE" (B)"MAR"-G-4

BRIDGE MTD. GS49(100W.) CONNECT TO CIR."MAR"-7

SECOND AVE.
THIRD AVE.
FIFTH AVE.
E. MARKET ST.
LITTLE AVE.
MARTHA AVE.
CHESSIE SYSTEM
FULLER ST.
WEEKS ST.
KELLY AVE.
CUYAHOGA RIVER

STRUCTURE NO. SUM-76-1244
STRUCTURE NO. SUM-76-1267
STRUCTURE NO. SUM-76-1277

℄ I-76

RAMP "E-6"
RAMP "E-8"
RAMP E-8-A
RAMP "E-7"
RAMP "E-4"
RAMP E-8B
RAMP "E-9"

CIR."FUL"-1
CIR."FUL"-2
CIR."FUL"-27
EX. CIR."MAR"-G
CIR."MAR"-6
CIR."MAR"-7

EXIST. "MAR"-G-14
EXIST. "MAR"-G-13
EXIST. "MAR"-G-12
EXIST. "MAR"-G-11
EXIST. "MAR"-G-10
EXIST. "MAR"-G-9
EXIST. "MAR"-G-6

CONDUIT EMPTY

SEE SHEET NO. 674 M.L. STA.610+50
MATCH LINE STA.581+00

FOR LEGEND SEE SHEET 690

SCALE IN FEET
0 100 200 300

STA.581+00 TO STA.610+50

LIGHTING SCHEMATIC PLAN

AA B/P# 71942R

CALC. BY. DATE	SUM-76-11.57	OHIO
CHKD. BY. DATE	FED. PROJECT IR-76-2(44)19	F.H.W.A. REGION 5

674
1214

SUMMIT COUNTY

END PROJECT	BEGIN PROJECT
SUM-76-11.57	SUM-76-13.41
STA. 634+00.00	STA. 634+00.00
IR-76-2(44)19	IR-76-2(45)21

18+00 GS62(100W.) CONNECT TO CIR. "MAR"-7

BRIDGE MTD. GS59(200W.) CONNECT TO CIR. "MAR"-7

15+60 GS60(350W.) CONNECT TO CIR. "MAR"-7

9+70 (C)"MAR"-7-10

18+40 (C)"MAR"-7-9

12+09 (C)"MAR"-7-4

11+45 (C)"MAR"-7-11

16+73 (C)"MAR"-7-8

15+57 (C)"MAR"-7-7

13+25 (C)"MAR"-7-5

13+15 (C)"MAR"-7-12

14+41 (C)"MAR"-7-6

15+10 (C)"MAR"-7-13

17+05 (C)"MAR"-7-14

19+00 (C)"MAR"-7-15

G20+80 (C)"MAR"-7-16

G22+00 GS25(700W) CONNECT TO CIR. "MAR"-7

EXIST. "MAR"-8-14

EXIST. "MAR"-8-15

EXIST. "MAR"-8-16

G30+90 GS26(700W.) CONNECT TO CIR. "MAR"-8

EXIST. G31+83 "MAR"-8-17

"BY OTHERS" G35+65 "MAR"-8-18

"BY OTHERS" 40+10 "MAS"-8-13

"BY OTHERS" 38+50 "MAS"-8-12

"BY OTHERS" G39+25 GS (500W.) CONNECT TO CIR. "MAS"-8

"BY OTHERS" G39+41 "MAS"-8-11

24+50/"WALL" (B)"MAR"-8-13

22+55 (C)"MAR"-8-12

22+20 (C)"MAR"-8-6

20+68 (C)"MAR"-8-11

20+46 (C)"MAR"-8-5

18+76 (C)"MAR"-8-10

18+72 (C)"MAR"-8-4

16+98 (C)"MAR"-8-3

16+70 (C)"MAR"-8-9

15+48 (C)"MAR"-8-2

14+75 (C)"MAR"-8-8 W/GLARE SHIELD

13+70 (C)"MAR"-8-1

12+80 (C)"MAR"-8-7

11+80 GS57(350W.) CONNECT TO CIR. "MAR"-8

EXIST. "MAR"-7-1

11+30 (C)"MAR"-6-1

12+45/50' LT. & POWER SERVICE "MAR" & "MTH" PAD MOUNTED

BRIDGE MTD. GS58(100W.) CONNECT TO CIR. "MAR"-7

G12+00/ GS22(850W.) CONNECT TO CIR. "MAR"-7

13+23/12' RT. (C)"MAR"-6-2

15+12/12' RT. (C)"MAR"-6-3

EXIST. "MAR"-7-2

EXIST. "MAR"-7-3

STRUCTURE NO. SUM-76-1296

STRUCTURE NO. SUM-76-1303

STRUCTURE NO. SUM-76-1332

RAMP "E-15"

RAMP "E-16"

RAMP "E-10"

RAMP "E-9"

RAMP "E-12"

RAMP "E-19"

CIR. "MAR"-7

CIR. "MAR"-8

CIR. "MAR"-87

CIR. "MAR"-6

CIR. "MAR"-8

EX. CIR. "MAR"-77

EX. CIR. 8

MARTHA AVE.

ENGLEWOOD AVE.

SEIBERLING ST.

SEE SHEET NO. G13 MATCH LINE STA. 610+50

M.L. STA. 10+50

FOR LEGEND SEE SHEET G90

SCALE IN FEET
0 100 200 300

STA. 610+50 TO STA. 641+00

LIGHTING SCHEMATIC PLAN

AA B.P# 71942R

LIGHTING GENERAL NOTES

CALC. BY. E.D.R. DATE 11-89	SUM-76-11.57	OHIO
CHKD. BY. DSB DATE 3/90	FED. PROJECT IR-76-2(44)19	F.H.W.A. REGION 5

SUMMIT COUNTY

675
1214

SPECIFICATIONS

THESE NOTES ARE SUPPLEMENTAL TO ITEMS 625 AND 713 OF THE STATE OF OHIO DEPARTMENT OF TRANSPORTATION CONSTRUCTION AND MATERIAL SPECIFICATIONS.

REFERENCE SHALL BE MADE TO STANDARD CONSTRUCTION DRAWINGS LISTED ON THE TITLE SHEET OF THESE PLANS.

GENERAL

THE POWER SUPPLYING AGENCY FOR THIS PROJECT IS OHIO EDISON COMPANY, III, CASCADE PLAZA, AKRON, OHIO 44308 (216) 384-5095.

ELECTRICAL ENERGY FROM EXISTING POWER SERVICES SHALL CONTINUE TO BE CHARGED TO THE MAINTAINING AGENCY. . THE CONTRACTOR SHALL PAY ELECTRICAL ENERGY CHARGES FOR NEW POWER SERVICES ESTABLISHED BY THIS PROJECT. UPON COMPLETION OF THIS PROJECT, POWER SERVICE ELECTRICAL ENERGY ACCOUNTS SHALL BE TRANSFERRED TO THE MAINTAINING AGENCIES NOTED IN THE PLANS. THIS SHALL INCLUDE NEW POWER SERVICE ESTABLISHED BY THIS PROJECT AS WELL AS REASSIGNMENT OF THE EXISTING SERVICE DUE TO WORK PERFORMED BY THIS PROJECT.

ITEM 625 - LUMINAIRES

STYLE B LUMINARIES SHALL BE SINGLE RATED 480 VOLT, 200 WATT WITH INTEGRAL REGULATOR BALLASTS FOR USE WITH HIGH-PRESSURE SODIUM LAMPS AND SHALL BE GENERAL ELECTRIC M-400, CROUSE-HINDS OVM, AMERICAN 25/26, OR EQUAL APPROVED BY THE ENGINEER. ALL LUMINAIRES SHALL CONFORM TO SECTION 713.11 OF THE SPECIFICATIONS.

ITEM 625 - UNDERPASS LUMINAIRES

UNDERPASS LUMINAIRES SHALL BE HOLOPHANE "UNDERPASS WALLPACK", WESTINGHOUSE, OR GENERAL ELECTRIC WL-250 UNDERPASS UNIT OR EQUAL APPROVED BY THE ENGINEER, AND SHALL BE FURNISHED WITH AN INTEGRAL FUSE HOLDER AND 10-AMPERE FUSE. THE INTEGRAL HIGH-PRESSURE SODIUM BALLAST SHALL BE OF A REGULATOR TYPE RATED FOR 480 VOLTS, 100 WATTS. ALL UNDERPASS LUMINAIRES SHALL CONFORM TO SECTION 713.13 OF THE SPECIFICATIONS.

HIGH-PRESSURE SODIUM LAMPS

HIGH-PRESSURE SODIUM LAMPS SHALL BE GENERAL ELECTRIC "LUCALOX", SYLVANIA "LUMALUX", WESTINGHOUSE "CERAMALUX", OR EQUAL APPROVED BY THE ENGINEER AND SHALL CONFORM TO SECTION 713.14 OF THE SPECIFICATIONS.

PADLOCKS AND KEYS

PADLOCKS FURNISHED SHALL BE EITHER BRASS OR BRONZE, MASTER NO. 4 BKA, WILSON BOHANNAN 660A, OR APPROVED EQUAL AND SHALL BE KEYED IN ACCORDANCE WITH SPECIFICATION 631.08, PARAGRAPH 3. PAYMENT SHALL BE INCLUDED IN THE BID FOR THE ITEM(S) BEING LOCKED.

ITEM 625 - LIGHT POLE ANCHOR BOLTS ON STRUCTURE, 'L' SHAPED

ANCHOR BOLTS FOR MEDIAN MOUNTED LIGHT POLES ON BRIDGES SHALL CONFORM TO THE REQUIREMENTS OF 713.01 AND DETAILS SHOWN ON THE PLANS AND STANDARD DRAWINGS OR THE APPROVED SHOP DRAWINGS FOR THE RESPECTIVE POLES TO BE PLACED THEREON. PAYMENT SHALL BE MADE AT THE UNIT PRICE BID FOR EACH BOLT REQUIRED AND NECESSARY TO INSTALL ONE POLE, AND THIS PAYMENT SHALL CONSTITUTE FULL COMPENSATION OR FURNISHING AND PLACING THE BOLTS.

ITEM 625 - MEDIAN LIGHT POLE FOUNDATION, AS PER PLAN

THE PAY ITEM 625 - MEDIAN LIGHT POLE FOUNDATION, AS PER PLAN SHALL BE FULL COMPENSATION FOR PLACING AND INSTALLING A STRUCTURE LIGHT POLE JUNCTION BOX AND FOUR (4) EACH OF LIGHT POLE ANCHOR BOLTS FOR STRUCTURE INCLUDING THE FORMING FOR CONCRETE AS DETAILED ON SHEET 700.

ITEM 202 - LIGHT POLE REMOVED FOR STORAGE , AS PER PLAN

THIS ITEM OF WORK SHALL CONSIST OF REMOVING AN EXISTING LIGHT POLE INCLUDING THE BRACKET ARM(S) AND TRANSFORMER BASE (IF USED). THE EXISTING WIRING SHALL BE REMOVED FROM THE POLE AND BRACKET ARM AND DISPOSED OF. THE POLE, BRACKET ARM(S) AND TRANSFORMER BASE SHALL BE SEPARATED AND STORED ON THE SITE FOR THE CITY OF AKRON TO TAKE POSSESSION.

PAYMENT WILL BE MADE AT THE UNIT BID FOR EACH ITEM 202 - LIGHT POLE REMOVED FOR STORAGE., AS PER PLAN.

ITEM 202 - LIGHT POLE FOUNDATION REMOVED

THIS ITEM OF WORK WILL CONSIST OF REMOVING AN EXISTING LIGHT POLE FOUNDATION TO A MINIMUM OF 1' BELOW FINISH GRADE. BACKFILLING THE RESULTANT DEPRESSION WITH COMPACTED SOIL AND RESTORING TO MATCH THE SURROUNDING AREA.

PAYMENT WILL BE EACH ITEM 202 - LIGHT POLE FOUNDATION REMOVED.

ITEM 202 - LUMINAIRE REMOVED FOR STORAGE , AS PER PLAN
ITEM 202 - UNDERPASS LUMINAIRE REMOVED FOR STORAGE, AS PER PLAN

THIS ITEM OF WORK SHALL CONSIST OF REMOVING AN EXISTING LUMINAIRE AND STORING IT ON THE PROJECT SITE FOR THE CITY OF AKRON TO TAKE POSSESSION.

PAYMENT WILL BE MADE FOR EACH ITEM 202 - LUMINAIRE REMOVED FOR STORAGE AS PER PLAN, OR ITEM 202 - UNDERPASS LUMINAIRE REMOVED FOR STORAGE, AS PER PLAN

ITEM 625 - TRANSITION JUNCTION BOX, AS PER PLAN

THIS ITEM SHALL CONSIST OF THE INSTALLATION OF A TRANSITION JUNCTION BOX AS DETAILED IN THE STANDARD DRAWING HL-30.33 AND SHEET 704 EXCEPT THAT 2" CONDUIT SHALL BE USED INSTEAD OF 4" PVC CONDUIT AND THE SLIPHOLE IN THE JUNCTION BOX SHALL BE 2" IN DIAMETER. THIS JUNCTION BOX SHALL BE INSTALLED AT ALL LOCATIONS WHERE 2" CONDUIT RUNS FROM A RETAINING WALL OR A BRIDGE PARAPET.

PAYMENT SHALL BE AT THE UNIT BID PRICE FOR EACH ITEM 625 - TRANSITION JUNCTION BOX, AS PER PLAN, AND SHALL INCLUDE ALL MATERIALS, LABOR, AND INCIDENTALS REQUIRED TO COMPLETE THE WORK.

ITEM 202 - POWER SERVICE REMOVED, As Per Plan

THIS ITEM CONSISTS OF REMOVING THE FOLLOWING EQUIPMENT, BUT NOT LIMITED TO: POWER SERVICE, WIRE, SERVICE AND POLE, AND ALL MISCELLANEOUS MATERIALS, NORMALLY COMPRISING OF A SERVICE POLE. NO EQUIPMENT OR MATERIAL SHALL BE REUSED. THE CONTRACTOR SHALL NOTIFY THE POWER COMPANY PRIOR TO REMOVAL SO THEIR EQUIPMENT CAN BE DISCONNECTED AND REMOVED. ALL EQUIPMENT NOT PROPERTY OF THE OHIO EDISON COMPANY, AND AFTER THE CITY OF AKRON TAKES POSSESSION OF ITEMS IT WANTS, SHALL BECOME PROPERTY OF THE CONTRACTOR AND BE REMOVED FROM THE PROJECT SITE.

PAYMENT SHALL BE AT THE UNIT PRICE BID FOR EACH ITEM 202 - POWER SERVICE REMOVED, As Per Plan, AND SHALL INCLUDE ALL MATERIAL, LABOR, AND INCIDENTALS NECESSARY TO COMPLETE THE REMOVAL.

ITEM 625 - REMOVE AND REERECT EXISTING MEDIAN LIGHT POLE, AS PER PLAN

AT THE LOCATION INDICATED ON THE PLANS, THE CONTRACTOR SHALL CAREFULLY REMOVE THE EXISTING MEDIAN LIGHT POLE, BRACKET ARMS, LUMINAIRES, AND LAMPS FROM THE EXISTING FOUNDATION. THE LUMINAIRES SHALL BE WASHED AND RE-LAMPED IN KIND BEFORE REERECTION. THE EXISTING BRACKET CABLE SHALL BE REUSED. THE MEDIAN LIGHT POLE AND BRACKET ARMS AND LUMINAIRES SHALL BE REERECTED ON A NEW MEDIAN LIGHT POLE FOUNDATION, AND ORIENTED AS DIRECTED ON THE PLANS. PAYMENT FOR THIS ITEM OF WORK SHALL BE AT THE CONTRACT BID PRICE PER EACH ITEM 625 - REMOVE AND REERECT EXISTING MEDIAN LIGHT POLE, AS PER PLAN, AND SHALL INCLUDE ALL LABOR, MATERIALS, INCLUDING THE NEW LAMP, ALL EQUIPMENT, AND INCIDENTALS NECESSARY TO COMPLETE THE WORK AS SPECIFIED.

UNDERDRAINS FOR PULL BOXES

REFERENCE IS MADE TO STANDARD DRAWING HL-30.11 FOR DETAILS OF DRAINING PULL BOXES. UNDERDRAINS FOR PULL BOXES SHALL BE USED AS DIRECTED BY THE ENGINEER AND SHALL BE PROVIDED WHERE THE LENGTH REQUIRED FOR A SATISFACTORY OUTLET DOES NOT EXCEED APPROXIMATELY 40'. AN ESTIMATED QUANTITY OF "1840 LIN. FT. OF ITEM 603, 4" CONDUIT, TYPE E" IS INCLUDED IN THE LIGHTING GENERAL SUMMARY FOR THIS PURPOSE.

AA B.P# 71942R

LIGHTING GENERAL NOTES

CALC. BY. EDR DATE 11-89
CHKD. BY. DBB DATE 3/90

SUM-76-11.57
FED. PROJECT IR-76-2(44)19
SUMMIT COUNTY

OHIO
F.H.W.A. REGION 5

676
1214

CONDUIT ON STRUCTURES

EXPANSION FITTINGS FOR CONDUIT ON STRUCTURES SHALL BE OZ TYPE AX, SPRING CITY TYPE AF, APPLETON TYPE XJ-4, OR EQUAL APPROVED BY THE ENGINEER FOR THE FOLLOWING BRIDGES:

(SUM-76-1231) OVER ARLINGTON STREET
(SUM-76-1235) RAMP E-8 OVER E-6
(SUM-76-1244) RAMP E-7 OVER E-4
(SUM-76-1567) OVER FULLER STREET
(SUM-76-1277) OVER KELLY AVENUE AND A.B.R.R.
(SUM-76-1296) OVER MARTHA AVENUE
(SUM-76-1332) OVER SEIBERLING STREET

EACH EXPANSION FITTING SHALL HAVE A COPPER EXTERNAL BONDING JUMPER.

REMOVAL OF EXISTING PULL BOXES

EXISTING PULL BOXES WHICH ARE NO LONGER REQUIRED SHALL BE REMOVED AND DISPOSED OF BY THE CONTRACTOR. THIS WORK SHALL BE CONSIDERED INCIDENTAL AND SHALL BE INCLUDED FOR PAYMENT WITH ITEM 203 - EXCAVATION NOT INCLUDING EMBANKMENT CONSTRUCTION AS DESCRIBED IN SECTION 202.01 OF THE SPECIFICATIONS.

ITEM 625 - SERVICE TO UNDERPASS LIGHTING

THIS ITEM SHALL CONSIST OF PROVIDING COMPLETE ELECTRICAL SERVICE, EXCEPT FOR LUMINAIRES AND STRUCTURE GROUNDING, FOR AN UNDERPASS LIGHTING SYSTEM ON THE FOLLOWING BRIDGES:

(SUM-76-1180) OVER INMAN STREET
(SUM-76-1231) OVER ARLINGTON STREET
(SUM-76-1267) OVER FULLER STREET
(SUM-76-1296) OVER MARTHA AVENUE
(SUM-76-1332) OVER SEIBERLING STREET

THE INSTALLATION WORK SHALL INCLUDE CONDUITS, CONDUIT GROUNDING, MOUNTINGS, FITTINGS, JUNCTION BOXES, CABLES, AND ALL INCIDENTALS NECESSARY TO COMPLETE, READY FOR USE, THE SERVICE AS DETAILED ON SHEET ~~698-699~~. THE BID PRICE BID FOR EACH ITEM 625 - SERVICE TO UNDERPASS LIGHTING SHALL INCLUDE PAYMENT FOR ALL EQUIPMENT, LABOR, AND MATERIALS NECESSARY TO COMPLETE THE WORK AS SPECIFIED. COMPONENT PARTS NOT SPECIFICALLY MENTIONED BUT REQUIRED FOR SATISFACTORY OPERATION OF THIS ITEM SHALL BE FURNISHED AND CONSIDERED PAID FOR AS PART OF THE ITEM.

ITEM 202 - UNDERPASS SERVICE REMOVED, AS PER PLAN

THIS ITEM SHALL CONSIST OF REMOVING ALL EXISTING LUMINAIRES, SURFACE MOUNTED CONDUIT, WIRE, JUNCTION BOXES AND ANY MISCELLANEOUS ITEMS INCLUDED IN THE UNDERPASS LIGHTING SYSTEM, UNLESS NOTED, FOR THE FOLLOWING STRUCTURES:

(SUM-76-1180) OVER INMAN STREET
(SUM-76-1231) OVER ARLINGTON STREET
(SUM-76-1267) OVER FULLER STREET
(SUM-76-1296) OVER MARTHA AVENUE
(SUM-76-1332) OVER SEIBERLING STREET

PAYMENT SHALL BE THE BID PRICE FOR EACH ITEM 202 - UNDERPASS SERVICE REMOVED, AS PER PLAN, AND SHALL INCLUDE ALL MATERIAL, LABOR AND INCIDENTALS NECESSARY TO COMPLETE THE WORK AS SPECIFIED.

GROUNDING OF RIGHT-OF-WAY FENCES AT OVERHEAD TRANSMISSION LINES CROSSING

THIS ITEM CONSISTS OF GROUNDING THE RIGHT-OF-WAY FENCES AT THE LOCATION LISTED IN THE FOLLOWING TABLE, PER STANDARD DRAWING 50.11.

PAYMENT SHALL BE AT THE UNIT BID PRICE PER ITEM 625 - GROUND RODS INCLUDING MATERIALS, LABOR, AND ALL INCIDENTALS NECESSARY TO COMPLETE THE WORK AS SPECIFIED.

SHEET NUMBER	STATION LOCATION	NUMBER OF GROUND RODS
-1206	623+30± LT	1

ITEM SPECIAL - PULL BOX, CONCRETE, 18" CIRCULAR (AKRON STANDARD)

THIS ITEM SHALL CONSIST OF FURNISHING AND INSTALLING CONCRETE PULL BOXES AS SPECIFIED AND AT THE LOCATIONS SHOWN ON THE PLANS.

THE CIRCULAR PULL BOXES SHALL BE A MINIMUM OF 18" I.D., 18" DEEP, WITH A 2" WALL THICKNESS. FOUR KNOCKOUTS SHALL BE INCLUDED FOR 3" CONDUIT, LOCATED 90" APART AND 2" FROM THE BOTTOM OF THE PULL BOX.

A RING AND COVER SHALL BE SUPPLIED FOR EACH PULL BOX. THE RING SHALL BE CAST IRON SUITABLE FOR INSTALLATION IN SIDEWALKS OR EARTH.

THE COVER SHALL BE SOLID, BOLT DOWN, AND RATED FOR TRUCK TRAFFIC. INSTALLATION OF THE PULL BOXES SHALL INCLUDE ALL EXCAVATING, BACKFILLING, GRADING, SURFACE RESTORATION, COPPERWELD GROUND RODS, AND WIRE LEADS. THE METAL COVERS SHALL BE BONDED TO THE GROUND SYSTEM BY #6 BARE COPPER WIRE. THE RING ASSEMBLY SHALL BE BONDED TO THE CONCRETE PULL BOX WITH EPOXY CEMENT.

PAYMENT SHALL BE THE UNIT PRICE BID FOR EACH ITEM SPECIAL - PULL BOX, CONCRETE, 18" CIRCULAR (AKRON STANDARD) INSTALLED, INCLUDING MATERIALS, LABOR AND ALL INCIDENTALS NECESSARY TO COMPLETE THIS ITEM AS SPECIFIED.

ITEM SPECIAL - MAINTAIN EXISTING LIGHTING

EXISTING ROADWAYS WHICH ARE TO REMAIN OPEN TO TRAFFIC DURING CONSTRUCTION OF THIS PROJECT AND WHICH ARE LIGHTED SHALL HAVE THE LIGHTING MAINTAINED AS DESCRIBED HEREIN.

BEFORE ANY WORK IS STARTED IN THE IMMEDIATE VICINITY OF ANY EXISTING LIGHTING CIRCUITS, REPRESENTATIVES OF THE STATE, THE MAINTAINING AGENCY, AND THE CONTRACTOR SHALL MAKE A VISUAL INSPECTION OF THE EXISTING ROADWAY LIGHTING CIRCUITS TO BE MAINTAINED. DURING THIS INSPECTION, A WRITTEN RECORD OF THE CONDITION OF THE EXISTING LIGHTING SHALL BE MADE BY THE STATE'S REPRESENTATIVE. THIS WRITTEN REPORT SHALL NOTE INDIVIDUAL LUMINAIRES WHICH ARE NOT IN WORKING ORDER, INDIVIDUAL POLES WHICH ARE NOT STANDING, AND INDIVIDUAL CIRCUITS WHICH ARE NOT IN WORKING ORDER. THE COMPLETED REPORT SHALL BE SIGNED BY THE REPRESENTATIVES OF THE STATE, THE MAINTAINING AGENCY, AND THE CONTRACTOR.
IF, AS A RESULT OF THIS INSPECTION, IT IS DETERMINED THAT THE CONDITION OF THE EXISTING SYSTEM IS BELOW THAT REQUIRED FOR THE SAFETY OF THE TRAVELING PUBLIC, THEN THE MAINTAINING AGENCY SHALL MAKE REPAIRS NECESSARY TO RETURN THE SYSTEM TO AN ACCEPTABLE CONDITION. FOLLOWING THESE REPAIRS, THE SYSTEM SHALL AGAIN BE INSPECTED AND A REPORT MADE AND SIGNED AS OUTLINED HEREIN.

WHEN THE EXISTING SYSTEM IS IN AN ACCEPTABLE CONDITION, IT SHALL BE TURNED OVER TO THE CONTRACTOR WHO SHALL THEN BE REQUIRED TO MAINTAIN THE EXISTING LIGHTING TO THE CONDITION OUTLINED IN THIS REPORT WITH THE EXCEPTION OF KNOCKDOWNS DUE TO TRAFFIC ACCIDENTS.

REPLACEMENT OF KNOCKED-DOWN UNITS SHALL BE DONE ONLY WHEN THE ENGINEER HAS DETERMINED THAT THE REPLACEMENT OF THE KNOCKED-DOWN UNIT IS NECESSARY AND SHALL BE PAID SEPARATELY ON A UNIT BASIS.

BETTERMENTS SHALL BE COVERED IN ITEMS OF WORK PERTAINING TO THE CONSTRUCTION OF PERMANENT IMPROVEMENTS.

SHOULD THE CONTRACTOR DESIRE THE REMOVAL OF THE EXISTING LIGHTING BEFORE THE NEW LIGHTING IS OPERATIONAL, THE CONTRACTOR SHALL THEN BE RESPONSIBLE FOR ADEQUATE TEMPORARY LIGHTING OF THAT PORTION OF THE EXISTING ROADWAY AFFECTED BY THE REMOVAL OF THE EXISTING LIGHTING.

PRIOR TO INSTALLING SUCH LIGHTING, THE CONTRACTOR SHALL PREPARE AND SUBMIT FOUR (4) SETS OF THE TEMPORARY LIGHTING PLAN TO THE DIRECTOR FOR REVIEW AND APPROVAL.

THIS PLAN SHALL SHOW LOCATION OF POLES, LENGTH OF BRACKET ARMS, STYLE OF LUMINAIRES, MOUNTING HEIGHT, WIRING METHODS, AND OTHER PERTINENT INFORMATION, THE TEMPORARY LIGHTING SHALL PROVIDE AN AVERAGE INITIAL INTENSITY OF 1.2 FOOTCANDLES WITH AN AVERAGE TO MINIMUM UNIFORMITY NOT TO EXCEED 4:1. MOUNTING HEIGHT FOR TEMPORARY LUMINAIRES SHALL NOT BE LESS THAN 27' AND MINIMUM OVERHEAD CONDUCTOR CLEARANCE SHALL BE 20'. TEMPORARY OVERHEAD CONSTRUCTION SHALL NOT BE LESS THAN GRADE "A" FOR STRENGTH REQUIREMENT AS DEFINED BY THE NATIONAL ELECTRIC SAFETY CODE. WOOD POLES WITH OVERHEAD WIRING MAY BE USED. HOWEVER, TEMPORARY LIGHTING SHALL MEET FEDERAL AND STATE SAFETY CRITERIA. IF BREAKAWAY POLES ARE USED TO MEET THESE CRITERIA, THEN UNDERGROUND WIRING SHALL BE USED. RECONDITIONED OR USED MATERIALS MAY BE FURNISHED FOR TEMPORARY LIGHTING.

AA B/P# 71942R

CALC. BY. EDR DATE 11-89
CHKD. BY. DSB DATE 3/90
SUM-76-11.57
FED. PROJECT IR-76-2(44)19
OHIO
F.H.W.A. REGION 5
SUMMIT COUNTY
G77 12.14

LIGHTING GENERAL NOTES

ITEM SPECIAL - MAINTAINING EXISTING LIGHTING (CONT'D)

ALL MATERIALS NECESSARY TO COMPLETE THE TEMPORARY LIGHTING SHALL BE FURNISHED AND INSTALLED BY THE CONTRACTOR. WHEN NO LONGER NEEDED, THE TEMPORARY LIGHTING INSTALLATION SHALL BE REMOVED AND PROPERLY DISPOSED OF BY THE CONTRACTOR.

THE MAINTAINING AGENCY WILL PAY FOR ELECTRICAL ENERGY CONSUMED BY EXISTING POWER SERVICES AND BY PROPOSED PERMANENT POWER SERVICES AFTER ACCEPTANCE. THE CONTRACTOR WILL PAY FOR ELECTRICAL ENERGY, INSTALLATION, REMOVAL, AND MAINTENANCE OF ANY TEMPORARY POWER SERVICES.

THE LUMP SUM PRICE BID FOR ITEM SPECIAL - MAINTAINING EXISTING LIGHTING, SHALL INCLUDE PAYMENT FOR ALL LABOR, EQUIPMENT, AND MATERIALS, AND INCIDENTALS NECESSARY TO MAINTAIN THE EXISTING LIGHTING AS SPECIFIED HEREIN.

ITEM SPECIAL - REPLACEMENT OF EXISTING LIGHTING UNIT

THE UNIT PRICE BID FOR ITEM SPECIAL - REPLACEMENT OF EXISTING LIGHTING UNIT SHALL BE FULL PAYMENT FOR THE REPLACEMENT OF AN EXISTING LIGHTING UNIT WHICH HAS BEEN KNOCKED DOWN AFTER THE AFOREMENTIONED INSPECTION (SEE ITEM SPECIAL - MAINTAIN EXISTING LIGHTING) AND SHALL INCLUDE ALL LABOR, EQUIPMENT, MATERIALS, AND INCIDENTALS NECESSARY TO PROVIDE A REPLACEMENT FOR SUCH UNIT.

THE FOLLOWING QUANTITY HAS BEEN INCLUDED IN THE LIGHTING GENERAL SUMMARY FOR USE AS DIRECTED BY THE ENGINEER.

ITEM SPECIAL - REPLACEMENT OF EXISTING LIGHTING UNIT 10 EACH

ITEM SPECIAL - DISCONNECT EXISTING CIRCUIT

THIS ITEM OF WORK SHALL CONSIST OF THE DISCONNECTION OF AN EXISTING LIGHT CIRCUIT AT A PULL BOX OR MEDIAN PULL BOX.

DISCONNECTION AT A PULL BOX SHALL INVOLVE CUTTING THE EXISTING CIRCUIT AND REMOVING ALL SPLICE KITS. ANY CABLE THAT IS TO BE ABANDONED SHALL BE TERMINATED IN A MANNER SUCH THAT NO CABLE IS LEFT IN THE PULL BOX. ALL EXISTING CABLE THAT IS DISCONNECTED BY CUTTING SHALL BE CUT IN A MANNER SO THAT THERE IS A SUFFICIENT LENGTH OF CABLE LEFT FOR RECONNECTION.

PAYMENT SHALL BE MADE AT THE UNIT BID PRICE FOR EACH ITEM SPECIAL - DISCONNECT EXISTING CIRCUIT, AND SHALL BE FULL COMPENSATION FOR ALL LABOR, MATERIALS, AND INCIDENTALS REQUIRED TO COMPLETE THE DISCONNECTION IN A SATISFACTORY MANNER.

ITEM SPECIAL - CONDUIT CLEANED AND CABLES REMOVED

THIS ITEM SHALL CONSIST OF LOCATING AND CLEANING AN EXISTING CONDUIT OF ALL EXISTING CABLES, MUD, AND DEBRIS SO THAT NEW CABLES MAY BE INSTALLED. MATERIAL REMOVED SHALL BECOME THE PROPERTY OF THE CONTRACTOR AND SHALL BE DISPOSED OF OFF THE PROJECT SITE. DISTURBED AREAS SHALL BE PROPERLY RESTORED.

PAYMENT WILL BE MADE FOR EACH LINEAR FOOT OF ITEM SPECIAL - CONDUIT CLEANED AND CABLES REMOVED, AND SHALL BE FULL COMPENSATION INCLUDING ALL LABOR, MATERIALS, AND INCIDENTALS REQUIRED TO COMPLETE THE WORK IN A SATISFACTORY MANNER.

CIRCUIT IDENTIFICATION

ALL EXISTING CIRCUITS THAT ARE TO REMAIN ACTIVE SHALL BE RETAGED IF THE EXISTING CIRCUIT NUMBER DOES NOT CORRESPOND TO THE CIRCUIT IDENTIFICATION SHOWN IN THE PLAN. TAGING SHALL CONFORM TO 625.14. THE COST OF THIS WORK SHALL BE INCIDENTAL TO THE ITEMS BID.

POLE IDENTIFICATION

ALL EXISTING LIGHT POLES THAT ARE TO BE REUSED AND REERECTED SHALL BE RELABELED TO CORRESPOND TO THE POLE NUMBER SHOWN IN THE PLANS IF THE EXISTING POLE NUMBER DOES NOT MATCH THE PROPOSED NUMBER. RELABELING SHALL CONFORM TO 625.23. THE COST OF THIS WORK SHALL BE INCIDENTAL TO THE ITEMS BID.

ITEM 625 - CONDUIT, 2", 713.04, AS PER PLAN

THIS ITEM OF WORK SHALL CONSIST OF MOUNTING A PIECE OF RIGID STEEL 2" CONDUIT ON A BRIDGE AS DETAILED ON SHEET 695.

PAYMENT SHALL BE MADE PER LINEAR FOOT OF ITEM 625 - CONDUIT, 2", 713.04, AS PER PLAN, AND SHALL BE FULL COMPENSATION INCLUDING ALL LABOR, MATERIALS, AND INCIDENTALS REQUIRED TO COMPLETE THE INSTALLATION IN A SATISFACTORY MANNER.

LIGHTING GENERAL SUMMARY

CALC. BY EDR DATE 11/89
CHKD. BY DSB DATE 3/90
SUM-76-11.57
FED PROJECT IR-76-2(44)19
SUMMIT COUNTY
OHIO
F.H.W.A. REGION 5
678 12.14

PLAN SHEET NUMBER / SUB-SUMMARY SHEET NUMBER														PARTICIPATION			ITEM	ITEM EXT.	GRAND TOTAL	UNIT	DESCRIPTION	LINE NO.
675	676	688/680	689/680	690/681	691/682	692/683	693/684	694/685	695/685	696/686	697/686	698/687	699/687									
																						1
		2	4	4	13	4	3	13		13	2						202	75403	58	EACH	LIGHT POLE REMOVED FOR STORAGE, AS PER PLAN (SEE NOTE, SHEET 675)	2
		2	4	4	13	4	3	13		13	2						202	75505	58	EACH	LUMINAIRE REMOVED FOR STORAGE, AS PER PLAN (SEE NOTE, SHEET 675)	3
		2	4	4	13	4	3	13		13	2						202	75500	58	EACH	LIGHT POLE FOUNDATION REMOVED (SEE NOTE, SHEET 675)	4
												13	2				202	98100	15	EACH	UNDERPASS LUMINAIRE REMOVED FOR STORAGE, AS PER PLAN (SEE SHEET 675)	5
	1																202	98100	1	EACH	UNDERPASS SERVICE REMOVED FOR BRIDGE SUM-76-1180 OVER INMAN STREET, AS PER PLAN ‡	6
	1																202	98100	1	EACH	UNDERPASS SERVICE REMOVED FOR BRIDGE SUM-76-1231 OVER ARLINGTON STREET, AS PER PLAN ‡	7
	1																202	98100	1	EACH	UNDERPASS SERVICE REMOVED FOR BRIDGE SUM-76-1267 OVER FULLER STREET, AS PER PLAN ‡	8
	1																202	98100	1	EACH	UNDERPASS SERVICE REMOVED FOR BRIDGE SUM-76-1296 OVER MARTHA AVENUE, AS PER PLAN ‡	9
	1																202	98100	1	EACH	UNDERPASS SERVICE REMOVED FOR BRIDGE SUM-76-1332 OVER SEIBERLING STREET, AS PER PLAN ‡	10
																					‡ (SEE NOTE, SHEET 676)	11
																						12
1840																	603	00400	1840	LIN. FT.	4" CONDUIT, TYPE E	13
																						14
																						15
						3	1										625	04100	4	EACH	LIGHT POLE DESIGN AT8B34.2	16
					4		2			1							625	03300	7	EACH	LIGHT POLE, DESIGN A12B32.5	17
		2	2	1	21	9		19		9							625	04300	63	EACH	LIGHT POLE, DESIGN AT12B34.2	18
			1			1											625	04400	2	EACH	LIGHT POLE, DESIGN AT15B34.2	19
							2										625	35011	2	EACH	REMOVE AND REERECT EXISTING MEDIAN LIGHT POLE, AS PER PLAN (SEE NOTE, SHEET 675)	20
																						21
																						22
		2	3	1	21	13	1	19		9							625	14000	69	EACH	LIGHT POLE FOUNDATION, 24" X 6' DEEP	23
							2										625	14501	2	EACH	MEDIAN LIGHT POLE FOUNDATION, AS PER PLAN (SEE NOTE, SHEET 675)	24
	1	2	3	1	25	13	1	19		10							625	32000	75	EACH	GROUND ROD, 713.16	25
					16		8			4							625	10600	28	EACH	LIGHT POLE ANCHOR L-BOLTS ON STRUCTURE	26
																						27
																						28
		2	3	1	25	13	3	19		10							625	26200	76	EACH	LUMINAIRE, STYLE B, TYPE II, 200 WATT, HIGH-PRESSURE SODIUM, 713.11, 480V.	29
					1			1									625	28000	2	EACH	GLARE SHIELD	30
												18	3				625	27500	21	EACH	LUMINAIRE, UNDERPASS, 100 WATT, HIGH-PRESSURE SODIUM, 713.13, 120 V.	31
																						32
																						33
			1	2		1	1	1		1	1						625	31500	8	EACH	MEDIAN PULL BOX	34
		1	3	7	6	6		10	1	2							625	30700	36	EACH	PULL BOX, 713.08, 18"	35
						1		1									625	30706	2	EACH	PULL BOX, 713.08, 24"	36
			1	5	4		3	2	3	1	1						625	29900	20	EACH	JUNCTION BOX, 18" x 8" x 6"	37
				2		3	1	2			2						625	29910	10	EACH	TRANSITION JUNCTION BOX	38
				1	2		1										625	29911	4	EACH	TRANSITION JUNCTION BOX, AS PER PLAN (SEE NOTE, SHEET 675)	39
																						40
																						41
		1190	917	1607	4323	3567	150	3629	290	1672	74	106	20				625	29002	17,545	LIN. FT.	TRENCH, 24" Deep	42
			165	518	601	115	1123	404		195	132	96	20				625	25400	3369	LIN. FT.	CONDUIT, 713.04, 2"	43
			135	426	184	363	93	716		61							625	25500	1978	LIN. FT.	CONDUIT, 713.04, 3"	44
		90	20						15								625	25900	125	LIN. FT.	CONDUIT, JACKED OR DRILLED UNDER PAVEMENT, 3"	45
									182								625	25401	182	LIN. FT.	CONDUIT, 713.04, 2" AS PER PLAN (SEE NOTE, SHEET 677)	46
																						47
																						48
																						49

LIGHTING GENERAL SUMMARY

CALC. BY E.D.R. DATE 11/89	SUM-76-11.57	OHIO
CHKD. BY D.S.B. DATE 3/90	FED. PROJECT IR-76-2(44)19	F.H.W.A. REGION 5
	SUMMIT COUNTY	

679 / 1214

PLAN SHEET NUMBER / SUB-SUMMARY SHEET NUMBER													PARTICIPATION			ITEM	ITEM EXT.	GRAND TOTAL	UNIT	DESCRIPTION	LINE NO.
	677	688/680	689/680	690/681	691/682	692/683	693/684	694/685	695/685	696/686	697/686	698/687	699/687									
																						50
		332	1270	2078	1598	1804	2766	1852	384	486	712						625	23200	13,282	LIN. FT.	NO. 4 AWG 5,000 VOLT, DISTRIBUTION CABLE	51
		1300	852	1256	4437	4344	155	3590	260	1764							625	24100	17,958	LIN. FT.	1 1/2" DUCT CABLE W/TWO NO. 4 AWG 5,000 VOLT CABLES	52
		186	281	93	2216	1175	259	1674		930							625	23400	6814	LIN. FT.	NO. 10 AWG POLE AND BRACKET CABLE	53
																						54
																						55
		2	4	1	25	16	6	20		12	1						625	00500	87	EACH	CONNECTOR KIT, TYPE II	56
		2	4	1	25	16	6	20		12	1						625	00600	87	EACH	CONNECTOR KIT, TYPE III	57
			6	18	2	2	4	12	6	2	8						625	01004	60	EACH	CONNECTOR KIT, TYPE VIIB	58
		10	10	14	12	14		24	2	4							625	01500	90	EACH	CABLE SPLICING KIT	59
						2		2									625	01100	4	EACH	CONNECTOR KIT, TYPE VIIC	60
																						61
																						62
												1					625	33000	1	EACH	STRUCTURE GROUNDING SYSTEM FOR BRIDGE SUM-76-1180 OVER INMAN STREET	63
												1					625	33000	1	EACH	STRUCTURE GROUNDING SYSTEM FOR BRIDGE SUM-76-1231 OVER ARLINGTON STREET	64
					1												625	33000	1	EACH	STRUCTURE GROUNDING SYSTEM FOR BRIDGE SUM-76-1244 OVER RAMP "E-4"	65
					1												625	33000	1	EACH	STRUCTURE GROUNDING SYSTEM FOR BRIDGE SUM-76-1235 OVER RAMP "E-6"	66
												1					625	33000	1	EACH	STRUCTURE GROUNDING SYSTEM FOR BRIDGE SUM-76-1267 OVER FULLER STREET	67
							1										625	33000	1	EACH	STRUCTURE GROUNDING SYSTEM FOR BRIDGE SUM-76-1277 OVER KELLY AVENUE/A.B.B.R.	68
												1					625	33000	1	EACH	STRUCTURE GROUNDING SYSTEM FOR BRIDGE SUM-76-1296 OVER MARTHA AVENUE	69
								1									625	33000	1	EACH	STRUCTURE GROUNDING SYSTEM FOR BRIDGE SUM-76-1303 OVER RAMP "E-16"	70
													1				625	33000	1	EACH	STRUCTURE GROUNDING SYSTEM FOR BRIDGE SUM-76-1332 OVER SEIBERLING STREET	71
																						72
																						73
						1		1				3	1				625	34000	6	EACH	POWER SERVICE	74
																	625	38000	LUMP		HIGH-VOLTAGE TEST	75
																						76
																						77
																						78
												3	1				SPEC	625 31600	4	EACH	PULL BOX, 7/3.08, 18" CIRCULAR (AKRON STANDARD) (SEE NOTE, SHEET G76)	79
				1		1		1			1						202	75511	4	EACH	POWER SERVICE REMOVED, As Per Plan	80
	L.S.																SPEC	625 40000	LUMP		MAINTAIN EXISTING LIGHTING (SEE NOTE, SHEET G76)	81
	10																SPEC	625 40010	10	EACH	REPLACEMENT OF EXISTING LIGHTING UNIT (SEE NOTE, SHEET G77)	82
		2	3	2	3	3	2	1		3	1						SPEC	625 40020	20	EACH	DISCONNECT EXISTING CIRCUIT (SEE NOTE, SHEET G77)	83
		73				762	107	200		295							SPEC	625 25910	1437	LIN. FT.	CONDUIT CLEANED AND CABLES REMOVED (SEE NOTE, SHEET G77)	84
																						85
																						86
												1					625	37100	1	EACH	SERVICE TO UNDERPASS LIGHTING FOR BRIDGE NO. SUM-76-1180 OVER INMAN STREET	87
												1					625	37100	1	EACH	SERVICE TO UNDERPASS LIGHTING FOR BRIDGE NO. SUM-76-1231 OVER ARLINGTON STREET	88
												1					625	37100	1	EACH	SERVICE TO UNDERPASS LIGHTING FOR BRIDGE NO. SUM-76-1267 OVER FULLER STREET	89
												1					625	37100	1	EACH	SERVICE TO UNDERPASS LIGHTING FOR BRIDGE NO. SUM-76-1296 OVER MARTHA AVENUE	90
													1				625	37100	1	EACH	SERVICE TO UNDERPASS LIGHTING FOR BRIDGE NO. SUM-76-1332 OVER SEIBERLING STREET	91
																						92
																						93
																						94
																						95
																						96
																						97
																						98

AA B/Pn 71942R

CALC. BY. E.D.L. DATE 11-89	SUM-76-11.57	OHIO
CHKD. BY. D.S.D. DATE 3/90	FED. PROJECT IR-76-2(44)19	F.H.W.A. REGION 5

SUMMIT COUNTY

680 / 1214

LIGHTING PLAN SUB-SUMMARY

LINE NUMBER	SIDE	STATION	STATION	625																												SPECIAL				202				REMARKS
					LIGHT POLE DESIGN AT15834.2 (D)	LIGHT POLE DESIGN AT12834.2 (C)	LIGHT POLE FOUNDATION 24" X 6'		LUMINAIRE, STYLE B, TYPE II, 200 W. H.P.S. 713.11, 480 V.			GROUND ROD 713.16	PULL BOX, CONCRETE, 18" 713.08		MEDIAN PULL BOX	TRENCH, 24"		CONDUIT, 713.04, 2"	CONDUIT, 713.04, 3"	CONDUIT JACKED OR DRILLED UNDER PAVEMENT, 3"	NO. 4 AWG 5,000 V. DISTRIBUTION CABLE	NO. 10 AWG POLE AND BRACKET CABLE	1 1/2" DUCT-CABLE W/2 NO. 4 AWG 5,000 V CABLES	CONNECTOR KIT TYPE II	CONNECTOR KIT TYPE III		CONNECTOR KIT TYPE VIIB		CABLE SPLICING KIT		JUNCTION BOX, 18" x 8" x 6"	TRANSITION JUNCTION BOX	TRANSITION JUNCTION BOX, AS PER PLAN	CONDUIT CLEANED AND CABLES REMOVED	DISCONNECT EXISTING CIRCUIT	POWER SERVICE REMOVED		LIGHT POLE REMOVED FOR STORAGE, AS PER PLAN	LUMINAIRE REMOVED FOR STORAGE, AS PER PLAN	LIGHT POLE FOUNDATION REMOVED		
					EA.	EA.	EA.		EA.			EA.	EA.		EA.	L.F.		L.F.	L.F.	L.F.	L.F.	L.F.	L.F.	EA.	EA.		EA.		EA.		EA.	EA.	EA.	L.F.	EA.	EA.		EA.	EA.	EA.		
1		SHEET NO. 688																																		2	2	2		
2		STA. REF. TO INMAN ST.																																						
3	RT.	13+20 'T'	11+03													490							500					4						1						EXIST. PULL BOX
4	LT./RT.	11+03	11+05																		332							4					73	1						EXIST. PULL BOX
5	RT.	11+05	13+00 "E-2"													295				25			305																	
6																																								
7		STA. REF. TO RAMP 'E-2'																																						
8	RT.	10+10	11+10			1	1		1			1				100						93	105	1	1															
9	RT.	11+10	13+00			1	1		1			1				190						93	200	1	1															
10	RT./LT.	547+00 I-76 EB	2G+28 I-76 WB										1			115				65			190					2												
11		TOTAL SHEET NO. 688			—	2	2		2			2	1		—	1190		—	—	90	332	186	1300	2	2		—		10		—	—	—	73	2	—		2	2	2		
12		SHEET NO. 689																																		4	4	4		
13		STA. REF. TO ℄ I-76																																						
14	℄	559+50	562+50																		620			1	1															
15	RT./℄	553+60	553+65												1	70			70		160						2	2						1						EX. P.B. TO NEW M.P.B.
16	RT.	558+82	559+40										1			58							68					4						1						
17	RT.	559+40	559+42													65			65		150						2													
18	LT.	553+90	9+20 'E-2'			1	1		1			1	1			62				20		93	92	1	1			2												
19	LT.	558+20	561+00										1			180							190					2												
20	RT.	558+45	558+82																																1					
21	RT.	564+35	566+00													10		165			340						2			1									
22		STA. REF. TO RAMP 'E-2'																																						
23	RT.	558+20	7+30		1		1		1			1				192						95	202	1	1															
24	RT.	7+30	9+20			1	1		1			1				190						93	200	1	1															
25	RT.	9+20	10+10													90							100																	
26																																								
27		TOTAL SHEET NO. 689			1	2	3		3			3	3		1	917		165	135	20	1270	281	852	4	4		6		10		1	—	—	—	3	—		4	4	4		
28																																								
29		SHEET NO. 690																																		4	4	4		
30		STA. REF. TO I-76																																						
31	RT./℄	566+00	567+95															195	60		540						4			1				1	1					
32	℄/LT.		574+90												1	85			85		190						4			1									
33	℄	574+90	575+85												1						210						2												
34																																								
35	℄	576+13	576+94															81													2								
36	℄/RT.		575+85										1			70			70		160							2												
37	RT.	575+85	576+80													30		109			210						2			1									
38	LT.	576+13	577+46															133			286						4			2		1							
39	℄/LT.		577+46													68			78		176						2												
40	℄/RT.		576+46																																1					
41		STA. REF. TO ARLINGTON ST.																																						
42	RT.		11+05										1														2												
43	RT.	11+05	15+35										1			430							440					2												
44		15+35	78+15 'E-6'													135							145																	
SUB-TOTALS SHEET NO. 690					—	—	—		—			—	3		2	818		518	293	—	1772	—	585	—	—		18		6		5	2	1	—	2	1		4	4	4		

AA B/P# 71942R

CALC. BY. EDK DATE 11-89 | CHKD. BY. DSB DATE 3/90 | SUM-76-11.57 | FED. PROJECT IR-76-2(44)19 | OHIO | F.H.W.A. REGION 5

SUMMIT COUNTY

LIGHTING PLAN SUB-SUMMARY

LINE NUMBER	SIDE	STATION	STATION	625 LIGHT POLE DESIGN A12B32.5 (8) EA.	625 LIGHT POLE DESIGN A12B34.2 (c) EA.	625 LIGHT POLE FOUNDATION 24" X 6' EA.	625 LUMINAIRE, STYLE B, TYPE II 200 W. H.P.S. 713.11, 400 V EA.	625 GLARE SHIELD EA.	625 GROUND ROD 713.16 EA.	625 PULL BOX, CONCRETE, 18", 713.08 EA.	625 MEDIAN PULL BOX EA.	625 TRENCH, 24" L.F.	625 CONDUIT, 713.04, 2" L.F.	625 CONDUIT, 713.04, 3" L.F.	625 NO. 4 AWG 5,000 V. DISTRIBUTION CABLE L.F.	625 NO. 10 AWG POLE AND BRACKET CABLE L.F.	625 1 1/2" DUCT-CABLE W/2 NO. 4 AWG 5,000V. CABLES L.F.	625 CONNECTOR KIT TYPE II EA.	625 CONNECTOR KIT TYPE III EA.	625 CONNECTOR KIT TYPE VIIB EA.	625 CABLE SPLICING KIT EA.	625 LIGHT POLE ANCHOR BOLTS FOR STRUCTURE, "L" SHAPED EA.	625 JUNCTION BOX, 18" x 8" x 6" EA.	625 TRANSITION JUNCTION BOX EA.	625 TRANSITION JUNCTION BOX, AS PER PLAN EA.	SPECIAL DISCONNECT EXISTING CIRCUIT EA.	SPECIAL POWER SERVICE REMOVED EA.	202 LIGHT POLE REMOVED FOR STORAGE, AS PER PLAN EA.	202 LUMINAIRE REMOVED FOR STORAGE, AS PER PLAN EA.	202 LIGHT POLE FOUNDATION REMOVED EA.	REMARKS
45		SHEET NO. 690 (CONT.)								3	2	818	518	293	1772	585				18	6		5	2	1	2	1	4	4	4	
46		STA. REF. TO ARLINGTON ST.																													
47			18+72							1											2										
48	RT.	18+72	77+59 "E-4"		1	1	1		1			95				93	100	1	1											
49	RT.	18+72	19+25							1		58		58	136						2									
50	LT. / RT.	19+15	19+25							1		75		75	170						2									
51		19+15	24+90							1		561				571					2									
52																															
53																															
54																															
55		TOTAL SHEET NO. 690		—	1	1	1	—	1	7	2	1607	518	426	2078	1256	1	1	18	14	—	5	2	1	2	1	4	4	4		
56																															
57																															
58		SHEET NO. 691																										13	13	13	
59		STA. REF. TO RAMP "E-4"																													
60	LT.	77+59	78+89		1	1	1		1			130				93	135	1	1											
61	LT.	78+89	80+76		1	1	1		1			187				93	197	1	1											
62	LT.	80+76	82+63		1	1	1		1			187				93	197	1	1											
63	LT.	82+63	84+50		1	1	1	1	1			187				93	197	1	1											
64	LT.	84+50	86+31		1	1	1		1			181				93	197	1	1											
65	LT.	86+31	88+21		1	1	1		1			190				93	200	1	1											
66	LT.	88+21	89+08							1		87					97				2									
67	LT.	89+08	589+10 & I-76							1		126		72	132		70			2	2			1						
68	LT.	89+08	90+00									92					97													
69																															
70		STA. REF. TO RAMP "E-7"																													
71			80+86	1			1		1							89		1	1			4	1								
72	LT.	80+86	82+52	1			1		1				166		352	89		1	1			4	1								
73	LT.	82+52	84+16	1			1		1				164		348	89		1	1			4	1								
74	LT.	84+16	85+52							1		10	136		292						2			1						
75	LT.	85+52	85+95		1	1	1		1			43				93	53	1	1											
76	LT.	85+95	87+71		1	1	1		1			176				93	186	1	1											
77	LT.	87+71	89+47		1	1	1		1			176				93	186	1	1											
78	LT. / RT.	89+47	89+08 "E-4"									60		30			70													
79	LT.	89+47	90+50									103					108													
80		STA. REF. TO RAMP "E-6"																													
81	RT.	78+15	78+32		1	1	1		1			17				93	27	1	1											
82	RT.	78+32	80+35		1	1	1		1			203				93	213	1	1											
83	RT.	80+35	82+48		1	1	1		1			213				93	223	1	1											
84	RT.	82+48	84+56		1	1	1		1			208				93	218	1	1											
85	RT.	84+56	86+64		1	1	1		1			208				93	218	1	1											
86	RT.	86+64	88+73		1	1	1		1			209				93	219	1	1											
87	RT.	88+73	590+00 NL									127					132													
88																															
		SUB-TOTALS SHEET NO. 691		3	15	15	18	1	18	3	—	3120	466	102	1124	1662	3240	18	18	2	6	12	3	—	1	1	—	13	13	13		

LIGHTING PLAN SUB-SUMMARY

AA B/Pe 71942R

CALC. BY. [illegible] DATE 11-89	SUM-76-11.57	OHIO
CHKD. BY. DSB DATE 3/90	FED. PROJECT IR-76-2(44)19	F.H.W.A. REGION 5

682 12.14

SUMMIT COUNTY

LIGHTING PLAN SUB-SUMMARY

LINE NUMBER	SIDE	STATION	STATION		625																											SPECIAL				202			REMARKS
					LIGHT POLE DESIGN A12B32.5 (A)	LIGHT POLE DESIGN A12B34.2 (C)	LIGHT POLE FOUNDATION 24" X 6'	LIGHT POLE DESIGN A15B34.2 (D)	LUMINAIRE, STYLE B, TYPE II 250 W. H.P.S. 713.11, 480V.	GLARE SHIELD		GROUND ROD 713.16	PULL BOX, CONCRETE, 18", 713.08		MEDIAN PULL BOX	TRENCH, 24"	Structure Grounding System for Bridge Sum-76-1244 over Ramp E-4	CONDUIT, 713.04, 2"	CONDUIT, 713.04, 3"	Structure Grounding System for Bridge Sum-76-1235 over Ramp E-6	NO. 4 AWG 5,000 V. DISTRIBUTION CABLE	NO. 10 AWG POLE AND BRACKET CABLE	1-1/2" DUCT-CABLE W/2 NO. 4 AWG. 5,000 V CABLES		CONNECTOR KIT TYPE II	CONNECTOR KIT TYPE III	CONNECTOR KIT TYPE VIIB	CONNECTOR KIT TYPE VIIC	CABLE SPLICING KIT		JUNCTION BOX, 18" x 8" x 6"	TRANSITION JUNCTION BOX	LIGHT POLE ANCHOR BOLTS FOR STRUCTURE "L" SHAPED	TRANSITION JUNCTION BOX, AS PER PLAN	DISCONNECT EXISTING CIRCUIT	POWER SERVICE REMOVED	CONDUIT CLEANED AND CABLES REMOVED		LIGHT POLE REMOVED FOR STORAGE, AS PER PLAN	LUMINAIRE REMOVED FOR STORAGE, AS PER PLAN	LIGHT POLE FOUNDATION REMOVED	
					EA.	EA.	EA.	EA.	EA.	EA.		EA.	EA.		EA.	L.F.		L.F.	L.F.		L.F.	L.F.	L.F.		EA.	EA.	EA.	EA.	EA.		EA.	EA.	EA.	EA.	EA.	EA.	L.F.		EA.	EA.	EA.	
89		SHEET NO. 691 (CONT.)			3	15	15	—	18	1		18	3		—	3120		466	102		1124	1662	3240		18	18	2	—	6		3	—	12	1	—	—	—		13	13	13	
90		STA. REF. TO	℄ I-76																																						
91	℄ / RT.	589+10	589+24										1			82			82		184									2											
92	RT.	589+24	590+00													66							76																	COMMON TRENCH
93	℄	578+65	580+52																															2						
94		STA. REF. TO	RAMP "E-8"																																						
95	RT.		78+00		1				1			1										89			1	1					1		4								
96	RT.	78+00	79+35										1			10		135			290									2				1							
97	RT.	79+35	79+83			1	1		1			1				48						93	59		1	1															
98	RT.	79+83	81+86			1	1		1			1				203						93	213		1	1															
99	RT.	81+86	83+79			1	1		1			1				193						93	203		1	1															
100	RT.	83+79	85+73			1	1		1			1				194						93	204		1	1															
101	RT.	85+73	87+66			1	1		1			1				193						93	203		1	1															
102	RT.	87+66	89+50										1			184							194							2											
103	RT.	89+50	89+55			1	1		1			1				5							15		1	1															
104	RT.	89+55	89+80													25							30																	
105		Sum-76-1244 over Ramp E-4															1																								
106		Sum-76-1235 over Ramp E-6																		1																					
107																																									
108																																									
109																																									
110																																									
111																																									
112		TOTAL SHEET NO. 691			4	21	21	—	25	1		25	6		—	4323	1	601	184	1	1598	2216	4437		25	25	2		12		4	—	16	2	3	—			13	13	13	
113																																									
114																																									
115		SHEET NO. 692																																	1				4	4	4	
116		STA. REF. TO ℄ I-76																																							
117	℄	EX. 593+38	EX. 596+75															71			694				2	2							2				337				
118																																									
119																																									
120	℄	596+75	597+40												1					150							2									65				
121	℄ / LT.		597+40										1			87			68				194						2											
122	RT.	597+10	597+40										1			146			60		502		156						2											
123	℄	597+40	599+81																		170				1	1								1		241				
124	℄	599+81	600+56																		98											1				75				
125	℄	600+56	601+00															44																		44				
126	RT.	590+00	13+00 FULLER													575							1160																	COMMON TRENCH
127		STA. REF.	TO RAMP "E-4"																																						
128	LT.	90+00	90+27			1	1		1			1				27						93	32		1	1															
129	LT.	90+27	92+33			1	1		1			1				206						93	216		1	1															
130	LT.	92+33	594+39 ℄ I-76				1	1	1			1				206						95	216		1	1															
131																																									
132																																									
		SUB-TOTALS SHEET NO. 692				2	3	1	3	—		3	2		1	1247		115	128		1614	281	1974		6	6	—	2	4		—	3	—	—	3	1	762		4	4	4	

LIGHTING PLAN SUB-SUMMARY

AA B/Pe 71542R

CALC. BY. EDK DATE 11-89 | CHKD. BY. DSB DATE 3/90 | SUM-76-11.57 | FED. PROJECT IR-76-2(44)19 | OHIO | F.H.W.A. REGION 5 | 683 1214

LIGHTING PLAN SUB-SUMMARY

SUMMIT COUNTY

LINE NUMBER	SIDE	STATION	STATION	625																														SPECIAL			202			REMARKS
				LIGHT POLE DESIGN AT8B34.2 (A)	LIGHT POLE DESIGN A12B32.5 (B)	LIGHT POLE DESIGN AT12B34.2 (C)	LIGHT POLE FOUNDATION 24" X 6'	MEDIAN LIGHT POLE FOUNDATION, AS PER PLAN	LUMINAIRE, STYLE B, TYPE II 250 W. H.P.S. 713.11, 480V.	REMOVE AND REERECT EXISTING MEDIAN LIGHT POLE, AS PER PLAN	LIGHT POLE DESIGN AT15B32.5 (D)	GROUND ROD 713.16	PULL BOX, CONCRETE, 18", 713.08	PULL BOX, CONCRETE, 24", 713.08	MEDIAN PULL BOX	TRENCH, 24"		CONDUIT, 713.04, 2"	CONDUIT, 713.04, 3"		NO. 4 AWG 5,000 V. DISTRIBUTION CABLE	NO. 10 AWG POLE AND BRACKET CABLE	1 1/2" DUCT-CABLE W/2 NO. 4 AWG 5,000 V. CABLES		CONNECTOR KIT TYPE II	CONNECTOR KIT TYPE III	CONNECTOR KIT TYPE VIIB	CONNECTOR KIT TYPE VIIC	CABLE SPLICING KIT		JUNCTION BOX, 18" x 8" x 6"	TRANSITION JUNCTION BOX	LIGHT POLE ANCHOR BOLTS FOR STRUCTURE "L" SHAPED	POWER SERVICE	TRANSITION JUNCTION BOX, AS PER PLAN	DISCOUNT EXISTING CIRCUIT	POWER SERVICE REMOVED	CONDUIT CLEANED AND CABLES REMOVED	LIGHT POLE REMOVED FOR STORAGE, AS PER PLAN	LUMINAIRE REMOVED FOR STORAGE, AS PER PLAN	LIGHT POLE FOUNDATION REMOVED	
				EA.	EA.	EA.	EA.	EA.	EA.	EA.	EA.	EA.	EA.	EA.	EA.	L.F.		L.F.	L.F.		L.F.	L.F.	L.F.		EA.	EA.	EA.	EA.	EA.		EA.	EA.	EA.	EA.	EA.	EA.	EA.	L.F.	EA.	EA.	EA.	
133		SHEET NO. 692 (CONT.)				2	3		3	-	1	3	2	-	1	1247		115	128		1614	281	1974		6	6	2	2	4		1	3	1	1	1	3	1	762	4	4	4	
134		STA. REF. TO	RAMP "E-7"																																						
135	LT.	90+50	91+23			1	1		1			1				73						93	78		1	1															
136	LT.	91+23	92+98			1	1		1			1				175						93	185		1	1															
137	LT.	92+98	94+74			1	1		1			1				176						93	186		1	1	2														
138																																									
139	LT./RT.	94+74	15+55 FULLER										1			155			30				165						2												
140	LT.	94+74	38+50 2ND AVE.										1			316							326						2												
141																																									
142		STA. REF. TO	RAMP "E-8"																																						
143	RT.	89+80	10+00 "E-8A"										1			20							25						2												
144	RT.	10+00 "E-8A"	12+00 "E-8A"			1	1		1			1				200						93	210		1	1														
145	RT./LT.	10+00 "E-8A"	91+15			1	1		1			1				140			30			93	150		1	1														
146	RT.	91+15	93+05			1	1		1			1				190						93	200		1	1														
147	RT.	93+05	94+95			1	1		1			1				190						93	200		1	1														
148	RT.	94+95	95+50										1			55							65						2												
149	RT./LT.	95+50	13+00 FULLER											1		85			85		190								2				1							POWER SERVICE "FUL"
150	RT.	95+50	100+93	1			1		1			1				138			90			81	148		1	1														
151		STA. REF. TO	RAMP "E-8B"																																						
152	RT.																																								
153	RT.	100+93	102+77	1			1		1			1				184						81	194		1	1														
154	RT.	102+77	104+61	1			1		1			1				184						81	194		1	1														
155	RT.	104+61	105+00													39							44																	
156																																									
157																																									
158		TOTAL SHEET NO. 692		3	-	9	13	-	13	-	1	13	6	1	1	3567		115	363		1804	1175	4344		16	16	2	2	14		-	3	-	1	-	3	1	762	4	4	4	
159																																									
160																																									
161		SHEET NO. 693																																					3	3	3	
162		STA. REF. TO ℄ I-76																																								
163	℄	601+00	602+90					1		1								190			390				1	1															
164	℄	602+90	606+10					1		1								320			660				1	1															
165	℄	606+10	606+80												1			70			160						2														
166	℄/RT.		606+80																93		206						2				1										
167	℄	606+80	608+66															186			392											1									
168	℄	608+66	609+43																		174				1	1															
169	℄	609+43	610+50																																							
170		STA. REF. TO	RAMP "E-9"																																							
171	RT.	606+80 I-76	607+38 I-76		1				1									58			136	89			1	1					1		4								
172	RT.	607+38 I-76	9+42		1				1									191			402	89			1	1					1		4								
173	RT.	9+42	9+58															16			52														1						
174	RT.	9+58	10+50															92			194																				
175																																									
176																																									
		SUB-TOTALS SHEET NO. 693		2	-	-	2	2	2	-	-	-	-	1	-			1123	93		2766	178			5	5	4	-	-		3	1	8	-	1	2	-	107	3	3	3	

LIGHTING PLAN SUB-SUMMARY

AA B/P# 71942R

CALC. BY. CDL DATE 11-89	SUM-76-11.57	OHIO
CHKD. BY. DSB DATE 3/90	FED. PROJECT IR-76-2(44)19	F.H.W.A. REGION 5

684 / 1214

SUMMIT COUNTY

LIGHTING PLAN SUB-SUMMARY

LINE NUMBER	SIDE	STATION	STATION	625																												SPECIAL			202			REMARKS
				LIGHT POLE DESIGN AT8B34.2 (A)	LIGHT POLE DESIGN A12B32.5 (B)	LIGHT POLE DESIGN AT12B34.2 (C)	LIGHT POLE FOUNDATION 24" X 6'	MEDIAN LIGHT POLE FOUNDATION, AS PER PLAN	LUMINAIRE, STYLE B, TYPE II 200 W. H.P.S. 7.3 1.1 480V.	REMOVE AND REERECT EXISTING MEDIAN LIGHT POLE, AS PER PLAN	GLARE SHEILDS	GROUND ROD 713.16	PULL BOX, CONCRETE, 18", 713.08	PULL BOX, CONCRETE, 24", 713.08	MEDIAN PULL BOX	TRENCH, 24"		CONDUIT, 713.04, 2"	CONDUIT, 713.04, 3"	Structure Grounding System for Bridge SUM-76-1277 over Kelly Ave / A.B.R.	NO. 4 AWG 5,000 V. DISTRIBUTION CABLE	NO. 10 AWG POLE AND BRACKET CABLE	1 1/2" DUCT-CABLE W/2 NO. 4 AWG 5,000 V. CABLES		CONNECTOR KIT TYPE II	CONNECTOR KIT TYPE III	CONNECTOR KIT TYPE VIIB	CONNECTOR KIT TYPE VIIC	CABLE SPLICING KIT	POWER SERVICE	JUNCTION BOX, 18" x 8" x 6"	TRANSITION JUNCTION BOX	LIGHT POLE ANCHOR BOLTS FOR STRUCTURE "L" SHAPED	TRANSITION JUNCTION BOX, AS PER PLAN		DISCONNECT EXISTING CIRCUIT	POWER SERVICE REMOVED	CONDUIT CLEANED AND CABLES REMOVED	LIGHT POLE REMOVED FOR STORAGE, AS PER PLAN	LUMINAIRE REMOVED FOR STORAGE, AS PER PLAN	LIGHT POLE FOUNDATION REMOVED	
				EA.	EA.	EA.	EA.	EA.	EA.	EA.	EA.	EA.	EA.	EA.	EA.	L.F.		L.F.	L.F.		L.F.	L.F.	L.F.		EA.	EA.	EA.	EA.	EA.	EA.	EA.	EA.	EA.		EA.	EA.	L.F.	EA.	EA.	EA.	
177		SHEET NO. 693 (CONT.)		—	2	—	—	2	2	2	—	—	—	—	1	—		1123	93		2766	178			5	5	4	—	—	—	3	1	8	1		2	—	107	3	3	3	
178		STA. REF. TO RAMP "E-8B"																																						
179	RT.	105+00	106+50	1			1		1			1				150						81	155		1	1														
180		Sum-76-1277 over Kelly Ave.																		1																				
181																																								
182																																								
183		TOTAL SHEET NO. 693		1	2	—	1	2	3	2	—	1	—	—	1	150		1123	93	1	2766	259	155		6	6	4	—	—	—	3	1	8	1		2	—	107	3	3	3	
184																																								
185		SHEET NO. 694																																						
186		STA. REF. TO ℄ I-76																																				1		13	13	13	
187	℄ LT.	612+10	12+69 "E-12"													85			85				190																		
188	℄	610+50	612+50																																		200			
189	℄	610+80.5	611+55.9															76													2									
190	℄	611+55.9	612+10												1												2													
191	℄ LT.		612+87																								2									1				
192	℄ RT.		612+10										1			82			82		184								2											
193	℄	612+10	612+52																		104				1	1														
194	RT.	611+15	612+10													10		95			210						2				1									
195		STA. REF. TO RAMP "E-9"																																						
196	RT.	10+50	11+05										1			10		55			120								2											
197	RT. LT.	11+05	12+44 "MAR"											1		141			141		302								6											
198	LT.	12+44 "MAR"	12+45 "MAR"													5			5		90									1									POWER SERVICE "MAR"
199	RT.	11+05	11+30		1	1		1			1					25						93	35		1	1													
200	RT.	11+30	13+23		1	1		1			1					193						93	203		1	1													
201	RT.	13+23	15+12		1	1		1			1					189						93	199		1	1													
202																																								
203		STA. REF. TO RAMP "E-10"																																						
204	RT.	612+10 I-76	12+44 "MAR"										1			33			33		86								2											
205	RT.	11+90 "MAR"	13+70		1	1		1			1					155							165		1	1													
206	RT.	13+70	14+20										1			60							70						2											
207	RT.	14+20	15+18										1			20		98			216								2											
208	RT.	15+18	15+48		1	1		1			1					30						93	40		1	1													
209	RT.	15+48	16+98		1	1		1			1					150						93	160		1	1													
210	RT.	16+98	17+00													2							4																
211																																								
212		STA. REF. TO RAMP "E-16"																																						
213	LT.																																							
214	LT. RT.	11+90 "MAR"	12+80		1	1		1			1					90			55			93	100		1	1													
215	RT.	12+80	14+75		1	1		1		1	1					195						93	205		1	1													
216	RT.	14+75	16+79		1	1		1			1					204						93	214		1	1													
217	RT.	16+79	17+23													44							49																
218																																								
219		STA. REF. TO RAMP "E-12"																																						
220	LT.	610+50 I-76	611+30 I-76										1			10		80			180						2		2		1								
		SUB-TOTALS SHEET NO. 694		—	9	9	—	9	—	1	9	6	1	1		1733		404	401		1492	744	1634		10	10	6	2	18	1	2	2	—	—		1	1	200	13	13	13	

LIGHTING PLAN SUB-SUMMARY

AA B/P# 71942R

CALC. BY. CDR DATE 11-89 | SUM-76-11.57 | OHIO
CHKD. BY. DSB DATE 3/90 | FED. PROJECT IR-76-2(44)19 | F.H.W.A. REGION 5
SUMMIT COUNTY

685/1214

LIGHTING PLAN SUB-SUMMARY

LINE NUMBER	SIDE	STATION	STATION		625																								SPECIAL				202			REMARKS
					LIGHT POLE DESIGN AT12 8342 (c)	LIGHT POLE FOUNDATION 24" X 8'		LUMINAIRE, STYLE B, TYPE II 200 W. H.P.S. 713.11, 460 V.		GLARE SHIELDS	GROUND ROD 713.16	PULL BOX, CONCRETE, 18"; 713.08	PULL BOX, CONCRETE, 24"; 713.08	MEDIAN PULL BOX	TRENCH, 24"	CONDUIT, 713.04, 2" AS PER PLAN	CONDUIT, 713.04, 2"	CONDUIT, 713.04, 3"	CONDUIT, JACKED OR DRILLED UNDER PAVEMENT, 3"	NO. 4 AWG 5,000 V. DISTRIBUTION CABLE	NO. 10 AWG POLE AND BRACKET CABLE	1 1/2" DUCT-CABLE W/2 NO. 4 AWG 5,000 V. CABLES	Structure Grounding System for Bridges Sum-76-1303 over Ramp E-16	CONNECTOR KIT TYPE II	CONNECTOR KIT TYPE III	CONNECTOR KIT TYPE VIIB	CONNECTOR KIT TYPE VIIC	CABLE SPLICING KIT	POWER SERVICE	JUNCTION BOX 18"x8"x6"	TRANSITION JUNCTION BOX	DISCONNECT EXISTING CIRCUIT	POWER SERVICE REMOVED	CONDUIT CLEANED AND CABLES REMOVED			LIGHT POLE REMOVED FOR STORAGE, AS PER PLAN	LUMINAIRE REMOVED FOR STORAGE, AS PER PLAN	LIGHT POLE FOUNDATION REMOVED	
					EA.	EA.		EA.		EA.	EA.	EA.	EA.	EA.	L.F.	L.F.	L.F.	L.F.	L.F.	L.F.	L.F.	L.F.		EA.	EA.	EA.	EA.	EA.	EA.	EA.	EA.	EA.	EA.	L.F.			EA.	EA.	EA.	
222		SHEET NO. 694 (CONT'D)			9	9		9		1	9	6	1	1	1733	—	404	401	—	1492	744	1634		10	10	6	2	18	1	2	2	1	1	200			13	13	13	
223	STA.	REF. TO RAMP "E-12"																																				
224																																						
225	LT.	611+30 I-76	12+09		1	1		1			1				78						93	88		1	1	2												
226	LT.	12+09	13+25		1	1		1			1				116						93	126		1	1												
227	LT.	13+25	14+41		1	1		1			1				116						93	126		1	1												
228	LT.	14+41	15+57		1	1		1			1				116						93	126		1	1												
229	LT.	15+57	16+73		1	1		1			1				116						93	126		1	1	2												
230	LT.	16+73	18+40		1	1		1			1				167						93	177		1	1												
231	LT.	18+40	15+70 "MAR"									1			32							42						2										
232	STA.	REF. TO MARTHA AVE.																																				
233	RT./LT.	11+90	12+44									1			90			90		200																		
234	RT./LT.		12+44												70			70		160																		
235	RT.		16+77									1																2										
236	RT./LT.																																					
237	LT.	16+77	17+90									1			113							123						2										
238	STA.	REF. TO RAMP "E-15"																																				
239	RT./LT.	16+77 "MAR"	9+75		1	1		1			1				100			80			93	110		1	1												
240	LT.	9+75	11+45		1	1		1			1				170						93	180		1	1	2												
241	LT.	11+45	13+15		1	1		1			1				170						93	180		1	1												
242	LT.	13+15	15+10		1	1		1			1				195						93	205		1	1												
243	LT.	15+10	16+82												172							177															
244	LT./RT.	11+45	16+73 "E-12"												75			75				170															
245		Sum-76-1303 over Ramp E-16																					1														
246		TOTAL SHEET NO. 694			19	19		19		1	19	10	1	1	3629	—	404	716	—	1852	1674	3590	1	20	20	12	2	24	1	2	2	1	1	200			13	13	13	
247																																						
248		SHEET NO. 695																																				
249	STA.	REF. TO KELLY AVE.																																				
250	RT./LT.	21+50	20+40									1			40	182				384						6		2		3							
251	RT./LT.	20+40	17+90 "MAR"												250				15			260															
252																																						
253																																						
254		TOTAL SHEET NO. 695			—	—		—		—	—	1	—	—	290	182	—	—	15	384	—	260		—	—	6		2	—	3	—	—	—	—			—	—	—	
255																																						
256		SHEET NO. 696																																			13	13	13	
257	STA.	REF. TO I-76																																				
258																																						
259																																						
260	℄/RT.		621+90									1		1	103			61				113				2		2										
261	℄	621+90	622+18																	76				1	1							1						
262	℄	618+95	621+90																					1	1							2		295				
263	STA.	REF. TO RAMP "E-15"																																				
264	LT.	16+82	17+05		1	1		1			1				23						93	33		1	1												
265																																						
		SUB-TOTALS SHEET NO. 696			1	1		1		—	1	1	—	1	126	—	—	61		76	93	146		3	3	2		2	—	—	—	3	—	295			13	13	13	

AA B/P# 7194ER

CALC. BY EDZ. DATE 11/89	SUM-76-11.57	OHIO
CHKD. BY DSB DATE 3/90	FED. PROJECT IR-76-2(44)19	F.H.W.A. REGION 5

686 / 1214

SUMMIT COUNTY

LIGHTING PLAN SUB-SUMMARY

LINE NUMBER	SIDE	STATION	STATION	625																										SPECIAL			202			REMARKS
				LIGHT POLE DESIGN A12B32.5 (B)	LIGHT POLE DESIGN AT12B342 (C)	LIGHT POLE FOUNDATION 24" X 6'		LUMINAIRE, STYLE B, TYPE II 200W. H.P.S. /13.11			GROUND ROD 713.16	PULL BOX, CONCRETE, 18", 713.08		MEDIAN PULL BOX	TRENCH, 24"		CONDUIT, 713.04, 2"	CONDUIT, 713.04, 3"		NO. 4 AWG 5,000 V. DISTRIBUTION CABLE	NO. 10 AWG POLE AND BRACKET CABLE	1 1/2" DUCT-CABLE W/2 NO. 4 AWG 5,000 V. CABLES		CONNECTOR KIT TYPE II	CONNECTOR KIT TYPE III	CONNECTOR KIT TYPE VIIB		CABLE SPLICING KIT	LIGHT POLE ANCHOR BOLTS FOR STRUCTURE "L" SHAPED	JUNCTION BOX, 18" x 8" x 6"	TRANSITION JUNCTION BOX	DISCONNECT EXISTING CIRCUIT	POWER SERVICE REMOVED	CONDUIT CLEANED AND CABLES REMOVED			LIGHT POLE REMOVED FOR STORAGE, AS PER PLAN	LUMINAIRE REMOVED FOR STORAGE, AS PER PLAN	LIGHT POLE FOUNDATION REMOVED	
				EA.	EA.	EA.		EA.			EA.	EA.		EA.	L.F.		L.F.	L.F.		L.F.	L.F.	L.F.		L.F.	EA.	EA.		EA.	EA.	EA.	EA.	EA.	EA.	L.F.			EA	EA.	EA.	
266		SHEET NO. 696 (CONT'D)			1	1		1			1	1		1	126			61		76	93	146		3	3	2		2	—	—	—	3	—	295			13	13	13	
267	STA.	REF. TO RAMP "E-15"																																				
268	LT.	17+05	19+00		1	1		1			1				195						93	205		1	1														
269	LT.	19+00	G20+80 I-76		1	1		1			1				171						93	181		1	1														
270	LT.	G20+80 I-76	G21+90 I-76									1			110							120						2											
271																																						
272	STA.	REF. TO RAMP "E-16"																																				
273	RT.	17+23	18+75		1	1		1			1				132						93	137		1	1														
274	RT.	18+65	20+60		1	1		1			1				205						93	215		1	1														
275	RT.	20+60	21+94												134							144																	
276	RT.	21+94	22+55		1	1		1			1				61						93	71		1	1														
277	RT.	22+55	24+50	1				1			1				18		195			410	93			1	1				4	1									
278																																						
279	STA.	REF. TO RAMP "E-10"																																				
280	RT.	17+00	18+72		1	1		1			1				172						93	177		1	1														
281	RT.	18+72	20+46		1	1		1			1				174						93	184		1	1														
282	RT.	20+46	22+20		1	1		1			1				174						93	184		1	1														
283																																						
284																																						
285		TOTAL SHEET NO. 696		1	9	9		10			10	2		1	1672		195	61		486	930	1764		12	12	2		4	4	1	—	3	—	295			13	13	13	
286																																						
287		SHEET NO. 697																																1			2	2	2	
288	STA.	REF. TO I-76																																						
289	℄	G29+47.5	G30+05.5														58			136						4				2									
290	℄	G30+05.5	G30+80											1						170						2													
291	℄	G30+80	G31+88.75																	238				1	1					1									
292																																							
293	LT./℄		G30+80												74		74			168						2					1									
294																																							
295																																							
296		TOTAL SHEET NO. 697		—	—	—		—			—	—		1	74		132	—		712	—	—		1	1	8		—	—	1	2	1	1	—			2	2	2	
		TOTALS																																						

LIGHTING PLAN SUB-SUMMARY

AA B/P# 71942R

CALC. BY C.D.R. DATE 11-89	SUM-76-11.57	OHIO
CHKD. BY DSD DATE 3/90	FED. PROJECT IR-76-2(44)19	F.H.W.A. REGION 5

687 / 1214

SUMMIT COUNTY

(UNDERPASS) LIGHTING PLAN SUB-SUMMARY

LINE NUMBER	BRIDGE NUMBER	202	625																		REMARKS
		UNDERPASS LUMINAIRE REMOVED FOR STORAGE, AS PER PLAN	LUMINAIRE, UNDERPASS, 100 W. H.P.S. 713.11, 120V.	POWER SERVICE	TRENCH, 24"	CONDUIT, 713.04, 2"		PULL BOX, CONCRETE, 18" CIRCULAR (AKRON STANDARD)	SERVICE TO UNDERPASS LIGHTING FOR BRIDGE (SUM-76-1180) OVER INMAN ST.	SERVICE TO UNDERPASS LIGHTING FOR BRIDGE (SUM-76-1231) OVER ARLINGTON ST.	SERVICE TO UNDERPASS LIGHTING FOR BRIDGE (SUM-76-1267) OVER FULLER ST.	SERVICE TO UNDERPASS LIGHTING FOR BRIDGE (SUM-76-1296) OVER MARTHA AVE.	SERVICE TO UNDERPASS LIGHTING FOR BRIDGE (SUM-76-1332) OVER SEIBERLING ST.			Structure Grounding System for Bridges Sum-76-1180 over Inman St.	Structure Grounding System for Bridges Sum-76-1231 over Arlington St.	Structure Grounding System for Bridge Sum-76-1267 over Fuller St.	Structure Grounding System for Bridge Sum-76-1296 over Martha Ave	Structure Grounding System for Bridge Sum-76-1332 over Seiberling St.	
		EA.	EA.	EA.	L.F.	L.F.		EA.	EA.	EA.	EA.	EA.	EA.								
1	SHEET NO. 698																				
2	(SUM-76-1180) OVER INMAN ST.	3	3		10				1							1					
3	(SUM-76-1231) OVER ARLINGTON ST.	4	6	1	10	10		1		1							1				"ARL"
4	(SUM-76-1267) OVER FULLER ST.	2	3	1	26	26		1			1							1			"FLR"
5	(SUM-76-1296) OVER MARTHA AVE.	4	6	1	60	60		1				1							1		"MTH"
6																					
7	TOTAL SHEET NO. 698	13	18	3	106	96		3	1	1	1	1				1	1	1	1		
8																					
9	SHEET NO. 699																				
10	(SUM-76-1332) OVER SEIBERLING ST.	2	3	1	20	20		1					1							1	"SEI"
11																					
12	TOTAL SHEET NO. 699	2	3	1	20	20		1					1							1	

AA B/P# 71942R

CALC. BY. EDR DATE 7-89	SUM-76-11.57	OHIO
CHKD. BY. DSB DATE 3/90	FED. PROJECT IR-76-2(44)19	F.H.W.A. REGION 5

688
1214

SUMMIT COUNTY

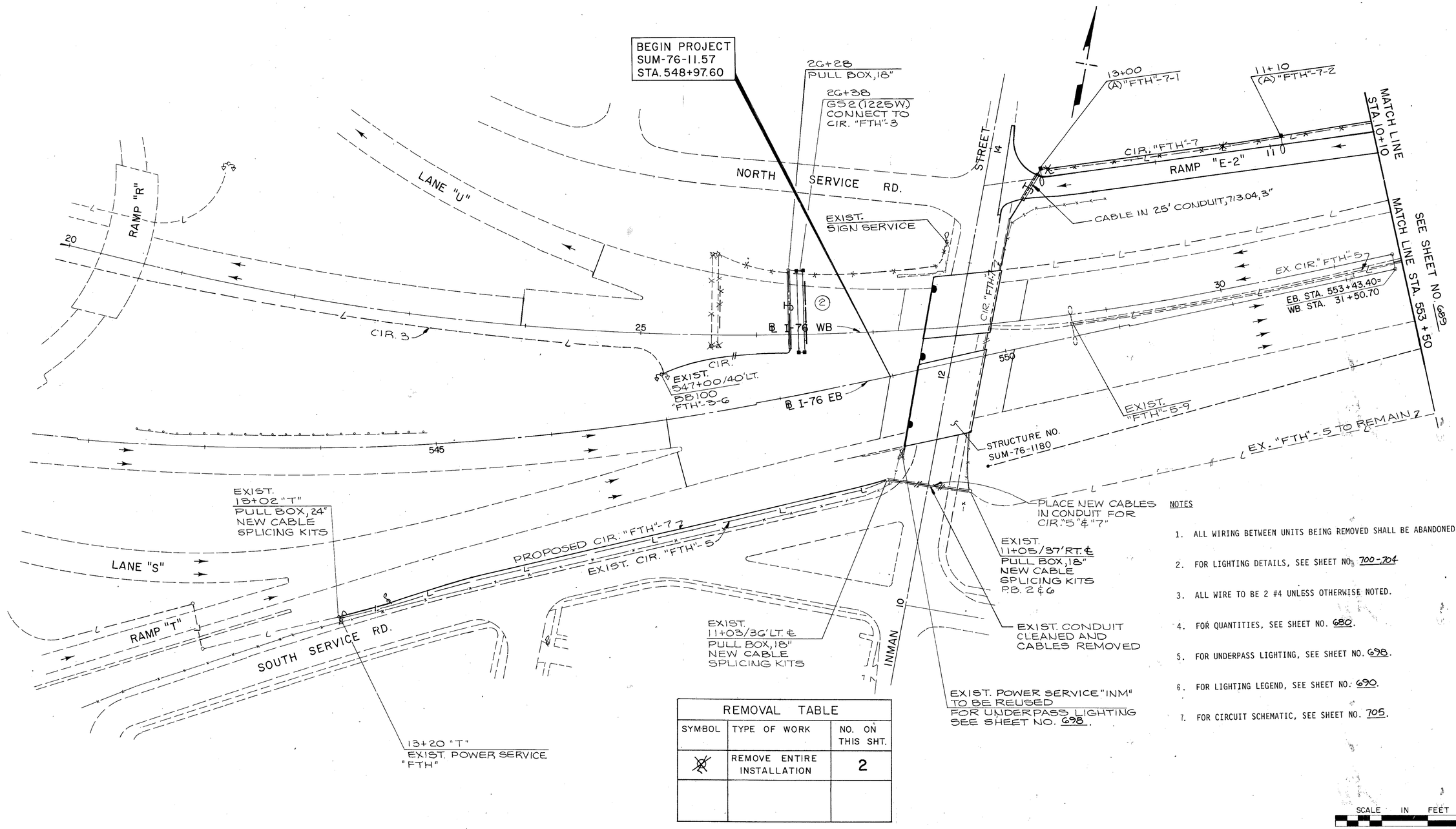

REMOVAL TABLE		
SYMBOL	TYPE OF WORK	NO. ON THIS SHT.
⊗	REMOVE ENTIRE INSTALLATION	2

NOTES

1. ALL WIRING BETWEEN UNITS BEING REMOVED SHALL BE ABANDONED.
2. FOR LIGHTING DETAILS, SEE SHEET NO. 700-704
3. ALL WIRE TO BE 2 #4 UNLESS OTHERWISE NOTED.
4. FOR QUANTITIES, SEE SHEET NO. 680.
5. FOR UNDERPASS LIGHTING, SEE SHEET NO. 698.
6. FOR LIGHTING LEGEND, SEE SHEET NO. 690.
7. FOR CIRCUIT SCHEMATIC, SEE SHEET NO. 705.

SCALE IN FEET
0 40 80 120

STA. 541+50 TO STA. 553+50

LIGHTING PLAN

AA B/P# 71942R

CALC. BY. E.B.P. DATE 11-89	SUM-76-11.57	OHIO
CHKD. BY. DSB DATE 3/90	FED. PROJECT IR-76-2(44)19	F.H.W.A. REGION 5

689 12.14

SUMMIT COUNTY

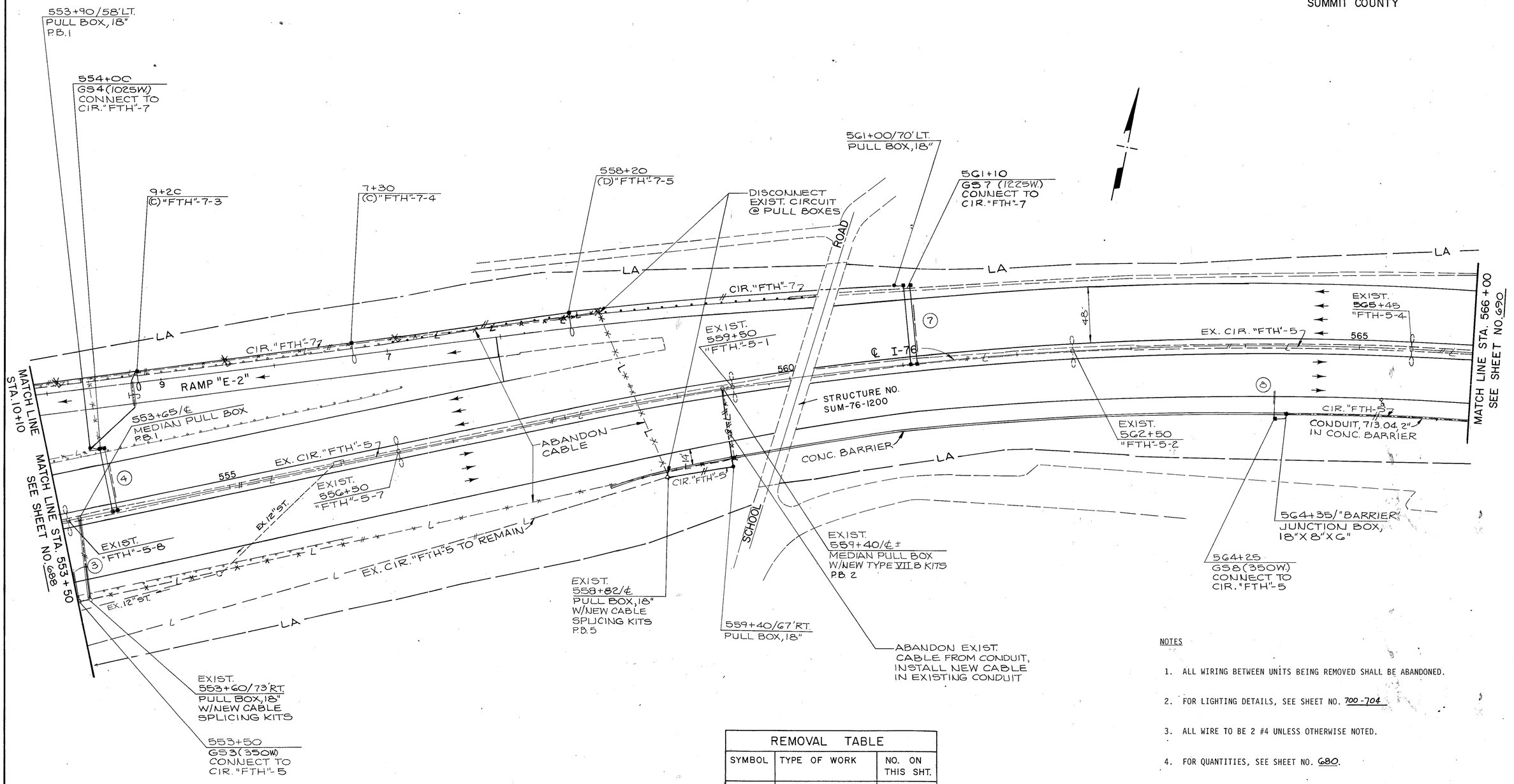

REMOVAL TABLE		
SYMBOL	TYPE OF WORK	NO. ON THIS SHT.
⊗	REMOVE ENTIRE INSTALLATION	4

NOTES

1. ALL WIRING BETWEEN UNITS BEING REMOVED SHALL BE ABANDONED.
2. FOR LIGHTING DETAILS, SEE SHEET NO. 700-704
3. ALL WIRE TO BE 2 #4 UNLESS OTHERWISE NOTED.
4. FOR QUANTITIES, SEE SHEET NO. 680.
5. FOR LIGHTING LEGEND, SEE SHEET NO. 690.
6. FOR CIRCUIT SCHEMATIC, SEE SHEET NO. 705.

SCALE IN FEET
0 40 80 120

STA. 553+50 TO STA. 566+00

LIGHTING PLAN

AA B/PK 71942R

CALC. BY. C&R DATE 11-89	SUM-76-11.57	OHIO
CHKD. BY. DSB DATE 3/90	FED. PROJECT IR-76-2(44)19	F.H.W.A. REGION 5

690
1214

LEGEND

- EXISTING MEDIAN LIGHT POLE INSTALLATION WITH TWIN 10' ARMS AND 2-310 WATT HIGH-PRESSURE SODIUM STYLE B LUMINAIRES TYPE II WITH MATCHING INTEGRAL BALLAST 50' MOUNTING HEIGHTS. * INDICATES TO BE REMOVED AND REERECTED, WASH LUMINAIRE AND RE-LAMP.
- GLARE SHIELD
- LUMINAIRE STYLE B, 200 WATT HIGH-PRESSURE SODIUM, TYPE II 34.2' MOUNTING HEIGHTS
- EXISTING LIGHT POLE
- EXISTING LIGHT POLE TO BE REMOVED
- PROPOSED DRAINAGE
- PULL BOX, CONCRETE, 18"OR 24",
- TRANSITION JUNCTION BOX
- 1 1/2" DUCT-CABLE W/2 NO. 4 AWG
- CONDUIT, 713.04, 2"
- CONDUIT, 713.04, 3"
- CONDUIT, 713.04, 4"
- INDICATES NO. OF SINGLE CONDUCTORS IN CABLE AND CONDUIT
- CONDUIT, JACKED OR DRILLED UNDER PAVEMENT, 3"
- EXISTING TRANSITION JUNCTION BOX
- 18" PULL BOX, CIRCULAR CONCRETE CITY OF AKRON STANDARD
- EXISTING CABLES AND CONDUITS TO BE ABANDONED
- EXISTING OVERHEAD SIGNS
- POWER SERVICE PAD OR POLE MOUNTED
- EXISTING POWER SERVICE PAD OR POLE MOUNTED
- MEDIAN PULL BOX
- UNDERPASS LUMINAIRE, 100W. H.P.S.
- JUNCTION BOX, 18"X8"X6"
- OVERHEAD SIGNS

SUMMIT COUNTY

MATCH LINE STA. 21+00

MATCH LINE STA. 566+00 SEE SHEET NO. 689

MATCH LINE STA. 77+59 SEE SHEET NO. 691

MATCH LINE STA. 578+00

MATCH LINE STA. 77+95

MATCH LINE STA. 78+15

LA

EXIST. "FTH"-5-5

DISCONNECT ABANDONED CIRCUIT FROM MEDIAN CIRCUIT

EX. CIR. "FTH"-5

570

℄ I-76

EX. CIR. 575 "FTH"-5

CIR. "FTH"-5

CIR. "FTH"-5-7

CONDUIT, 713.04, 2" IN CONC. BARRIER

EXIST. "FTH."-5-4

567+95/"BARRIER" JUNCTION BOX, 18"X8"X6"

EXIST. 567+95± MEDIAN PULL BOX 2 CONNECTOR KITS TYPE VII B TO RECONNECT CIRCUIT "FTH"-5 P.B-4

RETAINING WALL NO. 1

574+90/"WALL" 18"x8"x6" JUNCTION BOX

575+00/"WALL" GS10(350W.) CONNECT TO CIR. "FTH"-5

EXIST. 574+40 "FTH"-5-6

574+90 MEDIAN PULL BOX

575+85 MEDIAN PULL BOX P.B.7

575+85/77'RT. PULL BOX, 18" P.B.-3

575+95 GS12(1025W.) CONNECT TO CIR. "FTH"-5

576+13/℄ TRANSITION JUNCTION BOX

TALBOT

ARLINGTON

MARTIN AVE.

47

4

STREET

SECOND AVE.

RAMP "E-4"

RAMP "E-8"

RAMP "E-6"

RET. WALL NO. 2

RET. WALL NO. 3

CIR. "FUL"-2

CIR. "FUL"-2-7

CIR. "FUL"-2-10

CIR. "FUL"-1

CIR. "FUL"-1-1

CIR. 6

CIR. "FTH"-5

20

15

78

41 25

MATCH LINE STA. 21+00
24+90/32'LT.
PULL BOX, 18"

25+00
GS41(100W.)
CONNECT TO
CIR. "FUL"-2

576+96/"WALL
TRANSITION JUNCTION BOX, AS PER PLAN, SEE SHEET NO. 704 FOR DETAILS

19+15/35'LT.
PULL BOX, 18"

BRIDGE MOUNTED
GS39(200W.)
CONNECT TO
CIR. "MAR"-6
W/18"X8"X6"

EXIST. POWER SERVICE "ARL" TO BE REMOVED

19+28
G540(350W.)
CONNECT TO
CIR. "FUL"-2

19+25/50'RT.
PULL BOX, 18"
P.B.-2

18+72/55'RT.
PULL BOX, 18"
P.B.-1

77+02
(C)"FUL"-2-10

577+46
18"X8"X6"
JUNCTION BOX

STRUCTURE NO. SUM-76-1231

CONDUIT EMPTY

EXIST. 577+28 "MAR"-6-16

EX. CIR. "MAR"-6

575+85 MEDIAN PULL BOX P.B.7

EXIST. 577+46/℄ MEDIAN PULL BOX

DISCONNECT ABANDONED CIRCUIT

576+94/℄ TRANSITION JUNCTION BOX

15+35/37'RT. PULL BOX, 18"

15+25/37'RT. GS37(350W.) CONNECT TO CIR. "FUL"-1

11+05/32'RT. PULL BOX, 18"

10+95 GS36(100W.) CONNECT TO CIR. "FUL"-1

POWER SERVICE "ARL" FOR UNDERPASS LIGHTING SEE SHEET NO. 698 FOR DETAILS

BRIDGE MOUNTED GS38(100W.) CONNECT TO CIR. "FTH"-5 W/18"X8"X6" JUNCTION BOX

* FOR DETAIL OF CONNECTION OF NEW CONDUIT TO EXIST. MEDIAN PULL BOX SEE SHEET NO. 703.

REMOVAL TABLE		
SYMBOL	TYPE OF WORK	NO. ON THIS SHT.
⊗	REMOVE ENTIRE INSTALLATION	4
⊗	POWER SERVICE REMOVED	1

NOTES

1. ALL WIRING BETWEEN UNITS BEING REMOVED SHALL BE ABANDONED.
2. FOR LIGHTING DETAILS, SEE SHEET NO. 700-704
3. ALL WIRE TO BE 2 #4 UNLESS OTHERWISE NOTED.
4. FOR QUANTITIES, SEE SHEET NO. 680.
5. FOR UNDERPASS LIGHTING, SEE SHEET NO. 698.
6. FOR CIRCUIT SCHEMATIC, SEE SHEET NO. 705.

SCALE IN FEET
0 40 80 120

STA. 566+00 TO STA. 578+00

LIGHTING PLAN

AA B/P# 71942R

CALC. BY. EBR DATE 11-89	SUM-76-11.57	OHIO
CHKD. BY. DSB DATE 3/90	FED. PROJECT IR-76-2(44)19	F.H.W.A. REGION 5

691 / 1214

SUMMIT COUNTY

NOTE: LIGHT POLE LOCATIONS MAY VARY, PROPRIETARY WALL TO GOVERN LOCATIONS, SEE SHOP DRAWINGS.

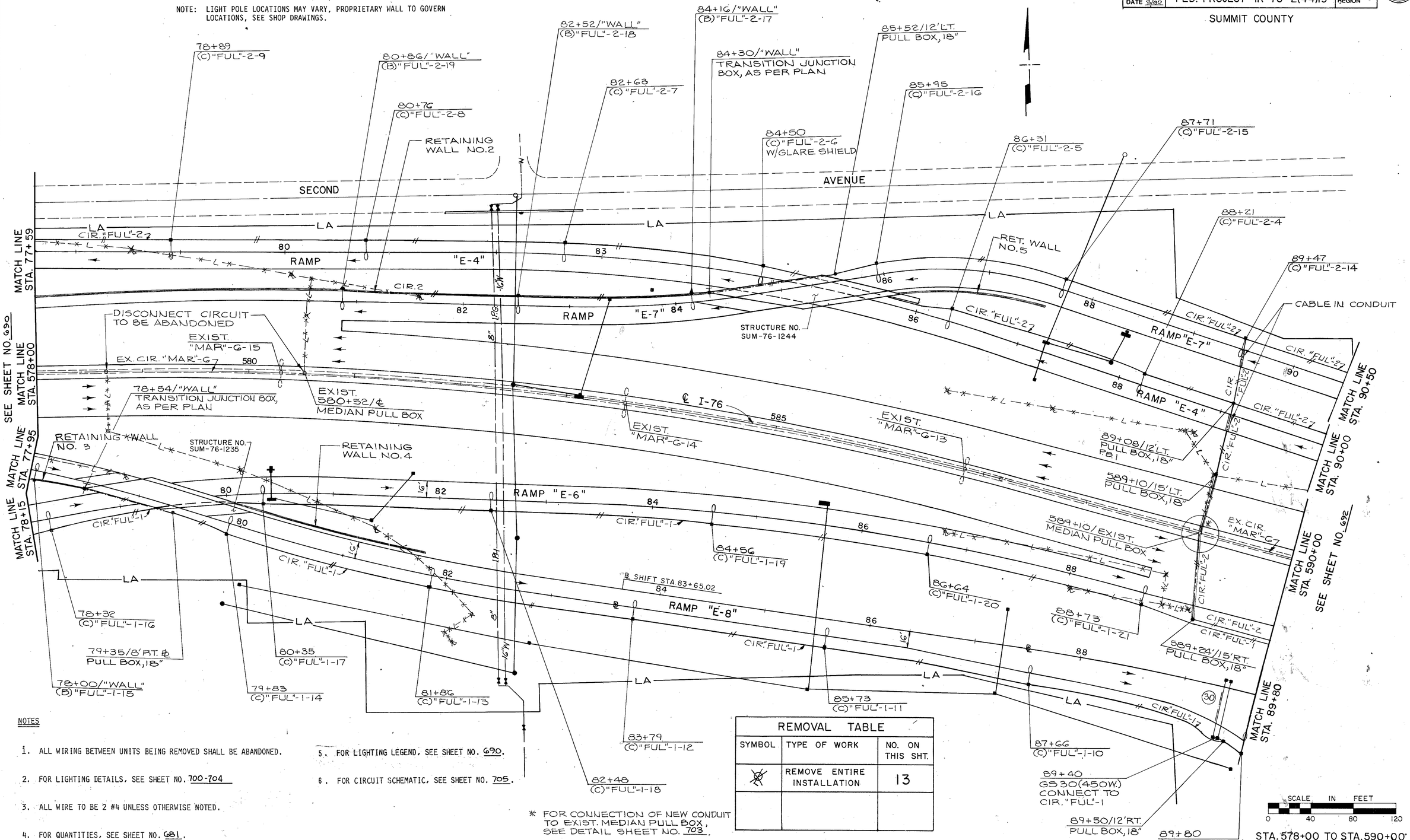

NOTES

1. ALL WIRING BETWEEN UNITS BEING REMOVED SHALL BE ABANDONED.
2. FOR LIGHTING DETAILS, SEE SHEET NO. 700-704
3. ALL WIRE TO BE 2 #4 UNLESS OTHERWISE NOTED.
4. FOR QUANTITIES, SEE SHEET NO. 681.
5. FOR LIGHTING LEGEND, SEE SHEET NO. 690.
6. FOR CIRCUIT SCHEMATIC, SEE SHEET NO. 705.

* FOR CONNECTION OF NEW CONDUIT TO EXIST. MEDIAN PULL BOX, SEE DETAIL SHEET NO. 703.

REMOVAL TABLE		
SYMBOL	TYPE OF WORK	NO. ON THIS SHT.
⊗	REMOVE ENTIRE INSTALLATION	13

STA. 578+00 TO STA. 590+00

LIGHTING PLAN

AA B/P# 71942R

CALC. BY. CAR DATE 11-89	SUM-76-11.57	OHIO
CHKD. BY. TDSB DATE 3/90	FED. PROJECT IR-76-2(44)19	F.H.W.A. REGION 5

SUMMIT COUNTY

692 (12.14)

SECOND AVE. (44) 38 19

38+40 GS44(175W) CONNECT TO CIR. "FUL"-2

38+50 PULL BOX, 18" LA

CIR. "FUL"-2

94+74 (C) "FUL"-2-11

91+23 (C) FUL"-2-13

92+98 (C) "FUL"-2-12

CIR. "FUL"-2

RAMP "E-7" 94 92

MATCH LINE STA. 90+50

15+65 GS45(350W) CONNECT TO CIR. "FUL"-2

CHESSIE SYSTEM

THIRD AVE.

45

FULLER 15

596+21.5/℄ TRANSITION JUNCTION BOX

597+40/87'LT. PULL BOX, 18"

597+50 GS18(1200W.) CONNECT TO CIR. "MAR"-G

15+55/15'LT. PULL BOX, 18"

90+27 (C) "FUL"-2-3

CIR. "FUL"-2

92+33 (C) "FUL"-2-2

593+39 (D) "FUL"-2-1

CIR. "FUL"-2

RAMP "E-4" 91 93

MATCH LINE STA. 90+00

SEE SHEET NO. 691

STRUCTURE NO. SUM-76-1267

EXIST. 596+75 "MAR"-G-10

18

CABLE IN 68' CONDUIT

EX. CIR. "MAR"-G

600

EXIST. 599+81 "MAR"-G-9

℄ I-76

597+40/℄ MEDIAN PULL BOX P.B.2

CABLE IN 60' CONDUIT

17

600+50/℄ TRANSITION JUNCTION BOX

SEE SHEET NO. 693

MATCH LINE STA. 601+00

MATCH LINE STA. 590+00

EX. CIR. "MAR"-G

36'

28'

48'

595

EXIST. "MAR"-G-12

EXIST. 593+38 "MAR"-G-11

597+10/78.5'RT. PULL BOX, 18"

597+00 GS17(500W) CONNECT TO CIR. "MAR"-G

CIR. "FUL"-27 IN COMMON TRENCH

CIR. "FUL"-1

595+51/℄ TRANSITION JUNCTION BOX

MATCH LINE STA. 89+80

91 93 95 101 104

RAMP "E-8" RAMP "E-8B"

CIR. "FUL"-1

94+95 (C) "FUL"-1-5

100+93 (A) "FUL"-1-1

102+77 (A) "FUL"-1-2

104+61 (A) "FUL"-1-3

91+15 (C) "FUL"-1-7

93+05 (C) "FUL"-1-6

CABLE IN CONDUIT

RAMP "E-8A"

10+00/8'RT. ℄ PULL BOX, 18" P.B.1

12+00 (C) "FUL"-1-8

95+50/46'RT. PULL BOX, 18" P.B.2

STREET

EXIST. POWER SERVICE "FUL" TO BE REMOVED

13+00/35'LT. ℄ PULL BOX, 18" P.B.3

CABLE IN 90' CONDUIT

FIFTH AVE.

WEEKS ST.

13+00/45'LT. ℄ FULLER ST. POWER SERVICE "FUL" & "FLR" POLE MOUNTED SEPARATELY AND METERED SEPARATELY

NOTES

1. ALL WIRING BETWEEN UNITS BEING REMOVED SHALL BE ABANDONED.
2. FOR LIGHTING DETAILS, SEE SHEET NO. 700-704
3. ALL WIRE TO BE 2 #4 UNLESS OTHERWISE NOTED.
4. FOR QUANTITIES, SEE SHEET NO. 682.
5. FOR UNDERPASS LIGHTING, SEE SHEET NO. 698.
6. FOR LIGHTING LEGEND, SEE SHEET NO. 690.
7. FOR CIRCUIT SCHEMATIC, SEE SHEET NO. 705.

REMOVAL TABLE		
SYMBOL	TYPE OF WORK	NO. ON THIS SHT.
⊗	REMOVE ENTIRE INSTALLATION	4
⊗	POWER SERVICE REMOVED	1

SCALE IN. FEET
0 40 80 120

STA. 590+00 TO STA. 601+00

LIGHTING PLAN

AA B/P# 71942R

CALC. BY. EBR DATE 11-89	SUM-76-11.57	OHIO	693
CHKD. BY. DSB DATE 3/90	FED. PROJECT IR-76-2(44)19	F.H.W.A. REGION 5	1214

SUMMIT COUNTY

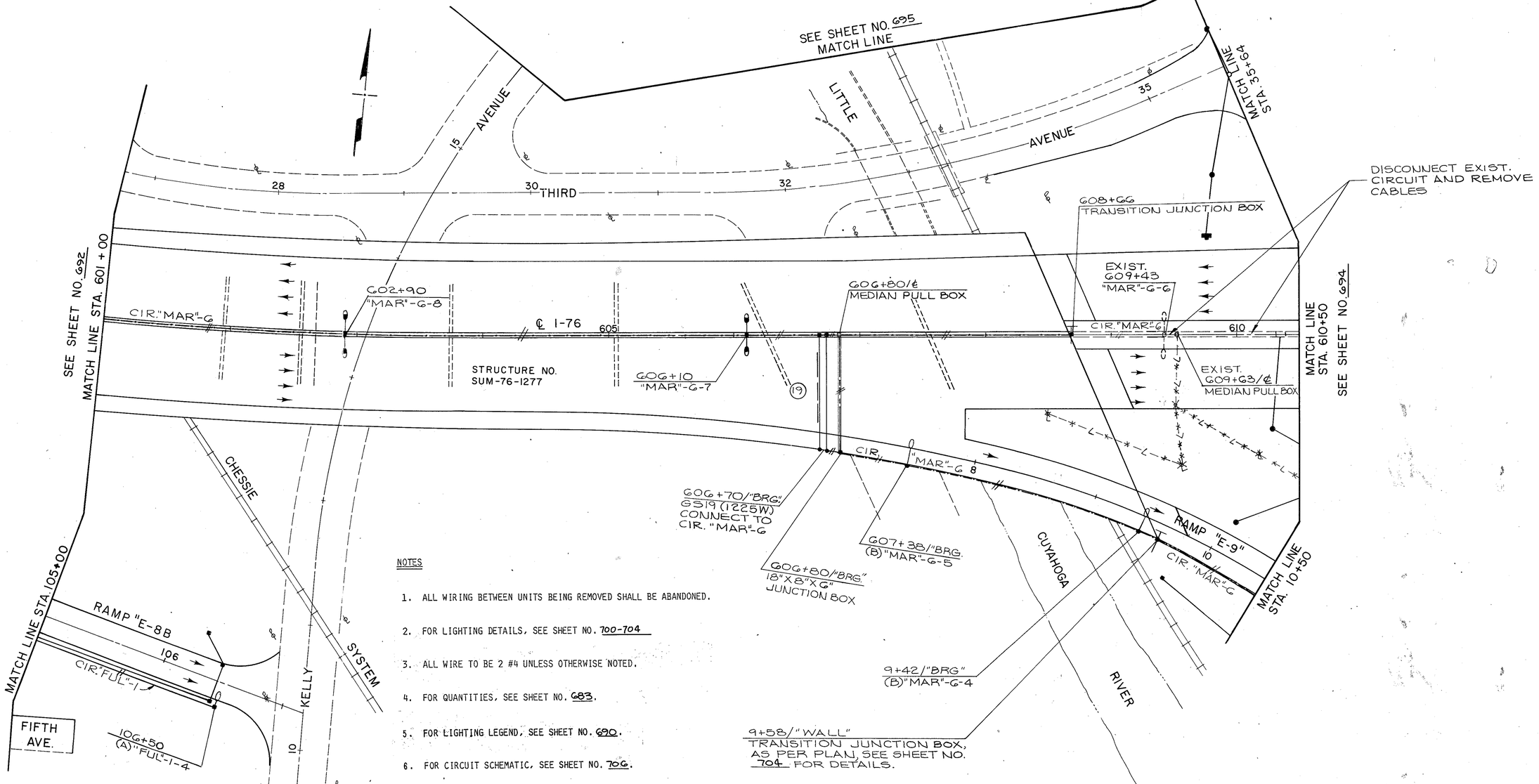

NOTES

1. ALL WIRING BETWEEN UNITS BEING REMOVED SHALL BE ABANDONED.
2. FOR LIGHTING DETAILS, SEE SHEET NO. 700-704
3. ALL WIRE TO BE 2 #4 UNLESS OTHERWISE NOTED.
4. FOR QUANTITIES, SEE SHEET NO. 683.
5. FOR LIGHTING LEGEND, SEE SHEET NO. 690.
6. FOR CIRCUIT SCHEMATIC, SEE SHEET NO. 706.

REMOVAL TABLE

SYMBOL	TYPE OF WORK	NO. ON THIS SHT.
⊗	REMOVE ENTIRE INSTALLATION	3
⊶⊷	REMOVE AND RE-ERECT EXIST. INSTALLATION	2

SCALE IN FEET
0 40 80 120

STA. 601+00 TO STA. 610+50

LIGHTING PLAN

AA B/P# 71942/R

CALC. BY. GBR DATE 7-89	SUM-76-11.57	OHIO
CHKD. BY. DSB DATE 3/90	FED. PROJECT IR-76-2(44)19	F.H.W.A. REGION 5
	SUMMIT COUNTY	

694
1214

11+05/12'RT.
PULL BOX,18"
P.B.4

MATCH LINE STA. 10+50

EXIST. POWER SERVICE
"MAR"&"MTH"
TO BE REMOVED

BRIDGE MTD.
GS58(100W.)
CONNECT TO
CIR."MAR"-7
W/18"X8"X6"
JCT. BOX

610+80.5/℄
TRANSITION JUNCTION BOX
SEE SHEET NO. 693

MATCH LINE
STA. 610+50

BRIDGE MTD.
GS59(200W.)
CONNECT TO
CIR."MAR"-7
W/18"X8"X6"
JUNCTION
BOX

CABLE IN 80' CONDUIT

16+77/32'LT.
PULL BOX,18"

MATCH LINE STA. 17+00

15+60
GS60(350W.)
CONNECT TO
CIR."MAR"-7

9+75
(A)"MAR"-7-10

15+70/40'RT.
PULL BOX,18"

12+45/50'LT.℄
POWER SERVICE
"MAR"(480V),"MTH"(120V)
PAD MOUNTED
TWIN ENCLOSURES

12+46/45'LT.
PULL BOX,18"

11+30
(C)"MAR"-G-1

12+44/29'RT.
PULL BOX,18"

11+90/31'RT.
PULL BOX,18"
P.B.3

13+23
(C)"MAR"-G-2

12+44/45'LT.℄
PULL BOX,24"

STRUCTURE SUM-76-

NO. 1296 CABLES

DISCONNECT EXIST. CIRCUIT & REMOVE CABLES

18+40
(A)"MAR"-7-9

G11+30/78'LT.
PULL BOX,18"

12+09
(C)"MAR"-7-4

G11+55.9/℄
TRANSITION JUNCTION BOX

16+73
(C)"MAR"-7-8

15+12
(A)"MAR"-G-3

MARTHA

RAMP "E-9"

CIR."MAR"-G

CIR."MAR"-7

CIR."MAR"-8

RAMP "E-16"

RAMP "E-10"

RAMP "E-12"

RAMP "E-15"

LA

12'W

10

12

14

16

18

22

36'

615

I-76

13+26
(C)"MAR"-7-5

14+41
(C)"MAR"-7-6

15+57
(C)"MAR"-7-7

11+45
(C)"MAR"-7-11

13+15
(C)"MAR"-7-12

18+00
GS62(100W.)
CONNECT TO
CIR."MAR"-7

17+90/28'LT.
PULL BOX,18"

MATCH LINE FOR CONTINUATION SEE SHEET NO. 695

MATCH LINE STA. 17+00

MARTHA 18

22 AVE.

11+80
GS57(350W.)
CONNECT TO
CIR."MAR"-8

12+80
(A)"MAR"-8-7

612+00
GS22(850W.)
CONNECT TO
CIR."MAR"-7

612+10/83'RT.
PULL BOX,18"
P.B.3

13+70
(C)"MAR"-8-1

14+20/12'RT.
PULL BOX,18"

14475
(C)"MAR"-8-8
W/GLARE SHIELD

15+18/8'RT.
PULL BOX,18"

15+48
(C)"MAR"-8-2

16+79
(C)"MAR"-8-9

16+98
(C)"MAR"-8-3

ENGLEWOOD

LEAGUE ST.

23 AVE.

LA RIV

STRUCTURE NO. SUM-76-1303

RET. WALL NO. 10

RET. WALL NO. 9

612+10/℄
MEDIAN PULL BOX
P.B.2

EXIST.
612+52
"MAR"-7-1

EXIST.
"MAR"-7-2

EAST MARKET STREET

15+10
(C)"MAR"-7-13

MATCH LINE STA. 17+00

MATCH LINE STA. 17+23

MATCH LINE STA. 617+00
SEE SHEET NO. 696

MATCH LINE STA. 16+82

NOTES

1. ALL WIRING BETWEEN UNITS BEING REMOVED SHALL BE ABANDONED.
2. FOR LIGHTING DETAILS, SEE SHEET NO. 700-704
3. ALL WIRE TO BE 2 #4 UNLESS OTHERWISE NOTED.
4. FOR QUANTITIES, SEE SHEET NO. 684.
5. FOR UNDERPASS LIGHTING, SEE SHEET NO. 698.
6. FOR LIGHTING LEGEND. SEE SHEET NO. 690.
7. FOR CIRCUIT SCHEMATIC, SEE SHEET NO. 706

REMOVAL TABLE		
SYMBOL	TYPE OF WORK	NO. ON THIS SHT.
⊗	REMOVE ENTIRE INSTALLATION	13
⊗	POWER SERVICE REMOVED	1

SCALE IN FEET
0 40 80 120

STA. 610+50 TO STA. 617+00

LIGHTING PLAN

AA B/P# 71942R

CALC. BY. EDR DATE 11-87	SUM-76-11.57	OHIO
CHKD. BY. DSB DATE 3/90	FED. PROJECT IR-76-2(44)19	F.H.W.A. REGION 5
	SUMMIT COUNTY	

695 12 14

* NOTE: WHEN TRENCHING, MAY ENCOUNTER EXIST. UTILITIES AND WATER SPRINKLING SYSTEM, FOR CABLE RUN FROM GS 49 TO GS 62, CAUTION TO BE USED.

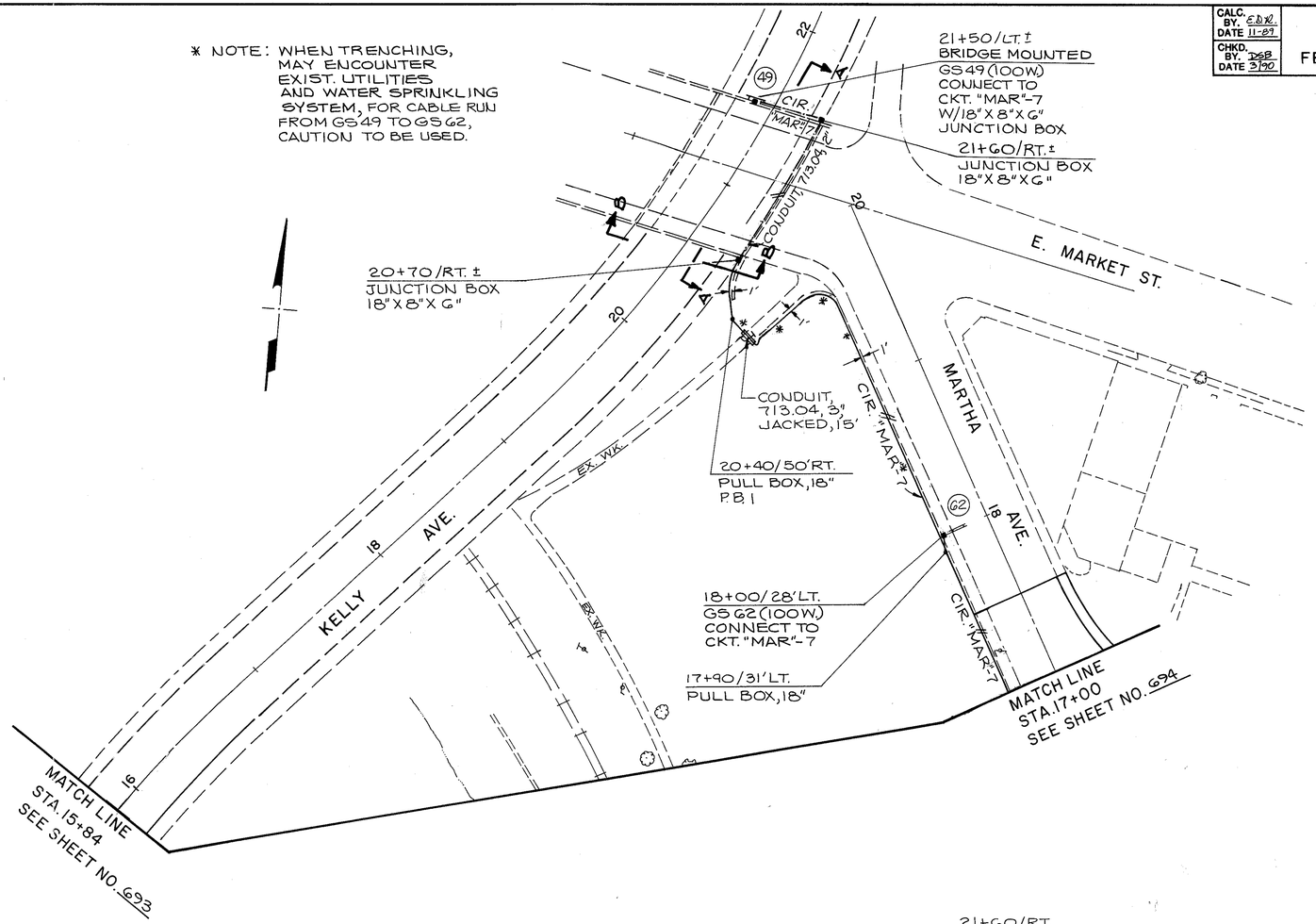

NOTES

1. ALL WIRE TO BE 2 #4 UNLESS OTHERWISE NOTED.
2. FOR QUANTITIES, SEE SHEET NO. 685.
3. FOR LIGHTING LEGEND, SEE SHEET 690.
4. FOR CIRCUIT SCHEMATIC, SEE SHEET NO. 706.

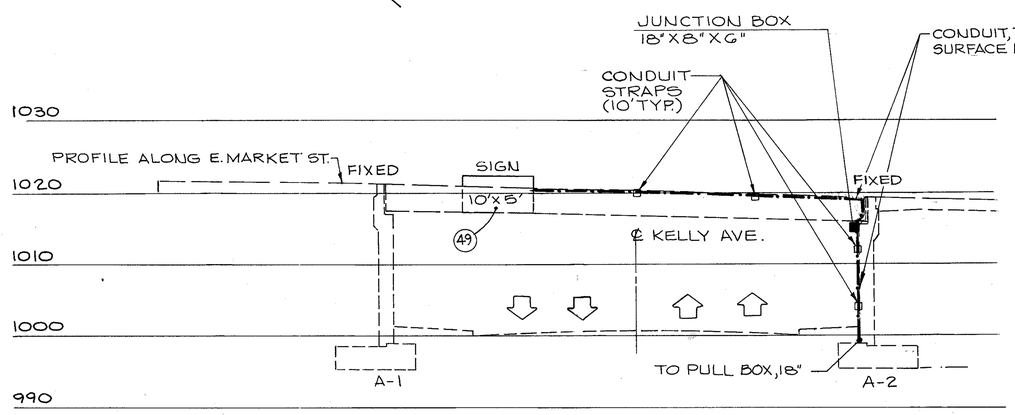

EAST MARKET STREET
CITY OF AKRON-BRIDGE NO. 164
VIEW B

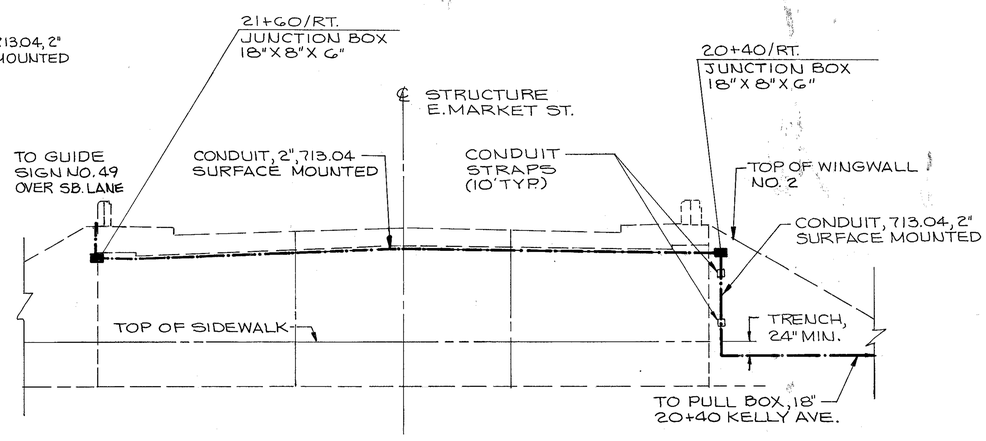

ELEVATION
ABUTMENT A-2
VIEW A

SCALE IN FEET
0 40 80 120

KELLY AVE.
STA. 15+80 TO STA. 22+00

LIGHTING PLAN

CALC. BY. DSR DATE 11-89	SUM-76-11.57	OHIO
CHKD. BY. DSR DATE 3/90	FED. PROJECT IR-76-2(44)19	F.H.W.A. REGION 5

SUMMIT COUNTY

696
12.14

EAST MARKET ST.

17+05/12'LT. (C)"MAR"-7-14

19+00/12'LT. (C)"MAR"-7-15

G21+90/85'LT. PULL BOX, 18"

G22+00 G525(700W) CONNECT TO CIR. "MAR"-7

G20+80/12'LT. (C)"MAR"-7-16

DISCONNECT EXIST. CIRCUIT & ABANDON CABLES

MATCH LINE STA. 16+82

CIR. "MAR"-7

18 RAMP "E-15" 20

CIR."MAR"-7

LA

RET. WALL NO. 11

DISCONNECT CIRCUIT "MAR"-7 -REMOVE EXIST. CABLES, CONDUIT TO REMAIN EMPTY

G22+18 "MAR"-8-14

CIR."MAR"-8 ℄ I-76

620 625

EXIST. "MAR"-8-16

CIR. "MAR"-8

CIR "MAR"-7

EXIST. G18+95 "MAR"-7-3

CABLE IN 45' CONDUIT

G21+90 MEDIAN PULL BOX

EXIST. "MAR"-8-15

CABLE IN 16' CONDUIT

MATCH LINE STA. 629+00 SEE SHEET NO. 697

SEE SHEET NO. 694

MATCH LINE STA. 617+00

24

22

CIR. "MAR"-8

RETAINING WALL NO.13

RET. WALL NO. 13

ENGLEWOOD AVENUE

12"W 33 12"W 35 12"W

RET. WALL NO.10

MATCH LINE STA. 17+23

RAMP "E-16" 20

18

CIR. "MAR"-8

RAMP "E-10" 20

CIR. "MAR"-8

12"W

MATCH LINE STA. 17+00

CIR. "MAR"-8

18

RET. WALL NO. 9

12"W.

24+50/"WALL" (B)"MAR"-8-13

21+94/12'RT. PULL BOX, 18" P.B.2

20+60/12'RT. (C)"MAR"-8-11

DETROIT

WIGLEY

18+72/12'RT. (C)"MAR"-8-4

20+46/12'RT. (C)"MAR"-8-5

18+65/12'RT. (C)"MAR"-8-10

22+20/12'RT. (C)"MAR"-8-6

22+55/12'RT. (C)"MAR"-8-12

NOTE: LIGHT POLE LOCATIONS MAY VARY, PROPRIETARY WALL TO GOVERN LOCATIONS, SEE SHOP DRAWINGS.

REMOVAL TABLE		
SYMBOL	TYPE OF WORK	NO. ON THIS SHT.
⊗	REMOVE ENTIRE INSTALLATION	13

NOTES

1. ALL WIRING BETWEEN UNITS BEING REMOVED SHALL BE ABANDONED.
2. FOR LIGHTING DETAILS, SEE SHEET NO. 700-704
3. ALL WIRE TO BE 2 #4 UNLESS OTHERWISE NOTED.
4. FOR QUANTITIES, SEE SHEET NO. 685.
5. FOR LIGHTING LEGEND, SEE SHEET NO. 690.
6. FOR CIRCUIT SCHEMATIC, SEE SHEET NO. 706.

SCALE IN FEET
0 40 80 120

STA. 617+00 TO STA. 629+00

LIGHTING PLAN

CALC. BY: EDP DATE 11-89	SUM-76-11.57	OHIO
CHKD. BY: DSB DATE 3/90	FED. PROJECT IR-76-2(44)	F.H.W.A. REGION 5

SUMMIT COUNTY

697
1214

END PROJECT SUM-76-11.57 STA.634+00.00 IR-76-2(44)19	BEGIN PROJECT SUM-76-13.41 STA.634+00.00 IR-76-2(45)21

12+11/27' LT.
POWER SERVICE "SEI"
FOR UNDERPASS LIGHTING
SEE SHEET NO. 699
FOR DETAILS.

EXIST.
POWER SERVICE "SEI"
TO BE REMOVED

EAST MARKET ST.

G30+80/℄ "WALL"
18"x8"x6" JUNCTION BOX

G30+90/℄ "WALL"
GS2G (700W)
CONNECT TO
CIR. "MAR"-8

RET. WALL NO. 11

STRUCTURE NO.
SUM-76-1332

SEIBERLING

LA

RET. WALL NO. 12

SEE SHEET NO. 696
MATCH LINE STA. 629+00

CIR. MAR-8

EXIST.
G31+88.75
"MAR"-8-17

END WORK LIGHTING

BY OTHERS
G35+65
"MAR"-8-18

CIR. MAR-8 635

CONDUIT EMPTY

BY OTHERS
38+50/11'LT.
"MAS"-8-12

BY OTHERS
40+10/11'LT.
"MAS"-8-13

RAMP "E-19"

G39+31
MEDIAN PULL BOX

640

CIR. MAS-8

BY OTHERS
G39+41
"MAS"-8-11

RET. WALL NO. 14

ENGLEWOOD AVENUE

RET. WALL NO. 13

STREET

G30+80/℄
MEDIAN PULL BOX
P.B.1

G30+05.5/℄
TRANSITION JUNCTION BOX

G29+47.5/℄
TRANSITION JUNCTION BOX

BY OTHERS
G39+25/G2'RT.
G5 (500W.)
CONNECT TO
CIR. "MAS"-8

BY OTHERS
G39+35/G4'RT.
PULL BOX, 18"

NOTES

1. ALL WIRING UNITS BEING REMOVED SHALL BE ABANDONED.
2. FOR LIGHTING DETAILS. SEE SHEET NO. 700-704
3. ALL WIRE TO BE 2 #4, UNLESS OTHERWISE NOTED.
4. FOR QUANTITIES. SEE SHEET NO. 686.
5. FOR LIGHTING LEGEND, SEE SHEET NO. 690.
6. FOR CIRCUIT SCHEMATIC. SEE SHEET NO. 706.
7. FOR UNDERPASS LIGHTING. SEE SHEET NO. 699.

REMOVAL TABLE		
SYMBOL	TYPE OF WORK	NO. ON THIS SHT.
	REMOVE ENTIRE INSTALLATION	
	POWER SERVICE REMOVED	1

SCALE IN FEET
0 40 80 120

STA.629+00 TO STA.641+00

LIGHTING PLAN

AA B/P# 71942R

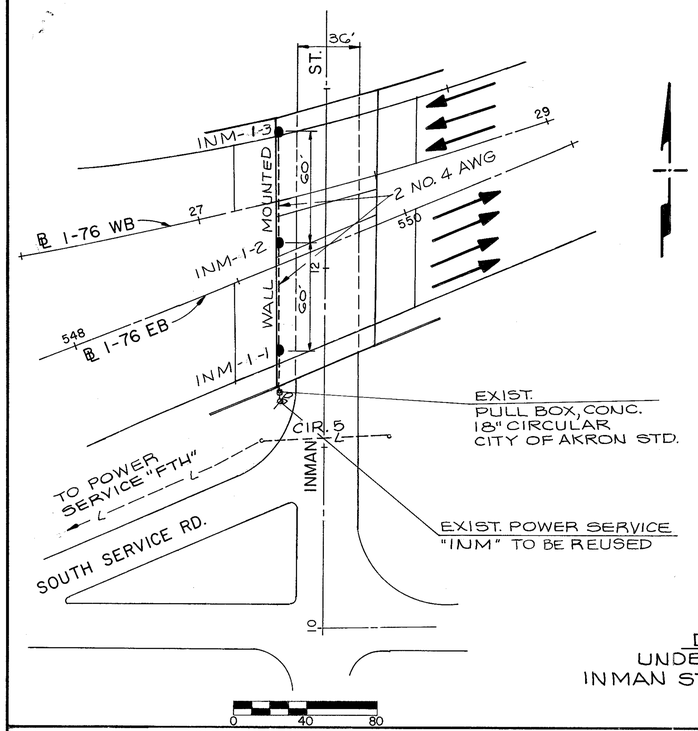

DETAIL "A"
UNDERPASS LIGHTING FOR
INMAN ST. STRUCTURE - SUM-76-1180

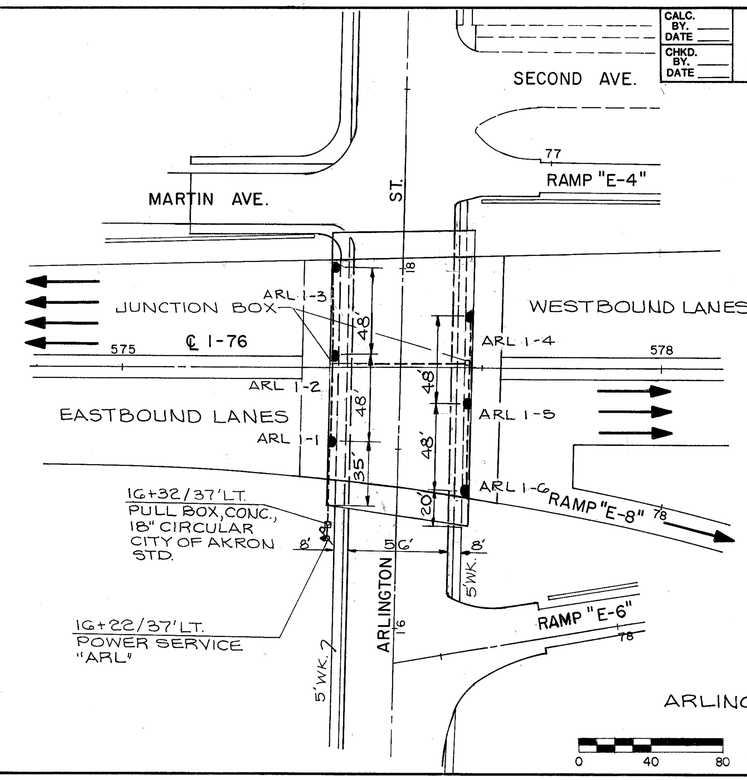

DETAIL "B"
UNDERPASS LIGHTING FOR
ARLINGTON ST. STRUCTURE SUM-76-1231

SUM-76-11.57
FED PROJECT IR-76-2(44)19
SUMMIT COUNTY

CALC. BY. DATE
CHKD. BY. DATE

OHIO
F.H.W.A. REGION 5

698
1214

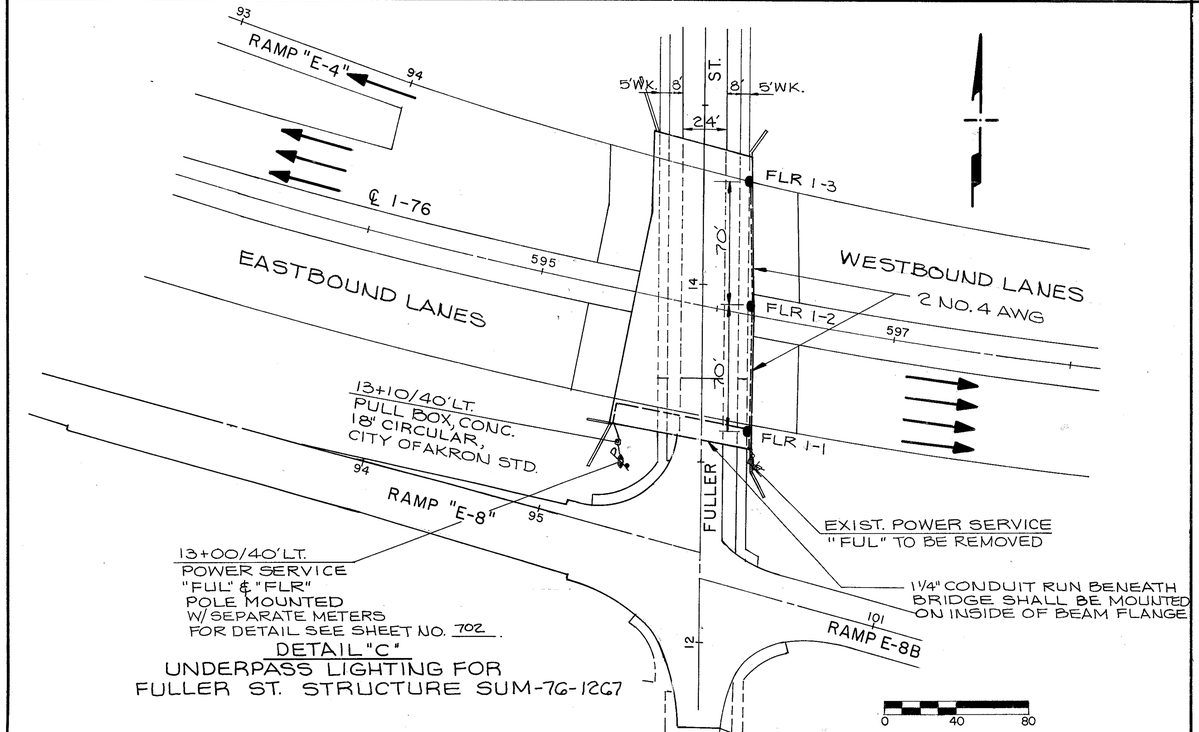

DETAIL "C"
UNDERPASS LIGHTING FOR
FULLER ST. STRUCTURE SUM-76-1267

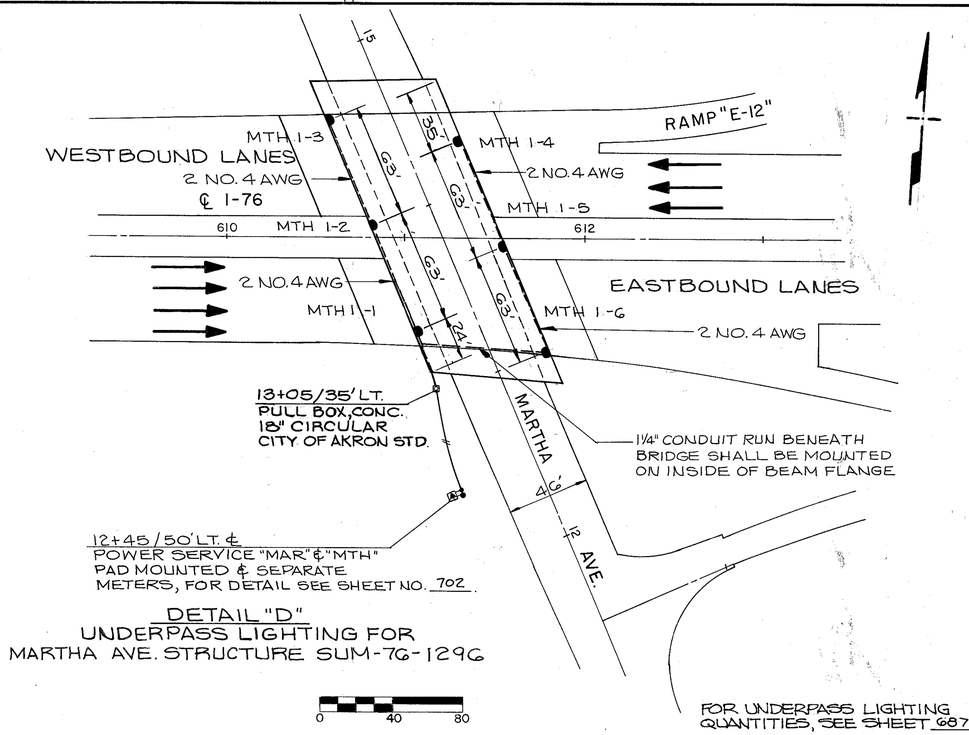

DETAIL "D"
UNDERPASS LIGHTING FOR
MARTHA AVE. STRUCTURE SUM-76-1296

FOR UNDERPASS LIGHTING
QUANTITIES, SEE SHEET 687

UNDERPASS LIGHTING DETAILS

AA D/Pw 21942R

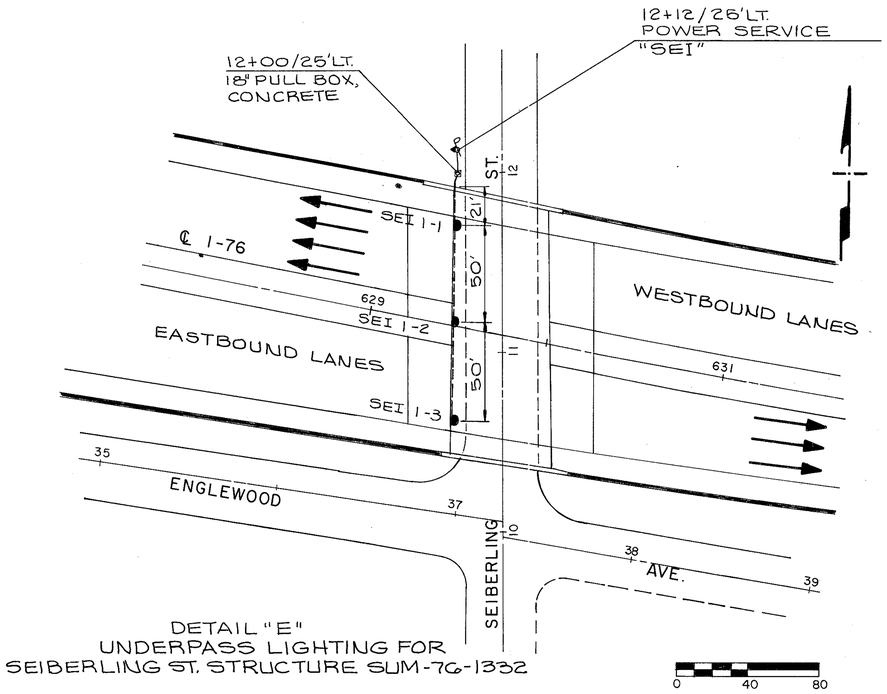

DETAIL "E"
UNDERPASS LIGHTING FOR
SEIBERLING ST. STRUCTURE SUM-76-1332

CALC. BY. DATE	SUM-76-11.57	OHIO	699 12.14
CHKD. BY. DATE	FED. PROJECT IR-76-2(44)19	F.H.W.A. REGION 5	
	SUMMIT GOUNTY		

FOR UNDERPASS LIGHTING QUANTITIES, SEE SHEET 687

UNDERPASS LIGHTING DETAILS

CALC. BY. ____ DATE ____	SUM-76-11.57	OHIO	700 / 1214
CHKD. BY. ____ DATE ____	FED. PROJECT IR-76-2(44)19	F.H.W.A. REGION 5	

SUMMIT COUNTY

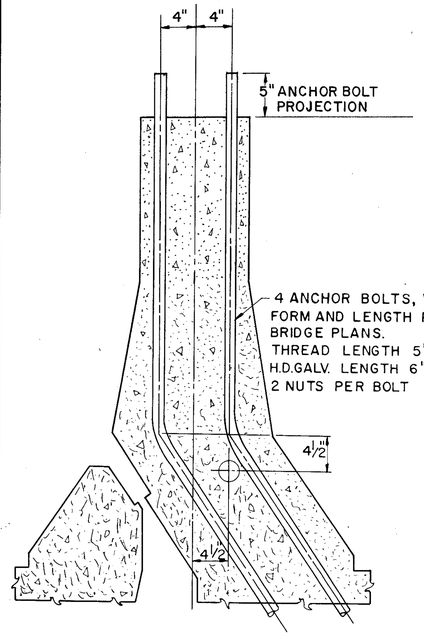

SECTION B-B

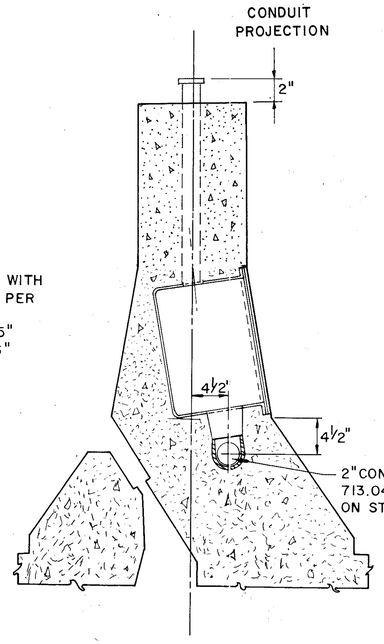

SECTION C-C

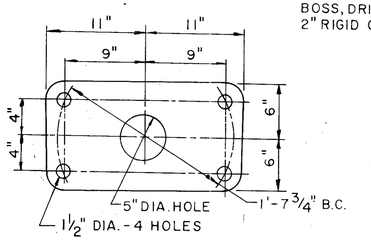

MEDIAN BARRIER LIGHT POLE BASE PLATE

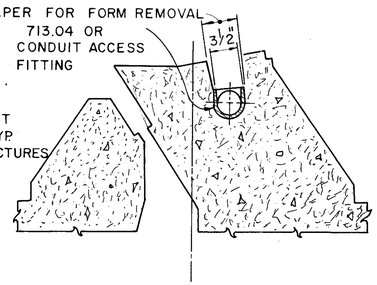

DETAIL OF CONCRETE POUR BELOW JUNCTION BOX, SECTION C-C.

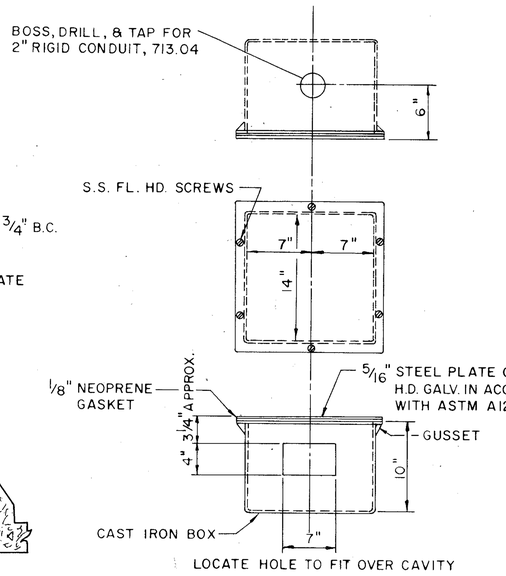

LOCATE HOLE TO FIT OVER CAVITY

JUNCTION BOX

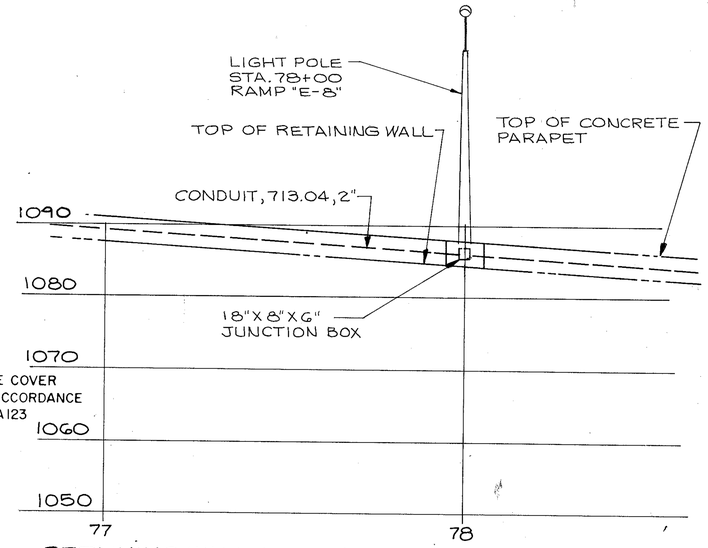

RETAINING WALL NO. 3 ALONG RAMP "E-8"

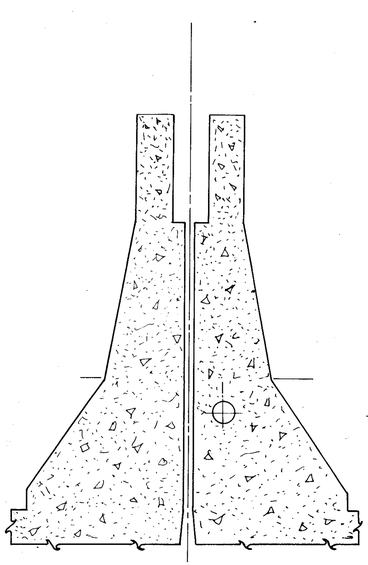

SECTION A-A

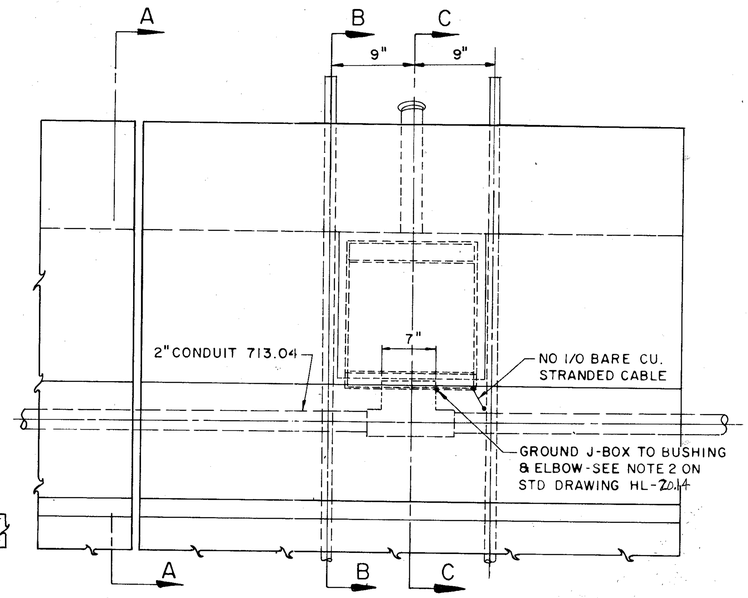

STRUCTURE BARRIER POLE MOUNTING DETAILS

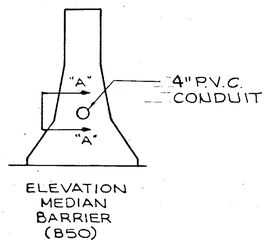

ELEVATION MEDIAN BARRIER (B50)

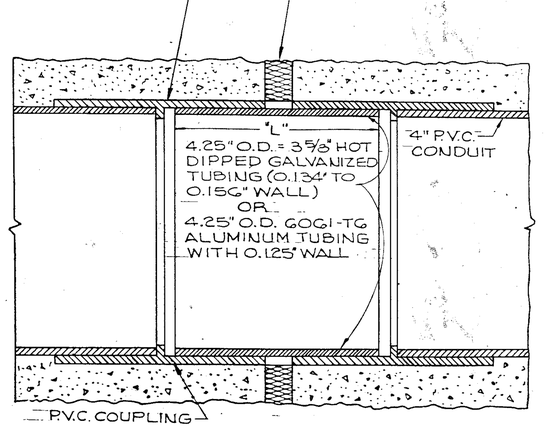

SECTION A-A

"L" IS APPROX. 3¾" WHEN JOINT IS ½"

NOTE: CONDUIT COUPLINGS AS DETAILED HERE IN SHALL BE PROVIDED AT ALL MEDIAN BARRIER JOINTS WHERE A JOINT FILLER IS USED, AS REQUIRED OR PERMITTED BY ITEM 622 OR STANDARD CONSTRUCTION DRAWING MC-9

CONDUIT COUPLING DETAIL AT MEDIAN BARRIER JOINT

AA B/P# 71942R

CALC. BY. E.D.R. DATE 11/89	SUM-76-11.57	OHIO	701
CHKD. BY. D.S.B. DATE 12/89	FED. PROJECT IR-76-2(44)19	F.H.W.A. REGION 5	1214
	SUMMIT COUNTY		

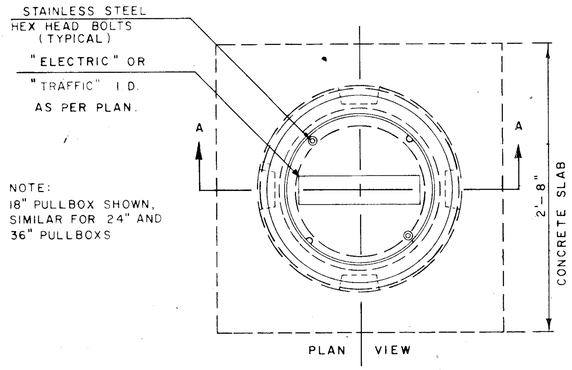

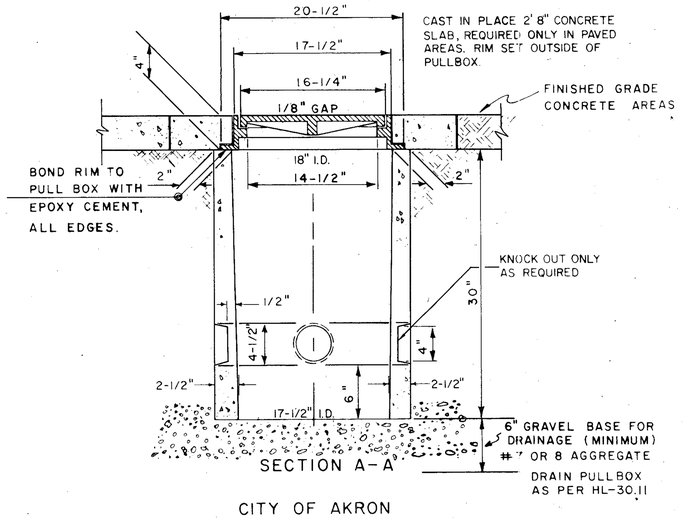

CITY OF AKRON
STANDARD
CONCRETE PULLBOX.

* JUNCTION BOXES SHALL BE ORIENTATED SO AS TO FACE THE CENTERLINE OF ROADWAY (TYPICAL)

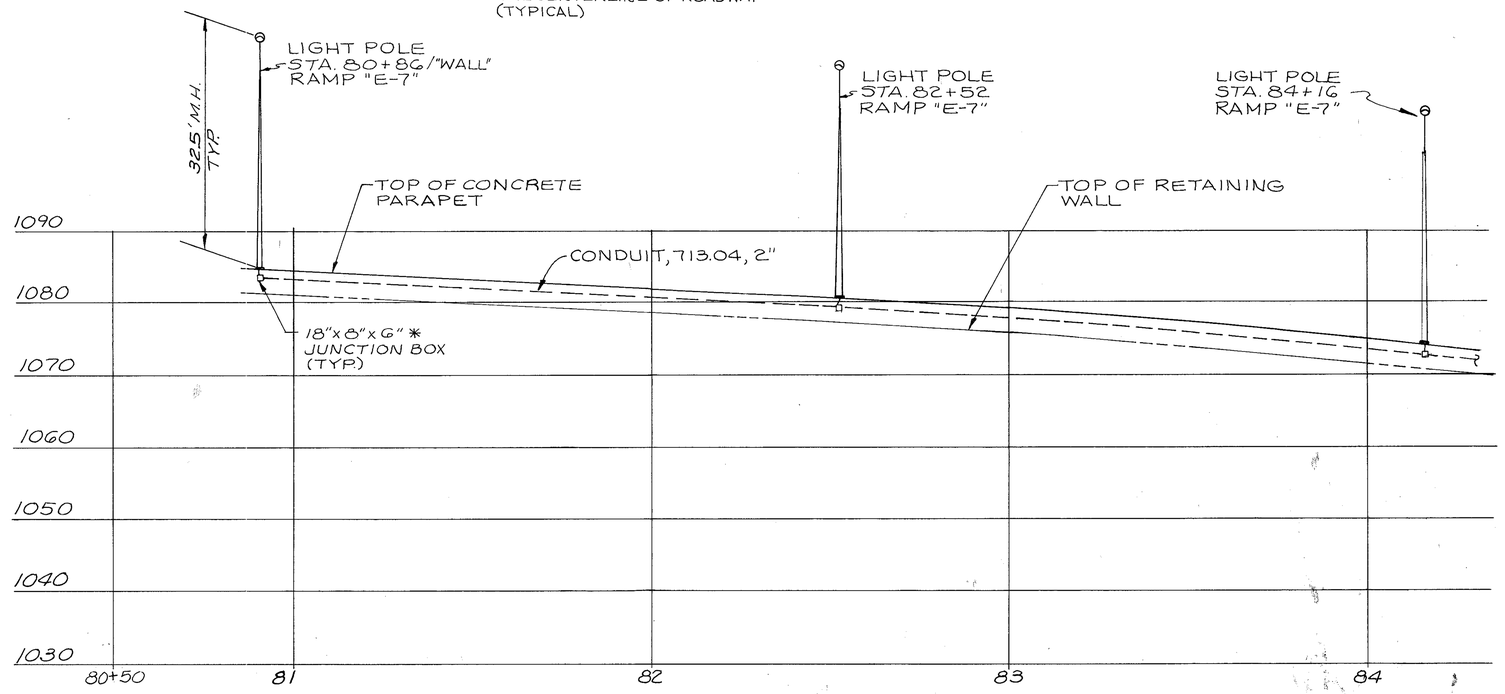

RETAINING WALL NO.2 ALONG RAMP "E-7"

CONTROL CENTER DATA

	STATION	CONTROL CENTER LOCATION	CONNECTED LOAD KVA	CONTACTOR RATING VOLTS	ENCLOSURE RATING AMPS	CIRCUIT NUMBER	CIRCUIT LOAD AMPS	CIRCUIT FUSE SIZE	MAINTAINING AGENCY
*	13+20 RAMP "T"	FTH	31.1	480 2W.	60	FTH-3	37.9	60	STATE OF OHIO
						FTH-5	18.9	20	
						FTH-7	7.9	20	
*	12+90 FULLER	FUL	9.3	480 2W.	60	FUL-1	12.5	30	STATE OF OHIO
						FUL-2	6.9	20	
*	12+45 MARTHA	MAR	28.6	480 2W.	60	MAR-6	26.8	40	STATE OF OHIO
						MAR-7	15.6	20	
						MAR-8	17.1	30	
**	13+00	INM	0.3	EXIST 120,2W.	60	INM-1	2.5	10	CITY OF AKRON
**	16+22	ARL	0.6	120,2W.	60	ARL-1	5.0	10	
**	12+90	FLR	0.3	120,2W.	60	FLR-1	2.5	10	
**	12+45	MTH	0.6	120,2W.	60	MTH-1	5.0	10	
**	12+00	SEI	0.3	120,2W.	60	SEI-1	2.5	10	

NOTE- *- EXIST. POWER SERVICE REVISED
**- FOR UNDERPASS LIGHTING WITH 100W. HIGH PRESSURE SODIUM LUMINAIRES.

NOTE: LIGHT POLE LOCATIONS MAY VARY, PROPRIETARY WALL TO GOVERN LOCATIONS, SEE SHOP DRAWINGS.

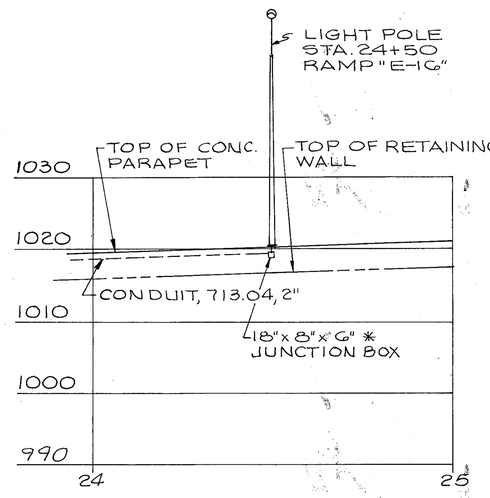

RETAINING WALL NO.13
ALONG RAMP "E-16"

LIGHTING DETAILS

AA. B/P# 71942R

CALC. BY. EBR DATE 3-92	SUM-76-11.57	OHIO	702
CHKD. BY. —— DATE ——	FED. PROJECT IR-76-2(44)19	F.H.W.A. REGION 5	1214

SUMMIT COUNTY

SLAB REINFORCEMENT

A WIRE FABRIC SHALL BE SUSPENDED IN THE CENTER OF THE CONCRETE SLAB. W4 OR D4 STEEL WIRE AT 4" ON CENTER IN EACH DIRECTION SHALL BE USED. A 2" CLEARANCE TO EDGE OF CONCRETE SLAB SHALL BE MAINTAINED.

ROADWAY LIGHTING
ENCLOSURE
480 V. 60 AMP.
2 WIRE METERED
SERVICE

UNDERPASS LIGHTING
ENCLOSURE
120V. 60 AMP.
2 WIRE METERED
SERVICE

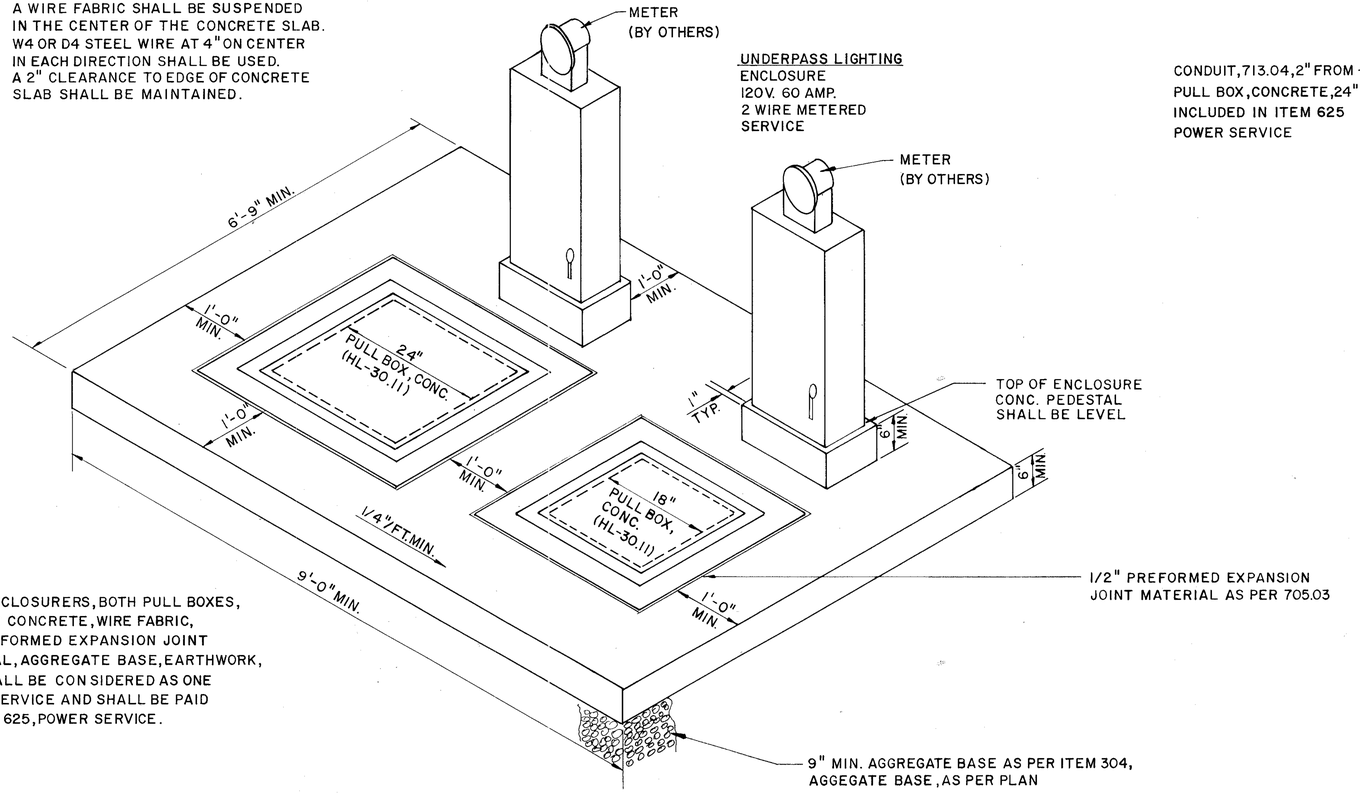

BOTH ENCLOSURERS, BOTH PULL BOXES, CLASS C CONCRETE, WIRE FABRIC, 1/2" PREFORMED EXPANSION JOINT MATERIAL, AGGREGATE BASE, EARTHWORK, ETC. SHALL BE CONSIDERED AS ONE POWER SERVICE AND SHALL BE PAID AS ITEM 625, POWER SERVICE.

CONCRETE PAD MOUNTED POWER SERVICE DETAIL

NOT TO SCALE

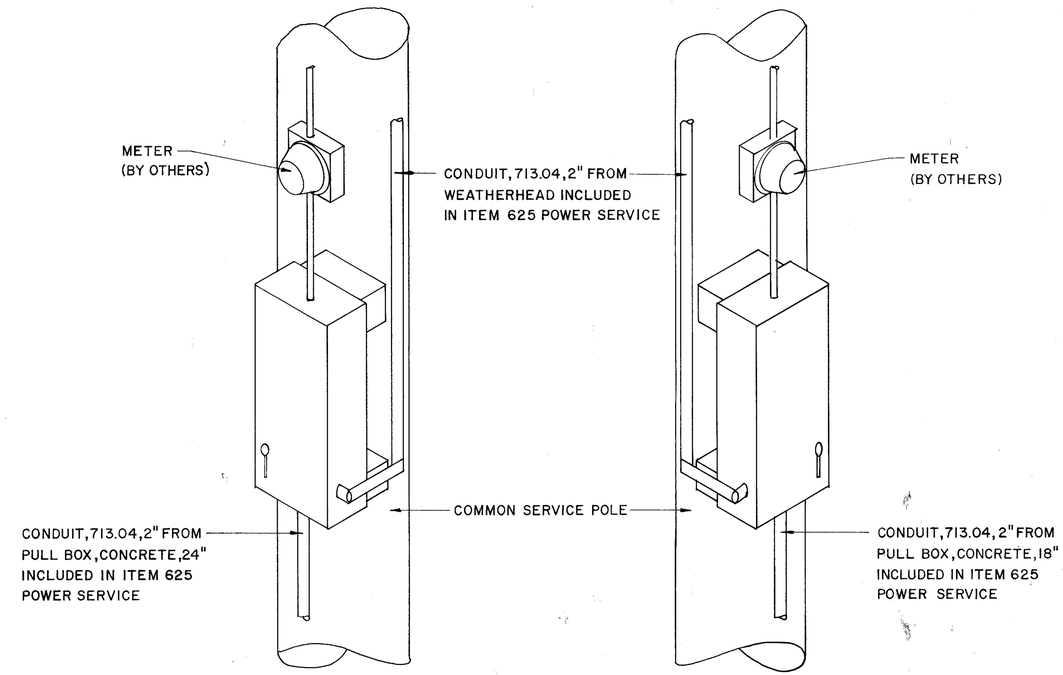

ROADWAY LIGHTING
ENCLOSURE MOUNTED
AND METERED SEPARATELY
480 V. 60 AMP. 2 WIRE SERVICE

UNDERPASS LIGHTING
ENCLOSURE MOUNTED
AND METERED SEPARATELY
120 V. 60 AMP. 2 WIRE SERVICE

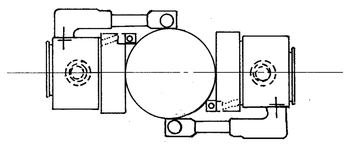

PLAN
2 SINGLE ENCLOSURES MOUNTED
OPPOSITELY ON COMMON SERVICE POLE

POLE MOUNTED POWER SERVICE DETAIL

NOT TO SCALE

LIGHTING DETAILS

CALC. BY. DATE	SUM-76-11.57	OHIO	703 1214
CHKD. BY. DATE	FED. PROJECT IR-76-2(44)19	F.H.W.A. REGION 5	

SUMMIT COUNTY

* NOTE: REMOVE EXIST. COUPLING FROM EXIST. CONDUIT, CLEAN CONDUIT, CONNECT NEW CONDUIT WITH NEW COUPLING TO EXIST. MEDIAN PULL BOX CONDUIT ELLS. FOR ADDITIONAL DETAILS SEE STANDARD DRAWING HL-20.13. THIS WORK SHALL BE CONSIDERED INCIDENTIAL TO AND INCLUDE IN THE UNIT PRICE BID FOR THE PERTINENT 625 - CONDUIT ITEM.

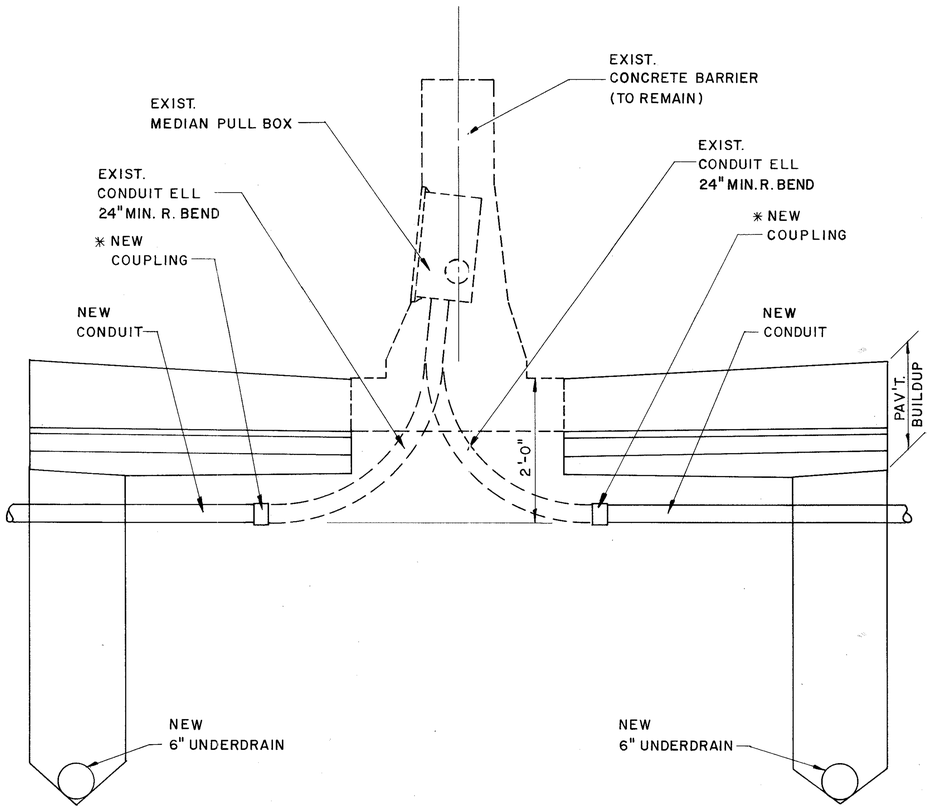

CONNECTION OF CONDUIT TO EXIST. MEDIAN PULL BOX DETAIL

NOT TO SCALE

FHWA REGION	STATE	PROJECT	
5	OHIO	FED. PROJECT IR-76-2 (44)19	

704
12.14

SUM-76-11.57

SUMMIT COUNTY

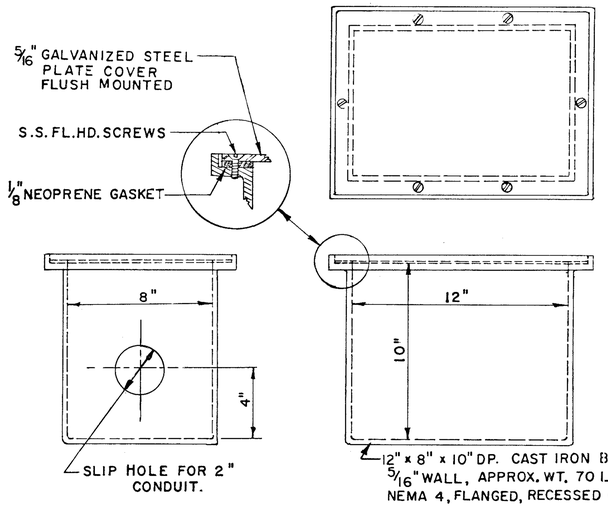

JUNCTION BOX SHALL CONFORM TO 713.10, EXCEPT THAT THE GALVANIZED STEEL PLATE COVER SHALL CONFORM TO ASTM A-242 OR A-36.

TRANSITION JUNCTION BOX DETAILS

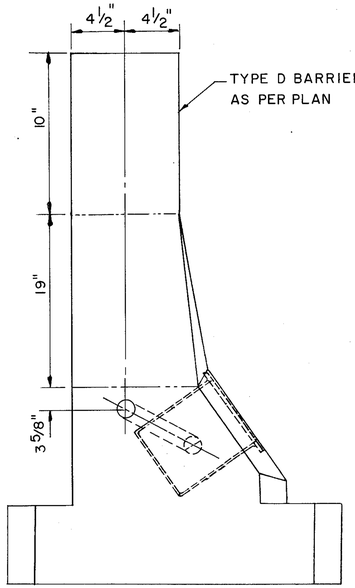

END ELEV. A-A

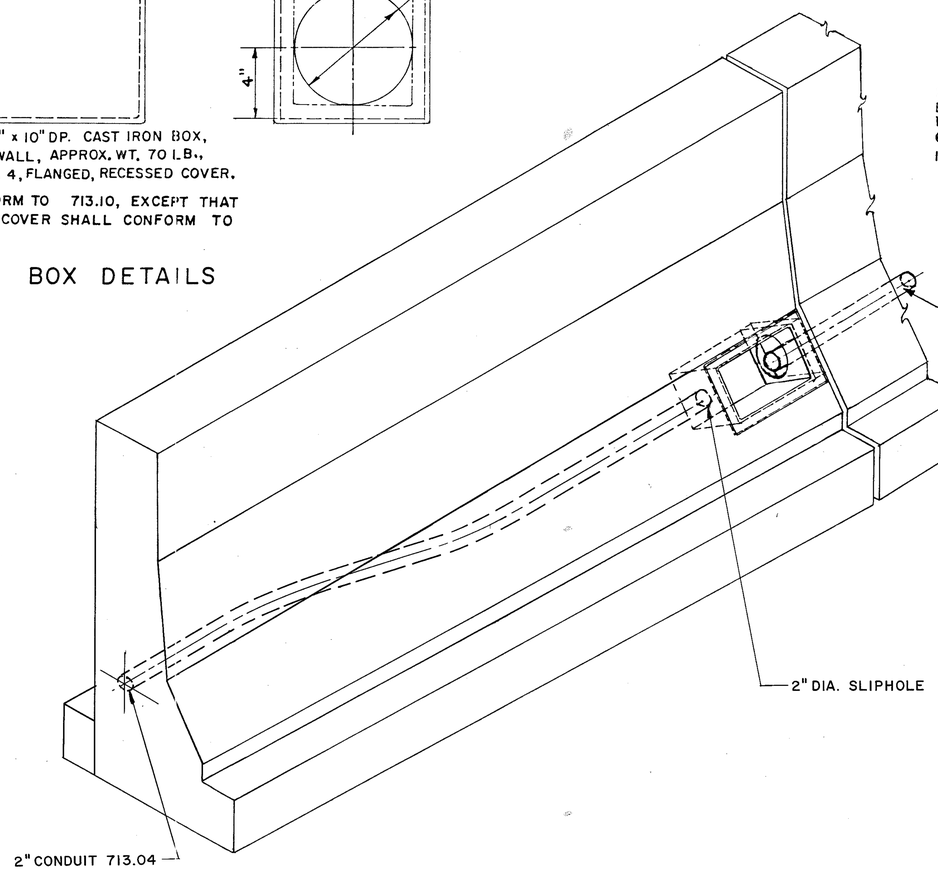

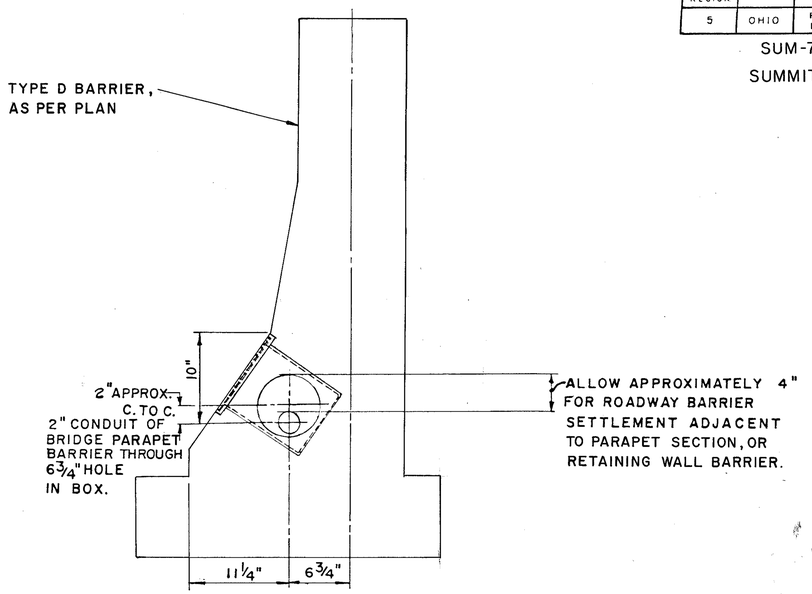

END ELEV. B-B

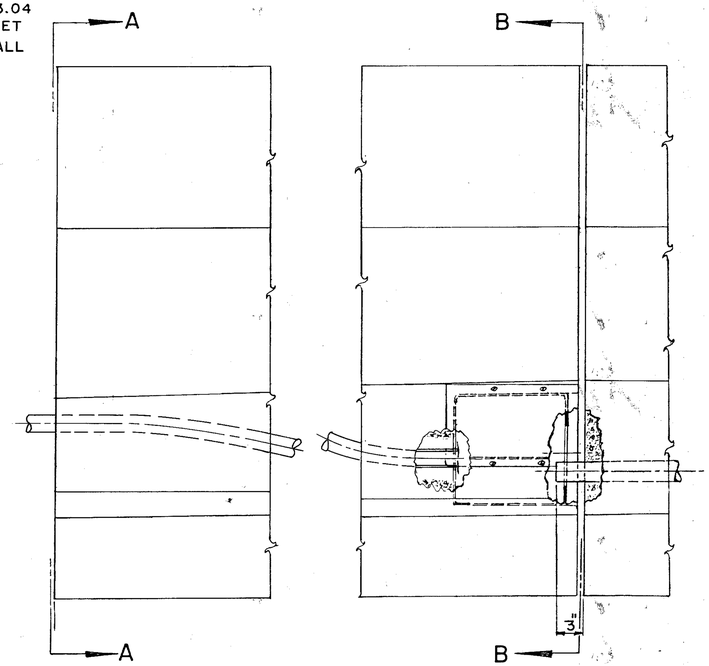

SIDE ELEVATION, TRANSITION BARRIER FROM ROADWAY TO BRIDGE CONFIGURATIONS

DETAIL TRANSITION JUNCTION BOX, AS PER PLAN

AA B/P# 71942R

CALC. BY. E.J.E. DATE 11-89	SUM-76-11.57	OHIO	705
CHKD. BY. ____ DATE ____	FED. PROJECT IR-76-2(44)19	F.H.W.A. REGION 5	1214

SUMMIT COUNTY

LOAD	
5 X 200W.	= 1000W.
LIGHTING LOAD	= 1000W.
SIGN LOAD	= 2250 W.
TOTAL LOAD	= 3250 W.

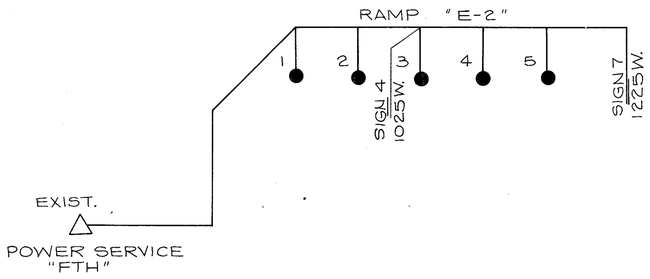

CIRCUIT "FTH"-7

LOAD	
21 X 200W. H.P.S. LAMPS	= 4200W.
LIGHTING LOAD	= 4200W.
SIGN LOAD	= 900W.
TOTAL LOAD	5100W.

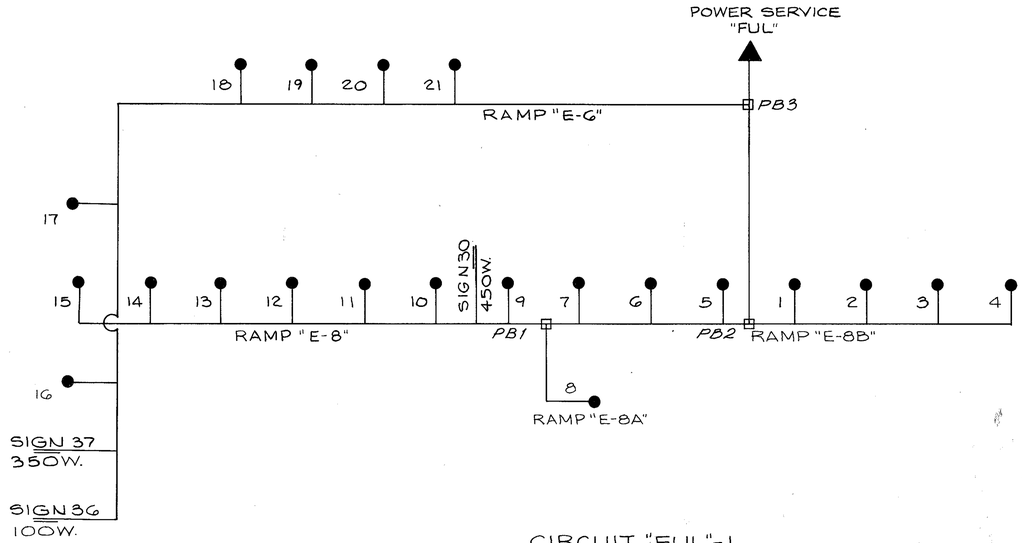

CIRCUIT "FUL"-1

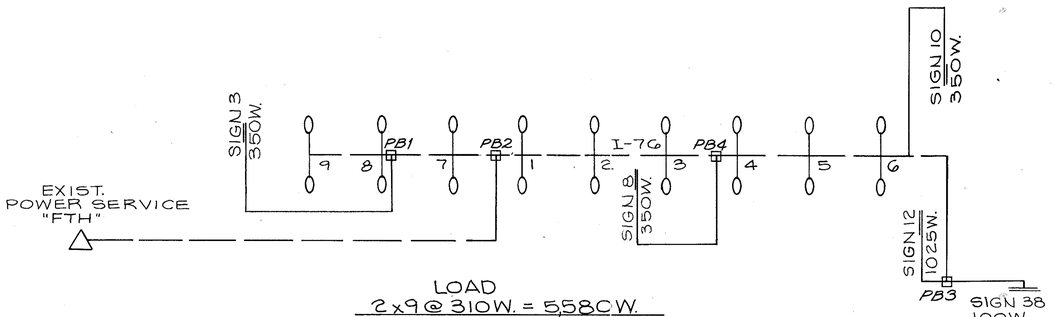

LOAD	
2x9 @ 310W.	= 5,580W.
LIGHTING LOAD	= 5,580W.
SIGN LOAD	= 2,175 W.
TOTAL LOAD	= 7,755W.

EXISTING CIRCUIT "FTH"-5 REVISED

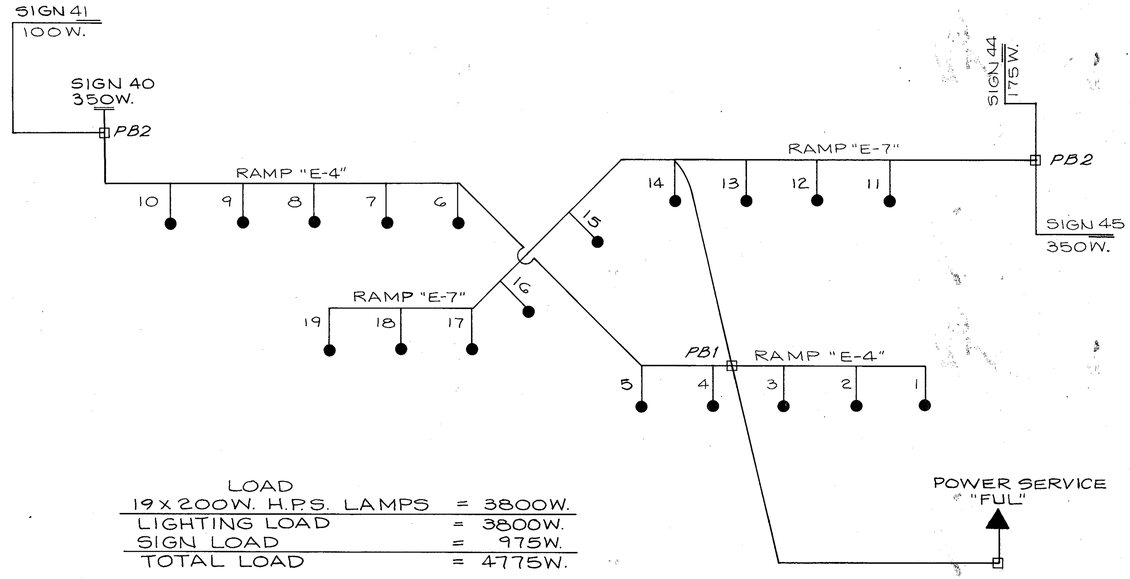

LOAD	
19 X 200W. H.P.S. LAMPS	= 3800W.
LIGHTING LOAD	= 3800W.
SIGN LOAD	= 975W.
TOTAL LOAD	= 4775W.

CIRCUIT "FUL"-2

CIRCUIT SCHEMATICS

AA B/P# 71942R

CALC. BY. C.R.R. DATE 11-89	SUM-76-11.57	OHIO
CHKD. BY. D.S.B. DATE 12/89	FED. PROJECT IR-76-2(44)19	F.H.W.A. REGION 5

706
1214

SUMMIT COUNTY

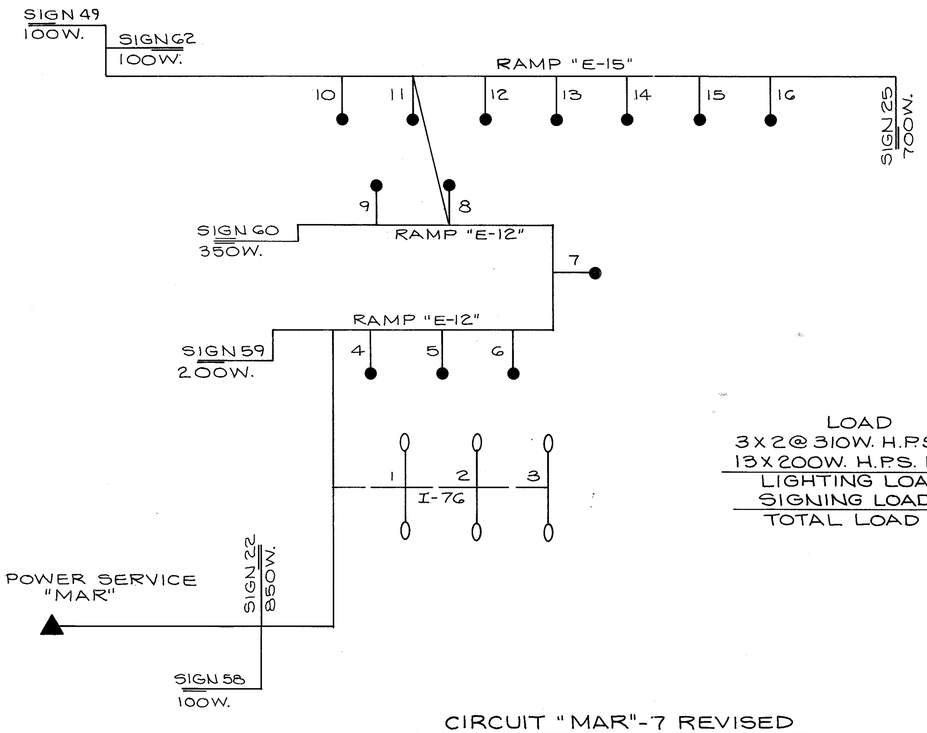

LOAD

3 X 2 @ 310W. H.P.S. LAMPS	= 1860W.
13 X 200W. H.P.S. LAMPS	= 2600W.
LIGHTING LOAD	= 4460W.
SIGNING LOAD	= 2400W.
TOTAL LOAD	= 6860W.

CIRCUIT "MAR"-7 REVISED

LOAD

2 X 5 @ 310W. H.P.S. LAMPS	= 3100W.
13 X 200W. H.P.S. LAMPS	= 2600W.
LIGHTING LOAD	= 5700W.
SIGNING LOAD	= 1050W.
TOTAL LOAD	= 6750W.

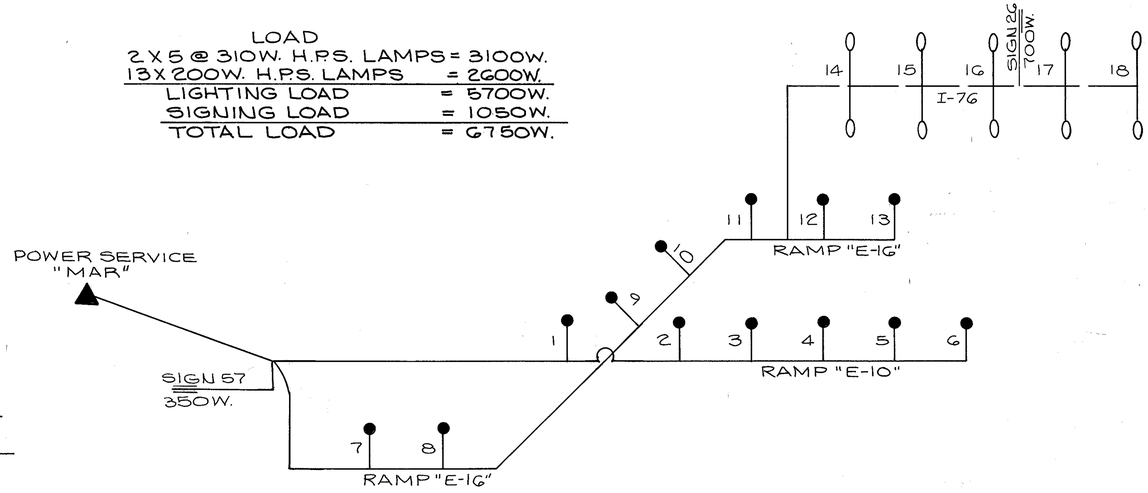

CIRCUIT "MAR"-8

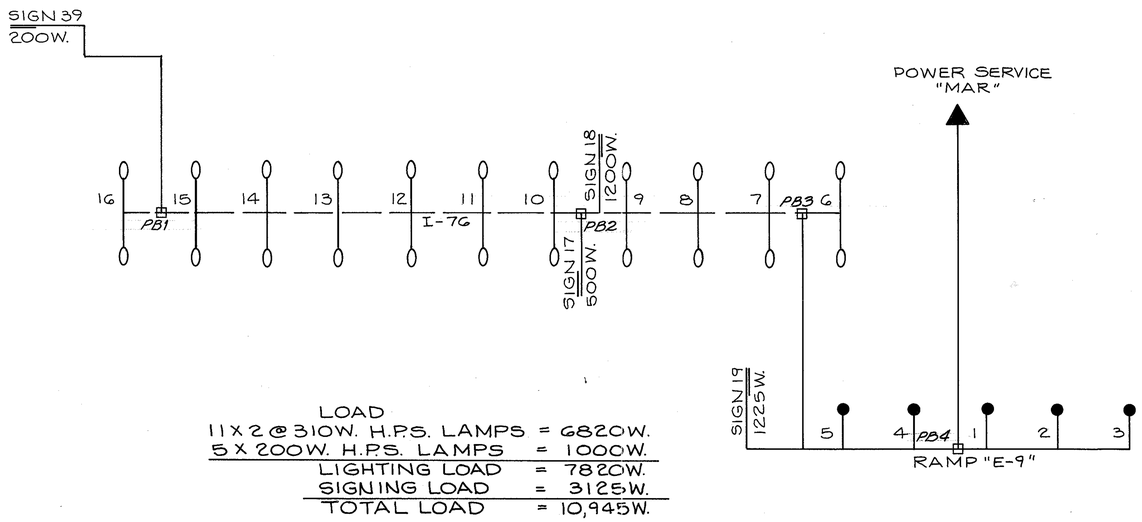

LOAD

11 X 2 @ 310W. H.P.S. LAMPS	= 6820W.
5 X 200W. H.P.S. LAMPS	= 1000W.
LIGHTING LOAD	= 7820W.
SIGNING LOAD	= 3125W.
TOTAL LOAD	= 10,945W.

CIRCUIT "MAR"-6 REVISED

F.H.W.A. REG.	STATE	PROJECT	
5	OHIO		

707/1214

SUM-76-11.57

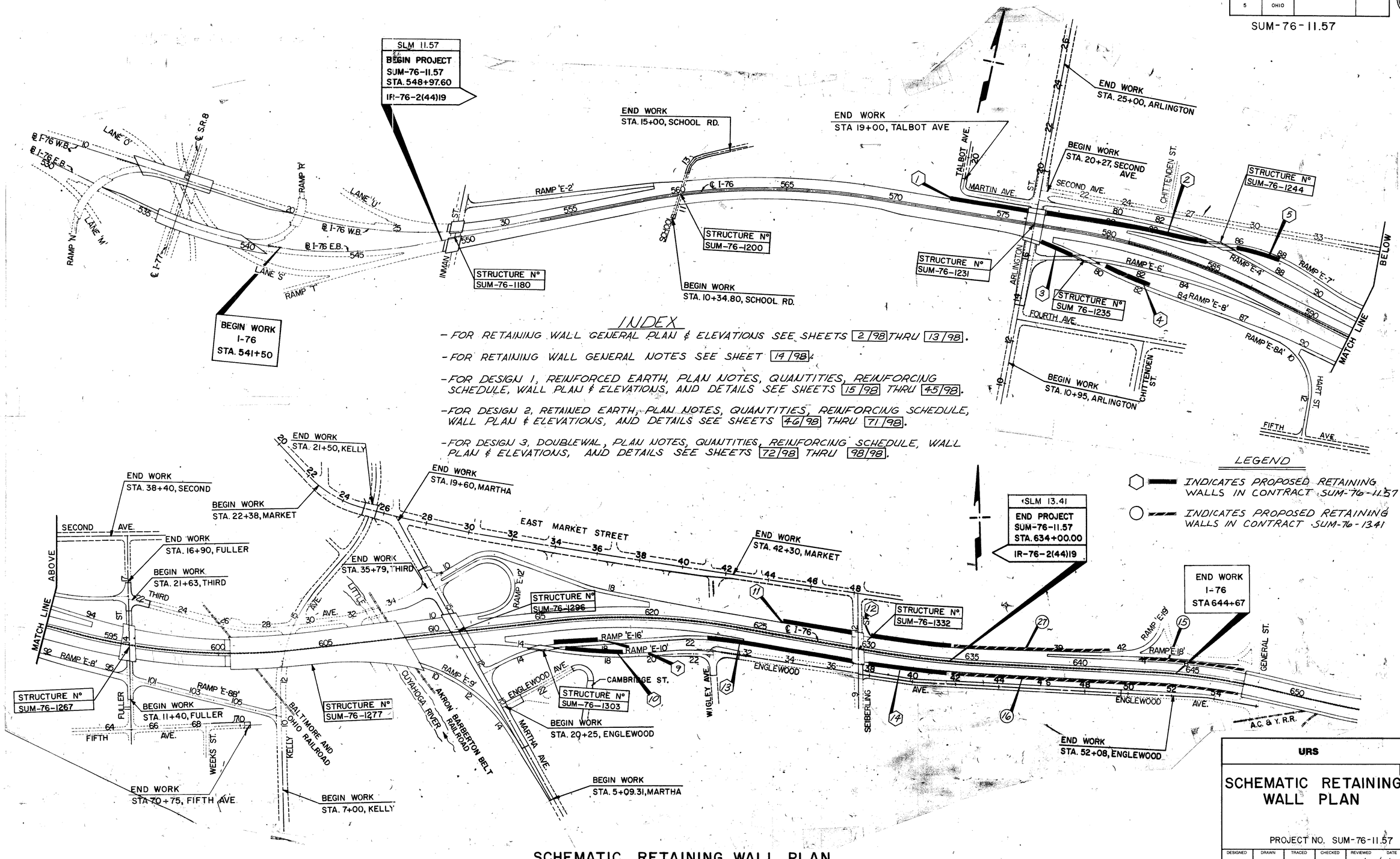

INDEX

- FOR RETAINING WALL GENERAL PLAN & ELEVATIONS SEE SHEETS 2/98 THRU 13/98.
- FOR RETAINING WALL GENERAL NOTES SEE SHEET 14/98.
- FOR DESIGN 1, REINFORCED EARTH, PLAN NOTES, QUANTITIES, REINFORCING SCHEDULE, WALL PLAN & ELEVATIONS, AND DETAILS SEE SHEETS 15/98 THRU 45/98.
- FOR DESIGN 2, RETAINED EARTH, PLAN NOTES, QUANTITIES, REINFORCING SCHEDULE, WALL PLAN & ELEVATIONS, AND DETAILS SEE SHEETS 46/98 THRU 71/98.
- FOR DESIGN 3, DOUBLEWAL, PLAN NOTES, QUANTITIES, REINFORCING SCHEDULE, WALL PLAN & ELEVATIONS, AND DETAILS SEE SHEETS 72/98 THRU 98/98.

LEGEND

- INDICATES PROPOSED RETAINING WALLS IN CONTRACT SUM-76-11.57
- INDICATES PROPOSED RETAINING WALLS IN CONTRACT SUM-76-13.41

SCHEMATIC RETAINING WALL PLAN

URS

1/98

SCHEMATIC RETAINING WALL PLAN

PROJECT NO. SUM-76-11.57

DESIGNED	DRAWN	TRACED	CHECKED	REVIEWED	DATE	REVISED
J.T.J.	J.T.J.		P.E.B.	Bkl	7/16/90	

FHWA REG	STATE	PROJECT	
5	OHIO		

708/1214

SUM - 76 - 11.57

NOTES

1. THERE ARE THREE PROPIETARY RETAINING WALL OPTIONS; DESIGN 1, REINFORCED EARTH, DESIGN 2, RETAINED EARTH, AND DESIGN 3, DOUBLEWAL. THE CONTRACTOR SHALL BID ON ONLY ONE PROPIETARY RETAINING WALL OPTION PER WALL.
2. FOR PROPIETARY RETAINING WALL PLAN NOTES, QUANTITIES, REINFORCING, SCHEDULES, AND DETAILS, REFER TO THE FOLLOWING:
   - -DESIGN 1, REINFORCED EARTH, SEE SHEETS 15/98 THRU 45/98.
   - -DESIGN 2, RETAINED EARTH, SEE SHEETS 46/98 THRU 71/98.
   - -DESIGN 3, DOUBLEWAL, SEE SHEETS 72/98 THRU 98/98.
3. FOR RETAINING WALL GENERAL NOTES SEE SHEET 14/98.

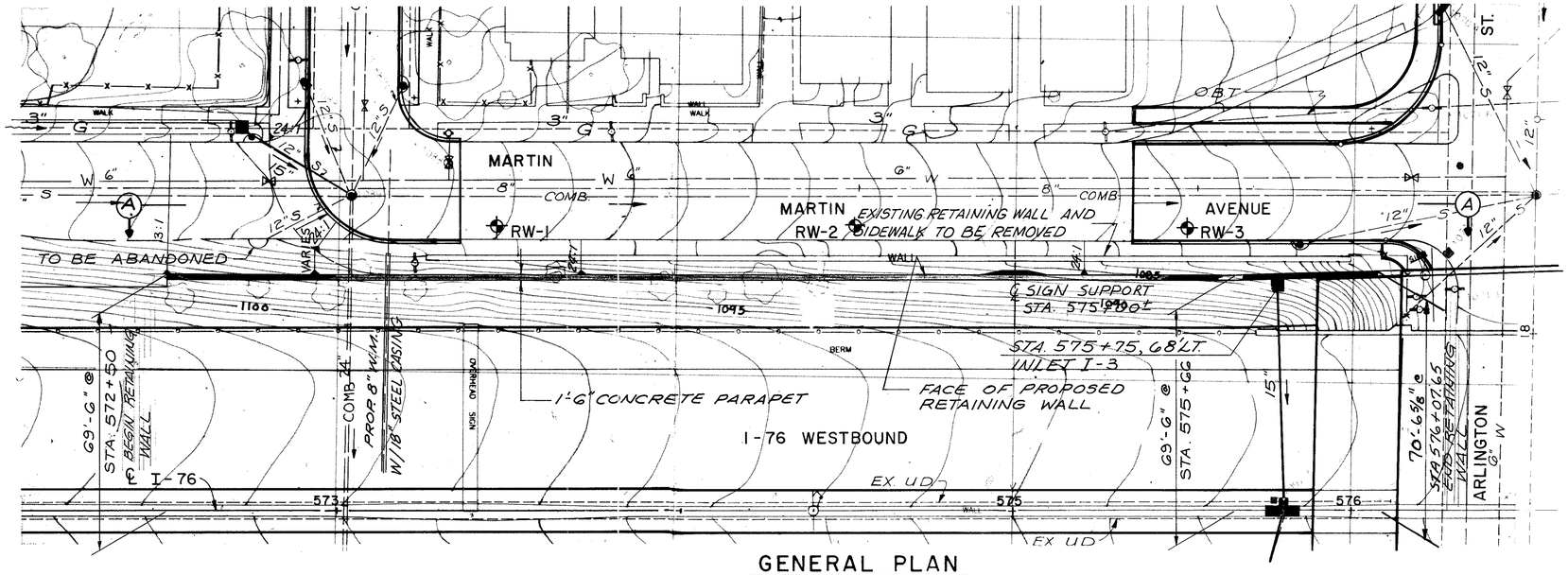

GENERAL PLAN

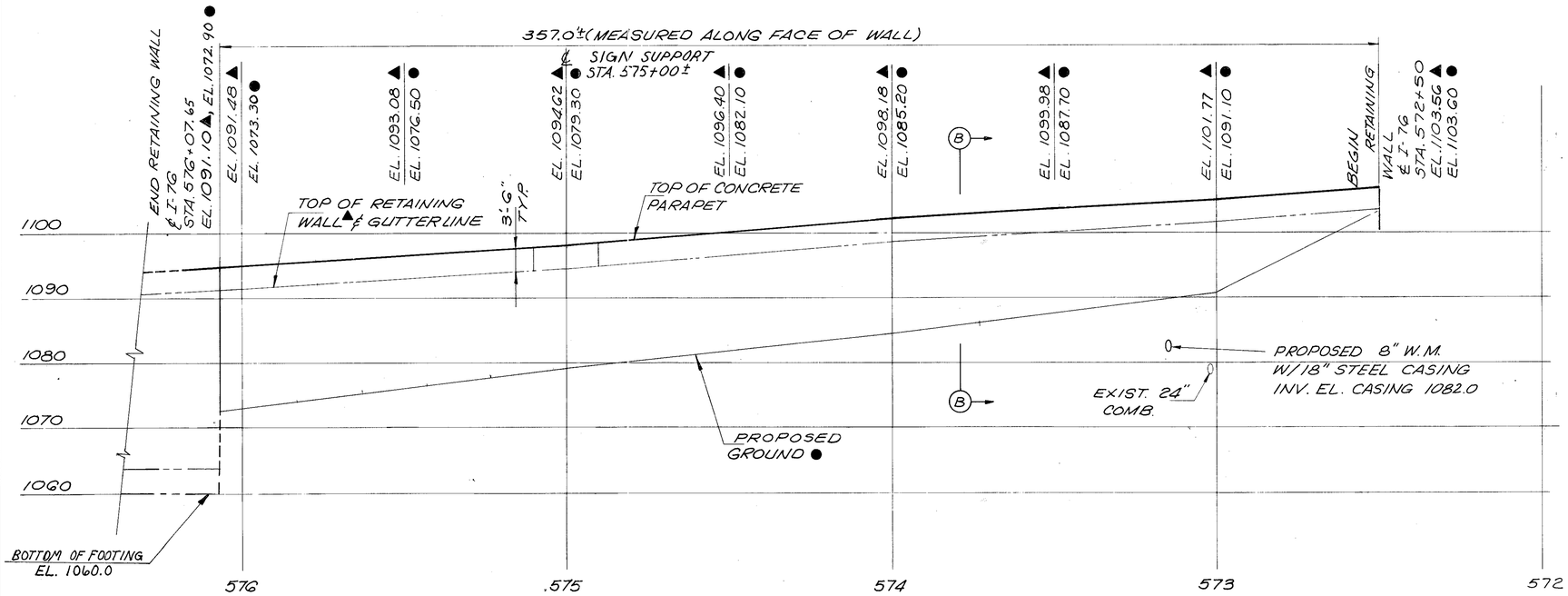

VIEW A-A
ELEVATION

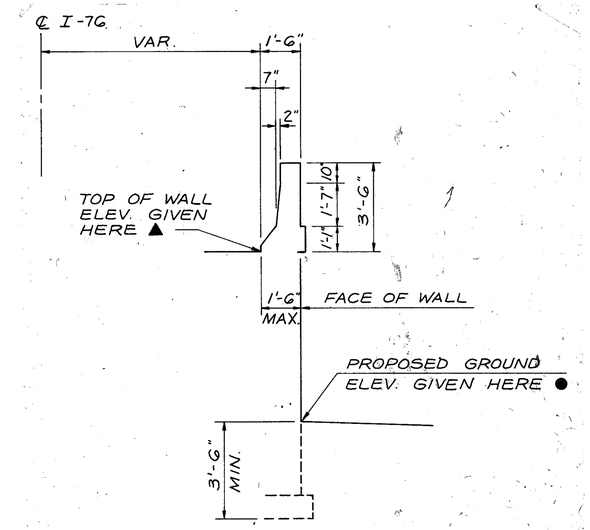

SECTION B-B

LEGEND

- ▲ FINISH ELEVATION AT TOP OF WALL.
- ● FINISH ELEVATION AT PROPOSED GROUND.
- ⌖ INDICATES SOIL BORING LOCATION

URS

2/98

GENERAL PLAN & ELEVATION

RETAINING WALL Nº 1

I-76 STA 572+50 TO STA 576+07.65

DESIGNED	DRAWN	TRACED	CHECKED	REVIEWED	DATE	REVISED
HK	COG		P.E.B.	J.J.P.	8-7-97	

F.H.W.A. REG.	STATE	PROJECT	
5	OHIO		

709
214

SUM-76-11.57

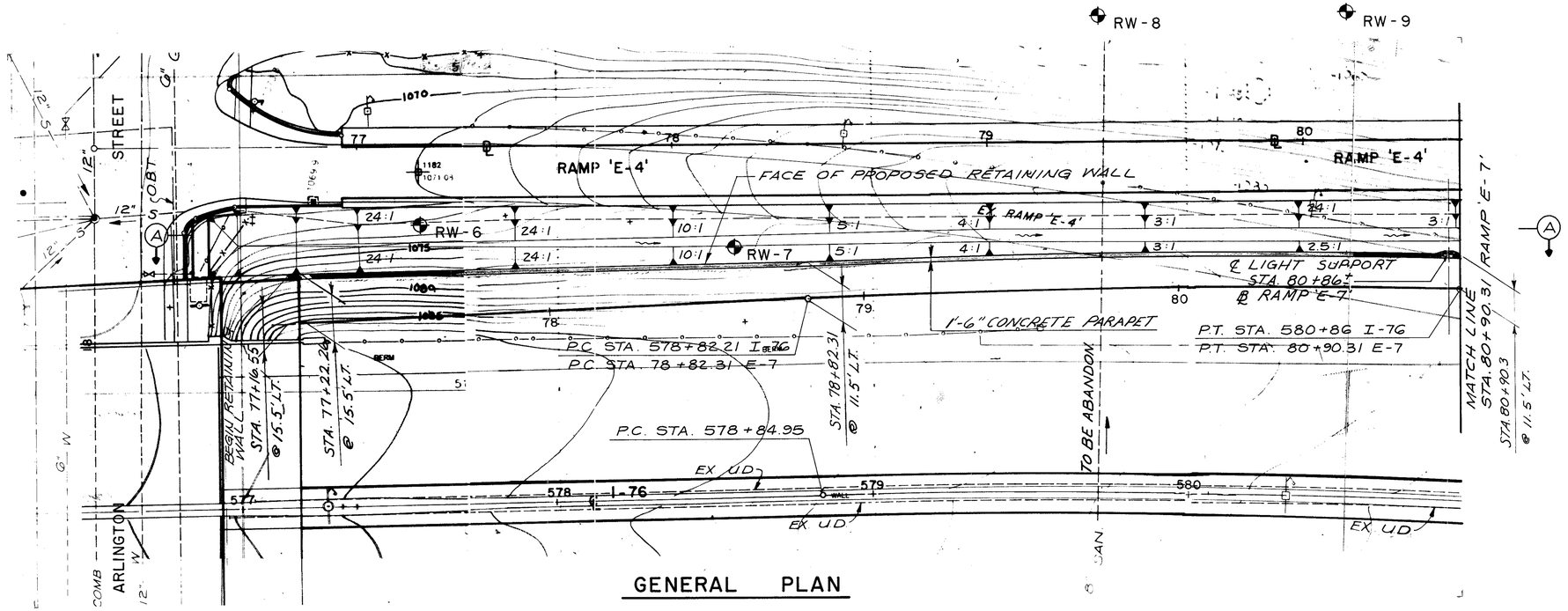

GENERAL PLAN

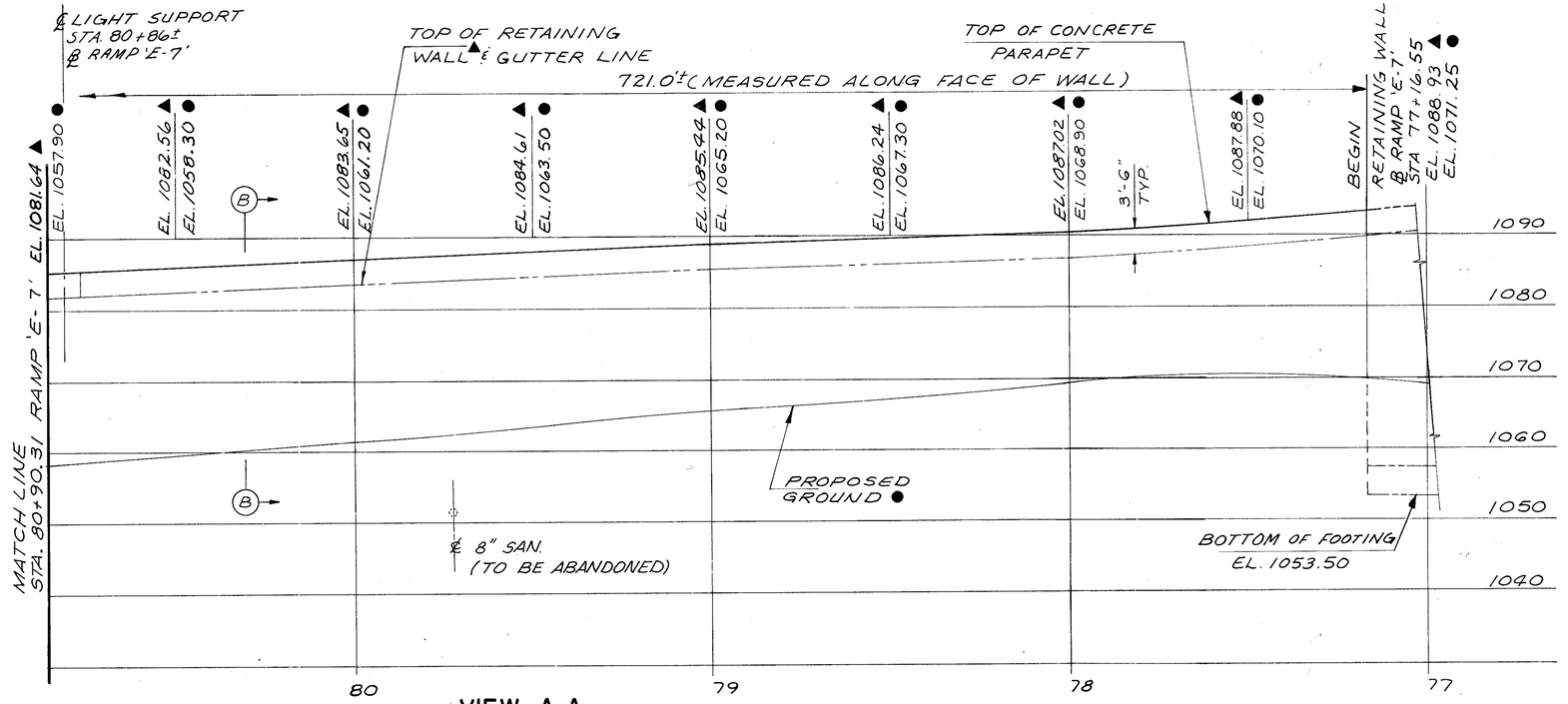

VIEW A-A ELEVATION

NOTES

1. FOR SECTION B-B SEE SHEET 4 98.
2. 2" ϕ CONDUIT SHALL EXTEND FROM STA. 80+86 TO STA. 84+37.65. SEE PROPRIETARY WALL PLANS FOR CONDUIT LOCATION.
3. FOR ADDITIONAL NOTES SEE SHEET 2 98.

CURVE DATA

CENTERLINE I-76
P.I. STA. 583+05.01
Δ = 16°-45'-08"
D_c = 2°-00'-30"
R = 2852.90'
T = 420.06'
L_c = 834.14'

BASELINE RAMP E-7

P.I. STA. 79+86.35	P.I. STA. 84+03.06
Δ = 4°-02'-16"	Δ = 10°-58'-31"
D_c = 1°-56'-29"	D_c = 7°-00'-00"
R = 2951.44'	R = 818.51'
T = 104.04'	T = 78.64'
L_c = 208.00'	L_c = 156.79'

LEGEND

- ▲ FINISH ELEVATION AT TOP OF WALL
- ● FINISH ELEVATION AT PROPOSED GROUND
- ⌖ INDICATES SOIL BORING LOCATION

URS

3 98

GENERAL PLAN & ELEVATION

RETAINING WALL Nº 2

RAMP 'E-7' STA. 77+16.55 TO STA. 84+37.65

DESIGNED	DRAWN	TRACED	CHECKED	REVIEWED	DATE	REVISED
B.A.B.	F.F.		P.E.B.		4-1998	

F.H.W.A. REG.	STATE	PROJECT	
5	OHIO		

710 / 1214

SUM-76-11.57

NOTES

1. FOR NOTES, LEGEND, AND CURVE DATA, SEE SHEET 3 98.
2. FOR REMOVAL OF CHITTENDEN STREET BRIDGE & WINGWALLS SEE SHEET 237 THRU 239.

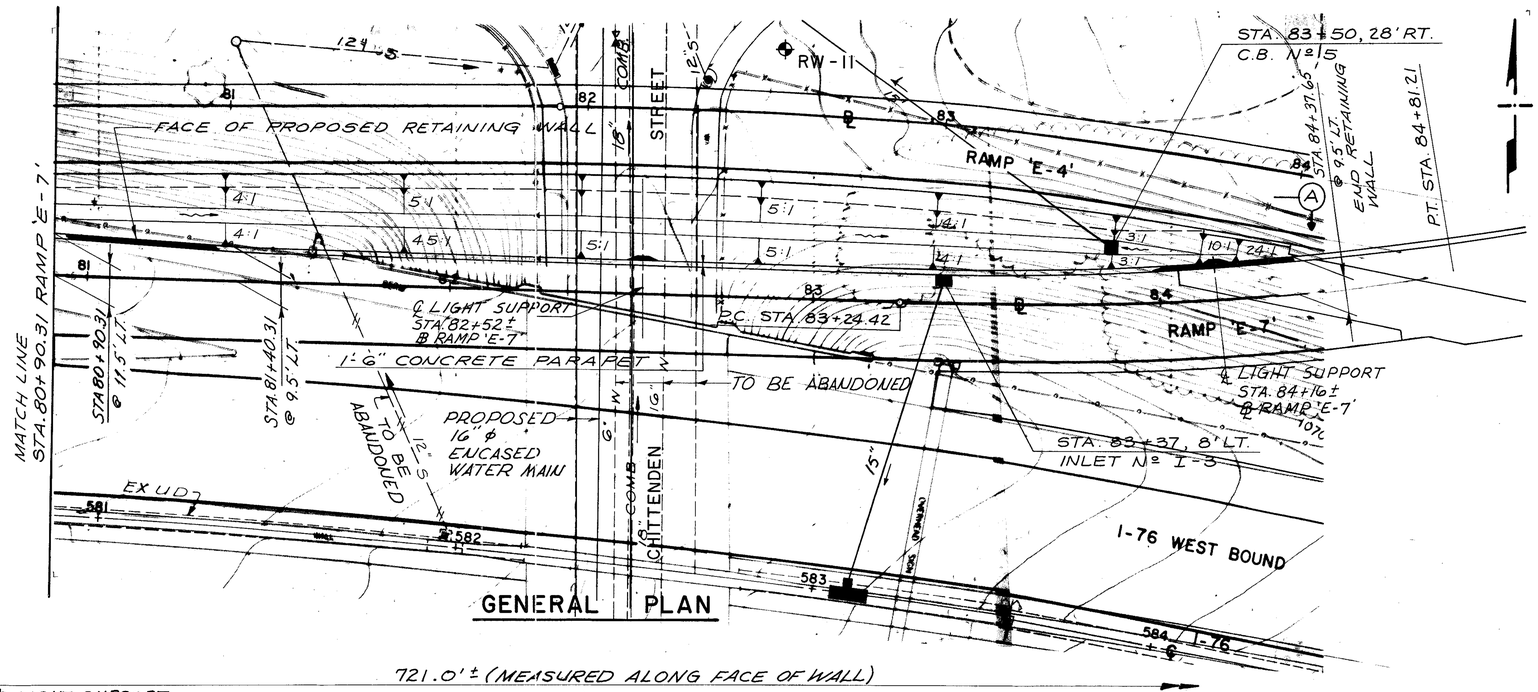

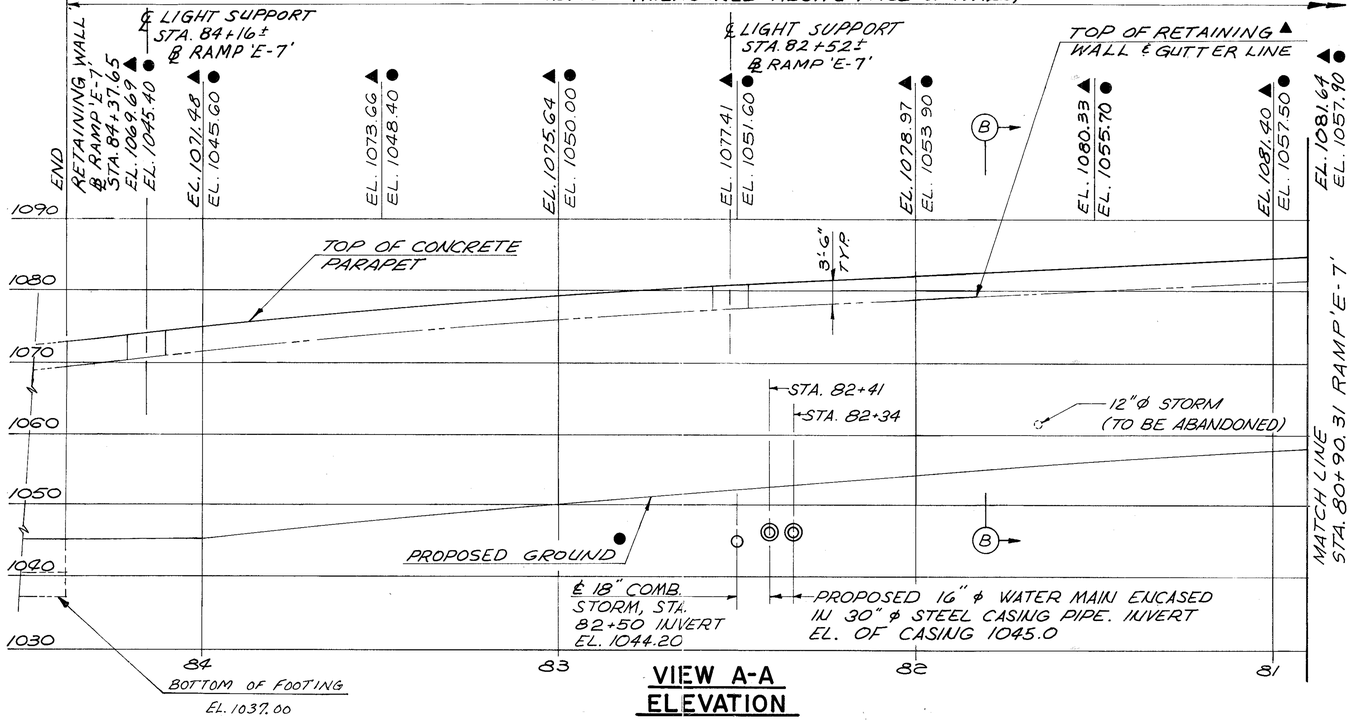

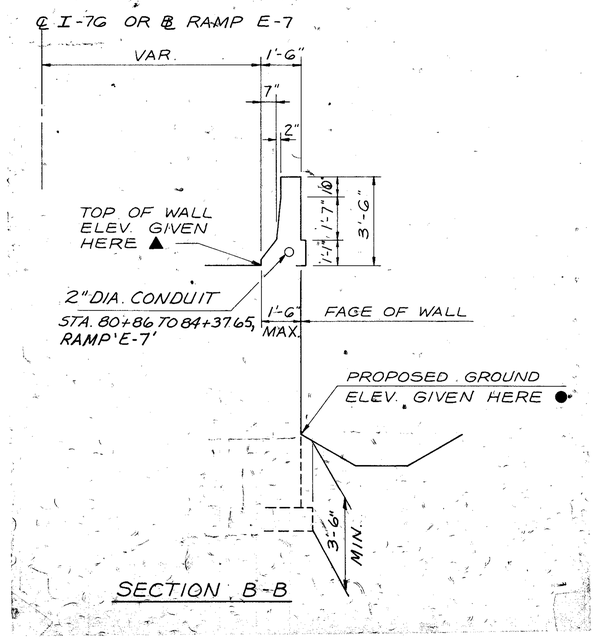

URS

4 / 98

GENERAL PLAN & ELEVATION

RETAINING WALL Nº 2

RAMP 'E-7' STA. 77+16.55 TO STA. 84+37.65

DESIGNED	DRAWN	TRACED	CHECKED	REVIEWED	DATE	REVISED
B.A.B.	F.F.		P.E.B.	JJP	4-19-88	

F.H.W.A. REG.	STATE	PROJECT	
5	OHIO		

711
12.14

SUM-76-11.57

NOTES

1. 2" ϕ CONDUIT SHALL EXTEND FROM STA. 78+00 TO STA. 78+90.32 FOR WALL NO. 3. SEE PROPRIETARY WALL PLANS FOR CONDUIT LOCATION.
2. FOR ADDITIONAL NOTES SEE SHEET 2/98.

CURVE DATA

BASELINE RAMP E-8
P.I. STA. 77+02.10
Δ = 18°-16'-49"
D_C = 4°-00'-00"
R = 1432.39'
T = 230.46'
L_C = 457.01'

BASELINE RAMP E-8
P.I. STA. 81+54.20
Δ = 8°-51'-32"
D_C = 3°-00'-00"
R = 1909.86'
T = 147.94'
L_C = 295.29'

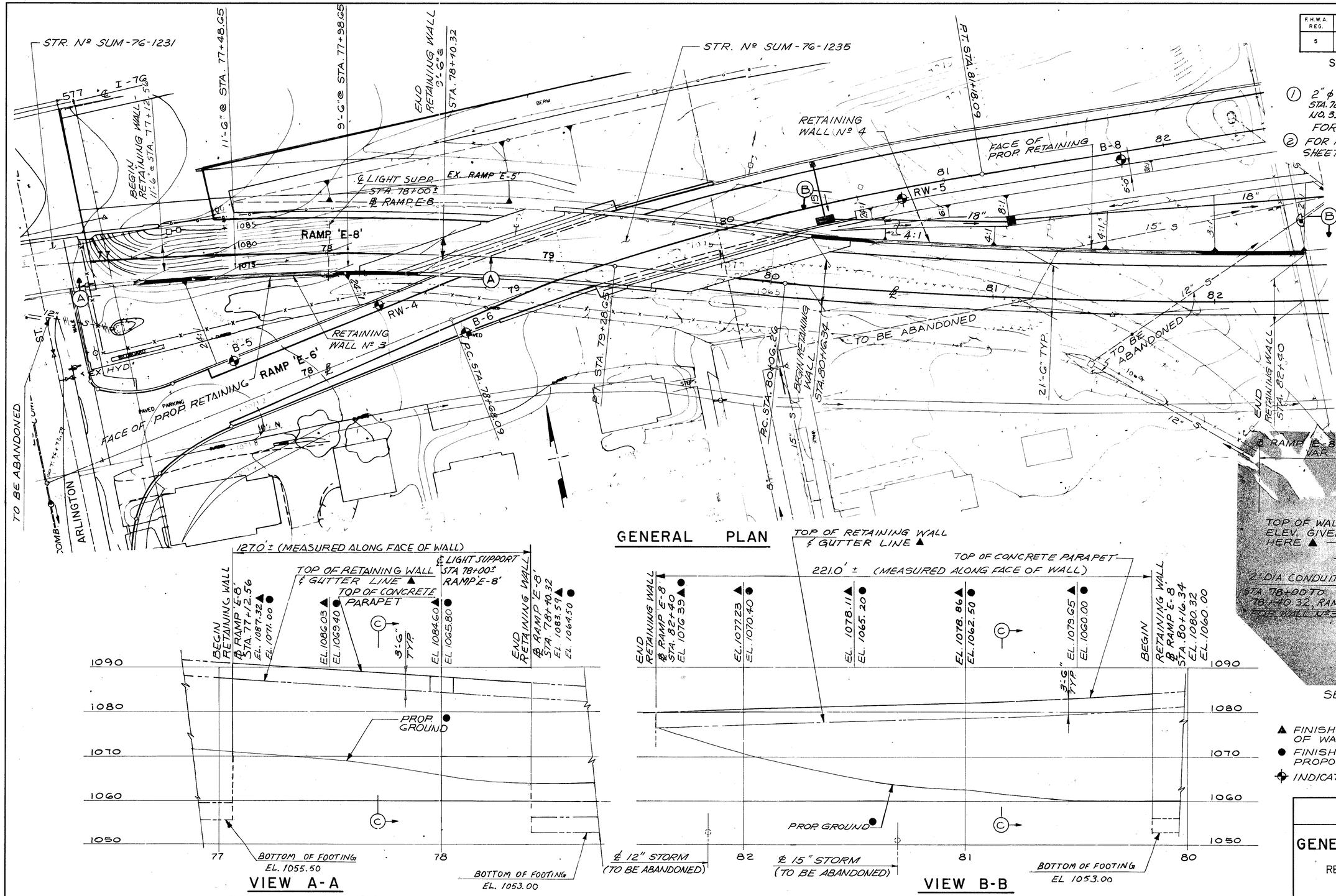

GENERAL PLAN

VIEW A-A
RETAINING WALL Nº 3

VIEW B-B
RETAINING WALL Nº 4

ELEVATION

SECTION C-C

LEGEND

- ▲ FINISH ELEVATION AT TOP OF WALL
- ● FINISH ELEVATION AT PROPOSED GROUND.
- ⌖ INDICATES SOIL BORING LOCATION

URS

5/98

GENERAL PLAN & ELEVATION

RETAINING WALL Nº 3 & Nº 4
RAMP 'E-8' WALL Nº 3
STA. 77+12.56 TO STA. 78+40.32
RAMP 'E-8 WALL Nº 4
STA. 80+16.34 TO STA. 82+40

DESIGNED	DRAWN	TRACED	CHECKED	REVIEWED	DATE	REVISED
HK	F.F.		P.E.B.	JJP	8-7-97	

F.H.W.A. REG.	STATE	PROJECT	
5	OHIO		

712
1214

SUM - 76 - 11.57

NOTES

(1) FOR ADDITIONAL NOTES SEE SHEET 2/98.

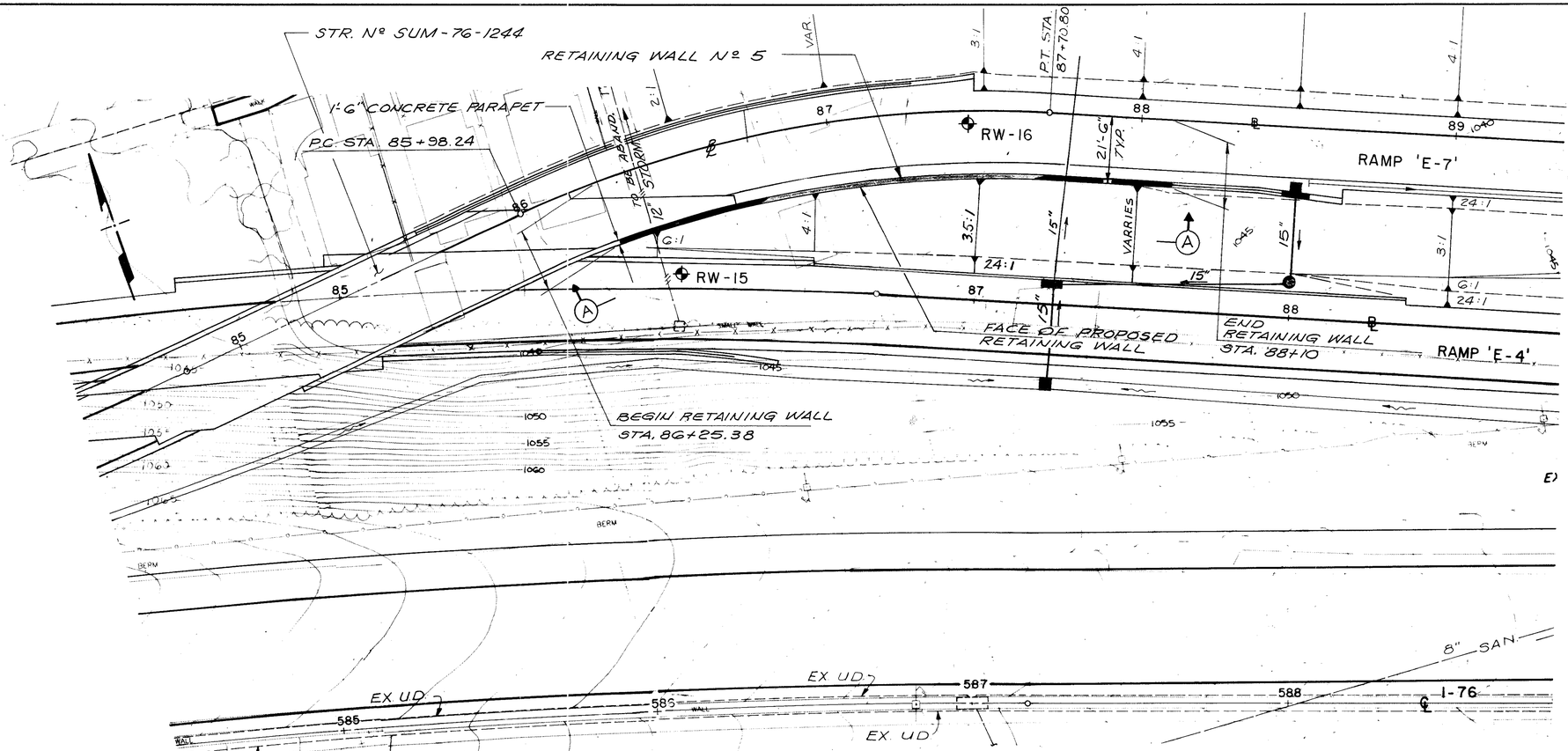

GENERAL PLAN

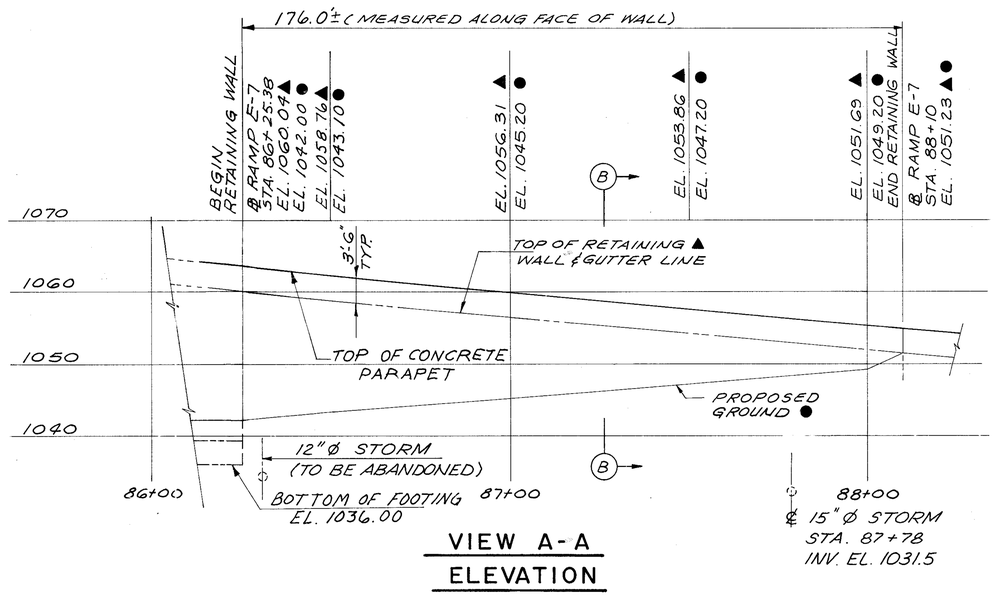

VIEW A-A
ELEVATION

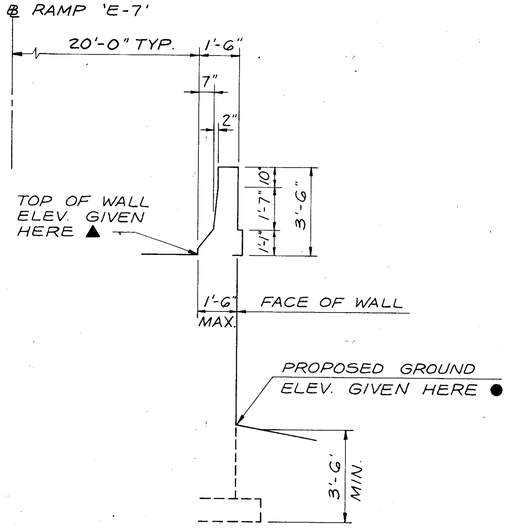

SECTION B-B

CURVE DATA

BASELINE RAMP E-7
P.I. STA. 86+86.34
Δ = 28°-28'-19"
D_c = 16°-30'-00"
R = 347.25'
T = 88.10'
L_c = 172.56'

LEGEND

- ▲ FINISH ELEVATION AT TOP OF WALL.
- ● FINISH ELEVATION AT PROPOSED GROUND.
- ⌖ INDICATES SOIL BORING LOCATION

URS

6/98

GENERAL PLAN & ELEVATION

RETAINING WALL Nº 5

RAMP 'E-7' STA. 86+25.38 TO STA. 88+10

DESIGNED	DRAWN	TRACED	CHECKED	REVIEWED	DATE	REVISED
B.A.B.	F.F.		P.G.B.	JJP	4-19-88	

F.H.W.A. REG.	STATE	PROJECT	
5	OHIO		

713/1214

SUM-76-11.57

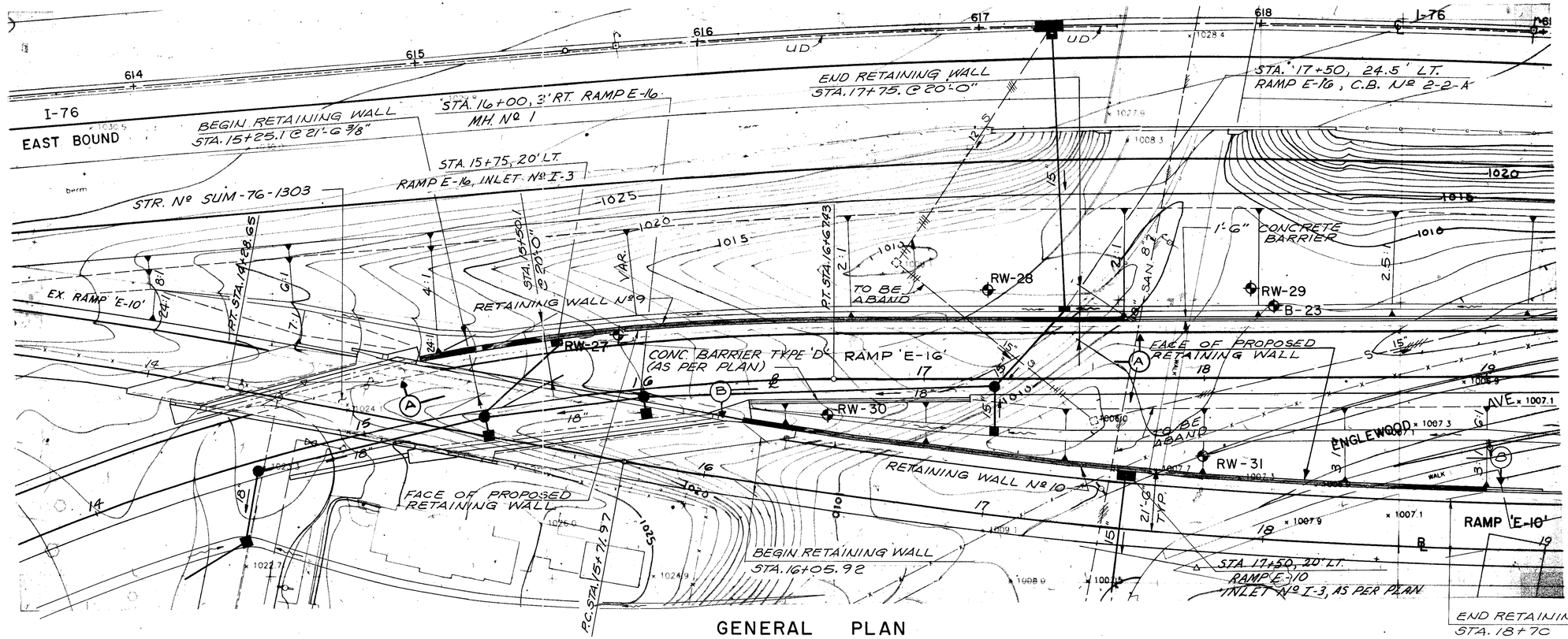

GENERAL PLAN

NOTES

1. FOR VIEW B-B OF RETAINING WALL Nº 10 SEE SHEET 8/98.
2. FOR ADDITIONAL NOTES SEE SHEET 2/98.

CURVE DATA

BASELINE RAMP E-16
P.I. STA. 14+87.29
Δ = 27°-33'-55"
D_c = 7°-30'-00"
R = 763.94'
T = 187.40'
L_c = 367.54'

BASELINE RAMP E-10
P.I. STA. 17+78.47
Δ = 12°-20'-33"
D_c = 3°-00'-00"
R = 1909.86
T = 206.51'
L_c = 411.42'

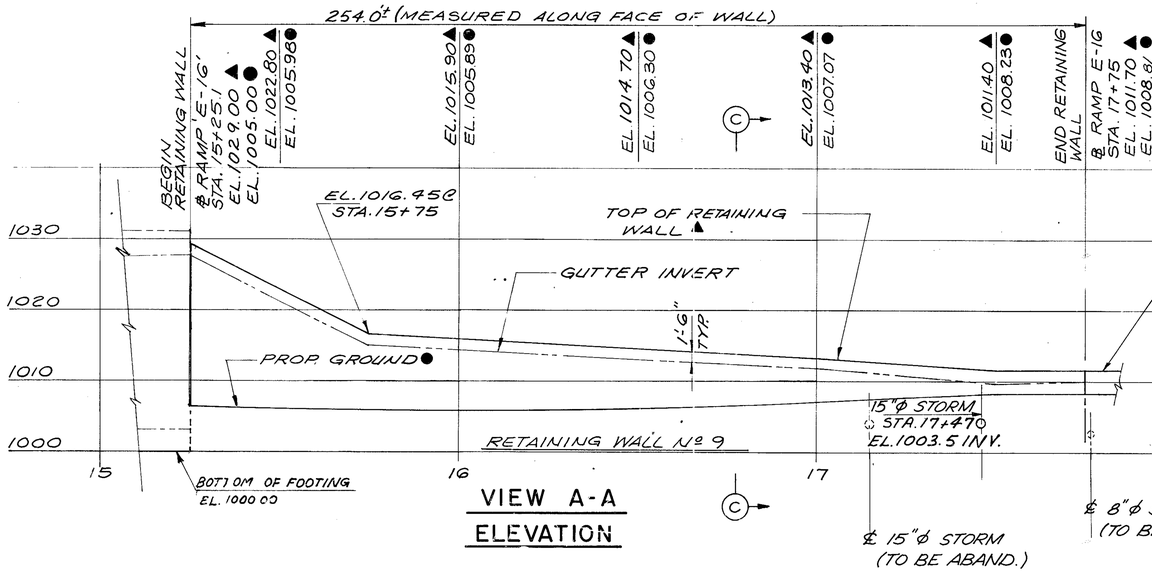

VIEW A-A ELEVATION

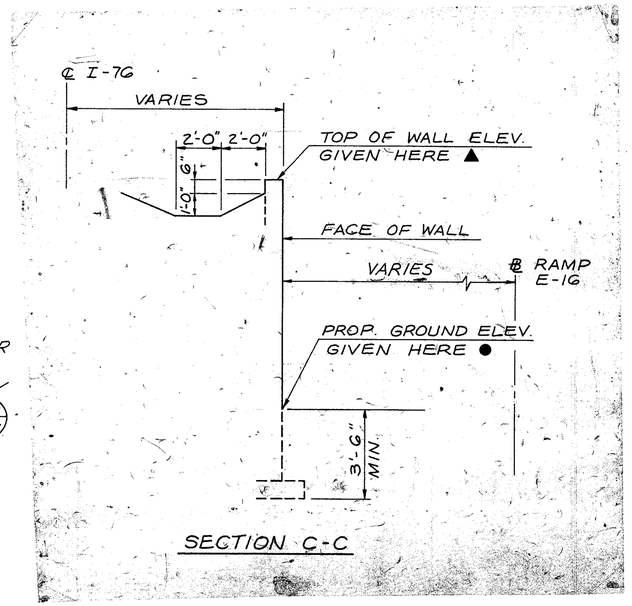

SECTION C-C

LEGEND

- ▲ FINISH ELEVATION AT TOP OF WALL.
- ● FINISH ELEVATION AT PROPOSED GROUND.
- ⌖ INDICATES SOIL BORING LOCATION

URS

7/98

GENERAL PLAN & ELEVATION

RETAINING WALL Nº 9 & 10

RAMP 'E-16' STA. 15+25.1 TO STA 17+75

RAMP 'E-10' STA. 16+05.92 TO STA. 18+70

DESIGNED	DRAWN	TRACED	CHECKED	REVIEWED	DATE	REVISED
HK	F.F		P.E.B.	JDP	8-7-97	

F.H.W.A. REG	STATE	PROJECT	
5	OHIO		

7/14
12/14

SUM - 76 - 11.57

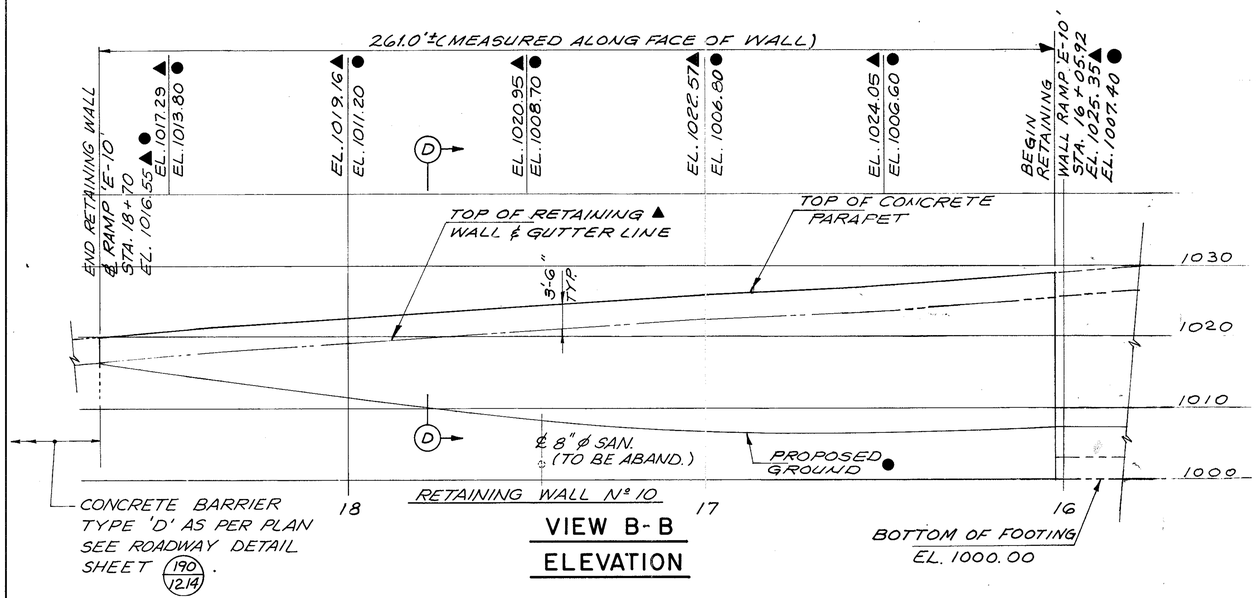

VIEW B-B
ELEVATION

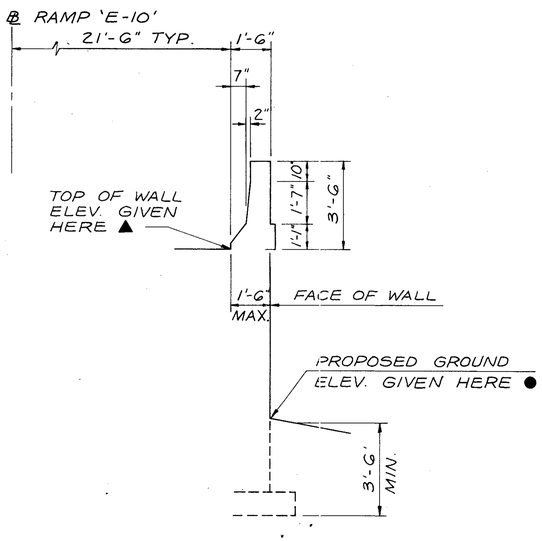

SECTION D-D

NOTES

(1) FOR LEGEND, CURVE DATA, AND ADDITIONAL NOTES SEE SHEET 7/98

LEGEND

▲ FINISH ELEVATION AT TOP OF WALL.

● FINISH ELEVATION AT PROPOSED GROUND.

URS

8/98

ELEVATION

RETAINING WALL Nº 10

RAMP 'E-10' STA. 16+05.92 TO STA. 18+70

DESIGNED	DRAWN	TRACED	CHECKED	REVIEWED	DATE	REVISED
J.T.J.	J.T.J.		P.E.B.	BKR	7/16/90	

F.H.W.A. REG.	STATE	PROJECT	
5	OHIO		

715/1214

SUM-76-11.57

NOTES

1. FOR ADDITIONAL NOTES SEE SHEET 2/98.

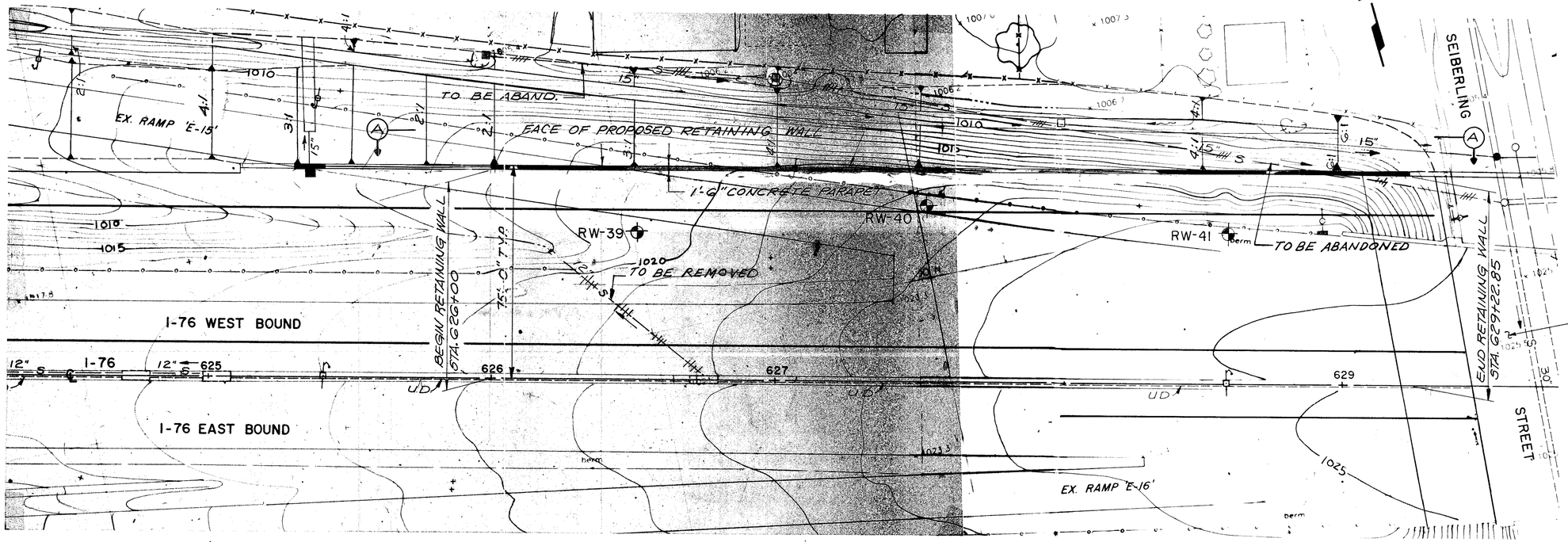

GENERAL PLAN

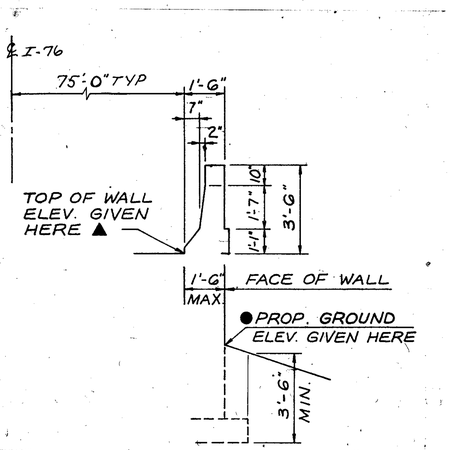

SECTION C-C

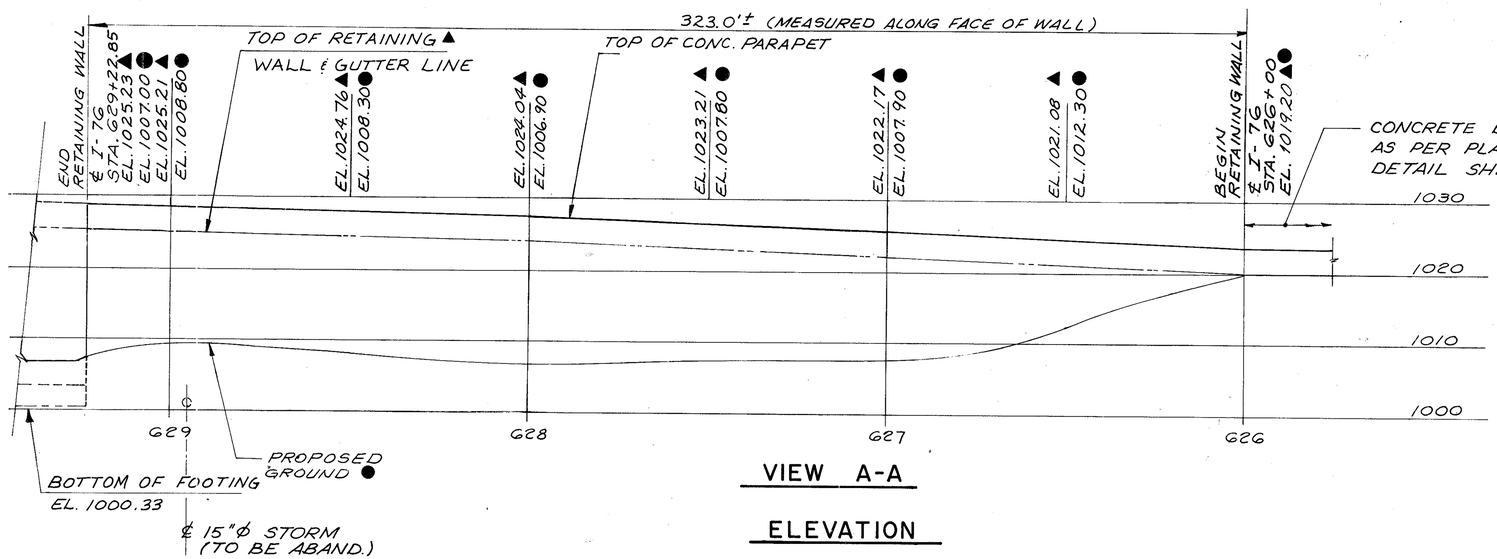

VIEW A-A

ELEVATION

LEGEND

- ▲ FINISH ELEVATION AT TOP OF WALL
- ● FINISH ELEVATION AT PROPOSED GROUND.
- ⌖ INDICATES SOIL BORING LOCATION

URS

9/98

GENERAL PLAN & ELEVATION

RETAINING WALL Nº 11

℄ I-76 STA. 626+00 TO STA. 629+22.85

DESIGNED	DRAWN	TRACED	CHECKED	REVIEWED	DATE	REVISED
HK	F.F.		P.E.B.	GDP	8-7-97	

F.H.W.A. REG.	STATE	PROJECT	
5	OHIO		

716
1214

SUM-76-11.57

PROJECT SUM-76-11.57
WALL Nº 12

PROJECT SUM-76-13.41
WALL Nº 27

MANHOLE AND CATCH BASIN TO BE REMOVED. COST TO BE INCLUDED WITH ITEM 202, PORTION OF STRUCTURES REMOVED

℄ SIGN SUPPORT STA. 630+90±

PAVED GUTTER TYPE 1-2

STEEL SHEET PILING, SEE NOTE (2) SHEET 13/98.
TOP OF PILE EL. 1016.32
BOTT. OF PILE EL. 996.50

200'±

FACE OF PROPOSED RETAINING WALL Nº 12

FACE OF PROPOSED RETAINING WALL Nº 27.

RW-42 RW-43 RW-44 RW-47

1'-6" CONC. PARAPET

TO BE ABANDONED

EXISTING WALL TO BE REMOVED

BEGIN RETAINING WALL STA. 630+05.9

END RETAINING WALL STA. 634+00

75'-0" TYP.

I-76 WEST BOUND

I-76 EAST BOUND

I-76

SEIBERLING STREET

SAN 8" VCP 12" N 36" W

UD

berm

1010 1015 1020

630 631 632 633 634 635 636

PC STA. 629+82.21

AT STA. 635+59.57

STR. Nº SUM-76-1332

PROPOSED RETAINING WALL Nº 27 CONTRACT SUM-76-13.41

TOP OF RETAINING WALL AND GUTTER LINE ▲

GENERAL PLAN

389.0'± (MEASURED ALONG FACE OF WALL)

END RETAINING WALL STA. 634+00 EL. 1106.32

BEGIN RETAINING WALL ℄ I-76 STA. 630+05.9 EL. 1024.50 EL. 1007.70

EL. 1007.70 · EL. 1017.49 · EL. 1007.30 · EL. 1018.63 · EL. 1006.80 · EL. 1019.79 · EL. 1006.30 · EL. 1020.93 · EL. 1005.70 · EL. 1022.08 · EL. 1006.50 · EL. 1023.08 · EL. 1007.00 · EL. 1024.27 · EL. 1007.50

℄ SIGN SUPPORT STA. 630+90±

TOP OF CONC. PARAPET

3'-6" TYP.

PROP. GROUND ●

1030 1020 1010 1000

G34 G33 G32 G31 G30

BOTTOM OF FOOTING EL. 1000.33

VIEW A-A

ELEVATION (DEVELOPED)

NOTES

(1) FOR ADDITIONAL NOTES SEE SHEET 2 / 98

(2) FOR WALLS 12 & 27 CONNECTION DETAILS SEE PROPRIETARY RETAINING WALL SHEETS.

LEGEND

- ⊕ INDICATES SOIL BORING LOCATION
- ▲ FINISH ELEVATION AT TOP OF WALL.
- ● FINISH ELEVATION AT PROPOSED GROUND

CURVE DATA CENTERLINE I-76

P.I. STA. 633+20.79
Δ = 6°-47'-01"
D_c = 1°-00'-00"
R = 5729.58'
T = 339.58'
L_c = 678.36'

℄ I-76 75'-0"

1'-6" 7" 2" 10" 1'-7" 1'-1" 3'-6"

TOP OF WALL ELEV. GIVEN HERE ▲

1'-6" MAX. FACE OF WALL

PROPOSED GROUND ELEV. GIVEN HERE ●

3'-6" MIN.

SECTION B-B

SECTION C-C

6" TYP.

TYPE 1-2 PAVED GUTTER

URS

10/98

GENERAL PLAN & ELEVATION

RETAINING WALL Nº 12

℄ I-76 STA. 630+05.9 TO STA. 634+00

DESIGNED	DRAWN	TRACED	CHECKED	REVIEWED	DATE	REVISED
HK	F.F.		P.B.	JAV	8-7-97	

F.H.W.A. REG.	STATE	PROJECT	
5	OHIO		

717
12.14

SUM-76-11.57

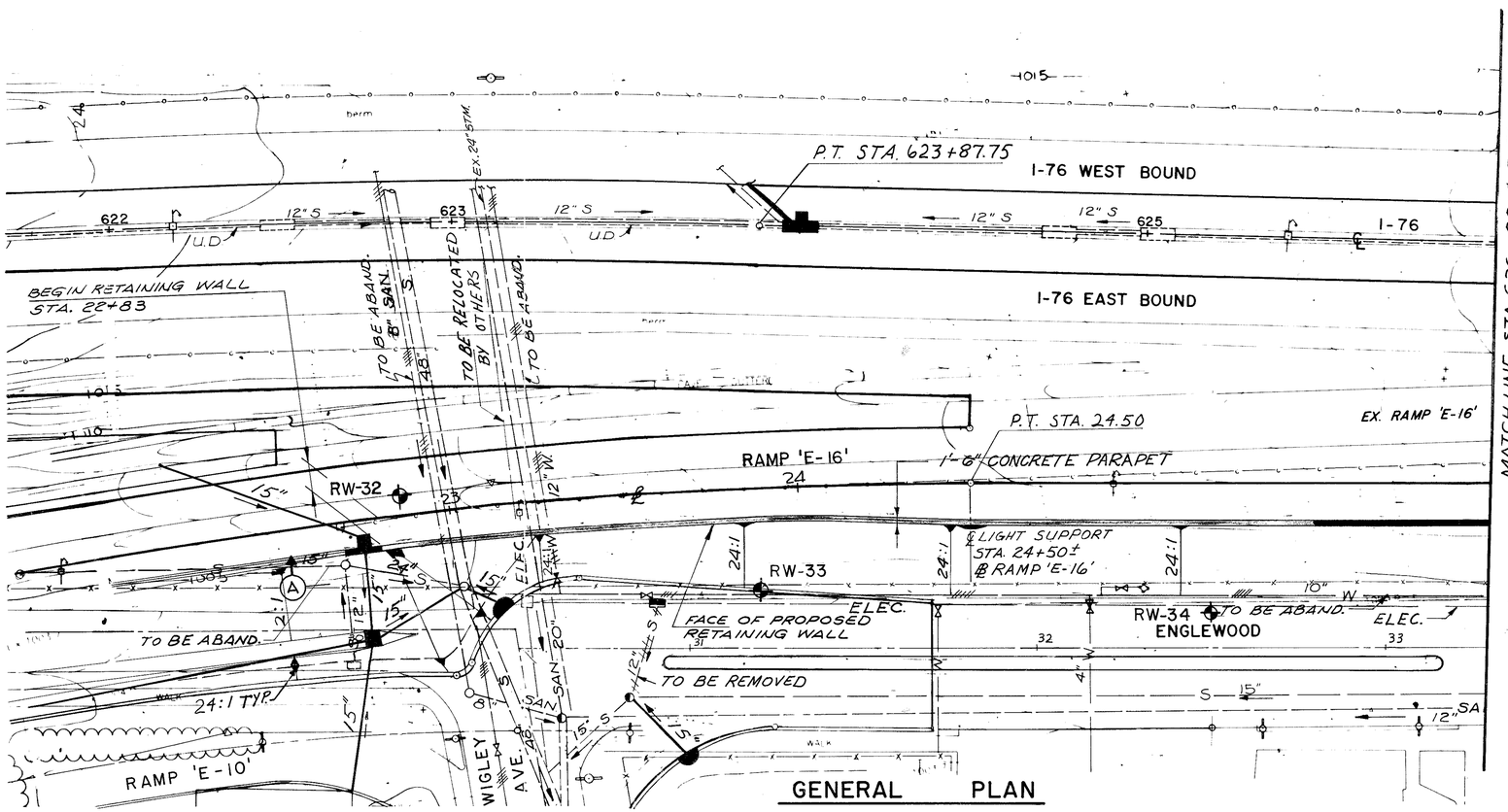

GENERAL PLAN

WALL OFFSET TABLE	
STA. ALONG ℄ RAMP E-16	OFFSET TO FACE OF WALL
22+83	9'-6"
24+00	9'-6"
24+50	11'-6"
STA. ALONG ℄ I-76	OFFSET TO FACE OF WALL
624+50	84'-0 1/8"
626+00	80'-3 1/8"
629+48.52	71'-6 9/16"

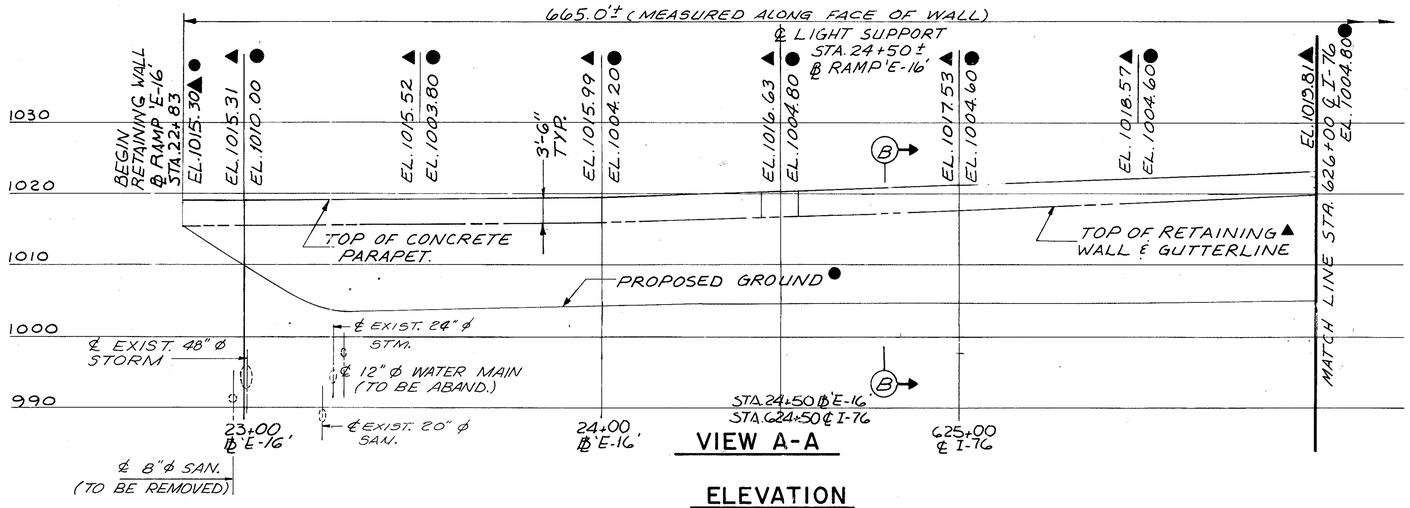

VIEW A-A

ELEVATION

NOTES

1. 2" ℄ CONDUIT SHALL EXTEND FROM STA. 22+83 TO STA. 24+50. SEE PROPIETARY WALL PLANS FOR CONDUIT LOCATION.
2. FOR ADDITIONAL NOTES SEE SHEET 2 98.

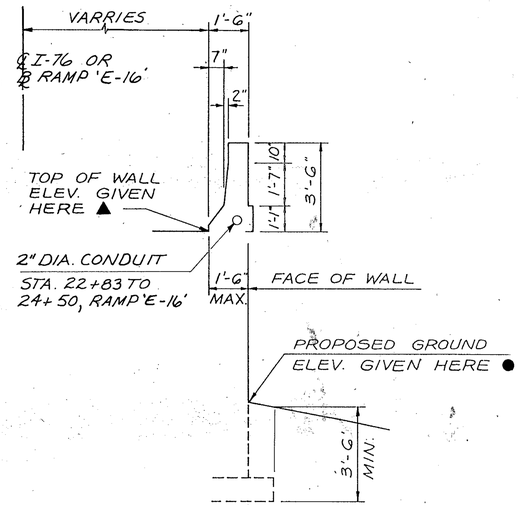

SECTION B-B

CURVE DATA

BASELINE RAMP E-16
P.I. STA. 23+12.93
Δ = 10°-59'-56"
Dc = 4°-00'-00"
R = 1432.39'
T = 137.91'
Lc = 274.97'

LEGEND

- ▲ FINISH GRADE AT TOP OF WALL.
- ● FINISH GRADE AT PROPOSED GROUND.
- ✣ INDICATES SOIL BORING LOCATION

URS

11/98

GENERAL PLAN & ELEVATION

RETAINING WALL Nº 13
℄ RAMP 'E-16'
STA. 22+83 TO ℄ I-76 STA. 629+48.52

DESIGNED	DRAWN	TRACED	CHECKED	REVIEWED	DATE	REVISED
HK	F.F.		P.E.B.	JGP	8-7-97	

F.H.W.A. REG.	STATE	PROJECT	
5	OHIO		

718
1214

SUM-76-11.57

NOTES

1. FOR LEGEND, SECTION B-B, WALL OFFSET TABLE, AND ADDITIONAL NOTES SEE SHEET 11/98.

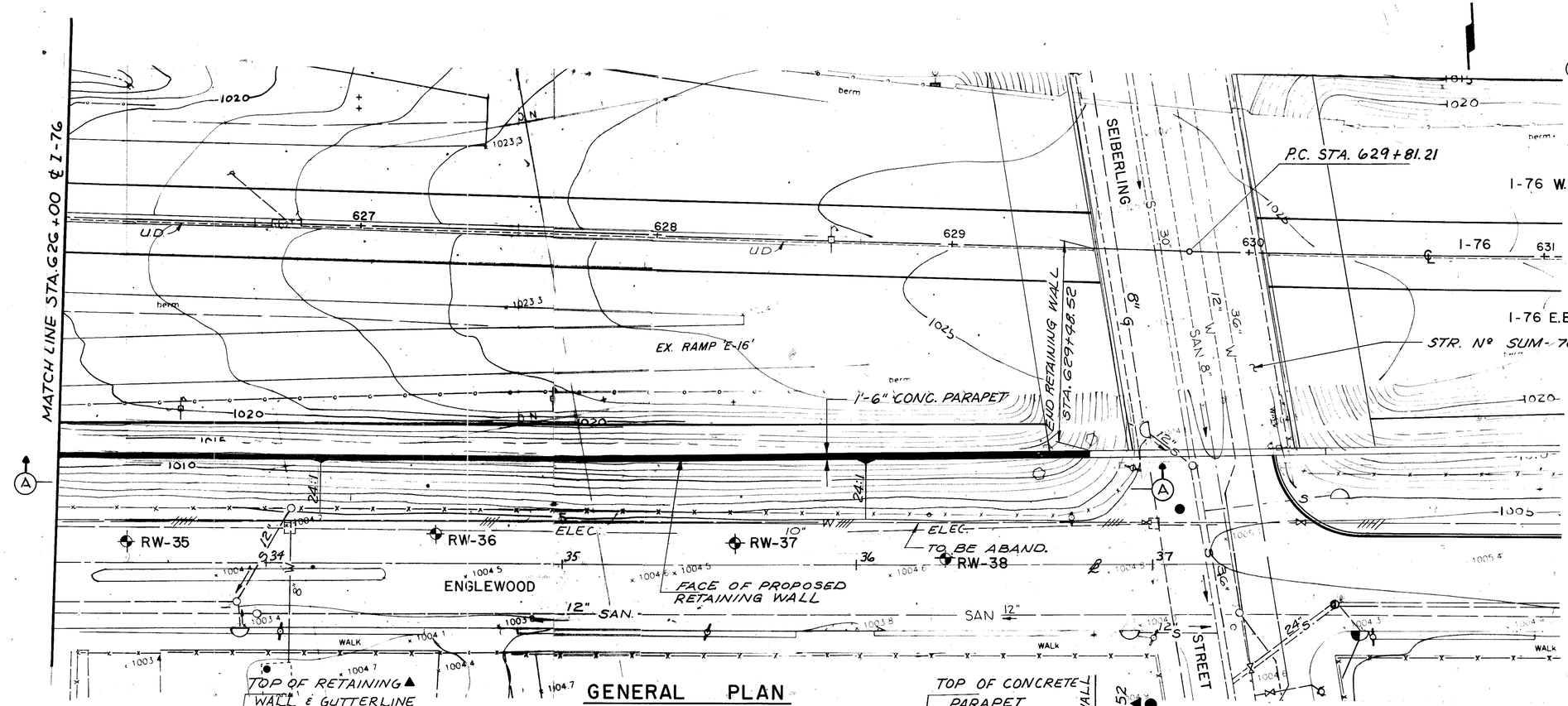

URS

12/98

GENERAL PLAN & ELEVATION

RETAINING WALL Nº 13
℄ RAMP E-16' STA. 22+83
TO ℄ I-76 STA. 629+48.52

DESIGNED	DRAWN	TRACED	CHECKED	REVIEWED	DATE	REVISED
HK	F.F.		P.E.B.	JJP	8-7-87	

F.H.W.A. REG.	STATE	PROJECT	
5	OHIO		

7/9
12/4

SUM - 76 - 11.57

NOTES

1. THE GRADING SHOWN IN THE PLAN AND ELEVATION AT STA. 634+00, IS REQUIRED ONLY UNTIL WALL Nº 16 IN CONTRACT SUM-76-13.41 IS CONSTRUCTED. A 2:1 SLOPE WILL BE TYPICAL AT THE LOW SIDE OF THE WALL AFTER WALL Nº 16 IS CONSTRUCTED.
2. SHEET PILING IS TO BE FIELD CUT AS REQUIRED TO ALLOW FOR UNDERDRAIN TO PASS THROUGH. COST OF STEEL SHEET PILING AND FIELD CUTTING TO BE INCLUDED WITH ITEM 504 "SHEET PILING LEFT IN PLACE." THE SHEET PILING SHALL HAVE A MINIMUM SECTION MODULUS OF 18.1 IN³ PER FOOT OF WALL.
3. FOR ADDITIONAL NOTES SEE SHEET 2 98.
4. FOR WALL 14 & 16 CONNECTION DETAIL SEE PROPRIETARY RETAINING WALL SHEETS.

SEIBERLING STREET
P.C. STA. 629+81.21
1-76 WEST BOUND
1-76 EAST BOUND
STR. Nº SUM-76-1332
1-76
BEGIN RETAINING WALL STA. 630+27.88
PROJECT SUM-76-11.57 WALL Nº 14
PROJECT SUM-76-13.41 WALL Nº 16
STEEL SHEET PILING, SEE NOTE 2
TOP OF PILE EL. 1016.50
BOTT. OF PILE EL. 997.50
1'-6" CONCRETE PARAPET
END RETAINING WALL STA. 634+00.00
FACE OF PROP. RETAINING WALL Nº 14
RW-102
RW-103
RW-104
4" I.P.G.
ELEC. 10" W.
TO BE ABAND.
TO BE REMOVED
SEE NOTE 1
FACE OF PROP. RETAINING WALL Nº 16
PROP. 12" W.M.
ENGLEWOOD AVENUE
SAN 10" S 24"
AN 12"
WALK
PAVED PARKING LOT

GENERAL PLAN

376.0'± (MEASURED ALONG FACE OF WALL)

BEGIN RETAINING WALL ℄ I-76 STA. 630+27.88 EL. 1026.00
TOP OF RETAINING WALL AND GUTTER LINE ▲
EL. 1006.90
EL. 1025.92 EL. 1007.30
EL. 1025.13 EL. 1007.60
EL. 1024.11 EL. 1007.80
3'-6" TYP.
EL. 1022.89 EL. 1008.00
EL. 1021.70 EL. 1008.40
EL. 1020.49 EL. 1008.50
EL. 1019.28 EL. 1008.50
TOP OF CONCRETE PARAPET
END RETAINING WALL ℄ I-76 STA. 634+00 EL. 1018.08 ▲
EL. 1008.08 ● SEE NOTE 1
PROPOSED RETAINING WALL Nº 16 CONTRACT SUM-76-13.41
1030
1020
1010
1000
SEE NOTE 1
FUTURE GROUND LINE
BOTTOM OF FOOTING EL. 999.83
PROPOSED GROUND ●
630 631 632 633 634

VIEW A-A ELEVATION

WALL OFFSET TABLE	
STATION ALONG ℄ I-76	OFFSET TO FACE OF WALL
630+27.88	67'-1⅛"
631+00	64'-6¾"
631+50	63'-1 1/16"
632+00	61'-10 1/16"
632+50	60'-9¾"
632+90	60'-1 5/16"
633+50	60'-11 7/16"
634+00	61'-10⅜"

CURVE DATA
CENTERLINE I-76
P.I. STA. 633+20.79
△ = 6°-47'-01"
D_c = 1°-00'-00"
R = 5729.58'
T = 339.58'
L = 678.36'

LEGEND
- ⊕ INDICATES SOIL BORING LOCATION
- ▲ FINISH ELEVATION AT TOP OF WALL
- ● FINISH ELEVATION AT PROPOSED GROUND

℄ I-76
75'-0"
1'-6"
7"
2"
10"
1'-7"
3'-6"
TOP OF WALL ELEV. GIVEN HERE ▲
1'-6" MAX.
FACE OF WALL
PROPOSED GROUND ELEV. GIVEN HERE ●
3'-6" MIN.

SECTION B-B

URS

13 98

GENERAL PLAN & ELEVATION

RETAINING WALL Nº 14

I-76 STA. 630+27.88 TO STA. 634+00

DESIGNED	DRAWN	TRACED	CHECKED	REVIEWED	DATE	REVISED
B.A.B.	D.T.		P.E.B.		4-19-98	

F.H.W.A. REGION	STATE	PROJECT	
5	OHIO		

720
1214

SUM–76–11.57

DESIGN SPECIFICATIONS

MECHANICALLY STABILIZED EMBANKMENT WALLS CONFORM TO AASHTO AGC–ARTBA, TASK FORCE 27 GUIDELINES FOR THE DESIGN OF MECHANICALLY STABILIZED EARTH WALLS.

INTERLOCKING REINFORCED CONCRETE RETAINING WALLS CONFORM TO DOUBLEWAL DESIGN MANUAL.

EXISTING STRUCTURE VERIFICATION

DETAILS AND DIMENSIONS SHOWN ON THESE PLANS PERTAINING TO THE EXISTING RETAINING WALL HAVE BEEN OBTAINED FROM PLANS OF THE EXISTING STRUCTURE AND/OR FROM FIELD OBSERVATIONS AND MEASUREMENTS. CONSEQUENTLY, THEY ARE INDICATIVE OF THE EXISTING STRUCTURE AND THE PROPOSED WORK BUT THEY SHALL BE CONSIDERED TENTATIVE AND APPROXIMATE. THE CONTRACTOR IS REFERRED TO CMS SECTIONS 102.05 AND 105.02.

CONTRACT BID PRICES SHALL BE BASED UPON A RECOGNITION OF THE UNCERTAINTIES DESCRIBED ABOVE AND UPON A PREBID EXAMINATION OF THE EXISTING STRUCTURE BY THE CONTRACTOR. HOWEVER, ALL PROJECT WORK SHALL BE BASED UPON ACTUAL DETAILS AND DIMENSIONS WHICH HAVE BEEN VERIFIED BY THE CONTRACTOR IN THE FIELD.

NO SEPARATE PAYMENT WILL BE MADE FOR ANY FIELD MEASUREMENTS BUT COST THEREOF SHALL BE INCLUDED IN THE COST OF OTHER ITEMS OF WORK ON THIS PROJECT.

EXISTING STRUCTURE PLANS

THE EXISTING BRIDGE AND ROADWAY PLANS MAY BE REVIEWED AT THE OFFICES OF THE OHIO DEPARTMENT OF TRANSPORTATION, DISTRICT 4, RAVENNA, OHIO.

ITEM 202 – PORTIONS OF STRUCTURES REMOVED

THE WORK SHALL CONSIST OF EXCAVATING, BACKFILLING, AND REMOVING EXISTING WINGWALLS, FOOTINGS, AND PILING AS REQUIRED TO FACILITATE THE INSTALLATION OF NEW RETAINING WALLS. THE WORK SHALL CONFORM TO ITEM 202.

THE CONTRACTOR SHALL IDENTIFY ALL LOCATIONS THAT EXISTING WINGWALLS WILL REQUIRE REMOVAL, BASED UPON THE WALL DESIGN THAT WILL BE CONSTRUCTED. THE CONTRACTOR SHALL THEN PREPARE DETAILED PROCEDURES AND PLANS FOR REMOVAL OF THE EXISTING STRUCTURE INCLUDING METHODS OF PROTECTING EXISTING OR RELOCATED UTILITIES AND PROTECTING THE PEDESTRIAN AND THE VEHICULAR TRAFFIC WITHIN THE LIMITS OF THE PROJECT. SUCH PLANS SHALL INCLUDE INFORMATION AS TO EQUIPMENT AND MATERIALS TO BE USED, PERSONNEL, SUPERVISION, THE HOURS OF OPERATION AND DURATION OF THE JOB.

THESE PLANS SHALL BE APPROVED BY THE ENGINEER BEFORE COMMENCING ANY DEMOLITION OPERATION. THE REVIEW AND APPROVAL BY THE ENGINEER SHALL NOT RELIEVE THE CONTRACTOR OF HIS FULL RESPONSIBILITY FOR SAFE DEMOLITION OPERATIONS. THE CONTRACTOR SHALL BE RESPONSIBLE FOR A SAFE DEMOLITION OPERATION.

THE DEMOLITION REQUIRED IN WINGWALL REMOVAL, FOR PROPRIETARY WALL DESIGN NO. 1, NO. 2, OR NO. 3, AS IDENTIFIED BY THE CONTRACTOR SHALL BE PAID FOR AT THE LUMP SUM BID FOR ITEM 202 – PORTIONS OF STRUCTURES REMOVED. THIS DEMOLITION IS IN ADDITION TO ITEM 202 – PORTION OF STRUCTURES REMOVED CALLED OUT IN THE BRIDGE PLANS.

ITEM 203 – EMBANKMENT AS PER PLAN

THIS WORK SHALL CONSIST OF FURNISHING AND CONSTRUCTING EMBANKMENT FOR PROPRIETARY WALL DESIGN NO. 1, NO. 2 OR NO. 3 WITHIN THE LIMITS SPECIFIED OR ESTABLISHED BY THE ENGINEER, AND SHALL BE IN CONFORMANCE WITH 203 OF THE CONSTRUCTION AND MATERIAL SPECIFICATIONS UNLESS NOTED OTHERWISE.

THE EMBANKMENT SHALL BE THE OVERALL VOLUMES OF FILL REQUIRED 4 1/2' FROM THE OUTSIDE EDGE OF BARRIER OR COPING ALONG THE LOW SIDE OF THE WALL TO 25' FROM THE OUTSIDE EDGE OF BARRIER OR COPING ALONG THE HIGH SIDE OF WALL. SEE ESTIMATED QUANTITIES FOR A DETAIL OF THESE LIMITS.

METHOD OF MEASUREMENT SHALL BE IN ACCORDANCE WITH 203.15(d). PAYMENT SHALL BE MADE IN ACCORDANCE WITH 203.16 AT THE CONTRACT PRICE PER CUBIC YARD FOR ITEM 203 – EMBANKMENT, AS PER PLAN.

CONTINGENCY QUANTITIES

THE CONTRACTOR SHALL NOT ORDER MATERIALS OR PERFORM WORK LISTED IN THE GENERAL SUMMARY FOR ITEMS DESIGNATED BY PLAN NOTE TO BE USED "AS DIRECTED BY THE ENGINEER" UNLESS AUTHORIZED BY THE ENGINEER. THE ACTUAL WORK LOCATIONS AND QUANTITIES USED AT THE ENGINEER'S DISCRETION SHALL BE MADE A MATTER OF RECORD BY INCORPORATION INTO THE FINAL CHANGE ORDER GOVERNING COMPLETION OF THIS PROJECT.

STAGED CONSTRUCTION

IN ORDER TO ACHIEVE THE REQUIRED ALLOWABLE BEARING PRESSURES FOR WALLS 3, 11, 12, AND 13, PRIMARY CONSOLIDATION IN DIFFERENT STAGES OF THE CONSTRUCTION PROCESS MUST OCCUR. THEREFORE, STAGED CONSTRUCTION FOR WALLS 3, 11, 12, AND 13 SHALL BE EMPLOYED AS FOLLOWS:

WALL 3 AND 11

THESE WALLS SHALL BE BUILT THEIR ENTIRE HEIGHT AND AT THAT POINT SHALL HAVE A 15–DAY WAITING PERIOD PRIOR TO FINAL GRADING AND PAVING.

WALL 12

THIS WALL SHALL BE BUILT ITS ENTIRE HEIGHT AND AT THAT POINT SHALL HAVE A 30–DAY WAITING PERIOD TO FINAL GRADING AND PAVING.

WALL 13

THIS WALL SHALL BE BUILT IN TWO EQUAL, OR AS EQUAL AS POSSIBLE, LIFTS WITH A 15–DAY WAITING PERIOD BETWEEN LIFTS AND BEFORE FINAL GRADING AND PAVING.

THE CONTRACTOR SHALL PREPARE PLANS AND WORK SCHEDULES INDICATING THE VARIOUS STAGES OF THE WALL CONSTRUCTION AND SUBSEQUENT GRADING AND PAVING WORK AND SUBMIT THE SAME TO THE DIRECTOR FOR APPROVAL. THESE PLANS SHALL BE APPROVED BY THE ENGINEER PRIOR TO THE WALL CONSTRUCTION. NO EXTRA PAYMENT WILL BE MADE FOR PERFORMING THIS WORK BUT THE COST THEREOF SHALL BE INCLUDED IN THE COST OF THE OTHER ITEMS FOR THE PROJECT.

URS

14 / 98

RETAINING WALL
GENERAL NOTES
SUMMIT COUNTY

PROJECT SUM–76–11.57

DESIGNED	DRAWN	TRACED	CHECKED	REVIEWED	DATE	REVISED
JTJ	M.E.		P.E.B	BAR	7-16-98	

F.H.W.A. REGION	STATE	PROJECT	
5	OHIO		

721
1214

SUM–76–11.57

REINFORCED EARTH WALL

1.0 DESCRIPTION

THIS WORK SHALL CONSIST OF REINFORCED EARTH WALLS CONSTRUCTED IN ACCORDANCE WITH THIS SPECIFICATION AND IN REASONABLY CLOSE CONFORMITY WITH THE LINES, GRADES, DESIGN, AND DIMENSIONS SHOWN ON THE PLANS OR ESTABLISHED BY THE ENGINEER.

2.0. MATERIALS

THE CONTRACTOR SHALL MAKE ARRANGEMENTS TO ACQUIRE THE REINFORCED CONCRETE FACE PANELS, GALVANIZED STEEL REINFORCING STRIPS, FASTENERS, JOINT MATERIALS, AND ALL NECESSARY INCIDENTALS FROM THE REINFORCED EARTH COMPANY, 2010 CORPORATE RIDGE, SUITE 1000, McLEAN, VIRGINIA 22102 (PHONE 703–821–1175).

THE CONTRACTOR SHALL PROVIDE CERTIFICATION OF THE ABOVE REINFORCED EARTH WALL COMPONENTS AS PER 101.061. CERTIFICATION SHALL ALSO BE PROVIDED FOR THE CONCRETE, REINFORCING STEEL, AND TIE STRIPS WHICH ARE COMPONENTS OF THE REINFORCED EARTH WALL. (REFER TO THE SECTION OF THE PROPOSAL CONCERNING STEEL PRODUCED IN THE UNITED STATES.)

2.1 REINFORCED CONCRETE FACE PANELS

CEMENT SHALL BE TYPES I, II, OR III AND SHALL CONFORM TO THE REQUIREMENTS OF ASTM C 150. CONCRETE SHALL HAVE A COMPRESSIVE STRENGTH AT 28 DAYS IN ACCORDANCE WITH SECTION 2.1.7 COMPRESSIVE STRENGTH. CONCRETE SHALL CONTAIN 6 +?_ 2% AIR. THE AIR ENTRAINING ADMIXTURE SHALL CONFORM TO AASHTO M 154. RETARDING AGENTS, ACCELERATING AGENTS OR ANY ADDITIVE CONTAINING CHLORIDE SHALL NOT BE USED WITHOUT APPROVAL FROM THE REINFORCED EARTH COMPANY.

TIE STRIPS, 3/4" DOWELS, PVC PIPE, AND SWIFT LIFT INSERT SHALL BE SET IN PLACE TO THE DIMENSIONS AND TOLERANCES SHOWN ON THE PLANS PRIOR TO CASTING.

2.1.1. TESTING AND INSPECTION

ACCEPTABILITY OF THE CONCRETE FOR THE PRECAST PANELS WILL BE DETERMINED ON THE BASIS OF COMPRESSION TESTS, CERTIFICATIONS AND VISUAL INSPECTION. THE CONCRETE STRENGTH REQUIREMENTS FOR THE PRECAST PANELS SHALL BE CONSIDERED ATTAINED REGARDLESS OF CURING AGE WHEN COMPRESSION TEST RESULTS INDICATE THAT THE CONCRETE STRENGTH WILL CONFORM TO 28–DAY SPECIFICATIONS. THE SUPPLIER SHALL FURNISH FACILITIES AND PERFORM ALL NECESSARY SAMPLING AND TESTING IN AN EXPEDITIOUS AND SATISFACTORY MANNER. PANELS UTILIZING TYPE I OR II CEMENT SHALL BE CONSIDERED ACCEPTABLE FOR PLACEMENT IN THE WALL WHEN 7–DAY INITIAL STRENGTHS EXCEED 85% OF THE 28–DAY REQUIREMENTS. PANELS UTILIZING TYPE III CEMENT SHALL BE CONSIDERED ACCEPTABLE FOR PLACEMENT IN THE WALL PRIOR TO 28 DAYS ONLY WHEN COMPRESSIVE STRENGTH TEST RESULTS INDICATE THAT THE STRENGTH EXCEEDS THE 28–DAY SPECIFICATION.

2.1.2. CASTING

THE PANELS SHALL BE CAST ON A FLAT AREA WITH THE FRONT FACE DOWN. TIE STRIP GUIDES SHALL BE SET ON THE BACKSIDE. THE CONCRETE IN EACH PANEL SHALL BE PLACED WITHOUT INTERRUPTION AND SHALL BE CONSOLIDATED BY THE USE OF A CONCRETE VIBRATOR, SUPPLEMENTED BY SUCH HAND–TAMPING AS MAY BE NECESSARY TO FORCE THE CONCRETE INTO THE CORNERS OF THE FORMS AND PREVENT THE FORMATION OF STONE POCKETS OR CLEAVAGE PLANES. CLEAR FORM OIL OF THE SAME MANUFACTURE SHALL BE USED THROUGHOUT THE CASTING OPERATION.

2.1.3 CURING

THE CURING METHOD WILL BE DEPENDENT ON THE CONCRETE PRECASTER'S CAPABILITIES AND SHALL BE AS PER INSTRUCTIONS BY THE REINFORCED EARTH COMPANY. THE REINFORCED CONCRETE PANELS SHALL BE CURED FOR A SUFFICIENT LENGTH OF TIME SO THAT THE CONCRETE WILL DEVELOP THE SPECIFIED COMPRESSIVE STRENGTH. ANY PRODUCTION LOT WHICH DOES NOT CONFORM TO THE STRENGTH REQUIREMENTS OF SECTION 2.1.7–COMPRESSIVE STRENGTH, SHALL BE REJECTED.

2.1.4 REMOVAL OF FORMS

THE FORMS SHALL REMAIN IN PLACE UNTIL THEY CAN BE REMOVED WITHOUT DAMAGE TO THE PANEL.

2.1.5 CONCRETE FINISH AND TOLERANCES

THE FRONT FACE OF THE REINFORCED CONCRETE PANELS SHALL HAVE A 3/4" FRACTURED FIN TEXTURE. THE FORM LINER USED SHALL BE ONE OF THE FOLLOWING OR AN APPROVED EQUAL:

1. SYMONS – P/C 30449 (ABS)
2. GREENSTREAK – NO. 373
3. FITZGERALD VACUFORM – NO. 16950

THE CONTRACTOR SHALL SUBMIT AN ACTUAL SAMPLE OF THE FINISHED RUSTICATION PATTERN TO THE ENGINEER WHICH WILL GET APPROVAL FROM THE CITY OF AKRON. THE CONTRACTOR SHALL USE THE SAME BRAND OF FORM LINER ON THE ENTIRE PROJECT.

THE BACKSIDE OF THE REINFORCED CONCRETE PANELS SHALL HAVE AN UNFORMED SURFACE FINISH AND SHALL BE ROUGH SCREEDED TO ELIMINATE OPEN POCKETS OF AGGREGATE AND SURFACE DISTORTIONS IN EXCESS OF 1/4".

2.1.6. TOLERANCES

ALL PANELS SHALL BE MANUFACTURED WITHIN THE FOLLOWING TOLERANCES:

A. PANEL DIMENSIONS

LATERAL POSITION OF TIE STRIPS – WITHIN 1". ALL OTHER DIMENSIONS – WITHIN 3/16".

B. PANEL SQUARENESS

SQUARENESS AS DETERMINED BY THE DIFFERENCE BETWEEN THE TWO DIAGONALS SHALL NOT EXCEED 1/2".

C. PANEL SURFACE FINISH

SURFACE DEFECTS ON SMOOTH FORMED SURFACES MEASURED ON A LENGTH OF 5' SHALL NOT EXCEED 0.125". SURFACE DEFECTS ON TEXTURED–FINISHED SURFACES MEASURED ON A LENGTH OF 5' SHALL NOT EXCEED 0.312".

2.1.7. COMPRESSIVE STRENGTH

ACCEPTANCE OF THE CONCRETE PANELS WITH RESPECT TO COMPRESSIVE STRENGTH WILL BE DETERMINED ON THE BASIS OF PRODUCTION LOTS. A PRODUCTION LOT IS DEFINED AS A GROUP OF PANELS THAT WILL BE REPRESENTED BY A SINGLE COMPRESSIVE STRENGTH SAMPLE AND WILL CONSIST OF EITHER 40 PANELS OR A SINGLE DAY'S PRODUCTION, WHICHEVER IS LESS.

DURING THE PRODUCTION OF THE CONCRETE PANELS, THE MANUFACTURER WILL RANDOMLY SAMPLE THE CONCRETE IN ACCORDANCE WITH ASTM C 172. A SINGLE COMPRESSIVE STRENGTH SAMPLE, CONSISTING OF A MINIMUM OF FOUR CYLINDERS, WILL BE RANDOMLY SELECTED FOR EVERY PRODUCTION LOT.

CYLINDERS FOR COMPRESSIVE STRENGTH TESTS SHALL BE 6" BY 12" SPECIMENS PREPARED IN ACCORDANCE WITH ASTM C 31. FOR EVERY COMPRESSIVE STRENGTH SAMPLE, A MINIMUM OF TWO CYLINDERS WILL BE CURED IN THE SAME MANNER AS THE PANELS AND TESTED AT APPROXIMATELY 7 DAYS. THE AVERAGE COMPRESSIVE STRENGTH OF THESE CYLINDERS, WHEN TESTED IN ACCORDANCE WITH ASTM C 39, WILL PROVIDE A TEST RESULT WHICH WILL DETERMINE THE INITIAL STRENGTH OF THE CONCRETE. IN ADDITION, TWO CYLINDERS SHALL BE CURED IN ACCORDANCE WITH ASTM C 31 AND TESTED AT 28 DAYS. THE AVERAGE COMPRESSIVE STRENGTH OF THESE TWO CYLINDERS, WHEN TESTED IN ACCORDANCE WITH AASHTO T 22, WILL PROVIDE A COMPRESSIVE STRENGTH TEST RESULT WHICH WILL DETERMINE THE COMPRESSIVE STRENGTH OF THE PRODUCTION LOT.

IF THE INITIAL STRENGTH TEST RESULTS INDICATE A COMPRESSIVE STRENGTH IN EXCESS OF 4,000 POUNDS PER SQUARE INCH, THEN THESE TEST RESULTS WILL BE UTILIZED AS THE COMPRESSIVE STRENGTH TEST RESULT FOR THAT PRODUCTION LOT AND THE REQUIREMENT FOR TESTING AT 28 DAYS WILL BE WAIVED FOR THAT PARTICULAR PRODUCTION LOT.

ACCEPTANCE OF A PRODUCTION LOT WILL BE MADE IF THE COMPRESSIVE STRENGTH TEST RESULT IS GREATER THAN OR EQUAL TO 4,000 POUNDS PER SQUARE INCH. IF THE COMPRESSIVE STRENGTH TEST RESULT IS LESS THAN 4,000 POUNDS PER SQUARE INCH, THE ACCEPTANCE OF THE PRODUCTION LOT WILL BE BASED ON ITS MEETING THE FOLLOWING ACCEPTANCE CRITERIA IN ITS ENTIRETY:

A. 90% OF THE COMPRESSIVE STRENGTH TEST RESULTS FOR THE OVERALL PRODUCTION SHALL EXCEED 4,000 POUNDS PER SQUARE INCH.

B. THE AVERAGE OF ANY SIX CONSECUTIVE COMPRESSIVE STRENGTH TEST RESULTS SHALL EXCEED 4,000 POUNDS PER SQUARE INCH.

C. NO INDIVIDUAL COMPRESSIVE STRENGTH TEST RESULT SHALL FALL BELOW 3,600 POUNDS PER SQUARE INCH.

IN THE EVENT THAT A PRODUCTION LOT FAILS TO MEET THE SPECIFIED COMPRESSIVE STRENGTH REQUIREMENTS, THE PRODUCTION LOT SHALL BE REJECTED. SUCH REJECTION SHALL PREVAIL UNLESS THE MANUFACTURER, AT HIS OWN EXPENSE, OBTAINS AND SUBMITS EVIDENCE ACCEPTABLE TO THE ENGINEER THAT THE STRENGTH AND QUALITY OF THE CONCRETE PLACED WITHIN THE PANELS OF THE PRODUCTION LOT IS ACCEPTABLE. IF SUCH EVIDENCE CONSISTS OF TESTS MADE ON CORES TAKEN FROM THE PANELS WITHIN THE PRODUCTION LOT, THE CORES SHALL BE OBTAINED AND TESTED IN ACCORDANCE WITH THE SPECIFICATIONS OF ASTM C 42.

2.1.8. REJECTION

PANELS SHALL BE SUBJECT TO REJECTION BECAUSE OF FAILURE TO MEET ANY OF THE REQUIREMENTS SPECIFIED ABOVE. IN ADDITION, ANY OR ALL OF THE FOLLOWING DEFECTS MAY BE SUFFICIENT CAUSE FOR REJECTION:

A. DEFECTS THAT INDICATE IMPERFECT MOLDING

B. DEFECTS INDICATING HONEYCOMBED OR OPEN TEXTURED CONCRETE

C. DEFECTS IN THE PHYSICAL CHARACTERISTICS OF THE CONCRETE, SUCH AS BROKEN OR CHIPPED CONCRETE

D. STAINED FORM FACE, DUE TO EXCESS FORM OIL OR OTHER CONTAMINATIONS

E. SIGNS OF AGGREGATE SEGREGATION

F. BROKEN OR CRACKED CORNERS

G. TIE STRIPS BENT OR DAMAGED

H. LIFTING INSERTS NOT USABLE

I. EXPOSED REINFORCING STEEL

J. CRACKS AT THE PVC PIPE OR PIN

K. INSUFFICIENT CONCRETE COMPRESSIVE STRENGTH

L. PANEL THICKNESS IN EXCESS OF 3/16" PLUS OR MINUS FROM THAT SHOWN ON THE PLANS

THE ENGINEER WILL DECIDE IF AN ATTEMPT MAY BE MADE TO REPAIR A DEFECTIVE PANEL. THE CONTRACTOR OR SUPPLIER SHALL MAKE THE REPAIRS. IF THE REPAIRS ARE MADE TO THE ENGINEER'S SATISFACTION, THE PANEL WILL BE ACCEPTABLE.

2.1.9. MARKING

THE DATE OF MANUFACTURE, THE PRODUCTION LOT NUMBER, AND THE PIECE MARK SHALL BE CLEARLY SCRIBED ON THE BACK SURFACE OF EACH PANEL.

DESIGN 1

URS

15 / 98

REINFORCED EARTH WALL
PLAN NOTES

SUMMIT COUNTY

PROJECT SUM–76–11.57

DESIGNED	DRAWN	TRACED	CHECKED	REVIEWED	DATE	REVISED
JTJ	M.E.		P.E.B.	BKR	7-16-98	

F.H.W.A. REGION	STATE	PROJECT	
5	OHIO		

722
1214

SUM–76–11.57

2.1.10. HANDLING, STORAGE, AND SHIPPING

ALL PANELS SHALL BE HANDLED, STORED, AND SHIPPED IN SUCH A MANNER AS TO AVOID CHIPPING, CRACKING, FRACTURING, AND EXCESSIVE BENDING STRESSES. PANELS IN STORAGE SHALL BE SUPPORTED ON FIRM BLOCKING LOCATED IMMEDIATELY ADJACENT TO TIE STRIPS TO AVOID BENDING THE TIE STRIPS.

2.1.11. REINFORCING STEEL

THE REINFORCING STEEL IN ALL THE WALL PANELS, ALL THE TRAFFIC BARRIERS, AND ALL THE COPING SHALL SATISFY ALL APPLICABLE REQUIREMENTS OF 509, EPOXY COATED REINFORCING STEEL, GRADE 60.

2.2 REINFORCING STRIPS AND TIE STRIPS

TIE STRIPS SHALL BE SHOP–FABRICATED OF HOT ROLLED STEEL CONFORMING TO THE REQUIREMENTS OF ASTM A570, GRADE 50, OR EQUIVALENT.

REINFORCING STRIPS SHALL BE HOT ROLLED FROM BARS TO THE REQUIRED SHAPE AND DIMENSIONS. THE PHYSICAL AND MECHANICAL PROPERTIES OF THE REINFORCING STRIPS SHALL CONFORM TO ASTM A572, GRADE 65, OR EQUIVALENT.

GALVANIZATION FOR REINFORCING STRIPS AND TIE STRIPS SHALL CONFORM TO ASTM A 123.

ALL REINFORCING STRIPS AND TIE STRIPS SHALL BE CAREFULLY INSPECTED TO INSURE THEY ARE TRUE TO SIZE AND FREE FROM DEFECTS THAT MAY IMPAIR THEIR STRENGTH AND DURABILITY.

2.3 FASTENERS

FASTENERS SHALL BE 1/2" DIAMETER, HEXAGONAL CAP SCREW BOLTS AND NUTS, WHICH ARE GALVANIZED AND CONFORM TO ASTM A 325.

2.4 JOINT MATERIALS

2.4.1. BEARING PADS

RUBBER BEARING PADS SHALL BE A TYPE AND GRADE RECOMMENDED BY THE REINFORCED EARTH COMPANY, SUCH AS "BEARING BLOK" OR EQUIVALENT.

2.4.2. JOINT COVER

WHEN REQUIRED AS SHOWN ON THE PLANS, COVER FOR HORIZONTAL AND VERTICAL JOINTS BETWEEN PANELS, AND AT OTHER SPECIFIED LOCATIONS, SHALL BE A POLYPROPYLENE FILTER FABRIC, SUCH AS Q–TRANS 80, OR EQUAL AS APPROVED BY THE ENGINEER. ADHESIVE USED TO ATTACH THE FABRIC MATERIAL TO THE REAR OF THE FACING PANEL SHALL BE PLIOBOND 5001, AS MANUFACTURED BY GOODYEAR RUBBER COMPANY, OR EQUAL, AS APPROVED BY THE ENGINEER.

2.5 DOWELS

THE 3/4" DOWEL BARS SHALL BE MADE OF A MATERIAL THAT IS SPECIFIED BY THE REINFORCED EARTH COMPANY.

2.6 SELECTED GRANULAR EMBANKMENT MATERIAL

THE SELECT GRANULAR EMBANKMENT MATERIAL USED IN THE STRUCTURE VOLUME SHALL BE MODIFIED 304 AGGREGATE BASE MATERIAL OR 310A SUBBASE MATERIAL, EXCLUDING SLAG OR CRUSHED CONCRETE PAVEMENT. 304 MATERIAL SHALL BE MODIFIED SUCH THAT THE TOTAL PERCENT PASSING THE NO. 200 SIEVE SIZE SHALL NOT BE MORE THAN 10 PERCENT. THE COMPACTED MATERIAL SHALL SATISFY THE GRADING REQUIREMENTS AFTER ALL OPERATIONS OF PLACING AND COMPACTING HAVE BEEN COMPLETED.

THE SELECT GRANULAR EMBANKMENT MATERIAL SHALL ALSO CONFORM TO THE REQUIREMENTS LISTED BELOW:

1. THE pH RANGE OF THE MATERIAL SHALL BE BETWEEN 5.5 AND 9.0.
2. THE RESISTIVITY OF THE MATERIAL SHALL BE GREATER THAN 10,000 OHM–CM.
3. THE CHLORIDE LEVELS OF THE MATERIAL SHALL BE LESS THAN 200 PPM.
4. THE SULFATE LEVELS OF THE MATERIAL SHALL BE LESS THAN 1,000 PPM.

THE CONTRACTOR OR SUPPLIER, AS HIS AGENT, SHALL FURNISH THE ENGINEER A CERTIFICATE OF COMPLIANCE FROM AN INDEPENDENT TESTING LABORATORY, CERTIFYING THAT THE ABOVE MATERIALS COMPLY WITH THE APPLICABLE CONTRACT SPECIFICATIONS. A COPY OF ALL TEST RESULTS PERFORMED BY THE CONTRACTOR OR SUPPLIER NECESSARY TO ASSURE CONTRACT COMPLIANCE SHALL ALSO BE FURNISHED TO THE ENGINEER.

ACCEPTANCE WILL BE BASED ON A LETTER OF CERTIFICATION FROM AN ENGINEER STATING THAT THE MATERIAL TO BE UTILIZED IS WITHIN THE PARAMETERS OF THE APPLICABLE CONTRACT NOTES AND SPECIFICATIONS. THIS LETTER SHALL BE SUBMITTED ALONG WITH THE ACCOMPANYING TEST REPORTS TO THE ENGINEER. THE ENGINEER WILL SUPPLY WRITTEN ACCEPTANCE OF THE MATERIAL TO THE CONTRACTOR AFTER REVIEWING ACCEPTABLE TEST REPORTS, AND AFTER OBSERVING ACCEPTABLE MATERIALS BY VISUAL INSPECTION.

2.7 LEVELING FOOTING CONCRETE

THE LEVELING FOOTING CONCRETE SHALL BE OF SUFFICIENT STRENGTH TO ADEQUATELY SUPPORT THE PANELS AT THE BOTTOM OF THE WALL IN A LEVEL POSITION DURING INSTALLATION. THE LEVELING FOOTING MAY BE CONSTRUCTED OF PRECAST CONCRETE. PRECAST CONCRETE LEVELING FOOTINGS ARE ADVANTAGEOUS TO USE WHEN MANY SHORT SEGMENT LEVELING FOOTING STEPS ARE REQUIRED.

2.8 FILTER FABRIC

FILTER FABRIC SHALL BE INSTALLED AT THE REQUIRED PLAN LOCATIONS AND SHALL SATISFY THE REQUIREMENTS OF CMS 712.09, Type B.

3.0 CONSTRUCTION REQUIREMENTS

3.1 WALL EXCAVATION

UNCLASSIFIED EXCAVATION SHALL BE IN ACCORDANCE WITH 503 EXCEPT THAT THE LIMITS OF EXCAVATION SHALL BE AS SHOWN IN THE PLAN AND THE BACKFILL WITHIN THE LIMITS OF THE SELECT GRANULAR EMBANKMENT IS INCLUDED FOR PAYMENT WITH 203 SELECT GRANULAR EMBANKMENT.

3.2 FOUNDATION PREPARATION

THE FOUNDATION FOR THE REINFORCED EARTH VOLUME SHALL BE GRADED LEVEL FOR A WIDTH EQUAL TO OR EXCEEDING THE LENGTH OF REINFORCING STRIPS OR AS SHOWN ON THE PLANS. PRIOR TO WALL CONSTRUCTION, THE FOUNDATION, IF NOT IN ROCK, SHALL BE LEVELED AND ROLLED WITH A SMOOTH WHEEL VIBRATORY ROLLER. ANY FOUNDATION SOILS FOUND TO BE UNSUITABLE SHALL BE REMOVED AND REPLACED, AS DIRECTED BY THE ENGINEER.

AN UNREINFORCED CONCRETE LEVELING FOOTING SHALL BE PROVIDED AS SHOWN ON THE PLAN. THE FOOTING SHALL BE CURED A MINIMUM OF 12 HOURS BEFORE PLACING WALL PANELS ON THE LEVELING FOOTING.

3.3 WALL ERECTION

PANELS ARE HANDLED BY MEANS OF A LIFTING DEVICE CONNECTED TO THE SWIFT LIFT INSERT WHICH IS CAST INTO THE UPPER EDGE OF THE PANELS. PANELS SHALL BE INSTALLED VERTICALLY IN SUCCESSIVE HORIZONTAL LIFTS AS SHOWN IN THE APPROVED WALL ERECTION DRAWINGS SUBMITTED BY THE CONTRACTOR AS EMBANKMENT PLACEMENT PROCEEDS. AS EMBANKMENT MATERIAL IS PLACED BEHIND A PANEL, THE PANELS SHALL BE MAINTAINED IN VERTICAL POSITION BY MEANS OF TEMPORARY WOODEN WEDGES PLACED IN THE PANEL JOINTS ON THE EXTERNAL SIDE OF THE WALL. EXTERNAL BRACING MAY BE REQUIRED FOR THE INITIAL LIFT. VERTICAL TOLERANCE (PLUMBNESS) AND HORIZONTAL ALIGNMENT TOLERANCE SHALL NOT EXCEED 3/4" WHEN MEASURED ALONG A 10' STRAIGHT EDGE. THE MAXIMUM ALLOWABLE OFFSET IN ANY PANEL JOINT SHALL BE 3/4". THE OVERALL VERTICAL TOLERANCE OF THE WALL (PLUMBNESS FROM TOP TO BOTTOM) SHALL NOT EXCEED 1/2" PER 10' OF WALL HEIGHT.

REINFORCING STRIPS SHALL BE PLACED NORMAL TO THE FACE OF THE WALL, UNLESS OTHERWISE SHOWN ON THE PLANS OR DIRECTED BY THE ENGINEER. PRIOR TO PLACEMENT OF THE REINFORCING STRIPS, EMBANKMENT SHALL BE COMPACTED IN ACCORDANCE WITH SECTION 3.4.

3.4 SELECT GRANULAR EMBANKMENT MATERIAL PLACEMENT

SELECT GRANULAR EMBANKMENT MATERIAL PLACEMENT SHALL CLOSELY FOLLOW THE ERECTION OF EACH LIFT OF PANELS. AT EACH REINFORCING STRIP LEVEL, THE SELECT GRANULAR EMBANKMENT MATERIAL SHOULD BE ROUGHLY LEVELED BEFORE PLACING AND BOLTING THE REINFORCING STRIPS. REINFORCING STRIPS SHALL BE PLACED NORMAL TO THE FACE OF THE WALL UNLESS THE PLANS SHOW THAT THE REINFORCING STRIPS MUST AVOID AN OBSTRUCTION. THE MAXIMUM SELECT GRANULAR EMBANKMENT LIFT THICKNESS SHALL NOT EXCEED 8" (LOOSE) AND SHALL CLOSELY FOLLOW PANEL ERECTION. THE CONTRACTOR SHALL DECREASE THE SELECT GRANULAR EMBANKMENT LIFT THICKNESS, IF NECESSARY, TO OBTAIN THE SPECIFIED DENSITY.

AT THE END OF EACH DAY'S OPERATIONS, THE CONTRACTOR SHALL SHAPE THE LAST LEVEL OF EMBANKMENT AS TO RAPIDLY DIRECT RUNOFF OF RAIN WATER AWAY FROM THE WALL FACE. THE CONTRACTOR SHALL NOT ALLOW SURFACE RUNOFF FROM ADJACENT AREAS TO ENTER THE WALL CONSTRUCTION SITE.

COMPACTION OF THE SELECT GRANULAR EMBANKMENT MATERIAL SHALL BE IN ACCORDANCE WITH ALL PERTINENT REQUIREMENTS OF 304.04 WHEN USING MODIFIED 304 MATERIAL OR 310.03 WHEN USING 310A MATERIAL. THE MOISTURE CONTENT OF THE SELECT GRANULAR EMBANKMENT MATERIAL PRIOR TO AND DURING COMPACTION SHALL BE UNIFORMLY DISTRIBUTED THROUGHOUT EACH LAYER AND SHALL BE NOT LESS THAN 3.5% DRY OF THE OPTIMUM MOISTURE CONTENT OR NOT GREATER THAN 1.0% ABOVE THE OPTIMUM MOISTURE CONTENT. EMBANKMENT COMPACTION SHALL BE ACCOMPLISHED WITHOUT DISTURBANCE OR DISTORTION OF REINFORCING STRIPS AND PANELS. COMPACTION WITHIN 3' OF THE BACKSIDE OF THE WALL PANELS SHALL BE ACHIEVED BY REQUIRING AT LEAST 3 PASSES OF A LIGHT MECHANICAL TAMPER. THE EMBANKMENT PLACED WITHIN 3' OF THE BACKSIDE OF THE WALL PANELS DOES NOT HAVE TO SATISFY DENSITY TEST REQUIREMENTS.

4.0 INSPECTION

THE REINFORCED EARTH COMPANY SHALL PROVIDE A COMPANY REPRESENTATIVE WHO SHALL MONITOR THE PRECAST OPERATION SUFFICIENTLY TO ASSURE THAT THE OPERATION COMPLIES WITH ALL THE ABOVE REQUIREMENTS AND SHALL SUBMIT DOCUMENTATION TO THIS EFFECT TO THE ENGINEER.

DOCUMENTATION SHALL BE FURNISHED BY THE COMPANY REPRESENTATIVE FOR ANY PANEL WHICH HE DEEMS ACCEPTABLE BUT WHICH IS SUBJECT TO REJECTION UNDER 2.1.8.

THE REINFORCED EARTH COMPANY SHALL PROVIDE SUFFICIENT ON–SITE TECHNICAL ASSISTANCE BY A COMPANY REPRESENTATIVE TO ASSURE THAT THE CONTRACTOR AND THE ENGINEER FULLY UNDERSTAND THE PROPER CONSTRUCTION PROCEDURES.

THE CONTRACTOR SHALL PROVIDE A SOILS CONSULTANT WHO SHALL, THROUGH THE ENGINEER, BE RESPONSIBLE FOR ENSURING THAT THE SELECT GRANULAR EMBANKMENT MATERIAL REQUIREMENTS AND THE PLACEMENT AND COMPACTION REQUIREMENTS ARE IN COMPLIANCE WITH THIS PLAN NOTE.

THE SOILS CONSULTANT SHALL PROVIDE THE ENGINEER WITH TWO COPIES OF AN INSPECTION REPORT WHICH CONTAINS THE TESTING RESULTS, ALL PERTINENT MEASUREMENTS, AND THE SOILS CONSULTANT'S CONCLUSIONS.

THE SOILS CONSULTANT'S FIELD REPRESENTATIVE SHALL BE A REGISTERED PROFESSIONAL ENGINEER OR WORK UNDER THE DIRECTION OF A REGISTERED PROFESSIONAL ENGINEER. THE FINAL INSPECTION REPORT SHALL BE SIGNED BY A REGISTERED PROFESSIONAL ENGINEER.

THE ENGINEER WILL MONITOR ERECTION OF THE STRUCTURE AND PLACEMENT OF SELECT GRANULAR EMBANKMENT MATERIAL WITH TECHNICAL ASSISTANCE FROM THE SOILS CONSULTANT AND THE REINFORCED EARTH COMPANY. ANY WORK NOT SATISFYING THE REQUIREMENTS OF THIS PROPOSAL IS SUBJECT TO REJECTION BY THE ENGINEER.

DESIGN 1

URS

16 / 98

REINFORCED EARTH WALL
PLAN NOTES

SUMMIT COUNTY

PROJECT SUM–76–11.57

DESIGNED	DRAWN	TRACED	CHECKED	REVIEWED	DATE	REVISED
JTJ	M.E		P.E.B.	ISK	7-16-98	

F.H.W.A. REGION	STATE	PROJECT	
5	OHIO		

723
1214

SUM–76–11.57

5.0 METHOD OF MEASUREMENT

THE REINFORCED EARTH WALL QUANTITY TO BE PAID FOR SHALL BE THE ACTUAL NUMBER OF SQUARE FEET OF FACIAL AREA OF APPROVED REINFORCED EARTH WALL PANELS COMPLETE IN PLACE. THE TOTAL QUANTITY IS THE COMPLETED AND ACCEPTED FRONT FACE WALL AREA WITHIN THE LIMITS OF THE BEGINNING AND ENDING WALL STATIONS AND FROM THE TOP OF THE WALL LEVELING FOOTING TO THE TOP OF THE TOP PRECAST WALL PANEL.

503 UNCLASSIFIED EXCAVATION IS DEFINED IN SECTION 3.1.

5.1 BASIS OF PAYMENT

ITEM SPECIAL – REINFORCED EARTH WALLS, WILL BE PAID FOR AT THE CONTRACT UNIT PRICE PER SQUARE FOOT. THIS WORK SHALL INCLUDE THE FABRICATION, FURNISHING, AND ERECTION OF THE REINFORCED EARTH WALLS, INCLUDING THE REINFORCED CONCRETE FACE PANELS WITH FRACTURED FIN SURFACE, REINFORCING STRIPS, FASTENERS, JOINT MATERIALS, FILTER FABRIC, SLIP JOINT, AND ALL INCIDENTALS, LABOR, AND EQUIPMENT NECESSARY TO SUCCESSFULLY COMPLETE THIS ITEM.

ITEM 202 – PORTIONS OF STRUCTURE REMOVED, WILL BE PAID FOR AT THE LUMP SUM CONTRACT PRICE IN ACCORDANCE WITH THE RETAINING WALL GENERAL NOTES

ITEM 203 – EXCAVATION NOT INCLUDING EMBANKMENT CONSTRUCTION, WILL BE PAID FOR AT THE CONTRACT PRICE PER CUBIC YARD.

ITEM 203 – EMBANKMENT, WILL BE PAID FOR AT THE CONTRACT PRICE PER CUBIC YARD.

ITEM 203 – SELECT GRANULAR EMBANKMENT, AS PER PLAN, WILL BE PAID FOR AT THE CONTRACT PRICE PER CUBIC YARD. PAYMENT FOR THE SOILS CONSULTANT'S WORK SHALL BE INCLUDED WITH THIS ITEM.

ITEM 503 – COFFERDAMS, CRIBS, AND SHEETING, WILL BE PAID FOR AT THE LUMP SUM CONTRACT PRICE.

ITEM 503 – UNCLASSIFIED EXCAVATION, AS PER PLAN, WILL BE PAID FOR AT THE CONTRACT PRICE PER CUBIC YARD.

ITEM 504 – STEEL SHEET PILING LEFT IN PLACE, AS PER PLAN (MINIMUM SECTION MODULAR OF 18.1 IN3 PER FOOT OF WALL), WILL BE PAID FOR AT THE CONTRACT PRICE PER SQUARE FOOT.

ITEM 509 – EPOXY COATED REINFORCING STEEL, GRADE 60, WILL BE PAID FOR AT THE CONTRACT PRICE PER POUND.

ITEM 511 – CLASS S CONCRETE, MISCELLANEOUS, SHALL BE PAID FOR AT THE CONTRACT PRICE PER CUBIC YARD FOR PROVIDING TRAFFIC BARRIER.

ITEM 511 – CLASS C CONCRETE WALL COPING (CAP), WILL BE PAID FOR AT THE CONTRACT UNIT PRICE PER CUBIC YARD.

ITEM 511 – CLASS C CONCRETE, FOOTING, WILL BE PAID FOR AT THE CONTRACT PRICE PER CUBIC YARD.

ITEM SPECIAL – SEALING OF CONCRETE SURFACES, SHALL BE PAID FOR AT THE CONTRACT PRICE PER SQUARE YARD IN ACCORDANCE WITH THE PROPOSAL NOTE.

ITEM SPECIAL – SEALING OF CONCRETE SURFACES, (EPOXY), SHALL BE PAID FOR AT THE CONTRACT PRICE PER SQUARE YARD IN ACCORDANCE WITH THE PROPOSAL NOTE.

ITEM 516 – 1/2" PREFORMED EXPANSION JOINT FILLER, WILL BE PAID FOR AT THE CONTRACT PRICE PER SQUARE FOOT.

ITEM 516 – 3/4" PREFORMED EXPANSION JOINT FILLER, WILL BE PAID FOR AT THE CONTRACT PRICE PER SQUARE FOOT.

ITEM 604 – INLET NO. 3, AS PER PLAN NO. 1, SHALL BE PAID FOR EACH AT THE CONTRACT PRICE.

DESIGN 1

URS

17 / 98

REINFORCED EARTH WALL
PLAN NOTES

SUMMIT COUNTY

PROJECT SUM–76–11.57

DESIGNED	DRAWN	TRACED	CHECKED	REVIEWED	DATE	REVISED
JTJ	M.E.		P&B.	BJR	7-16-98	

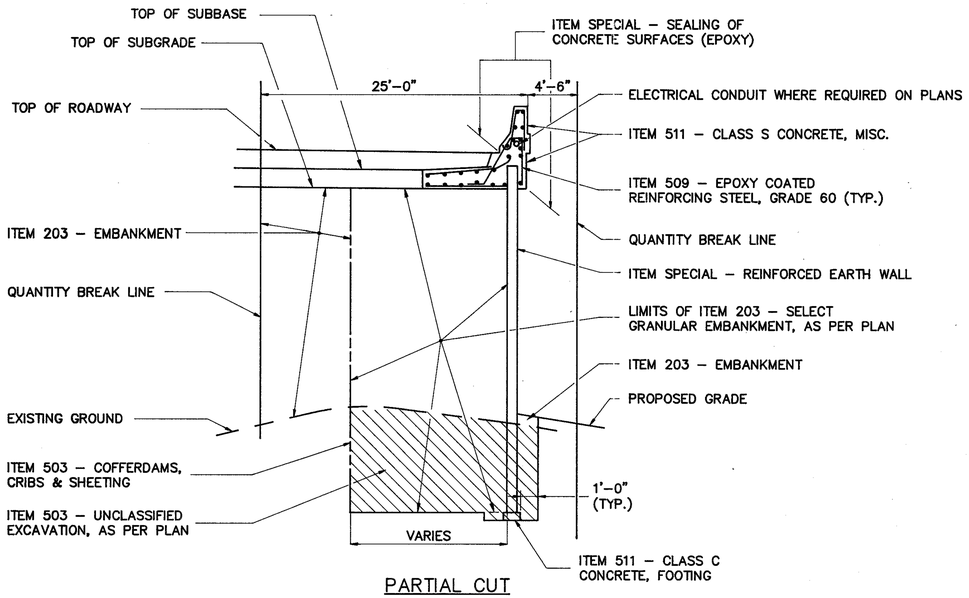

PARTIAL CUT

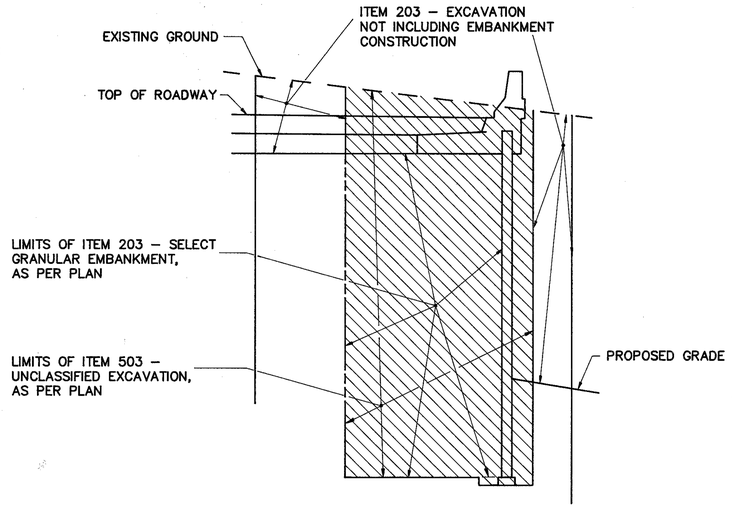

FULL CUT

(FOR ADDITIONAL ITEM LOCATIONS SEE PARTIAL CUT DIAGRAM)

STRUCTURE QUANTITIES DIAGRAMS

DESIGN No.1 ESTIMATED QUANTITES – REINFORCED EARTH WALLS

ITEM	ITEM EXT.	TOTAL	UNIT	DESCRIPTION	WALL1	WALL2	WALL3	WALL4	WALL5	WALL9	WALL10	WALL11	WALL12	WALL13	WALL14		
202	11200	LUMP		PORTIONS OF STRUCTURE REMOVED	LUMP	LUMP	LUMP	LUMP	LUMP	LUMP	LUMP	LUMP	LUMP	LUMP	LUMP		
203	12000	3588	C.Y.	EXCAVATION NOT INCLUDING EMBANKMENT CONSTRUCTION	414	1,428	78	146	0	367	111	383	37	541	83		
203	20000	7226	C.Y.	EMBANKMENT	29	252	42	1,347	1,952	737	1,517	104	645	413	188		
203	35001	38,679	C.Y.	SELECT GRANULAR EMBANKMENT, AS PER PLAN (SEE SHEET 722)	2,797	12,932	1,607	1,873	1,041	1,464	1,841	2,604	3,213	6,203	3,104		
503	11100	LUMP		COFFERDAMS, CRIBS, AND SHEETING	LUMP	LUMP	LUMP	LUMP	LUMP	LUMP	LUMP	LUMP	LUMP	LUMP	LUMP		
503	21101	28,933	C.Y.	UNCLASSIFIED EXCAVATION, AS PER PLAN (SEE SHEET 722)	2,347	10,951	1,126	961	0	1.661	598	2,588	1,391	5,267	2,043		
504	11101	776	S.F.	STEEL SHEET PILING LEFT IN PLACE, AS PER PLAN (MIN. SECTION MODULUS 18.1 CU. IN./FT.)	–	–	–	–	–	–	–	–	396	–	380		
509	15800	192,691	L.B.	EPOXY COATED REINFORCING STEEL, GRADE 60	19,675	38,173	6,809	11,500	9,217	1,438	13,549	16,855	21,194	34,727	19,554		
511	34450	1548	C.Y.	CLASS S CONCRETE, MISC.: Traffic Barrier and Sleeper Slab	158	308	55	93	75	–	109	137	173	281	159		
511	46300	15	C.Y.	CLASS C CONCRETE, WALL COPING (CAP)	–	–	–	–	–	15	–	–	–	–	–		
511	46500	71	C.Y.	CLASS C CONCRETE, FOOTING	7	13	2	4	3	5	5	6	7	12	7		
SPEC	51267500	255	S.Y.	SEALING OF CONCRETE SURFACES (SEE PROPOSAL NOTE)	–	–	–	–	–	255	–	–	–	–	–		
SPEC	51267502	4252	S.Y.	SEALING OF CONCRETE SURFACES (EPOXY) (SEE PROPOSAL NOTE)	414	825	146	252	202	109	297	370	450	758	429		
516	13200	1321	S.F.	1/2" PREFORMED EXPANSION JOINT FILLER	148	285	34	68	57	12	102	114	137	239	125		
516	13400	2343	S.F.	3/4" PREFORMED EXPANSION JOINT FILLER	227	459	109	148	121	15	170	207	244	406	237		
604	22500	3	EA.	INLET NO. 3, AS PER PLAN NO. 1 (SEE SHEET 552)	/	/	–	–	–	–	1	–	–	–	–		
SPEC	61013500	67,554	S.F.	REINFORCED EARTH WALL	5,630	18,000	2,560	3,410	2,110	2,900	3,680	5,180	6,374	11,490	6220		

CALCULATED BY: JTJ DATE: 6-22-90 CHECKED BY: P.E.B. DATE: 6-22-90

F.H.W.A. REGION	STATE	PROJECT	
5	OHIO		

724
1214

SUM–76–11.57

NOTES

1. ITEM 503 – UNCLASSIFIED EXCAVATION, AS PER PLAN: FOR AN EXPLANATION OF THE ITEM, SEE SECTION 3.1 ON SHEET 16 / 98 .
2. ITEM 203 – SELECT GRANULAR EMBANKMENT, AS PER PLAN: FOR AN EXPLANATION OF THIS ITEM, SEE SECTION 2.6 ON SHEET 16 / 98 .
3. ITEM SPECIAL – REINFORCED EARTH WALL: ALL SPECIFICATIONS FOR THESE WALLS ARE PROVIDED AS PER PLAN NOTES ON SHEETS 15 / 98 THROUGH 17 / 98 .
4. ITEM 511 – CLASS S CONCRETE, MISC.: SHALL INCLUDE TRAFFIC BARRIER AND SLEEPER SLAB.

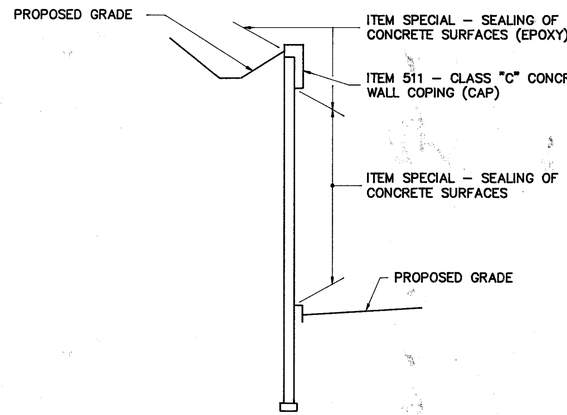

SEALING CONCRETE SURFACES

(WALL No.9 ONLY)

DESIGN 1

URS

18 / 98

ESTIMATED QUANTITIES

REINFORCED EARTH WALLS

PROJECT No. SUM–76–11.57

DESIGNED	DRAWN	TRACED	CHECKED	REVIEWED	DATE	REVISED
JTJ	ME		P.E.B.	BKR	7-12-90	

F.H.W.A. REG.	STATE	PROJECT	
5	OHIO		

725/1214

SUM-76-11.57

MARK	No. REQD.	LGTH.	TYPE	DIMENSIONS A	B	C	D	INCRM.	WEIGHT LBS.
WALL 1									
1EW1 401	2	8- 8	40	2- 3	1- 8				12
1EW1 402	2	9- 0	40	2- 3	1-10				12
1EW1 501	376	6-11	51						2712
1EW1 502	510	7- 5	52						3945
1EW1 503	659	5- 7	ST						3838
1EW1 504	230	4- 6	ST						1080
1EW1 505	18	33- 8	ST						632
1EW1 506	180	29- 2	ST						5476
1EW1 511	10	6- 4	53						66
1EW1 512	2	8- 5	ST						18
1EW1 513	2	8-11	17	1- 5	1- 5	5- 0			19
1EW1 514	11	3-10	40	0- 8	0- 8				44
1EW1 521	23	29- 2	ST						700
1EW1 523	11	8- 2	54	1- 8	1- 4				94
SERIES	2-SETS	6- 2		0- 5	0- 0			7	
OF	OF 10=	TO	54	TO	TO			0- 2--	148
1EW1 524	20 BAR	8-0		1- 7	1- 3			16	
1EW1 526	31	6- 6	ST						210
1EW1 527	21	8-10	ST						193
SERIES	2-SETS	7- 7						3	
OF	OF 19=	TO	ST					0- 0--	324
1EW1 528	38 BAR	8- 9						4	
1EW1 529	5	29- 3	17	1- 3	9- 6	10- 1			152
EPOXY COATED REINFORCING STEEL, TOTAL WALL 1 = 19675									

MARK	No. REQD.	LGTH.	TYPE	DIMENSIONS A	B	C	D	INCRM.	WEIGHT LBS.
WALL 2									
2EW1 501	759	6-11	51						5475
2EW1 502	1007	7- 5	52						7790
2EW1 503	1409	5- 7	ST						8205
2EW1 504	494	4- 6	ST						2319
2EW1 505	54	34- 2	ST						1924
2EW1 506	378	29- 2	ST						11499
2EW1 511	10	6- 4	53						66
2EW1 512	2	8- 5	ST						18
2EW1 513	2	8-11	17	1- 5	1- 5	5- 0			19
2EW1 514	11	3-10	40	0- 8	0- 8				44
2EW1 531	3	8- 4	25	0- 9	2- 0	2- 0	1- 6		26
2EW1 532	9	8- 8	25	0- 9	2- 0	2- 0	1-10		82
2EW1 533	6	7- 3	54	1- 2	0-10				45
2EW1 534	9	8- 7	54	1-11	1-7				81
2EW1 535	15	6- 1	ST						95
2EW1 536	15	8- 7	ST						134
SERIES	6-SETS	7- 1						5	
OF	OF 4=	TO	ST					0- 4--	191
2EW1 537	24 BAR	8- 2						16	
2EW1 538	6	6- 7	ST						41
2EW1 539	6	6- 1	ST						38
2EW1 540	6	12-11	17	2- 6	2- 6	6- 0			81
EPOXY COATED REINFORCING STEEL, TOTAL WALL 2 = 38173									

MARK	No. REQD.	LGTH.	TYPE	DIMENSIONS A	B	C	D	INCRM.	WEIGHT LBS.
WALL 3									
3EW1 501	132	6-11	51						952
3EW1 502	180	7- 5	52						1392
3EW1 503	243	5- 7	ST						1415
3EW1 504	85	4- 6	ST						399
3EW1 505	36	33- 8	ST						1264
3EW1 506	36	29- 8	ST						1114
3EW1 531	1	8- 4	25	0- 9	2- 0	2- 0	1- 6		9
3EW1 532	3	8- 8	25	0- 9	2- 0	2- 0	1-10		27
3EW1 533	2	7- 3	54	1- 2	0-10				15
3EW1 534	3	8- 7	54	1-11	1- 7				27
3EW1 535	5	6- 1	ST						32
3EW1 536	5	8- 7	ST						45
SERIES	2-SETS	7- 1						5	
OF	OF 4=	TO	ST					0- 4--	64
3EW1 537	8 BAR	8- 2						16	
3EW1 538	2	6- 7	ST						14
3EW1 539	2	6- 1	ST						13
3EW1 540	2	12-11	17	2- 6	2- 6	6- 0			27
EPOXY COATED REINFORCING STEEL, TOTAL WALL 3 = 6809									

MARK	No. REQD.	LGTH.	TYPE	DIMENSIONS A	B	C	D	INCRM.	WEIGHT LBS.
WALL 4									
4EW1 501	232	6-11	51						1674
4EW1 502	305	7- 5	52						2359
4EW1 503	450	5- 7	ST						2621
4EW1 504	156	4- 6	ST						732
4EW1 505	54	34- 2	ST						1924
4EW1 506	72	29- 2	ST						2190
EPOXY COATED REINFORCING STEEL, TOTAL WALL 4 = 11500									

MARK	No. REQD.	LGTH.	TYPE	DIMENSIONS A	B	C	D	INCRM.	WEIGHT LBS.
WALL 5									
5EW1 501	186	6-11	51						1342
5EW1 502	246	7- 5	52						1903
5EW1 503	360	5- 7	ST						2096
5EW1 504	126	4- 6	ST						591
5EW1 505	108	29- 2	ST						3285
EPOXY COATED REINFORCING STEEL, TOTAL WALL 5 = 9217									

MARK	No. REQD.	LGTH.	TYPE	DIMENSIONS A	B	C	D	INCRM.	WEIGHT LBS.
WALL 9									
9EW1 541	104	3- 7	2	1- 8	0- 6				389
9EW1 542	104	9- 8	ST						1049
EPOXY COATED REINFORCING STEEL, TOTAL WALL 9 = 1438									

MARK	No. REQD.	LGTH.	TYPE	DIMENSIONS A	B	C	D	INCRM.	WEIGHT LBS.
WALL 10									
10EW1 501	273	6-11	51						1969
10EW1 502	351	7- 5	52						2715
10EW1 503	520	5- 7	ST						3028
10EW1 504	179	4- 6	ST						840
10EW1 505	90	34- 2	ST						3207
10EW1 506	54	29- 2	ST						1643
10EW1 511	10	6- 4	53						66
10EW1 512	2	8- 5	ST						18
10EW1 513	2	8-11	17	1- 5	1- 5	5- 0			19
10EW1 514	11	3-10	40	0- 8	0- 8				44
EPOXY COATED REINFORCING STEEL, TOTAL WALL 10 = 13549									

MARK	No. REQD.	LGTH.	TYPE	DIMENSIONS A	B	C	D	INCRM.	WEIGHT LBS.
WALL 11									
11EW1 501	340	6-11	51						2453
11EW1 502	446	7- 5	52						3450
11EW1 503	660	5- 7	ST						3843
11EW1 504	228	4- 6	ST						1070
11EW1 505	108	34- 2	ST						3849
11EW1 506	72	29- 2	ST						2190
EPOXY COATED REINFORCING STEEL, TOTAL WALL 11 = 16855									

MARK	No. REQD.	LGTH.	TYPE	DIMENSIONS A	B	C	D	INCRM.	WEIGHT LBS.
WALL 12									
12EW1 401	2	8- 8	40	2- 3	1- 8				12
12EW1 402	2	9- 0	40	2- 3	1-10				12
12EW1 501	407	6-11	51						2936
12EW1 502	558	7- 5	52						4316
12EW1 503	729	5- 7	ST						4245
12EW1 504	255	4- 6	ST						1197
12EW1 505	18	33- 8	ST						632
12EW1 506	198	29- 2	ST						6023
12EW1 521	23	29- 2	ST						700
12EW1 523	11	8- 2	54	1- 8	1- 4				94
SERIES	2-SETS	6- 2		0- 5	0- 0			7	
OF	OF 10=	TO	54	TO	TO			0- 2--	148
12EW1 524	20 BAR	8- 0		1- 7	1- 3			16	
12EW1 526	31	6- 6	ST						210
12EW1 527	21	8-10	ST						193
SERIES	2-SETS	7- 7						3	
OF	OF 19=	TO	ST					0- 0--	324
12EW1 528	38 BAR	8- 9						4	
12EW1 529	5	29- 3	17	1- 3	9- 6	10- 1			152
EPOXY COATED REINFORCING STEEL, TOTAL WALL 12 = 21194									

NOTES

① FOR REINFORCING BAR DIAGRAMS AND NOTES SEE SHEET 20/98

DESIGN 1

URS

19/98

REINFORCING SCHEDULE

REINFORCED EARTH

SUMMIT COUNTY

PROJECT No. SUM-76-11.57

DESIGNED	DRAWN	TRACED	CHECKED	REVIEWED	DATE	REVISED
J.T.J.	ME		P.E.B.	BKR	7/10/98	

F.H.W.A. REG.	STATE	PROJECT	
5	OHIO		

726
1214

SUM-76-11.57

MARK	No. REQD.	LGTH.	TYPE	DIMENSIONS A	B	C	D	INCRM.	WEIGHT LBS.
WALL 13									
13EW1 501	697	6-11	51						5028
13EW1 502	924	7- 5	52						7148
13EW1 503	1333	5- 7	ST						7763
13EW1 504	466	4- 6	ST						2187
13EW1 505	54	34- 2	ST						1924
13EW1 506	342	29- 2	ST						10404
13EW1 531	1	8- 4	25	0- 9	2- 0	2- 0	1- 6		9
13EW1 532	3	8- 8	25	0- 9	2- 0	2- 0	1-10		27
13EW1 533	2	7- 3	54	1- 2	0-10				15
13EW1 534	3	8- 7	54	1-11	1- 7				27
13EW1 535	5	6- 1	ST						32
13EW1 536	5	8- 7	ST						45
SERIES	2-SETS	7- 1						5	
OF	OF 4=	TO	ST					0- 4--	64
13EW1 537	8 BAR	8- 2						16	
13EW1 538	2	6- 7	ST						14
13EW1 539	2	6- 1	ST						13
13EW1 540	2	12-11	17	2- 6	2- 6	6- 0			27
EPOXY COATED REINFORCING STEEL, TOTAL WALL 13 = 34727									

MARK	No. REQD.	LGTH.	TYPE	DIMENSIONS A	B	C	D	INCRM.	WEIGHT LBS.
WALL 14									
14EW1 501	394	6-11	51						2842
14EW1 502	519	7- 5	52						4015
14EW1 503	765	5- 7	ST						4455
14EW1 504	266	4- 6	ST						1248
14EW1 505	72	34- 2	ST						2566
14EW1 506	126	29- 2	ST						3833
14EW1 507	18	31- 8	ST						595
EPOXY COATED REINFORCING STEEL, TOTAL WALL 14 = 19554									

509
EPOXY COATED REINFORCING STEEL,
GRADE 60

WALL	192691
TOTAL	192691

REINFORCING BAR TYPES

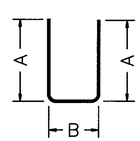

2

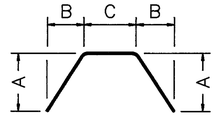

17

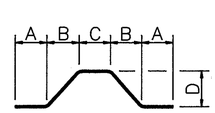

25

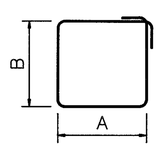

40

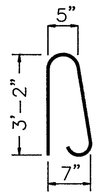

51

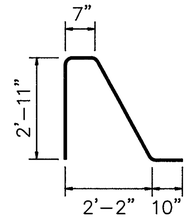

52

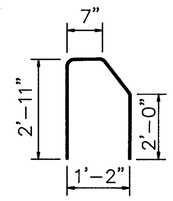

53

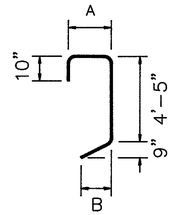

54

REINFORCING STEEL SAMPLES

REFER TO CMS SECTIONS 106.03, 700, 709.01 THROUGH 709.05 AND 709.08. SUFFICIENT ADDITIONAL REINFORCING STEEL SHALL BE PROVIDED FOR SAMPLING. RANDOM SAMPLES SHALL BE REPLACED IN THE STRUCTURES BY THE ADDITIONAL STEEL, SPLICED IN ACCORDANCE WITH 509.08.

DESIGN 1

URS

20 / 98

REINFORCING SCHEDULE
REINFORCED EARTH

SUMMIT COUNTY

PROJECT No. SUM-76-11.57

DESIGNED	DRAWN	TRACED	CHECKED	REVIEWED	DATE	REVISED
J.T.J.	M.E.		P.E.B	BML	7/17/90	

727
1214

SUM - 76 - 11 57

reinforced earth ®

NORTHEASTERN DIVISION 2010 CORPORATE RIDGE, SUITE 1000, McLEAN, VA. 22102. (703) 821-1175

GENERAL NOTES

DESIGN CRITERIA

■ 1. DESIGN IS BASED ON THE ASSUMPTION THAT THE MATERIAL WITHIN THE REINFORCED EARTH VOLUME, METHODS OF CONSTRUCTION AND QUALITY OF PREFABRICATED MATERIAL SHALL CONFORM TO THE CONTRACTING AGENCY'S TECHNICAL SPECIFICATIONS FOR REINFORCED EARTH WALLS.

■ 2. ASSUMED SOILS CHARACTERISTICS :

SELECT GRANULAR BACKFILL
ϕ = 34° degrees, c = 0 p.s.f., γ = .120 p.c.f.

RANDOM BACKFILL
ϕ = 30° degrees, c = 0 p.s.f., γ = .120 p.c.f.

FOUNDATION MATERIAL
ϕ = 30 DEGREES, C = 0 p.s.f., WALLS 4, 9, 10, 12, AND 14
ϕ = 25 DEGREES, C = 600 p.s.f., WALLS 1, 11, AND 13
ϕ = 20 DEGREES, C = 800 p.s.f., WALLS 2, 3, AND 5

IF THE ACTUAL CHARACTERISTICS OF THE SOIL MATERIALS DIFFER FROM THOSE ABOVE, THE REINFORCED EARTH COMPANY SHOULD BE NOTIFIED PRIOR TO CONSTRUCTION TO EVALUATE THE NEED FOR REDESIGN OF THE WALL.

■ 3. THE MAXIMUM APPLIED BEARING PRESSURE AT THE FOUNDATION LEVEL IS AS SHOWN ON THE WALL ELEVATIONS FOR EACH DESIGN CASE.

■ 4. ANY UNSUITABLE FOUNDATION MATERIAL BELOW THE REINFORCED EARTH VOLUME, AS DETERMINED BY THE ENGINEER, SHALL BE EXCAVATED AND REPLACED WITH SUITABLE MATERIAL OR OTHERWISE STABILIZED AS DIRECTED BY THE ENGINEER.

■ 5. REINFORCING STRIPS FOR REINFORCED EARTH WALLS SHALL BE 50MM WIDE AND 4MM THICK AND SHALL CONFORM TO THE PHYSICAL AND MECHANICAL PROPERTIES OF ASTM A-572, GRADE 65.

■ 6. REFER TO THE CONTRACT DRAWINGS PREPARED BY URS CONSULTANTS FOR THE FOLLOWING:
- LINE, GRADE & GEOMETRIC DATA
- ESTIMATED QUANTITIES, REINFORCING BAR SCHEDULE AND PLAN NOTES FOR CONSTRUCTION OF REINFORCED EARTH WALL.

■ 7. WALLS 3, 11, 12, AND 13 SHALL BE CONSTRUCTED IN STAGES. REFER TO THE RETAINING WALL GENERAL NOTES FOR STAGE CONSTRUCTION SEQUENCING.

■ NOTE APPLIES TO THIS PROJECT

☐ NOTE DOES NOT APPLY TO THIS PROJECT

WALL CONSTRUCTION

■ 1. STATIONS SHOWN ARE ALONG CENTERLINE OR BASELINE OF ROADWAY.

■ 2. REINFORCED EARTH WALLS, IN CURVES, WILL FORM A SERIES OF SHORT CHORDS OF 4.92' EACH TO MATCH DESIRED WALL ALIGNMENT.

■ 3. FOR LOCATION AND ALIGNMENT OF REINFORCED EARTH WALLS, SEE CONTRACT DRAWINGS.

■ 4. MANHOLES AND DROP INLETS SHALL BE LOCATED AS SHOWN ON WALL ELEVATIONS.

☐ 5. PILES WITHIN THE REINFORCED EARTH VOLUME SHALL BE DRIVEN PRIOR TO THE CONSTRUCTION OF THE REINFORCED EARTH WALL.

■ 6. BACKFILL MATERIAL SHALL BE COMPACTED, IN ACCORDANCE WITH THE SPECIFICATIONS FOR REINFORCED EARTH WALLS, TO A LEVEL OF 2" (*) ABOVE THE TIE STRIPS EMBEDDED IN THE PANELS. INSTALLATION OF REINFORCING STRIPS SHALL BE PERMITTED ONLY AFTER PLACEMENT AND COMPACTION OF THE BACKFILL MATERIAL HAS REACHED THE REQUIRED LEVEL.

■ 7. COMPACTION AND OPERATION EQUIPMENT SHALL BE KEPT A MINIMUM DISTANCE OF 3'-0" FROM BACK FACE OF REINFORCED EARTH PANEL. COMPACTION WITHIN 3'-0" OF THE REINFORCED EARTH PANELS SHALL BE ACHIEVED WITH AT LEAST THREE (3) PASSES OF A LIGHTWEIGHT MECHANICAL TAMPER, ROLLER OR VIBRATORY SYSTEM.

■ 8. FOR STRUCTURES IN EXCESS OF 20' IN HEIGHT, THE FINISHED GRADE IN FRONT OF THE WALL SHALL BE PLACED AND COMPACTED BEFORE WALL CONSTRUCTION EXCEEDS A HEIGHT OF 20'. FINISHED GRADE BACKFILL SHALL BE COMPACTED TO 95 % OF ASTM D-698, METHODS 'C' OR 'D', UNLESS OTHERWISE DIRECTED BY ENGINEER.

☐ 9. IT IS THE CONTRACTOR'S RESPONSIBILITY TO DETERMINE THE LOCATION OF GUARDRAIL POSTS BEHIND THE REINFORCED EARTH PANELS, PRIOR TO PLACEMENT OF THE TOP LAYER OF REINFORCING STRIPS. INDIVIDUAL STRIPS MAY BE SKEWED, IF AUTHORIZED BY THE REINFORCED EARTH COMPANY, PRIOR TO PLACEMENT. ANY DAMAGE DONE TO THE REINFORCING STRIPS DUE TO THE INSTALLATION OF THE GUARDRAIL SHALL BE REPAIRED BY THE CONTRACTOR AT THE CONTRACTOR'S EXPENSE.

■ 10. IF STRUCTURES WITHIN THE REINFORCED EARTH VOLUME INTERFERE WITH THE NORMAL PLACEMENT OF REINFORCING STRIPS, THE CONTRACTOR SHALL NOTIFY THE REINFORCED EARTH COMPANY TO DETERMINE THE EFFECT ON THE DESIGN OF THE WALL BY SKEWING THESE STRIPS.

■ 11. ALL DETAILING AND CHECKING OF REINFORCING STEEL FOR ANY C.I.P. CONCRETE WORK IS THE RESPONSIBILITY OF THE CONTRACTOR.

■ 12. PANEL LEGEND: A6
PANEL NAME — NO OF REINFORCING STRIPS PER PANEL

CERTIFIED WITH RESPECT TO INTERNAL STABILITY OF REINFORCED EARTH STRUCTURES ONLY.

STATE OF OHIO — DAVID R. MARTINELLI — 48801 — REGISTERED PROFESSIONAL ENGINEER

DESIGN 1

The Reinforced Earth Company
General Headquarters, McLean, Virginia
2010 Corporate Ridge, Suite 1000, McLean, Virginia 22102
(703) 821-1175

Structure	REINFORCED EARTH WALL
Location	AKRON OHIO
	AKRON EAST EXPRESSWAY
Owner	OHIO DOT
Drawn By L.R.	Date 1/5/89
Checked By A.J.P.	CONTRACT NO. 3154
DRAWING TITLE GENERAL NOTES	DRAWING NO. 21 OF 28
	SCALE N.T.S.

NO. | DATE | DESCRIPTION

"REINFORCED EARTH" IS THE REGISTERED TRADEMARK OF THE REINFORCED EARTH COMPANY

This drawing contains information proprietary to The Reinforced Earth Company, and is being furnished for the use of OHIO DOT only in connection with this project and the information contained herein is not to be transmitted to any other organization unless specifically authorized in writing by The Reinforced Earth Company.
The Reinforced Earth Company is exclusive licensee in the United States under patents issued to Henri Vidal, and the furnishing of this drawing does not constitute an express or implied license under the Vidal patents.

THE DESIGN CONTAINED ON THESE DRAWINGS IS BASED ON INFORMATION PROVIDED BY THE OWNER. ON THE BASIS OF THIS INFORMATION, THE REINFORCED EARTH COMPANY HAS DESIGNED AND IS RESPONSIBLE FOR THE INTERNAL STABILITY OF THE STRUCTURE ONLY. EXTERNAL STABILITY, INCLUDING FOUNDATION AND SLOPE STABILITY, IS THE RESPONSIBILITY OF THE OWNER.

F.H.W.A. REG.	STATE	PROJECT	
5	OHIO		

728
1214

SUM-76-11.57

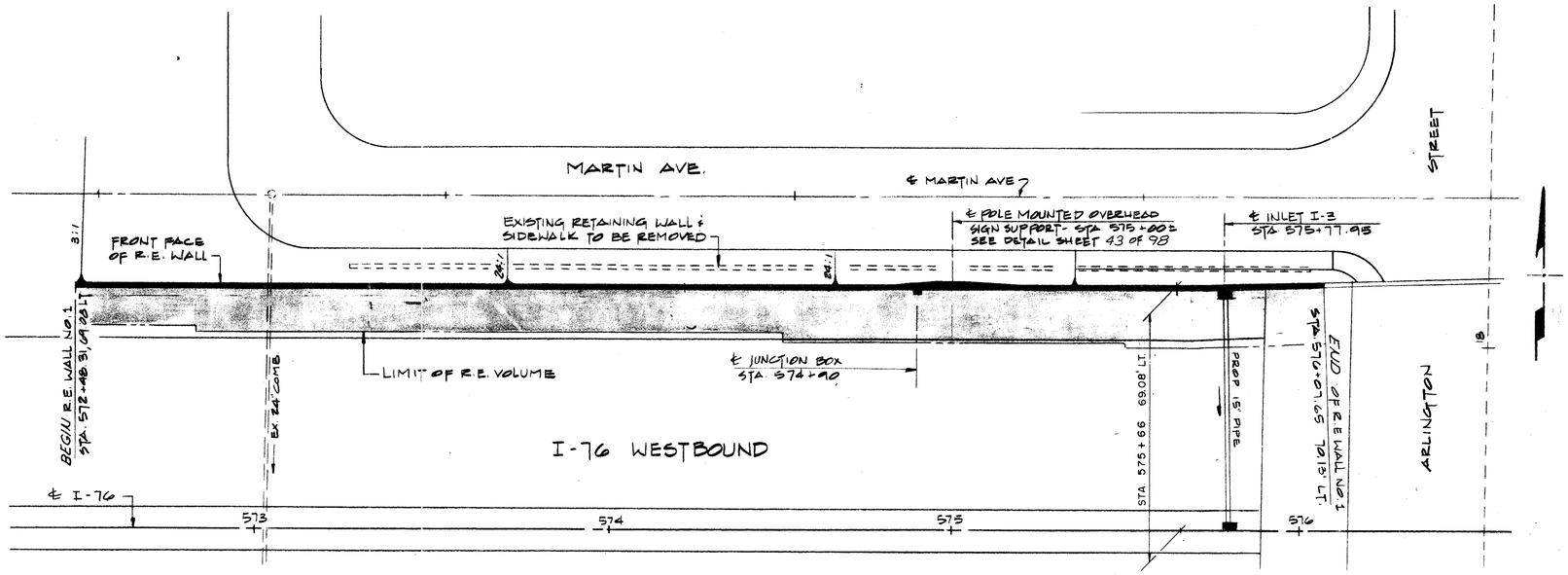

PLAN
REINFORCED EARTH WALL NO. 1

CERTIFIED WITH RESPECT TO INTERNAL STABILITY OF REINFORCED EARTH STRUCTURES ONLY.

STATE OF OHIO — DAVID A. MONTEITH — 58807 — REGISTERED PROFESSIONAL ENGINEER

WALL NO. 1

DESIGN 1

THE DESIGN CONTAINED ON THESE DRAWINGS IS BASED ON INFORMATION PROVIDED BY THE OWNER. ON THE BASIS OF THIS INFORMATION, THE REINFORCED EARTH COMPANY HAS DESIGNED, AND IS RESPONSIBLE FOR THE INTERNAL STABILITY OF THE STRUCTURE ONLY. EXTERNAL STABILITY, INCLUDING FOUNDATION AND SLOPE STABILITY, IS THE RESPONSIBILITY OF THE OWNER.

"REINFORCED EARTH" IS THE REGISTERED TRADEMARK OF THE REINFORCED EARTH COMPANY.

This drawing contains information proprietary to The Reinforced Earth Company, and is being furnished for the use of OHIO D.O.T only in connection with this project, and the information contained herein is not to be transmitted to any other organization unless specifically authorized in writing by The Reinforced Earth Company.
The Reinforced Earth Company is exclusive licensee in the United States under patents issued to Henri Vidal, and the furnishing of this drawing does not constitute an express or implied license under the Vidal patents.

The Reinforced Earth Company
Corporate Headquarters · Mclean, Virginia
2010 Corporate Ridge Suite 1000 Mclean, Virginia 22102
(703) 821-1175

REV. NO.	DATE	DESCRIPTION

Structure	REINFORCED EARTH WALL
Location	AKRON OHIO
	AKRON EAST EXPRESSWAY
Owner	OHIO D.O.T.
DESIGNED BY: DCM	DATE: 12/5/89
PROJECT ENGR: KAL	CONTRACT NO. 3154
CHECKED BY: AJP	DRAWING NO. 22 OF 98
PLAN WALL NO.1 / QUANTITIES	SCALE 1" = 20'-0"

FHWA REG	STATE	PROJECT	
5	OHIO		

729
1214

SUM - 76 - 11.57

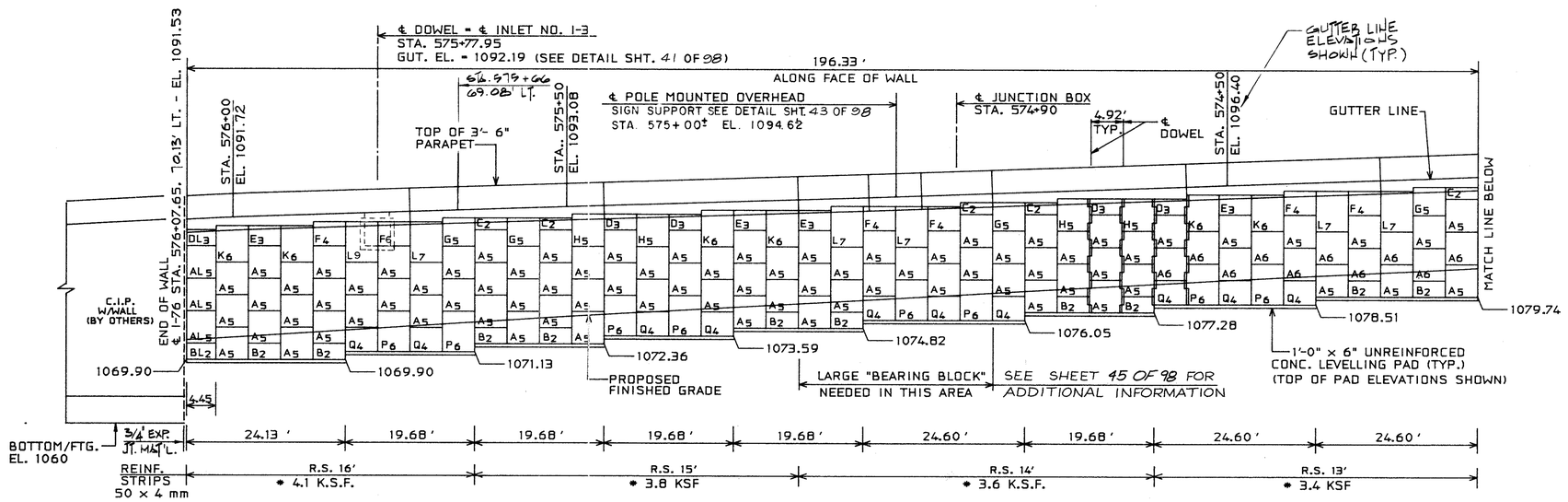

ELEVATION - FRONT FACE - WALL 1

* SEE GENERAL NOTE 3 ON SHEET 21 (DESIGN CRITERIA)

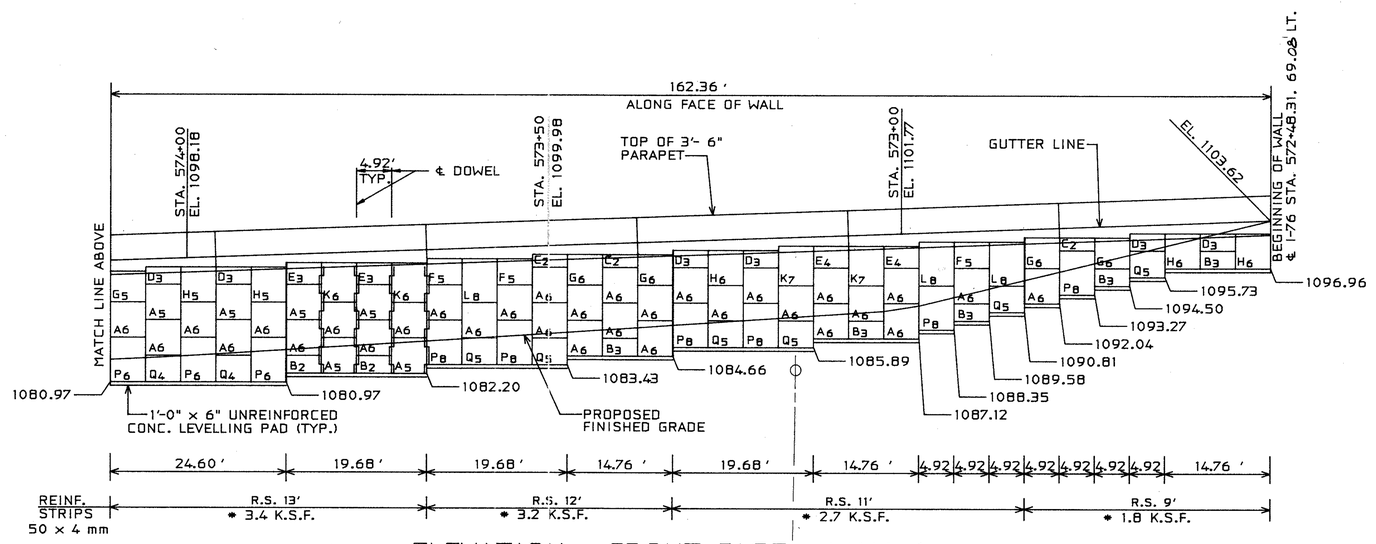

ELEVATION - FRONT FACE - WALL 1

℄ PROPOSED 8" W.M. W/18" STEEL CASING

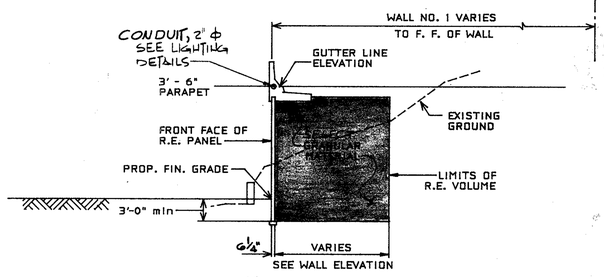

TYPICAL SECTION - WALL NO. 1

THE DESIGN CONTAINED ON THESE DRAWINGS IS BASED ON INFORMATION PROVIDED BY THE OWNER. ON THE BASIS OF THIS INFORMATION, THE REINFORCED EARTH COMPANY HAS DESIGNED, AND IS RESPONSIBLE FOR THE INTERNAL STABILITY OF THE STRUCTURE ONLY. EXTERNAL STABILITY, INCLUDING FOUNDATION AND SLOPE STABILITY, IS THE RESPONSIBILITY OF THE OWNER.

"REINFORCED EARTH" IS THE REGISTERED TRADEMARK OF THE REINFORCED EARTH COMPANY.

This drawing contains information proprietary to The Reinforced Earth Company, and is being furnished for the use of OHIO D.O.T. only in connection with this project, and the information contained herein is not to be transmitted to any other organization unless specifically authorized in writing by The Reinforced Earth Company.
The Reinforced Earth Company is exclusive licensee in the United States under patents issued to Henri Vidal, and the furnishing of this drawing does not constitute an express or implied license under the Vidal patents.

CERTIFIED WITH RESPECT TO INTERNAL STABILITY OF REINFORCED EARTH STRUCTURES ONLY.

STATE OF OHIO — DAVID J. PEARSON — 48801 — REGISTERED PROFESSIONAL ENGINEER

WALL NO. 1

DESIGN 1

The Reinforced Earth Company
Corporate Headquarters · Mclean, Virginia
2010 Corporate Ridge Suite 1000 Mclean, Virginia 22102
(703) 821-1175

REV. NO.	DATE	DESCRIPTION

Structure	REINFORCED EARTH WALL
Location	AKRON OHIO
	AKRON EAST EXPRESSWAY
Owner	OHIO D.O.T.
Drawn By	L.R.
Checked By	AJP
Date	12/3/89
CONTRACT NO.	3154
DRAWING COVERS	ELEVATION & SECTION
DRAWING NO.	23 OF 98
SCALE	1" = 10'-0"

F.H.W.A. REG.	STATE	PROJECT	
5	OHIO		

730
1214

SUM - 76 - 11.57

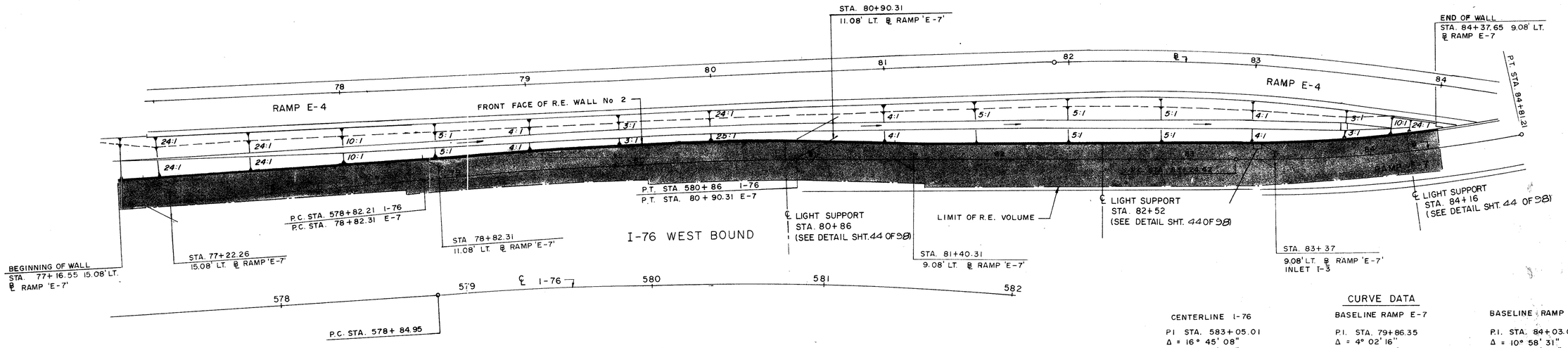

PLAN

N.T.S.

CURVE DATA

CENTERLINE I-76
P.I STA. 583+05.01
Δ = 16° 45' 08"
Dc = 2° 00' 30"
R = 2852.90'
T = 420.06'
Lc = 834.14'

BASELINE RAMP E-7
P.I. STA. 79+86.35
Δ = 4° 02' 16"
Dc = 1° 56' 29"
R = 2951.44'
T = 104.04'
Lc = 208.00'

BASELINE RAMP E-7
P.I. STA. 84+03.06
Δ = 10° 58' 31"
Dc = 7° 00' 00"
R. = 818.51'
T = 78.64'
Lc = 156.79'

WALL OFFSET TABLE	
STA. ALONG ℄ RAMP E-7	OFFSET TO FACE OF WALL
77+16.55	15.08'
77+22.26	15.08'
78+82.31	11.08'
80+90.31	11.08'
81+40.31	9.08'
83+37	9.08'
84+37.65	9.08'

CERTIFIED WITH RESPECT TO INTERNAL STABILITY OF REINFORCED EARTH STRUCTURES ONLY.
STATE OF OHIO · DAVID P. [illegible] · 18801 · REGISTERED PROFESSIONAL ENGINEER

WALL NO. 2

DESIGN 1

The Reinforced Earth Company
Corporate Headquarters · Mclean, Virginia
2010 Corporate Ridge Suite 1000 Mclean, Virginia 22102
(703) 821-1175

REV. NO.	DATE	DESCRIPTION

Structure	REINFORCED EARTH WALL
Location	AKRON OHIO
	AKRON EAST EXPRESSWAY
Owner	OHIO D.O.T.
Drawn By	L.R.
Checked By	AJP
Date	2/5/89
CONTRACT NO.	3154
DRAWING COVERS	PLAN
DRAWING NO.	24 OF 98
SCALE	AS SHOWN

THE DESIGN CONTAINED ON THESE DRAWINGS IS BASED ON INFORMATION PROVIDED BY THE OWNER. ON THE BASIS OF THIS INFORMATION, THE REINFORCED EARTH COMPANY HAS DESIGNED, AND IS RESPONSIBLE FOR THE INTERNAL STABILITY OF THE STRUCTURE ONLY. EXTERNAL STABILITY, INCLUDING FOUNDATION AND SLOPE STABILITY, IS THE RESPONSIBILITY OF THE OWNER.

"REINFORCED EARTH" IS THE REGISTERED TRADEMARK OF THE REINFORCED EARTH COMPANY.

This drawing contains information proprietary to The Reinforced Earth Company, and is being furnished for the use of OHIO D.O.T. only in connection with this project, and the information contained herein is not to be transmitted to any other organization unless specifically authorized in writing by The Reinforced Earth Company.
The Reinforced Earth Company is exclusive licensee in the United States under patents issued to Henri Vidal, and the furnishing of this drawing does not constitute an express or implied license under the Vidal patents.

FHWA REG	STATE	PROJECT	
5	OHIO		

731
1214

SUM-76-11.57

℄ LIGHT SUPPORT
STA. 84+16 ± (SEE DETAIL SHT. 44 OF 98)

GUTTER LINE ELEVATIONS SHOWN (TYP.)

℄ INLET I - 3
STA 83+37 ± (SEE DETAIL SHT. 44 OF 98)

℄ LIGHT SUPPORT
STA. 82+52 (SEE DETAIL SHT. 44 OF 98)

244.73'
ALONG FACE OF WALL

111.95'
(ON CURVE)

132.78' (ON TANG.)

STA. 84+00
EL. 1071.48

4.92'
TYP.

℄ DOWEL

STA. 83+50
EL. 1073.66

P.C.
STA. 83+24.42
℄ RAMP E-7

STA. 83+00
EL. 1075.64

GUTTER LINE

STA. 82+50
EL. 1077.41

TOP OF 3'- 6"
PARAPET

STA. 82+00
EL. 1078.97

EL. 1069.84

C.I.P.
W/WALL
(BY OTHERS)

END OF WALL
RAMP E-7 STA. 84+37.65 9.08' LT.

MATCH LINE BELOW

1051.01

1049.78

1048.55

1047.32

1046.09

1044.86

1043.63

1042.40

1042.40

PROPOSED FINISHED GRADE

℄ 18" COMB.
STORM, STA.
82+50 INVERT
EL. 1044.20

PROPOSED 16" Ø WATERMAIN ENCASED
IN 30" Ø STEEL CASING PIPE. INVERT
EL. OF CASING = 1045.00

STA. 82+41 ±

STA. 82+34 ±

BOTTOM/FTG.
EL. 1037.00

3/4" EXP.
JT. MAT'L.

3.95

57.77'

19.68'

34.44'

39.36'

34.44'

29.52'

24.60'

4.92

REINF.
STRIPS
50 X 4 mm

R.S. 20'
* 4.9 KSF

R.S. 21'
* 5.2 KSF

* SEE GENERAL NOTE 3 ON SHEET 21 (DESIGN CRITERIA)

P.T. STA. 580+86 ℄ I-76
P.T. STA. 80+90.31 ℄ RAMP E-7

246.00'
ALONG FACE OF WALL

101.33' (ON TANG.)

144.67' (ON CURVE)

STA. 81+50
EL. 1080.33

STA. 81+40.31
9.08' LT.

TOP OF 3'- 6"
PARAPET

GUTTER LINE

STA. 81+00
EL. 1081.40

℄ LIGHT SUPPORT
STA. 80+86 (SEE DETAIL)
SHT. 44 OF 98)

STA. 80+50
EL. 1082.56

4.92'
TYP.

℄ DOWEL

STA. 80+00
EL. 1083.65

2" ϕ CONDUIT IN BARRIER
SEE LIGHTING DETAILS

STA. 79+50
EL. 1084.61

MATCH LINE SHT. NO. 26 OF 98

MATCH LINE ABOVE

1051.01

1051.01

1052.24

1053.47

1054.70

1055.93

1057.16

1058.39

1059.62

PROPOSED FINISHED GRADE

1'-0" x 6" UNREINFORCED
CONC. LEVELLING PAD (TYP.)
TOP OF PAD ELEVATIONS SHOWN

29.52'

34.44'

34.44'

29.52'

34.44'

34.44'

24.60'

24.60'

REINF.
STRIPS
50 x 4 mm

R.S. 21'
* 5.2 KSF

R.S. 20'
* 4.9 KSF

R.S. 19'
* 4.7 KSF

R.S. 18'
* 4.5 KSF

ELEVATION - FRONT FACE - WALL NO. 2

CERTIFIED WITH RESPECT TO INTERNAL STABILITY OF REINFORCED EARTH STRUCTURES ONLY.

STATE OF OHIO
DAVID P. HAMILTON
46801
REGISTERED PROFESSIONAL ENGINEER

WALL NO. 2

DESIGN 1

The Reinforced Earth Company
Corporate Headquarters - Mclean, Virginia
2010 Corporate Ridge Suite 1000 Mclean, Virginia 22102
(703) 821-1175

Structure	REINFORCED EARTH WALL
Location	AKRON OHIO
	AKRON EAST EXPRESSWAY
Owner	OHIO D.O.T.
Drawn By	L.R.
Checked By	AJP
Date	12/5/89
CONTRACT NO.	3154
DRAWING COVERS	ELEVATION
DRAWING NO.	25 OF 98
SCALE	1" = 10'-0"

REV. NO.	DATE	DESCRIPTION

"REINFORCED EARTH" IS THE REGISTERED TRADEMARK OF THE REINFORCED EARTH COMPANY.

This drawing contains information proprietary to The Reinforced Earth Company, and is being furnished for the use of OHIO D.O.T. only in connection with this project, and the information contained herein is not to be transmitted to any other organization unless specifically authorized in writing by The Reinforced Earth Company.
The Reinforced Earth Company is exclusive licensee in the United States under patents issued to Henri Vidal, and the furnishing of this drawing does not constitute an express or implied license under the Vidal patents.

THE DESIGN CONTAINED ON THESE DRAWINGS IS BASED ON INFORMATION PROVIDED BY THE OWNER. ON THE BASIS OF THIS INFORMATION, THE REINFORCED EARTH COMPANY HAS DESIGNED, AND IS RESPONSIBLE FOR THE INTERNAL STABILITY OF THE STRUCTURE ONLY. EXTERNAL STABILITY, INCLUDING FOUNDATION AND SLOPE STABILITY, IS THE RESPONSIBILITY OF THE OWNER.

FHWA REG	STATE	PROJECT	
5	OHIO		

732/1214

SUM-76-11.57

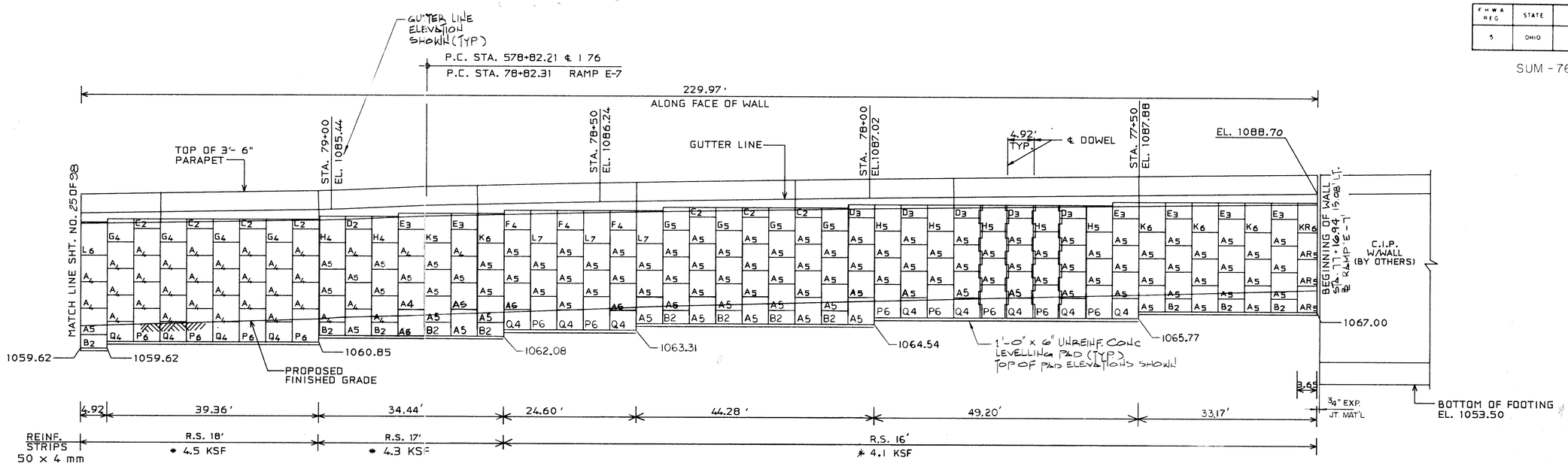

ELEVATION - FRONT FACE - WALL NO. 2

* SEE GENERAL NOTE 3 ON SHEET 21 (DESIGN CRITERIA)

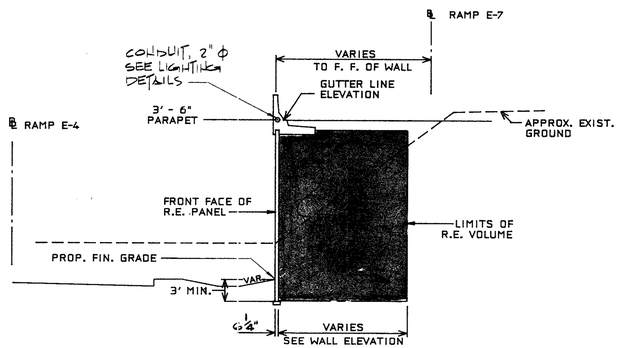

TYPICAL SECTION - WALL NO. 2

CERTIFIED WITH RESPECT TO INTERNAL STABILITY OF REINFORCED EARTH STRUCTURES ONLY.

STATE OF OHIO DAVID P. THOMPSON 49801 REGISTERED PROFESSIONAL ENGINEER

THE DESIGN CONTAINED ON THESE DRAWINGS IS BASED ON INFORMATION PROVIDED BY THE OWNER. ON THE BASIS OF THIS INFORMATION, THE REINFORCED EARTH COMPANY HAS DESIGNED, AND IS RESPONSIBLE FOR THE INTERNAL STABILITY OF THE STRUCTURE ONLY. EXTERNAL STABILITY, INCLUDING FOUNDATION AND SLOPE STABILITY, IS THE RESPONSIBILITY OF THE OWNER.

"REINFORCED EARTH" IS THE REGISTERED TRADEMARK OF THE REINFORCED EARTH COMPANY.

This drawing contains information proprietary to The Reinforced Earth Company, and is being furnished for the use of OHIO D.O.T. only in connection with this project, and the information contained herein is not to be transmitted to any other organization unless specifically authorized in writing by The Reinforced Earth Company.
The Reinforced Earth Company is exclusive licensee in the United States under patents issued to Henri Vidal, and the furnishing of this drawing does not constitute an express or implied license under the Vidal patents.

WALL NO. 2

DESIGN 1

The Reinforced Earth Company
Corporate Headquarters · Mclean, Virginia
2010 Corporate Ridge Suite 1000 Mclean, Virginia 22102
(703) 821-1175

Structure	REINFORCED EARTH WALL
Location	AKRON OHIO
	AKRON EAST EXPRESSWAY
Owner	OHIO D.O.T.
Drawn By	L.R.
Checked By	A.J.P.
Date	12/5/89
CONTRACT NO.	3154
DRAWING COVERS	ELEVATION & SECTION
DRAWING NO.	26 OF 98
SCALE	1" = 10'-0"

REV. NO.	DATE	DESCRIPTION

F.H.W.A. REG.	STATE	PROJECT	
5	OHIO		

733
1214

SUM - 76 - 11.57

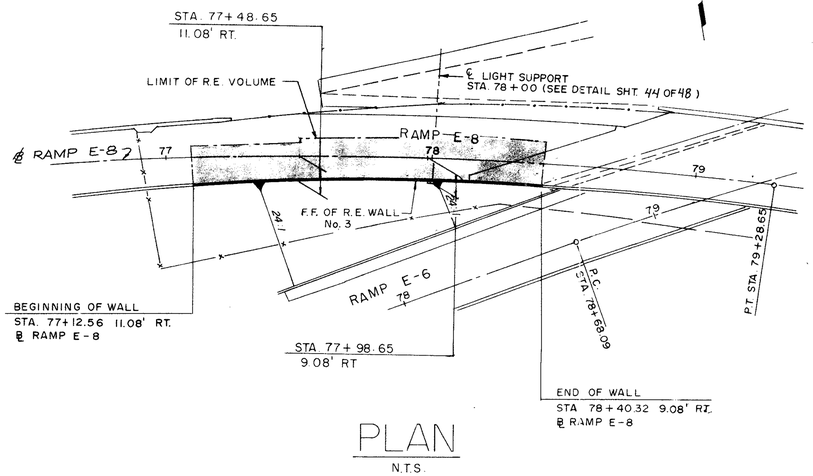

PLAN
N.T.S.

BASE LINE RAMP E-8

P.I. STA. 77+02.10
Δ = 18° 16' 49"
Dc = 4° 00' 00"
R = 1432.39
T = 230.46
Lc = 457.01

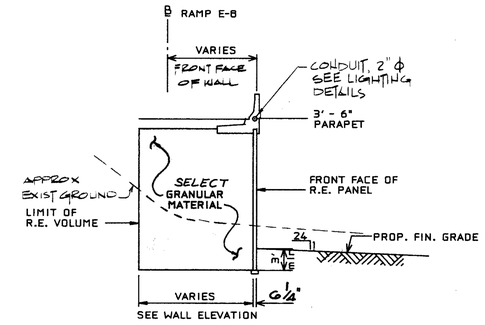

TYPICAL SECTION - WALL NO. 3

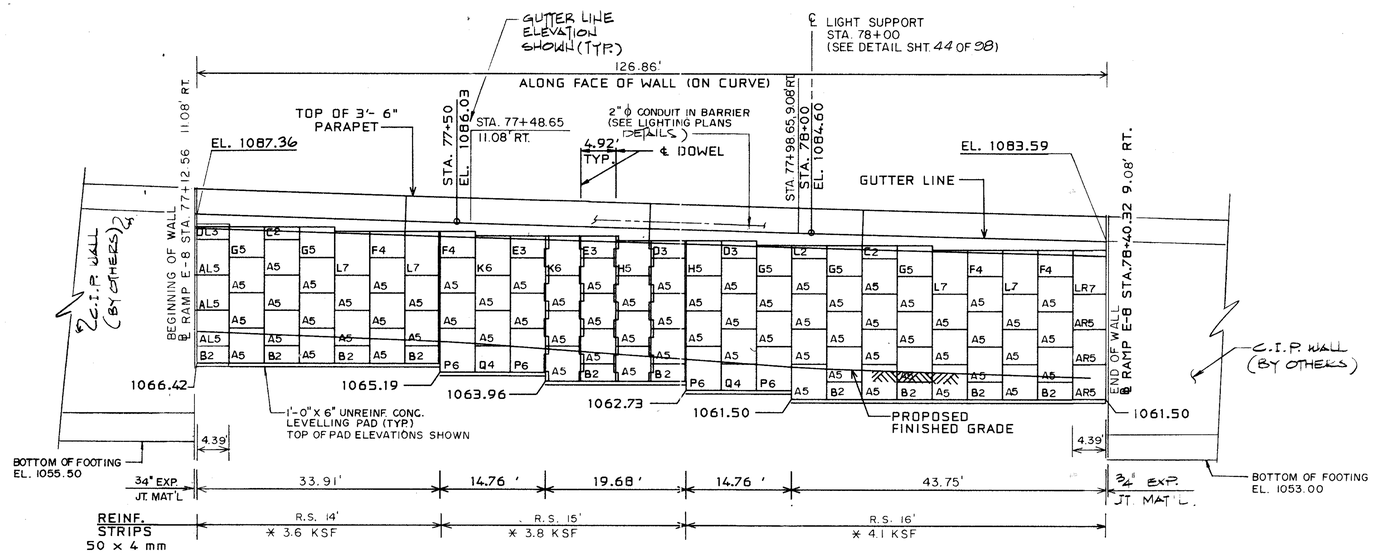

ELEVATION - FRONT FACE - WALL NO. 3

* SEE GENERAL NOTE 3 ON SHEET 21 (DESIGN CRITERIA)

CERTIFIED WITH RESPECT TO INTERNAL STABILITY OF REINFORCED EARTH STRUCTURES ONLY.

STATE OF OHIO — DAVID P. ALLEN — 48501 — REGISTERED PROFESSIONAL ENGINEER

THE DESIGN CONTAINED ON THESE DRAWINGS IS BASED ON INFORMATION PROVIDED BY THE OWNER. ON THE BASIS OF THIS INFORMATION, THE REINFORCED EARTH COMPANY HAS DESIGNED, AND IS RESPONSIBLE FOR THE INTERNAL STABILITY OF THE STRUCTURE ONLY. EXTERNAL STABILITY, INCLUDING FOUNDATION AND SLOPE STABILITY, IS THE RESPONSIBILITY OF THE OWNER.

"REINFORCED EARTH" IS THE REGISTERED TRADEMARK OF THE REINFORCED EARTH COMPANY.

This drawing contains information proprietary to The Reinforced Earth Company, and is being furnished for the use of OHIO D.O.T. only in connection with this project, and the information contained herein is not to be transmitted to any other organization unless specifically authorized in writing by The Reinforced Earth Company.
The Reinforced Earth Company is exclusive licensee in the United States under patents issued to Henri Vidal, and the furnishing of this drawing does not constitute an express or implied license under the Vidal patents.

WALL NO. 3

DESIGN 1

The Reinforced Earth Company
Corporate Headquarters · Mclean, Virginia
2010 Corporate Ridge Suite 1000 Mclean, Virginia 22102
(703) 821-1175

REV. NO.	DATE	DESCRIPTION

Structure	REINFORCED EARTH WALL
Location	AKRON OHIO
	AKRON EAST EXPRESSWAY
Owner	OHIO D.O.T
Drawn By	L.R
Checked By	AJP
Date	2/6/89
CONTRACT NO.	3154
DRAWING COVERS	PLAN & ELEVATION
DRAWING NO.	27 OF 98
SCALE	AS SHOWN

F.H.W.A. REG.	STATE	PROJECT	
5	OHIO		

734
1214

SUM-76-11.57

BASE LINE RAMP E-8
P.I. STA. 81+54.20
Δ = 8°-51'-32"
D_c = 3°-00'-00"
R = 1909.86'
T = 147.94'
L_c = 295.29'

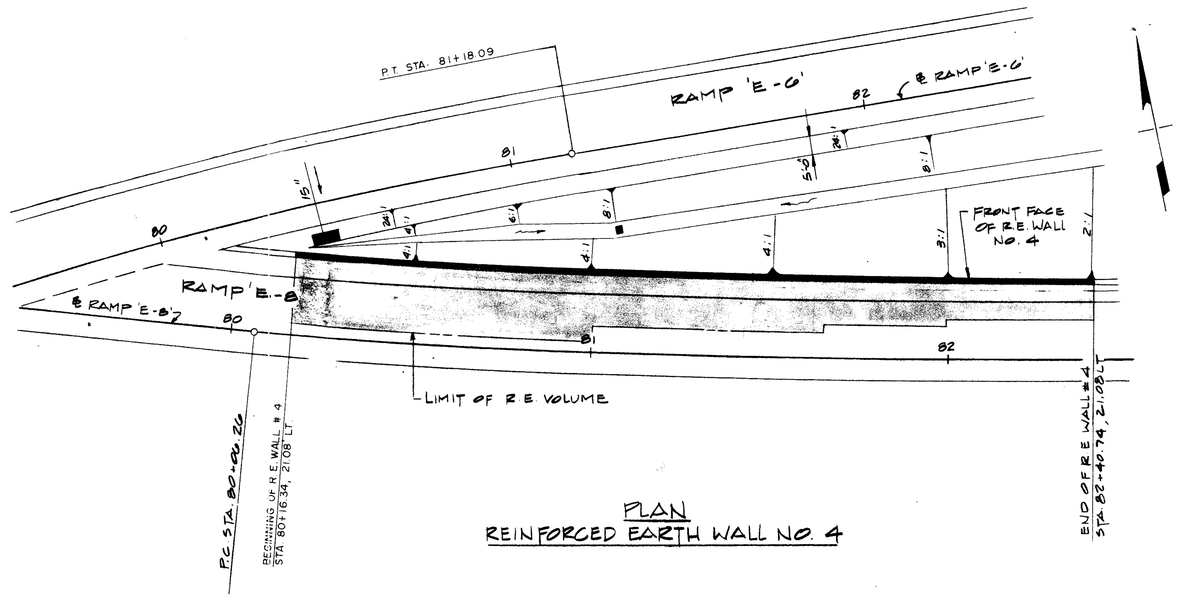

PLAN
REINFORCED EARTH WALL NO. 4

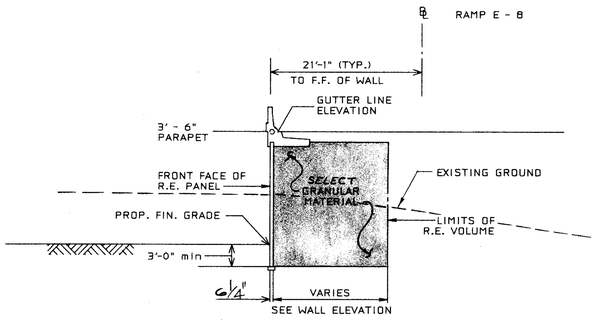

TYPICAL SECTION - WALL NO. 4

BASE LINE RAMP E-16
P.I. STA. 14+87.29
Δ = 27°-33'-55"
D_c = 7°-30'-00"
R = 763.94'
T = 187.40'
L_c = 367.54'

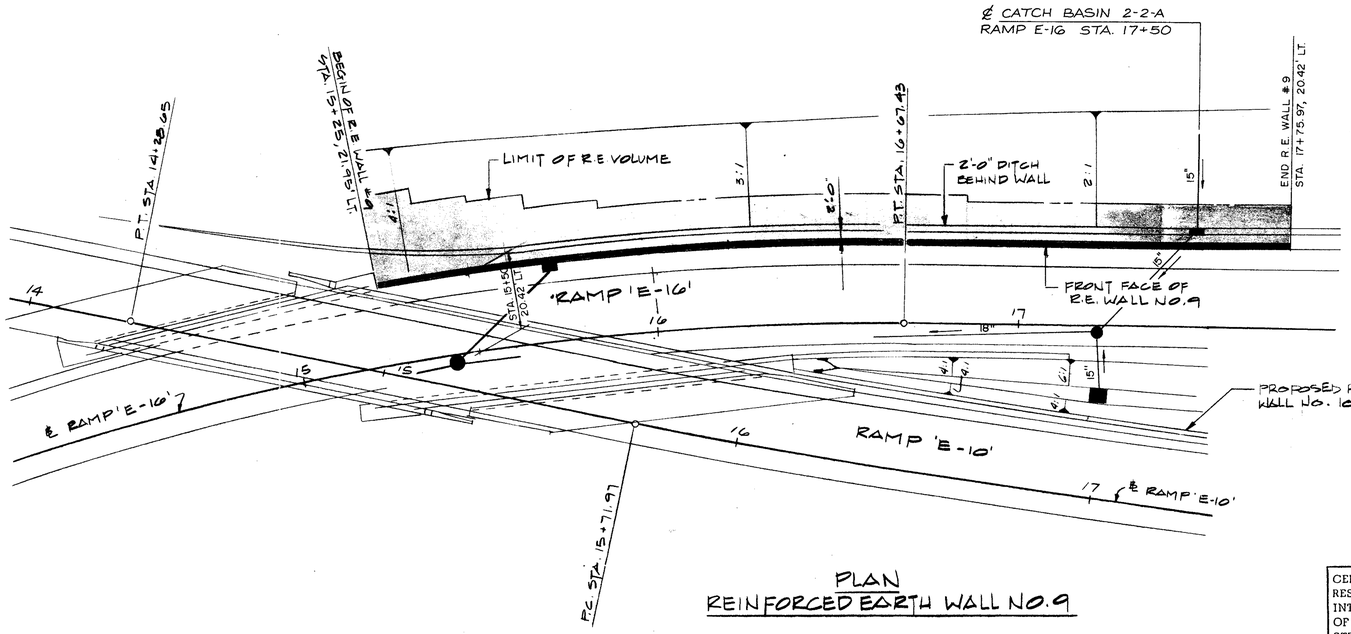

PLAN
REINFORCED EARTH WALL NO. 9

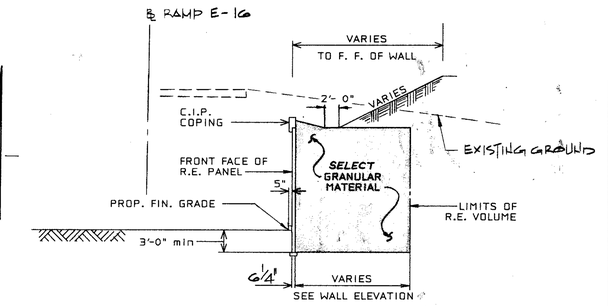

TYPICAL SECTION - WALL NO. 9

NOTE
1 CURB HEIGHT TO BE 6" BETWEEN STA. 15+25 AND STA. 17+65. TRANSITION CURB HEIGHT FROM 6" AT STA. 17+65 TO 3" HIGH AT STA. 17+75

CERTIFIED WITH RESPECT TO INTERNAL STABILITY OF REINFORCED EARTH STRUCTURES ONLY.

STATE OF OHIO · DAVID P. MILLER · 48801 · REGISTERED PROFESSIONAL ENGINEER

WALL NO. 4 & 9

DESIGN 1

reinforced earth

The Reinforced Earth Company
Corporate Headquarters · Mclean, Virginia
2010 Corporate Ridge Suite 1000 Mclean, Virginia 22102
(703) 821-1175

Structure	REINFORCED EARTH WALL
Location	AKRON OHIO
	AKRON EAST EXPRESSWAY
Owner	OHIO D.O.T.
DESIGNED BY: DCM	DATE
PROJECT ENGR: KAL	
CHECKED BY: AJP	12/5/89
PLAN WALL NOS. 4 & 9	

CONTRACT NO. 3154
DRAWING NO. 28 OF 98
SCALE

REV. NO.	DATE	DESCRIPTION

"REINFORCED EARTH" IS THE REGISTERED TRADEMARK OF THE REINFORCED EARTH COMPANY.

THE DESIGN CONTAINED ON THESE DRAWINGS IS BASED ON INFORMATION PROVIDED BY THE OWNER. ON THE BASIS OF THIS INFORMATION, THE REINFORCED EARTH COMPANY HAS DESIGNED, AND IS RESPONSIBLE FOR THE INTERNAL STABILITY OF THE STRUCTURE ONLY. EXTERNAL STABILITY, INCLUDING FOUNDATION AND SLOPE STABILITY, IS THE RESPONSIBILITY OF THE OWNER.

This drawing contains information proprietary to The Reinforced Earth Company, and is being furnished for the use of OHIO D.O.T only in connection with this project, and the information contained herein is not to be transmitted to any other organization unless specifically authorized in writing by The Reinforced Earth Company.
The Reinforced Earth Company is exclusive licensee in the United States under patents issued to Henri Vidal, and the furnishing of this drawing does not constitute an express or implied license under the Vidal patents.

F.H.W.A. REG.	STATE	PROJECT	
5	OHIO		

735
1214

SUM-76-11.57

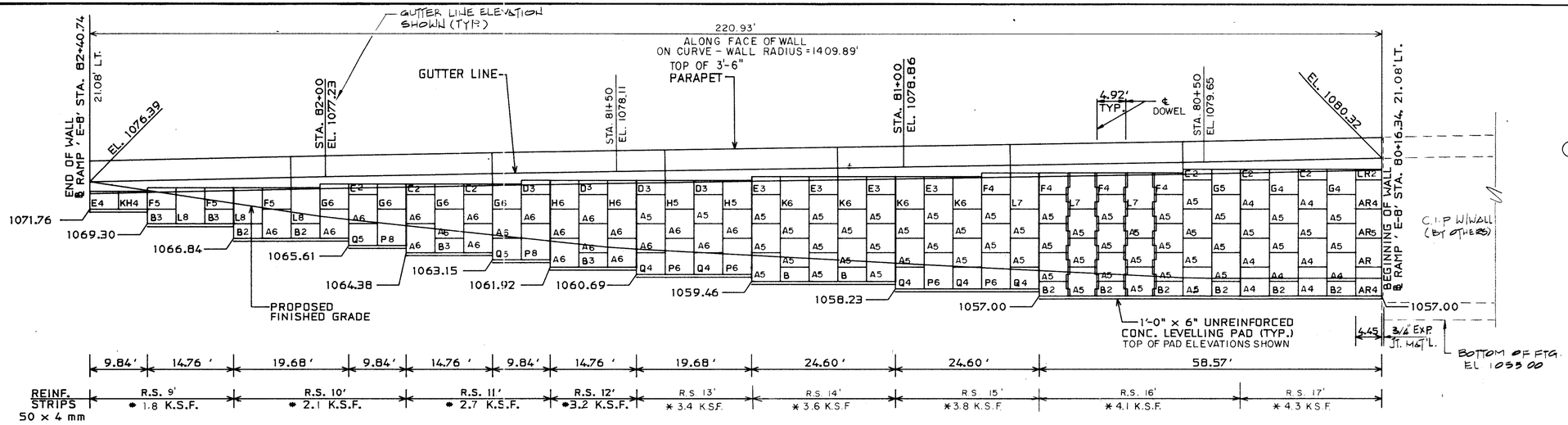

ELEVATION - FRONT FACE - WALL 4

(1) NOTE
COST OF CONCRETE FILL SHALL BE INCLUDED WITH ITEM 511, CLASS "C" CONCRETE, FOOTINGS. THE CONCRETE FILL SHALL EXTEND 1'-0" AND LINE UP WITH THE LEVELING PAD.

* SEE GENERAL NOTE 3 ON SHEET 21 (DESIGN CRITERIA)

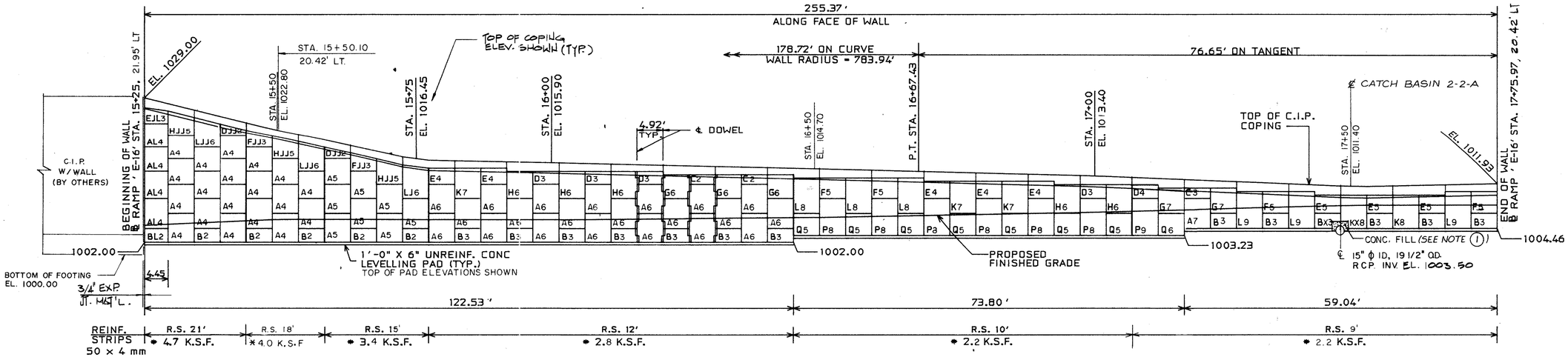

ELEVATION - FRONT FACE - WALL 9

CERTIFIED WITH RESPECT TO INTERNAL STABILITY OF REINFORCED EARTH STRUCTURES ONLY.
STATE OF OHIO DAVID P. HAMMOND 46801 REGISTERED PROFESSIONAL ENGINEER

WALL NO. 4 & 9

DESIGN 1

The Reinforced Earth Company
Corporate Headquarters • McLean, Virginia
2010 Corporate Ridge Suite 1000 McLean, Virginia 22102
(703) 821-1175

Structure	REINFORCED EARTH WALL
Location	AKRON OHIO
	AKRON EAST EXPRESSWAY
Owner	OHIO D.O.T.
DESIGNED BY: DCM	DATE
PROJECT ENGR: KAL	12/5/89
CHECKED BY: AJP	
CONTRACT NO.	3154
DRAWING NO.	290F98
SCALE	AS SHOWN
ELEVATION - WALL 4 & 9	

REV. NO.	DATE	DESCRIPTION

THE DESIGN CONTAINED ON THESE DRAWINGS IS BASED ON INFORMATION PROVIDED BY THE OWNER. ON THE BASIS OF THIS INFORMATION, The REINFORCED EARTH COMPANY HAS DESIGNED, AND IS RESPONSIBLE FOR THE INTERNAL STABILITY OF THE STRUCTURE ONLY. EXTERNAL STABILITY, INCLUDING FOUNDATION AND SLOPE STABILITY, IS THE RESPONSIBILITY OF THE OWNER.

"REINFORCED EARTH" IS THE REGISTERED TRADEMARK OF THE REINFORCED EARTH COMPANY.

This drawing contains information proprietary to The Reinforced Earth Company, and is being furnished for the use of OHIO D.O.T only in connection with this project, and the information contained herein is not to be transmitted to any other organization unless specifically authorized in writing by The Reinforced Earth Company.
The Reinforced Earth Company is exclusive licensee in the United States under patents issued to Henri Vidal, and the furnishing of this drawing does not constitute an express or implied license under the Vidal patents.

F.H.W.A. REG.	STATE	PROJECT	
5	OHIO		

736
1214

SUM - 76 - 11.57

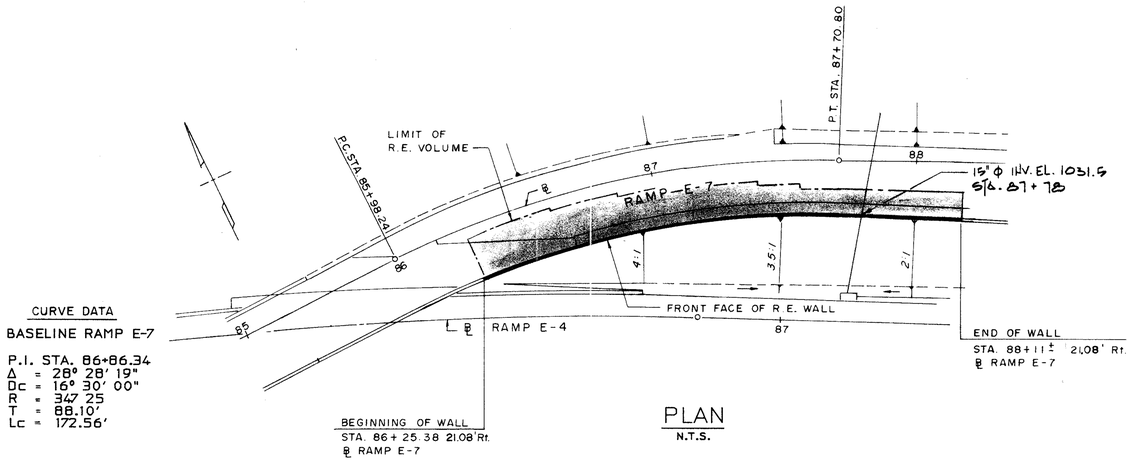

CURVE DATA

BASELINE RAMP E-7

P.I. STA. 86+86.34
Δ = 28° 28' 19"
Dc = 16° 30' 00"
R = 347.25
T = 88.10'
Lc = 172.56'

PLAN
N.T.S.

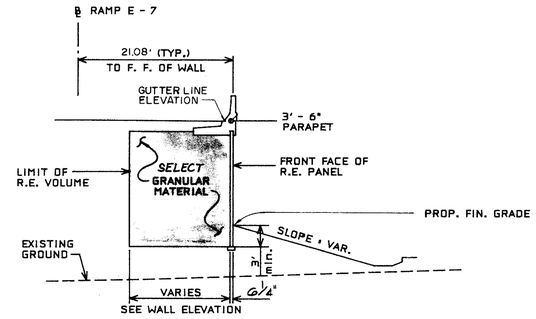

TYPICAL SECTION - WALL NO. 5

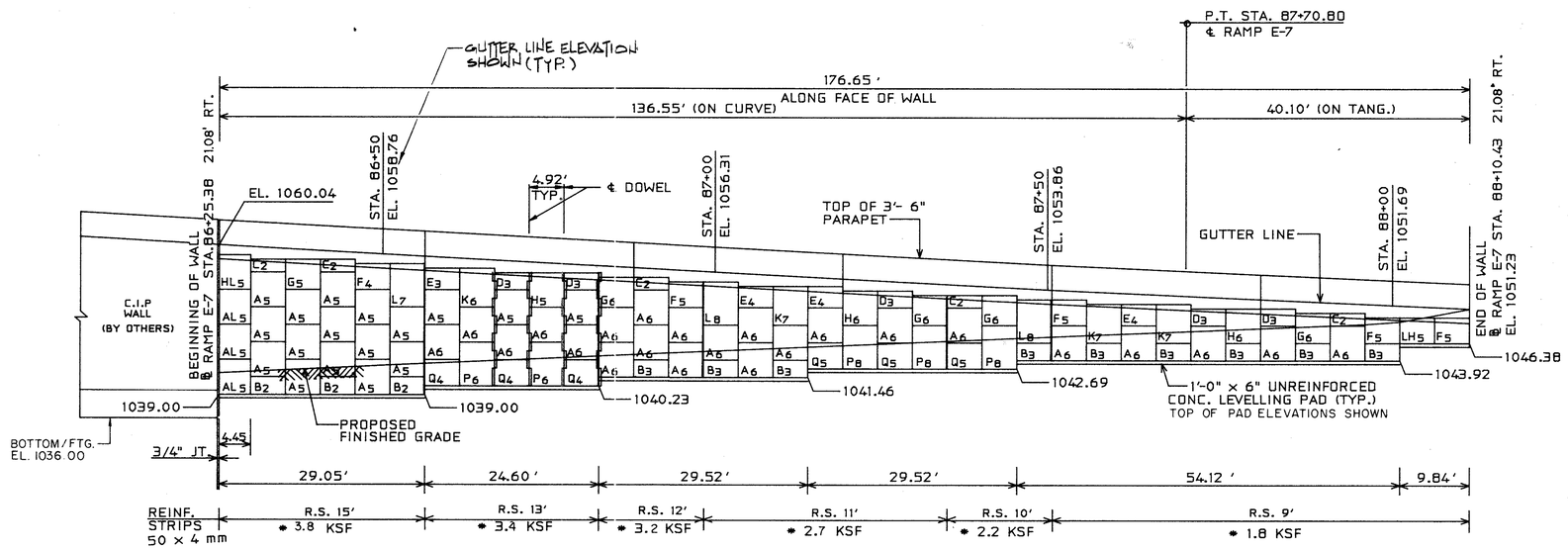

ELEVATION - FRONT FACE - WALL NO. 5

* SEE GENERAL NOTE 3 ON SHEET 21 (DESIGN CRITERIA)

CERTIFIED WITH RESPECT TO INTERNAL STABILITY OF REINFORCED EARTH STRUCTURES ONLY.

STATE OF OHIO — DAVID P. LEWITZKE — 46661 — REGISTERED PROFESSIONAL ENGINEER

WALL NO. 5

DESIGN 1

The Reinforced Earth Company
Corporate Headquarters • Mclean, Virginia
2010 Corporate Ridge Suite 1000 Mclean, Virginia 22102
(703) 821-1175

Structure	REINFORCED EARTH WALL
Location	AKRON OHIO
	AKRON EAST EXPRESSWAY
Owner	OHIO D.O.T.
Drawn By	L.R.
Checked By	A.J.P. Date 12/5/89
CONTRACT NO.	3154
DRAWING COVERS	PLAN, ELEVATION & SECTION
DRAWING NO.	30 OF 98
SCALE	AS SHOWN

REV. NO.	DATE	DESCRIPTION

THE DESIGN CONTAINED ON THESE DRAWINGS IS BASED ON INFORMATION PROVIDED BY THE OWNER. ON THE BASIS OF THIS INFORMATION, THE REINFORCED EARTH COMPANY HAS DESIGNED, AND IS RESPONSIBLE FOR THE INTERNAL STABILITY OF THE STRUCTURE ONLY. EXTERNAL STABILITY, INCLUDING FOUNDATION AND SLOPE STABILITY, IS THE RESPONSIBILITY OF THE OWNER.

"REINFORCED EARTH" IS THE REGISTERED TRADEMARK OF THE REINFORCED EARTH COMPANY.

This drawing contains information proprietary to The Reinforced Earth Company, and is being furnished for the use of OHIO D.O.T. only in connection with this project, and the information contained herein is not to be transmitted to any other organization unless specifically authorized in writing by The Reinforced Earth Company.
The Reinforced Earth Company is exclusive licensee in the United States under patents issued to Henri Vidal, and the furnishing of this drawing does not constitute an express or implied license under the Vidal patents.

F.H.W.A. REG.	STATE	PROJECT	
5	OHIO		

737
12/14

SUM - 76 - 11.57

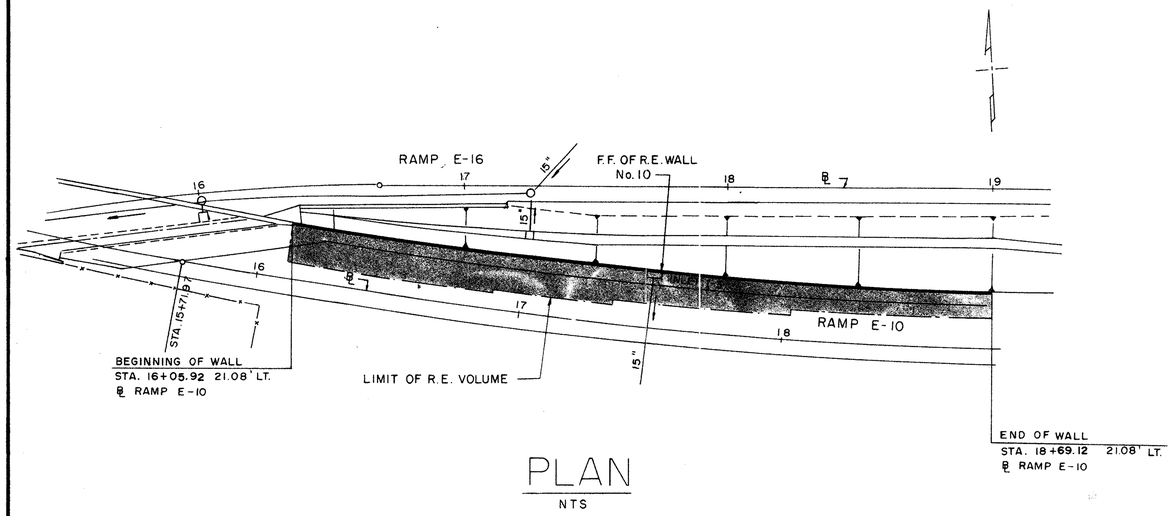

PLAN
NTS

CURVE DATA
BASELINE RAMP E-10
P.I. STA. 17+78.47
Δ = 12° 20' 33"
Dc = 3° 00' 00"
R = 1909.86
T = 206.51
Lc = 411.42'

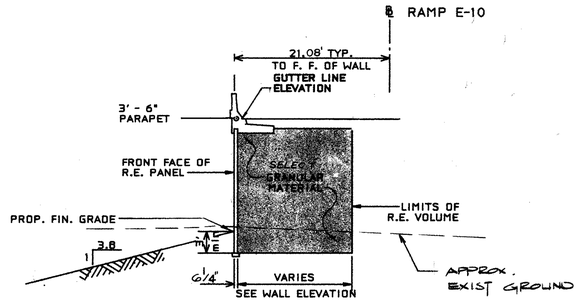

TYPICAL SECTION- WALL NO. 10

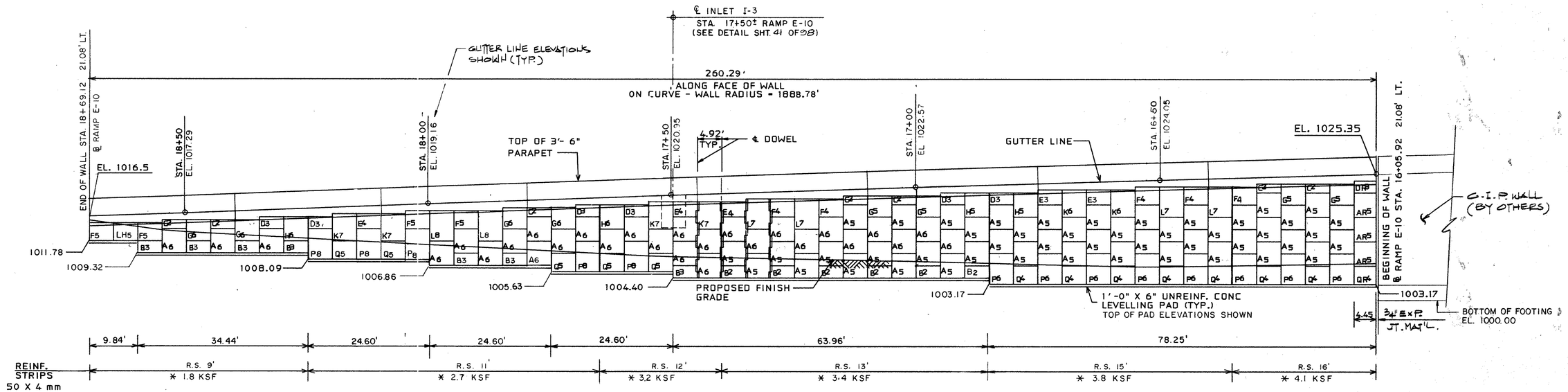

ELEVATION - FRONT FACE - WALL NO. 10

* SEE GENERAL NOTE 3 ON SHEET 21 (DESIGN CRITERIA)

CERTIFIED WITH RESPECT TO INTERNAL STABILITY OF REINFORCED EARTH STRUCTURES ONLY.
STATE OF OHIO DAVID P. [illegible] 46801 REGISTERED PROFESSIONAL ENGINEER

WALL NO. 10

DESIGN 1

The Reinforced Earth Company
Corporate Headquarters · Mclean, Virginia
2010 Corporate Ridge Suite 1000 Mclean, Virginia 22102
(703) 821-1175

Structure	REINFORCED EARTH WALL
Location	AKRON OHIO
	AKRON EAST EXPRESSWAY
Owner	OHIO D.O.T
Drawn By	L.R
Checked By	A.J.P
Date	12/5/88
CONTRACT NO.	3154
DRAWING COVERS	PLAN, ELEVATION & SECTION
DRAWING NO.	31 OF 98
SCALE	AS SHOWN

REV. NO.	DATE	DESCRIPTION

THE DESIGN CONTAINED ON THESE DRAWINGS IS BASED ON INFORMATION PROVIDED BY THE OWNER. ON THE BASIS OF THIS INFORMATION, THE REINFORCED EARTH COMPANY HAS DESIGNED, AND IS RESPONSIBLE FOR THE INTERNAL STABILITY OF THE STRUCTURE ONLY. EXTERNAL STABILITY, INCLUDING FOUNDATION AND SLOPE STABILITY, IS THE RESPONSIBILITY OF THE OWNER.

"REINFORCED EARTH" IS THE REGISTERED TRADEMARK OF THE REINFORCED EARTH COMPANY.

This drawing contains information proprietary to The Reinforced Earth Company, and is being furnished for the use of OHIO D.O.T. only in connection with this project, and the information contained herein is not to be transmitted to any other organization unless specifically authorized in writing by The Reinforced Earth Company.
The Reinforced Earth Company is exclusive licensee in the United States under patents issued to Henri Vidal, and the furnishing of this drawing does not constitute an express or implied license under the Vidal patents.

F.H.W.A. REG.	STATE	PROJECT	
5	OHIO		

738
12/14

SUM - 76 - 11.57

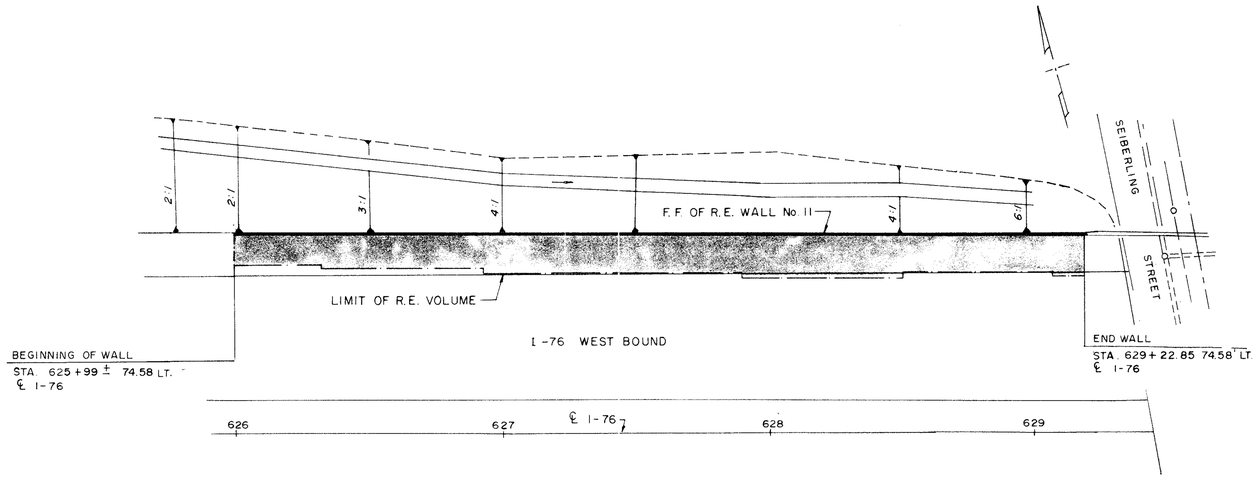

PLAN

NTS

THE DESIGN CONTAINED ON THESE DRAWINGS IS BASED ON INFORMATION PROVIDED BY THE OWNER. ON THE BASIS OF THIS INFORMATION, THE REINFORCED EARTH COMPANY HAS DESIGNED, AND IS RESPONSIBLE FOR THE INTERNAL STABILITY OF THE STRUCTURE ONLY. EXTERNAL STABILITY, INCLUDING FOUNDATION AND SLOPE STABILITY, IS THE RESPONSIBILITY OF THE OWNER.

"REINFORCED EARTH" IS THE REGISTERED TRADEMARK OF THE REINFORCED EARTH COMPANY.

This drawing contains information proprietary to The Reinforced Earth Company, and is being furnished for the use of OHIO D.O.T only in connection with this project, and the information contained herein is not to be transmitted to any other organization unless specifically authorized in writing by The Reinforced Earth Company. The Reinforced Earth Company is exclusive licensee in the United States under patents issued to Henri Vidal, and the furnishing of this drawing does not constitute an express or implied license under the Vidal patents.

CERTIFIED WITH RESPECT TO INTERNAL STABILITY OF REINFORCED EARTH STRUCTURES ONLY.

STATE OF OHIO — DAVID R. MONTGOMERY — 46801 — REGISTERED PROFESSIONAL ENGINEER

WALL NO. 11

DESIGN 1

REV. NO.	DATE	DESCRIPTION

The Reinforced Earth Company
Corporate Headquarters • McLean, Virginia
2010 Corporate Ridge Suite 1000 McLean, Virginia 22102
(703) 821-1175

Structure	REINFORCED EARTH WALL
Location	AKRON OHIO
	AKRON EAST EXPRESSWAY
Owner	OHIO D.O.T
Drawn By	L.R
Checked By	Date 12/5/89
DRAWING COVERS	PLAN
CONTRACT NO.	3154
DRAWING NO.	32 OF 38
SCALE	AS SHOWN

F.H.W.A. REG.	STATE	PROJECT	
5	OHIO		

739/1214

SUM - 76 - 11.57

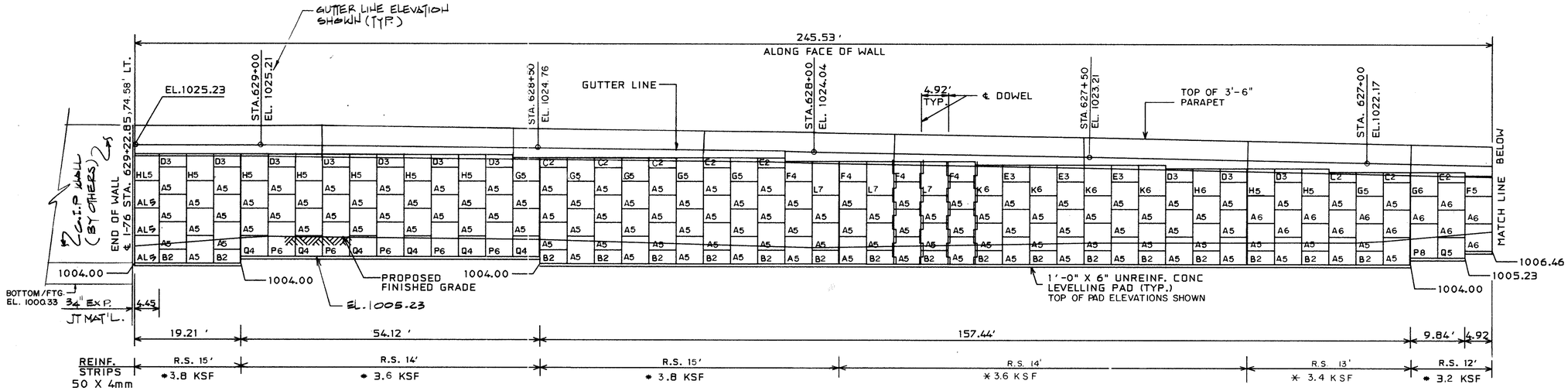

ELEVATION - FRONT FACE - WALL NO. 11

* SEE GENERAL NOTE 3 ON SHEET 21 (DESIGN CRITERIA)

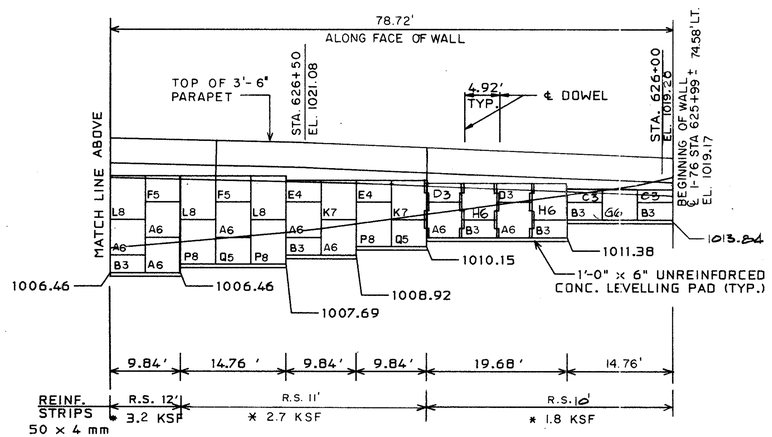

ELEVATION - FRONT FACE - WALL NO. 11

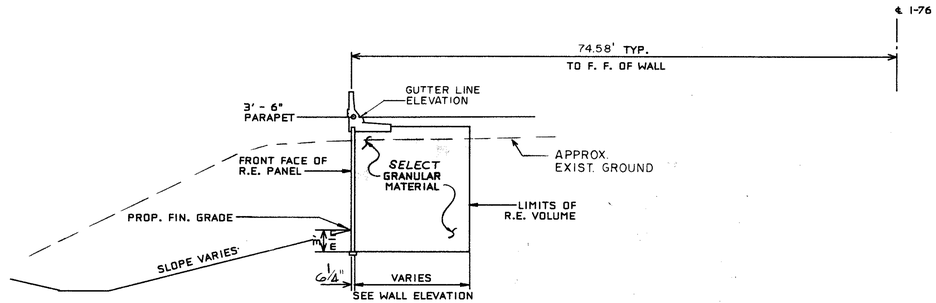

TYPICAL SECTION - WALL NO. 11

CERTIFIED WITH RESPECT TO INTERNAL STABILITY OF REINFORCED EARTH STRUCTURES ONLY.

STATE OF OHIO — DAVID P. [illegible] 46801 — REGISTERED PROFESSIONAL ENGINEER

"REINFORCED EARTH" IS THE REGISTERED TRADEMARK OF THE REINFORCED EARTH COMPANY.

THE DESIGN CONTAINED ON THESE DRAWINGS IS BASED ON INFORMATION PROVIDED BY THE OWNER. ON THE BASIS OF THIS INFORMATION, THE REINFORCED EARTH COMPANY HAS DESIGNED, AND IS RESPONSIBLE FOR THE INTERNAL STABILITY OF THE STRUCTURE ONLY. EXTERNAL STABILITY, INCLUDING FOUNDATION AND SLOPE STABILITY, IS THE RESPONSIBILITY OF THE OWNER.

This drawing contains information proprietary to The Reinforced Earth Company, and is being furnished for the use of OHIO D.O.T. only in connection with this project, and the information contained herein is not to be transmitted to any other organization unless specifically authorized in writing by The Reinforced Earth Company.
The Reinforced Earth Company is exclusive licensee in the United States under patents issued to Henri Vidal, and the furnishing of this drawing does not constitute an express or implied license under the Vidal patents.

WALL NO. 11

DESIGN 1

The Reinforced Earth Company
Corporate Headquarters • Mclean, Virginia
2010 Corporate Ridge Suite 1000 Mclean, Virginia 22102
(703) 821-1175

REV. NO.	DATE	DESCRIPTION

Structure	REINFORCED EARTH WALL
Location	AKRON OHIO
	AKRON EAST EXPRESSWAY
Owner	OHIO D.O.T.
Drawn By	L.R.
Checked By	A.J.P.
Date	12/5/89
CONTRACT NO.	3154
DRAWING COVERS	ELEVATION & SECTION
DRAWING NO.	33 OF 98
SCALE	1" = 10'-0"

F.H.W.A. REG	STATE	PROJECT	
5	OHIO		

740
1219

SUM - 76 - 11.57

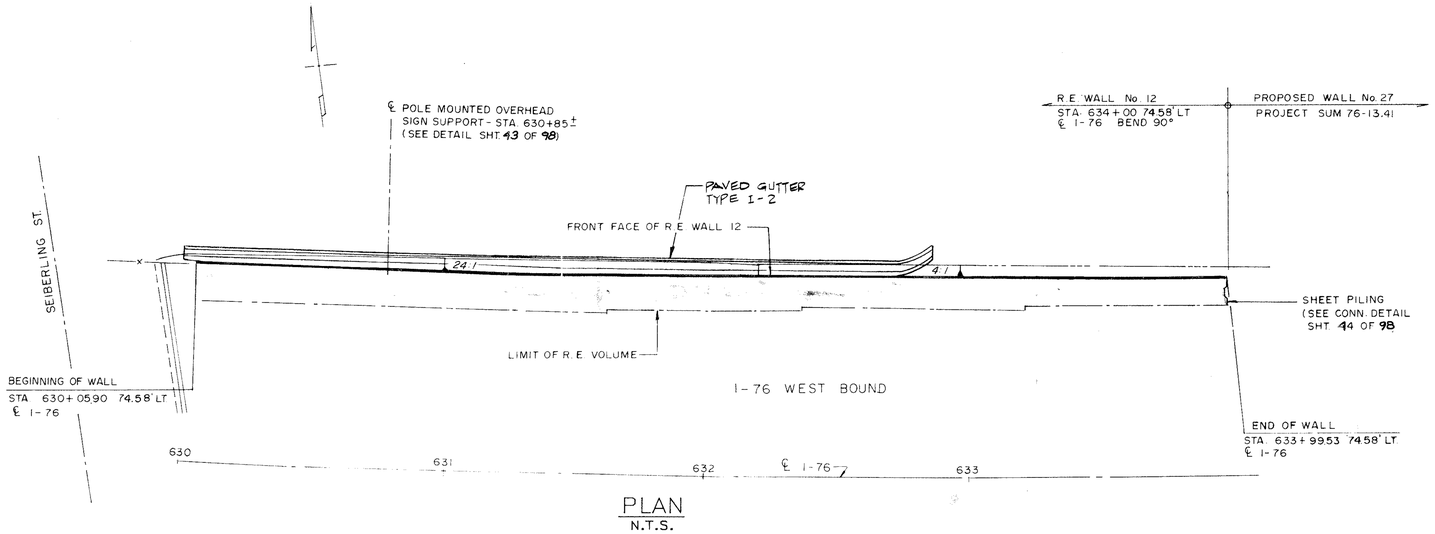

PLAN
N.T.S.

CURVE DATA

CENTERLINE I - 76

P.I. STA. 633+20.79
Δ = 6° 47' 01"
Dc = 1° 00, 00"
R = 5729.58'
T = 339.58'
Lc = 678.36'

THE DESIGN CONTAINED ON THESE DRAWINGS IS BASED ON INFORMATION PROVIDED BY THE OWNER. ON THE BASIS OF THIS INFORMATION, THE REINFORCED EARTH COMPANY HAS DESIGNED, AND IS RESPONSIBLE FOR THE INTERNAL STABILITY OF THE STRUCTURE ONLY. EXTERNAL STABILITY, INCLUDING FOUNDATION AND SLOPE STABILITY, IS THE RESPONSIBILITY OF THE OWNER.

"REINFORCED EARTH" IS THE REGISTERED TRADEMARK OF THE REINFORCED EARTH COMPANY.

This drawing contains information proprietary to The Reinforced Earth Company, and is being furnished for the use of OHIO D.O.T. only in connection with this project, and the information contained herein is not to be transmitted to any other organization unless specifically authorized in writing by The Reinforced Earth Company.
The Reinforced Earth Company is exclusive licensee in the United States under patents issued to Henri Vidal, and the furnishing of this drawing does not constitute an express or implied license under the Vidal patents.

CERTIFIED WITH RESPECT TO INTERNAL STABILITY OF REINFORCED EARTH STRUCTURES ONLY.

STATE OF OHIO · DAVID P. [illegible] · 48801 · REGISTERED PROFESSIONAL ENGINEER

WALL NO. 12

DESIGN 1

reinforced earth
The Reinforced Earth Company
Corporate Headquarters · Mclean, Virginia
2010 Corporate Ridge Suite 1000 Mclean, Virginia 22102
(703) 821-1175

REV. NO.	DATE	DESCRIPTION

Structure	REINFORCED EARTH WALL
Location	AKRON OHIO
	AKRON EAST EXPRESSWAY
Owner	OHIO D.O.T.
Drawn By	L.R.
Checked By	Date 8/31/90
DRAWING COVERS	PLAN
CONTRACT NO.	3154
DRAWING NO.	34 OF 98
SCALE	N.T.S

F.H.W.A. REG	STATE	PROJECT	
5	OHIO		

741/1214

SUM - 76 - 11.57

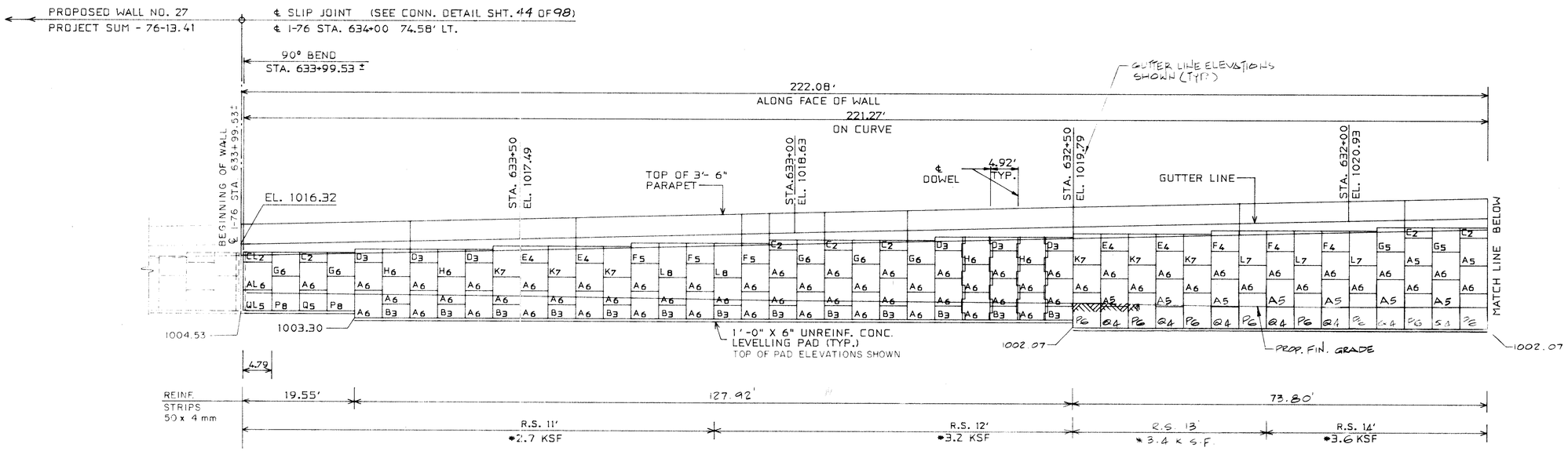

ELEVATION - FRONT FACE - WALL NO. 12

* SEE GENERAL NOTE 3 ON SHEET 21 (DESIGN CRITERIA)

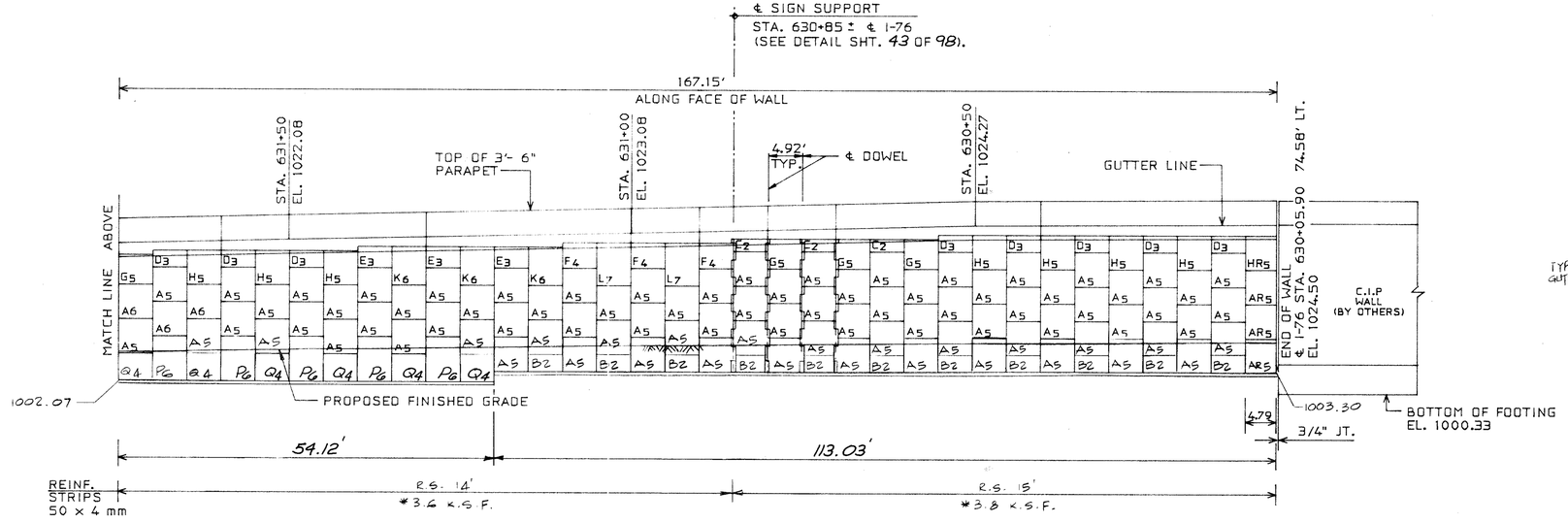

ELEVATION - FRONT FACE - WALL NO. 12

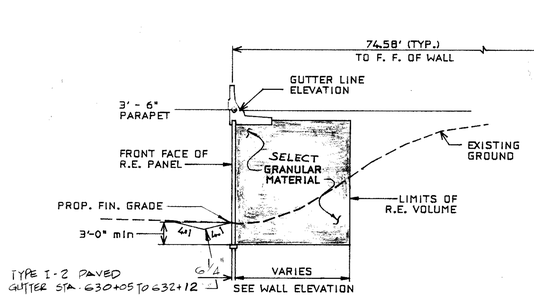

TYPICAL SECTION - WALL NO. 12

THE DESIGN CONTAINED ON THESE DRAWINGS IS BASED ON INFORMATION PROVIDED BY THE OWNER. ON THE BASIS OF THIS INFORMATION, THE REINFORCED EARTH COMPANY HAS DESIGNED, AND IS RESPONSIBLE FOR THE INTERNAL STABILITY OF THE STRUCTURE ONLY. EXTERNAL STABILITY, INCLUDING FOUNDATION AND SLOPE STABILITY, IS THE RESPONSIBILITY OF THE OWNER.

"REINFORCED EARTH" IS THE REGISTERED TRADEMARK OF THE REINFORCED EARTH COMPANY.

This drawing contains information proprietary to The Reinforced Earth Company, and is being furnished for the use of OHIO D.O.T. only in connection with this project, and the information contained herein is not to be transmitted to any other organization unless specifically authorized in writing by The Reinforced Earth Company.
The Reinforced Earth Company is exclusive licensee in the United States under patents issued to Henri Vidal, and the furnishing of this drawing does not constitute an express or implied license under the Vidal patents.

CERTIFIED WITH RESPECT TO INTERNAL STABILITY OF REINFORCED EARTH STRUCTURES ONLY.

STATE OF OHIO · DAVID P. GILLIS · 19801 · REGISTERED PROFESSIONAL ENGINEER

WALL NO. 12

DESIGN 1

The Reinforced Earth Company
Corporate Headquarters · Mclean, Virginia
2010 Corporate Ridge Suite 1000 Mclean, Virginia 22102
(703) 821-1175

REV NO.	DATE	DESCRIPTION

Structure	REINFORCED EARTH WALL
Location	AKRON OHIO
	AKRON EAST EXPRESSWAY
Owner	OHIO D.O.T.
Drawn By	L.R.
Checked By	Date 8/31/90
CONTRACT NO.	3154
DRAWING COVERS	ELEVATION & SECTION
DRAWING NO.	35 OF 98
SCALE	1"=10'-0"

F.H.W.A. REG.	STATE	PROJECT	
5	OHIO		

742
1214

SUM - 76 - 11.57

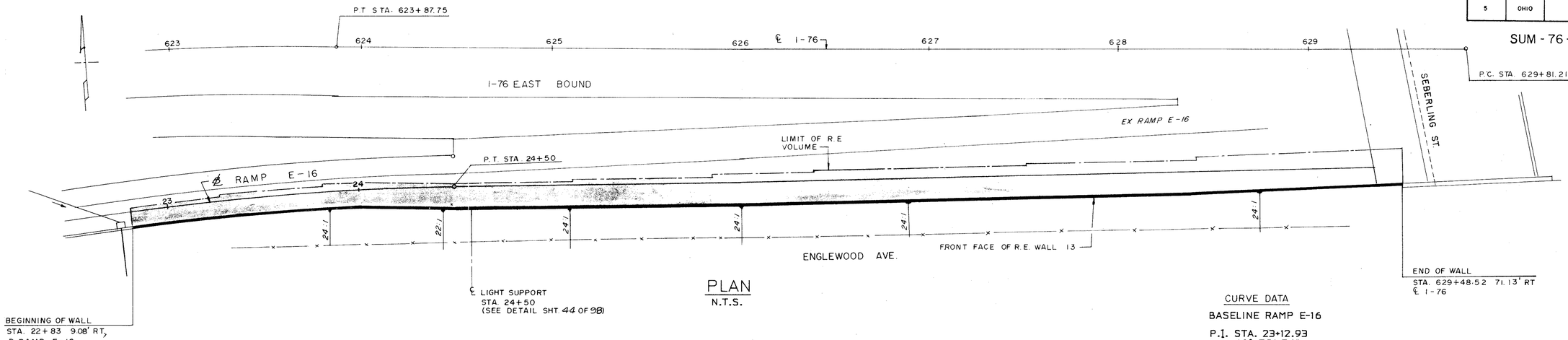

PLAN
N.T.S.

CURVE DATA

BASELINE RAMP E-16

P.I. STA. 23+12.93
Δ = 10° 59' 56"
Dc = 4° 00' 00"
R = 1432.39'
T = 137.91'
Lc = 274.97'

WALL OFFSET TABLE	
STA. ALONG ℄ RAMP E-16	OFFSET TO FACE OF WALL
22+83	9.08'
24+00	9.08'
24+50	11.08'
STA. ALONG ℄ I - 76	OFFSET TO FACE OF WALL
624+50	83.59'
625+00	79.84'
629+48.52	69.90'

CERTIFIED WITH RESPECT TO INTERNAL STABILITY OF REINFORCED EARTH STRUCTURES ONLY.

STATE OF OHIO
DAVID P. RINEHART
16801
REGISTERED PROFESSIONAL ENGINEER

WALL NO. 13

DESIGN 1

THE DESIGN CONTAINED ON THESE DRAWINGS IS BASED ON INFORMATION PROVIDED BY THE OWNER. ON THE BASIS OF THIS INFORMATION, THE REINFORCED EARTH COMPANY HAS DESIGNED, AND IS RESPONSIBLE FOR THE INTERNAL STABILITY OF THE STRUCTURE ONLY. EXTERNAL STABILITY, INCLUDING FOUNDATION AND SLOPE STABILITY, IS THE RESPONSIBILITY OF THE OWNER.

"REINFORCED EARTH" IS THE REGISTERED TRADEMARK OF THE REINFORCED EARTH COMPANY.

This drawing contains information proprietary to The Reinforced Earth Company, and is being furnished for the use of OHIO D.O.T. only in connection with this project, and the information contained herein is not to be transmitted to any other organization unless specifically authorized in writing by The Reinforced Earth Company.
The Reinforced Earth Company is exclusive licensee in the United States under patents issued to Henri Vidal, and the furnishing of this drawing does not constitute an express or implied license under the Vidal patents.

REV. NO.	DATE	DESCRIPTION

reinforced earth
The Reinforced Earth Company
Corporate Headquarters · Mclean, Virginia
2010 Corporate Ridge Suite 1000 Mclean, Virginia 22102
(703) 821-1175

Structure	REINFORCED EARTH WALL
Location	AKRON OHIO
	AKRON EAST EXPRESSWAY
Owner	OHIO D.O.T.
Drawn By	L.R.
Checked By	Date 12/9/89
CONTRACT NO.	3154
DRAWING COVERS	PLAN
DRAWING NO.	36 OF 98
SCALE	N.T.S.

FHWA REG	STATE	PROJECT	
5	OHIO		

743
1214

SUM - 76 - 11.57

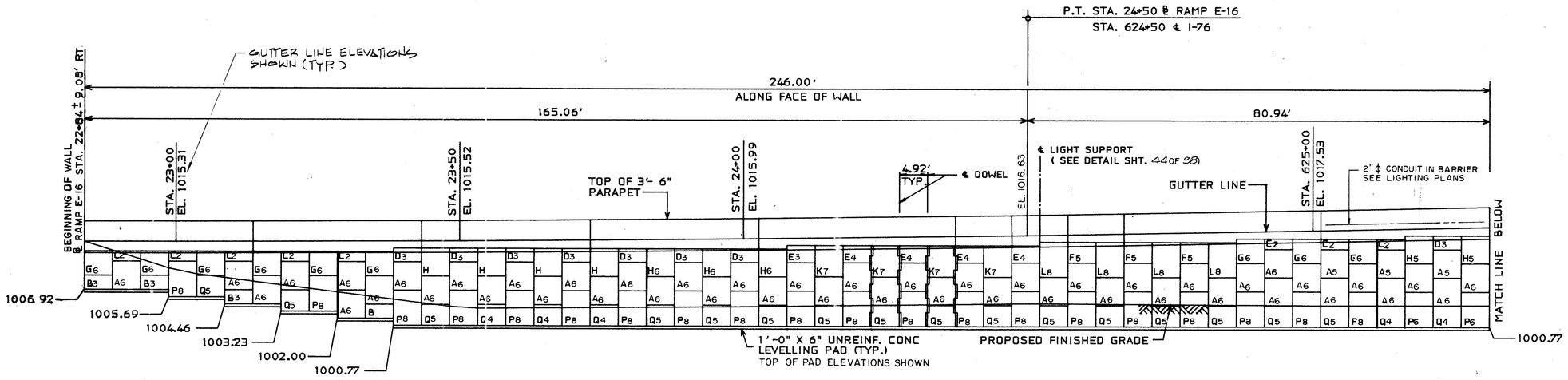

ELEVATION - FRONT FACE - WALL NO. 13

* SEE GENERAL NOTE 3 ON SHEET 21 (DESIGN CRITERIA)

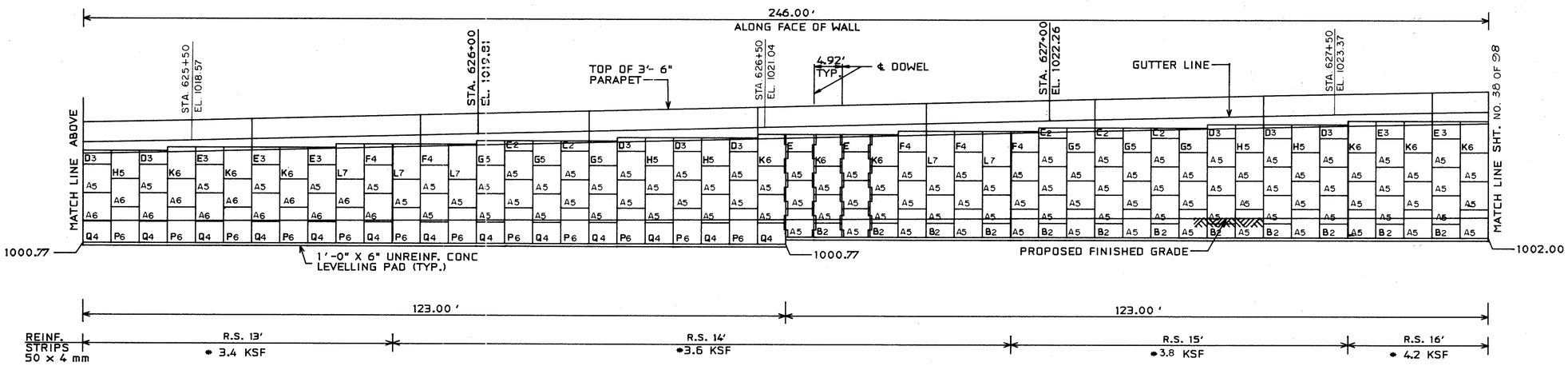

ELEVATION - FRONT FACE - WALL NO. 13

CERTIFIED WITH RESPECT TO INTERNAL STABILITY OF REINFORCED EARTH STRUCTURES ONLY.

STATE OF OHIO · AJP · 49911 · REGISTERED PROFESSIONAL ENGINEER

"REINFORCED EARTH" IS THE REGISTERED TRADEMARK OF THE REINFORCED EARTH COMPANY.

This drawing contains information proprietary to The Reinforced Earth Company, and is being furnished for the use of OHIO D.O.T. only in connection with this project, and the information contained herein is not to be transmitted to any other organization unless specifically authorized in writing by The Reinforced Earth Company.
The Reinforced Earth Company is exclusive licensee in the United States under patents issued to Henri Vidal, and the furnishing of this drawing does not constitute an express or implied license under the Vidal patents.

THE DESIGN CONTAINED ON THESE DRAWINGS IS BASED ON INFORMATION PROVIDED BY THE OWNER. ON THE BASIS OF THIS INFORMATION, THE REINFORCED EARTH COMPANY HAS DESIGNED, AND IS RESPONSIBLE FOR THE INTERNAL STABILITY OF THE STRUCTURE ONLY. EXTERNAL STABILITY, INCLUDING FOUNDATION AND SLOPE STABILITY, IS THE RESPONSIBILITY OF THE OWNER.

WALL NO. 13

DESIGN 1

The Reinforced Earth Company
Corporate Headquarters · Mclean, Virginia
2010 Corporate Ridge Suite 1000 Mclean, Virginia 22102
(703) 821-1175

REV NO.	DATE	DESCRIPTION

Structure	REINFORCED EARTH WALL
Location	AKRON OHIO
	AKRON EAST EXPRESSWAY
Owner	OHIO D.O.T.
Drawn By	L.R
Checked By	AJP
Date	12/5/89
CONTRACT NO.	3154
DRAWING COVERS	ELEVATION
DRAWING NO.	37 OF 98
SCALE	1" = 10'-0"

FHWA REG	STATE	PROJECT	
5	OHIO		

744
1214

SUM - 76 - 11.57

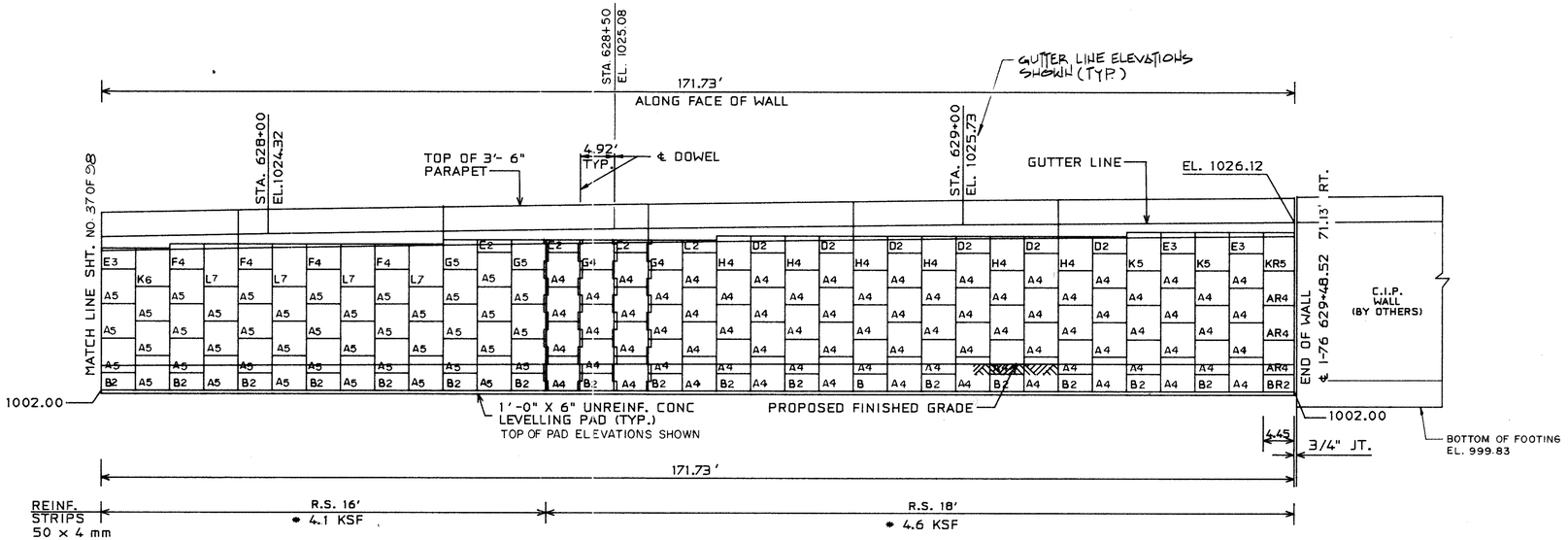

ELEVATION - FRONT FACE - WALL NO. 13

* SEE GENERAL NOTE 3 ON SHEET 21 (DESIGN CRITERIA)

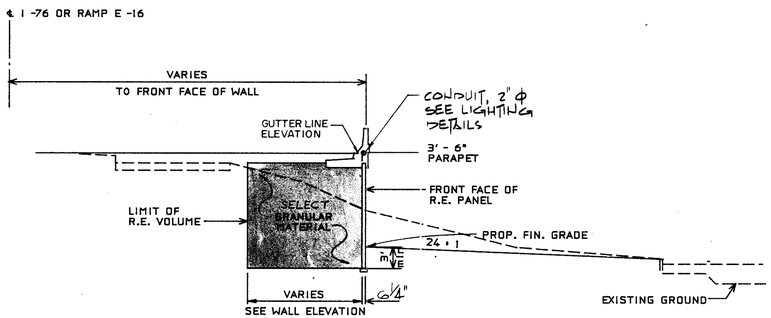

TYPICAL SECTION - WALL NO. 13

CERTIFIED WITH RESPECT TO INTERNAL STABILITY OF REINFORCED EARTH STRUCTURES ONLY.

STATE OF OHIO · DAVID P. [illegible] · 48801 · REGISTERED PROFESSIONAL ENGINEER

WALL NO. 13

DESIGN 1

The Reinforced Earth Company
Corporate Headquarters · Mclean, Virginia
2010 Corporate Ridge Suite 1000 Mclean, Virginia 22102
(703) 821-1175

Structure	REINFORCED EARTH WALL
Location	AKRON OHIO
	AKRON EAST EXPRESSWAY
Owner	OHIO D.O.T.
Drawn By	L.R.
Checked By	Date 12/9/89
CONTRACT NO.	3154
DRAWING COVERS	ELEVATION
DRAWING NO.	38 OF 98
SCALE	1" = 10'-0"

REV. NO.	DATE	DESCRIPTION

THE DESIGN CONTAINED ON THESE DRAWINGS IS BASED ON INFORMATION PROVIDED BY THE OWNER. ON THE BASIS OF THIS INFORMATION, THE REINFORCED EARTH COMPANY HAS DESIGNED, AND IS RESPONSIBLE FOR THE INTERNAL STABILITY OF THE STRUCTURE ONLY. EXTERNAL STABILITY, INCLUDING FOUNDATION AND SLOPE STABILITY, IS THE RESPONSIBILITY OF THE OWNER.

"REINFORCED EARTH" IS THE REGISTERED TRADEMARK OF THE REINFORCED EARTH COMPANY.

This drawing contains information proprietary to The Reinforced Earth Company, and is being furnished for the use of OHIO D.O.T. only in connection with this project, and the information contained herein is not to be transmitted to any other organization unless specifically authorized in writing by The Reinforced Earth Company.
The Reinforced Earth Company is exclusive licensee in the United States under patents issued to Henri Vidal, and the furnishing of this drawing does not constitute an express or implied license under the Vidal patents.

F.H.W.A. REG.	STATE	PROJECT	
5	OHIO		

745
12/12

SUM - 76 - 11.57

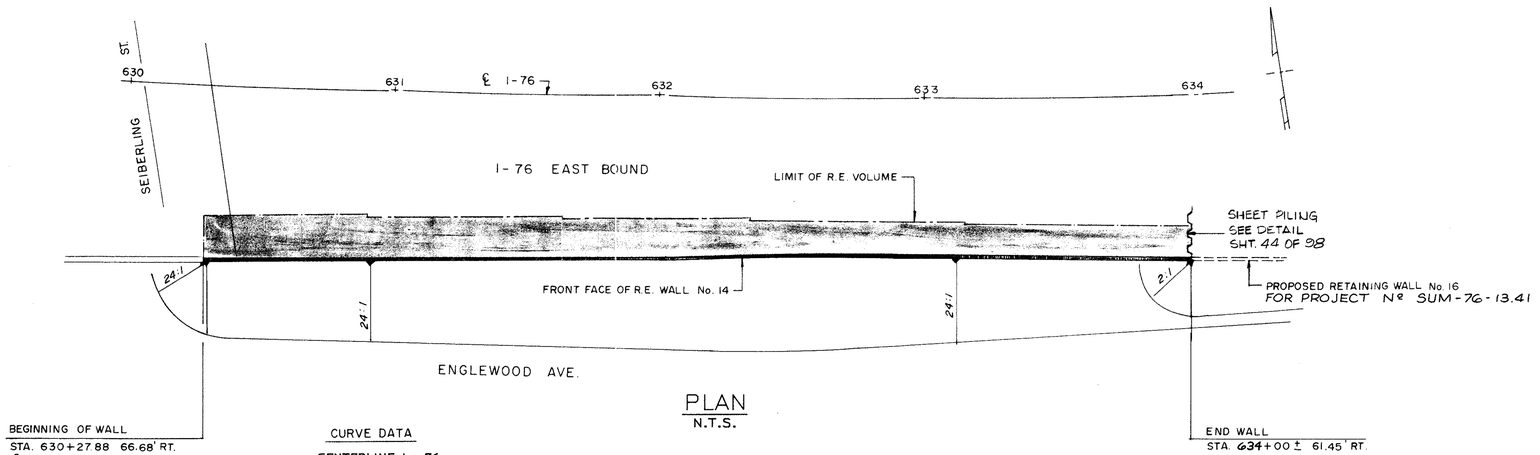

PLAN
N.T.S.

BEGINNING OF WALL
STA. 630+27.88 66.68' RT.
℄ I-76

CURVE DATA

CENTERLINE I - 76

P. I. STA. 633+20.79
Δ = 6° 47' 01"
Dc = 1° 00' 00"
R = 5729.58'
T = 339.58
Lc = 678.36

END WALL
STA. 634+00 ± 61.45' RT.

WALL OFFSET TABLE	
STA. ALONG ℄ I-76	OFFSET TO FACE OF WALL
630+27.88	66.68'
631+00	64.15
631+50	62.67'
632+00	61.42'
632+50	60.40'
632+90	59.74'
633+50	60.54'
634+00	61.45

CERTIFIED WITH RESPECT TO INTERNAL STABILITY OF REINFORCED EARTH STRUCTURES ONLY.

STATE OF OHIO · DAVID P. WHITTLESEY · 16801 · REGISTERED PROFESSIONAL ENGINEER

WALL NO. 14

DESIGN 1

THE DESIGN CONTAINED ON THESE DRAWINGS IS BASED ON INFORMATION PROVIDED BY THE OWNER. ON THE BASIS OF THIS INFORMATION, THE REINFORCED EARTH COMPANY HAS DESIGNED, AND IS RESPONSIBLE FOR THE INTERNAL STABILITY OF THE STRUCTURE ONLY. EXTERNAL STABILITY, INCLUDING FOUNDATION AND SLOPE STABILITY, IS THE RESPONSIBILITY OF THE OWNER.

"REINFORCED EARTH" IS THE REGISTERED TRADEMARK OF THE REINFORCED EARTH COMPANY.

This drawing contains information proprietary to The Reinforced Earth Company, and is being furnished for the use of OHIO D.O.T. only in connection with this project, and the information contained herein is not to be transmitted to any other organization unless specifically authorized in writing by The Reinforced Earth Company.
The Reinforced Earth Company is exclusive licensee in the United States under patents issued to Henri Vidal, and the furnishing of this drawing does not constitute an express or implied license under the Vidal patents.

reinforced earth
The Reinforced Earth Company
Corporate Headquarters · Mclean, Virginia
2010 Corporate Ridge Suite 1000 Mclean, Virginia 22102
(703) 821-1175

REV. NO.	DATE	DESCRIPTION

Structure	REINFORCED EARTH WALL
Location	AKRON OHIO
	AKRON EAST EXPRESSWAY
Owner	OHIO D.O.T.
Drawn By	L.R
Checked By	Date 12/5/89
DRAWING COVERS	PLAN
CONTRACT NO.	3154
DRAWING NO.	39 OF 98
SCALE	NTS

F.H.W.A. DIST.	STATE	PROJECT	
*	OHIO		

746/1219

SUM - 76 - 11.57

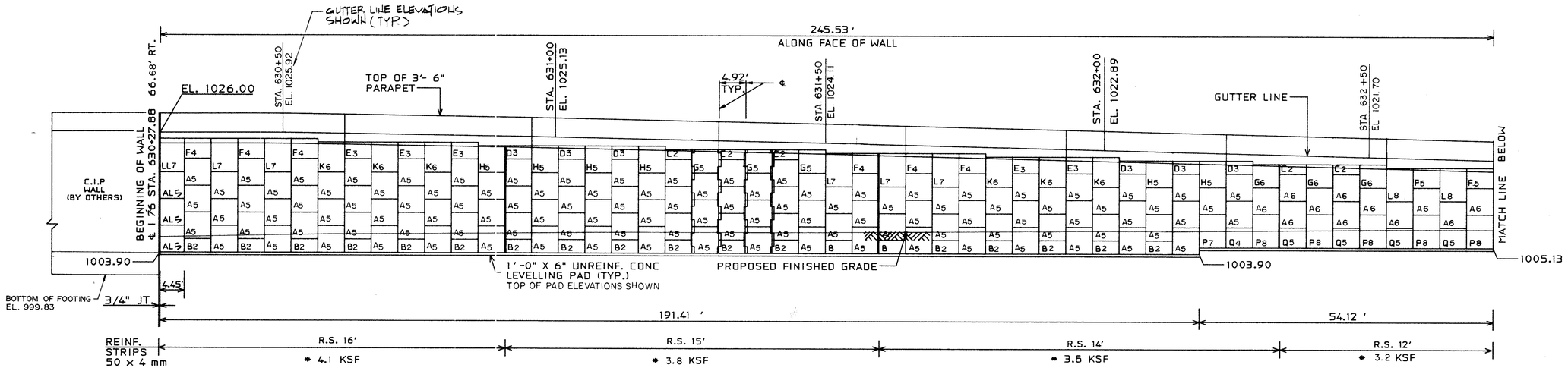

ELEVATION - FRONT FACE - WALL NO. 14

* SEE GENERAL NOTE 3 ON SHEET 21 (DESIGN CRITERIA)

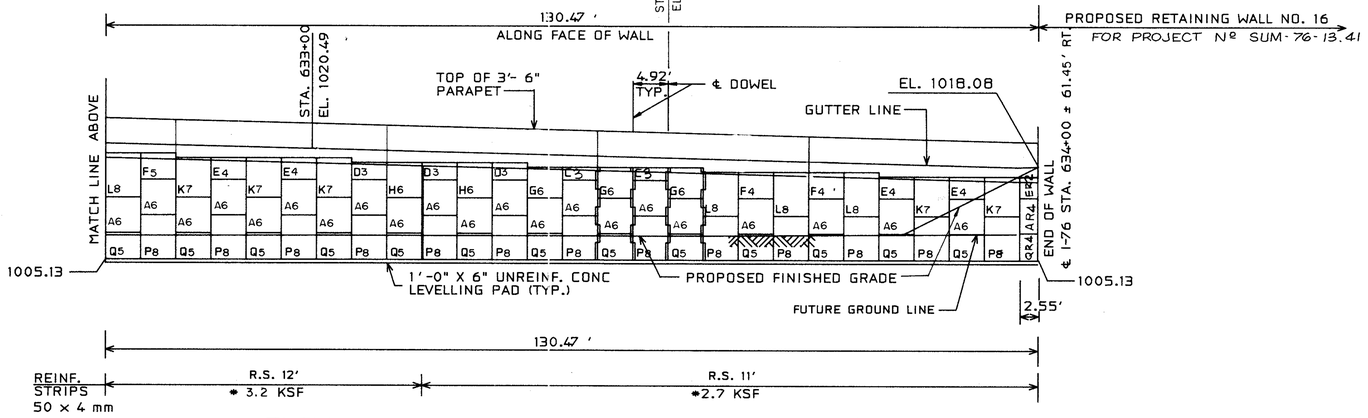

ELEVATION - FRONT FACE - WALL NO. 14

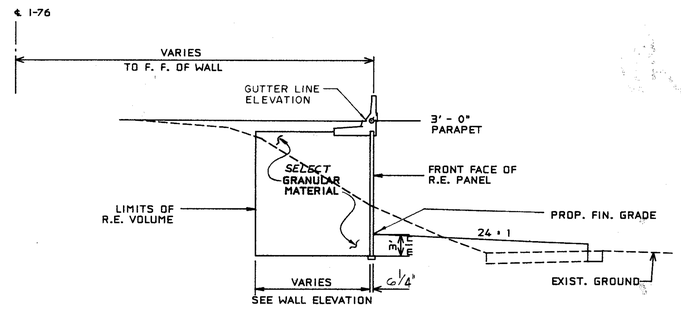

TYPICAL SECTION - WALL NO. 14

CERTIFIED WITH RESPECT TO INTERNAL STABILITY OF REINFORCED EARTH STRUCTURES ONLY.

STATE OF OHIO — DAVID B. PITTMAN — 48801 — REGISTERED PROFESSIONAL ENGINEER

THE DESIGN CONTAINED ON THESE DRAWINGS IS BASED ON INFORMATION PROVIDED BY THE OWNER. ON THE BASIS OF THIS INFORMATION, THE REINFORCED EARTH COMPANY HAS DESIGNED, AND IS RESPONSIBLE FOR THE INTERNAL STABILITY OF THE STRUCTURE ONLY. EXTERNAL STABILITY, INCLUDING FOUNDATION AND SLOPE STABILITY, IS THE RESPONSIBILITY OF THE OWNER.

"REINFORCED EARTH" IS THE REGISTERED TRADEMARK OF THE REINFORCED EARTH COMPANY.

This drawing contains information proprietary to The Reinforced Earth Company, and is being furnished for the use of OHIO D.O.T. only in connection with this project, and the information contained herein is not to be transmitted to any other organization unless specifically authorized in writing by The Reinforced Earth Company.
The Reinforced Earth Company is exclusive licensee in the United States under patents issued to Henri Vidal, and the furnishing of this drawing does not constitute an express or implied license under the Vidal patents.

WALL NO. 14

DESIGN 1

The Reinforced Earth Company
Corporate Headquarters · Mclean, Virginia
2010 Corporate Ridge Suite 1000 Mclean, Virginia 22102
(703) 821-1175

REV NO.	DATE	DESCRIPTION

Structure	REINFORCED EARTH WALL
Location	AKRON OHIO
	AKRON EAST EXPRESSWAY
Owner	OHIO D.O.T.
Drawn By L.R	CONTRACT NO. 3154
Checked By Date 12/5/89	
DRAWING COVERS ELEVATION & SECTION	DRAWING NO. 40 OF 98
	SCALE 1" = 10'-0"

FHWA REG	STATE	PROJECT	
5	OHIO		

747
1214

SUM - 76 - 11.57

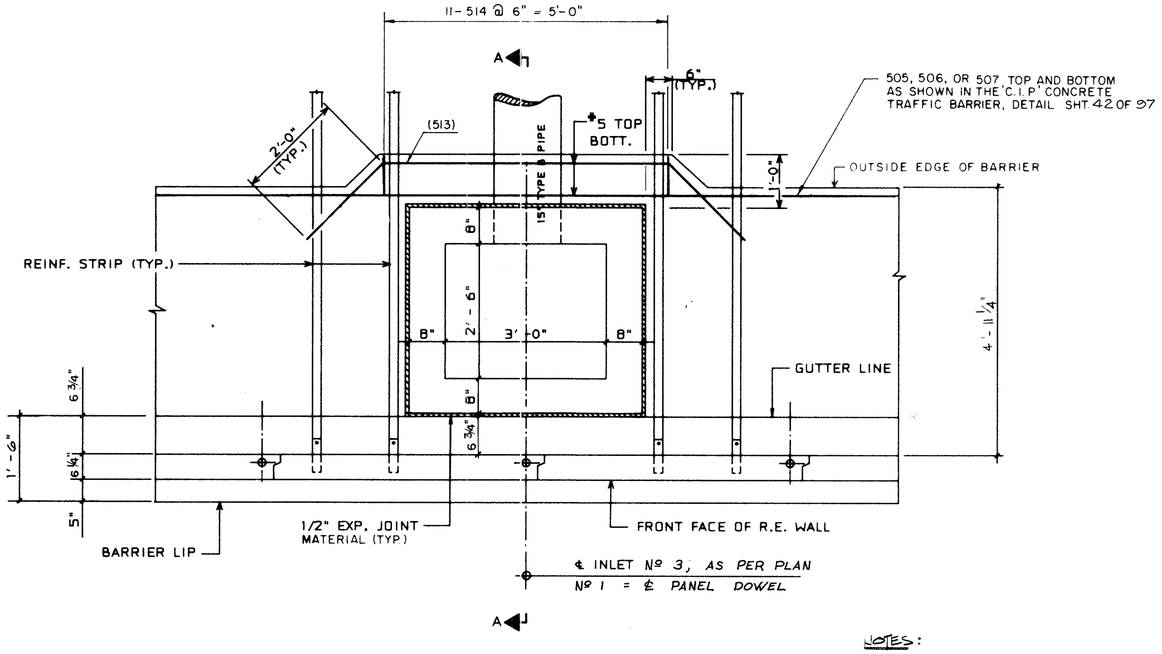

PLAN

INLET 1 - 3 TYPICAL DETAIL

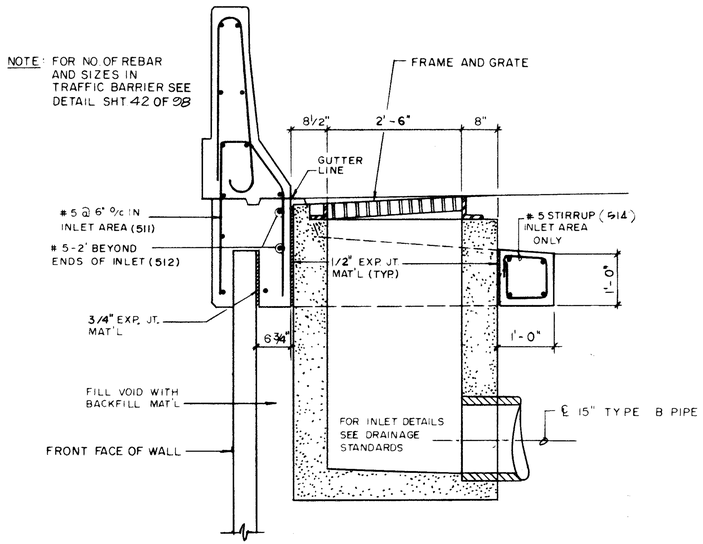

SECTION 'A-A'

NOTES:

1. FOR ADDITIONAL NOTES: SEE SHT. 44 OF 98
2. FOR BAR MARKS NOT SHOWN, SEE C.I.P. CONCRETE TRAFFIC BARRIER, DETAIL SHEET 42 OF 98
3. SEE NOTE ② SHEET 42 OF 98 FOR REQUIRED FIELD CUTTING OF STEEL REINFORCING BARS.
4. FOR INLET Nº 3, AS PER PLAN Nº 1 DETAILS SEE SHEET 552.

CERTIFIED WITH RESPECT TO INTERNAL STABILITY OF REINFORCED EARTH STRUCTURES ONLY.

STATE OF OHIO — DAVID P. [illegible] 40001 — REGISTERED PROFESSIONAL ENGINEER

DESIGN 1

The Reinforced Earth Company
Corporate Headquarters · Mclean, Virginia
2010 Corporate Ridge Suite 1000 Mclean, Virginia 22102
(703) 821-1175

Structure	REINFORCED EARTH WALL
Location	AKRON OHIO
	AKRON EAST EXPRESSWAY
Owner	OHIO D.O.T
Drawn By	L.R.
Checked By	A.J.P.
Date	12/5/89
CONTRACT NO.	3154
DRAWING COVERS	TYP. SECTIONS & INLET DETAILS
DRAWING NO.	41 OF 98
SCALE	AS SHOWN

REV NO.	DATE	DESCRIPTION

"REINFORCED EARTH" IS THE REGISTERED TRADEMARK OF THE REINFORCED EARTH COMPANY.

This drawing contains information proprietary to The Reinforced Earth Company, and is being furnished for the use of OHIO D.O.T only in connection with this project, and the information contained herein is not to be transmitted to any other organization unless specifically authorized in writing by The Reinforced Earth Company.
The Reinforced Earth Company is exclusive licensee in the United States under patents issued to Henri Vidal, and the furnishing of this drawing does not constitute an express or implied license under the Vidal patents.

THE DESIGN CONTAINED ON THESE DRAWINGS IS BASED ON INFORMATION PROVIDED BY THE OWNER. ON THE BASIS OF THIS INFORMATION, THE REINFORCED EARTH COMPANY HAS DESIGNED, AND IS RESPONSIBLE FOR THE INTERNAL STABILITY OF THE STRUCTURE ONLY. EXTERNAL STABILITY, INCLUDING FOUNDATION AND SLOPE STABILITY, IS THE RESPONSIBILITY OF THE OWNER.

FHWA REG.	STATE	PROJECT	
5	OHIO		

748 / 1214

SUM - 76 - 11.57

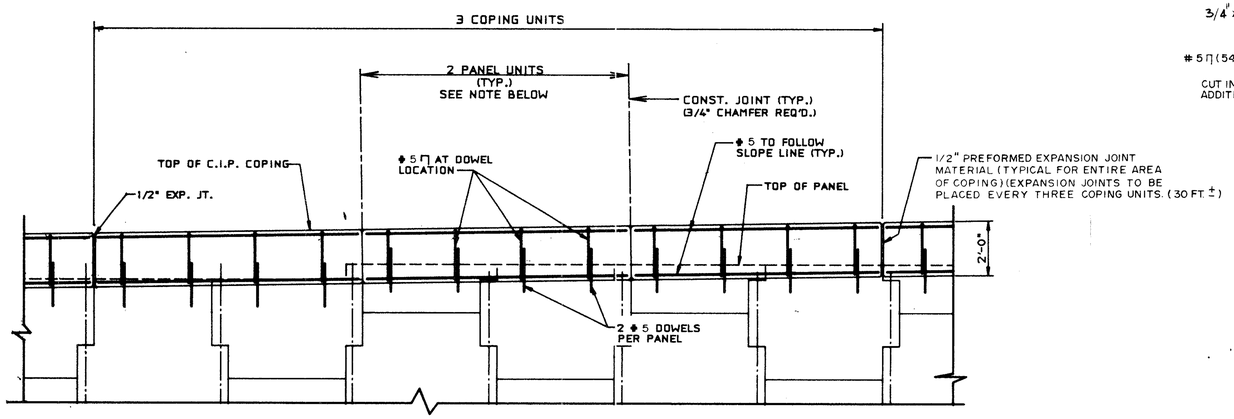

NOTE:
CONST. JT. IN C.I.P. COPING SHALL BE AT 2 PANEL INTERVALS. COPING JOINTS MUST COINCIDE WITH PANEL JOINTS, ON FRONT FACE, WHERE BOTTOM OF 5" LIP INTERSECTS WITH JOINT. REINFORCING STEEL SHALL BE STOPPED 2" SHORT OF EITHER SIDE OF THE CONSTRUCTION JOINTS AND EXPANSION JOINTS.

C.I.P. COPING PARTIAL ELEVATION

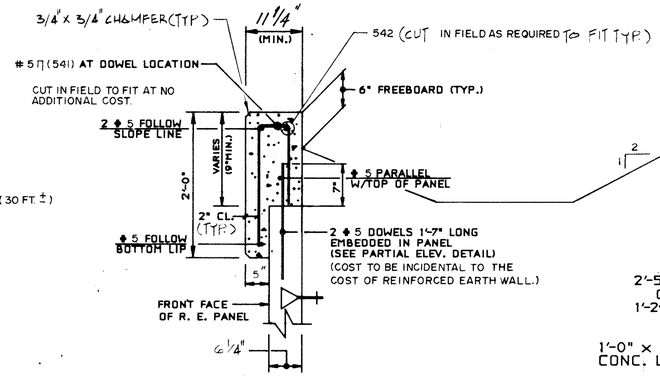

C.I.P. CONC. COPING DETAIL
(RETAINING WALL Nº 9 ONLY)

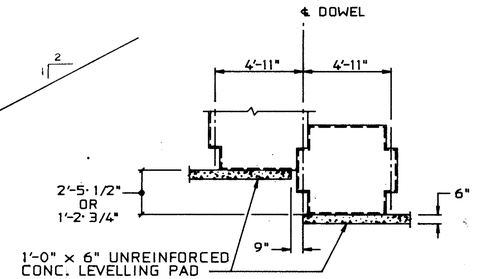

TYPICAL LEVELLING PAD STEP DETAIL

NOTES:
1. LEVELLING PAD MUST BE POURED SO AS TO HAVE THE TOP OF THE LEVELLING PAD AT THE ELEVATION SHOWN ON THE ELEVATION VIEWS. ALLOWABLE ELEVATION TOLERANCES ARE 0.01'(+) AND 0.02'(-). PRECAST PANEL JOINT FILLER MATERIAL IS NOT PERMITTED BETWEEN PRECAST PANEL AND LEVELLING PAD UNLESS AUTHORIZED IN WRITING BY THE REINFORCED EARTH COMPANY.
2. ALL 505, 506 AND 507 BARS THAT WILL INTERFERE WITH THE INSTALLATION OF ANY INLET, DETAIL SHOWN ON SHEET 41 OF 98, WILL BE CUT IN THE FIELD TO FIT
3. FOR ADDITIONAL NOTES, SEE SHT. 44 OF 98

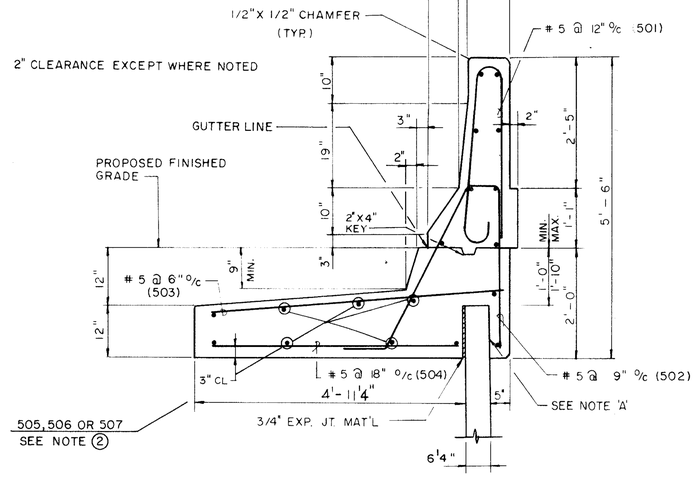

C.I.P. CONCRETE TRAFFIC BARRIER DETAIL
(TYP. FOR ALL RETAINING WALLS EXCEPT WALL Nº 9.)

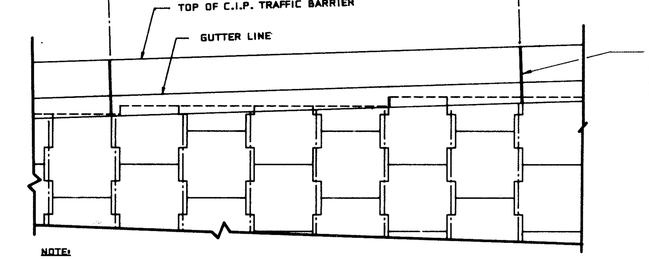

NOTE:
ALL JOINTS SHALL BE LOCATED AS SHOWN ON WALL ELEVATIONS AND MUST COINCIDE WITH PANEL JOINT ON FRONT FACE WHERE BOTTOM OF LIP INTERSECTS WITH PANEL JOINT.

C.I.P. TRAFFIC BARRIER PARTIAL ELEVATION

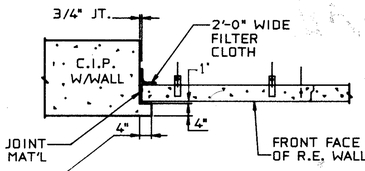

CONNECTION DETAIL

ADDITIONAL C.I.P. WALL LIP REQUIRED SEE STRUCTURE DRAWINGS FOR DETAILS. COST OF ADDITIONAL CONCRETE AND REINFORCING TO BE INCIDENTAL TO THE COST OF ITEM SPECIAL, REINFORCED EARTH WALL

NOTE A - POSITIVE BOND BREAKER SHALL BE PROVIDED BETWEEN CAST-IN-PLACE CONC AND PRECAST CONCRETE PANEL (COST TO BE INCIDENTAL TO THE COST OF ITEM 511)

CERTIFIED WITH RESPECT TO INTERNAL STABILITY OF REINFORCED EARTH STRUCTURES ONLY.
STATE OF OHIO — DAVID P. MARTINEZ — 46601 — REGISTERED PROFESSIONAL ENGINEER

DESIGN 1

The Reinforced Earth Company
Corporate Headquarters · Mclean, Virginia
2010 Corporate Ridge Suite 1000 Mclean, Virginia 22102
(703) 821-1175

Structure	REINFORCED EARTH WALL
Location	AKRON OHIO
	AKRON EAST EXPRESSWAY
Owner	OHIO D.O.T.
Drawn By	L.R.
Checked By	A.J.P.
Date	12/5/89
CONTRACT NO	3154
DRAWING COVERS	DETAILS
DRAWING NO.	42 OF 98
SCALE	AS SHOWN

REV NO.	DATE	DESCRIPTION

THE DESIGN CONTAINED ON THESE DRAWINGS IS BASED ON INFORMATION PROVIDED BY THE OWNER. ON THE BASIS OF THIS INFORMATION, THE REINFORCED EARTH COMPANY HAS DESIGNED, AND IS RESPONSIBLE FOR THE INTERNAL STABILITY OF THE STRUCTURE ONLY. EXTERNAL STABILITY, INCLUDING FOUNDATION AND SLOPE STABILITY, IS THE RESPONSIBILITY OF THE OWNER.

"REINFORCED EARTH" IS THE REGISTERED TRADEMARK OF THE REINFORCED EARTH COMPANY.

This drawing contains information proprietary to The Reinforced Earth Company, and is being furnished for the use of OHIO D.O.T. only in connection with this project, and the information contained herein is not to be transmitted to any other organization unless specifically authorized in writing by The Reinforced Earth Company.
The Reinforced Earth Company is exclusive licensee in the United States under patents issued to Henri Vidal, and the furnishing of this drawing does not constitute an express or implied license under the Vidal patents.

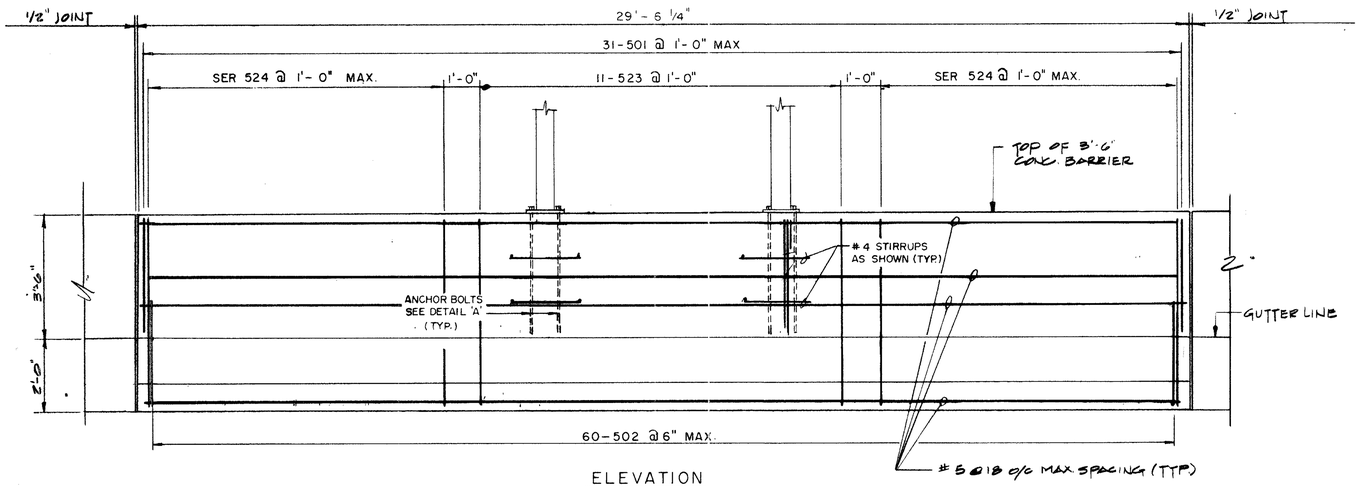

ELEVATION

OVERHEAD SIGN SUPPORT ON BARRIER AT STA. 575+00± & STA. 630+85±

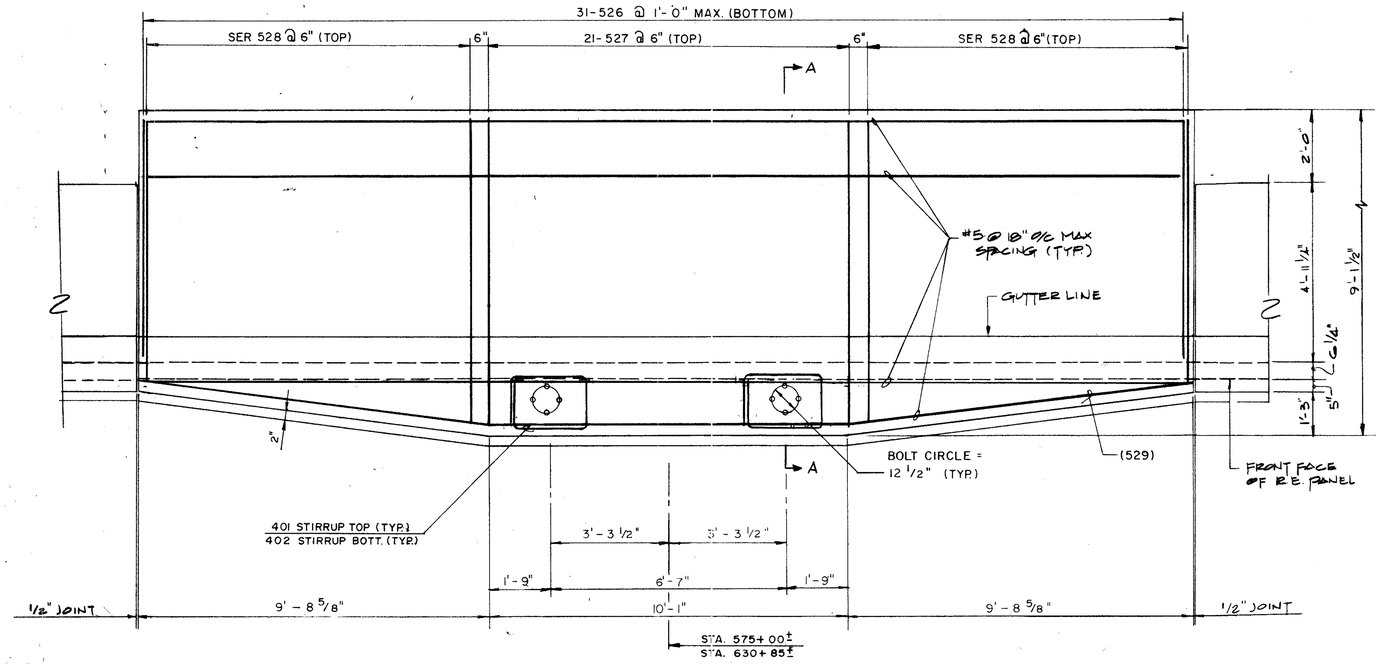

PLAN

OVERHEAD SIGN SUPPORT ON BARRIER AT STA. 575+00± & STA. 630+85±

F.H.W.A. REG.	STATE	PROJECT	
5	OHIO		

749
1214

SUM-76-11.57

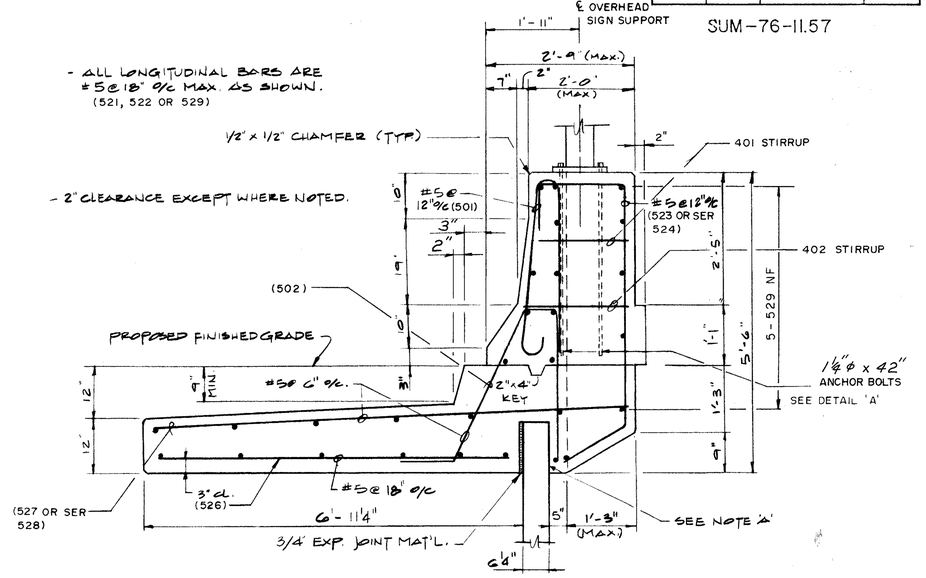

NOTE 'A' - POSITIVE BOND BREAKER SHALL BE PROVIDED BETWEEN CAST-IN-PLACE CONC. & PRECAST CONC. PANEL. (COST INCIDENTAL TO THE COST OF ITEM 511)

SECTION A-A

NOTE:

FOR ADDITIONAL NOTES, SEE SHEET 44 OF 98

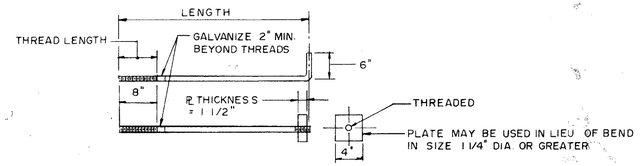

DETAIL "A"

N.T.S.

SEE NOTE (2) SHEET 44 OF 98

CERTIFIED WITH RESPECT TO INTERNAL STABILITY OF REINFORCED EARTH STRUCTURES ONLY.

STATE OF OHIO DAVID P. ABBOTT REGISTERED PROFESSIONAL ENGINEER

DESIGN 1

The Reinforced Earth Company
Corporate Headquarters · Mclean, Virginia
2010 Corporate Ridge Suite 1000 Mclean, Virginia 22102
(703) 821-1175

REV. NO.	DATE	DESCRIPTION

Structure	REINFORCED EARTH WALL
Location	AKRON, OHIO
	AKRON EAST EXPRESSWAY
Owner	OHIO D.O.T.
DESIGNED BY:	DCM
PROJECT ENGR:	KAL
CHECKED BY:	
DATE	12/5/89
CONTRACT NO.	3154
DRAWING NO.	43 OF 98
SCALE	AS NOTED
	TRAFFIC BARRIER DETAILS

"REINFORCED EARTH" IS THE REGISTERED TRADEMARK OF THE REINFORCED EARTH COMPANY.

This drawing contains information proprietary to The Reinforced Earth Company, and is being furnished for the use of OHIO D.O.T. only in connection with this project, and the information contained herein is not to be transmitted to any other organization unless specifically authorized in writing by The Reinforced Earth Company.
The Reinforced Earth Company is exclusive licensee in the United States under patents issued to Henri Vidal, and the furnishing of this drawing does not constitute an express or implied license under the Vidal patents.

THE DESIGN CONTAINED ON THESE DRAWINGS IS BASED ON INFORMATION PROVIDED BY THE OWNER. ON THE BASIS OF THIS INFORMATION, THE REINFORCED EARTH COMPANY HAS DESIGNED, AND IS RESPONSIBLE FOR THE INTERNAL STABILITY OF THE STRUCTURE ONLY. EXTERNAL STABILITY, INCLUDING FOUNDATION AND SLOPE STABILITY, IS THE RESPONSIBILITY OF THE OWNER.

F.H.W.A. REG.	STATE	PROJECT	
5	OHIO		

750
12/14

SUM - 76-11.57

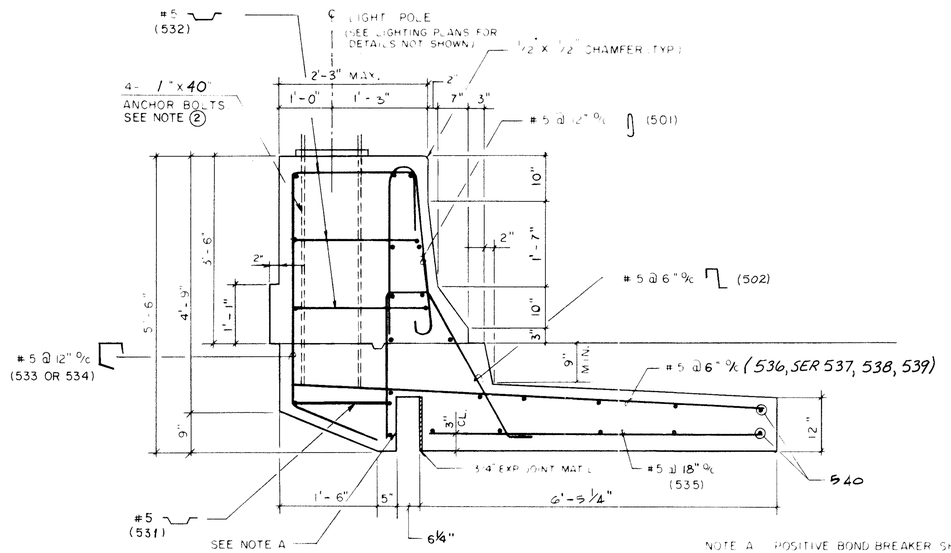

SECTION A-A

NOTE A POSITIVE BOND BREAKER SHALL BE PROVIDED BETWEEN CAST IN-PLACE CONC. AND CONCRETE PANEL (COST INCIDENTAL TO THE COST OF ITEM 511)

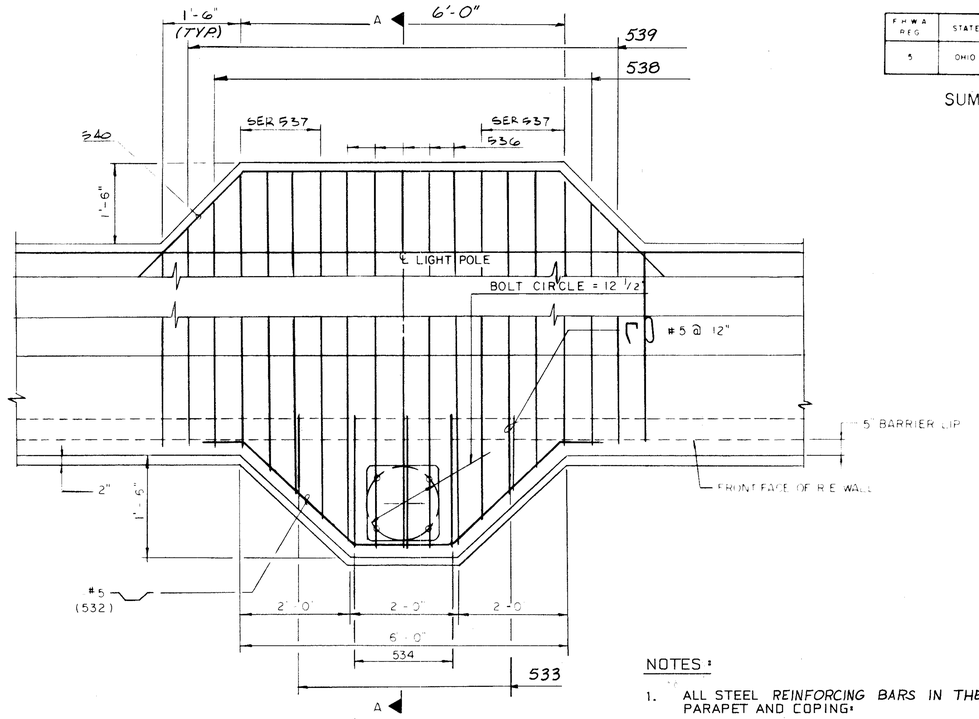

PLAN VIEW AT LIGHT POLE SUPPORT

NOTES:

1. ALL STEEL *REINFORCING BARS IN THE C.I.P. CONCRETE* PARAPET AND COPING:
   - SHALL BE EPOXY COATED REINFORCING, GRADE 60.
   - SHALL HAVE 2" CONCRETE CLEARENCE EXCEPT AS NOTED OTHERWISE.
   - SHALL HAVE THE FOLLOWING PREFIX'S:
     - 1EW1 FOR WALL NO 1
     - 2EW1 FOR WALL NO. 2
     - 3EW1 FOR WALL NO. 3
     - 4EW1 FOR WALL NO. 4
     - 5EW1 FOR WALL NO. 5
     - 9EW1 FOR WALL NO. 9
     - 10EW1 FOR WALL NO. 10
     - 11EW1 FOR WALL NO 11
     - 12EW1 FOR WALL NO. 12
     - 13EW1 FOR WALL NO. 13
     - 14EW1 FOR WALL NO. 14
2. FOR ANCHOR BOLT PAY ITEM AND QUANTITY, SEE LIGHTING PLAN SUMMARY.

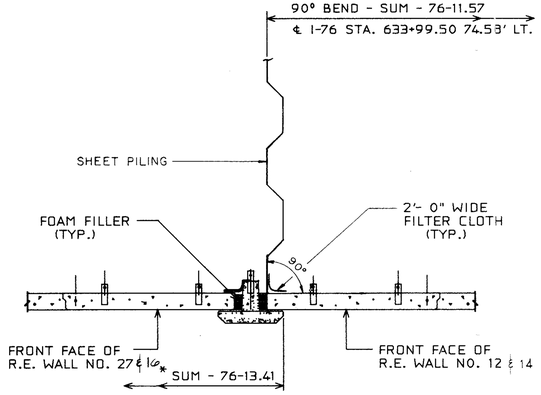

CONNECTION DETAIL AT WALL NO. 12 & NO. 27 AND Nº 14 & Nº 16

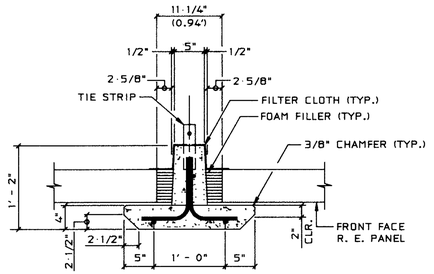

SLIP JOINT DETAIL

* SUM - 76-13.41

CERTIFIED WITH RESPECT TO INTERNAL STABILITY OF REINFORCED EARTH STRUCTURES ONLY.

STATE OF OHIO — DAVID P. JOHNSON 48001 — REGISTERED PROFESSIONAL ENGINEER

THE DESIGN CONTAINED ON THESE DRAWINGS IS BASED ON INFORMATION PROVIDED BY THE OWNER. ON THE BASIS OF THIS INFORMATION, THE REINFORCED EARTH COMPANY HAS DESIGNED, AND IS RESPONSIBLE FOR THE INTERNAL STABILITY OF THE STRUCTURE ONLY. EXTERNAL STABILITY, INCLUDING FOUNDATION AND SLOPE STABILITY, IS THE RESPONSIBILITY OF THE OWNER.

"REINFORCED EARTH" IS THE REGISTERED TRADEMARK OF THE REINFORCED EARTH COMPANY.

This drawing contains information proprietary to The Reinforced Earth Company, and is being furnished for the use of OHIO DOT only in connection with this project, and the information contained herein is not to be transmitted to any other organization unless specifically authorized in writing by The Reinforced Earth Company.
The Reinforced Earth Company is exclusive licensee in the United States under patents issued to Henri Vidal, and the furnishing of this drawing does not constitute an express or implied license under the Vidal patents.

DESIGN 1

The Reinforced Earth Company
Corporate Headquarters · Mclean, Virginia
2010 Corporate Ridge Suite 1000 Mclean, Virginia 22102
(703) 821-1175

REV NO.	DATE	DESCRIPTION

Structure	REINFORCED EARTH WALL
Location	AKRON OHIO
	AKRON EAST EXPRESSWAY
Owner	OHIO DOT
Drawn By	L R
Checked By	A J P
Date	12/9/89
CONTRACT NO.	3154
DRAWING COVERS	DETAILS
DRAWING NO.	44 OF 98
SCALE	AS SHOWN

F.H.W.A. REG.	STATE	PROJECT	
5	OHIO		

751
12/14

SUM-76-11.57

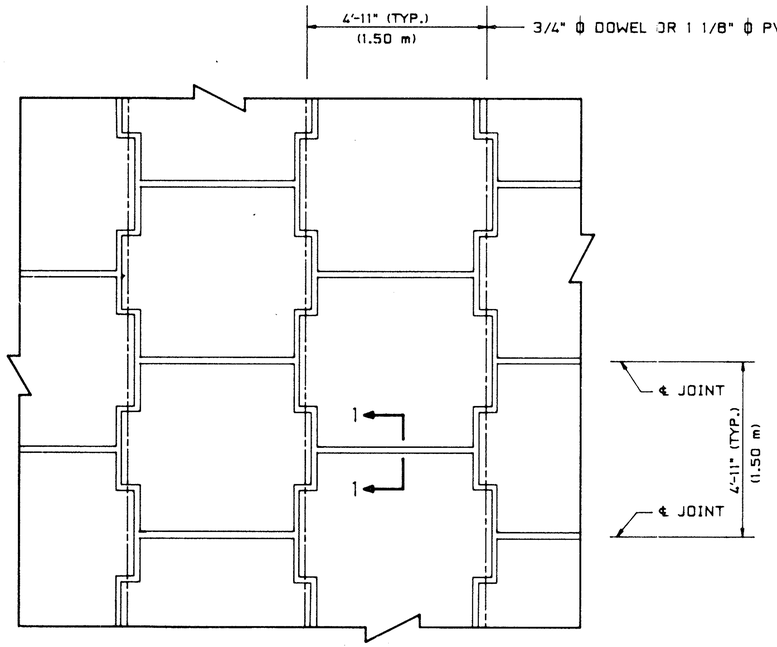

TYPICAL PANEL LAYOUT
PARTIAL ELEVATION - FRONT FACE

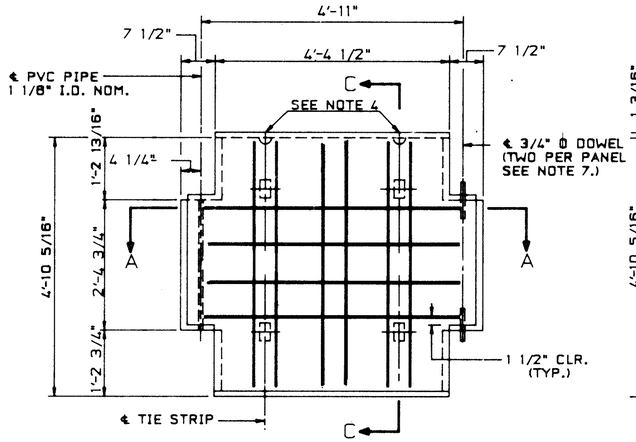

PANEL TYPE "A"
WITH R6 REINFORCEMENT
FRONT VIEW

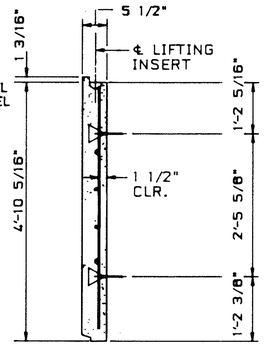

SECTION C-C

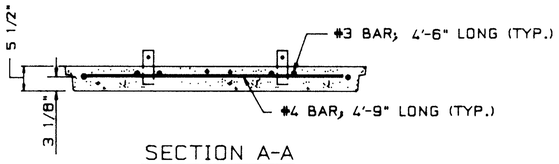

SECTION A-A

PANEL THICKNESS	REINFORCEMENT DESIGNATION	PANEL REINFORCEMENT A_s (IN²)	MAXIMUM ALLOWABLE HORIZONTAL STRESS AT FACING (KSF)
5½"	R4	~~0.44 VERTICAL 0.58 HORIZONTAL~~	~~1.01~~
	R6	0.66 VERTICAL 0.78 HORIZONTAL	1.33
	R7	~~1.16 VERTICAL 1.77 HORIZONTAL~~	~~2.58~~

NOTES:

1. REINFORCING STEEL TO BE A615 GRADE 60.
2. 3/8" X 3/8" CHAMFER SHALL BE PROVIDED ON ALL EXPOSED EDGES (FRONT FACE ONLY).
3. ALL PANEL TYPES AND OTHER RELATED ELEMENTS WILL BE DETAILED ON SHOP DRAWINGS.
4. ALL PANELS SHALL HAVE TWO LIFTING INSERTS OF ONE TON CAPACITY EACH.
5. PANEL DESIGN THICKNESS IS 5 1/2". THICKNESS OF CONCRETE MUST INCREASE TO ACCOMODATE ANY ARCHITECTURAL SURFACE FINISH THAT MAY BE SPECIFIED.
6. ACTUAL PANEL REINFORCEMENT FOR ALL PANEL TYPES ON THIS PROJECT IS DESIGNATED ABOVE. R6 ILLUSTRATED FOR INFORMATION ONLY.
7. EACH 3/4" ϕ DOWEL SHALL HAVE MINIMUM LENGTH OF 10". DOWELS MAY BE GALVANIZED STEEL OR PVC ROD. A SINGLE FULL LENGTH DOWEL MAY BE USED AT THE DISCRETION OF THE MANUFACTURER.
8. THE REINFORCING BARS IN THE PRECAST WALL PANELS *SHALL BE EPOXY COATED AS PER ITEM 509.*
9. PANEL TYPE 'A' SHOWS FOUR REINFORCING STRIP CONNECTIONS FOR ILLUSTRATED INFORMATION ONLY.

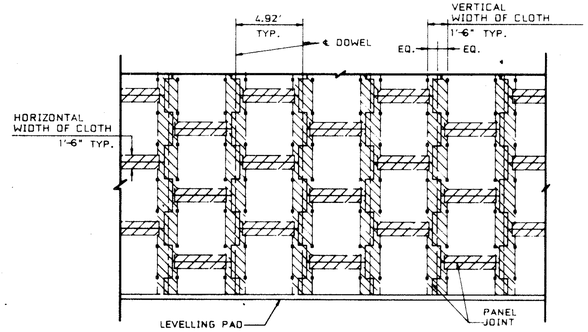

NOTE:
STRIPS OF FILTER CLOTH SHALL BE PLACED ON BACK FACE OF PANEL OVER PANEL JOINTS . FILTER CLOTH SHALL BE ADHERED TO BACK FACE OF PANELS USING AN ADHESIVE COMPOUND SUPPLIED BY THE REINFORCED EARTH COMPANY .

FILTER CLOTH DETAIL
PARTIAL ELEVATION - BACK FACE

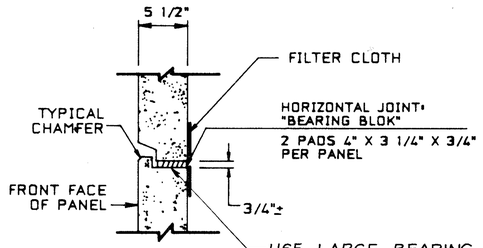

SECTION 1-1

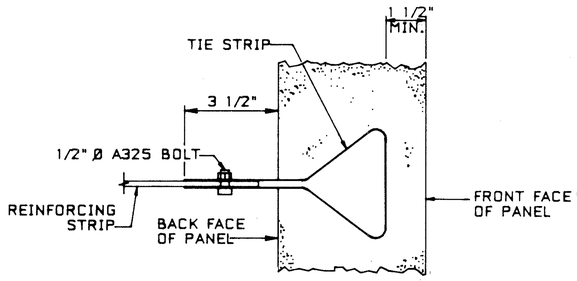

CONNECTION DETAIL
NO SCALE

CERTIFIED WITH RESPECT TO INTERNAL STABILITY OF REINFORCED EARTH STRUCTURES ONLY.

STATE OF OHIO
DAVID P. MARTIN
48801
REGISTERED PROFESSIONAL ENGINEER

DESIGN 1

THE DESIGN CONTAINED ON THESE DRAWINGS IS BASED ON INFORMATION PROVIDED BY THE OWNER. ON THE BASIS OF THIS INFORMATION, THE REINFORCED EARTH COMPANY HAS DESIGNED, AND IS RESPONSIBLE FOR THE INTERNAL STABILITY OF THE STRUCTURE ONLY. EXTERNAL STABILITY, *INCLUDING FOUNDATION AND SLOPE STABILITY, IS THE RESPONSIBILITY OF THE OWNER.

"REINFORCED EARTH" IS THE REGISTERED TRADEMARK OF THE REINFORCED EARTH COMPANY.

This drawing contains information proprietary to The Reinforced Earth Company, and is being furnished for the use of OHIO DOT only in connection with this project, and the information contained herein is not to be transmitted to any other organization unless specifically authorized in writing by The Reinforced Earth Company.
The Reinforced Earth Company is exclusive licensee in the United States under patents issued to Henri Vidal, and the furnishing of this drawing does not constitute an express or implied license under the Vidal patents.

reinforced earth
The Reinforced Earth Company
Corporate Headquarters · Mclean, Virginia
2010 Corporate Ridge Suite 1000 Mclean, Virginia 22102
(703) 521-1175

REV. NO.	DATE	DESCRIPTION

Structure	REINFORCED EARTH WALL
Location	AKRON, OHIO
	AKRON EAST EXPRESSWAY
Owner	OHIO D.O.T.
DESIGNED BY: DCM	DATE 12/15/89
PROJECT ENGR: KAL	CONTRACT NO. 3754
CHECKED BY: AJP	DRAWING NO. 45 OF 98
STANDARD PANEL DETAILS	SCALE AS SHOWN

RETAINED EARTH WALLS

1.0 DESCRIPTION

THIS WORK SHALL CONSIST OF RETAINED EARTH WALLS CONSTRUCTED IN ACCORDANCE WITH THIS SPECIFICATION AND IN REASONABLY CLOSE CONFORMITY WITH THE LINES, GRADES, DESIGN, AND DIMENSIONS SHOWN ON THE PLANS OR ESTABLISHED BY THE ENGINEER.

2.0. MATERIALS

THE CONTRACTOR SHALL MAKE ARRANGEMENTS TO ACQUIRE THE REINFORCED CONCRETE FACE PANELS, GALVANIZED REINFORCING MESH, ATTACHMENT DEVICES, JOINT MATERIALS, ALIGNMENT PINS, AND ALL NECESSARY INCIDENTALS FROM THE VSL CORPORATION, P. O. BOX 866, 8006 HAUTE COURT, SPRINGFIELD, VIRGINIA 22150 (PHONE 703–451–4300)

THE CONTRACTOR SHALL PROVIDE CERTIFICATION OF THE RETAINED EARTH WALL COMPONENTS AS PER 101.061. CERTIFICATION SHALL ALSO BE PROVIDED FOR THE CONCRETE, REINFORCING STEEL, COIL EMBED, COIL BOLT, GALVANIZED REINFORCING MESH, ATTACHMENT DEVICES, JOINT MATERIALS, AND ALIGNMENT PINS WHICH ARE COMPONENTS OF THE RETAINED EARTH WALL. (REFER TO THE SECTION OF THE PROPOSAL CONCERNING STEEL PRODUCED IN THE UNITED STATES.)

2.1 REINFORCED CONCRETE FACE PANELS

CEMENT SHALL BE TYPES I, II, OR III AND SHALL CONFORM TO THE REQUIREMENTS OF ASTM C 150. CONCRETE SHALL HAVE A COMPRESSIVE STRENGTH AT 28 DAYS IN ACCORDANCE WITH SECTION 2.1.7 COMPRESSIVE STRENGTH. CONCRETE SHALL CONTAIN 6 +?_ 2% AIR. THE AIR ENTRAINING ADMIXTURE SHALL CONFORM TO AASHTO M154. RETARDING AGENTS, ACCELERATING AGENTS OR ANY ADDITIVE CONTAINING CHLORIDE SHALL NOT BE USED WITHOUT APPROVAL FROM THE VSL ENGINEER.

2.1.1. TESTING AND INSPECTION

ACCEPTABILITY OF THE CONCRETE FOR THE PRECAST PANELS WILL BE DETERMINED ON THE BASIS OF COMPRESSION TESTS, CERTIFICATIONS AND VISUAL INSPECTION. THE CONCRETE STRENGTH REQUIREMENTS FOR THE PRECAST PANELS SHALL BE CONSIDERED ATTAINED REGARDLESS OF CURING AGE WHEN COMPRESSION TEST RESULTS INDICATE STRENGTH WILL CONFORM TO 28–DAY SPECIFICATIONS. THE SUPPLIER SHALL FURNISH FACILITIES AND PERFORM ALL NECESSARY SAMPLING AND TESTING IN AN EXPEDITIOUS AND SATISFACTORY MANNER. PANELS UTILIZING TYPE I OR II CEMENT SHALL BE CONSIDERED ACCEPTABLE FOR PLACEMENT IN THE WALL WHEN 7–DAY INITIAL STRENGTHS EXCEED 85% OF THE 28–DAY REQUIREMENTS. PANELS UTILIZING TYPE III CEMENT SHALL BE CONSIDERED ACCEPTABLE FOR PLACEMENT IN THE WALL PRIOR TO 28 DAYS ONLY WHEN COMPRESSIVE STRENGTH TEST RESULTS INDICATE THAT THE STRENGTH EXCEEDS THE 28–DAY SPECIFICATION.

2.1.2. CASTING

THE PANELS SHALL BE CAST ON A FLAT AREA WITH THE FRONT FACE DOWN. COIL LOOP INSERTS, REINFORCING STEEL, PVC PIPE, AND LIFTING DEVICES SHALL BE SET IN PLACE TO THE DIMENSIONS AND TOLERANCE SHOWN ON THE DRAWINGS PRIOR TO CASTING. THE PVC PIPE SHALL BE PLACED IN SUCH A MANNER AS TO ENSURE THAT IT IS STRAIGHT, NOT BENT OR BOWED. COIL LOOP INSERTS SHALL BE SET ON THE REAR FACE. THE CONCRETE IN EACH UNIT SHALL BE PLACED WITHOUT INTERRUPTION AND SHALL BE CONSOLIDATED BY THE USE OF A CONCRETE VIBRATOR, SUPPLEMENTED BY SUCH HAND–TAMPING AS MAY BE NECESSARY TO FORCE THE CONCRETE INTO THE CORNERS OF THE FORMS AND PREVENT THE FORMATION OF STONE POCKETS, AIR BUBBLES OR CLEAVAGE PLANES. CLEAR FORM OIL OF THE SAME MANUFACTURE SHALL BE USED THROUGHOUT THE CASTING OPERATION AND APPROVED BY THE VSL ENGINEER.

SPECIAL CARE SHALL BE GIVEN TO THE COIL LOOP INSERTS: ALL COIL LOOP INSERTS MUST BE ATTACHED TO THE ALIGNMENT TEMPLATES USING THE BOLTS PROVIDED WITH THE FORMS. THE VERTICAL AND HORIZONTAL ALIGNMENT OF THE COIL LOOP INSERTS SHALL BE WITHIN +1/8" OF THE PLAN DIMENSION. THE HOLES INSIDE THE COIL LOOP INSERTS MUST BE 2 1/4" DEEP IN THE FINISHED PANEL AND MUST BE FREE OF ALL CONCRETE AND DEBRIS, LOOSE OR OTHERWISE. NO CONCRETE OR OTHER DEBRIS SHALL BE ON THE INTERIOR SURFACES OF THE COILS OF THE COIL LOOP INSERTS IN THE FINISHED PANELS. IMMEDIATELY AFTER THE ALIGNMENT TEMPLATE IS REMOVED, DUCT TAPE OR EQUAL APPROVED BY THE VSL ENGINEER SHALL BE PLACED OVER THE COIL LOOP INSERT HOLES IN ORDER TO PREVENT DEBRIS FROM ENTERING THE HOLES. THIS DUCT TAPE SHALL NOT BE REMOVED EXCEPT BY THE CREW THAT IS ASSEMBLING THE WALL. CARE SHALL BE TAKEN TO ENSURE THAT THE DUCT TAPE IS NOT REMOVED DURING SHIPPING.

2.1.3. CURING

THE CURING METHOD WILL BE DEPENDENT ON THE CONCRETE PRECASTER'S CAPABILITIES AND SHALL BE AS PER INSTRUCTIONS BY THE RETAINED EARTH COMPANY. THE REINFORCED CONCRETE PANELS SHALL BE CURED FOR AT LEAST 72 HOURS SO THAT THE CONCRETE WILL DEVELOP THE SPECIFIED COMPRESSIVE STRENGTH. ANY PRODUCTION LOT WHICH DOES NOT CONFORM TO THE STRENGTH REQUIREMENTS OF SECTION 2.1.7 – COMPRESSIVE STRENGTH, SHALL BE REJECTED.

2.1.4. REMOVAL OF FORMS

THE FORMS SHALL REMAIN IN PLACE UNTIL THEY CAN BE REMOVED WITHOUT DAMAGE TO THE PANEL.

2.1.5. CONCRETE FINISH AND TOLERANCES

THE FRONT FACE OF THE REINFORCED CONCRETE PANELS SHALL HAVE A 3/4" FRACTURED FIN TEXTURE. THE FORM LINER USED SHALL BE ONE OF THE FOLLOWING OR AN APPROVED EQUAL:

1. SYMONS – P/C 30449 (ABS)
2. GREENSTREAK – NO. 373
3. FITZGERALD VACUFORM – NO. 16950

THE CONTRACTOR SHALL SUBMIT AN ACTUAL SAMPLE OF THE FINISHED RUSTICATION PATTERN TO THE ENGINEER WHICH WILL GET APPROVAL FROM THE CITY OF AKRON. THE CONTRACTOR SHALL USE THE SAME BRAND OF FORM LINER ON THE ENTIRE PROJECT.

THE BACKSIDE OF THE REINFORCED CONCRETE PANELS SHALL HAVE AN UNFORMED SURFACE FINISH AND SHALL BE ROUGH SCREEDED TO ELIMINATE OPEN POCKETS OF AGGREGATE AND SURFACE DISTORTIONS IN EXCESS OF 1/4".

2.1.6. TOLERANCES

ALL PANELS SHALL BE MANUFACTURED WITHIN THE FOLLOWING TOLERANCES:

A. PANEL DIMENSIONS

ALL DIMENSIONS – WITHIN 3/16".

B. PANEL SQUARENESS

ANGULAR DISTORTION WITH REGARD TO THE HEIGHT OF THE PANEL SHALL NOT EXCEED 0.215" IN 5'.

C. PANEL SURFACE FINISH

SURFACE DEFECTS ON SMOOTH FORMED SURFACES MEASURED ON A LENGTH OF 5' SHALL NOT EXCEED 0.125". SURFACE DEFECTS ON TEXTURED–FINISHED SURFACES MEASURED ON A LENGTH OF 5' SHALL NOT EXCEED 0.312".

2.1.7. COMPRESSIVE STRENGTH

ACCEPTANCE OF THE CONCRETE PANELS WITH RESPECT TO COMPRESSIVE STRENGTH WILL BE DETERMINED ON THE BASIS OF PRODUCTION LOTS. A PRODUCTION LOT IS DEFINED AS A GROUP OF PANELS THAT WILL BE REPRESENTED BY A SINGLE COMPRESSIVE STRENGTH SAMPLE AND WILL CONSIST OF EITHER 40 PANELS OR A SINGLE DAY'S PRODUCTION, WHICHEVER IS LESS.

DURING THE PRODUCTION OF THE CONCRETE PANELS, THE MANUFACTURER WILL RANDOMLY SAMPLE THE CONCRETE IN ACCORDANCE WITH ASTM C 172. A SINGLE COMPRESSIVE STRENGTH SAMPLE, CONSISTING OF A MINIMUM OF FOUR CYLINDERS, WILL BE RANDOMLY SELECTED FOR EVERY PRODUCTION LOT.

CYLINDERS FOR COMPRESSIVE STRENGTH TESTS SHALL BE 6" BY 12" SPECIMENS PREPARED IN ACCORDANCE WITH ASTM C 31. FOR EVERY COMPRESSIVE STRENGTH SAMPLE, A MINIMUM OF TWO CYLINDERS WILL BE CURED IN THE SAME MANNER AS THE PANELS AND TESTED AT APPROXIMATELY 7 DAYS. THE AVERAGE COMPRESSIVE STRENGTH OF THESE CYLINDERS, WHEN TESTED IN ACCORDANCE WITH ASTM C 39, WILL PROVIDE A TEST RESULT WHICH WILL DETERMINE THE INITIAL STRENGTH OF THE CONCRETE. IN ADDITION, TWO CYLINDERS SHALL BE CURED IN ACCORDANCE WITH ASTM C 31 AND TESTED AT 28 DAYS. THE AVERAGE COMPRESSIVE STRENGTH OF THESE TWO CYLINDERS, WHEN TESTED IN ACCORDANCE WITH ASTM C 39, WILL PROVIDE A COMPRESSIVE STRENGTH TEST RESULT WHICH WILL DETERMINE THE COMPRESSIVE STRENGTH OF THE PRODUCTION LOT.

IF THE INITIAL STRENGTH TEST RESULTS INDICATE A COMPRESSIVE STRENGTH IN EXCESS OF 4,000 POUNDS PER SQUARE INCH, THEN THESE TEST RESULTS WILL BE UTILIZED AS THE COMPRESSIVE STRENGTH TEST RESULT FOR THAT PRODUCTION LOT AND THE REQUIREMENT FOR TESTING AT 28 DAYS WILL BE WAIVED FOR THAT PARTICULAR PRODUCTION LOT.

ACCEPTANCE OF A PRODUCTION LOT WILL BE MADE IF THE COMPRESSIVE STRENGTH TEST RESULT IS GREATER THAN OR EQUAL TO 4,000 POUNDS PER SQUARE INCH. IF THE COMPRESSIVE STRENGTH TEST RESULT IS LESS THAN 4,000 POUNDS PER SQUARE INCH, THE ACCEPTANCE OF THE PRODUCTION LOT WILL BE BASED ON ITS MEETING THE FOLLOWING ACCEPTANCE CRITERIA IN ITS ENTIRETY:

A. 90% OF THE COMPRESSIVE STRENGTH TEST RESULTS FOR THE OVERALL PRODUCTION SHALL EXCEED 4,000 POUNDS PER SQUARE INCH,

B. THE AVERAGE OF ANY SIX CONSECUTIVE COMPRESSIVE STRENGTH TEST RESULTS SHALL EXCEED 4,000 POUNDS PER SQUARE INCH,

C. NO INDIVIDUAL COMPRESSIVE STRENGTH TEST RESULT SHALL FALL BELOW 3,600 POUNDS PER SQUARE INCH.

IN THE EVENT THAT A PRODUCTION LOT FAILS TO MEET THE SPECIFIED COMPRESSIVE STRENGTH REQUIREMENTS, THE PRODUCTION LOT SHALL BE REJECTED. SUCH REJECTION SHALL PREVAIL UNLESS THE MANUFACTURER, AT HIS OWN EXPENSE, OBTAINS AND SUBMITS EVIDENCE ACCEPTABLE TO THE ENGINEER THAT THE STRENGTH AND QUALITY OF THE CONCRETE PLACED WITHIN THE PANELS OF THE PRODUCTION LOT IS ACCEPTABLE. IF SUCH EVIDENCE CONSISTS OF TESTS MADE ON CORES TAKEN FROM THE PANELS WITHIN THE PRODUCTION LOT, THE CORES SHALL BE OBTAINED AND TESTED IN ACCORDANCE WITH THE SPECIFICATIONS OF ASTM C 42.

2.1.8. REJECTION

PANELS SHALL BE SUBJECT TO REJECTION BECAUSE OF FAILURE TO MEET ANY OF THE REQUIREMENTS SPECIFIED ABOVE. IN ADDITION, ANY OR ALL OF THE FOLLOWING DEFECTS MAY BE SUFFICIENT CAUSE FOR REJECTION:

A. DEFECTS THAT INDICATE IMPERFECT MOLDING

B. DEFECTS INDICATING HONEYCOMED OR OPEN TEXTURED CONCRETE

C. DEFECTS IN THE PHYSICAL CHARACTERISTICS OF THE CONCRETE, SUCH A BROKEN OR CHIPPED CONCRETE

D. STAINED FORM FACE, DUE TO EXCESS FORM OIL OR OTHER CONTAMINATIONS

E. SIGNS OF AGGREGATE SEGREGATION

F. BROKEN OR CRACKED CORNERS

DESIGN 2

URS

46 98

RETAINED EARTH WALL
PLAN NOTES

SUMMIT COUNTY

PROJECT SUM–76–11.57

DESIGNED	DRAWN	TRACED	CHECKED	REVIEWED	DATE	REVISED
JTJ	M.E.		P.E.B.	BKR	7-16-90	

F.H.W.A. REGION	STATE	PROJECT	
5	OHIO		

753
1214

SUM–76–11.57

G. LIFTING INSERTS NOT USABLE

H. EXPOSED REINFORCING STEEL

I. CRACKS AT THE PVC PIPE OR PIN

J. INSUFFICIENT CONCRETE COMPRESSIVE STRENGTH

K. PANEL THICKNESS IN EXCESS OF 3/16" PLUS OR MINUS FROM THAT SHOWN ON THE PLANS

THE ENGINEER WILL DECIDE IF AN ATTEMPT MAY BE MADE TO REPAIR A DEFECTIVE PANEL. THE CONTRACTOR OR SUPPLIER SHALL MAKE THE REPAIRS. IF THE REPAIRS ARE MADE TO THE ENGINEER'S SATISFACTION, THE PANEL WILL BE ACCEPTABLE.

2.1.9. MARKING

THE DATE OF MANUFACTURE, THE PRODUCTION LOT NUMBER, AND THE PIECE MARK SHALL BE CLEARLY SCRIBED ON THE BACK SURFACE OF EACH PANEL.

2.1.10. HANDLING, STORAGE, AND SHIPPING

ALL PANELS SHALL BE HANDLED, STORED, AND SHIPPED IN SUCH A MANNER AS TO AVOID CHIPPING, CRACKING, FRACTURING, AND EXCESSIVE BENDING STRESSES.

2.1.11. REINFORCING STEEL

THE REINFORCING STEEL IN ALL THE WALL PANELS, ALL THE TRAFFIC BARRIERS, AND ALL THE COPING SHALL SATISFY ALL APPLICABLE REQUIREMENTS OF 509 – EPOXY COATED REINFORCING STEEL, GRADE 60.

2.2 REINFORCING MESH

THE REINFORCING MESH SHALL BE SHOP FABRICATED OF COLD DRAWN STEEL WIRE CONFORMING TO THE REQUIREMENTS OF ASTM A82 AND SHALL BE WELDED INTO THE FINISHED MESH FABRIC IN ACCORDANCE WITH ASTM A 185. GALVANIZING SHALL CONFORM TO THE REQUIREMENTS OF ASTM A123.

2.3 ATTACHMENT DEVICES

2.3.1. COIL EMBED

THE 1" COIL EMBED SHALL BE FABRICATED OF COLD DRAWN STEEL WIRE CONFORMING TO AISI C1035. THE COIL EMBED SHALL BE GALVANIZED IN ACCORDANCE WITH ASTM A164.

2.3.2. COIL BOLT

THE 1" COIL BOLT SHALL HAVE 2" OF THREAD. THE COIL BOLT SHALL BE CAST OF 80–55–06 DUCTILE IRON CONFORMING TO ASTM A536 AND SHALL BE GALVANIZED IN ACCORDANCE WITH ASTM A164.

2.4 JOINT MATERIALS

2.4.1. INCLINED AND HORIZONTAL JOINTS

THE MATERIAL TO BE ATTACHED TO THE REAR SIDE OF THE FACING PANEL COVERING THE INCLINED AND HORIZONTAL JOINTS BETWEEN FACING PANELS SHALL BE CHICOPEE POLYPROPYLENE EROSION FABRIC AS MANUFACTURED BY CHICOPEE MILLS OR EQUAL APPROVED BY THE VSL ENGINEER. ADHESIVE USED TO ATTACH THE FABRIC MATERIAL TO THE FACING PANEL SHALL BE PLIOBOND 5001 AS MANUFACTURED BY THE GOODYEAR RUBBER COMPANY OR EQUAL APPROVED BY THE VSL ENGINEER.

2.4.2. HORIZONTAL JOINTS

THE MATERIAL TO BE USED IN THE HORIZONTAL JOINTS BETWEEN FACING PANELS SHALL BE RESIN–BONDED CORK FILLER CONFORMING TO ASTM D1752 (TYPE II).

2.5 ALIGNMENT PINS

THE PINS USED TO ALIGN THE FACE PANELS DURING CONSTRUCTION SHALL BE ROUND, SMOOTH NUMBER 5 BARS MADE OF MILD STEEL.

2.6 SELECTED GRANULAR EMBANKMENT MATERIAL

THE SELECT GRANULAR EMBANKMENT MATERIAL USED IN THE STRUCTURE VOLUME SHALL BE MODIFIED 304 AGGREGATE BASE MATERIAL OR 310A SUBBASE MATERIAL, EXCLUDING SLAG OR CRUSHED CONCRETE PAVEMENT. 304 MATERIAL SHALL BE MODIFIED SUCH THAT THE TOTAL PERCENT PASSING THE NO. 200 SIEVE SIZE SHALL NOT BE MORE THAN 10 PERCENT. THE COMPACTED MATERIAL SHALL SATISFY THE GRADING REQUIREMENTS AFTER ALL OPERATIONS OF PLACING AND COMPACTING HAVE BEEN COMPLETED.

THE SELECT GRANULAR EMBANKMENT MATERIAL SHALL ALSO CONFORM TO THE REQUIREMENTS LISTED BELOW:

1. THE pH RANGE OF THE MATERIAL SHALL BE BETWEEN 5.5 AND 9.0.
2. THE RESISTIVITY OF THE MATERIAL SHALL BE GREATER THAN 10,000 OHM–CM.
3. THE CHLORIDE LEVELS OF THE MATERIAL SHALL BE LESS THAN 200 PPM.
4. THE SULFATE LEVELS OF THE MATERIAL SHALL BE LESS THAN 1,000 PPM.

THE CONTRACTOR OR SUPPLIER, AS HIS AGENT, SHALL FURNISH THE ENGINEER A CERTIFICATE OF COMPLIANCE FROM AN INDEPENDENT TESTING LABORATORY, CERTIFYING THAT THE ABOVE MATERIALS COMPLY WITH THE APPLICABLE CONTRACT SPECIFICATIONS. A COPY OF ALL TEST RESULTS PERFORMED BY THE CONTRACTOR OR SUPPLIER NECESSARY TO ASSURE CONTRACT COMPLIANCE SHALL ALSO BE FURNISHED TO THE ENGINEER.

ACCEPTANCE WILL BE BASED ON A LETTER OF CERTIFICATION FROM AN ENGINEER STATING THAT THE MATERIAL TO BE UTILIZED IS WITHIN THE PARAMETERS OF THE APPLICABLE CONTRACT NOTES AND SPECIFICATIONS. THIS LETTER SHALL BE SUBMITTED ALONG WITH THE ACCOMPANYING TEST REPORTS TO THE ENGINEER. THE ENGINEER WILL SUPPLY WRITTEN ACCEPTANCE OF THE MATERIAL TO THE CONTRACTOR AFTER REVIEWING ACCEPTABLE TEST REPORTS, AND AFTER OBSERVING ACCEPTABLE MATERIALS BY VISUAL INSPECTION.

2.7 LEVELING FOOTING CONCRETE

THE CONCRETE LEVELING FOOTING SHALL BE CONSTRUCTED WITH CONCRETE HAVING A STRENGTH THAT IS NOT LESS THAN 2,500 POUNDS PER SQUARE INCH AND SHALL HAVE SUFFICIENT STRENGTH TO ADEQUATELY SUPPORT THE PANELS AT THE BOTTOM OF THE WALL IN A LEVEL POSITION DURING INSTALLATION.

2.8 FILTER FABRIC

FILTER FABRIC SHALL BE INSTALLED AT THE REQUIRED PLAN LOCATIONS AND SHALL SATISFY THE REQUIREMENTS OF CMS 712.09, Type B.

3.0 CONSTRUCTION REQUIREMENTS

3.1 WALL EXCAVATION

UNCLASSIFIED EXCAVATION SHALL BE IN ACCORDANCE WITH 503 EXCEPT THAT THE LIMITS OF EXCAVATION SHALL BE AS SHOWN IN THE PLAN AND THE BACKFILL WITHIN THE LIMITS OF THE SELECT GRANULAR EMBANKMENT IS INCLUDED FOR PAYMENT WITH 203 SELECT GRANULAR EMBANKMENT.

3.2 FOUNDATION PREPARATION

THE FOUNDATION FOR THE RETAINED EARTH VOLUME SHALL BE GRADED LEVEL FOR A WIDTH EQUAL TO OR EXCEEDING THE LENGTH OF REINFORCING MESH PLUS 6" OR AS SHOWN ON THE PLANS. PRIOR TO WALL CONSTRUCTION, THE FOUNDATION, IF NOT IN ROCK, SHALL BE LEVELED AND ROLLED WITH A SMOOTH WHEEL VIBRATORY ROLLER. ANY FOUNDATION SOILS FOUND TO BE UNSUITABLE SHALL BE REMOVED AND REPLACED, AS DIRECTED BY THE ENGINEER.

AN UNREINFORCED CONCRETE LEVELING FOOTING SHALL BE PROVIDED AS SHOWN ON THE PLAN. THE FOOTING SHALL BE CURED A MINIMUM OF 24 HOURS BEFORE PLACING WALL PANELS ON THE LEVELING FOOTING.

3.3 WALL ERECTION

PANELS ARE HANDLED BY MEANS OF A LIFTING DEVICE CONNECTED TO THE LIFTING INSERT WHICH IS CAST INTO THE UPPER EDGE OF THE PANELS. PANELS SHALL BE INSTALLED VERTICALLY IN SUCCESSIVE HORIZONTAL LIFTS IN THE SEQUENCE SHOWN ON THE PLANS AS EMBANKMENT PLACEMENT PROCEEDS. AS EMBANKMENT MATERIAL IS PLACED BEHIND A PANEL, THE PANELS SHALL BE MAINTAINED IN VERTICAL POSITION BY MEANS OF TEMPORARY WOODEN WEDGES PLACED IN THE PANEL JOINTS ON THE EXTERNAL SIDE OF THE WALL. EXTERNAL BRACING IS REQUIRED FOR THE INITIAL LIFT. VERTICAL TOLERANCE (PLUMBNESS) AND HORIZONTAL ALIGNMENT TOLERANCE SHALL NOT EXCEED 3/4" WHEN MEASURED ALONG A 10' STRAIGHT EDGE. THE MAXIMUM ALLOWABLE OFFSET IN ANY PANEL JOINT SHALL BE 3/4". THE OVERALL VERTICAL TOLERANCE OF THE WALL (PLUMBNESS FROM TOP TO BOTTOM) SHALL NOT EXCEED 1/2" PER 10' OF WALL HEIGHT.

REINFORCING MESH SHALL BE PLACED NORMAL TO THE FACE OF THE WALL, UNLESS OTHERWISE SHOWN ON THE PLANS OR DIRECTED BY THE ENGINEER. PRIOR TO PLACEMENT OF THE REINFORCING MESH, EMBANKMENT SHALL BE COMPACTED IN ACCORDANCE WITH SECTION 3.4.

3.4 SELECT GRANULAR EMBANKMENT MATERIAL PLACEMENT

SELECT GRANULAR EMBANKMENT MATERIAL PLACEMENT SHALL CLOSELY FOLLOW THE ERECTION OF EACH LIFT OF PANELS. AT EACH REINFORCING MESH LEVEL, THE SELECT GRANULAR EMBANKMENT MATERIAL SHOULD BE ROUGHLY LEVELED BEFORE PLACING AND ATTACHING THE MESH. THE REINFORCING MESH SHALL BE PLACED NORMAL TO THE FACE OF THE WALL UNLESS THE PLANS SHOW THAT THE REINFORCING MESH MUST AVOID AN OBSTRUCTION. THE MAXIMUM SELECT GRANULAR EMBANKMENT LIFT THICKNESS SHALL NOT EXCEED 8" (LOOSE) AND SHALL CLOSELY FOLLOW PANEL ERECTION. THE CONTRACTOR SHALL DECREASE THE SELECT GRANULAR EMBANKMENT LIFT THICKNESS, IF NECESSARY, TO OBTAIN THE SPECIFIED DENSITY.

AT THE END OF EACH DAY'S OPERATIONS, THE CONTRACTOR SHALL SHAPE THE LAST LEVEL OF EMBANKMENT AS TO RAPIDLY DIRECT RUNOFF OF RAINWATER AWAY FROM THE WALL FACE. THE CONTRACTOR SHALL NOT ALLOW SURFACE RUNOFF FROM ADJACENT AREAS TO ENTER THE WALL CONSTRUCTION SITE.

COMPACTION OF THE SELECT GRANULAR EMBANKMENT MATERIAL SHALL BE IN ACCORDANCE WITH ALL PERTINENT REQUIREMENTS OF 304.04 WHEN USING MODIFIED 304 MATERIAL OR 310.03 WHEN USING 310A MATERIAL. THE MOISTURE CONTENT OF THE SELECT GRANULAR EMBANKMENT MATERIAL PRIOR TO AND DURING COMPACTION SHALL BE UNIFORMLY DISTRIBUTED THROUGHOUT EACH LAYER AND SHALL BE NOT LESS THAN 3.5% DRY OF THE OPTIMUM MOISTURE CONTENT OR GREATER THAN 1.0% ABOVE THE OPTIMUM MOISTURE CONTENT. EMBANKMENT COMPACTION SHALL BE ACCOMPLISHED WITHOUT DISTURBANCE OR DISTORTION OF REINFORCING MESH OR FACE PANELS. COMPACTION OF THE RETAINED EARTH VOLUME SHALL NOT BE ACCOMPLISHED BY SHEEP FOOT, GRID ROLLERS OR ANY TYPE OF EQUIPMENT EMPLOYING A FOOT, WHICH IN THE OPINION OF THE VSL ENGINEER, COULD PENETRATE THE EMBANKMENT MATERIAL AND DAMAGE THE REINFORCING MESH. COMPACTION IN A STRIP 3' WIDE ADJACENT TO THE BACKSIDE OF THE WALL PANEL SHALL BE ACHIEVED BY AT LEAST 3 PASSES OF A LIGHT MECHANICAL TAMPER. THE SELECT GRANULAR EMBANKMENT MATERIAL PLACED WITHIN 3' OF THE BACKSIDE OF THE WALL PANELS DOES NOT HAVE TO SATISFY DENSITY TEST REQUIREMENTS.

DESIGN 2

URS

47/98

RETAINED EARTH WALL
PLAN NOTES

SUMMIT COUNTY

PROJECT SUM–76–11.57

DESIGNED	DRAWN	TRACED	CHECKED	REVIEWED	DATE	REVISED
JTJ	M.E.		P.E.B	BKL	7-16-98	

F.H.W.A. REGION	STATE	PROJECT	
5	OHIO		

754
1214

SUM–76–11.57

4.0 INSPECTION

THE VSL CORPORATION SHALL PROVIDE A COMPANY REPRESENTATIVE WHO SHALL MONITOR THE PRECAST OPERATION SUFFICIENTLY TO ASSURE THAT THE OPERATION COMPLIES WITH ALL THE ABOVE REQUIREMENTS AND SHALL SUBMIT DOCUMENTATION TO THIS EFFECT TO THE ENGINEER.

DOCUMENTATION SHALL BE FURNISHED BY THE COMPANY REPRESENTATIVE FOR ANY PANEL WHICH HE DEEMS ACCEPTABLE BUT WHICH IS SUBJECT TO REJECTION UNDER 2.1.8.

THE VSL CORPORATION SHALL PROVIDE SUFFICIENT ON–SITE TECHNICAL ASSISTANCE BY A COMPANY REPRESENTATIVE TO ENSURE THAT THE CONTRACTOR AND THE ENGINEER FULLY UNDERSTAND THE PROPER CONSTRUCTION PROCEDURES AND OPERATIONS.

THE CONTRACTOR SHALL PROVIDE A SOILS CONSULTANT WHO SHALL, THROUGH THE ENGINEER, BE RESPONSIBLE FOR ENSURING THAT THE SELECT GRANULAR EMBANKMENT MATERIAL REQUIREMENTS AND THE PLACEMENT AND COMPACTION REQUIREMENTS ARE IN COMPLIANCE WITH THIS PROPOSAL NOTE.

THE SOILS CONSULTANT SHALL PROVIDE THE ENGINEER WITH TWO COPIES OF AN INSPECTION REPORT WHICH CONTAINS THE TESTING RESULTS, ALL PERTINENT MEASUREMENTS, AND THE SOILS CONSULTANT'S CONCLUSIONS.

THE SOILS CONSULTANT'S FIELD REPRESENTATIVE SHALL BE A REGISTERED PROFESSIONAL ENGINEER OR WORK UNDER THE DIRECTION OF A REGISTERED PROFESSIONAL ENGINEER. THE FINAL INSPECTION REPORT SHALL BE SIGNED BY A REGISTERED PROFESSIONAL ENGINEER.

THE ENGINEER WILL MONITOR ERECTION OF THE STRUCTURE AND PLACEMENT OF FILL WITH TECHNICAL ASSISTANCE FROM THE SOILS CONSULTANT AND THE VSL CORPORATION. ANY WORK NOT SATISFYING THE REQUIREMENTS OF THIS PROPOSAL IS SUBJECT TO REJECTION BY THE ENGINEER.

5.0 METHOD OF MEASUREMENT

THE RETAINED EARTH WALL QUANTITY TO BE PAID FOR SHALL BE THE ACTUAL NUMBER OF SQUARE FEET OF FACIAL AREA OF APPROVED RETAINED EARTH WALL PANELS COMPLETE IN PLACE. THE TOTAL QUANTITY IS THE COMPLETED AND ACCEPTED FRONT FACE WALL AREA WITHIN THE LIMITS OF THE BEGINNING AND ENDING WALL STATIONS AND FROM THE TOP OF THE WALL LEVELING FOOTING TO THE TOP OF THE TOP PRECAST WALL PANEL.

503 UNCLASSIFIED EXCAVATION IS DEFINED IN SECTION 3.1.

5.1 BASIS OF PAYMENT

ITEM SPECIAL – RETAINED EARTH WALLS, WILL BE PAID FOR AT THE CONTRACT UNIT PRICE PER SQUARE FOOT. THIS WORK SHALL INCLUDE THE FABRICATION, FURNISHING, AND ERECTION OF THE RETAINED EARTH WALLS, INCLUDING THE REINFORCED CONCRETE FACE PANELS WITH FRACTURED FIN SURFACE, REINFORCING MESH, FASTENERS, JOINT MATERIALS, FILTER FABRIC, SLIP JOINT, AND ALL INCIDENTALS, LABOR, AND EQUIPMENT NECESSARY TO SUCCESSFULLY COMPLETE THIS ITEM.

ITEM 202 – PORTIONS OF STRUCTURE REMOVED, WILL BE PAID FOR AT THE LUMP SUM CONTRACT PRICE IN ACCORDANCE WITH THE RETAINING WALL GENERAL NOTES

ITEM 203 – EXCAVATION NOT INCLUDING EMBANKMENT CONSTRUCTION, WILL BE PAID FOR AT THE CONTRACT PRICE PER CUBIC YARD.

ITEM 203 – EMBANKMENT, WILL BE PAID FOR AT THE CONTRACT UNIT PRICE PER CUBIC YARD.

ITEM 203 – SELECT GRANULAR EMBANKMENT, AS PER PLAN, WILL BE PAID FOR AT THE CONTRACT PRICE PER CUBIC YARD. PAYMENT FOR THE SOILS CONSULTANT'S WORK SHALL BE INCLUDED WITH THIS ITEM.

ITEM 503 – COFFERDAMS, CRIB, AND SHEETING, WILL BE PAID FOR AT THE LUMP SUM CONTRACT PRICE.

ITEM 503 – UNCLASSIFIED EXCAVATION AS PER PLAN, WILL BE PAID FOR AT THE CONTRACT PRICE PER CUBIC YARD.

ITEM 504 – STEEL SHEET PILING LEFT IN PLACE, AS PER PLAN (MINIMUM SECTION MODULAR OF 18.1 IN3 PER FOOT OF WALL), WILL BE PAID FOR AT THE CONTRACT PRICE PER SQUARE FOOT.

ITEM 509 – EPOXY COATED REINFORCING STEEL, GRADE 60, WILL BE PAID FOR AT THE CONTRACT UNIT PRICE PER POUND.

ITEM 511 – CLASS S CONCRETE, MISCELLANEOUS, WILL BE PAID FOR AT THE CONTRACT UNIT PRICE PER CUBIC YARD FOR PROVIDING TRAFFIC BARRIER.

ITEM 511 – CLASS C CONCRETE WALL COPING (CAP), WILL BE PAID FOR AT THE CONTRACT UNIT PRICE PER CUBIC YARD.

ITEM 511 – CLASS C CONCRETE, FOOTING, WILL BE PAID FOR AT THE CONTRACT UNIT PRICE BID PER CUBIC YARD.

ITEM SPECIAL – SEALING OF CONCRETE SURFACES SHALL BE PAID FOR AT THE CONTRACT PRICE PER SQUARE YARD IN ACCORDANCE WITH THE PROPOSAL NOTE.

ITEM SPECIAL – SEALING OF CONCRETE SURFACES, (EPOXY), WILL BE PAID FOR AT THE CONTRACT UNIT PRICE PER SQUARE YARD IN ACCORDANCE WITH THE PROPOSAL NOTE.

ITEM 516 – 1/2" PREFORMED EXPANSION JOINT FILLER, WILL BE PAID FOR AT THE CONTRACT PRICE PER SQUARE FOOT.

ITEM 516 – 3/4" PREFORMED EXPANSION JOINT FILLER, WILL BE PAID FOR AT THE CONTRACT PRICE PER SQUARE FOOT.

ITEM 604 – INLET NO. 3, AS PER PLAN NO. 1, SHALL BE PAID FOR EACH AT THE CONTRACT PRICE.

DESIGN 2

URS

48 /98

RETAINED EARTH WALL
PLAN NOTES

SUMMIT COUNTY

PROJECT SUM–76–11.57

DESIGNED	DRAWN	TRACED	CHECKED	REVIEWED	DATE	REVISED
JTJ	M.E.		P.E.B.	BKL	7-16-98	

F.H.W.A. REGION	STATE	PROJECT	
5	OHIO		

755
1214

SUM–76–11.57

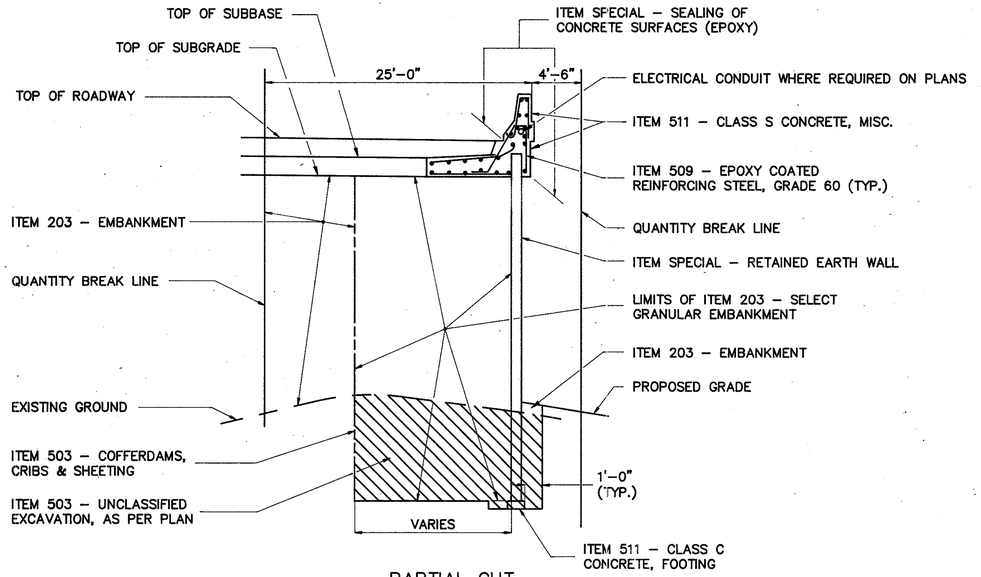

PARTIAL CUT

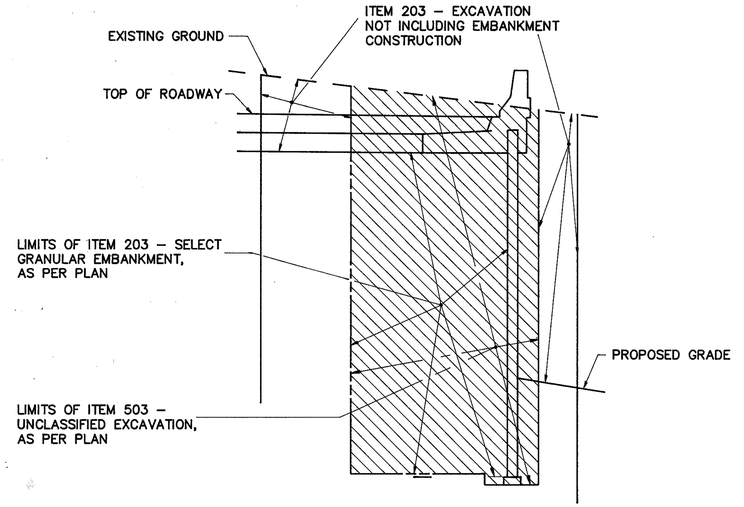

FULL CUT

(FOR ADDITIONAL ITEM LOCATIONS SEE PARTIAL CUT DIAGRAM)

NOTES

1. ITEM 503 – UNCLASSIFIED EXCAVATION, AS PER PLAN:
   FOR AN EXPLANATION OF THE ITEM, SEE SECTION 3.1 ON SHEET 47/98 .
2. ITEM 203 – SELECT GRANULAR EMBANKMENT, AS PER PLAN:
   FOR AN EXPLANATION OF THIS ITEM, SEE SECTION 3.4 ON SHEET 47/98 .
3. ITEM SPECIAL – RETAINED EARTH WALL:
   ALL SPECIFICATIONS FOR THESE WALLS ARE PROVIDED AS PER PLAN NOTES ON SHEETS 46/98 THROUGH 48/98 .
4. ITEM 511 – CLASS S CONCRETE, MISC.:
   SHALL INCLUDE TRAFFIC BARRIER AND SLEEPER SLAB.

STRUCTURE QUANTITIES DIAGRAMS

DESIGN No.2 ESTIMATED QUANTITES – RETAINED EARTH WALLS

ITEM	ITEM EXT.	TOTAL	UNIT	DESCRIPTION	WALL1	WALL2	WALL3	WALL4	WALL5	WALL9	WALL10	WALL11	WALL12	WALL13	WALL14
202	11200	LUMP		PORTIONS OF STRUCTURE REMOVED	LUMP	LUMP	LUMP	LUMP	LUMP	LUMP	LUMP	LUMP	LUMP	LUMP	LUMP
203	12000	3,470	C.Y.	EXCAVATION NOT INCLUDING EMBANKMENT	439	1,337	76	154	0	371	105	363	31	514	80
				CONSTRUCTION											
203	20000	6,954	C.Y.	EMBANKMENT	26	76	40	1,213	1,911	614	1,672	118	610	442	232
203	35001	39,003	C.Y.	SELECT GRANULAR EMBANKMENT, AS PER PLAN (SEE SHEET 753)	2,779	13,740	1,597	1,975	995	1,785	1,876	2,515	3,092	5,806	2,843
503	11100	LUMP		COFFERDAMS, CRIBS, AND SHEETING	LUMP	LUMP	LUMP	LUMP	LUMP	LUMP	LUMP	LUMP	LUMP	LUMP	LUMP
503	21101	28,574	C.Y.	UNCLASSIFIED EXCAVATION, AS PER PLAN (SEE SHEET 753)	2,267	11,310	1,079	961	0	1,981	600	2,572	1,339	4693	1,772
504	11101	777	S.F.	STEEL SHEET PILING LEFT IN PLACE, AS PER PLAN (MIN. SECTION MODULUS 18.1 CU. IN./FT.)	–	–	–	–	–	–	–	–	397	–	380
509	15800	217,974	L.B.	EPOXY COATED REINFORCING STEEL, GRADE 60	21,994	43,051	7,608	13,209	10,487	1,284	15,385	19,275	24,320	39,425	21,936
511	34450	1,552	C.Y.	CLASS S CONCRETE, MISC.: Traffic Barrier and Sleeper Slab	158	309	55	94	75	0	110	137	173	282	159
511	46300	14	C.Y.	CLASS C CONCRETE, WALL COPING (CAP)						14					
511	46500	140	C.Y.	CLASS C CONCRETE, FOOTING	12	26	5	8	6	9	10	12	14	24	14
SPEC	51267500	206	S.Y.	SEALING OF CONCRETE SURFACES (SEE PROPOSAL NOTE)	–	–	–	–	–	206	–	–	–	–	–
SPEC	51267502	4,455	S.Y.	SEALING OF CONCRETE SURFACES (EPOXY) (SEE PROPOSAL NOTE)	414	827	146	252	201	310	298	369	452	759	427
516	13200	3,694	S.F.	1/2" PREFORMED EXPANSION JOINT FILLER	379	751	120	220	171	13	277	325	387	673	378
516	13400	303	S.F.	3/4" PREFORMED EXPANSION JOINT FILLER	37	52	41	20	19	16	19	18	39	23	19
604	22500	3	EA.	INLET NO. 3, AS PER PLAN NO. 1 (SEE SHEET 552)	1	1	–	–	–	–	1	–	–	–	–
SPEC	61013700	67,262	S.F.	RETAINED EARTH WALL	5,679	18,173	2,528	3,448	2,107	2,860	3,847	5,159	6,193	11,185	6,083

CALCULATED BY: JTJ DATE: 6-22-90 CHECKED BY: PeB DATE: 6-22-90

SEALING CONCRETE SURFACES

(WALL No.9 ONLY)

DESIGN 2

URS

49/98

ESTIMATED QUANTITIES

RETAINED EARTH WALLS

PROJECT No. SUM–76–11.57

DESIGNED	DRAWN	TRACED	CHECKED	REVIEWED	DATE	REVISED
JTJ	ME		PeB	BKP	7-12-90	

F.H.W.A. REG.	STATE	PROJECT	
5	OHIO		

SUM-76-11.57

756
12/4

MARK	No. REQD.	LGTH.	TYPE	DIMENSIONS A	B	C	D	INCRM.	WEIGHT LBS.
WALL 1									
1EW2 401	2	8-10	40	2- 3	1- 9				12
1EW2 402	2	9- 2	40	2- 3	1-11				12
1EW2 501	386	6-11	51						2785
1EW2 502	737	7- 4	52						5637
1EW2 503	677	5- 7	38	1- 2	3-10	3- 4			3913
1EW2 504	238	4- 6	ST						1117
1EW2 505	38	21- 8	ST						859
1EW2 506	190	26- 2	ST						5185
1EW2 507	19	27- 8	ST						548
1EW2 511	10	6- 4	53						66
1EW2 512	1	8- 5	ST						9
1EW2 513	2	8-11	17	1- 5	1- 5	5- 0			19
1EW2 514	11	3-10	40	0- 8	0- 8				44
1EW2 521	24	29- 2	ST						730
1EW2 523	11	8- 1	54	1- 8	1- 4				93
SERIES	2-SETS	6- 2		0- 5	0- 0			7	
OF	OF 10=	TO	54	TO	TO			0- 1--	148
1EW2 524	20 BAR	8- 0		1- 7	1- 3			16	
1EW2 526	31	6- 6	ST						210
1EW2 527	59	7- 5	38	1- 1	5- 9	5- 0			454
1EW2 529	5	29- 5	17	1- 3	9- 7	10- 1			153
EPOXY COATED REINFORCING STEEL, TOTAL WALL 1 = 21994									

MARK	No. REQD.	LGTH.	TYPE	DIMENSIONS A	B	C	D	INCRM.	WEIGHT LBS.
WALL 2									
2EW2 501	775	6-11	51						5591
2EW2 502	1447	7- 4	52						11068
2EW2 503	1435	5- 7	38	1- 2	3-10	3- 4			8295
2EW2 504	508	4- 6	ST						2384
2EW2 505	19	19-10	ST						393
2EW2 506	494	26- 2	ST						13482
2EW2 507	19	24- 8	ST						489
2EW2 511	10	6- 4	53						66
2EW2 512	1	8- 5	ST						9
2EW2 513	2	8-11	17	1- 5	1- 5	5- 0			19
2EW2 514	11	3-10	40	0- 8	0- 8				44
2EW2 531	3	8- 4	25	0- 9	2- 0	2- 0	1- 6		26
2EW2 532	9	8- 8	25	0- 9	2- 0	2- 0	1-10		82
2EW2 533	6	7- 3	54	1- 2	0-10				45
2EW2 534	9	8- 7	54	1-11	1- 7				81
2EW2 535	15	6- 1	ST						95
2EW2 536	39	7- 2	38	1- 3	5- 4	4- 8			290
2EW2 538	6	6- 8	38	1- 3	4-11	4- 3			42
2EW2 539	6	6- 3	38	1- 3	4- 5	3-10			39
2EW2 540	6	12-11	17	2- 6	2- 6	6- 0			81
2EW2 602	39	7- 4	52						430
EPOXY COATED REINFORCING STEEL, TOTAL WALL 2 = 43051									

MARK	No. REQD.	LGTH.	TYPE	DIMENSIONS A	B	C	D	INCRM.	WEIGHT LBS.
WALL 3									
3EW2 501	136	6-11	51						981
3EW2 502	250	7- 4	52						1912
3EW2 503	246	5- 5	38	1- 0	3-10	3- 4			1379
3EW2 504	87	4- 6	ST						408
3EW2 505	19	23- 8	ST						469
3EW2 506	57	26- 2	ST						1556
3EW2 507	19	25- 2	ST						499
3EW2 531	1	8- 4	25	0- 9	2- 0	2- 0	1- 6		9
3EW2 532	3	8- 8	25	0- 9	2- 0	2- 0	1-10		27
3EW2 533	2	7- 3	54	1- 2	0-10				15
3EW2 534	3	8- 7	54	1-11	1- 7				27
3EW2 535	5	6- 1	ST						32
3EW2 536	13	7- 2	38	1- 3	5- 4	4- 8			97
3EW2 538	2	6- 8	38	1- 3	4-11	4- 3			14
3EW2 539	2	6- 3	38	1- 3	4- 5	3-10			13
3EW2 540	2	12-11	17	2- 6	2- 6	6- 0			27
3EW2 602	13	7- 4	52						143
EPOXY COATED REINFORCING STEEL, TOTAL WALL 3 = 7608									

MARK	No. REQD.	LGTH.	TYPE	DIMENSIONS A	B	C	D	INCRM.	WEIGHT LBS.
WALL 4									
4EW2 501	240	6-11	51						1731
4EW2 502	465	7- 4	52						3557
4EW2 503	465	5- 7	38	1- 2	3-10	3- 4			2688
4EW2 504	165	4- 6	ST						774
4EW2 505	57	22- 8	ST						1348
4EW2 506	114	26- 2	ST						3111
EPOXY COATED REINFORCING STEEL, TOTAL WALL 4 = 13209									

MARK	No. REQD.	LGTH.	TYPE	DIMENSIONS A	B	C	D	INCRM.	WEIGHT LBS.
WALL 5									
5EW2 501	189	6-11	51						1363
5EW2 502	370	7- 4	52						2830
5EW2 503	370	5- 7	38	1- 2	3-10	3- 4			2139
5EW2 504	129	4- 6	ST						605
5EW2 505	19	21- 2	ST						419
5EW2 506	95	26- 8	ST						2642
5EW2 507	19	24- 8	ST						489
EPOXY COATED REINFORCING STEEL, TOTAL WALL 5 = 10487									

MARK	No. REQD.	LGTH.	TYPE	DIMENSIONS A	B	C	D	INCRM.	WEIGHT LBS.
WALL 9									
9EW2 541	118	3- 7	2	1- 8	0- 6				441
9EW2 542	84	9- 2	ST						803
9EW2 543	3	12- 8	ST						40
EPOXY COATED REINFORCING STEEL, TOTAL WALL 9 = 1284									

MARK	No. REQD.	LGTH.	TYPE	DIMENSIONS A	B	C	D	INCRM.	WEIGHT LBS.
WALL 10									
10EW2 501	280	6-11	51						2020
10EW2 502	532	7- 4	52						4069
10EW2 503	532	5- 7	38	1- 2	3-10	3- 4			3075
10EW2 504	187	4- 6	ST						878
10EW2 505	19	27- 8	ST						548
10EW2 506	152	26- 2	ST						4148
10EW2 507	19	25- 8	ST						509
10EW2 511	10	6- 4	53						66
10EW2 512	1	8- 5	ST						9
10EW2 513	2	8-11	17	1- 5	1- 5	5- 0			19
10EW2 514	11	3-10	40	0- 8	0- 8				44
EPOXY COATED REINFORCING STEEL, TOTAL WALL 10 = 15385									

MARK	No. REQD.	LGTH.	TYPE	DIMENSIONS A	B	C	D	INCRM.	WEIGHT LBS.
WALL 11									
11EW2 501	351	6-11	51						2532
11EW2 502	679	7- 4	52						5193
11EW2 503	679	5- 7	38	1- 2	3-10	3- 4			3925
11EW2 504	240	4- 6	ST						1126
11EW2 505	19	25- 2	ST						499
11EW2 506	171	26- 2	ST						4667
11EW2 507	57	22- 5	ST						1333
EPOXY COATED REINFORCING STEEL, TOTAL WALL 11 = 19275									

MARK	No. REQD.	LGTH.	TYPE	DIMENSIONS A	B	C	D	INCRM.	WEIGHT LBS.
WALL 12									
12EW2 401	2	8-10	40	2- 3	1- 9				12
12EW2 402	2	9- 2	40	2- 3	1-11				12
12EW2 501	430	6-11	51						3102
12EW2 502	828	7- 4	52						6333
12EW2 503	768	5- 7	38	1- 2	3-10	3- 4			4439
12EW2 504	271	4- 6	ST						1272
12EW2 505	133	23- 2	ST						3214
12EW2 506	152	26- 2	ST						4148
12EW2 521	24	29- 2	ST						730
12EW2 523	11	8- 1	54	1- 8	1- 4				93
SERIES	2-SETS	6- 2		0- 5	0- 0			7	
OF	OF 10=	TO	54	TO	TO			0- 1--	148
12EW2 524	20 BAR	8- 0		1- 7	1- 3			16	
12EW2 526	31	6- 6	ST						210
12EW2 527	59	7- 5	38	1- 1	5- 9	5- 0			454
12EW2 529	5	29- 5	17	1- 3	9- 7	10- 1			153
TOTAL WALL 12 = 24320									

NOTES

① FOR REINFORCING BAR DIAGRAMS AND NOTES SEE SHEET 51/98

DESIGN 2

URS

50/98

REINFORCING SCHEDULE

RETAINED EARTH

SUMMIT COUNTY

PROJECT No. SUM-76-11.57

DESIGNED	DRAWN	TRACED	CHECKED	REVIEWED	DATE	REVISED
J.T.J.	M.E.		P.E.B.	BKK	7/17/96	

F.H.W.A. REG.	STATE	PROJECT	
5	OHIO		

757/1219

SUM-76-11.57

REINFORCING BAR TYPES

MARK	No. REQD.	LGTH.	TYPE	DIMENSIONS A	B	C	D	INCRM.	WEIGHT LBS.
WALL 13									
13EW2 501	716	6-11	51						5165
13EW2 502	1368	7- 4	52						10463
13EW2 503	1364	5- 7	38	1- 2	3-10	3- 4			7885
13EW2 504	482	4- 6	ST						2262
13EW2 505	19	21- 2	ST						419
13EW2 506	456	26- 2	ST						12445
13EW2 507	19	19- 8	ST						390
13EW2 531	1	8- 4	25	0- 9	2- 0	2- 0	1- 6		9
13EW2 532	3	8- 8	25	0- 9	2- 0	2- 0	1-10		27
13EW2 533	2	7- 3	54	1- 2	0-10				15
13EW2 534	3	8- 7	54	1-11	1- 7				27
13EW2 535	5	6- 1	ST						32
13EW2 536	13	7- 2	38	1- 3	5- 4	4- 8			97
13EW2 538	2	6- 8	38	1- 3	4-11	4- 3			14
13EW2 539	2	6- 3	38	1- 3	4- 5	3-10			13
13EW2 540	2	8-11	17	2- 6	2- 6	2- 0			19
13EW2 602	13	7- 4	52						143
EPOXY COATED REINFORCING STEEL, TOTAL WALL 13 = 39425									

MARK	No. REQD.	LGTH.	TYPE	DIMENSIONS A	B	C	D	INCRM.	WEIGHT LBS.
WALL 14									
14EW2 501	400	6-11	51						2886
14EW2 502	772	7- 4	52						5905
14EW2 503	772	5- 7	38	1- 2	3-10	3- 4			4463
14EW2 504	273	4- 6	ST						1281
14EW2 505	38	20- 2	ST						799
14EW2 506	209	26- 2	ST						5704
14EW2 507	38	22- 8	ST						898
EPOXY COATED REINFORCING STEEL, TOTAL WALL 14 = 21936									

ITEM 509
EPOXY COATED REINFORCING STEEL,
GRADE 60

WALL	217974
TOTAL	217974

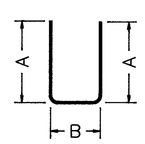

2

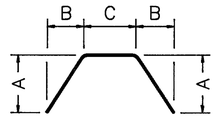

17

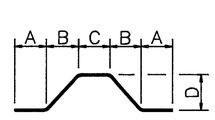

25

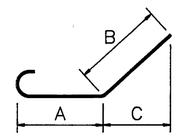

38

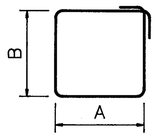

40

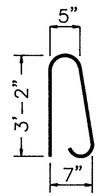

51

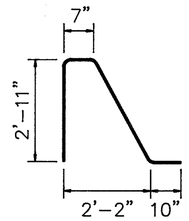

52

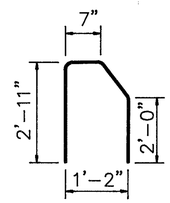

53

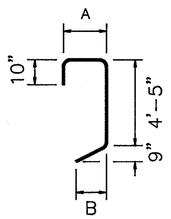

54

REINFORCING STEEL SAMPLES

REFER TO CMS SECTIONS 106.03, 700, 709.01 THROUGH 709.05 AND 709.08. SUFFICIENT ADDITIONAL REINFORCING STEEL SHALL BE PROVIDED FOR SAMPLING. RANDOM SAMPLES SHALL BE REPLACED IN THE STRUCTURES BY THE ADDITIONAL STEEL, SPLICED IN ACCORDANCE WITH 509.08.

DESIGN 2

URS

51 / 98

REINFORCING SCHEDULE
RETAINED EARTH
SUMMIT COUNTY
PROJECT No. SUM-76-11.57

DESIGNED	DRAWN	TRACED	CHECKED	REVIEWED	DATE	REVISED
J.T.J.	M E		P.E.B.	BKR	7/7/98	

F.H.W.A. REG.	STATE	PROJECT	
5	OHIO		

758
1214

SUM - 76 - 11.57

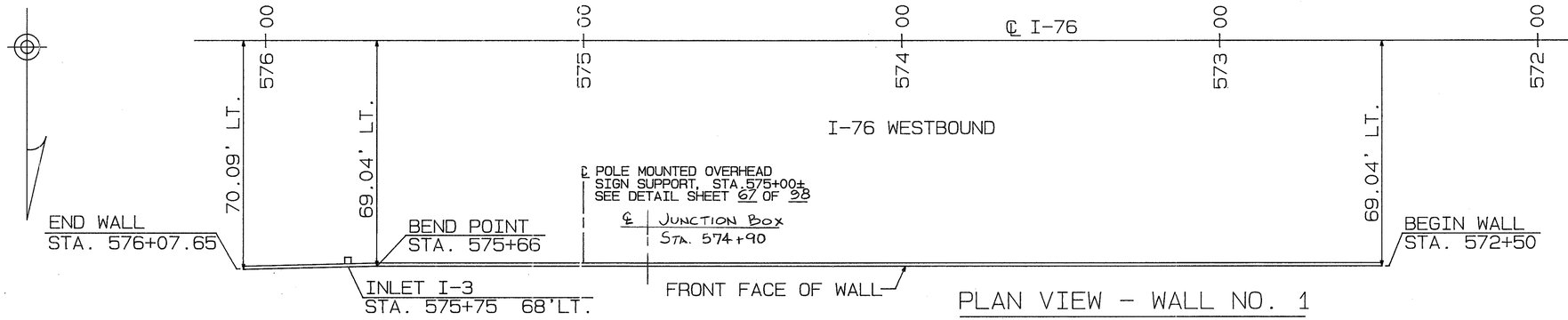

PLAN VIEW - WALL NO. 1

TYPICAL NOTES FOR SUM-76-11.57

1. REFER TO THE CONTRACT DRAWINGS PREPARED BY URS CONSULTANTS FOR THE FOLLOWING:
   - LINE, GRADE, & GEOMETRIC DATA.
   - ESTIMATED QUANTITIES, REINFORCING BAR SCHEDULE & PLAN NOTES FOR CONSTRUCTION OF RETAINED EARTH WALLS.
2. WALLS 3, 11, 12, 13 SHALL BE CONSTRUCTED IN STAGES. REFER TO THE RETAINING WALL GENERAL NOTES FOR STAGE CONSTRUCTION SEQUENCING.
3. ⬭ INDICATES MESH SIZE.
4. FOR ADDITIONAL INFORMATION SEE SHEETS 65/98 THRU 71/98.
5. THE HEAVY LINE ON WALL ELEVATIONS INDICATES WHERE THE MESH SIZES CHANGE.

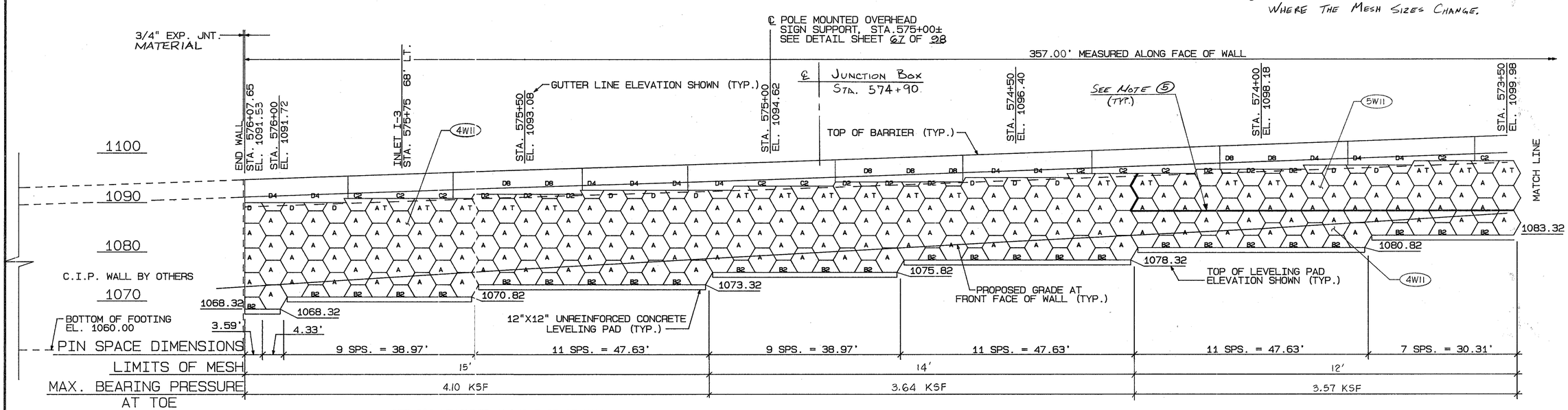

DEVELOPED ELEVATION - WALL NO. 1

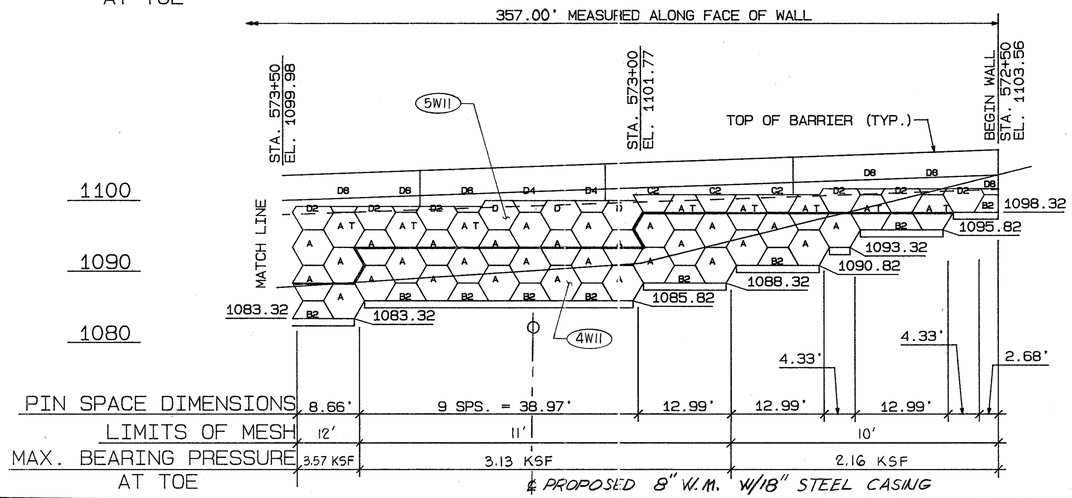

DESIGN OF ALL WALLS IS BASED ON THE ASSUMPTION THAT ALL MATERIALS, INCLUDING THE RETAINED EARTH BACKFILL AND METHODS OF CONSTRUCTION CONFORM TO THE SPECIFICATIONS FOR RETAINED EARTH WALLS.

THESE DRAWINGS ARE CERTIFIED WITH RESPECT TO INTERNAL STABILITY OF RETAINED EARTH STRUCTURES ONLY.

STATE OF OHIO ROGER A. BLOOMFIELD REGISTERED PROFESSIONAL ENGINEER

DESIGN 2

FABRICATOR:

REV. No.	DATE	DESCRIPTION	MADE BY

REVISION SCHEDULE

ODOT PROJECT No.

BRIDGE No.

				CONSULT. ENGR.		
				CONTRACTOR		
				DRAWN BY	DATE	MATERIAL
				CHK'D	DATE	DRAWING No.
				TRACED	DATE	OF
DATE	ISSUED FOR	PRINTS	SEPIAS	APP'D	DATE	

NO.	DATE	REVISION	BY
2	11/19/01	REV. PER ENGR.	ALC
#1	9/24/01	REV. PER ENGR.	ALC

DES.	3/30/01	JT
DRN.	3/30/01	JT
CHK.	3/9/01	JN

ENGINEERED DRAWING INSTITUTE

VSL CORPORATION
RETAINED EARTH
8096 HAUTE COURT
P.O. BOX 866
SPRINGFIELD, VA 22150
Phone: 703-451-4300
Fax: 703-451-0882
Atlanta, GA / Campbell, CA / Dallas, TX / Denver, CO / Honolulu, HI / Houston, TX / Los Angeles, CA / Miami, FL / Minneapolis, MN / Seattle, WA / Washington, DC

VSL Corporation ("VSL") has prepared these drawings and specifications and owns all rights in all drawings, specifications and other information ("Information") set forth in these drawings. Any use of such information in whole or in part, or any reproduction in whole or in part, or any reference to the Information in connection with any publication, material and/or project, other than that for which it was prepared by VSL, is strictly prohibited without the written consent of VSL. Any other use is strictly at user's own risk and user agrees to hold VSL harmless from any and all LIABILITY CLAIMS ANY LIABILITY thereafter.

RETAINED EARTH
ELEVATION AND PLAN VIEW - WALL 1
AKRON EAST EXPRESSWAY
SUM-76-11.57
AKRON, OHIO

PRINT STATUS:

JOB NO: OH006-8

SHEET: 52 OF: 98

BRUNING 44.232 75346

F.H.W.A. REG.	STATE	PROJECT	
5	OHIO		

759
1214

SUM - 76 - 11.57

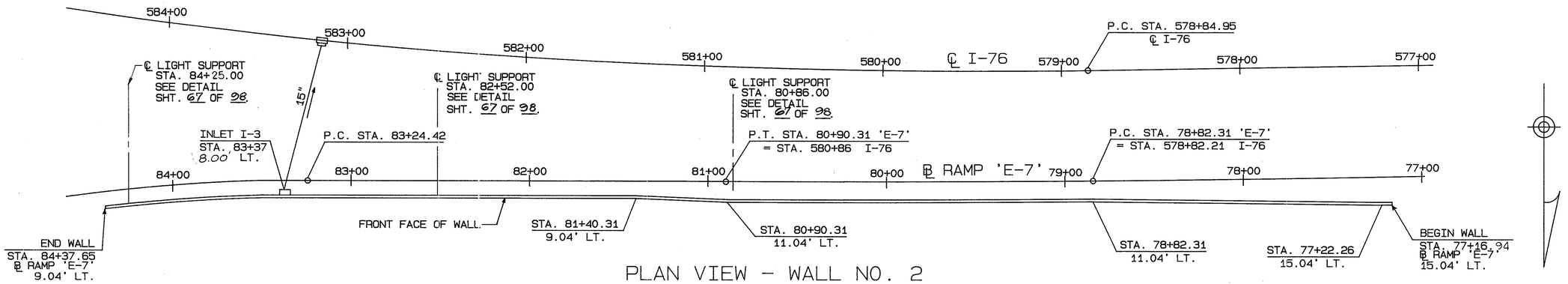

PLAN VIEW - WALL NO. 2

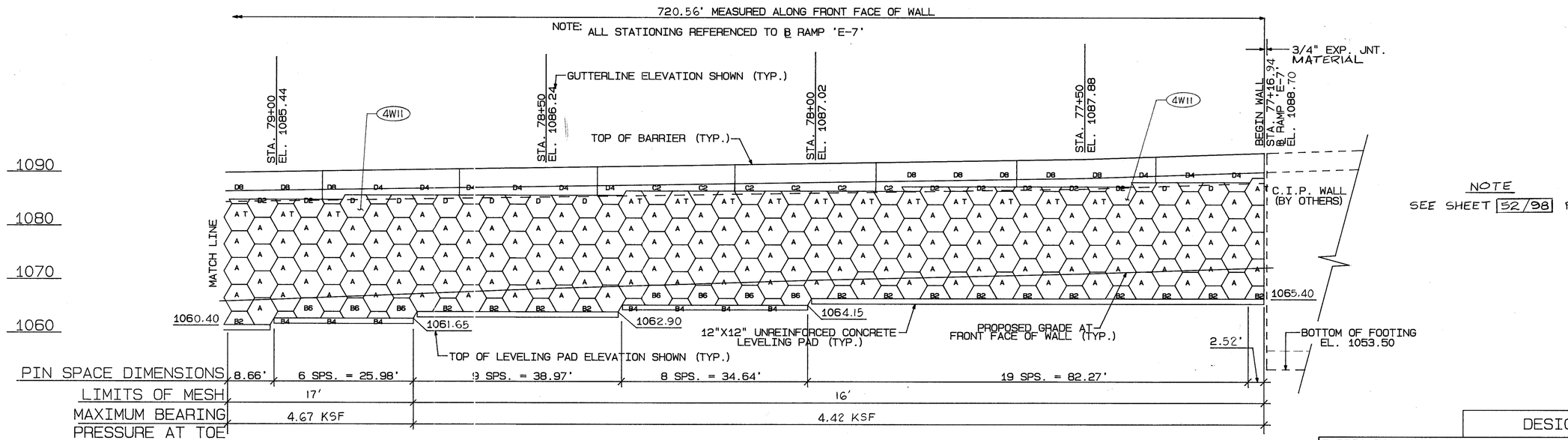

PARTIAL DEVELOPED ELEVATION - WALL NO. 2

NOTE
SEE SHEET 52/98 FOR NOTES

DESIGN 2

FABRICATOR:

REV. No.	DATE	DESCRIPTION	MADE BY

REVISION SCHEDULE

ODOT PROJECT No.

BRIDGE No.

				CONSULT. ENGR.		
				CONTRACTOR:		
				DRAWN BY	DATE	MATERIAL
				CHK'D	DATE	DRAWING No.
				TRACED	DATE	OF
DATE	ISSUED FOR	PRINTS	SEPIAS	APP'D	DATE	

DESIGN OF ALL WALLS IS BASED ON THE ASSUMPTION THAT ALL MATERIALS, INCLUDING THE RETAINED EARTH BACKFILL AND METHODS OF CONSTRUCTION CONFORM TO THE SPECIFICATIONS FOR RETAINED EARTH WALLS.

THESE DRAWINGS ARE CERTIFIED WITH RESPECT TO INTERNAL STABILITY OF RETAINED EARTH STRUCTURES ONLY.

Ryan C. Ashley 10/6/00

NO.	DATE	REVISION	BY
1	11/20/98	REV. PER. ENGR.	ALS
2	12/9/98	REV. PER. ENGR.	ALS

DES. JT 3/3/99
DRN. JT 3/30/81
CHK. TM 3/3/99

POST-TENSIONING INSTITUTE

VSL CORPORATION
RETAINED EARTH™
8008 HAUTE COURT
POST OFFICE BOX 2150
SPRINGFIELD, VA 22150
Phone: 703-451-4300
Fax: 703-451-0092
Atlanta, GA / Campbell, CA / Dallas, TX / Denver, CO / Honolulu, HI / Houston, TX / Los Angeles, CA / Miami, FL / Minneapolis, MN / Seattle, WA / Washington, DC

VSL Corporation ("VSL") claims a strict proprietary interest in the specifications and calculations contained herein. The information set forth on this sheet and all such information in whole or in part may not be reproduced or disclosed to others without VSL's written consent. Use of this sheet is for construction purposes only and in connection with VSL's service provided by VSL. Any other use is strictly prohibited and VSL DISCLAIMS ANY LIABILITY CAUSED BY SUCH USE.

RETAINED EARTH
ELEVATION AND PLAN VIEW - WALL 2

AKRON EAST EXPRESSWAY
SUM-76-11.57
AKRON, OHIO

PRINT STATUS:

JOB NO: OH006-8

SHEET: 53 OF: 98

BRUNING 44 233 75346

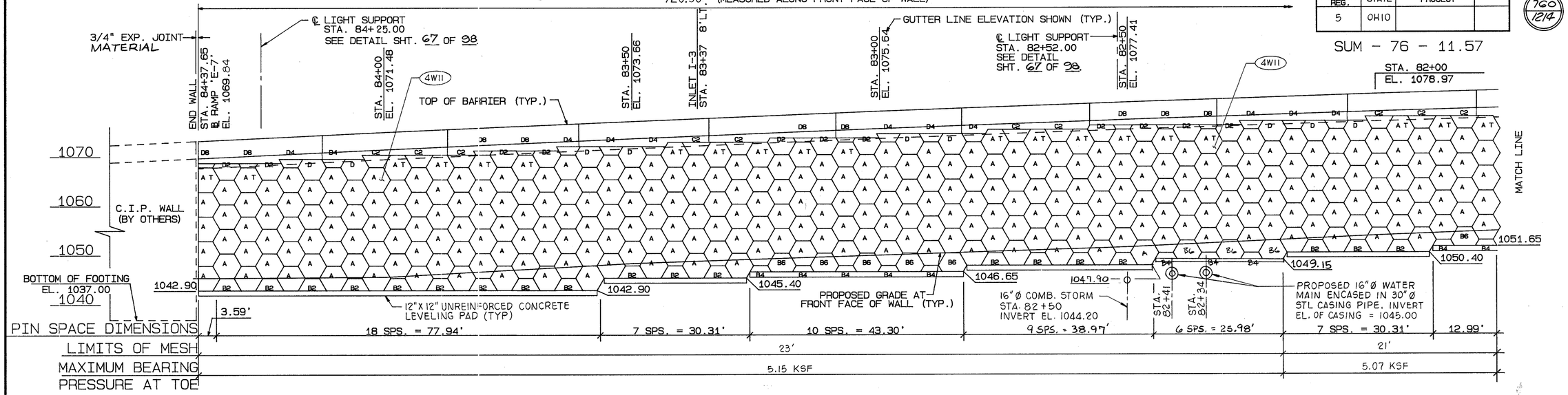

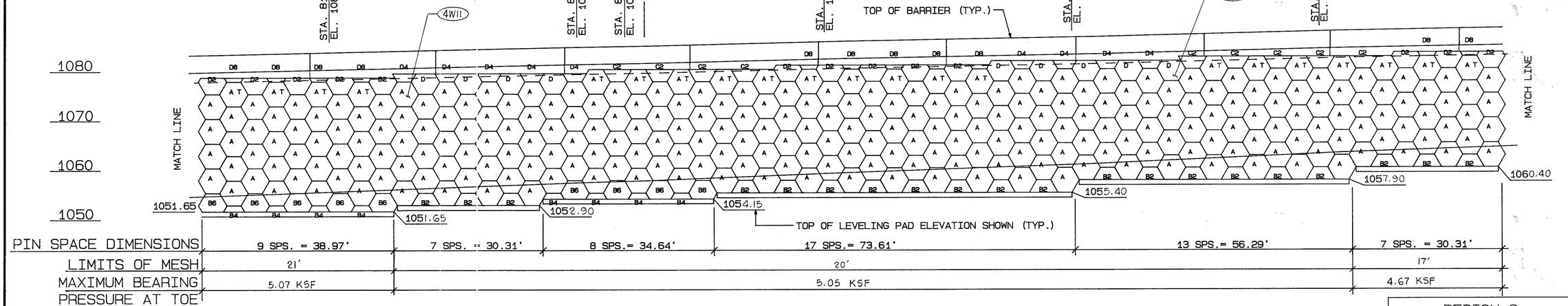

PARTIAL DEVELOPED ELEVATION - WALL NO. 2

DESIGN 2

F.H.W.A. REG.	STATE	PROJECT	
5	OH10		

760/1214

SUM - 76 - 11.57

DESIGN OF ALL WALLS IS BASED ON THE ASSUMPTION THAT ALL MATERIALS, INCLUDING THE RETAINED EARTH BACKFILL AND METHODS OF CONSTRUCTION CONFORM TO THE SPECIFICATIONS FOR RETAINED EARTH WALLS.

THESE DRAWINGS ARE CERTIFIED WITH RESPECT TO INTERNAL STABILITY OF RETAINED EARTH STRUCTURES ONLY.

FABRICATOR:

REV. No.	DATE	DESCRIPTION	MADE BY

REVISION SCHEDULE

ODOT PROJECT No.

BRIDGE No.

DATE	ISSUED FOR	PRINTS	SEPIAS

CONSULT. ENGR:	
CONTRACTOR:	
DRAWN BY	DATE
CHK'D	DATE
TRACED	DATE
APP'D	DATE

MATERIAL

DRAWING No.

OF

NO.	DATE	REVISION	BY
1	11/24/04	REV PER ENGR.	
2	12/19/05	REV. PER ENGR.	ALC

DES.	3/19/01	TT
DRN.	3/23/04	TT
CHK.	3/24/04	TJN

MSE WALLS DESIGNING INSTITUTE

VSL CORPORATION
RETAINED EARTH™
8006 HAUTE COURT
P.O. BOX 666
SPRINGFIELD, VA 22150
Phone: 703-451-4300
Fax: 703-451-0862
Atlanta, GA / Campbell, CA / Dallas, TX / Denver, CO / Honolulu, HI / Houston, TX / Los Angeles, CA / Miami, FL / Minneapolis, MN / Seattle, WA / Washington, DC

VSL Corporation ("VSL") owns all intellectual property rights in all drawings, specifications and other information ("information") set forth herein. Any use of such information in whole or in part, any reproduction, distribution, transmission, adaptation, public display or public performance of the information to the material and/or information contained herein is strictly prohibited by VSL. Any other use is strictly prohibited by VSL and VSL DISCLAIMS ANY LIABILITY thereto.

RETAINED EARTH
ELEVATION - WALL 2
AKRON EAST EXPRESSWAY
SUM-76-11.57
AKRON, OHIO

PRINT STATUS:

JOB NO: OH006-8

SHEET: 54 OF: 98

BRUNING 44-232 79346

F.H.W.A. REG.	STATE	PROJECT	
5	OHIO		

761/1214

SUM - 76 - 11.57

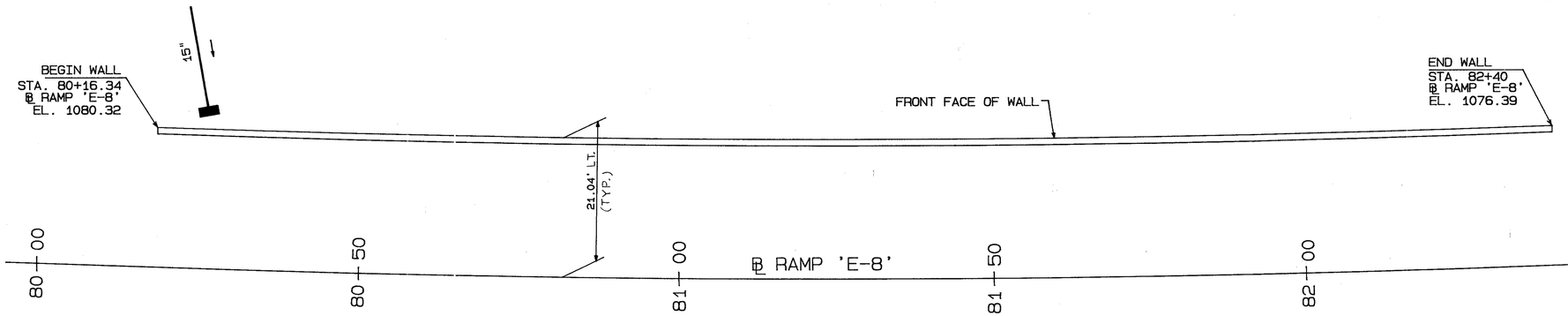

PLAN VIEW - WALL NO. 4

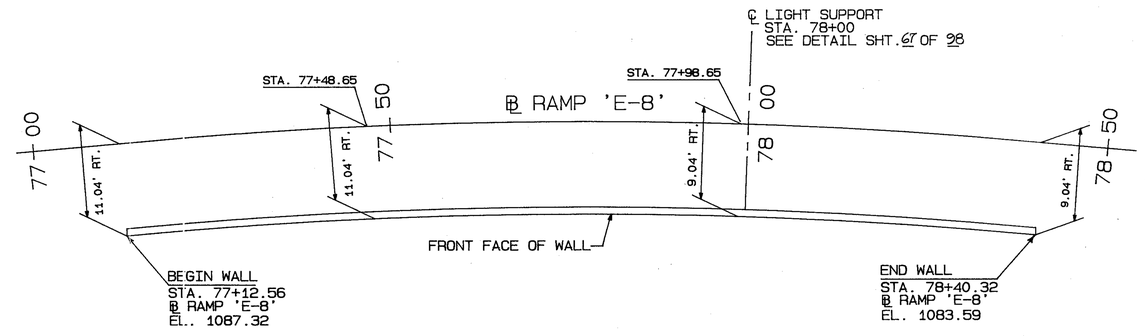

PLAN VIEW - WALL NO. 3

NOTE

SEE SHEET 52/98 FOR NOTES

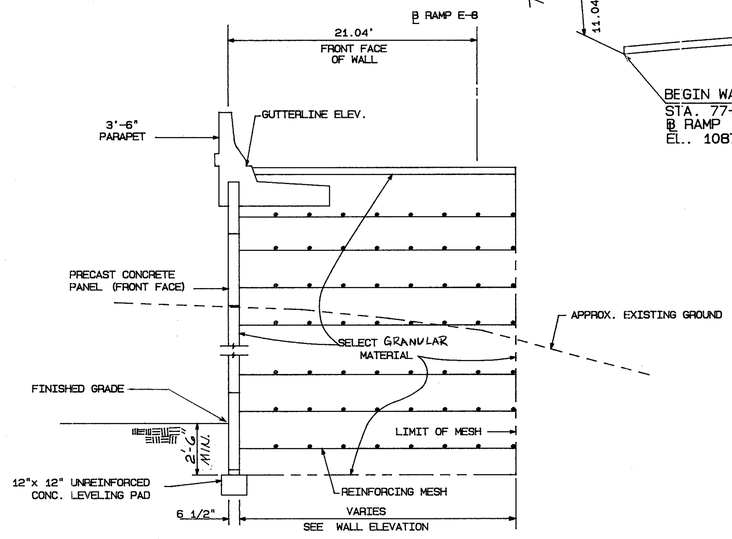

TYPICAL SECTION - WALL 4

N.T.S.

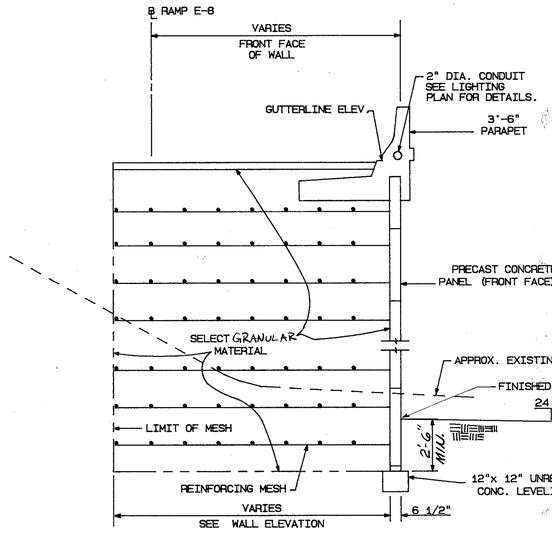

TYPICAL SECTION - WALL 3

N.T.S.

DESIGN 2

FABRICATOR:

REV. No.	DATE	DESCRIPTION	MADE BY

REVISION SCHEDULE

ODOT PROJECT No.

BRIDGE No.

DATE	ISSUED FOR	PRINTS	SEPIAS

CONSULT. ENGR:

CONTRACTOR:

DRAWN BY	DATE	MATERIAL
CHK'D	DATE	DRAWING No.
TRACED	DATE	OF
APP'D	DATE	

DESIGN OF ALL WALLS IS BASED ON THE ASSUMPTION THAT ALL MATERIALS, INCLUDING THE RETAINED EARTH BACKFILL AND METHODS OF CONSTRUCTION CONFORM TO THE SPECIFICATIONS FOR RETAINED EARTH WALLS.

THESE DRAWINGS ARE CERTIFIED WITH RESPECT TO INTERNAL STABILITY OF RETAINED EARTH STRUCTURES ONLY.

STATE OF OHIO ROGER ENGINEER PROFESSIONAL

NO.	DATE	REVISION	BY
1	12/19/97	REV. PER ENGR.	ALS
2	1/29/98	REV. PER ENGR.	

DES.	12/3/97	TT
DRN.	3/30/98	JT
CHK.	3/30/98	TW

PTI DEPARTMENT POST-TENSIONING INSTITUTE

VSL CORPORATION
RETAINED EARTH™
8006 HAUTE COURT
P.O. BOX 5460
SPRINGFIELD, VA 22150
Phone: 703-451-4300
Fax: 703-451-0862
Atlanta, GA / Campbell, CA / Dallas, TX / Denver, CO / Honolulu, HI / Houston, TX / Los Angeles, CA / Miami, FL / Minneapolis, MN / Seattle, WA / Washington, DC

VSL Corporation ("VSL") claims a strict proprietary right in all drawings, specifications and other documentation ("information") set forth on this sheet and in any reproduction thereof. By accepting such information in whole or in part, the recipient agrees that such information is strictly confidential and that it will not be used for any purpose other than that for which it was prepared and furnished by VSL. Any other use is strictly prohibited and VSL DISCLAIMS ANY LIABILITY WHATSOEVER.

RETAINED EARTH
PLAN VIEWS - WALL NOS. 3&4
AKRON EAST EXPRESSWAY
SUM-76-11.57
AKRON, OHIO

PRINT STATUS:

JOB NO: OH006-8

SHEET: 55 OF: 98

BRUNING 44-232 75346

F.H.W.A. REG.	STATE	PROJECT	
5	OHIO		

762
1214

SUM - 76 - 11.57

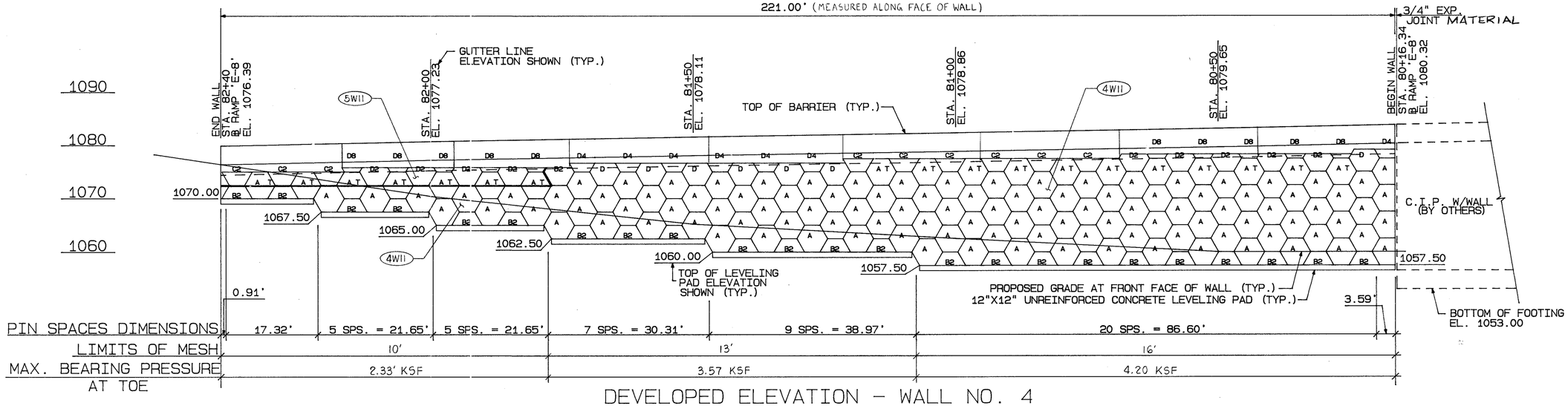

DEVELOPED ELEVATION - WALL NO. 4

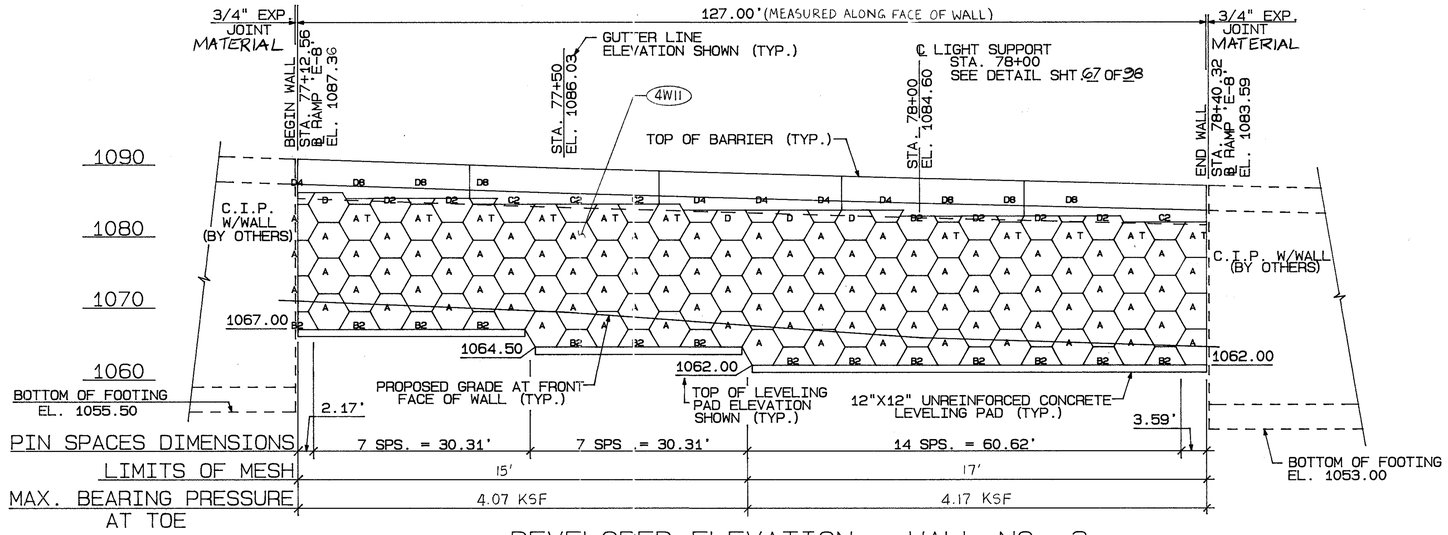

DEVELOPED ELEVATION - WALL NO. 3

DESIGN OF ALL WALLS IS BASED ON THE ASSUMPTION THAT ALL MATERIALS, INCLUDING THE RETAINED EARTH BACKFILL AND METHODS OF CONSTRUCTION CONFORM TO THE SPECIFICATIONS FOR RETAINED EARTH WALLS.

THESE DRAWINGS ARE CERTIFIED WITH RESPECT TO INTERNAL STABILITY OF RETAINED EARTH STRUCTURES ONLY.

DESIGN 2

FABRICATOR:

REV. No.	DATE	DESCRIPTION	MADE BY

REVISION SCHEDULE

ODOT PROJECT No.

BRIDGE No.

				CONSULT. ENGR.	
				CONTRACTOR	
				DRAWN BY	DATE
				CHK'D	DATE
				TRACED	DATE
				APP'D	DATE

DATE	ISSUED FOR	PRINTS	SEPIAS

MATERIAL
DRAWING No.
OF

NO.	DATE	REVISION	BY
2	12/19/01	REV. PER ENGR.	ALC
1	9/5/01	REV PER ENGR	ALC

DES.	3/5/99	JT
DRN.	3/17/99	JT
CHK.	7/20/99	JN

POST-TENSIONING INSTITUTE

VSL CORPORATION
RETAINED EARTH™
8006 HAUTE COURT
P.O. BOX 46
SPRINGFIELD, VA 22150
Phone: 703-451-4300
Fax: 703-451-0862
Atlanta, GA / Campbell, CA / Dallas, TX / Denver, CO / Honolulu, HI / Houston, TX / Los Angeles, CA / Miami, FL / Minneapolis, MN / Seattle, WA. Washington, DC

VSL Corporation ("VSL") claims a strict proprietary right in all drawings, specifications and other documents ("information") set forth on this sheet or in any such information in whole or in part, and the use, reproduction thereof, is restricted to the material and/or project for which it was prepared and published. VSL CLAIMS ANY LIABILITY thereafter.

RETAINED EARTH
ELEVATIONS - WALLS 3 & 4
AKRON EAST EXPRESSWAY
SUM-76-11.57
AKRON, OHIO

PRINT STATUS:

JOB NO: OH006-8

SHEET: 56 OF: 98

BRUNING 44232 75346

F.H.W.A. REG.	STATE	PROJECT	
5	OHIO		

763
12/14

SUM - 76 - 11.57

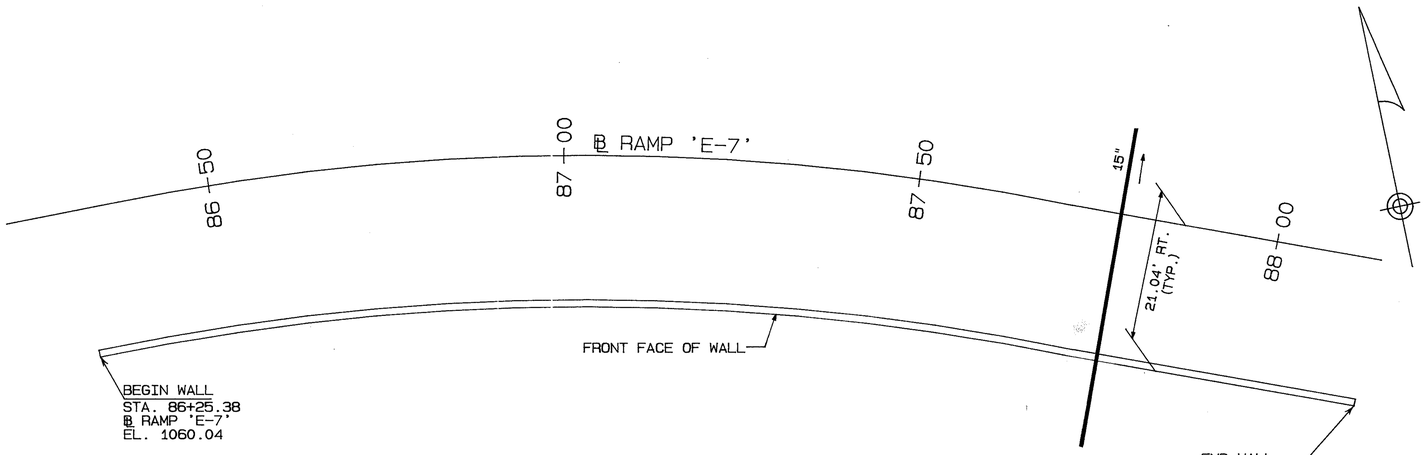

PLAN VIEW - WALL NO. 5

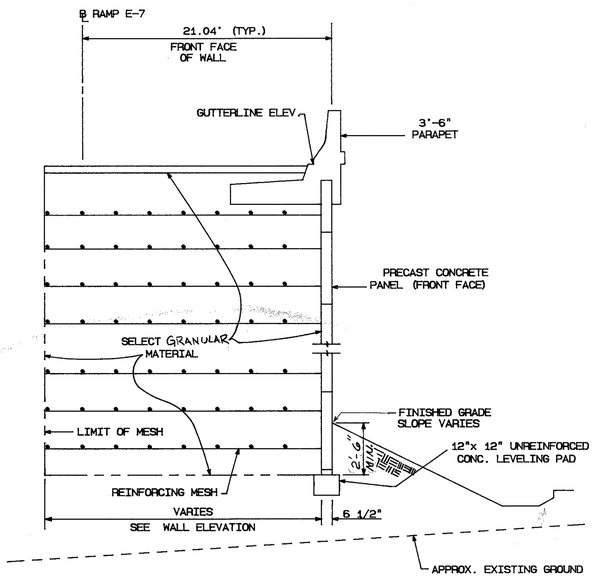

TYPICAL SECTION - WALL 5

N.T.S.

NOTE

SEE SHEET 52/98 FOR NOTES

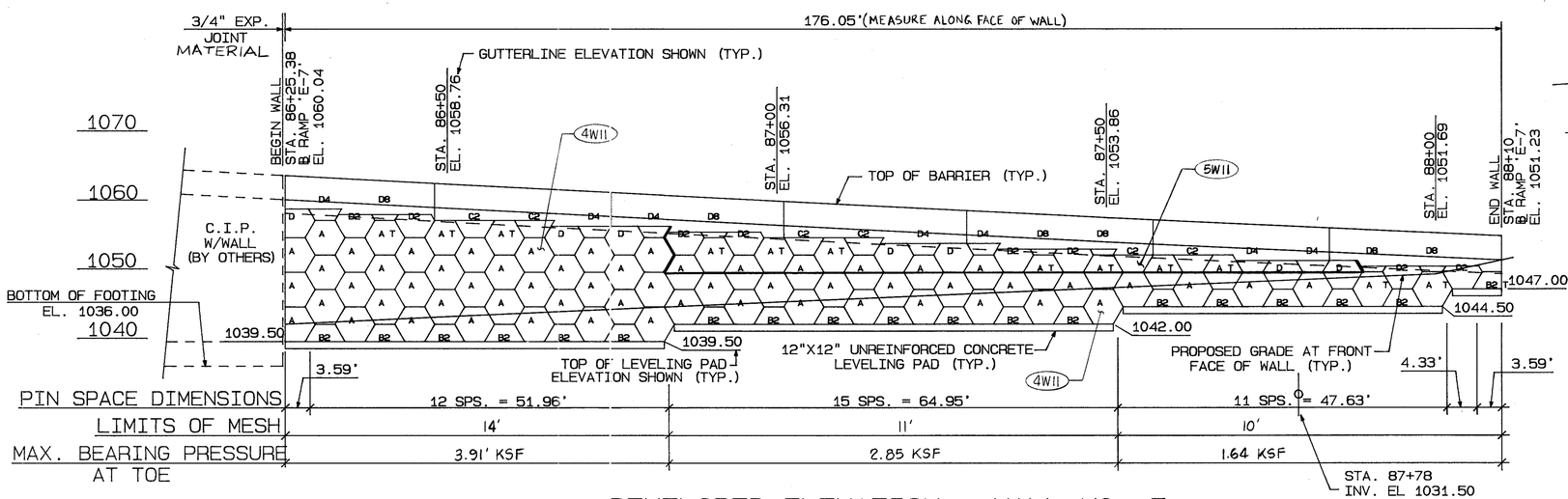

DEVELOPED ELEVATION - WALL NO. 5

DESIGN OF ALL WALLS IS BASED ON THE ASSUMPTION THAT ALL MATERIALS, INCLUDING THE RETAINED EARTH BACKFILL AND METHODS OF CONSTRUCTION CONFORM TO THE SPECIFICATIONS FOR RETAINED EARTH WALLS.

THESE DRAWINGS ARE CERTIFIED WITH RESPECT TO INTERNAL STABILITY OF RETAINED EARTH STRUCTURES ONLY.

STATE OF OHIO
ROGER A. BLOUGH
10/4/10
REGISTERED PROFESSIONAL ENGINEER

DESIGN 2

FABRICATOR:

REV. No.	DATE	DESCRIPTION	MADE BY

REVISION SCHEDULE

ODOT PROJECT No.

BRIDGE No.

				CONSULT. ENGR.	
				CONTRACTOR	
				DRAWN BY	DATE
				CHK'D	DATE
				TRACED	DATE
DATE	ISSUED FOR	PRINTS	SEPIAS	APP'D	DATE

MATERIAL
DRAWING No.
OF

NO.	DATE	REVISION	BY
2	12/19/14	REV PER ENGR.	ALS
1	11/20/14	REV PER ENGR.	ALS

DES. MH-14 JT
DRN. 3/14-14 JT
CHK. 3/14-14 JW

PTI POSTTENSIONING INSTITUTE

VSL CORPORATION
RETAINED EARTH™
8006 HAUTE COURT
P.O. BOX 5455
SPRINGFIELD, VA 22150
Phone: 703-451-4300
Fax: 703-451-0862
Atlanta, GA / Campbell, CA / Dallas, TX / Denver, CO / Honolulu, HI / Houston, TX / Los Angeles, CA / Miami, FL / Minneapolis, MN / Seattle, WA / Washington, DC

VSL Corporation ("VSL") claims a strict proprietary interest in these specifications and calculations. Information set forth on these drawings and such information in whole or in part may not be used, duplication thereof in re-produced or modified by/or for the material by/or any other use is strictly prohibited except with VSL's written consent. VSL DISCLAIMS ANY LIABILITY thereafter.

RETAINED EARTH
ELEVATION AND PLAN VIEW - WALL NO. 5

AKRON EAST EXPRESSWAY
SUM-76-11.57
AKRON, OHIO

PRINT STATUS:

JOB NO: OH006-8

SHEET: 57 OF: 98

BRUNING 44-232 75346

F.H.W.A. REG.	STATE	PROJECT	
5	OHIO		

764/1214

SUM - 76 - 11.57

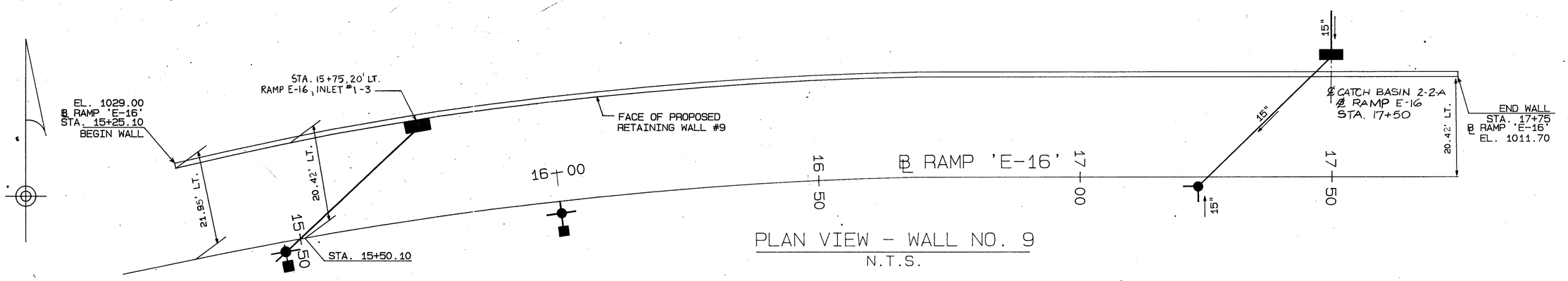

PLAN VIEW - WALL NO. 9

N.T.S.

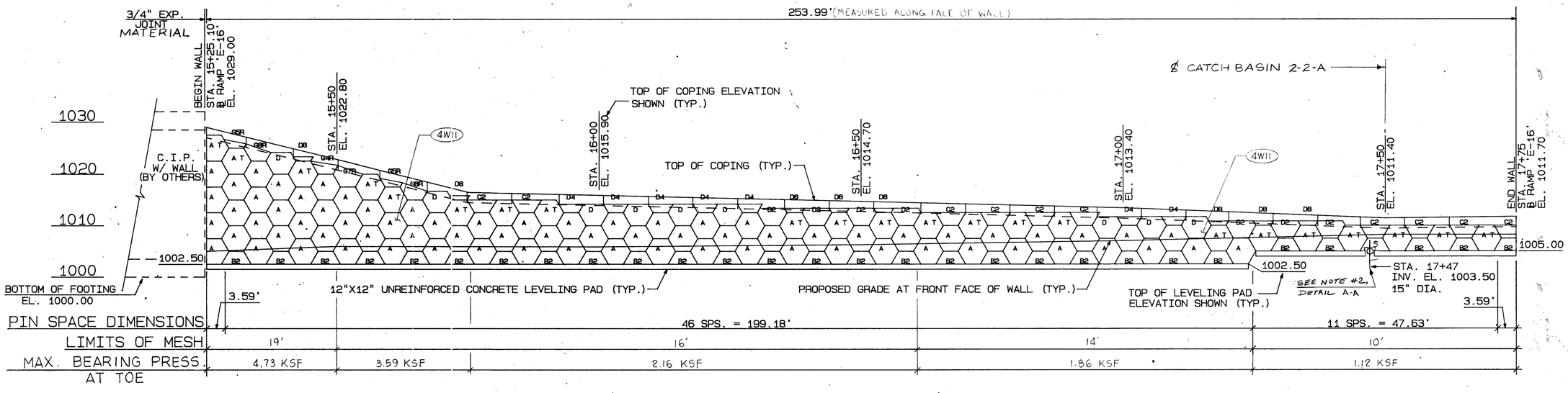

DEVELOPED ELEVATION - WALL NO. 9

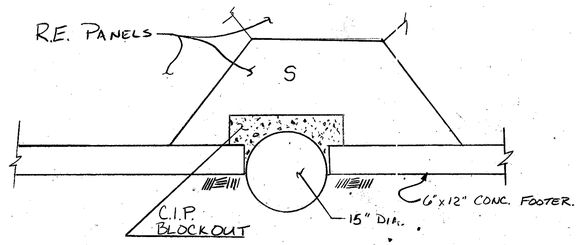

DETAIL A-A

NO SCALE

NOTES:

① CURB TO BE 6" HIGH AND 4" WIDE BETWEEN STA. 15+25 AND STA. 17+65. TRANSITION CURB HEIGHT FROM 6" AT STA. 17+65 TO 3" AT STA. 17+75.

② THE CONCRETE FILL SHALL BE INCLUDED WITH ITEM 511, CLASS "C" CONCRETE, FOOTING, FOR PAYMENT. CONCRETE FILL TO BE 1'-0" WIDE TO MATCH LEVELING PAD.

DESIGN OF ALL WALLS IS BASED ON THE ASSUMPTION THAT ALL MATERIALS, INCLUDING THE RETAINED EARTH BACKFILL AND METHODS OF CONSTRUCTION CONFORM TO THE SPECIFICATIONS FOR RETAINED EARTH WALLS.

THESE DRAWINGS ARE CERTIFIED WITH RESPECT TO INTERNAL STABILITY OF RETAINED EARTH STRUCTURES ONLY.

NO.	DATE	REVISION	BY
2	12/19/94	REV. PER ENGR.	JLC
1	11/1/94	REV. PER ENGR.	JLC

DES.	9/1/94	JJ
DRN.	7/1/94	JJ
CHK.	9/1/94	JJ

PTI POSTTENSIONING INSTITUTE

VSL CORPORATION

RETAINED EARTH

Atlanta, GA · Campbell, CA · Dallas, TX · Denver, CO · Honolulu, HI · Houston, TX · Los Angeles, CA · Miami, FL · Minneapolis, MN · Seattle, WA · Washington, DC

8906 HAVITE COURT
P.O. BOX 866
SPRINGFIELD, VA 22150

Phone: 703-451-4300
Fax: 703-451-0862

VSL Corporation ("VSL") claims a strict proprietary interest in the specifications and calculations contained in or relating to this sheet. The use of such information without production thereof is restricted to the purpose for which it was prepared and to the scope of work and service provided by VSL. Reproduction or copying is prohibited, and VSL DISCLAIMS ANY LIABILITY thereto.

RETAINED EARTH
ELEVATION AND PLAN VIEW - WALL NO. 9

AKRON EAST EXPRESSWAY
SUM-76-11.57
AKRON, OHIO

PRINT STATUS:

JOB NO: OH006-8

SHEET: 58 OF: 98

DESIGN 2

FABRICATOR:

REV. No.	DATE	DESCRIPTION	MADE BY

REVISION SCHEDULE

ODOT PROJECT No.

BRIDGE No.

DATE	ISSUED FOR	PRINTS	SEPIAS

CONSULT. ENGR.		
CONTRACTOR		
DRAWN BY	DATE	MATERIAL
CHK'D	DATE	DRAWING No.
TRACED	DATE	OF
APP'D	DATE	

BRUNING 44-232 75346

F.H.W.A. REG.	STATE	PROJECT	
5	OHIO		

SUM - 76 - 11.57

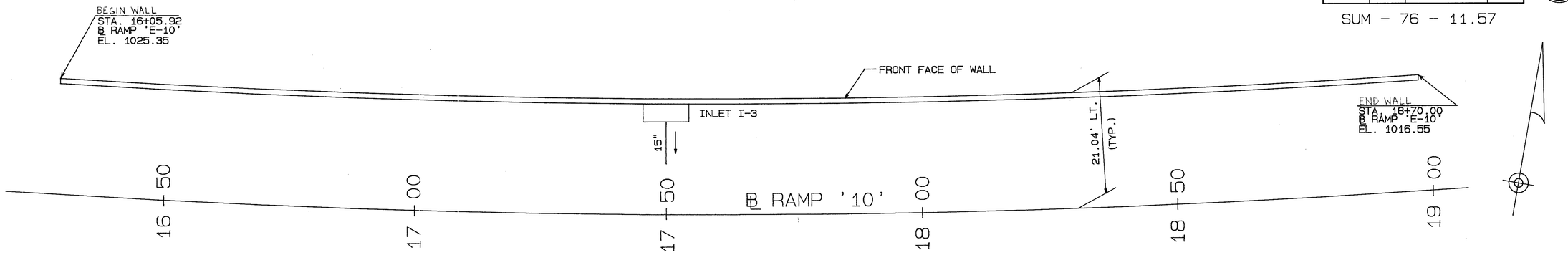

PLAN VIEW - WALL NO. 10

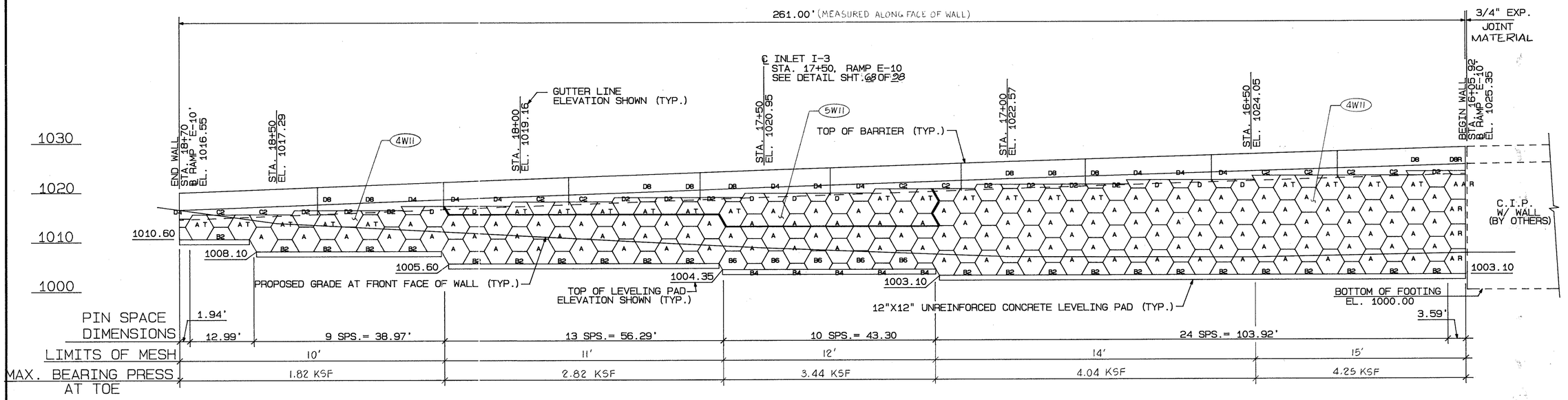

DEVELOPED ELEVATION - WALL NO. 10

NOTE

SEE SHEET 52/98 FOR NOTES

DESIGN OF ALL WALLS IS BASED ON THE ASSUMPTION THAT ALL MATERIALS, INCLUDING THE RETAINED EARTH BACKFILL AND METHODS OF CONSTRUCTION CONFORM TO THE SPECIFICATIONS FOR RETAINED EARTH WALLS.

THESE DRAWINGS ARE CERTIFIED WITH RESPECT TO INTERNAL STABILITY OF RETAINED EARTH STRUCTURES ONLY.

STATE OF OHIO — 10/6/98 — PROFESSIONAL ENGINEER

DESIGN 2

FABRICATOR:

REV. No.	DATE	DESCRIPTION	MADE BY
		REVISION SCHEDULE	

ODOT PROJECT No.

BRIDGE No.

DATE	ISSUED FOR	PRINTS	SEPIAS	CONSULT. ENGR	CONTRACTOR	DRAWN BY	DATE	MATERIAL
						CHK'D	DATE	DRAWING No.
						TRACED	DATE	OF
						APP'D	DATE	

NO.	DATE	REVISION	BY
1	11/19/98	Rev. per Engr.	ALC
2	11/19/98	Rev. per Engr.	JNS

DES.	2/25/98	JT
DRN.	3/25/98	JT
CHK.	10/6/98	JN

PTI POSTTENSIONING INSTITUTE

VSL CORPORATION
RETAINED EARTH™
8006 HAUTE COURT
P.O. BOX 846
SPRINGFIELD, VA 22150
Phone: 703-451-4300
Fax: 703-451-0862
Atlanta, GA / Campbell, CA / Dallas, TX / Denver, CO / Honolulu, HI / Houston, TX / Los Angeles, CA / Miami, FL / Minneapolis, MN / Seattle, WA / Washington, DC

VSL Corporation ("VSL") claims all patent proprietary right in all drawings, specifications and other documents ("information") set forth herein. Any use of such information in whole or in part, or any reproduction thereof, is restricted to the sole for which it is provided by VSL. The material and/or information provided herein is strictly "as is" and VSL DISCLAIMS ANY LIABILITY therefor.

RETAINED EARTH
ELEVATION AND PLAN VIEW - WALL NO. 10

AKRON EAST EXPRESSWAY
SUM-76-11.57
AKRON, OHIO

PRINT STATUS:

JOB NO: OH006-8

SHEET: 59 OF: 98

BRUNING 44-232 75346

F.H.W.A. REG.	STATE	PROJECT	
5	OHIO		

766
12/14

SUM - 76 - 11.57

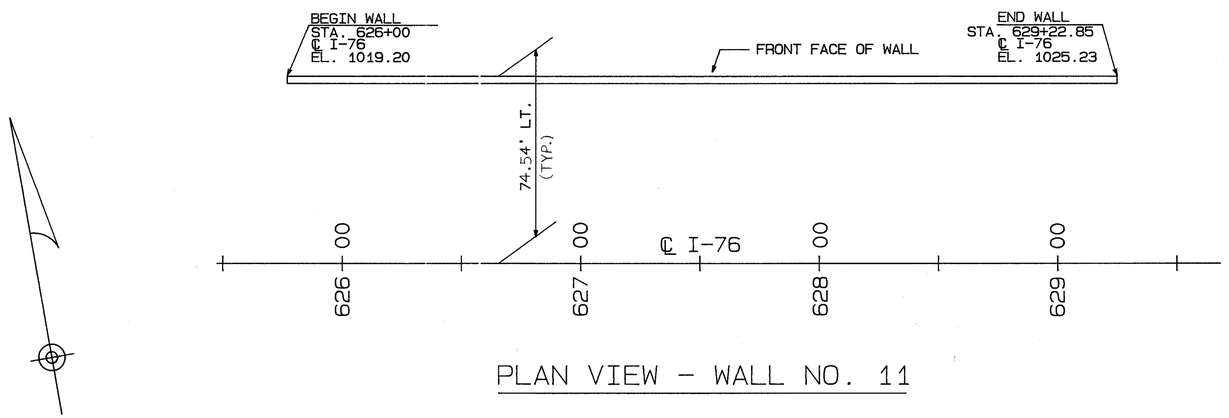

PLAN VIEW - WALL NO. 11

NOTE

SEE SHEET 52/98 FOR NOTES

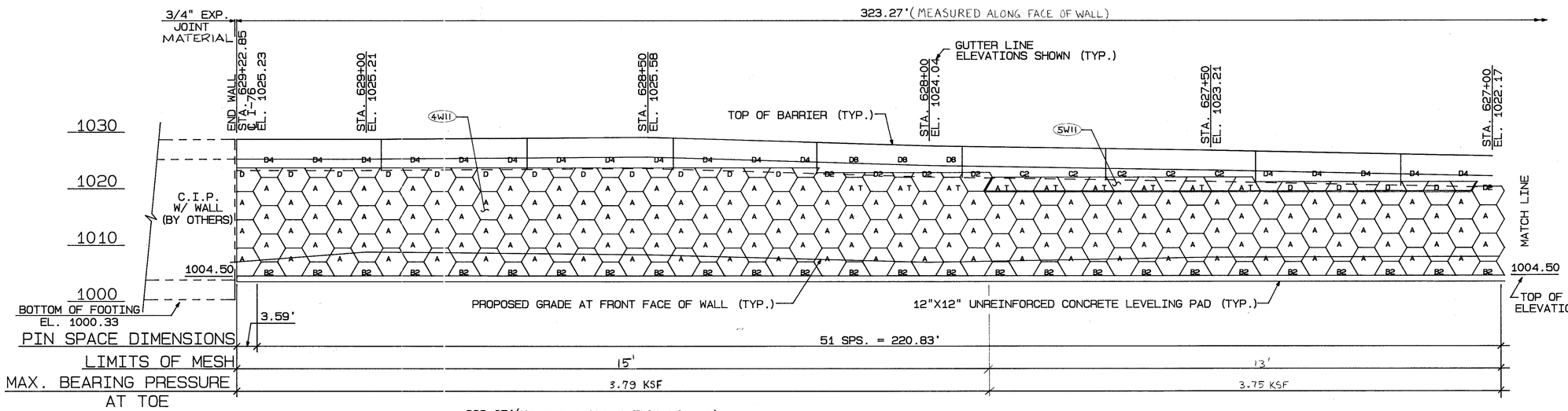

ELEVATION - WALL NO. 11

DESIGN OF ALL WALLS IS BASED ON THE ASSUMPTION THAT ALL MATERIALS, INCLUDING THE RETAINED EARTH BACKFILL AND METHODS OF CONSTRUCTION CONFORM TO THE SPECIFICATIONS FOR RETAINED EARTH WALLS.

THESE DRAWINGS ARE CERTIFIED WITH RESPECT TO INTERNAL STABILITY OF RETAINED EARTH STRUCTURES ONLY.

STATE OF OHIO ROGER PROFESSIONAL ENGINEER 10/6/06

DESIGN 2

FABRICATOR:

REV. No.	DATE	DESCRIPTION	MADE BY

REVISION SCHEDULE

ODOT PROJECT No.

BRIDGE No.

DATE	ISSUED FOR	PRINTS	SEPIAS

CONSULT. ENGR:

CONTRACTOR:

DRAWN BY	DATE	MATERIAL
CHK'D	DATE	DRAWING No.
TRACED	DATE	OF
APP'D	DATE	

NO.	DATE	REVISION	BY
2	12/1/06	REV. PER ENGR	ALC
1	11/1/06	REVIEW PER ENGR	ALC

	DES.	DRN.	CHK.
	3/06/06 JT	3/30/06 JT	3/30/06 JN

PCI PRECAST/PRESTRESSED CONCRETE INSTITUTE

VSL CORPORATION
RETAINED EARTH
8006 HAUTE COURT
P.O. BOX 866
SPRINGFIELD, VA 22150
Phone: 703-451-4300
Fax: 703-451-0862
Atlanta, GA / Campbell, CA / Dallas, TX / Denver, CO / Honolulu, HI / Houston, TX / Los Angeles, CA / Miami, FL / Minneapolis, MN / Seattle, WA / Washington, DC

VSL Corporation ("VSL") claims a strict proprietary right in all drawings, specifications and other documents ("information") set forth herein. Any publication or reproduction of this information in whole or in part, and any disclosure thereof to a third party is restricted to the use for which it is specifically furnished by VSL. VSL EXPRESSLY DISCLAIMS ANY LIABILITY stemming from any other use of the information contained herein or for the material and/or information omitted herein. Any other use is strictly reserved to VSL and is subject to its full copyright protection.

RETAINED EARTH
ELEVATION AND PLAN VIEW - WALL NO. 11

AKRON EAST EXPRESSWAY
SUM-76-11.57
AKRON, OHIO

PRINT STATUS:

JOB NO: OH006-8

SHEET: 60 OF: 98

BRUNING 44-232 75346

F.H.W.A. REG.	STATE	PROJECT	
5	OHIO		

767/1214

SUM - 76 - 11.57

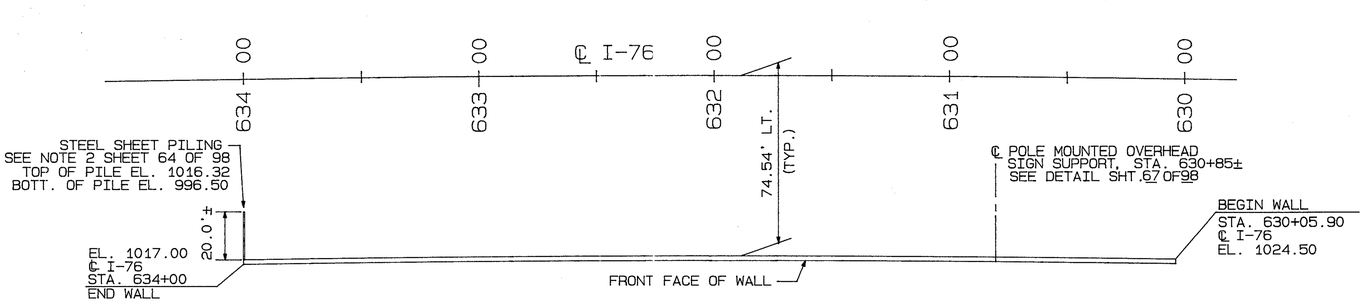

NOTE

SEE SHEET 52/98 FOR NOTES.

PLAN VIEW - WALL NO. 12

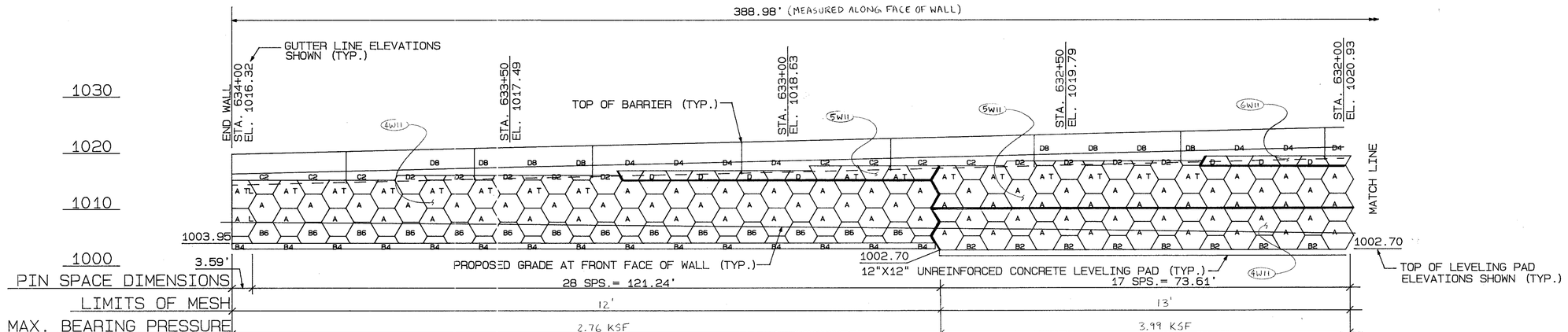

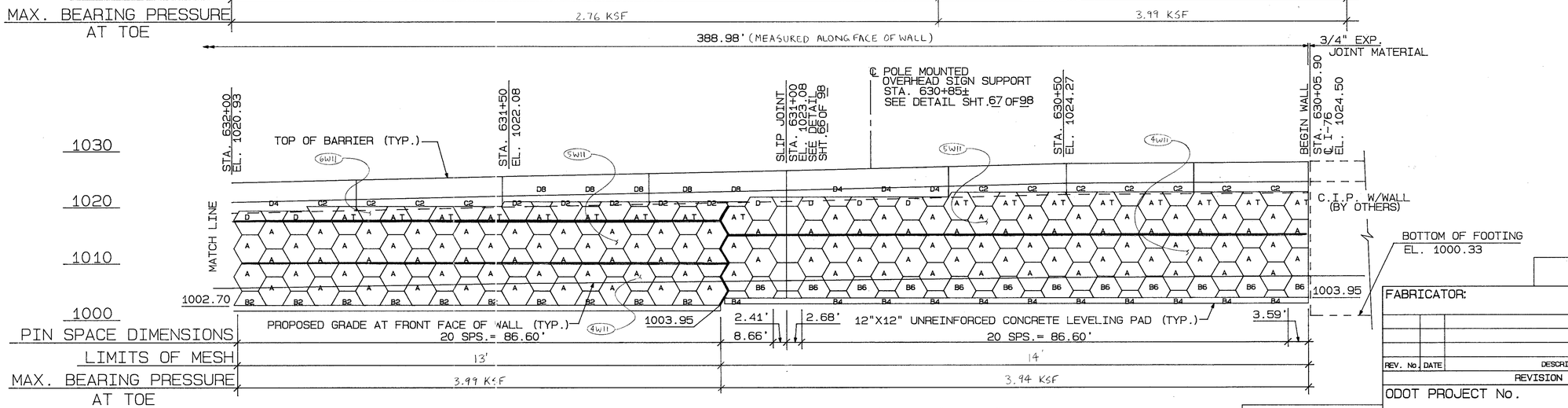

DEVELOPED ELEVATION - WALL NO. 12

DESIGN OF ALL WALLS IS BASED ON THE ASSUMPTION THAT ALL MATERIALS, INCLUDING THE RETAINED EARTH BACKFILL AND METHODS OF CONSTRUCTION CONFORM TO THE SPECIFICATIONS FOR RETAINED EARTH WALLS.

THESE DRAWINGS ARE CERTIFIED WITH RESPECT TO INTERNAL STABILITY OF RETAINED EARTH STRUCTURES ONLY.

12/6/00

DESIGN 2

FABRICATOR:

REV. No.	DATE	DESCRIPTION	MADE BY

REVISION SCHEDULE

ODOT PROJECT No.

BRIDGE No.

				CONSULT. ENGR.		
				CONTRACTOR:		
				DRAWN BY	DATE	MATERIAL
				CHK'D	DATE	DRAWING No.
				TRACED	DATE	OF
DATE	ISSUED FOR	PRINTS	SEPIAS	APP'D	DATE	

NO.	DATE	REVISION	BY
4	9/13/00	REV. PANEL LAYOUT	ALC
3	8/21/00	REV. PER ENGR.	ALC
2	12/11/99	REV. PER ENGR.	ALC
1	11/23/99	REV. PER ENGR.	ALC

DES.	3/30/99	JT
DRN.	3/30/99	JT
CHK.	3/30/99	JM

PTI POSTTENSIONING INSTITUTE

VSL CORPORATION

RETAINED EARTH®

8006 HAUTE COURT
P.O. BOX 8366
SPRINGFIELD, VA 22150

Phone: 703-451-4300
Fax: 703-451-0862

Atlanta, GA / Campbell, CA / Dallas, TX / Denver, CO / Honolulu, HI / Houston, TX / Los Angeles, CA / Miami, FL / Minneapolis, MN / Seattle, WA. Washington, DC

VSL Corporation ("VSL") claims a strict proprietary interest in these drawings and calculations ("Information") set forth herein. Reproduction of such information in whole or part or its use on any project without the written authorization of VSL is prohibited. Any other use is strictly at your own risk and VSL DISCLAIMS ANY LIABILITY thereto.

RETAINED EARTH
ELEVATION AND PLAN VIEW - WALL NO. 12

AKRON EAST EXPRESSWAY
SUM-76-11.57
AKRON, OHIO

PRINT STATUS:

JOB NO: OH006-8

SHEET: 61 OF: 98

BRUNING 44-232-7546

F.H.W.A. REG.	STATE	PROJECT	
5	OHIO		

768
1214

SUM - 76 - 11.57

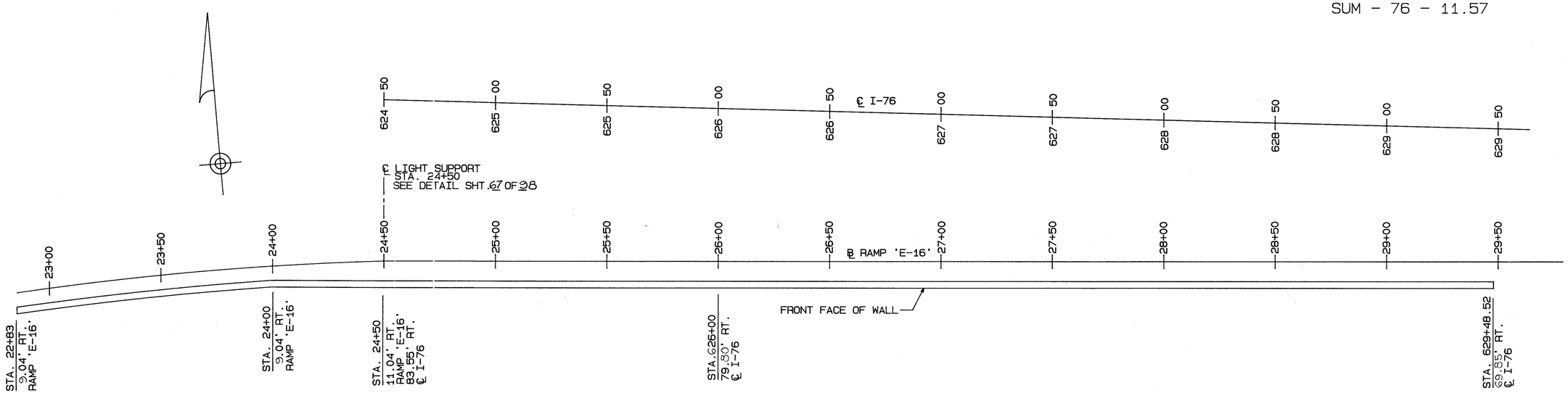

PLAN VIEW - WALL NO. 13

N.T.S.

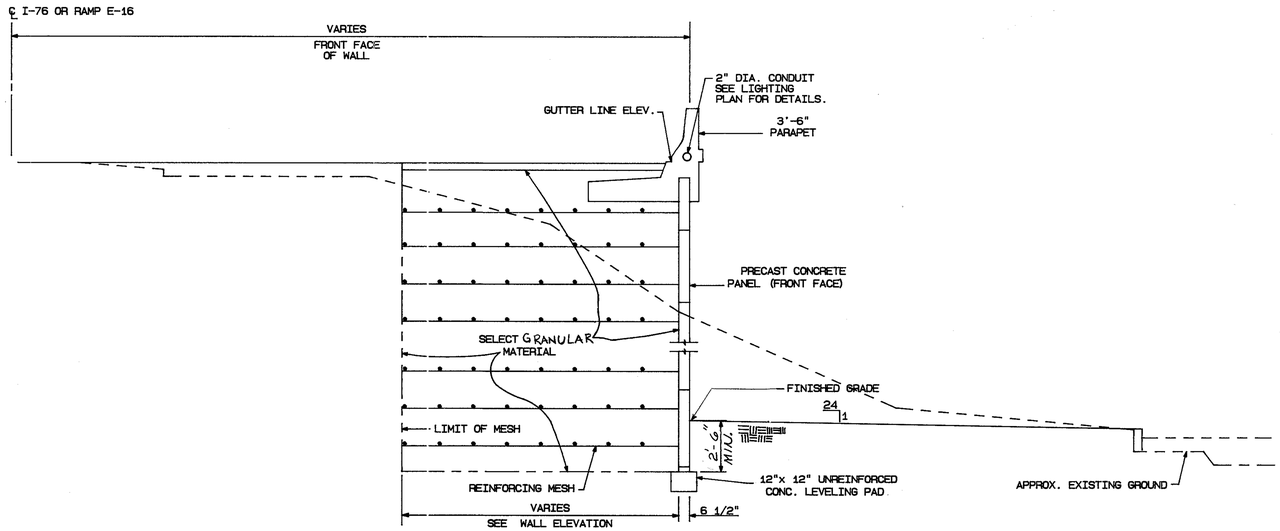

TYPICAL SECTION - WALL 13

N.T.S.

NOTE

SEE SHEET 52/98 FOR NOTES

DESIGN OF ALL WALLS IS BASED ON THE ASSUMPTION THAT ALL MATERIALS, INCLUDING THE RETAINED EARTH BACKFILL AND METHODS OF CONSTRUCTION CONFORM TO THE SPECIFICATIONS FOR RETAINED EARTH WALLS.

THESE DRAWINGS ARE CERTIFIED WITH RESPECT TO INTERNAL STABILITY OF RETAINED EARTH STRUCTURES ONLY.

STATE OF OHIO ROGER PROFESSIONAL ENGINEER 6/6/00

DESIGN 2

FABRICATOR:

REV. No.	DATE	DESCRIPTION	MADE BY

REVISION SCHEDULE

ODOT PROJECT No.

BRIDGE No.

DATE	ISSUED FOR	PRINTS	SEPIAS

CONSULT. ENGR:	
CONTRACTOR:	
DRAWN BY	DATE
CHK'D	DATE
TRACED	DATE
APP'D	DATE
MATERIAL	
DRAWING No.	OF

NO.	DATE	REVISION	BY
2	12/19/00	REVISED PER ENGR.	ALS
1	11/29/00	REVISED PER ENGR.	ALS

DES.	8/29/00	TT
DRN.	8/30/00	TT
CHK.	9/01/00	JW

ADVANCED TECHNOLOGY INSTITUTE

VSL CORPORATION

RETAINED EARTH™

8006 HAUTE COURT
P.O. BOX 866
SPRINGFIELD, VA 22150

Phone: 703-451-4300
Fax: 703-451-0862

Atlanta, GA / Campbell, CA / Dallas, TX / Denver, CO / Honolulu, HI / Houston, TX / Los Angeles, CA / Miami, FL / Minneapolis, MN / Seattle, WA / Washington, DC

VSL Corporation ("VSL") retains all ownership and intellectual property rights in all drawings, specifications and electronic data ("information") set forth on this sheet. The use of such information in whole or in part—for any purpose—is restricted to the site for which it was prepared and to the material and/or work expressly described. Any other use is strictly prohibited and VSL disclaims ANY LIABILITY thereto.

RETAINED EARTH
ELEVATION - WALL NO. 13

AKRON EAST EXPRESSWAY
SUM-76-11.57
AKRON, OHIO

PRINT STATUS:

JOB NO: 01006-8

SHEET: 62 OF: 98

BRUNING 44-232 75346

DEVELOPED ELEVATION - WALL NO. 13

DESIGN 2

DESIGN OF ALL WALLS IS BASED ON THE ASSUMPTION THAT ALL MATERIALS, INCLUDING THE RETAINED EARTH BACKFILL AND METHODS OF CONSTRUCTION CONFORM TO THE SPECIFICATIONS FOR RETAINED EARTH WALLS.

THESE DRAWINGS ARE CERTIFIED WITH RESPECT TO INTERNAL STABILITY OF RETAINED EARTH STRUCTURES ONLY.

10/6/10

FABRICATOR:

REV. No.	DATE	DESCRIPTION	MADE BY
2	12/19/05	REVISED PER ENGR.	AJC
1	11/2/05	REVISED PER ENGR.	ALC

REVISION SCHEDULE

ODOT PROJECT No.

BRIDGE No.

DATE	ISSUED FOR	PRINTS	SEPIAS

CONSULT. ENGR:

CONTRACTOR:

DRAWN BY	DATE	MATERIAL
CHK'D	DATE	DRAWING No.
TRACED	DATE	OF
APP'D	DATE	

	DES.	DRN.	CHK.
	3/10/04 JT	3/10/04 JT	3/10/04 TN

MEMBER POST-TENSIONING INSTITUTE

VSL CORPORATION
RETAINED EARTH™
8006 HAUTE COURT
SPRINGFIELD, VA 22150
Phone: 703-451-4300
Fax: 703-451-6862
Atlanta, GA / Campbell, CA / Dallas, TX / Denver, CO / Honolulu, HI / Houston, TX / Los Angeles, CA / Miami, FL / Minneapolis, MN / Seattle, WA / Washington, DC

"VSL Corporation ("VSL") claims a strict proprietary interest in these illustrations and calculations of information T set forth in whole or in part is re- stricted and shall not be used by VSL strictly SUBJECT TO LIMITATION OF LIABILITY CLAIMS ANY LIABILITY thereof."

RETAINED EARTH
ELEVATION - WALL NO. 13

AKRON EAST EXPRESSWAY
SUM-76-11.57
AKRON, OHIO

PRINT STATUS:

JOB NO: 0H006-8

SHEET: 63 OF: 98

BRUNING 44-232 75346

F.H.W.A. REG.	STATE	PROJECT	
5	OHIO		

770
1214

SUM - 76 - 11.57

NOTES

① SHEET PILING IS TO BE FIELD CUT AS REQUIRED TO ALLOW FOR UNDERDRAIN TO PASS THROUGH. COST OF STEEL SHEET PILING AND FIELD CUTTING TO BE INCLUDED WITH ITEM 504, "SHEET PILING LEFT IN PLACE." THE SHEET PILING SHALL HAVE A MINIMUM SECTION MODULUS OF 18.1 CU. IN. PER FOOT OF WALL.

② SEE SHEET 52 /98 FOR ADDITIONAL NOTES.

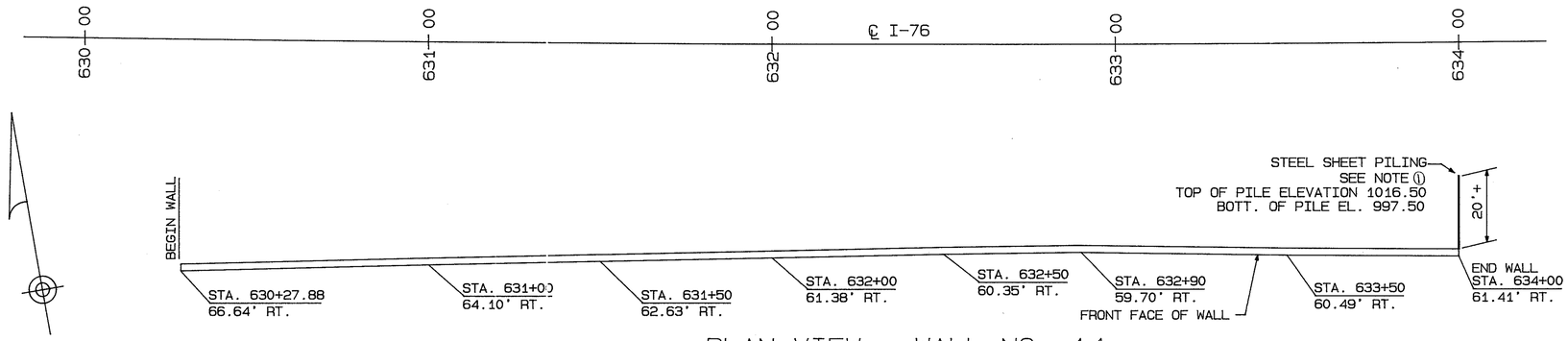

PLAN VIEW - WALL NO. 14

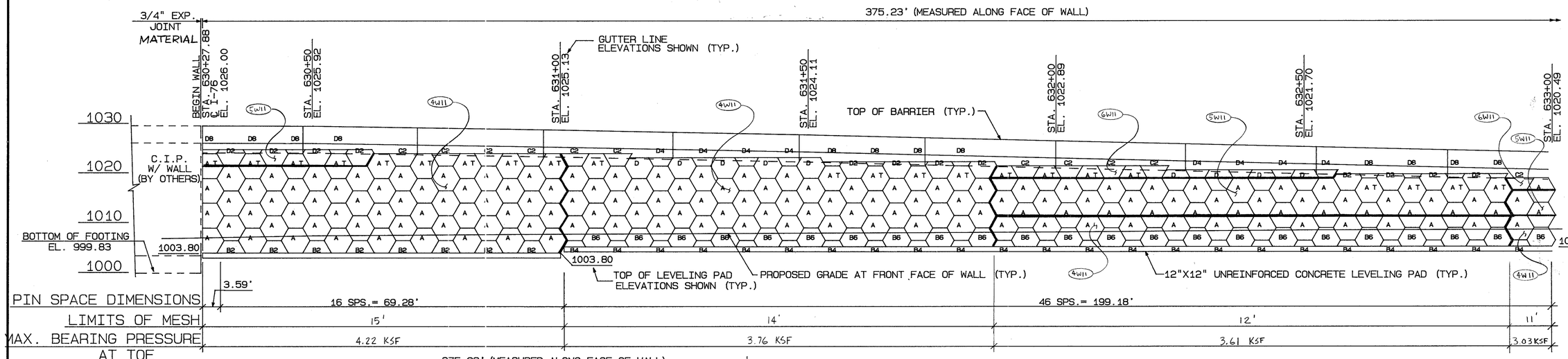

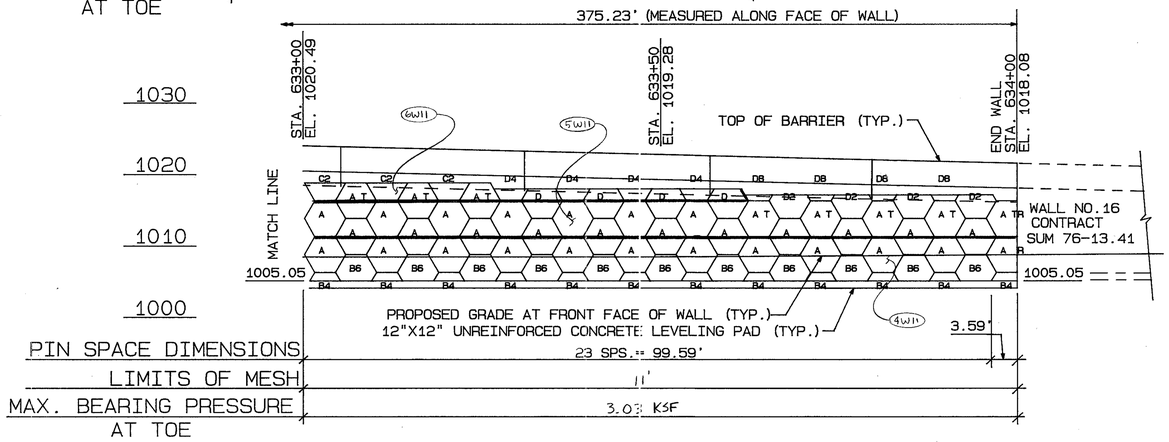

DEVELOPED ELEVATION - WALL NO. 14

NOTE: ELEVATIONS GIVEN TO TOP OF COPING

DESIGN OF ALL WALLS IS BASED ON THE ASSUMPTION THAT ALL MATERIALS, INCLUDING THE RETAINED EARTH BACKFILL AND METHODS OF CONSTRUCTION CONFORM TO THE SPECIFICATIONS FOR RETAINED EARTH WALLS.

THESE DRAWINGS ARE CERTIFIED WITH RESPECT TO INTERNAL STABILITY OF RETAINED EARTH STRUCTURES ONLY.

STATE OF OHIO — EUGENE A. BLEAU — 10/4/16 — REGISTERED PROFESSIONAL ENGINEER

DESIGN 2

FABRICATOR:

REV. No.	DATE	DESCRIPTION	MADE BY

REVISION SCHEDULE

ODOT PROJECT No.

BRIDGE No.

CONSULT. ENGR:

CONTRACTOR:

DRAWN BY	DATE	MATERIAL
CHK'D	DATE	DRAWING No.
TRACED	DATE	OF
APP'D	DATE	

DATE	ISSUED FOR	PRINTS	SEPIAS

NO.	DATE	REVISION	BY
3	9/19/16	REV. LAYOUT	AJC
2	12/18/18	REV. PER ENGR.	AJC
1	11/23/16	REV. PER ENGR.	AJC

DES. 8/31/16 JT
DRN. 8/31/16 JT
CHK. 8/31/16 JA

POST-TENSIONING INSTITUTE

VSL CORPORATION
RETAINED EARTH™
8006 HAUTE COURT
SPRINGFIELD, VA 22150
Phone: 703-451-4300
Fax: 703-451-0862
Atlanta, GA / Campbell, CA / Dallas, TX / Denver, CO / Honolulu, HI / Houston, TX / Los Angeles, CA / Miami, FL / Minneapolis, MN / Seattle, WA / Washington, DC

VSL Corporation ("VSL") claims a strict proprietary rights in the information contained in this drawing set, commonly referred to as "Information", set forth herein. The Information is not to be used in whole or in part by any other person or entity without the prior written authorization of VSL. Any other use is strictly prohibited and VSL EXPRESSLY DISCLAIMS ANY LIABILITY to it. By taking any action with respect to the Information, you represent that you have read and understood the terms of this boilerplate.

RETAINED EARTH
ELEVATION - WALL NO. 14

AKRON EAST EXPRESSWAY
SUM-76-11.57
AKRON, OHIO

PRINT STATUS:

JOB NO: OH006-8

SHEET: 64 OF: 98

BRUNING 44-232-75346

F.H.W.A. REG.	STATE	PROJECT	
5	OHIO		

77/1217

SUM - 76 - 11.57

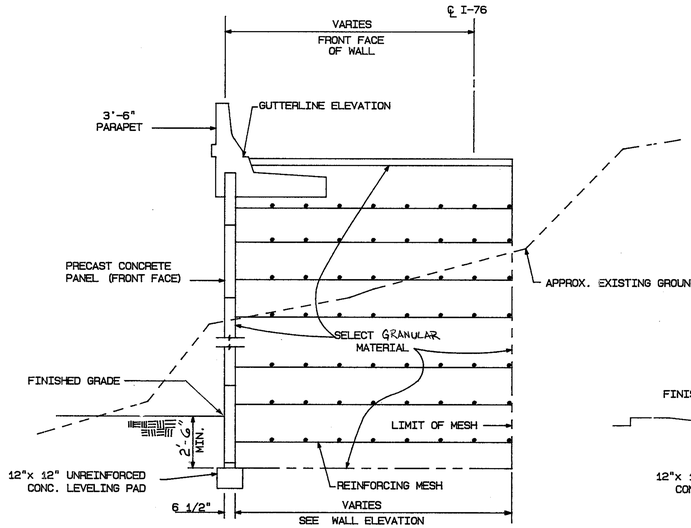

TYPICAL SECTION - WALL 1

N.T.S.

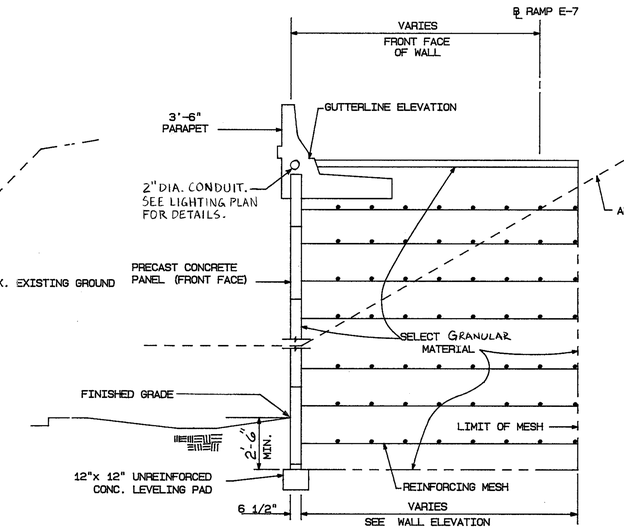

TYPICAL SECTION - WALL 2

N.T.S.

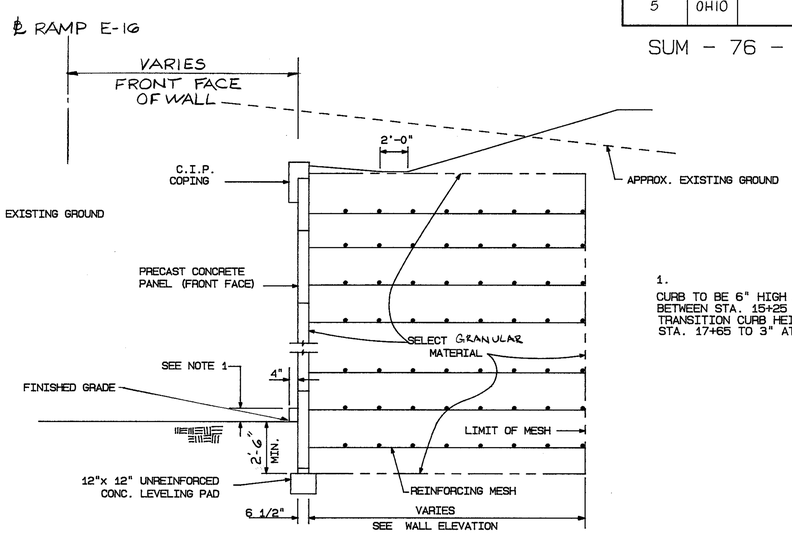

1.
CURB TO BE 6" HIGH AND 4" WIDE BETWEEN STA. 15+25 AND STA. 17+65. TRANSITION CURB HEIGHT FROM 6" AT STA. 17+65 TO 3" AT STA. 17+75.

TYPICAL SECTION - WALL 9

N.T.S.

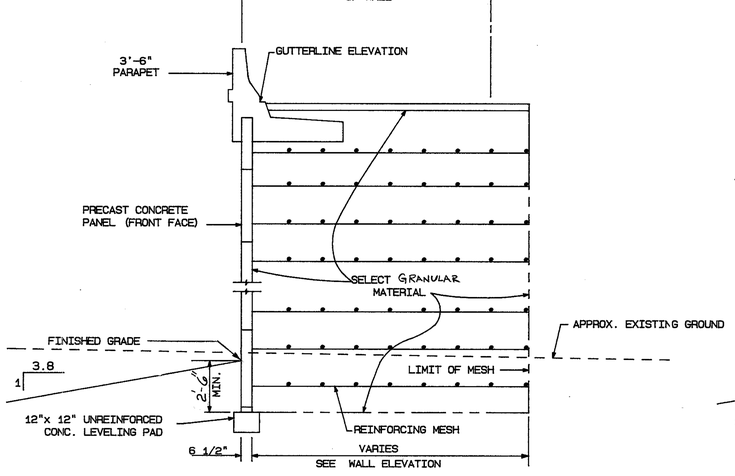

TYPICAL SECTION - WALL 10

N.T.S.

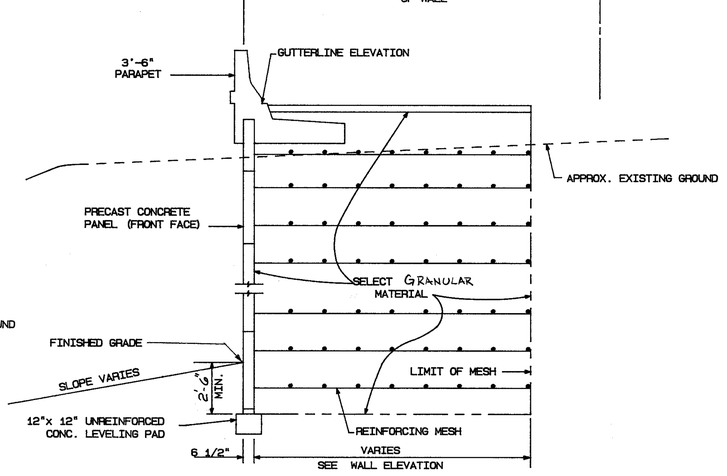

TYPICAL SECTION - WALL 11

N.T.S.

DESIGN OF ALL WALLS IS BASED ON THE ASSUMPTION THAT ALL MATERIALS, INCLUDING THE RETAINED EARTH BACKFILL AND METHODS OF CONSTRUCTION CONFORM TO THE SPECIFICATIONS FOR RETAINED EARTH WALLS.

THESE DRAWINGS ARE CERTIFIED WITH RESPECT TO INTERNAL STABILITY OF RETAINED EARTH STRUCTURES ONLY.

STATE OF OHIO — ROGER A. BROWN — REGISTERED PROFESSIONAL ENGINEER — 12/6/90

DESIGN 2

FABRICATOR:

REV. No.	DATE	DESCRIPTION	MADE BY

REVISION SCHEDULE

ODOT PROJECT No.

BRIDGE No.

DATE	ISSUED FOR	PRINTS	SEPIAS

CONSULT. ENGR.		
CONTRACTOR		
DRAWN BY	DATE	MATERIAL
CHK'D	DATE	DRAWING No.
TRACED	DATE	OF
APP'D	DATE	

NO.	DATE	REVISION	BY
1	11/30/89	TYP. SECTIONS PER ENGR.	ALC
2	12/19/89	REV. PER ENGR.	ALC

DES. 11/29/89 ALC
DRN. 11/29/89 ALS
CHK. 11/30/89 JN

POST-TENSIONING INSTITUTE

VSL CORPORATION

RETAINED EARTH™

8008 HAUTE COURT
P.O. BOX 9436
SPRINGFIELD, VA 22150

Phone: 703-451-4300
Fax: 703-451-0862

Atlanta, GA / Campbell, CA / Dallas, TX / Denver, CO / Honolulu, HI / Houston, TX / Los Angeles, CA / Miami, FL / Minneapolis, MN / Seattle, WA / Washington, DC

VSL Corporation ("VSL") claims a strict proprietary interest in all information, specifications and calculations ("information") set forth on this sheet. Reproduction of such information in whole or in part, or use of the same for any purpose other than that for which it was prepared and provided by VSL is forbidden without the express written consent of VSL. Any other use is strictly prohibited and VSL disclaims any liability whatsoever.

RETAINED EARTH
TYPICAL WALL SECTIONS
AKRON EAST EXPRESSWAY
SUM-76-11.57
AKRON, OHIO

PRINT STATUS:

JOB NO: 0H006-8

SHEET: 65 OF: 98

BRUNING 44 232 79346

F.H.W.A. REG.	STATE	PROJECT	
5	OHIO		

772
1214

SUM - 76 - 11.57

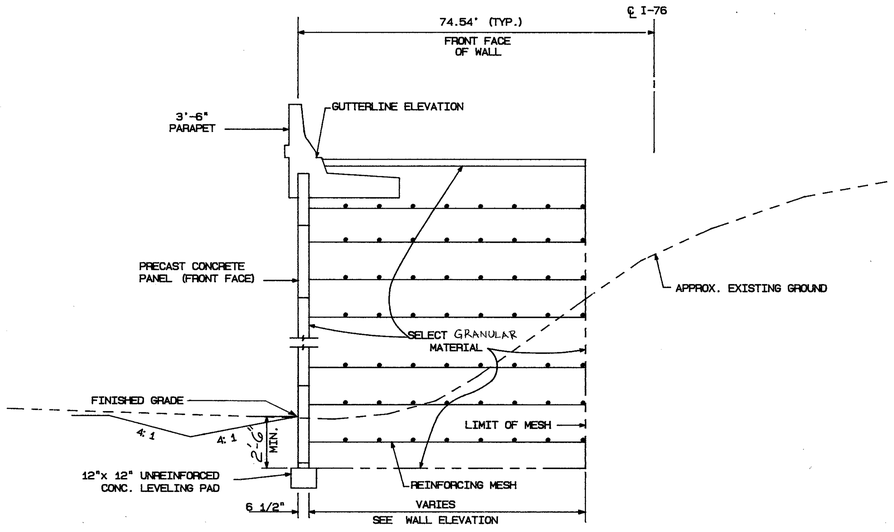

TYPICAL SECTION - WALL 12

N.T.S.

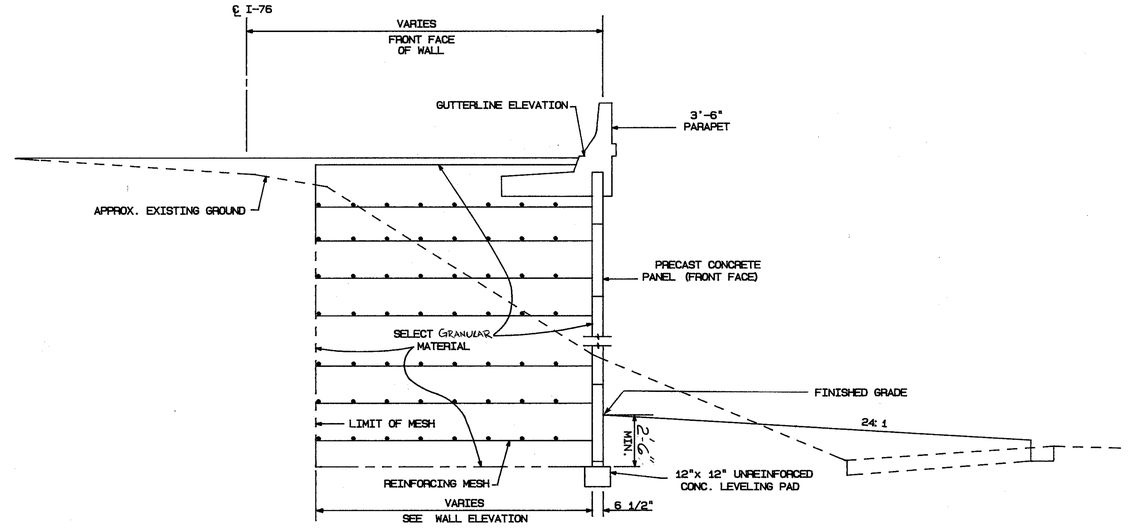

TYPICAL SECTION - WALL 14

N.T.S.

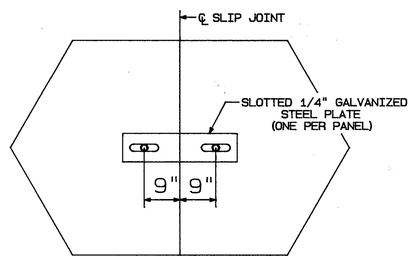

BACK FACE VIEW

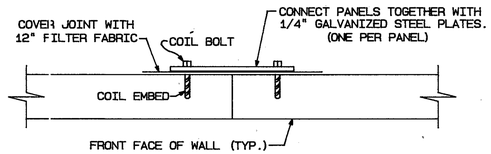

SLIP JOINT DETAIL

N.T.S.

DESIGN OF ALL WALLS IS BASED ON THE ASSUMPTION THAT ALL MATERIALS, INCLUDING THE RETAINED EARTH BACKFILL AND METHODS OF CONSTRUCTION CONFORM TO THE SPECIFICATIONS FOR RETAINED EARTH WALLS.

THESE DRAWINGS ARE CERTIFIED WITH RESPECT TO INTERNAL STABILITY OF RETAINED EARTH STRUCTURES ONLY.

STATE OF OHIO — REGISTERED — 10/16/90 — PROFESSIONAL ENGINEER

DESIGN 2

FABRICATOR:

REV. No.	DATE	DESCRIPTION	MADE BY

REVISION SCHEDULE

ODOT PROJECT No.

BRIDGE No.

DATE	ISSUED FOR	PRINTS	SEPIAS

CONSULT. ENGR:

CONTRACTOR:

DRAWN BY	DATE	MATERIAL
CHK'D	DATE	DRAWING No.
TRACED	DATE	OF
APP'D	DATE	

NO.	DATE	REVISION	BY
1	11/30/89	TYP SECTIONS PER ENGR	ALS
2	12/19/89	REV. PER ENGR.	ALC

	DES.	DRN.	CHK.
	11/30/89 ALS	11/30/89 ALS	11/30/89 JN

VSL CORPORATION
RETAINED EARTH™
8006 HAUTE COURT
SPRINGFIELD, VA 22150
Phone: 703-451-4300
Fax: 703-451-0882
Atlanta, GA / Campbell, CA / Dallas, TX / Denver, CO / Honolulu, HI / Houston, TX / Los Angeles, CA / Miami, FL / Minneapolis, MN / Seattle, WA / Washington, DC

VSL Corporation ("VSL") claims a strict proprietary right in the concepts, designs, specifications and calculations contained in this sheet. The use of such information in whole or in part for any purpose other than construction thereof, is prohibited unless written permission is first obtained from VSL which it was prepared and to whom it was delivered. Any other use is strictly at the user's own risk and CLAIMS ANY LIABILITY THEREOF.

RETAINED EARTH
TYPICAL WALL SECTIONS

AKRON EAST EXPRESSWAY
SUM-76-11.57
AKRON, OHIO

PRINT STATUS:

JOB NO: OH006-8

SHEET: 66 OF: 98

BRUNING 44.232 75346

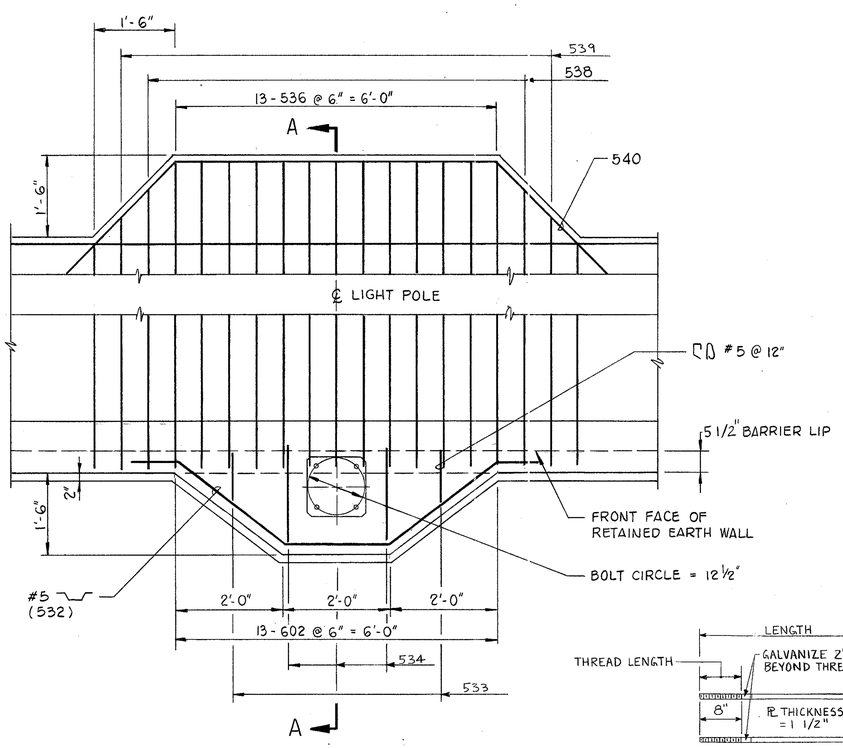

PLAN VIEW - LIGHT POLE SUPPORT

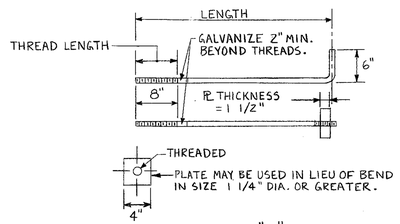

DETAIL "A"
N.T.S.
(SEE NOTE 3)

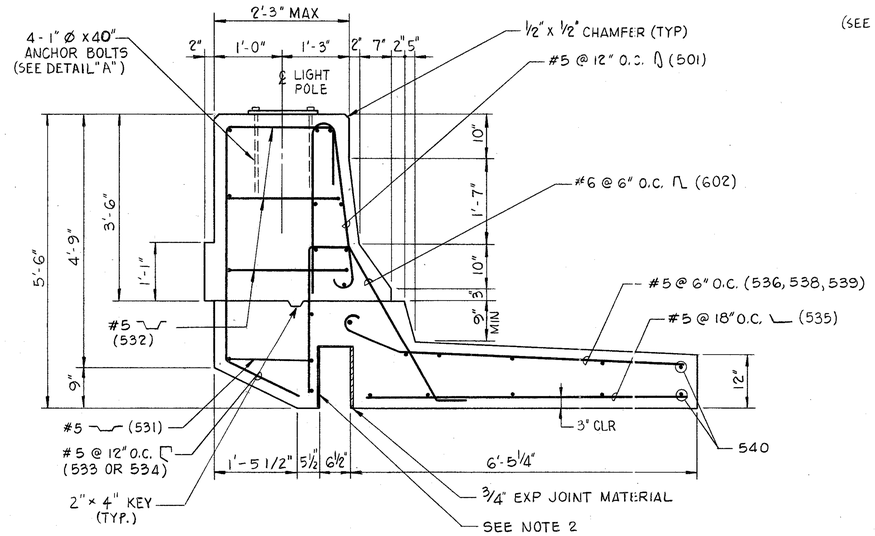

SECTION A-A - LIGHT POLE SUPPORT

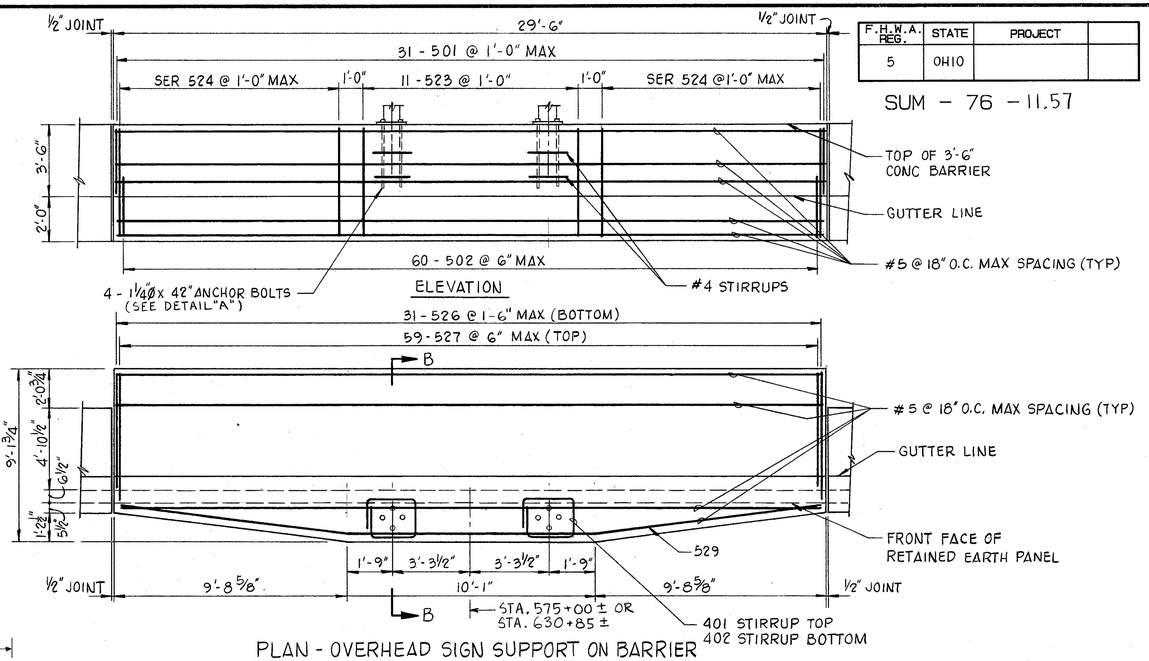

PLAN - OVERHEAD SIGN SUPPORT ON BARRIER
(AT STA. 575+00 ± AND STA. 630+85 ±)

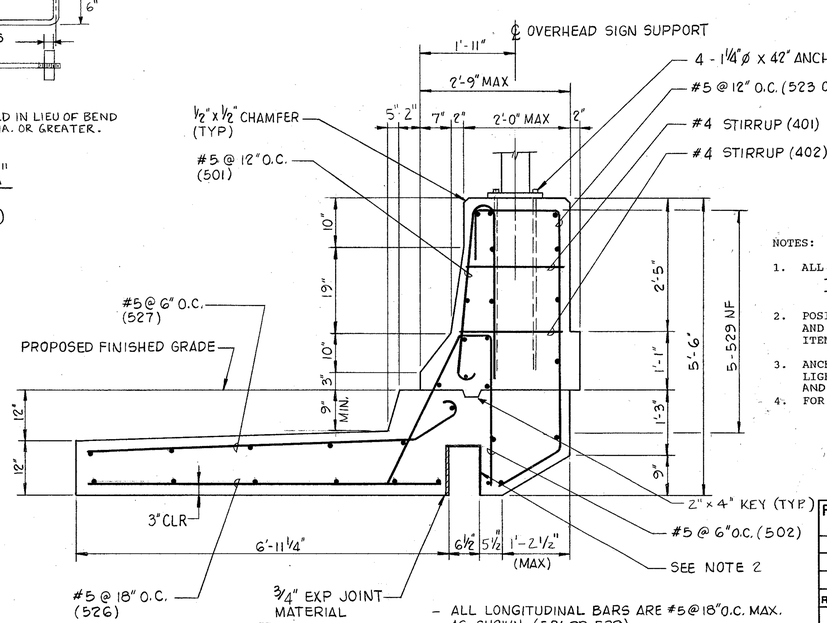

SECTION B-B - OVERHEAD SIGN SUPPORT

NOTES:

1. ALL STEEL REINFORCING BARS IN THE C.I.P. CONC PARAPET AND COPING:
   - SHALL BE EPOXY COATED REINFORCING, GRADE 60.
   - SHALL HAVE 2" CONCRETE CLEARANCE EXCEPT AS NOTED OTHERWISE.
2. POSITIVE BOND BREAKER SHALL BE PROVIDED BETWEEN CAST-IN-PLACE CONC AND CONCRETE PANEL. THE COST SHALL BE INCIDENTAL TO THIS COST OF ITEM 511.
3. ANCHOR BOLTS SHALL BE FURNISHED WITH OVERHEAD SIGN SUPPORTS AND LIGHT POLE SUPPORTS, FOR COST OF ANCHOR BOLTS SEE GUIDE SIGN PLAN AND LIGHTING PLAN SUMMARY.
4. FOR ADDITIONAL NOTES SEE SHEET 69 OF 98.

DESIGN OF ALL WALLS IS BASED ON THE ASSUMPTION THAT ALL MATERIALS, INCLUDING THE RETAINED EARTH BACKFILL AND METHODS OF CONSTRUCTION CONFORM TO THE SPECIFICATIONS FOR RETAINED EARTH WALLS.

THESE DRAWINGS ARE CERTIFIED WITH RESPECT TO INTERNAL STABILITY OF RETAINED EARTH STRUCTURES ONLY.

F.H.W.A. REG.	STATE	PROJECT	
5	OHIO		

773
1214

SUM - 76 - 11.57

NO.	DATE	REVISION	BY
2	12/19/96	REV PER ENGR.	ALS
1	11/24/95	DETAILS PER ENGR.	ALS

	DES.	DRN.	CHK.
	11/30/95 ALS	11/30/95 ALS	11/7/95 JN

POST-TENSIONING INSTITUTE

VSL CORPORATION
RETAINED EARTH
8006 HAUTE COURT
SPRINGFIELD, VA 22150
Phone: 703-451-4300
Fax: 703-451-0862
Atlanta, GA / Campbell, CA / Dallas, TX / Denver, CO / Honolulu, HI / Houston, TX / Los Angeles, CA / Miami, FL / Minneapolis, MN / Seattle, WA / Washington, DC

VSL Corporation ("VSL") claims a strict proprietary right in all drawings, specifications and electronic data ("information") set forth in this document. This information is to be used only for the intended purpose and may not be reproduced, in whole or in part, or used for any other purpose without the written permission of VSL. The material and/or information furnished by VSL is strictly confidential and VSL DISCLAIMS ANY LIABILITY thereto.

RETAINED EARTH
DETAILS

AKRON EAST EXPRESSWAY
SUM-76-11.57
AKRON, OHIO

DESIGN 2

FABRICATOR:

REV. No.	DATE	DESCRIPTION	MADE BY

REVISION SCHEDULE

ODOT PROJECT No.

BRIDGE No.

CONSULT. ENGR:					
CONTRACTOR:					
DRAWN BY	DATE	MATERIAL			
CHK'D	DATE	DRAWING No.			
TRACED	DATE	OF			
APP'D	DATE				

DATE	ISSUED FOR	PRINTS	SEPIAS

PRINT STATUS:

JOB NO: OH006-8

SHEET: 67 OF: 98

BRUNING 44-232-76346

F.H.W.A. REG.	STATE	PROJECT	
5	OHIO		

774
12/19

SUM - 76 - 11.57

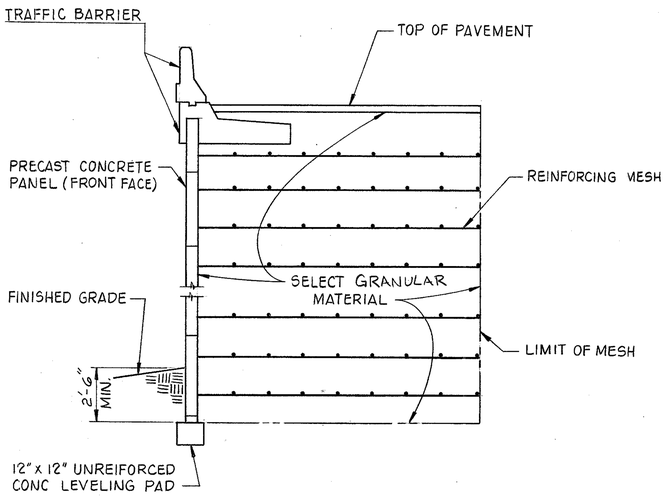

TYPICAL SECTION W/ TRAFFIC BARRIER

N.T.S.

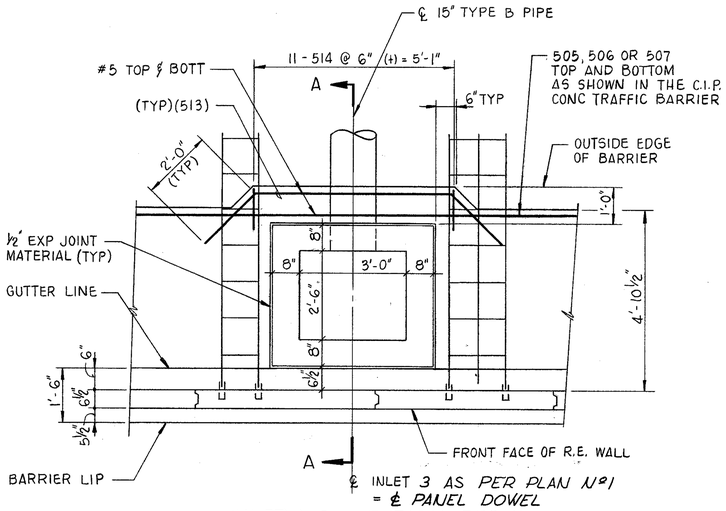

INLET 1-3 - TYPICAL DETAIL

FOR INLET Nº 3, AS PER PLAN Nº 1 DETAIL, SEE SHEET 552.

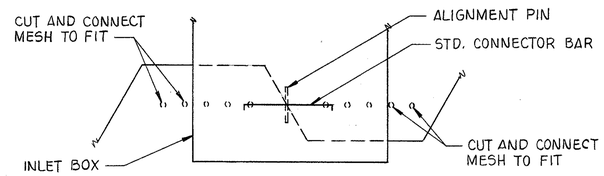

DETAIL OF BACKFACE RETAINED EARTH WALL @ INLET

N.T.S.

NOTE: FOR NO. OF REBAR AND SIZES IN TRAFFIC BARRIER, SEE C.I.P. CONC TRAFFIC BARRIER.

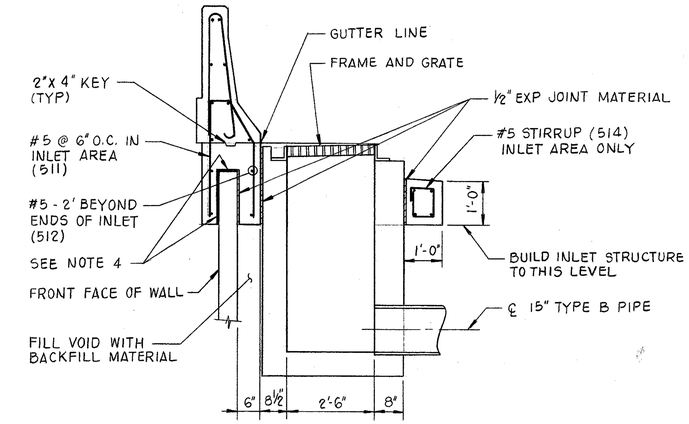

SECTION A-A - INLET 1-3

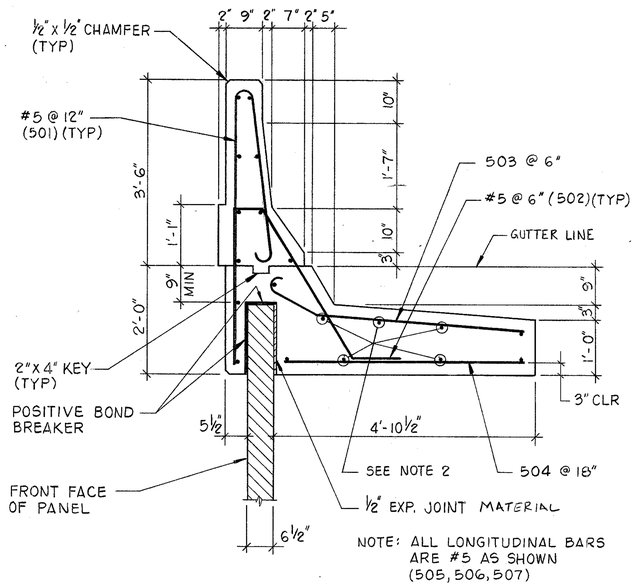

NOTE: ALL LONGITUDINAL BARS ARE #5 AS SHOWN (505, 506, 507)

C.I.P. CONCRETE TRAFFIC BARRIER DETAIL

(WALLS NO. 1 THRU NO. 5 AND NO. 10 THRU NO. 14)

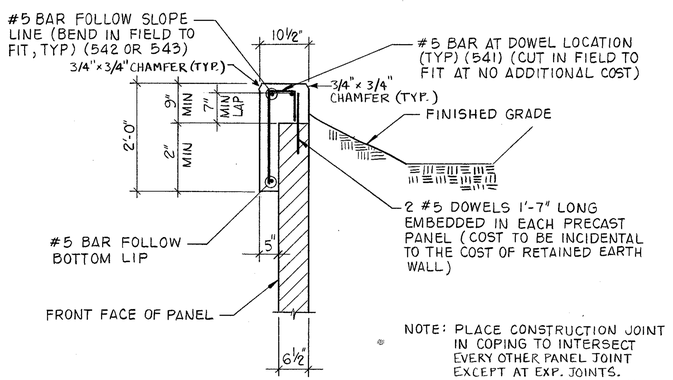

NOTE: PLACE CONSTRUCTION JOINT IN COPING TO INTERSECT EVERY OTHER PANEL JOINT EXCEPT AT EXP. JOINTS. STEEL IS NOT CONTINUOUS ACROSS ANY JOINTS.

C.I.P. COPING DETAIL

N.T.S.

(WALL NO. 9 ONLY)

(COST OF DOWEL AND INSTALLATION SHALL BE INCIDENTAL TO THE COST OF RETAINED EARTH WALL)

NOTES:

1. ALL STEEL REINFORCING BARS IN THE C.I.P. CONC PARAPET AND COPING:
   - SHALL BE EPOXY COATED REINFORCING, GRADE 60
   - SHALL HAVE 2" CONCRETE CLEARANCE EXCEPT AS NOTED OTHERWISE.
   - SHALL HAVE THE FOLLOWING PREFIX'S:
     1EW2 FOR WALL NO. 1
     2EW2 FOR WALL NO. 2
     3EW2 FOR WALL NO. 3
     4EW2 FOR WALL NO. 4
     5EW2 FOR WALL NO. 5
     9EW2 FOR WALL NO. 9
     10EW2 FOR WALL NO. 10
     11EW2 FOR WALL NO. 11
     12EW2 FOR WALL NO. 12
     13EW2 FOR WALL NO. 13
     14EW2 FOR WALL NO. 14
2. ALL 505, 506, OR 507 BARS THAT WILL INTERFERE WITH THE INSTALLATION OF ANY INLET DETAIL SHOWN ON THIS SHEET, WILL BE CUT IN THE FIELD TO FIT AT ADDITIONAL COST.
3. ALL 505, 506, 507 BARS WILL BE CUT IN FIELD TO FIT BETWEEN EXPANSION JOINTS AT NO ADDITIONAL COST.
4. POSITIVE BOND BREAKER SHALL BE PROVIDED BETWEEN CAST-IN-PLACE CONC. AND CONCRETE PANEL.
5. 1/2" PREFORMED EXPANSION JOINT MATERIAL SHALL BE PLACED TO EXTEND ACROSS ENTIRE AREA OF C.I.P. CONCRETE TRAFFIC BARRIER WITH SUPPORT SLAB AND C.I.P. COPING EVERY 6 PANEL JOINTS.
6. ALL CONCRETE FOR C.I.P. CONCRETE TRAFFIC BARRIER SHALL BE CLASS S. ALL C.I.P. COPING CONC AND CONCRETE LEVELING PAD SHALL BE CLASS C.
7. FOR ADDITIONAL NOTES SEE SHEET 69 OF 98.

DESIGN OF ALL WALLS IS BASED ON THE ASSUMPTION THAT ALL MATERIALS, INCLUDING THE RETAINED EARTH BACKFILL AND METHODS OF CONSTRUCTION CONFORM TO THE SPECIFICATIONS FOR RETAINED EARTH WALLS.

THESE DRAWINGS ARE CERTIFIED WITH RESPECT TO INTERNAL STABILITY OF RETAINED EARTH STRUCTURES ONLY.

STATE OF OHIO — ROGER A. BROWN — 10/4/19 — PROFESSIONAL ENGINEER

DESIGN 2

FABRICATOR:

REV. No.	DATE	DESCRIPTION	MADE BY

REVISION SCHEDULE

ODOT PROJECT No.

BRIDGE No.

CONSULT. ENGR:

CONTRACTOR:

DRAWN BY	DATE	MATERIAL
CHK'D	DATE	DRAWING No.
TRACED	DATE	OF
APP'D	DATE	

DATE	ISSUED FOR	PRINTS	SEPIAS

NO.	DATE	REVISION	BY
1	11/3/21	DETAILS PER ENGR.	ALS
2	12/1/21	REV. PER ENGR.	ALS

DES. 11/30/21 ALS
DRN. 11/30/21 ALS
CHK. 11/30/21 JN

POST-TENSIONING INSTITUTE

VSL CORPORATION
RETAINED EARTH™
8006 HAUTE COURT
P.O. BOX 865
SPRINGFIELD, VA 22150
Phone: 703-451-4300
Fax: 703-451-8862
Atlanta, GA / Campbell, CA / Dallas, TX / Denver, CO / Honolulu, HI / Houston, TX / Los Angeles, CA / Miami, FL / Minneapolis, MN / Seattle, WA. Washington, DC

VSL Corporation ("VSL") claims a strict proprietary right in all drawings, specifications and other documents ("Information") set forth herein. Reproduction of such information in whole or in part or any other reproduction thereof is prohibited and/or which it was prepared and for. The material and/or information shall not be used for any other use is strictly any other purpose without VSL's written permission. VSL CLAIMS ANY LIABILITY therefor.

RETAINED EARTH
DETAILS

AKRON EAST EXPRESSWAY
SUM-76-11.57
AKRON, OHIO

PRINT STATUS:

JOB NO: OH006-8

SHEET: 68 OF: 98

BRUNING 44-232-75346

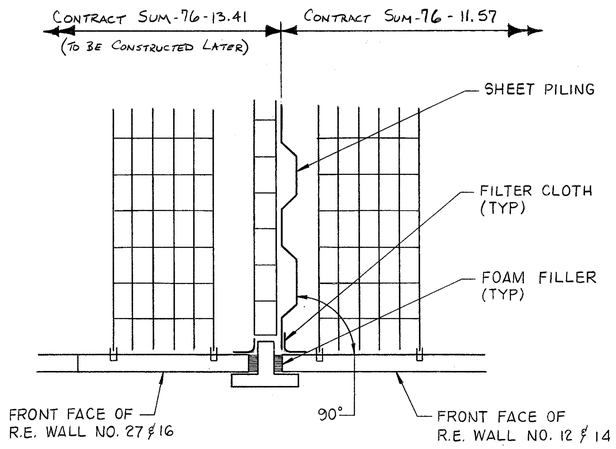

CONNECTION DETAIL AT WALL NO. 12 & NO. 27, NO. 14 & NO. 16

N.T.S.

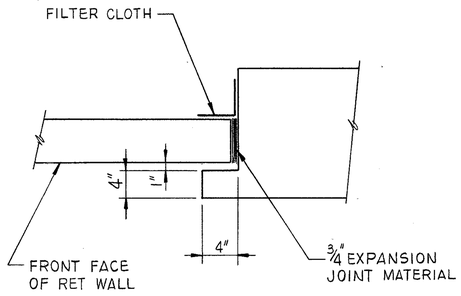

KEY JOINT DETAIL

N.T.S.

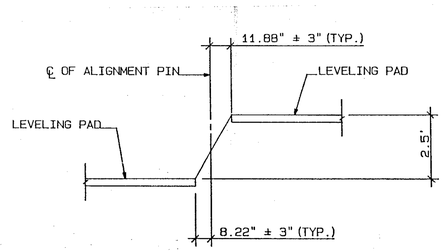

2.5' LEVELING PAD JUMP

N.T.S.

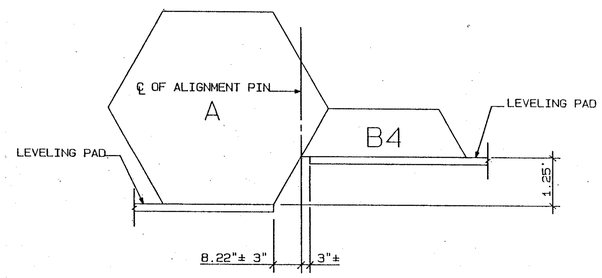

1.25' LEVELING PAD JUMP

N.T.S.

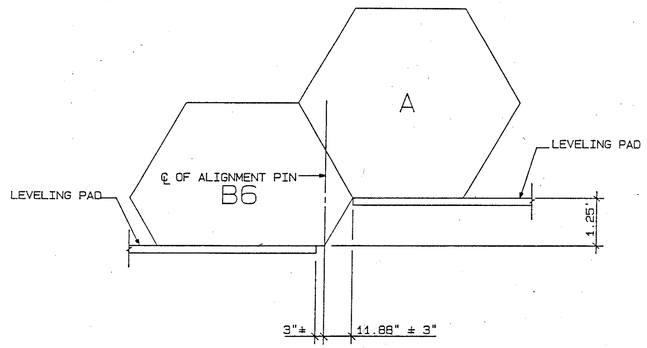

1.25' LEVELING PAD JUMP

N.T.S.

F.H.W.A. REG.	STATE	PROJECT	
5	OHIO		

SUM - 76 - 11.57

775/1214

GENERAL NOTES:

1. DESIGN CRITERIA:
   - ɣ = 125 PCF
   - Ø SELECT = 34 DEGREES
   - Ø BASE = 30 DEGREES FOR WALLS 4, 9, 10, 12 & 14
   - Ø BASE = 25 DEGREES FOR WALLS 1, 11, 13;
   - Ø BASE = 20 DEGREES FOR WALLS 2, 3, 5
   - Ø RANDOM = 30 DEGREES, C = 0 PSF
   - TRAFFIC SURCHARGE = 250 PSF

2. FACTORS OF SAFETY:
   OVERTURNING = 2.0
   SLIDING = 1.5
   INTERNAL PULLOUT = 1.5 (ALLOWABLE
   DEFORMATION = 0.75 INCHES)
   STEEL = 0.55 Fy

3. FOR LOCATION AND ALIGNMENT OF RETAINED EARTH WALLS SEE THE CONTRACT DRAWINGS.

4. RETAINED EARTH WALL PANELS SHALL HAVE A FRACTURED FIN FORM LINER FINISH.

5. TOP OF WALL ELEVATIONS ARE GIVEN TO THE GUTTERLINE ON WALLS 1, 2, 3, 4, 5, 10, 11, 12, 13, 14. TOP OF WALL ELEVATIONS FOR WALL 9 ARE GIVEN TO THE TOP OF COPING.

6. 4W11 MESH INDICATED A MESH UNIT WITH FOUR LONGITUDINAL WIRES. W11 IS THE WIRE SIZE (3/8" DIA.).

7. WALLS 3, 11, 12, 13, SHALL BE CONSTRUCTED IN STAGES. REFER TO THE RETAINING WALL GENERAL NOTES FOR STAGE CONSTRUCTION SEQUENCING.

DESIGN 2

FABRICATOR:

REV. No.	DATE	DESCRIPTION	MADE BY

REVISION SCHEDULE

ODOT PROJECT No.

BRIDGE No.

DATE	ISSUED FOR	PRINTS	SEPIAS

CONSULT. ENGR:

CONTRACTOR:

DRAWN BY	DATE	MATERIAL
CHK'D	DATE	DRAWING No.
TRACED	DATE	OF
APP'D	DATE	

DESIGN OF ALL WALLS IS BASED ON THE ASSUMPTION THAT ALL MATERIALS, INCLUDING THE RETAINED EARTH BACKFILL AND METHODS OF CONSTRUCTION CONFORM TO THE SPECIFICATIONS FOR RETAINED EARTH WALLS.

THESE DRAWINGS ARE CERTIFIED WITH RESPECT TO INTERNAL STABILITY OF RETAINED EARTH STRUCTURES ONLY.

STATE OF OHIO — Roger A. Bligh — 10/4/90 — REGISTERED PROFESSIONAL ENGINEER

NO.	DATE	REVISION	BY
1	11/30/89	DETAILS PER ENGR.	ALS
2	12/19/89	REV. PER ENGR.	ALS

DES. 11/30/89 ALS
DRN. 11/30/89 ALS
CHK. 11/30/89 JN

WIRE REINFORCED RETAINING WALL INSTITUTE

VSL CORPORATION
RETAINED EARTH™
8008 HAUTE COURT
P.O. BOX 886
SPRINGFIELD, VA 22150
Phone: 703-451-4300
Fax: 703-451-0862
Atlanta, GA / Campbell, CA / Dallas, TX / Denver, CO / Honolulu, HI / Houston, TX / Los Angeles, CA / Miami, FL / Minneapolis, MN / Seattle, WA / Washington, DC

VSL Corporation ("VSL") claims a strict proprietary interest in these specifications and calculations and in all forms contained on this sheet. The use of such information in whole or in part for any purpose of construction (hereof is forbidden and shall entitle VSL, which it was prepared and to which this sheet is loaned, to recover any fees for services provided by VSL and damages. Copying, publication, and use by DISCLAIMS ANY LIABILITY WHATSOEVER.

RETAINED EARTH
DETAILS

AKRON EAST EXPRESSWAY
SUM-76-11.57
AKRON, OHIO

PRINT STATUS:

JOB NO:

SHEET: 69 OF: 98

BRUNING 44-237 75346

F.H.W.A. REG.	STATE	PROJECT	
5	OHIO		

SUM - 76 - 11.57

776
1214

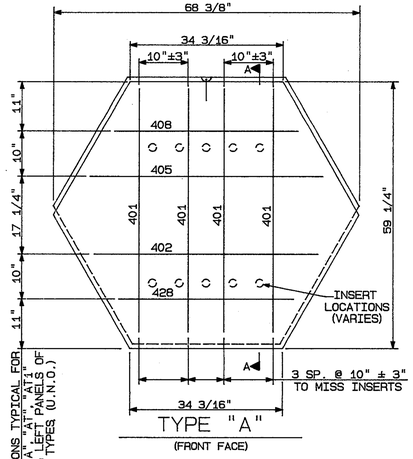

DIMENSIONS TYPICAL FOR RIGHT & LEFT END PANELS OF THESE TYPES (U.N.O.)

TYPE "A"
(FRONT FACE)

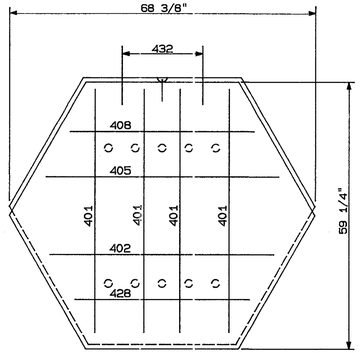

TYPE "AT"/"AT1"
(FRONT FACE)

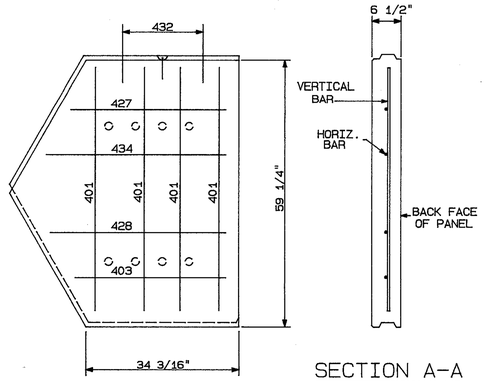

TYPE "AR"
(FRONT FACE)

SECTION A-A

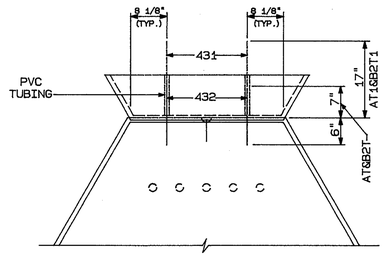

TYPES: AT, AT1, B2T, B2T1
(SIMILAR FOR RIGHT AND LEFT END PANELS OF THESE TYPES.)

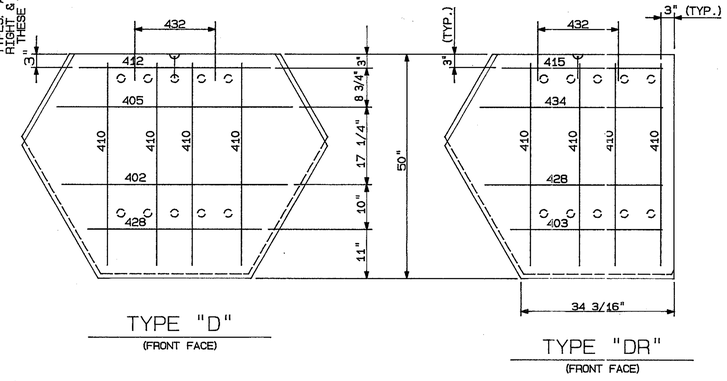

TYPE "D"
(FRONT FACE)

TYPE "DR"
(FRONT FACE)

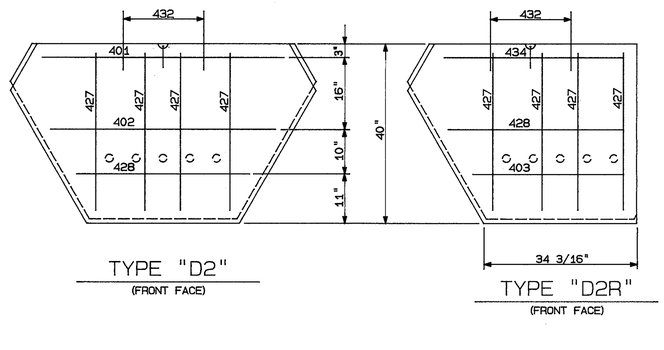

TYPE "D2"
(FRONT FACE)

TYPE "D2R"
(FRONT FACE)

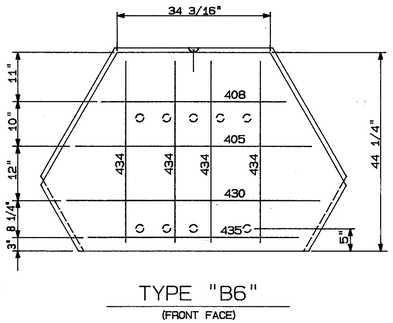

TYPE "B4"
(FRONT FACE)

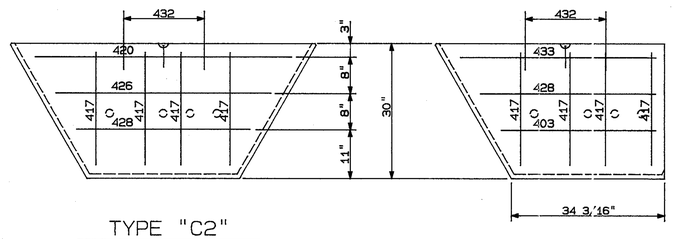

TYPE "C2"
(FRONT FACE)

TYPE "C2R"
(FRONT FACE)

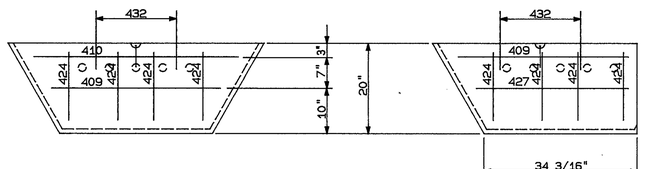

TYPE "D4"
(FRONT FACE)

TYPE "D4R"
(FRONT FACE)

TYPE "B6"
(FRONT FACE)

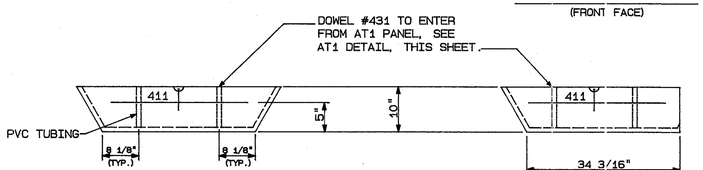

TYPE "D8"
(FRONT FACE)

TYPE "D8R"
(FRONT FACE)

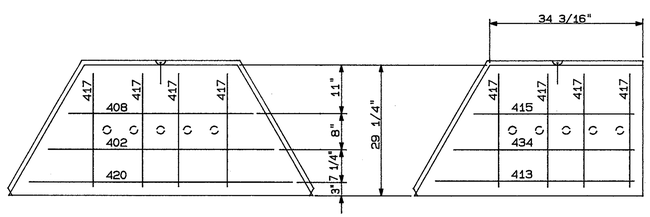

TYPE "B2"
(FRONT FACE)

TYPE "B2R"
(FRONT FACE)

BILL OF REINFORCING	
MARK	LENGTH
401	4'-6"
402	4'-2"
403	2'-9"
405	4'-4"
407	0'-11"
408	3'-5"
409	3'-1 1/2"
410	3'-8"
411	2'-6 1/2"
412	3'-6"
413	3'-8"
415	2'-11"
417	2'-0"
420	4'-9"
424	1'-2"
426	4'-0"
427	2'-9"
428	3'-3"
429	2'-8"
430	4'-8"
431	1'-11"
432	1'-1"
433	3'-7"
434	3'-4"
435	3'-11"

NOTES:
1. ALL REINFORCING STEEL TO BE EPOXY COATED.
2. ALL REINFORCING STEEL TO BE #4 BARS.
3. ALL REINFORCING STEEL TO BE GRADE 60.
4. DIMENSIONS SHOWN ARE TO THE FRONT FACE UNLESS NOTED OTHERWISE.
5. VERTICAL BARS TO HAVE 2" (MIN.) CLEAR TO THE BACK FACE.
6. HORIZONTAL BARS TO HAVE 2 1/2" (MIN.) CLEAR TO BACK FACE.
7. ALL BARS TO HAVE 2" MIN. CLEAR TO SIDES.
8. LEFT END PANELS ARE OPPOSITE OF RIGHT END PANELS.

PANEL REINFORCEMENT
(FRONT FACE)

DESIGN OF ALL WALLS IS BASED ON THE ASSUMPTION THAT ALL MATERIALS, INCLUDING THE RETAINED EARTH BACKFILL AND METHODS OF CONSTRUCTION CONFORM TO THE SPECIFICATIONS FOR RETAINED EARTH WALLS.

THESE DRAWINGS ARE CERTIFIED WITH RESPECT TO INTERNAL STABILITY OF RETAINED EARTH STRUCTURES ONLY.

DESIGN 2

FABRICATOR:

REV. No.	DATE	DESCRIPTION	MADE BY

REVISION SCHEDULE

ODOT PROJECT No.

BRIDGE No.

DATE	ISSUED FOR	PRINTS	SEPIAS

CONSULT. ENGR:
CONTRACTOR:
DRAWN BY | DATE | MATERIAL
CHK'D | DATE | DRAWING No.
TRACED | DATE | OF
APP'D | DATE

NO.	DATE	REVISION	BY
1	11/10/89	Added Note 1, Project Blocks	ALS

DES. 4/5/89 EF
DRN. 4/5/89 DT
CHK. 4/5/89 JW

modern RETAINING WALL INSTITUTE

VSL CORPORATION
RETAINED EARTH™
8006 HAUTE COURT
P.O. BOX 868
SPRINGFIELD, VA 22150
Phone: 703-451-4300
Fax: 703-451-0862
Atlanta, GA / Campbell, CA / Dallas, TX / Denver, CO / Honolulu, HI / Houston, TX / Los Angeles, CA / Miami, FL / Minneapolis, MN / Seattle, WA / Washington, DC

VSL Corporation ("VSL") claims a strict proprietary right in all drawings, specifications and other documents ("Information") set forth on this sheet. Reproduction of such information in whole or in part, or any use thereof for the material and/or construction of any structure without written permission from VSL is strictly prohibited, and VSL DISCLAIMS ANY LIABILITY therefor.

RETAINED EARTH
REBAR SHEET
AKRON EAST EXPRESSWAY
SUM-76-11.57
AKRON, OHIO

PRINT STATUS:

JOB NO: OH006-8

SHEET: 70 OF: 98

BRUNING 44.232 75346

F.H.W.A. REG.	STATE	PROJECT	
5	OHIO		

777/1214

SUM - 76 - 11.57

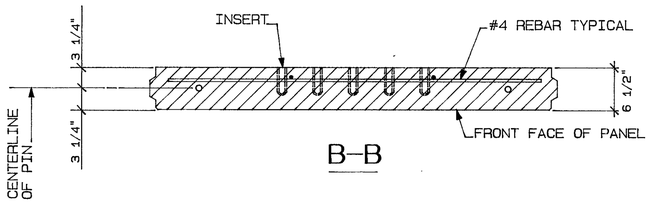

B–B

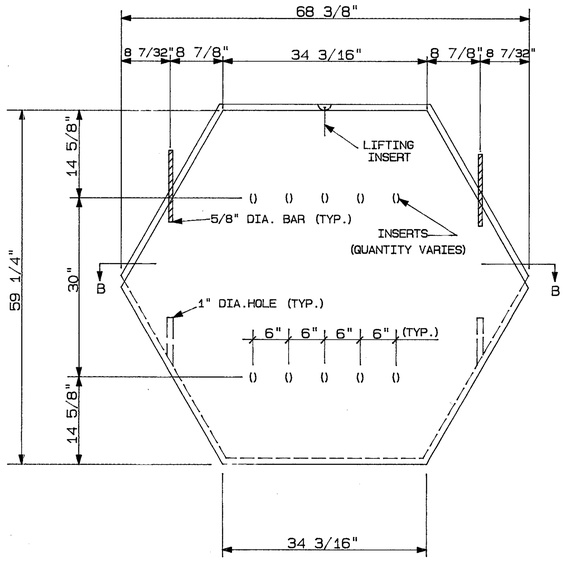

TYPE "A" PANEL

(FRONT FACE)

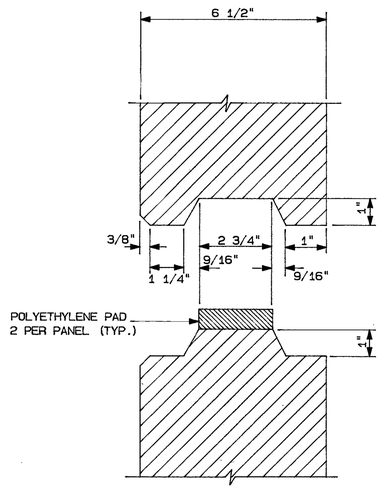

PANEL JOINT DETAIL

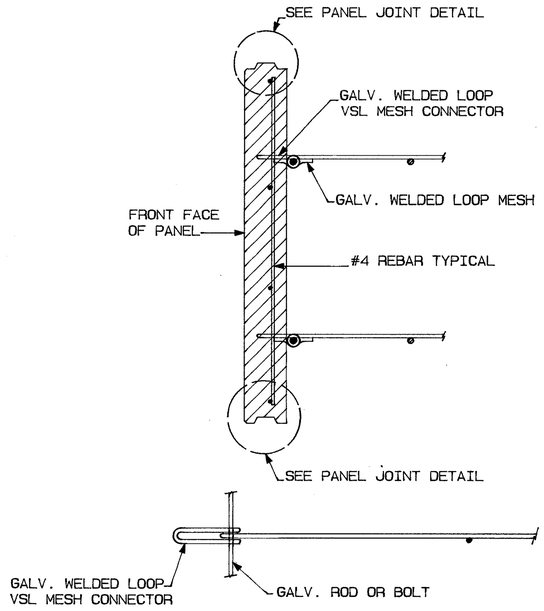

MESH CONNECTOR DETAIL

(SIDE VIEW)

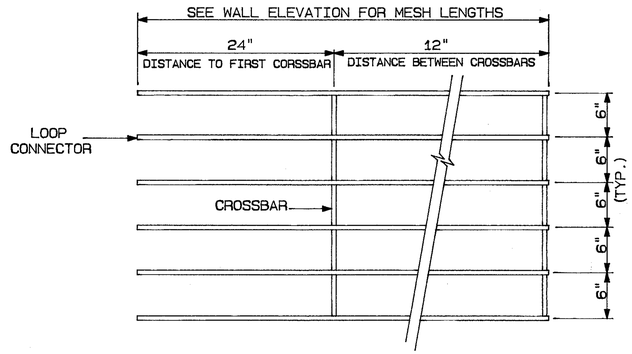

SOIL REINFORCING MESH UNIT DETAIL

(6W11 MESH)

NOTES:

A. 6W11 MESH SHOWN, MESH CONFIGURATION VARIES, SEE WALL ELEVATIONS.
B. NUMBER OF LOOP MESH CONNECTORS VARIES ACCORDING TO MESH CONFIGURATION.
C. ALL PANEL JOINTS ON BACK FACE OF PANELS TO BE COVERED WITH FILTER FABRIC.

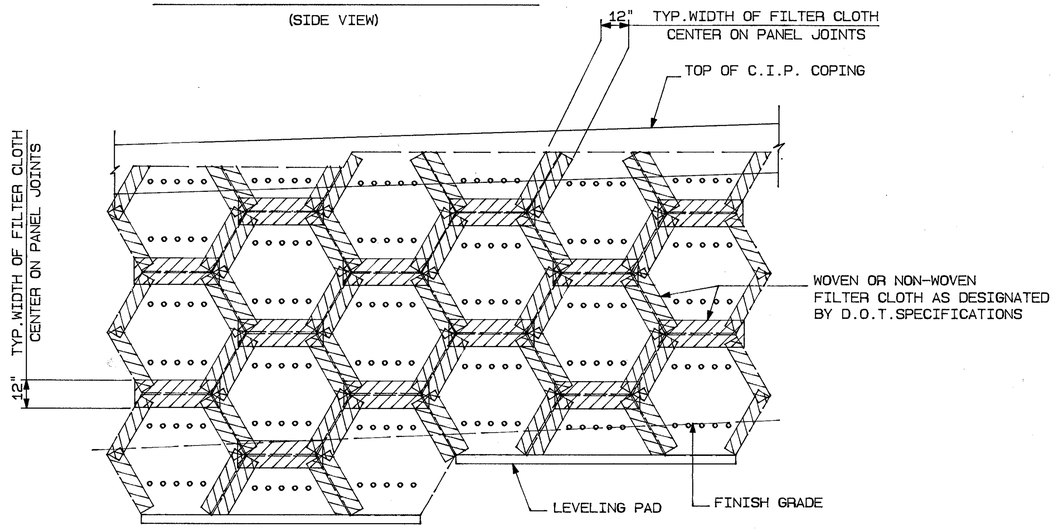

PARTIAL WALL ELEVATION

(BACK FACE)

DESIGN OF ALL WALLS IS BASED ON THE ASSUMPTION THAT ALL MATERIALS, INCLUDING THE RETAINED EARTH BACKFILL AND METHODS OF CONSTRUCTION CONFORM TO THE SPECIFICATIONS FOR RETAINED EARTH WALLS.

THESE DRAWINGS ARE CERTIFIED WITH RESPECT TO INTERNAL STABILITY OF RETAINED EARTH STRUCTURES ONLY.

STATE OF OHIO — REGISTERED PROFESSIONAL ENGINEER — 10/6/98

DESIGN 2

FABRICATOR:

REV. No.	DATE	DESCRIPTION	MADE BY

REVISION SCHEDULE

ODOT PROJECT No.

BRIDGE No.

DATE	ISSUED FOR	PRINTS	SEPIAS

CONSULT. ENGR:

CONTRACTOR:

DRAWN BY	DATE	MATERIAL
CHK'D	DATE	DRAWING No.
TRACED	DATE	OF
APP'D	DATE	

NO.	DATE	REVISION	BY
1	11/24/97	Added Project Block	HLS

DES. 3/30/98 JT
DRN. 3/30/98 JT
CHK. 3/30/98 JN

VSL POSTTENSIONING INSTITUTE

VSL Corporation

Washington, D.C.
8005 Haven Depot
Springfield, Virginia 22153
Telephone: (703) 913-0500
Telex: 89487

Los Gatos, CA / Campbell, CA / Seattle, WA / Atlanta, GA / Dallas, TX / Denver, CO / Honolulu, HI
Houston, TX / Minneapolis, MN / Miami, FL / Washington, D.C.

VSL Corporation ("VSL") claims a strict proprietary interest in the ideas, designs and calculations contained in this drawing ("information"). I set forth such information in whole or in part, except for use in connection with the project for which it was prepared and to the limited extent authorized by VSL. Any other use is strictly prohibited and will be at the user's risk. VSL DISCLAIMS ANY LIABILITY FOR SUCH USE.

RETAINED EARTH
STANDARD DETAIL SHEET
AKRON EAST EXPRESSWAY
SUM-76-11.57
AKRON, OHIO

PRINT STATUS:

JOB NO: OH006-8

SHEET: 71 OF: 98

BRUNING 56286-5

F.H.W.A. REGION	STATE	PROJECT	
5	OHIO		

778
1214

SUM–76–11.57

DOUBLEWAL SPECIAL PROVISIONS

1.0 DESCRIPTION

THIS WORK SHALL CONSIST OF CONSTRUCTING A DOUBLEWAL STRUCTURE IN ACCORDANCE WITH THIS SPECIFICATION AND IN REASONABLY CLOSE CONFORMITY WITH THE LINES, GRADES, DESIGN AND DIMENSIONS SHOWN ON THE PLANS OR AS ESTABLISHED BY THE ENGINEER.

2.0 MATERIALS

THE CONTRACTOR SHALL MAKE ARRANGEMENTS TO ACQUIRE THE DOUBLEWAL PRECAST REINFORCED CONCRETE MODULAR UNITS, PRECAST TRAFFIC BARRIER, PRECAST PARAPET, PREFORMED CORK JOINT FILLER, RUBBER PADS, FILTER CLOTH AND CLOSED–CELL POLYETHYLENE FOAM RODS FROM THE LICENSEE OF THE DOUBLEWAL CORPORATION, 59 EAST MAIN STREET, PLAINVILLE, CONNECTICUT, 06062 (PHONE 203–747–3412).

THE CONTRACTOR SHALL PROVIDE CERTIFICATION OF THE ABOVE DOUBLEWAL COMPONENTS AS PER 101.061. CERTIFICATION SHALL BE PROVIDED FOR THE CONCRETE, REINFORCING STEEL, PREFORMED CORK JOINT FILLER, RUBBER PADS, FILTER CLOTH AND CLOSED CELL POLYETHYLENE FOAM RODS WHICH ARE ALL COMPONENTS OF THE DOUBLEWAL STRUCTURE. (REFER TO THE SECTION OF THE PROPOSAL CONCERNING STEEL PRODUCED IN THE UNITED STATES).

2.1 DOUBLEWAL PRECAST REINFORCED CONCRETE MODULAR UNITS

THE CONCRETE FOR THE PRECAST UNITS SHALL CONFORM TO THE REQUIREMENTS OF 511 EXCEPT AS MODIFIED HEREIN. CONCRETE FOR THE PRECAST MODULAR UNITS SHALL BE AIR–ENTRAINED COMPOSED OF PORTLAND CEMENT, FINE AND COARSE AGGREGATES, ADMIXTURES AND WATER. CONCRETE SHALL CONTAIN 6 +/– 2 PERCENT AIR. THE AIR ENTRAINING ADMIXTURE SHALL CONFORM TO AASHTO M 154.

THE CONCRETE UTILIZED SHALL BE A MIX WHICH WILL ATTAIN A MINIMUM 28 DAYS STRENGTH (f'c) OF 5,000 PSI. THE MIX DESIGN WILL BE FURNISHED TO THE ENGINEER.

(A) COARSE AGGREGATE SHALL CONSIST OF CRUSHED CARBONATE STONE HAVING A MAXIMUM SIZE OF 3/4". AGGREGATE SHALL MEET REQUIREMENTS FOR 511, EXCEPT ABRASION LOSS SHALL HAVE A MAXIMUM OF 50 PERCENT.

(B) TYPE I, TYPE II, TYPE III, OR TYPE IIIa PORTLAND CEMENT SHALL BE USED.

(C) WATER–REDUCING ADMIXTURE: THE CONTRACTOR MAY SUBMIT, FOR APPROVAL BY THE ENGINEER, WATER–REDUCING ADMIXTURE FOR THE PURPOSE OF INCREASING WORKABILITY AND REDUCING THE WATER REQUIREMENT FOR THE CONCRETE.

(D) CALCIUM CHLORIDE: THE ADDITION TO THE MIX OF CALCIUM CHLORIDE OR ADMIXTURES CONTAINING CALCIUM CHLORIDE WILL NOT BE PERMITTED.

WHEN THE PLANS REQUIRE THAT IRON HARDWARE OR STEEL HARDWARE IS TO BE EMBEDDED IN THE CONCRETE, THE HARDWARE SHALL BE GALVANIZED IN ACCORDANCE WITH ASTM A153.

2.1.1 TESTING AND INSPECTION

BEFORE PROCEEDING WITH PRODUCTION, A MODEL PRECAST MODULAR UNIT SHALL BE PROVIDED BY THE FABRICATOR FOR THE ENGINEER'S APPROVAL TO ESTABLISH A GUIDE AND STANDARD FOR THE TYPE OF FINISH ON THE EXPOSED FACE. THIS MODEL SHALL BE KEPT AT THE FABRICATOR'S PLANT TO BE USED FOR COMPARISON PURPOSES DURING PRODUCTION.

DURING THE CASTING OF THE UNITS, THE CONTRACTOR SHALL MAKE TEST CYLINDERS UNDER THE SUPERVISION OF THE ENGINEER. A MINIMUM OF FOUR (4) CYLINDERS SHALL BE TAKEN DURING EACH PRODUCTION RUN OR AS ORDERED BY THE ENGINEER. THE MAXIMUM TIME PERIOD FOR A PRODUCTION RUN IS ONE DAY. THE DIMENSIONS AND TYPE OF CYLINDER MOLD SHALL BE STANDARD OR AS SPECIFIED BY THE ENGINEER. CYLINDERS SHALL BE CURED UNDER CONTROLS CONFORMING TO THE REQUIREMENTS OF ASTM C192 AND SHALL BE USED TO DETERMINE THE 28–DAY COMPRESSIVE STRENGTH REQUIREMENTS (f'c). FAILURE OF ANY OF THE 28–DAY TEST CYLINDER TO MEET 90 PERCENT OF THE MINIMUM COMPRESSIVE STRENGTH OR FAILURE OF THE AVERAGE TO MEET THE FULL MINIMUM COMPRESSIVE STRENGTH REQUIREMENT CAN, AT THE DISCRETION OF THE ENGINEER, BE CAUSE FOR REJECTION.

THE PRECAST UNITS SHALL NOT BE SHIPPED BEFORE ATTAINING THE REQUIRED 28–DAY CONCRETE STRENGTH (f'c).

BEFORE SHIPMENT, SURFACES OF ALL PRECAST UNITS SHALL BE EXAMINED. IF THE EXPOSED FACE OF A UNIT IS BELOW THE STANDARD OF THE APPROVED MODEL, THEN IT SHALL BE PROPERLY REPAIRED TO CONFORM TO THE BALANCE OF THE WORK WITH RESPECT TO APPEARANCE, STRENGTH, AND DURABILITY. SEE SECTION 2.1.7 FOR REJECTION INSTRUCTIONS.

2.1.2. FORMS

FORMS FOR THE PRECAST REINFORCED CONCRETE MODULAR UNITS SHALL BE CONSTRUCTED OF STEEL WITH DIMENSIONAL TOLERANCES THAT WILL ASSURE THE PRODUCTION OF UNIFORM UNITS.

THE FRONT FACE OF THE REINFORCED CONCRETE MODULES SHALL HAVE A 3/4" FRACTURED FIN TEXTURE. THE FORM LINER USED SHALL BE ONE OF THE FOLLOWING OR AN APPROVAL EQUAL:

1. SYMONS – P/C 30449 (ABS)
2. GREENSTREAK – NO. 373
3. FITZGERALD VACUFORM – NO. 16950

THE CONTRACTOR SHALL SUBMIT AN ACTUAL SAMPLE OF THE FINISHED RUSTICATION PATTERN TO THE ENGINEER WHICH WILL GET APPROVAL FROM THE CITY OF AKRON. THE CONTRACTOR SHALL USE THE SAME BRAND OF FORM LINER ON THE ENTIRE PROJECT.

?2.1.3 MIXING AND PLACING CONCRETE

THE CONCRETE MIX SHALL BE PROPORTIONED AND MIXED IN A BATCH MIXER TO PRODUCE A HOMOGENEOUS CONCRETE CONFORMING TO THESE SPECIFICATION REQUIREMENTS. THE TRANSPORTING, PLACEMENT AND COMPACTION OF CONCRETE SHALL BE BY METHODS THAT WILL PREVENT SEGREGATION OF THE CONCRETE MATERIALS AND THE DISPLACEMENT OF THE REINFORCEMENT STEEL FROM ITS PROPER POSITION IN THE FORM. CONCRETE SHALL BE CAREFULLY PLACED IN THE FORMS AND VIBRATED SUFFICIENTLY TO PRODUCE A SURFACE FREE FROM IMPERFECTIONS, SUCH AS HONEYCOMB, SEGREGATION, OR CRACKS.

2.1.4 REINFORCING STEEL FOR PRECAST UNITS

ALL REINFORCING STEEL FOR THE PRECAST REINFORCED CONCRETE MODULAR UNITS, AND OTHER WALL COMPONENTS SHALL BE FABRICATED AND PLACED IN ACCORDANCE WITH STANDARDS OF DOUBLEWAL CORPORATION.

ALL REINFORCING STEEL THAT EXTENDS INTO THE FRONT FACE OF MODULAR BLOCK UNITS FOR ALL WALLS SHALL SATISFY ALL APPLICABLE REQUIREMENTS OF 509, EPOXY COATED REINFORCING STEEL, GRADE 60. THE REMAINING REINFORCING STEEL IN THE MODULAR BLOCK UNITS SHALL SATISFY ALL APPLICABLE REQUIREMENTS OF 509, REINFORCING STEEL, GRADE 60.

2.1.5 CURING

THE CURING METHOD WILL BE DEPENDENT ON THE CONCRETE PRECASTER'S CAPABILITIES AND SHALL BE AS PER INSTRUCTIONS BY THE DOUBLEWAL CORPORATION.

PRECAST UNITS SHALL BE CURED BY A METHOD, OR COMBINATION OF METHODS, THAT WILL GIVE SATISFACTORY RESULTS IN ACCORDANCE WITH ACCEPTED LOCAL PRACTICES AND STANDARDS.

WHEN STEAM CURING IS USED, IT SHALL BE DONE UNDER A SUITABLE ENCLOSURE TO CONTAIN THE LIVE STEAM, MINIMIZING MOISTURE AND HEAT LOSSES. THE INITIAL APPLICATION OF THE STEAM SHALL BE TWO TO FOUR HOURS AFTER THE FINAL PLACEMENT OF THE CONCRETE TO ALLOW THE INITIAL SET OF THE CONCRETE TO TAKE PLACE. IF RETARDERS ARE USED, THE WAITING PERIOD BEFORE APPLICATION OF THE STEAM SHALL BE TWO TO SIX HOURS. APPLICATION OF THE STEAM SHALL NOT BE DIRECTLY ON THE CONCRETE.

2.1.6 HANDLING AND STORAGE

HANDLING DEVICES, AS REQUIRED, SHALL BE PROVIDED IN EACH PRECAST MODULAR UNIT FOR THE PURPOSE OF HANDLING AND PLACING. CARE SHALL BE TAKEN DURING STORAGE, TRANSPORTING, HOISTING, AND HANDLING OF ALL UNITS TO PREVENT CRACKING OR DAMAGE. UNITS DAMAGED BY IMPROPER STORING, TRANSPORTING, OR HANDLING, SHALL BE REPLACED OR REPAIRED TO THE SATISFACTION OF THE ENGINEER.

2.1.7 REJECTION

THE QUALITY OF MATERIALS, THE PROCESS OF MANUFACTURE, AND THE FINISHED UNITS SHALL BE SUBJECT TO INSPECTION BY THE ENGINEER PRIOR TO SHIPMENT. PRECAST UNITS MAY BE SUBJECT TO REJECTION DUE TO FAILURE TO CONFORM TO THE REQUIREMENTS OF THIS SPECIAL PROVISION. INDIVIDUAL UNITS MAY BE REJECTED BECAUSE OF ANY OF THE FOLLOWING:

(A) VARIATIONS IN THE EXPOSED FACE THAT SUBSTANTIALLY DEVIATE FROM THE APPROVED MODEL AS TO TEXTURE IN ACCORDANCE WITH PRECAST CONCRETE INDUSTRY STANDARDS.

(B) DIMENSIONS NOT CONFORMING TO THE FOLLOWING TOLERANCES:

FACE OF PANEL, LENGTH OR HEIGHT: +3/16"

DEVIATION FROM SQUARE WHEN MEASURED ON DIAGONAL: 5/16" FOR MODULES UP TO 10' WIDE, 3/4" FOR LARGER UNITS.

(C) HONEYCOMB OR OPEN TEXTURE NOT PROPERLY REPAIRED.

(D) DEFECTS WHICH WOULD AFFECT THE STRUCTURAL INTEGRITY OF THE UNIT.

2.1.8 MARKING

EACH PRECAST REINFORCED CONCRETE MODULAR UNIT SHALL HAVE A UNIQUE IDENTIFYING MARK CLEARLY PLACED ON THE MODULAR UNIT. THE IDENTIFYING MARK SHALL CONTAIN THE DATE OF MANUFACTURE, THE PRODUCTION LOT NUMBER, THE INDIVIDUAL UNIT AND TYPE OF UNIT IN ACCORDANCE WITH THE APPROVED SHOP DRAWINGS.

2.2 PERVIOUS STRUCTURE FILL

THE PERVIOUS STRUCTURE FILL MATERIAL THAT IS USED TO FILL THE DOUBLEWAL MODULAR UNITS SHALL BE PERMEABLE AND FREE OF ORGANIC OR DELETERIOUS MATERIAL. THE GRADATION SHALL CONFORM TO MINUS 6" SIZE AND NOT CONTAIN MORE THAN 10 PERCENT PASSING A NO. 200 SIEVE AS DETERMINED BY AASHTO T–27. THE DRY UNIT WEIGHT OF THE FILL MATERIAL SHALL NOT BE LESS THAN 120 POUNDS PER CUBIC FOOT.

2.3 PREFORMED CORK JOINT FILLER

PREFORMED CORK JOINT FILLER, CONFORMING TO ASTM D 1752 (TYPE II), OR EQUAL, SHALL BE INSTALLED IN THE HORIZONTAL JOINTS AT THE FOOTING AND PARAPETS.

2.4 FILTER CLOTH

A 12" WIDTH OF TYPE "A" FILTER CLOTH (SUPPLEMENTAL SPECIFICATION 939) OR APPROVED EQUAL SHALL BE INSTALLED INSIDE THE UNITS AT THE VERTICAL JOINTS OF THE BACK AND FRONT FACES.

2.5 CLOSED–CELL POLYETHYLENE FOAM RODS

A CLOSED–CELL POLYETHYLENE FOAM ROD SHALL BE PLACED IN THE DOUBLEWAL FRONT FACE HORIZONTAL JOINTS BETWEEN THE PRECAST REINFORCED CONCRETE MODULAR UNITS.

2.6 RUBBER PADS

RUBBER PADS SHALL BE "MASTICORD T.M." AS MANUFACTURED BY J.V.I. INCORPORATED, SKOKIE, ILLINOIS, OR AN APPROVED EQUAL.

DESIGN 3

URS

72 / 98

DOUBLEWAL
PLAN NOTES

SUMMIT COUNTY

PROJECT SUM–76–11.57

DESIGNED	DRAWN	TRACED	CHECKED	REVIEWED	DATE	REVISED
JTJ	M.E.		R.E.B.	BLR	7-16-90	

2.7 CONCRETE

THE CAST–IN–PLACE CONCRETE FOR THE FOOTING AT THE TOE OF THE DOUBLEWAL AND THE LEVELING BEAM SHALL CONFORM TO 511 CLASS C CONCRETE. THE CAST–IN–PLACE CONCRETE FOR THE ANCHORAGE OF THE TRAFFIC BARRIER AND PARAPET SHALL CONFORM TO 511 CLASS S CONCRETE.

2.8 REINFORCING STEEL FOR C.I.P. CONCRETE

THE REINFORCING STEEL TO BE PLACED IN THE FOOTING AT THE TOE OF THE DOUBLEWAL SHALL SATISFY ALL APPLICABLE REQUIREMENTS OF 509, REINFORCING STEEL. THE EPOXY COATED REINFORCING STEEL TO BE PLACED IN THE PARAPET AND BARRIER ANCHORAGE SLABS SHALL SATISFY ALL APPLICABLE REQUIREMENTS OF 509, EPOXY COATED REINFORCING STEEL.

2.9 PRECAST CONCRETE BARRIERS AND PARAPETS

FOR THE PRECAST TRAFFIC BARRIERS AND PARAPETS, THE CONCRETE SHALL CONFORM TO SECTION 2.1, DOUBLEWAL PRECAST REINFORCED CONCRETE MODULAR UNITS WITH REGARD TO CONCRETE MIX, TESTING AND INSPECTION, MIXING AND PLACING CONCRETE, CURING, HANDLING AND STORAGE, AND REJECTION. THE REINFORCING STEEL SHALL CONFORM TO ITEM 509, EPOXY COATED REINFORCING STEEL, GRADE 60.

3.0 CONSTRUCTION REQUIREMENTS

3.1 WALL EXCAVATION

UNCLASSIFIED EXCAVATION SHALL BE IN ACCORDANCE WITH 503 EXCEPT THAT THE LIMITS OF EXCAVATION SHALL BE AS SHOWN IN THE PLAN AND THE FILL MATERIAL WITHIN THE LIMITS OF THE DOUBLEWAL VOLUME IS INCLUDED FOR PAYMENT WITH ITEM 203 – PERVIOUS STRUCTURE FILL, AS PER PLAN. EXCAVATION OF SOFT MATERIALS LOCATED BELOW THE PROPOSED FOOTING AND/OR LEVELING BEAM SHALL BE AS DIRECTED BY THE ENGINEER.

EXCAVATIONS IN SOIL LOCATED BELOW THE PROPOSED FOOTING AND LEVELING BEAM SHALL BE BACKFILLED WITH 203 GRANULAR MATERIAL AND COMPACTED AS PER 203 REQUIREMENTS, UNLESS OTHERWISE NOTED.

3.2 FOOTING AND LEVELING BEAM

AT EACH UNIT FOUNDATION LEVEL, EITHER A PRECAST OR CAST–IN–PLACE FOOTING AND/OR LEVELING BEAM SHALL BE PROVIDED AS SHOWN ON THE PLANS. THE FOOTINGS SHALL BE GIVEN A WOOD FLOAT FINISH AND SHALL REACH A COMPRESSIVE STRENGTH OF 2,000 PSI BEFORE PLACEMENT OF WALL MODULES. THE COMPLETED FOOTING SURFACE SHALL BE CONSTRUCTED IN ACCORDANCE WITH GRADES AND CROSS SLOPES SHOWN ON PLANS. WHEN TESTED WITH A 10' STRAIGHT EDGE, THE SURFACE SHALL NOT VARY MORE THAN 1/8" IN 10'.

3.3 PLACEMENT OF PRECAST REINFORCED CONCRETE MODULAR UNITS

THE PRECAST REINFORCED CONCRETE MODULAR UNITS SHALL BE INSTALLED IN ACCORDANCE WITH THE MANUFACTURER'S RECOMMENDATIONS AS SHOWN ON THE APPROVED SHOP DRAWING. SPECIAL CARE SHALL BE TAKEN IN SETTING THE BOTTOM COURSE OF UNITS TO TRUE LINE AND GRADE.

ALL MODULAR UNITS ABOVE THE FIRST COURSE SHALL INTERLOCK WITH LOWER COURSES. VERTICAL JOINTS SHALL BE STAGGERED WITH EACH SUCCESSIVE COURSE. THE VERTICAL JOINT OPENING ON THE FRONT FACE OF THE WALL SHALL NOT EXCEED 3/4". JOINT FILLER SHALL BE INSTALLED IN THE HORIZONTAL JOINTS OF BOTH FACES. JOINTS AT CORNERS OR ANGLE POINTS SHALL BE CLOSED IN ACCORDANCE WITH RECOMMENDATIONS OF THE MANUFACTURER.

REPAIRS AT THE JOB SITE SHALL BE DONE BY EXPERIENCED PERSONNEL, USING METHODS AND MATERIALS RECOMMENDED BY THE MANUFACTURER. PATCHING WILL BE DONE ONLY WITH PERMISSION FROM THE ENGINEER AND WHEN CONDITIONS EXIST WHICH ENSURE THAT THE REPAIRED AREA WILL CONFORM TO THE BALANCE OF THE WORK WITH RESPECT TO APPEARANCE, STRENGTH, AND DURABILITY.

THE OVERALL VERTICAL TOLERANCE OF THE WALL (PLUMBNESS FROM TOP TO BOTTOM) SHALL NOT EXCEED 1/2" PER 10' OF WALL HEIGHT.

ALL VERTICAL JOINTS BETWEEN MODULE UNITS SHALL BE COVERED BY FILTER FABRIC. THE EXPOSED PERVIOUS STRUCTURE FILL IN THE MODULE UNITS AT MODULE UNIT WIDTH TRANSITIONS SHALL BE COVERED BY A LAYER OF FILTER FABRIC. FILTER FABRIC SHALL OVERLAP THE MODULE UNIT A MINIMUM OF 6".

3.4 PLACEMENT OF PERVIOUS STRUCTURE FILL

DOUBLEWAL MODULAR UNITS SHALL BE FILLED, ONE COURSE AT A TIME, WITH PERVIOUS STRUCTURE FILL MATERIALS. WALL UNITS 4' OR LESS IN HEIGHT SHALL BE FILLED IN ONE LAYER AND THE CONTRACTOR SHALL MAKE A REASONABLE ATTEMPT TO CONSOLIDATE THE PERVIOUS STRUCTURE FILL WITH A VIBRATORY TAMPING DEVICE. UNITS WHICH ARE MORE THAN 4' IN HEIGHT SHALL BE FILLED AND CONSOLIDATED IN TWO APPROXIMATELY EQUAL LAYERS. EACH UNIT IN PLACE IN THE WALL SHALL BE FILLED PRIOR TO STACKING ANOTHER UNIT ON TOP OF IT.

WHEN ERECTING A DOUBLEWAL, PLACEMENT OF THE PERVIOUS STRUCTURE FILL SHALL PRECEDE PLACEMENT OF THE COMPACTED BACKFILL MATERIAL. THE HEIGHT OF THE PERVIOUS STRUCTURE FILL MATERIAL SHALL NOT EXCEED 6' GREATER THAN THE HEIGHT OF THE COMPACTED MATERIALS. THE COMPACTED MATERIAL PLACED BEHIND THE DOUBLEWAL SHALL CONFORM TO THE APPLICABLE REQUIREMENTS OF 503 AND/OR 203 EMBANKMENT.

4.0 INSPECTION

THE DOUBLEWAL CORPORATION SHALL PROVIDE A COMPANY REPRESENTATIVE WHO SHALL MONITOR THE PRECAST OPERATION SUFFICIENTLY TO ASSURE THAT THE OPERATION COMPLIES WITH ALL THE ABOVE REQUIREMENTS AND SHALL SUBMIT DOCUMENTATION TO THIS EFFECT TO THE ENGINEER.

DOCUMENTATION SHALL BE FURNISHED BY THE COMPANY REPRESENTATIVE FOR ANY PANEL WHICH HE DEEMS ACCEPTABLE BUT WHICH IS SUBJECT TO REJECTION BY THE REQUIREMENTS OF THIS PROPOSAL NOTE.

THE DOUBLEWAL CORPORATION SHALL PROVIDE SUFFICIENT ON–SITE TECHNICAL ASSISTANCE BY A COMPANY REPRESENTATIVE TO ASSURE THAT THE CONTRACTOR AND THE ENGINEER FULLY UNDERSTAND THE PROPER CONSTRUCTION PROCEDURES AND OPERATIONS.

THE ENGINEER WILL MONITOR ERECTION OF THE STRUCTURE AND PLACEMENT OF FILL WITH TECHNICAL ASSISTANCE FROM THE DOUBLEWAL CORPORATION. ANY WORK NOT SATISFYING THE REQUIREMENTS OF THIS PROPOSAL IS SUBJECT TO REJECTION BY THE ENGINEER.

5.0 METHOD OF MEASUREMENT

THE DOUBLEWAL QUANTITY ACCEPTED FOR PAYMENT SHALL BE THE ACTUAL NUMBER OF SQUARE FEET OF FRONT FACIAL AREA OF APPROVED DOUBLEWAL MODULAR UNITS COMPLETE IN PLACE. THE TOTAL QUANTITY IS THE SUM OF THE FRONT FACIAL AREAS OF ALL INDIVIDUAL PRECAST REINFORCED CONCRETE MODULAR UNITS.

503 UNCLASSIFIED EXCAVATION IS DEFINED IN SECTION 3.1

THE PERVIOUS STRUCTURE FILL QUANTITY TO BE PAID FOR SHALL BE THE ACTUAL FILLED VOLUME MEASURED INSIDE THE PRECAST REINFORCED CONCRETE MODULAR UNITS.

THE PRECAST TRAFFIC BARRIER AND PARAPET QUANTITY ACCEPTED FOR PAYMENT SHALL BE THE ACTUAL NUMBER OF SQUARE FEET OF APPROVED PRECAST TRAFFIC BARRIER AND PARAPET MEASURED AT THE FRONT FACE OF THE WALL FROM TOP OF BARRIER OR PARAPET TO THE TOP OF THE TOP DOUBLEWAL MODULAR UNIT, COMPLETE IN PLACE. NO DISTINCTION WILL BE MADE FOR THOSE PRECAST BARRIER OR PARAPET UNITS HAVING SPECIAL SECTIONS FOR SUPPORT OF LIGHT POLES AND TO ACCOMMODATE INLETS FOR THE PURPOSE OF MEASUREMENT OF QUANTITY FOR THIS ITEM.

6.0 BASIS OF PAYMENT

THE FABRICATION, FURNISHING, AND ERECTION OF THE DOUBLEWAL WILL BE PAID FOR AT THE CONTRACT SQUARE FOOT UNIT PRICE BID FOR ITEM SPECIAL – DOUBLEWAL. PAYMENT FOR THE PRECAST REINFORCED CONCRETE MODULAR UNITS, FRACTURED FIN SURFACE, EMBEDDED REINFORCING STEEL AND HARDWARE, PREFORMED CORK JOINT FILLER, RUBBER PADS, FILTER CLOTH, AND CLOSED–CELL POLYETHYLENE FOAM RODS AND ALL INCIDENTALS, LABOR AND EQUIPMENT NECESSARY TO COMPLETE THE DOUBLEWAL ARE INCLUDED WITH THIS ITEM. (SEE 109.07 PAYMENT FOR MATERIAL ON HAND.)

ITEM 202 – PORTIONS OF STRUCTURES REMOVED, WILL BE PAID FOR AT THE LUMP SUM CONTRACT PRICE IN ACCORDANCE WITH THE RETAINING WALL GENERAL NOTE.

ITEM 203 – EXCAVATION NOT INCLUDING EMBANKMENT CONSTRUCTION, SHALL BE PAID FOR AT THE CONTRACT PRICE PER CUBIC YARD.

ITEM 203 – EMBANKMENT, WILL BE PAID FOR AT THE CONTRACT PRICE PER CUBIC YARD IN ACCORDANCE WITH THE RETAINING WALL GENERAL NOTE.

ITEM 203 – PERVIOUS STRUCTURE FILL, AS PER PLAN, SHALL BE PAID FOR AT THE CONTRACT PRICE PER CUBIC YARD.

ITEM 503 – COFFERDAMS, CRIBS, AND SHEETING, WILL BE PAID FOR AT THE LUMP SUM CONTRACT PRICE.

ITEM 503 – UNCLASSIFIED EXCAVATION, AS PER PLAN, WILL BE PAID FOR AT THE CONTRACT PRICE PER CUBIC YARD.

ITEM 504 – STEEL SHEET PILING LEFT IN PLACE, AS PER PLAN (MIN. SECTION MODULUS 18.1 CU. IN./FT.), WILL BE PAID FOR AT THE CONTRACT PRICE PER SQUARE FOOT.

ITEM 509 – REINFORCING STEEL, GRADE 60, TO BE PLACED IN THE CAST–IN–PLACE CONCRETE FOOTING, SHALL BE PAID FOR AT THE CONTRACT PRICE PER POUND.

ITEM 509 – EPOXY COATED REINFORCING STEEL, GRADE 60, AS DEFINED IN SECTION 2.8 AND EXCLUSIVE OF THOSE BARS PROTRUDING FROM THE PRECAST COPING, SHALL BE PAID FOR AT THE CONTRACT PRICE PER POUND.

ITEM 511 – CLASS S CONCRETE, MISC. SHALL BE PAID FOR AT THE CONTRACT PRICE PER CUBIC YARD.

ITEM 511 – CLASS C CONCRETE, FOOTING, AS DEFINED IN SECTION 2.7, SHALL BE PAID FOR AT THE CONTRACT PRICE PER CUBIC YARD.

ITEM 511 – CONCRETE (PRECAST TRAFFIC BARRIER AND PARAPET) SHALL BE PAID FOR AT THE CONTRACT PRICE PER SQUARE FOOT, WHICH SHALL INCLUDE ALL FABRICATION, CONCRETE, EPOXY COATED REINFORCING STEEL, FURNISHING, ERECTION, AND ALL INCIDENTALS.

ITEM SPECIAL – SEALING OF CONCRETE SURFACES, SHALL BE PAID FOR AT THE CONTRACT PRICE PER SQUARE YARD IN ACCORDANCE WITH THE PROPOSAL NOTE.

ITEM SPECIAL – SEALING OF CONCRETE SURFACES (EPOXY), SHALL BE PAID FOR AT THE CONTRACT PRICE PER SQUARE YARD IN ACCORDANCE WITH THE PROPOSAL NOTE.

ITEM 516 – 1/2" PREFORMED EXPANSION JOINT FILLER, SHALL BE PAID FOR AT THE CONTRACT PRICE PER SQUARE FOOT.

ITEM 604 – INLET NO. 3, AS PER PLAN NO. 2, SHALL BE PAID FOR EACH AT THE CONTRACT PRICE.

DESIGN3

URS

73 / 98

DOUBLEWAL
PLAN NOTES

SUMMIT COUNTY

PROJECT SUM–76–11.57

DESIGNED	DRAWN	TRACED	CHECKED	REVIEWED	DATE	REVISED
JTJ	M.E.		R.E.B.	BJCE	7/6/90	

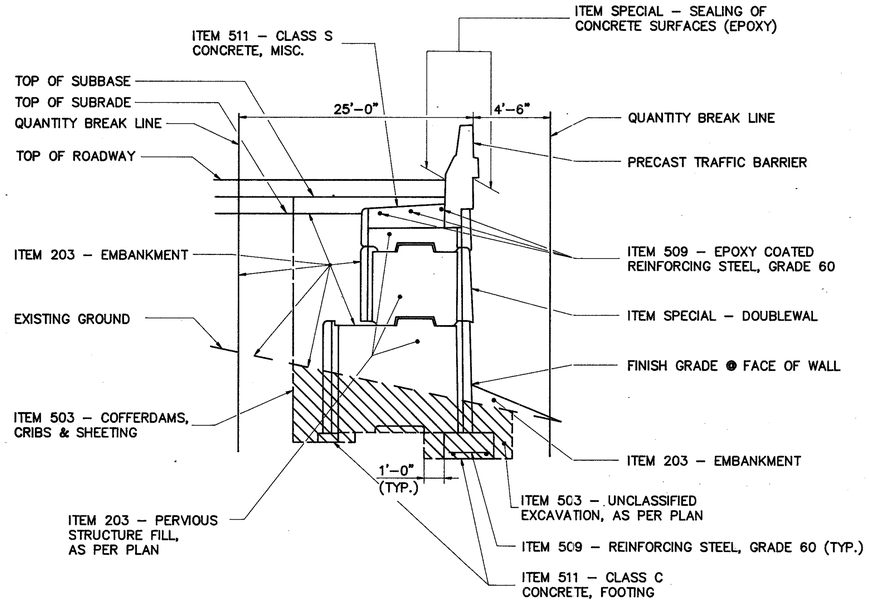

PARTIAL CUT

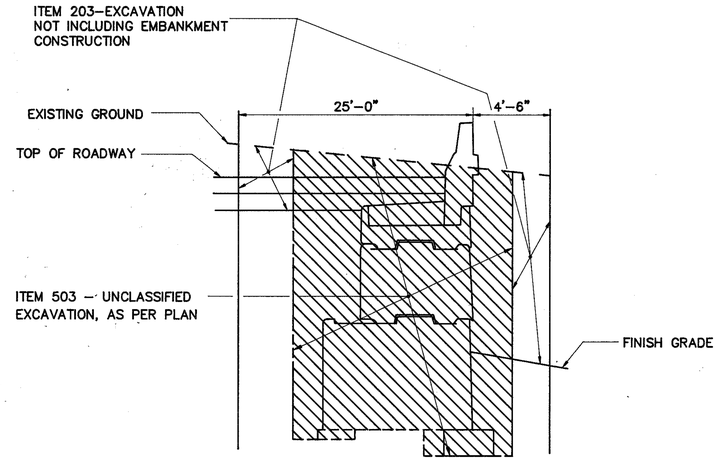

FULL CUT

(FOR ADDITIONAL ITEM LOCATIONS SEE PARTIAL CUT DIAGRAM)

F.H.W.A. REGION	STATE	PROJECT	
5	OHIO		

780
1214

SUM–76–11.57

NOTES

1. ITEM 503 – UNCLASSIFIED EXCAVATION, AS PER PLAN:
   FOR AN EXPLANATION OF THE ITEM, SEE SECTION 3.1 ON SHEET 73/98 .
2. ITEM 203 – PERVIOUS STRUCTURE FILL, AS PER PLAN:
   FOR AN EXPLANATION OF THE ITEM, SEE SECTION 2.2 ON SHEET 72/98 .
3. ITEM SPECIAL – DOUBLEWAL:
   ALL SPECIFICATIONS FOR THESE WALLS ARE PROVIDED AS PER PLAN NOTES ON SHEETS 72/98 THROUGH 73/98 .
4. ITEM 511 – CLASS S CONCRETE, MISC.:
   SHALL INCLUDE TRAFFIC BARRIER ANCHORAGE AND PARAPET ANCHORAGE.
5. ITEM 511 – CONCRETE (PRECAST TRAFFIC BARRIER AND PARAPET):
   SHALL INCLUDE PRECAST TRAFFIC BARRIER AND PRECAST PARAPET.
   FOR AN EXPLANATION OF THE ITEM, SEE SECTION 2.9 ON SHEET 73/98 .

DESIGN No.3 ESTIMATED QUANTITIES – DOUBLEWAL

ITEM	ITEM EXT.	TOTAL	UNIT	DESCRIPTION	WALL1	WALL2	WALL3	WALL4	WALL5	WALL9	WALL10	WALL11	WALL12	WALL13	WALL14
202	11200	LUMP		PORTIONS OF STRUCTURE REMOVED	LUMP	LUMP	LUMP	LUMP	LUMP	LUMP	LUMP	LUMP	LUMP	LUMP	LUMP
203	12000	1,952	C.Y.	EXCAVATION NOT INCLUDING EMBANKMENT CONSTRUCTION	329	621	36	80	–	288	38	200	17	306	37
203	20000	14,188	C.Y.	EMBANKMENT	312	1,912	351	1,959	2,515	804	2,367	303	1,621	1,170	874
203	98000	13,424	C.Y.	PERVIOUS STRUCTURE FILL, AS PER PLAN (SEE SHEET 778)	1053	4390	544	676	353	297	660	983	1173	2,140	1,155
503	11100	LUMP		COFFERDAMS, CRIBS, AND SHEETING	LUMP	LUMP	LUMP	LUMP	LUMP	LUMP	LUMP	LUMP	LUMP	LUMP	LUMP
503	21101	23,715	C.Y.	UNCLASSIFIED EXCAVATION, AS PER PLAN (SEE SHEET 779)	1,953	9,251	912	906	–	1,094	592	2,321	1,083	4,017	1,586
504	11101	776	S.F.	STEEL SHEET PILING LEFT IN PLACE, AS PER PLAN (MIN. SECTION MODULUS 18.1 CU. IN./FT.)	–	–	–	–	–	–	–	–	396	–	380
509	15400	27,528	L.B.	REINFORCING STEEL, GRADE 60	1,976	8,586	1,025	1,406	911	877	1,658	2,312	2,612	3,718	2,447
509	15800	15,515	L.B.	EPOXY COATED REINFORCING STEEL, GRADE 60	2,796	2,413	416	726	582	527	890	1,073	2,644	2,202	1,246
511	34450	655	C.Y.	CLASS S CONCRETE, MISC.: Traffic Barrier & Parapet Anchorage	73	121	22	37	30	22	44	55	75	112	64
511	46500	659	C.Y.	CLASS C CONCRETE, FOOTING	48	180	23	32	24	24	36	58	66	103	65
511	71200	21,097	S.F.	CONCRETE (PRECAST TRAFFIC BARRIER AND PARAPET)	1,934	3,956	728	1,241	1,015	882	1,503	1,810	2,038	3,861	2,129
SPEC	51267500	158	S.Y.	SEALING OF CONCRETE SURFACES (SEE PROPOSAL NOTE)	–	–	–	–	–	158	–	–	–	–	–
SPEC	51267502	3,462	S.Y.	SEALING OF CONCRETE SURFACES (EPOXY) (SEE PROPOSAL NOTE)	328	663	117	203	162	133	240	299	358	612	347
516	13200	129	S.F.	1/2" PREFORMED EXPANSION JOINT FILLER	10	22	19	10	9	11	9	10	9	10	10
604	22500	3	EA.	INLET No. 3, AS PER PLAN No. 2 (SEE SHEET 552)	1	1	–	–	–	–	1	–	–	–	–
SPEC	61012900	63,138	S.F.	DOUBLEWAL	5216	17,580	2,414	3,344	1,952	2,144	3,368	4,912	5,904	10,496	5,808

CALCULATED BY: HK DATE: 7-12-90 CHECKED BY: JTJ DATE: 7-12-90

SEALING CONCRETE SURFACES

(WALL No.9 ONLY)

DESIGN 3

URS

74/98

ESTIMATED QUANTITIES

DOUBLEWAL

PROJECT No. SUM–76–11.57

DESIGNED	DRAWN	TRACED	CHECKED	REVIEWED	DATE	REVISED
P.E.B.	M.E.		JTJ	BLR	7-17-90	

F.H.W.A. REG.	STATE	PROJECT	
5	OHIO		

781/12.14

SUM-76-11.57

WALL 1

MARK	No. REQD.	LGTH.	TYPE	DIMENSIONS A	B	C	D	INCRM.	WEIGHT LBS.
1 W3 401	48	30- 0	ST						962
1 W3 403	29	8- 6	51	5- 0	2- 5	1- 3			165
1 W3 405	29	3- 6	ST						68
1 W3 406	29	6- 6	11	1- 0	3- 6	2- 0	2- 6		126
1 W3 410	18	0-10	ST						10
1 W3 411	25	1- 3	ST						21
1 W3 413	44	1- 9	ST						51
1 W3 414	52	2- 0	ST						69
1EW3 501	36	30- 0	ST						1126
1 W3 504	60	2- 7	ST						162
1 W3 506	66	3- 0	ST						207
1 W3 507	37	3- 6	ST						135
1EW3 530	22	19- 8	ST						451
1EW3 531	17	7- 2	36	6- 6	0- 9	0- 7			128
1EW3 532	31	6-10	38	4-10	1- 6	1- 3			222
1EW3 533	31	10- 3	54	7- 1					331
1EW3 534	11	11- 7	55	6- 0					133
1EW3 535	3	15- 8	25	1- 0	1- 6	9- 8	1- 6		49
1EW3 536	2	17- 9	25	1- 0	2- 3	9- 8	2- 3		37
1EW3 540	3	16- 7	ST						52
1EW3 630	21	7- 7	38	6- 0	1- 0	0- 9			239
1EW3 750	2	6-11	4	0- 8	3- 3	1- 6			28

NON-EPOXY COATED = 1976
EPOXY COATED = 2796

TOTAL WALL 1 = 4772

WALL 2

MARK	No. REQD.	LGTH.	TYPE	DIMENSIONS A	B	C	D	INCRM.	WEIGHT LBS.
2 W3 401	96	30- 0	ST						1924
2 W3 403	39	8- 6	51	5- 0	2- 5	1- 3			221
2 W3 405	39	3- 6	ST						91
2 W3 406	39	6- 6	11	1- 0	3- 6	2- 0	2- 6		169
2 W3 421	12	0- 9	ST						6
2 W3 422	12	5- 0	ST						40
2EW3 501	75	30- 0	ST						2347
2 W3 506	144	3- 0	ST						451
2 W3 507	33	3- 6	ST						120
2EW3 541	3	12- 1	ST						38
2 W3 601	7	15- 6	ST						163
2 W3 620	94	4- 0	ST						565
2 W3 621	131	4- 6	ST						885
2 W3 720	269	5- 0	ST						2749
2 W3 721	112	5- 3	ST						1202
2EW3 750	2	6-11	4	0- 8	3- 3	1- 6			28

NON-EPOXY COATED = 8586
EPOXY COATED = 2413

TOTAL WALL 2 = 10999

WALL 3

MARK	No. REQD.	LGTH.	TYPE	DIMENSIONS A	B	C	D	INCRM.	WEIGHT LBS.
3 W3 401	18	30- 0	ST						361
3 W3 403	6	8- 6	51	5- 0	2- 5	1- 3			34
3 W3 405	6	3- 6	ST						14
3 W3 406	6	6- 6	11	1- 0	3- 6	2- 0	2- 6		26
3EW3 501	12	30- 0	ST						375
3 W3 507	81	3- 6	ST						296
3EW3 542	3	13- 3	ST						41
3 W3 620	49	4- 0	ST						294

NON-EPOXY COATED = 1025
EPOXY COATED = 416

TOTAL WALL 3 = 1441

WALL 4

MARK	No. REQD.	LGTH.	TYPE	DIMENSIONS A	B	C	D	INCRM.	WEIGHT LBS.
4 W3 401	27	30- 0	ST						541
4 W3 403	14	8- 6	51	5- 0	2- 5	1- 3			79
4 W3 405	14	3- 6	ST						33
4 W3 406	14	6- 6	11	1- 0	3- 6	2- 0	2- 6		61
4 W3 410	16	0-10	ST						9
4 W3 411	28	1- 3	ST						23
4 W3 414	15	2- 0	ST						20
4 W3 415	37	2- 3	ST						56
4EW3 501	21	30- 0	ST						657
4 W3 506	31	3- 0	ST						97
4EW3 543	3	21-11	ST						69
4 W3 620	81	4- 0	ST						487

NON-EPOXY COATED = 1406
EPOXY COATED = 726

TOTAL WALL 4 = 2132

WALL 5

MARK	No. REQD.	LGTH.	TYPE	DIMENSIONS A	B	C	D	INCRM.	WEIGHT LBS.
5 W3 401	18	30- 0	ST						361
5 W3 403	7	8- 6	51	5- 0	2- 5	1- 3			40
5 W3 405	7	3- 6	ST						16
5 W3 406	7	6- 6	11	1- 0	3- 6	2- 0	2- 6		30
5 W3 411	29	1- 3	ST						24
5 W3 412	31	1- 6	ST						31
5 W3 415	21	2- 3	ST						32
5EW3 501	18	30- 0	ST						563
5 W3 504	20	2- 7	ST						54
5EW3 544	3	6- 1	ST						19
5 W3 620	20	4- 0	ST						120
5 W3 621	30	4- 6	ST						203

NON-EPOXY COATED = 911
EPOXY COATED = 582

TOTAL WALL 5 = 1493

WALL 9

MARK	No. REQD.	LGTH.	TYPE	DIMENSIONS A	B	C	D	INCRM.	WEIGHT LBS.
9 W3 401	23	30- 0	ST						461
9 W3 403	3	8- 6	51	5- 0	2- 5	1- 3			17
9 W3 404	4	6- 6	51	4- 0	1- 5	1- 3			17
9 W3 405	7	3- 6	ST						16
9 W3 406	3	6- 6	11	1- 0	3- 6	2- 0	2- 6		13
9 W3 407	4	4-11	11	1- 0	2- 2	1- 9	1- 6		13
9 W3 410	63	0-10	ST						35
9 W3 411	49	1- 3	ST						41
9 W3 412	26	1- 6	ST						26
9 W3 414	20	2- 0	ST						27
9 W3 415	17	2- 3	ST						26
9EW3 462	24	30- 0	ST						481
9EW3 463	3	23- 0	ST						46
9 W3 602	2	5- 3	ST						16
9 W3 621	25	4- 6	ST						169

NON-EPOXY COATED = 877
EPOXY COATED = 527

TOTAL WALL 9 = 1404

NOTES

① FOR REINFORCING BAR DIAGRAMS AND NOTES SEE SHEET 76/98.

DESIGN 3

URS

75/98

REINFORCING SCHEDULE

DOUBLEWAL

SUMMIT COUNTY

PROJECT No. SUM-76-11.57

DESIGNED	DRAWN	TRACED	CHECKED	REVIEWED	DATE	REVISED
HK	T.C.		P.E.B.	BWR	7/17/90	

F.H.W.A. REG.	STATE	PROJECT	
5	OHIO		

782
1214

SUM–76–11.57

WALL 10

MARK	No. REQD.	LGTH.	TYPE	DIMENSIONS A	B	C	D	INCRM.	WEIGHT LBS.
10 W3 401	27	30– 0	ST						541
10 W3 403	7	8– 6	51	5– 0	2– 5	1– 3			40
10 W3 404	2	6– 6	51	4– 0	1– 5	1– 3			9
10 W3 405	9	3– 6	ST						21
10 W3 406	7	6– 6	11	1– 0	3– 6	2– 0	2– 6		30
10 W3 407	2	4–11	11	1– 0	2– 2	1– 9	1– 6		7
10 W3 410	64	0–10	ST						36
10 W3 412	26	1– 6	ST						26
10EW3 501	27	30– 0	ST						845
10EW3 545	3	5– 4	ST						17
10 W3 620	97	4– 0	ST						583
10 W3 621	54	4– 6	ST						365
10EW3 750	2	6–11	4	0– 8	3– 3	1– 6			28

NON–EPOXY COATED = 1658
EPOXY COATED = 890

TOTAL WALL 10 = 2548

WALL 11

MARK	No. REQD.	LGTH.	TYPE	DIMENSIONS A	B	C	D	INCRM.	WEIGHT LBS.
11 W3 401	32	30– 0	ST						641
11 W3 403	11	8– 6	51	5– 0	2– 5	1– 3			62
11 W3 405	11	3– 6	ST						26
11 W3 406	11	6– 6	11	1– 0	3– 6	2– 0	2– 6		48
11 W3 411	41	1– 3	ST						34
11 W3 413	15	1– 9	ST						18
11EW3 501	33	30– 0	ST						1033
11 W3 504	18	2– 7	ST						48
11 W3 507	52	3– 6	ST						190
11EW3 546	3	12–10	ST						40
11 W3 620	97	4– 0	ST						583
11 W3 621	98	4– 6	ST						662

NON–EPOXY COATED = 2312
EPOXY COATED = 1073

TOTAL WALL 11 = 3385

WALL 12

MARK	No. REQD.	LGTH.	TYPE	DIMENSIONS A	B	C	D	INCRM.	WEIGHT LBS.
12 W3 401	43	30– 0	ST						862
12 W3 403	5	8– 6	51	5– 0	2– 5	1– 3			28
12 W3 405	5	3– 3	ST						11
12 W3 406	5	6– 6	11	1– 0	3– 6	2– 0	2– 6		22
12 W3 411	16	1– 3	ST						13
12 W3 415	56	2– 3	ST						84
12EW3 501	39	30– 0	ST						1220
12 W3 504	22	2– 7	ST						59
12 W3 506	52	3– 0	ST						163
12EW3 530	22	19– 8	ST						451
12EW3 531	17	7– 2	36	6– 6	0– 9	0– 7			128
12EW3 532	31	5– 2	38	3– 2	1– 6	1– 3			168
12EW3 533	31	8– 2	54	5– 1					264
12EW3 534	11	9– 7	55	4– 1					110
12EW3 535	3	15– 8	25	1– 0	1– 6	9– 8	1– 6		49
12EW3 536	2	17– 9	25	1– 0	2– 3	9– 8	2– 3		37
12EW3 547	3	20– 4	ST						64
12 W3 620	228	4– 0	ST						1370
12EW3 630	21	4–10	38	3– 3	1– 0	0– 9			153

NON–EPOXY COATED = 2612
EPOXY COATED = 2644

TOTAL WALL 12 = 5256

WALL 13

MARK	No. REQD.	LGTH.	TYPE	DIMENSIONS A	B	C	D	INCRM.	WEIGHT LBS.
13 W3 401	66	30– 0	ST						1323
13 W3 403	2	8– 6	51	5– 0	2– 5	1– 3			11
13 W3 404	5	6– 6	51	4– 0	1– 5	1– 3			22
13 W3 405	7	3– 6	ST						16
13 W3 406	2	6– 6	11	1– 0	3– 6	2– 0	2– 6		9
13 W3 407	5	4–11	11	1– 0	2– 2	1– 9	1– 6		16
13 W3 411	17	1– 3	ST						14
13 W3 414	169	2– 0	ST						226
13 W3 415	58	2– 3	ST						87
13EW3 501	69	30– 0	ST						2159
13 W3 502	2	7– 1	11	1– 6	4– 1	1– 6	4– 0		15
13 W3 503	2	6–10	51	1– 6	4– 0	1– 6			14
13 W3 506	110	3– 0	ST						344
13 W3 507	66	3– 6	ST						241
13 W3 521	8	1– 3	ST						10
13EW3 548	3	13– 8	ST						43
13 W3 620	102	4– 0	ST						613
13 W3 621	112	4– 6	ST						757

NON–EPOXY COATED = 3718
EPOXY COATED = 2202

TOTAL WALL 13 = 5920

WALL 14

MARK	No. REQD.	LGTH.	TYPE	DIMENSIONS A	B	C	D	INCRM.	WEIGHT LBS.
14 W3 401	37	30– 0	ST						741
14 W3 403	3	8– 6	51	5– 0	2– 5	1– 3			17
14 W3 405	3	3– 6	ST						7
14 W3 406	3	6– 6	11	1– 0	3– 6	2– 0	2– 6		13
14 W3 414	32	2– 0	ST						43
14 W3 415	82	2– 3	ST						123
14EW3 501	39	30– 0	ST						1220
14 W3 506	53	3– 0	ST						166
14 W3 507	81	3– 6	ST						296
14EW3 549	3	8– 4	ST						26
14 W3 620	66	4– 0	ST						397
14 W3 720	63	5– 0	ST						644

NON–EPOXY COATED = 2447
EPOXY COATED = 1246

TOTAL WALL 14 = 3693

ITEM 824 EPOXY COATED REINFORCING STEEL, GRADE 60		ITEM 509 REINFORCING STEEL, GRADE 60	
WALL	15515	WALL	27528
TOTAL	15515	TOTAL	27528

REINFORCING BAR DIAGRAMS

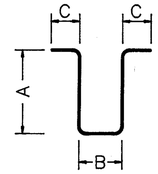

(4)

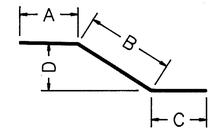

(11)

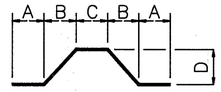

(25)

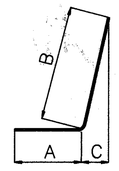

(36)

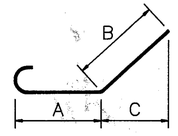

(38)

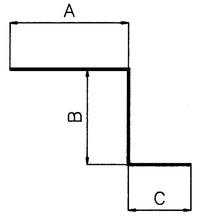

(51)

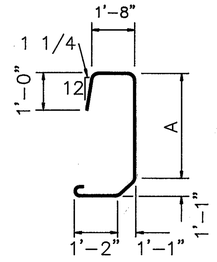

(55)

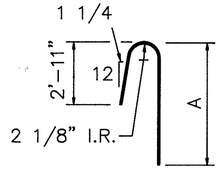

(54)

REINFORCING STEEL SAMPLES

REFER TO CMS SECTIONS 106.03, 700, 709.01 THROUGH 709.05 AND 709.08. SUFFICIENT ADDITIONAL REINFORCING STEEL SHALL BE PROVIDED FOR SAMPLING. RANDOM SAMPLES SHALL BE REPLACED IN THE STRUCTURES BY THE ADDITIONAL STEEL, SPLICED IN ACCORDANCE WITH 509.08.

DESIGN 3

URS

76 / 98

REINFORCING SCHEDULE

DOUBLEWAL

SUMMIT COUNTY

PROJECT No. SUM–76–11.57

DESIGNED	DRAWN	TRACED	CHECKED	REVIEWED	DATE	REVISED
HK	TC		PEB	BKR	7/17/98	

FHWA REGION	STATE	PROJECT	
5	OHIO		

783
1214

SUM-76-11.57

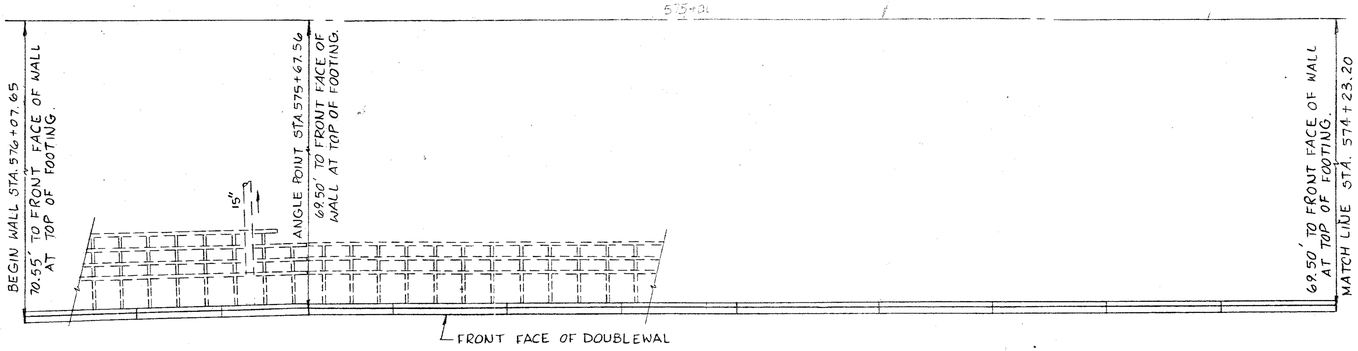

PLAN

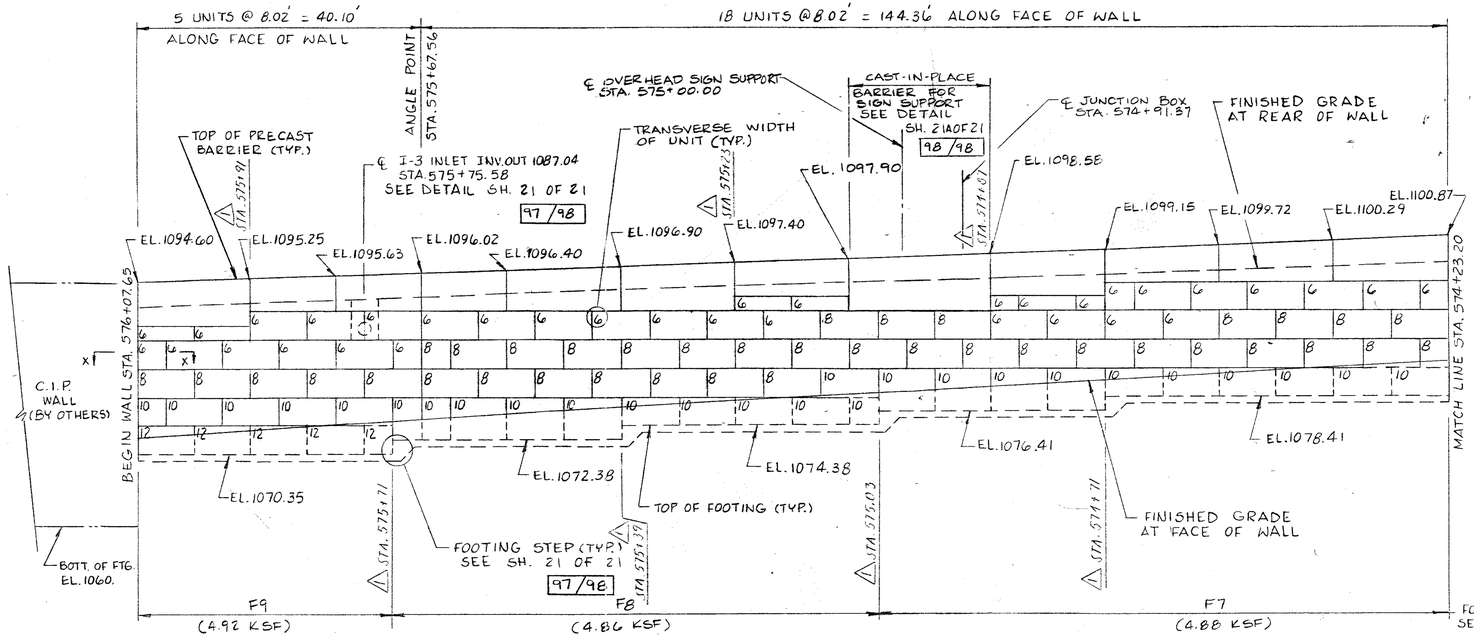

DEVELOPED ELEVATION
WALL 1

( ) - INDICATES MAXIMUM DESIGN BEARING PRESSURE

FOR SECTION X-X SEE SH. 20 OF 21 96/98

NOTES:

FOR PRECAST CONCRETE TRAFFIC BARRIER DETAILS SEE SHEET 96/98

GENERAL NOTES

1. REFER TO THE CONTRACT DRAWINGS PREPARED BY URS CONSULTANTS FOR THE FOLLOWING:
   - LINE, GRADE, & GEOMETRIC DATA.
   - ESTIMATED QUANTITIES, REINFORCING BAR SCHEDULE & PLAN NOTES FOR CONSTRUCTION OF DOUBLEWAL WALLS.
2. WALLS 3, 11, 12, 13 SHALL BE CONSTRUCTED IN STAGES REFER TO THE RESPECTIVE WALLS GENERAL NOTES FOR STAGE CONSTRUCTION SEQUENCING.
3. BASIS OF DESIGN

THE DESIGN OF THE DOUBLEWAL PRECAST WALLS ARE BASED ON THE FOLLOWING ASSUMED LOADS AND SOIL DATA. THE ALLOWABLE BEARING CAPACITIES HAVE BEEN FURNISHED BY THE OHIO DEPARTMENT OF TRANSPORTATION.

MINIMUM FACTORS IN SAFETY USED IN THE ANALYSIS ARE:

F.S. OVERTURNING = 2.0
F.S. SLIDING = 1.5

1. LATERAL EARTH PRESSURE - EQUAL TO EQUIVALENT FLUID OF 40 PCF. WALL HAS BEEN DESIGNED USING THE COULOMB METHOD AND THE FOLLOWING SOIL CHARACTERISTICS:

   120 PCF = UNIT WEIGHT OF BACKFILL
   120 PCF = UNIT WEIGHT OF INSIDE FILL
   30° = ANGLE OF INTERNAL FRICITON
   20.0° = ANGLE OF FRICTION BETWEEN WALL AND BACKFILL
   .58 = COEFFICIENT OF SLIDING FRICTION AT BASE OF WALL(CONC. ON SOIL)
   .50 = COEFFICIENT OF SLIDING FRICTION AT BASE OF WALL(CONC. ON SOIL)

2. SURFACE LIVE LOADS:

   AN EQUIVALENT HEIGHT OF 2' OF SOIL, .240 KSF, AS A SURCHARGE WHERE APPLICABLE.

3. HORIZONTAL LOAD AT TOP OF BARRIER PER AASHTO REQUIREMENTS, WHERE APPLICABLE.

ALLOWABLE BEARING CAPACITIES

THE FOOTINGS HAVE BEEN DESIGNED FOR THE FOLLOWING ALLOWABLE BEARING CAPACITIES.

WALL		ALLOWABLE BEARING CAPACITY. (KSF)
1		5.0*
2		5.5*
3		5.0
4		4.5*
5		4.0
9		4.5*
10	STA 16+05 TO STA 17+00	4.0
10	STA 17+00 TO STA 18+70	6.0
11		4.0
12		4.0
13		4.6
14		4.2*

4. FOR ADDITIONAL INFORMATION SEE SHEETS 20 THRU 21A 96/98 THRU 98/98

⚠ DESIGN CHECK NOTES

1. ONLY DRAWING BEARING RAISED SEAL HAVE BEEN CHECKED FOR CONFORMANCE TO DESIGN CALCULATIONS.
2. INTERNAL STABILITY IS DEFINED AS OVERTURNING AND SLIDING.
3. DESIGN HAS BEEN CHECKED FOR CONFORMANCE TO GENERAL NOTES "BASIS OF DESIGN" THIS SHEET, FURNISHED BY OTHERS.

* THESE VALUES ARE NOT THE ULTIMATE ALLOWABLE BEARING CAPACITIES BUT THE MAXIMUM BEARING CAPACITIES USED FOR DESIGN.

NO	REVISION	BY	C'K'D	DATE
3	REVISED STATE	JJ		10-25-95

© COPYRIGHT 1990 JOHN S. DEERKOSKI, P.E.

CERTIFIED ONLY WITH RESPECT TO INTERNAL STABILITY OF THE DOUBLEWAL STRUCTURE BASED ON LOADS AND SOIL DATA INDICATED ON THESE DRAWINGS. SEE DESIGN CHECK NOTES.

JOHN S. DEERKOSKI, P.E.
OHIO LICENSE NO. E-43379

This drawing contains information proprietary to Doublewal Corporation and is being furnished for the use of OHIO D.O.T. only in connection with this project, and the information contained herein is not to be transmitted to any other organization unless specifically authorized in writing by Doublewal Corporation. The furnishing of this drawing does not constitute an expressed or implied license under U.S. Patent Numbers 4,196,161; 4,251,186; 4,361,507 and 4,772,051. Canadian Patent Number 1,064,246 and 1,104,788 or other Patents Pending.

DATE	SCALE	DWG. NO.
9-12-89	N.T.S.	42-15
DR. BY MHM	JOB NO.	SHEET
CHK. BY DCM/WLB	38075	1 OF 21

DESIGN 3

DOUBLEWAL CORPORATION 77/98
PLAINVILLE, CONNECTICUT 06062

AKRON EAST EXPRESSWAY
AKRON, OHIO
I-76 PROPOSED DOUBLEWAL WALL NO. 1
I-76 STA. 576+07.65 TO STA. 574+23.20
PLAN & ELEVATION

DESIGNED	DRAWN	TRACED	CHECKED	REVIEWED	DATE	REVISED
DCM	MHM		DCM	WLB	9/89	

FHWA REGION	STATE	PROJECT	
5	OHIO		

784/1214

SUM-76-11.57

NOTES:

FOR PRECAST CONCRETE TRAFFIC BARRIER DETAILS SEE SHEET 96/98

FOR ADDITIONAL NOTES SEE SHEET 77/98

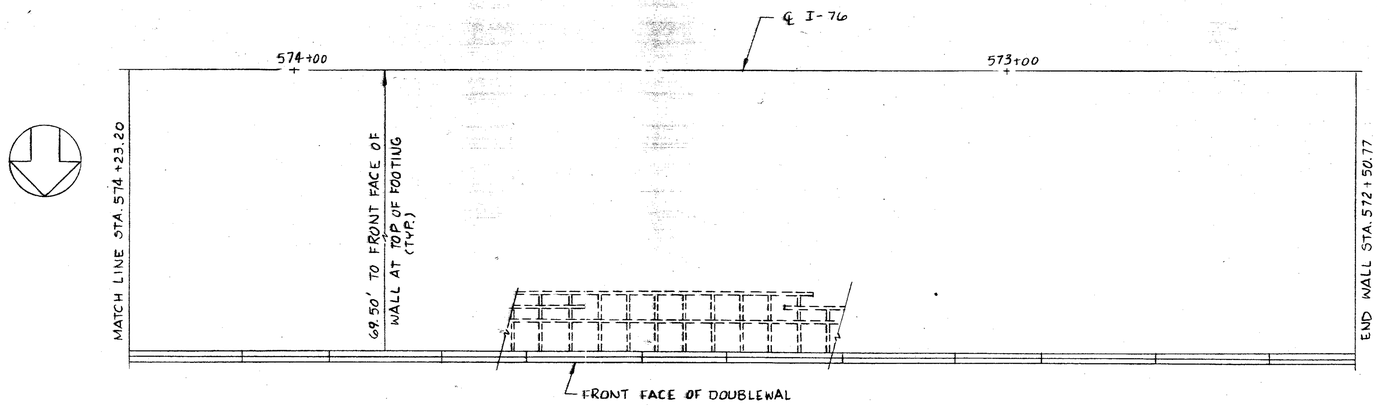

PLAN

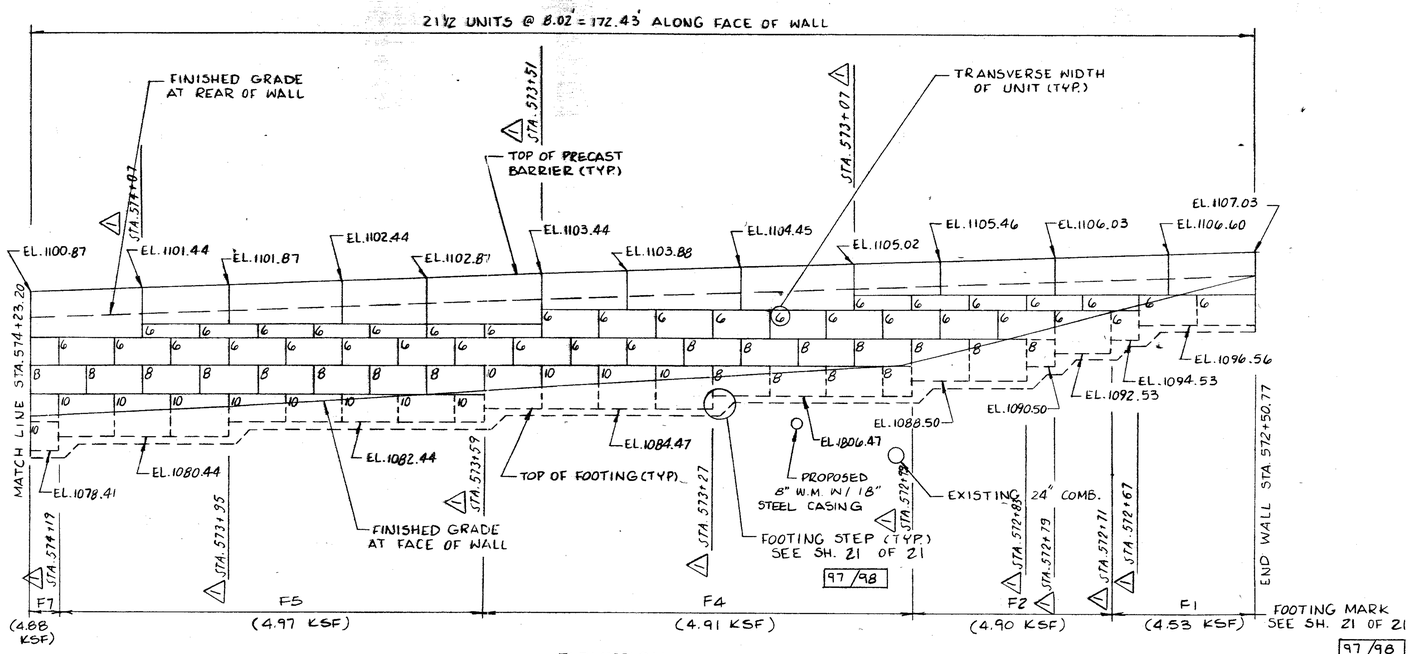

ELEVATION
WALL 1

( )- INDICATES MAXIMUM DESIGN BEARING PRESSURE

DATE 9-12-89	SCALE N.T.S.
DR BY MHM	JOB NO. 38075
CHK BY DCM/WLB	SHEET 2 OF 21
	DWG. NO. 42-15

NO	REVISION	BY	C'K'D	DATE
1	ADDED STATIONS	K.V.		10-23-90

© COPYRIGHT 1990 JOHN S. DEERKOSKI, P.E.

CERTIFIED ONLY WITH RESPECT TO INTERNAL STABILITY OF THE DOUBLEWAL STRUCTURE BASED ON LOADS AND SOIL DATA INDICATED ON THESE DRAWINGS.
SEE DESIGN CHECK NOTES SHEET 1 OF 21

JOHN S. DEERKOSKI, P.E.
OHIO LICENSE NO. E-43379

This drawing contains information proprietary to Doublewal Corporation, and is being furnished for the use of OHIO D.O.T. only in connection with this project, and the information contained herein is not to be transmitted to any other organization unless specifically authorized in writing by Doublewal Corporation. The furnishing of this drawing does not constitute an expressed or implied license under U.S. Patent Numbers 4,196,161; 4,251,196; 4,351,507 and 4,372,091; Canadian Patent Number 1,084,246 and 1,104,798 or other Patents Pending.

DESIGN 3

DOUBLEWAL CORPORATION 78/93
PLAINVILLE, CONNECTICUT 06062

AKRON EAST EXPRESSWAY
AKRON, OHIO
I-76 PROPOSED DOUBLEWAL WALL NO. 1
I-76 STA. 574+23.20 TO STA. 572+50.77
PLAN & ELEVATION

DESIGNED	DRAWN	TRACED	CHECKED	REVIEWED	DATE	REVISED
DCM	MHM		DCM	WLB	9/89	

FHWA REGION	STATE	PROJECT	
5	OHIO		

SUM-76-11.57

785/1214

NOTES:

FOR PRECAST CONCRETE TRAFFIC BARRIER DETAILS SEE SHEET 96/98

FOR ADDITIONAL NOTES SEE SHEET: 97/98

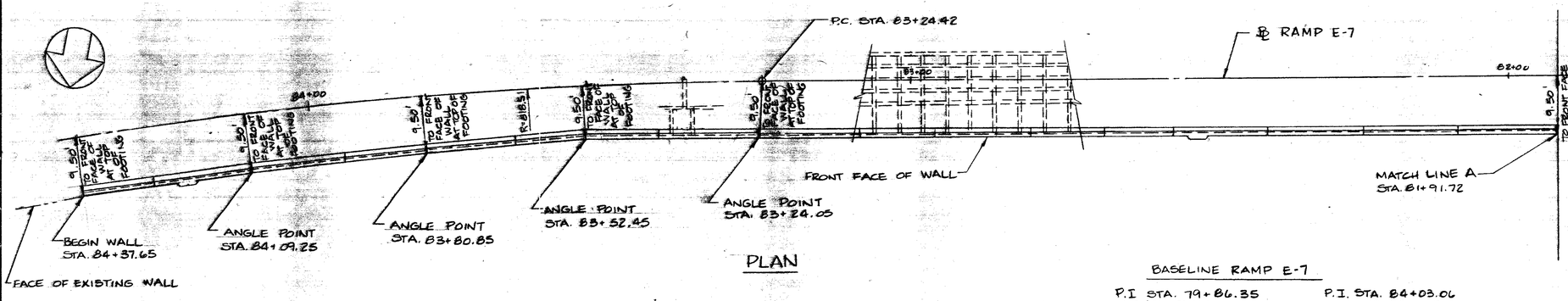

PLAN

BASELINE RAMP E-7

P.I STA. 79+86.35
Δ = 4°-02'-16"
D_C = 1°-56'-29"
R = 2951.44'
T = 104.04'
L_C = 208.00'

P.I. STA. 84+03.06
Δ = 10°-58'-31"
D_C = 7°-00'-00"
R = 818.51'
T = 78.64'
L_C = 156.79'

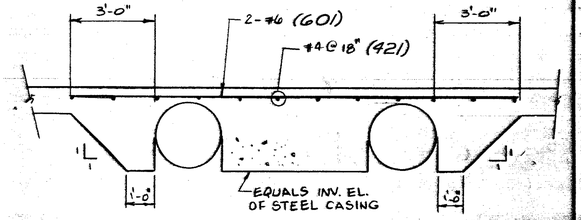

LEVELING BEAM

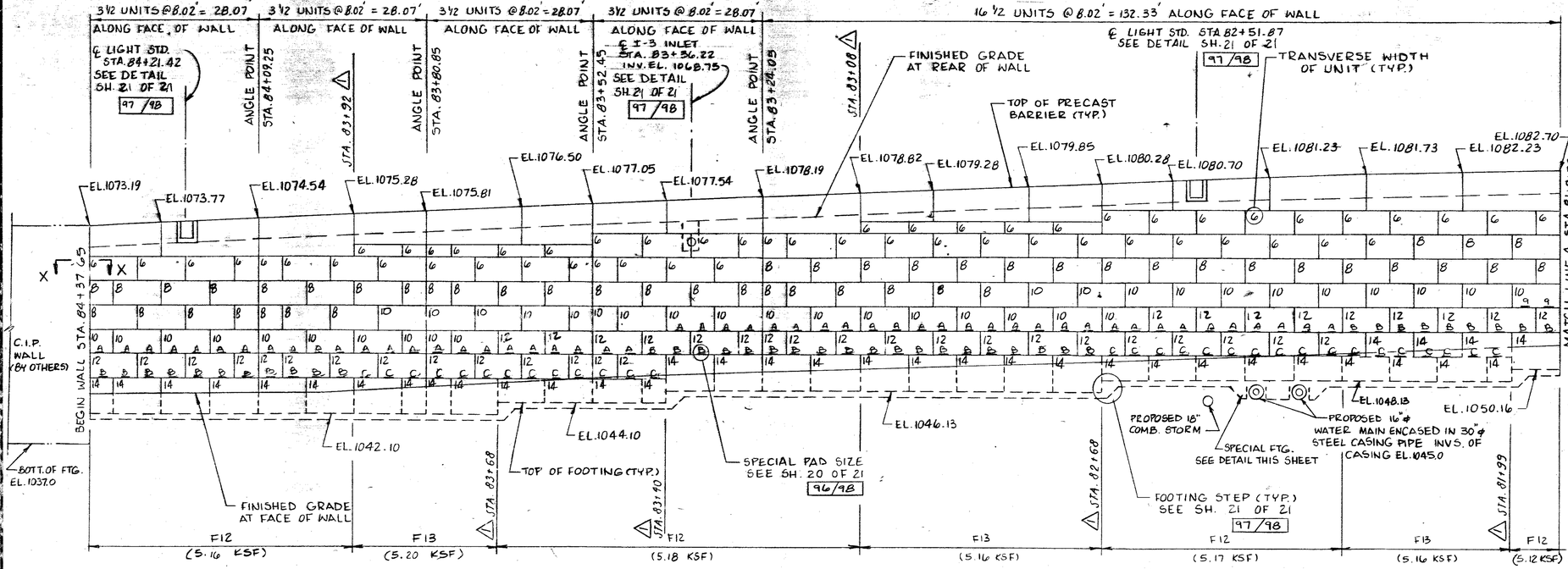

DEVELOPED ELEVATION
WALL 2

FOR SECTION X-X SEE SH. 20 OF 21 96/98

( ) INDICATES MAXIMUM DESIGN BEARING PRESSURE

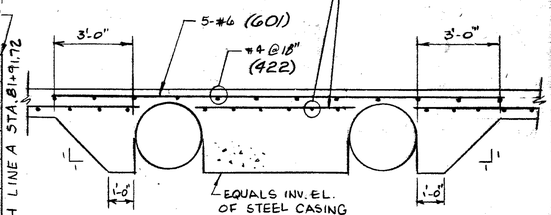

FOOTING

SPECIAL FOOTING DETAILS

NOTE: THE COST OF THE SPECIAL FOOTING TO BE INCLUDED IN THE COST OF ITEM 511 CLASS 'C' CONCRETE, FOOTING.

DATE	9-12-89	SCALE	N.T.S.	DWG. NO.	42-15
DR BY	MHM	JOB NO.	38075	SHEET	3 OF 21
CHK BY	DCM/WLB				

NO	REVISION	BY	CK'D	DATE
1	ADDED STATIONS	V.V.		10-23-90

© COPYRIGHT 1990 JOHN S. DEERKOSKI, P.E.

CERTIFIED ONLY WITH RESPECT TO INTERNAL STABILITY OF THE DOUBLEWAL STRUCTURE BASED ON LOADS AND SOIL DATA INDICATED ON THESE DRAWINGS. SEE DESIGN CHECK NOTES SHEET 1 OF 21

JOHN S. DEERKOSKI, P.E.
OHIO LICENSE NO. E-43379

This drawing contains information proprietary to Doublewal Corporation, and is being furnished for the use of OHIO D.O.T. only in connection with this project, and the information contained herein is not to be transmitted to any other organization unless specifically authorized in writing by Doublewal Corporation. The furnishing of this drawing does not constitute an expressed or implied license under U.S. Patent Numbers 4,196,161; 4,251,196; 4,351,507 and 4,372,091; Canadian Patent Number 1,084,246 and 1,104,798 or other Patents Pending.

DESIGN 3

DOUBLEWAL CORPORATION 79/98
PLAINVILLE, CONNECTICUT 06062

AKRON EAST EXPRESSWAY
AKRON, OHIO
PROPOSED DOUBLEWAL WALL NO. 2
RAMP E-7 STA. 81+91.72 TO STA. 84+37.65
PLAN & ELEVATION

DESIGNED	DRAWN	TRACED	CHECKED	REVIEWED	DATE	REVISED
DCM	MHM		DCM	WLB	9/89	

FHWA REGION	STATE	PROJECT	
5	OHIO		

786
12/14

SUM-76-11.57

NOTES:

FOR PRECAST CONCRETE TRAFFIC BARRIER DETAILS SEE SHEET 96/98

FOR ADDITIONAL NOTES SEE SHEET 77/98

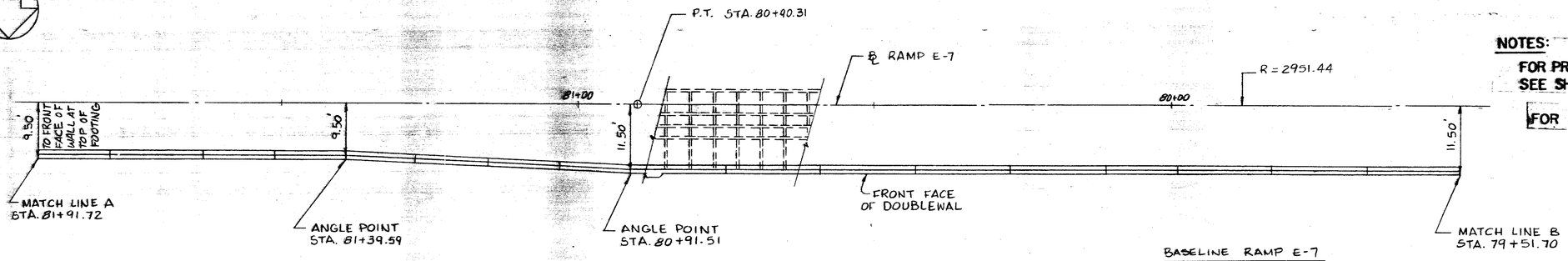

PLAN

BASELINE RAMP E-7

P.I. STA. 79+86.35
Δ = 4°-02'-16"
D_c = 1°-56'-29"
R = 2951.44'
T = 104.04'
L_c = 208.00'

P.I. STA. 80+03.06
Δ = 10°-58'-31"
D_c = 7°-00'-00"
R = 818.51'
T = 78.64
L_c = 156.79

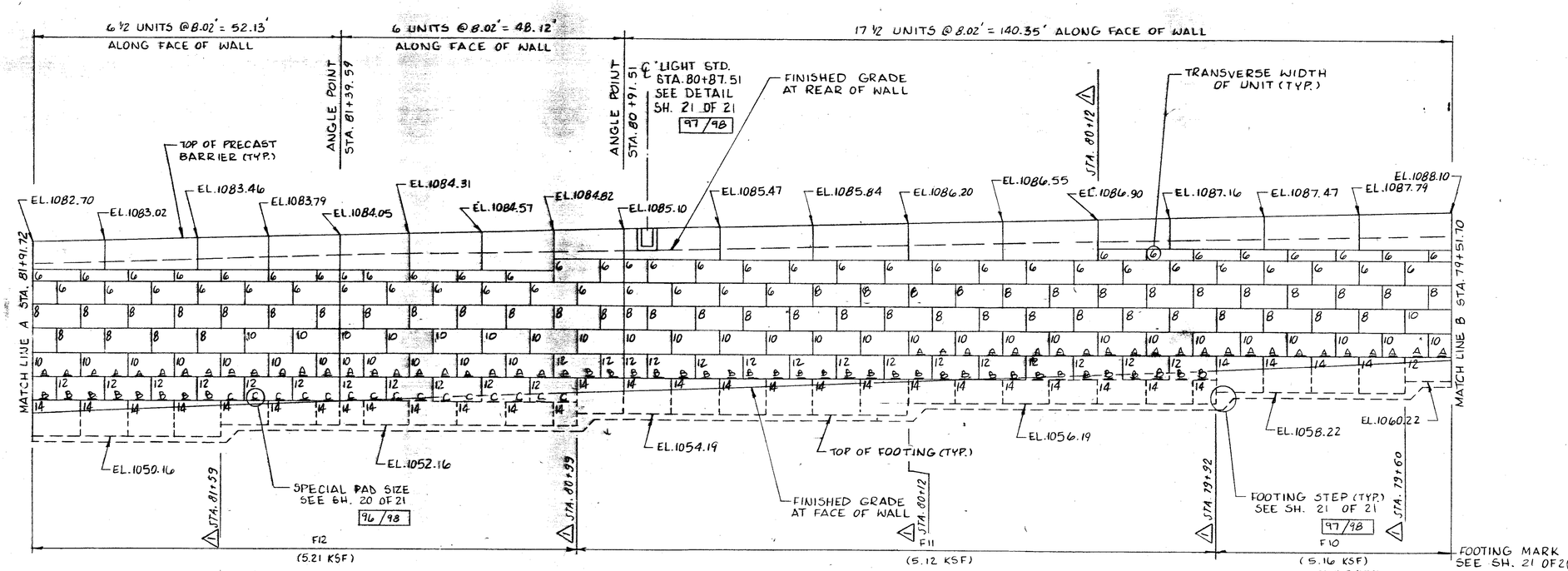

DEVELOPED ELEVATION
WALL 2

( ) - INDICATES MAXIMUM DESIGN BEARING PRESSURE

NO	REVISION	BY	C'K'D	DATE
1	ADDED STATIONS	V.V.		10-23-90

© COPYRIGHT 1990 JOHN S. DEERKOSKI, P.E.

CERTIFIED ONLY WITH RESPECT TO INTERNAL STABILITY OF THE DOUBLEWAL STRUCTURE BASED ON LOADS AND SOIL DATA INDICATED ON THESE DRAWINGS. SEE DESIGN CHECK NOTES SHEET 1 OF 21

JOHN S. DEERKOSKI, P.E.
OHIO LICENSE NO. E-43379

This drawing contains information proprietary to Doublewal Corporation, and is being furnished for the use of OHIO D.O.T. only in connection with this project, and the information contained herein is not to be transmitted to any other organization unless specifically authorized in writing by Doublewal Corporation. The furnishing of this drawing does not constitute an expressed or implied license under U.S. Patent Numbers 4,196,161; 4,251,196; 4,351,507 and 4,372,091; Canadian Patent Number 1,084,246 and 1,104,798 or other Patents Pending.

DATE	9-12-89	SCALE	N.T.S.	DWG. NO.	42-15
DR BY	MHM	JOB NO.	38075	SHEET	4 OF 21
CHK BY	DCM/WLB				

DESIGN 3

DOUBLEWAL CORPORATION 80/98
PLAINVILLE, CONNECTICUT 06062

AKRON EAST EXPRESSWAY
AKRON, OHIO
PROPOSED DOUBLEWAL WALL NO. 2
RAMP E-7 STA. 79+51.70 TO STA. 81+91.72
PLAN & ELEVATION

DESIGNED	DRAWN	TRACED	CHECKED	REVIEWED	DATE	REVISED
DCM	MHM		DCM	WLB	9/89	

FHWA REGION	STATE	PROJECT	
5	OHIO		

78:7
12/14

SUM-76-11.57(

NOTES:

FOR PRECAST CONCRETE TRAFFIC BARRIER DETAILS SEE SHEET 96/98

FOR ADDITIONAL NOTES SEE SHEET 77/98

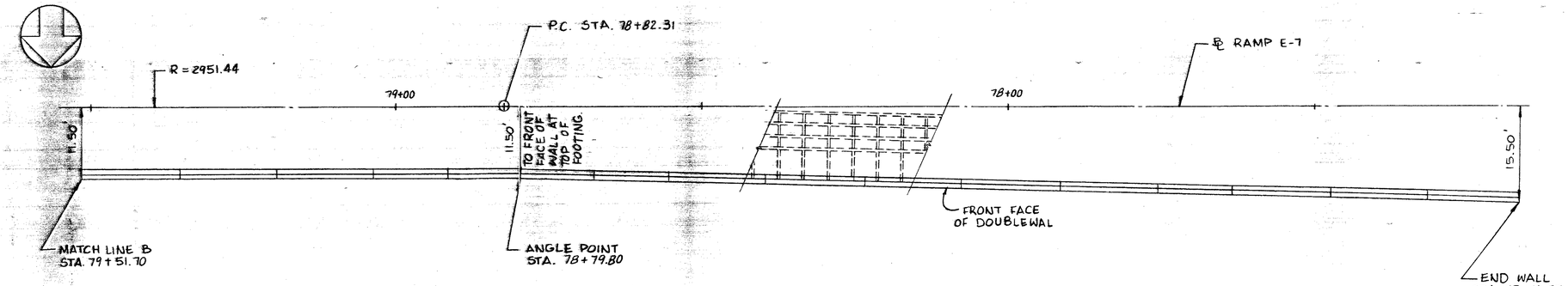

PLAN

BASELINE RAMP E-7

P.I. STA. 79+86.35	P.I STA. 84+03.06
$\Delta = 4°-02'-16"$	$\Delta = 10°-58'-31"$
$D_c = 1°-56'-29"$	$D_c = 7°-00'-00"$
$R = 2951.44'$	$R = 818.51'$
$T = 104.04'$	$T = 78.64'$
$L_c = 208.00'$	$L_c = 156.79'$

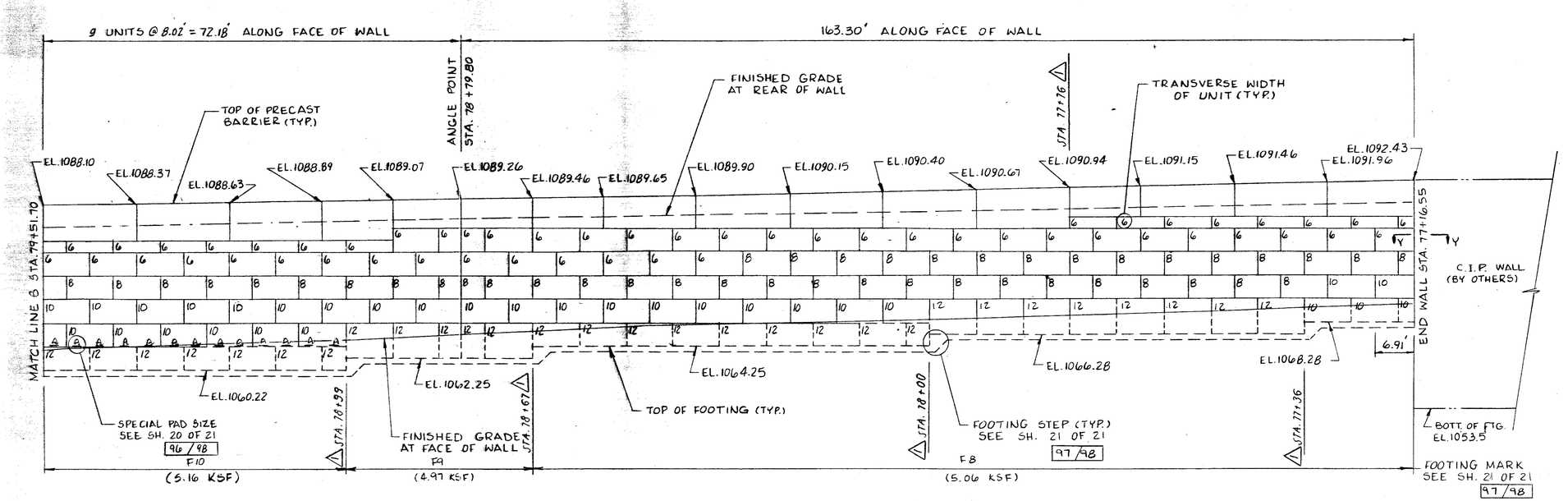

( )- INDICATES MAXIMUM DESIGN BEARING PRESSURE

DEVELOPED ELEVATION
WALL 2

FOR SECTION Y-Y SEE SH. 20 OF 21 96/98

NO	REVISION	BY	CK'D	DATE
1	ADDED STATIONS	V.V.		10-23-90

© COPYRIGHT 1990 JOHN S. DEERKOSKI, P.E.

CERTIFIED ONLY WITH RESPECT TO INTERNAL STABILITY OF THE DOUBLEWAL STRUCTURE BASED ON LOADS AND SOIL DATA INDICATED ON THESE DRAWINGS.
SEE DESIGN CHECK NOTES SHEET 1 OF 21

JOHN S. DEERKOSKI, P.E.
OHIO LICENSE NO. E-43379

This drawing contains information proprietary to Doublewal Corporation, and is being furnished for the use of OHIO D.O.T. only in connection with this project, and the information contained herein is not to be transmitted to any other organization unless specifically authorized in writing by Doublewal Corporation. The furnishing of this drawing does not constitute an expressed or implied license under U.S. Patent Numbers 4,196,161; 4,251,196; 4,351,507 and 4,372,091; Canadian Patent Number 1,084,246 and 1,104,798 or other Patents Pending.

DATE	SCALE	DWG. NO.
9-12-89	N.T.S.	42-15
DR BY MHM	JOB NO. 38075	SHEET 5 OF 21
CHK BY DCM/WLB		

DESIGN 3

DOUBLEWAL CORPORATION 81/98
PLAINVILLE, CONNECTICUT 06062

AKRON EAST EXPRESSWAY
AKRON, OHIO
PROPOSED DOUBLEWAL WALL NO. 2
RAMP E-7 STA. 77+16.55 TO STA. 79+51.70
PLAN & ELEVATION

DESIGNED	DRAWN	TRACED	CHECKED	REVIEWED	DATE	REVISED
DCM	MHM		DCM	WLB	9/89	

FHWA REGION	STATE	PROJECT		
5	OHIO			

788/1214

SUM-76-11.57

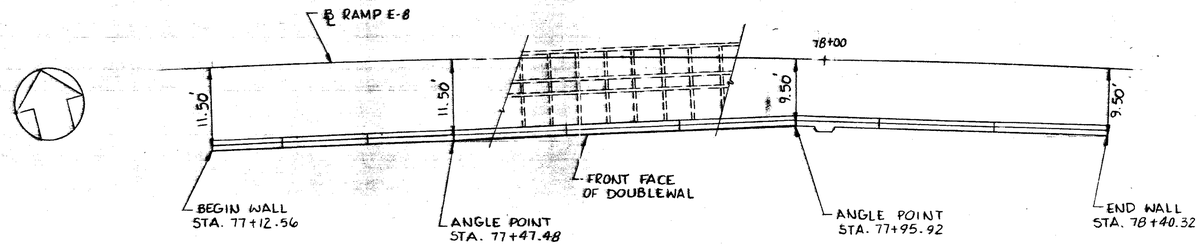

PLAN

BASELINE RAMP E-8
CURVE DATA

B.I. STA. 77+02.10
$\Delta = 18°-16'-49"$
$D_c = 4°-00'-00"$
$R = 1432.39'$
$T = 230.46'$
$L_c = 457.01'$

NOTES:

FOR PRECAST CONCRETE TRAFFIC BARRIER DETAILS SEE SHEET 96/97

FOR ADDITIONAL NOTES SEE SHEET 97/98

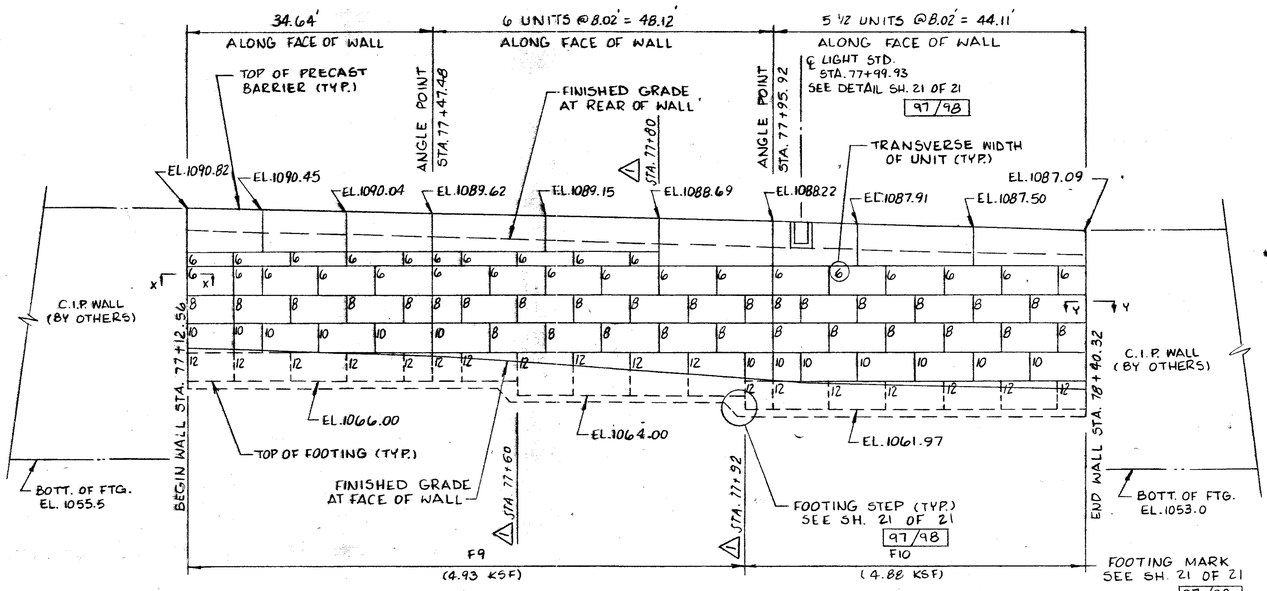

DEVELOPED ELEVATION
WALL 3

FOR SECTION X-X & Y-Y SEE SH. 20 OF 21 96/98

NO.	REVISION	BY	C'K'D	DATE
1	ADDED STATIONS	V.V.		10-23-90

© COPYRIGHT 1990 JOHN S. DEERKOSKI, P.E.

CERTIFIED ONLY WITH RESPECT TO INTERNAL STABILITY OF THE DOUBLEWAL STRUCTURE BASED ON LOADS AND SOIL DATA INDICATED ON THESE DRAWINGS.
SEE DESIGN CHECK NOTES SHEET 1 OF 21

JOHN S. DEERKOSKI, P.E.
OHIO LICENSE NO. E-43379

This drawing contains information proprietary to Doublewal Corporation, and is being furnished for the use of OHIO D.O.T. only in connection with this project, and the information contained herein is not to be transmitted to any other organization unless specifically authorized in writing by Doublewal Corporation. The furnishing of this drawing does not constitute an expressed or implied license under U.S. Patent Numbers 4,196,161; 4,251,196; 4,351,507 and 4,372,091; Canadian Patent Number 1,084,246 and 1,104,798 or other Patents Pending.

DATE	12-6-89	SCALE	N.T.S.	DWG. NO.	42-15
DR BY	MHM	JOB NO.	38075	SHEET	6 OF 21
CHK BY	DCM/WLB				

DESIGN 3

DOUBLEWAL CORPORATION 82/98
PLAINVILLE, CONNECTICUT 06062

AKRON-EAST EXPRESSWAY
AKRON, OHIO
PROPOSED DOUBLEWAL WALL NO. 3
RAMP E-8 STA. 77+12.56 TO STA. 78+40.32
PLAN & ELEVATION

DESIGNED	DRAWN	TRACED	CHECKED	REVIEWED	DATE	REVISED
DCM	MHM		DCM	WLB	9/89	

FHWA REGION	STATE	PROJECT		
5	OHIO			

789/1214

SUM-76-11.57

NOTES:

FOR PRECAST CONCRETE TRAFFIC BARRIER DETAILS SEE SHEET 96/98

FOR ADDITIONAL NOTES SEE SHEET 77/98

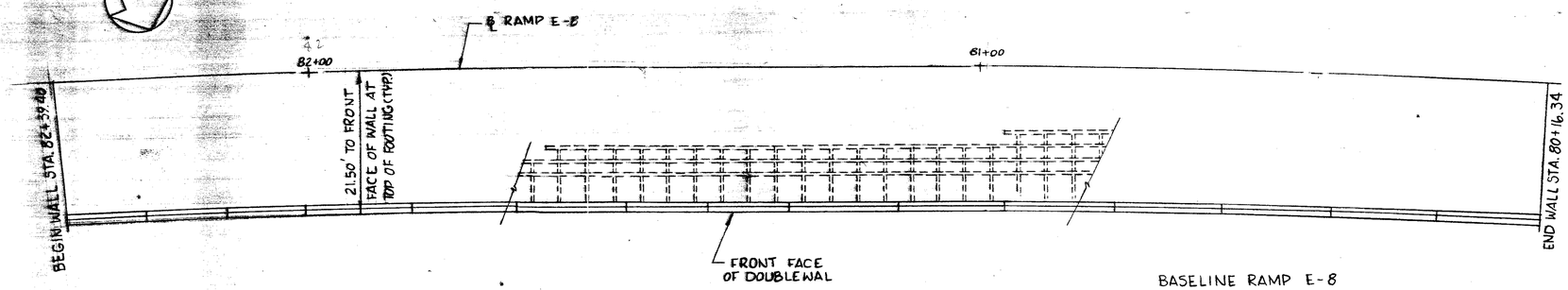

PLAN

BASELINE RAMP E-8
CURVE DATA

P.I. STA. 81+54.20
Δ = 8°-51'-32"
D_C = 3°-00'-00"
R = 1909.86'
T = 147.94'
L_C = 295.29'

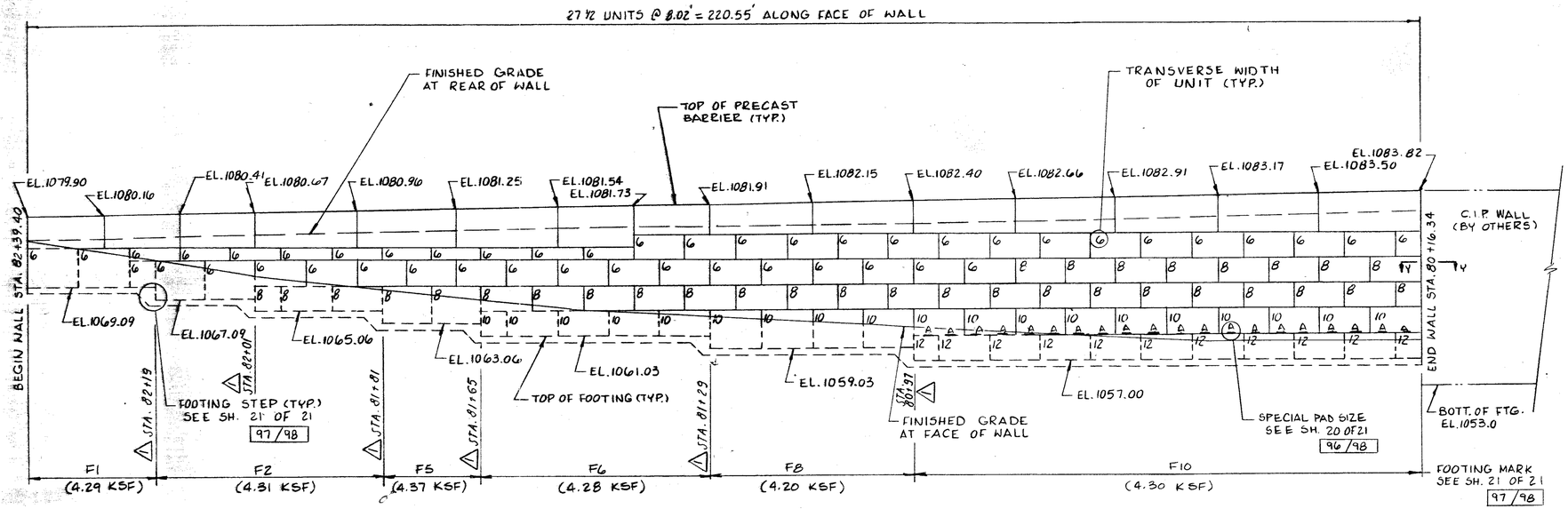

ELEVATION
WALL 4

( )- INDICATES MAXIMUM DESIGN BEARING PRESSURE

FOR SECTION Y-Y SEE SH. 20 OF 21 96/98

DATE 9-12-89	SCALE N.T.S.	DWG. NO. 42-15
DR. BY MHM	JOB NO. 38075	SHEET 7 OF 21
CHK. BY DCM/WLB		

NO	REVISION	BY	C'K'D	DATE
1	ADDED STATIONS	V.V.		10-23-90

© COPYRIGHT 1990 JOHN S. DEERKOSKI, P.E.

CERTIFIED ONLY WITH RESPECT TO INTERNAL STABILITY OF THE DOUBLEWAL STRUCTURE BASED ON LOADS AND SOIL DATA INDICATED ON THESE DRAWINGS.
SEE DESIGN CHECK NOTES SHEET 1 OF 21

JOHN S. DEERKOSKI, P.E.
OHIO LICENSE NO. E-43379

This drawing contains information proprietary to Doublewal Corporation, and is being furnished for the use of OHIO D.O.T. only in connection with this project, and the information contained herein is not to be transmitted to any other organization unless specifically authorized in writing by Doublewal Corporation. The furnishing of this drawing does not constitute an expressed or implied license under U.S. Patent Numbers 4,196,161; 4,251,196; 4,351,507 and 4,372,091, Canadian Patent Number 1,084,246 and 1,104,796 or other Patents Pending.

DESIGN 3

DOUBLEWAL CORPORATION 83/98
PLAINVILLE, CONNECTICUT 06062

AKRON EAST EXPRESSWAY
AKRON, OHIO
PROPOSED DOUBLEWAL WALL NO. 4
RAMP E-8 STA. 82+39.40 TO STA. 80+16.34
PLAN & ELEVATION

DESIGNED	DRAWN	TRACED	CHECKED	REVIEWED	DATE	REVISED
DCM	MHM		DCM	WLB	9/89	

FHWA REGION	STATE	PROJECT	
5	OHIO		

790
12/14

SUM-76-11.57

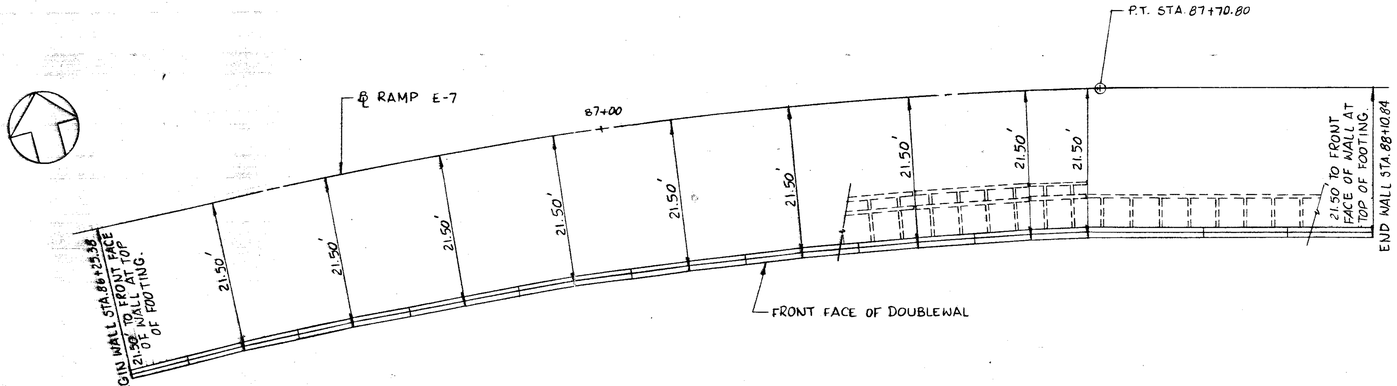

PLAN

BASELINE RAMP E-7
CURVE DATA

P.I. STA. 86+80.34
$\Delta = 28^\circ - 28' - 19''$
$D_c = 16^\circ - 30' - 00''$
$R = 347.25'$
$T = 88.10'$
$L_c = 172.56'$

NOTES:

FOR PRECAST CONCRETE TRAFFIC BARRIER DETAILS SEE SHEET 96/98

FOR ADDITIONAL NOTES SEE SHEET 77/98

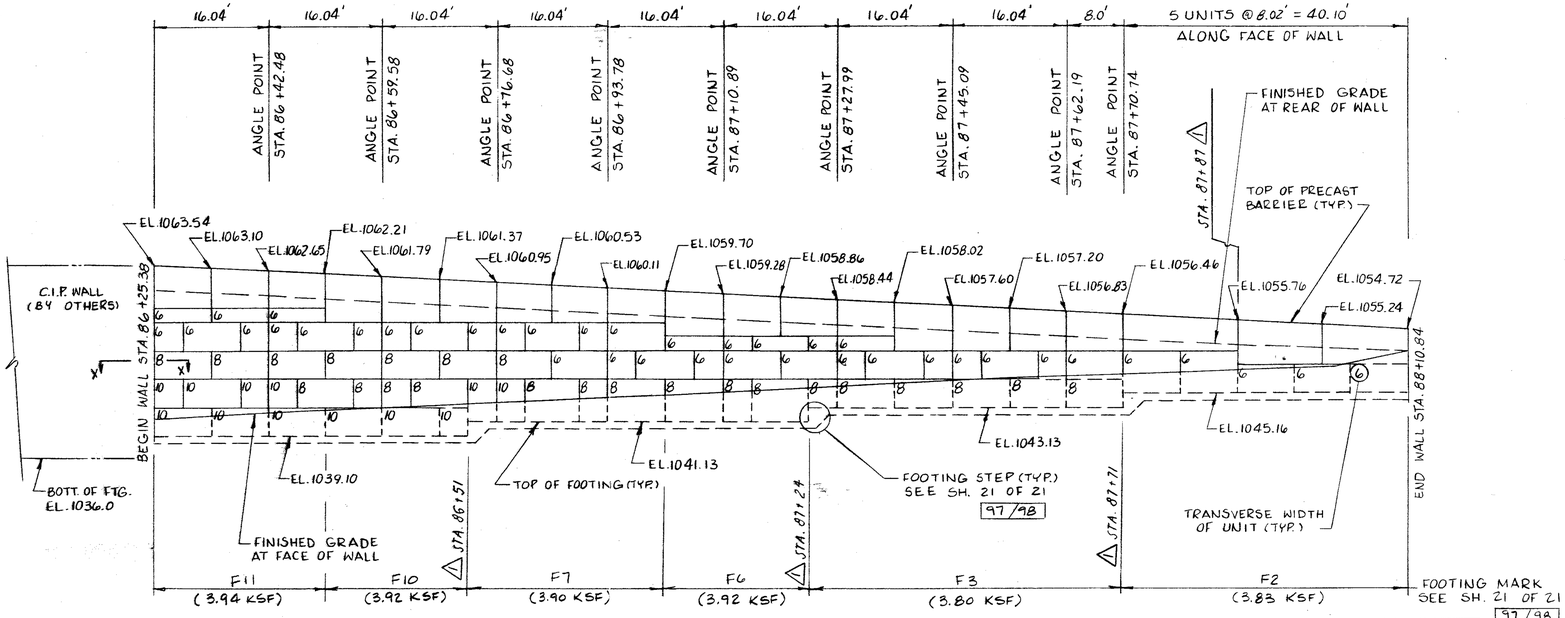

FOR SECTION X-X SEE SH. 20 OF 21 96/98

( ) - INDICATES MAXIMUM DESIGN BEARING PRESSURE

DEVELOPED ELEVATION
WALL 5

NO	REVISION	BY	C'K'D	DATE
1	ADDED STATIONS	V.V.		10-23-90

© COPYRIGHT 1990 JOHN S. DEERKOSKI, P.E.

CERTIFIED ONLY WITH RESPECT TO INTERNAL STABILITY OF THE DOUBLEWAL STRUCTURE BASED ON LOADS AND SOIL DATA INDICATED ON THESE DRAWINGS.
SEE DESIGN CHECK NOTES SHEET 1 OF 21

JOHN S. DEERKOSKI, P.E.
OHIO LICENSE NO. E-43379

This drawing contains information proprietary to Doublewal Corporation, and is being furnished for the use of OHIO D.O.T. only in connection with this project, and the information contained herein is not to be transmitted to any other organization unless specifically authorized in writing by Doublewal Corporation. The furnishing of this drawing does not constitute an expressed or implied license under U.S. Patent Numbers 4,196,161; 4,251,196; 4,351,507 and 4,372,091; Canadian Patent Number 1,084,246 and 1,104,798 or other Patents Pending.

DATE	9-12-89	SCALE	N.T.S.	DWG. NO.	42-15
DR BY	MHM	JOB NO.	38075	SHEET	8 OF 21
CHK. BY	DCM/WLB				

DESIGN 3

DOUBLEWAL CORPORATION 84/98
PLAINVILLE, CONNECTICUT 06062

AKRON EAST EXPRESSWAY
AKRON, OHIO
PROPOSED DOUBLEWAL WALL NO. 5
RAMP E-7 STA. 86+25.38 TO STA. 88+10.84
PLAN & ELEVATION

DESIGNED	DRAWN	TRACED	CHECKED	REVIEWED	DATE	REVISED
DCM	MHM		DCM	WLB	9/89	

FHWA REGION	STATE	PROJECT
5	OHIO	

SUM-76-11.57

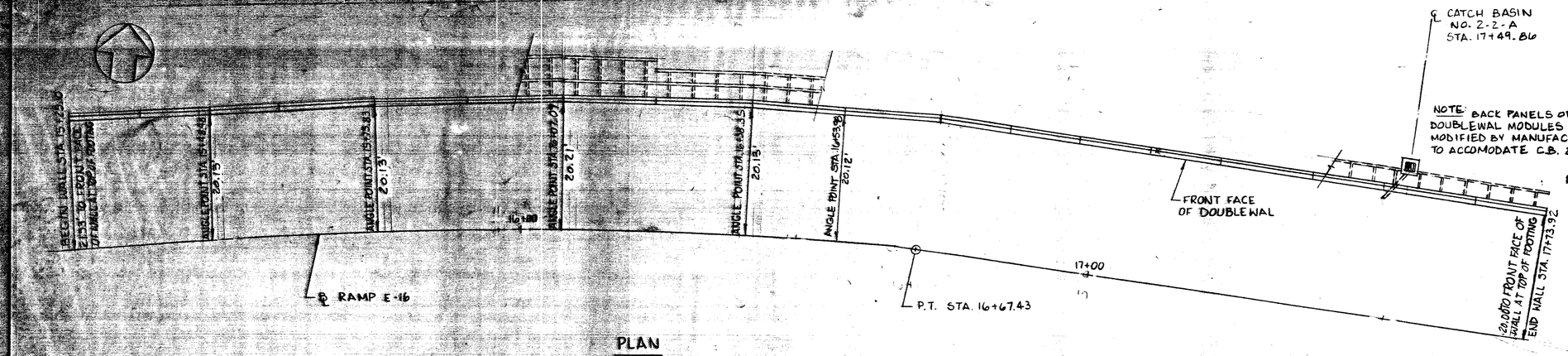

PLAN

BASELINE RAMP E-16
CURVE DATA

P.I. STA. 14+87.29
$\Delta = 27°-33'-55"$
$D_C = 7°-30'-00"$
$R = 763.94'$
$T = 187.40'$
$L_C = 367.54'$

NOTES:

FOR PRECAST CONCRETE PARAPET TYPE A DETAILS SEE SHEET 96/98

FOR ADDITIONAL NOTES SEE SHEET 17/98

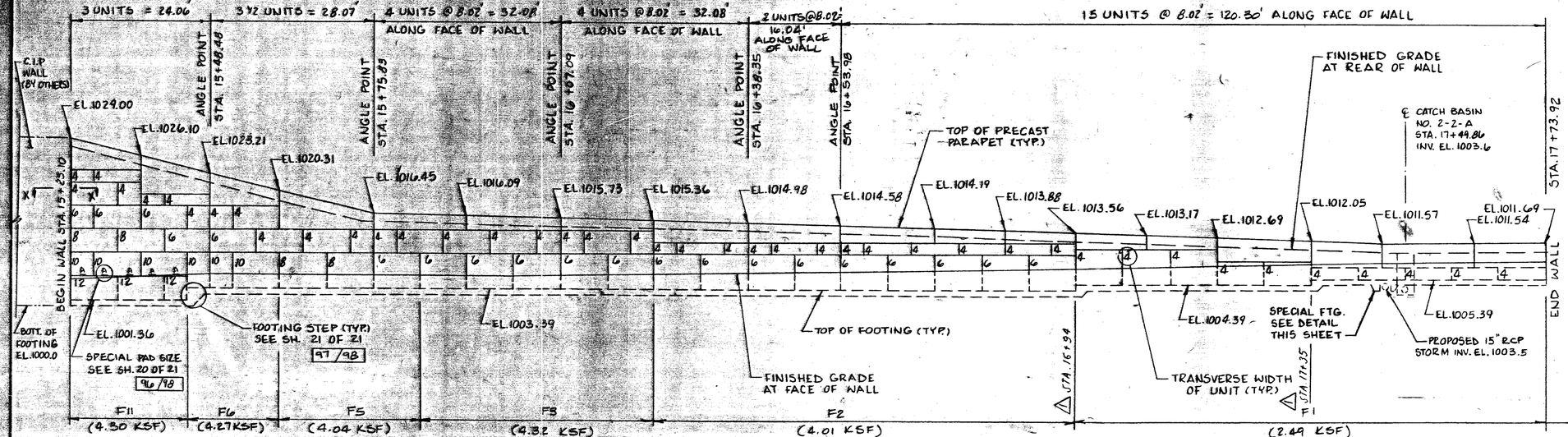

DEVELOPED ELEVATION
WALL NO. 9

FOR SECTION X-X SEE SH. 20 OF 21 96/98

( ) - INDICATES MAXIMUM DESIGN BEARING PRESSURE

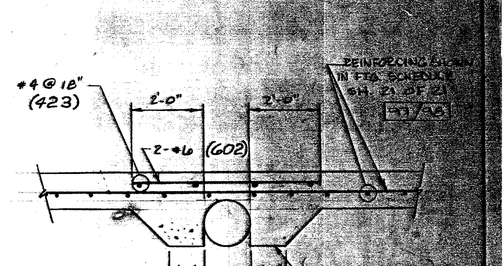

SPECIAL FOOTING DETAIL

NOTE: THE COST OF THE SPECIAL FOOTING TO BE INCLUDED IN THE COST OF ITEM 511 CLASS "C" CONCRETE, FOOTING

DATE	SCALE	DWG. NO.
9-12-89	N.T.S.	42-15
DR BY MHM	JOB NO. 38075	SHEET 9 OF 21
DCM/WLB		

NO	REVISION	BY	C'K'D	DATE
1	ADDED STATIONS	VV		10-23-90

© COPYRIGHT 1990 JOHN S. DEERKOSKI, P.E.

CERTIFIED ONLY WITH RESPECT TO INTERNAL STABILITY OF THE DOUBLEWAL STRUCTURE BASED ON LOADS AND SOIL DATA INDICATED ON THESE DRAWINGS. SEE DESIGN CHECK NOTES SHEET 1 OF 21

JOHN S. DEERKOSKI, P.E.
OHIO LICENSE NO. E-43379

This drawing contains information proprietary to Doublewal Corporation and is being furnished for the use of OHIO D.O.T. only in connection with this project and the information contained on it shall not be disclosed to others for purposes other than

DESIGN 3

DOUBLEWAL CORPORATION 257/98
PLAINVILLE, CONNECTICUT 06062

AKRON EAST EXPRESSWAY
AKRON, OHIO
PROPOSED DOUBLEWAL WALL NO. 9
RAMP E-16 STA. 15+25.10 TO STA. 17+73.92
PLAN & ELEVATION

DESIGNED	DRAWN	TRACED	CHECKED	REVIEWED	DATE	REVISED
DCM	MHM		DCM	WLB	9/89	

FHWA REGION	STATE	PROJECT	
5	OHIO		

792/1214

SUM-76-11.57

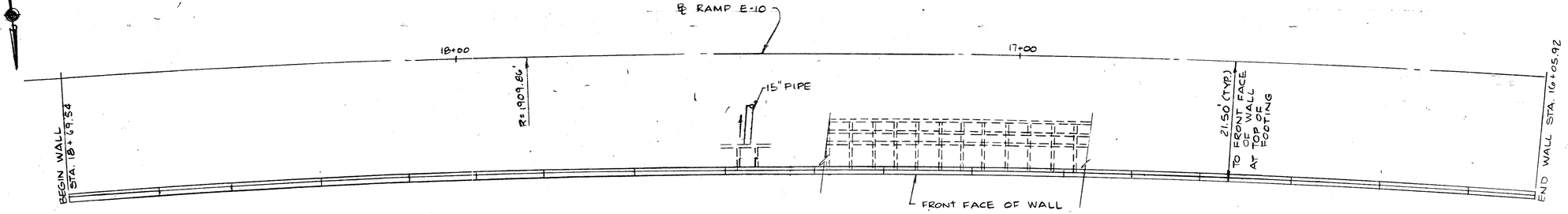

PLAN

NOTES:

FOR PRECAST CONCRETE TRAFFIC BARRIER DETAILS SEE SHEET 96/98

BASELINE RAMP E-10
P.I. STA. 17+78.47

$\Delta = 12°-20'-33''$
$D_C = 3°-00'-00''$
$R = 1909.86$
$T = 206.51$
$L_C = 411.42$

FOR ADDITIONAL NOTES SEE SHEET 77/98

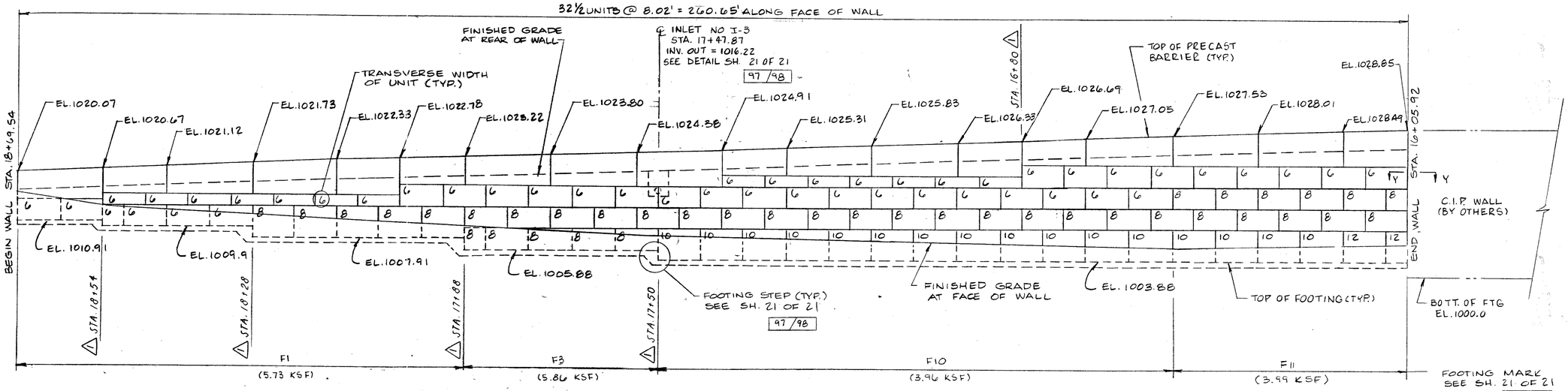

FOR SECTION Y-Y SEE SH. 20 OF 21 96/98

ELEVATION

WALL NO. 10

( )- INDICATES MAXIMUM DESIGN BEARING PRESSURE

DATE	9-12-89	SCALE	N.T.S.	DWG NO.	42-15
DESIGNED BY	JSU	JOB NO.	38075	SHEET	10 OF 21
CHECKED BY	WLB				

NO	REVISION	BY	C'K'D	DATE
1	ADDED STATIONS	V.V.		10-22-89

© COPYRIGHT 1990 JOHN S. DEERKOSKI, P.E.

CERTIFIED ONLY WITH RESPECT TO INTERNAL STABILITY OF THE DOUBLEWAL STRUCTURE BASED ON LOADS AND SOIL DATA INDICATED ON THESE DRAWINGS.
SEE DESIGN CHECK NOTES SHEET 1 OF 21

JOHN S. DEERKOSKI, P.E.
OHIO LICENSE NO. E-43379

This drawing contains information proprietary to Doublewal Corporation, and is being furnished for the use of OHIO D.O.T. only in connection with this project, and the information contained herein is not to be transmitted to any other organization unless specifically authorized in writing by Doublewal Corporation. The furnishing of this drawing does not constitute an expressed or implied license under U.S. Patent Numbers 4,196,161; 4,251,196; 4,351,507 and 4,372,091; Canadian Patent Number 1,084,246 and 1,104,796 or other Patents Pending.

DESIGN 3

86/98

AKRON EAST EXPRESSWAY
AKRON, OHIO
PROPOSED DOUBLEWAL WALL NO. 10
RAMP E-10 STA. 18+69.54 TO STA. 16+05.92
PLAN & ELEVATION

DCM JSU DCM WLB 9/89

FHWA REGION	STATE	PROJECT	
5	OHIO		

793/1214

SUM-76-11.57

NOTES:

FOR PRECAST CONCRETE TRAFFIC BARRIER DETAILS SEE SHEET 96/98

FOR ADDITIONAL NOTES SEE SHEET 77/98

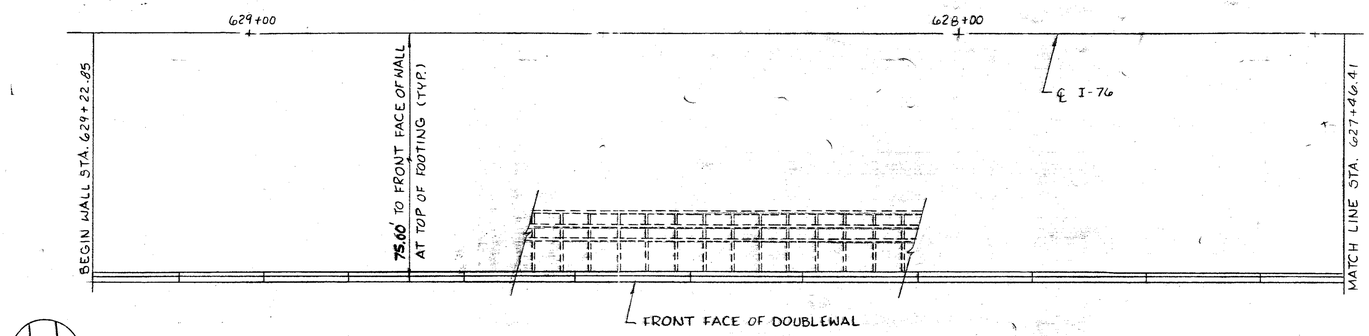

PLAN

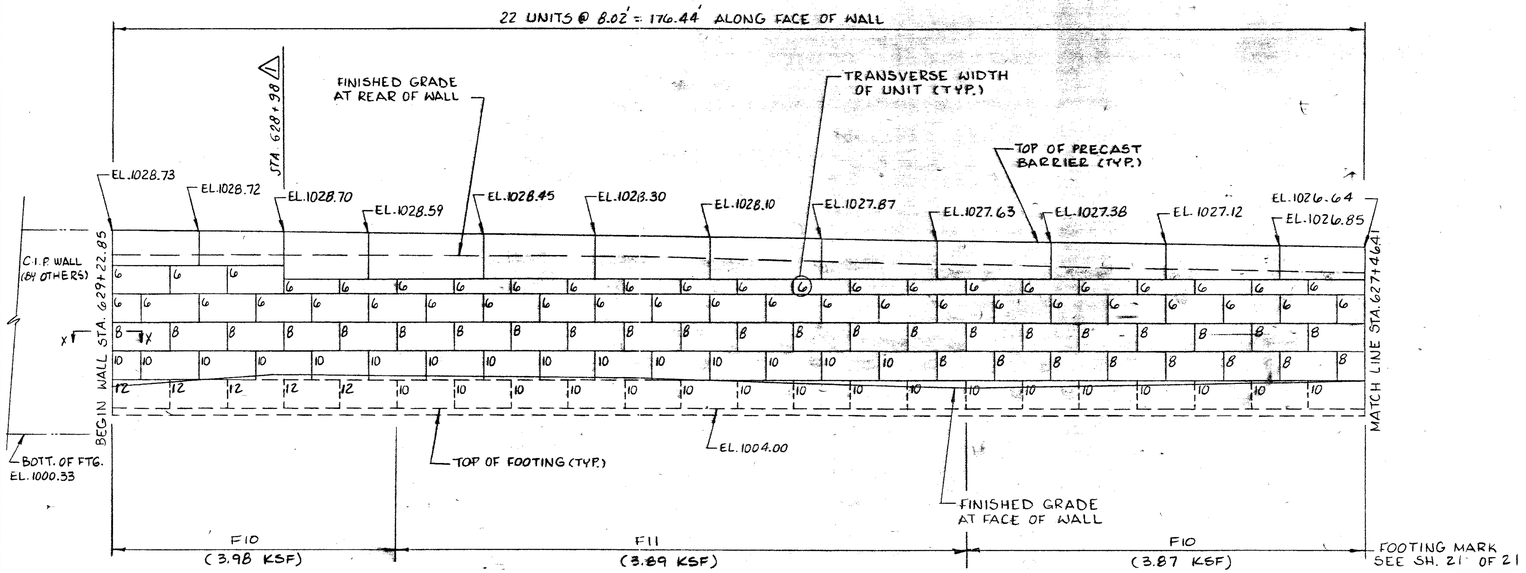

ELEVATION
WALL NO. 11

( ) INDICATES MAXIMUM DESIGN BEARING PRESSURE

DATE	9-12-89	SCALE	N.T.S.	DWG. NO.	42-15
DES.	MHM	JOB NO.	38075	SHEET	11 OF 21
CHK.	DCM/WLB				

FOR SECTION X-X SEE SH. 20 OF 21 96/98

NO	REVISION	BY	C'K'D	DATE
1	ADDED STATION	V.V.		10-23-90

© COPYRIGHT 1990 JOHN S. DEERKOSKI, P.E.

CERTIFIED ONLY WITH RESPECT TO INTERNAL STABILITY OF THE DOUBLEWAL STRUCTURE BASED ON LOADS AND SOIL DATA INDICATED ON THESE DRAWINGS.
SEE DESIGN CHECK NOTES SHEET 1 OF 21

JOHN S. DEERKOSKI, P.E.
OHIO LICENSE NO. E-43379

This drawing contains information proprietary to Doublewal Corporation, and is being furnished for the use of OHIO D.O.T. only in connection with this project, and the information contained herein is not to be transmitted to any other organization unless specifically authorized in writing by Doublewal Corporation. The furnishing of this drawing does not constitute an expressed or implied license under U.S. Patent Numbers 4,196,161; 4,251,196; 4,351,507 and 4,372,091; Canadian Patent Number 1,084,246 and 1,104,798 or other Patents Pending.

DESIGN 3

DOUBLEWAL CORPORATION 87/98
FLEMINGTON, CONNECTICUT 06806

AKRON EAST EXPRESSWAY
AKRON, OHIO
PROPOSED DOUBLEWAL WALL NO. 11
I-76 STA. 629+22.85 TO STA. 627+46.41
PLAN & ELEVATION

DCM MHM DCM WLB 9/89

FHWA REGION	STATE	PROJECT	
5	OHIO		

794/1214

SUM-76-11.57

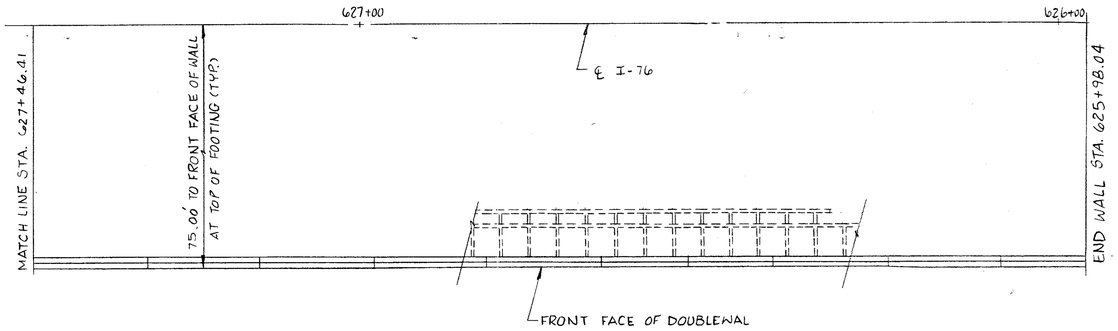

PLAN

NOTES:

1. FOR PRECAST CONCRETE TRAFFIC BARRIER DETAILS SEE SHEET 96/98
2. FOR ADDITIONAL NOTES SEE SHEET 77/98

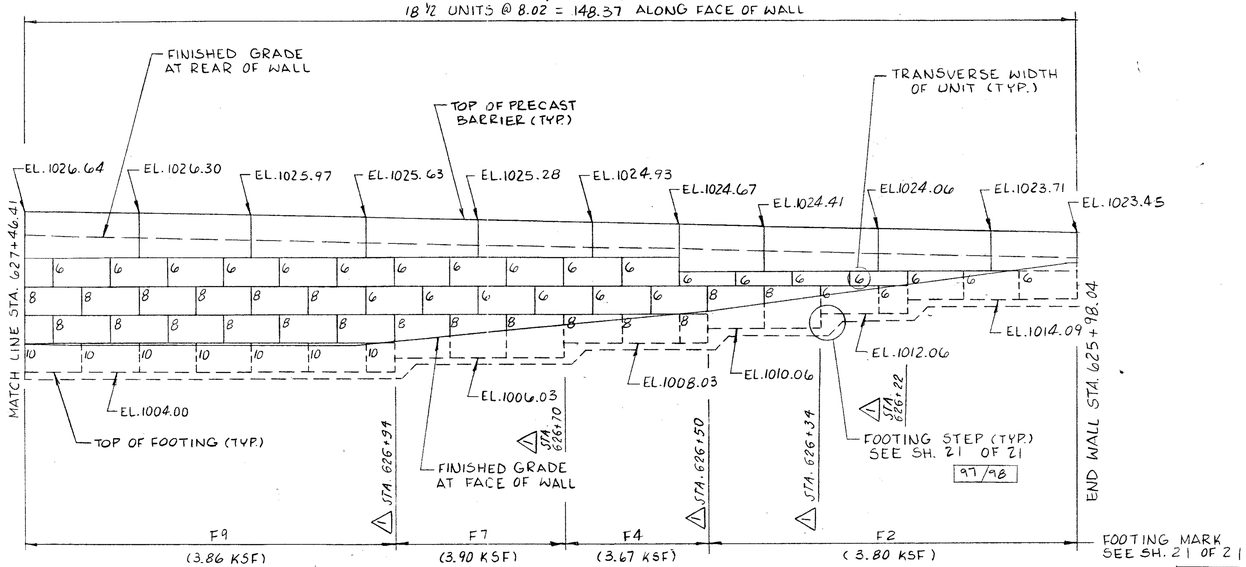

ELEVATION
WALL NO. 11

( ) - INDICATES MAXIMUM DESIGN BEARING PRESSURE

© COPYRIGHT 1990 JOHN S. DEERKOSKI, P.E.

CERTIFIED ONLY WITH RESPECT TO INTERNAL STABILITY OF THE DOUBLEWAL STRUCTURE BASED ON LOADS AND SOIL DATA INDICATED ON THESE DRAWINGS.
SEE DESIGN CHECK NOTES SHEET 1 OF 21

JOHN S. DEERKOSKI, P.E.
OHIO LICENSE NO. E-43379

NO	REVISION	BY	C'K'D	DATE
1	ADDED STATIONS	V.V.		10-23-96

DATE	SCALE	DWG NO
9-12-89	N.T.S.	42-15
DES'D MHM	JOB NO 38075	SHEET 12 OF 21
DCM/WLB		

DESIGN 3
DOUBLEWAL CORPORATION 88/98
KNOXVILLE, TENNESSEE

AKRON EAST EXPRESSWAY
AKRON, OHIO
PROPOSED DOUBLEWAL WALL NO. 11
I-76 STA. 627+46.41 TO STA. 625+98.04
PLAN & ELEVATION

DES'D	CHK'D	DRAWN	CHK'D	APP'D
DCM	MHM		DCM	WLB 9/89

This drawing contains information proprietary to Doublewal Corporation, and is being furnished for the use of OHIO D.O.T. only in connection with this project, and the information contained herein is not to be transmitted to any other organization unless specifically authorized in writing by Doublewal Corporation. The furnishing of this drawing does not constitute an expressed or implied license under U.S. Patent Numbers 4,196,161; 4,251,166; 4,351,507 and 4,372,091; Canadian Patent Number 1,084,246 and 1,104,796 or other Patents Pending.

FHWA REGION	STATE	PROJECT	
5	OHIO		

795
1214

SUM-76-11.57

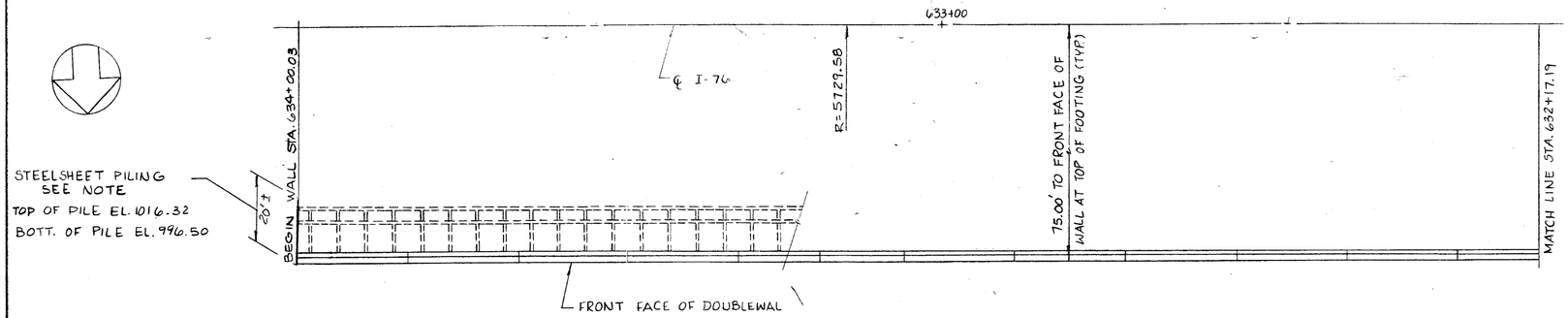

PLAN

NOTE:
SHEET PILING IS TO BE FIELD CUT AS REQUIRED TO ALLOW FOR UNDERDRAIN TO PASS THROUGH. COST OF STEEL SHEET PILING AND FIELD CUTTING TO BE INCLUDED WITH ITEM 504 "SHEET PILING LEFT IN PLACE". THE SHEET PILING SHALL HAVE A MINIMUM SECTION MODULUS OF 18.1 IN^3 PER FOOT OF WALL.

NOTES:

FOR PRECAST CONCRETE TRAFFIC BARRIER DETAILS SEE SHEET 96/98

FOR ADDITIONAL NOTES SEE SHEET 77/98

CURVE DATA
CENTERLINE I-76

P.I. STA. 633+20.79
$\Delta = 6°-47'-01"$
$D_c = 1°-00'-00"$
$R = 5729.58'$
$T = 339.58'$
$L_c = 678.36'$

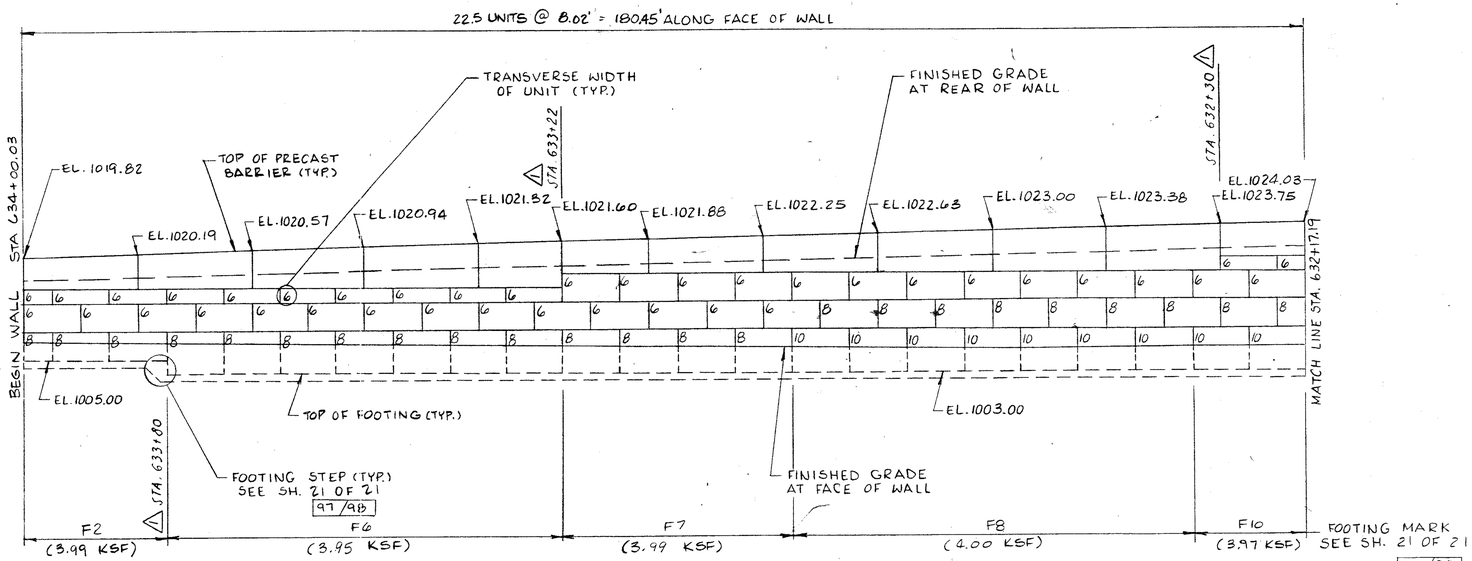

DEVELOPED ELEVATION
WALL NO. 12

( ) - INDICATES MAXIMUM DESIGN BEARING PRESSURE

© COPYRIGHT 1990 JOHN S. DEERKOSKI, P.E.

CERTIFIED ONLY WITH RESPECT TO INTERNAL STABILITY OF THE DOUBLEWAL STRUCTURE BASED ON LOADS AND SOIL DATA INDICATED ON THESE DRAWINGS.
SEE DESIGN CHECK NOTES SHEET 1 OF 21

JOHN S. DEERKOSKI, P.E.
OHIO LICENSE NO. E-43379

NO	REVISION	BY	C'K'D	DATE
1	ADDED STATIONS	V.V.		10-23-90

This drawing contains information proprietary to Doublewal Corporation, and is being furnished for the use of OHIO D.O.T. only in connection with this project, and the information contained herein is not to be transmitted to any other organization unless specifically authorized in writing by Doublewal Corporation. The furnishing of this drawing does not constitute an expressed or implied license under U.S. Patent Numbers 4,196,161; 4,251,196; 4,351,507 and 4,372,091; Canadian Patent Number 1,084,246 and 1,104,786 or other Patents Pending.

DATE	9-12-89	SCALE	N.T.S.	DWG NO.	42-15
BY	MHM	JOB NO.	38075	SHEET	13 OF 21
CK'D	DCM/WLB				

DESIGN 3

DESIGNED FOR PRECAST CONCRETE PANELS 89/96

AKRON EAST EXPRESSWAY
AKRON, OHIO
PROPOSED DOUBLEWAL WALL NO. 12
I-76 STA. 634+00.03 TO STA. 632+17.19
PLAN & ELEVATION

DCM MHM DCM WLB 9/89

FHWA REGION	STATE	PROJECT	
5	OHIO		

796/214

SUM-76-1157

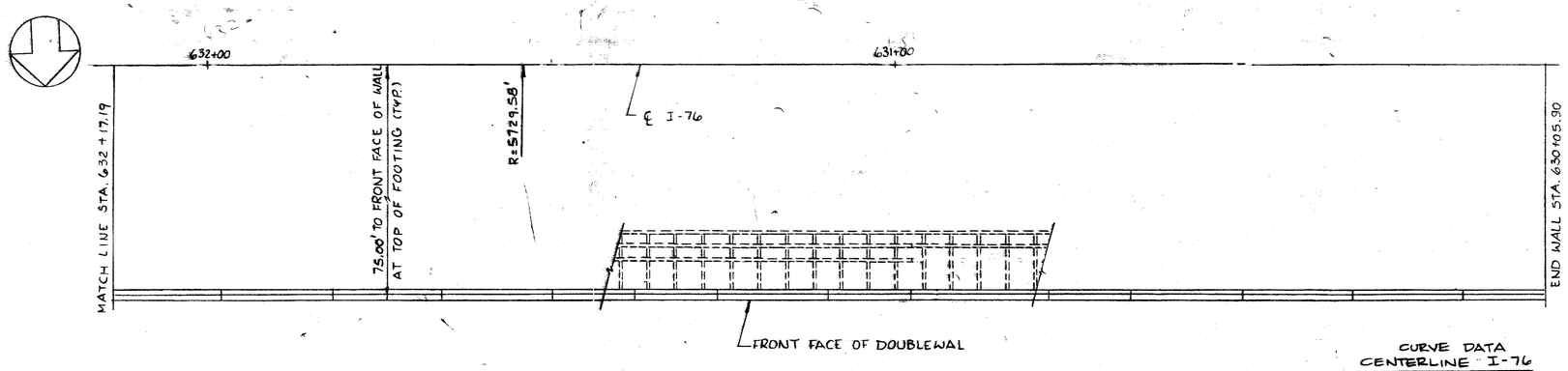

PLAN

CURVE DATA
CENTERLINE I-76

P.I. STA. 633+20.79
$\Delta = 6°-47'-01"$
$D_c = 1°-00'-00"$
$R = 5729.58'$
$T = 339.58'$
$L_c = 678.36'$

NOTES:

1. FOR PRECAST CONCRETE TRAFFIC BARRIER DETAILS SEE SHEET 96/98

FOR ADDITIONAL NOTES SEE SHEET 77/98

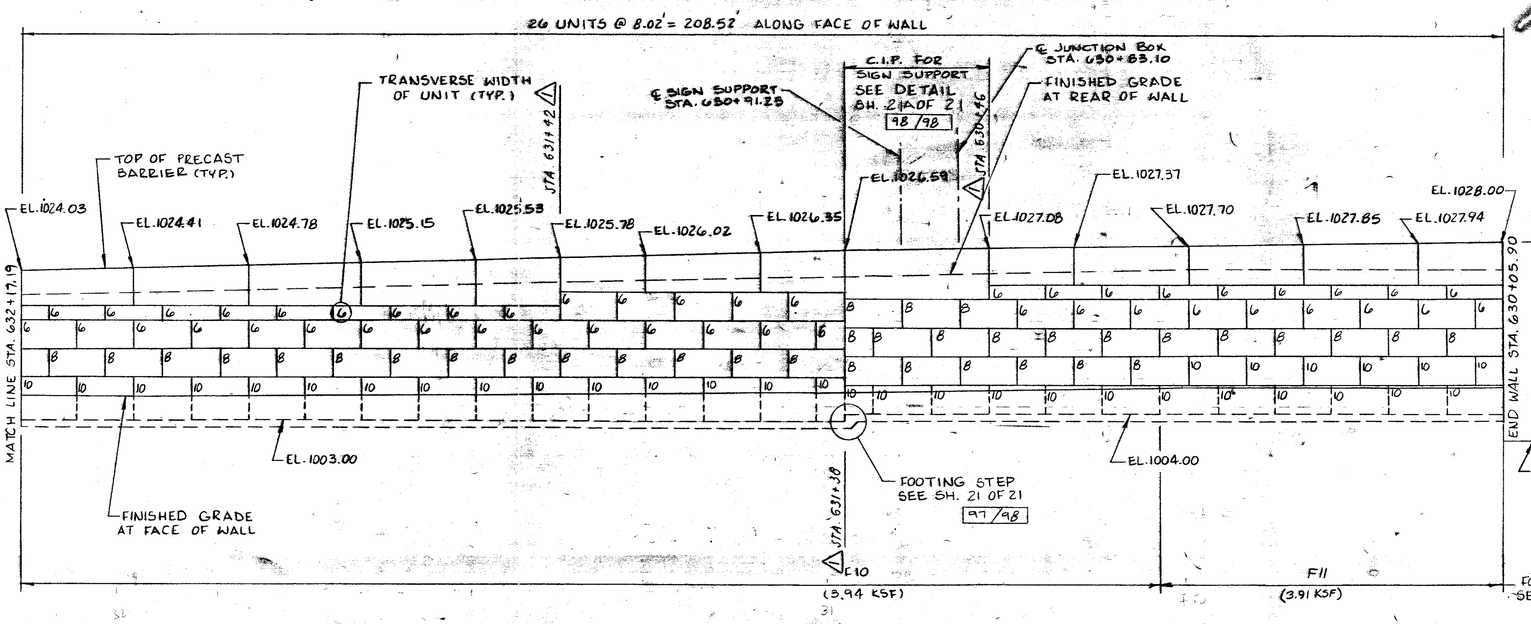

ELEVATION
WALL NO. 12

( ) - INDICATES MAXIMUM DESIGN BEARING PRESSURE

NO	REVISION	BY	C'K'D	DATE
1	ADDED STATIONS	V.V.		10-23-90

© COPYRIGHT 1990 JOHN S. DEERKOSKI, P.E.

CERTIFIED ONLY WITH RESPECT TO INTERNAL STABILITY OF THE DOUBLEWAL STRUCTURE BASED ON LOADS AND SOIL DATA INDICATED ON THESE DRAWINGS.
SEE DESIGN CHECK NOTES SHEET 1 OF 21

JOHN S. DEERKOSKI, P.E.
OHIO LICENSE NO. E-43379

This drawing contains information proprietary to Doublewal Corporation, and is being furnished for the use of OHIO D.O.T. only in connection with this project, and the information contained herein is not to be transmitted to any other organization unless specifically authorized in writing by Doublewal Corporation. The furnishing of this drawing does not constitute an expressed or implied license under U.S. Patent Numbers 4,196,161; 4,251,196; 4,351,507 and 4,372,091; Canadian Patent Number 1,084,246 and 1,104,798 or other Patents Pending.

DATE	8-31-90	SCALE	N.T.S.	DWG. NO.	42-15
DR BY	MHM	JOB NO.	38075	SHEET	14 OF 21
CHK BY	DCM/WLB				

DESIGN 3

DOUBLEWAL CORPORATION 90/98
PLAINVILLE, CONNECTICUT 06062

AKRON EAST EXPRESSWAY
AKRON, OHIO
PROPOSED DOUBLEWAL WALL NO. 12
I-76 STA. 632+17.19 TO STA. 630+05.90
PLAN & ELEVATION

DESIGNED	DRAWN	TRACED	CHECKED	REVIEWED	DATE	REVISED
DCM	MHM		DCM	WLB	'89	-

FHWA REGION	STATE	PROJECT	
5	OHIO		

SUM-76-11.57

797
1214

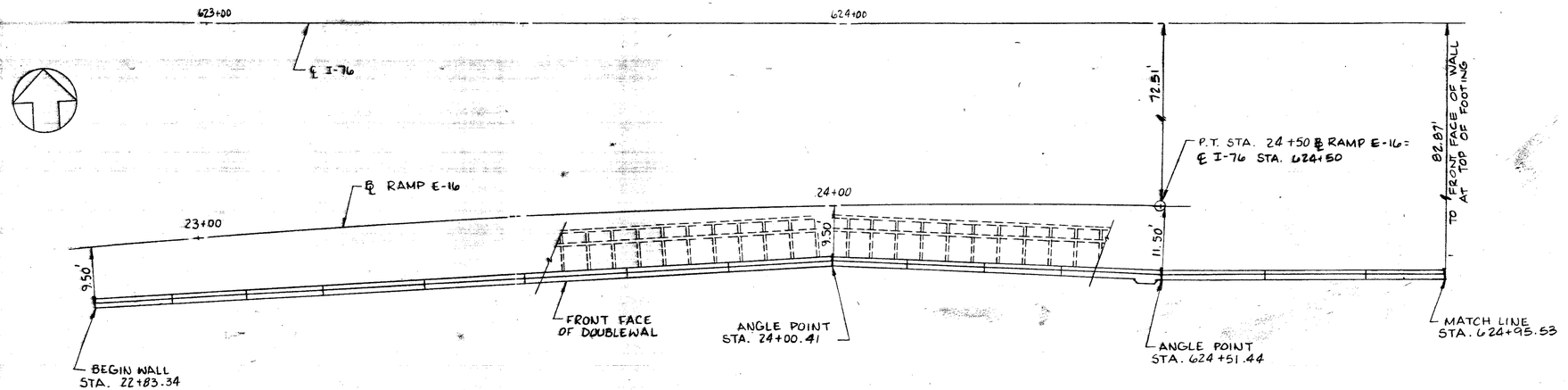

PLAN

BASELINE RAMP E-16
CURVE DATA

P.I. STA. 23+12.93

$\Delta = 10^\circ - 59' - 56''$
$D_C = 4^\circ - 00' - 00^\circ$
$R = 1432.39'$
$T = 137.91'$
$LC = 274.97'$

NOTES:

FOR PRECAST CONCRETE TRAFFIC BARRIER DETAILS SEE SHEET 96/98

FOR ADDITIONAL NOTES SEE SHEET 77/98

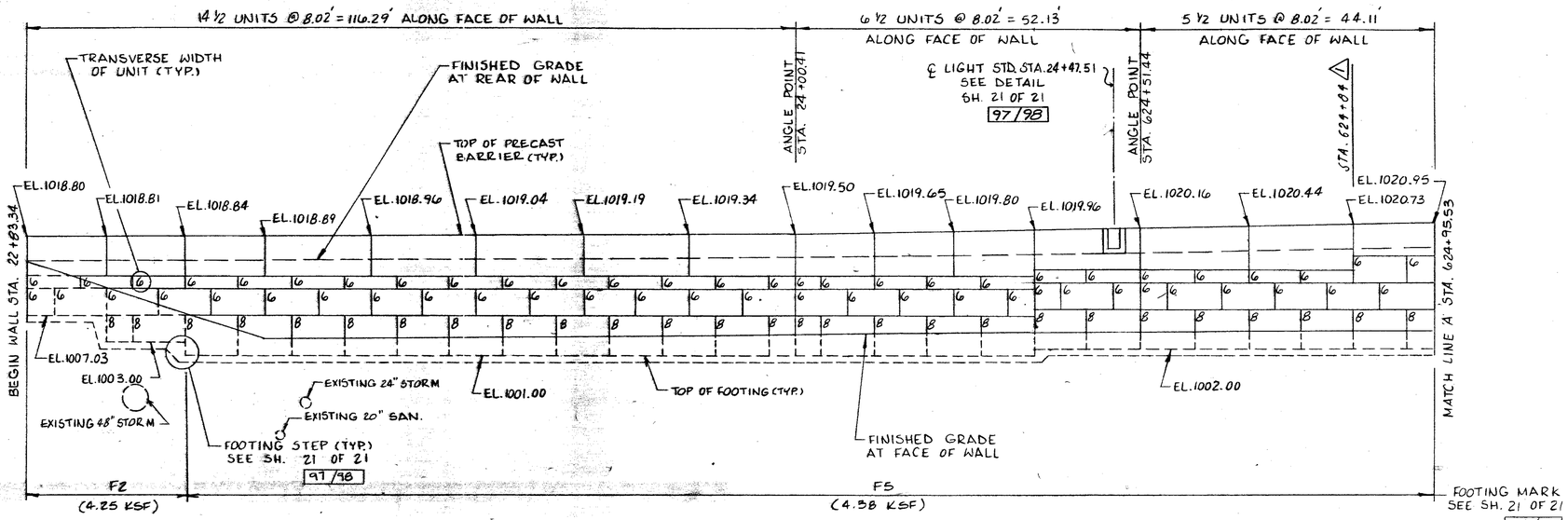

DEVELOPED ELEVATION
WALL NO. 13

( ) - INDICATES MAXIMUM DESIGN BEARING PRESSURE

© COPYRIGHT 1990 JOHN S. DEERKOSKI, P.E.

CERTIFIED ONLY WITH RESPECT TO INTERNAL STABILITY OF THE DOUBLEWAL STRUCTURE BASED ON LOADS AND SOIL DATA INDICATED ON THESE DRAWINGS.
SEE DESIGN CHECK NOTES SHEET 1 OF 21

JOHN S. DEERKOSKI, P.E.
OHIO LICENSE NO. E-43379

NO	REVISION	BY	C'K'D	DATE
1	ADDED STATION	V.V.		10-23-90

This drawing contains information proprietary to Doublewal Corporation, and is being furnished for the use of OHIO D.O.T. only in connection with this project, and the information contained herein is not to be transmitted to any other organization unless specifically authorized in writing by Doublewal Corporation. The furnishing of this drawing does not constitute an expressed or implied license under U.S. Patent Numbers 4,196,161; 4,251,196; 4,351,507 and 4,372,091; Canadian Patent Number 1,084,246 and 1,104,798 or other Patents Pending.

DATE	SCALE	DWG. NO.
9-12-89	N.T.S.	42-15
DR BY MHM	JOB NO. 38075	SHEET 15 OF 21
CHK BY DCM/WLB		

DESIGN 3

DOUBLEWAL CORPORATION 91/98
PLAINVILLE, CONNECTICUT 06062

AKRON EAST EXPRESSWAY
AKRON, OHIO
PROPOSED DOUBLEWAL WALL NO. 13
℄ RAMP E-16 STA. 22+83.34 TO ℄ I-76 STA. 624+95.53
PLAN & ELEVATION

DESIGNED	DRAWN	TRACED	CHECKED	REVIEWED	DATE	REVISED
DCM	MHM		DCM	WLB	9/89	

FHWA REGION	STATE	PROJECT	
5	OHIO		

SUM-76-11.57

79/98
72/98

NOTES:

FOR PRECAST CONCRETE TRAFFIC BARRIER DETAILS SEE SHEET 96/98

FOR ADDITIONAL NOTES SEE SHEET 77/98

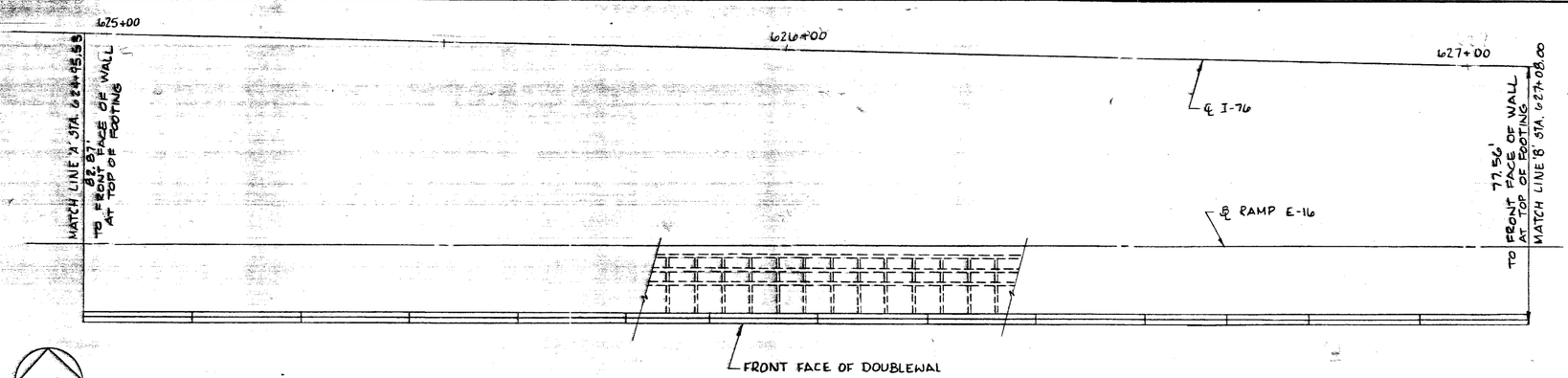

PLAN

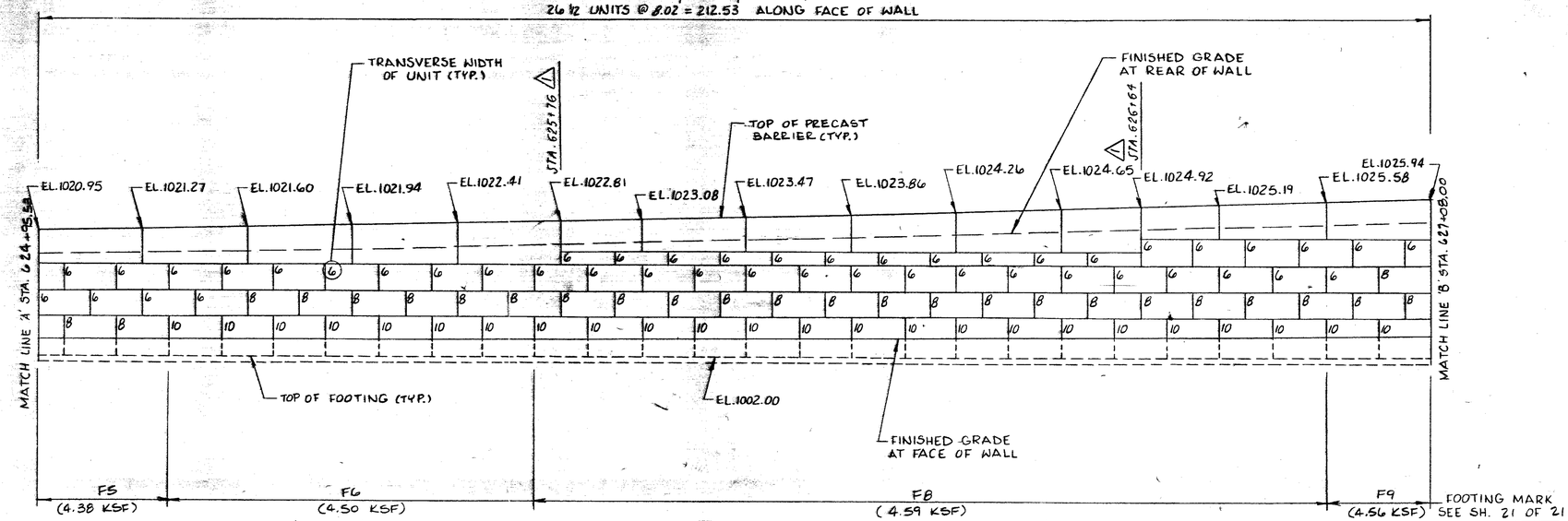

ELEVATION
WALL NO. 13

( )- INDICATES MAXIMUM DESIGN BEARING PRESSURE

NO	REVISION	BY	C'K'D	DATE
1	ADDED STATIONS	V.V.		10-23-90

© COPYRIGHT 1990 JOHN S. DEERKOSKI, P.E.

CERTIFIED ONLY WITH RESPECT TO INTERNAL STABILITY OF THE DOUBLEWAL STRUCTURE BASED ON LOADS AND SOIL DATA INDICATED ON THESE DRAWINGS. SEE DESIGN CHECK NOTES SHEET 1 OF 21

JOHN S. DEERKOSKI, P.E. OHIO LICENSE NO. E-43379

DATE	SCALE	DWG. NO.
9-12-89	N.T.S.	42-15
DR BY MHM	JOB NO. 38075	SHEET 16 OF 21
CHK. BY DCM/WLB		

This drawing contains information proprietary to Doublewal Corporation, and is being furnished for the use of OHIO D.O.T. only in connection with this project, and the information contained herein is not to be transmitted to any other organization unless specifically authorized in writing by Doublewal Corporation. The furnishing of this drawing does not constitute an expressed or implied license under U.S. Patent Numbers 4,196,161; 4,251,196; 4,351,507 and 4,372,091; Canadian Patent Number 1,084,246 and 1,104,798 or other Patents Pending.

DESIGN 3

DOUBLEWAL CORPORATION 92/98
PLAINVILLE, CONNECTICUT 06062

AKRON EAST EXPRESSWAY
AKRON, OHIO
PROPOSED DOUBLEWAL WALL NO. 13
I-76 STA. 624+95.53 TO STA. 627+08.00
PLAN & ELEVATION

DESIGNED	DRAWN	TRACED	CHECKED	REVIEWED	DATE	REVISED
DCM	MHM		DCM	WLB	9/89	

FHWA REGION	STATE	PROJECT	
5	OHIO		

799/1214

SUM-76-11.57

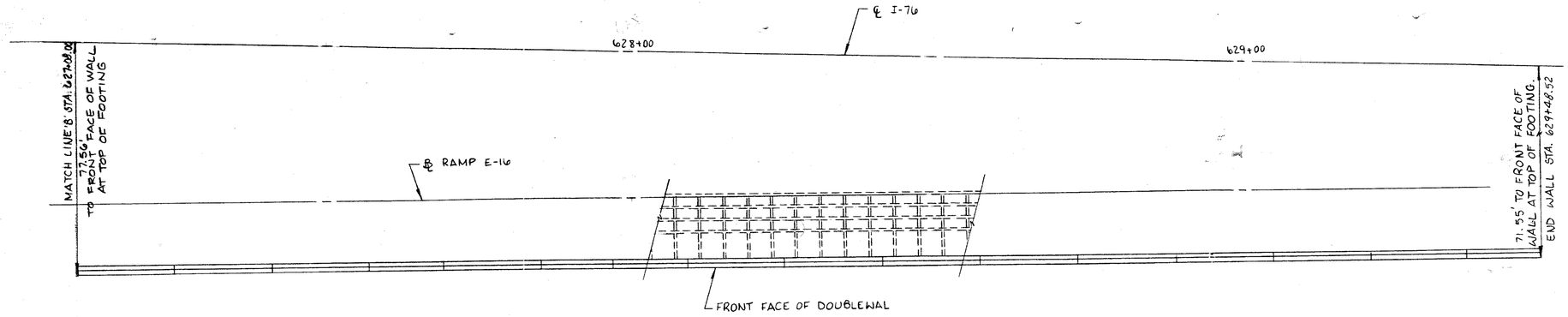

PLAN

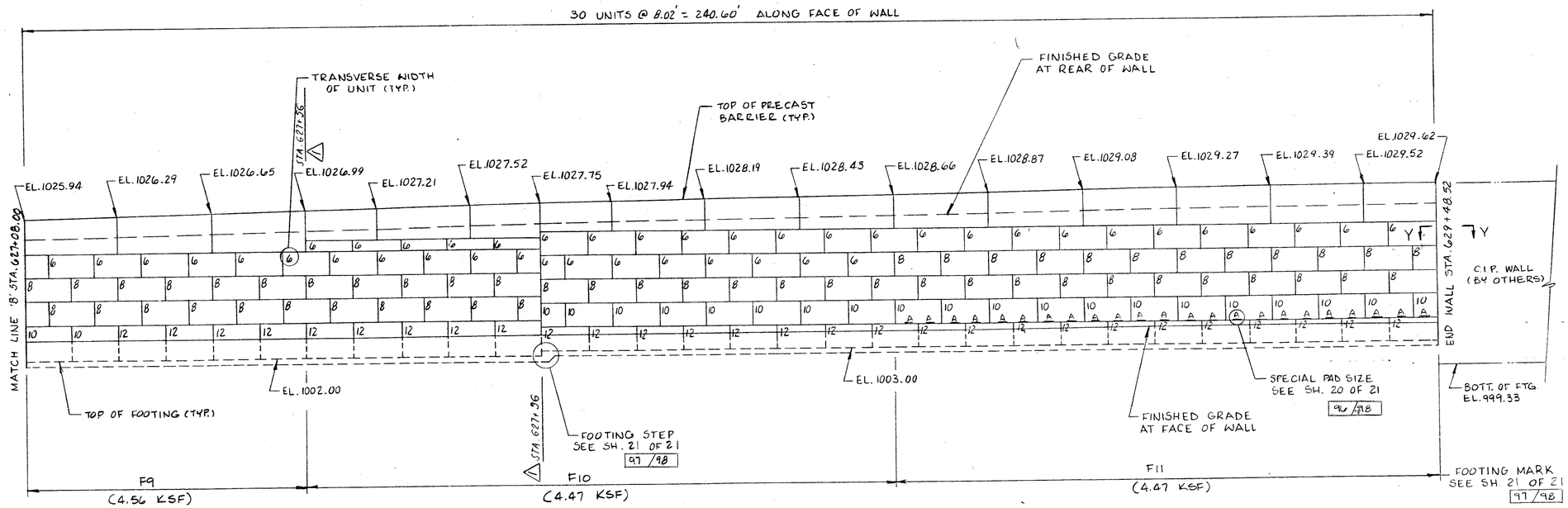

ELEVATION
WALL NO. 13

( ) - INDICATES MAXIMUM DESIGN BEARING PRESSURE

FOR SECTION Y-Y SEE SH. 20 OF 21 96/98

NOTES:

FOR PRECAST CONCRETE TRAFFIC BARRIER DETAILS SEE SHEET 96/98

FOR ADDITIONAL NOTES SEE SHEET 77/98

NO	REVISION	BY	C'K'D	DATE
1	ADDED STATIONS	V.V.		10-23-90

© COPYRIGHT 1990 JOHN S. DEERKOSKI, P.E.

CERTIFIED ONLY WITH RESPECT TO INTERNAL STABILITY OF THE DOUBLEWAL STRUCTURE BASED ON LOADS AND SOIL DATA INDICATED ON THESE DRAWINGS.
SEE DESIGN CHECK NOTES SHEET 1 OF 21

JOHN S. DEERKOSKI, P.E.
OHIO LICENSE NO. E-43379

This drawing contains information proprietary to Doublewal Corporation, and is being furnished for the use of OHIO D.O.T. only in connection with this project, and the information contained herein is not to be transmitted to any other organization unless specifically authorized in writing by Doublewal Corporation. The furnishing of this drawing does not constitute an expressed or implied license under U.S. Patent Numbers 4,196,161; 4,251,196; 4,351,507 and 4,372,091; Canadian Patent Number 1,084,246 and 1,104,798 or other Patents Pending.

DATE	SCALE	DWG. NO.
9-12-89	N.T.S.	42-15
DR BY MHM	JOB NO. 38075	SHEET 17 OF 21
CHK BY DCM/WLB		

DESIGN 3

DOUBLEWAL CORPORATION 93/98
PLAINVILLE, CONNECTICUT 06062

AKRON EAST EXPRESSWAY
AKRON, OHIO
PROPOSED DOUBLEWAL WALL NO. 13
I-76 STA. 627+08.00 TO STA. 629+48.52
PLAN & ELEVATION

DESIGNED	DRAWN	TRACED	CHECKED	REVIEWED	DATE	REVISED
DCM	MHM		DCM	WLB	989	

FHWA REGION	STATE	PROJECT	
5	OHIO		

SUM-76-11.57

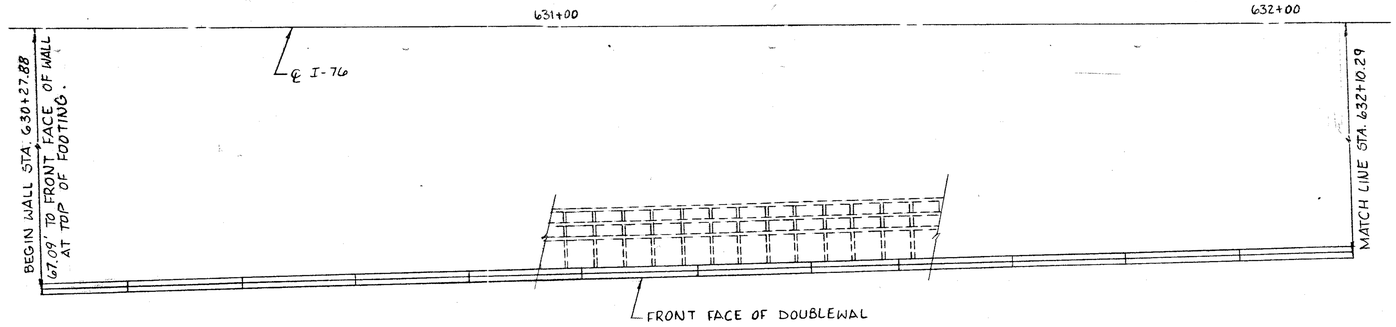

PLAN

CENTERLINE I-76
CURVE DATA

P.I. STA. 633+20.79

$\Delta = 6°-47'-01"$
$D_C = 1°-00'-00"$
$R = 5729.58'$
$T = 339.58'$
$L_C = 678.36'$

NOTES:

FOR PRECAST CONCRETE TRAFFIC BARRIER DETAILS SEE SHEET 96/98

FOR ADDITIONAL NOTES SEE SHEET 77/98

WALL OFFSET TABLE	
STATION ALONG ℄ I-76	OFFSET TO FACE OF WALL
630+27.88	67.09
631+00	64.56
631+50	63.09
632+00	61.84
632+50	60.81
632+90	60.16
633+50	60.95
634+00	61.86

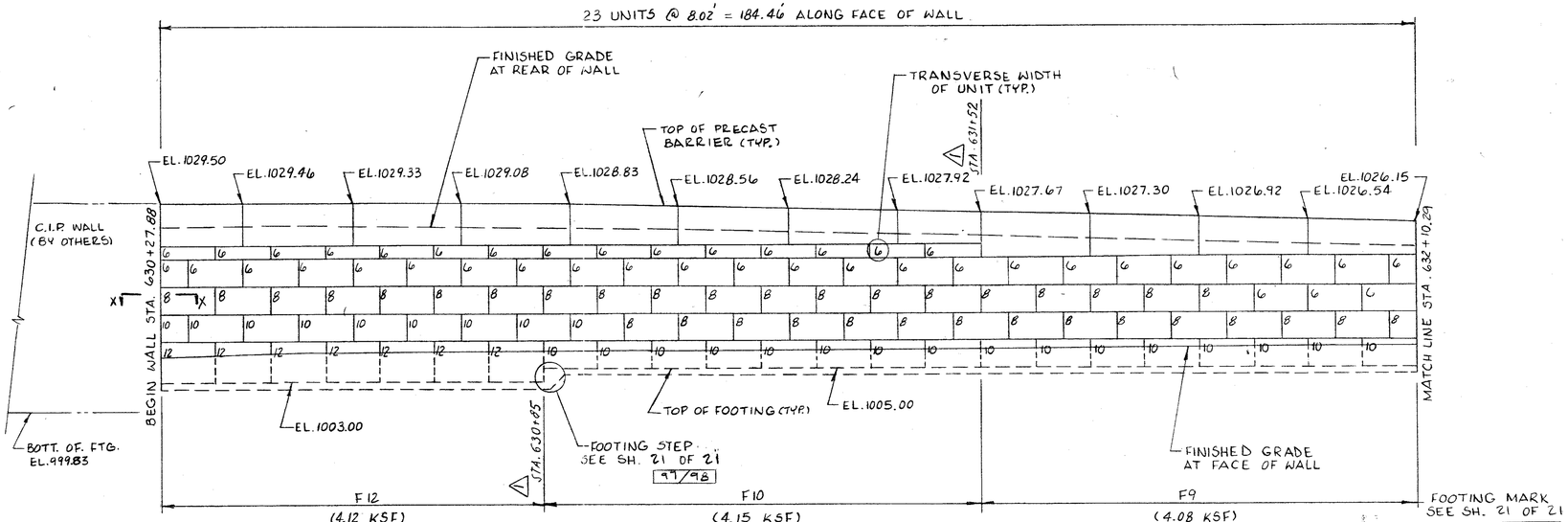

ELEVATION
WALL NO. 14

( ) - INDICATES MAXIMUM DESIGN BEARING PRESSURE.

DATE 9-12-89	SCALE N.T.S.	DWG NO. 42-15
DR BY MHM	JOB NO. 38075	SHEET 18 OF 21
CHK. BY DCM/WLB		

FOR SECTION X-X SEE SH. 20 OF 21 96/98

NO	REVISION	BY	CK'D	DATE
1	ADDED STATIONS	V.V.		10-23-90

© COPYRIGHT 1990 JOHN S. DEERKOSKI, P.E.

CERTIFIED ONLY WITH RESPECT TO INTERNAL STABILITY OF THE DOUBLEWAL STRUCTURE BASED ON LOADS AND SOIL DATA INDICATED ON THESE DRAWINGS.
SEE DESIGN CHECK NOTES SHEET 1 OF 21

JOHN S. DEERKOSKI, P.E.
OHIO LICENSE NO. E-43379

This drawing contains information proprietary to Doublewal Corporation, and is being furnished for the use of OHIO D.O.T. only in connection with this project, and the information contained herein is not to be transmitted to any other organization unless specifically authorized in writing by Doublewal Corporation. The furnishing of this drawing does not constitute an expressed or implied license under U.S. Patent Numbers 4,196,161; 4,251,196; 4,351,507 and 4,372,091; Canadian Patent Number 1,084,246 and 1,104,798 or other Patents Pending.

DESIGN 3

DOUBLEWAL CORPORATION 94/98
PLAINVILLE, CONNECTICUT 06062

AKRON EAST EXPRESSWAY
AKRON, OHIO
PROPOSED DOUBLEWAL WALL NO. 14
I-76 STA. 630+27.88 TO STA. 632+10.29
PLAN & ELEVATION

DESIGNED	DRAWN	TRACED	CHECKED	REVIEWED	DATE	REVISED
DCM	MHM		DCM	WLB	9/89	

FHWA REGION	STATE	PROJECT	
5	OHIO		

SUM-76-11.57

NOTES:

FOR PRECAST CONCRETE TRAFFIC BARRIER DETAILS SEE SHEET 96/98

FOR ADDITIONAL NOTES SEE SHEET 77/98

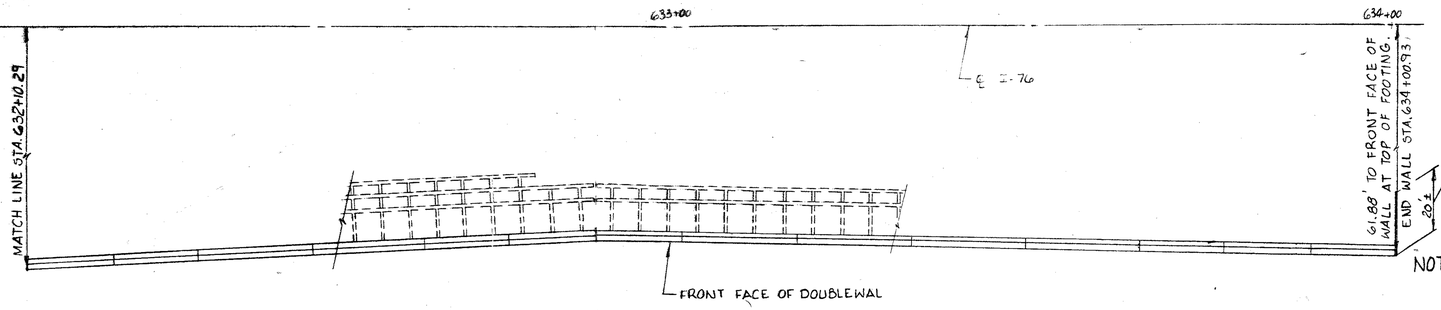

PLAN

NOTE: SHEET PILING IS TO BE FIELD CUT AS REQUIRED TO ALLOW FOR UNDERDRAIN TO PASS THROUGH. COST OF STEEL SHEET PILING AND FIELD CUTTING TO BE INCLUDED WITH ITEM 504 "SHEET PILING SHALL HAVE A MINIMUM SECTION MODULUS OF 18.1 IN^3 PER FOOT OF WALL.

CENTERLINE I-76
CURVE DATA

P.I. STA. 633+20.79
$\Delta = 6°-47'-01"$
$D_c = 1°-00'-00"$
$R = 5729.58'$
$T = 339.58'$
$L_c = 678.36'$

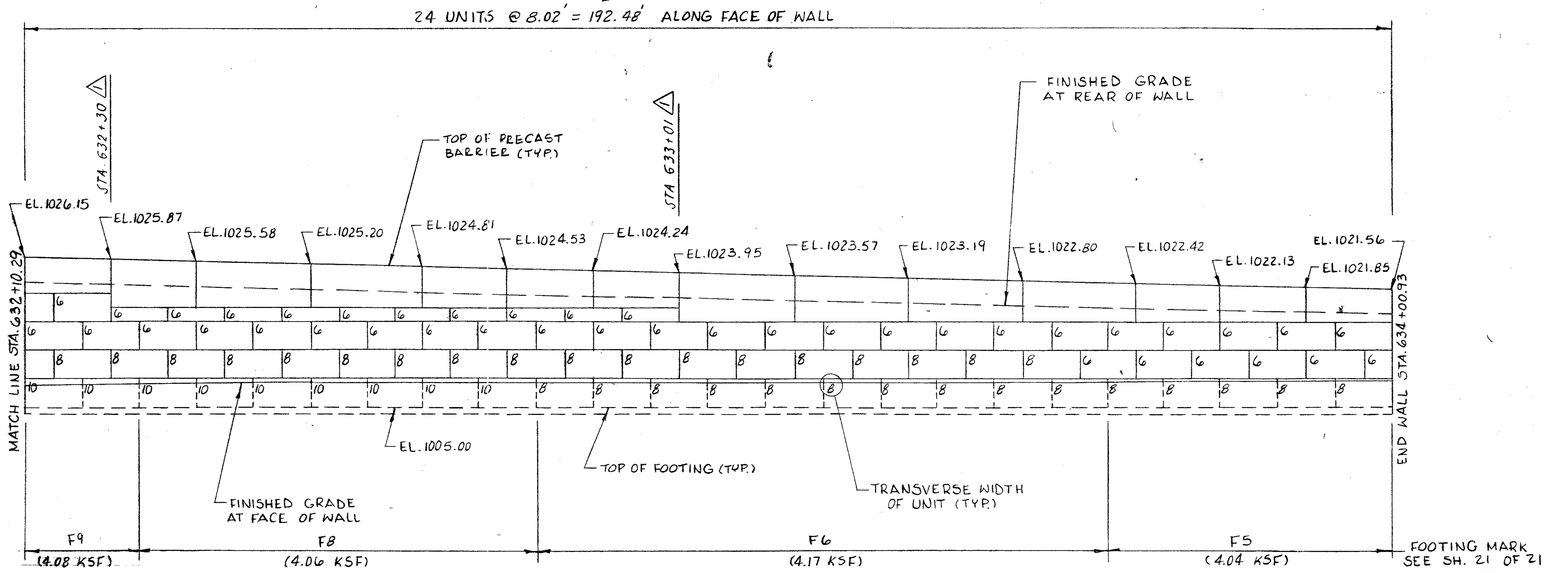

DEVELOPED ELEVATION
WALL NO. 14

( ) - INDICATES MAXIMUM DESIGN BEARING PRESSURE.

NO	REVISION	BY	C'K'D	DATE
1	ADDED STATIONS	V.V.		10-23-89

© COPYRIGHT 1990 JOHN S. DEERKOSKI, P.E.

CERTIFIED ONLY WITH RESPECT TO INTERNAL STABILITY OF THE DOUBLEWAL STRUCTURE BASED ON LOADS AND SOIL DATA INDICATED ON THESE DRAWINGS.
SEE DESIGN CHECK NOTES SHEET 1 OF 21

JOHN S. DEERKOSKI, P.E.
OHIO LICENSE NO. E-43379

This drawing contains information proprietary to Doublewal Corporation, and is being furnished for the use of OHIO D.O.T. only in connection with this project, and the information contained herein is not to be transmitted to any other organization unless specifically authorized in writing by Doublewal Corporation. The furnishing of this drawing does not constitute an expressed or implied license under U.S. Patent Numbers 4,196,161; 4,251,196; 4,351,507 and 4,372,091; Canadian Patent Number 1,084,246 and 1,104,795 or other Patents Pending.

DESIGN 3

DOUBLEWAL CORPORATION 95/98
PLAINVILLE, CONNECTICUT 06062

AKRON EAST EXPRESSWAY
AKRON, OHIO
PROPOSED DOUBLEWAL WALL NO. 14
I-76 STA. 632+10.29 TO STA. 634+00.93
PLAN & ELEVATION

DESIGNED	DRAWN	TRACED	CHECKED	REVIEWED	DATE	REVISED
DCM	MHM		DCM	WLB	9/89	

DATE 9-12-89	SCALE N.T.S.	DWG NO. 42-15	
DR BY MHM	JOB NO 38075	SHEET 19 OF 21	
CHK. BY DCM/WLB			

FHWA REGION	STATE	PROJECT	
5	OHIO		

SUM-76-11.57

802
1214

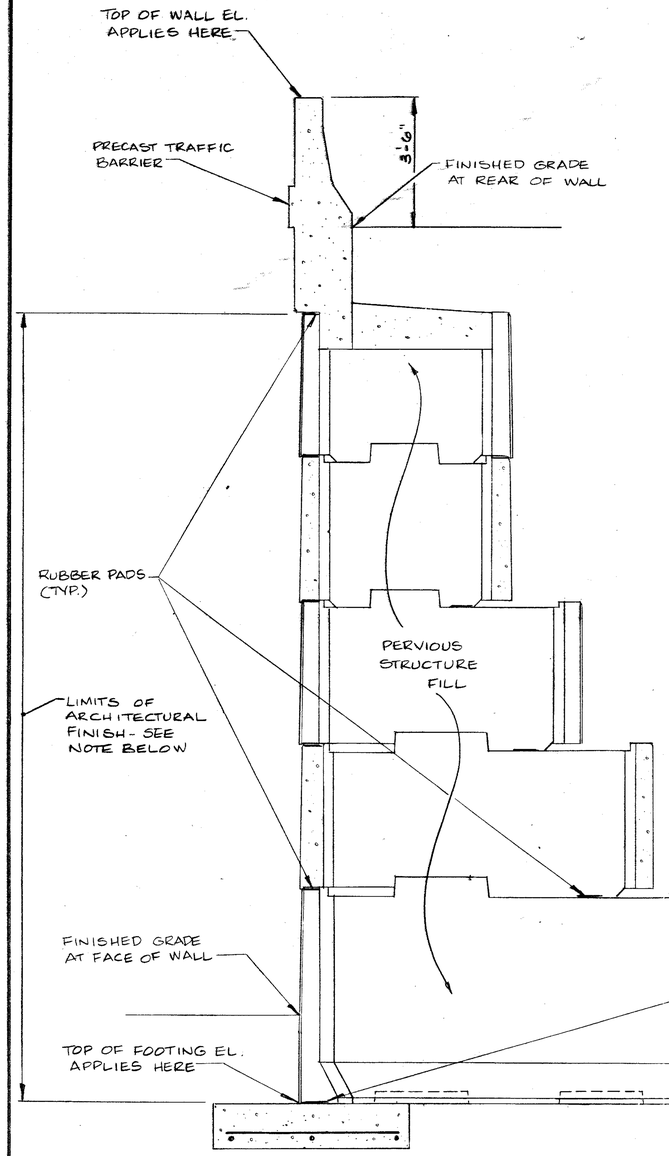

TYPICAL SECTION

ALL WALLS EXCEPT WALL 9

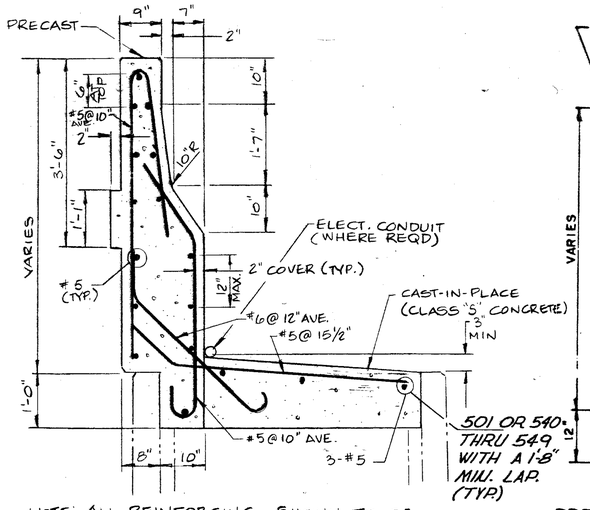

NOTE: ALL REINFORCING SHOWN TO BE EPOXY COATED

PRECAST TRAFFIC BARRIER

(ALL WALLS EXCEPT WALL NO. 9)

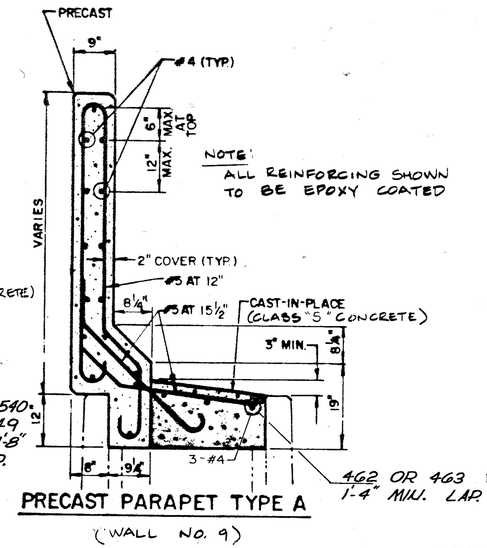

NOTE: ALL REINFORCING SHOWN TO BE EPOXY COATED

PRECAST PARAPET TYPE A

(WALL NO. 9)

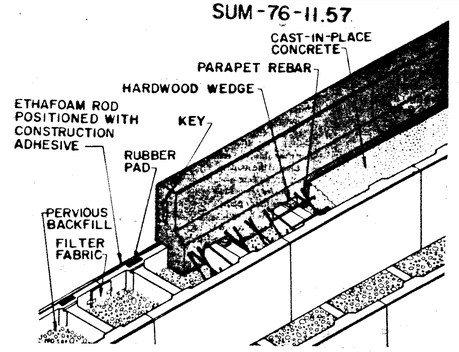

TYPICAL ISOMETRIC AT PARAPET

(AT REAR FACE OF WALL)

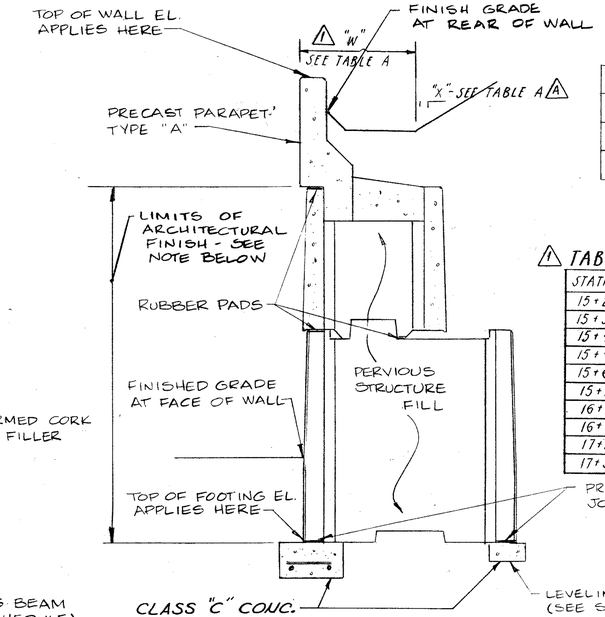

TYPICAL SECTION

WALL 9

SPECIAL PAD SIZES	
A	5" X 10"
B	5" X 12"
C	6" X 12"

(A) TABLE A

STATION	MIN. "W" (FT.)	MIN. "X"
15+26	13	11.2
15+38	9	5.79
15+46	8	4.38
15+49	6	4.03
15+61	6	2.98
15+75	5	2.31
16+23	5	2.17
16+94	5	2.00
17+19	5	2.00
17+35	5	2.00

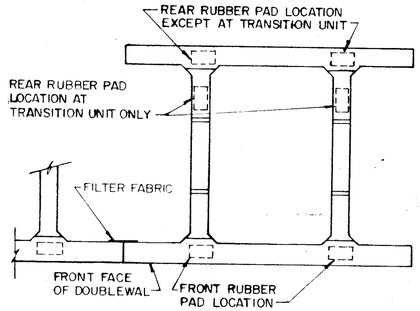

UNIT PLAN VIEW

N.T.S.

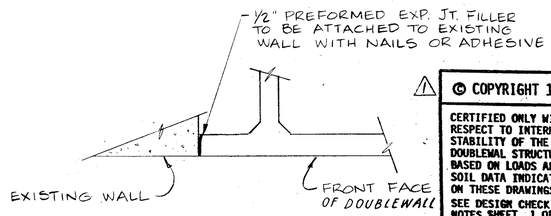

SECTION X-X

(SECTION Y-Y OPPOSITE HAND)

NOTES:

1) ALL RUBBER PADS SHALL BE 5" x 8" x 3/8" ±. PADS MAY BE USED IN COMBINATIONS OF 1/16", 1/4", & 3/8" MAX. TOTAL THICKNESS OF 3/4". PADS SHALL BE MANUFACTURED BY J.V.I. INC., SKOKIE, ILL.
2) THE SPACE BETWEEN PADS IN FRONT FACE SHALL BE FILLED WITH CLOSED CELL POLYETHYLENE FOAM ROD JOINT FILLER.
3) ALL HALF UNITS SHALL HAVE THREE PADS AT FRONT FACE.

NOTE:

ARCHITECTURAL FINISH TO BE 3/4" FRACTURE FIN FINISH AS PER DOUBLEWAL PLAN NOTES

SEE SHEET 97/98

© COPYRIGHT 1990 JOHN S. DEERKOSKI, P.E.

CERTIFIED ONLY WITH RESPECT TO INTERNAL STABILITY OF THE DOUBLEWAL STRUCTURE BASED ON LOADS AND SOIL DATA INDICATED ON THESE DRAWINGS.
SEE DESIGN CHECK NOTES SHEET 1 OF 21

JOHN S. DEERKOSKI, P.E.
OHIO LICENSE NO. E-43379

DESIGN 3

DOUBLEWAL CORPORATION 96/98
PLAINVILLE, CONNECTICUT 06062

AKRON EAST EXPRESSWAY
AKRON, OHIO

TYPICAL SECTIONS & DETAILS

DESIGNED	DRAWN	TRACED	CHECKED	REVIEWED	DATE	REVISED
DCM	JSU		DCM	WLB	9/89	

DATE	9-12-89
DR. BY	JSU
CHK. BY	WLB
SCALE	N.T.S.
JOB NO.	38075
DWG. NO.	42-15
SHEET	20 OF 21

NO	REVISION	BY	C'K'D	DATE
1	ADDED TABLE A	V.V.		10-22-90

This drawing contains information proprietary to Doublewal Corporation, and is being furnished for the use of OHIO D.O.T. only in connection with this project, and the information contained herein is not to be transmitted to any other organization unless specifically authorized in writing by Doublewal Corporation. The furnishing of this drawing does not constitute an expressed or implied license under U.S. Patent Numbers 4,196,161; 4,251,196; 4,351,507 and 4,372,091; Canadian Patent Number 1,084,246 and 1,104,798 or other Patents Pending.

FHWA REGION	STATE	PROJECT		
5	OHIO			

803
1214

SUM-76-11.57

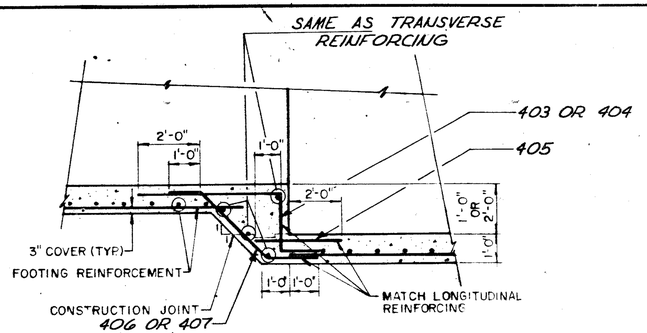

1' OR 2' FOOTING STEP DETAIL

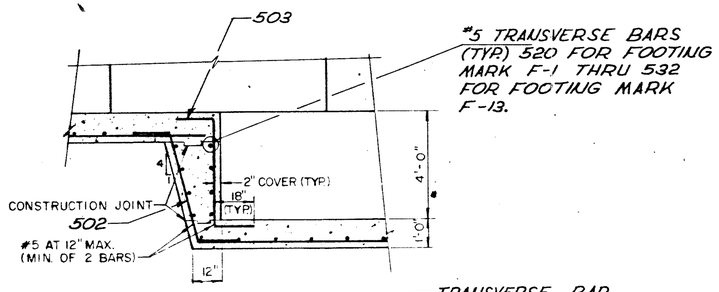

4' FOOTING STEP DETAIL

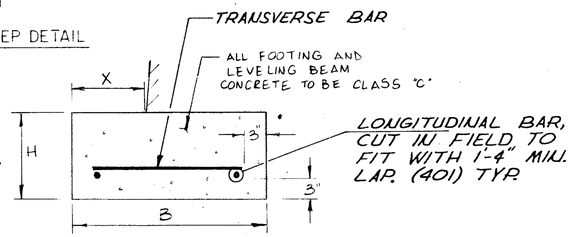

FOOTING DETAIL
N.T.S.

FOOTING SCHEDULE						LEVELING BEAM		
FOOTING MARK	H	B	X	REINFORCING TRANSVERSE	REINFORCING LONGITUDINAL	H	B	X
F1	1'-0"	1'-4"	0'-4½"	410 @ 18"	2-#401	0'-6"	1'-0"	0'-3"
F2	1'-0"	1'-9"	0'-7½"	411 @ 18"	2-#401	0'-6"	1'-0"	0'-3"
F3	1'-0"	2'-0"	0'-9"	412 @ 18"	2-#401	0'-6"	1'-0"	0'-3"
F4	1'-0"	2'-3"	0'-11½"	413 @ 18"	2-#401	0'-6"	1'-0"	0'-3"
F5	1'-0"	2'-6"	1'-0"	414 @ 15"	2-#401	0'-6"	1'-0"	0'-3"
F6.	1'-0"	2'-9"	1'-0½"	415 @ 12"	2-#401	0'-6"	1'-0"	0'-3"
F7	1'-0"	3'-1"	1'-2½"	504 @ 18"	2-#401	0'-6"	1'-0"	0'-3"
F8	1'-0"	3'-6"	1'-5½"	506 @ 13"	3-#401	0'-6"	1'-0"	0'-3"
F9	1'-0"	4'-0"	1'-7"	507 @ 12"	3-#401	0'-6"	1'-0"	0'-3"
F10	1'-0"	4'-6"	1'-10"	620 @ 12"	3-#401	0'-6"	1'-0"	0'-3"
F11	1'-1"	5'-0"	2'-1"	621 @ 10"	3-#401	1'-0"	1'-3"	0'-4½"
F12	1'-2"	5'-6"	2'-4"	720 @ 11"	3-#401	1'-0"	1'-3"	0'-4½"
F13	1'-3"	5'-9"	2'-6"	721 @ 10"	3-#401	1'-0"	1'-6"	0'-6"

ALL REINFORCING TO BE GRADE 60.

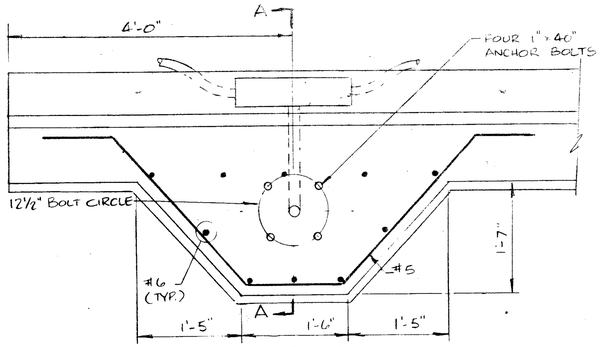

PLAN

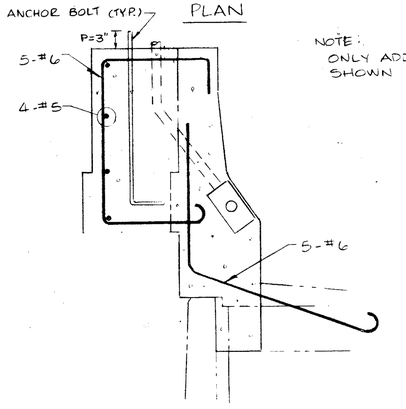

SECTION A-A

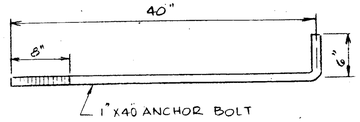

ANCHOR BOLT DETAIL

NOTE FOR ANCHOR BOLT PAY ITEM AND QUANTITY SEE LIGHTING PLAN SUMMARY

NOTE:
ONLY ADDITIONAL REINFORCING SHOWN

NOTES

(1) A 3/4" FRACTURE FINISH FACE SHALL BE ON THE FRONT OF ALL DOUBLEWAL MODULES AS PER RETAINING WALL GENERAL NOTES. PRECAST TRAFFIC BARRIER AND PARAPET SHALL NOT HAVE FRACTURE FINISH FACE.

(2) ALL REINFORCING STEEL IN THE PRECAST TRAFFIC BARRIER, PARAPET ALONG WITH CAST-IN-PLACE CONCRETE ADJACENT TO BARRIER AND PARAPET AND THE REINFORCING STEEL IN THE FRONT FACE OF THE DOUBLEWAL MODULES SHALL BE EPOXY COATED.

(3) ALL STEEL REINFORCING BARS IN ALL CAST-IN-PLACE CONCRETE

- SHALL HAVE 2" CONCRETE CLEARANCE EXCEPT AS NOTED OTHERWISE

- SHALL HAVE THE FOLLOWING PREFIXES:

EPOXY COATED	NON-EPOXY COATED
1EW3 FOR WALL NO. 1	1W3 FOR WALL NO. 1
2EW3 FOR WALL NO. 2	2W3 FOR WALL NO. 2
3EW3 FOR WALL NO. 3	3W3 FOR WALL NO. 3
4EW3 FOR WALL NO. 4	4W3 FOR WALL NO. 4
5EW3 FOR WALL NO. 5	5W3 FOR WALL NO. 5
9EW3 FOR WALL NO. 9	9W3 FOR WALL NO. 9
10EW3 FOR WALL NO. 10	10W3 FOR WALL NO. 10
11EW3 FOR WALL NO. 11	11W3 FOR WALL NO. 11
12EW3 FOR WALL NO. 12	12W3 FOR WALL NO. 12
13EW3 FOR WALL NO. 13	13W3 FOR WALL NO. 13
14EW3 FOR WALL NO. 14	14W3 FOR WALL NO. 14

(4) FOR ANCHOR BOLT PAY ITEM AND QUANTITY, SEE LIGHTING PLAN SUMMARY.

(5) FOR DETAILS AND NOTES OF INLET Nº 3, AS PER PLAN Nº 2, SEE SHEET 552. THE INLET SHALL BE PAID FOR AS PER ITEM 604-INLET Nº 3, AS PER PLAN Nº 2, AND SHALL INCLUDE COST OF CAST IN PLACE CONCRETE BELOW THE TRAFFIC BARRIER ANCHORAGE SLAB. ANY ADDITIONAL COST FOR FIELD CUTTING OF REINFORCING STEEL, PROVIDING ACCESS THROUGH THE WALL MODULE FOR PIPES ETC., IS TO BE INCIDENTAL TO THE COST OF ITEM SPECIAL DOUBLEWAL.

PRECAST LIGHT STANDARD DETAILS

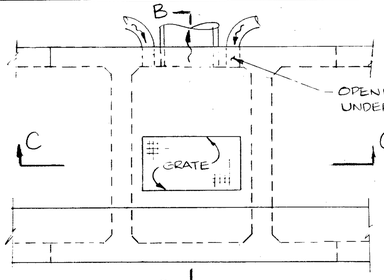

PLAN

DOUBLEWAL MODULE TO BE MODIFIED BY MANUFACTURER SEAL OPENING WITH NONSHRINK GROUT (COST TO BE INCIDENTAL TO THE COST OF ITEM SPECIAL DOUBLEWAL)

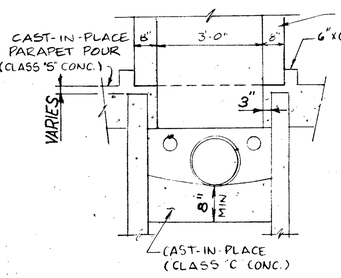

SECTION C-C

PRECAST TRAFFIC BARRIER ANCHORAGE STEEL TO BE CUT IN FIELD TO ACCOMODATE INLET OPENING COST TO BE INCIDENTAL TO COST OF ITEM SPECIAL DOUBLEWAL

INLET DETAILS

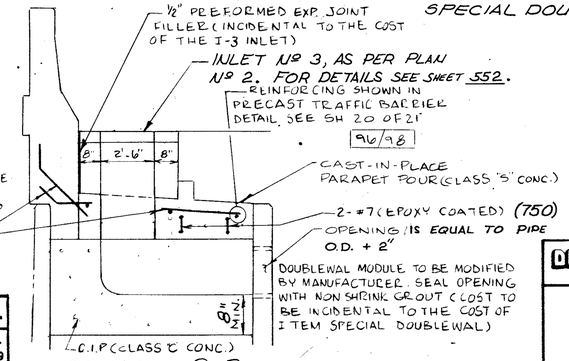

SECTION B-B

© COPYRIGHT 1990 JOHN S. DEERKOSKI, P.E.

CERTIFIED ONLY WITH RESPECT TO INTERNAL STABILITY OF THE DOUBLEWAL STRUCTURE BASED ON LOADS AND SOIL DATA INDICATED ON THESE DRAWINGS.
SEE DESIGN CHECK NOTES SHEET 1 OF 21

JOHN S. DEERKOSKI, P.E.
OHIO LICENSE NO. E-43379

This drawing contains information proprietary to Doublewal Corporation, and is being furnished for the use of OHIO D.O.T only in connection with this project, and the information contained herein is not to be transmitted to any other organization unless specifically authorized in writing by Doublewal Corporation. The furnishing of this drawing does not constitute an expressed or implied license under U.S. Patent Numbers 4.196.161, 4.251.196, 4.351.507 and 4.372.091. Canadian Patent Number 1.084.246 and 1.104.798 or other Patents Pending.

DESIGN 3

DOUBLEWAL CORPORATION 97/98
PLAINVILLE, CONNECTICUT 06062

AKRON EAST EXPRESSWAY
AKRON, OHIO

FOOTING & MISCELLANEOUS DETAILS

DESIGNED	DRAWN	TRACED	CHECKED	REVIEWED	DATE	REVISED
DCM	JSD		BCM	WLB	9/89	

DATE 9-12-89	SCALE N.T.S.	DWG. NO. 42-15	
DR. BY JSD	JOB NO. 38075	SHEET 21 OF 21	
CHK. BY WLB			

FHWA REGION	STATE	PROJECT	
5	OHIO		

804/1214

SUM-76-11.57

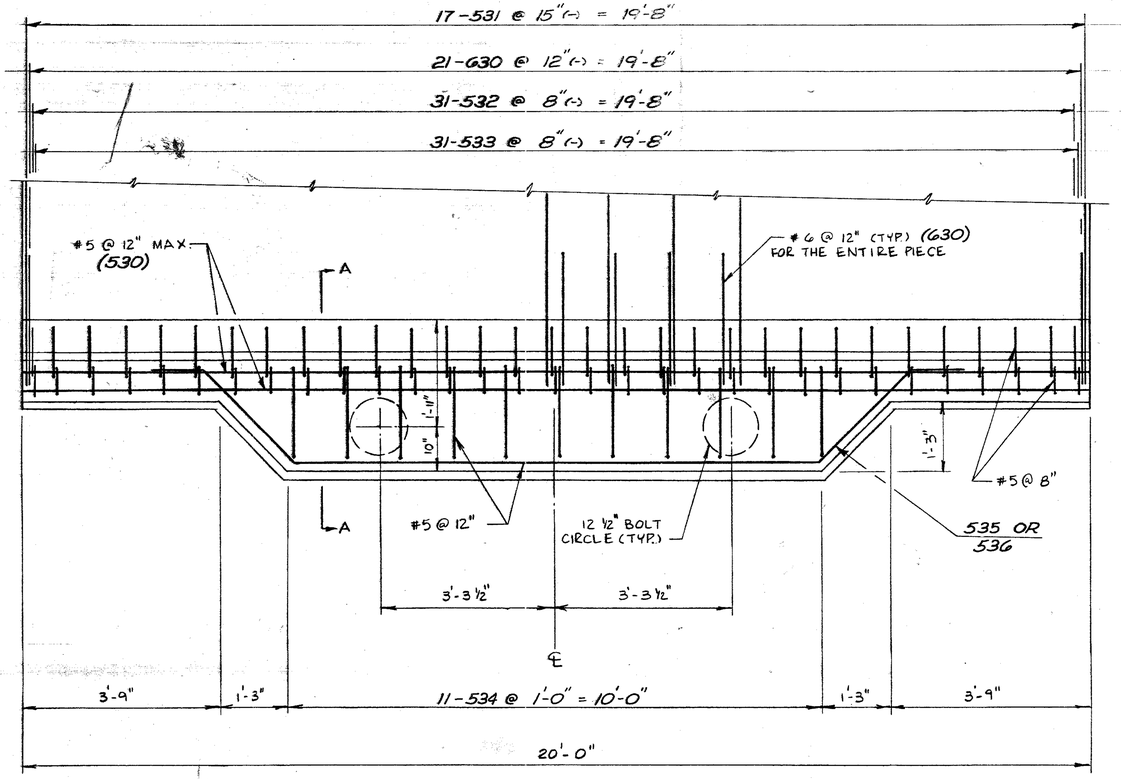

PLAN

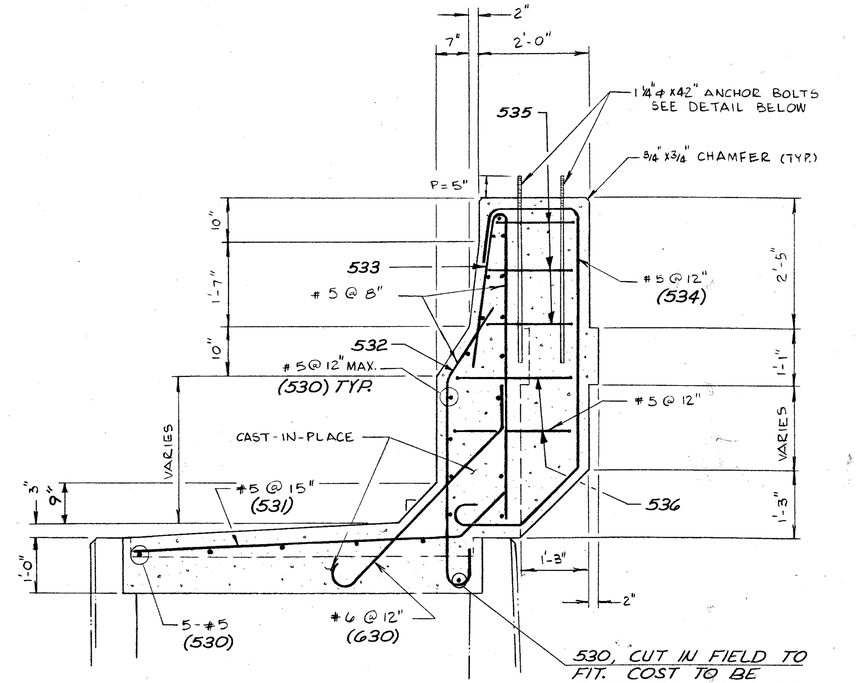

SECTION A-A

NOTES:

1. ALL REINFORCING BARS SHALL MEET THE REQUIREMENTS OF ITEM 509 EPOXY COATED REINFORCING AND SHALL BE PLACED TO MISS DOUBLEWAL CROSS BEAMS.
2. ALL REINFORCING TO BE EPOXY COATED.
3. ALL REINFORCING BARS TO HAVE 2" CLEARANCE EXCEPT WHERE NOTED.
4. CONCRETE TO BE CLASS "S" CONCRETE.
5. FOR ADDITIONAL NOTES SEE SHEET 97/98.

CAST-IN-PLACE SIGN SUPPORT DETAILS

WALL 1 ℄ STA. 574+97.39 SEE SHEET 77/98.

WALL 12 ℄ STA. 630+89.20 SEE SHEET 90/98.

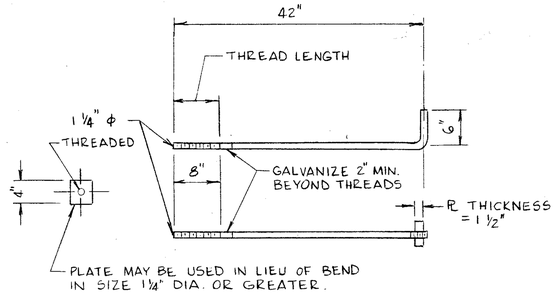

ANCHOR BOLT DETAIL

NOTE: FOR ANCHOR BOLT PAY ITEM AND QUANTITY SEE LIGHTING PLAN SUMMARY.

© COPYRIGHT 1990 JOHN S. DEERKOSKI, P.E.

CERTIFIED ONLY WITH RESPECT TO INTERNAL STABILITY OF THE DOUBLEWAL STRUCTURE BASED ON LOADS AND SOIL DATA INDICATED ON THESE DRAWINGS.
SEE DESIGN CHECK NOTES SHEET 1 OF 11

JOHN S. DEERKOSKI, P.E.
OHIO LICENSE NO. E-43379

This drawing contains information proprietary to Doublewal Corporation, and is being furnished for the use of OHIO D.O.T. only in connection with this project, and the information contained herein is not to be transmitted to any other organization unless specifically authorized in writing by Doublewal Corporation. The furnishing of this drawing does not constitute an expressed or implied license under U.S. Patent Numbers 4,196,161; 4,251,196; 4,351,507 and 4,372,091; Canadian Patent Number 1,084,246 and 1,104,786 or other Patents Pending.

DATE 8-3-90	SCALE N.T.S	DWG NO. 42-15
DR. BY MHM	JOB NO. 38075	SHEET 21A OF 21
CHK BY DCM, WLB		

DESIGN 3

DOUBLEWAL CORPORATION 98/98
PLAINVILLE, CONNECTICUT 06062

AKRON EAST EXPRESSWAY
AKRON, OHIO
SIGN SUPPORT DETAILS

DESIGNED	DRAWN	TRACED	CHECKED	REVIEWED	DATE	REVISED
DCM	MHM		DCM	WLB	8/90	

F.H.W.A. REG.	STATE	PROJECT	
5	OHIO		

805/1214

SUMMIT COUNTY
SUM-76-11.57

SPIRAL DATA WESTBOUND

θs = 2°08'23"
Ls = 173.50'
LT = 115.68'
ST = 57.84'

EXISTING STRUCTURE

STRUCTURE FILE NO: 7706154, 7706189
TYPE: TWIN SIMPLE SPAN STEEL BEAM WITH REINFORCED CONCRETE DECK AND SUB-STRUCTURE.

SPAN: VARIES
ROADWAY: VARIES
LOADING: CF 2000
SKEW: VARIES
WEARING SURFACE: 6" ASPHALTIC CONCRETE
APPROACH SLAB: 15'-0" CONCRETE
ALIGNMENT: E.B. TANGENT, W.B. CURVE LT.
SUPERELEVATION: E.B. NONE, W.B. 0.04 FT/FT
YEAR BUILT: 1955

PROPOSED STRUCTURE

PROPOSED WORK: UPGRADE EXISTING SIMPLE SPAN STEEL BEAM STRUCTURE INCLUDING REPLACEMENT OF CONCRETE DECK AND PARAPETS, REPLACE EXPANSION JOINT MECHANISMS, REPLACE BRIDGE BEARING DEVICES, REPAIR ABUTMENTS, CLEAN AND REPAINT STEEL, RAISE THE SUPERSTRUCTURE, REPLACE APPROACH SLABS, SEAL ABUTMENTS, WIDEN NORTH DECK AND IMMEDIATE SUBSTRUCTURE.

SPAN: VARIES: E.B. 57'-01/8", W.B. 54'-7-3/8" C/C BEARING ALONG BEAMS.
ROADWAY: E.B. 65'-5", W.B. VARIES FROM 54'-0" TO 54'-03/16" (TOE TO TOE OF PARAPETS)
LOADING: HS 20-44 CASE I AND THE ALTERNATE MILITARY LOADING.
SKEW: E.B. 22°55'42" LT. FWD., W.B. 15°45'40" LT. FWD. TO REF. CHORD.
WEARING SURFACE: MONOLOTHIC
APPROACH SLABS: AS-1-81 (15'-0" LONG)
ALIGNMENT: E.B. TANGENT, W.B. CURVE 2°28'00" LT.
SUPERELEVATION: E.B. NONE, W.B. 0.04 FT/FT.

UTILITY NOTE:
UTILITIES SHOWN ARE EXISTING AND REMAIN IN PLACE.

EARTHWORK NOTE:
EARTHWORK LIMITS SHOWN ARE APPROXIMATE. ACTUAL SLOPES SHALL CONFORM TO PLAN CROSS-SECTIONS

DESIGN TRAFFIC

E.B. 1990	-	37,991 ADT
		5,699 ADTT
2010	-	49,951 ADT
		7,493 ADTT
W.B. 1990	-	38,016 ADT
		5,702 ADTT
2010	-	49,984 ADT
		7,498 ADTT

JOHN DAVID JONES & ASSOC. INC. 1/20
2162 FRONT STREET
CUYAHOGA FALLS, OHIO 44221
ENGINEERS ..... ARCHITECTS ..... PLANNERS

SITE PLAN

BRIDGE NO. SUM-76-1180
OVER INMAN STREET

SUMMIT COUNTY STA. 549+22.60 TO STA 549+85.04

PRESENT TOPOGRAPHY		PROPOSED WORK			
SURVEYED	DRAWN	DESIGNED	DRAWN	CHECKED	REVIEWED
		JRS	JRS	BCK	R&K 3-6-87

86005/K

F.H.W.A. REGION	STATE	PROJECT
5	OHIO	

806
1214

SUMMIT COUNTY
SUM-76-11.57

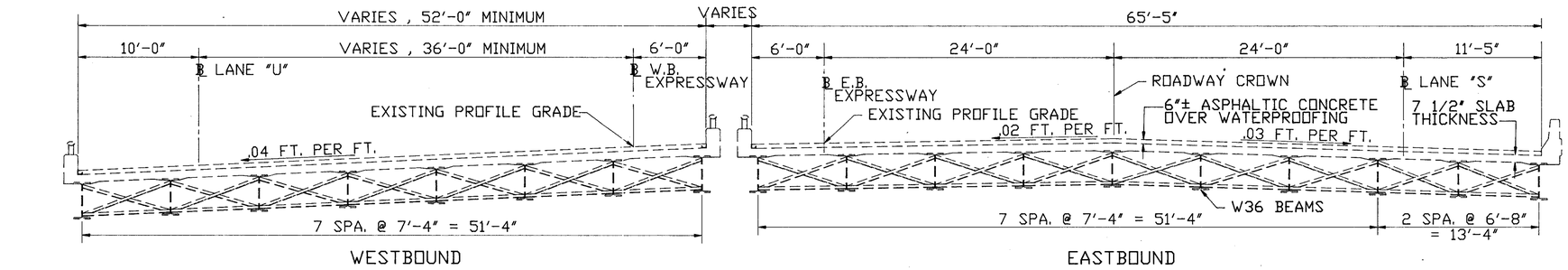

EXISTING TRANSVERSE SECTION

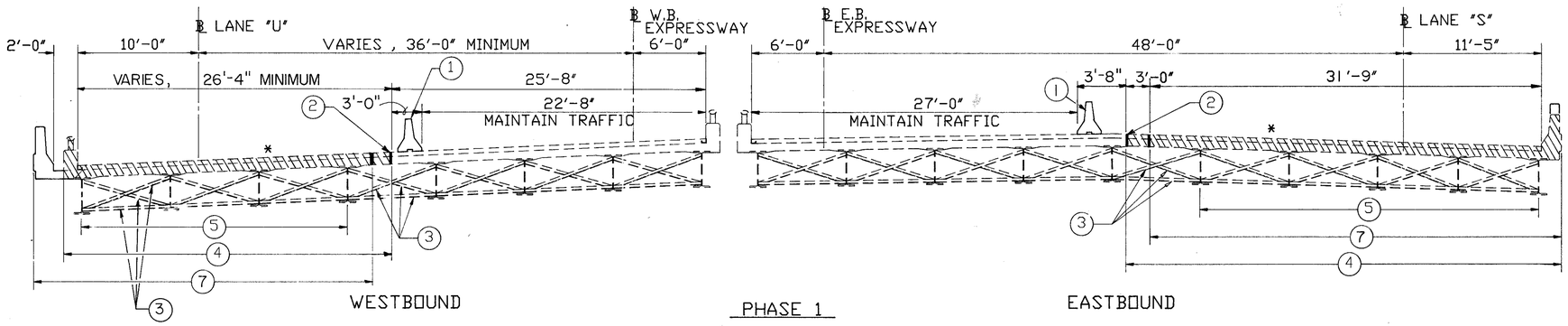

PHASE 1

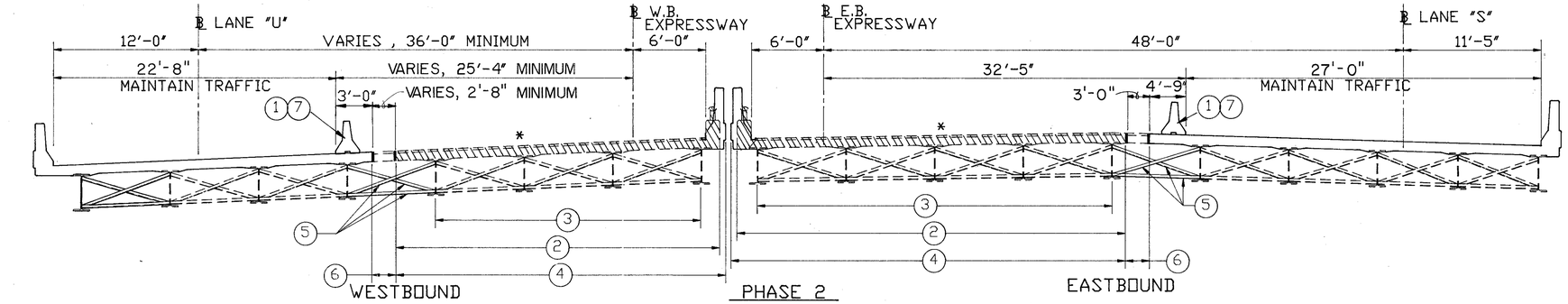

PHASE 2

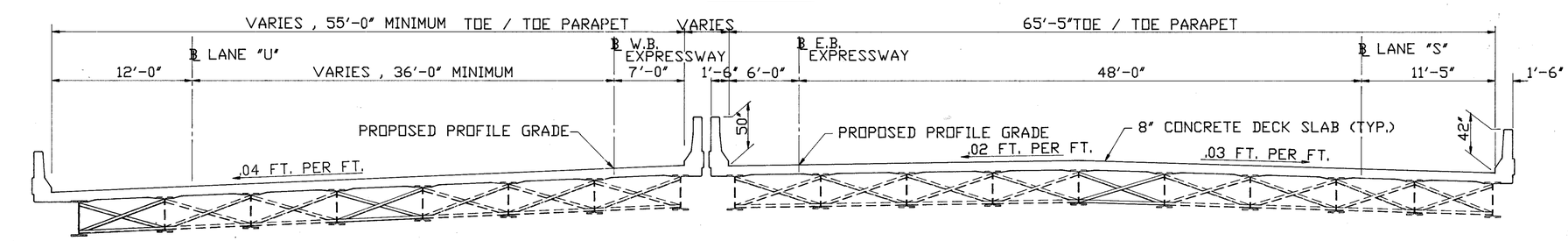

FINAL TRANSVERSE SECTION

NOTE :
ITEM 622 , PORTABLE CONCRETE BARRIER , MODIFIED , IS CARRIED IN THE ROADWAY QUANTITIES.
REFER TO STANDARD DRAWING MC-9.2 FOR PORTABLE PRECAST CONCRETE BARRIER DETAILS.
ANCHORAGE OF THE PORTABLE CONCRETE BARRIER TO THE DECK IS REQUIRED.

PHASE 1 SEQUENCE

1. INSTALL PORTABLE BARRIER AND MAINTAIN TRAFFIC.
2. CUT CONCRETE DECK, FULL DEPTH AND FULL LENGTH OF DECK.
3. REMOVE CROSSFRAMES SHOWN.
4. REMOVE PORTION OF DECK SHOWN, INCLUDING ASPHALT OVERLAY CONCRETE DECK, PARAPET AND RAILING TO LIMITS SHOWN.
5. JACK BEAMS SHOWN TO PROPOSED VERTICAL POSITION, REPLACE BEARING DEVICES.
6. REPLACE NORTH FASCIA BEAM ON WEST BOUND BRIDGE, INSTALL CROSS-FRAMES.
7. CONSTRUCT PROPOSED CONCRETE DECK AND 42" PARAPETS TO LIMITS SHOWN.

PHASE 2 SEQUENCE

1. MOVE PORTABLE BARRIER AND MAINTAIN TRAFFIC.
2. REMOVE REMAINDER OF DECK AND PARAPETS.
3. JACK REMAINING SUPERSTRUCTURE TO PROPOSED VERTICAL POSITION, AND REPLACE BEARING DEVICES.
4. CONSTRUCT DECK TO LIMITS SHOWN, INCLUDING CONCRETE DECK, AND 50" MEDIAN PARAPETS.
5. INSTALL CROSSFRAMES.
6. CONSTRUCT DECK CLOSURE STRIPS.
7. REMOVE PORTABLE BARRIERS.

NOTES:
1) FOR DETAILS OF PORTABLE CONCRETE BARRIERS, APPROPRIATE NOTES AND QUANTITIES SEE MAINTENANCE OF TRAFFIC PLANS, SHEET 32 IN THE ROADWAY PLAN SET.
2) SEQUENCE OF BRIDGE CONSTRUCTION SHALL BE COORDINATED WITH ALL OTHER SEQUENCES.
3) * CROSS-HATCHED AREAS ARE REMOVAL LIMITS.

JOHN DAVID JONES & ASSOC., INC. 2 / 20
2162 FRONT STREET
CUYAHOGA FALLS, OHIO 44221
ENGINEERS ARCHITECTS PLANNERS

TRANSVERSE SECTIONS AND MAINTENANCE OF TRAFFIC

BRIDGE No. SUM-76-1180
OVER INMAN STREET

DESIGNED	DRAWN	TRACED	CHECKED	REVIEWED	DATE	REVISED
J.R.S.	R.W.M.		B.C.K.	P.A.K.	9-10-91	

ESTIMATED QUANTITIES

QUANTITY CALCULATIONS
MADE BY: R.W. DATE: 6-90
CH'KD BY: R.B. DATE: 8-90

F.H.W.A. REGION	STATE	PROJECT	
5	OHIO		

807 / 12.14

SUMMIT COUNTY
SUM-76-11.57

ITEM	ITEM EXT.	TOTAL	UNIT	DESCRIPTION	ABUTMENTS	SUPER STRUCTURE	GENERAL	
202	11202	LUMP		PORTIONS OF STRUCTURES REMOVED			LUMP	
509	15800	64841	LB.	EPOXY COATED REINFORCING STEEL, GRADE 60	18525	45816	500	
510	13300	192	EACH	DOWEL HOLES FOR WINGWALL REPLACEMENT BARS (1'-2" DEEP)	192			
511**	33404	225	CU. YD.	CLASS S CONCRETE, SUPERSTRUCTURE (USING SHRINKAGE COMPENSATING CEMENT)(SEE PROPOSAL NOTE)		225		
511**	33410	LUMP		CLASS S CONCRETE, USING SHRINKAGE COMPENSATING CEMENT, FOR PRE-Placement TESTING(SEE PROPOSAL NOTE)			LUMP	
511	31502	225	CU.YD.	CLASS S CONCRETE, SUPERSTRUCTURE		225		
511	45701	272	CU.YD.	CLASS C CONCRETE, ABUTMENT, AS PER PLAN	272			
511	51100	30	Cu. Yd.	Class C Concrete, Facing, As Per Plan		30		
513	11300	15200	LB.	STRUCTURAL STEEL, ASTM A-36, AISC CATEGORY I		15200		
513	16000	3000	LB.	STRUCTURAL STEEL FOR REHABILITATION		3000		
513	16590	2200	LB.	STRUCTURAL STEEL, MISC. CROSS FRAME REPLACEMENT		2200		
513	16800	36	EACH	STRUCTURAL STEEL SHIM PLATES	36			
516	11211	269	LIN.FT.	STRUCTURAL EXPANSION JOINTS INCL. ELASTOMERIC STRIP SEALS, AS PER PLAN		269		
516	30501	20	LIN.FT.	PVC WATERSTOP, AS PER PLAN	20			
516	45305	36	EACH	REFURBISH BEARING DEVICES, AS PER PLAN	36			
518	21100	84	CU.YD.	POROUS BACKFILL	84			

** THESE TWO ITEMS SHALL CONSTITUTE ONE ALTERNATE BID TO ITEM 511, CLASS S CONCRETE, SUPERSTRUCTURE.

ITEM	ITEM EXT.	TOTAL	UNIT	DESCRIPTION	ABUTMENTS	SUPER STRUCTURE	GENERAL	
				SEE SHEET 678/1214 FOR LIGHTING SUMMARY				
SPECIAL	51267502	90	SQ.YD.	SEALING CONCRETE SURFACES (EPOXY) (SEE PROPOSAL NOTE)	90			
SPECIAL	51267504	1224	SQ.YD.	SEALING CONCRETE SURFACES (NON-EPOXY) (SEE PROPOSAL NOTE)	805	419		
SPECIAL	51400050	14900	SQ. FT.	SURFACE PREPARATION OF EXISTING STEEL, SYSTEM OZEU (SEE PROPOSAL NOTE)		14900		
SPECIAL	51400056	14900	SQ. FT.	FIELD PAINTING OF EXISTING STEEL, PRIME COAT, SYSTEM OZEU (SEE PROPOSAL NOTE)		14900		
SPECIAL	51400060	14900	SQ. FT.	FIELD PAINTING OF EXISTING STEEL, INTERMEDIATE COAT, SYSTEM OZEU (SEE PROPOSAL NOTE)		14900		
SPECIAL	51400065	14900	SQ. FT.	FIELD PAINTING OF EXISTING STEEL, FINISH COAT, SYSTEM OZEU		14900		
~~SPECIAL~~	~~51426500~~	~~LUMP~~		~~HAZARDOUS WASTE MANAGEMENT (SEE PROPOSAL NOTE)~~			~~LUMP~~	
~~SPECIAL~~	~~51426510~~	~~LUMP~~		~~NON-HAZARDOUS WASTE MANAGEMENT (SEE PROPOSAL NOTE)~~			~~LUMP~~	
519	11100	3272	SQ.FT.	PATCHING CONCRETE STRUCTURES	3272			
SPECIAL	53000200	LUMP		JACKING STRUCTURE			LUMP	
SPECIAL	53000600	5366	SQ.FT.	REMOVAL OF SHOTCRETE FROM ABUTMENT FACES	5366			
SPECIAL	51400600	LUMP		FIELD PAINTING OF NEW STEEL, SYSTEM IZEU			LUMP	

JOHN DAVID JONES & ASSOC., INC. 3/20
2162 FRONT STREET
CUYAHOGA FALLS, OHIO 44221
ENGINEERS ARCHITECTS PLANNERS

QUANTITY TABLE

BRIDGE No. SUM-76-11.80
OVER INMAN ST.

DESIGNED	DRAWN	TRACED	CHECKED	REVIEWED	DATE	REVISED
JRS	EMB	—	BRH	PAK	11/90	

GENERAL NOTES

F.H.W.A. REGION	STATE	PROJECT	
5	OHIO		

8080-1214

SUMMIT COUNTY
SUM-76-11.57

ITEM 511 - CLASS C CONCRETE, ABUTMENT, AS PER PLAN

THIS ITEM CONSISTS OF THE REMOVAL OF ALL LOOSE AND DISINTEGRATED CONCRETE, THE PREPARATION OF THE SURFACE, THE FURNISHING AND PLACING OF THE REINFORCING STEEL INCLUDING WELDED STEEL WIRE FABRIC, DOWELS AND EXPANSION BOLTS, FORMS, FORM LINERS, AND THE PLACING OF CONCRETE, INCLUDING CURING OF SAME.

MATERIALS SHALL CONFORM TO THE FOLLOWING:

CONCRETE - CLASS C.....499, 511
DOWELS.....510 OR SS852 AND SS952
REINFORCING STEEL.....509
WELDED STEEL WIRE FABRIC.....709.14

ALL LOOSE AND DISINTEGRATED CONCRETE SHALL BE REMOVED FROM THE AREAS TO BE REPAIRED IN SUCH A MANNER AND TO SUCH AN EXTENT AS TO EXPOSE A SOUND CONCRETE SURFACE. THE DEPTH OF A PATCH SHALL BE NOT LESS THAN 4 INCHES, EXCEPT ON HORIZONTAL SURFACES, ON WHICH IT SHALL BE NOT LESS THAN 3 INCHES. SOUND CONCRETE (BENEATH THE DISINTEGRATED CONCRETE) SHALL BE REMOVED FOR A DEPTH OF NOT LESS THAN 1/4 INCH AND NOT MORE THAN 1 INCH, PROVIDED THAT THE ABOVE MINIMUM DEPTH OF PATCH IS MAINTAINED. SQUARE OR PREFERABLY SLIGHTLY UNDERCUT SHOULDERS, HAVING A DEPTH NOT LESS THAN THE SPECIFIED MINIMUM DEPTH OF THE PATCH, SHALL BE MADE AT THE EDGES OF ALL PATCHES.

ALL INSPECTION TOOLS, EQUIPMENT, MATERIALS AND INCIDENTALS NECESSARY FOR THE ENGINEER TO SOUND 100% OF THE CONCRETE ABUTMENTS, WINGWALLS AND BEAM SEATS SHALL BE SUPPLIED BY THE CONTRACTOR AT THE REQUEST OF THE ENGINEER. PAYMENT SHALL BE INCIDENTAL TO ITEM 511 - CLASS C CONCRETE, ABUTMENT, AS PER PLAN.

ONLY PNEUMATIC OR HAND TOOLS THAT WILL GIVE RESULTS SATISFACTORY TO THE ENGINEER SHALL BE USED IN THE REMOVAL OF THE DISINTEGRATED CONCRETE AND IN PREPARING AND SHAPING THE AREAS TO BE PATCHED.

CARE SHOULD BE USED IN WORKING AROUND REINFORCING STEEL SO AS NOT TO DAMAGE OR DEBOND THE STEEL, OR TO SHATTER THE CONCRETE AROUND IT, BEYOND THE AREA TO BE PATCHED.

REINFORCEMENT WHICH IS LOOSE SHALL BE ADEQUATELY SUPPORTED AND TIED BACK INTO PLACE. REINFORCEMENT THAT IS DAMAGED DURING THE CONTRACTOR'S OPERATIONS SHALL BE REPLACED AT NO COST TO THE DEPARTMENT.

AFTER THE DISINTEGRATED AND LOOSE CONCRETE HAS BEEN REMOVED, THE AREA TO BE PATCHED SHALL BE PROPERLY SHAPED AND ANY DOWELS OR EXPANSION BOLTS NECESSARY TO HOLD THE WIRE FABRIC TO BE USED IN THE PATCH SHALL BE INSTALLED. THE SURFACE OF THE AREA TO BE PATCHED AND EXPOSED REINFORCING STEEL SHALL BE THOROUGHLY CLEANED OF ALL DIRT, DUST OR OTHER FOREIGN MATERIALS BY THE USE OF WATER, AIR UNDER PRESSURE, OR ANY OTHER METHOD THAT PRODUCES SATISFACTORY RESULTS. THE SURFACE SHALL BE THOROUGHLY-DRENCHED WITH CLEAN WATER. BEFORE PLACING THE CONCRETE, THE SURFACE SHALL BE ALLOWED TO DRY TO A DAMP CONDITION.

REINFORCEMENT WILL NOT BE REQUIRED FOR PATCHES ON TOP HORIZONTAL SURFACES. THE REINFORCEMENT FOR PATCHES ON OTHER SURFACES SHALL CONSIST OF EPOXY-COATED WELDED STEEL WIRE FABRIC EITHER 2 INCH BY 2 INCH USING WIRE SIZE NUMBER W 0.9 OR 3 INCH BY 3 INCH USING WIRE SIZE NUMBER W 1.4. THIS FABRIC SHALL COVER THE ENTIRE AREA OF THE PATCH AND SHALL BE PLACED AND HELD APPROXIMATELY 2 INCHES FROM THE COMPLETED EXPOSED SURFACE OF THE PATCH. IT SHALL BE FASTENED TO DOWELS OR EXPANSION BOLTS INSTALLED, BY THE CONTRACTOR, AT NOT TO EXCEED 18-INCH CENTERS IN BOTH DIRECTIONS.

THE CONCRETE SHALL BE CLASS C AND SHALL BE PROPORTIONED, MIXED AND PLACED IN ACCORDANCE WITH 499 AND 511. ABUTMENTS AND WINGWALLS SHALL BE TEXTURED IN ACCORDANCE WITH THE GENERAL NOTES.

FORMS SHALL BE REMOVED WITHIN 24 HOURS AFTER PLACEMENT OF CONCRETE. MEMBRANE CURING MATERIAL SHALL BE APPLIED IMMEDIATELY AS NOTED IN 511.14, METHOD (b).

AFTER CURING AND BEFORE FINAL ACCEPTANCE, ALL PATCHED AREAS SHALL BE SOUNDED. ALL UNSOUND AREAS SHALL BE REMOVED AND REPLACED.

ABUTMENT WALL TEXTURE: ABUTMENTS AND WINGWALLS SHALL BE TEXTURED BY USING FORM LINERS ATTACHED TO FORMWORK PRIOR TO PLACING CONCRETE. AREAS TO RECEIVE TEXTURED CONCRETE SURFACE SHALL INCLUDE THE FULL LENGTH OF EXPOSED ABUTMENT BREAST WALLS AND WINGWALLS FROM FINISHED GRADE OR PAVEMENT TO THE TOP OF THE WALL.

TEXTURED SURFACE SHALL CONSIST OF A 3/4" DEEP FRACTURED FIN TEXTURE. ACCEPTABLE PRODUCTS INCLUDE:

SYMONS CORPORATION
7603 OLD ROCKSIDE ROAD
INDEPENDENCE, OH 44131
(216) 524-5240
PATTERN NO. P/C 30449

GREENSTREAK ,
3400 TREE COURT IND. BLVD.
ST. LOUIS, MO 63122
(800) 325-9504
PATTERN NO. 373

FITZGERALD CONSTRUCTION SALES
17376-A NEWHOPE AVENUE
FOUNTAIN VALLEY, CA 92708
(800) 227-2755
PATTERN NO. 16950

OR AN APPROVED ALTERNATE. THE CONTRACTOR SHALL SUBMIT A SAMPLE OF THE FINISHED CONCRETE TEXTURED SURFACE FOR APPROVAL.

PAYMENT FOR ALL MATERIALS AND LABOR REQUIRED FOR THE TEXTURED SURFACES SHALL BE INCLUDED WITH ITEM 511, Class C CONCRETE, or with Class C concrete facing, As Per Plan.

ITEM 513 - STRUCTURAL STEEL SHIM PLATES: THIS WORK SHALL CONSIST OF THE CLEANING, WELDING, PAINTING AND ALL OTHER WORK PERTAINING TO THE PLACEMENT OF THE SHIM PLATES. CLEANING AND PAINTING SHALL BE ACCORDING TO THE PROPOSAL NOTE (SYSTEM IZEU PAINT).

ITEM - SPECIAL - PATCHING CONCRETE STRUCTURE: AT THE LOCATIONS WHERE LOOSE, DISINTEGRATED OR UNSOUND CONCRETE EXTENDS BEYOND THE LIMITS NOTED IN ITEM 511 - CLASS C CONCRETE, ABUTMENT, AS PER PLAN THE CONTRACTOR SHALL REMOVE THE CONCRETE TO EXPOSE A SOUND CONCRETE SURFACE, PREPARE THE SURFACE AND PLACE NEW CLASS C CONCRETE. ALL OF THESE ITEMS OF WORK AND REPAIR SHALL BE AS DESCRIBED IN THE NOTE TITLED ITEM 511 - CLASS C CONCRETE, ABUTMENT, AS PER PLAN. PAYMENT FOR THIS WORK SHALL BE MEASURED ON A SQUARE FOOT BASIS AND SHALL INCLUDE ONLY THOSE AREAS WHERE THE DEPTH OF PATCHING EXCEEDS THE LIMITS NOTED IN ITEM 511 - CLASS C CONCRETE, ABUTMENT, AS PER PLAN. THE PAYMENT SHALL INCLUDE ALL NECESSARY LABOR, EQUIPMENT, MATERIALS AND INCIDENTALS NECESSARY TO PERFORM THE REQUIRED WORK. SINCE ALL QUANTITIES OF PATCHING SHOWN ON THE PLANS ARE ONLY ESTIMATES, ACTUAL PATCHING QUANTITIES WILL BE DETERMINED THROUGH FIELD INSPECTION AND SOUNDING.

ITEM 516 - REFURBISH BEARING DEVICES, AS PER PLAN: THIS SHALL INCLUDE ALL WORK NECESSARY TO PROPERLY ALIGN BEARINGS AS WELL AS THEIR CLEANING AND PAINTING. INCLUDED SHALL BE THE DISASSEMBLY OF THE BEARINGS, HAND CLEANING (GRINDING IF NECESSARY), SANDBLASTING AND PAINTING WITH SYSTEM IZEU AS REQUIRED BY THE PROPOSAL NOTE, OR SPECIAL REPLACEMENT OF ANY DAMAGED SHEET LEAD (711.19), (INSTALLATION OF ANY STEEL SHIMS OF THE SAME SIZE AS THE BEARINGS TO PROVIDE A SNUG FIT), REALIGNMENT OF THE UPPER BEARING PLATE BY REMOVING EXISTING WELDS AND RE-WELDING SO THAT THE BEARINGS ARE ALIGNED AT 60 DEGREES F., EXTENDING BEARING ANCHORS, RE-ASSEMBLY OF THE BEARINGS, AND TRIMMING OF ENDS OF BEAMS WHERE REQUIRED. ALL WORK SHALL BE TO THE SATISFACTION OF THE PROJECT ENGINEER.

THE CONTRACTOR MAY REPLACE BEARINGS IN KIND AT NO ADDITIONAL COST AT HIS OPTION AND THE WRITTEN APPROVAL OF THE ENGINEER.

PAYMENT FOR ALL THE ABOVE DESCRIBED LABOR AND MATERIALS WILL BE MADE AT THE CONTRACT PRICE BID FOR ITEM 516 - REFURBISH BEARING DEVICES, AS PER PLAN.

ITEM SPECIAL - SEALING CONCRETE SURFACES: THE FOLLOWING CONCRETE SURFACES SHALL BE SEALED WITH EPOXY OR NON-EPOXY SEALER AS SPECIFIED IN ACCORDANCE WITH PROPOSAL NOTE: (THE COLOR OF THE EPOXY SEALER SHALL BE PER FEDERAL STD. 595A 13522)

1. NEW AND EXISTING ABUTMENT BRIDGE SEATS AND EXTENDING FROM THE LEVEL OF THE BRIDGE SEAT ONE FOOT DOWN THE FACE OF THE BREASTWALL WITH EPOXY SEALER.

2. ENTIRE FRONT FACE OF ABUTMENT BREASTWALL FROM THE GROUND LINE UP TO THE LEVEL OF THE BRIDGE SEAT WITH EPOXY OR NON-EPOXY SEALER.

3. INSIDE FACE, TOP AND OUTSIDE FACE OF PARAPET ON WINGWALLS - EPOXY OR NON-EPOXY SEALER.

4. SUPERSTRUCTURE - NINE INCH GUTTER, INSIDE FACE, TOP, AND OUTSIDE FACE OF PARAPET, DECK FASCIA AND SIX INCH UNDERDECK RETURN, WITH EPOXY OR NON-EPOXY SEALER.

ITEM SPECIAL - JACKING STRUCTURE: THE LUMP SUM PRICE BID FOR THIS ITEM SHALL INCLUDE THE FURNISHING OF ALL MATERIALS, LABOR, EQUIPMENT AND INCIDENTALS NECESSARY TO RAISE, SUPPORT AND LOWER THE SUPERSTRUCTURE.

THE EXISTING SUPERSTRUCTURE SHALL BE RAISED UNIFORMLY APPROXIMATELY 12" ABOVE ITS EXISTING ELEVATION. THIS IS ABOUT 6" ABOVE ITS FINAL ELEVATION AND IS REQUIRED IN ORDER TO REINSTALL THE REFURBISHED BOLSTERS. THE SUPERSTRUCTURE SHALL THEN BE LOWERED THE 6" TO ITS FINAL POSITION ON THE NEW 5-3/4" THICK SHIM PLATES. THESE OPERATIONS SHALL BE PERFORMED PRIOR TO PLACEMENT OF NEW DECK CONCRETE.

JACKING SHALL BE DONE IN SUCH A MANNER THAT NO SIGNIFICANT STRESSES SHALL BE INDUCED INTO THE BEAMS AT ANY TIME. JACKING SHALL BE DONE IN SUCH A MANNER AS TO MAINTAIN AXIAL LOADING AT THE ABUTMENT FOOTINGS. DURING JACKING THE DIFFERENTIAL MOVEMENT BETWEEN ADJACENT BEAMS SHALL NOT EXCEED ONE-QUARTER INCH.

THE CONTRACTOR SHALL SUBMIT DRAWINGS AND A DESCRIPTION OF THE METHODS TO BE USED TO RAISE AND SHIM THE SUPERSTRUCTURE TO THE DIRECTOR AT LEAST TWENTY (20) DAYS PRIOR TO COMMENCEMENT OF THIS OPERATION.

IT WILL BE THE CONTRACTOR'S RESPONSIBILITY TO COORDINATE THE STRUCTURE PATCHING OF THE ABUTMENT SEATS WITH THE JACKING AND REFURBISHING/REPLACEMENT OF BOLSTERS, ROCKERS AND BEARING DEVICES AND THE PATCHING REQUIRED UNDER THE BEARING DEVICES.

Item 511 Class C Concrete, Facing, As Per Plan
See note on Sheet 906.

ITEM SPECIAL - FIELD PAINTING OF NEW STEEL, SYSTEM IZEU: THIS ITEM SHALL CONSIST OF FURNISHING ALL NECESSARY LABOR, MATERIALS, AND EQUIPMENT TO CLEAN AND PAINT ALL NEW STEEL SURFACES AS HEREIN SPECIFIED WITH THE FOLLOWING COATINGS:

INORGANIC ZINC PRIME COAT (SHOP APPLIED)
EPOXY INTERMEDIATE COAT (FIELD APPLIED)
URETHANE FINISH COAT (FIELD APPLIED)

ALL OF THE REQUIREMENTS CONTAINED IN THE "FIELD PAINTING OF EXISTING STEEL, SYSTEM IZEU" PROPOSAL NOTE SHALL APPLY, WITH THE FOLLOWING MODIFICATIONS:

MATERIALS

THE COLOR OF URETHANE FINISH COAT SHALL BE "DARK BROWN", FEDERAL SPECIFICATION NUMBER 595 A 10080. AN ACTUAL SAMPLE OF THE PAINT PROPOSED FOR USE SHALL BE SUBMITTED BY THE CONTRACTOR FOR APPROVAL. THE INTERMEDIATE COAT COLOR SHALL BE PER FEDERAL STD. 595A 10219.

PREPARATION

PRIOR TO APPLICATION OF THE PRIME COAT, STEEL SHALL BE PREPARED IN ACCORDANCE WITH 514.04.

ITEM SPECIAL - FIELD PAINTING OF EXISTING STEEL, SYSTEM OZEU: ALL OF THE REQUIREMENTS CONTAINED IN THE "FIELD PAINTING OF EXISTING STEEL, SYSTEM OZEU" PROPOSAL NOTE SHALL APPLY.

THE COLOR OF URETHANE FINISH COAT SHALL BE "DARK BROWN", FEDERAL SPECIFICATION NUMBER 595 A 10080. AN ACTUAL SAMPLE OF THE PAINT PROPOSED FOR USE SHALL BE SUBMITTED BY THE CONTRACTOR FOR APPROVAL. THE INTERMEDIATE COAT COLOR SHALL BE PER FEDERAL STD. 595A 10219.

ITEM SPECIAL - REMOVAL OF SHOTCRETE FROM ABUTMENT FACES:

THE PREVIOUSLY APPLIED PNEUMATICALLY PLACED CONCRETE (GUNITE OR GUNITE-LIKE) SHALL BE REMOVED FROM THE ENTIRE FACE OF THE ABUTMENTS. AFTERWARDS THE WALL SHALL BE SOUNDED TO DETERMINE THE EXTEND OF THE DETERIORATION FOR REPAIR BY ITEM 511, CLASS C CONCRETE, ABOVE FOOTINGS, (AS PER PLAN).

JOHN DAVID JONES & ASSOC., INC.
2162 FRONT STREET
CUYAHOGA FALLS, OHIO 44221
ENGINEERS ARCHITECTS PLANNERS

4b/20

GENERAL NOTES

BRIDGE No. SUM-76-1180
OVER INMAN ST.

DESIGNED	DRAWN	TRACED	CHECKED	REVIEWED	DATE	REVISED
JRS	EMB		BCK	PAK	11-9-87	

543271

F.H.W.A. REGION	STATE	PROJECT	
5	OHIO		

8080a 12/14

SUMMIT COUNTY
SUM-76-11.57

GENERAL NOTES

ITEM 511 - CLASS C CONCRETE, ABUTMENT, AS PER PLAN

THIS ITEM CONSISTS OF THE REMOVAL OF ALL LOOSE AND DISINTEGRATED CONCRETE, THE PREPARATION OF THE SURFACE, THE FURNISHING AND PLACING OF THE REINFORCING STEEL INCLUDING WELDED STEEL WIRE FABRIC, DOWELS AND EXPANSION BOLTS, FORMS, FORM LINERS, AND THE PLACING OF CONCRETE, INCLUDING CURING OF SAME.

MATERIALS SHALL CONFORM TO THE FOLLOWING:

CONCRETE - CLASS C.....499, 511
DOWELS.....510 OR SS852 AND SS952
REINFORCING STEEL.....509
WELDED STEEL WIRE FABRIC.....709.14

ALL LOOSE AND DISINTEGRATED CONCRETE SHALL BE REMOVED FROM THE AREAS TO BE REPAIRED IN SUCH A MANNER AND TO SUCH AN EXTENT AS TO EXPOSE A SOUND CONCRETE SURFACE. THE DEPTH OF A PATCH SHALL BE NOT LESS THAN 4 INCHES, EXCEPT ON HORIZONTAL SURFACES, ON WHICH IT SHALL BE NOT LESS THAN 3 INCHES. SOUND CONCRETE (BENEATH THE DISINTEGRATED CONCRETE) SHALL BE REMOVED FOR A DEPTH OF NOT LESS THAN 1/4 INCH AND NOT MORE THAN 1 INCH, PROVIDED THAT THE ABOVE MINIMUM DEPTH OF PATCH IS MAINTAINED. SQUARE OR PREFERABLY SLIGHTLY UNDERCUT SHOULDERS, HAVING A DEPTH NOT LESS THAN THE SPECIFIED MINIMUM DEPTH OF THE PATCH, SHALL BE MADE AT THE EDGES OF ALL PATCHES.

ALL INSPECTION TOOLS, EQUIPMENT, MATERIALS AND INCIDENTALS NECESSARY FOR THE ENGINEER TO SOUND 100% OF THE CONCRETE ABUTMENTS, WINGWALLS AND BEAM SEATS SHALL BE SUPPLIED BY THE CONTRACTOR AT THE REQUEST OF THE ENGINEER. PAYMENT SHALL BE INCIDENTAL TO ITEM 511 - CLASS C CONCRETE, ABUTMENT, AS PER PLAN.

ONLY PNEUMATIC OR HAND TOOLS THAT WILL GIVE RESULTS SATISFACTORY TO THE ENGINEER SHALL BE USED IN THE REMOVAL OF THE DISINTEGRATED CONCRETE AND IN PREPARING AND SHAPING THE AREAS TO BE PATCHED.

CARE SHOULD BE USED IN WORKING AROUND REINFORCING STEEL SO AS NOT TO DAMAGE OR DEBOND THE STEEL, OR TO SHATTER THE CONCRETE AROUND IT, BEYOND THE AREA TO BE PATCHED.

REINFORCEMENT WHICH IS LOOSE SHALL BE ADEQUATELY SUPPORTED AND TIED BACK INTO PLACE. REINFORCEMENT THAT IS DAMAGED DURING THE CONTRACTOR'S OPERATIONS SHALL BE REPLACED AT NO COST TO THE DEPARTMENT.

AFTER THE DISINTEGRATED AND LOOSE CONCRETE HAS BEEN REMOVED, THE AREA TO BE PATCHED SHALL BE PROPERLY SHAPED AND ANY DOWELS OR EXPANSION BOLTS NECESSARY TO HOLD THE WIRE FABRIC TO BE USED IN THE PATCH SHALL BE INSTALLED. THE SURFACE OF THE AREA TO BE PATCHED AND EXPOSED REINFORCING STEEL SHALL BE THOROUGHLY CLEANED OF ALL DIRT, DUST OR OTHER FOREIGN MATERIALS BY THE USE OF WATER, AIR UNDER PRESSURE, OR ANY OTHER METHOD THAT PRODUCES SATISFACTORY RESULTS. THE SURFACE SHALL BE THOROUGHLY-DRENCHED WITH CLEAN WATER. BEFORE PLACING THE CONCRETE, THE SURFACE SHALL BE ALLOWED TO DRY TO A DAMP CONDITION.

REINFORCEMENT WILL NOT BE REQUIRED FOR PATCHES ON TOP HORIZONTAL SURFACES. THE REINFORCEMENT FOR PATCHES ON OTHER SURFACES SHALL CONSIST OF EPOXY-COATED WELDED STEEL WIRE FABRIC EITHER 2 INCH BY 2 INCH USING WIRE SIZE NUMBER W 0.9 OR 3 INCH BY 3 INCH USING WIRE SIZE NUMBER W 1.4. THIS FABRIC SHALL COVER THE ENTIRE AREA OF THE PATCH AND SHALL BE PLACED AND HELD APPROXIMATELY 2 INCHES FROM THE COMPLETED EXPOSED SURFACE OF THE PATCH. IT SHALL BE FASTENED TO DOWELS OR EXPANSION BOLTS INSTALLED, BY THE CONTRACTOR, AT NOT TO EXCEED 18-INCH CENTERS IN BOTH DIRECTIONS.

THE CONCRETE SHALL BE CLASS C AND SHALL BE PROPORTIONED, MIXED AND PLACED IN ACCORDANCE WITH 499 AND 511. ABUTMENTS AND WINGWALLS SHALL BE TEXTURED IN ACCORDANCE WITH THE GENERAL NOTES.

FORMS SHALL BE REMOVED WITHIN 24 HOURS AFTER PLACEMENT OF CONCRETE. MEMBRANE CURING MATERIAL SHALL BE APPLIED IMMEDIATELY AS NOTED IN 511.14, METHOD (b).

AFTER CURING AND BEFORE FINAL ACCEPTANCE, ALL PATCHED AREAS SHALL BE SOUNDED. ALL UNSOUND AREAS SHALL BE REMOVED AND REPLACED.

ABUTMENT WALL TEXTURE: ABUTMENTS AND WINGWALLS SHALL BE TEXTURED BY USING FORM LINERS ATTACHED TO FORMWORK PRIOR TO PLACING CONCRETE. AREAS TO RECEIVE TEXTURED CONCRETE SURFACE SHALL INCLUDE THE FULL LENGTH OF EXPOSED ABUTMENT BREAST WALLS AND WINGWALLS FROM FINISHED GRADE OR PAVEMENT TO THE TOP OF THE WALL.

TEXTURED SURFACE SHALL CONSIST OF A 3/4" DEEP FRACTURED FIN TEXTURE. ACCEPTABLE PRODUCTS INCLUDE:

SYMONS CORPORATION
7603 OLD ROCKSIDE ROAD
INDEPENDENCE, OH 44131
(216) 524-5240
PATTERN NO. P/C 30449

GREENSTREAK
3400 TREE COURT IND. BLVD.
ST. LOUIS, MO 63122
(800) 325-9504
PATTERN NO. 373

FITZGERALD CONSTRUCTION SALES
17376-A NEWHOPE AVENUE
FOUNTAIN VALLEY, CA 92708
(800) 227-2755
PATTERN NO. 16950

OR AN APPROVED ALTERNATE. THE CONTRACTOR SHALL SUBMIT A SAMPLE OF THE FINISHED CONCRETE TEXTURED SURFACE FOR APPROVAL.

PAYMENT FOR ALL MATERIALS AND LABOR REQUIRED FOR THE TEXTURED SURFACES SHALL BE INCLUDED WITH ITEM 511, CLASS C CONCRETE, or with Class C Concrete Facing, As Per Plan.

ITEM 513 - STRUCTURAL STEEL SHIM PLATES: THIS WORK SHALL CONSIST OF THE CLEANING, WELDING, PAINTING AND ALL OTHER WORK PERTAINING TO THE PLACEMENT OF THE SHIM PLATES. CLEANING AND PAINTING SHALL BE ACCORDING TO THE PROPOSAL NOTE (SYSTEM IZEU PAINT).

ITEM SPECIAL - PATCHING CONCRETE STRUCTURE: AT THE LOCATIONS WHERE LOOSE, DISINTEGRATED OR UNSOUND CONCRETE EXTENDS BEYOND THE LIMITS NOTED IN ITEM 511 - CLASS C CONCRETE, ABUTMENT, AS PER PLAN, THE CONTRACTOR SHALL REMOVE THE CONCRETE TO EXPOSE A SOUND CONCRETE SURFACE, PREPARE THE SURFACE, AND PLACE NEW CLASS C CONCRETE. ALL OF THESE ITEMS OF WORK AND REPAIR SHALL BE AS DESCRIBED IN THE NOTE TITLED ITEM 511 - CLASS C CONCRETE, ABUTMENT, AS PER PLAN. PAYMENT FOR THIS WORK SHALL BE MEASURED ON A SQUARE FOOT BASIS AND SHALL INCLUDE ONLY THOSE AREAS WHERE THE DEPTH OF PATCHING EXCEEDS THE LIMITS NOTED IN ITEM 511 - CLASS C CONCRETE, ABUTMENT, AS PER PLAN. THE PAYMENT SHALL INCLUDE ALL NECESSARY LABOR, EQUIPMENT, MATERIALS AND INCIDENTALS NECESSARY TO PERFORM THE REQUIRED WORK. SINCE ALL QUANTITIES OF PATCHING SHOWN ON THE PLANS ARE ONLY ESTIMATES, ACTUAL PATCHING QUANTITIES WILL BE DETERMINED THROUGH FIELD INSPECTION AND SOUNDING.

ITEM 516 - REFURBISH BEARING DEVICES, AS PER PLAN: THIS SHALL INCLUDE ALL WORK NECESSARY TO PROPERLY ALIGN BEARINGS AS WELL AS THEIR CLEANING AND PAINTING. INCLUDED SHALL BE THE DISASSEMBLY OF THE BEARINGS, HAND CLEANING (GRINDING IF NECESSARY), SANDBLASTING AND PAINTING WITH SYSTEM IZEU AS REQUIRED BY THE PROPOSAL NOTE, OR SPECIAL REPLACEMENT OF ANY DAMAGED SHEET LEAD (711.19), (INSTALLATION OF ANY STEEL SHIMS OF THE SAME SIZE AS THE BEARINGS TO PROVIDE A SNUG FIT), REALIGNMENT OF THE UPPER BEARING PLATE BY REMOVING EXISTING WELDS AND RE-WELDING SO THAT THE BEARINGS ARE ALIGNED AT 60 DEGREES F., EXTENDING BEARING ANCHORS, RE-ASSEMBLY OF THE BEARINGS, AND TRIMMING OF ENDS OF BEAMS WHERE REQUIRED. ALL WORK SHALL BE TO THE SATISFACTION OF THE PROJECT ENGINEER.

THE CONTRACTOR MAY REPLACE BEARINGS IN KIND AT NO ADDITIONAL COST AT HIS OPTION AND THE WRITTEN APPROVAL OF THE ENGINEER.

PAYMENT FOR ALL THE ABOVE DESCRIBED LABOR AND MATERIALS WILL BE MADE AT THE CONTRACT PRICE BID FOR ITEM 516 - REFURBISH BEARING DEVICES, AS PER PLAN.

ITEM SPECIAL - SEALING CONCRETE SURFACES: THE FOLLOWING CONCRETE SURFACES SHALL BE SEALED WITH EPOXY OR NON-EPOXY SEALER AS SPECIFIED IN ACCORDANCE WITH PROPOSAL NOTE: (THE COLOR OF THE EPOXY SEALER SHALL BE PER FEDERAL STD. 595A 13522)

1. NEW AND EXISTING ABUTMENT BRIDGE SEATS AND EXTENDING FROM THE LEVEL OF THE BRIDGE SEAT ONE FOOT DOWN THE FACE OF THE BREASTWALL WITH EPOXY SEALER.

2. ENTIRE FRONT FACE OF ABUTMENT BREASTWALL FROM THE GROUND LINE UP TO THE LEVEL OF THE BRIDGE SEAT WITH EPOXY OR NON-EPOXY SEALER.

3. INSIDE FACE, TOP AND OUTSIDE FACE OF PARAPET ON WINGWALLS - EPOXY OR NON-EPOXY SEALER.

4. SUPERSTRUCTURE - NINE INCH GUTTER, INSIDE FACE, TOP, AND OUTSIDE FACE OF PARAPET, DECK FASCIA AND SIX INCH UNDERDECK RETURN, WITH EPOXY OR NON-EPOXY SEALER.

ITEM SPECIAL - JACKING STRUCTURE: THE LUMP SUM PRICE BID FOR THIS ITEM SHALL INCLUDE THE FURNISHING OF ALL MATERIALS, LABOR, EQUIPMENT AND INCIDENTALS NECESSARY TO RAISE, SUPPORT AND LOWER THE SUPERSTRUCTURE.

THE EXISTING SUPERSTRUCTURE SHALL BE RAISED UNIFORMLY APPROXIMATELY 12" ABOVE ITS EXISTING ELEVATION. THIS IS ABOUT 6" ABOVE ITS FINAL ELEVATION AND IS REQUIRED IN ORDER TO REINSTALL THE REFURBISHED BOLSTERS. THE SUPERSTRUCTURE SHALL THEN BE LOWERED THE 6" TO ITS FINAL POSITION ON THE NEW 5-3/4" THICK SHIM PLATES. THESE OPERATIONS SHALL BE PERFORMED PRIOR TO PLACEMENT OF NEW DECK CONCRETE.

JACKING SHALL BE DONE IN SUCH A MANNER THAT NO SIGNIFICANT STRESSES SHALL BE INDUCED INTO THE BEAMS AT ANY TIME. JACKING SHALL BE DONE IN SUCH A MANNER AS TO MAINTAIN AXIAL LOADING AT THE ABUTMENT FOOTINGS. DURING JACKING THE DIFFERENTIAL MOVEMENT BETWEEN ADJACENT BEAMS SHALL NOT EXCEED ONE-QUARTER INCH.

THE CONTRACTOR SHALL SUBMIT DRAWINGS AND A DESCRIPTION OF THE METHODS TO BE USED TO RAISE AND SHIM THE SUPERSTRUCTURE TO THE DIRECTOR AT LEAST TWENTY (20) DAYS PRIOR TO COMMENCEMENT OF THIS OPERATION.

IT WILL BE THE CONTRACTOR'S RESPONSIBILITY TO COORDINATE THE STRUCTURE PATCHING OF THE ABUTMENT SEATS WITH THE JACKING AND REFURBISHING/REPLACEMENT OF BOLSTERS, ROCKERS AND BEARING DEVICES AND THE PATCHING REQUIRED UNDER THE BEARING DEVICES.

Item 511 Class C Concrete, Facing, As Per Plan
See note on Sheet 906.

ITEM SPECIAL - FIELD PAINTING OF NEW STEEL, SYSTEM IZEU: THIS ITEM SHALL CONSIST OF FURNISHING ALL NECESSARY LABOR, MATERIALS, AND EQUIPMENT TO CLEAN AND PAINT ALL NEW STEEL SURFACES AS HEREIN SPECIFIED WITH THE FOLLOWING COATINGS:

INORGANIC ZINC PRIME COAT (SHOP APPLIED)
EPOXY INTERMEDIATE COAT (FIELD APPLIED)
URETHANE FINISH COAT (FIELD APPLIED)

ALL OF THE REQUIREMENTS CONTAINED IN THE "FIELD PAINTING OF EXISTING STEEL, SYSTEM IZEU" PROPOSAL NOTE SHALL APPLY, WITH THE FOLLOWING MODIFICATIONS:

MATERIALS

THE COLOR OF URETHANE FINISH COAT SHALL BE "DARK BROWN", FEDERAL SPECIFICATION NUMBER 595 A 10080. AN ACTUAL SAMPLE OF THE PAINT PROPOSED FOR USE SHALL BE SUBMITTED BY THE CONTRACTOR FOR APPROVAL. THE INTERMEDIATE COAT COLOR SHALL BE PER FEDERAL STD. 595A 10219.

PREPARATION

PRIOR TO APPLICATION OF THE PRIME COAT, STEEL SHALL BE PREPARED IN ACCORDANCE WITH 514.04.

ITEM SPECIAL - FIELD PAINTING OF EXISTING STEEL, SYSTEM OZEU: ALL OF THE REQUIREMENTS CONTAINED IN THE "FIELD PAINTING OF EXISTING STEEL, SYSTEM OZEU" PROPOSAL NOTE SHALL APPLY.

THE COLOR OF URETHANE FINISH COAT SHALL BE "DARK BROWN", FEDERAL SPECIFICATION NUMBER 595 A 10080. AN ACTUAL SAMPLE OF THE PAINT PROPOSED FOR USE SHALL BE SUBMITTED BY THE CONTRACTOR FOR APPROVAL. THE INTERMEDIATE COAT COLOR SHALL BE PER FEDERAL STD. 595A 10219.

ITEM SPECIAL - REMOVAL OF SHOTCRETE FROM ABUTMENT FACES:

THE PREVIOUSLY APPLIED PNEUMATICALY PLACED CONCRETE (GUNITE OR GUNITE-LIKE) SHALL BE REMOVED FROM THE ENTIRE FACE OF THE ABUTMENTS. AFTERWARDS THE WALL SHALL BE SOUNDED TO DETERMINE THE EXTEND OF THE DETERIORATION FOR REPAIR BY ITEM 511, CLASS C CONCRETE, ABOVE FOOTINGS, (AS PER PLAN).

543271

JOHN DAVID JONES & ASSOC., INC.
2162 FRONT STREET
CUYAHOGA FALLS, OHIO 44221
ENGINEERS ARCHITECTS PLANNERS

4b/20

GENERAL NOTES

BRIDGE No. SUM-76-1180
OVER INMAN ST.

DESIGNED	DRAWN	TRACED	CHECKED	REVIEWED	DATE	REVISED
JRS	EMB		BCK	PAK	11-9-87	

NOTE:
THE WESTBOUND REFERENCE CHORD IS THE CHORD THAT CONNECTS THE INTERSECTIONS OF THE WESTBOUND BASELINE CURVE AND THE CENTERLINES OF ABUTMENT BEARINGS.

F.H.W.A. REG.	STATE	PROJECT	
5	OHIO		

809
1214

SUMMIT COUNTY
SUM-76-11.57

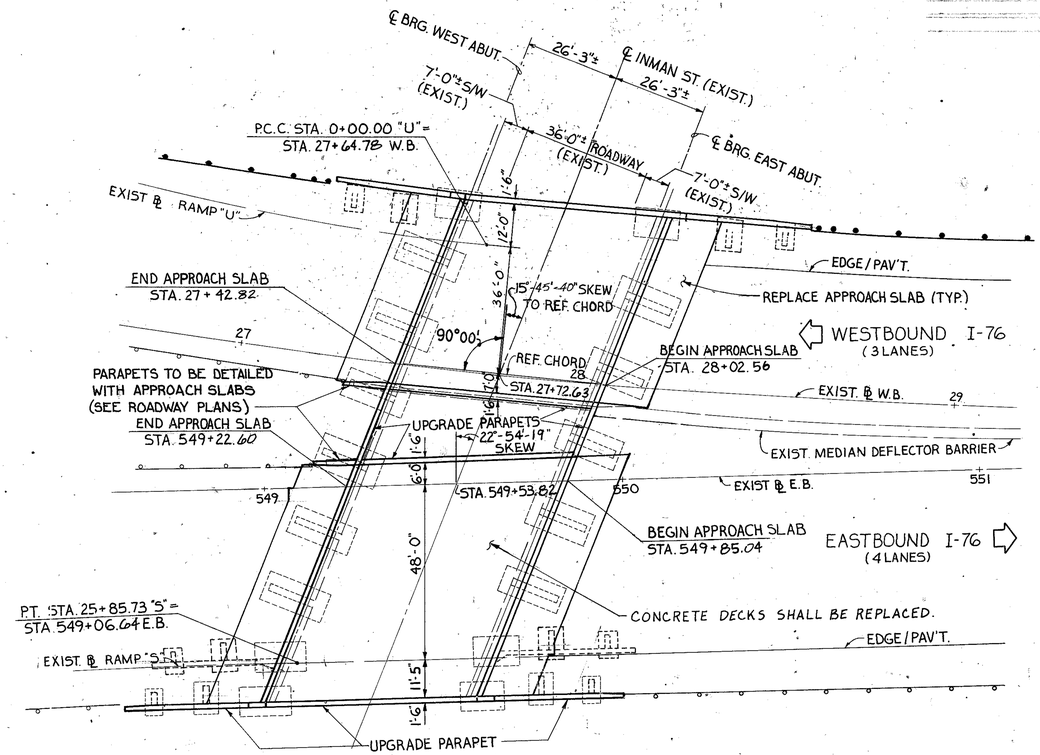

PLAN

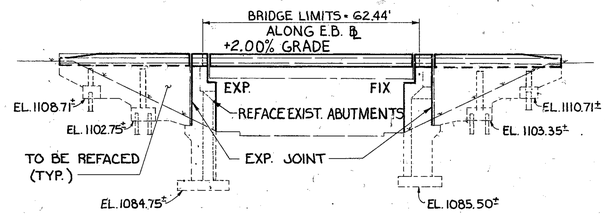

ELEVATION

JOHN DAVID JONES & ASSOC., INC.
2162 FRONT STREET
CUYAHOGA FALLS, OHIO 44221
ENGINEERS ARCHITECTS PLANNERS

5/20

GENERAL PLAN, ELEVATION

BRIDGE No. SUM-76-1180
OVER INMAN ST.

DESIGNED	DRAWN	TRACED	CHECKED	REVIEWED	DATE	REVISED
JRS	JPM	JPM	BCK	PAK	11-6-87	

F.H.W.A. REG.	STATE	PROJECT	
5	OHIO		

810
1214

SUMMIT COUNTY
SUM-76-11.57

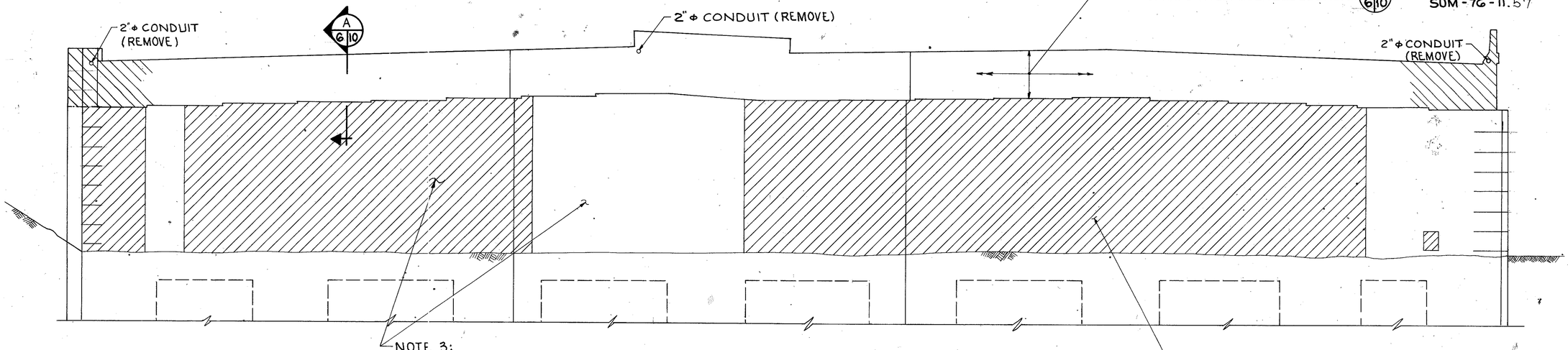

ELEVATION
EAST ABUTMENT

NOTE 4: ITEM SPECIAL - PATCHING CONCRETE STRUCTURE (FOR DESCRIPTION SEE SHEET 45/20)

ESTIMATED WALL REMOVAL AREAS:
EAST ABUTMENT = 1712 SQ. FT.
WEST ABUTMENT = 1248 SQ. FT.
TOTAL = 2960 SQ. FT.

ALSO, SEE SHEET 7/20 FOR PATCHING OF BEAM SEATS.

NOTE 5: ITEM SPECIAL - REMOVAL OF SHOTCRETE FROM ABUTMENT FACES (FOR DESCRIPTION SEE SHEET 45/20)

ESTIMATED REMOVAL AREAS:
EAST ABUTMENT = 2352 SQ. FT.
WEST ABUTMENT = 3014 SQ. FT.
TOTAL = 5366 SQ. FT.

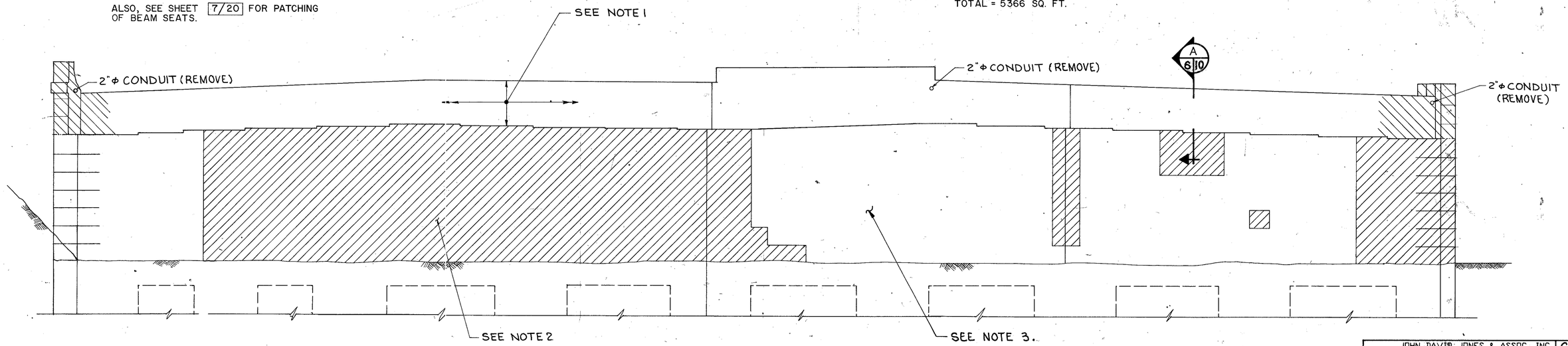

ELEVATION
WEST ABUTMENT

JOHN DAVID JONES & ASSOC., INC. 6/20
2162 FRONT STREET
CUYAHOGA FALLS, OHIO 44221
ENGINEERS ARCHITECTS PLANNERS

ABUTMENT REPAIRS & DEMOLITION

BRIDGE No. SUM-76-1180
OVER INMAN ST.

DESIGNED	DRAWN	TRACED	CHECKED	REVIEWED	DATE	REVISED
JRS	E.M.B.		B.C.K.	PAK	11-6-87	

F.H.W.A. REG.	STATE	PROJECT	
5	OHIO		

SUMMIT COUNTY
SUM-76-11.57

811
12/14

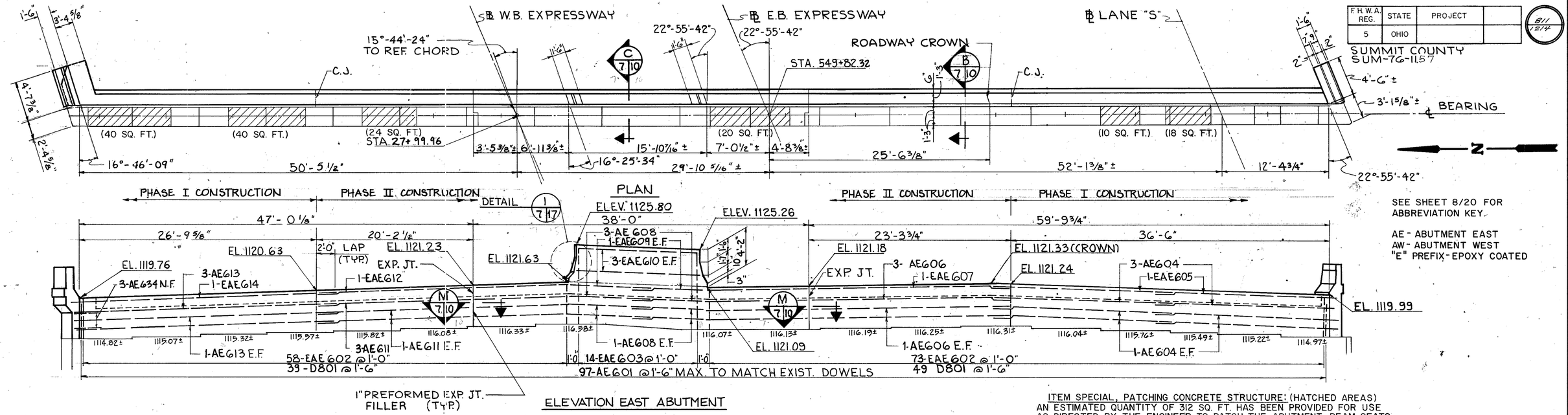

SEE SHEET 8/20 FOR ABBREVIATION KEY.

AE - ABUTMENT EAST
AW - ABUTMENT WEST
"E" PREFIX - EPOXY COATED

ITEM SPECIAL, PATCHING CONCRETE STRUCTURE: (HATCHED AREAS)
AN ESTIMATED QUANTITY OF 312 SQ. FT. HAS BEEN PROVIDED FOR USE AS DIRECTED BY THE ENGINEER TO PATCH THE ABUTMENT BEAM SEATS. THE QUANTITIES AND LOCATIONS SHOWN ON THIS SHEET ARE APPROXIMATE AND INTENDED AS INFORMATION ONLY. AREAS TO BE REPAIRED WILL BE AS DETERMINED BY THE ENGINEER FOLLOWING FIELD INSPECTION AND SOUNDING.

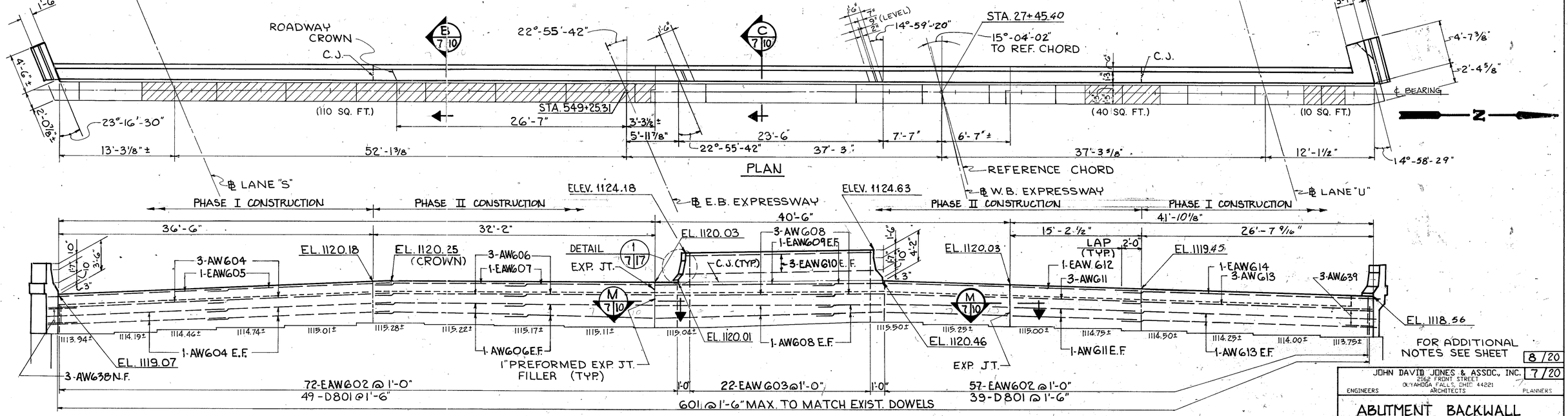

NOTE:
ELEVATIONS SHOWN AT TOP OF BACKWALL ARE ALONG FRONT FACE OF BACKWALL AND AT TOP OF ANGLE 7×4 (TYP.).

FOR ADDITIONAL NOTES SEE SHEET 8/20

7/20

JOHN DAVID JONES & ASSOC., INC.
2162 FRONT STREET
CUYAHOGA FALLS, OHIO 44221
ENGINEERS ARCHITECTS PLANNERS

ABUTMENT BACKWALL MODIFICATIONS

BRIDGE No. SUM-76-1180
OVER INMAN ST.

DESIGNED	DRAWN	TRACED	CHECKED	REVIEWED	DATE	REVISED
JRS	EB		BCK	PAK	11-6-87	

F.H.W.A. REG.	STATE	PROJECT	
5	OHIO		

812
12-14

SUMMIT COUNTY
SUM-76-11.57

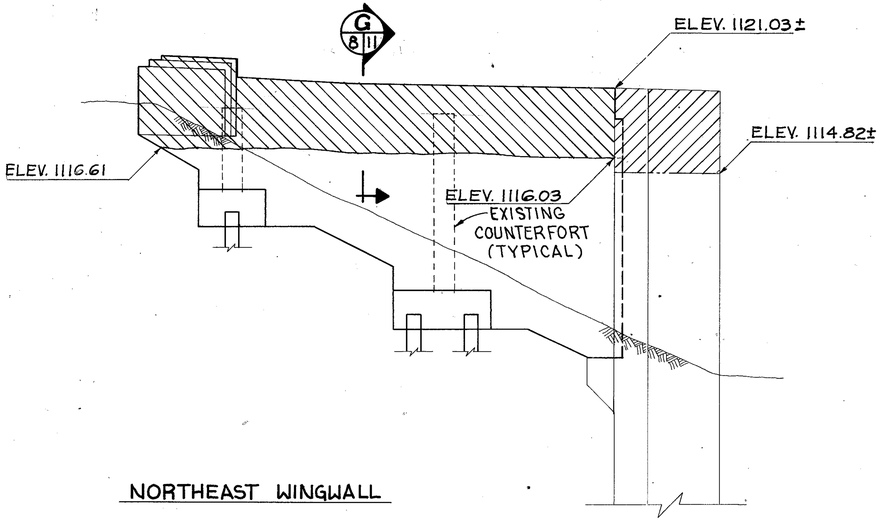

NORTHEAST WINGWALL

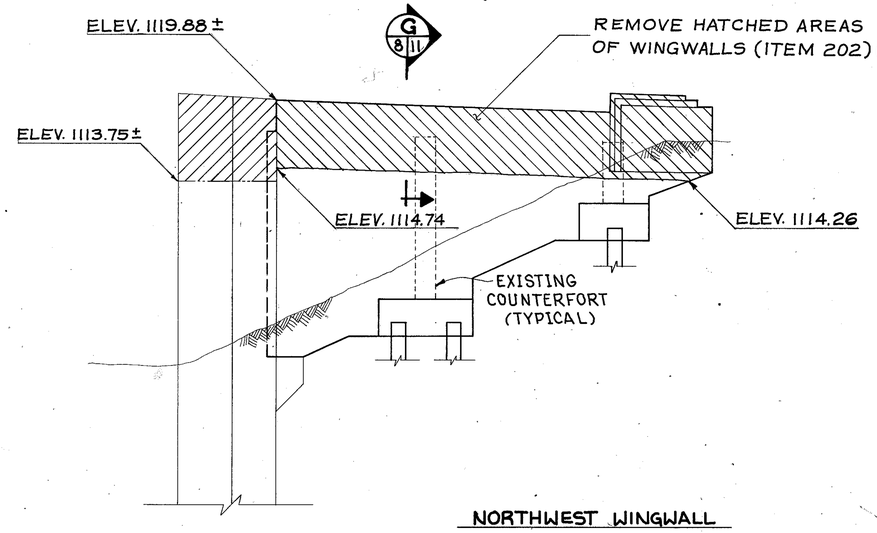

NORTHWEST WINGWALL

ELEVATION

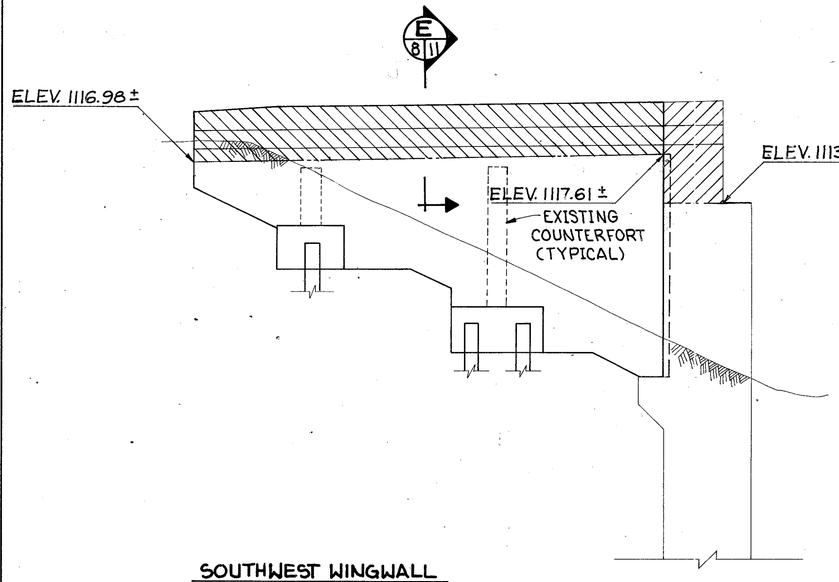

SOUTHWEST WINGWALL

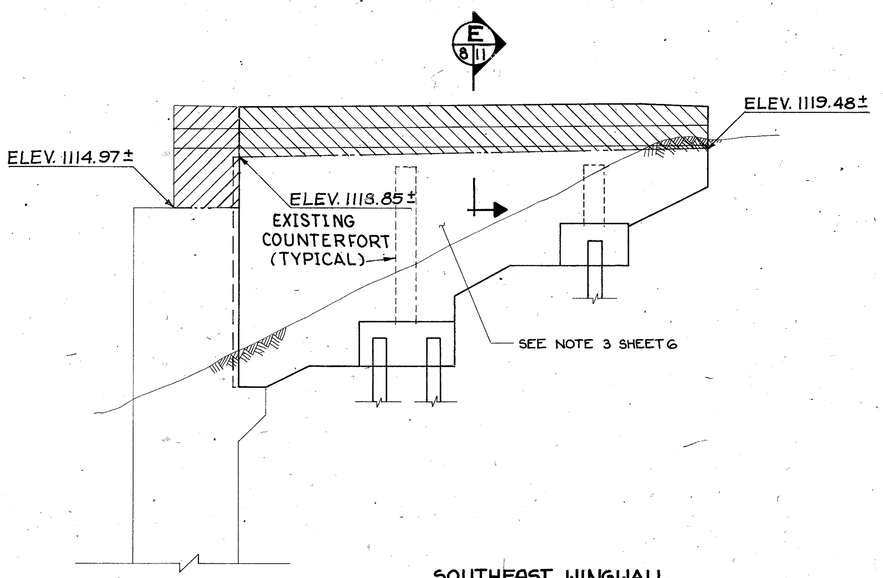

SOUTHEAST WINGWALL

ELEVATION

ABBREVIATIONS:

N.F.	NEAR FACE
F.F.	FAR FACE
E.F.	EACH FACE
TYP.	TYPICAL
EXP. JT.	EXPANSION JOINT
E.B.	EASTBOUND
W.B.	WESTBOUND
EL.	ELEVATION
EXIST.	EXISTING
PEJF	PREFORMED EXPANSION JOINT FILLER
C.J.	CONSTRUCTION JOINT
EQ. SPA.	EQUALLY SPACED

NOTES:

BACKWALL CONCRETE: IN ADDITION TO THE PROVISION OF 511.08, BACKWALL CONCRETE ABOVE THE OPTIONAL CONSTRUCTION JOINT AT THE APPROACH SLAB SEAT SHALL NOT BE PLACED UNTIL AFTER THE DECK CONCRETE IN THE SPAN ADJACENT TO THE ABUTMENT HAS BEEN PLACED.

RESURFACE EXPOSED VERTICAL SURFACES OF WINGWALLS ACCORDING TO ITEM 511, CLASS C CONCRETE, ABUTMENT, AS PER PLAN AND DETAIL.

EXPANSION JOINTS: A 6" PVC WATERSTOP SHALL BE CENTERED ON THE BACKWALL EXPANSION JOINTS TO FORM A CONTINUOUS WATERPROOF SEAL. THE WATERSTOP SHALL EXTEND FROM THE TOP OF THE BRIDGE SEAT TO THE BOTTOM OF THE APPROACH SLAB SEAT. THE 6" PVC WATERSTOP IS PAID FOR UNDER ITEM 516, PVC WATERSTOP, AS PER PLAN.

1" PREFORMED EXPANSION JOINT FILLER SHALL EXTEND FULL WIDTH OF THE BACKWALL AND FROM THE TOP OF THE BRIDGE SEAT TO THE TOP OF THE BACKWALL. THE 1" PREFORMED EXPANSION JOINT FILLER SHALL BE INCLUDED WITH ITEM 511 FOR PAYMENT.

JOHN DAVID JONES & ASSOC., INC.
2162 FRONT STREET
CUYAHOGA FALLS, OHIO 44221
ENGINEERS ARCHITECTS PLANNERS

8/20

WINGWALL REPAIRS & DEMOLITION

BRIDGE No. SUM-76-1180
OVER INMAN ST.

DESIGNED	DRAWN	TRACED	CHECKED	REVIEWED	DATE	REVISED
J.R.S.	J.P.M.		BCK	PAK	11-6-87	

F.H.W.A. REG.	STATE	PROJECT	
5	OHIO		

813
1214

SUMMIT COUNTY
SUM-76-11.57

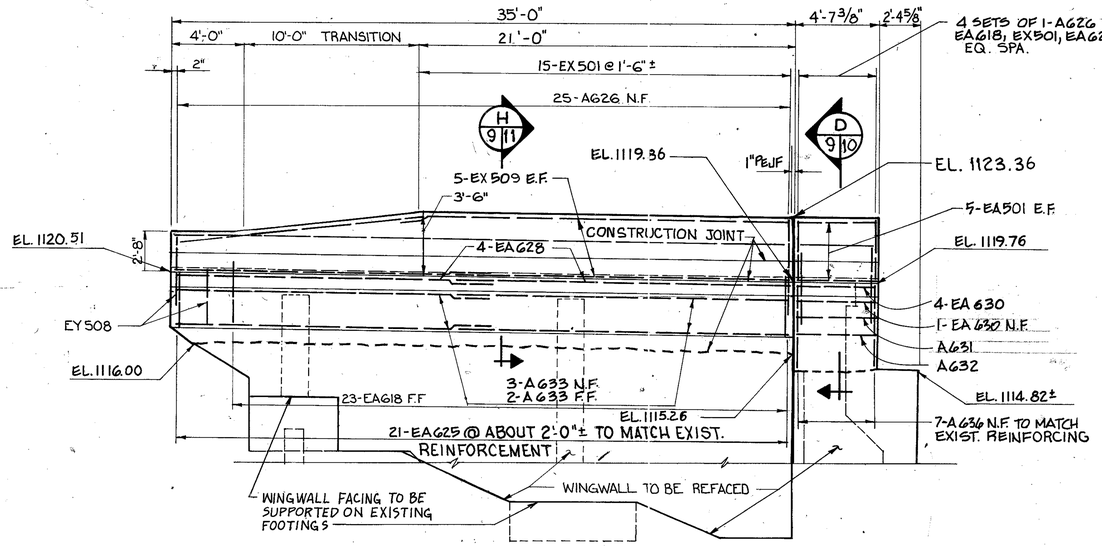

N.E. WINGWALL
(EAST ABUTMENT)

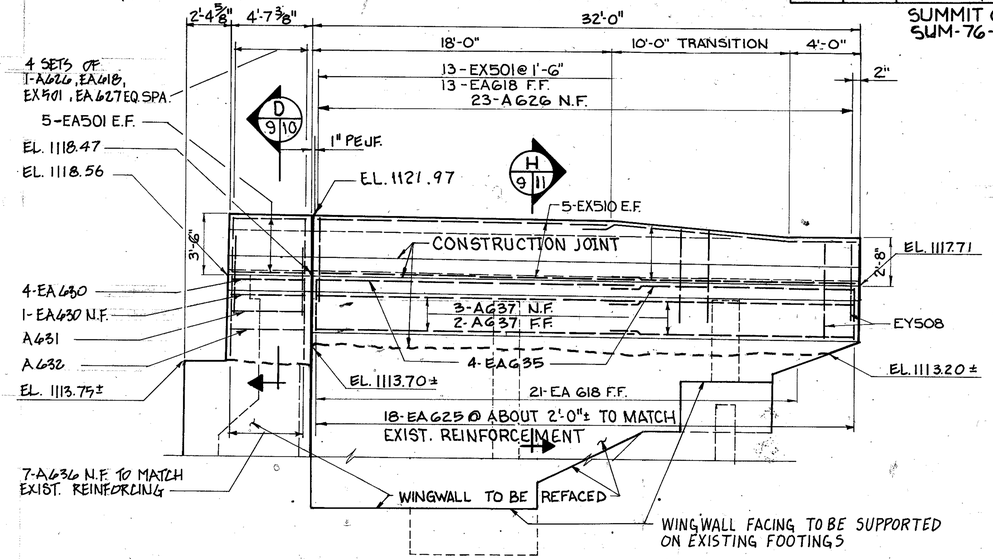

N.W. WINGWALL
(WEST ABUTMENT)

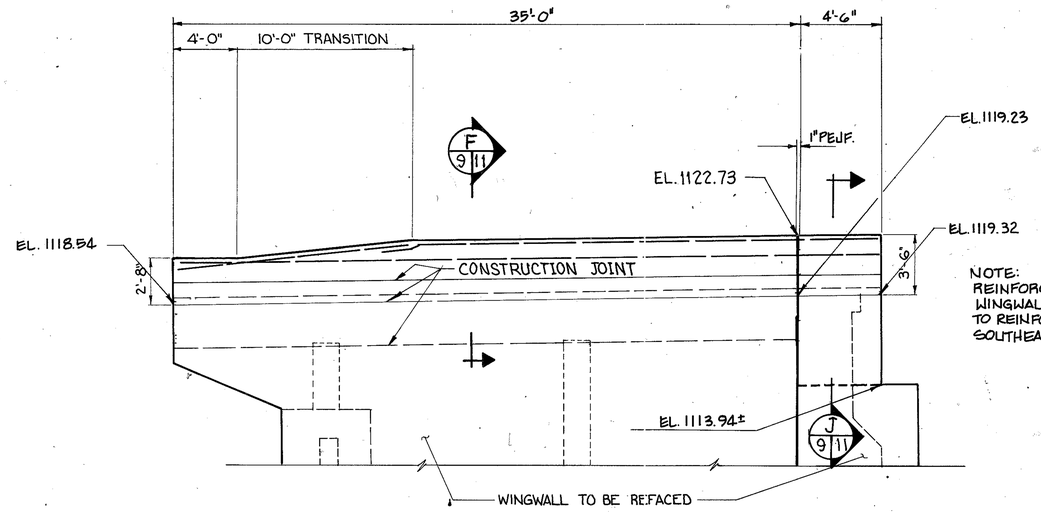

S.W. WINGWALL
(WEST ABUTMENT)

NOTE:
REINFORCING FOR SOUTHWEST WINGWALL IS OPPOSITE HAND TO REINFORCING SHOWN FOR SOUTHEAST WINGWALL

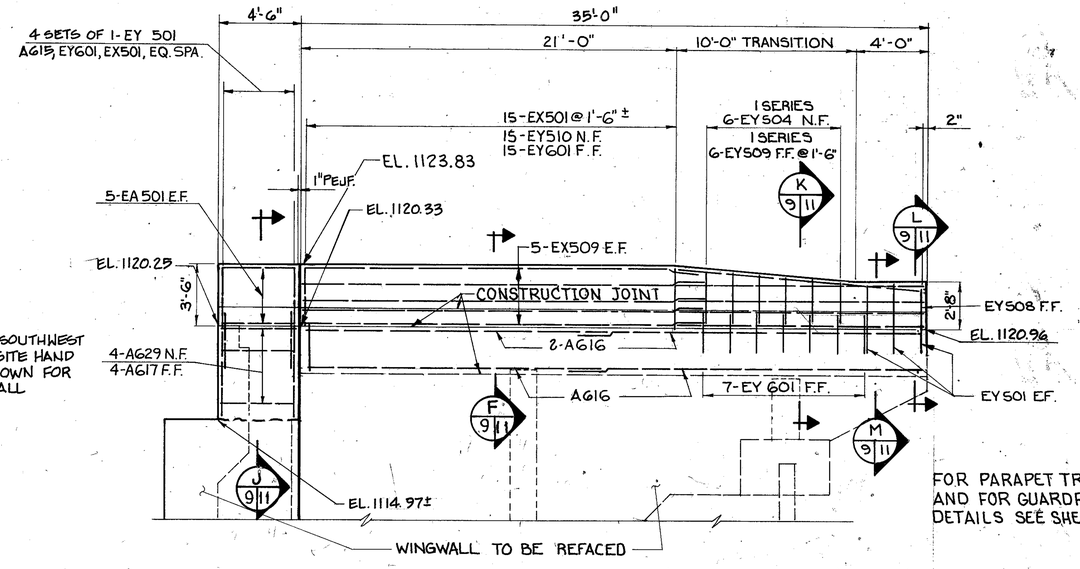

S.E. WINGWALL
(EAST ABUTMENT)

FOR PARAPET TRANSITION DETAILS AND FOR GUARDRAIL ATTACHMENT DETAILS SEE SHEET 18/20.

LAP SPLICES	
BAR SIZES	LENGTH
5	1'-8"
6	2'-0"

FOR ADDITIONAL NOTES SEE SHEET 8/20

JOHN DAVID JONES & ASSOC., INC. 9/20
2162 FRONT STREET
CUYAHOGA FALLS, OHIO 44221
ENGINEERS ARCHITECTS PLANNERS

WING WALL MODIFICATIONS

BRIDGE No. SUM-76-11.80
OVER INMAN ST.

DESIGNED	DRAWN	TRACED	CHECKED	REVIEWED	DATE	REVISED
JRS	EMB		BCK	PAK	11-6-87	

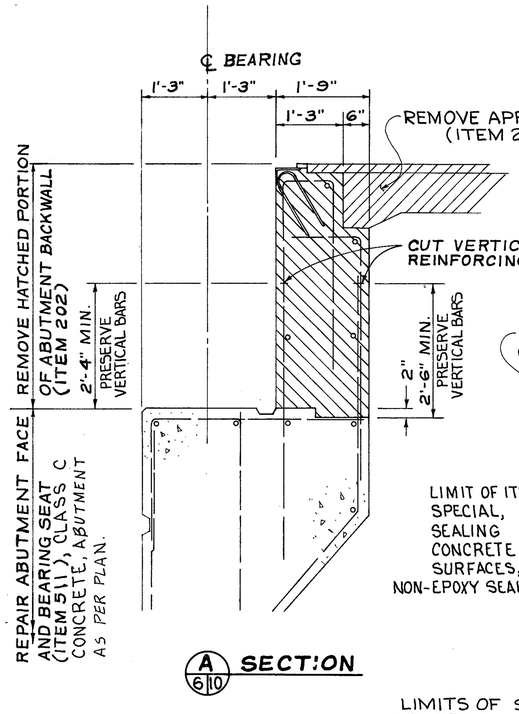

A SECTION 6/10

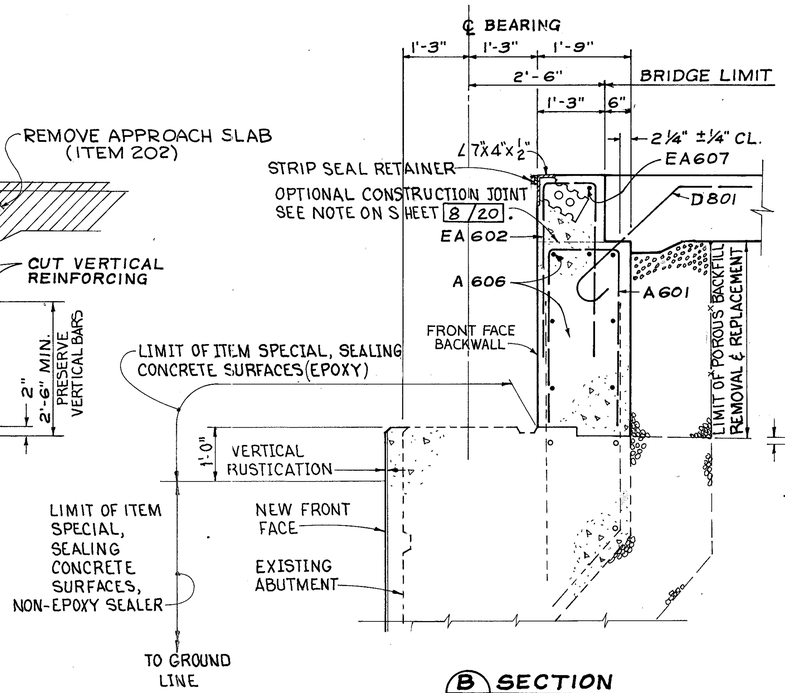

B SECTION 7/10

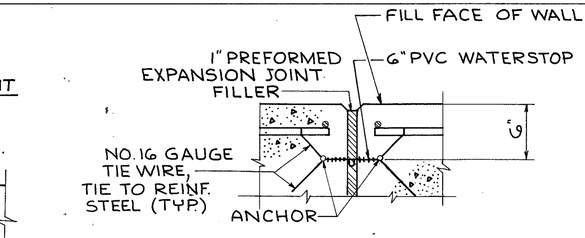

M SECTION 7/10

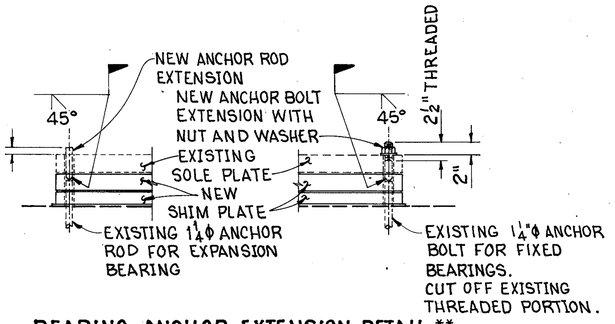

BEARING ANCHOR EXTENSION DETAIL**

PAYMENT FOR EXTENDING BEARING ANCHORS IS INCLUDED WITH ITEM 516, REFURBISH BEARING DEVICES, AS PER PLAN.

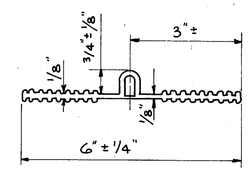

WATERSTOP DETAIL

NOTE:
FOR THE FIRST POUR, THE WATERSTOP SHOULD BE HELD SECURELY IN PLACE BY USE OF SPLIT FORMS AND TIE WIRES. FOR THE SECOND POUR, SECURE THE FREE END OF WATERSTOP IN PROPER POSITION WITH TIE WIRES. ALTERNATE METHODS, AS APPROVED BY THE ENGINEER, MAY BE USED TO INSURE THE CORRECT POSITIONING OF THE WATERSTOP.

** IF THE EXISTING ANCHOR BOLT DOES NOT HAVE SUFFICIENT CROSS-SECTIONAL AREA TO WELD PROPERLY, THE CONTRACTOR IS TO REMOVE ANY CONCRETE NECESSARY TO A SUFFICIENT DEPTH TO OBTAIN SUITABLE MATERIAL WITH SUFFICIENT CROSS-SECTIONAL AREA TO WELD PROPERLY. THE COST OF REMOVING AND REPLACING THE CONCRETE SHALL BE INCLUDED IN THE UNIT PRICE BID FOR ITEM 516, REFURBISH BEARING DEVICES, AS PER PLAN.

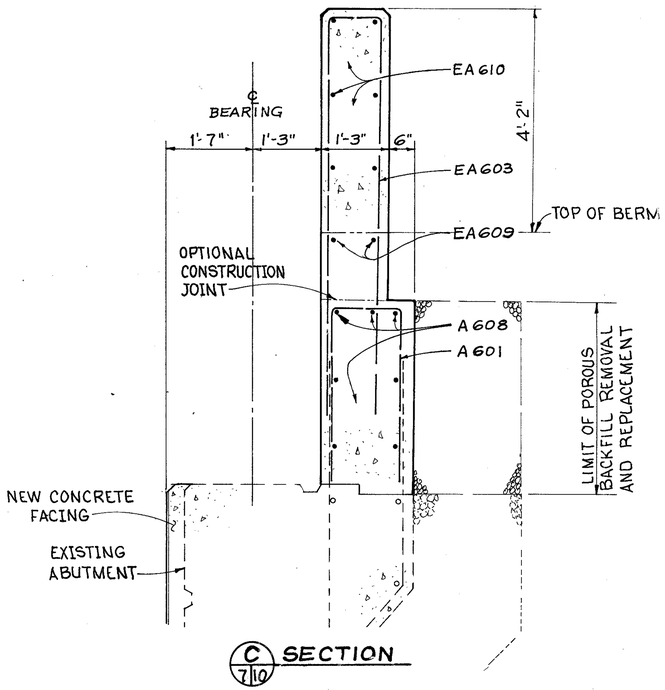

C SECTION 7/10

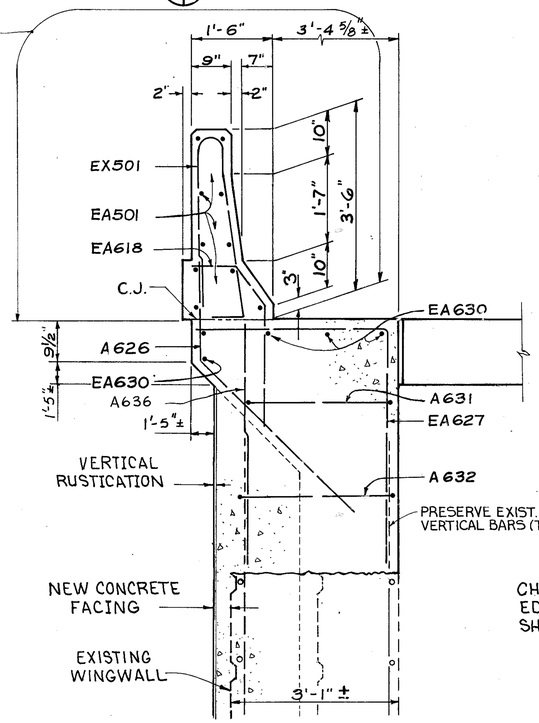

D SECTION 9/10

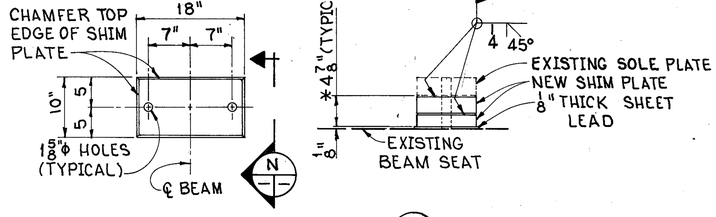

BOLSTER SHIM PLATE DETAIL

* THE TOTAL THICKNESS OF SHIMS SHALL BE MADE UP OF A SERIES OF PLATES WITH NO PLATE EXCEEDING A THICKNESS OF 2".

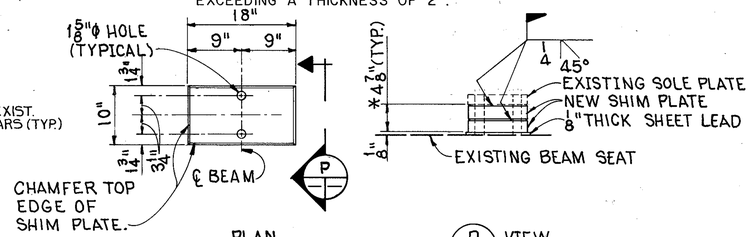

ROCKER SHIM PLATE DETAIL

NOTE: CONTRACTOR SHALL VERIFY EXISTING ELEVATIONS PRIOR TO ORDERING SHIM PLATES.

OHIO	STATE	PROJECT

SUMMIT COUNTY
SUM-76-11.57

814
12.14

JOHN DAVID JONES & ASSOC., INC. 10/20
ENGINEERS ARCHITECTS

ABUTMENT SECTIONS & DETAILS

BRIDGE No. SUM-76-11.80
OVER INMAN ST.

JRS	EB		BCK	PAK	11-6-87	

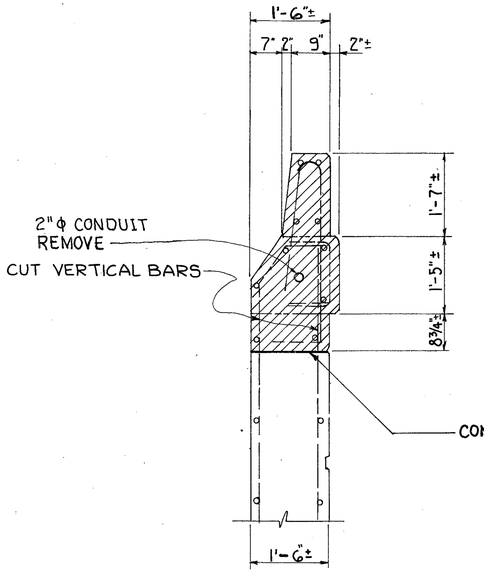

E 8/11 SECTION

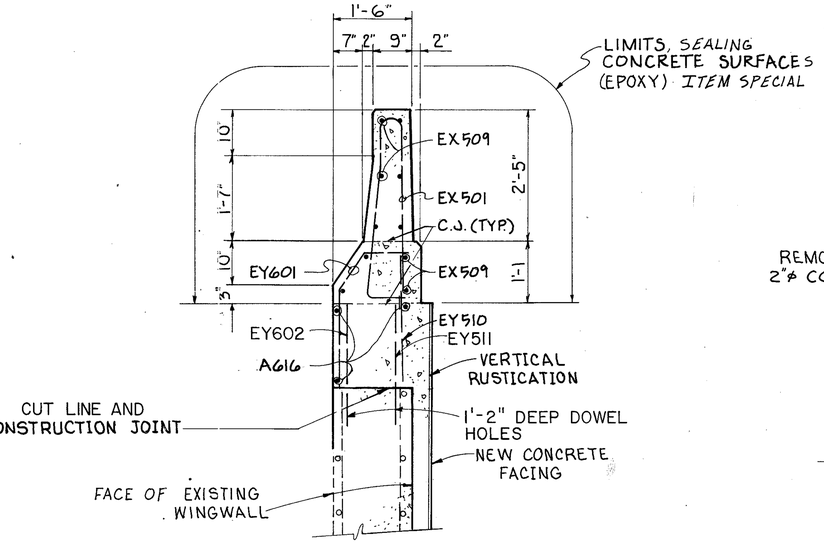

F 9/11 SECTION

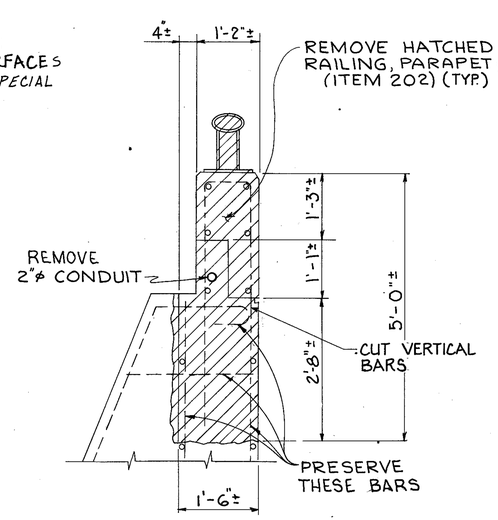

G 8/11 SECTION

F.H.W.A. REG.	STATE	PROJECT	
5	OHIO		

8/15 12/14

SUMMIT COUNTY
SUM - 76 - 11.57

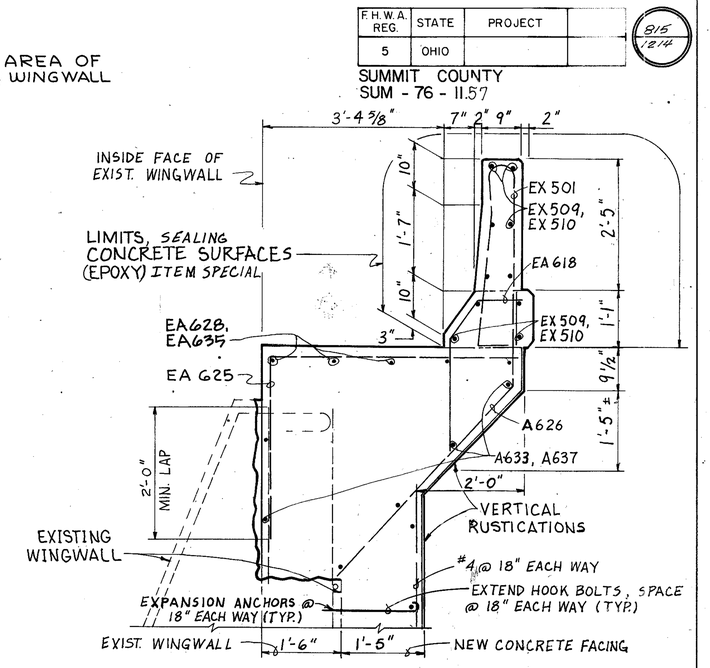

H 9/11 SECTION

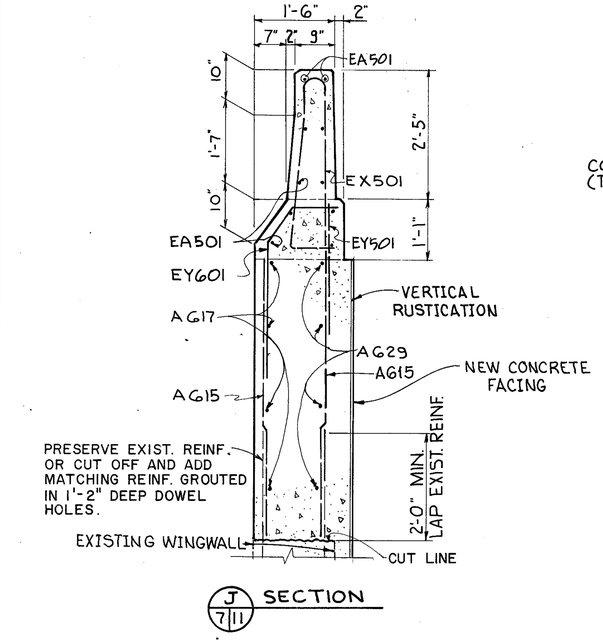

J 7/11 SECTION

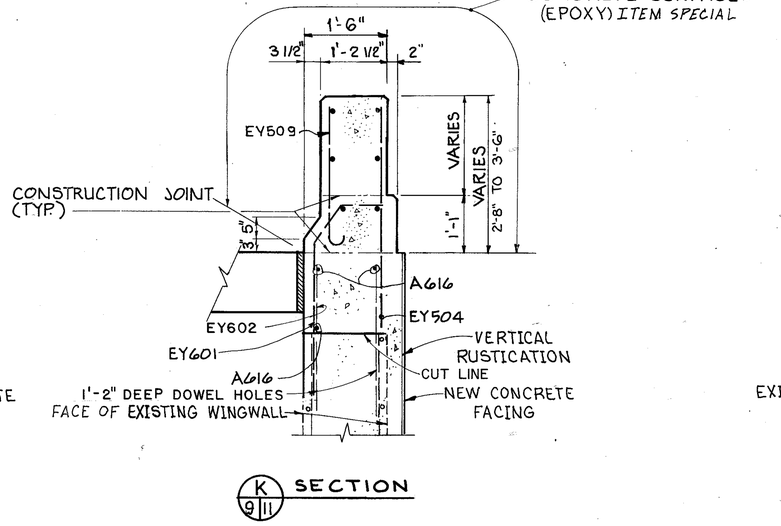

K 9/11 SECTION

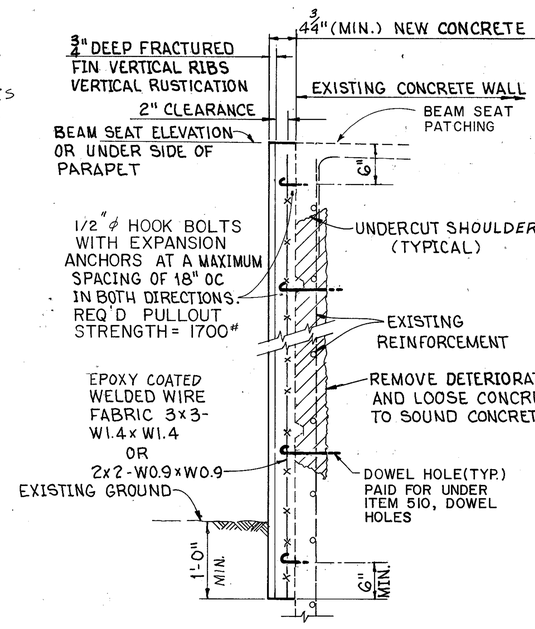

I 6/11 DETAIL

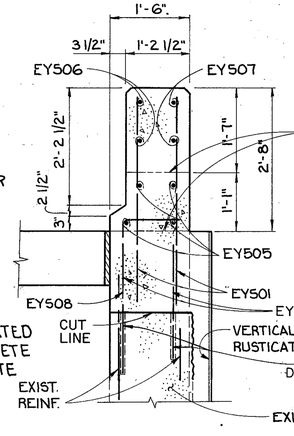

M 9/11 SECTION

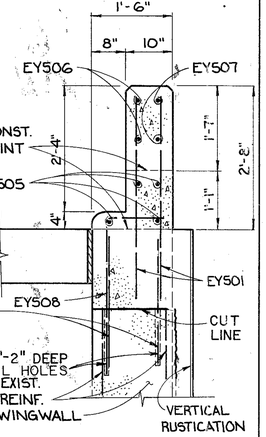

L 9/11 SECTION

JOHN DAVID JONES & ASSOC., INC. 11/20
2162 FRONT STREET
CUYAHOGA FALLS, OHIO 44221
ENGINEERS ARCHITECTS PLANNERS

WINGWALL SECTIONS

BRIDGE No. SUM-76-11.80
OVER INMAN ST.

DESIGNED	DRAWN	TRACED	CHECKED	RE-VIEWED	DATE	RE-VISED
JRS	EB		BCK	PAK	11-6-87	

F.H.W.A. REGION	STATE	PROJECT	
5	OHIO		

816/1214

SUMMIT COUNTY
SUM-76-11.57

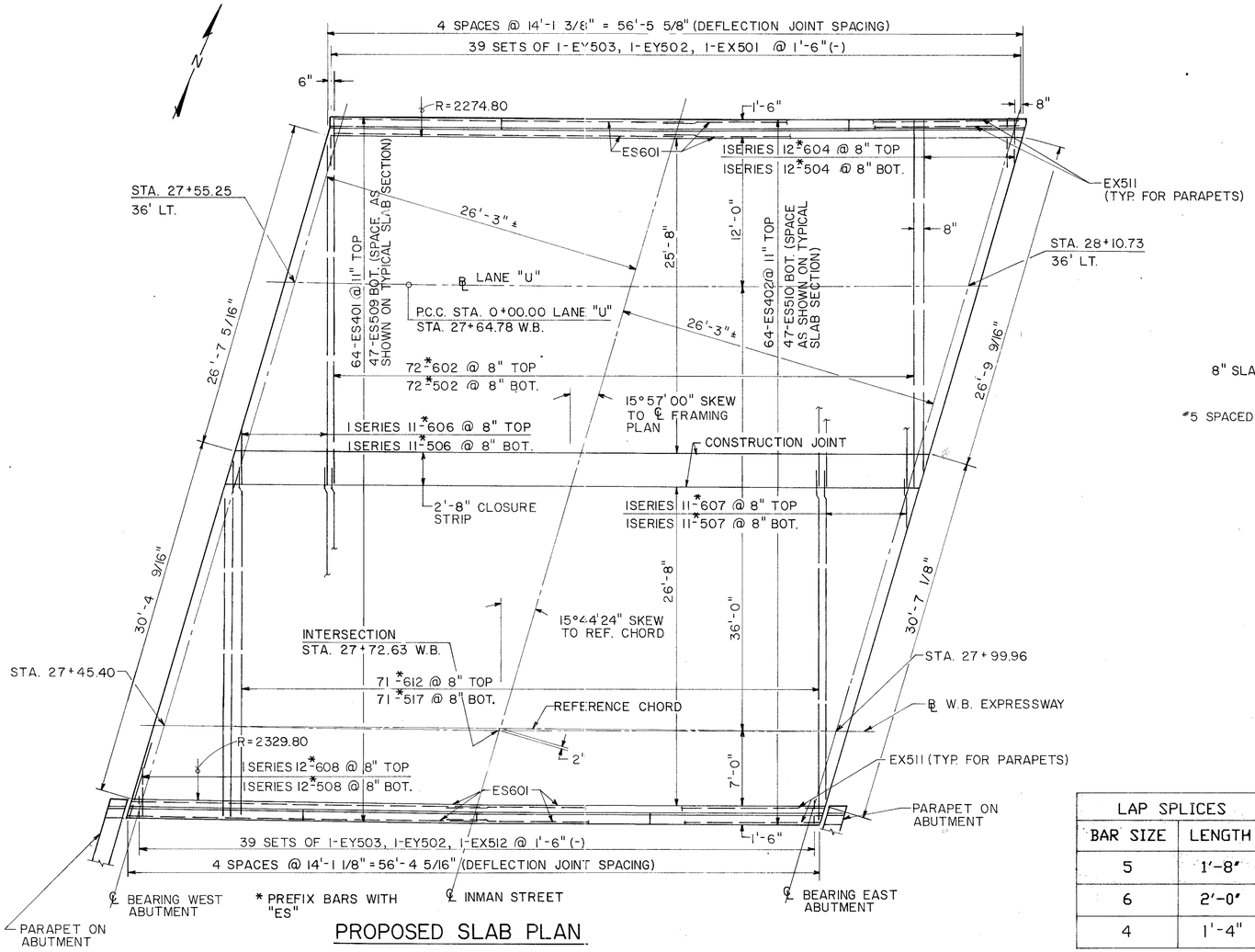

PROPOSED SLAB PLAN

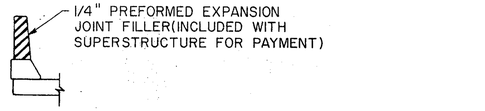

SECTION THROUGH DEFLECTION JOINT

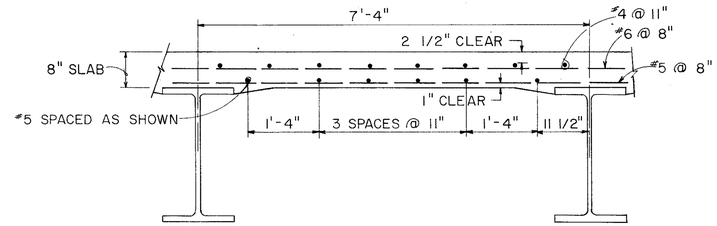

TYPICAL SLAB SECTION

LAP SPLICES	
BAR SIZE	LENGTH
5	1'-8"
6	2'-0"
4	1'-4"

KEYED LONGITUDINAL CONSTRUCTION JOINT
2 3/4" X 1 1/2"

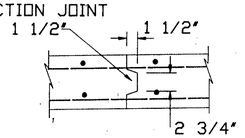

5 DETAIL

NOTES

A HAUNCH WIDTH OF 9" SHALL BE USED FOR COMPUTING QUANTITY OF CONCRETE, HOWEVER, THE HAUNCH WIDTH MAY VARY BETWEEN 6" AND 12" PROVIDED THAT THE SLOPE SHALL BE NOT MORE THAN 1:4 FOR A HAUNCH LESS THAN 9" WIDTH.

DECK SLAB DEPTH IS THE DISTANCE SHOWN FROM TOP OF DECK SLAB TO TOP OF STEEL BEAM IS THE DESIGN DIMENSION. THE QUANTITY OF DECK CONCRETE TO BE PAID FOR SHALL BE BASED ON THIS DIMENSION, EVEN THOUGH DEVIATION FROM IT MAY BE NECESSARY BECAUSE THE TOP FLANGE OF BEAM MAY NOT HAVE THE EXACT CAMBER OR CONFORMATION REQUIRED TO PLACE IT PARALLEL TO THE FINISHED GRADE.

CROSSFRAMES IN THE CLOSURE SECTION BAY SHALL BE INSTALLED AFTER THE DECK CONCRETE ON BOTH SIDES OF THIS SECTION HAS BEEN PLACED AND JUST BEFORE THE CLOSURE SECTION CONCRETE HAS BEEN PLACED.

NOTES

FOR EXPANSION JOINT DETAILS SEE STANDARD DWG. EXJ-4-87, SHEETS 16/20 & 17/20

FOR STAGED CONSTRUCTION DETAILS SEE SHEET 2/20

FOR ADDITIONAL DETAILS SEE SHEET 15/20

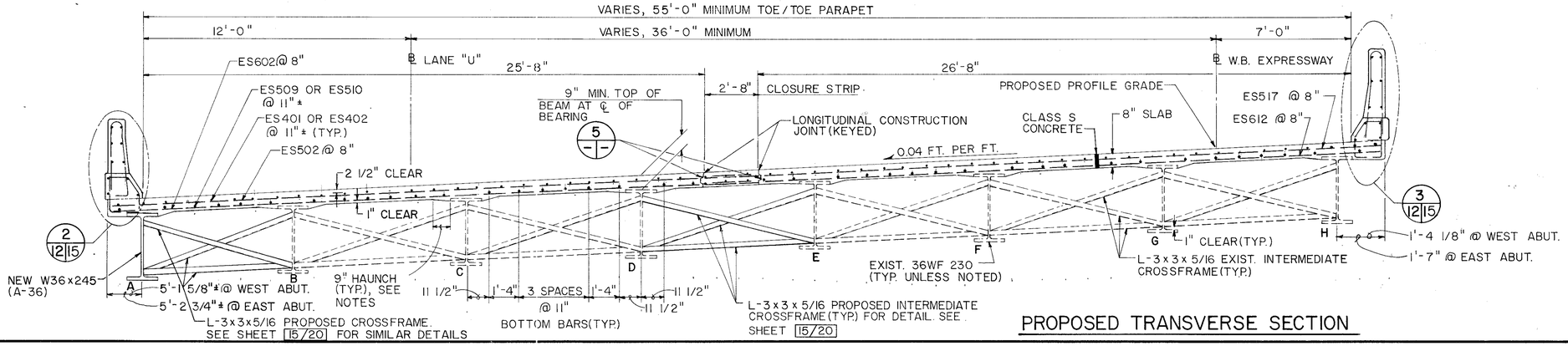

PROPOSED TRANSVERSE SECTION

JOHN DAVID JONES & ASSOC., INC. 12/20
2162 FRONT STREET
CUYAHOGA FALLS, OHIO 44221
ENGINEERS ARCHITECTS PLANNERS

WESTBOUND DECK PLAN

BRIDGE No. SUM-76-1180
OVER INMAN ST.

DESIGNED	DRAWN	TRACED	CHECKED	REVIEWED	DATE	REVISED
JRS	KMW	K.MW	BCK	PAK	9-10-91	

543271

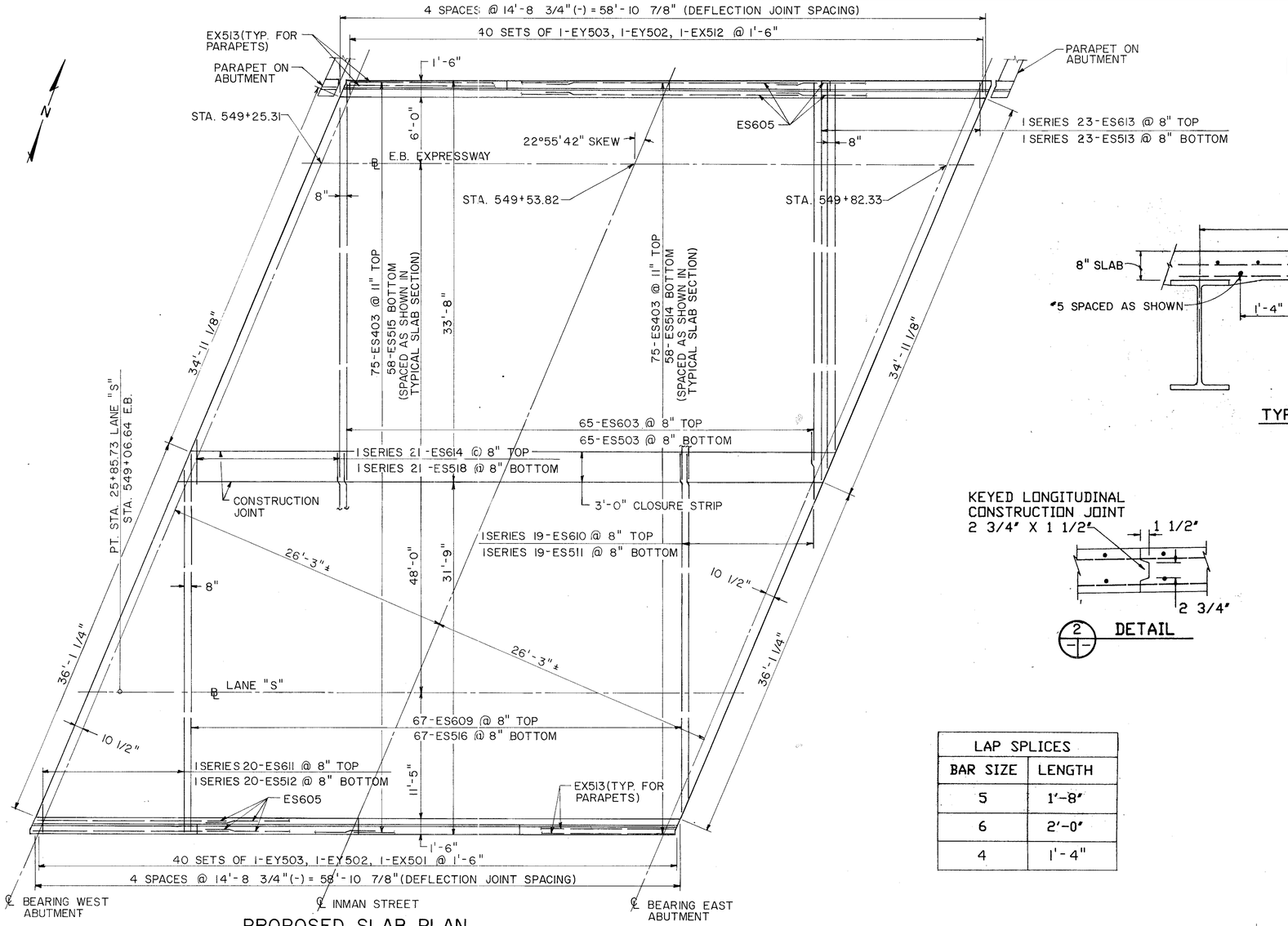

PROPOSED SLAB PLAN

SECTION THROUGH DEFLECTION JOINT

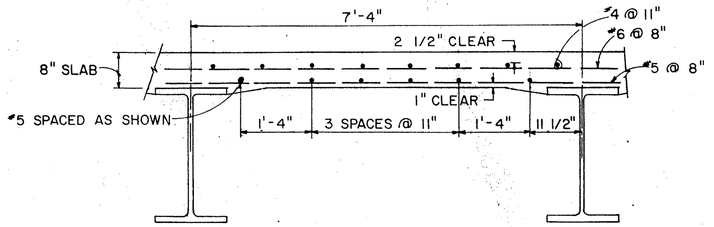

TYPICAL SLAB SECTION

LAP SPLICES	
BAR SIZE	LENGTH
5	1'-8"
6	2'-0"
4	1'-4"

NOTES

A HAUNCH WIDTH OF 9" SHALL BE USED FOR COMPUTING QUANTITY OF CONCRETE, HOWEVER, THE HAUNCH WIDTH MAY VARY BETWEEN 6" AND 12" PROVIDED THAT THE SLOPE SHALL BE NOT MORE THAN 1:4 FOR A HAUNCH LESS THAN 9" WIDTH.

DECK SLAB DEPTH IS THE DISTANCE SHOWN FROM TOP OF DECK SLAB TO TOP OF STEEL BEAM IS THE DESIGN DIMENSION. THE QUANTITY OF DECK CONCRETE TO BE PAID FOR SHALL BE BASED ON THIS DIMENSION, EVEN THOUGH DEVIATION FROM IT MAY BE NECESSARY BECAUSE THE TOP FLANGE OF BEAM MAY NOT HAVE THE EXACT CAMBER OR CONFORMATION REQUIRED TO PLACE IT PARALLEL TO THE FINISHED GRADE.

CROSSFRAMES IN THE CLOSURE SECTION BAY SHALL BE INSTALLED AFTER THE DECK CONCRETE ON BOTH SIDES OF THIS SECTION HAS BEEN PLACED AND JUST BEFORE THE CLOSURE SECTION CONCRETE HAS BEEN PLACED.

NOTES

FOR EXPANSION JOINT DETAILS SEE STANDARD DWG. EXJ-4-87, SHEETS 16/20 & 17/20

FOR STAGED CONSTRUCTION DETAILS SEE SHEET 2/20

FOR ADDITIONAL DETAILS SEE SHEET 15/20

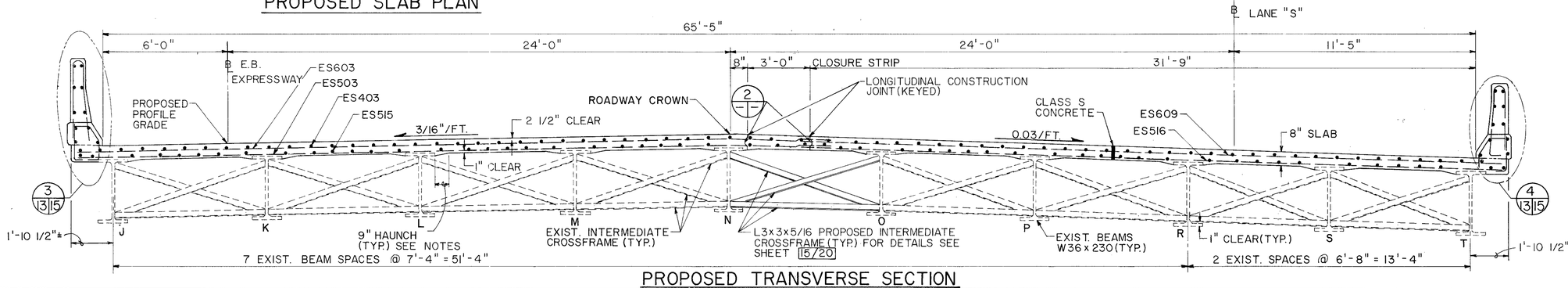

PROPOSED TRANSVERSE SECTION

F.H.W.A. REGION	STATE	PROJECT	
5	OHIO		

817/1214

SUMMIT COUNTY
SUM-76-11.57

JOHN DAVID JONES & ASSOC., INC. 13/20
2162 FRONT STREET
CUYAHOGA FALLS, OHIO 44221
ENGINEERS ARCHITECTS PLANNERS

EASTBOUND DECK PLAN

BRIDGE No. SUM-76-1180
OVER INMAN ST.

DESIGNED	DRAWN	TRACED	CHECKED	REVIEWED	DATE	REVISED
JRS	KMW	KMW	BCK	PAK	9-10-91	

542371

F.H.W.A. REGION	STATE	PROJECT	
5	OHIO		

818/1214

SUMMIT COUNTY
SUM-76-11.57

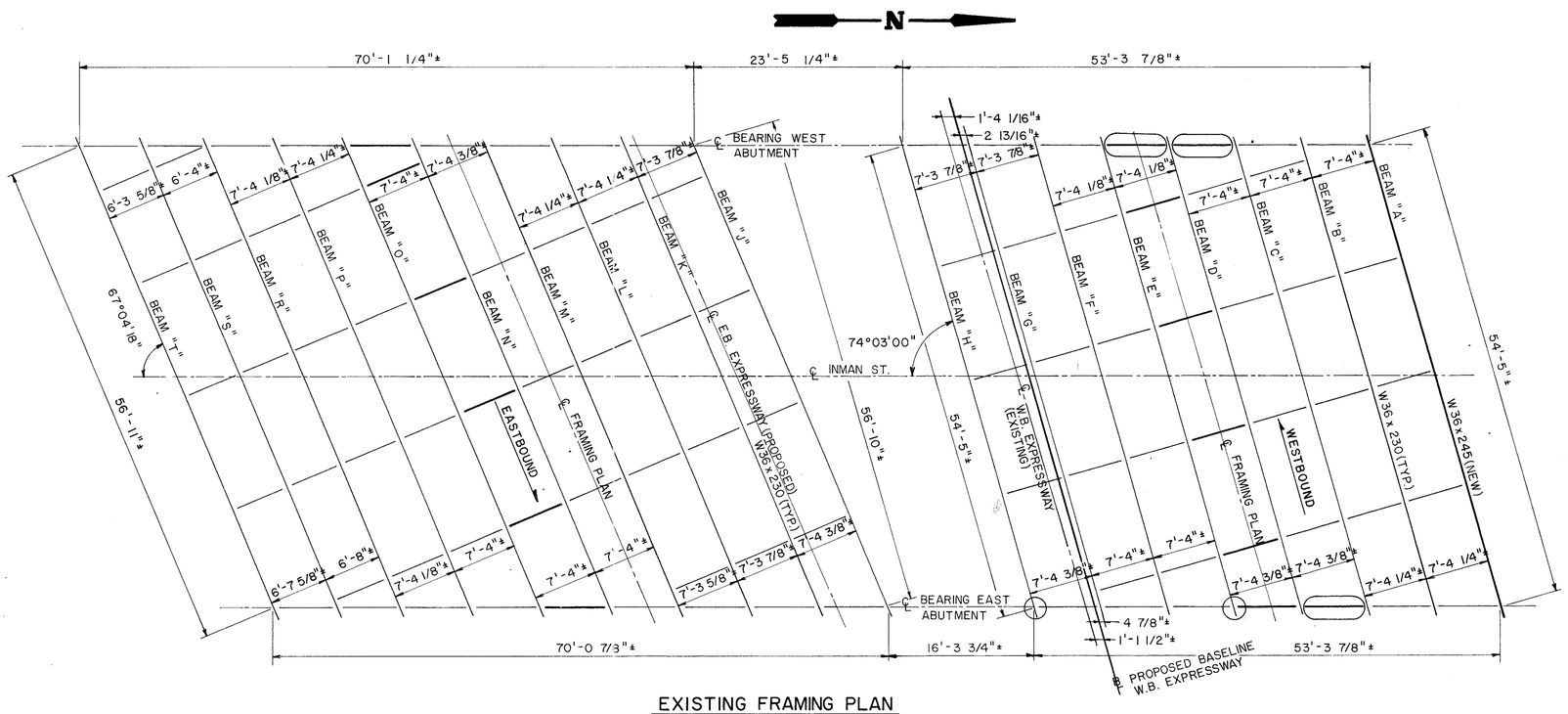

EXISTING FRAMING PLAN

NOTES

1.) AFTER THE EXISTING CONCRETE DECK HAS BEEN REMOVED AND BEFORE THE EXISTING BEAM BEARINGS ARE REMOVED FOR REFURBISHING, THE ELEVATIONS OF THE TOPS OF THE EXISTING BEAMS, "A" THROUGH "T" HAVE TO BE CHECKED TO SEE IF THE 4" SHIMS WILL MAINTAIN SLAB THICKNESS OVER THE BEAMS OF AT LEAST 8 INCHES.

2.) IF THE CALCULATED SLAB THICKNESS IS LESS THAN THIS, THE SHIMS WILL HAVE TO BE REDUCED FROM THEIR TABLE VALUES TO THICKNESSES REQUIRED TO MAINTAIN THE 0.67 FT. SLAB THICKNESS.

3.) BEAM A, WHEN REPLACED SHALL HAVE A TOP OF STEEL ELEVATION EQUAL TO THAT AS MEASURED IN NOTES 1 & 2.

4.) CIRCLED AREAS IN FRAMING PLAN INDICATES AREAS TO BE REPAIRED. THIS WORK SHALL BE AS PER ITEM 513 STRUCTURAL STEEL FOR REHIBILITATION.

5.) ALL BEARINGS TO BE REFURBISHED OR REPAIRED AT THE CONTRACTOR'S OPTION AT NO ADDITIONAL EXPENSE TO THE STATE.

6.) THE NEW W36 x 245 STEEL BEAM SHALL BE PAID FOR UNDER ITEM 513 STRUCTURAL STEEL ASTM A-36 AISC CATEGORY I.

7.) THE CONTRACTOR SHALL FIELD VERIFY ALL DIMENSIONS AND ELEVATIONS PRIOR TO THE FABRICATION OF ANY COMPONENTS, SEE EXISTING STRUCTURE VERIFICATION NOTE ON SHEET 4a/20

8.) ALL BASELINE LAYOUT WORK SHALL BE COORDINATED WITH THE ROADWAY PLANS.

PROPOSED PAVEMENT ELEVATIONS OVER TOP OF EXISTING BEAMS				
EXIST. BEAM	WEST ABUTMENT	MIDSPAN OF BEAM*	EAST ABUTMENT	
A	1118.72	1119.31	1119.83	WESTBOUND ROADWAY
B	1118.97	1119.56	1120.08	
C	1119.22	1119.81	1120.33	
D	1119.43	1120.06	1120.58	
E	1119.73	1120.31	1120.82	
F	1119.98	1120.56	1121.07	
G	1120.24	1120.84	1121.32	
H	1120.49	1121.07	1121.57	
J	1120.04	1120.59	1121.07	EASTBOUND ROADWAY
K	1120.10	1120.65	1121.12	
L	1120.16	1120.71	1121.18	
M	1120.22	1120.77	1121.24	
N	1120.27	1120.82	1121.30	
O	1120.01	1120.56	1121.03	
P	1119.73	1120.28	1120.76	
R	1119.45	1120.00	1120.48	
S	1119.20	1119.75	1120.23	
T	1118.95	1119.50	1119.98	

* ELEVATIONS ARE TOP OF PAVEMENT WITHOUT DEFLECTIONS DUE TO WEIGHT OF CONCRETE SLAB. (+ 1/2" AT EASTBOUND BEAMS & + 7/16" AT WESTBOUND BEAMS HAS BEEN ADDED TO ELEVATIONS IN THIS COLUMN)

SCREED ELEVATION				
LOCATION		℄ BEARING WEST ABUTMENT	MIDSPAN *	℄ BEARING EAST ABUTMENT
NORTH DECK WESTBOUND	NORTH PARAPET GUTTER	1118.59	1119.19	1119.71
	SOUTH PARAPET GUTTER	1120.49	1121.08	1121.58
SOUTH DECK EASTBOUND	NORTH PARAPET GUTTER	1120.02	1120.59	1121.08
	SOUTH PARAPET GUTTER	1118.93	1119.50	1119.99

* THESE ARE TOP OF PAVEMENT ELEVATIONS WITHOUT THE DEFLECTION DUE TO THE WEIGHT OF THE CONCRETE SLAB. (0.04 FT. HAS BEEN ADDED TO THE PAVEMENT ELEVATIONS IN THIS COLUMN)

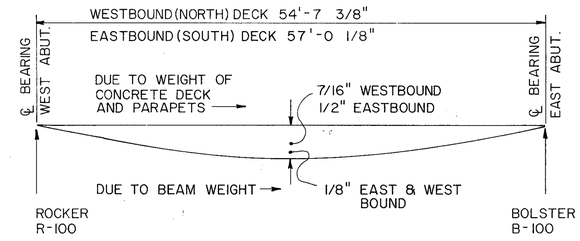

DEAD LOAD DEFLECTION DIAGRAM AT MIDSPAN; EXISTING BEAMS (36 WF 230)

JOHN DAVID JONES & ASSOC., INC. 14/20
2162 FRONT STREET
CUYAHOGA FALLS, OHIO 44221
ENGINEERS ARCHITECTS PLANNERS

EXISTING FRAMING PLAN, BEAM AND SCREED ELEVATIONS

BRIDGE No. SUM-76-11.80
OVER INMAN ST.

DESIGNED	DRAWN	TRACED	CHECKED	REVIEWED	DATE	REVISED
GFD	KMW	—	BCK	PAK	9-10-91	

543371

F.H.W.A. REGION	STATE	REGION	
5	OHIO		

819
1214

SUMMIT COUNTY
SUM-76-11.57

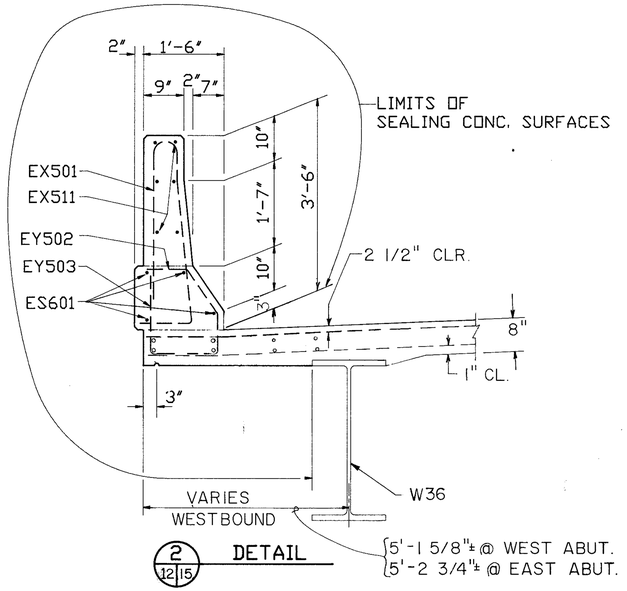

2 / 12|15 DETAIL

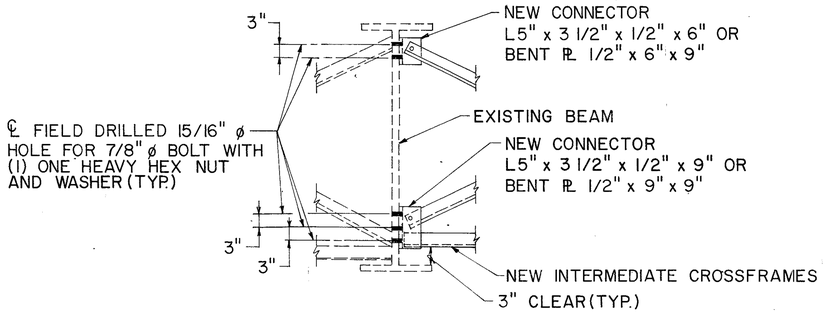

CROSSFRAME CONNECTION DETAIL
AT EXISTING BEAM

NOTE: CROSSFRAME DETAILS & STEEL REPAIRS SHALL BE WORKED WITH STANDARD DRAWING SD-1-69 IN ADDITION TO THIS PLAN SET.

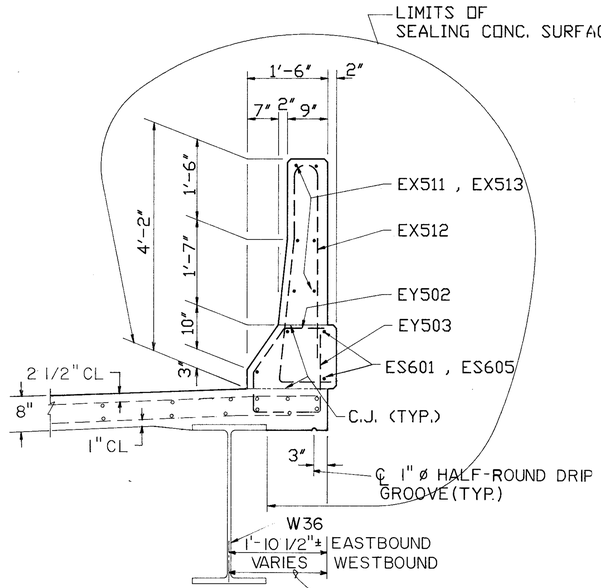

3 / 12|15 13|15 DETAIL

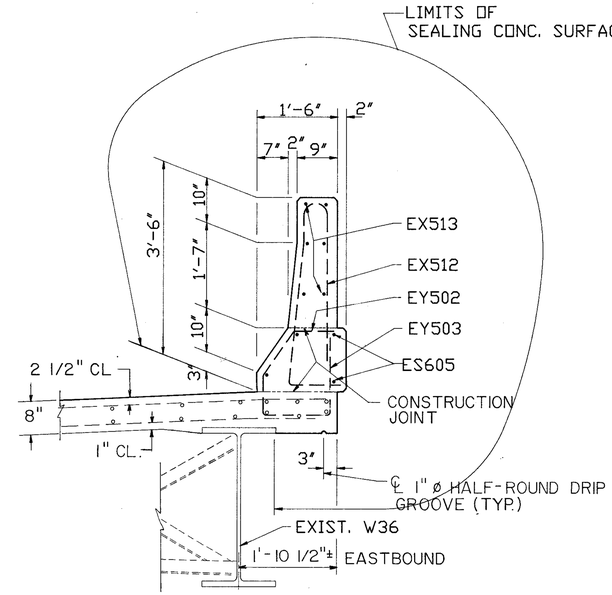

4 / 13|15 DETAIL

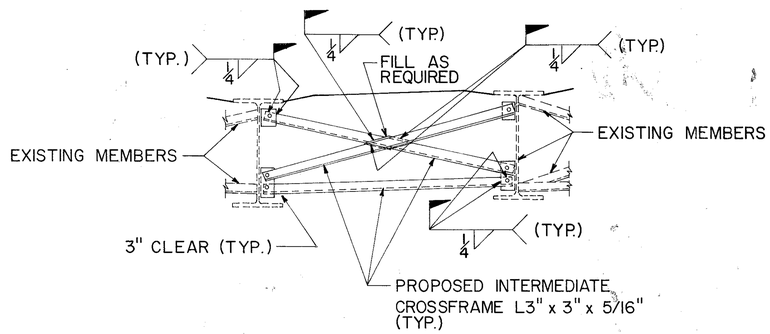

TYPICAL INTERMEDIATE CROSSFRAME

JOHN DAVID JONES & ASSOC., INC. 15/20
2162 FRONT STREET
CUYAHOGA FALLS, OHIO 44221
ENGINEERS ARCHITECTS PLANNERS

DECK DETAILS

BRIDGE NO. SUM-76-1180
OVER INMAN ST.

DESIGNED	DRAWN	TRACED	CHECKED	REVIEWED	DATE	REVISED
JRS	RWM	RCK	BCK	PAK	11-9-87	

F.H.W.A. REG.	STATE	PROJECT	
5	OHIO		

820
1214

SUMMIT COUNTY
SUM-76-11.57

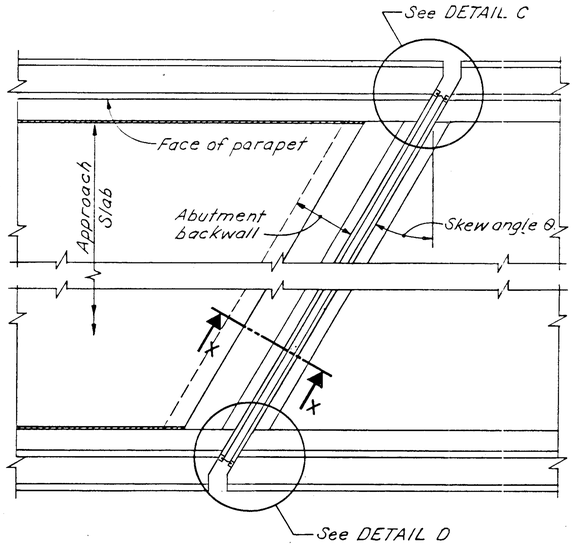

PLAN AT ABUTMENT
FOR BRIDGES WITH DEFLECTOR PARAPET RAILING

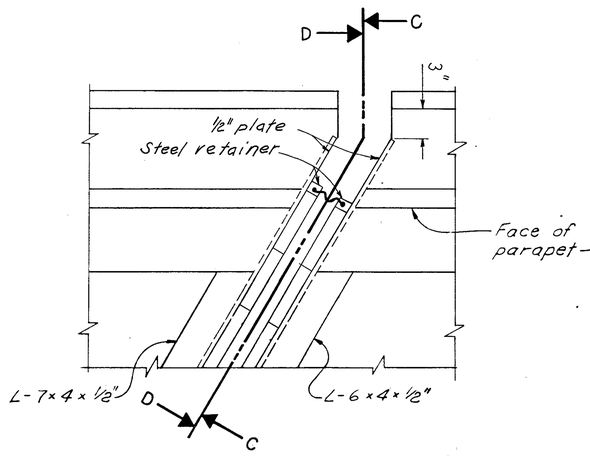

DETAIL C

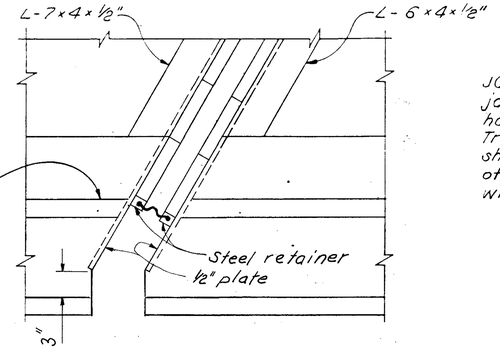

DETAIL D

JOINTS IN END DAM ARMOR: Transverse joints in superstructure angles shall have complete penetration butt welds. Transverse joints in abutment angle shall be closely butted with a minimum of 6'-0" between joints. Welds in contact with seal glands shall be ground flush.

STRIP SEAL ADJUSTMENT TABLE	
AMBIENT TEMPERATURE	JOINT OPENING
40° F	1 13/16"
50° F	1 11/16"
60° F	1 5/8"
70° F	1 9/16"
80° F	1 1/2"
90° F	1 3/8"

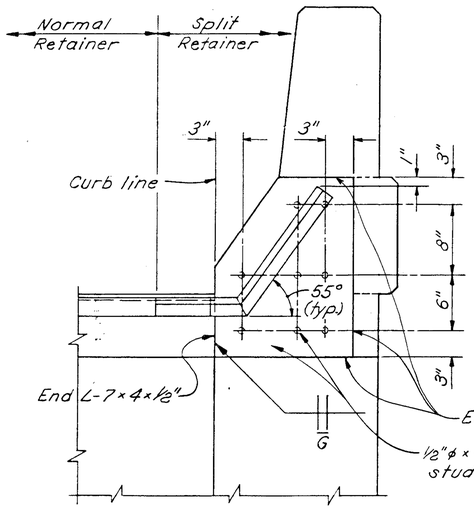

SECTION C-C ⚠

(SIMILAR TO SECTION D-D ON STANDARD DWG. EXJ-4-87, 2/5)

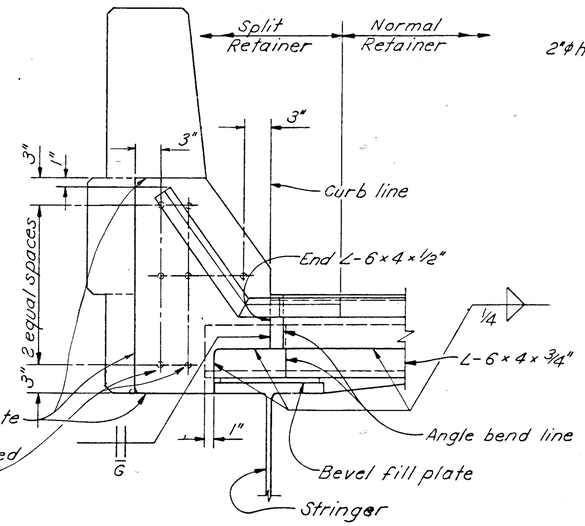

SECTION D-D ⚠

(SIMILAR TO SECTION E-E ON STANDARD DWG. EXJ-4-87, 2/5)

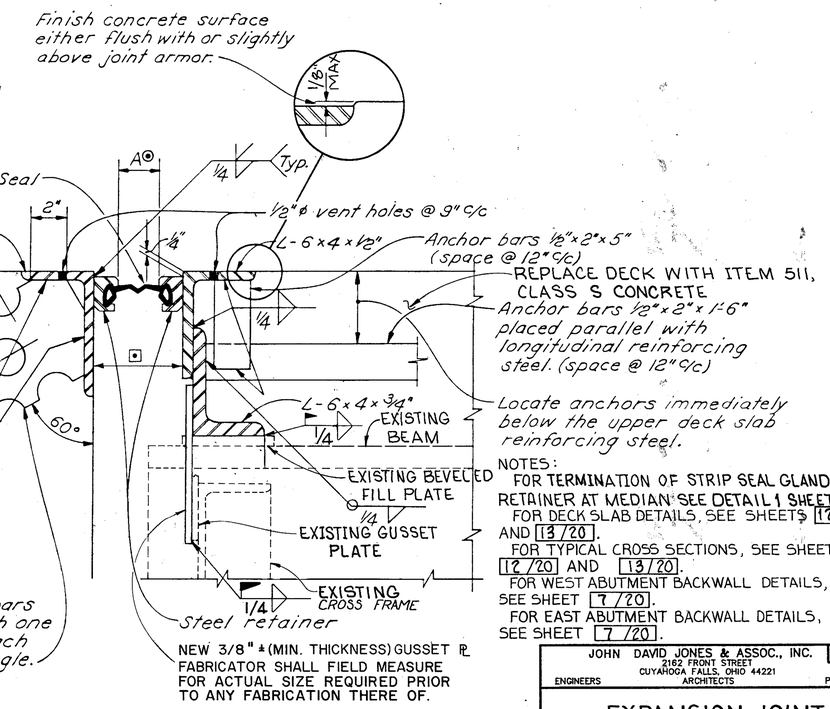

SECTION X-X

NOTES:
FOR TERMINATION OF STRIP SEAL GLAND RETAINER AT MEDIAN SEE DETAIL 1 SHEET 17/20
FOR DECK SLAB DETAILS, SEE SHEETS 12/20 AND 13/20.
FOR TYPICAL CROSS SECTIONS, SEE SHEETS 12/20 AND 13/20.
FOR WEST ABUTMENT BACKWALL DETAILS, SEE SHEET 7/20.
FOR EAST ABUTMENT BACKWALL DETAILS, SEE SHEET 7/20.

⚠ PARAPET JOINT ARMOR ANCHORS: IN LIEU OF THE ½"Ø×21" END-WELDED STUDS SHOWN, ALTERNATE METHODS OF ANCHORING THE JOINT ARMOR MAY BE USED, SUBJECT TO APPROVAL BY THE DIRECTOR.

⊙ - Dimension "A", SEE STRIP SEAL ADJUSTMENT TABLE.

⊡ - THIS DIMENSION IS THE SUM OF (2 x STEEL RETAINER WIDTH) + DIM. "A"

JOHN DAVID JONES & ASSOC., INC. 16/20
2162 FRONT STREET
CUYAHOGA FALLS, OHIO 44221
ENGINEERS ARCHITECTS PLANNERS

EXPANSION JOINT DETAILS

BRIDGE NO. SUM-76-1180
OVER INMAN STREET

DESIGNED	DRAWN	TRACED	CHECKED	REVIEWED	DATE	REVISED
JRS	RCK	RCK	HGS	PAK	12-7-88	

86005/K

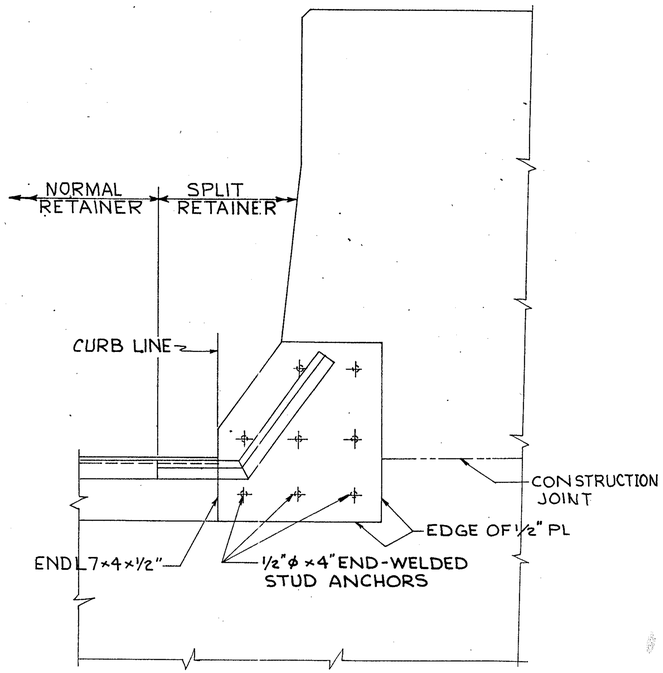

1/7 DETAIL

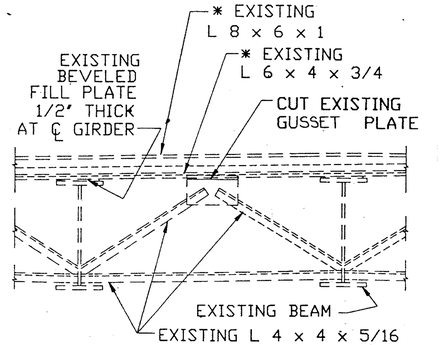

* - EXISTING MEMBERS TO BE REMOVED NEW MEMBERS TO BE INSTALLED FOR DETAILS SEE SHEET 16/20.

EXISTING EXPANSION JOINT REMOVAL

SUMMIT COUNTY
SUM-76-11.57

F.H.W.A. REG.	STATE	PROJECT	
5	OHIO		

821
12/14

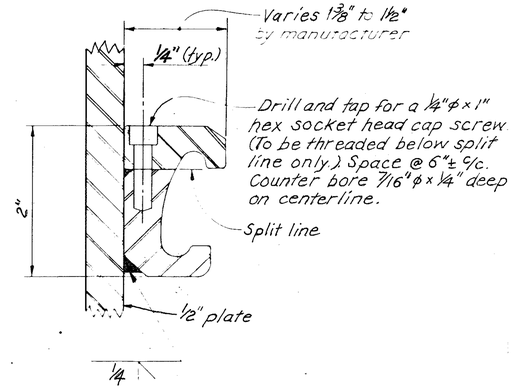

SPLIT RETAINER DETAIL
NORMAL RETAINER SIMILAR

The split retainer shown above is a normal extrusion which has been modified as indicated.
When joint upturns are greater than 60° (from horizontal), split retainers are required. When joint upturns are 60° or less, split retainers are optional.
Steel retainers shall be welded at all miters (below the line where split).

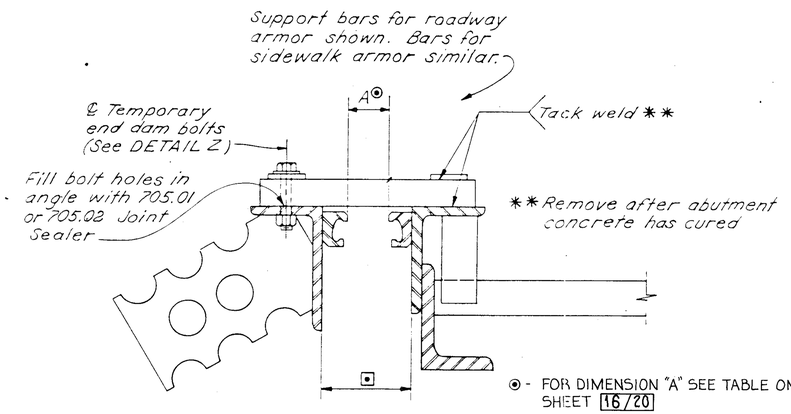

⊙ - FOR DIMENSION "A" SEE TABLE ON SHEET 16/20

⊡ - THIS DIMENSION IS THE SUM OF (2 x STEEL RETAINER WIDTH) + (DIM. "A").

JOINT ARMOR ADJUSTMENT DETAIL

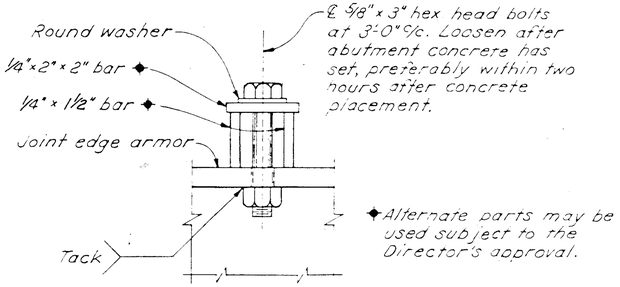

DETAIL Z
TEMPORARY SUPPORT BARS

STRIP SEAL GLAND TABLE			
SEAL MOVEMENT RATING	MANUFACTURER & DESIGNATION *		
	D. S. BROWN	STRUCTURAL ACCESSORIES	WATSON BOWMAN & ACME
3"	SS300	30 SS	S-300

* OR AN APPROVED ALTERNATE

JOHN DAVID JONES & ASSOC., INC. 17/20
2162 FRONT STREET
CUYAHOGA FALLS, OHIO 44221
ENGINEERS ARCHITECTS PLANNERS

EXPANSION JOINT DETAILS

BRIDGE NO. SUM-76-1180
OVER INMAN STREET

DESIGNED	DRAWN	TRACED	CHECKED	REVIEWED	DATE	REVISED
JRS	RCK	-	HGS	PAK	12-7-88	

86005/K

F.H.W.A. REGION	STATE	PROJECT	
5	OHIO		

822
12/14

SUMMIT COUNTY
SUM-76-11.57

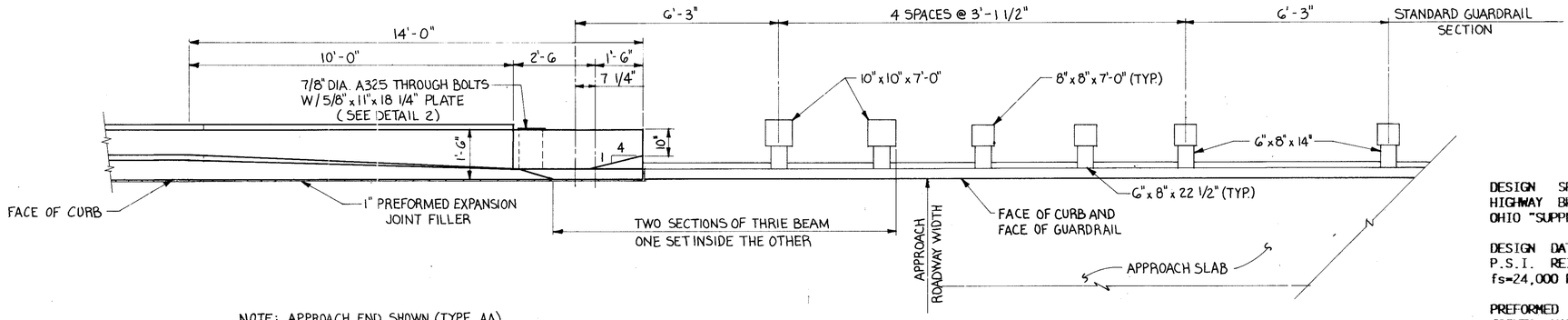

NOTE: APPROACH END SHOWN (TYPE AA)
TRAILING END SIMILAR (TYPE AT)
(SEE STD. DRAWING GR-3)

1 / 15|16 DETAIL
PART PLAN @ ABUTMENT

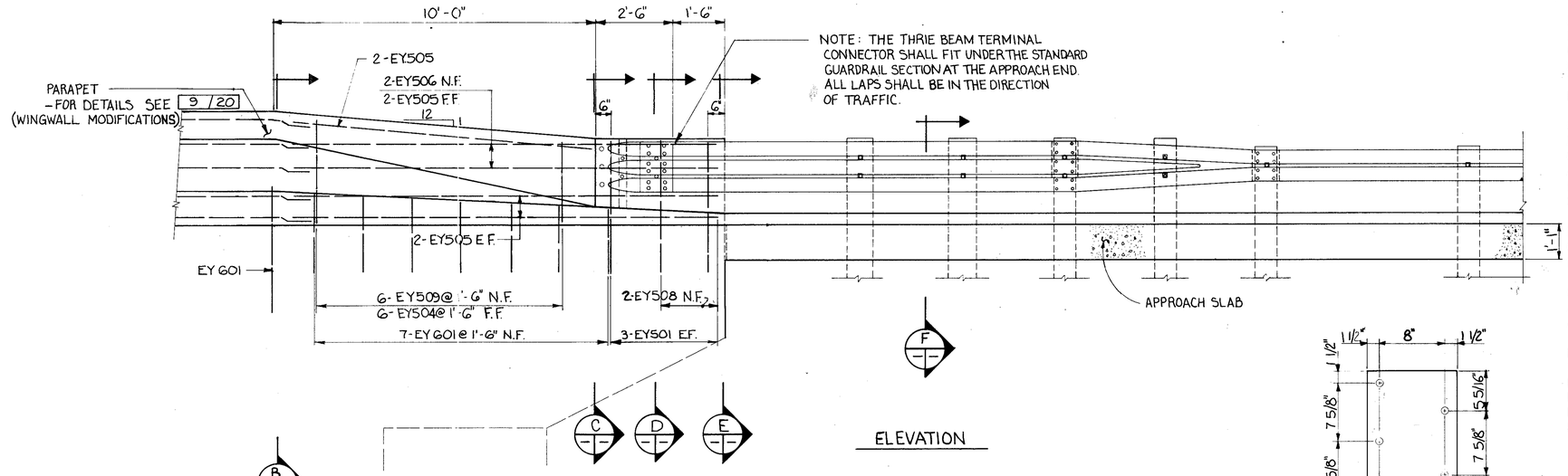

ELEVATION

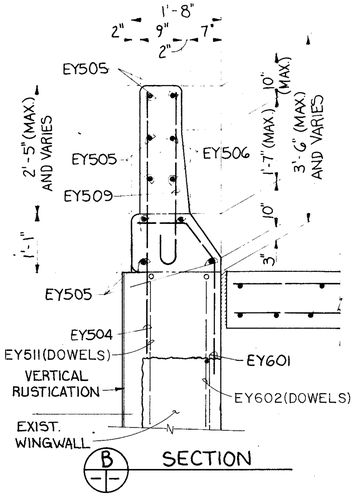

B / SECTION

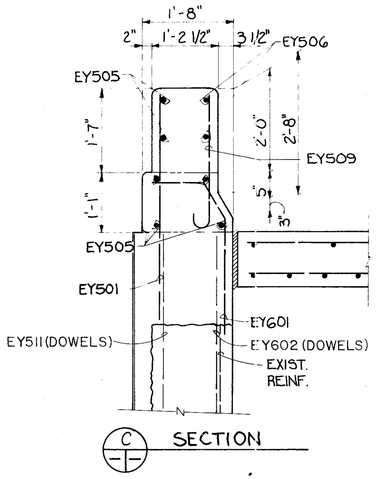

C / SECTION

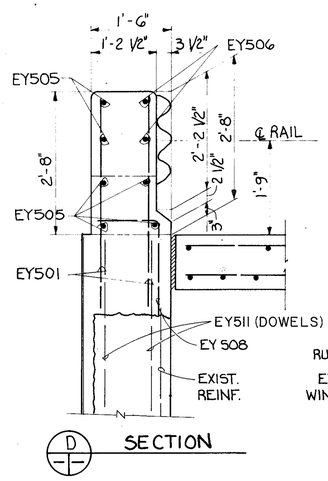

D / SECTION

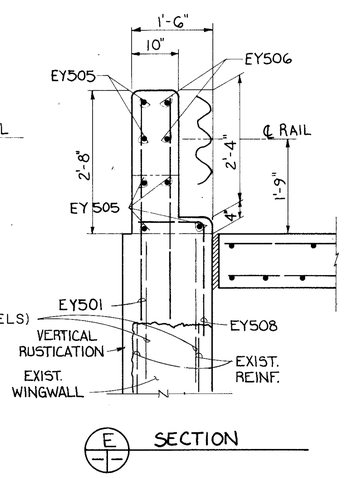

E / SECTION

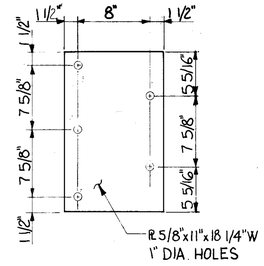

2 / DETAIL

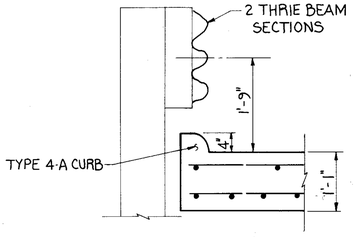

F / SECTION

GENERAL NOTES

DESIGN SPECIFICATIONS: "STANDARD SPECIFICATIONS FOR HIGHWAY BRIDGES" ADOPTED BY AASHTO, 1989, INCLUDING THE OHIO "SUPPLEMENT" TO THESE SPECIFICATIONS.

DESIGN DATA: CONCRETE CLASS S fc=4500 P.S.I., fc=1500 P.S.I. REINFORCING STEEL ASTM A615, A616, 1617 GRADE 60 fs=24,000 P.S.I.

PREFORMED EXPANSION JOINT FILLER IN THE PARAPET DEFLECTION JOINTS MAY BE EITHER 1/4" GRAY SPONGE RUBBER OR 1/4" FILLER CELLULAR POLYVINYL CHLORIDE (PVC) SPONGE. SPONGE RUBBER FILLER SHALL CONFORM TO AASHTO M-153, TYPE 1. DENSITY OF PVC SPONGE NOT BE LESS THAN 20 LBS. PER CU. FT.

DEFLECTION JOINTS SHALL BE SPACED AT 16'-0" CENTERS, MAX., EXCEPT THAT FOR CONTINUOUS STRUCTURES THE PANELS SHALL BE FURTHER SUBDIVIDED IN THE NEGATIVE MOMENT REGION (OVER THE PIERS) INTO LENGTHS OR NOT LESS THAN 5'-0" NOR MORE THAN 7'-6". REINFORCING BARS SHALL NOT EXTEND THROUGH DEFLECTION JOINTS.

CONCRETE PARAPETS ABOVE UPPER CONSTRUCTION JOINT SHALL BE PLACED IN ALTERNATE SECTIONS BY THE USE OF BULKHEADS. CLOSING SECTIONS SHALL BE PLACED AFTER REMOVAL OF BULKHEADS AND AFTER PLACEMENT OF EXPANSION JOINT FILLER. EXPOSED EDGES OF THE FILLER SHALL BE FLUSH WITH THE SURFACE ON CONCRETE AND SHALL BE FREE OF MORTAR.

PAYMENT: ADDITIONAL GUARDRAIL COST IN EXCESS OF NORMAL GUARDRAIL COST, SUCH AS: TERMINAL CONNECTOR, STEEL PLATE, BOLTS, NUTS, PLATE WASHERS AND OTHER HARDWARE SHALL BE INCLUDED WITH BRIDGE TERMINAL ASSEMBLY FOR PAYMENT. QUANTITIES OF CONCRETE AND REINFORCING STEEL FOR PARAPET ARE INCLUDED WITH THEIR APPROPRIATE ITEM UNDER EITHER ABUTMENTS OR SUPERSTRUCTURE FOR PAYMENT.

POSTS SHALL BE SQUARE-SAWED PRESSURE TREATED WOOD AS PER 710.14. POSTS SHALL BE FABRICATED WITH SQUARE ENDS. BOLT HOLES SHALL BE BORED AND TOPS OF POSTS TRIMMED, IF REQUIRED, AFTER POSTS ARE SET. POSTS MAY BE SET IN DRILLED HOLES OR DRIVEN TO GRADE. STEEL POSTS AND BLOCKOUTS MAY BE FURNISHED AS AN ALTERNATE, PROVIDED THAT THE STRENGTH EQUALS OR EXCEEDS THE STRENGTH OF WOOD POSTS AND BLOCKOUTS.

WORK THIS DRAWING WITH STANDARD CONSTRUCTION DRAWING GR-3.1 (BRIDGE TERMINAL ASSEMBLY, TYPE 1)

FOR REINFORCING STEEL LIST SEE BRIDGE TERMINAL PARAPETS, SHEET 19/20

JOHN DAVID JONES & ASSOC., INC. 18/20
2162 FRONT STREET
CUYAHOGA FALLS, OHIO 44221
ENGINEERS ARCHITECTS PLANNERS

BRIDGE RAILING DEFLECTOR PARAPET TYPE

BRIDGE No. SUM-76-11.80
OVER INMAN ST.

DESIGNED	DRAWN	TRACED	CHECKED	REVIEWED	DATE	REVISED
JRS	JPM	—	JRS	PAK	11-12-87	

96005

MARK	TOTAL NO.	LENGTH	WEIGHT	SHP. TYPE	A	B	C	D
			EAST ABUTMENT					
D801	88	4'–11"	1155	14	2'–7"			
AE601	97	7'–11"	1153	1	1'–5"	3'–5"		
AE604	14	21'–3"	447	STR.				
AE606	7	23'–2"	244	STR.				
AE608	14	19'–10"	417	STR.				
AE611	7	20'–1"	211	STR.				
AE613	7	30'–7"	322	STR.				
AE615	8	5'–1"	61	STR.				
AE616	6	18'–4"	165	STR.				
AE617	4	4'–2"	25	STR.				
AE626	29	5'–9"	250	4	4'–0"	1'–10"	12	12
AE629	4	7'–2"	43	30	4'–2"	1'–2"	2'–0"	5 1/8"
AE631	1	11'–0"	17	1	2'–10"	4'–3"		
AE632	1	9'–11"	15	29				
AE633	10	18'–4"	275	STR.				
AE634	3	4'–5"	20	4	3'–0"	1'–6"	39 1/4	12
AE636	7	4'–8"	49	STR.				
		TOTAL BARS = 4869						
EAE602	131	6'–9"	1328	1	0'–11"	3'–1"		
EAE603	15	15'–1"	340	1	0'–11"	7'–3"		
EAE605	2	21'–3"	64	STR.				
EAE607	1	23'–2"	35	STR.				
EAE609	4	19'–10"	119	STR.				
EAE610	6	13'–10"	125	STR.				
EAE612	1	20'–1"	31	STR.				
EAE614	1	30'–7"	46	STR.				
EAE618	27	3'–8"	149	9	1'-0"	0'–6"	2'–2"	0'-8 1/2"
EAE625	21	9'–0"	284	2	4'–6"	4'–6"		
EAE627	4	7'–11"	48	2	3'–5"	4'–8"		
EAE628	8	18'–4"	220	STR.				
EAE630	5	4'–3"	32	STR.				
EA501	20	4'-2"	87	STR.				
EX501	38	6'-11	274	27	0'-8"	3'-0"		
EX504	2	5'-3"	11	5	2'-2"	2'-5"	0'-7 1/2"	
EX509	20	22'-8"	473	STR.				

MARK	TOTAL NO.	LENGTH	WEIGHT	SHP. TYPE	A	B	C	D
			EAST ABUTMENT (CONTINUED)					
EY501	10	4'-0"	42	STR.				
EY504	1 SER. 6	4'-0" / 4'-10"	28	STR.				
EY505	16	13'-8"	228	STR.				
EY506	4	13'-8"	57	36				
EY508	2	2'-0"	5	2	1'-0"	1'-0"		
EY509	2 SER. 6	3'-1" / 3'-8 1/2"	43	6	2'-6" / 3'-11/2"			
EY510	21	2'-6"	55	STR.				
EY511	18	2'-6"	43	STR.				
EY601	26	2'-9"	109	9	0'-9"	0'-6"	1'-3"	0'-8"
EY602	26	2'-6"	98	STR.				
		TOTAL BARS = 4304						
			WEST ABUTMENT					
D801	88	4'–11"	1155	14	2'–7"			
AW601	101	7'–11"	1201	1	1'–5"	3'–5"		
AW604	14	21'–3"	447	STR.				
AW606	14	17'–0"	357	STR.				
AW608	14	21'–1"	443	STR.				
AW611	7	15'–0"	158	STR.				
AW613	7	30'–7"	322	STR.				
AW615	8	5'–1"	61	STR.				
AW616	6	18'–4"	165	STR.				
AW617	4	4'–2"	25	STR.				
AW626	27	7'–4"	297	4	5'–6"	1'–10"	12	12
AW629	4	6'–3"	38	2	4'–2"	2'–3"		
AW631	1	11'–0"	17	1	2'–10"	4'–3"		
AW632	1	9'–11"	15	29				
AW636	7	4'–8"	49	STR.				
AW637	10	16'–10"	253	STR.				
AW638	3	5'–11"	27	4	3'–0"	3'–0"	12	5 1/8
AW639	3	5'–1"	23	30	1'–10"	0'–6"	3'–0"	3 1/4
		TOTAL BARS = 5053						

TYPE 1

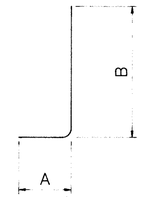

TYPE 2

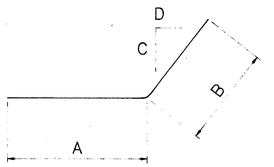

TYPE 4

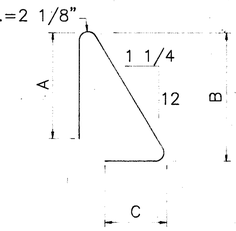

TYPE 5

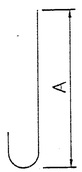

TYPE 6

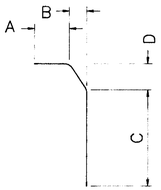

TYPE 9

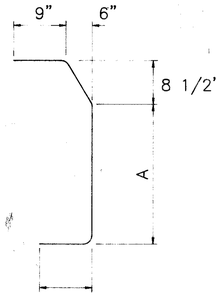

TYPE 13

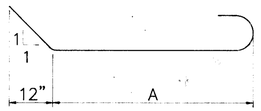

TYPE 14

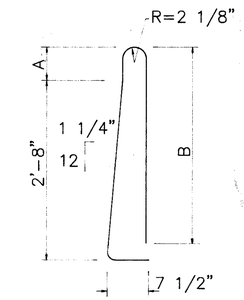

TYPE 27

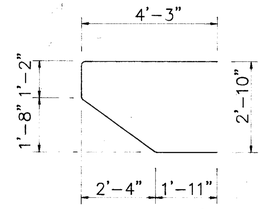

TYPE 29

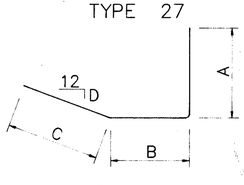

TYPE 30

REINFORCING STEEL SAMPLES :

REFER TO CMS SECTIONS 106.03 , 700 , 709.01 THROUGH 709.05 AND 709.08. SUFFICIENT ADDITIONAL REINFORCING STEEL SHALL BE PROVIDED FOR SAMPLING. RANDOM SAMPLES SHALL BE REPLACED IN THE STRUCTURES BY THE ADDITIONAL STEEL , SPLICED IN ACCORDANCE WITH 509.08.

NOTE: ALL REINFORCING STEEL SHALL BE EPOXY COATED.

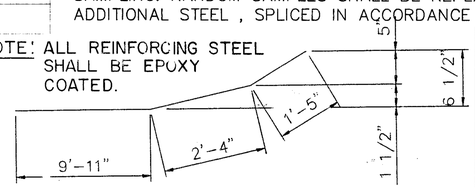

TYPE 36

F.H.W.A. REGION	STATE	PROJECT
5	OHIO	

823 / 1214

SUMMIT COUNTY
SUM–76–11.57

JOHN DAVID JONES & ASSOC., INC.
2162 FRONT STREET
CUYAHOGA FALLS, OHIO 44221
ENGINEERS ARCHITECTS PLANNERS

19/20

REINFORCING STEEL LIST

BRIDGE No. SUM–76–1180
OVER INMAN ST.

DESIGNED	DRAWN	TRACED	CHECKED	REVIEWED	DATE	REVISED
J.R.S.	R.W.M.	–	BCK	P.A.K.	11-9-87	

MARK	TOTAL NO.	LENGTH	WEIGHT	SHP. TYPE	A	B	C	D
WEST ABUTMENT (CONTINUED)								
EAW602	129	6'-9"	1308	1	0'-11"	3'-1"		
EAW603	22	15'-1"	498	1	0'-11"	7'-3"		
EAW605	2	21'-3"	64	STR.				
EAW607	2	17'-0"	51	STR.				
EAW609	4	21'-1"	127	STR.				
EAW610	6	21'-7"	195	STR.				
EAW612	1	14'-4"	23	STR.				
EAW614	1	30'-7"	46	STR.				
EAW618	25	3'-8"	138	9	1'-0"	0'-6"	2'-2"	0'-8 1/2"
EAW625	18	6'-8"	180	2	3'-5"	3'-5"		
EAW627	4	7'-11"	48	2	3'-5"	4'-8"		
EAW630	5	4'-3"	32	STR.				
EAW635	8	16'-10"	202	STR.				
EY601	26	2'-9"	109	9	0'-9"	0'-6"	1'-3"	0'-8"
EY602	26	2'-6"	98	STR.				
EY501	10	4'-0"	42	STR.				
EY504	1 SER. 6	4'-0" / 4'-10"	28	STR.				
EY505	16	13'-8"	228	STR.				
EY506	4	13'-8"	57	36				
EY508	2	2'-0"	5	2	1'-0"	1'-0"		
EY509	2 SER. 6	3'-1" / 3'-8 1/2"	43	6	2'-6" / 3'-11/2"			
EY510	21	2'-6"	55	STR.				
EY511	18	2'-6"	43	STR.				
EX501	36	6'-11"	260	27	0'-8"	3'-0"		
EX504	2	5'-3"	11	5	2'-2"	2'-5"	0'-7 1/2"	
EX509	10	22'-8"	237	STR.				
EX510	10	19'-8"	205	STR.				
EAW501	20	4'-2"	87	STR.				
TOTAL BARS = 4299								

MARK	TOTAL NO.	LENGTH	WEIGHT	SHP. TYPE	SER. INCR.	A	B	C	D
SUPERSTRUCTURE									
ES401	64	30'-0"	1283	STR.					
ES402	64	29'-3"	1251	STR.					
ES403	150	30'-0"	3006	STR.					
ES502	72	29'-6"	2216	STR.					
ES503	65	36'-4"	2463	STR.					
ES504	1 SER. 12	3'-2" / 28'-1"	196	STR.	2'-3 3/16"				
ES506	1 SER. 11	4'-0" / 27'-6"	181	STR.	2'-4 3/16"				
ES507	1 SER. 11	6'-3" / 28'-8"	201	STR.	2'-2 7/8"				
ES508	1 SER. 12	4'-11" / 30'-4"	221	STR.	2'-3 3/4"				
ES509	47	30'-0"	1471	STR.					
ES510	47	29'-7"	1450	STR.					
ES511	1 SER. 19	4'-0" / 32'-8"	364	STR.	1'-7 1/8"				
ES512	1 SER. 20	2'-8" / 32'-10"	371	STR.	1'-7" +				
ES513	1 SER. 23	2'-3" / 36'-7"	466	STR.	1'-6 3/4"				
ES514	58	30'-0"	1815	STR.					
ES515	58	30'-0"	1815	STR.					
ES516	67	34'-5"	2405	STR.					
ES517	71	30'-6"	2259	STR.					
ES518	21	4'-4" / 35'-0"	431	STR.	1'-6 3/8"				
ES601	16	29'-3"	703	STR.					
ES602	72	29'-6"	3190	STR.					
ES603	65	36'-4"	3548	STR.					
ES604	1 SER. 12	3'-2" / 28'-1"	282	STR.	2'-3 3/16"				
ES605	24	20'-11"	754	STR.					
ES606	1 SER. 11	4'-0" / 27'-6"	260	STR.	2'-4 3/16"				
ES607	1 SER. 11	6'-3" / 28'-8"	289	STR.	2'-2 7/8"				
ES608	1 SER. 12	4'-11" / 30'-4"	318	STR.	2'-3 3/4"				
ES609	67	34'-5"	3464	STR.					
ES610	1 SER. 19	4'-0" / 32'-8"	523	STR.	1'-7 1/8"				
ES611	1 SER 20	2'-8" / 32'-10"	533	STR.	1'-7" +				
ES612	71	30'-6"	3253	STR.					
ES613	1 SER. 23	2'-3" / 36'-7"	671	STR.	1'-6 3/4"				
ES614	21	4'-4" / 35'-0"	621	STR.	1'-6 3/8"				
EX501	79	7'-1"	584	27					
EX511	48	13'-7"	680	STR.					
EX512	79	8'-5"	693	27					
EX513	48	14'-3"	713	STR.					
EY502	158	3'-0"	494	13					
EY503	158	2'-3 1/2"	378	2					
TOTAL BARS = 45,816									

F.H.W.A. REGION	STATE	PROJECT
5	OHIO	

824 / 1214

SUMMIT COUNTY
SUM-76-11.57

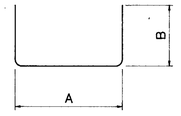

TYPE 1

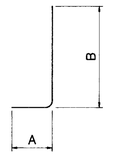

TYPE 2

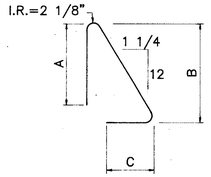

TYPE 5

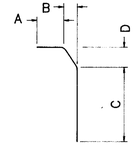

TYPE 9

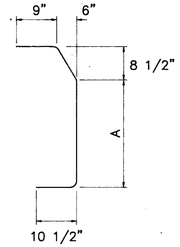

TYPE 13

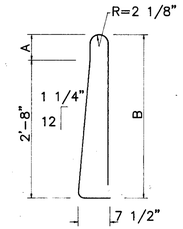

TYPE 27

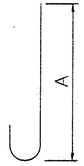

TYPE 6

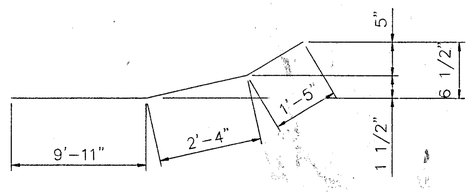

TYPE 36

REINFORCING STEEL SAMPLES:
REFER TO CMS SECTIONS 106.03, 700, 709.01 THROUGH 709.05 AND 709.08. SUFFICIENT ADDITIONAL REINFORCING STEEL SHALL BE PROVIDED FOR SAMPLING. RANDOM SAMPLES SHALL BE REPLACED IN THE STRUCTURES BY THE ADDITIONAL STEEL, SPLICED IN ACCORDANCE WITH 509.08.

NOTE:
ALL REINFORCING STEEL SHALL BE EPOXY COATED.

JOHN DAVID JONES & ASSOC., INC. 20/20
2162 FRONT STREET
CUYAHOGA FALLS, OHIO 44221
ENGINEERS ARCHITECTS PLANNERS

REINFORCING STEEL LIST

BRIDGE No. SUM-76-1180
OVER INMAN ST.

DESIGNED	DRAWN	TRACED	CHECKED	REVIEWED	DATE	REVISED
J.R.S.	R.W.M.	——	B.C.K.	P.A.K.	11-9-87	

F.H.W.A. REG.	STATE	PROJECT	
5	OHIO		

925
1214

SUMMIT COUNTY
SUM-76-11.57

PLAN

BENCH MARK

CITY OF AKRON DISK STAMPED "HOBAN" LOCATED AT THE NORTHEAST ENTRANCE TO SCHOOL, ELEV. 1166.79

VERTICAL CLEARANCE (EAST BEAM)	
EXISTING	15.02'
REQUIRED	17.25'
PROPOSED	17.45'

MINIMUM VERTICAL CLEARANCE REQUIRED INCLUDES 3" ALLOWANCE FOR FUTURE MAINLINE PAVEMENT OVERLAY.

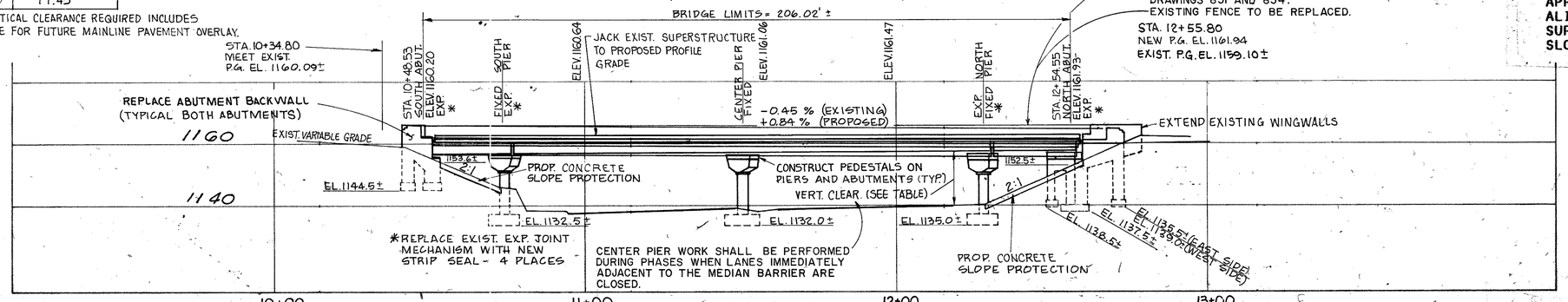

ELEVATION

EXISTING STRUCTURE

TYPE: SIMPLE END SPANS, CONTINUOUS MIDSPANS, STEEL BEAMS WITH REINFORCED CONCRETE DECK AND SUBSTRUCTURES.

SPANS: 24'-0", 75'-0", 77'-6", 24'-0" C/CBRGS.
ROADWAY: 14'-0" FACE/FACE CURB
LOADING: CF 130
SKEW: 24°-59'-32" RT. FWD.
WEARING SURFACE: 2 1/2" ASPHALTIC CONCRETE
APPROACH SLABS: NONE
ALIGNMENT: TANGENT
SUPERELEVATION: NONE
SLOPE PROTECTION: NONE

PROPOSED STRUCTURE

TYPE: JACK EXISTING SUPERSTRUCTURE TO ACHIEVE REQUIRED VERTICAL CLEARANCES. UPGRADE EXISTING STRUCTURE INCLUDING REPAIR CONCRETE DECK AND SUBSTRUCTURES, REPLACE EXPANSION JOINT MECHANISMS, CLEAN AND REPAINT STEEL, REPLACE ASPHALTIC WEARING SURFACE WITH LMC OVERLAY, SEAL PIERS.

SPANS: 24'-0", 75'-0", 77'-6", 24'-0" C/C BRGS.
ROADWAY: 14'-0" FACE/FACE CURB
LOADING: H15-44 CASE III
SKEW: 24°-59'-32" RT. FWD.
WEARING SURFACE: 1 1/4" LMC OVERLAY
APPROACH SLABS: NONE
ALIGNMENT: TANGENT
SUPERELEVATION: NONE
SLOPE PROTECTION: CONCRETE

STRUCTURE FILE No. 7706219

JOHN DAVID JONES & ASSOC. INC. 2162 FRONT STREET CUYAHOGA FALLS, OHIO 44221
ENGINEERS ARCHITECTS PLANNERS

1/16

SITE PLAN

BRIDGE No. SUM-76-12.00
HOBAN PEDESTRIAN BRIDGE
OVER INTERSTATE 76
SUMMIT COUNTY
STA. 10+48.53
TO STA. 12+54.55

PRESENT TOPOGRAPHY		PROPOSED WORK			
SURVEYED	DRAWN	DESIGNED	DRAWN	CHECKED	REVIEWED
		J.R.S.	R.W.M.	D.Y.F.	P.A.K. 5-11-87

ESTIMATED QUANTITIES

QUANTITY CALCULATIONS
MADE BY: J.R.S. DATE: 2-89
CH'KD BY: G.F.D. DATE: 2-89

F.H.W.A. REGION	STATE	PROJECT	
5	OHIO		

826
1214

SUMMIT COUNTY
SUM-76-11.57

ITEM	ITEM EXT.	TOTAL	UNIT	DESCRIPTION	ABUTMENTS	PIERS	SUPER STRUCTURE	GENERAL
202	11200	LUMP		PORTIONS OF STRUCTURES REMOVED				LUMP
202	23500	312	Sq. Yd.	WEARING COURSE REMOVED			312	
509	15400	605	LB.	REINFORCING STEEL, GRADE 60	605			
509	15800	2935	LB.	EPOXY COATED REINFORCING STEEL, GRADE 60	2459	476		
510	11100	94	EACH	DOWEL HOLES	94			
511	32202	2	CU.YD.	CLASS S CONCRETE, SUPERSTRUCTURE			2	
511	45100	31	CU.YD.	CLASS "C" CONCRETE, ABUTMENTS ABOVE FOOTINGS	31			
511	46400	5	Cu. Yd.	CLASS "C" CONCRETE, PEDESTALS, INCLUDING REINFORCING	2	3		
511	51100	10	Cu. Yd.	Class "C" Concrete, Facing As Per Plan	10			
513	16590	450	LB.	STRUCTURAL STEEL SHIM PLATES	450			
Spec.	513 17700	LUMP		LIFT, SUPPORT AND HOLD EXISTING STRUCTURAL STEEL				LUMP
516	11210	71	LIN.FT.	STRUCTURAL EXPANSION JOINTS INCL. ELASTOMERIC STRIP SEALS,			71	
516	45305	21	EACH	REFURBISH BEARING DEVICES, AS PER PLAN	6	15		

ITEM	ITEM EXT.	TOTAL	UNIT	DESCRIPTION	ABUTMENTS	PIERS	SUPER STRUCTURE	GENERAL
518	21200	16	CU.YD.	POROUS BACKFILL, WITH FILTER FABRIC	16			
519	11100	40	SQ.FT.	PATCHING CONCRETE STRUCTURE	20	20		
601	21000	162	SQ.YD.	CONCRETE SLOPE PROTECTION				162
845	10300	312	SQ.YD.	LATEX MODIFIED CONCRETE OVERLAY (1-1/4" THICK)			312	
845	11000	2	CU.YD.	LATEX MODIFIED CONCRETE (VARIABLE THICKNESS)			2	
845	30000	1	CU.YD.	FULL-DEPTH REPAIR			1	
SPECIAL	51267502	390	SQ.YD.	SEALING CONCRETE SURFACES (EPOXY) (SEE PROPOSAL NOTE)	74	60	256	
SPECIAL	51267504	57	SQ.YD.	SEALING CONCRETE SURFACES (NON-EPOXY) (SEE PROPOSAL NOTE)		57		
SPECIAL	51400050	6240	SQ.FT.	OF EXISTING STEEL, SURFACE PREPARATION, SYSTEM OZEU (SEE PROPOSAL NOTE) ▲			6240	
SPECIAL	51400056	6240	SQ.FT.	FIELD PAINTING OF EXISTING STEEL, PRIME COAT, SYSTEM OZEU (SEE PROPOSAL NOTE) ▲			6240	
SPECIAL	51400060	6240	SQ.FT.	FIELD PAINTING OF EXISTING STEEL, INTERMEDIATE COAT, SYSTEM OZEU (SEE PROPOSAL NOTE) ▲			6240	
SPECIAL	51400066	6240	SQ.FT.	FIELD PAINTING OF EXISTING STEEL, FINISH COAT, SYSTEM OZEU (SEE PROPOSAL NOTE) ▲			6240	
~~SPECIAL~~	~~51426500~~	~~LUMP~~		~~HAZARDOUS WASTE MANAGEMENT (SEE PROPOSAL NOTE)~~				~~LUMP~~
~~SPECIAL~~	~~51426510~~	~~LUMP~~		~~NON-HAZARDOUS WASTE MANAGEMENT (SEE PROPOSAL NOTE)~~				~~LUMP~~
SPECIAL	60739920	417	LIN.FT.	VANDAL PROTECTION FENCE, 10' CURVED, COATED FABRIC	11		406	

▲ See general notes for additional requirements

JOHN DAVID JONES & ASSOC., INC.
2162 FRONT STREET
CUYAHOGA FALLS, OHIO 44221
ENGINEERS ARCHITECTS PLANNERS

2/16

QUANTITY TABLE

BRIDGE No. SUM-76-12.00
HOBAN PEDESTRIAN BRIDGE

DESIGNED	DRAWN	TRACED	CHECKED	REVIEWED	DATE	REVISED
JRS	EMB	—	BRH	PAK	11/89	

542371

GENERAL NOTES

F.H.W.A. REGION	STATE	REGION	
5	OHIO		

827
1214

SUMMIT COUNTY
SUM-76-11.57

REFERENCE SHALL BE MADE
TO STANDARD DRAWING EXT-4-87 DATED: 1-5-89
TO SUPPLEMENTAL SPECIFICATIONS:

~~824~~ ~~DATED 10-8-82~~

845 DATED ~~2-25-88~~ 5-31-88

953 DATED 8-21-80

DESIGN SPECIFICATIONS: MODIFICATIONS TO THIS STRUCTURE CONFORM TO "STANDARD SPECIFICATIONS FOR HIGHWAY BRIDGES" ADOPTED BY THE AMERICAN ASSOCIATION OF STATE HIGHWAY AND TRANSPORTATION OFFICIALS, 1983, INCLUDING THE 1984 AND 1985 INTERIM SPECIFICATIONS AND THE OHIO "SUPPLEMENT" TO THESE SPECIFICATIONS.

DESIGN LOADING - H15-44 CASE III.

DESIGN STRESSES

CONCRETE CLASS S - COMPRESSIVE STRENGTH 4500 P.S.I.
CONCRETE CLASS C - COMPRESSIVE STRENGTH 4000 P.S.I.
REINFORCING STEEL - ASTM A615, A616, A617 - GRADE 60 MINIMUM YIELD STRENGTH 60,000 P.S.I.
STRUCTURAL STEEL ASTM A36-YIELD STRENGTH 36,000 P.S.I.

DECK PROTECTION METHOD: LATEX MODIFIED CONCRETE OVERLAY.
SEALING OF PARAPET SURFACES.

EXISTING STRUCTURE VERIFICATION: DETAILS AND DIMENSIONS SHOWN ON THESE PLANS PERTAINING TO THE EXISTING STRUCTURE HAVE BEEN OBTAINED FROM PLANS OF THE EXISTING STRUCTURE AND/OR FROM FIELD OBSERVATIONS AND MEASUREMENTS. CONSEQUENTLY, THEY ARE INDICATIVE OF THE EXISTING STRUCTURE AND THE PROPOSED WORK BUT THEY SHALL BE CONSIDERED TENTATIVE AND APPROXIMATE. THE CONTRACTOR IS REFERRED TO CMS SECTIONS 102.05, 105.02 AND 513.02.

CONTRACT BID PRICES SHALL BE BASED UPON A RECOGNITION OF THE UNCERTAINTIES DESCRIBED ABOVE AND UPON A PREBID EXAMINATION OF THE EXISTING STRUCTURE BY THE CONTRACTOR. HOWEVER, ALL PROJECT WORK SHALL BE BASED UPON ACTUAL DETAILS AND DIMENSIONS WHICH HAVE BEEN VERIFIED BY THE CONTRACTOR IN THE FIELD.

REPLACEMENT OF EXISTING REINFORCING STEEL: ANY EXISTING REINFORCING BARS WHICH ARE TO BE INCORPORATED INTO THE NEW WORK AND WHICH ARE MADE UNUSABLE BY THE CONTRACTOR'S CONCRETE REMOVAL OPERATIONS SHALL BE REPLACED WITH NEW STEEL AT HIS COST. ANY EXISTING REINFORCING BARS DEEMED BY THE ENGINEER TO BE UNUSABLE BECAUSE OF CORROSION SHALL BE REPLACED WITH NEW STEEL. AN ALLOWANCE OF 100 POUNDS IS INCLUDED IN ITEM 509 FOR THIS PURPOSE.

MAINTENANCE OF TRAFFIC: THE CONTRACTOR CAN CLOSE THE BRIDGE FOR THREE MONTHS DURING THE SUMMER AND IN CONJUNCTION WITH THE APPROPRIATE I-76 MAINLINE MAINTENANCE OF TRAFFIC. MAINLINE I-76 TRAFFIC SHALL BE MAINTAINED AS INDICATED ON THE ROADWAY PLANS. THE CONTRACTOR SHALL SAFEGUARD THE TRAVELING PUBLIC BY PROVIDING PLATFORMS, NETS OR OTHER SUITABLE PROTECTION. HIS PROPOSED METHOD SHALL BE SUBMITTED TO THE DIRECTOR AND SHALL HAVE BEEN APPROVED BEFORE REMOVAL WORK BEGINS.

UTILITY LINES: ALL EXPENSE INVOLVED IN RELOCATING THE AFFECTED UTILITY LINES SHALL BE BORNE BY THE OWNERS. THE CONTRACTOR AND OWNERS ARE REQUESTED TO COOPERATE BY ARRANGING THEIR WORK IN SUCH A MANNER THAT INCONVENIENCE TO EITHER WILL BE HELD TO A MINIMUM.

PROPOSED WORK - SUGGESTED SEQUENCE OF OPERATIONS

1. CLOSE BRIDGE TO TRAFFIC.
2. REMOVE ASPHALT WEARING SURFACE AND MEMBRANE WATERPROOFING, IF PRESENT, FROM BRIDGE DECK.
3. EXTEND HEIGHT OF BEARING ANCHORS.
4. DISCONNECT HANDRAIL AND FENCE AT BRIDGE EXPANSION JOINTS.
5. JACK STRUCTURES WHILE MAINTAINING MAINLINE TRAFFIC.
6. INSTALL CONCRETE PEDESTALS AND STEEL SHIMS.
7. CLEAN AND RESET BEARING DEVICES.
8. REMOVE PORTIONS OF BACKWALLS, WINGWALLS, EXPANSION JOINT MECHANISMS, SCUPPERS AND DOWNSPOUTS.
9. INSTALL SEALED JOINT MECHANISMS.
10. REPLACE BACKWALLS.
11. CONSTRUCT WINGWALLS.
12. INSTALL CONCRETE SLOPE PROTECTION.
13. REPAIR DECK CONCRETE AS DIRECTED BY THE ENGINEER.
14. INSTALL LMC OVERLAY.
15. PATCH CONCRETE BREAST WALLS, WINGWALLS AND PIERS AS DIRECTED BY THE ENGINEER.
16. SEAL PIER CONCRETE SURFACES.
17. RE-CONNECT HANDRAIL AND FENCE.
18. CLEAN AND REPAINT SUPERSTRUCTURE STEEL AND HANDRAIL.

ITEM 202 - PORTIONS OF STRUCTURES REMOVED: THIS WORK SHALL INCLUDE THE REMOVAL AND DISPOSAL OF THE FOLLOWING:

1. WINGWALLS TO THE LIMITS SHOWN ON THE PLANS.
2. ABUTMENT BACKWALLS TO THE LIMITS SHOWN ON THE PLANS.
3. PORTIONS OF THE BRIDGE DECK AS SHOWN ON THE DECK PLAN.
4. EXCAVATION AND BACKFILL INCIDENTAL TO THE ABOVE.
5. DOWNSPOUTS ON PIERS

THE EXISTING REINFORCING SHALL BE PRESERVED AND/OR MODIFIED AS SHOWN ON THE PLANS.

PAYMENT FOR THE WORK DESCRIBED SHALL BE INCLUDED IN THE PRICE BID FOR ITEM 202 - PORTIONS OF STRUCTURES REMOVED.

ITEM 202 - WEARING SURFACE REMOVED: THIS ITEM SHALL INCLUDE THE REMOVAL AND DISPOSAL OF THE ASPHALT WEARING SURFACE AND MEMBRANE WATERPROOFING IF PRESENT.

ITEM 511 - CLASS C CONCRETE, PEDESTALS, INCLUDING REINFORCING: THIS WORK SHALL INCLUDE ALL MATERIALS AND LABOR NECESSARY TO INSTALL THE CONCRETE PEDESTALS SHOWN ON THE PLANS, INCLUDING DRILLING DOWEL HOLES, SURFACE PREPARATION, GROUTING AND PLACING CONCRETE.

ITEM 511 - CLASS C CONCRETE (AS PER PLAN)

THIS ITEM CONSISTS OF THE REMOVAL OF ALL LOOSE AND DISINTEGRATED CONCRETE, THE PREPARATION OF THE SURFACE, THE FURNISHING AND PLACING OF THE REINFORCING STEEL INCLUDING WELDED STEEL WIRE FABRIC, DOWELS AND EXPANSION BOLTS, FORMS, FORM LINERS, AND THE PLACING OF CONCRETE, INCLUDING CURING OF SAME.

MATERIALS SHALL CONFORM TO THE FOLLOWING:

CONCRETE - CLASS C.....499, 511
DOWELS.....709.01, 709.03 OR 709.05
REINFORCING STEEL.....509
WELDED STEEL WIRE FABRIC.....709.10 OR 709.12

ALL LOOSE AND DISINTEGRATED CONCRETE SHALL BE REMOVED FROM THE AREAS TO BE REPAIRED IN SUCH A MANNER AND TO SUCH AN EXTENT AS TO EXPOSE A SOUND CONCRETE SURFACE. ONLY STRUCTURAL PATCHES (EXPOSING PRIMARY REINFORCING STEEL AFTER REMOVAL OF UNSOUND CONCRETE) SHALL BE MADE AS DIRECTED BY THE ENGINEER. THE DEPTH OF A PATCH SHALL BE NOT LESS THAN 4 INCHES, EXCEPT ON TOP HORIZONTAL SURFACES, ON WHICH IT SHALL BE NOT LESS THAN 3 INCHES. SOUND CONCRETE (BENEATH THE DISINTEGRATED CONCRETE) SHALL BE REMOVED FOR A DEPTH OF NOT LESS THAN 1/4 INCH AND NOT MORE THAN 1 INCH, PROVIDED THAT THE ABOVE MINIMUM DEPTH OF PATCH IS MAINTAINED. SQUARE OR PREFERABLY SLIGHTLY UNDERCUT SHOULDERS, HAVING A DEPTH NOT LESS THAN THE SPECIFIED MINIMUM DEPTH OF THE PATCH, SHALL BE MADE AT THE EDGES OF ALL PATCHES.

ONLY PNEUMATIC OR HAND TOOLS THAT WILL GIVE RESULTS SATISFACTORY TO THE ENGINEER SHALL BE USED IN THE REMOVAL OF THE DISINTEGRATED CONCRETE AND IN PREPARING AND SHAPING THE AREAS TO BE PATCHED.

CARE SHOULD BE USED IN WORKING AROUND REINFORCING STEEL SO AS NOT TO DAMAGE OR DEBOND THE STEEL, OR TO SHATTER THE CONCRETE AROUND IT BEYOND THE AREA TO BE PATCHED.

REINFORCEMENT WHICH IS LOOSE SHALL BE ADEQUATELY SUPPORTED AND TIED BACK INTO PLACE. REINFORCEMENT THAT IS DAMAGED DURING THE CONTRACTOR'S OPERATIONS SHALL BE REPLACED AT NO COST TO THE DEPARTMENT.

AFTER ALL DISINTEGRATED AND LOOSE CONCRETE HAS BEEN REMOVED, THE AREA TO BE PATCHED SHALL BE PROPERLY SHAPED AND ANY DOWELS OR EXPANSION BOLTS NECESSARY TO HOLD THE WIRE FABRIC TO BE USED IN THE PATCH SHALL BE INSTALLED. THE SURFACE OF THE AREA TO BE PATCHED AND EXPOSED REINFORCING STEEL SHALL BE THOROUGHLY CLEANED OF ALL DIRT, DUST OR OTHER FOREIGN MATERIALS BY THE USE OF WATER, AIR UNDER PRESSURE, OR ANY OTHER METHOD THAT PRODUCES SATISFACTORY RESULTS. THE SURFACE SHALL BE THOROUGHLY DRENCHED WITH CLEAN WATER. BEFORE PLACING THE CONCRETE, THE SURFACE SHALL BE ALLOWED TO DRY TO A DAMP CONDITION.
REINFORCEMENT WILL NOT BE REQUIRED FOR PATCHES ON TOP HORIZONTAL SURFACES. THE REINFORCEMENT FOR PATCHES ON OTHER SURFACES SHALL CONSIST OF WELDED STEEL WIRE FABRIC EITHER 2 INCH BY 2 INCH USING WIRE SIZE NUMBER W 0.9 OR 3 INCH BY 3 INCH USING WIRE SIZE NUMBER W 1.4. THIS FABRIC SHALL COVER THE ENTIRE AREA OF THE PATCH AND SHALL BE PLACED AND HELD APPROXIMATELY 1 INCH FROM THE COMPLETED EXPOSED SURFACE OF THE PATCH. IT SHALL BE FASTENED TO DOWELS OR EXPANSION BOLTS INSTALLED, BY THE CONTRACTOR, AT NOT TO EXCEED 18-INCH CENTERS IN BOTH DIRECTIONS.

THE CONCRETE SHALL BE CLASS C AND SHALL BE PROPORTIONED, MIXED AND PLACED IN ACCORDANCE WITH 499 AND 511. ABUTMENTS AND WINGWALLS SHALL BE TEXTURED IN ACCORDANCE WITH THE GENERAL NOTES.

FORMS SHALL BE REMOVED WITHIN 24 HOURS AFTER PLACEMENT OF CONCRETE. MEMBRANE CURING MATERIAL SHALL BE APPLIED IMMEDIATELY AS NOTED IN 511.14, METHOD (b).

AFTER CURING AND BEFORE FINAL ACCEPTANCE, ALL PATCHED AREAS SHALL BE SOUNDED. ALL UNSOUND AREAS SHALL BE REMOVED AND REPLACED.

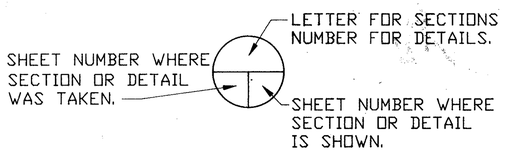

SECTION OR DETAIL
BALLOON LEGEND

JOHN DAVID JONES & ASSOC., INC. 3/16
2162 FRONT STREET
CUYAHOGA FALLS, OHIO 44221
ENGINEERS ARCHITECTS PLANNERS

GENERAL NOTES

BRIDGE No. SUM-76-12.00
HOBAN PEDESTRIAN BRIDGE

DESIGNED	DRAWN	TRACED	CHECKED	REVIEWED	DATE	REVISED
JRS	JRS		DYF	PAK	1-25-88	

GENERAL NOTES

F.H.W.A. REGION	STATE	REGION	
5	OHIO		

828 12/14

SUMMIT COUNTY
SUM-76-11.57

ABUTMENT WALL TEXTURE: ABUTMENTS AND WINGWALLS SHALL BE TEXTURED BY USING FORM LINERS ATTACHED TO FORMWORK PRIOR TO PLACING CONCRETE. AREAS TO RECEIVE TEXTURED CONCRETE SURFACE SHALL INCLUDE THE FULL LENGTH OF EXPOSED ABUTMENT BREAST WALLS AND WINGWALLS FROM FINISHED GRADE OR PAVEMENT TO THE TOP OF THE WALL.

TEXTURED SURFACE SHALL CONSIST OF A 3/4" DEEP FRACTURED FIN TEXTURE. ACCEPTABLE PRODUCTS INCLUDE:

SYMONS CORPORATION
7603 OLD ROCKSIDE ROAD
INDEPENDENCE, OH 44131
PATTERN NO. P/C 30449

GREENSTREAK
3400 TREE COURT IND. BLVD.
ST. LOUIS, MO 63122
(800) 325-9504
PATTERN NO. 373

FITZGERALD CONSTRUCTION SALES
17376-A NEWHOPE AVENUE
FOUNTAIN VALLEY, CA 92708
(800) 227-2755
PATTERN NO. 16950

OR AN APPROVED ALTERNATE. THE CONTRACTOR SHALL SUBMIT A SAMPLE OF THE FINISHED CONCRETE TEXTURED SURFACE FOR APPROVAL.

PAYMENT FOR ALL MATERIALS AND LABOR REQUIRED FOR THE TEXTURED SURFACES SHALL BE INCLUDED WITH ITEM 511 - CLASS C CONCRETE, FACING (AS PER PLAN).

ITEM 513 - LIFT, SUPPORT AND HOLD STRUCTURAL STEEL: THE LUMP SUM PRICE BID FOR THIS ITEM SHALL INCLUDE THE FURNISHING OF ALL MATERIALS, LABOR, EQUIPMENT AND INCIDENTIALS NECESSARY TO RAISE, SUPPORT AND LOWER THE SUPERSTRUCTURE.

JACKING SHALL BE DONE IN SUCH A MANNER THAT NO STRESSES SHALL BE INDUCED INTO THE BEAMS OR SLAB AT ANY TIME. JACKING SHALL BE DONE IN SUCH A MANNER AS TO MAINTAIN AXIAL LOADING AT THE ABUTMENT AND PIER FOOTINGS. DURING JACKING THE DIFFERENTIAL MOVEMENT BETWEEN ADJACENT BEAMS SHALL NOT EXCEED ONE-QUARTER INCH. JACKING OF CONTINUOUS SPANS SHALL BE PERFORMED BY JACKING SIMULTANEOUSLY AT ALL PIER SUPPORT LOCATIONS, OR BY LIMITING THE DIFFERENTIAL JACKING MOVEMENT BETWEEN ADJACENT SUPPORT LOCATIONS TO 1/2 INCH. DIFFERENTIAL JACKING MOVEMENT BETWEEN ADJACENT PIER AND ABUTMENT SHALL NOT EXCEED 2 1/2 INCHES.

THE CONTRACTOR SHALL SUBMIT DRAWINGS AND A DESCRIPTION OF THE METHODS TO BE USED TO RAISE THE SUPERSTRUCTURE TO THE DIRECTOR AT LEAST FIFTEEN DAYS PRIOR TO COMMENCEMENT OF THIS OPERATION.

ITEM 513 - STRUCTURAL STEEL SHIM PLATES: THIS WORK SHALL CONSIST OF THE CLEANING, WELDING, PAINTING AND ALL OTHER WORK PERTAINING TO THE PLACEMENT OF THE SHIM PLATES. CLEANING AND PAINTING SHALL BE AS REQUIRED BY ITEM 514.

ITEM 511 - Class "C" Concrete Facing, As Per Plan:
See note on sheet 906.

ITEM 516 - REFURBISH BEARING DEVICES, AS PER PLAN: THIS SHOULD INCLUDE ALL WORK NECESSARY TO PROPERLY ALIGN BEARINGS AS WELL AS THEIR CLEANING AND PAINTING. INCLUDED SHALL BE THE REQUIRED JACKING AND TEMPORARY SUPPORT, DISASSEMBLY OF THE BEARINGS, HAND CLEANING (GRINDING IF NECESSARY), SANDBLASTING AND PAINTING AS REQUIRED BY ITEM 514, REPLACEMENT OF ANY DAMAGED SHEET LEAD (711.19), INSTALLATION OF ANY STEEL SHIMS OF THE SAME SIZE AS THE BEARINGS TO PROVIDE A SNUG FIT, REALIGNMENT OF THE UPPER BEARING PLATE BY REMOVING EXISTING WELDS AND REWELDING SO THAT THE BEARINGS ARE ALIGNED AT 60 DEGREES F., REASSEMBLY OF THE BEARINGS, AND REMOVAL OF THE JACKS. ALL WORK SHALL BE TO THE SATISFACTION OF THE PROJECT ENGINEER. THE CONTRACTOR SHALL SUBMIT HIS METHOD OF JACKING THE BEARINGS TO THE DIRECTOR FOR PRIOR APPROVAL BEFORE COMMENCING THE JACKING OPERATION.

PAYMENT FOR ALL THE ABOVE DESCRIBED LABOR AND MATERIALS WILL BE MADE AT THE CONTRACT PRICE BID FOR ITEM 516 - REFURBISH BEARING DEVICES, AS PER PLAN.

ITEM 519 - PATCHING CONCRETE STRUCTURES: PATCH CONCRETE BREAST WALLS, WINGWALLS AND PIERS AS DIRECTED BY THE ENGINEER.

ITEM SPECIAL - SEALING CONCRETE SURFACES: THIS ITEM SHALL BE IN ACCORDANCE WITH PROPOSAL NOTE AND AS DESCRIBED BELOW. (THE COLOR OF THE EPOXY SEALER SHALL BE PER FEDERAL STD. 595A 13522).
SUBSTRUCTURE:

ABUTMENTS: BRIDGE SEATS AND PEDESTALS EXTENDED FROM THE LEVEL OF THE BRIDGE SEAT OR PEDESTAL ONE FOOT DOWN THE FACE OF THE BREASTWLL FOR THE ENTIRE WIDTH OF THE ABUTMENTS - EPOXY SEALER

VERTICAL FACE OF CURB, TOP OF CURB, INSIDE FACE, TOP AND OUTSITE FACE OF PARAPETS ON WINGWALLS - EPOXY SEALER.

PIERS: AS SHOWN IN PLANS - EPOXY OR NON-EPOXY SEALER.

SUPERSTRUCTURE:

DECK: VERTICAL FACE OF CURB, TOP OF CURB, DECK FASCIA AND 6 INCH UNDERDECK RETURN - EPOXY SEALER.

ITEM SPECIAL - FIELD PAINTING OF EXISTING STEEL, SYSTEM OZEU: ALL OF THE REQUIREMENTS CONTAINED IN THE "FIELD PAINTING OF EXISTING STEEL, SYSTEM OZEU" PROPOSAL NOTE SHALL APPLY. EXISTING RAILING SHALL BE PAINTED AS PART OF THE QUANTITY.

THE COLOR OF URETHANE FINISH COAT SHALL BE "DARK BROWN", FEDERAL SPECIFICATION NUMBER 595A 10080. AN ACTUAL SAMPLE OF THE PAINT PROPOSED FOR USE SHALL BE SUBMITTED BY THE CONTRACTOR FOR APPROVAL. THE INTERMEDIATE COAT COLOR SHALL BE PER FEDERAL STD. 595A 10219.

STRUCTURAL STEEL REQUIRED IN ITEM 516 - STRUCTURAL STEEL EXPANSION JOINTS, INCLUDING ELASTOMERIC STRIP SEALS WILL NOT REQUIRE SHOP DRAWINGS PRIOR TO FABRICATION. THE CONTRACTOR SHALL MAKE MEASUREMENTS AND PREPARE SKETCHES, DRAWINGS, TABLES, ETC. THE ENGINEER SHALL HAVE AUTHORITY AND RESPONSIBILITY FOR ENSURING THAT THE FABRICATED STEEL IS ACCEPTABLE. TECHNICAL ASSISTANCE WILL BE PROVIDED ON REQUEST BY THE BUREAU OF BRIDGES. MILL TEST REPORTS AND SHIPPING DOCUMENTS SHALL BE SUBMITTED TO THE ENGINEER FOR REVIEW AND APPROVAL PRIOR TO INCORPORATING STEEL ITEMS INTO THE WORK, AS REQUIRED BY 501.07. AFTER FABRICATION THE CONTRACTOR SHALL SUBMIT SHOP DRAWINGS TO THE ENGINEER FOR REVIEW AND APPROVAL TO ENSURE THAT THE DRAWINGS DEPICT THE STEEL AS ACTUALLY INCORPORATED INTO THE WORK. THE ENGINEER WILL THEN SEND ONE APPROVED SET TO THE BUREAU OF BRIDGES FOR INFORMATION. PAY LENGTHS SHALL BE COMPUTED IN COMPLIANCE WITH 516 OF THE CMS AND SUBMITTED TO THE ENGINEER FOR HIS REVIEW AND APPROVAL. THE FABRICATOR SHALL FURNISH A 35 MILLIMETER MICROFILM COPY OF EACH SHOP DRAWING, WHICH SHALL BE MOUNTED ON AN APERTURE CARD AS SPECIFIED IN 501.05.

JOHN DAVID JONES & ASSOC., INC. 4/16
2162 FRONT STREET
CUYAHOGA FALLS, OHIO 44221
ENGINEERS ARCHITECTS PLANNERS

GENERAL NOTES

BRIDGE No. SUM-76-12.00
HOBAN PEDESTRIAN BRIDGE

DESIGNED	DRAWN	TRACED	CHECKED	REVIEWED	DATE	REVISED
JRS	JRS		DYF	PAK	1-25-88	

F.H.W.A. REG.	STATE	PROJECT	
5	OHIO		

829
1214

SUMMIT COUNTY
SUM-76-11.57

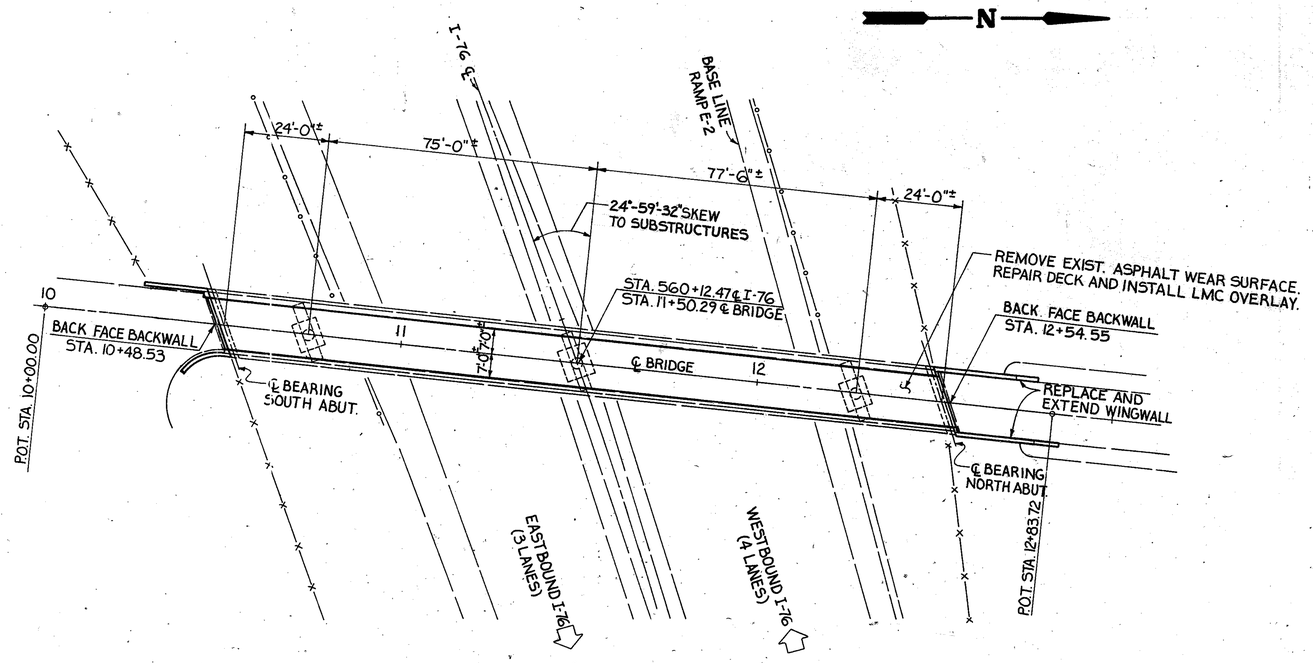

PLAN

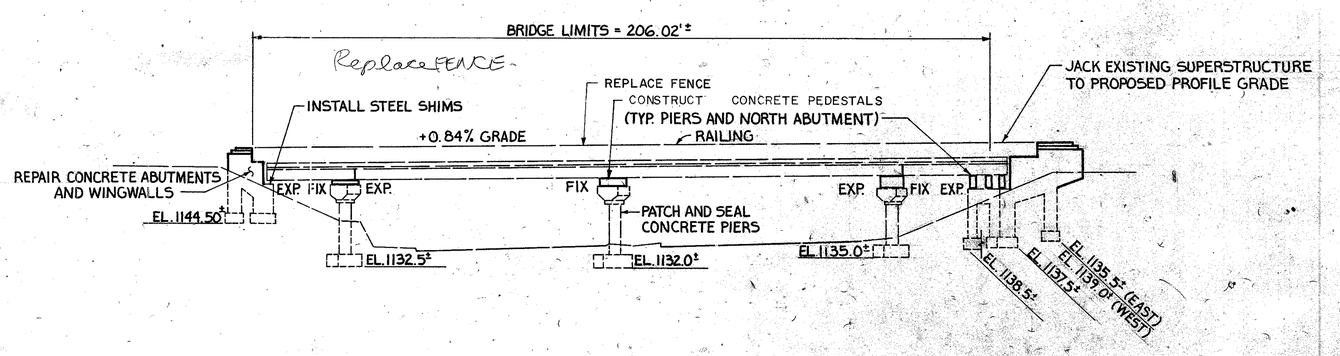

ELEVATION

JOHN DAVID JONES & ASSOC., INC. 2162 FRONT STREET CUYAHOGA FALLS, OHIO 44221
ENGINEERS ARCHITECTS PLANNERS

5/16

GENERAL PLAN, ELEVATION

BRIDGE No. SUM-76-12.00
HOBAN PEDESTRIAN BRIDGE

DESIGNED	DRAWN	TRACED	CHECKED	REVIEWED	DATE	REVISED
JRS	JPM		DYF	PAK	1-25-88	

F.H.W.A. REG.	STATE	PROJECT	
5	OHIO		

830
12/14

SUMMIT COUNTY
SUM-76-11.57

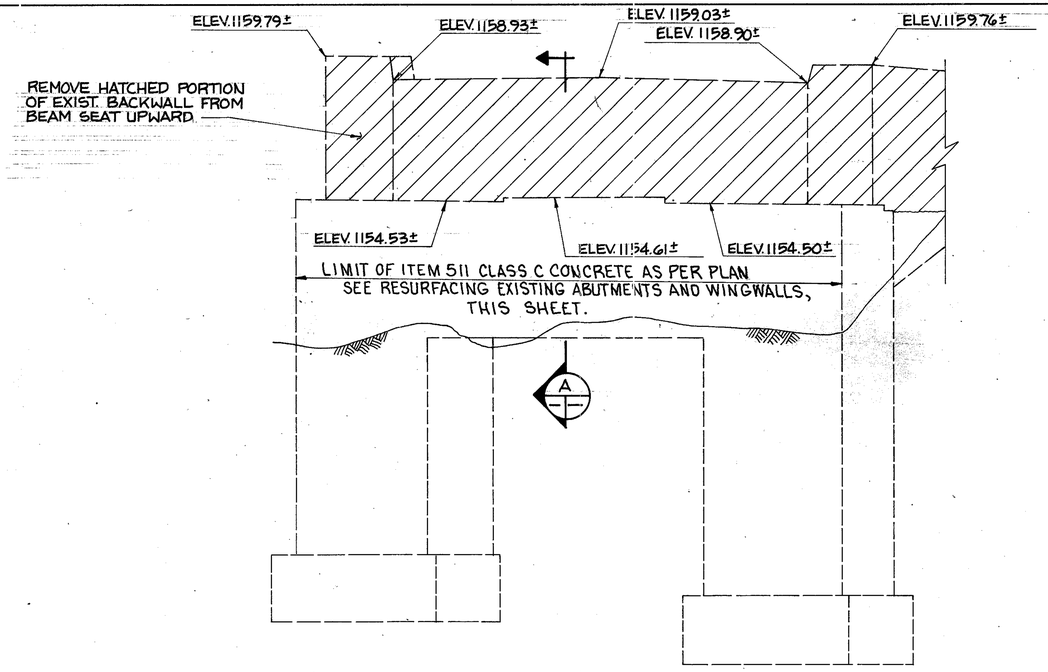

ELEVATION
NORTH ABUTMENT

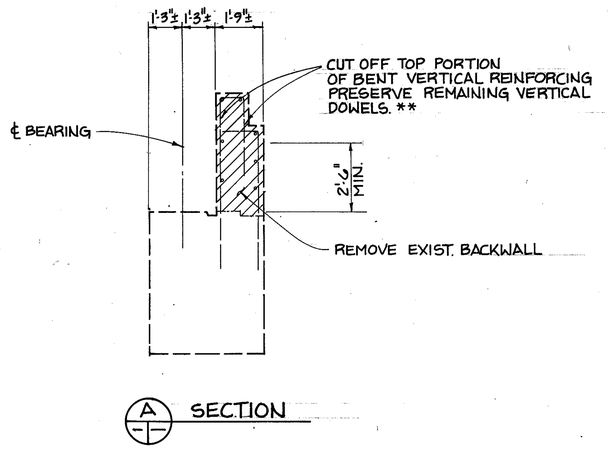

SECTION

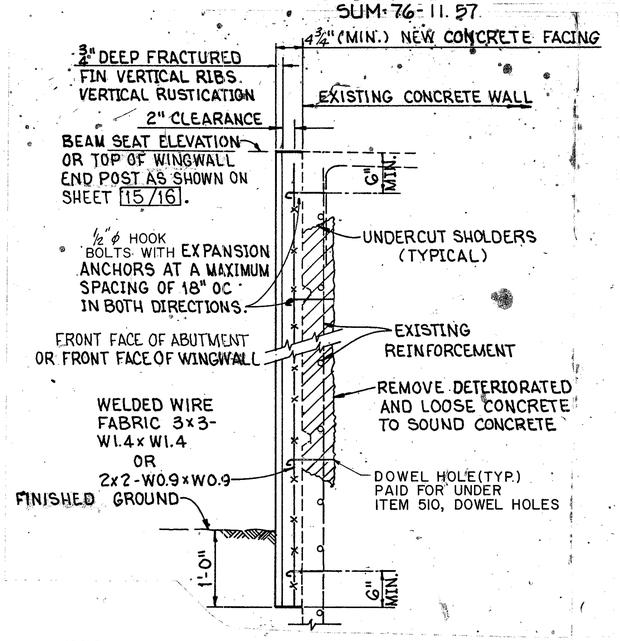

RESURFACING OF EXISTING ABUTMENTS AND WINGWALLS (TYPICAL)

IN ACCORDANCE WITH ITEM 511, CLASS C CONCRETE, AS PER PLAN.

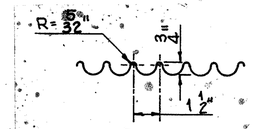

VERTICAL RUSTICATION
FOR ABUTMENT AND WINGWALLS, SEE GENERAL NOTES.

ELEVATION
SOUTH ABUTMENT

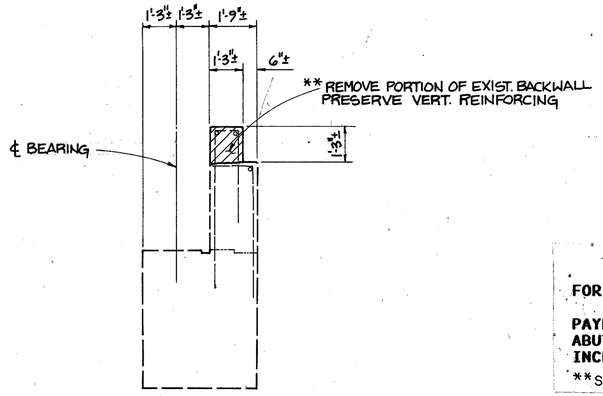

SECTION

NOTES

FOR LIMITS OF WINGWALL DEMOLITION SEE SHEET 7/16.

PAYMENT FOR ALL EXCAVATION REQUIRED TO FACILITATE ABUTMENT BACKWALL AND WINGWALL REPAIRS SHALL BE INCLUDED IN ITEM 202 - PORTIONS OF STRUCTURES REMOVED.

** SEE NOTE ON SHEET 8/16

JOHN DAVID JONES & ASSOC., INC.
2162 FRONT STREET
CUYAHOGA FALLS, OHIO 44221
ENGINEERS ARCHITECTS PLANNERS

6/16

ABUTMENT REPAIRS AND DEMOLITION

BRIDGE No. SUM-76-12.00
HOBAN PEDESTRIAN BRIDGE

DESIGNED	DRAWN	TRACED	CHECKED	REVIEWED	DATE	REVISED
JRS	EMB		DYF	PAK	1-25-88	

F.H.W.A. REG.	STATE	PROJECT	
5	OHIO		

831
1214

SUMMIT COUNTY
SUM-76.11.57

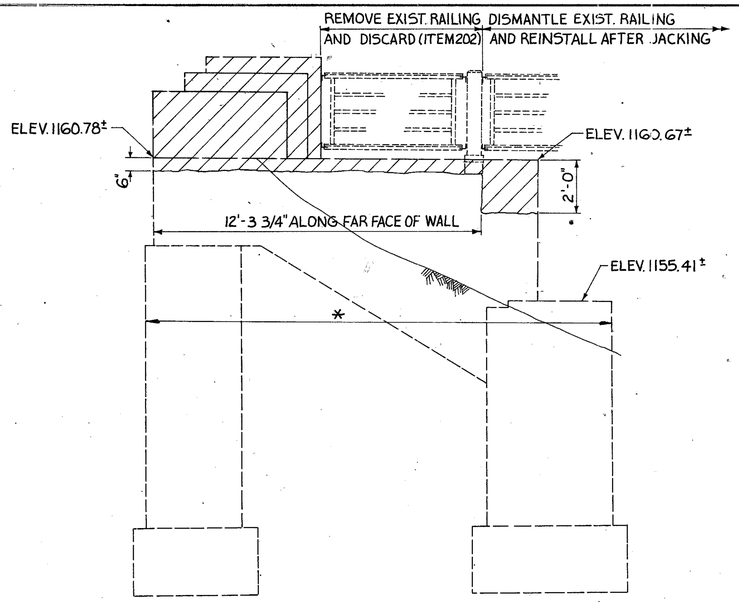

DEVELOPED SOUTHEAST WINGWALL

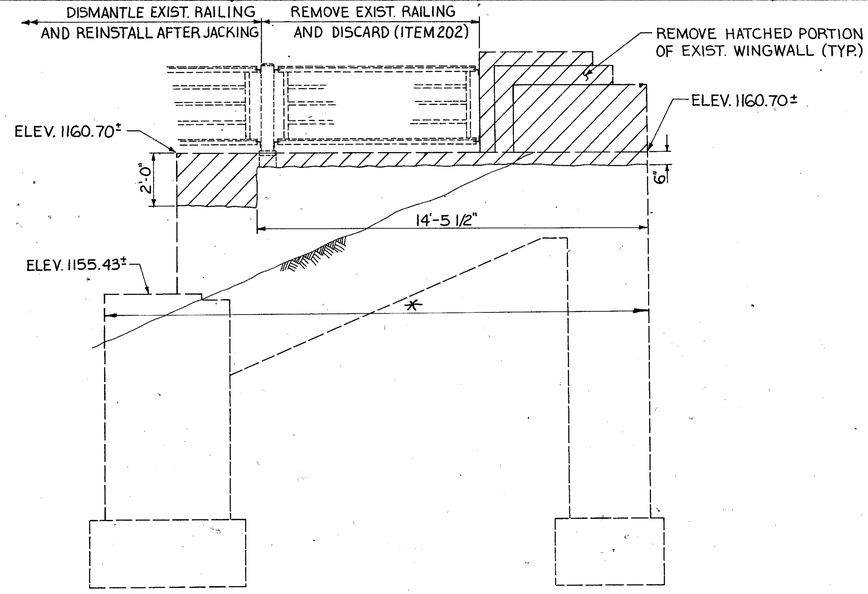

SOUTHWEST WINGWALL

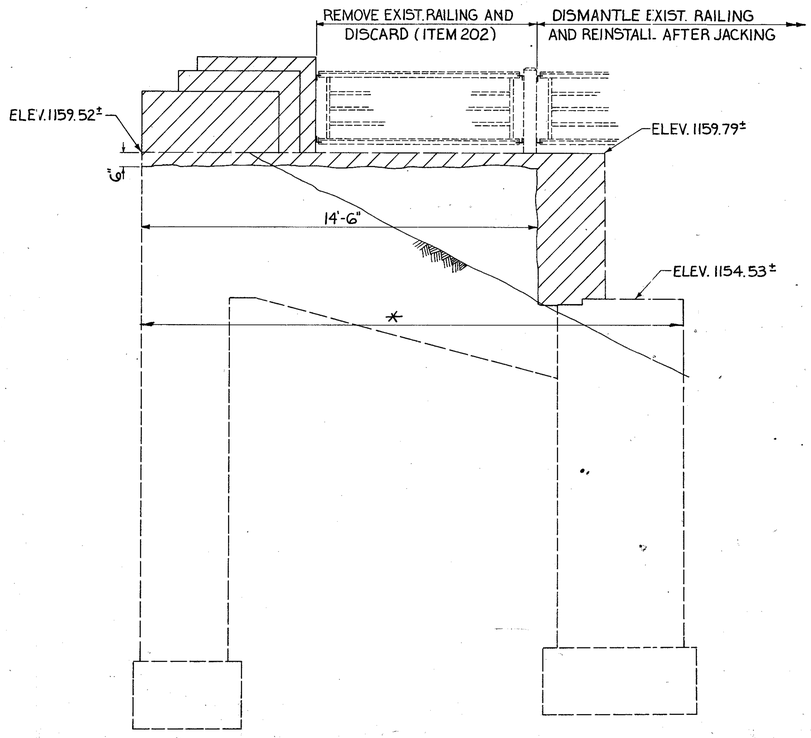

NORTHWEST WINGWALL

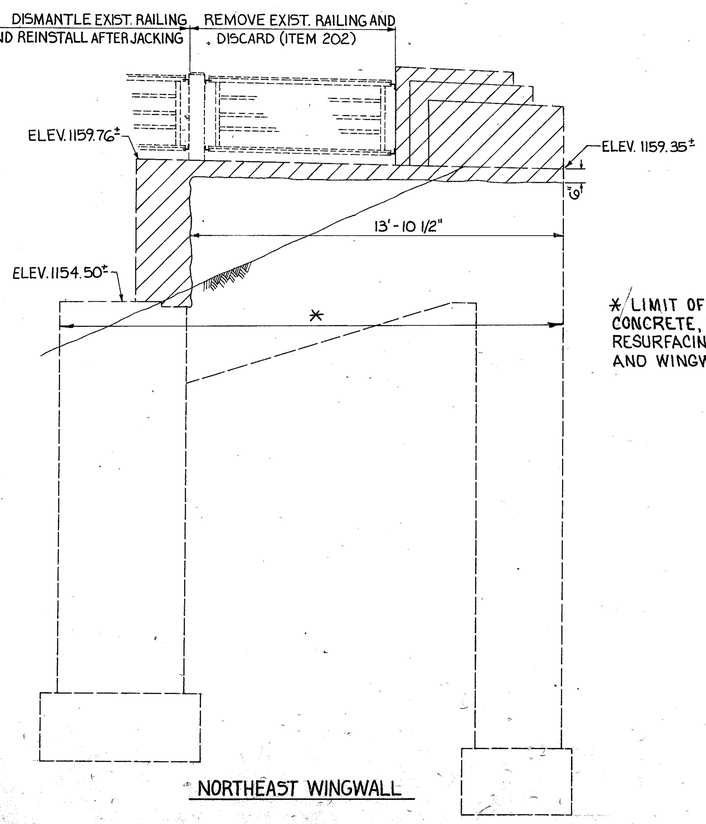

NORTHEAST WINGWALL

* LIMIT OF ITEM 511 CLASS C CONCRETE, AS PER PLAN. SEE RESURFACING EXISTING ABUTMENTS AND WINGWALLS, SHEET 6/16.

NOTES

PAYMENT FOR DISMANTLING AND REINSTALLING PORTIONS OF EXISTING HANDRAIL TO FACILITATE JACKING THE SUPERSTRUCTURE SHALL BE INCLUDED WITH ITEM SPECIAL - JACKING STRUCTURE.

JOHN DAVID JONES & ASSOC., INC.
2162 FRONT STREET
CUYAHOGA FALLS, OHIO 44221
ENGINEERS ARCHITECTS PLANNERS

7/16

WINGWALL REPAIRS AND DEMOLITION

BRIDGE No. SUM-76-12.00
HOBAN PEDESTRIAN BRIDGE

DESIGNED	DRAWN	TRACED	CHECKED	REVIEWED	DATE	REVISED
JRS	JPM		DYF	PAK	1-25-88	

F.H.W.A. REG.	STATE	PROJECT	
5	OHIO		

832
12/14

SUMMIT COUNTY
SUM-76-11.57

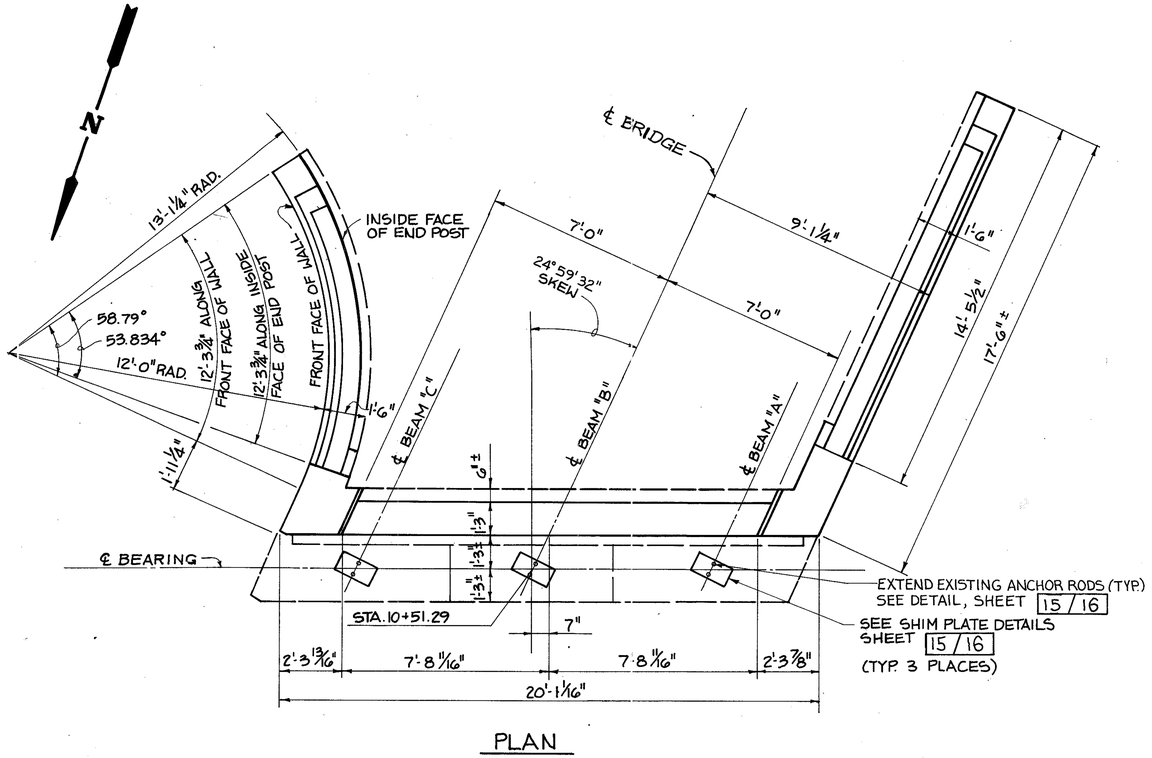

PLAN

* - ELEVATIONS SHOWN ARE TOP OF PAVEMENT AT THE FACE OF BACKWALL

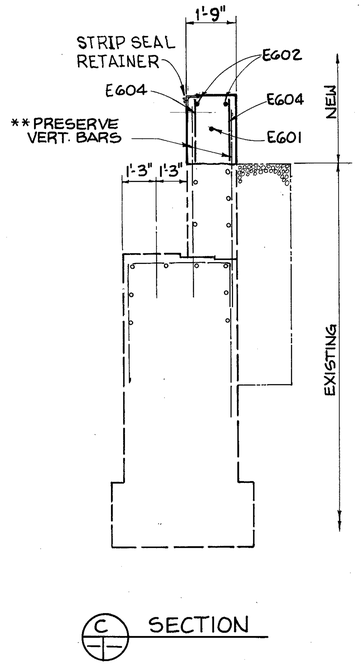

C SECTION

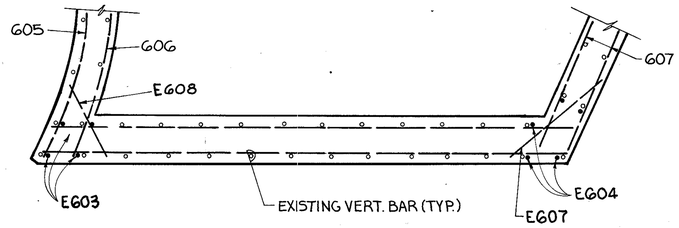

A SECTION

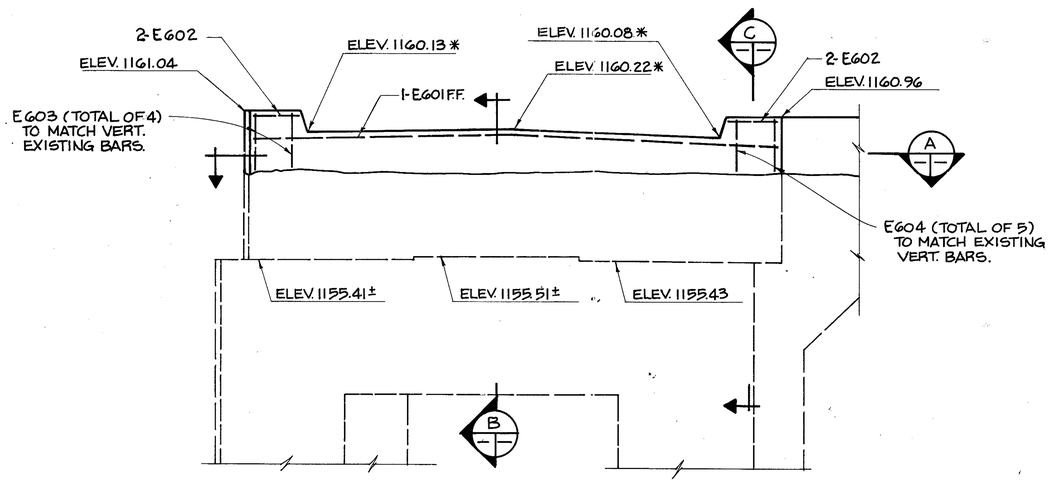

ELEVATION

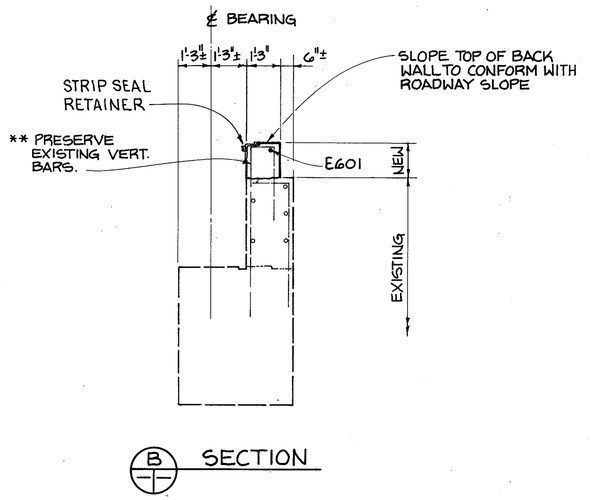

B SECTION

** NOTE: CONTRACTOR HAS THE OPTION OF CUTTING OFF THE EXISTING VERTICAL BARS AND REPLACING THEM WITH THE SAME SIZE AND NUMBER OF BARS DOWELLED 1'-2" DEEP INTO THE EXISTING CONCRETE.

NOTE:
FOR NOTES SEE SHEET 9/16.

JOHN DAVID JONES & ASSOC., INC. 8/16
2162 FRONT STREET
CUYAHOGA FALLS, OHIO 44221
ENGINEERS ARCHITECTS PLANNERS

SOUTH ABUTMENT MODIFICATIONS

BRIDGE No. SUM-76-12.00
HOBAN PEDESTRIAN BRIDGE

DESIGNED	DRAWN	TRACED	CHECKED	REVIEWED	DATE	REVISED
BCK	EMB		DYF	PAK	1-25-88	

CHWA REG.	STATE	PROJECT	
5	OHIO		

833
1214

SUMMIT COUNTY
SUM-76-11.57

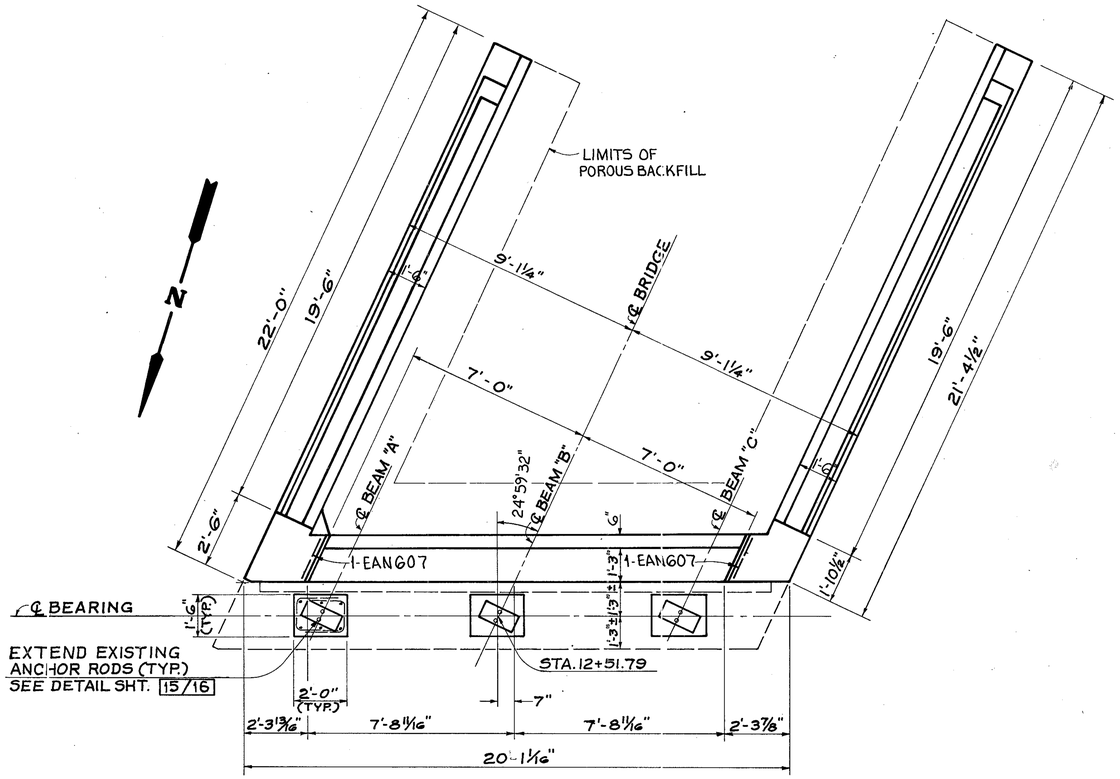

PLAN

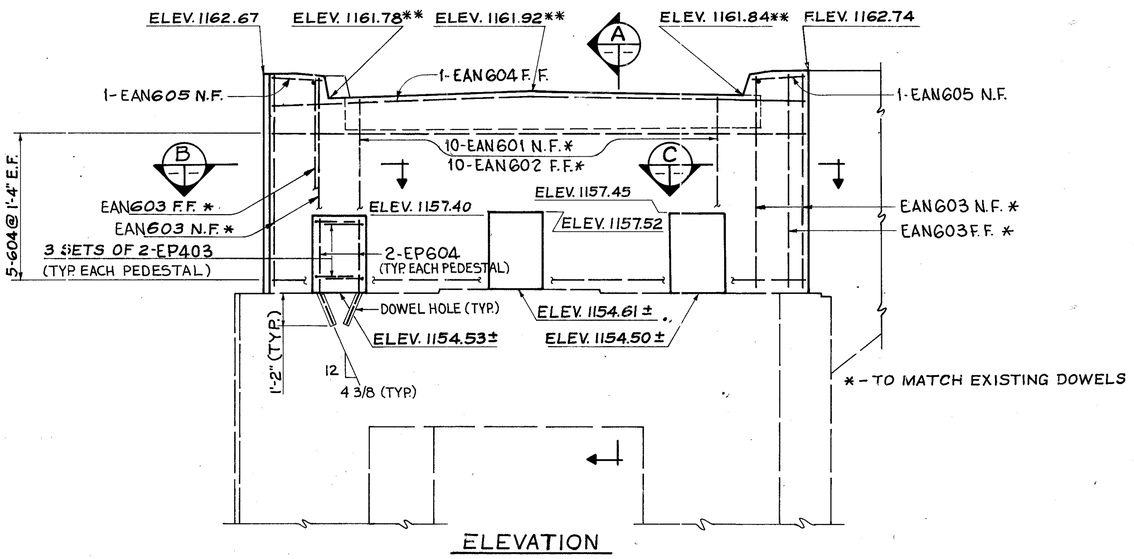

ELEVATION

** ELEVATIONS SHOWN ARE TOP OF PAVEMENT AT THE FACE OF BACKWALL

NOTES

POROUS BACKFILL, 2 FT. THICK, SHALL EXTEND UP TO THE PLANE OF THE SUBGRADE AND LATERALLY TO THE ENDS OF THE WING WALLS. PAYMENT FOR FILTER FABRIC CONFORMING TO CMS 712.09 TYPE A, B, OR C SHALL BE INCLUDED WITH ITEM 518.

FOR REPAIRS AND DEMOLITION OF EXISTING ABUTMENTS SEE SHEET 6/16.

FOR ELEVATIONS SHOWING WINGWALL MODIFICATIONS SEE SHEET 7/16.

PREFIX ALL REINFORCING BAR MARKS "AS" FOR SOUTH ABUTMENT AND WINGWALLS OR "AN" FOR NORTH ABUTMENT AND WINGWALLS.

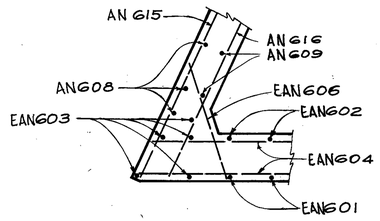

B SECTION

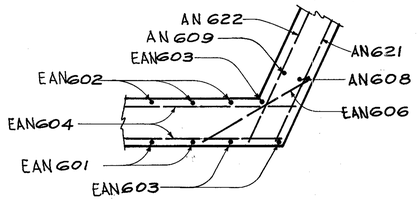

C SECTION

ABBREVIATIONS

N.F.	NEAR FACE
F.F.	FAR FACE
E.F.	EACH FACE
TYP.	TYPICAL
EXIST.	EXISTING
ELEV.	ELEVATION
VERT.	VERTICAL
C.J.	CONSTRUCTION JOINT

BACKWALL CONCRETE: IN ADDITION TO THE PROVISION OF 511.08, BACKWALL CONCRETE ABOVE THE OPTIONAL CONSTRUCTION JOINT AT THE APPROACH SLAB SEAT SHALL NOT BE PLACED UNTIL AFTER THE DECK CONCRETE IN THE SPAN ADJACENT TO THE ABUTMENT HAS BEEN PLACED.

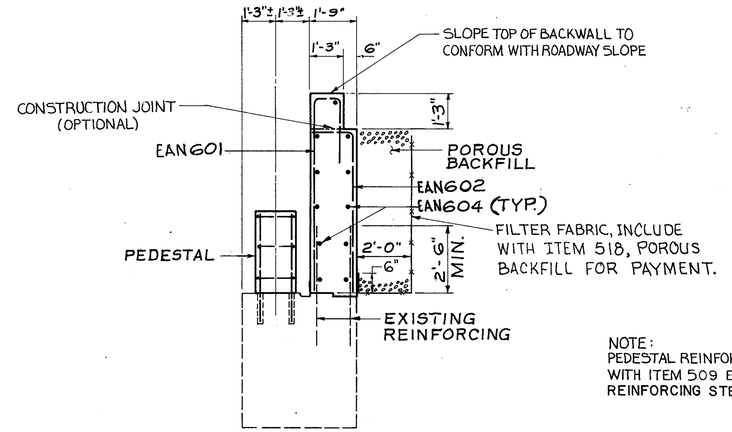

A SECTION

NOTE:
PEDESTAL REINFORCING IS INCLUDED WITH ITEM 509 EPOXY COATED REINFORCING STEEL.

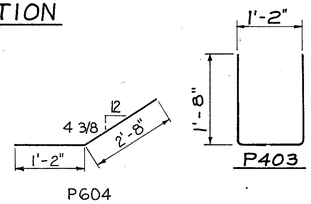

PEDESTAL REINFORCING			
MARK	NO.	LENGTH	SHAPE
EP604	12	3'-10"	BENT
EP403	18	4'-4"	BENT
TOTAL WEIGHT = 100#			

JOHN DAVID JONES & ASSOC., INC. 9/16
2162 FRONT STREET
CUYAHOGA FALLS, OHIO 44221
ENGINEERS ARCHITECTS PLANNERS

NORTH ABUTMENT MODIFICATIONS

BRIDGE No. SUM-76-12.00
HOBAN PEDESTRIAN BRIDGE

DESIGNED	DRAWN	TRACED	CHECKED	REVIEWED	DATE	REVISED
JRS	AJ		DYF	PAK	1-25-88	

F.H.W.A. REG	STATE	PROJECT	
5	OHIO		

C34
12/14

SUMMIT COUNTY
SUM-76-11.57

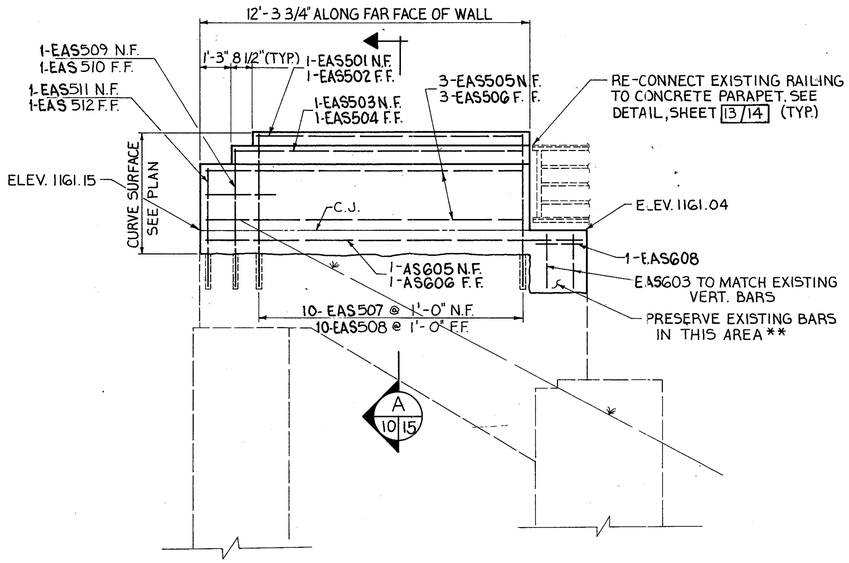

SOUTHWEST WINGWALL

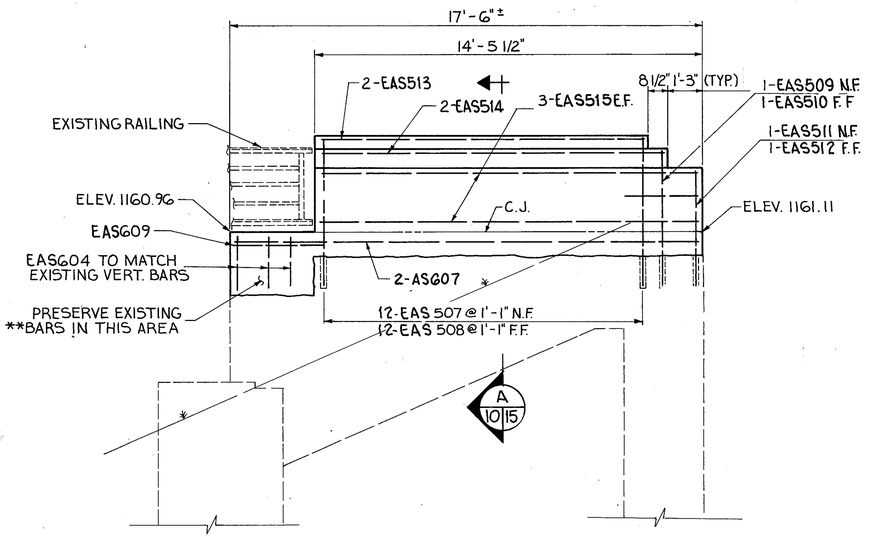

SOUTHEAST WINGWALL

NOTES:

1. DOWEL HOLES ARE 1'-0" DEEP FOR #5 BARS AND 1'-2" DEEP FOR #6 BARS.
2. IN NO CASE SHALL ANY DOWEL BE PLACE LESS THAN 9" FROM ANY CONCRETE FACE PARALLEL TO THE THE PLANE OF THE DOWEL.

** SEE NOTE ON SHEET 8/16

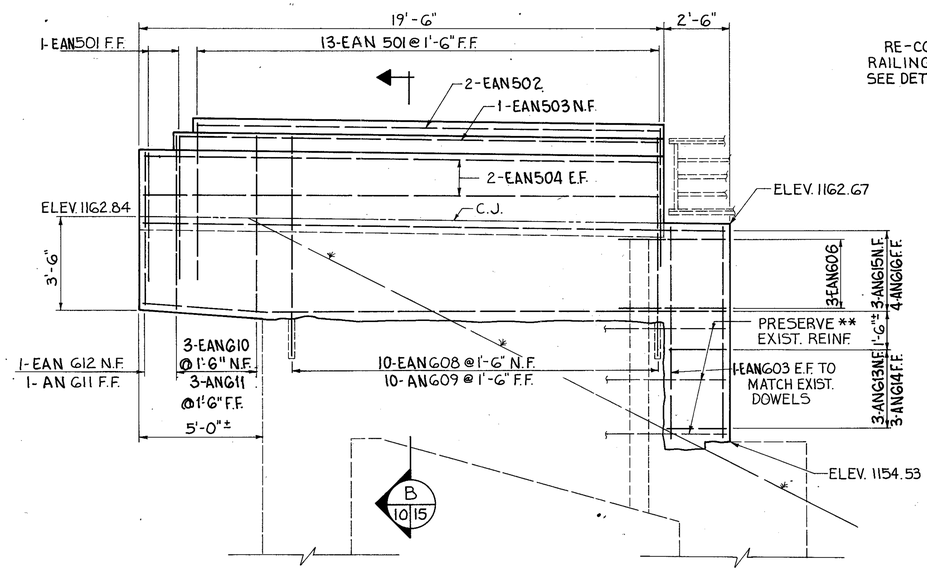

NORTHWEST WINGWALL

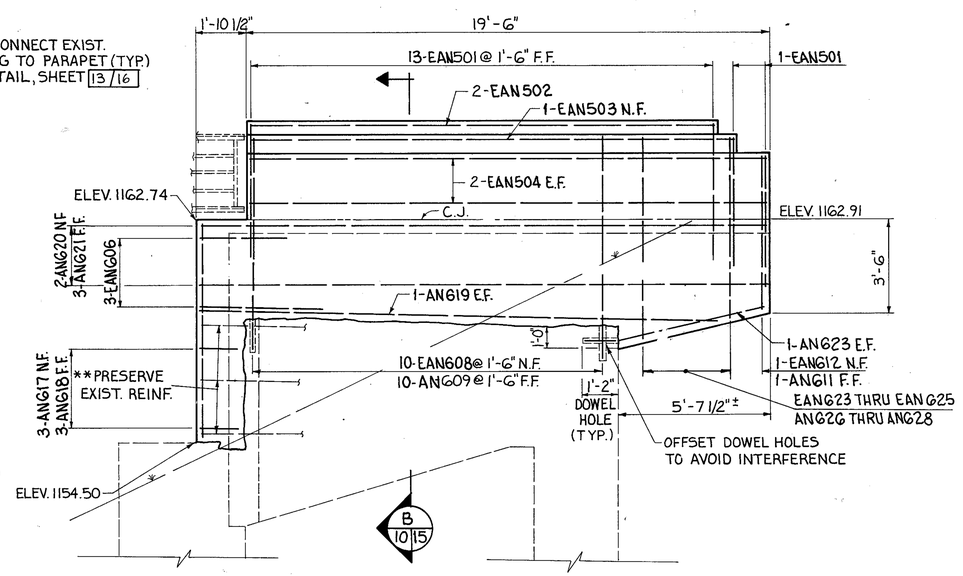

NORTHEAST WINGWALL

ABBREVIATIONS

N.F. - NEAR FACE
F.F. - FAR FACE
E.F. - EACH FACE
EXIST. - EXISTING
ELEV. - ELEVATION
C.J. - CONSTRUCTION JOINT
VERT. - VERTICAL

FOR ADDITIONAL NOTES SEE SHEET 15/16

JOHN DAVID JONES & ASSOC., INC. 10/16
2162 FRONT STREET
CUYAHOGA FALLS, OHIO 44221
ENGINEERS ARCHITECTS PLANNERS

WINGWALL MODIFICATIONS

BRIDGE No. SUM-76-12.00
HOBAN PEDESTRIAN BRIDGE

DESIGNED	DRAWN	TRACED	CHECKED	REVIEWED	DATE	REVISED
JRS	JPM	.	DYF	PAK	1-25-88	

F.H.W.A. REG.	STATE	PROJECT	
5	OHIO		

E35
1.2.14

SUMMIT COUNTY
SUM-76-11.57

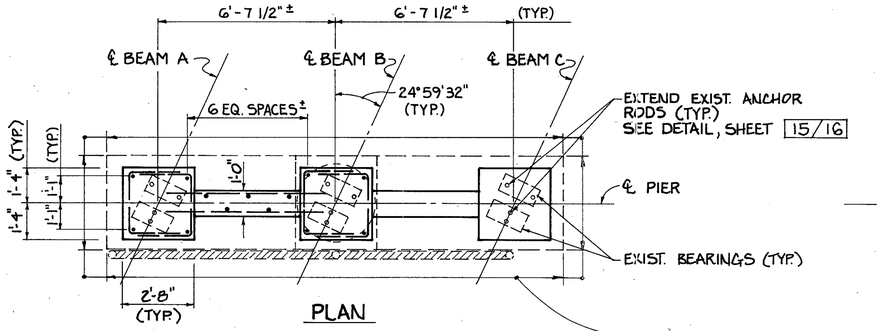

PLAN

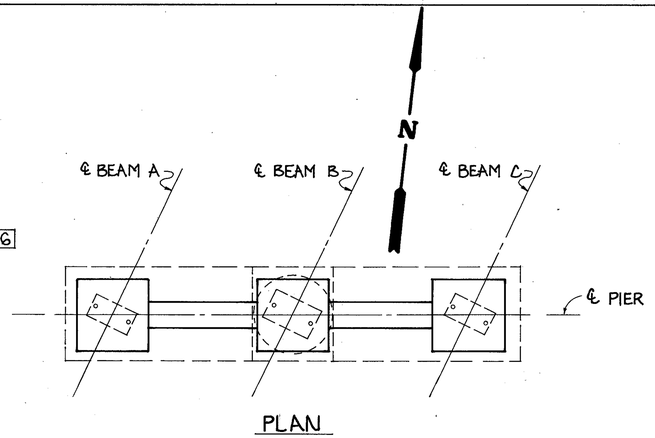

PLAN

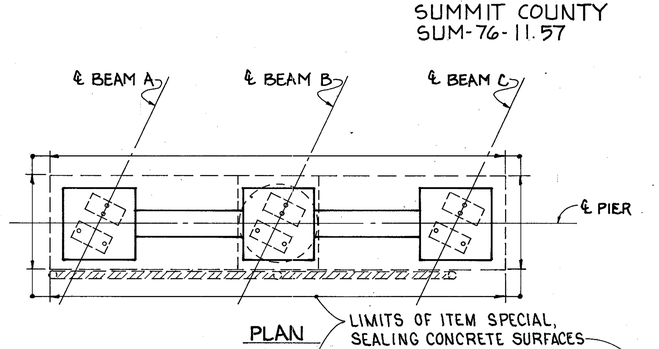

PLAN

LIMITS OF ITEM SPECIAL, SEALING CONCRETE SURFACES (EPOXY)

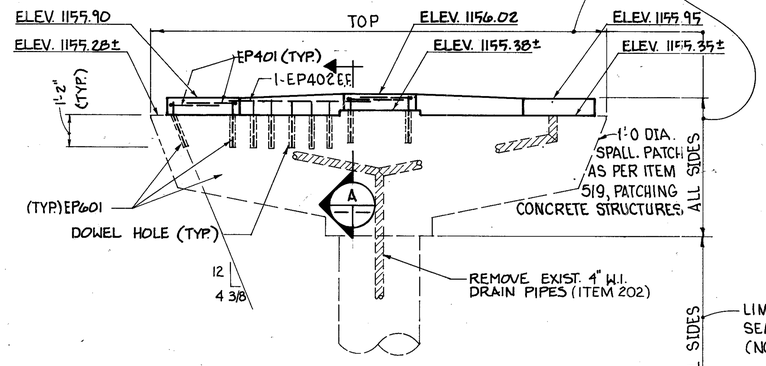

ELEVATION

SOUTH PIER

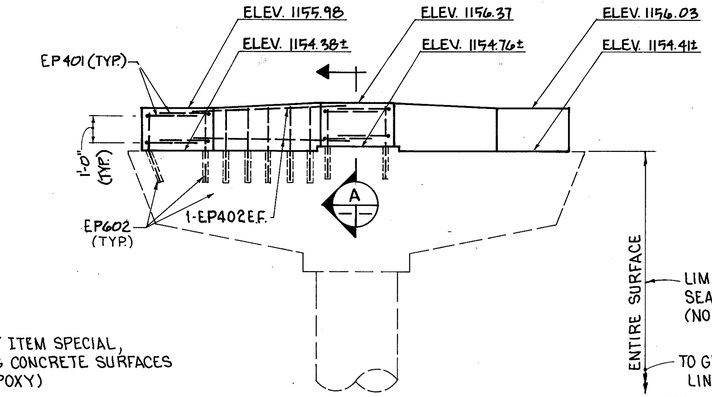

ELEVATION

CENTER PIER

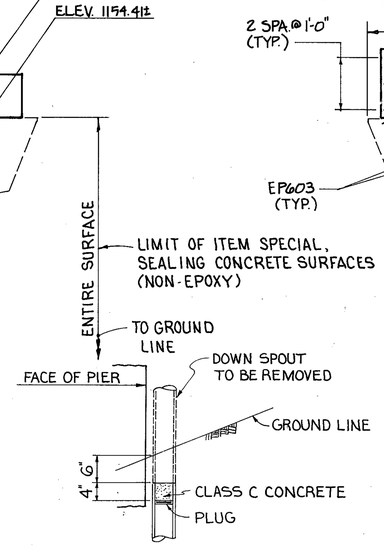

DRAIN PIPE CAP DETAIL
(INCLUDED WITH ITEM 202)

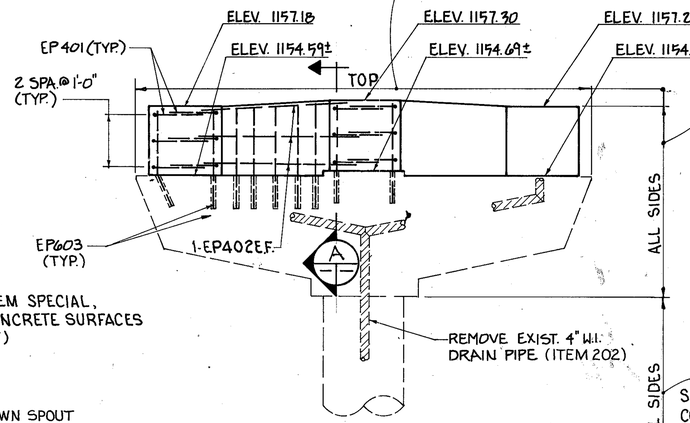

ELEVATION

NORTH PIER

NOTE:
DOWEL HOLES SHALL BE DRILLED AT THE BATTER SHOWN TO FACILITATE INSTALLATION OF DOWELS.

NOTE:
PEDESTAL REINFORCING IS INCLUDED WITH ITEM 509 EPOXY COATED REINFORCING STEEL.

PEDESTAL REINFORCING			
MARK	NO.	LTH.	SHAPE
EP601	22	1'-7"	BENT
EP602	22	2'-7"	BENT
EP603	22	3'-7"	BENT
EP401	36	6'-2"	BENT
EP402	24	6'-6"	STR.
TOTAL WEIGHT = 476#			

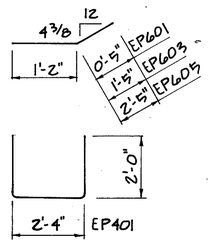

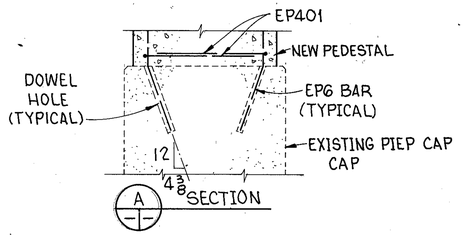

JOHN DAVID JONES & ASSOC., INC. 11/16
2162 FRONT STREET
CUYAHOGA FALLS, OHIO 44221
ENGINEERS ARCHITECTS PLANNERS

PIER MODIFICATIONS

BRIDGE No. SUM-76-12.00
HOBAN PEDESTRIAN BRIDGE

DESIGNED	DRAWN	TRACED	CHECKED	REVIEWED	DATE	REVISED
JRS	JPS		DYF	PAK	1-25-88	

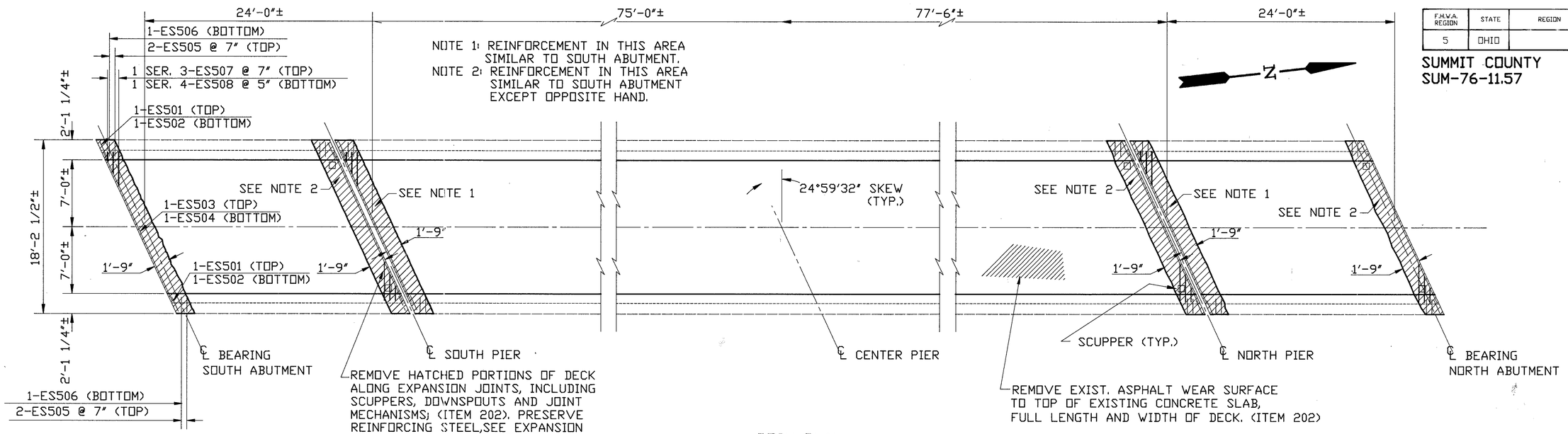

NOTE 1: REINFORCEMENT IN THIS AREA SIMILAR TO SOUTH ABUTMENT.
NOTE 2: REINFORCEMENT IN THIS AREA SIMILAR TO SOUTH ABUTMENT EXCEPT OPPOSITE HAND.

DECK PLAN

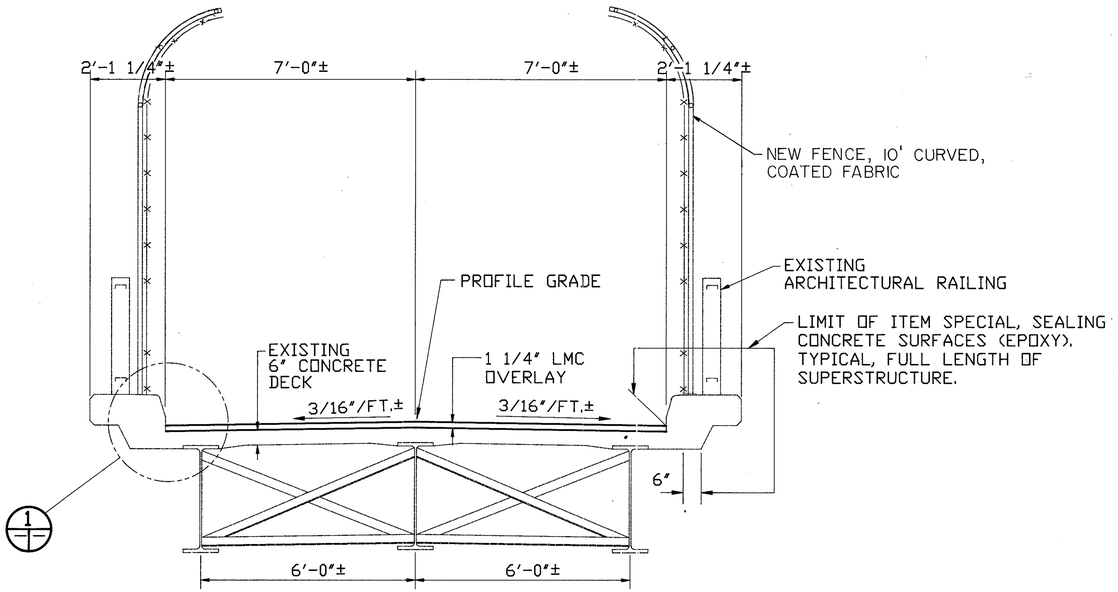

TYPICAL SECTION

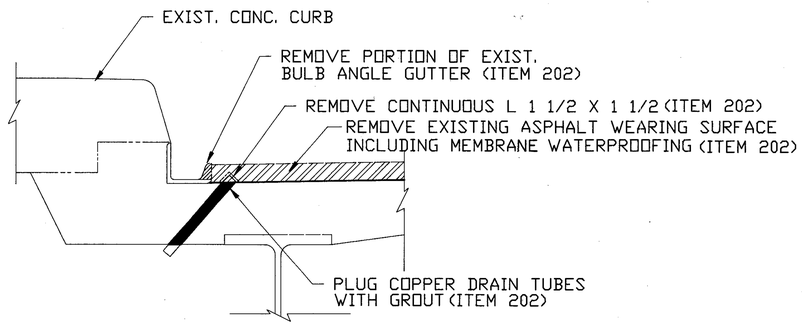

DETAIL

F.H.W.A. REGION	STATE	REGION	
5	OHIO		

836
1214

SUMMIT COUNTY
SUM-76-11.57

JOHN DAVID JONES & ASSOC., INC. 12/16
2162 FRONT STREET
CUYAHOGA FALLS, OHIO 44221
ENGINEERS ARCHITECTS PLANNERS

DECK PLAN AND DETAILS

BRIDGE NO. SUM-76-1200
HOBAN PEDESTRIAN BRIDGE

DESIGNED	DRAWN	TRACED	CHECKED	REVIEWED	DATE	REVISED
JRS	RWM	EMB	DYF	PAK	1-25-88	

F.H.W.A. REGION	STATE	REGION		837 / 1214
5	OHIO			

SUMMIT COUNTY
SUM-76-11.57

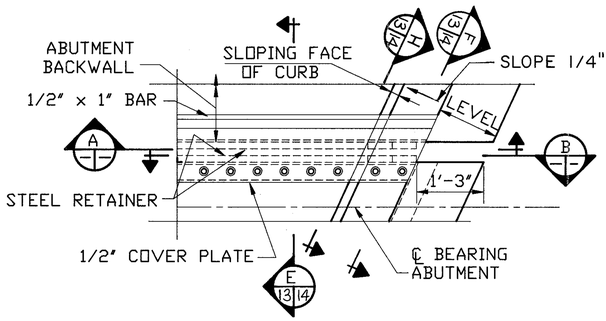

PART PLAN AT ABUTMENT

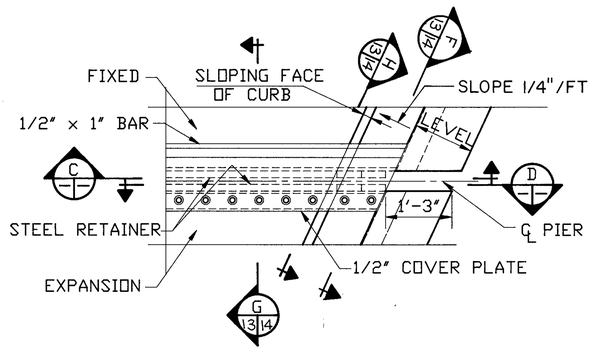

PART PLAN AT PIER

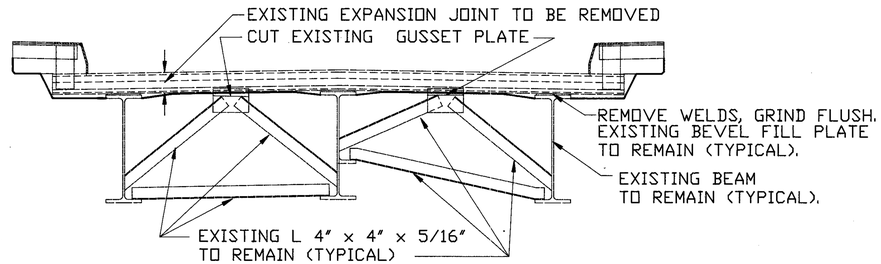

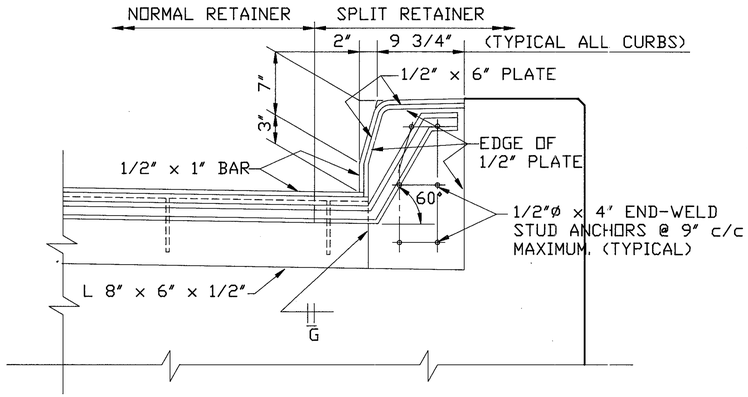

A SECTION

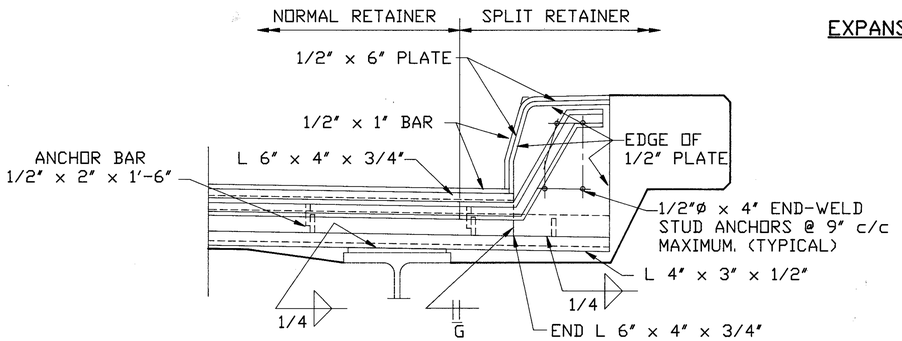

C SECTION

EXPANSION JOINT REMOVAL

NOTES:

TRANSVERSE JOINTS IN SUPERSTRUCTURE ANGLE SHALL HAVE COMPLETE PENETRATION BUTT WELDS. TRANSVERSE JOINTS IN ABUTMENT ANGLE SHALL BE CLOSELY BUTTED WITH A MINIMUM OF 6'-0" BETWEEN JOINTS. WELDS IN CONTACT WITH SEAL GLANDS SHALL BE GROUND FLUSH.

IN LIEU OF THE 1/2"ø END-WELD STUDS SHOWN ALTERNATE METHODS OF ANCHORING THE JOINT ARMOR MAY BE USED, SUBJECT TO APPROVAL BY THE DIRECTOR.

DURING INSTALLATION OF THE SUPPORT/ARMOR FOR THE SUPERSTRUCTURE SIDE OF THE EXPANSION JOINT SEAL, THE SEATING OF THE BEAMS ON THEIR BEARINGS SHALL BE CAREFULLY OBSERVED TO ASSURE THAT POSITIVE BEARING IS MAINTAINED. PROPER VERTICAL FIT OF THE SUPPORT/ARMOR ON THE BEAMS SHALL BE ACHIEVED BY POSITIONING OF THE BEVEL FILL PLATES RATHER THAN BY CLAMPING FORCE.

STEEL MEMBERS SHALL BE FURNISHED IN LENGTHS AS LONG AS PRACTICABLE. AT ALL FIELD BUTT JOINTS THEY SHALL BE RIGIDLY FASTENED TOGETHER AS REQUIRED PRIOR TO PLACING CONCRETE.

STRIP SEAL GLAND TABLE			
SEAL MOVEMENT RATING	MANUFACTURER & DESIGNATION *		
	D.S.BROWN	STRUCTURAL ACCESSORIES	WATSON BOWMAN & ACME
3"	SS300	30 SS	S-300

* OR AN APPROVED ALTERNATE.

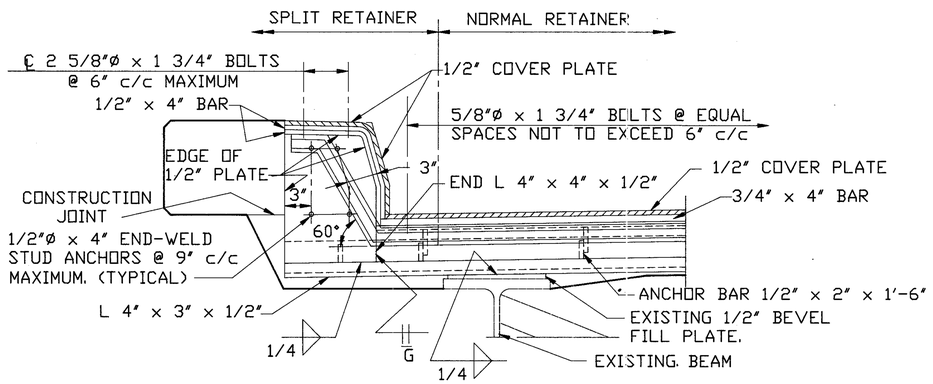

B SECTION D SIMILAR

SECTION B SHOWN,

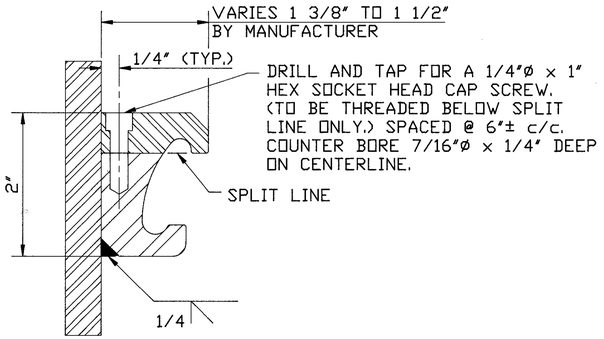

SPLIT RETAINER DETAIL

NORMAL RETAINER SIMILAR

THE SPLIT RETAINER SHOWN ABOVE IS A NORMAL EXTRUSION WHICH HAS BEEN MODIFIED AS INDICATED.
STEEL RETAINERS SHALL BE WELDED AT ALL MITERS (BELOW THE SPLIT LINE).

JOHN DAVID JONES & ASSOC., INC. 13 / 16
2162 FRONT STREET
CUYAHOGA FALLS, OHIO 44221
ENGINEERS ARCHITECTS PLANNERS

EXPANSION JOINT DETAILS

BRIDGE NO. SUM-76-1200
HOBAN PEDESTRIAN BRIDGE

DESIGNED	DRAWN	TRACED	CHECKED	REVIEWED	DATE	REVISED
RCK	RCK		GFD	PAK	1-25-88	

F.H.W.A. REGION	STATE	REGION	
5	OHIO		

838
12/14

SUMMIT COUNTY
SUM-76-11.57

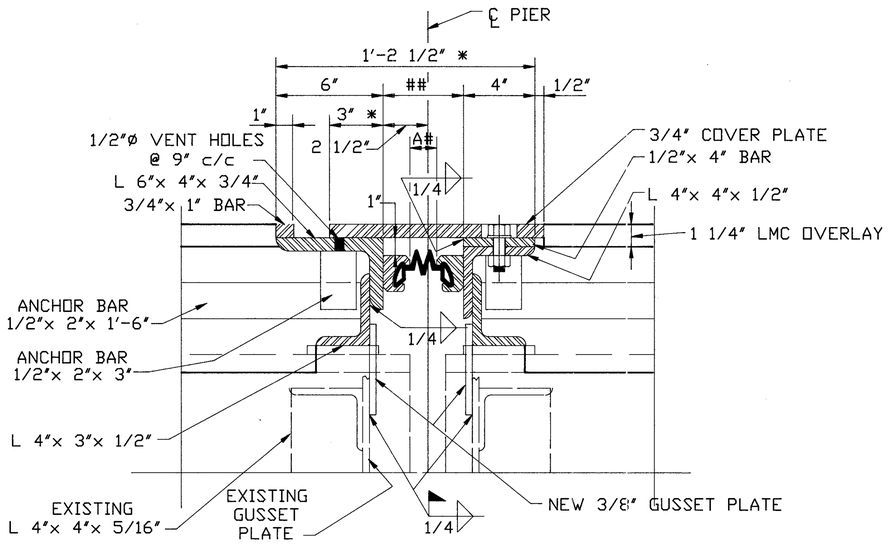

G 13|14 SECTION

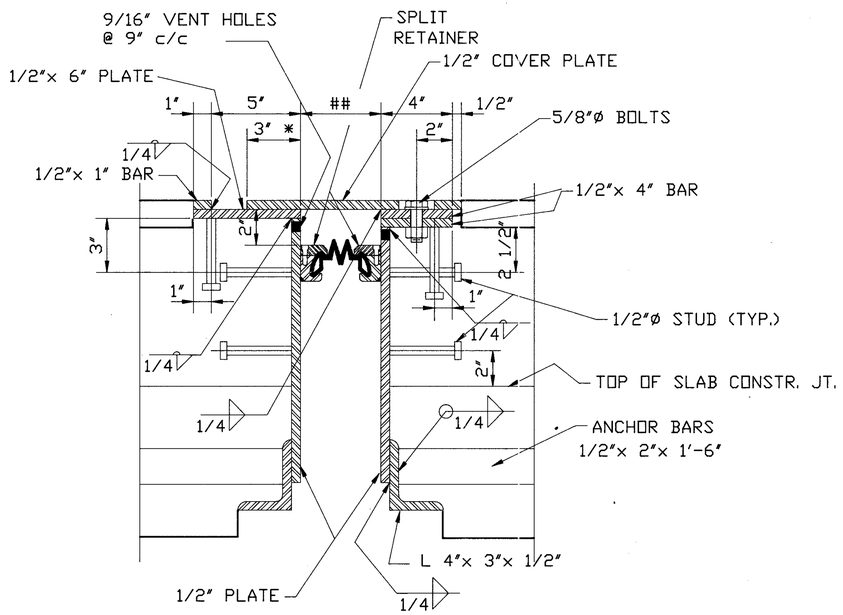

F 13|14 SECTION

K SECTION

H 13|14 SECTION

J SECTION

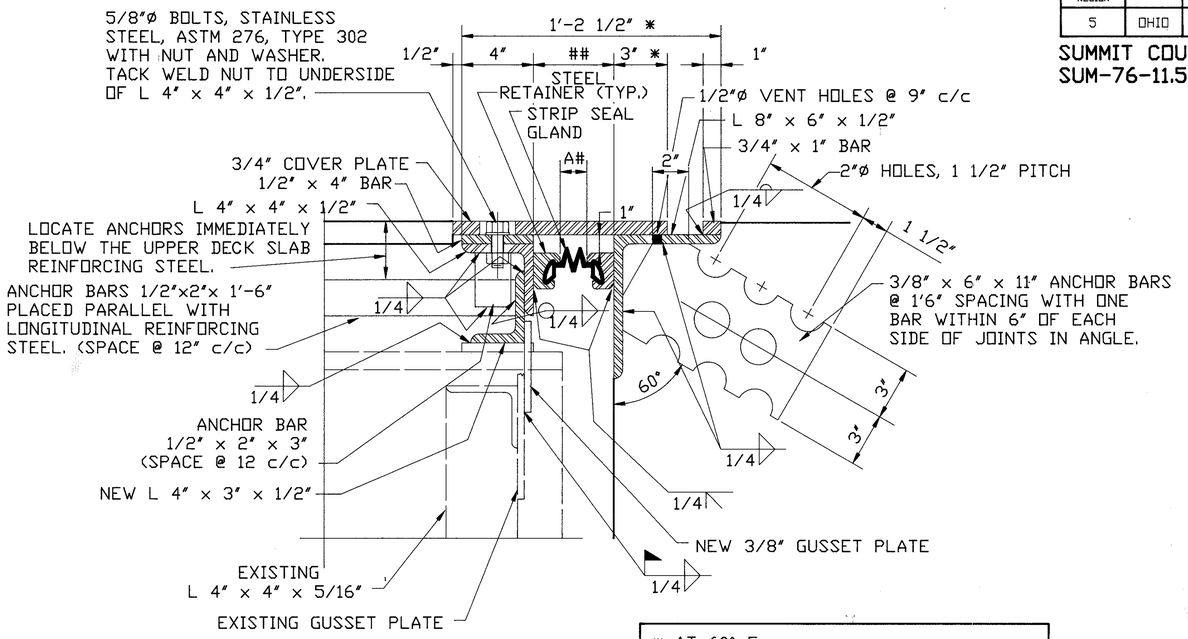

E 13|14 SECTION

* AT 60° F
THIS DIMENSION IS THE SUM OF (2x STEEL RETAINER WIDTH + DIM. "A").
#-DIMENSION "A" SEE STRIP SEAL ADJUSTMENT TABLE.

STRIP SEAL ADJUSTMENT TABLE		
AMBIENT TEMPERATURE	AT ABUTMENT	AT PIER
90°	1 11/16"	1 7/16"
80°	1 11/16"	1 9/16"
70°	1 11/16"	1 5/8"
60°	1 3/4"	1 11/16"
50°	1 3/4"	1 3/4"
40°	1 3/4"	1 13/16"

NOTE:
FOR ADDITIONAL NOTES AND DETAILS NOT SHOWN SEE STANDARD DRAWING EXJ-4-87.

JOHN DAVID JONES & ASSOC., INC. 14/16
2162 FRONT STREET
CUYAHOGA FALLS, OHIO 44221
ENGINEERS · ARCHITECTS · PLANNERS

EXPANSION JOINT DETAILS

BRIDGE NO. SUM-76-1200
HOBAN PEDESTRIAN BRIDGE

DESIGNED	DRAWN	TRACED	CHECKED	REVIEWED	DATE	REVISED
RCK.	RCK	—	GFD	PAK	1-25-88	

F.H.W.A. REGION	STATE	REGION	
	TO		

839
1214

SUMMIT COUNTY
SUM-76-11.57

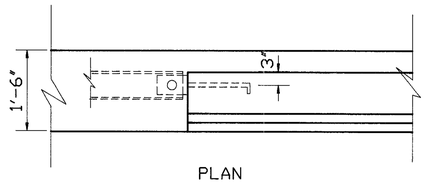

PLAN

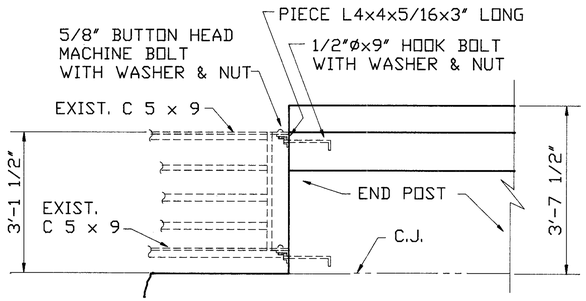

ELEVATION

RAILING CONNECTION

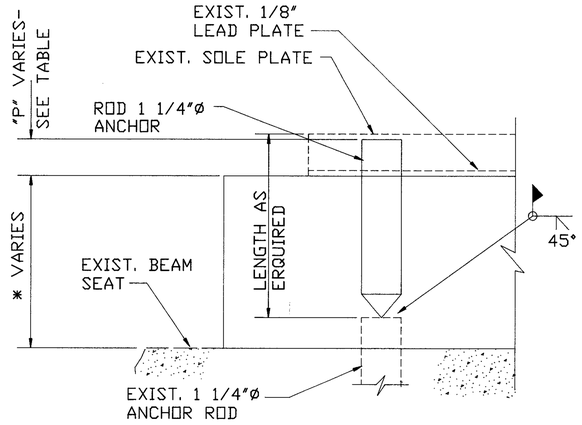

ANCHOR ROD EXTENSION**

* SEE PEDESTAL DETAILS AND SHIM PLATE DETAIL.

ANCHOR ROD PROJECTION "P"							
BEAM LOCATION	SOUTH ABUTMENT	SOUTH PIER		CENTER PIER	NORTH PIER		NORTH ABUTMENT
		SOUTH BEARING	NORTH BEARING		SOUTH BEARING	NORTH BEARING	
A	1 1/2"	1 3/4"	1 1/2"	2 1/2"	1 1/2"	1 3/4"	1 1/2"
B	1 1/2"	1 3/4"	1 1/2"	2"	1 1/2"	1 3/4"	1 1/2"
C	1 1/2"	1 3/4"	1 1/2"	2 1/2"	1 1/2"	1 3/4"	1 1/2"

**IF THE EXISTING ANCHOR BOLT DOES NOT HAVE SUFFICIENT CROSS-SECTIONAL AREA TO WELD PROPERLY, THE CONTRACTOR IS TO REMOVE ANY CONCRETE NECESSARY TO A SUFFICIENT DEPTH TO OBTAIN SUITABLE MATERIAL WITH SUFFICIENT CROSS-SECTIONAL AREA TO WELD PROPERLY. THE COST OF REMOVING AND REPLACING THE CONCRETE SHALL BE INCLUDED IN THE UNIT PRICE BID FOR ITEM 516, REFURBISH BEARING DEVICES, AS PER PLAN.

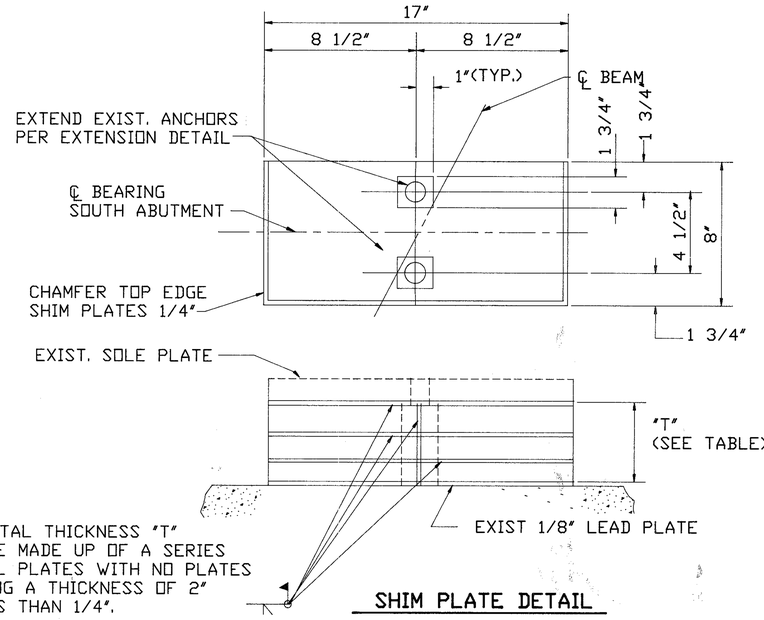

NOTE: TOTAL THICKNESS "T" SHALL BE MADE UP OF A SERIES OF STEEL PLATES WITH NO PLATES EXCEEDING A THICKNESS OF 2" NOR LESS THAN 1/4".

SHIM PLATE DETAIL

SHIM THICKNESS			
BEAM LOCATION	EXIST. SEAT ELEVATION	PROP. SEAT ELEVATION	THICKNESS "T" *
A	1155.45±	1155.73	3 1/2"
B	1155.51±	1155.84	3 7/8"
C	1155.41±	1155.77	4 1/4"

* THICKNESS "T" IS BASED ON EXIST. SEAT ELEVATION SHOWN AND MAY REQUIRE ADJUSTMENTS FOR ACTUAL ELEVATION

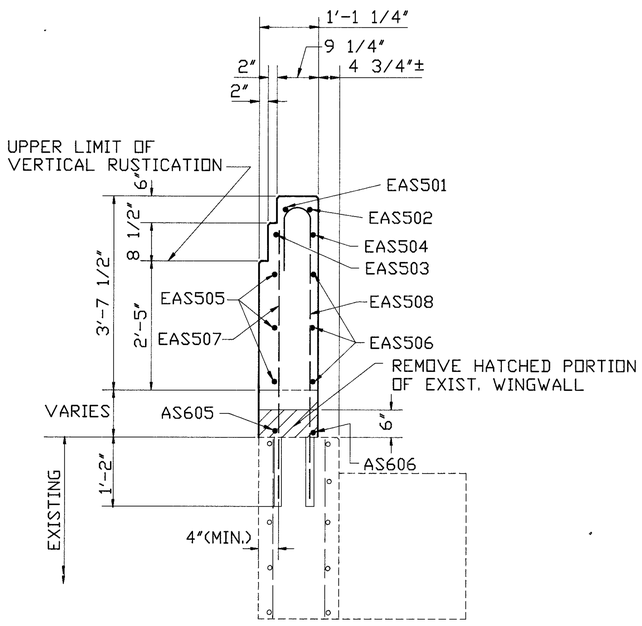

A 10|15 SECTION

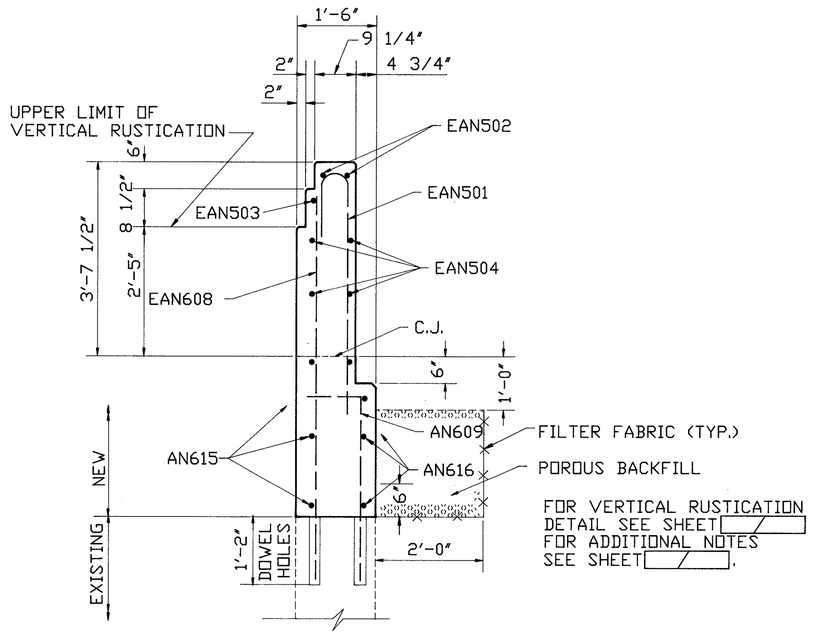

FOR VERTICAL RUSTICATION DETAIL SEE SHEET [ ].
FOR ADDITIONAL NOTES SEE SHEET [ ].

B 10|15 SECTION

JOHN DAVID JONES & ASSOC., INC. 15|16
2162 FRONT STREET
CUYAHOGA FALLS, OHIO 44221
ENGINEERS ARCHITECTS PLANNERS

CONSTRUCTION DETAILS

BRIDGE No. SUM-76-1200
HOBAN PEDESTRAIN BRIDGE

DESIGNED	DRAWN	TRACED	CHECKED	REVIEWED	DATE	REVISED
JRS	EMB	RCK	BCK	PAK	1-25-88	

MARK	NO.	LENGTH	TYPE	WEIGHT	A	B	C	D
SOUTH ABUTMENT								
AS605	1	14'-3"	20	21	12'-6"	12'-4"	1'-9"	
AS606	1	13'-6"	19	20	13'-6"	12'-11"		
AS607	2	17'-2"	STR.	52				
TOTAL UNCOATED BARS=				93				
EAS601	1	19'-9"	STR.	30				
EAS602	4	2'-0"	STR.	12				
EAS603	4	2'-3"	STR.	14				
EAS604	5	2'-1"	STR.	16				
EAS608	1	3'-0"	STR.	5				
EAS609	1	4'-6"	STR.	7				
EAS501	1	9'-7"	19	10	9'-7"	12'-6"		
EAS502	1	9'-10"	19	10	9'-10"	12'-11"		
EAS503	1	10'-1"	19	11	10'-1"	12'-4"		
EAS504	1	10'-7"	19	11	10'-7"	12'-11"		
EAS505	3	11'-3"	19	35	11'-3"	12'-4"		
EAS506	3	11'-10"	19	37	11'-10"	12'-11"		
EAS507	22	5'-6"	STR.	126				
EAS508	22	7'-2"	6	164	0'-5"	5'-6"	1'-6"	
EAS509	2	5'-0"	STR.	10				
EAS510	2	6'-10"	6	14	0'-7"	5'-0"	1'-6"	
EAS511	2	4'-3"	STR.	9				
EAS512	2	6'-3"	6	13	0'-9"	4'-3"	1'-6"	
EAS513	2	12'-2"	STR.	25				
EAS514	2	12'-10"	STR.	27				
EAS515	6	14'-1"	STR.	88				
TOTAL WEIGHT EPOXY COATED BARS =				674				
NORTH ABUTMENT								
AN613	3	2'-2"	STR.	10				
AN614	3	1'-8"	STR.	8				
AN615	3	21'-8"	STR.	98				
AN616	4	21'-4"	STR.	128				
AN617	6	1'-6"	STR.	14				
AN618	6	1'-10"	STR.	17				
AN619	2	19'-0"	STR.	57				
AN620	2	21'-0"	STR.	63				
AN621	3	21'-4"	STR.	96				
AN622	2	7'-0"	4	21	5'-9"	1'-3"	1'-0"	3 3/8"
TOTAL UNCOATED BARS =				512				

MARK	NO.	LENGTH	TYPE	WEIGHT	A	B	C	D
NORTH ABUTMENT (CONTINUED)								
EAN601	10	10'-2"	6	153	0'-11"	7'-0"	2'-7"	
EAN602	10	7'-0"	2	105	1'-5"	5'-9"	2'-7"	
EAN603	8	7'-10"	STR.	94				
EAN604	11	19'-9"	STR.	326				
EAN605	2	1'-11"	STR.	6				
EAN606	6	4'-4"	STR.	39				
EAN607	2	1'-7"	STR.	5				
EAN608	20	7'-10"	STR.	235				
EAN609	20	4'-9"	2	143	0'-8"	4'-3"		
EAN610	3	6'-3"	STR.	28				
EAN611	5	3'-1"	2	23	0'-8"	2'-7"		
EAN612	2	5'-6"	STR.	17				
EAN623	1	5'-9"	STR.	9				
EAN624	1	6'-0"	STR.	9				
EAN625	1	6'-3"	STR.	9				
EAN626	1	3'-3"	2	5	0'-8"	2'-9"		
EAN627	1	3'-9"	2	6	0'-8"	3'-3"		
EAN628	1	4'-0"	2	6	0'-8"	3'-6"		
EAN501	30	6'-4"	6	198	0'-5"	4'-8"	1'-6"	
EAN502	4	17'-2"	STR.	72				
EAN503	2	17'-11"	STR.	37				
EAN504	8	19'-2"	STR.	160				
TOTAL WEIGHT EPOXY COATED BARS=				1685				

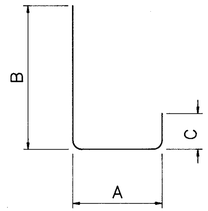

TYPE 6

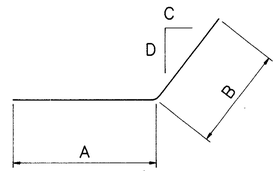

TYPE 4

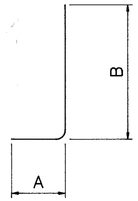

TYPE 2

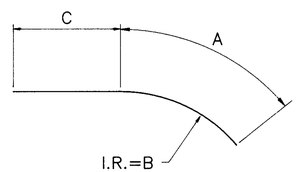

TYPE 20

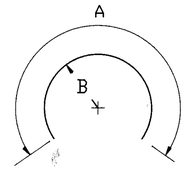

TYPE 19

F.H.W.A. REGION	STATE	PROJECT
5	OHIO	

640
1214

SUMMIT COUNTY
SUM-76-11.57

REINFORCING STEEL SAMPLES

REFER TO CMS SECTIONS 106.03, 700, 709.01 THROUGH 709.05 AND 709.08 SUFFICIENT ADDITIONAL REINFORCING STEEL SHALL BE PROVIDED FOR SAMPLING. RAMDOM SAMPLES SHALL BE REPLACED IN STRUCTURES BY THE ADDITIONAL STEEL , SPLICED IN ACCORDANCE WITH 509.08

JOHN DAVID JONES & ASSOC., INC. 16/16
2162 FRONT STREET
CUYAHOGA FALLS, OHIO 44221
ENGINEERS ARCHITECTS PLANNERS

REINFORCING STEEL LIST

BRIDGE NO. SUM-76-1200
HOBAN PEDESTRIAN BRIDGE

DESIGNED	DRAWN	TRACED	CHECKED	REVIEWED	DATE	REVISED
JRS	EMB		JRS	PAK	1-25-88	

F.H.W.A. REG.	STATE	PROJECT	
5	OHIO		

841
12.14

SUMMIT COUNTY
SUM-76-11.57

MARTIN AVE.
W 6"
ST 12"
BEGIN WINGWALL
STA. 576+07.65
70.55 LT.
ROT. STA. 75+66 54.00' LT. OF
STA. 575+66.00 ℄ I-76
PROPOSED RETAINING WALL
(SEE ROADWAY PLANS)
WALL
PARAPET
SHOULDER
12'
40:1 TAPER
N 87°55'14"E
BERM
VARIES
12'-0"
48'-0"
8'-0"
P.C. STA. 74+71.64 RAMP E-8
STA. 574+71.64 I-76
℄ RAMP E-8
PARAPET
SODDED FLUME
CURVE DATA RAMP E-8
Δ = 18°16'49"
D = 4° - 00' - 00"
R = 1432.39'
T = 230.46'
L = 457.01'
UTILITIES
UTILITIES SHOWN ARE EXISTING AND REMAIN IN PLACE UNLESS NOTED OTHERWISE.
DENOTES SOIL BORING LOCATION
BEGIN WINGWALL
STA. 575+83.23
69.46 RT.
18+61.87 ARLINGTON ST.
76+16.88 E-4
END WINGWALL
STA. 577+16.50
73.27 LT.
RAMP E-4
PROPOSED RETAINING WALL
(SEE ROADWAY PLANS)
160' SHOULDER TRANSITION
℄ RAMP E-7
& EDGE OF PAV'T
P.C. STA. 78+82.31 E-7
12" SHOULDER
AT STA. 577+25
1°00'40"
SKEW LT FWD.
(TYPICAL @ ℄
BOTH ABUTMENTS)
BEGIN APPROACH SLAB
STA. 575+88.31
END APPROACH SLAB
STA. 576+13.31
576+63.31
17+46.25
N 89°21'10"E
BEGIN APPROACH SLAB
STA. 576+93.31
END APPROACH SLAB
STA. 577+18.31
WESTBOUND I-76
(3 LANES)
P.C. STA. 578+84.95
EXISTING ℄
EXIST. MEDIAN BARRIER
EASTBOUND I-76
(3 LANES)
12'-0"
36'-0"
25'-0"
N 0°21'50"E
REMOVE EXISTING WINGWALL
TO 2' BELOW FINISHED GRADE (TYP)
NOSE STA. 77+50 E-8 (16' LT.)
= STA. 577+50 I-76 (65' RT.)
EXIST. RAMP E-5
(TO BE REMOVED)
RAMP E-8
PROPOSED
RETAINING WALL
(SEE ROADWAY PLANS)
SHOULDER 6'-0"
RAMP E-6
P.C. STA. 78+68.09
P.T. STA. 79+28.96
BEGIN WINGWALL
STA. 575+83.23
69.46 RT.
END WINGWALL
STA. 577+09.50
85.54 RT.
℄ ARLINGTON ST.
W 6"
COMB 20"
W 12"
EXISTING
44'-0"
8'-0"
PAVED PARKING
STEPS
CLEAR
22'-0"
7'-11"
56'-0"
NOTE:
RAMP E-8 BRIDGE OVER RAMP E-6 IS NOT SHOWN HERE BUT IS DETAILED ON ANOTHER SITE PLAN. RETAINING WALLS ARE SHOWN FOR CLARITY ONLY. SEE ROADWAY PLANS FOR RETAINING WALL DETAILS.

PVC STA 575+25
PVI STA 576+00
PVT STA 576+75 ±
150' V.C.
25.00'
BRIDGE LIMITS = 80.00' ±
25.00'
-3.57%
-2.34%
REPLACE APPROACH SLABS (TYP.)
REPLACE EXISTING BACK-WALLS AND EXPANSION JOINT MECHANISMS (TYP.)
EXP.
FIX.
VERT. CLEARANCE (SEE TABLE)
REPAIR AND REHABILITATE EXISTING ABUTMENTS (TYP.) EXTEND EXISTING ABUTMENTS AND CONSTRUCT PROPOSED WINGWALLS TO ACCOMMODATE THE WIDENED BRIDGE (TYP.)
BOTT. FTG. EL. 1060.00 ±
BOTT. FTG. EL. 1055.25 ±
1080
1060
1040
575+00
576+00
577+00
578+00
PROFILE ALONG CENTERLINE

VERTICAL CLEARANCE (SOUTH BEAM)
15.33' REQUIRED MINIMUM
14.79' EXISTING
15.34' PROPOSED

DESIGN TRAFFIC

E.B. 1990 - 37,991 ADT
5,699 ADTT
2010 - 49,951 ADT
7,493 ADTT
W.B. 1990 - 38,750 ADT
5,813 ADTT
2010 - 50,950 ADT
7,643 ADTT
MAINTAIN TRAFFIC

EXISTING STRUCTURE

STRUCTURE FILE NO. 7706243
TYPE: SIMPLE SPAN STEEL BEAM WITH REINFORCED CONCRETE DECK AND SUBSTRUCTURE.
SPAN: 75'-0" C/C BRGS.
ROADWAY: WESTBOUND 50'-5", EASTBOUND VARIES
LOADING: CF 2000
SKEW: .0°-59'-45" LT. FWD.
WEARING SURFACE: 6" ASPHALTIC CONCRETE
APPROACH SLAB: 15'-0" CONCRETE
ALIGNMENT: TANGENT
SUPERELEVATION: NONE

PROPOSED STRUCTURE

TYPE: UPGRADE AND WIDEN EXISTING SIMPLE SPAN STEEL BEAM WITH REINFORCED CONCRETE DECK AND SUBSTRUCTURE, INCLUDING REPLACE DECK, UPGRADE PARAPETS AND MEDIAN BARRIER, CLEAN AND REPAINT STEEL SUPERSTRUCTURE, REFURBISH BEARINGS, REPLACE APPROACH SLABS, INSTALL SEALED EXPANSION JOINT MECHANISMS, REPAIR AND SEAL SUBSTRUCTURES.
SPAN: 75'-0" C/C BRGS,
ROADWAY: VARIES EASTBOUND AND WESTBOUND
LOADING: HS20-44 CASE I AND THE ALTERNATE MILITARY LOADING
SKEW: 1°-00'-40" LT. FWD.
WEARING SURFACE: 1" MONOLITHIC
APPROACH SLAB: AS-1-81 (25'-0" LONG)
ALIGNMENT: MAINLINE AND RAMP E-7: TANGENT
RAMP E-8: CURVE
SUPERELEVATION: VARIES

EARTHWORK

EARTHWORK LIMITS SHOWN ARE APPROXIMATE. ACTUAL SLOPES SHALL CONFORM TO PLAN CROSS-SECTIONS.

JOHN DAVID JONES & ASSOC. INC. 11/23
2162 FRONT STREET
CUYAHOGA FALLS, OHIO 44221
ENGINEERS ARCHITECTS PLANNERS

SITE PLAN

BRIDGE NO. SUM-76-1231
OVER ARLINGTON STREET
SUMMIT COUNTY STA.

PRESENT TOPOGRAPHY		PROPOSED WORK			
SURVEYED	DRAWN	DESIGNED	DRAWN	CHECKED	REVIEWED
-	-	JRS	JRS	JRO	PAK 3-25-87

F.H.W.A. REG.	STATE	PROJECT	
5	OHIO		

842
1214

SUMMIT COUNTY
SUM-76-11.57

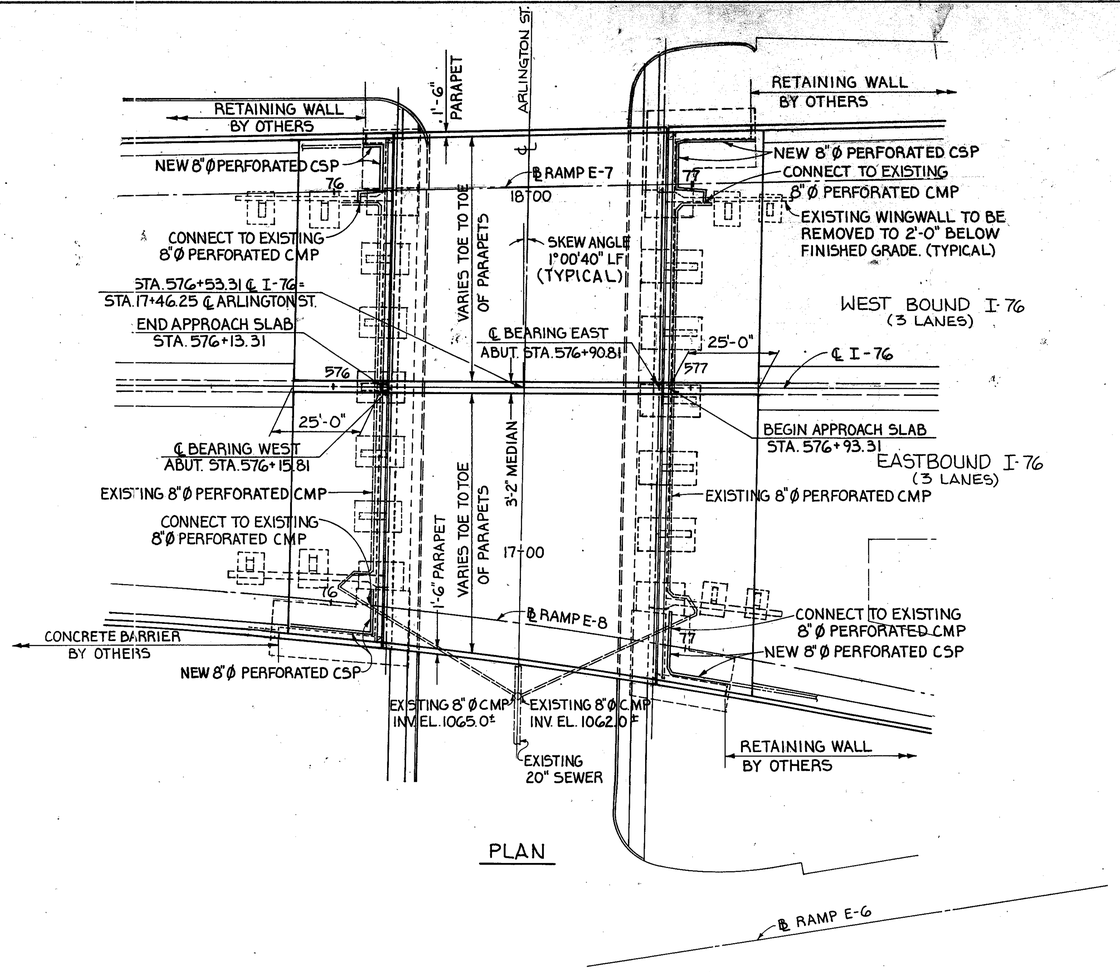

PLAN

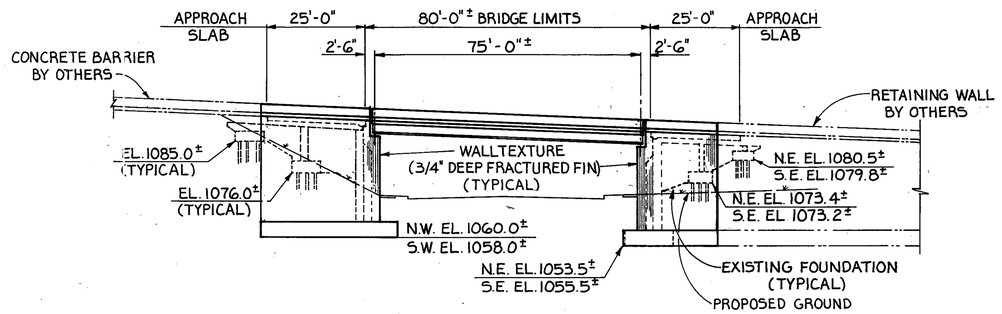

ELEVATION

JOHN DAVID JONES & ASSOC., INC. 2/23
2162 FRONT STREET
CUYAHOGA FALLS, OHIO 44221
ENGINEERS ARCHITECTS PLANNERS

GENERAL PLAN, ELEVATION

BRIDGE No. SUM-76-1231
OVER ARLINGTON ST.

DESIGNED	DRAWN	TRACED	CHECKED	REVIEWED	DATE	REVISED
GFD	RCK	JPM	HGS	P.A.K.	11/23/88	

ESTIMATED QUANTITIES

QUANTITY CALCULATIONS
MADE BY: H.G.S. DATE: 9-9-88
CH'KD BY: G.F.D. DATE: 9-12-88

F.H.W.A. REGION	STATE	PROJECT	
5	OHIO		

843
1214

SUMMIT COUNTY
SUM-76-11.57

ITEM	ITEM EXT.	TOTAL	UNIT	DESCRIPTION	ABUTMENTS	PIERS	SUPER STRUCTURE	GENERAL
202	11200	LUMP		PORTIONS OF STRUCTURES REMOVED				LUMP
503	21102	1347	CU.YD.	UNCLASSIFIED EXCAVATION INCLUDING SHALE	1347			
509	15400	50438	LB.	REINFORCING STEEL, GRADE 60	50438			
509	15800	91979	LB.	EPOXY COATED REINFORCING STEEL, GRADE 60	16143		75836	
509	15800	157	LB.	EPOXY COATED REINFORCING STEEL, GRADE 60, AT OPTIONAL 4" X 4" KEYS	157			
510	11100	166	EACH	DOWEL HOLES	166			
511	32203	335	CU.YD.	CLASS S CONCRETE SUPERSTRUCTURE, AS PER PLAN			335	
511	45100	487	CU.YD.	CLASS "C" CONCRETE, ABUTMENTS ABOVE FOOTINGS	487			
511	46500	306	CU.YD.	CLASS "C" CONCRETE, FOOTINGS	306			
511	51100	45	CU.YD.	CLASS "C" CONCRETE FACING (AS PER PLAN)	45			
513	11100	124450	LB.	STRUCTURAL STEEL, ASTM A 36 AISC Category I			124450	
513	16000	2000	LB.	STRUCTURAL STEEL, ASTM A 36 FOR REHABILITATION			2000	
513	16800	34	EACH	STRUCTURAL STEEL SHIM PLATES	34			
516	10500	154	LIN.FT.	STRUCTURAL EXPANSION JOINTS INCL. ELASTOMERIC COMPRESSION SEALS			154	
516	30501	11	LIN.FT.	PVC WATERSTOP, AS PER PLAN	11			
516	45305	32	EACH	REFURBISH BEARING DEVICES, AS PER PLAN	32			
516	46000	8	EACH	Bearing Device, BOLSTERS	8			
516	46200	8	EACH	Bearing Device, ROCKERS	8			
518	21200	219	CU.YD.	POROUS BACKFILL with filter fabric	219			
518	42200	134	LIN.FT.	8" PERFORATED, CORRUGATED STEEL PIPE, 707.01	134			
518	42300	52	LIN.FT.	8" NON-PERFORATED, CORRUGATED STEEL PIPE, INCLUDING SPECIALS, 707.01	52			
518	62100	80	LIN.FT.	4" DIAM. PLASTIC PIPE, 707.19	80			
SPECIAL	51267502	520	SQ.YD.	SEALING of CONCRETE SURFACES (EPOXY) (SEE PROPOSAL NOTE)	267		253	
SPECIAL	51267504	411	SQ.YD.	SEALING CONCRETE SURFACES (NON-EPOXY) (SEE PROPOSAL NOTE)	411			
SPECIAL	51400050	19935	Sq. Ft.	SURFACE PREPARATION OF EXISTING STEEL, SYSTEM OZEU* ▲				
SPECIAL	51400056	19935	Sq. Ft.	FIELD PAINTING OF EXISTING STEEL, PRIME COAT, SYSTEM OZEU* ▲				
SPECIAL	51400060	19935	Sq. Ft.	FIELD PAINTING OF EXISTING STEEL, INTERMEDIATE COAT, SYSTEM OZEU* ▲				
SPECIAL	51400066	19935	Sq. Ft.	FIELD PAINTING OF EXISTING STEEL, FINISH COAT, SYSTEM OZEU* ▲				
SPECIAL	51400600	LUMP		FIELD PAINTING OF NEW STEEL, SYSTEM IZEU* ▲				
~~SPECIAL~~	~~51426500~~	~~LUMP~~		~~HAZARDOUS WASTE MANAGEMENT (SEE PROPOSAL NOTE)~~				
~~SPECIAL~~	~~51426510~~	~~LUMP~~		~~NON-HAZARDOUS WASTE MANAGEMENT (SEE PROPOSAL NOTE)~~				
519	11100	1840	SQ.FT.	PATCHING CONCRETE STRUCTURE	1840			
SPECIAL	53000200	LUMP		JACK STRUCTURE				
				* - SEE PROPOSAL NOTE				
◁ 511	33404	335	CU.YD.	Class S concrete, superstructure using shrinkage compensating cement (See Proposal Note)			335	
◁ 511	33410	LUMP		Class S concrete, using shrinkage compensating cement For pre-place. testing (See Proposal Note)			LUMP	

* See Proposal Note

▲ See General Notes for Additional Requirements

◁ These two items shall constitute one alternate bid to class S concrete, superstructure, as per plan

CLASS S CONCRETE SUPERSTRUCTURE-AS PER PLAN-
Concrete shall be cured by method (a) water curing.

JOHN DAVID JONES & ASSOC., INC. 3/23
2162 FRONT STREET
CUYAHOGA FALLS, OHIO 44221
ENGINEERS ARCHITECTS PLANNERS

QUANTITY TABLE

BRIDGE No. SUM-76-12.31
OVER ARLINGTON ST.

DESIGNED	DRAWN	TRACED	CHECKED	REVIEWED	DATE	REVISED
JRS	EMB	—	BRH	PAK	11/88	

545371

F.H.W.A. REG.	STATE	PROJECT	
5	OHIO		

844
12.14

SUMMIT COUNTY
SUM-76-11.57

GENERAL NOTES

REFERENCE SHALL BE MADE TO STANDARD DRAWING(S):

AS-1-81 DATED 11-27-81

FB-1-82 DATED 5-10-82

RB-1-55 DATED 2-2-59

EXJ-2-81 REVISED 4-2-84

SD-1-69 DATED 6-12-69

MC-9A REVISED 1-11-85

AND TO SUPPLEMENTAL SPECIFICATION(S):

~~814~~ DATED ~~10-08-82~~

836 DATED 11-12-85

849 DATED 12-24-85

~~904~~ DATED ~~10-17-86~~

~~911~~ DATED ~~4-17-87~~

949 DATED 09-26-86

DESIGN SPECIFICATIONS: MODIFICATIONS TO THIS STRUCTURE CONFORM TO "STANDARD SPECIFICATIONS FOR HIGHWAY BRIDGES" ADOPTED BY THE AMERICAN ASSOCIATION OF STATE HIGHWAY AND TRANSPORTATION OFFICIALS, 1983, INCLUDING THE 1984, 1985 AND 1986 INTERIM SPECIFICATIONS AND THE OHIO "SUPPLEMENT" TO THESE SPECIFICATIONS.

DESIGN LOADING - HS20-44, CASE 1 AND THE ALTERNATE MILITARY LOADING.

DESIGN STRESSES

CONCRETE CLASS S - COMPRESSIVE STRENGTH 4500 P.S.I.
CONCRETE CLASS C - COMPRESSIVE STRENGTH 4000 P.S.I.
REINFORCING STEEL - ASTM A615, A616, A617 - GRADE 60 MINIMUM YIELD STRENGTH 60,000 P.S.I.

STRUCTURAL STEEL:
EXISTING.... ASTM A-7 (ASSUMED), YIELD STRENGTH 33,000 P.S.I. (UNIT STRESS 18,000 P.S.I.)
NEW..... ASTM A-36, YIELD STRENGTH 36,000 P.S.I. (UNIT STRESS 20,000 P.S.I.)

DECK PROTECTION METHOD: EPOXY COATED REINFORCING STEEL, TOP AND BOTTOM MAT.

MONOLITHIC WEARING SURFACE IS ASSUMED, FOR DESIGN PURPOSES, TO BE 1" THICK.

EXISTING STRUCTURE VERIFICATION: DETAILS AND DIMENSIONS SHOWN ON THESE PLANS PERTAINING TO THE EXISTING STRUCTURE HAVE BEEN OBTAINED FROM PLANS OF THE EXISTING STRUCTURE AND/OR FROM FIELD OBSERVATIONS AND MEASUREMENTS. CONSEQUENTLY, THEY ARE INDICATIVE OF THE EXISTING STRUCTURE AND THE PROPOSED WORK BUT THEY SHALL BE CONSIDERED TENTATIVE AND APPROXIMATE. THE CONTRACTOR IS REFERRED TO CMS SECTIONS 102.05, 105.02 AND 513.02.

CONTRACT BID PRICES SHALL BE BASED UPON A RECOGNITION OF THE UNCERTAINTIES DESCRIBED ABOVE AND UPON A PREBID EXAMINATION OF THE EXISTING STRUCTURE BY THE CONTRACTOR. HOWEVER, ALL PROJECT WORK SHALL BE BASED UPON ACTUAL DETAILS AND DIMENSIONS WHICH HAVE BEEN VERIFIED BY THE CONTRACTOR IN THE FIELD.

REPLACEMENT OF EXISTING REINFORCING STEEL: ANY EXISTING REINFORCING BARS WHICH ARE TO BE INCORPORATED INTO THE NEW WORK AND WHICH ARE MADE UNUSABLE BY THE CONTRACTOR'S CONCRETE REMOVAL OPERATIONS SHALL BE REPLACED WITH NEW STEEL AT HIS COST. ANY EXISTING REINFORCING BARS DEEMED BY THE ENGINEER TO BE UNUSABLE BECAUSE OF CORROSION SHALL BE REPLACED WITH NEW STEEL. AN ALLOWANCE OF 100 POUNDS IS INCLUDED IN ITEM 509 FOR THIS PURPOSE.

EMBANKMENT CONSTRUCTION: THE EMBANKMENTS SHALL BE CONSTRUCTED TO THE LEVEL OF THE SUBGRADE FOR A MINIMUM DISTANCE OF 100 FEET BACK OF THE ABUTMENTS. EXCAVATION MAY THEN BE MADE FOR THE ABUTMENTS.

FOUNDATION BEARING PRESSURE: ABUTMENT FOOTINGS, AS DESIGNED, PRODUCE A MAXIMUM BEARING PRESSURE OF 4.0 TONS PER SQ. FT.

FOOTINGS SHALL EXTEND A MINIMUM OF 3 INCHES INTO BEDROCK, OR MATCH THE ELEVATION OF EXISTING ADJACENT FOOTING, WHICHEVER IS LOWER.

MAINTENANCE OF TRAFFIC: TRAFFIC SHALL BE MAINTAINED ON I-76 AND ARLINGTON STREET AT ALL TIMES. SEE MAINTENANCE OF TRAFFIC PLANS FOR COMPLETE DETAILS.

UTILITY LINES: ALL EXPENSE INVOLVED IN RELOCATING AND/OR INSTALLING THE AFFECTED UTILITY LINES SHALL BE BORNE BY THE OWNER(S). THE CONTRACTOR AND OWNER(S) ARE REQUESTED TO COOPERATE BY ARRANGING THEIR WORK IN SUCH A MANNER THAT INCONVENIENCE TO EITHER WILL BE HELD TO A MINIMUM.

ITEM 202, PORTIONS OF STRUCTURES REMOVED: THIS WORK SHALL INCLUDE THE REMOVAL AND DISPOSAL OF THE FOLLOWING:

1. WINGWALLS TO THE LIMITS SHOWN ON THE PLANS.
2. ABUTMENT BACKWALLS TO THE LIMITS SHOWN ON THE PLANS.
3. STRUCTURAL STEEL CROSS FRAMES AS SHOWN ON THE PLANS.
4. EXPANSION JOINTS.
5. BRIDGE DECK, INCLUDING METAL RAILING AND SCUPPERS.
6. ASPHALT WEARING SURFACE.
7. EXCAVATION INCIDENTAL TO THE ABOVE.

THE EXISTING REINFORCING SHALL BE PRESERVED AND/OR MODIFIED AS SHOWN ON THE PLANS.

PAYMENT FOR THE WORK DESCRIBED SHALL BE INCLUDED IN THE PRICE BID FOR ITEM 202 - PORTIONS OF STRUCTURES REMOVED.

ITEM 516 - REFURBISH BEARING DEVICES, AS PER PLAN: THIS SHALL INCLUDE ALL WORK NECESSARY TO PROPERLY ALIGN BEARINGS AS WELL AS THEIR CLEANING AND PAINTING. INCLUDED SHALL BE THE DISASSEMBLY OF THE BEARINGS, HAND CLEANING (GRINDING IF NECESSARY), SANDBLASTING AND PAINTING AS REQUIRED BY ITEM SPECIAL - FIELD PAINTING OF EXISTING STEEL, SYSTEM OZEU, REPLACEMENT OF ANY DAMAGED SHEET LEAD (711.19), REALIGNMENT OF THE UPPER BEARING PLATE BY REMOVING EXISTING WELDS AND EXTENDING BEARING ANCHORS, AND REASSEMBLY OF THE BEARINGS. ALL WORK SHALL BE TO THE SATISFACTION OF THE PROJECT ENGINEER. THE CONTRACTOR SHALL SUBMIT HIS METHOD OF JACKING THE BEARINGS TO THE DIRECTOR FOR PRIOR APPROVAL BEFORE COMMENCING THE JACKING OPERATION.

PAYMENT FOR ALL THE ABOVE DESCRIBED LABOR AND MATERIALS WILL BE MADE AT THE CONTRACT PRICE BID FOR ITEM 516 - REFURBISH BEARING DEVICES, AS PER PLAN.

PATCHING ABUTMENT BEAM SEATS: IT WILL BE THE CONTRACTOR'S RESPONSIBILITY TO COORDINATE THE STRUCTURE PATCHING OF THE ABUTMENT SEATS WITH THE JACKING AND REFURBISHING/REPLACEMENT OF BOLSTERS, ROCKERS AND BEARING DEVICES AND THE PATCHING REQUIRED UNDER THE BEARING DEVICES.

ITEM SPECIAL - SEALING OF CONCRETE SURFACES: THE FOLLOWING CONCRETE SURFACES SHALL BE SEALED WITH THE TYPE OF CONCRETE SEALER SPECIFIED BELOW IN ACCORDANCE WITH PROPOSAL NOTE: *(THE COLOR OF THE EPOXY SEALER SHALL BE PER FED. STD. 595A 13522)*

1. NEW AND EXISTING ABUTMENT BRIDGE SEATS AND ONE FOOT DOWN THE FACE OF THE BREASTWALL - EPOXY SEALER.
2. NINE INCH GUTTER, INSIDE FACE, TOP, AND OUTSIDE FACE OF PARAPET, DECK FASCIA AND SIX INCH UNDERDECK RETURN - EPOXY SEALER OR NON-EPOXY SEALER.
3. INSIDE FACE, TOP AND OUTSIDE FACE OF PARAPET ON WINGWALLS - EPOXY SEALER OR NON-EPOXY SEALER.
4. TOTAL SURFACE OF ABUTMENTS ADJACENT TO TRAFFIC LANES - NON-EPOXY.

ABUTMENT WALL TEXTURE: ABUTMENTS AND WINGWALLS SHALL BE TEXTURED BY USING FORM LINERS ATTACHED TO FORMWORK PRIOR TO PLACING CONCRETE, AREAS TO RECEIVE TEXTURED CONCRETE SURFACE SHALL INCLUDE THE FULL LENGTH OF EXPOSED ABUTMENT BREAST WALLS AND WINGWALLS FROM FINISHED GRADE/PAVEMENT UPWARD.

TEXTURED SURFACE SHALL CONSIST OF A 3/4" DEEP FRACTURED FIN TEXTURE. ACCEPTABLE PRODUCTS INCLUDE:

SYMONS CORPORATION
7603 OLD ROCKSIDE RD.
INDEPENDENCE, OH 44131
(216) 524-5240
PATTERN NO. P/C 30449

GREENSTREAK
3400 TREE COURT IND. BLVD.
ST. LOUIS, MO 63122
(800) 325-9504
PATTERN NO. 373

FITZGERALD CONSTRUCTION SALES
17376-A NEWHOPE AVENUE
FOUNTAIN VALLEY, CA 92708
(800) 227-2755
PATTERN NO. 16950

OR AN APPROVED ALTERNATE. THE CONTRACTOR SHALL SUBMIT A SAMPLE OF THE FINISHED CONCRETE TEXTURED SURFACE FOR APPROVAL.

PAYMENT FOR ALL MATERIALS AND LABOR REQUIRED FOR THE TEXTURED SURFACES SHALL BE INCLUDED WITH ITEM 511 - CLASS C CONCRETE, ABUTMENT WALL.

ITEM SPECIAL - JACKING STRUCTURE:

THE WESTBOUND PORTION OF THE EXISTING SUPERSTRUCTURE WILL BE RAISED VERTICALLY 6-3/4" AT THE WEST ABUTMENT AND 5-5/8" AT THE EAST ABUTMENT. THIS REQUIRES THAT THE SUPERSTRUCTURE BE RAISED ABOUT 4" HIGHER THAN THE TOP OF THE NEW SHIM PLATES IN ORDER TO CLEAR THE EXTENDED ANCHOR RODS WITH THE REFURBISHED BOLSTERS AND ROCKERS. THIS RESULTS IN A TOTAL VERTICAL JACKING OF THE EXISTING BEAMS FROM THEIR ORIGINAL POSITIONS OF ABOUT 10-3/4" AT THE WEST ABUTMENT AND 9-5/8" AT THE EAST ABUTMENT.

THE EASTBOUND PORTION OF THE EXISTING SUPERSTRUCTURE WILL BE RAISED BY VARIABLE AMOUNTS. THE WEST ABUTMENT BEAMS WILL BE RAISED AT AN APPROXIMATELY UNIFORM SLOPE, WITH BEAM 'E' BEING RAISED 2-5/8" AND BEAM 'N' BEING RAISED 6-5/8". THE EAST ABUTMENT BEAMS WILL ALSO BE ADJUSTED AT AN APPROXIMATELY UNIFORM SLOPE, WITH BEAM 'F' BEING RAISED 0", BEAM 'N' BEING RAISED 5-1/8", AND BEAM 'E' BEING LOWERED 1-3/4". THE OVERALL VERTICAL WARPAGE BETWEEN EAST AND WEST ABUTMENTS IS ABOUT 0.58", WHICH AMOUNTS TO A MAXIMUM DIFFERENTIAL MOVEMENT OF ABOUT 3/32" BETWEEN ADJACENT BEAMS.

THE EASTBOUND BEAMS WILL ALSO HAVE TO BE RAISED ABOUT 4" HIGHER THAN THEIR FINAL ELEVATIONS IN ORDER TO CLEAR THE EXTENDED ANCHOR RODS WITH THE REFURBISHED ROCKERS AND BOLSTERS.

DURING JACKING THE DIFFERENTIAL MOVEMENT BETWEEN ADJACENT BEAMS SHALL NOT EXCEED ONE-QUARTER INCH.

THE CONTRACTOR SHALL SUBMIT DRAWINGS AND A DESCRIPTION OF THE METHODS TO BE USED TO RAISE THE SUPERSTRUCTURE TO THE DIRECTOR AT LEAST FIFTEEN DAYS PRIOR TO COMMENCEMENT OF THIS OPERATION.

ITEM SPECIAL - FIELD PAINTING OF NEW STEEL, SYSTEM I ZEU: THIS ITEM SHALL CONSIST OF FURNISHING ALL NECESSARY LABOR, MATERIALS, AND EQUIPMENT TO CLEAN AND PAINT ALL NEW STEEL SURFACES AS HEREIN SPECIFIED WITH THE FOLLOWING COATINGS:

INORGANIC ZINC PRIME COAT (SHOP APPLIED)
EPOXY INTERMEDIATE COAT (FIELD APPLIED)
URETHANE FINISH COAT (FIELD APPLIED)

ALL OF THE REQUIREMENTS CONTAINED IN THE "FIELD PAINTING OF EXISTING STEEL, SYSTEM OZEU" PROPOSAL NOTE DATED MAY 10, 1988 SHALL APPLY, WITH THE FOLLOWING MODIFICATIONS:

MATERIALS

INORGANIC ZINC PRIME COAT IN ACCORDANCE WITH 708.17 SHALL BE SUBSTITUTED FOR ORGANIC ZINC PRIME COAT.

THE COLOR OF URETHANE FINISH COAT SHALL BE "DARK BROWN", FEDERAL SPECIFICATION NUMBER 595A *10080*. AN ACTUAL SAMPLE OF THE PAINT PROPOSED FOR USE SHALL BE SUBMITTED BY THE CONTRACTOR FOR APPROVAL. *THE INTERMEDIATE COAT COLOR SHALL BE PER FEDERAL STD. 595A 10219.*

PREPARATION

PRIOR TO APPLICATION OF THE PRIME COAT, STEEL SHALL BE PREPARED IN ACCORDANCE WITH 514.04.

ITEM SPECIAL - FIELD PAINTING OF EXISTING STEEL, SYSTEM OZEU: ALL OF THE REQUIREMENTS CONTAINED IN THE "FIELD PAINTING OF EXISTING STEEL, SYSTEM OZEU" PROPOSAL NOTE ~~DATED MAY 10, 1988~~ SHALL APPLY. *(THE INTERMEDIATE COAT COLOR SHALL BE PER FEDERAL STD. 595A 10219).*
THE COLOR OF URETHANE FINISH COAT SHALL BE "DARK BROWN", FEDERAL SPECIFICATION NUMBER 595A *10080*. AN ACTUAL SAMPLE OF THE PAINT PROPOSED FOR USE SHALL BE SUBMITTED BY THE CONTRACTOR FOR APPROVAL.

~~ITEM SPECIAL - PATCHING CONCRETE STRUCTURE: AT THE LOCATIONS WHERE LOOSE, DISINTEGRATED OR UNSOUND CONCRETE EXTENDS BEYOND THE LIMITS NOTED IN ITEM 511 - CLASS C CONCRETE (AS PER PLAN) THE CONTRACTOR SHALL REMOVE THE CONCRETE TO EXPOSE A SOUND CONCRETE SURFACE, PREPARE THE SURFACE AND PLACE NEW CLASS "C" CONCRETE. ALL OF THESE ITEMS OF WORK AND REPAIR SHALL BE AS DESCRIBED IN THE NOTE TITLED ITEM 511 - CLASS "C" CONCRETE (AS PER PLAN). PAYMENT FOR THIS WORK SHALL BE MEASURED ON A SQUARE FOOT BASIS AND SHALL INCLUDE ONLY THOSE AREAS WHERE THE DEPTH OF PATCHING EXCEEDS THE LIMITS NOTED IN ITEM 511 - CLASS "C" CONCRETE (AS PER PLAN) THE PAYMENT SHALL INCLUDE ALL NECESSARY LABOR, EQUIPMENT, MATERIALS AND INCIDENTALS NECESSARY TO PERFORM THE REQUIRED WORK. SINCE ALL QUANTITIES OF PATCHING SHOWN ON THE PLANS ARE ONLY ESTIMATES, ACTUAL PATCHING QUANTITIES WILL BE DETERMINED THROUGH FIELD INSPECTION AND SOUNDING.~~

SECTION OR DETAIL BALLOON LEGEND

JOHN DAVID JONES & ASSOC., INC. 4/23
2162 FRONT STREET
CUYAHOGA FALLS, OHIO 44221
ENGINEERS ARCHITECTS PLANNERS

GENERAL NOTES

BRIDGE No. SUM-76-1231
OVER ARLINGTON ST.

DESIGNED	DRAWN	TRACED	CHECKED	REVIEWED	DATE	REVISED
GFD	GFD	GFD	RCK	PAK	11/23/88	

GENERAL NOTES

F.H.W.A. REGION	STATE	PROJECT	
5	OHIO		

844A
1214

SUMMIT COUNTY
SUM-76-11.57

Item 511 Class C Concrete, Facing, As Per Plan
See note on sheet 906.

ITEM 513 - STRUCTURAL STEEL (A36) FOR REHABILITATION

THIS ITEM SHALL CONSIST OF FURNISHING THE NECESSARY LABOR, MATERIALS, AND EQUIPMENT FOR STIFFENER REPAIRS AS SHOWN IN THE CONTRACT DRAWINGS AT THE CROSS FRAME LOCATIONS, AS DIRECTED BY THE ENGINEER, AND FOR PATCHING OR REPLACEMENT OF ANY CORRODED STEEL SHAPES AS DIRECTED BY THE ENGINEER.

THE ESTIMATED NUMBER OF REPAIRS AT THE LOCATIONS IN THE PLANS IS APPROXIMATE ONLY AND IS USED TO ARRIVE AT A TOTAL QUANTITY OF STRUCTURAL STEEL FOR REPAIRS. THIS QUANTITY INCLUDES THE WEIGHT OF HIGH-STRENGTH BOLTS REQUIRED FOR REPAIRS AT THE LOCATIONS.

NO DEFINITE LOCATIONS OF STEEL SHAPES WITH SUFFICIENT SECTION LOSS TO WARRANT REMOVAL WERE DETERMINED IN A PRIOR BRIDGE INSPECTION. THESE LOCATIONS, IF ANY, SHALL BE DETERMINED BY THE ENGINEER AFTER DECK REMOVAL. AN ALLOWANCE OF 2000 LBS. HAS BEEN ADDED TO THE ESTIMATED QUANTITY FOR PATCHING OR REPLACEMENT OF CORRODED STEEL. ANY WELDING REQUIRED SHALL BE INCLUDED FOR PAYMENT WITH THIS ITEM.

MATERIALS

THE STRUCTURAL STEEL REQUIRED FOR REPAIR PURPOSES SHALL BE ASTM A36, UNLESS NOTED OTHERWISE. HIGH-STRENGTH BOLTS SHALL CONFORM TO ASTM 1325. FABRICATION DRAWINGS AND CERTIFICATION (MILL TEST, ETC.) WILL BE HANDLED AT THE PROJECT LEVEL BY THE ENGINEER.

CONSTRUCTION

THE CONTRACTOR SHALL SANDBLAST AND INSPECT THE EXISTING STRUCTURE TO DETERMINE THE EXACT NUMBER AND EXTENT OF REPAIRS REQUIRED. THE CONTRACTOR SHALL OBTAIN THE WRITTEN APPROVAL OF THE ENGINEER AS TO THE NUMBER OF REPAIRS AND EXTENT OF REPAIRS AT EACH INDIVIDUAL LOCATION BEFORE FABRICATION OF ANY STRUCTURAL STEEL OR COMMENCING ANY STEEL REPAIR WORK. IT IS THE CONTRACTOR'S RESPONSIBILITY TO DETERMINE THE EXACT LENGTHS OF STEEL SHAPES REQUIRED TO MAKE THE REPAIRS. HIGH STRENGTH BOLTS SHALL BE INSTALLED IN ACCORDANCE WITH ITEM 513 OF THE CMS. WELDING SHALL BE IN ACCORDANCE WITH AASHTO ARTICLE 1.7.21.

METHOD OF MEASUREMENT

THE QUANTITY WILL BE MEASURED AS THE ACTUAL WEIGHT IN POUNDS OF STRUCTURAL STEEL USED TO MAKE APPROVED REPAIRS. THE QUANTITY SO MEASURED SHALL INCLUDE ALL LABOR, MATERIALS, WELDING, EQUIPMENT, SHORING AND INCIDENTALS NECESSARY FOR SANDBLASTING, INSPECTION BY THE ENGINEER, REMOVAL AND REPLACEMENT OF THE CROSS FRAMES AND SATISFACTORILY PERFORMING THE REPAIRS IN ACCORDANCE WITH THE PLANS AND SPECIFICATIONS AND AS DIRECTED BY THE ENGINEER.

BASIS OF PAYMENT

PAYMENT WILL BE MADE AT THE CONTRACT UNIT PRICE BID PER POUND FOR "ITEM 513 - STRUCTURAL STEEL (A36) FROM REHABILITATION".

543271

JOHN DAVID JONES & ASSOC., INC.
2162 FRONT STREET
CUYAHOGA FALLS, OHIO 44221
ENGINEERS ARCHITECTS PLANNERS

4A/23

GENERAL NOTES

BRIDGE NO. SUM-76-12.31
OVER ARLINGTON ST.

DESIGNED	DRAWN	TRACED	CHECKED	REVIEWED	DATE	REVISED
GFD	GFD	—	RCK	PAK	11-88	

F.H.W.A. REG.	STATE	PROJECT	
5	OHIO		

845
12/4

SUMMIT COUNTY
SUM-76-11.57

NOTE 1: AREAS HATCHED THUS ▨ INDICATE THE APPROXIMATE LOCATION OF AREAS OF DISINTEGRATED CONCRETE TO BE REMOVED.

NOTE 2: REMOVE EXISTING ABUTMENT BACKWALL FROM BEAM SEAT CONSTRUCTION JOINT UPWARD (ITEM 202).

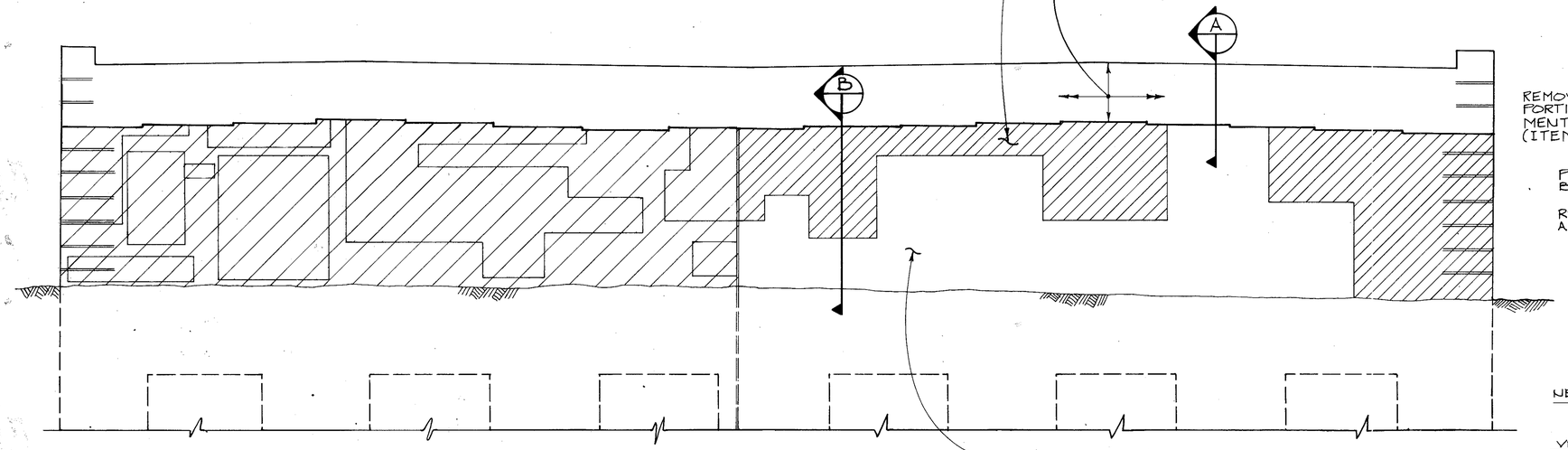

NOTE 3: THE ENTIRE AREA OF THE FRONT FACE OF THE ABUTMENT IS TO BE RESURFACED.

NOTE 4: ITEM SPECIAL: PATCHING CONCRETE STRUCTURE
FOR DESCRIPTION SEE SHEET 4/23
ESTIMATED REMOVAL AREAS:
EAST ABUTMENT = 1060 SQ. FT.
WEST ABUTMENT = 780 SQ. FT.

ELEVATION
EAST ABUTMENT

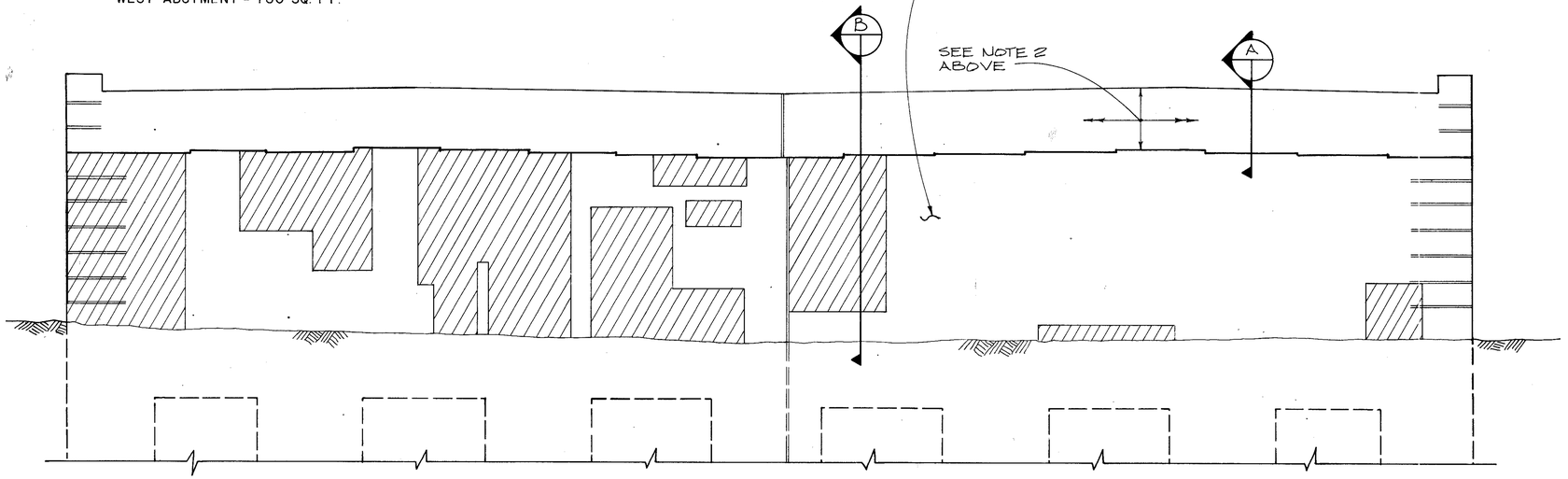

ELEVATION
WEST ABUTMENT

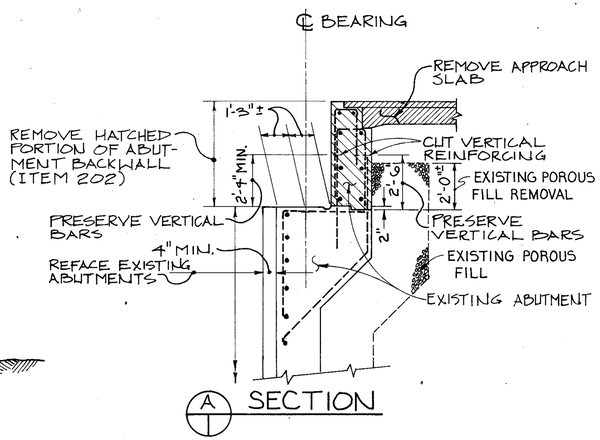

A SECTION

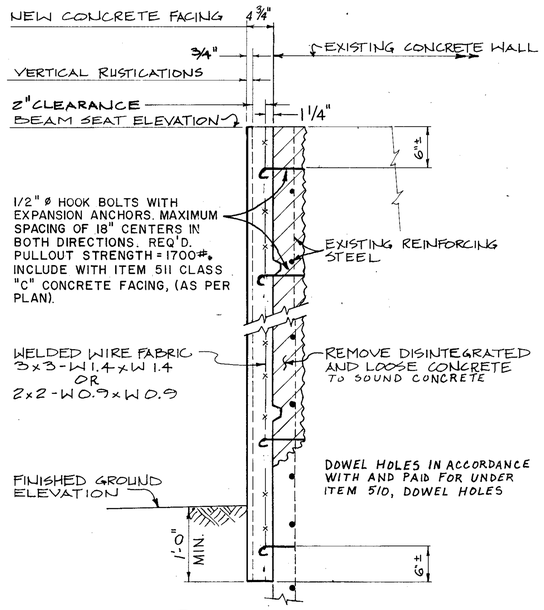

B SECTION

REFACING OF EXISTING ABUTMENTS

JOHN DAVID JONES & ASSOC., INC. 5/23
2162 FRONT STREET
CUYAHOGA FALLS, OHIO 44221
ENGINEERS ARCHITECTS PLANNERS

ABUTMENT REPAIRS AND DEMOLITION

BRIDGE No. SUM-76-1231
OVER ARLINGTON ST.

DESIGNED	DRAWN	TRACED	CHECKED	REVIEWED	DATE	REVISED
GD	RH	–	RCK	PAK	11/23/88	

C.H.W.A. REG.	STATE	PROJECT	
5	OHIO		

846
1214

SUMMIT COUNTY
SUM-76-11.57

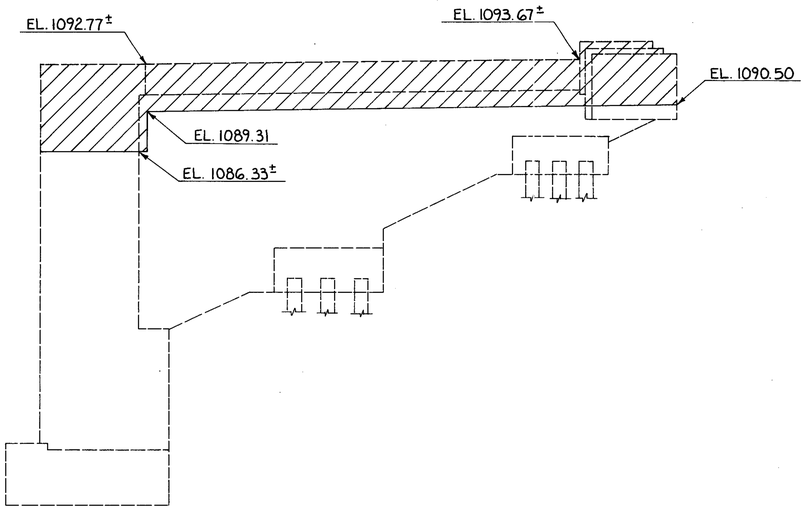

NORTHWEST WINGWALL

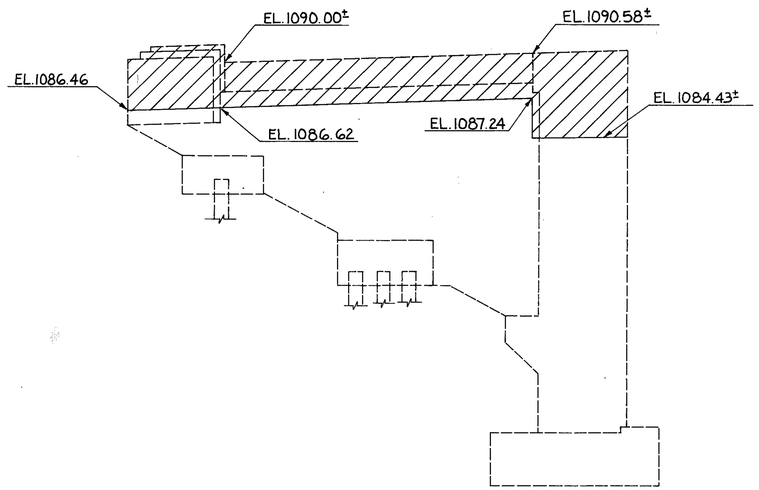

NORTHEAST WINGWALL

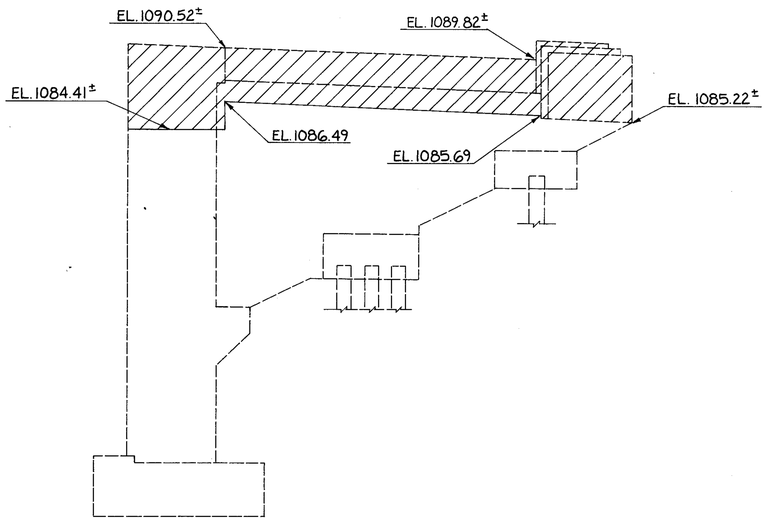

SOUTHEAST WINGWALL

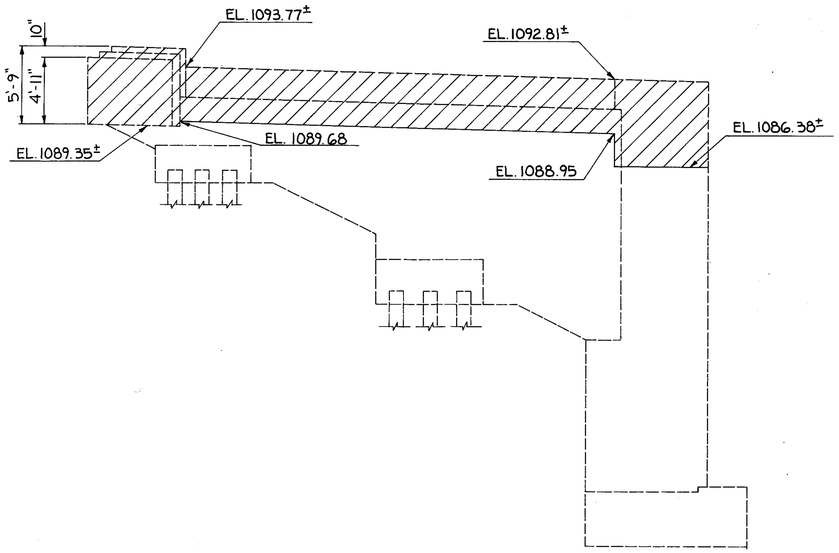

SOUTHWEST WINGWALL

NOTES:
PAYMENT FOR ALL EXCAVATION REQUIRED TO FACILITATE ABUTMENT AND WINGWALL REMOVAL SHALL BE INCLUDED WITH ITEM 202 - PORTIONS OF STRUCTURES REMOVED.

▨ DENOTES AREAS TO BE REMOVED.

JOHN DAVID JONES & ASSOC., INC. 6/23
2162 FRONT STREET
CUYAHOGA FALLS, OHIO 44221
ENGINEERS ARCHITECTS PLANNERS

WINGWALL DEMOLITION

BRIDGE No. SUM-76-12.31
OVER ARLINGTON ST.

DESIGNED	DRAWN	TRACED	CHECKED	REVIEWED	DATE	REVISED
G.F.D.	J.P.M.	—	R.C.K.	P.A.K.	11/23/88	

LAP SPLICES	
BAR SIZE	LENGTH
4	1'-4"
5	1'-8"
6	2'-0"
8	3'-3"
10	5'-3"
11	6'-5"

E.H.W.A. REG.	STATE	PROJECT	
5	OHIO		

847
12.14

SUMMIT COUNTY
SUM-76-11.97

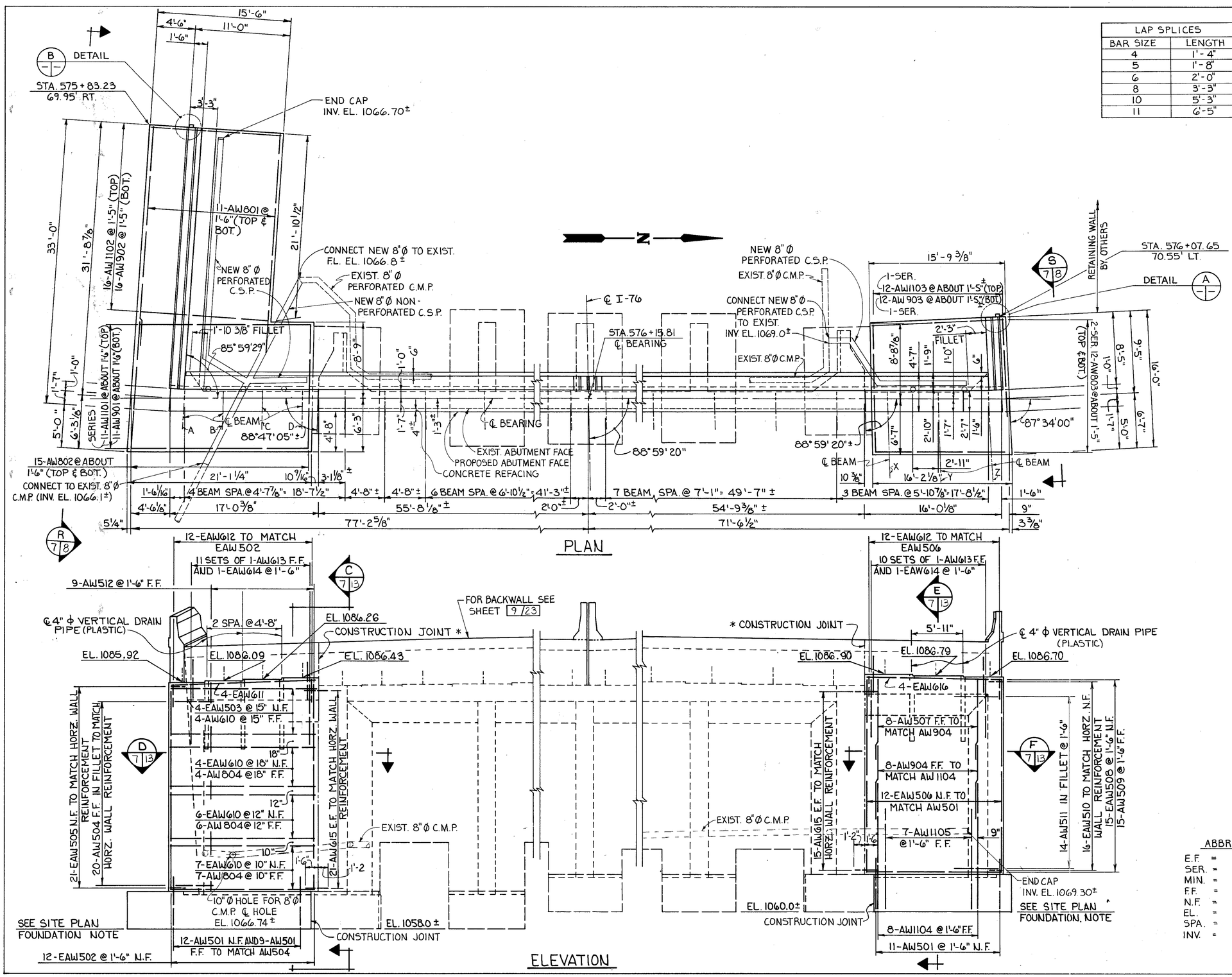

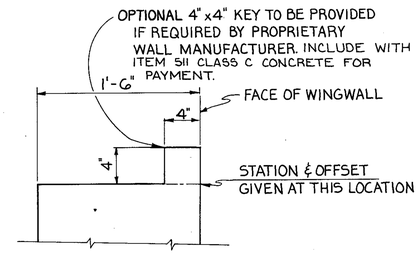

DETAIL (SHOWN) A 10/7

DETAIL (OPPOSITE HAND) B 10/7

NOTES:

FOR WINGWALL ELEVATIONS SEE SHEET 8/23

FOR SHIM PLATE DETAILS SEE SHEET 19/23

* CLEAN AND ROUGHEN EXISTING CONCRETE SURFACE AND DAMPEN BEFORE POURING ABUTTING CONCRETE (TYPICAL)

ABBREVIATIONS

E.F.	=	EACH FACE
SER.	=	SERIES
MIN.	=	MINIMUM
F.F.	=	FAR FACE
N.F.	=	NEAR FACE
EL.	=	ELEVATION
SPA.	=	SPACES
INV.	=	INVERT

JOHN DAVID JONES & ASSOC., INC. 7/23
2162 FRONT STREET
CUYAHOGA FALLS, OHIO 44221
ENGINEERS ARCHITECTS PLANNERS

WEST ABUTMENT MODIFICATION

BRIDGE No. SUM-76-12.31
OVER ARLINGTON ST.

DESIGNED	DRAWN	TRACED	CHECKED	REVIEWED	DATE	REVISED
GFD	RCK	DRK	HGS	PAK	11/23/88	

F.H.W.A. REG.	STATE	PROJECT	
5	OHIO		

848
1214

SUMMIT COUNTY
SUM-76-11.57

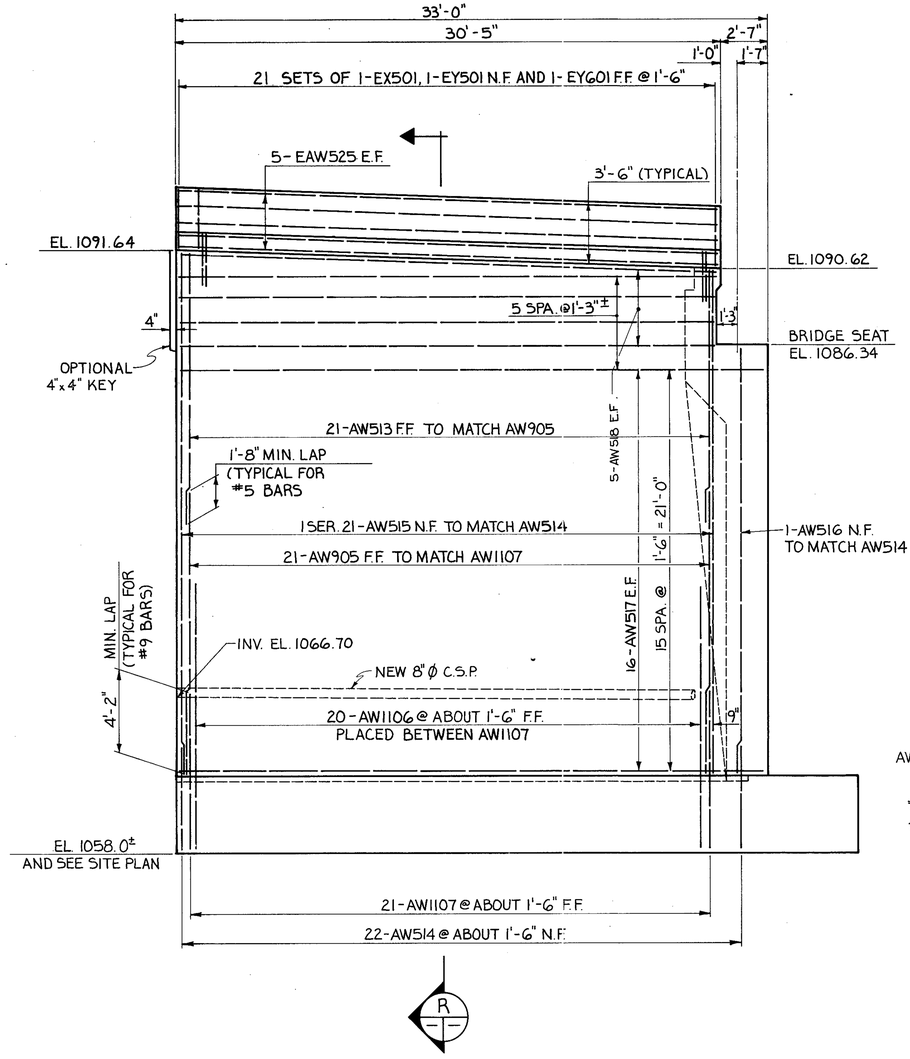

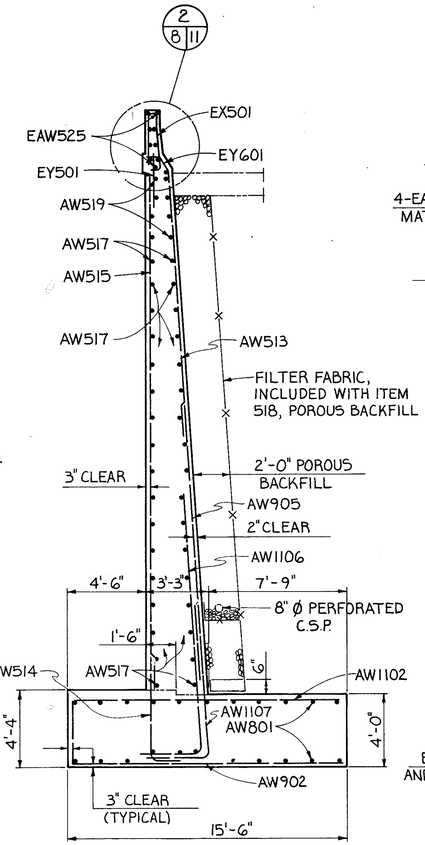

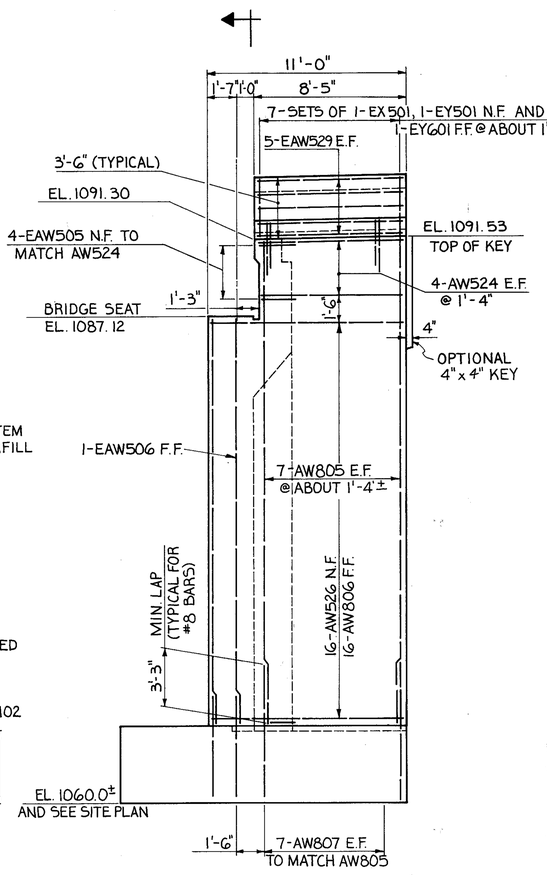

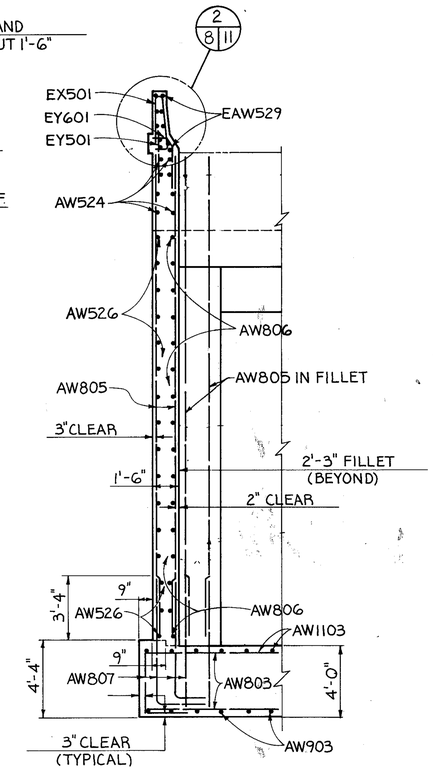

NOTE:
FOR WEST ABUTMENT SEE SHEET 7/23
FOR ABUTMENT SECTIONS SEE SHEET 13/23

ABBREVIATIONS

E.F.	=	EACH FACE
SER.	=	SERIES
MIN.	=	MINIMUM
F.F.	=	FAR FACE
N.F.	=	NEAR FACE
EL.	=	ELEVATION
SPA.	=	SPACES
INV.	=	INVERT

JOHN DAVID JONES & ASSOC., INC. 8/23
2182 FRONT STREET
CUYAHOGA FALLS, OHIO 44221
ENGINEERS ARCHITECTS PLANNERS

WEST ABUTMENT WINGWALL MODIFICATIONS

BRIDGE No. SUM-76-12.31
OVER ARLINGTON ST.

DESIGNED	DRAWN	TRACED	CHECKED	REVIEWED	DATE	REVISED
GFD	RCK	JPM	RCK	PAK	11/23/88	

F.H.W.A. REGION	STATE	PROJECT	
5	OHIO		

849
12/14

SUMMIT COUNTY
SUM-76-11.57

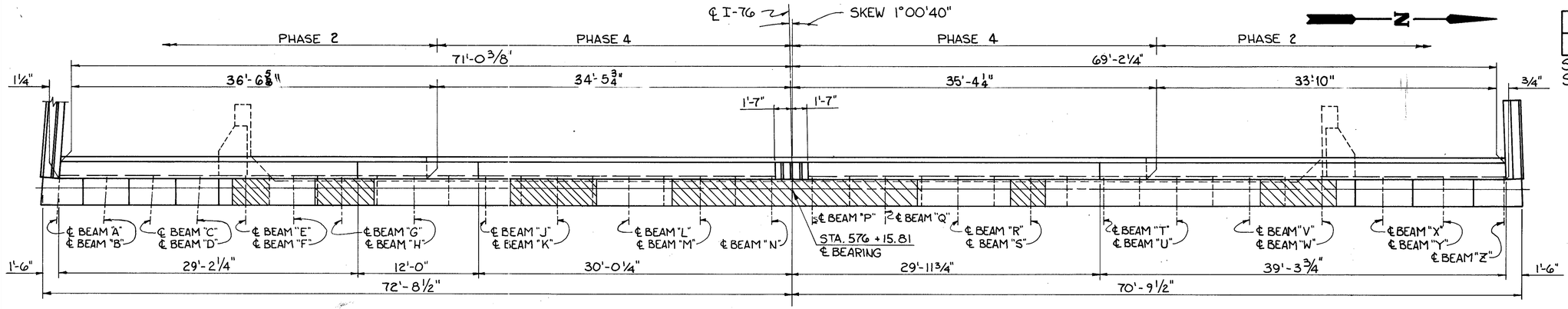

— APPROXIMATE LOCATION OF AREAS OF DISINTEGRATED CONCRETE TO BE REMOVED

PLAN

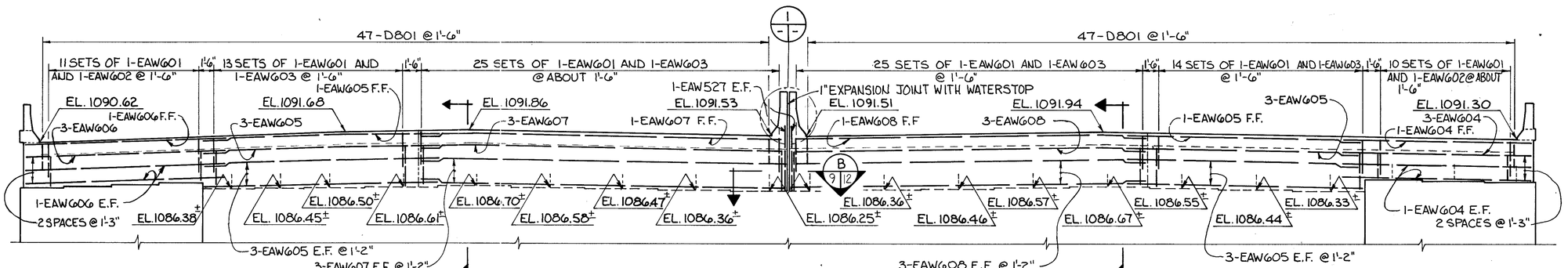

ELEVATION

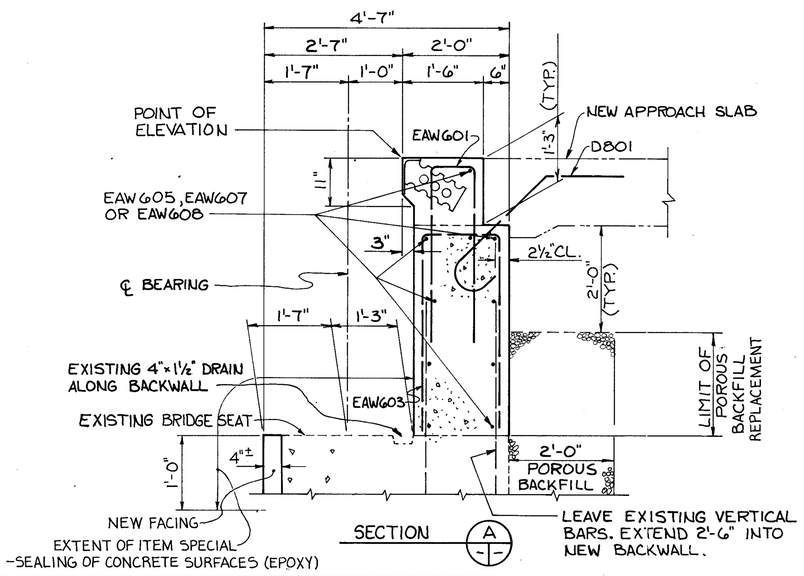

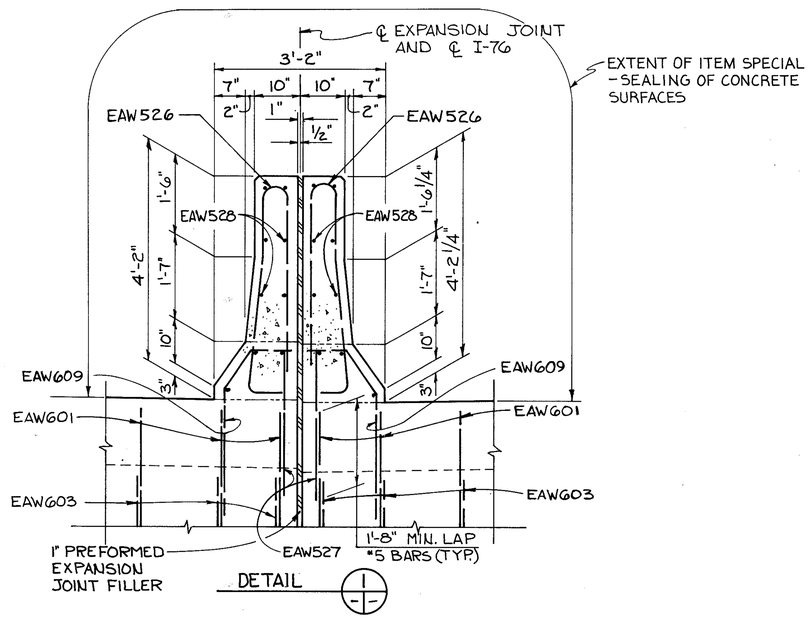

NOTE:

AN ESTIMATED QUANTITY OF 155 SQ. FT. OF ITEM 519 PATCHING CONCRETE STRUCTURES HAS BEEN PROVIDED FOR USE AS DIRECTED BY THE ENGINEER TO PATCH THE ABUTMENT BEAM SEATS. THE QUANTITIES AND LOCATIONS SHOWN ON THIS SHEET ARE APPROXIMATE AND INTENDED AS INFORMATION ONLY. AREAS TO BE REPAIRED WILL BE AS DETERMINED BY THE ENGINEER FOLLOWING FIELD INSPECTION AND SOUNDINGS.

JOHN DAVID JONES & ASSOC., INC. 9/23
2162 FRONT STREET
CUYAHOGA FALLS, OHIO 44221
ENGINEERS ARCHITECTS PLANNERS

ABUTMENT BACKWALL DETAILS WEST ABUTMENT

BRIDGE No. SUM-76-1231
OVER ARLINGTON STREET

DESIGNED	DRAWN	TRACED	CHECKED	REVIEWED	DATE	REVISED
RCK	RCK	DRK	JRS	PAK	11/23/88	

F.H.W.A. REG.	STATE	PROJECT	
5	OHIO		

850
1214

SUMMIT COUNTY
SUM-76-11.97

DETAIL B 10|7

STA. 577+16.50
(℄ I-76)
73.27' LT.

RETAINING WALL

1 SER 12-AE801 @ ABOUT 1'-5" (TOP AND BOT.)
NEW 8"Ø PERFORATED C.S.P.
12-AE1101 @ 1'-5"± (TOP)
12-AE1001 @ 1'-5"± (BOT.)
10-AE1102 @ ABOUT 1'-5" (TOP)
10-AE1002 @ ABOUT 1'-5" (BOT.)
4-AE802 @ 1'-6" (TOP AND BOT.)
NEW 8"Ø PERFORATED C.S.P.
CONNECT NEW 8" PIPE TO EXIST. 8"Ø C.M.P. ⊙
EXISTING ABUTMENT
EXIST. F.L. EL. 1064.0±
EXIST. 8"Ø C.M.P.
89°00'00"±
1'-11¾" FILLET
℄ I-76
STA. 576+90.81
℄ BEARING
EXIST. ABUTMENT FACE
PROPOSED ABUTMENT FACE
87°33'24"
88°59'20"
℄ BEARING
4"± (REFACING)
℄ BEAM
Z
21'-6¾" Y
X
3'-9⅞"
8"±
2'-0"±
2'-0"±
2¾"
2'-11¾"
1'-6"
3 BEAM SPACES @ 6'-6⅝" = 19'-6¹⁵⁄₁₆"
7 EXISTING BEAM SPACES @ 7'-1" = 49'-7"±
8 EXISTING BEAM SPACES @ 6'-10½" = 55'-0"±
4'-6"
17'-11⅛"
54'-8⅞"±
61'-0 9/16"
72'-8"
77'-2"
86'-10⅛"
L 10|11

⊙WITH 707.01 COUPLING BANDS.

⊛REPLACE EXIST. C.M.P. AS REQUIRED W/C.S.P.

DETAIL A 10|7

15'-0"
10'-6"
4'-6"
1'-6"
3'-0"
STA. 577+09.50
85.54' RT.
RETAINING WALL
1 SER. 11-AE804 @ ABOUT 1'-5" (TOP AND BOT.)
NEW 8"Ø PERFORATED C.S.P. WITH END CAP
CONNECT NEW 8"Ø PIPE TO EXIST. 8"Ø C.M.P. (F.L. EL. 1062.73±) ⊙
EXIST. 8"Ø NON-PERFORATED C.S.P. EXIST. F.L. EL. 1063.0±
7-AE803 @ 1'-6" (TOP AND BOT.)
NEW 8"Ø PERFORATED C.S.P. WITH END CAP
13'-0¾"
2 SPACES @ 1'-3"± (TOP AND BOT.)
6-AE901 @ 1'-4"± (TOP AND BOT.)
2-AE901 FANNED (TOP AND BOT.)
FILLET 1'-2⅛"
85°02'17"
81°48'48"
2'-11"
24'-8⅜"
2½"
10¾"
1'-6¼"
4'-6½"
21'-3"
℄ BEAM
D C B A
1 SER. OF 11-AE1003 @ ABOUT 1'-6" (TOP)
1 SER. OF 11-AE902 @ ABOUT 1'-6" (BOT.)
M 10|11

PLAN

⊗TO EXISTING STREET M.H.

* CLEAN AND ROUGHEN EXIST CONCRETE SURFACE AND DAMPEN BEFORE POURING ABUTTING CONCRETE (TYPICAL).

13-EAE521 @ ABOUT 18" N.F.
11-AE519 @ ABOUT 18" F.F.
13-EAE621 TO MATCH AE519 N.F.
11 SETS OF 1-AE619 F.F. AND 1-EAE615 @ 1'-6"
13-EAE618 TO MATCH EAE521 N.F.
℄ 4"Ø PLASTIC DRAIN
ELEV. 1084.67
ELEV. 1084.78
ELEV. 1084.89
3-EAE617
6-EAE515 @ 17" N.F.
6-AE617 @ 17" F.F.
18"
4-EAE617 @ 18" N.F.
4-EAE805 @ 18" F.F.
12"
6-EAE617 @ 12" N.F.
6-EAE805 @ 12" F.F.
10"
8-EAE617 @ 10" N.F.
8-EAE805 @ 10" F.F.
25-EAE522 TO MATCH HORIZ. WALL REINFORCEMENT (N.F.)
23-AE514 IN FILLET TO MATCH HORIZ. WALL REINFORCEMENT (F.F.)
* CONSTRUCTION JOINT
25-AE612 E.F. TO MATCH HORIZ. WALL REINFORCEMENT
CONNECT NEW 8" PIPE TO EXIST. ⊙
EXIST. 8"Ø C.M.P.
NEW 8"Ø PERFORATED C.S.P.
EXISTING ABUTMENT
SEE SITE PLAN FOUNDATION NOTE
**ELEV. 1053.5±
12-AE501 N.F. AND 10-AE501 F.F. TO MATCH AE519 AND EAE521
G 10|13

ELEV. 1083.81
ELEV. 1084.03
ELEV. 1083.59
ELEV. 1083.38
15-EAE520 @ ABOUT 18" N.F.
13-AE510 @ ABOUT 18" F.F.
15-EAE614 TO MATCH EAE520 N.F.
14-AE613 @ 1'-6" F.F.
1 SER. 14-EAE616 TO MATCH AE613
2-4"Ø PLASTIC DRAIN SPACES @ 5'-11"
3-EAE611
5-EAE511 @ 15" N.F.
5-AE611 @ 15" F.F.
18"
4-EAE611 @ 18" N.F.
4-AE806 @ 18" F.F.
12"
6-EAE611 @ 12" N.F.
6-AE806 @ 12" F.F.
10"
7-EAE611 @ 10" N.F.
7-AE806 @ 10" F.F.
22-AE612 E.F. TO MATCH HORIZ. WALL REINFORCEMENT
* CONSTRUCTION JOINT
22-EAE513 TO MATCH HORIZ. WALL REINFORCEMENT (N.F.)
21-AE512 IN FILLET TO MATCH HORIZ. WALL REINFORCEMENT (F.F.)
EXIST. 8"Ø C.M.P.
10"Ø HOLE FOR 8"Ø C.S.P.
℄ HOLE EL. 1063.12±
**ELEV. 1055.5±
SEE SITE PLAN FOUNDATION NOTE
14-AE501 N.F. AND 12-AE501 F.F. TO MATCH EAE520 & AE510
H 10|13
K 10|13
J 10|13

ELEVATION

** DETAILS BASED ON THESE DIMENSIONS

JOHN DAVID JONES & ASSOC., INC. 10/23
2162 FRONT STREET
CUYAHOGA FALLS, OHIO 44221
ENGINEERS ARCHITECTS PLANNERS

EAST ABUTMENT MODIFICATION

BRIDGE No. SUM-76-12.31
OVER ARLINGTON ST.

DESIGNED	DRAWN	TRACED	CHECKED	REVIEWED	DATE	REVISED
GFD	JPM	–	RCK	PAK	11/23/88	

FHWA REG	STATE	PROJECT	
5	OHIO		

851
12.14

SUMMIT COUNTY
SUM-76-11.57

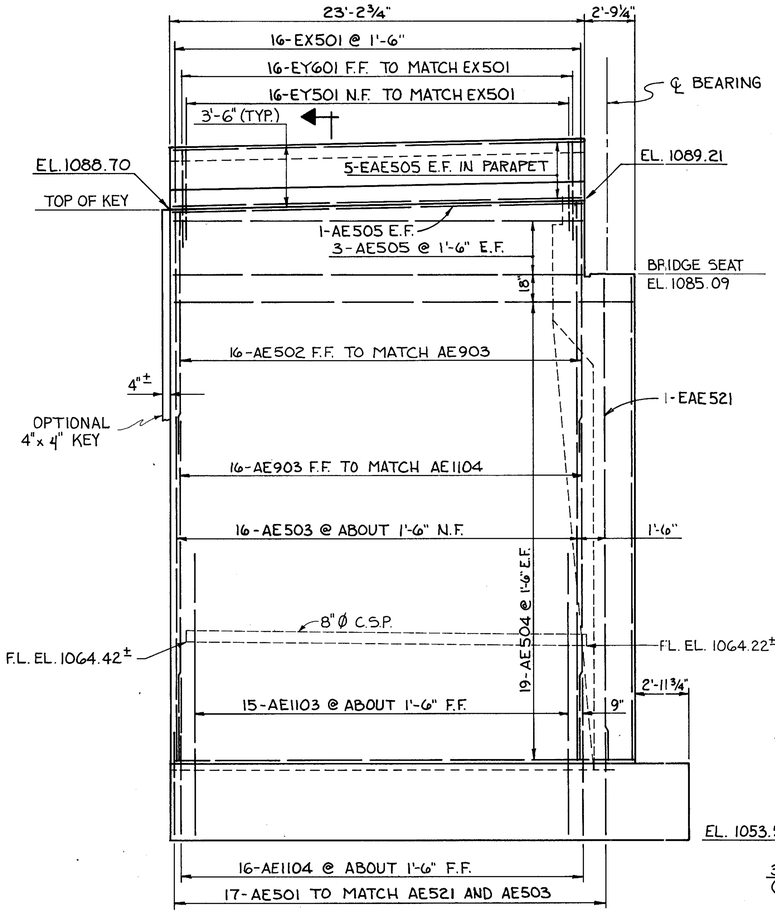

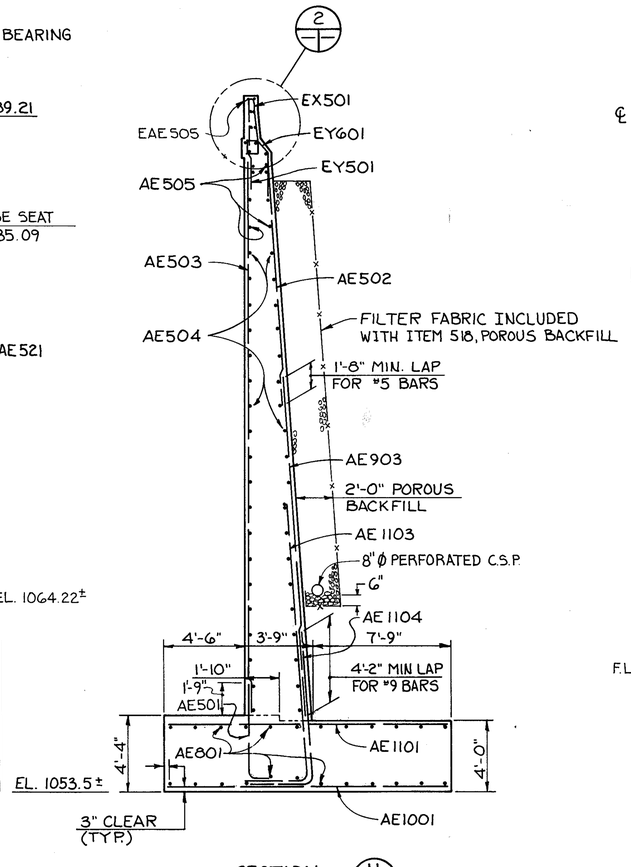

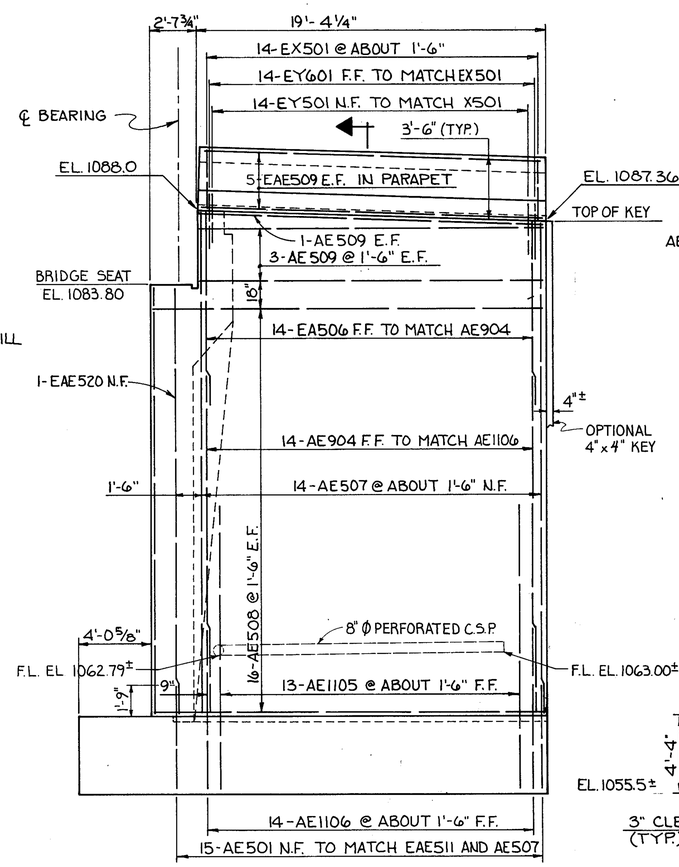

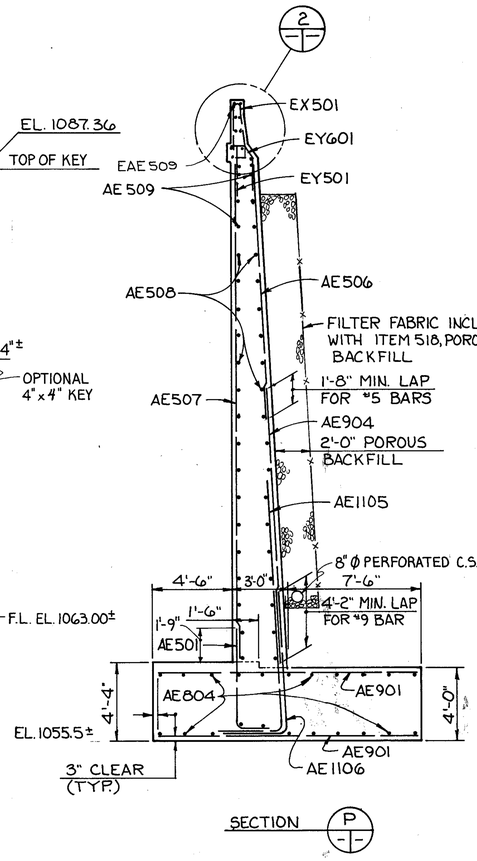

NOTE:
FOR EAST ABUTMENT SEE SHEET 10/23
FOR ABUTMENT SECTIONS SEE SHEET 13/23

JOHN DAVID JONES & ASSOC., INC. 11/23
2162 FRONT STREET
CUYAHOGA FALLS, OHIO 44221
ENGINEERS ARCHITECTS PLANNERS

EAST ABUTMENT WINGWALL MODIFICATIONS

BRIDGE No. SUM-76-12.31
OVER ARLINGTON ST.

DESIGNED	DRAWN	TRACED	CHECKED	REVIEWED	DATE	REVISED
GFD	RCK	DRK	JRS	PAK	11/23/88	

F.H.W.A. REG.	STATE	PROJECT	
5	OHIO		

852
12.14

SUMMIT COUNTY
SUM-76-11.57

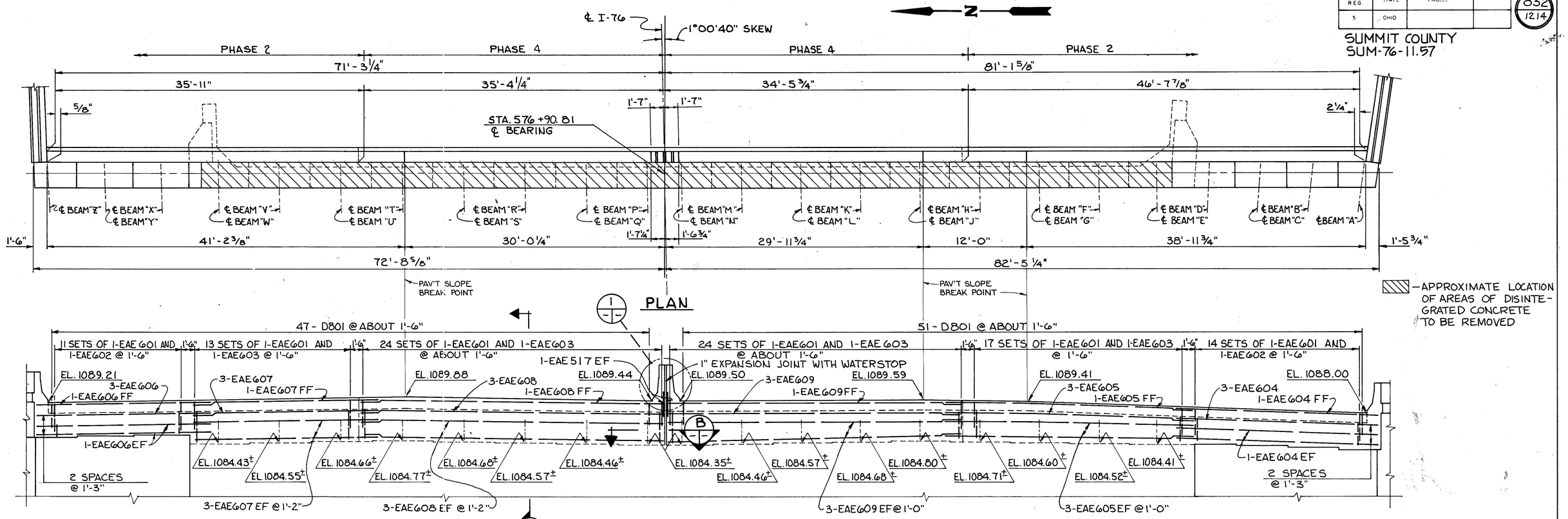

▨ — APPROXIMATE LOCATION OF AREAS OF DISINTEGRATED CONCRETE TO BE REMOVED

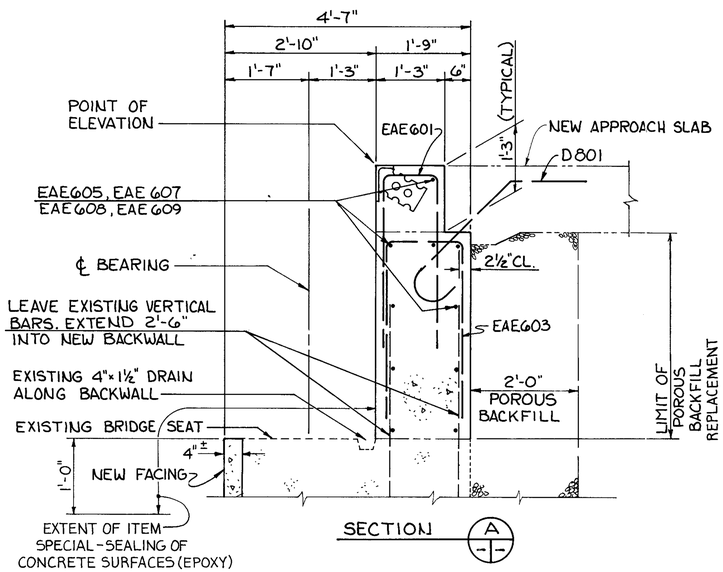

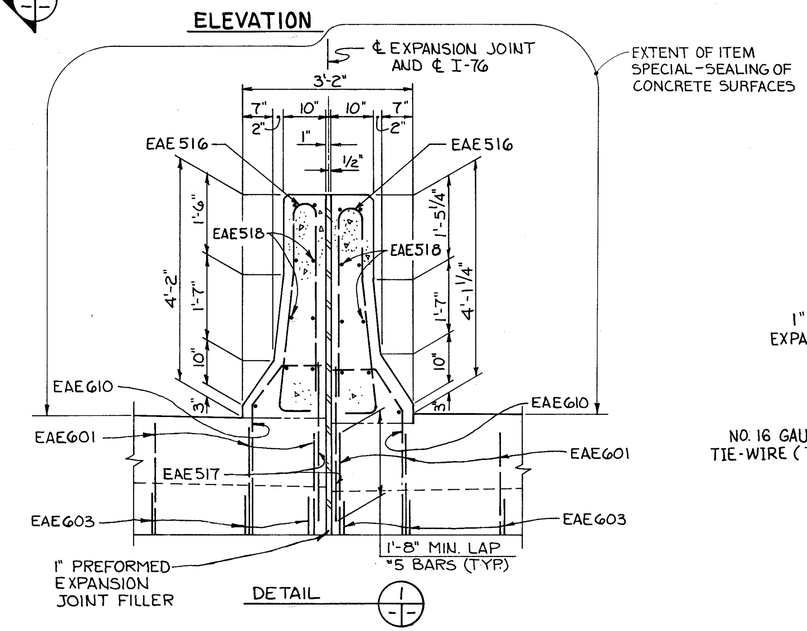

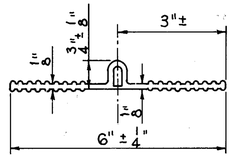

WATER STOP DETAIL

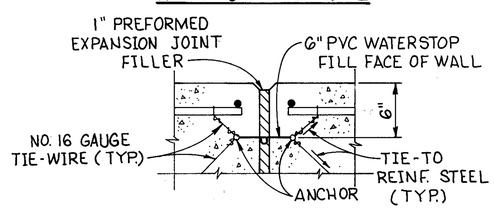

SECTION B 9|12

NOTE:

AN ESTIMATED QUANTITY OF 290 SQ. FT. (ENTIRE BEAM SEAT) OF ITEM 519 PATCHING CONCRETE STRUCTURES HAS BEEN PROVIDED FOR USE AS DIRECTED BY THE ENGINEER TO PATCH THE ABUTMENT BEAM SEATS. THE QUANTITIES AND LOCATIONS SHOWN ON THIS SHEET ARE APPROXIMATE AND INTENDED AS INFORMATION ONLY. AREAS TO BE REPAIRED WILL BE AS DETERMINED BY THE ENGINEER FOLLOWING FIELD INSPECTION AND SOUNDINGS.

JOHN DAVID JONES & ASSOC., INC. 12/23
2162 FRONT STREET
CUYAHOGA FALLS, OHIO 44221
ENGINEERS ARCHITECTS PLANNERS

ABUTMENT BACKWALL DETAILS EAST ABUTMENT

BRIDGE No. SUM-76-12.31
OVER ARLINGTON ST.

DESIGNED	DRAWN	TRACED	CHECKED	REVIEWED	DATE	REVISED
RCK	RCK	DRK	JRS	PAK	11/23/88	

F.H.W.A. REG.	STATE	PROJECT	
5	OHIO		

853
1214

SUMMIT COUNTY
SUM-76-11.97

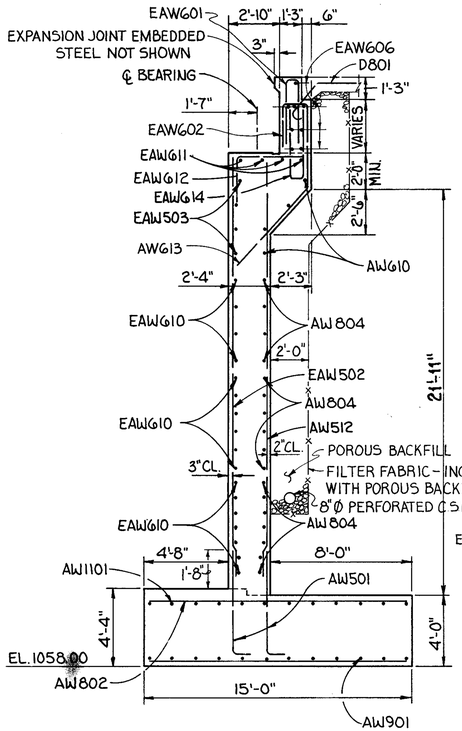

C 7|13 SECTION

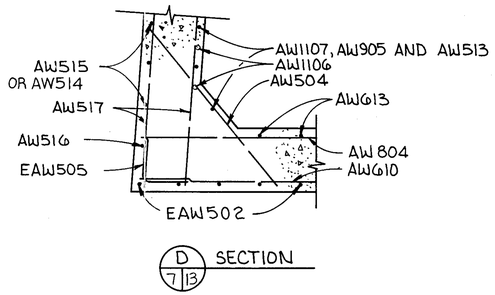

D 7|13 SECTION

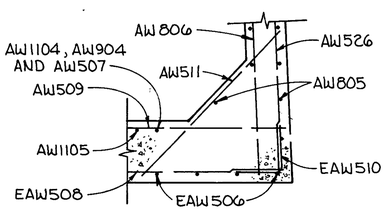

F 7|13 SECTION

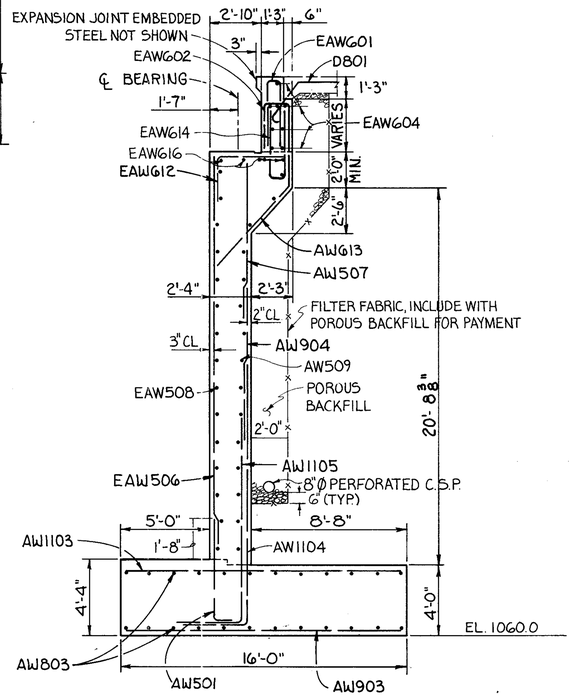

E 7|13 SECTION

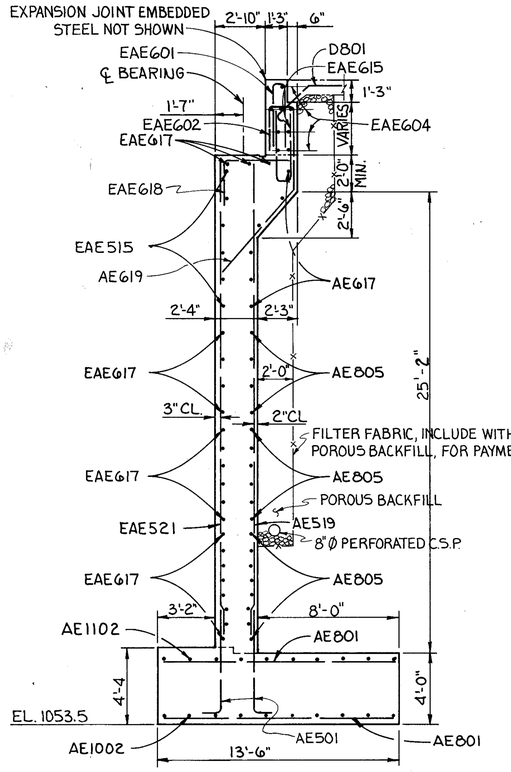

G 10|13 SECTION

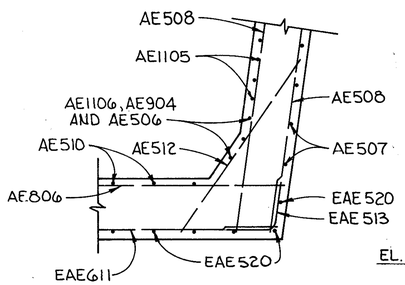

K 10|13 SECTION

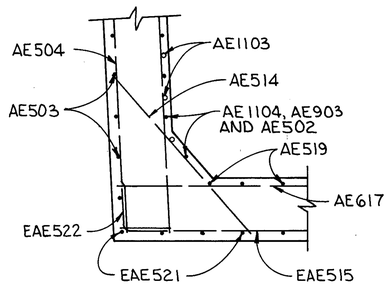

H 10|13 SECTION

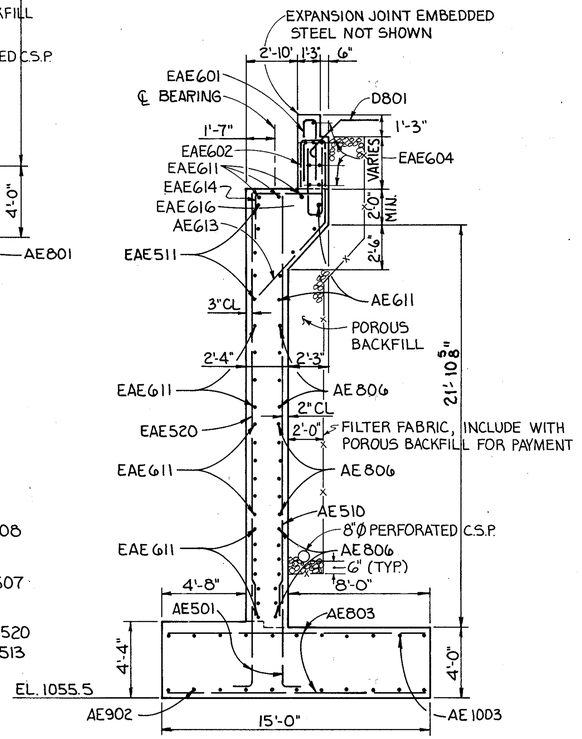

J 10|13 SECTION

NOTES:
FOR PARAPET REINFORCING, SEE SHEETS 9|23 & 12|23, ABUTMENT BACKWALL DETAILS

JOHN DAVID JONES & ASSOC., INC. 13|23
2162 FRONT STREET
CUYAHOGA FALLS, OHIO 44221
ENGINEERS ARCHITECTS PLANNERS

SECTIONS THROUGH ABUTMENT EXTENSIONS

BRIDGE No. SUM-76-12.31
OVER ARLINGTON ST.

DESIGNED	DRAWN	TRACED	CHECKED	REVIEWED	DATE	REVISED
GFD	GFD	DRK	RCK	PAK	11/23/88	

F.H.W.A. REGION	STATE	PROJECT	
5	OHIO		

854
12/4

SUMMIT COUNTY
SUM-76-11.57

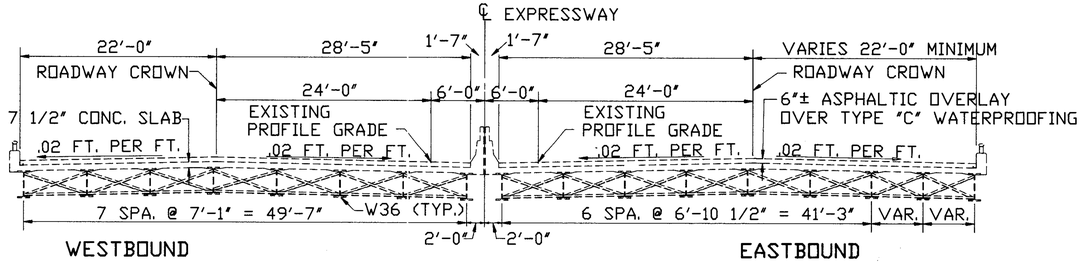

EXISTING TRANSVERSE SECTION

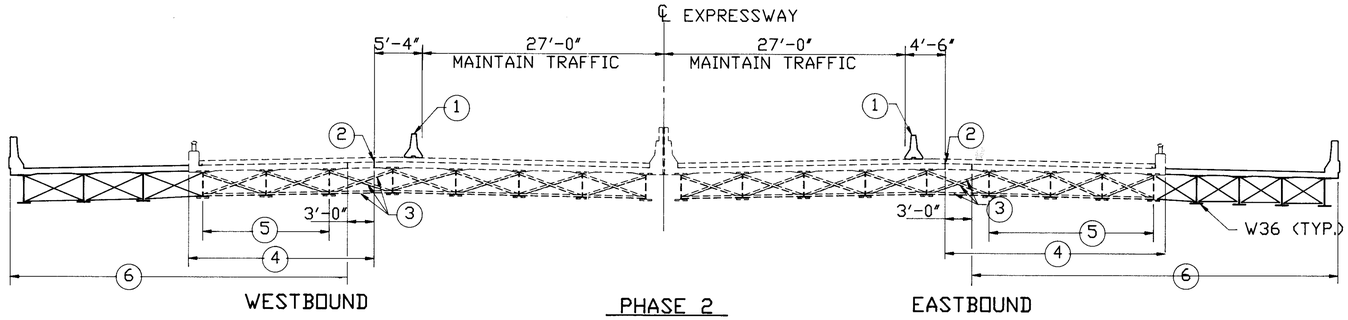

PHASE 2

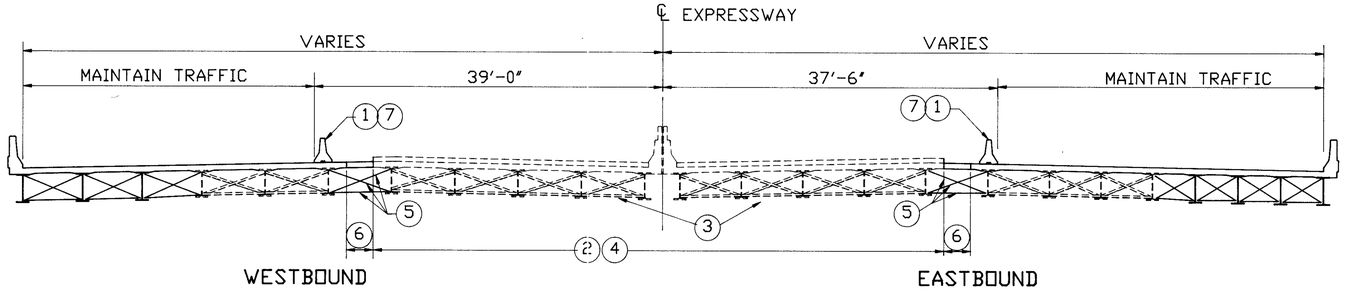

PHASE 4

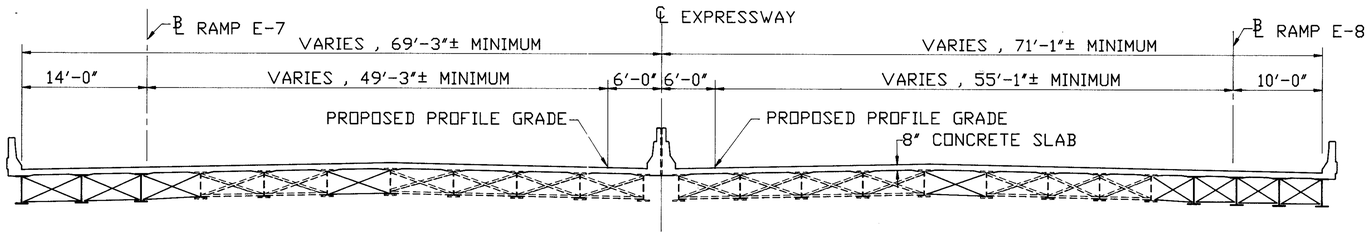

PROPOSED TRANSVERSE SECTION

ITEM 622, TEMPORARY CONCRETE BARRIER, MODIFIED

1. BRIDGE DECK SURFACE PREPARATION
   A. THE BRIDGE DECK SURFACE AREA ON WHICH THE PRECAST CONCRETE BARRIERS WILL REST SHALL BE CLEANED OF ALL LOOSE SAND, GRAVEL, DIRT AND DEBRIS.
   B. ANY IRREGULARITIES IN THE BRIDGE DECK AREA, UNLESS JUDGED BY THE ENGINEER TO BE INCONSEQUENTIAL, SHALL BE LEVELED WITH GROUT AND/OR ASPHALT.
   C. ASPHALT ROLL ROOFING SHALL BE PLACED ON THOSE BRIDGE DECK AREAS, AS JUDGED BY THE ENGINEER, TO HAVE A SURFACE ROUGHNESS WHICH WOULD INHIBIT FRICTION CONTACT BETWEEN BARRIER SEGMENTS AND DECK.

2. FOR CONCRETE BARRIER DETAILS, NOTES AND ANCHORAGE, SEE MAINTENANCE OF TRAFFIC PLANS.

3. PAYMENT
   PAYMENT FOR ITEM 622 IS CARRIED IN THE ROADWAY QUANTITIES.

PHASE 2 SUGGESTED SEQUENCE

(1) INSTALL TEMPORARY BARRIER AND MAINTAIN TRAFFIC

(2) CUT CONCRETE DECK , FULL DEPTH AND FULL LENGTH OF DECK.

(3) REMOVE CROSSFRAMES SHOWN.*

(4) REMOVE PORTION OF DECK TO LIMITS SHOWN.

(5) JACK REMAINING PORTIONS OF EXISTING SUPERSTRUCTURE TO PROPOSED VERTICAL POSITION.

(6) CONSTRUCT PROPOSED WIDENED DECK TO LIMITS SHOWN , INCLUDING BEAMS , CROSSFRAMES , CONCRETE DECK AND 42" PARAPETS.

* PAYMENT IS INCLUDED UNDER ITEM 202 (CROSS FRAMES AND INTERMEDIATE CROSS FRAMES)

PHASE 4 SUGGESTED SEQUENCE

(1) MOVE TEMPORARY BARRIERS AND MAINTAIN TRAFFIC.

(2) REMOVE REMAINDER OF DECK.

(3) JACK REMAINING PORTIONS OF EXISTING SUPERSTRUCTURE TO PROPOSED VERTICAL POSITION AND REPLACE THE TWO EXISTING BEARINGS SHOWN ON SHEET 18/23

(4) CONSTRUCT DECK TO LIMITS SHOWN , INCLUDING CONCRETE DECK AND 50" MEDIAN PARAPETS.

(5) INSTALL CROSSFRAMES.*

(6) CONSTRUCT DECK CLOSURE STRIPS.

(7) REMOVE TEMPORARY BARRIERS.

* PAYMENT IS INCLUDED UNDER ITEM 513 - REPLACEMENT STEEL (THIS INCLUDES BOTH END CROSS FRAMES AND INTERMEDIATE CROSS FRAMES).

NOTE:
PAYMENT FOR REMOVAL AND REPLACEMENT OF THE TWO EXISTING BEARINGS (1-F100 & R100) SHOWN ON SHEET 18/23 IS INCLUDED UNDER ITEM 516 (BEARING DEVICES).

JOHN DAVID JONES & ASSOC., INC. 14/23
2162 FRONT STREET
CUYAHOGA FALLS, OHIO 44221
ENGINEERS ARCHITECTS PLANNERS

TRANSVERSE SECTIONS AND MAINTENANCE OF TRAFFIC

BRIDGE No. SUM-76-1231
OVER ARLINGTON STREET

DESIGNED	DRAWN	TRACED	CHECKED	REVIEWED	DATE	REVISED
GD	RWM	-	RCK	PAK	11/23/88	

FED. AID PROJ. REG.	STATE	PROJECT	
5	OHIO		

855
1214

SUMMIT COUNTY
SUM-76-11.97

LAP SPLICES	
BAR SIZE	LENGTH
4	1'-4"
5	1'-8"
6	2'-0"

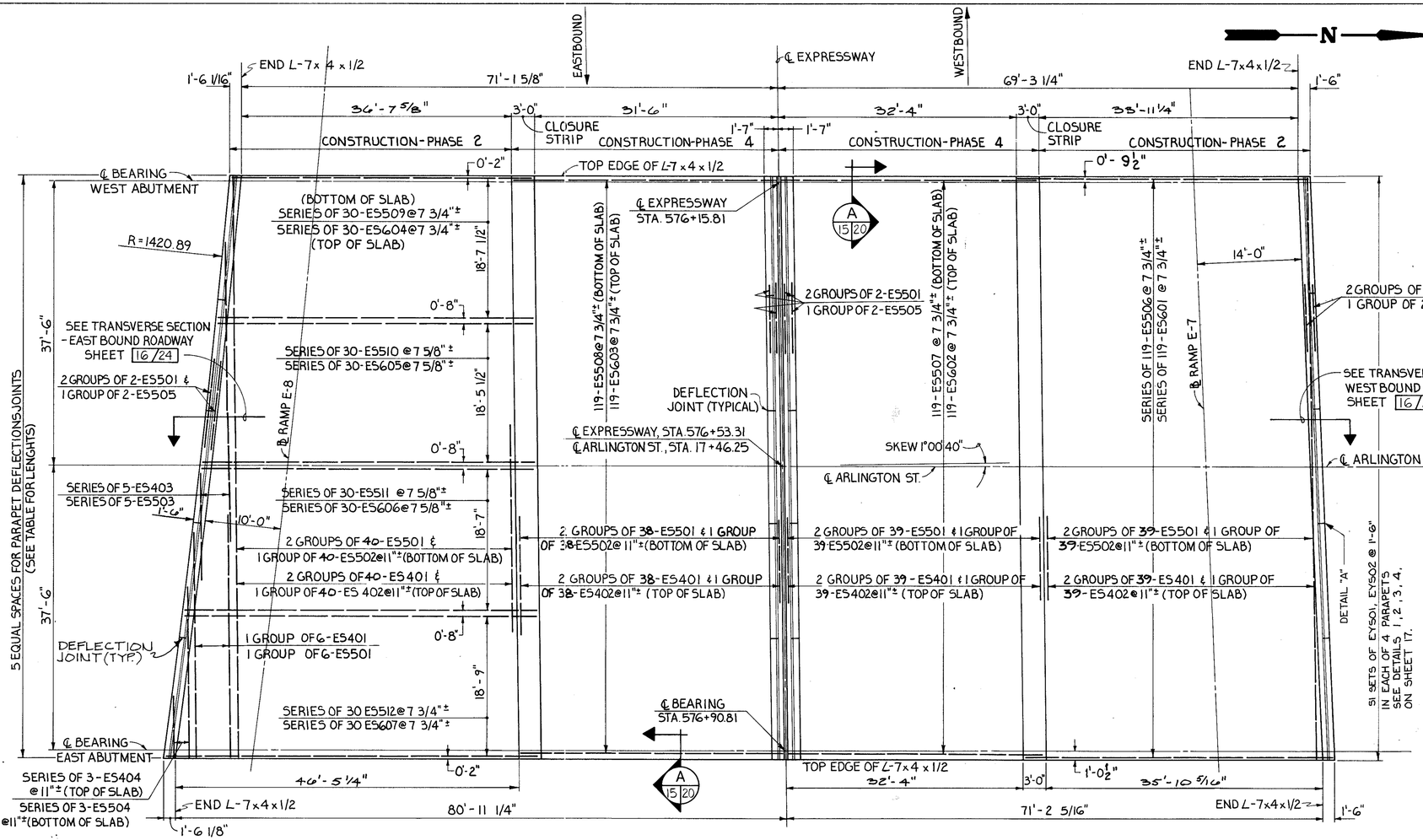

DECK PLAN

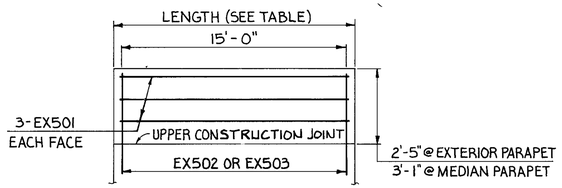

TYPICAL PARAPET PANEL

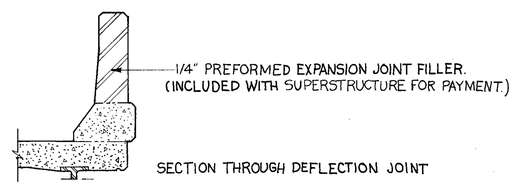

DETAIL "A" (TYPICAL)

PARAPET DATA		
PANELS		
NUMBER	LENGTH	LOCATION
10	15'-4 3/16"	MEDIAN
5	15'-4 5/16"	NORTH PARAPET
5	15'-5 1/4"	SOUTH PARAPET

DEFLECTION JOINT NOTES:

1. PREFORMED EXPANSION JOINT FILLER IN THE PARAPET DEFLECTION JOINTS MAY BE EITHER 1/4" GRAY SPONGE RUBBER OR 1/4" GRAY CELLULAR POLYVINYL CHLORIDE (PVC) SPONGE. FILLER SHALL CONFORM TO AASHTO M-153, TYPE I, EXCEPT DENSITY OF PVC SPONGE SHALL NOT BE LESS THAN 20 LBS. PER CU. FT..
2. CONCRETE PARAPETS ABOVE UPPER CONSTRUCTION JOINT SHALL BE PLACED IN ALTERNATE SECTIONS BY THE USE OF BULKHEADS. CLOSING SECTIONS SHALL BE PLACED AFTER REMOVAL OF BULKHEADS AND AFTER PLACEMENT OF EXPANSION JOINT FILLER. EXPOSED EDGES OF THE FILLER SHALL BE FLUSH WITH THE SURFACE OF CONCRETE AND SHALL BE FREE OF MORTAR.

JOHN DAVID JONES & ASSOC., INC. 15/23
2162 FRONT STREET
CUYAHOGA FALLS, OHIO 44221
ENGINEERS ARCHITECTS PLANNERS

SLAB PLAN

BRIDGE No. SUM-76-12.31
OVER ARLINGTON ST.

DESIGNED	DRAWN	TRACED	CHECKED	REVIEWED	DATE	REVISED
G.D.	J.P.M.	-	RCK	P.A.K.	11/23/88	

F.H.W.A. REGION	STATE	PROJECT	
5	OHIO		

856
1214

SUMMIT COUNTY
SUM-76-11.57

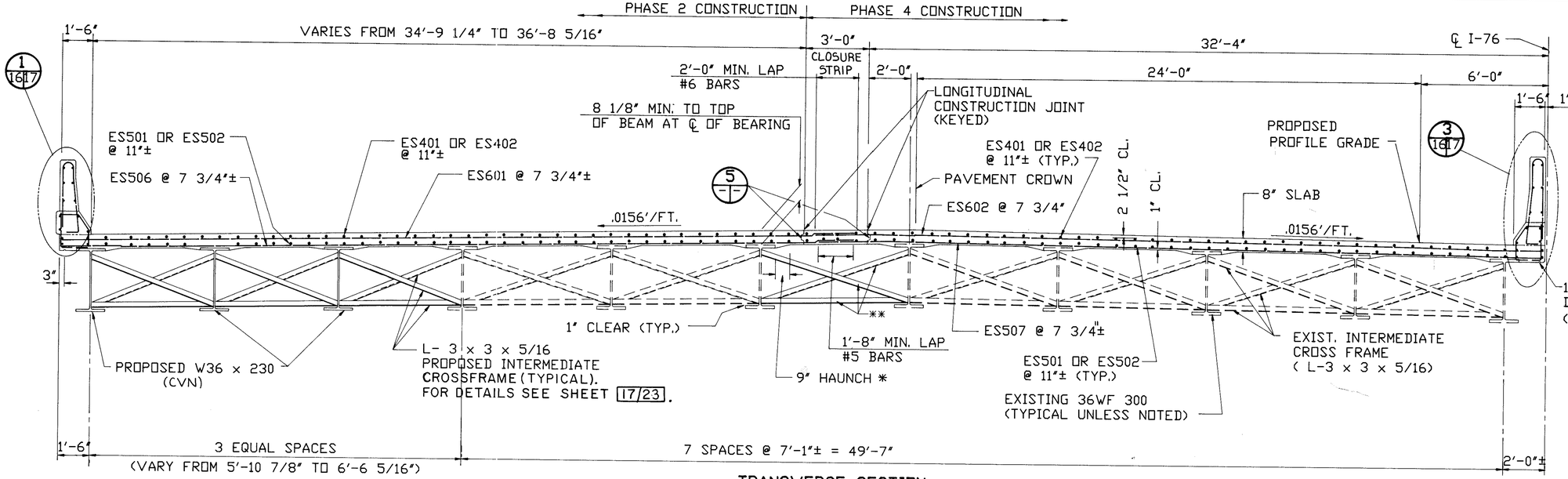

KEYED LONGITUDINAL CONSTRUCTION JOINT
2 3/4" X 1 1/2"

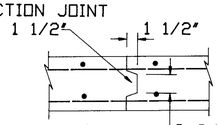

5 DETAIL

FOR SLAB PLAN SEE SHEET 15/23

FOR STRUCTURAL STEEL FRAMING PLAN AND DETAILS , SEE SHEETS 18/23 AND 19/23

TRANSVERSE SECTION
WESTBOUND ROADWAY - LOOKING EAST

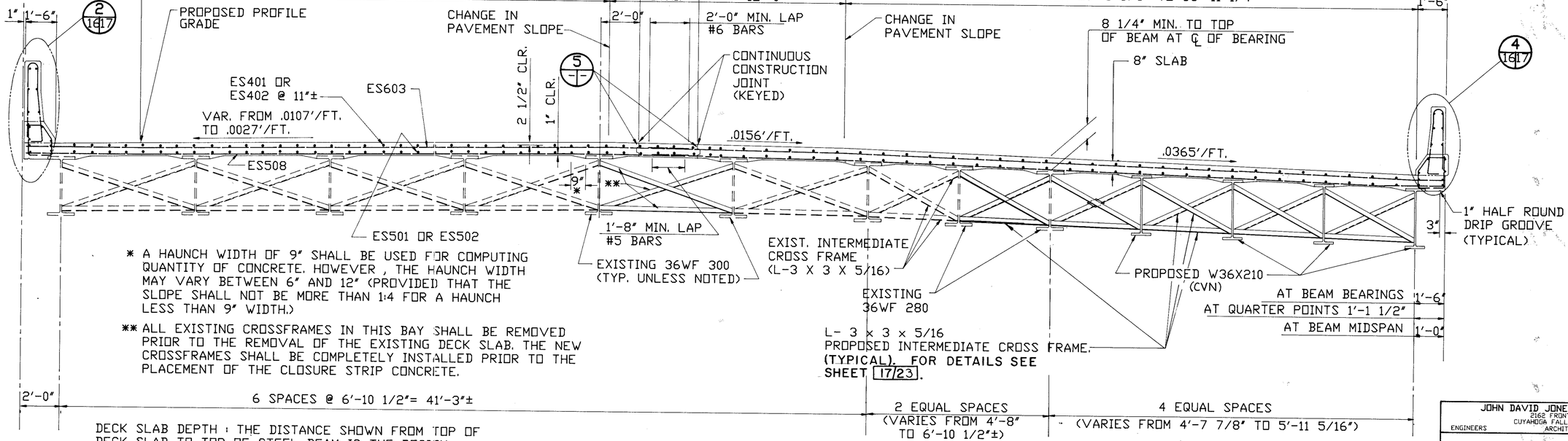

* A HAUNCH WIDTH OF 9" SHALL BE USED FOR COMPUTING QUANTITY OF CONCRETE. HOWEVER , THE HAUNCH WIDTH MAY VARY BETWEEN 6" AND 12" (PROVIDED THAT THE SLOPE SHALL NOT BE MORE THAN 1:4 FOR A HAUNCH LESS THAN 9" WIDTH.)

** ALL EXISTING CROSSFRAMES IN THIS BAY SHALL BE REMOVED PRIOR TO THE REMOVAL OF THE EXISTING DECK SLAB. THE NEW CROSSFRAMES SHALL BE COMPLETELY INSTALLED PRIOR TO THE PLACEMENT OF THE CLOSURE STRIP CONCRETE.

DECK SLAB DEPTH : THE DISTANCE SHOWN FROM TOP OF DECK SLAB TO TOP OF STEEL BEAM IS THE DESIGN DIMENSION. THE QUANTITY OF DECK CONCRETE TO BE PAID FOR SHALL BE BASED ON THIS DIMENSION , EVEN THOUGH DEVIATION FROM IT MAY BE NECESSARY BECAUSE THE TOP FLANGE OF THE BEAM MAY NOT HAVE THE EXACT CAMBER OR CONFORMATION REQUIRED TO PLACE IT PARALLEL TO THE FINISHED GRADE.

TRANSVERSE SECTION
EASTBOUND ROADWAY - LOOKING EAST

NOTE:
WHERE A SHAPE OR PLATE IS DESIGNATED (CVN) THE MATERIAL SHALL MEET SPECIFIED MINIMUM NOTCH TOUGHNESS REQUIREMENTS AS SPECIFIED IN 711.02 OF CMS.

JOHN DAVID JONES & ASSOC., INC. 16/23
2162 FRONT STREET
CUYAHOGA FALLS, OHIO 44221
ENGINEERS ARCHITECTS PLANNERS

TRANSVERSE SECTIONS OF BRIDGE DECK

BRIDGE NO SUM-76-1231
OVER ARLINGTON ST.

DESIGNED	DRAWN	TRACED	CHECKED	REVIEWED	DATE	REVISED
GD	RWM	-	GFD	PAK	11/23/88	

FHWA REG	STATE	PROJECT	
5	OHIO		

857
1214

SUMMIT COUNTY
SUM-76-11.57

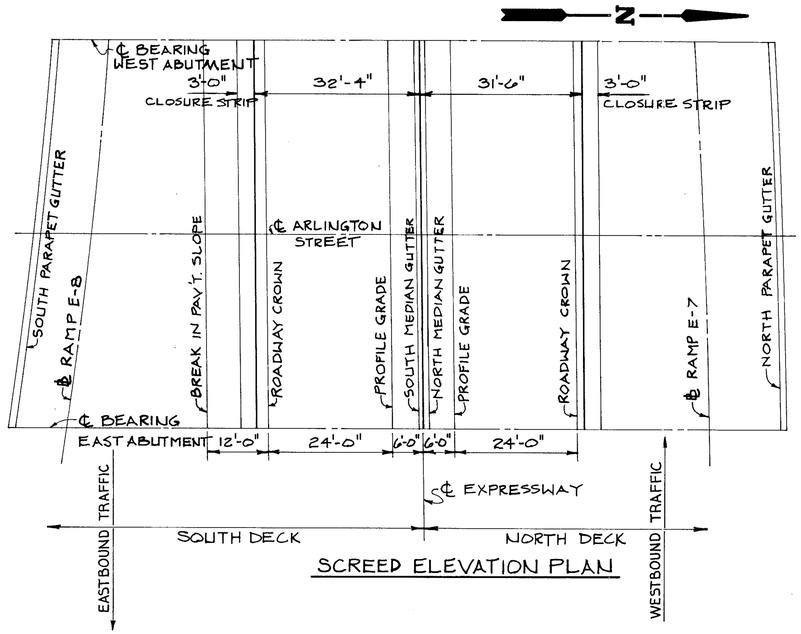

SCREED ELEVATION PLAN

SCREED ELEVATIONS						
	LOCATION	℄ BEARING WEST ABUT.	1/4	1/2	3/4	℄ BEARING EAST ABUT.
NORTH DECK	NORTH PARAPET GUTTER	1091.27	1090.79	1090.29	1089.77	1089.24
	NORTH EDGE CLOSURE STRIP	1091.83	1091.37	1090.88	1090.37	1089.83
	SOUTH EDGE CLOSURE STRIP	1091.88	1091.41	1090.92	1090.41	1089.88
	ROADWAY CROWN (30' LEFT)	1091.90	1091.44	1090.95	1090.44	1089.90
	NORTH MEDIAN GUTTER	1091.48	1091.01	1090.52	1090.01	1089.47
SOUTH DECK	SOUTH MEDIAN GUTTER	1091.50	1091.04	1090.56	1090.06	1089.53
	NORTH EDGE CLOSURE STRIP	1091.78	1091.27	1090.73	1090.17	1089.59
	SOUTH EDGE CLOSURE STRIP	1091.74	1091.22	1090.69	1090.13	1089.54
	ROADWAY CROWN (30' RIGHT)	1091.82	1091.30	1090.77	1090.21	1090.12
	BREAK IN PAV'T SLOPE (42' RIGHT)	1091.64	1091.12	1090.58	1090.03	1089.44
	SOUTH PARAPET GUTTER	1090.57	1089.96	1089.33	1088.69	1088.03

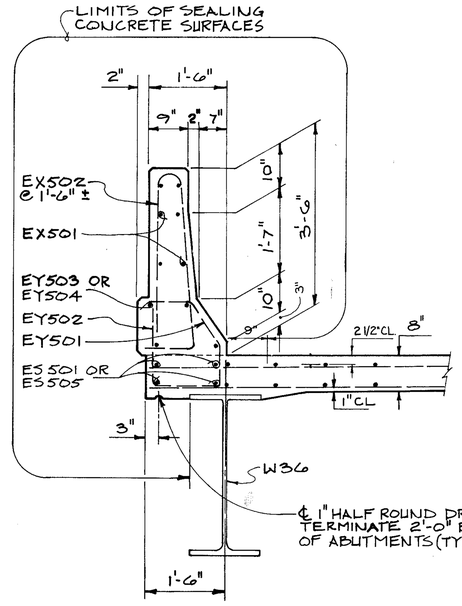

1/16|17 DETAIL

4/16|17 DETAIL
SIMILAR AND OPPOSITE HAND

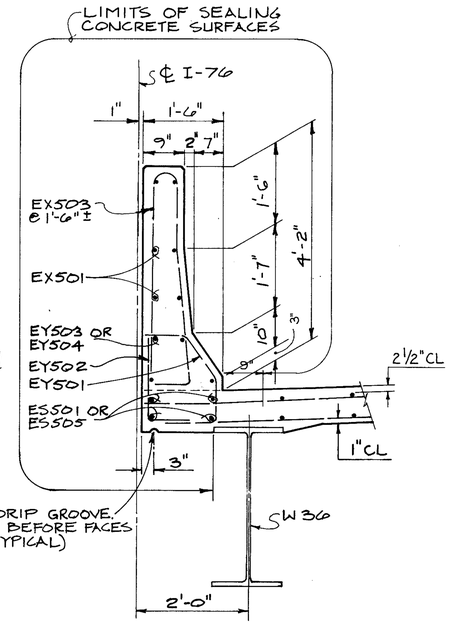

2/16|17 DETAIL

3/16|17 DETAIL
SIMILAR AND OPPOSITE HAND

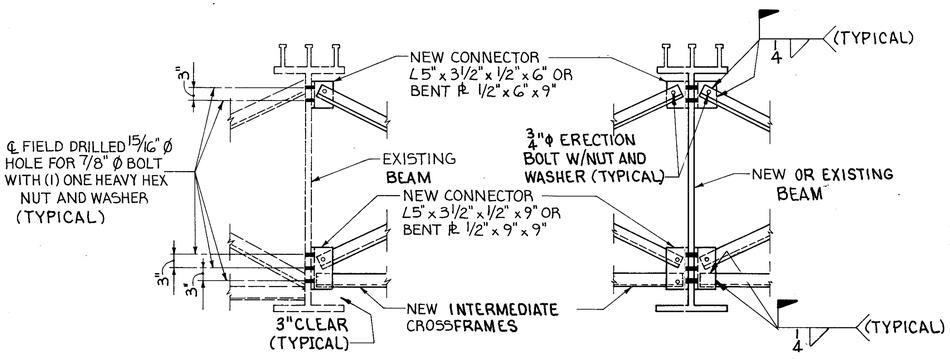

CONNECTION DETAIL
(TYPICAL AT BEAMS: F, H, J, T, U, W).

CONNECTION DETAIL
(TYPICAL AT BEAMS: A, B, C, D, E, X, Y, AND Z).

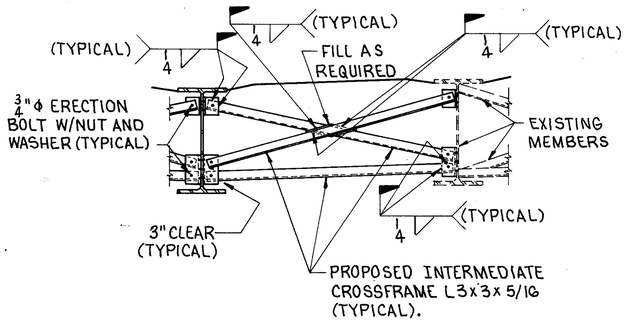

TYPICAL INTERMEDIATE CROSSFRAME

JOHN DAVID JONES & ASSOC., INC.
2162 FRONT STREET
CUYAHOGA FALLS, OHIO 44221
ENGINEERS ARCHITECTS PLANNERS

17/23

SCREED ELEVATIONS AND DECK PARAPET DETAILS

BRIDGE No. SUM-76-1231
OVER ARLINGTON ST.

DESIGNED	DRAWN	TRACED	CHECKED	REVIEWED	DATE	REVISED
G.P.	R.P.H.	–	R.C.K.	P.A.K.	11/23/88	

F.H.W.A. REGION	STATE	PROJECT	
5	OHIO		

858
1214

SUMMIT COUNTY
SUM-76-11.57

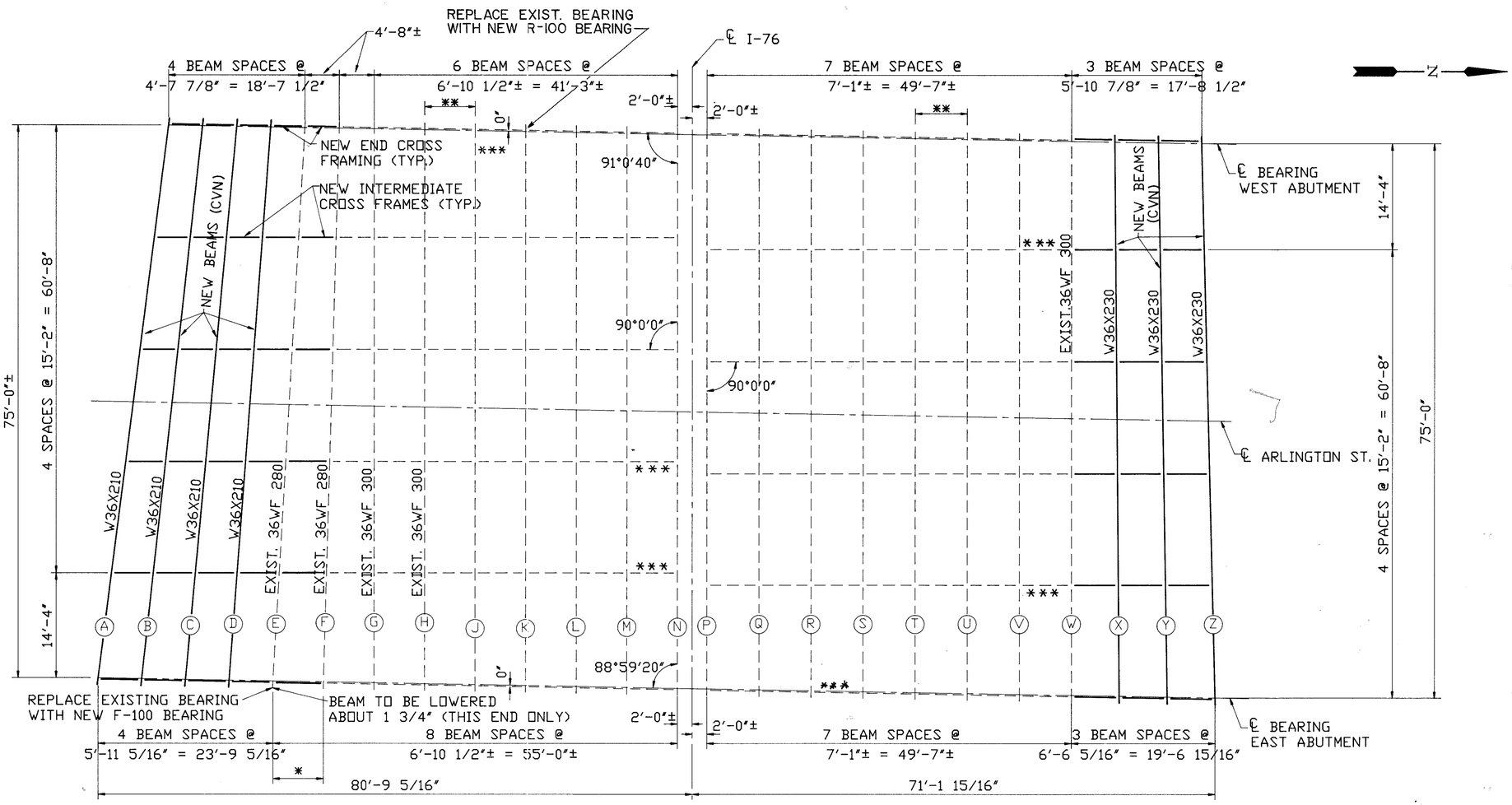

FRAMING PLAN

*** CROSS FRAMES TO BE REPLACED (6 PLACES) INCLUDED UNDER ITEM 513, STRUCTURAL STEEL FOR REHABILITATION

* REMOVE ALL CROSS FRAMES IN THIS BAY, LOWER BEAM "E", REPLACE CROSSFRAMES WITH NEW CROSS FRAMING.

** REMOVE ALL CROSS FRAMES IN THIS BAY AND REPLACE WITH NEW CROSS FRAMING BEFORE ADDING CONCRETE CLOSURE STRIP. SEE SHEET 16/24. PAYMENT FOR THIS ITEM IS INCLUDED UNDER ITEM 513-REPLACEMENT STEEL.

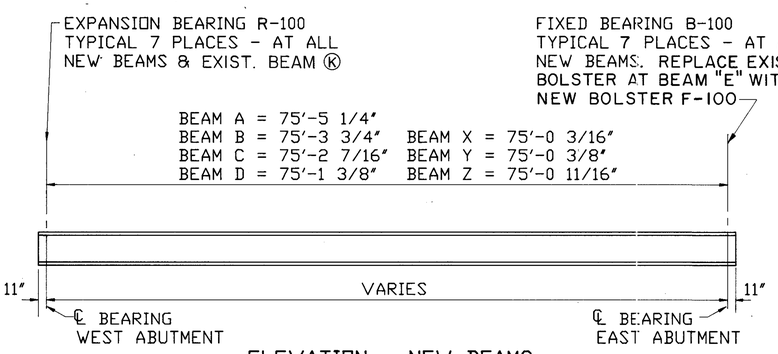

ELEVATION - NEW BEAMS

DEFLECTION AND CAMBER (INCHES)						
BEAM	BEAMS A,B,C & D			BEAMS X,Y & Z		
POINT	1/4	1/2	3/4	1/4	1/2	3/4
DEFLECTION DUE TO WEIGHT OF STEEL	5/16	3/8	5/16	5/16	7/16	5/16
DEFLECTION DUE TO REMAINING DEAD LOAD	13/16	1 3/16	13/16	15/16	1 3/8	15/16
ADJUSTMENT REQUIRED FOR VERTICAL CURVE	- 5/16	-7/16	-5/16	-5/16	-7/16	-5/16
REQUIRED SHOP CAMBER	13/16	1 1/8	13/16	15/16	1 3/8	15/16

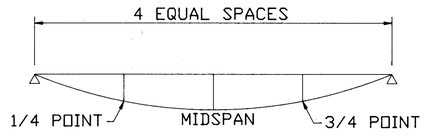

DEAD LOAD DEFLECTION DIAGRAM

NOTES:

FOR EXISTING BEARING UNIT DETAILS AND SHIM PLATES, SEE SHEET 19/24.

FOR DETAILS OF NEW BEARING UNITS, SEE STANDARD DRAWINGS RB-1-55 AND FB-1-82.

FOR EXPANSION JOINT DETAILS, SEE SHEET 20/24

DEFLECTIONS ARE MEASURED TO THE NEAREST 1/16 OF AN INCH.

WHERE A SHAPE OR PLATE IS DESIGNATED (CVN) THE MATERIAL SHALL MEET SPECIFIED MINIMUM NOTCH TOUGHNESS REQUIREMENTS AS SPECIFIED IN 711.02 OF CMS.

JOHN DAVID JONES & ASSOC., INC. 18/23
2162 FRONT STREET
CUYAHOGA FALLS, OHIO 44221
ENGINEERS ARCHITECTS PLANNERS

FRAMING PLAN AND BEAM ELEVATIONS

BRIDGE No. SUM-76-1231
OVER ARLINGTON ST.

DESIGNED	DRAWN	TRACED	CHECKED	REVIEWED	DATE	REVISED
GD	RWM	-	RCK	PAK	11/23/88	

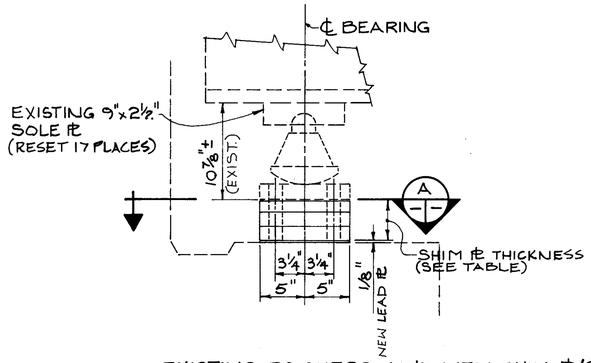

EXISTING ROCKERS AND NEW SHIM PL'S
WEST ABUTMENT-17 PLACES

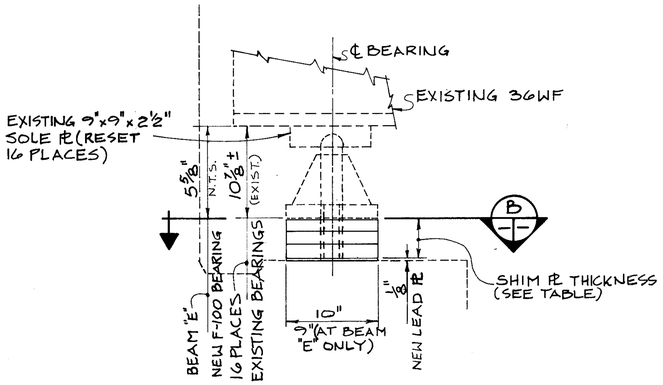

EXISTING BOLSTERS AND NEW SHIM PL'S
EAST ABUTMENT-17 PLACES

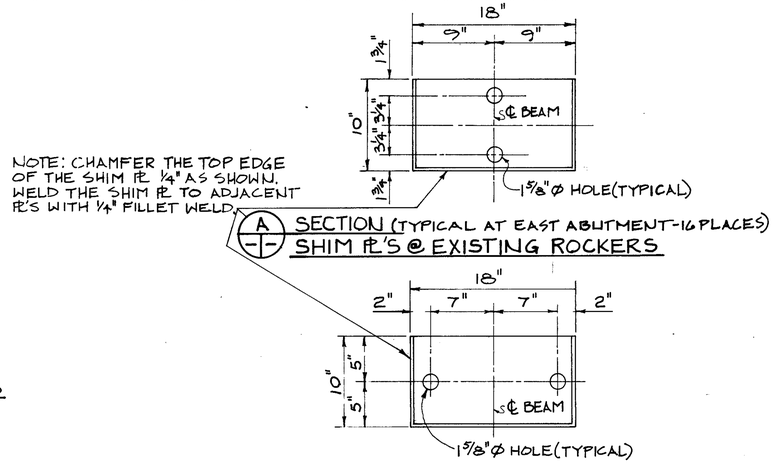

A SECTION (TYPICAL AT EAST ABUTMENT-16 PLACES)
SHIM PL'S @ EXISTING ROCKERS

B SECTION (TYPICAL AT WEST ABUTMENT-17 PLACES)
SHIM PL'S @ EXISTING BOLSTERS

B SECTION
SHIM PL'S @ EXISTING BEAM 'E'

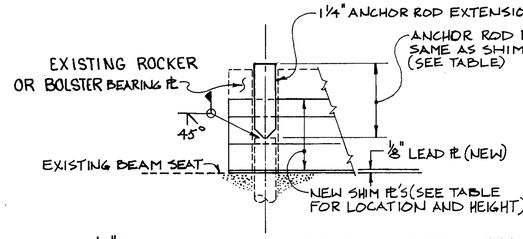

1¼"Ø ANCHOR ROD EXTENSION DETAIL***
(TYPICAL 66 PLACES)

NOTE: PAYMENT FOR ANCHOR ROD EXTENSIONS SHALL BE INCLUDED UNDER ITEM 516, REFURBISH BEARING DEVICES, AS PER PLAN.

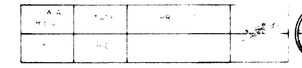

859
12/4

SUMMIT COUNTY
SUM-76-11.57

SHIM PLATE TABLE
APPROXIMATE THICKNESS OF NEW SHIMS REQUIRED UNDER BEAM BEARINGS

BEAM	EAST ABUTMENT	WEST ABUTMENT
E	* 3½"	2⅝"
F	0	3"
G	1"	3⅜"
H	1 7/16"	3⅞"
J	1 15/16"	4 7/16"
K	2 15/16"	**5"
L	3 11/16"	5 9/16"
M	4⅜"	6 1/16"
N	5⅛"	6⅝"
P	5⅝"	6¾"
Q	↑	↑
R		
S		
T		
U		
V		↓
W	5⅝"	6¾"

* REPLACE EXISTING BEARING WITH NEW F-100 BEARING
** REPLACE EXISTING BEARING WITH NEW R-100 BEARING
NOTE: THE TOTAL THICKNESS OF THE SHIMS SHALL BE MADE UP OF A SERIES OF PLATES WITH NO PLATE EXCEEDING A THICKNESS OF 2"
CONTRACTOR SHALL VERIFY EXISTING ELEVATIONS PRIOR TO ORDERING SHIM PLATES.

*** IF THE EXISTING ANCHOR BOLT DOES NOT HAVE SUFFICIENT CROSS-SECTIONAL AREA TO WELD PROPERLY, THE CONTRACTOR IS TO REMOVE ANY CONCRETE NECESSARY TO A SUFFICIENT DEPTH TO OBTAIN SUITABLE MATERIAL WITH SUFFICIENT CROSS-SECTIONAL AREA TO WELD PROPERLY. THE COST OF REMOVING AND REPLACING THE CONCRETE SHALL BE INCLUDED IN THE UNIT PRICE BID FOR ITEM 516, REFURBISH BEARING DEVICES, AS PER PLAN.

JOHN DAVID JONES & ASSOC., INC. 19/23
2162 FRONT STREET
CUYAHOGA FALLS, OHIO 44221
ENGINEERS ARCHITECTS PLANNERS

BEAM BEARING AND SHIM PLATE DETAILS

BRIDGE No. SUM-76-1231
OVER ARLINGTON ST.

DESIGNED	DRAWN	TRACED	CHECKED	REVIEWED	DATE	REVISED
G.D.	R.D.H.	–	GFD	PAK	11/23/88	

F.H.W.A. REG.	STATE	PROJECT	
5	OHIO		

860
1214

SUMMIT COUNTY
SUM-76-11.57

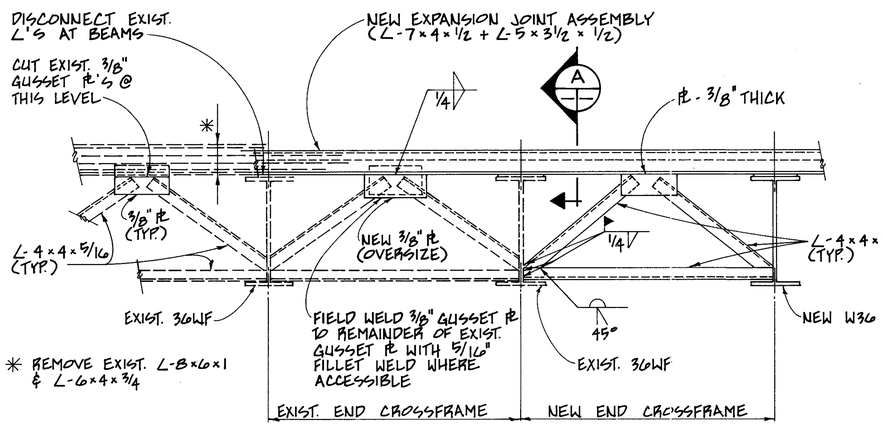

TYPICAL SECTION THROUGH END CROSSFRAMES
FOR DETAILS NOT SHOWN - SEE STANDARD DRAWINGS EXJ-2-81 AND SD-1-69

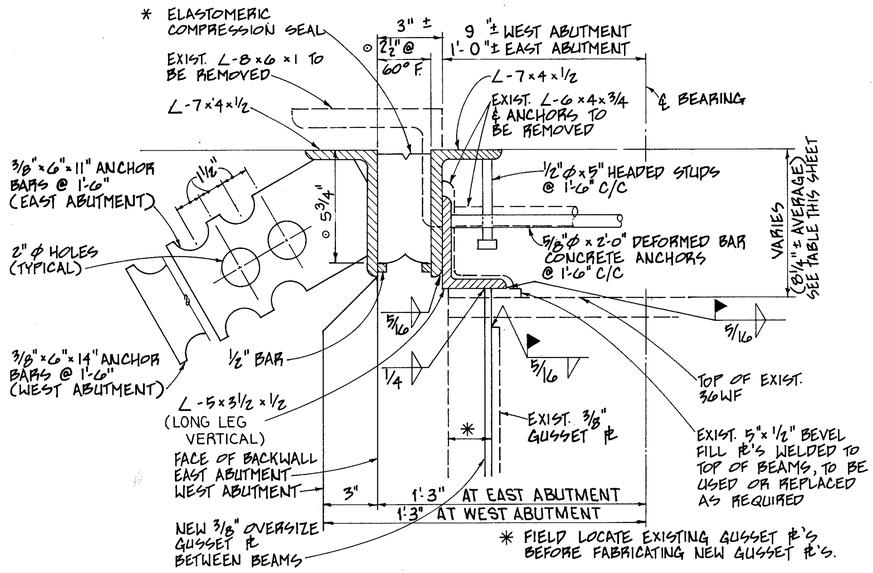

A — SECTION - THROUGH EXPANSION JOINTS
EAST ABUTMENT SHOWN - WEST ABUTMENT SIMILAR

15|20 (FOR LENGTHS OF ANGLE ASSEMBLIES, SEE SHEET 15/23.)

* MODIFY STD. DRAWING EXJ-2-81, COMPRESSION SEAL DETAIL, SHOWN ON SHEET 2 OF 2, FROM A 5" SEAL TO A 4" SEAL.

* * MODIFY STD. DRAWING EXJ-2-81, MATERIALS, ON SHEET 2 OF 2, SO THAT THE PAINT SYSTEM IS SYSTEM IZEU, FIELD PAINTING OF NEW STEEL.

o VERIFY WITH MANUFACTURER

COMPRESSION SEAL ADJUSTMENT TABLE	
AMBIENT TEMPERATURE	JOINT OPENING
40° F	2 5/8"
50° F	2 9/16"
60° F	2 1/2"
70° F	2 7/16"
80° F	2 3/8"
90° F	2 5/16"

PAVEMENT AND TOP OF BEAM ELEVATION AT ABUTMENTS

BEAM	℄ BEARING - EAST ABUTMENT		℄ BEARING - WEST ABUTMENT	
	TOP OF PAVEMENT	TOP OF BEAM	TOP OF PAVEMENT	TOP OF BEAM
A	1088.03	1087.34	1090.57	1089.88
B	1088.24	1087.55	1090.74	1090.05
C	1088.46	1087.77	1090.91	1090.22
D	1088.68	1087.99	1091.08	1090.39
E	1088.90	1088.22	1091.25	1090.56
F	1089.15	1088.48	1091.42	1090.66
G	1089.40	1088.66	1091.59	1090.76
H	1089.53	1088.81	1091.72	1090.92
J	1089.62	1088.94	1091.81	1091.05
K	1089.60	1088.90	1091.73	1090.98
L	1089.58	1088.86	1091.66	1090.91
M	1089.55	1088.80	1091.58	1090.85
N	1089.48	1088.76	1091.48	1090.78
P	1089.48	1088.80	1091.48	1090.80
Q	1089.59	1088.90	1091.59	1090.91
R	1089.69	1089.01	1091.70	1091.02
S	1089.80	1089.13	1091.80	1091.12
T	1089.90	1089.22	1091.90	1091.22
U	1089.79	1089.11	1091.79	1091.11
V	1089.67	1088.99	1091.67	1090.99
W	1089.56	1088.88	1091.56	1090.88
X	1089.46	1088.78	1091.47	1090.79
Y	1089.35	1088.67	1091.36	1090.68
Z	1089.24	1088.56	1091.27	1090.59

NOTE: AFTER THE EXISTING CONCRETE DECK HAS BEEN REMOVED AND BEFORE THE EXISTING BEAM BEARINGS ARE REMOVED FOR REFURBISHING, THE ELEVATIONS OF THE TOPS OF THE EXISTING BEAMS, E THRU V, WILL HAVE TO BE CHECKED TO SEE IF THE SHIMS TO BE ADDED, FROM THE TABLE ON SHEET 19/24 , WILL MAINTAIN THE MIMIMUM SLAB THICKNESS OVER THE BEAMS OF 0.68 FT.

IF THE CALCULATED SLAB THICKNESS IS LESS THAN THIS THE SHIMS WILL HAVE TO BE REDUCED FROM THEIR TABLE VALUES TO THICKNESSES REQUIRED TO MAINTAIN THE 0.68 FT. SLAB THICKNESS.

NOTE: ELASTOMER COMPRESSION SEALS ARE TO BE ONE PIECE CONTINUOUS A CROSS THE FULL WIDTH OF THE ROADWAY.

JOHN DAVID JONES & ASSOC., INC. 20/23
2162 FRONT STREET
CUYAHOGA FALLS, OHIO 44221
ENGINEERS ARCHITECTS PLANNERS

END CROSSFRAME & EXPANSION JOINT DETAILS AND BEAM ELEVATIONS AT BEARINGS
BRIDGE No. SUM-76-1231
OVER ARLINGTON ST.

DESIGNED	DRAWN	TRACED	CHECKED	REVIEWED	DATE	REVISED
GFD	JPS	—	RCK	PAK	11/23/88	

SLAB

MARK	NO.	LENGTH	SER. INCR.	TYPE	WEIGHT	A	B	C	D
ES401	318	30'-0"		STR.	6373				
ES402	156	19'-1"			1989				
ES403	1SER.5	8'-6" / 38'-10"	7'-7"		79				
ES404	1SER.3	9'-0" / 23'-0"	7'-0"	STR.	32				
ES501	350	30'-0"		STR.	10952				
ES502	156	19'-9"			3213				
ES503	1SER5	8'-6" / 38'-10"	7'-7"		123				
ES504	1SER3	9'-0" / 23'-0"	7'-0"		50				
ES505	16	20'-1"			335				
ES506	1SER119	38'-0" / 39'-11"	3/16"		4835				
ES507	119	34'-11"			4334				
ES508	119	34'-1"			4230				
ES509	1SER.30	40'-9" / 42'-10"	7/8"		1308				
ES510	1SER.30	42'-10" / 45'-2"	15/16"		1377				
ES511	1SER 30	45'-2" / 47'-8"	1"		1452				
ES512	1SER 30	47'-8" / 50'-7"	1 3/16"	STR.	1537				
ES601	1SER.119	38'-0" / 39'-11"	3/16"	STR.	6963				
ES602	119	34'-11"			6241				
ES603	119	34'-1"			6092				
ES604	1SER.30	40'-9" / 42'-10"			1883				
ES605	1SER.30	42'-10" / 45'-2"	15/16"		1983				
ES606	1SER.30	45'-2" / 47'-8"	1"		2092				
ES607	1SER.30	47'-8" / 50'-7"	1 3/16"	STR.	2214				
EX501	120	15'-0"		STR.	1877				
EX502	110	7'-1"		27	813	0'-7"	3'-0"		
EX503	110	8'-5"		27	966	1'-3"	3'-8"		
EY501	208	3'-0"		13	651	0'-9"			
EY502	208	2'-4"		2	506	10 1/2"	1'-6 1/2"		
EY503	32	30'-0"		STR.	1001	} LONGITUDINAL BARS IN LOWER PART OF PARAPET. SEE SHEET 17.			
EY504	16	20'-1"		STR.	335				
	TOTAL WEIGHT OF COATED BARS = 75,836 LBS.								

WEST ABUTMENT

MARK	NO.	LENGTH	SER. INCR.	TYPE	WEIGHT	A	B	C	D
AW501	32	6'-8"		2	223	1'-0"	5'-9"		
AW504	20	8'-2"		STR.	170				
AW507	8	9'-4"			78				
AW509	15	15'-5"			241				
AW511	14	7'-6"			110				
AW512	9	23'-5"			220				
AW513	21	16'-8"		STR.	365				
AW514	22	6'-8"		2	153	1'-0"	5'-9"		
AW515	1SER.21	28'-2" / 29'-2"	5/8" ±	STR.	628				
AW516	1	23'-10"			25				
AW517	32	32'-8"			1500				
AW518	10	29'-10"		STR.	311				
AW524	8	7'-10"		STR.	66				
AW526	16	10'-8"		STR.	178				
AW610	4	16'-8"		STR.	100				
AW613	21	8'-1"		4	255	6'-3"	1'-10"	10 3/4"	12"
AW615	36	2'-8"		STR.	144				
AW801	22	25'-1"		STR.	1473				
AW802	30	14'-6"			1161				
AW803	2SER12	15'-1" / 15'-6"	7/16"		980				
AW804	17	16'-8"			757				
AW805	14	26'-10"			1003				
AW806	16	10'-8"			456				
AW807	14	8'-2"		STR.	305	1'-0"	7'-4"		
D801	94	4'-11"		14	1234	2'-7"			
AW901	1SER.11	19'-6" / 20'-3"	7/8"	STR.	743				
AW902	16	15'-0"			816				
AW903	1SER.12	14'-10" / 15'-6"			619				
AW904	8	8'-6"	3/4"		231				
AW905	21	15'-4"		STR.	1095				

CALC. BY: RCK DATE: 9-5-88
CHECKED BY: GFD DATE: 9-6-88

F.H.W.A. REGION	STATE	PROJECT
5	OHIO	

361 12.14

SUMMIT COUNTY
SUM-76-11.57

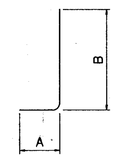

TYPE 2

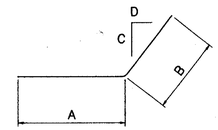

TYPE 4

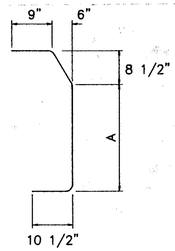

TYPE 13

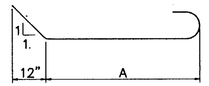

TYPE 14

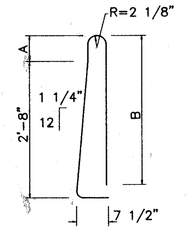

TYPE 27

'E' PREFIX INDICATES EPOXY COATED BARS

REINFORCING STEEL SAMPLES

REFER TO CMS SECTIONS 106.03, 700, 709.01 THROUGH 709.05 AND 709.08. SUFFICIENT ADDITIONAL REINFORCING STEEL SHALL BE PROVIDED FOR SAMPLING. RANDOM SAMPLES SHALL BE REPLACED IN STRUCTURES BY THE ADDITIONAL STEEL, SPLICED IN ACCORDANCE WITH 509.08.

JOHN DAVID JONES & ASSOC., INC.
2162 FRONT STREET
CUYAHOGA FALLS, OHIO 44221
ENGINEERS ARCHITECTS PLANNERS

21/23

REINFORCING STEEL LIST

BRIDGE NO. SUM-76-1231
OVER ARLINGTON STREET

DESIGNED	DRAWN	TRACED	CHECKED	REVIEWED	DATE	REVISED
RCK	JPM	-	GFD	PAK	11/23/88	

MARK	NO.	LENGTH	SER. INCR.	TYPE	WEIGHT	A	B	C	D
WEST ABUTMENT (CONT'D.)									
AW1101	1SER. 11	19'-6" / 20'-3"	.7/8"	STR.	1162				
AW1102	16	15'-0"		STR.	1275				
AW1103	1SER. 12	14'-10" / 15'-6"	3/4"	STR.	967				
AW1104	8	17'-9"		2	754	3'-7"	14'-6"		
AW1105	7	14'-9"		2	549	3'-7"	11'-6"		
AW1106	20	18'-0"		10	1913	3'-7"	14'-9"	10 1/2"	
AW1107	21	12'-0"		10	1339	3'-7"	8'-9"	6 1/4"	
	TOTAL WEIGHT OF UNCOATED BARS = 23,599 LBS.								
EAW502	12	23'-5"		STR.	293				
EAW503	4	16'-8"		STR.	70				
EAW505	21	3'-4"		10	73	1'-8"	1'-8"	7/8"	
EAW506	13	22'-2"		STR.	300				
EAW508	15	15'-8"		STR.	245				
EAW510	16	3'-4"		10	56	1'-8"	1'-8"	1/2"	
EAW525	10	29'-11"		STR.	312				
EAW526	4	8'-1"		27	34	1'-2"	3'-7"		
EAW527	4	2' 11"		STR.	12				
EAW528	18	1'-0"		STR.	19				
EAW529	10	8'-1"		STR.	84				
EAW601	98	7'-1"		1	1043	11"	3'-3"		
EAW602	21	6'-11"		1	218	1'-5"	2'-11"		
EAW603	77	7'-9"		1	896	1'-5"	3'-4"		
EAW604	8	18'-0"		STR.	216				
EAW605	20	22'-3"		↓	668				
EAW606	8	19'-0"		↓	228				
EAW607	10	35'-0"		↓	526				
EAW608	10	34'-2"		STR.	513				
EAW609	4	3'-11"		9	24	9"	6"	2'-4"	8 1/2"
EAW610	17	16'-8"		STR.	426				
EAW611	4	16'-7"		STR.	100				
EAW612	24	6'-8"		2	240	2'-6"	4'-3"		
EAW614	21	6'-3"		1	197	1'-5"	4'-7"		
EAW616	4	15'-6"		STR.	93				
EX501	28	6'-8"		27	195	8"	3'-0"		

MARK	NO.	LENGTH	SER. INCR.	TYPE	WEIGHT	A	B	C	D
WEST ABUTMENT (CONT'D.)									
EY501	28	2'-10"		STR.	83				
EY601	28	3'-11"		9	165	9"	6"	2'-5"	8"
	TOTAL WEIGHT OF COATED BARS = 7,246 LBS.								
EAST ABUTMENT									
AE501	80	6'-8"		2	556	1'-0"	5'-9"		
AE502	16	13'-8"		STR.	228				
AE503	16	30'-8"		↓	512				
AE504	38	25'-8"		↓	1017				
AE505	18	22'-10"		↓	429				
AE506	14	14'-8"		↓	214				
AE507	14	27'-4"		↓	399				
AE508	32	21'-8"		↓	723				
AE509	8	19'-0"		↓	159				
AE510	13	23'-4"		↓	316				
AE512	21	8'-7"		↓	188				
AE514	23	8'-1"		↓	194				
AE519	11	26'-8"		STR.	306				
AE611	5	23'-9"		STR.	178				
AE612	94	2'-8"		STR.	377				
AE613	14	8'-0"		4	168	6'-4"	1'-8"	10 3/4"	12"
AE617	6	17'-6"		STR.	158				

CALC. BY: GFD DATE: 9-5-88
CHECKED BY: RCK DATE: 9-6-88

F.H.W.A. REGION	STATE	PROJECT
5	OHIO	

862
1214

SUMMIT COUNTY
SUM-76-11.57

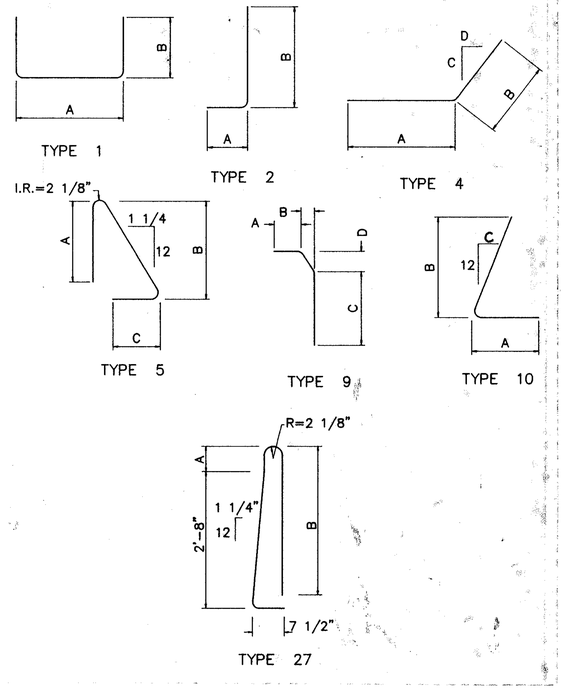

'E' PREFIX INDICATES EPOXY COATED BARS

REINFORCING STEEL SAMPLES

REFER TO CMS SECTIONS 106.03, 700, 709.01 THROUGH 709.05 AND 709.08. SUFFICIENT ADDITIONAL REINFORCING STEEL SHALL BE PROVIDED FOR SAMPLING. RANDOM SAMPLES SHALL BE REPLACED IN STRUCTURES BY THE ADDITIONAL STEEL , SPLICED IN ACCORDANCE WITH 509.08.

JOHN DAVID JONES & ASSOC., INC.
2162 FRONT STREET
CUYAHOGA FALLS, OHIO 44221
ENGINEERS ARCHITECTS PLANNERS

22/23

REINFORCING STEEL LIST

BRIDGE NO. SUM-76-1231
OVER ARLINGTON RD.

DESIGNED	DRAWN	TRACED	CHECKED	REVIEWED	DATE	REVISED
GFD	JPM	—	RCK	PAK	11/23/88	

MARK	NO.	LENGTH	SER. INCR.	TYPE	WEIGHT	A	B	C	D
EAST ABUTMENT (CONT'D.)									
AE619	11	8'-8"		4	143	6'-4"	2'-4"	10 3/4"	12"
AE801	2SER.12	28'-6" / 29'-3"	13/16"	STR.	1850				
AE802	8	13'-0"			278				
AE803	14	14'-6"			542				
AE804	2SER.11	25'-6" / 27'-9"	2 11/16"		1564				
AE806	17	20'-9"		STR.	942				
AE805	18	17'-6"		STR.	841				
AE901	20	14'-6"		STR.	986				
AE902	1SER.11	24'-0" / 24'-10"	1"		913				
AE903	16	19'-0"			1034				
AE904	14	15'-4"		STR.	730				
AE1001	12	15'-6"		STR.	800				
AE1002	10	21'-1"		STR.	907				
AE1003	1SER.11	24'-0" / 24'-10"	1"	STR.	1156				
AE1101	12	15'-6"		STR.	988				
AE1102	10	21'-1"		STR.	1120				
AE1103	15	19'-0"		10	1514	3'-7"	15'-9"	1'-5"	
AE1104	16	12'-0"		10	1020	3'-7"	8'-9"	7"	
AE1105	13	17'-6"		10	1209	3'-7"	14'-3"	9"	
AE1106	14	12'-0"		10	893	3'-7"	8'-9"	5"	
D801	98	4'-11"		14	1287	2'-7"			
	TOTAL WEIGHT OF UNCOATED BARS = 26,839 LBS.								
EAE505	10	22'-10"		STR.	238				
EAE509	10	19'-0"		STR.	198				
EAE511	5	20'-9"		STR.	108				
EAE513	22	3'-4"		4	77	1'-8"	1'-8"	12"	1 3/4"
EAE515	6	17'-6"		STR.	110				
EAE516	4	8'-1"		27	34	1'-2"	3'-7"		
EAE517	4	2'-11"		STR.	12				
EAE518	18	1'-3"		STR.	24				
EAE520	16	23'-4"		STR.	389				

MARK	NO.	LENGTH	SER. INCR.	TYPE	WEIGHT	A	B	C	D
EAST ABUTMENT (CONT'D.)									
EAE521	14	26'-8"		STR.	389				
EAE522	25	3'-4"		4	87	1'-8"	1'-8"	12"	1/2"
EAE601	103	7'-1"		1	1096	11"	3'-3"		
EAE602	25	6'-11"		1	260	1'-5"	2'-11"		
EAE603	78	7'-5"		1	869	1'-5"	3'-2"		
EAE604	8	23'-3"		STR.	279				
EAE605	10	28'-8"			431				
EAE606	8	20'-0"			240				
EAE607	10	20'-0"			300				
EAE608	10	35'-0"			526				
EAE609	10	34'-2"		STR.	513				
EAE610	4	3'-11"		9	24	9"	6"	2'-4"	8 1/2"
EAE611	20	20'-9"		STR.	623				
EAE614	15	6'-5"		2	145	2'-4"	4'-3"		
EAE615	11	11'-11"		1	197	1'-5"	5'-5"		
EAE616	1SER.14	10'-3" / 11'-7"	5/8"	1	230	1'-5"	4'-7" / 5'-3"		
EAE617	21	17'-6"		STR.	552				
EAE618	13	6'-0"		2	117	1'-11"	4'-3"		
EAE621	13	17'-6"		STR.	342				
EX501	30	6'-8"		27	209	8"	3'-0"		
EY501	30	3'-3"		STR.	102				
EY601	30	3'-11"		9	176	9"	6"	2'-5"	8"
	TOTAL WEIGHT OF COATED BARS = 8897 LBS.								
	SUMMARY OF BAR WEIGHTS (TOTAL)								
	UNCOATED BARS = 50438 LBS.								
	COATED BARS = 91,979 LBS.								

CALC. BY: GFD DATE: 9-9-88
CHECKED BY: RCK DATE: 9-12-88

F.H.W.A. REGION	STATE	PROJECT
5	OHIO	

863
1214

SUMMIT COUNTY
SUM-76-11.57

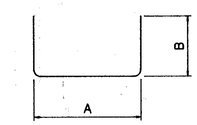

TYPE 1

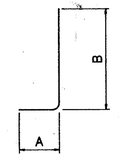

TYPE 2

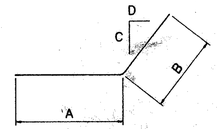

TYPE 4

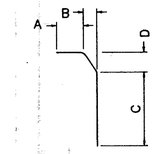

TYPE 9

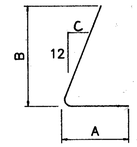

TYPE 10

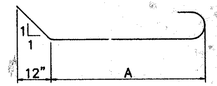

TYPE 14

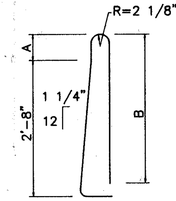

TYPE 27

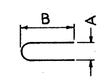

TYPE 17

'E' PREFIX INDICATES EPOXY COATED BARS

REINFORCING STEEL SAMPLES

REFER TO CMS SECTIONS 106.03, 700, 709.01 THROUGH 709.05 AND 709.08. SUFFICIENT ADDITIONAL REINFORCING STEEL SHALL BE PROVIDED FOR SAMPLING. RANDOM SAMPLES SHALL BE REPLACED IN STRUCTURES BY THE ADDITIONAL STEEL , SPLICED IN ACCORDANCE WITH 509.08.

JOHN DAVID JONES & ASSOC., INC.
2162 FRONT STREET
CUYAHOGA FALLS, OHIO 44221
ENGINEERS ARCHITECTS PLANNERS

23/23

REINFORCING STEEL LIST

BRIDGE NO. SUM-76-1231
OVER ARLINGTON STREET

DESIGNED	DRAWN	TRACED	CHECKED	REVIEWED	DATE	REVISED
GFD	JPM	–	RCK	PAK	11/23/88	

F.H.W.A. REG.	STATE	PROJECT	
5	OHIO		

SUMMIT COUNTY
SUM-76-11.57

CURVE DATA I-76
△ = 16°-45'-08"
Dc = 2°00' 30"
R = 2852.90'
T = 420.06'
L = 834.14'

CURVE DATA RAMP E-8
△ = 18°-16'-49"
Dc = 4°-00'-00"
R = 1432.39'
T = 230.46'
L = 457.01'
P.I. STA. 77+02.10

CURVE DATA RAMP E-8
△ = 8°-51'-32"
Dc = 3°-00'-00"
R = 1909.86'
T = 147.94'
L = 295.29'
P.I. STA. 81+54.20

CURVE DATA RAMP E-6
△ = 12°-30'-00"
Dc = 5°-00'-00"
R = 1145.92'
T = 125.50'
L = 250.00'
P.I. STA. 79+93.59

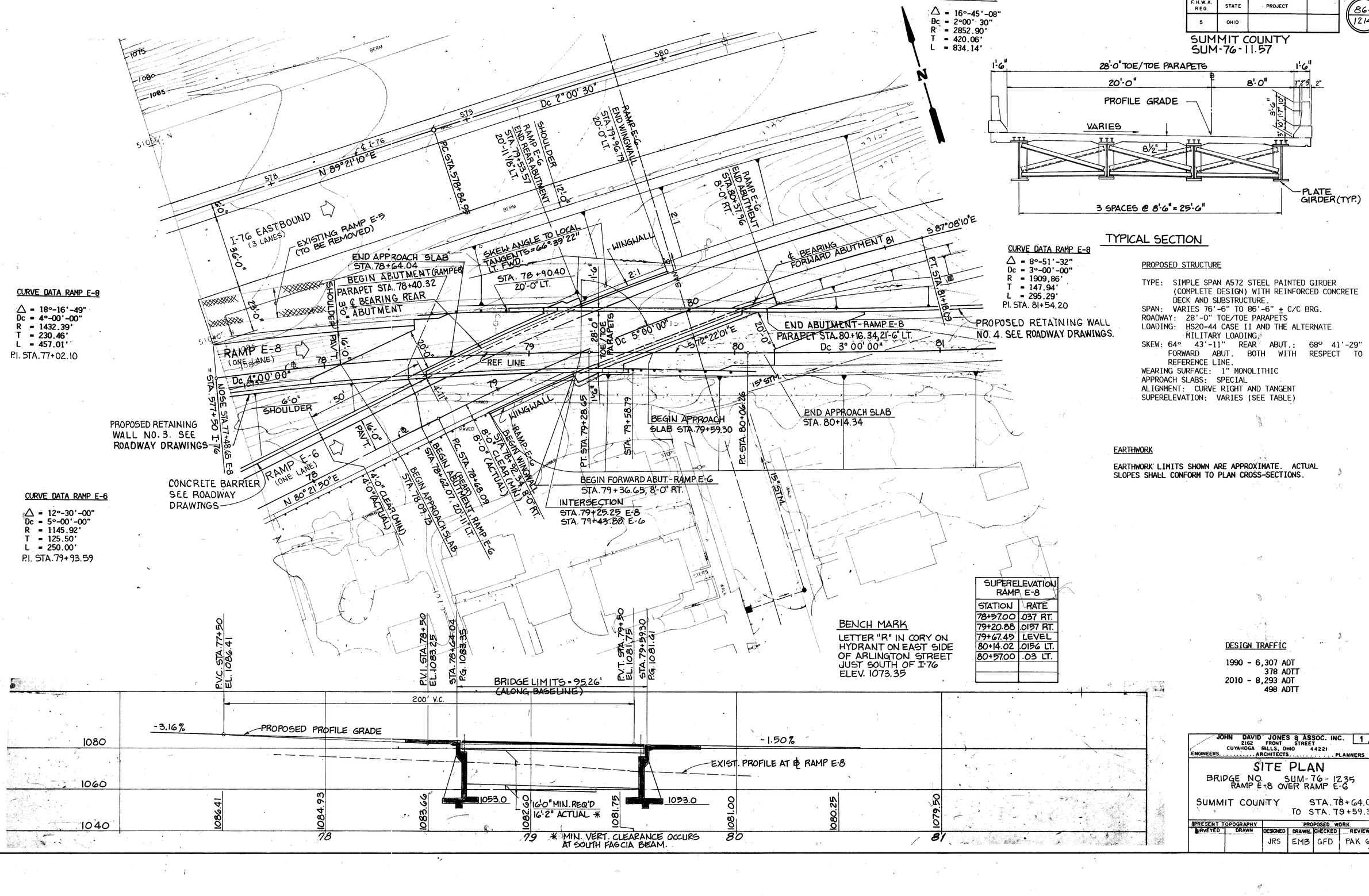

TYPICAL SECTION

PROPOSED STRUCTURE

TYPE: SIMPLE SPAN A572 STEEL PAINTED GIRDER (COMPLETE DESIGN) WITH REINFORCED CONCRETE DECK AND SUBSTRUCTURE.
SPAN: VARIES 76'-6" TO 86'-6" ± C/C BRG.
ROADWAY: 28'-0" TOE/TOE PARAPETS
LOADING: HS20-44 CASE II AND THE ALTERNATE MILITARY LOADING.
SKEW: 64° 43'-11" REAR ABUT.; 68° 41'-29" FORWARD ABUT. BOTH WITH RESPECT TO REFERENCE LINE.
WEARING SURFACE: 1" MONOLITHIC
APPROACH SLABS: SPECIAL
ALIGNMENT: CURVE RIGHT AND TANGENT
SUPERELEVATION: VARIES (SEE TABLE)

EARTHWORK

EARTHWORK LIMITS SHOWN ARE APPROXIMATE. ACTUAL SLOPES SHALL CONFORM TO PLAN CROSS-SECTIONS.

SUPERELEVATION RAMP E-8	
STATION	RATE
78+57.00	.037 RT.
79+20.88	.0157 RT.
79+67.45	LEVEL
80+14.02	.0156 LT.
80+57.00	.03 LT.

BENCH MARK

LETTER "R" IN CORY ON HYDRANT ON EAST SIDE OF ARLINGTON STREET JUST SOUTH OF I-76
ELEV. 1073.35

DESIGN TRAFFIC

1990 - 6,307 ADT
378 ADTT
2010 - 8,293 ADT
498 ADTT

JOHN DAVID JONES & ASSOC. INC. 1/20
2162 FRONT STREET
CUYAHOGA FALLS, OHIO 44221
ENGINEERS ..... ARCHITECTS ..... PLANNERS

SITE PLAN

BRIDGE NO. SUM-76-1235
RAMP E-8 OVER RAMP E-6

SUMMIT COUNTY STA. 78+64.04 TO STA. 79+59.30

PRESENT TOPOGRAPHY		PROPOSED WORK			
SURVEYED	DRAWN	DESIGNED	DRAWN	CHECKED	REVIEWED
		JRS	EMB	GFD	PAK 6-2-87

FHWA REG	STATE	PROJECT	
5	OHIO		

865
12.14

SUMMIT COUNTY
SUM-76-11.57

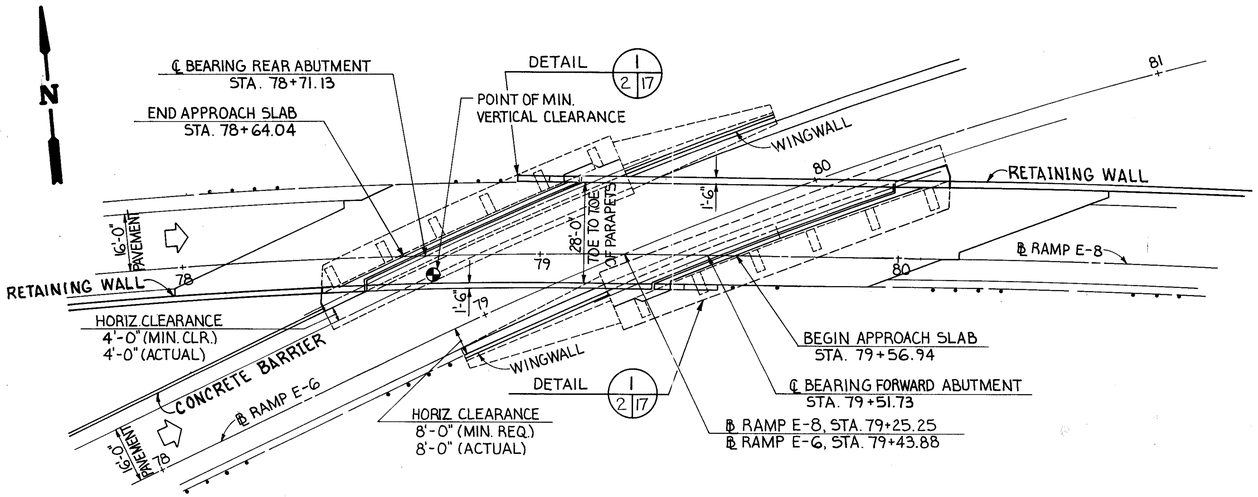

PLAN

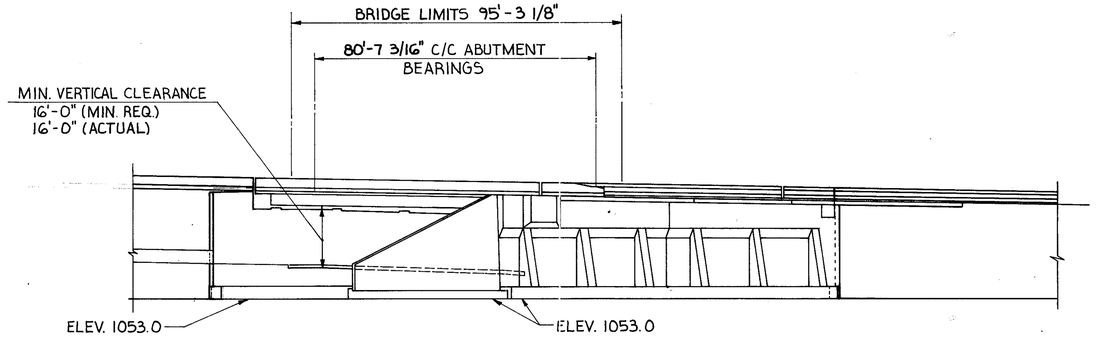

ELEVATION

JOHN DAVID JONES & ASSOC., INC. 2 /20
2162 FRONT STREET
CUYAHOGA FALLS, OHIO 44221
ENGINEERS ARCHITECTS PLANNERS

GENERAL PLAN & ELEVATION

BRIDGE No. SUM-76-1235
RAMP E-8 OVER RAMP E-6

DESIGNED	DRAWN	TRACED	CHECKED	REVIEWED	DATE	REVISED
JRS	RCK	JM	HGS	P.A.K.	12/22/88	

ESTIMATED QUANTITIES

QUANTITY CALCULATIONS
MADE BY: G.F.D. DATE: 12-88
CH'KD BY: B.H. DATE: 12-88

F.H.W.A. REGION	STATE	PROJECT	
5	OHIO		

866/1214

SUMMIT COUNTY
SUM-76-11.57

ITEM	ITEM EXT.	TOTAL	UNIT	DESCRIPTION	ABUTMENTS	PIERS	SUPER STRUCTURE	GENERAL
503	11100	LUMP		COFFERDAMS, CRIBS AND SHEETING				LUMP
503	21100	3691	CU.YD.	UNCLASSIFIED EXCAVATION	3691			
509	15400	102980	LB.	REINFORCING STEEL, GRADE 60	91160			11820
509	15800	51568	LB.	EPOXY COATED REINFORCING STEEL, GRADE 60	29310		20139	2119
511	32203	105	CU.YD.	CLASS S CONCRETE, SUPERSTRUCTURE, AS PER PLAN			105	
511	45100	628	CU.YD.	CLASS "C" CONCRETE, ABUTMENT WALLS	628			
511	46500	406	CU.YD.	CLASS "C" CONCRETE, FOOTINGS	406			
513	11600	64521	LB.	STRUCTURAL STEEL (AISC CATEGORY III) - ASTM A 572			64521	
513	11700	15314	LB.	STRUCTURAL STEEL, (AISC CATEGORY III) - ASTM A 36			15314	
513	20000	792	EACH	WELDED STUD SHEAR CONNECTORS			792	
516	11210	161	LIN.FT.	STRUCTURAL EXPANSION JOINTS INCL. ELASTOMERIC STRIP SEALS			161	
516	30501	112	LIN.FT.	PVC WATERSTOP, AS PER PLAN	112			
516	44200	6	EACH	LAMINATED ELASTOMERIC BEARINGS 16" X 11" X 3.037 ELASTOMERIC PAD WITH 19" X 12" X 1-5/8" STEEL LOAD PLATE	6			
516	44200	2	EACH	LAMINATED ELASTOMERIC BEARINGS 16" X 11" X 3.037 ELASTOMERIC PAD WITH 24" X 12" X 1-5/8" TAPERED STEEL LOAD PLATE	2			

ITEM	ITEM EXT.	TOTAL	UNIT	DESCRIPTION	ABUTMENTS	PIERS	SUPER STRUCTURE	GENERAL	
518	21200	334	CU.YD.	POROUS BACKFILL, WITH FILTER FABRIC	334				
SPECIAL	51267502	73	SQ.YD.	SEALING CONCRETE SURFACES (EPOXY) (SEE PROPOSAL NOTE)	73				
SPECIAL	51267504	797	SQ.YD.	SEALING CONCRETE SURFACES (NON-EPOXY) (SEE PROPOSAL NOTE)	608		189		
SPECIAL	51400610	79835	LB.	PAINTING OF NEW STEEL, SYSTEM IZEU ▲ (SEE PROPOSAL NOTE)			79835		▲ See General Notes for additional requirements
511	33404	105	CU.YD.	Class S concrete, superstructure, using shrinkage compensating cement (See Proposal Note)			105		⏀
511	33410	LUMP		Class S concrete, using shrinkage compensating cement For preplacement testing (See proposal note)			LUMP		⏀

⏀ These two items shall constitute one alternate bid to class S concrete, superstructure, as per plan

Class S concrete, superstructure, as per plan
Concrete shall be cured by method (a) water curing

JOHN DAVID JONES & ASSOC., INC.
2162 FRONT STREET
CUYAHOGA FALLS, OHIO 44221
ENGINEERS ARCHITECTS PLANNERS

3/20

QUANTITY TABLE

BRIDGE No. SUM-76-12.35
RAMP E-B OVER RAMP E-6

DESIGNED	DRAWN	TRACED	CHECKED	REVIEWED	DATE	REVISED
JRS	EMB	—	BRH	PAK	11/88	

542371

GENERAL NOTES

SUMMIT COUNTY
SUM-76-11.57

867
1214

REFERENCE SHALL BE MADE TO STANDARD DRAWING(S):

SD-1-69 DATED 6-12-69 GR-1.3 Dated 2-21-92
EXJ-4-87 DATED 1-5-89
GR-1.1 REVISED 5-6-91
GR-1.2 Dated 5-6-91
AND TO SUPPLEMENTAL SPECIFICATION(S):

836 DATED 11-12-85

DESIGN SPECIFICATIONS: THIS STRUCTURE CONFORMS TO "STANDARD SPECIFICATIONS FOR HIGHWAY BRIDGES" ADOPTED BY THE AMERICAN ASSOCIATION OF STATE HIGHWAY AND TRANSPORTATION OFFICIALS, 1989 INCLUDING THE OHIO "SUPPLEMENT" TO THESE SPECIFICATIONS.

DESIGN LOADING - HS20-44 CASE I AND THE ALTERNATE MILITARY LOADING.

DESIGN STRESSES

CONCRETE CLASS S - COMPRESSIVE STRENGTH 4500 P.S.I.
CONCRETE CLASS C - COMPRESSIVE STRENGTH 4000 P.S.I.
REINFORCING STEEL - ASTM A615, A616, A617 - GRADE 60 MINIMUM YIELD STRENGTH 60,000 P.S.I.
STRUCTURAL STEEL - ASTM A572 - YIELD STRENGTH 50,000 P.S.I. - PLATE GIRDERS, BEARING AND TRANSVERSE STIFFENER PLATE.
ASTM A36 - YIELD STRENGTH 36,000 P.S.I. - CROSS FRAMES AND BEAM BEARING DEVICES.

DECK PROTECTION METHOD: EPOXY COATED REINFORCING STEEL, TOP AND BOTTOM MAT, EPOXY SEALER PARAPETS.

MONOLITHIC WEARING SURFACE IS ASSUMED, FOR DESIGN PURPOSES, TO BE 1" THICK.

EMBANKMENT CONSTRUCTION: THE APPROACH EMBANKMENT SHALL BE CONSTRUCTED TO THE LEVEL OF THE ABUTMENT FOOTING AND UP ON A 1.5 TO 1 SLOPE FROM THE HEEL OF THE ABUTMENT FOOTING TO THE SUBGRADE ELEVATION FOR A MINIMUM DISTANCE OF 200 FEET BACK OF THE FOOTING BEFORE ANY PORTIONS OF THE ABUTMENT ARE CONSTRUCTED. BEFORE THE BACKWALL IS CONSTRUCTED THE EMBANKMENT SHALL BE PLACED UP TO THE LEVEL OF THE SUBGRADE WITH A 1:1 SLOPE FROM THE BRIDGE SEAT. PAYMENT FOR BACKFILL AND NEW EMBANKMENT, 503.10, REQUIRED IN EXCESS OF 503, 518 AND 203 QUANTITIES SHALL BE INCLUDED IN THE PRICE BID FOR ITEM 203 EMBANKMENT.

FOUNDATION BEARING PRESSURE: ABUTMENT FOOTINGS, AS DESIGNED, PRODUCE A MAXIMUM BEARING PRESSURE OF 3.2 TONS PER SQ. FT.

UTILITY LINES: ALL EXPENSE INVOLVED IN RELOCATING AND/OR INSTALLING THE AFFECTED UTILITY LINES SHALL BE BORNE BY THE OWNERS. THE CONTRACTOR AND OWNERS ARE REQUESTED TO COOPERATE BY ARRANGING THEIR WORK IN SUCH A MANNER THAT INCONVENIENCE TO EITHER WILL BE HELD TO A MINIMUM.

ABUTMENT WALL TEXTURE: ABUTMENTS AND WINGWALLS SHALL BE TEXTURED BY USING FORM LINERS ATTACHED TO FORMWORK PRIOR TO PLACING CONCRETE. AREAS TO RECEIVE TEXTURED CONCRETE SURFACE SHALL INCLUDE THE FULL LENGTH OF EXPOSED ABUTMENT BREAST WALLS AND WINGWALLS FROM FINISHED GRADE/PAVEMENT UPWARD.

TEXTURED SURFACE SHALL CONSIST OF A 3/4" DEEP FRACTURED FIN TEXTURE. ACCEPTABLE PRODUCTS INCLUDE:

SYMONS CORPORATION
7603 OLD ROCKSIDE ROAD
INDEPENDENCE, OH 44131
(216) 524-5240
PATTERN NO. P/C 30449

GREENSTREAK
3400 TREE COURT IND. BLVD.
ST. LOUIS, MO 63122
(800) 325-9504
PATTERN NO. 373

FITZGERALD CONSTRUCTION SALES
17376-A NEWHOPE AVENUE
FOUNTAIN VALLEY, CA 92708
(800) 227-2755
PATTERN NO. 16950

OR AN APPROVED ALTERNATE. THE CONTRACTOR SHALL SUBMIT A SAMPLE OF THE FINISHED CONCRETE TEXTURED SURFACE FOR APPROVAL.

PAYMENT FOR ALL MATERIALS AND LABOR REQUIRED FOR THE TEXTURED SURFACES SHALL BE INCLUDED WITH ITEM 511 - CLASS C CONCRETE, ABUTMENT WALL.

ITEM SPECIAL - SEALING OF CONCRETE SURFACES (EPOXY): THE FOLLOWING CONCRETE SURFACES SHALL BE SEALED IN ACCORDANCE WITH PROPOSAL NOTE: (THE COLOR OF THE EPOXY SEALER SHALL BE PER FED STD. 595A 13522).

1. ABUTMENT BRIDGE SEATS AND BREAST WALLS EXTENDING DOWNWARD TO FINISH GRADE AND FULL ABUTMENT WIDTH.

2. WINGWALL FACES ABOVE GRADE.

3. PARAPETS TO THE LIMITS SHOWN ON THE PLANS.

ITEM SPECIAL - FIELD PAINTING OF NEW STEEL, SYSTEM IZEU: THIS ITEM SHALL CONSIST OF FURNISHING ALL NECESSARY LABOR, MATERIALS, AND EQUIPMENT TO CLEAN AND PAINT ALL NEW STEEL SURFACES AS HEREIN SPECIFIED WITH THE FOLLOWING COATINGS:

INORGANIC ZINC PRIME COAT (SHOP APPLIED)
EPOXY INTERMEDIATE COAT (FIELD APPLIED)
URETHANE FINISH COAT (FIELD APPLIED)

ALL OF THE REQUIREMENTS CONTAINED IN THE "FIELD PAINTING OF EXISTING STEEL, SYSTEM OZEU" PROPOSAL NOTE DATED MAY 10, 1988 SHALL APPLY, WITH THE FOLLOWING MODIFICATIONS.

MATERIALS

INORGANIC ZINC PRIME COAT IN ACCORDANCE WITH 708.17 SHALL BE SUBSTITUTED FOR ORGANIC ZINC PRIME COAT.

THE COLOR OF URETHANE FINISH COAT SHALL BE "DARK BROWN", FEDERAL SPECIFICATION NUMBER 595A 10080. AN ACTUAL SAMPLE OF THE PAINT PROPOSED FOR USE SHALL BE SUBMITTED BY THE CONTRACTOR FOR APPROVAL. THE INTERMEDIATE COAT COLOR SHALL BE PER FEDERAL STD. 595A 10219.

PREPARATION

PRIOR TO APPLICATION OF THE PRIME COAT, STEEL SHALL BE PREPARED IN ACCORDANCE WITH 514.04.

JOHN DAVID JONES & ASSOC., INC. 4/20
2162 FRONT STREET
CUYAHOGA FALLS, OHIO 44221
ENGINEERS ARCHITECTS PLANNERS

GENERAL NOTES

BRIDGE No. SUM-76-1235
RAMP E-8 OVER RAMP E-6

DESIGNED	DRAWN	TRACED	CHECKED	REVIEWED	DATE	REVISED
R.C.K.	J.P.M.	—	G.F.D.	P.A.K.	12/22/88	

F.H.W.A. REGION	STATE	PROJECT	
5	OHIO		

868
1214

SUMMIT COUNTY
SUM-76-11.57

COUNTERFORT SPACING 2'-6 3/16" | 16'-0" | 16'-0" | 8'-0" | 8'-0" | 16'-0" | 16'-0" | 6'-6 1/4"
42'-6 3/16" | 46'-6 1/4"
19'-11 5/16"
19- D801 @ 3'-10" ±
RAMP E-8, STA. 78+40.33
9'-6" RT., END ABUTMENT
1 SER. 9-905 TO MATCH 903 (TOP)
1 SER. 7-907 TO MATCH 902 (BOTTOM)
STA. 78+64.04
END APPROACH SLAB
℄ EXPANSION JOINT
WINGWALL, FOR DETAIL SEE SHEET 9/20
RETAINING WALL (SEE ROADWAY PLANS)
10'-9 5/8"
6'-3 15/16"
2'-11 11/16"
1'-6"
21°44'51"
4"x4" KEY
SLOPE TO DRAIN
1 SER. 3-712 TO MATCH 702 (BOTTOM)
1 SER. 2-906 TO MATCH 903 (TOP)
RAMP E-8
STA. 78+71.13
RAMP E-8
STA. 78+73.63, 1.06 LT.
6'-11"
17'-6"
(TYP.) 1'-0"
1'-1 1/2" (TYP.)
4'-5 1/2"
8'-10 3/4"
4 3/4"
2'-1 3/4"
1'-6 3/16"
2'-7 1/4"
1'-4"
4 1/4"
SLOPE TO DRAIN
3'-3"
1'-6"
℄ BEARING
25°16'49" (TYP.)
1'-3" 1'-3" (TYP.)
22°58'46" TO LOCAL TANGENT
RAMP E-8
℄ GIRDER ④
℄ GIRDER ③
REFERENCE LINE
℄ GIRDER ②
℄ GIRDER ①
7'-1 3/8"
4'-2 9/16"
FINISH BEAM SEAT LEVEL (TYP.)
SLOPE 3/4" BETWEEN BEAM SEATS (TYP.)
6'-10 3/4"
1'-3"
1'-2 3/8"
1'-10 3/8"
9 1/16"
1'-6"
7'-5 9/16"
8-702 @ 1'-0" (BOTTOM)
9-703 @ 1'-0" (TOP)
2'-8 1/2"
6'-9 5/8"
6'-7 3/8"
4'-4 5/8"
2'-11 3/8"
20'-0" | 13'-1 1/4" | 13'-5" | 13'-3 1/2" | 19'-10 7/8" | 13'-3 7/8"
46'-6 1/4" | 46'-6 1/4"
93'-0 1/2"
RAMP E-6
STA. 78+62.07, 20'-11" LT.
RAMP E-6
STA. 79+53.57, 20'-11 7/8" LT.
N

PLAN

C 5/8 | 3 EQUAL SPACES | 3 EQUAL SPACES | A 5/8
7 SETS OF 1-EX501, 1-EY601 & 1-EY501 @ 1'-6"
3-EG08 @ 1'-0" F.F.
3-EG09 @ 1'-0" N.F.
69 SET OF 1-EG02 & 1-EG03 @ 1'-0"
5 SETS OF 1-EX501, 1-EY601 & 1-EY501 @ ABOUT 1'-4"
8-EG04 @ 1'-0"
4-EG05 @ 1'-0" N.F.
3-EG05 @ 1'-0" F.F.
EL. 1083.42
1'-0"
5-E515 E.F.
5-E516 F.F.
2" ∅ CONDUIT
7-EG05 @ 1'-0" F.F.
EL. 1083.55
EL. 1083.50
EL. 1083.39
EL. 1078.85
2-EG05
EL. 1083.33
EL. 1078.85
EL. 1083.24
EL. 1083.13
EL. 1078.72
EL. 1083.02
1078.53
EL. 1082.89
EL. 1082.74
EL. 1082.84
5-E514 N.F.
EL. 1082.68
EL. 1078.27
EL. 1082.64
EL. 1082.47
EL. 1082.41
10-EG05 @ 1'-0" N.F.
1-E505 F.F.
3-E505
3-E505 @ 1'-0" F.F.
5-E509 @ 1'-0" N.F.
3-E507
1-E507 F.F.
3-E507 @ 1'-0" E.F.
D 5/8
B 5/8
C.J.
6-EG05
5-E510 @ 1'-0" N.F.
E513 @ 1'-0" F.F.
1-710 E.F.
4-E709
4-E707
4-E707
4-E707
7-E508 @ 1'-0" F.F.
83-E504 @ 1'-0"
94-EG07 @ 1'-0" N.F. TO MATCH EG02, EG04, EG05, EG09
76-G01 @ 1'-0" F.F.
10-G06 @ 1'-0" F.F.
7-G01 @ 1'-0" F.F.
1'-0"
94-E705 @ 1'-0" N.F.
94-E706 @ 1'-0" F.F.
E 5/8
28-E512 @ 1'-0"
22-516 @ 1'-0" F.F.
21-E707 @ 1'-0" N.F.
21-E708 @ 1'-0" F.F.
21-E707 @ 1'-0" N.F.
21-E708 @ 1'-0" F.F.
21-E707 @ 1'-0" N.F.
21-E708 @ 1'-0" F.F.
21-E707 @ 1'-0" N.F.
21-E708 @ 1'-0" F.F.
WINGWALL
EXPANSION JOINT
EXPANSION JOINT
RETAINING WALL
8-G10 @ 1'-0" F.F.
11, 6" ∅ WEEP HOLE SPACES @ 8'-0"
94-704 DOWELS @ 1'-0" F.F.
1 SER. 4-711 @ 1'-0" (TOP)
1 SER. 4-904 @ 1'-0" (BOTTOM)
1'-0"
90-701 @ 1'-0" (TOP)
90-901 @ 1'-0" (BOTTOM)
9-703 & 11-903 (TYP. 3 PLACES)
11-702 & 6-902 (TYP. 3 PLACES)
BOTTOM FOOTING EL. 1053.00
8-G11 DOWELS TO MATCH G10 F.F.
FOOTING KEY
2'-9", #7 TOP
6'-0", #9 TOP
2'-0", #7 BOTTOM
4'-3", #9 BOTTOM

ELEVATION

JOHN DAVID JONES & ASSOC., INC.
2162 FRONT STREET
CUYAHOGA FALLS, OHIO 44221
ENGINEERS ARCHITECTS PLANNERS

5/20

REAR ABUTMENT

BRIDGE NO. SUM-76-1235
RAMP E-8 OVER RAMP E-6

DESIGNED	DRAWN	TRACED	CHECKED	REVIEWED	DATE	REVISED
GD	JS	–	BH	PAK	3/8/90	

330331

F.H.W.A. REGION	STATE	PROJECT	
5	OHIO		

869
1214

SUMMIT COUNTY
SUM-76-11.57

46'-5 5/8" | 50'-3 1/2"

COUNTERFORT SPACING: 3'-1 5/8" | 17'-4" | 17'-4" | 8'-8" | 8'-8" | 17'-4" | 17'-4" | 6'-11 1/2"

RAMP E-8, STA. 80+16.34
21'-6" LT., END ABUTMENT

RETAINING WALL (SEE ROADWAY PLANS)

1 SER. 9-905 TO MATCH 903 (TOP)
1 SER. 7-907 TO MATCH 902 (BOTTOM)

19-D801 @ 4'-2"

℄ EXPANSION JOINT

11'-9 3/16" | 1'-1½" (TYP.) | 5'-5 5/8" | 9'-2 1/4" | 5 1/8"

(TYP.) 1'-0"

WINGWALL, FOR DETAILS, SEE SHEET 9/20

1 SER. 3-712 TO MATCH 702 (BOTTOM)
1 SER. 2-906 TO MATCH 903 (TOP)

BEGIN APPROACH SLAB
STA. 79+59.30

STA. 79+51.73

SLOPE TO DRAIN

5'-11 1/2" | 10'-7 3/4" | 5'-1 5/8" | 3'-9" | 1'-5 1/4" | 2'-3 5/8" | 3'-2 1/4" | 1'-6" | 21°00'24" | 1'-8" | 2 3/4" | 1'-6" | 7'-6 3/4"

1'-10 3/16" | 1'-3" | 1'-2 3/16" | 4"x4" KEY | 8'-0 1/4" | RAMP E-6 STA. 80+37.96, 8'-0" RT.

℄ BEARING | FINISH BEAM SEAT LEVEL (TYP.) | 9-703 @ 1'-0" (TOP) | 8-702 @ 1'-0" (BOTTOM)

6'-11" | 17'-6" | 6" | 4'-9" | 1'-6" | 1'-3" | 2'-3" | 5'-10" | (TYP.) 1'-3" 1'-3"

℄ GIRDER ① | ℄ GIRDER ② | ℄ GIRDER ③ | ℄ GIRDER ④

21°18'31" (TYP.) | SLOPE 3/4" BETWEEN BRIDGE SEATS (TYP.)

21°18'31" | ℄ RAMP E-8 | 4'-9 3/4" | 8'-3 1/16"

1'-10" | 1'-8" | 2'-2 5/8" | 1'-6 5/8" | 3'-4" | 1'-4" | 4" | 3'-3" | 1'-6"

1'-0 7/8"

RAMP E-6 STA. 79+36.65, 8'-0" RT.

18'-9 13/16"

5'-0 1/2"

P.T. RAMP E-8 STA. 79+28.65

GIRDER SPACING: 16'-11 15/16" | 23'-4 3/4" | 9'-10 13/16" | 13'-5 7/8" | 23'-4 3/4" | 13'-4 7/8"

50'-3 1/2" | 50'-3 1/2"

100'-7"

PLAN

C 6 8

3-E608 @ 1'-0" F.F.
3-E609 @ 1'-0" N.F.

5-E605 @ 1'-0" N.F.
4-E605 @ 1'-0" F.F.

EL. 1080.43
EL. 1080.38

5-E515 E.F.

3 EQUAL SPACES | 3 EQUAL SPACES

6 SETS OF 1-EX501, 1-EY601 & 1-EY501 @ ABOUT 1'-5"

74 SETS OF 1-EG02 & 1-EG03 @ 1'-0"

EL. 1080.59 | EL. 1080.62 | EL. 1076.37 | EL. 1080.94 | EL. 1081.21 | EL. 1076.86 | EL. 1081.45 | EL. 1081.63 | EL. 1077.24 | EL. 1081.77 | EL. 1081.89

1-E507 F.F.
3-E507
3-E507 @ 1'-0" E.F.
1-E710 E.F.
4-E709
4-E707
91-E504 @ 1'-0"
1-E505 F.F.
3-E505
3-E505 @ 1'-0" E.F.
4-E707
1-E505 F.F.
1-E506 N.F. & 2-E505 F.F.
3-E506 @ 1'-0" N.F.
3-E505 @ 1'-0" F.F.

A 6 8

6 SETS OF 1-EX501, 1-EY601 & 1-EY501 @ ABOUT 1'-5"
9-E604 @ 1'-0"
10-E605 @ 1'-0" N.F.
7-E605 @ 1'-1"± F.F.
2" ∅ CONDUIT
5-E516 F.F.
5-E514 N.F.
EL. 1082.07
EL. 1077.49
EL. 1081.95
EL. 1082.08
3-E605 @ 1'-0" END
5-E509 @ 1'-0" N.F.
B 6 8
C.J.
4-E707
8-E508 @ 1'-0" F.F.

G-E605
D 6 8
C.J.
5-E510 @ 1'-0" N.F.
5-E513 @ 1'-0" F.F.

25-E512 @ 1'-0"

103-E607 @ 1'-0" N.F. TO MATCH EG05, EG09, EG04 & EG02
83-601 @ 1'-0" F.F.
10-606 @ 1'-0" F.F.
7-601 @ 1'-0" F.F.
1'-0"

RETAINING WALL
E 6 8

20-516 @ 1'-0" F.F.
3'-3"
8-610 @ 1'-0" F.F.

51-E705 @ 1'-0" N.F.
51-E706 @ 1'-0" F.F.
19-E707 @ 1'-0" N.F.
19-708 @ 1'-0" F.F.
19-E707 @ 1'-0" N.F.
19-708 @ 1'-0" F.F.
50-E713 @ 1'-0" N.F.
50-706 @ 1'-0" F.F.
20-E707 @ 1'-0" N.F.
20-708 @ 1'-0" F.F.
20-E707 @ 1'-0" N.F.
20-708 @ 1'-0" F.F.

WINGWALL
EXPANSION JOINT
EXPANSION JOINT

11, 6" ∅ WEEP HOLE SPACES @ 8'-8"
101-704 DOWELS @ 1'-0" F.F.

1 SER. 4-711 @ 1'-0" (TOP)
1 SER. 4-904 @ 1'-0" (BOTTOM)
BOTTOM/FOOTING EL. 1053.00

1'-0"
97-701 @ 1'-0" (TOP)
97-901 @ 1'-0" (BOTTOM)
9-703 & 11-903 (TYP. 3 PLACES)
11-702 & 7-902 (TYP. 3 PLACES)
8-611 DOWELS TO MATCH 610 F.F.
2'-9" #7 TOP
6'-0" #9 TOP
2'-0", #7 BOTTOM
4'-3", #9 BOTTOM
FOOTING KEY

ELEVATION

JOHN DAVID JONES & ASSOC., INC.
2162 FRONT STREET
CUYAHOGA FALLS, OHIO 44221
ENGINEERS ARCHITECTS PLANNERS

6/20

FORWARD ABUTMENT

BRIDGE NO. SUM-76-1235
RAMP E-8 OVER RAMP E-6

DESIGNED	DRAWN	TRACED	CHECKED	REVIEWED	DATE	REVISED
GD	JS	–	BH	PAK	3/8/90	

SSD231

F.H.W.A. REGION	STATE	REGION	
5	OHIO		

870
1214

SUMMIT COUNTY
SUM-76-11.57

NOTE: 1" PEJF SHALL EXTEND CONTINUOUSLY FROM TOP OF FOOTING TO TOP OF BACKWALL . WATERSTOP AND KEY SHALL EXTEND FROM TOP OF FOOTING TO APPROACH SEAT TO FORM A CONTINUOUS WATERPROOF SEAL .

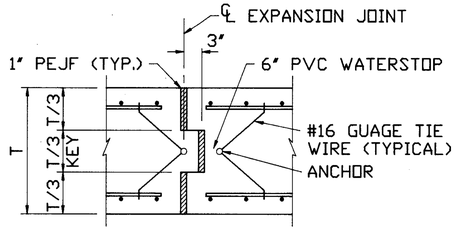

BACKWALL

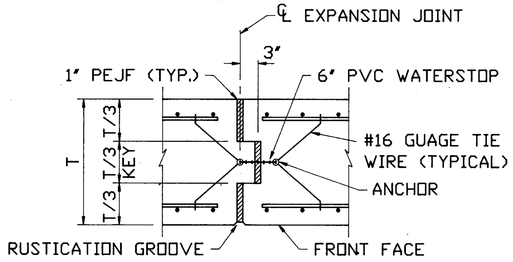

BREAST WALL

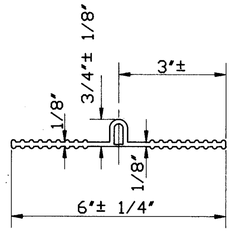

WATERSTOP DETAIL

NOTE: SHEAR KEY SHALL EXTEND CONTINUOUSLY FROM BOTTOM OF HIGHER FOOTING TO TOP OF WALL . 1" PEJF AND WATERSTOP SHALL EXTEND FROM TOP OF HIGHER FOOTING TO 1'-0" BELOW TOP OF WALL TO FORM A CONTINUOUS WATERPROOF SEAL.

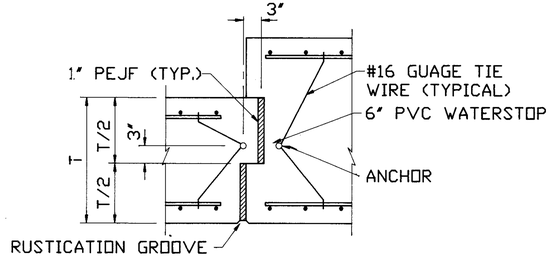

WINGWALL ABUTMENT

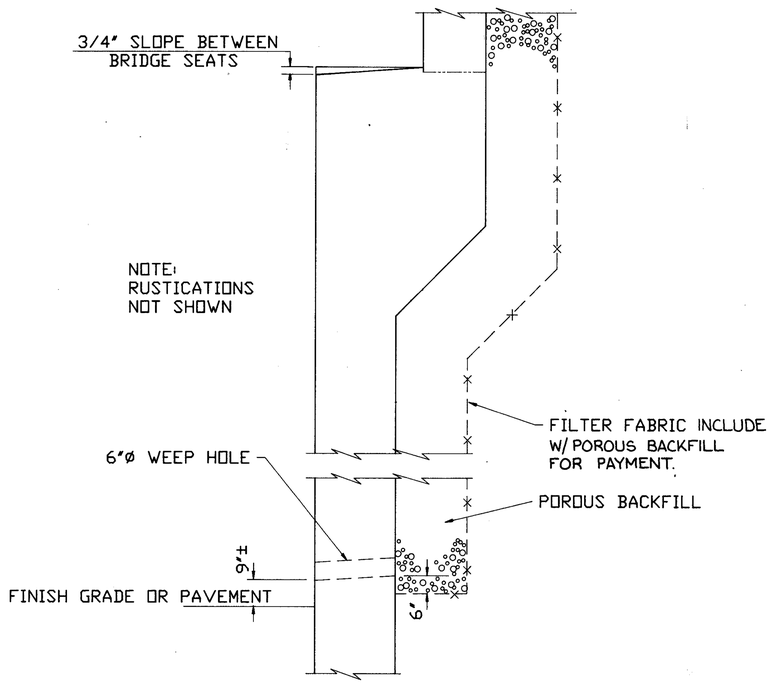

TYPICAL DRAINAGE DETAIL

EXPANSION JOINT DETAILS

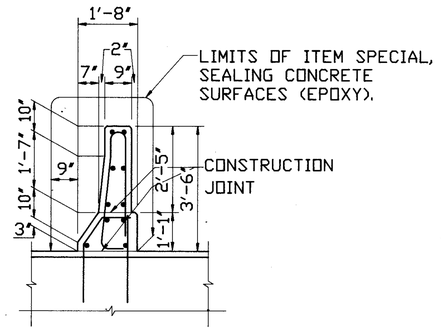

1/8 DETAIL

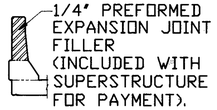

SECTION THROUGH DEFLECTION JOINT

NOTES:
PREFORMED EXPANSION JOINT FILLER IN PARAPET DEFLECTION JOINTS MAY BE EITHER 1/4" GRAY SPONGE RUBBER OR 1/4" GRAY CELLULAR POLYVINYL CHLORIDE (PVC) SPONGE. FILLER SHALL CONFORM TO AASHTO M-153, TYPE 1, EXCEPT DENSITY OF PVC SPONGE SHALL NOT BE LESS THAN 20 LBS. PER CU. FT..
CONCRETE PARAPETS ABOVE UPPER CONSTRUCTION JOINT SHALL BE PLACED IN ALTERNATE SECTIONS BY THE USE OF BULKHEADS AND AFTER PLACEMENT OF EXPANSION JOINT FILLER. EXPOSED EDGES OF THE FILLER SHALL BE FLUSH WITH THE SURFACE OF CONCRETE AND SHALL BE FREE OF MORTAR.

GENERAL NOTES

DESIGN SPECIFICATIONS: "STANDARD SPECIFICATIONS FOR HIGHWAY BRIDGES" ADOPTED BY AASHTO, 1989, INCLUDING THE OHIO "SUPPLEMENT" TO THESE SPECIFICATIONS.

DESIGN DATA: CONCRETE CLASS S fc=4500 P.S.I., fc=1500 P.S.I. REINFORCING STEEL ASTM A615, A616, A617 GRADE 60 fs=24,000 P.S.I.

PREFORMED EXPANSION JOINT FILLER IN THE PARAPET DEFLECTION JOINTS MAY BE EITHER 1/4" GRAY SPONGE RUBBER OR 1/4" FILLER CELLULAR POLYVINYL CHLORIDE (PVC) SPONGE. SPONGE RUBBER FILLER SHALL CONFORM TO AASHTO M-153, TYPE 1. DENSITY OF PVC SPONGE NOT LESS THAN 20 LBS. PER CU. FT.

DEFLECTION JOINTS SHALL BE SPACED AT 16'-0" CENTERS, MAX., EXCEPT THAT FOR CONTINUOUS STRUCTURES THE PANELS SHALL BE FURTHER SUBDIVIDED IN THE NEGATIVE MOMENT REGION (OVER THE PIERS) INTO LENGTHS OR NOT LESS THAN 5'-0" NOR MORE THAN 7'-6". REINFORCING BARS SHALL NOT EXTEND THROUGH DEFLECTION JOINTS.

CONCRETE PARAPETS ABOVE UPPER CONSTRUCTION JOINT SHALL BE PLACED IN ALTERNATE SECTIONS BY THE USE OF BULKHEADS. CLOSING SECTION SHALL BE PLACED AFTER REMOVAL OF BULKHEADS AND AFTER PLACEMENT OF EXPANSION JOINT FILLER. EXPOSED EDGES OF THE FILLER SHALL BE FLUSH WITH THE SURFACE ON CONCRETE AND SHALL BE FREE OF MORTAR.

ALTERNATE METHODS OF CONSTRUCTION PROPOSED BY THE CONTRACTOR MAY BE SUBMITTED FOR APPROVAL BY THE ENGINEER. ALL ALTERNATE METHODS OF CONSTRUCTION SHALL BE APPROVED IN WRITING BY THE ENGINEER BEFORE CONSTRUCTION BY THAT METHOD IS INITIATED.

NOTES:

1. PVC WATERSTOP SHALL BE SPLICED BY MITERING AND HEAT FUSING ENDS TO FORM A WATERTIGHT JOINT . WATERSTOP SHALL BE CAPABLE OF ACCOMMODATING 1 1/2" OF JOINT MOVEMENT .

2. WATERSTOP INSTALLATION PROCEDURE
FOR THE FIRST POUR, THE WATERSTOP SHOULD BE HELD SECURELY IN PLACE BY THE USE OF SPLIT FORMS AND TIE-WIRES. FOR THE SECOND POUR, SECURE THE FREE END OF THE WATERSTOP IN PROPER POSITION WITH TIE-WIRES. ALTERNATE METHODS, AS APPROVED BY THE ENGINEER, MAY BE USED TO INSURE THE CORRECT POSITIONING OF THE WATERSTOP.

ABBREVIATIONS

TYP.	TYPICAL
T	THICKNESS
PEJF	PREFORMED EXPANSION JOINT FILLER

FOR ADDITIONAL NOTES SEE SHEET 8/20 .

JOHN DAVID JONES & ASSOC., INC. 7/20
2162 FRONT STREET
CUYAHOGA FALLS, OHIO 44221
ENGINEERS ARCHITECTS PLANNERS

ABUTMENT SECTIONS & DETAILS

BRIDGE NO. SUM-76-1235
RAMP E-8 OVER RAMP E-6

DESIGNED	DRAWN	TRACED	CHECKED	REVIEWED	DATE	REVISED
JRS	RWM	-	BH	PAK	12/22/88	

F.H.W.A. REGION	STATE	REGION	
5	OHIO		

8 7/1214

SUMMIT COUNTY
SUM-76-11.57

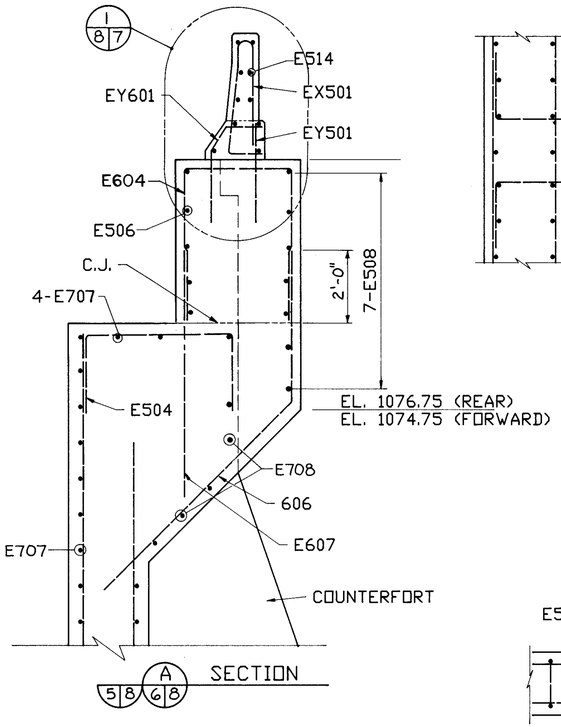

A 5|8 6|8 SECTION

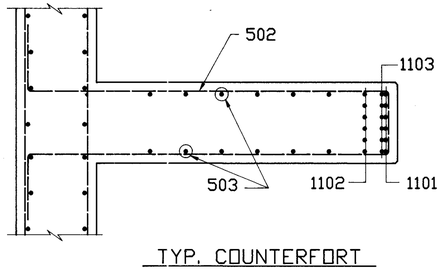

TYP. COUNTERFORT

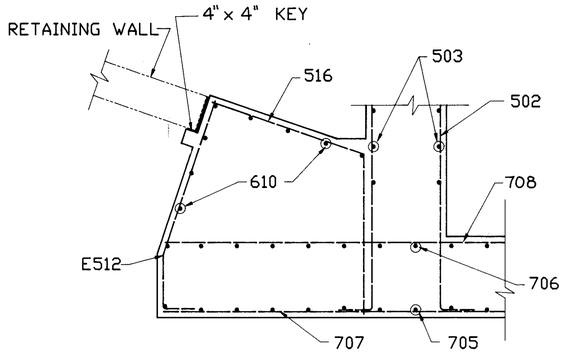

E 5|8 6|8 SECTION

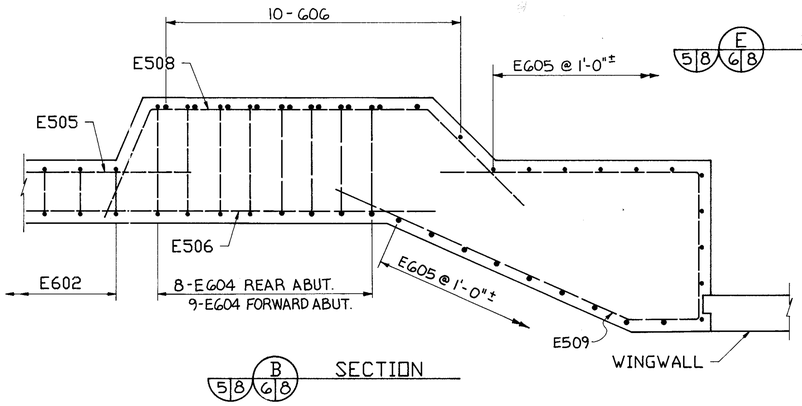

B 5|8 6|8 SECTION

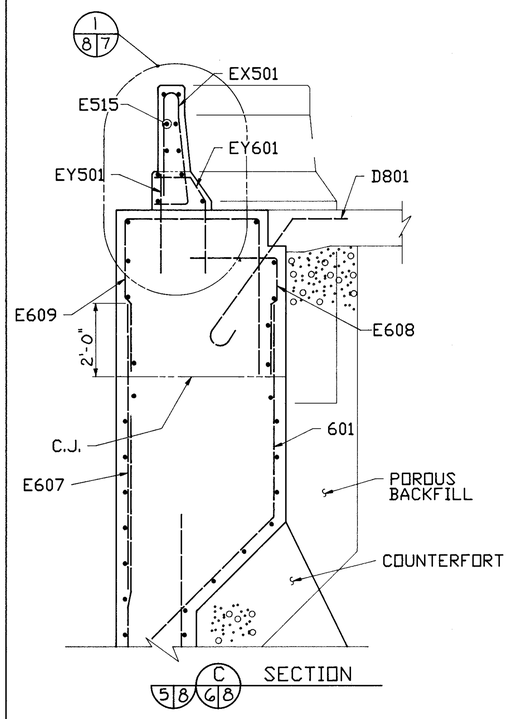

C 5|8 6|8 SECTION

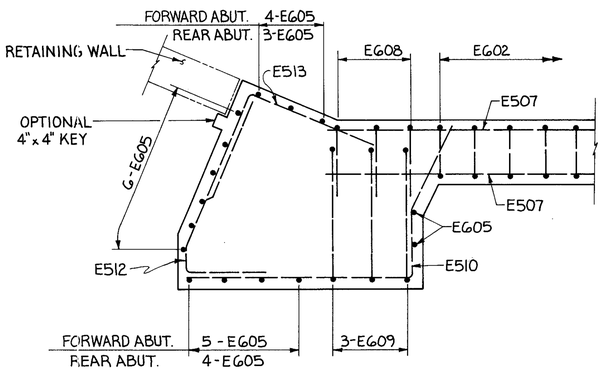

D 5|8 6|8 SECTION

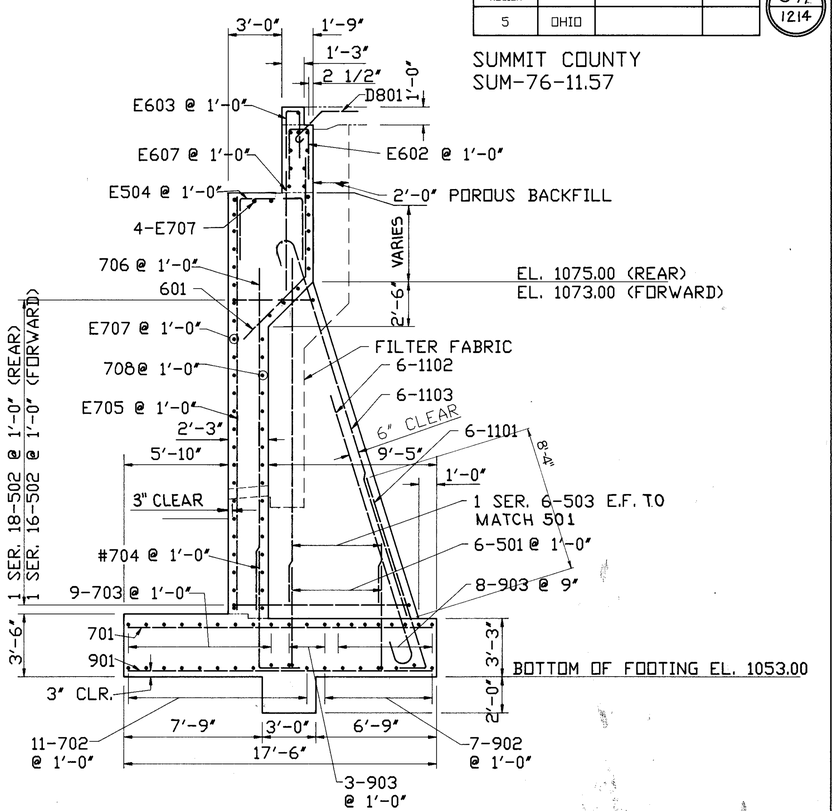

ABUTMENT TYPICAL SECTION

NOTES

1. POROUS BACKFILL , 2 FT. THICK , SHALL EXTEND UP TO THE PLANE OF THE SUBGRADE AND LATERALLY TO THE ENDS OF THE WING WALLS . PAYMENT FOR FILTER FABRIC CONFORMING TO CMS 712.09 TYPE A , B , OR C SHALL BE INCLUDED WITH ITEM 518 .
2. BRIDGE SEAT REINFORCING: REINFORCING STEEL IN THE VICINITY OF THE BRIDGE SEAT SHALL BE ACCURATELY PLACED TO AVOID INTERFERENCE WITH THE DRILLING OF BEARING ANCHOR HOLES OR THE PRE-SETTING OF BEARING ANCHORS .
3. BACKWALL CONCRETE: IN ADDITION TO THE PROVISION OF 511.08 , BACKWALL CONCRETE ABOVE THE OPTIONAL CONSTRUCTION JOINT AT THE APPROACH SLAB SEAT SHALL NOT BE PLACED UNTIL AFTER THE DECK CONCRETE IN THE SPAN ADJACENT TO THE ABUTMENT HAS BEEN PLACED .
4. PREFIX ALL REINFORCING BAR MARKS "AR" FOR REAR ABUTMENT , "WR" FOR REAR WINGWALL , "AF" FOR FORWARD ABUTMENT AND "WF" FOR FORWARD WINGWALL .
5. FOR DETAILS OF PARAPETS SEE SHEET 7/20 .
6. FOR DETAILS OF WINGWALLS SEE SHEET 9/20 .
7. FOR SURFACE-MOUNT LIGHT FIXTURE DETAILS SEE LIGHTING PLANS .

ABBREVIATIONS

N.F. NEAR FACE
F.F. FAR FACE
E.F. EACH FACE
TYP. TYPICAL
EL. ELEVATION
C.J. CONSTRUCTION JOINT
SER. SERIES

JOHN DAVID JONES & ASSOC., INC. 8/20
2162 FRONT STREET
CUYAHOGA FALLS, OHIO 44221
ENGINEERS ARCHITECTS PLANNERS

ABUTMENT SECTIONS & DETAILS

BRIDGE NO. SUM-76-1235
RAMP E-8 OVER RAMP E-6

DESIGNED	DRAWN	TRACED	CHECKED	REVIEWED	DATE	REVISED
JRS	RWM	RCK	BH	PAK	12/22/88	

FHWA REG.	STATE	PROJECT	
5	OHIO		

872
12.14

SUMMIT COUNTY
SUM - 76 - 11.57

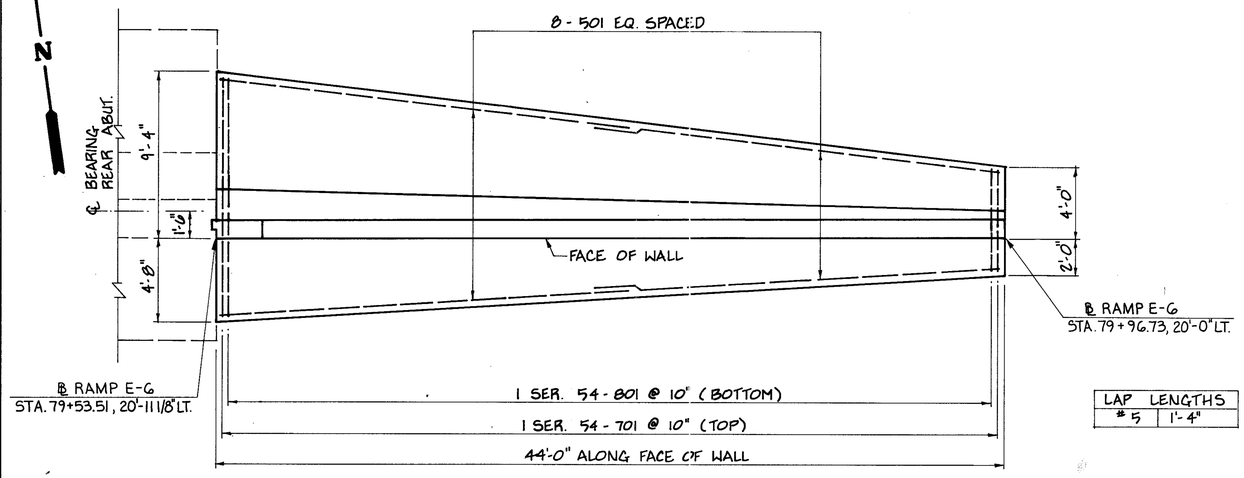

LAP LENGTHS	
#5	1'-4"

PLAN
LEFT REAR WINGWALL

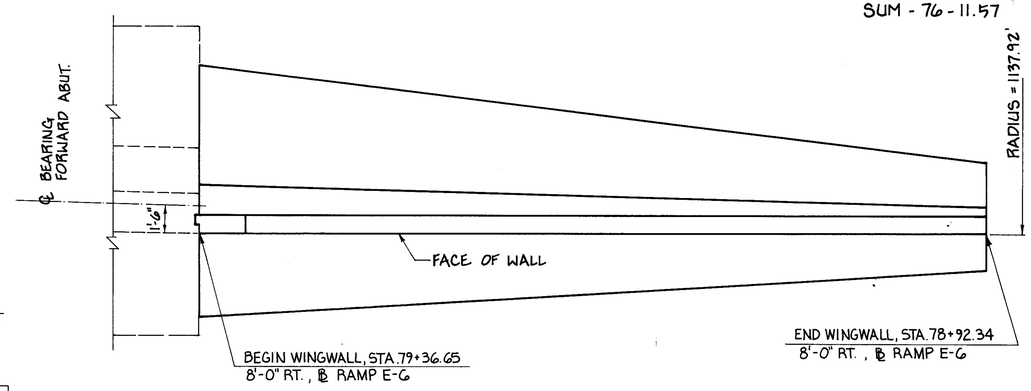

PLAN
RIGHT FORWARD WINGWALL

FOR DIMENSIONS AND REINFORCING NOT SHOWN, SEE LEFT REAR WINGWALL PLAN, SECTION AND ELEVATION.

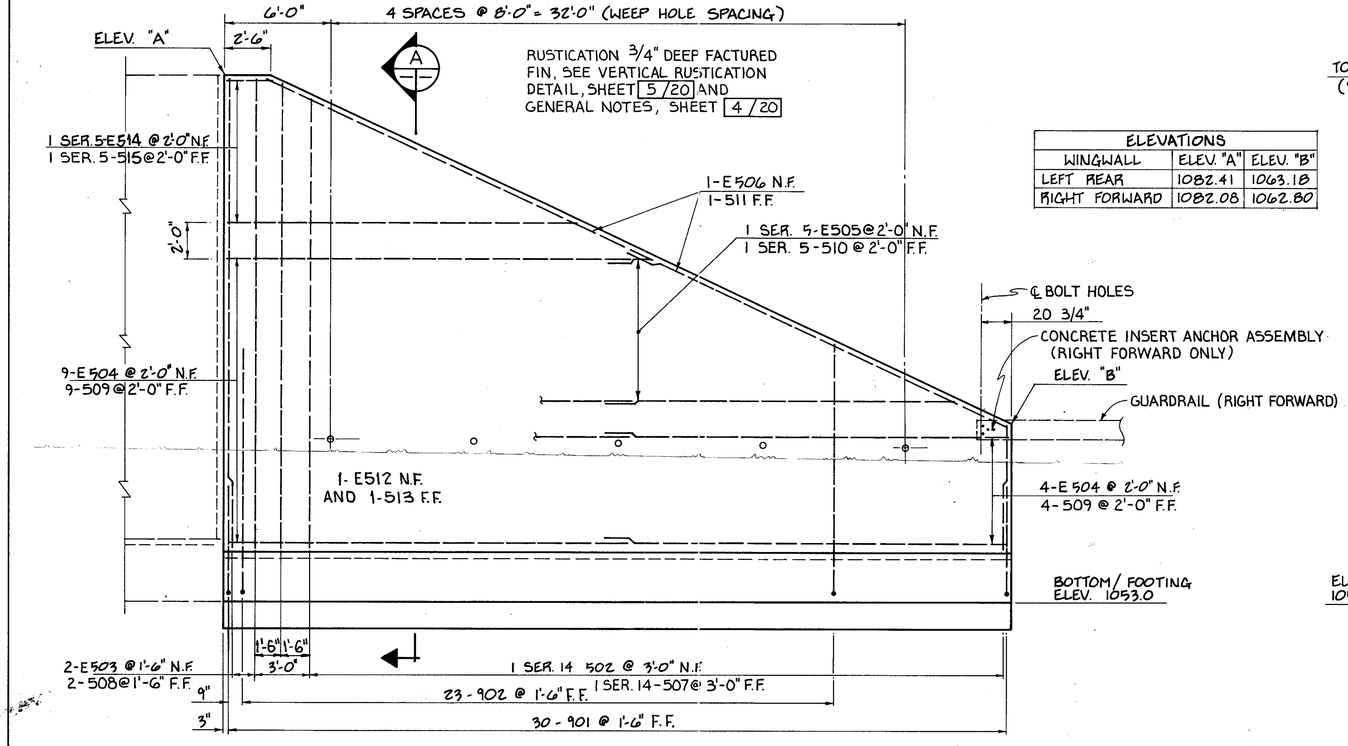

ELEVATION

ELEVATIONS		
WINGWALL	ELEV. "A"	ELEV. "B"
LEFT REAR	1082.41	1063.18
RIGHT FORWARD	1082.08	1062.80

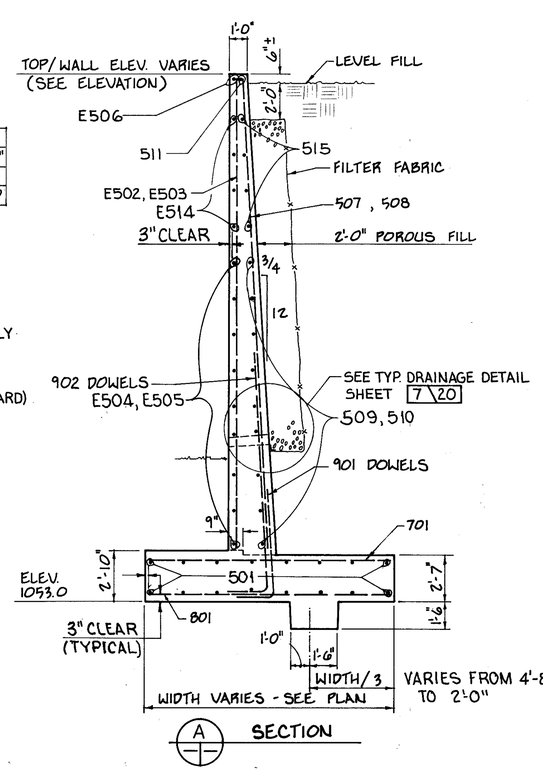

NOTES

1. KEY FOR FOOTING SHALL BE PLACED IN A CAREFULLY MADE TRENCH AGAINST UNDISTURBED EARTH.
2. POROUS BACKFILL, 2 FT. THICK, SHALL EXTEND LATERALLY TO THE ENDS OF THE WING WALLS. PAYMENT FOR FILTER FABRIC CONFORMING TO CMS 712.09 TYPE A, B OR C SHALL BE INCLUDED WITH ITEM 518.
3. PREFIX ALL BAR MARKS "WF" FOR RIGHT FORWARD WINGWALL AND "WR" FOR LEFT REAR WINGWALL, RESPECTIVELY.
4. CONCRETE INSERT ANCHOR ASSEMBLY, AS SHOWN ON STD. DWG. GR-1, SHALL BE PROVIDED AT THE END OF THE RIGHT FORWARD WINGWALL FOR ATTACHMENT OF GUARDRAIL TERMINAL CONNECTORS AND INCLUDED WITH ABUTMENT CONCRETE FOR PAYMENT.

ABBREVIATIONS

ELEV.	ELEVATION	F.F.	FAR FACE
EQ.	EQUALLY	N.F.	NEAR FACE
SER.	SERIES		
TYP.	TYPICAL		
ABUT.	ABUTMENT		
E.F.	EACH FACE		

JOHN DAVID JONES & ASSOC., INC. 9/20
2162 FRONT STREET
CUYAHOGA FALLS, OHIO 44221
ENGINEERS ARCHITECTS PLANNERS

WINGWALL PLANS & ELEVATION

BRIDGE No. SUM-76-1235
RAMP E-8 OVER RAMP E-6

DESIGNED	DRAWN	TRACED	CHECKED	REVIEWED	DATE	REVISED
JRS	JPS	—	BH	PAK	12/22/88	

36005

F.H.W.A. REGION	STATE	PROJECT	
5	OHIO		

873
12.14

SUMMIT COUNTY
SUM-76-11.57

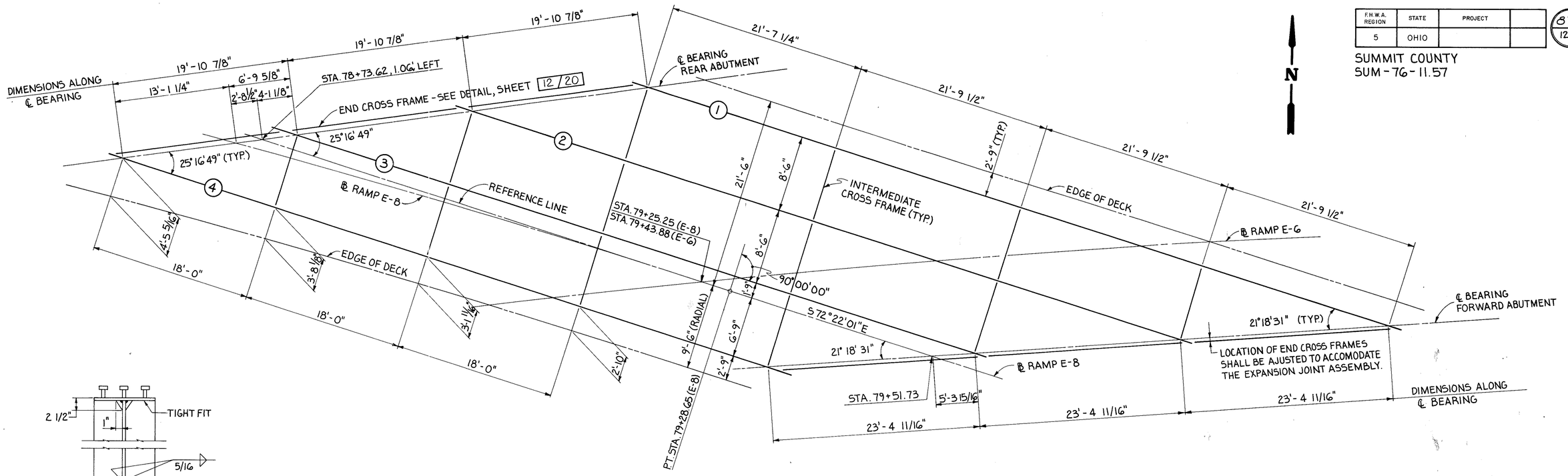

FRAMING PLAN

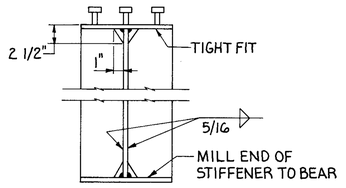

BEARING STIFFENER DETAIL

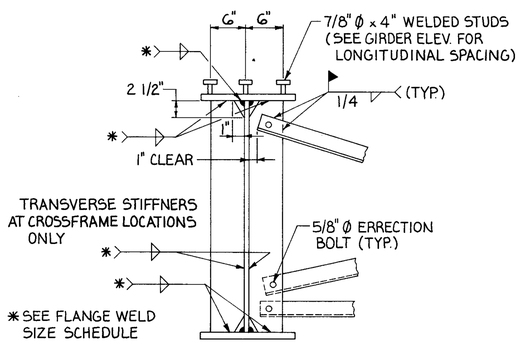

TYPICAL GIRDER SECTION

FLANGE WELD SIZE SCHEDULE	
THICKNESS OF THICKER PLATE (INCHES)	MINIMUM SIZE OF FILLET WELD (INCHES)
TO 3/4 INCLUSIVE	1/4
OVER 3/4 TO 1 1/2	5/16
OVER 1 1/2 TO 2 1/4	3/8

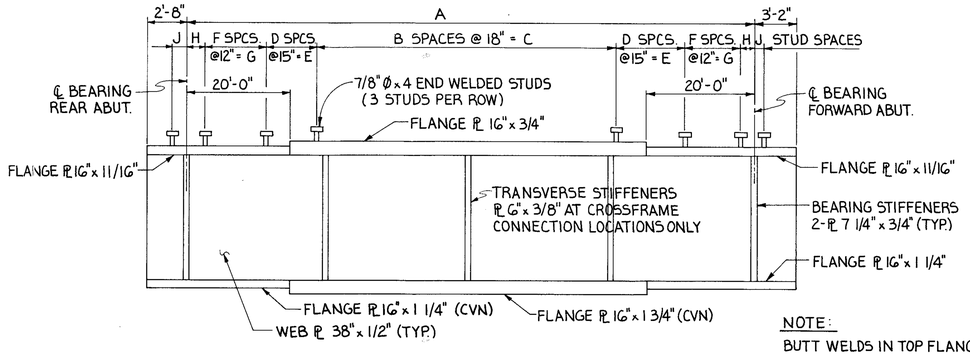

GIRDER ELEVATION
GIRDER 1 THRU 4 SIMILAR
(ASTM A572)

NOTE:
BUTT WELDS IN TOP FLANGE SUBJECT TO COMPRESSIVE STRESSES ONLY. ALL FLANGE BUTT WELDS SHALL BE COMPLETE PENETRATION.

GIRDER DIMENSION									
GIRDER	A	B	C	D	E	F	G	H	J
1	86'-11 3/4"	28	42'-0"	7	8'-9"	13	13'-0"	8 7/8"	3 1/8"
2	83'-2 1/4"	27	40'-6"	7	8'-9"	12	12'-0"	7 1/8"	4 7/8"
3	79'-4 3/4"	25	37'-6"	7	8'-9"	12	12'-0"	2 3/8"	9 5/8"
4	75'-7 1/4"	24	36'-0"	7	8'-9"	11	11'-0"	0 5/8"	11 3/8"

NOTES

1. STEEL NOTCH TOUGHNESS REQUIREMENT (CHARPY V-NOTCH): WHERE A SHAPE OR PLATE IS DESIGNATED (CVN) THE MATERIAL SHALL MEET SPECIFIED MINIMUM NOTCH TOUGHNESS REQUIREMENTS AS SPECIFIED IN 711.01 OF CMS.

2. ERECTION BOLTS: HOLE DIAMETER IN THE CROSSFRAMES AND GIRDER STIFFENERS SHALL BE RESPECTIVELY 1/16" AND 1/4" LARGER THAN THE DIAMETER OF THE ERECTION BOLTS. UNLESS REPLACED BY PERMANENT HIGH STRENGTH BOLTS, ERECTION BOLTS SHALL REMAIN IN PLACE. LOCK WASHERS SHALL BE FURNISHED FOR OTHER THAN FULLY TORQUED HIGH STRENGTH ERECTION BOLTS. BOLTS SHALL BE FURNISHED AS PART OF ITEM 513.

   IN LIEU OF ERECTION BOLTS AND AT THE OPTION OF THE CONTRACTOR, ALTERNATIVE MEANS OF TEMPORARY BRACING MAY BE USED SUBJECT TO THE APPROVAL OF THE DIRECTOR (501.06).

3. WELDED ATTACHMENT OF SUPPORTS FOR CONCRETE DECK FINISHING MACHINE MAY BE MADE TO THE FASCIA STRINGER TOP (COMPRESSION) FLANGES. ATTACHMENTS SHALL NOT BE MADE TO BOTTOM (TENSION) FLANGES. FILLET WELDS TO COMPRESSION FLANGES SHALL BE NOT CLOSER THAN 1" FROM EDGE OF FLANGE, BE NOT MORE THAN 2" LONG, AND BE NOT SMALLER THAN THE MINIMUM SIZE REQUIRED BY AASHTO.

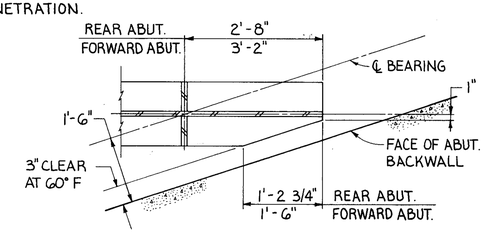

FLANGE DETAIL

JOHN DAVID JONES & ASSOC., INC.
2162 FRONT STREET
CUYAHOGA FALLS, OHIO 44221
ENGINEERS ARCHITECTS PLANNERS
10/20

FRAMING PLAN

BRIDGE NO. SUM-76-1235
RAMP E-8 OVER RAMP E-6

DESIGNED	DRAWN	TRACED	CHECKED	REVIEWED	DATE	REVISED
GD	JS	—	BH	PAK	2/15/90	

639281

F.H.W.A. REGION	STATE	REGION	
5	OHIO		

874
1214

SUMMIT COUNTY
SUM-76-11.57

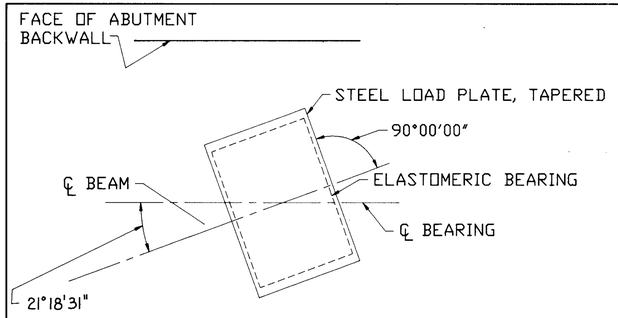

EXPANSION BEARING DETAIL
FORWARD ABUTMENT

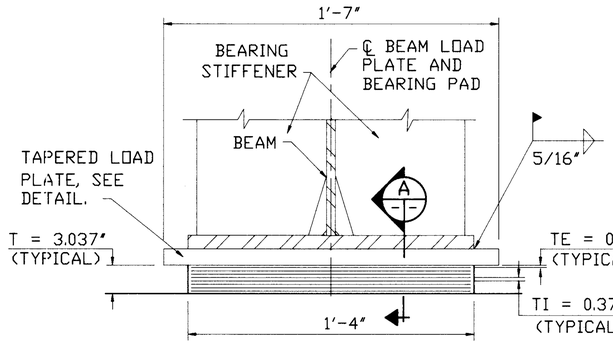

EXPANSION BEARING
N = 7 (TYPICAL)

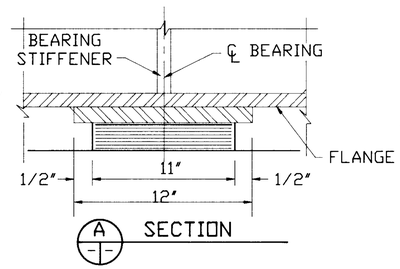

SECTION

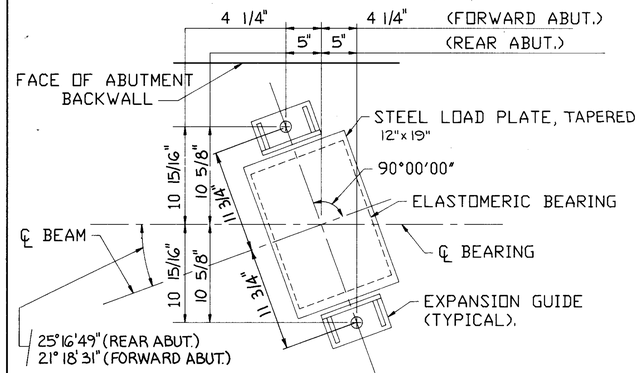

EXPANSION GUIDE BEARING DETAIL

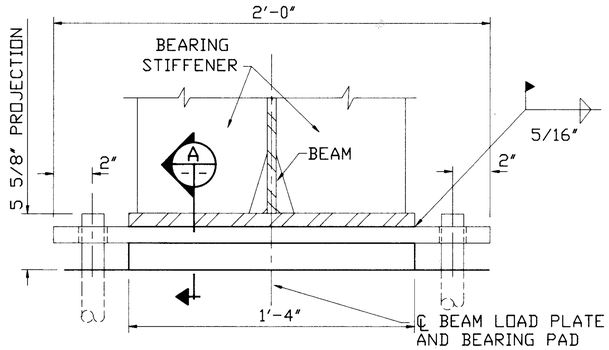

FIXED BEARING

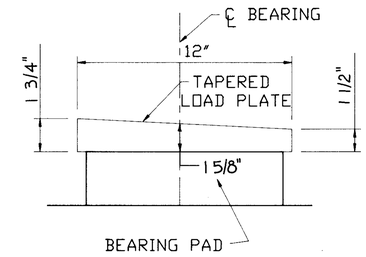

LOAD PLATE DETAIL

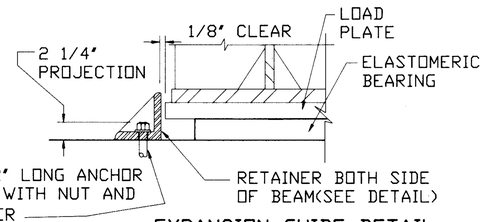

EXPANSION GUIDE DETAIL
APPLIES ONLY TO LOCATIONS DENOTED ON FRAMING PLAN

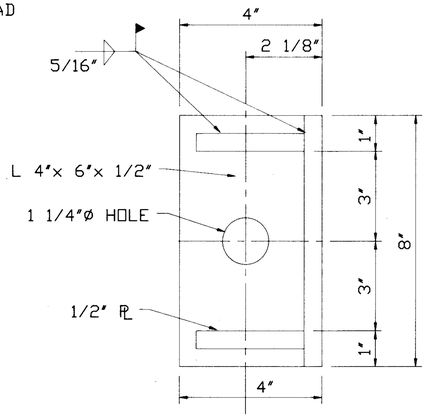

RETAINER DETAIL

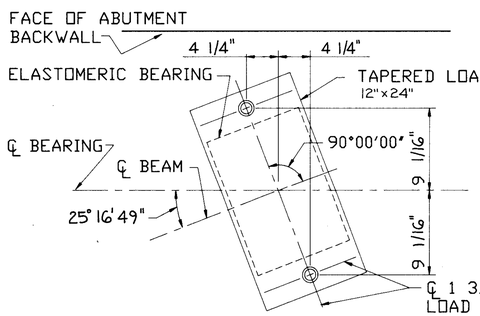

FIXED BEARING DETAIL
REAR ABUTMENT

℄ 1 3/4"ø HOLE IN STEEL LOAD PLATE FOR 1 1/4"ø x 1'-7" ANCHOR ROD. GALVANIZED ACCORDING TO 711.02. INSTALL ANCHOR ROD ACCORDING TO 510. INCLUDE DOWEL HOLES AND ANCHOR RODS WITH ITEM 516 FOR PAYMENT.

ELASTOMERIC BEARINGS

GIRDER	FORWARD ABUTMENT	REAR ABUTMENT
1	EXPANSION W/GUIDES	EXPANSION
2	FIXED	EXPANSION W/GUIDES
3	FIXED	EXPANSION W/GUIDES
4	EXPANSION W/GUIDES	EXPANSION

BEARING NOTES

TOLERANCES:

INDIVIDUAL ELASTOMER LAYER THICKNESS: ±20 % OF DESIGN VALUE (NOT TO EXCEED ±1/8")

PLAN DIMENSIONS	-0, +1/4"
DESIGN THICKNESS ≤ 1 1/4"	-0, +1/8"
DESIGN THICKNESS > 1 1/4"	-0, +1/4"
EDGE COVER OF EMBEDDED LAMINATES	-0, +1/8"

DUROMETER: THE ELASTOMER SHALL BE 50 DUROMETER.

LOAD PLATE: THE STEEL LOAD PLATE SHALL BE BONDED BY VULCANIZATION TO THE ELASTOMER DURING THE MOLDING PROCESS.

WELDING OF THE LOAD PLATE TO THE SUPERSTRUCTURE SHALL BE CONTROLLED SO THAT THE PLATE TEMPERATURE AT THE ELASTOMER BONDED SURFACE SHALL NOY EXCEED 400 DEGREES F. AS DETERMINED BY THE USE OF PYROMETRIC STICKS OR OTHER TEMPERATURE MONITORING DEVICES.

BEARING ANCHOR RODS: AT THE OPTION OF THE CONTRACTOR, THE BEARING ANCHOR RODS (OR FORMED HOLES), LOCATED AND SUPPORTED BY TEMPLATES, MAY BE CAST-IN-PLACE.

BRIDGE SEAT REINFORCING: REINFORCING STEEL IN THE VICINITY OF THE BRIDGE SEAT SHALL BE ACCURATELY PLACED TO AVOID INTERFERENCE WITH THE DRILLING OF BEARING ANCOR HOLES OR PRE-SETTING OF BEARING ANCHORS. BEARING SEATS SHALL BE LEVEL.

BEARING REPOSITIONING: IF DECK CONCRETE IS PLACED AT AN AMBIENT TEMPERATURE HIGHER THAN 80 DEGREES F OR LOWER THAN 40 DEGREES F AND THE BEARING SHEAR DEFLECTION EXCEEDS ONE-SIXTH OF THE BEARING HEIGHT AT 60 DEGREES ±10 DEGREES F, THE BEAMS OR GIRDERS SHALL BE RAISED TO ALLOW THE BEARINGS TO RETURN TO THEIR UNDEFORMED SHAPE AT 60 DEGREES ± 10 DEGREES F.

BASIS OF PAYMENT: THE UNIT BID PRICE SHALL INCLUDE ALL MATERIALS, LABOR AND INCIDENTALS NECESSARY TO FURNISH AND INSTALL LAMINATED ELASTOMERIC BEARING EITHER FIXED OR EXPANSION. PAYMENT WILL BE MADE AT THE CONTRACT PRICE FOR ITEM 516, LAMINATED ELASTOMERIC BEARINGS.

TEST SAMPLE: THE ELASTOMERIC BEARING MANUFACTURE SHALL SUPPLY A PLAIN ELASTOMERIC PAD FOR TESTING PURPOSES. THE PAD SHALL BE FURNISHED FROM THE SAME BATCH OF NEOPRENE THAT IS USED IN THE FABRICATION OF THE LAMINATED ELASTOMERIC BEARINGS AND THE FABRICATOR SHALL CERTIFY THE IDENTITY OF THE ELASTOMER. THE PAD SHALL HAVE A 1/2 INCH THICKNESS AND SHALL HAVE MINIMUM LENGTH AND WIDTH DIMENSIONS OF 6 INCHES. PAYMENT FOR THE TEST PAD WILL BE INCLUDED IN THE PRICE BID FOR ITEM 516, LAMINATED ELASTOMERIC BEARING.

LEGEND

N = NUMBER OF 14 GUAGE LAMINATES
T = TOTAL THICKNESS OF LAMINATED PAD
TE= THICKNESS OF EXTERIOR ELASTOMER LAYER(50 DUROMETER)
TI= THICKNESS OF INTERIOR ELASTOMER LAYER(50 DUROMETER)

JOHN DAVID JONES & ASSOC., INC. 11/20
2162 FRONT STREET
CUYAHOGA FALLS, OHIO 44221
ENGINEERS ARCHITECTS PLANNERS

BEARING DETAILS

BRIDGE NO. SUM-76-1235
RAMP E-8 OVER RAMP E-6

DESIGNED	DRAWN	TRACED	CHECKED	REVIEWED	DATE	REVISED
BRH	RCK	RCK	GFD	PAK	1/90	

F.H.W.A. REGION	STATE	PROJECT	
5	OHIO		

875/1214

SUMMIT COUNTY
SUM-76-11.57

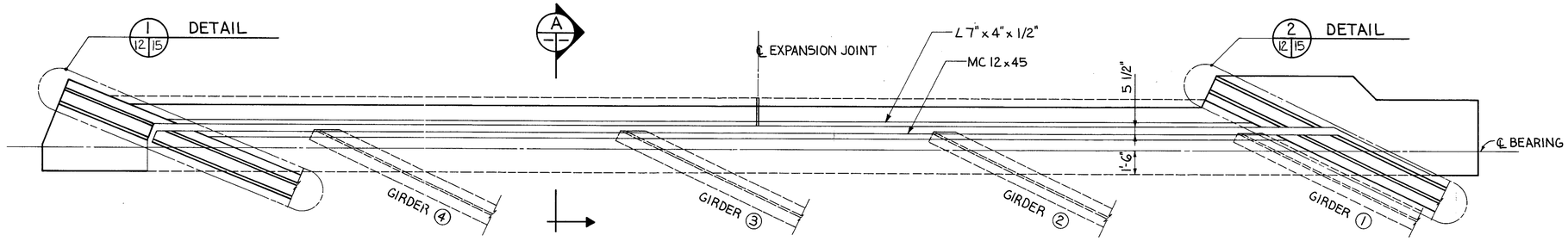

PLAN AT ABUTMENT

NOTE:
REAR ABUTMENT (SHOWN)
FORWARD ABUTMENT (SIMILAR)

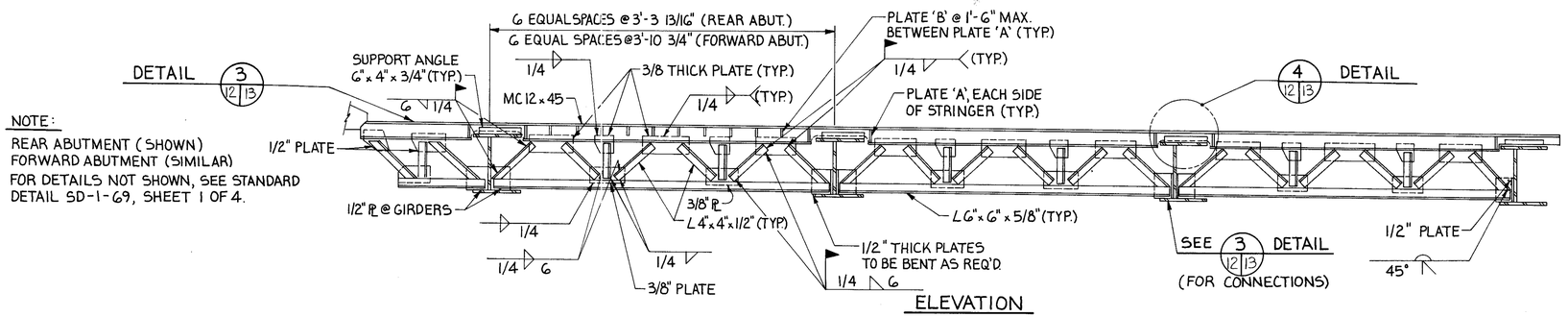

ELEVATION

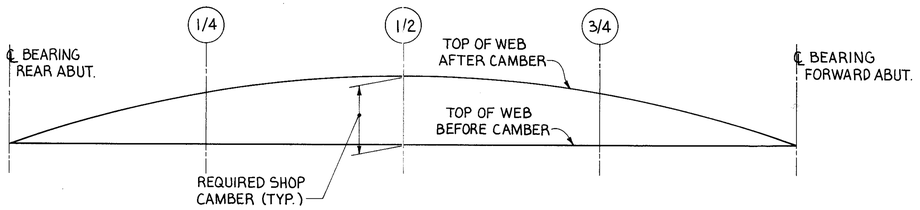

GIRDER CAMBER DIAGRAM

DEFLECTION AND CAMBER												
GIRDER	1			2			3			4		
POINT	1/4	1/2	3/4	1/4	1/2	3/4	1/4	1/2	3/4	1/4	1/2	3/4
DEFLECTION DUE TO WEIGHT OF STEEL	3/8"	1/2"	3/8"	5/16"	7/16"	5/16"	1/4"	3/8"	1/4"	1/4"	3/8"	1/4"
DEFLECTION DUE TO REMAINING DEAD LOAD	2 1/16"	3 1/16"	2 1/8"	1 13/16"	2 1/2"	1 13/16"	1 1/2"	2 1/16"	1 1/2"	1 3/16"	1 9/16"	1 3/16"
ADJUSTMENT REQUIRED FOR VERTICAL CURVE	-5/16"	-5/16"	-1/8"	-9/16"	-5/8"	-3/8"	-11/16"	-7/8"	-5/8"	-3/4"	-15/16"	-11/16"
REQUIRED SHOP CAMBER	2 1/8"	3 1/16"	2 3/8"	1 9/16"	2 5/16"	1 3/4"	1 1/16"	1 9/16"	1 1/8"	11/16"	1"	3/4"

STRIP SEAL ADJUSTMENT TABLE	
AMBIENT TEMP. (F°)	JOINT OPENING DIMENSION "A"
40	2 13/16"
50	2 11/16"
60	2 9/16"
70	2 7/16"
80	2 5/16"
90	2 3/16"

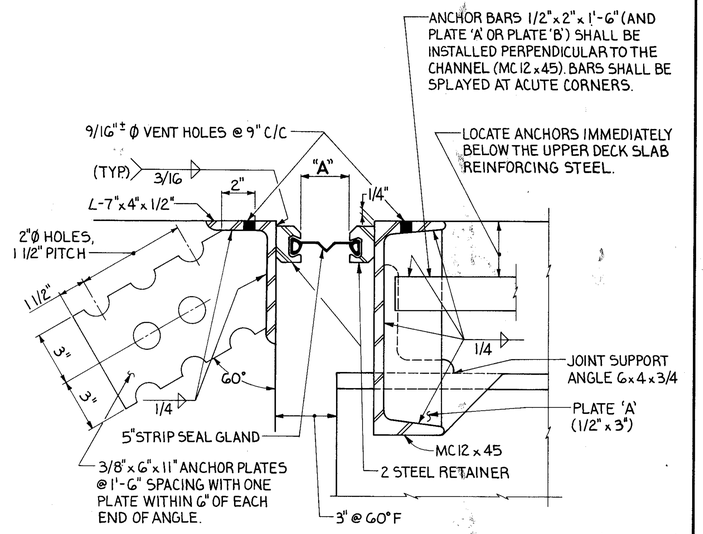

A SECTION

NOTE:
THE JOINT ASSEMBLY SHALL BE PLACED SO THAT THE 7"x4"x1/2" ANGLE AND THE MC 12x45 CHANNEL REMAIN PARALLEL TO EACH OTHER

1. FOR END DAM DETAILS NOT SHOWN SEE SHEETS 13/20 THRU 15/20.
2. FOR END CROSSFRAME DETAILS NOT SHOWN SEE STANDARD DRAWING SD-1-69, SHEET 1 OF 4.
3. INSTALLATION OF SEAL: DURING INSTALLATION OF THE SUPPORT/ARMOR FOR THE SUPERSTRUCTURE SIDE OF THE EXPANSION JOINT SEAL, THE SEATING OF GIRDERS ON BEARINGS SHALL BE CAREFULLY OBSERVED TO ASSURE THAT POSITIVE BEARING IS MAINTAINED.
4. FOR STRIP SEAL DETAILS NOT SHOWN AND NOTES, SEE STANDARD DRAWING EXJ-4-87.
5. WORK THIS SHEET WITH SHEETS 13/20 THRU 15/20.

JOHN DAVID JONES & ASSOC., INC. 12/20
2162 FRONT STREET
CUYAHOGA FALLS, OHIO 44221
ENGINEERS ARCHITECTS PLANNERS

FRAMING DETAILS I

BRIDGE NO. SUM-76-1235
RAMP E-8 OVER RAMP E-G

DESIGNED	DRAWN	TRACED	CHECKED	REVIEWED	DATE	REVISED
GD	JS	-	HGS	PAK	3/9/90	

SD2081

F.H.W.A. REGION	STATE	PROJECT	
5	OHIO		

876
12:14

SUMMIT COUNTY
SUM-76-11.57

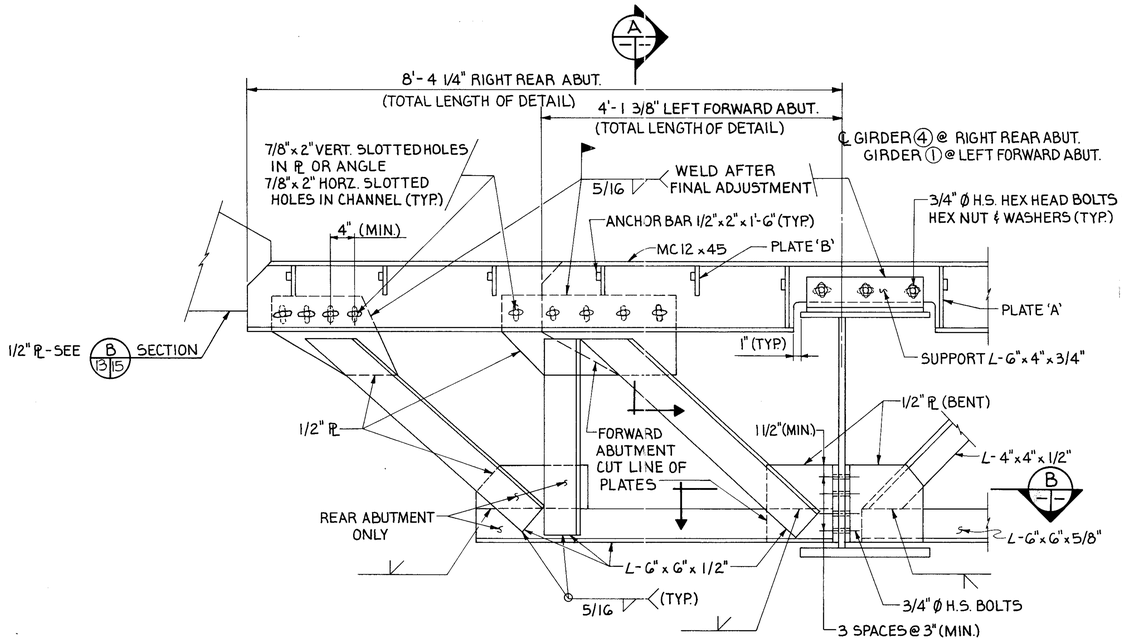

3 | 12|13 DETAIL
AT RIGHT REAR ABUTMENT (SHOWN) (LOOKING NORTH)
AT LEFT FORWARD ABUTMENT (SIMILAR, AS INDICATED) (LOOKING SOUTH)

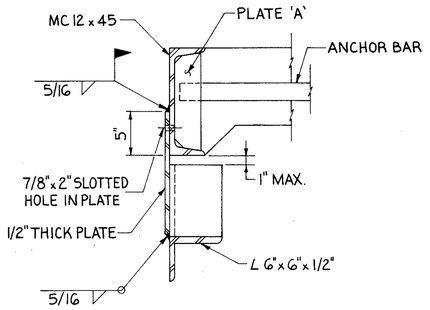

A | SECTION

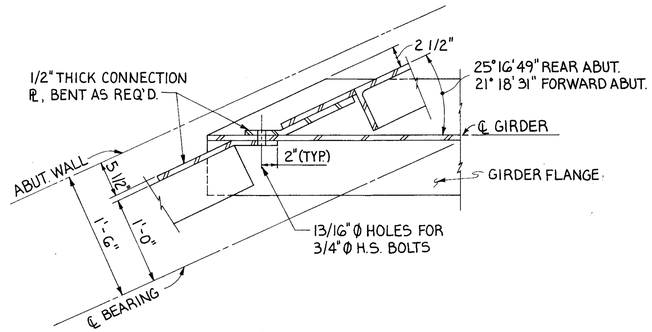

B | SECTION

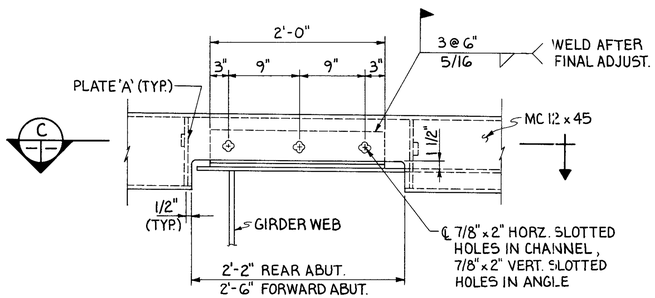

4 | 12|13 DETAIL

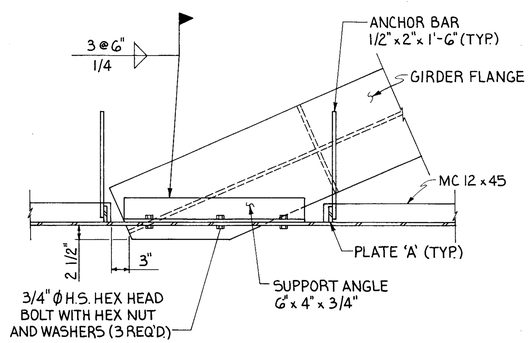

C | SECTION

JOHN DAVID JONES & ASSOC., INC. 13/20
2162 FRONT STREET
CUYAHOGA FALLS, OHIO 44221
ENGINEERS ARCHITECTS PLANNERS

FRAMING DETAILS II

BRIDGE NO. SUM-76-1235
RAMP E-8 OVER RAMP E-6

DESIGNED	DRAWN	TRACED	CHECKED	REVIEWED	DATE	REVISED
GFD	JPS	-	BRH	PAK	2/90	

639281

F.H.W.A. REGION	STATE	REGION	
5	OHIO		

877
1214

SUMMIT COUNTY
SUM-76-11.57

LAP LENGTH
#4 - 1'-4"
#5 - 1'-8"

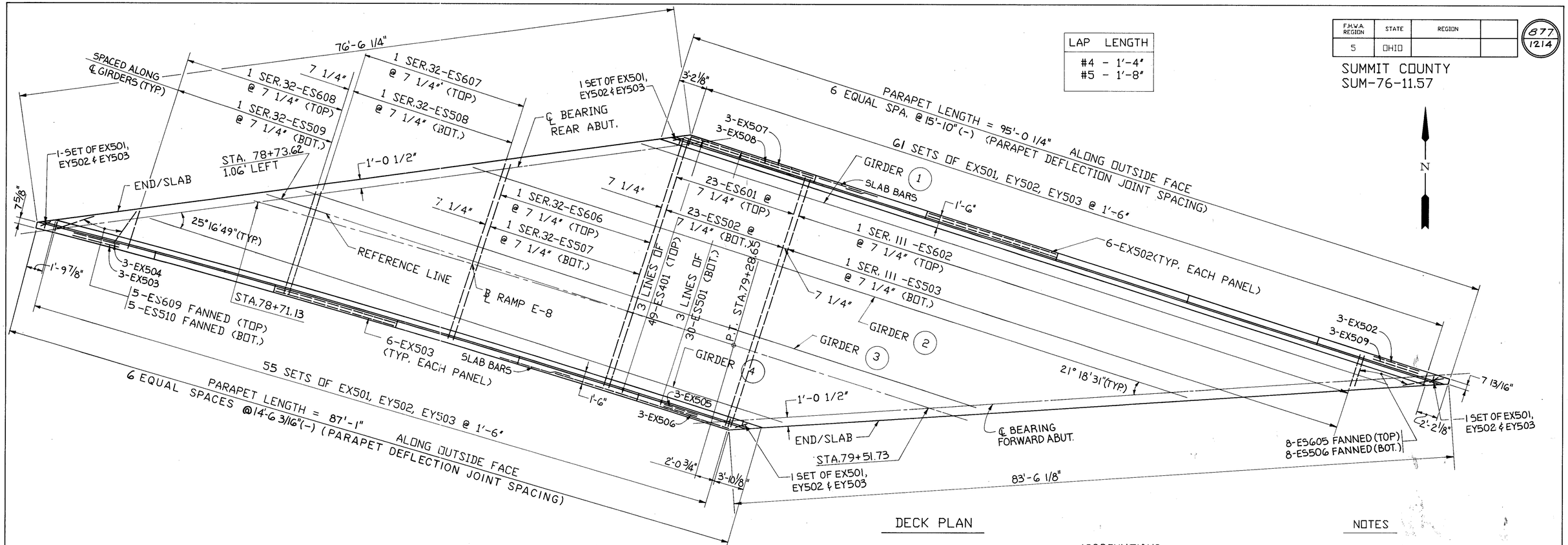

DECK PLAN

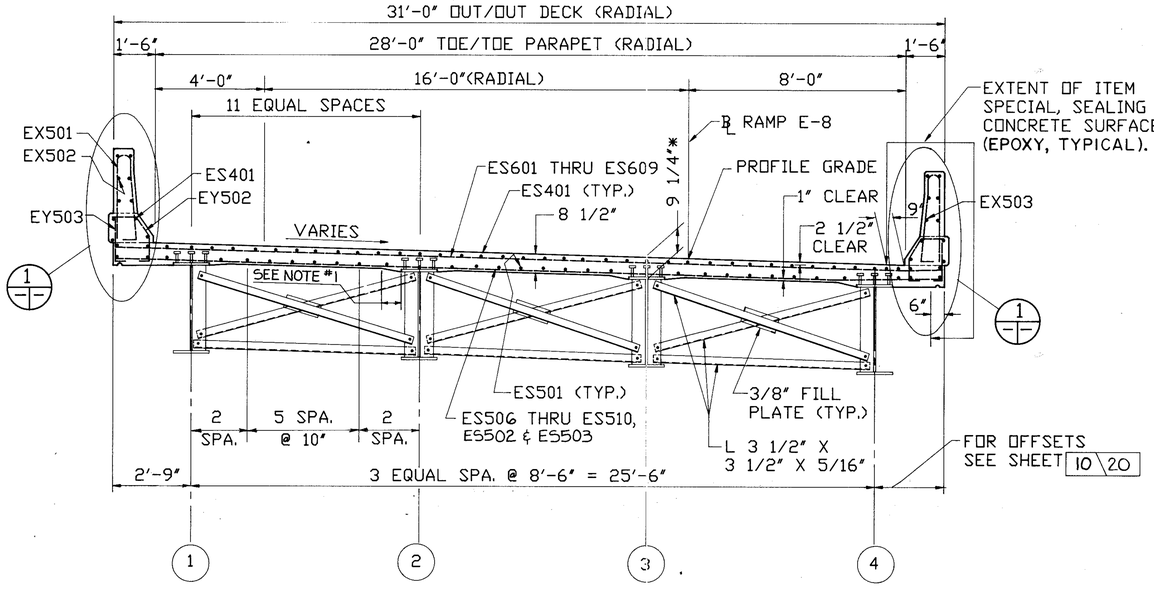

TRANSVERSE SECTION

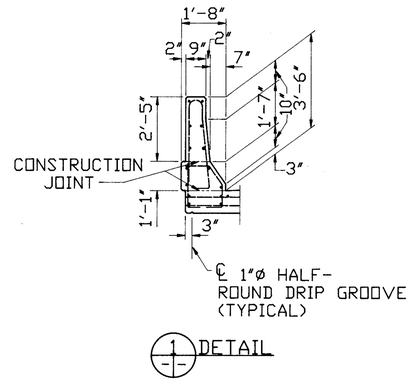

1\-- DETAIL

ABBREVIATIONS

SPA.	=	SPACES
TYP.	=	TYPICAL
BOT.	=	BOTTOM
SER.	=	SERIES
ABUT.	=	ABUTMENT

NOTES

1. A HAUNCH WIDTH OF 9" SHALL BE USED FOR COMPUTING QUANTITY OF CONCRETE. HOWEVER, THE HAUNCH WIDTH MAY VARY BETWEEN 6" AND 12".

   FOR DETAIL OF PARAPET DEFLECTION JOINT SEE SHEET 7/20.

2. SCREED ELEVATIONS SHOWN ARE ELEVATIONS AT THE TOP OF DECK AT THE LOCATIONS SHOWN THAT ARE REQUIRED BEFORE CONCRETE IS PLACED. ALLOWANCE HAS BEEN MADE FOR THE DEAD LOAD DEFLECTIONS CAUSED BY THE WEIGHT OF CONCRETE.

* THIS IS THE DESIGN DIMENSION. THE QUANTITY OF DECK CONCRETE TO BE PAID FOR SHALL BE BASED UPON THIS DIMENSION, EVEN THOUGH DEVIATION FROM IT MAY BE NECESSARY BECAUSE THE TOP FLANGE OF THE GIRDER MAY NOT HAVE THE EXACT CAMBER OR CONFORMATION REQUIRED TO PLACE IT PARALLEL TO THE FINISHED GRADE. DEDUCTION SHALL BE MADE FOR VOLUME OF ENCASED STEEL PLATES AS PER 511.18

SCREED ELEVATIONS

LOCATION	℄ BEARING REAR ABUT.	1/4	1/2	3/4	℄ BEARING FORWARD ABUT.
LEFT GUTTER	1082.65	1082.29	1081.87	1081.34	1080.71
RIGHT GUTTER	1083.31	1083.04	1082.71	1082.35	1081.94

JOHN DAVID JONES & ASSOC., INC. 14/20
2162 FRONT STREET
CUYAHOGA FALLS, OHIO 44221
ENGINEERS ARCHITECTS PLANNERS

SLAB PLAN AND TRANSVERSE SECTION

BRIDGE NO.SUM-76-1235
RAMP E-8 OVER RAMP E-6

DESIGNED	DRAWN	TRACED	CHECKED	REVIEWED	DATE	REVISED
JRS	EMB	RCK	BH	PAK	12/22/88	

F.H.W.A. REGION	STATE	PROJECT	
5	OHIO		

878
1214

SUMMIT COUNTY
SUM-76-11.57

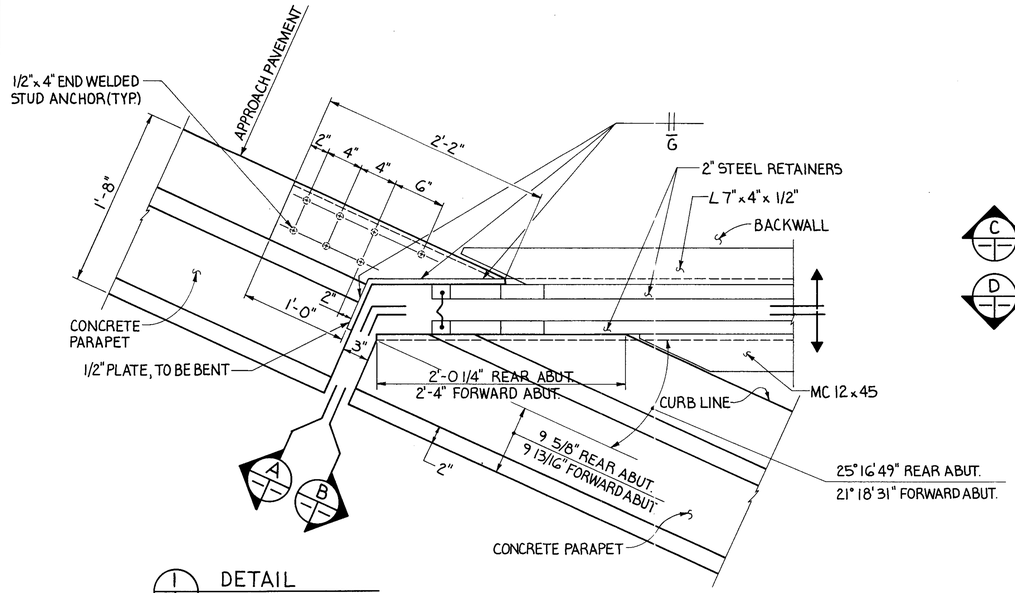

1 12|15 DETAIL
RIGHT REAR ABUT.
LEFT FORWARD ABUT.

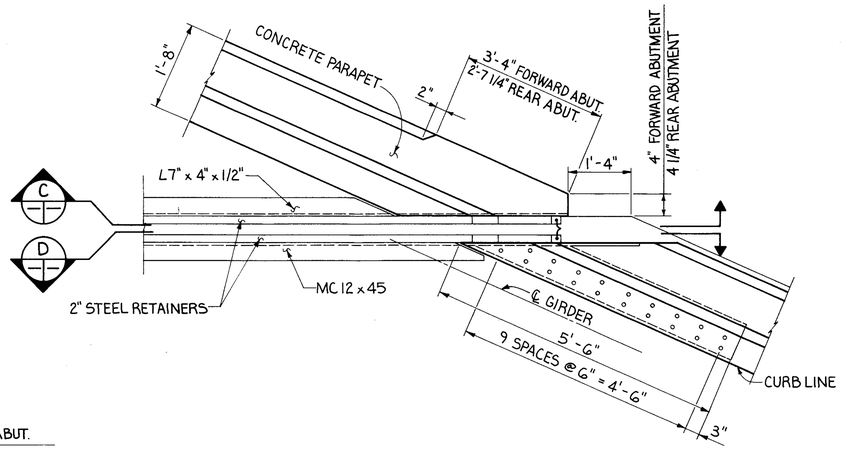

2 12|15 DETAIL

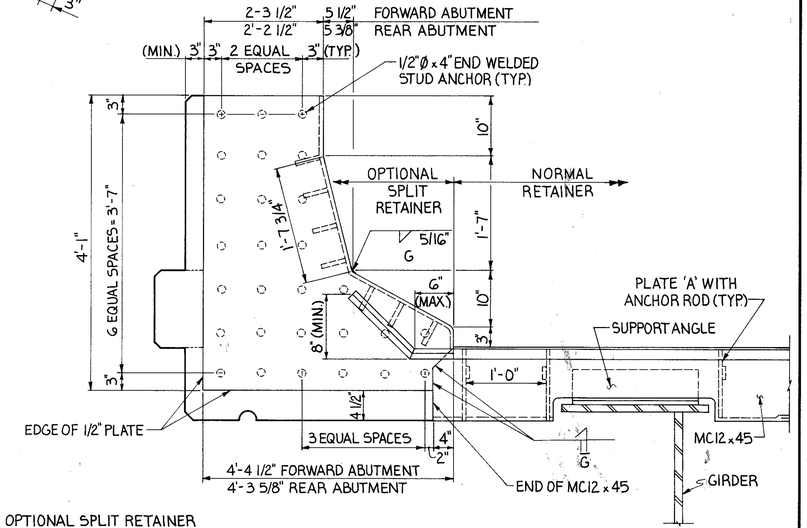

D SECTION

NOTE :
WORK THIS SHEET WITH SHEET 12/20.

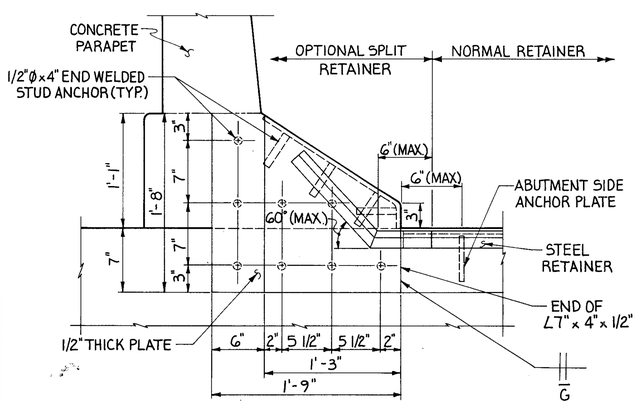

A SECTION

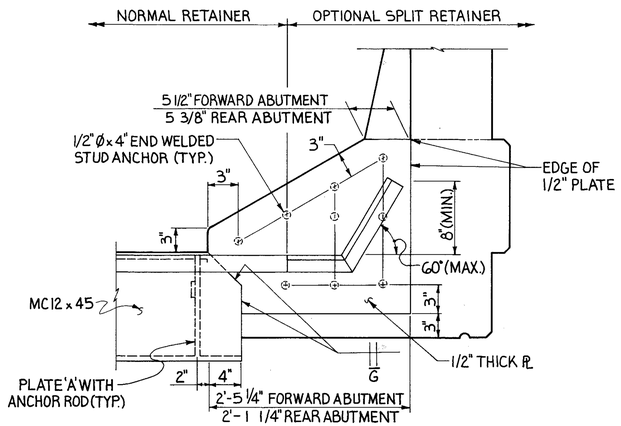

13|15 B SECTION

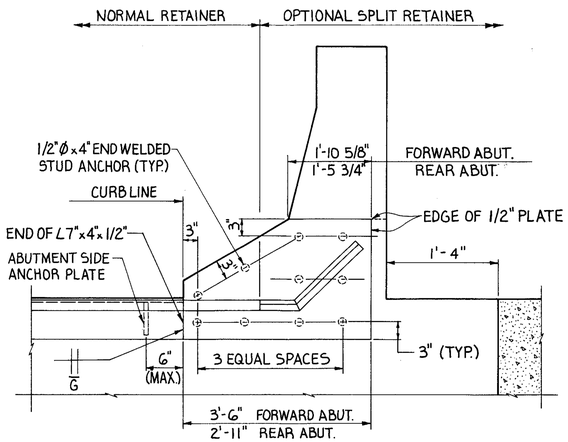

C SECTION

JOHN DAVID JONES & ASSOC., INC. 15/20
2162 FRONT STREET
CUYAHOGA FALLS, OHIO 44221
ENGINEERS ARCHITECTS PLANNERS

EXPANSION JOINT DETAILS

BRIDGE NO. SUM-76-1235
RAMP E-8 OVER RAMP E-6

DESIGNED	DRAWN	TRACED	CHECKED	REVIEWED	DATE	REVISED
GD	JPS	—	HGS	PAK	3/9/90	

53291

F.H.W.A. REGION	STATE	PROJECT	
5	OHIO		

879/1214

SUMMIT COUNTY
SUM-76-11.57

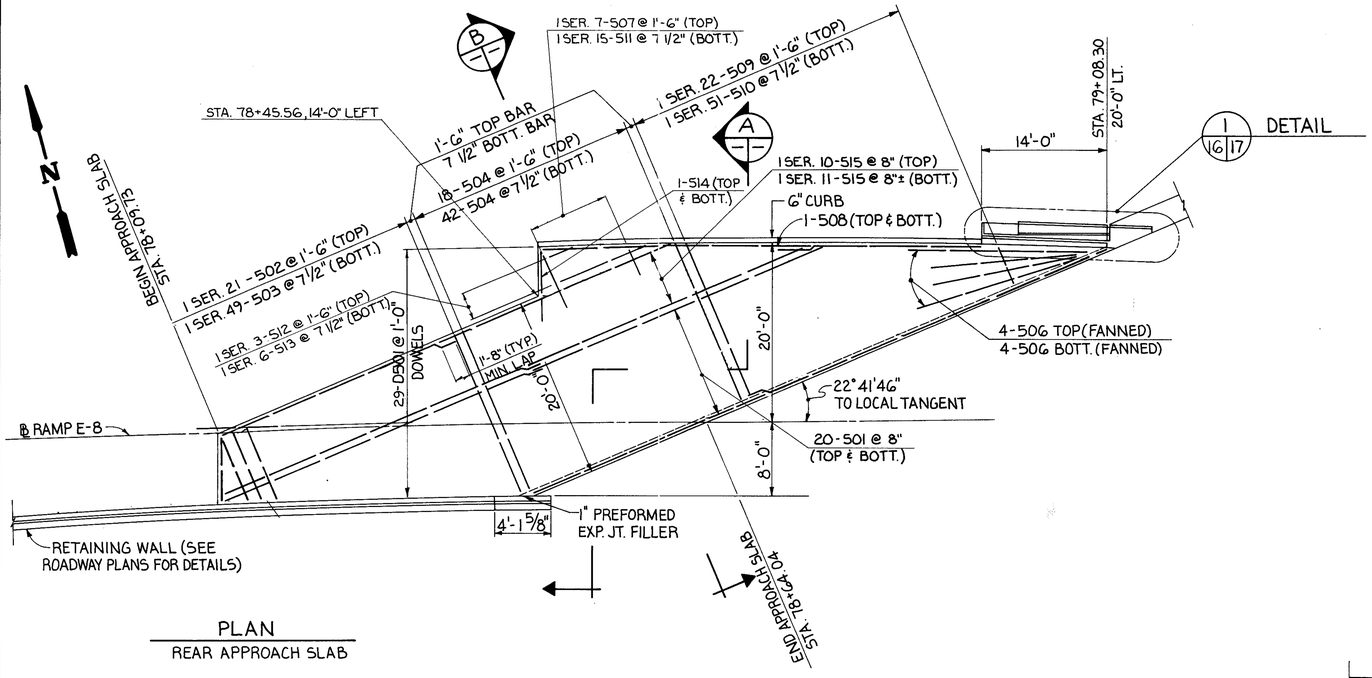

PLAN
REAR APPROACH SLAB

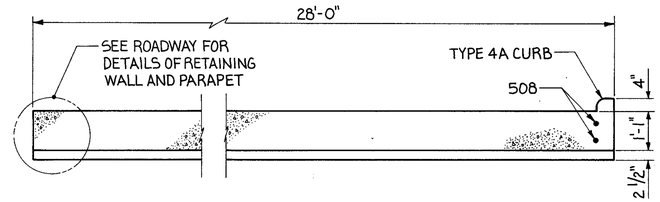

A SECTION

FOR NOTES, SEE STANDARD DRAWING AS-1-81

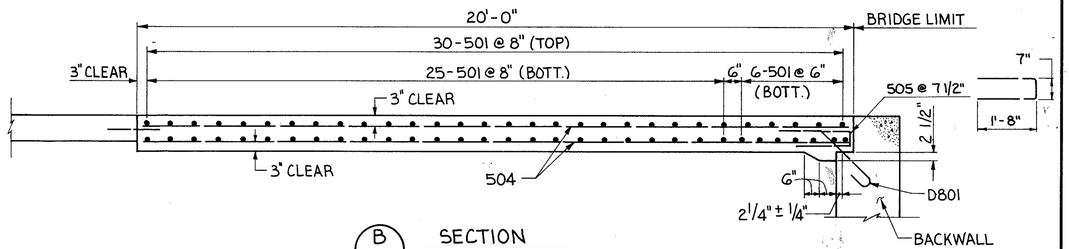

B SECTION

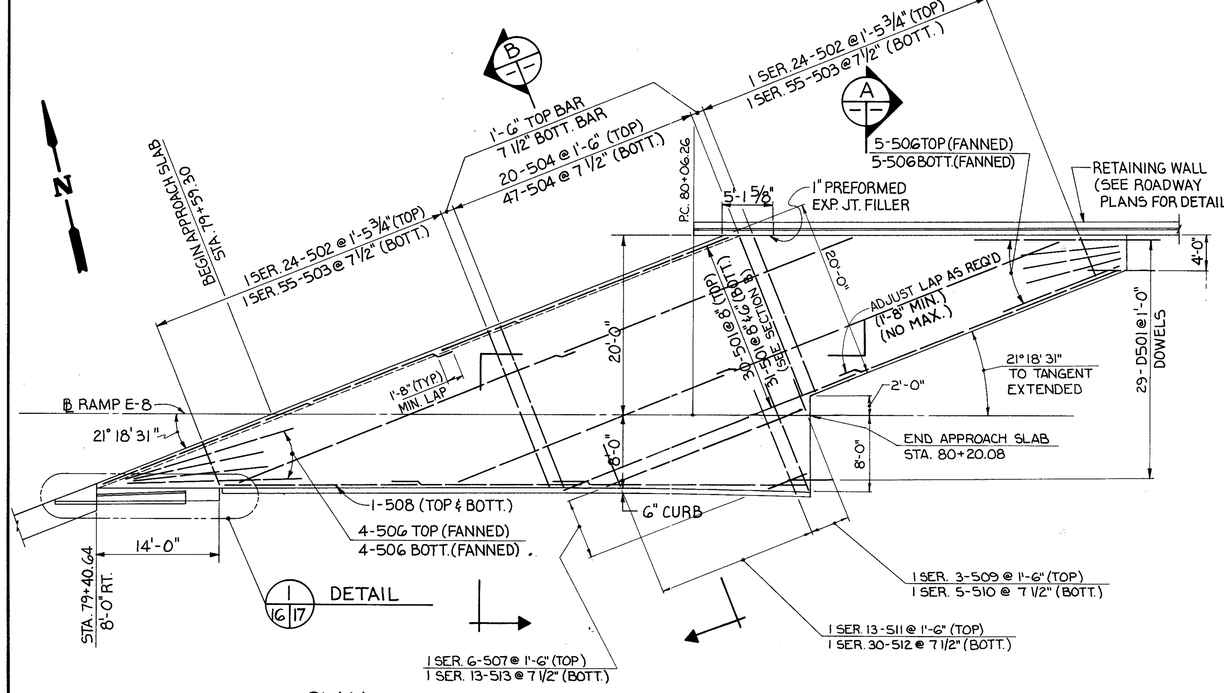

PLAN
FORWARD APPROACH SLAB

MARK	NO.	LENGTH	SER. INCR.	TYPE	WEIGHT
REAR APPROACH SLAB					
501	80	37'-0"	—	STR	
502	1 SER. 21	7'-6" / 19'-0"	6 7/8"	STR.	
503	1 SER. 49	7'-6" / 19'-0"	2 7/8"	STR	
504	60	19'-6"	—		
505	93	4'-0"	7 1/2"	U-BAR	
506	8	14'-0"	—	STR.	
507	1 SER. 7	3'-2" / 6'-8"	7"	STR.	
508	4	25'-4"	—	STR.	
509	1 SER. 22	5'-0" / 19'-0"			
510	1 SER. 51	5'-0" / 19'-3"	—	STR.	
511	1 SER. 15	3'-2" / 6'-8"	3"	STR.	
512	3	4'-0" / 11'-6"	3'-9"	STR	
513	6	4'-0" / 11'-6"	1'-6"	STR.	
514	2	8'-0"	—	STR.	
D501	29	1'-6"	—	STR.	
515	2 SER. 21	27'-0" / 37'-0"	1'-1 5/16"	STR.	

MARK	NO.	LENGTH	SER. INCR.	TYPE	WEIGHT
FORWARD APPROACH SLAB					
501	122	39'-0"	—	STR.	
502	2 SER 24	5'-0" / 19'-0"	7 5/16"	STR.	
503	2 SER 55	5'-0" / 19'-3"	3 1/8"	STR.	
504	67	19'-6"	—	STR.	
505	102	4'-0"	7 1/2"	U-BAR	
506	18	14'-0"	—	STR.	
507	1 SER 6	5'-0" / 24'-0"	3'-9 5/8"	STR.	
508	6	23'-10"	—	STR.	
509	1 SER 3	5'-2" / 11'-8"	3'-3"	STR.	
510	1 SER 5	5'-2" / 11'-8"	1'-7 1/2"	STR.	
511	1 SER 13	3'-4" / 11'-0"	7 5/8"	STR.	
512	1 SER 30	3'-4" / 11'-0"	3 3/16"	STR.	
513	1 SER 13	5'-0" / 24'-0"	1'-7"	STR.	
D501	29	1'-6"	—	STR.	

JOHN DAVID JONES & ASSOC., INC. 16/20
2162 FRONT STREET
CUYAHOGA FALLS, OHIO 44221
ENGINEERS ARCHITECTS PLANNERS

REINFORCED CONCRETE APPROACH SLABS

BRIDGE NO. SUM-76-1235
RAMP E-8 OVER RAMP E-6

DESIGNED	DRAWN	TRACED	CHECKED	REVIEWED	DATE	REVISED
GD	JS	—	BH	PAK	3/9/90	

529281

FHWA REGION	STATE	PROJECT	
5	OHIO		

880/1214

SUMMIT COUNTY
SUM-76-11.57

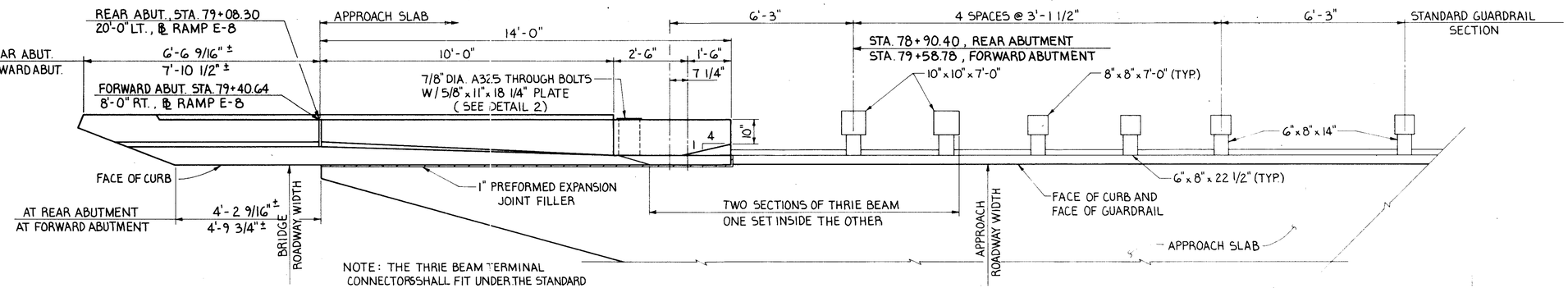

NOTE: THE THRIE BEAM TERMINAL CONNECTORS SHALL FIT UNDER THE STANDARD GUARDRAIL SECTION AT THE APPROACH END. ALL LAPS SHALL BE IN THE DIRECTION OF TRAFFIC.

1/2/17 DETAIL
PART PLAN @ RIGHT FORWARD & LEFT REAR ABUTMENTS

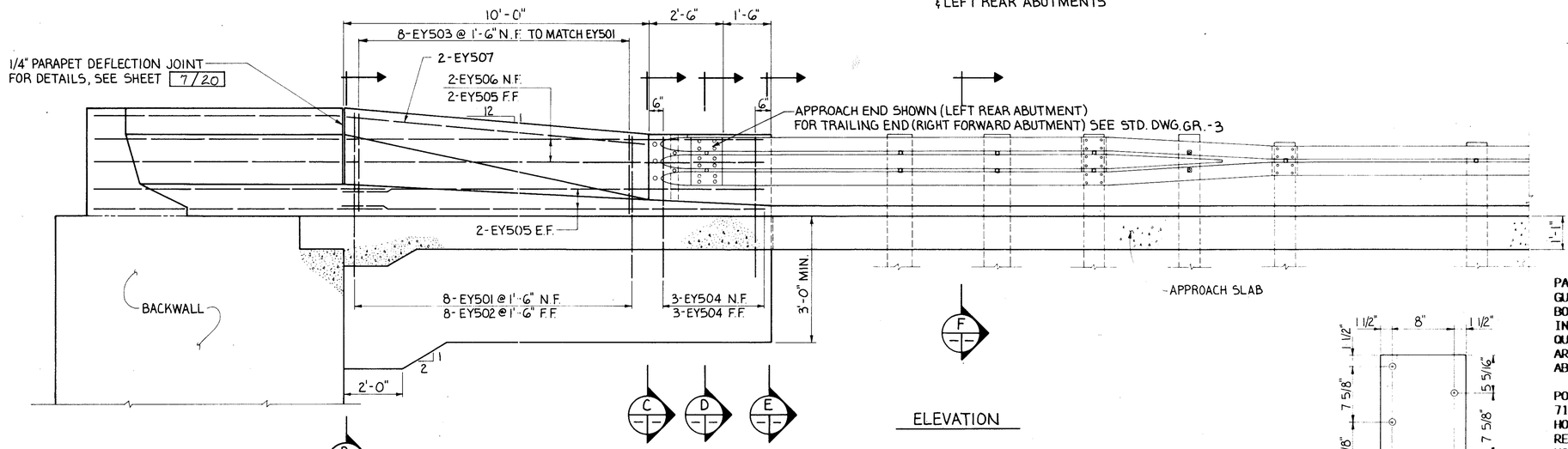

ELEVATION

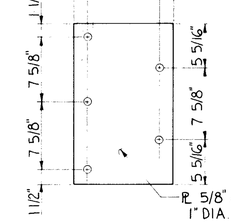

2/1/1 DETAIL

PAYMENT: ADDITIONAL GUARDRAIL COST IN EXCESS OF NORMAL GUARDRAIL COST, SUCH AS: TERMINAL CONNECTOR, STEEL PLATE, BOLTS, NUTS, PLATE WASHERS AND OTHER HARDWARE SHALL BE INCLUDED WITH BRIDGE TERMINAL ASSEMBLY FOR PAYMENT. QUANTITIES OF CONCRETE AND REINFORCING STEEL FOR PARAPET ARE INCLUDED WITH THEIR APPROPRIATE ITEM UNDER EITHER ABUTMENTS OR SUPERSTRUCTURE FOR PAYMENT.

POSTS SHALL BE SQUARE-SAWED PRESSURE TREATED WOOD AS PER 710.14. POSTS SHALL BE FABRICATED WITH SQUARE ENDS. BOLT HOLES SHALL BE BORED AND TOPS OF POSTS TRIMMED, IF REQUIRED, AFTER POSTS ARE SET. POSTS MAY BE SET IN DRILLED HOLES OR DRIVEN TO GRADE. STEEL POSTS AND BLOCKOUTS MAY BE FURNISHED AS AN ALTERNATE, PROVIDED THAT THE STRENGTH EQUALS OR EXCEEDS THE STRENGTH OF WOOD POSTS AND BLOCKOUTS.

NOTE:

WORK THIS DRAWING WITH STANDARD CONSTRUCTION DRAWINGS GR-3 (BRIDGE TERMINAL ASSEMBLIES.)
FOR REINFORCEMENT, SEE SHEET 20/20, (BRIDGE TERMINAL PARAPETS)

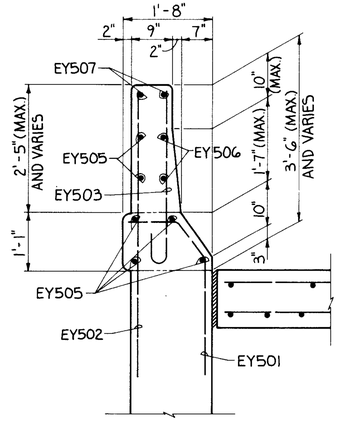

B/2/1 SECTION

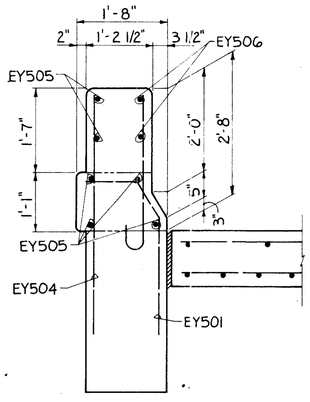

C/2/1 SECTION

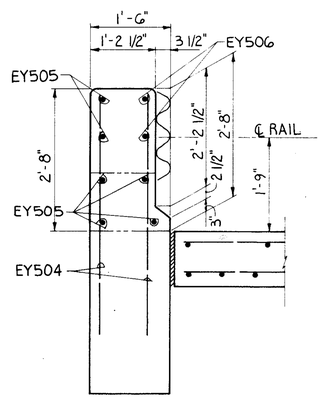

D/2/1 SECTION

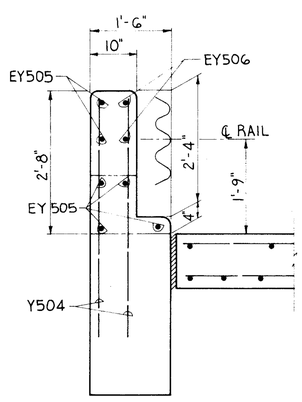

E/2/1 SECTION

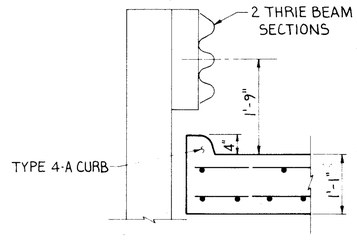

F/2/1 SECTION

JOHN DAVID JONES & ASSOC., INC. 17/20
2162 FRONT STREET
CUYAHOGA FALLS, OHIO 44221
ENGINEERS ARCHITECTS PLANNERS

BRIDGE RAILING DEFLECTOR PARAPET TYPE

BRIDGE NO. SUM-76-1235
RAMP E-8 OVER RAMP E-6

DESIGNED	DRAWN	TRACED	CHECKED	REVIEWED	DATE	REVISED
BH	JS	–	GD	PAK	3/9/90	

MARK	NO.	LENGTH	SER. INCR.	TYPE	WEIGHT	A	B	C	D
REAR ABUTMENT									
AR1101	36	13'-2"		32	2518	11'-7"	3 3/4"		
AR1102	36	18'-1"		6	3459	16'-6"			
AR1103	36	23'-7"		6	4511	22'-0"			
AR901	90	17'-0"		STR.	5202				
AR902	21	27'-5"		↓	1960				
AR903	33	29'-2"		↓	3273				
AR904	1 SER. 4	8'-0" / 15'-8"	2'-6 5/8"	↓	161				
AR905	1 SER. 9	25'-4" / 27'-7"	3 3/8"	↓	810				
AR906	1 SER. 2	29'-2" / 28'-5"	6"	↓	196				
AR907	1 SER. 7	23'-7" / 25'-10"	4 1/2"	↓	588				
AR701	90	17'-0"		STR.	3127				
AR702	41	25'-2"		↓	2110				
AR703	36	25'-11"		↓	1907				
AR704	94	6'-7"		2	1265	1'-2"	5'-7"		
AR706	94	18'-3"		STR.	3506				
AR708	84	24'-5"		↓	4192				
AR710	2	10'-0"		↓	41				
AR711	1 SER. 4	8'-0" / 15'-8"	2'-6 5/8"	↓	97				
AR712	1 SER. 3	24'-0" / 24'-11"	5 1/2"	↓	150				
AR601	83	11'-1"		4	1382	6'-0"	5'-1"	12"	12"
AR606	10	14'-0"		4	210	7'-6"	6'-6"	12"	12"
AR610	8	24'-2"		STR.	291				
AR611	7	6'-2"		2	65	1'-0"	5'-3"		
AR501	36	10'-2"		1	382	1'-9"	4'-4"		
AR502	6 SER. 18	12'-3" / 22'-11"	3 3/4"	33	1981	1'-11"	4'-7" / 9'-11"	10"	
AR503	12 SER. 6	5'-2" / 18'-3"	2'-7 3/8"	STR.	879				
AR516	22	7'-6"		4	172	3'-8"	3'-10"	12"	5 1/4"
D801	19	4'-7"		14	233	2'-4"			
		TOTAL UNCOATED BARS =			44,668				

MARK	NO.	LENGTH	SER. INCR.	TYPE	WEIGHT	A	B	C	D
REAR ABUTMENT (CONTINUED)									
EAR705	94	21'-7"		STR.	4147				
EAR707	96	24'-5"		↓	4791				
EAR709	4	16'-6"		↓	135				
EAR602	69	9'-1"		1	942	1'-5"	4'-0"		
EAR603	69	5'-3"		1	544	0'-11"	2'-4"		
EAR604	8	10'-4"		1	124	5'-11"	2'-2"		
EAR605	33	4'-5"		STR.	219				
EAR607	94	6'-6"		STR.	918				
EAR608	3	5'-2"		2	23	2'-0"	3'-2"		
EAR609	3	12'-2"		1	55	3'-6"	4'-4"		
EAR504	83	9'-0"		1	779	4'-3"	2'-6"		
EAR505	14	20'-11"		STR.	305				
EAR507	20	22'-0"		STR.	459				
EAR508	7	15'-5"		31	113	8'-8"	3'-6"	3'-3"	
EAR509	5	23'-3"		34	121	7'-8"	4'-5"	2'-8"	8'-6"
EAR510	5	10'-8"		2	56	6'-6"	4'-2"		
EAR512	28	8'-10"		8	258	1'-4"	4'-0"	1'-8"	8"
EAR513	5	6'-6"		2	34	3'-0"	3'-6"		
EAR514	5	3'-11"		STR.	20				
EAR515	10	6'-0"		STR.	63				
EAR516	5	6'-4"		STR.	33				
EY601	12	3'-11"		9	71	0'-9"	0'-6"	2'-5"	0'-8"
EY501	12	2'-9"		STR.	34				
EX501	12	7'-0"		27	88	0'-8"	3'-0"		
		TOTAL COATED BARS =			14,365				

CALC. BY: RCK DATE: 12/14/88
CHECKED BY: GFD DATE: 12/16/88

F.H.W.A. REGION	STATE	PROJECT
5	OHIO	

881 12.14

SUMMIT COUNTY
SUM-76-11.57

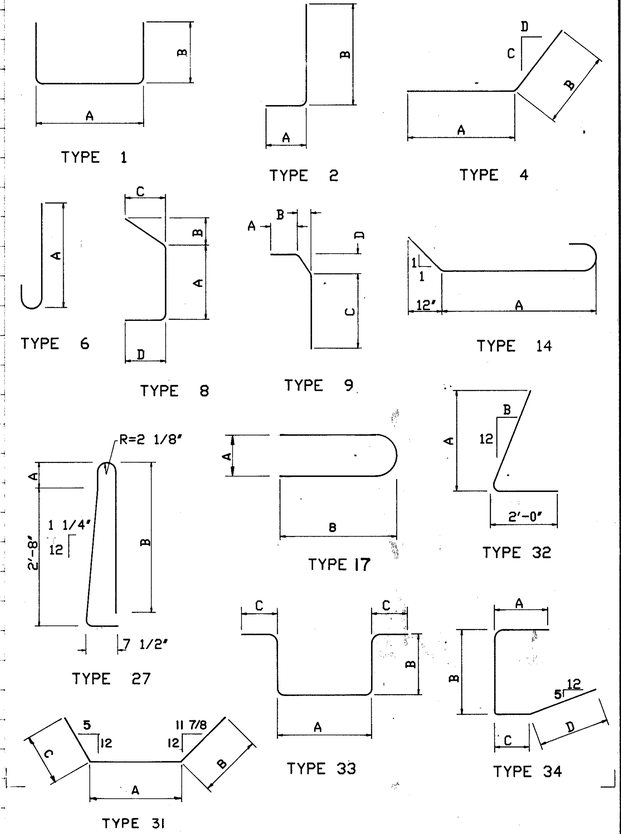

REINFORCING STEEL SAMPLES

REFER TO CMS SECTIONS 106.03, 700, 709.01 THROUGH 709.05 AND 709.08. SUFFICIENT ADDITIONAL REINFORCING STEEL SHALL BE PROVIDED FOR SAMPLING. RANDOM SAMPLES SHALL BE REPLACED IN STRUCTURES BY THE ADDITIONAL STEEL, SPLICED IN ACCORDANCE WITH 509.08.

BAR MARKS PREFIXED WITH "E" INDICATE EPOXY COATING REQUIRED.

JOHN DAVID JONES & ASSOC., INC. 18/20
2 FIRST STREET
CUYAHOGA FALLS, OHIO 44221
ENGINEERS ARCHITECTS PLANNERS

REINFORCING STEEL LIST

BRIDGE No. SUM-76-1235
RAMP E-8 OVER RAMP E-6

DESIGNED	DRAWN	TRACED	CHECKED	REVIEWED	DATE	REVISED
RCK	JPM	—	GFD	PAK	12/22/88	

MARK	NO.	LENGTH	SER. INCR.	TYPE	WEIGHT	A	B	C	D
FORWARD ABUTMENT									
AF1101	36	13'-2"		32	2518	11'-7"	4 1/8"		
AF1102	36	18'-1"		6	3459	16'-6"			
AF1103	36	21'-7"		6	4128	20'-0"			
AF901	97	17'-0"		STR.	5607				
AF902	21	29'-3"			2089				
AF903	33	31'-0"			3478				
AF904	1 SER. 4	8'-0" / 15'-8"	2'-6 5/8"		161				
AF905	1 SER. 9	27'-2" / 29'-6"	3 1/2"		867				
AF906	1 SER. 2	29'-10" / 30'-3"	4"		204				
AF907	1 SER. 7	25'-5" / 27'-9"	4 5/8"		633				
AF701	97	17'-0"		STR.	3371				
AF702	41	27'-0"			2263				
AF703	36	27'-9"			2042				
AF704	101	6'-7"		2	1359	1'-2"	5'-7"		
AF706	101	16'-9"		STR.	3458				
AF708	78	26'-5"			4212				
AF710	2	15'-4"			63				
AF711	1 SER. 4	8'-0" / 15'-8"	2'-6 5/8"		97				
AF712	1 SER. 3	25'-10" / 26'-9"	5 1/2"		161				
AF601	90	11'-10"		4	1600	6'-6"	5'-4"	12"	12"
AF606	10	14'-0"		4	210	7'-6"	6'-6"	12"	12"
AF610	8	21'-8"		STR.	260				
AF611	8	6'-2"		2	74	1'-0"	5'-3"		
AF501	36	10'-2"		1	382	1'-9"	4'-4"		
AF502	6 SER. 16	12'-3" / 22'-11"	4 1/4"	33	1761	1'-11"	4'-7" / 9'-11"	10"	
AF503	12 SER. 6	4'-7" / 16'-3"	2'-4"	STR.	782				
AF504	91	9'-0"		1	853	4'-3"	2'-6"		
AF516	20	8'-0"		4	167	4'-0"	4'-0"	12"	4 1/2"
D801	19	4'-7"		14	233	2'-4"			
			TOTAL UNCOATED BARS = 46,492						

MARK	NO.	LENGTH	SER. INCR.	TYPE	WEIGHT	A	B	C	D
FORWARD ABUTMENT (CONTINUED)									
EAF705	51	19'-8"		STR.	2050				
EAF707	90	26'-5"			4860				
EAF709	4	13'-8"			112				
EAF713	50	20'-4"			2078				
EAF602	74	9'-1"		1	1010	1'-5"	4'-0"		
EAF603	74	5'-3"		1	584	0'-11"	2'-4"		
EAF604	9	10'-4"		1	140	5'-11"	2'-2"		
EAF605	35	4'-5"		STR.	232				
EAF607	103	7'-4"		STR.	1135				
EAF608	3	4'-3"		2	19	1'-0"	3'-3"		
EAF609	3	11'-4		1	51	3'-10"	3'-9"		
EAF504	91	9'-0"		1	854	4'-3"	2'-6"		
EAF505	17	18'-8"		STR.	331				
EAF506	3	25'-0"		STR.	78				
EAF507	20	24'-8"		STR.	515				
EAF508	8	15'-6"		31	129	9'-0"	3'-4"	3'-2"	
EAF509	5	20'-8"		34	108	7'-3"	4'-3"	6"	8'-8"
EAF510	5	11'-10"		2	62	7'-8"	4'-2"		
EAF512	25	8'-10"		8	230	1'-4"	4'-0"	1'-8"	8"
EAF513	5	6'-6"		2	34	3'-0"	3'-6"		
EAF514	5	4'-6"		STR.	24				
EAF515	10	7'-1"		STR.	74				
EAF516	5	7'-10"		STR.	41				
EY601	12	3'-11"		9	71	0'-9"	0'-6"	2'-5"	0'-8"
EY501	12	2'-9"		STR.	35				
EX501	12	7'-0"		27	88	0'-8"	3'-0"		
		TOTAL COATED BARS =			14,945				

CALC. BY: RCK DATE: 12/14/88
CHECKED BY: GFD DATE: 12/16/88

F.H.W.A. REGION	STATE	PROJECT
5	OHIO	

882
12.14

SUMMIT COUNTY
SUM-76-11.57

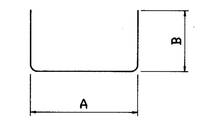

TYPE 1

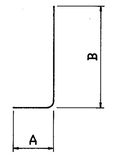

TYPE 2

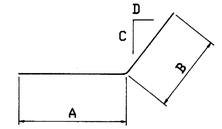

TYPE 4

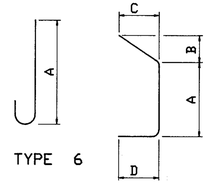

TYPE 6 TYPE 8

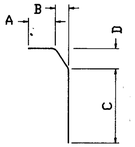

TYPE 9

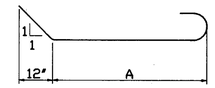

TYPE 14

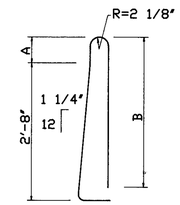

TYPE 27

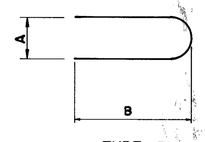

TYPE 17

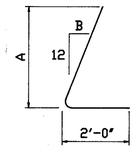

TYPE 32

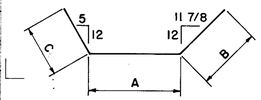

TYPE 31

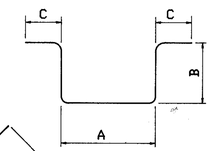

TYPE 33

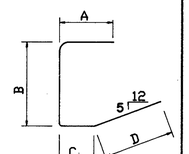

TYPE 34

REINFORCING STEEL SAMPLES

REFER TO CMS SECTIONS 106.03, 700, 709.01 THROUGH 709.05 AND 709.08. SUFFICIENT ADDITIONAL REINFORCING STEEL SHALL BE PROVIDED FOR SAMPLING. RANDOM SAMPLES SHALL BE REPLACED IN STRUCTURES BY THE ADDITIONAL STEEL, SPLICED IN ACCORDANCE WITH 509.08.

BAR MARKS PREFIXED WITH "E" INDICATE EPOXY COATING REQUIRED

JOHN DAVID JONES & ASSOC., INC. 19/20
2162 FRUIT STREET
CUYAHOGA FALLS, OHIO 44221
ENGINEERS ARCHITECTS PLANNERS

REINFORCING STEEL LIST

BRIDGE No. SUM-76-1235
RAMP E-8 OVER RAMP E-6

DESIGNED	DRAWN	TRACED	CHECKED	REVIEWED	DATE	REVISED
RCK	JPM	—	GFD	PAK	12/22/88	

MARK	NO.	LENGTH	SER. INCR.	TYPE	WEIGHT	A	B	C	D
			LEFT REAR WINGWALL						
WR 901	30	8'-0"		2	816	2'-10"	5'-6"		
WR 902	23	14'-4"		2	1121	2'-10"	11'-10"		
WR 801	1 SER. 54	5'-6" / 13'-6"	1 13/16"	STR	1370				
WR 701	1 SER. 54	5'-6" / 13'-6"	1 13/16"	STR	1049				
WR 501	32	22'-10"		STR	762				
WR 507	1 SER. 14	7'-0" / 25'-5"	1'-5"		237				
WR 508	2	26'-5"			55				
WR 509	13	22'-8"			307				
WR 510	1 SER. 5	4'-0" / 20'-0"	4'-0"		63				
WR 511	2	23'-7"			49				
WR513	1	26'-1"		STR	27				
WR515	1 SER. 5	2'-6" / 19'-6"	4'-3"	STR	57				
		TOTAL	UNCOATED	BARS	5913				
EWR 502	1 SER. 14	7'-0" / 25'-5"	1'-5"	STR	237				
EWR 503	2	26'-5"			55				
EWR 504	13	22'-8"			307				
EWR 505	1 SER. 5	4'-0" / 20'-0"	4'-0"		63				
EWR 506	2	23'-7"			49				
EWR512	1	26'-1"		STR	27				
EWR514	1 SER 5	2'-6" / 19'-6"	4'-3"	STR	57				
		TOTAL	COATED	BARS	795				
			RIGHT FORWARD WINGWALL						
WF 901	30	8'-0"		2	816	2'-10"	5'-6"		
WF 902	23	14'-4"		2	1121	2'-10"	11'-10"		
WF 801	1 SER. 54	5'-6" / 13'-6"	1 13/16"	STR	1370				
WF 701	1 SER. 54	5'-6" / 13'-6"	1 13/16"	STR	1049				
WF 501	32	22'-10"		STR	762				
WF 507	1 SER 14	6'-8" / 25'-1"	1'-5"	STR	232				
WF 508	2	26'-1"			54				
WF 509	13	22'-8"			307				
WF 510	1 SER. 5	4'-0" / 20'-0"	4'-0"		63				
WF 511	2	23'-7"			49				
WF 513	1	25'-9"			27				
WF515	1 SER. 5	2'-6" / 19'-6"	4'-3"	STR	57				
		TOTAL	UNCOATED	BARS	5907				
EWF502	1 SER. 14	6'-8" / 25'-1"	1'-5"	STR.	232				
EWF 503	2	26'-1"		STR	54				
EWF 504	13	22'-8"			307				
EWF 505	1 SER. 5	4'-0" / 20'-0"	4'-0"		63				
EWF 506	2	23'-7"			49				
EWF 512	1	25'-9"			27				
EWF514	1 SER 5	2'-6" / 19'-6"	4'-3"	STR	57				
		TOTAL	COATED	BARS	789				

MARK	NO.	LENGTH	SER. INCR.	TYPE	WEIGHT	A	B	C	D
				SLAB					
ES 601	23	30'-8"		STR	1059				
ES 602	1 SER. 111	30'-5 1/4" / 4'-6"	2 7/8"		2913				
ES 605	8	4'-3"			51				
ES 606	1 SER. 32	30'-4 1/2" / 21'-10 5/8"	3 1/4"		1256				
ES 607	1 SER. 32	21'-7 1/8" / 13'-3 5/8"	3 1/4"		839				
ES 608	1 SER. 32	13'-0" / 5'-0"	3 1/4"		433				
ES 609	5	5'-0"			38				
ES 501	90	32'-6"		STR	3051				
ES 502	23	30'-8"			736				
ES 503	1 SER. 111	30'-5 1/4" / 4'-6"	2 7/8"		2023				
ES 506	8	4'-3"			36				
ES 507	1 SER. 32	30'-4 1/2" / 21'-10 5/8"	3 1/4"		872				
ES 508	1 SER. 32	21'-7 1/8" / 13'-3 5/8"	3 1/4"		583				
ES 509	1 SER. 32	13'-0" / 5'-0"	3 1/4"		301				
ES 510	5	5'-0"			26				
ES 401	147	32'-2"		STR	3159				
EX 501	120	6'-8"		27	835	0'-8"	3'-0"		
EX 502	33	15'-4"		STR	528				
EX 503	33	14'-0"		STR	482				
EY 502	120	3'-1"		9	386	0'-10"	0'-9"	0'-6"	0'-8 1/2"
EY 503	120	2'-4"		2	292	0'-10 1/2"	1'-7"		
EX 504	3	13'-9"		STR.	43				
EX 505	3	11'-8"			37				
EX 506	3	10'-2"			32				
EX 507	3	12'-2"			38				
EX508	3	13'-5"			42				
EX509	3	15'-2"			48				
		TOTAL COATED BARS = 20,139 (SLAB)							
		BRIDGE TERMINAL PARAPETS							
EY501	16	3'-7"		9	60				
EY502	16	5'-2"		STR	86				
EY503	16	3'-10"		6	64	3'-3"			
EY504	12	4'-4"		STR	55				
EY505	12	13'-8"		STR	171				
EY506	4	13'-8"		35	57				
EY507	4	10'-0"		STR.	42				
		TOTAL COATED BARS = 535							

CALC. BY: RCK DATE: 12/14/88
CHECKED BY: GFD DATE: 12/16/88

F.H.W.A. REGION	STATE	PROJECT
5	OHIO	

883
12.14

SUMMIT COUNTY
SUM - 76 - 11.57

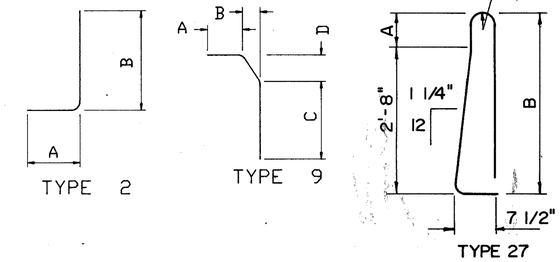

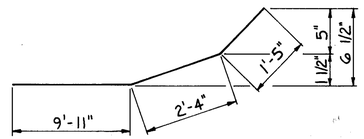

TYPE 35

BAR MARKS PREFIXED WITH "E" INDICATE EPOXY COATING REQUIRED.

REINFORCING STEEL SAMPLES

REFER TO CMS SECTIONS 106.03, 700, 709.01 THROUGH 709.05 AND 709.08. SUFFICIENT ADDITIONAL REINFORCING STEEL SHALL BE PROVIDED FOR SAMPLING. RANDOM SAMPLES SHALL BE REPLACED IN STRUCTURES BY THE ADDITIONAL STEEL, SPLICED IN ACCORDANCE WITH 509.08.

JOHN DAVID JONES & ASSOC., INC. 20/20
2162 FRONT STREET
CUYAHOGA FALLS, OHIO 44221
ENGINEERS ARCHITECTS PLANNERS

REINFORCING STEEL LIST

BRIDGE No. SUM-76-1235
RAMP E-8 OVER RAMP E-6

DESIGNED	DRAWN	TRACED	CHECKED	REVIEWED	DATE	REVISED
JAS	JPS	—	GFD	PAK	12/22/88	

F.H.W.A. REG.	STATE	PROJECT	
5	OHIO		

884
12.14

SUMMIT COUNTY
SUM - 76 - 11.57

CURVE DATA RAMP E-4

△ = 19°-05'-29"
Dc = 4°-00'-00"
R = 1432.39'
T = 240.88'
L = 477.29'

CURVE DATA RAMP E-7

△ = 10°-58'-31"
Dc = 7°-00'-00"
R = 818.51'
T = 78.64'
L = 156.79'

BENCH MARK
LETTER "R" IN CORY ON HYDRANT
AT N.W. CORNER OF INTERSECTION
OF SECOND AND CHITTENDEN.
ELEV. 1054.18

SECOND AVENUE (EXISTING)

INTERSECTION
STA. 85+40.53 E-7
STA. 85+03.80 E-4

BEGIN APPROACH
STA. 85+72.67

RETAINING WALL

END ABUTMENT
PARAPET STA. 86+25.38

P.C. STA. 81+91.70

S 89°38'10" E

P.C. STA. 83+24.42

BEGIN ABUTMENT
STA. 84+02.03 E-4

BEGIN WINGWALL
STA. 84+50.48, 8.00' LT. (E-4)

8'-0" (MIN)

4'-0" (MIN.)

WINGWALL

STA. 85+73.65

P.C. STA. 85+98.24

2:1 (TYP)

B-6

Dc = 4°00'00"

B-7

PROPOSED RETAINING WALL NO. 2, SEE RETAINING WALL DRAWINGS

16'-0" SHOULDER

16'-0" PAV'T.

S 88°02'29" E

Dc = 7°00'00"

℄ RAMP E-7

20'-0"

BEGIN ABUTMENT
PAPARET STA. 84+37.62

3'-0" SHOULDER

16'-0" PAV'T.

P.T. STA. 84+89.21

STA. 85+04.00

N 80°59'00" E

℄ BRG. FORWARD ABUT.

B-8

28'-0" TOE/TOE PARAPETS

20'-0"

Dc = 16°30'00"

RAMP E-7
(ONE LANE)

B-10

SKEW ANGLE
66°34'35"

WINGWALL

PROPOSED RETAINING WALL NO. 5,
SEE RETAINING WALL
DRAWINGS.

P.T. STA. 86+68.99

CONC. BARRIER, SEE ROADWAY PLANS.

℄ RAMP E-4

16'-0" PAV'T.

36'-0"

CHITTENDEN STREET
BRIDGE (REMOVED)

OVERHEAD SIGN
(REMOVED)

END APPROACH
STA. 84+68.46

B-9

SKEW ANGLE
70°18'07" TO
LOCAL TANGENT

END ABUTMENT
STA. 85+61.98, 20.00' RT.

END WINGWALL
STA. 85+61.98 (E-4)

END ABUTMENT
STA. 85+68.20

I-76 WEST BOUND
(3 LANES)

583

584

℄ I-76

SHOULDER 12'-0"

BERM

SITE PLAN

1'-6" 28'-0" TOE/TOE PARAPETS 1'-6"
2" 9 2 7" 8'-0" ℄ RAMP E-7 16'-0" 4'-0"
PROFILE GRADE
8 1/2"
VARIES
PLATE GIRDER (TYP)
3 SPACES @ 8'-6" = 25'-6"

TYPICAL SECTION

CURVE DATA RAMP E-7

△ = 28°-28'-19"
Dc = 16°-30'-00"
R = 347.25'
T = 88.10'
L = 172.56'

N

PROPOSED STRUCTURE

TYPE: SIMPLE SPAN A572 STEEL GIRDER WITH REINFORCED CONCRETE DECK (COMPOSITE DISIGN) AND SUBSTRUCTURE.

SPAN: VARIES 80'-11" ± TO 92'-6"± C/C BEARINGS

ROADWAY: 28'-0" TOE/TOE PARAPETS

LOADING: HS20-44 CASE II AND THE ALTERNATE MILITARY LOADING

SKEW: FORWARD ABUT. 66°34'35" RT., REAR ABUT. 70°18'07" RT. TO LOCAL TANGENT.

WEARING SURFACE: 1" MONOLITHIC

APPROACH SLAB: SPECIAL

ALIGNMENT: TANGENT WITH CURVES AT ENDS

SUPERELEVATION: VARIES (SEE TABLE)

EARTHWORK

EARTHWORK LIMITS SHOWN ARE APPROXIMATE. ACTUAL SLOPES SHALL CONFORM TO PLAN CROSS-SECTIONS.

PROPOSED ELEVATIONS

P.V.I. STA. 82+65.31
ELEV. 1078.50

ELEV. 1076.01

350' V.C.

ELEV. 1073.99

ELEV. 1071.81

P.V.T. STA. 84+40.31
ELEV. 1069.89
ELEV. 1069.41

ELEV. 1066.95

ELEV. 1064.49

ELEV. 1062.03

ELEV. 1059.58

ELEV. 1057.12

1090
1070
1050
1030

-2.12%
-4.92%

BRIDGE LIMITS = 104.21'
(ALONG BASE LINE)

STA. 84+68.46
ELEV. 1068.50

STA. 85+72.67
ELEV. 1063.37

-4.92%

EL. 1037.00

EL. 1036.00

EXIST. GRADE

MIN.
VERT. CLEARANCE 16.00' REQD.
16.60' ACTUAL AT SOUTH BEAM

83 84 85 86 87

PROFILE

SUPERELEVATION RAMP E-7	
STATION	SUPER
82+93.80	.0156 LT.
83+39.73	.033 LT.
84+51.08	.033 LT.
85+00.00	.0156 LT.
85+41.60	LEVEL
86+32.12	.04 RT.
87+71.07	.04 RT.

DESIGN TRAFFIC

1990 - 6,826 ADT
341 ADTT
2010 - 8,974 ADT
449 ADTT

JOHN DAVID JONES & ASSOC. INC.
2162 FRONT STREET
CUYAHOGA FALLS, OHIO 44221
ENGINEERS..... ARCHITECTS..... PLANNERS

1/19

SITE PLAN

BRIDGE No. SUM-76-1244
RAMP E-7 OVER RAMP E-4

SUMMIT COUNTY STA. 84+71.33
TO STA. 85+72.60

PRESENT TOPOGRAPHY		PROPOSED WORK			
SURVEYED	DRAWN	DESIGNED	DRAWN	CHECKED	REVIEWED
		JRS	JM	BRH	PAK 10-19-87

F.H.W.A. REG.	STATE	PROJECT	
5	OHIO		

885
12.14

SUMMIT COUNTY
SUM-76-11.57

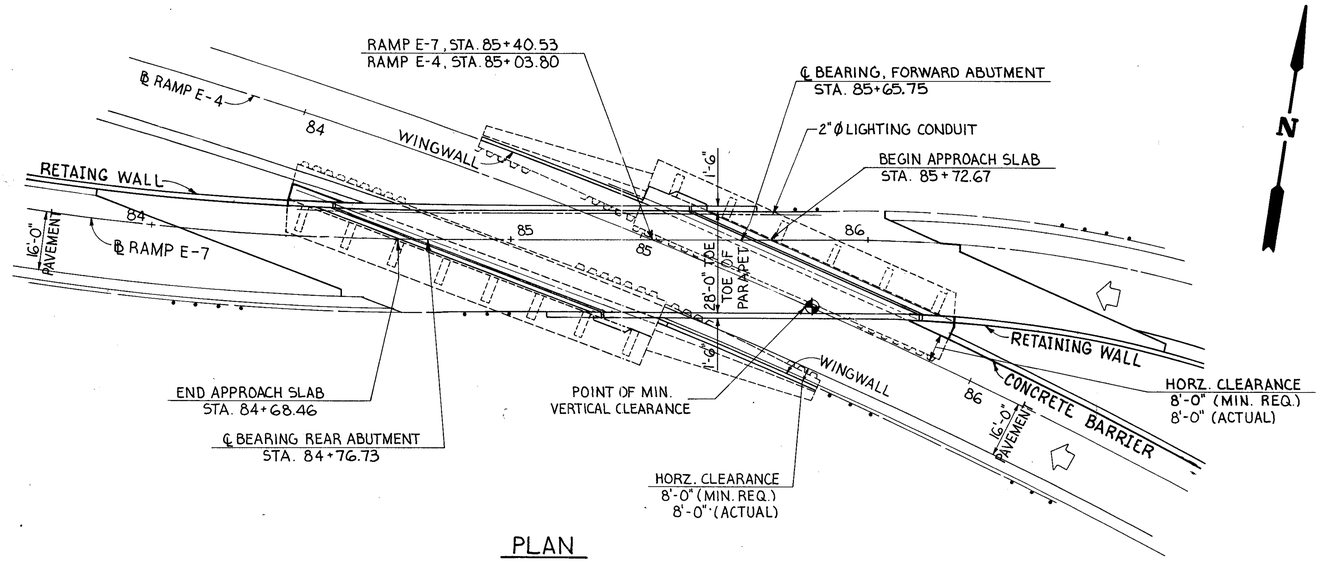

PLAN

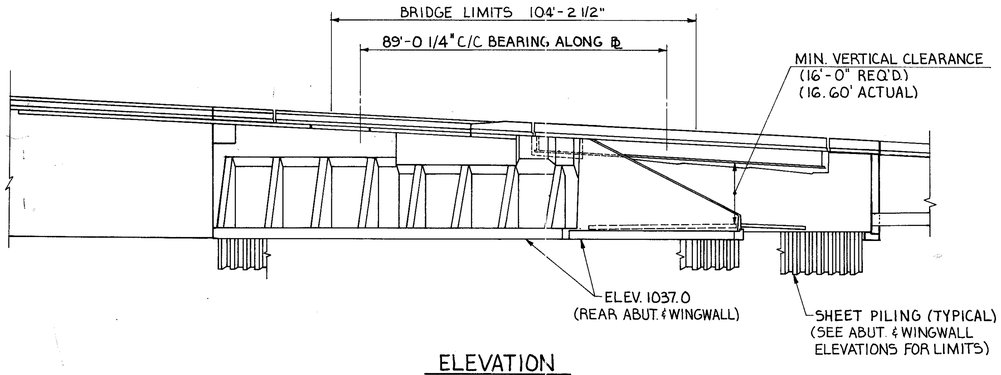

ELEVATION

JOHN DAVID JONES & ASSOC., INC.
2162 FRONT STREET
CUYAHOGA FALLS, OHIO 44221
ENGINEERS ARCHITECTS PLANNERS

2 / 19

GENERAL PLAN & ELEVATION

BRIDGE No. SUM-76-1244
RAMP E-7 OVER RAMP E-4

DESIGNED	DRAWN	TRACED	CHECKED	REVIEWED	DATE	REVISED
JRS	JPM	–	BRH	PAK	12/21/88	

ESTIMATED QUANTITIES

QUANTITY CALCULATIONS
MADE BY: R.W. DATE: 6-90
CHKD. BY: PAK DATE: 8-90

F.H.W.A. REGION	STATE	PROJECT	
5	OHIO		

886/1214

SUMMIT COUNTY
SUM-76-11.57

ITEM	ITEM EXT.	TOTAL	UNIT	DESCRIPTION	ABUTMENTS	PIERS	SUPER STRUCTURE	GENERAL
503	11100	LUMP		COFFERDAMS, CRIBS AND SHEETING				LUMP
503	21100	1325	CU.YD.	UNCLASSIFIED EXCAVATION	1325			
504	11100	848	SQ.FT.	STEEL SHEET PILING LEFT IN PLACE (MINIMUM SECTION MODULES OF 21.6 IN.^{3} PER FOOT OF WALL)	848			
504	11100	2414	SQ.FT.	STEEL SHEET PILING LEFT IN PLACE (MINIMUM SECTION MODULES OF 48.4 IN.^{3} PER FOOT OF WALL)	2414			
505	11100	LUMP		PILE DRIVING EQUIPMENT MOBILIZATION	LUMP			
509	15400	113503	LB.	REINFORCING STEEL, GRADE 60	113503			
509	15800	54806	LB.	EPOXY COATED REINFORCED STEEL, GRADE 60	33582	21224		
511	32203	99	CU.YD.	CLASS S CONCRETE, SUPERSTRUCTURE, AS PER PLAN			99	
511	45101	649	CU.YD.	CLASS "C" CONCRETE, ABUTMENTS ABOVE FOOTINGS, As Per Plan	649			
511	46001	103	CU.YD.	CLASS "C" CONCRETE, WINGWALLS ABOVE FOOTINGS, As Per Plan	103			
511	46500	604	CU.YD.	CLASS "C" CONCRETE FOOTINGS	604			
513	11600	71000	LB.	STRUCTURAL STEEL (AISC CATEGORY III) - ASTM A572			71000	
513	11700	14536	LB.	STRUCTURAL STEEL (AISC CATEGORY III) - ASTM A36			14536	
513	20000	840	EACH	WELDED STUD SHEAR CONNECTORS			840	
516	11210	155	LIN.FT.	STRUCTURAL EXPANSION JOINTS INCL. ELASTOMERIC STRIP SEALS	155			
516	13600	245	SQ.FT.	1" PREFORMED EXPANSION JOINT FILLER	245			
516	30501	103	LIN.FT.	PVC WATERSTOP, AS PER PLAN	103			
516	44200	6	EACH	LAMINATED ELASTOMERIC BEARINGS 16" X 11" X 3.037" ELASTOMERIC PAD WITH 19" X 12" X 1-13/16" STEEL LOAD PLATE	6			
516	44200	2	EACH	LAMINATED ELASTOMERIC BEARINGS 16" X 11" X 3.037" ELASTOMERIC PAD WITH 24" X 12" X 1-13/16" STEEL LOAD PLATE	2			
518	21200	468	CU.YD.	POROUS BACKFILL, WITH FILTER FABRIC,	468			
511	33404	99	Cu.YD.	Class S concrete, superstructure, using shrinkage compensating cement (See Proposal Note)			99	
511	33410	LUMP		Class S concrete, using shrinkage compensating cement for pre-placement testing (See Proposal Note)			LUMP	
625				SEE SHEET 678-679 FOR LIGHTING SUMMARY				
SPECIAL	51267502	871	SQ.YD.	SEALING CONCRETE SURFACES (EPOXY) (SEE PROPOSAL NOTE)	650	221		
SPECIAL	51400600	LUMP		PAINTING OF NEW STEEL, SYSTEM IZEU (SEE PROPOSAL NOTE) ▲				LUMP

∝ These two items shall constitute one alternate bid to class S concrete superstructure, as per plan

▲ See General Notes for additional requirements

ITEM 511 - CLASS S CONCRETE SUPERSTRUCTURE, AS PER PLAN
Curing shall be method (a) water curing

JOHN DAVID JONES & ASSOC., INC. 3/19
2162 FRONT STREET
CUYAHOGA FALLS, OHIO 44221
ENGINEERS ARCHITECTS PLANNERS

QUANTITY TABLE

BRIDGE No. SUM-76-12.44
RAMP E-7 OVER RAMP E-4

DESIGNED	DRAWN	TRACED	CHECKED	REVIEWED	DATE	REVISED
JRG	EMB	—	BRH	PAK	11/90	

543271

F.H.W.A. REGION	STATE	PROJECT	
5	OHIO		

886A 1214

SUMMIT COUNTY
SUM-76-11.57

GENERAL NOTES

REFERENCE SHALL BE MADE TO STANDARD DRAWING(S):

SD-1-69 DATED 6-12-69
AS-1-81 DATED 11-27-81
GR-1 REVISED 5-6-91
EXJ-4-87 DATED 1-5-89
AND TO SUPPLEMENTAL SPECIFICATION(S):

836 DATED 11-12-85

DESIGN SPECIFICATIONS: THIS STRUCTURE CONFORMS TO "STANDARD SPECIFICATIONS FOR HIGHWAY BRIDGES" ADOPTED BY THE AMERICAN ASSOCIATION OF STATE HIGHWAY AND TRANSPORTATION OFFICIALS, 1983, INCLUDING THE 1984, 1985 AND 1986 INTERIM SPECIFICATIONS AND THE OHIO "SUPPLEMENT" TO THESE SPECIFICATIONS. THIS STRUCTURE ALSO CONFORMS TO THE LATEST "CONSTRUCTION AND MATERIAL SPECIFICATIONS" OF THE STATE OF OHIO DEPARTMENT OF TRANSPORTATION.

DESIGN LOADING - HS20-44 CASE I AND THE ALTERNATE MILITARY LOADING.

DESIGN STRESSES

CONCRETE CLASS S - COMPRESSIVE STRENGTH 4500 P.S.I.
CONCRETE CLASS C - COMPRESSIVE STRENGTH 4000 P.S.I.
REINFORCING STEEL - ASTM A615, A616, A617 - GRADE 60 MINIMUM YIELD STRENGTH.60,000 P.S.I.
STRUCTURAL STEEL - ASTM A572 - YIELD STRENGTH 50,000 P.S.I. - PLATE GIRDERS, BEARING AND INTERMEDIATE STIFFENER PLATES.
ASTM A36 - YIELD STRENGTH 36,000 P.S.I. - CROSS FRAMES.

DECK PROTECTION METHOD: EPOXY COATED REINFORCING STEEL, TOP AND BOTTOM MAT, EPOXY SEALER PARAPETS.

MONOLITHIC WEARING SURFACE IS ASSUMED, FOR DESIGN PURPOSES, TO BE 1" THICK.

EMBANKMENT CONSTRUCTION: THE APPROACH EMBANKMENT SHALL BE CONSTRUCTED TO THE LEVEL OF THE ABUTMENT FOOTING (IF APPLICABLE) AND UP ON A 1.5 TO 1 SLOPE FROM THE HEEL OF THE ABUTMENT FOOTING TO THE SUBGRADE ELEVATION FOR A MINIMUM DISTANCE OF 200 FEET BACK OF THE FOOTING BEFORE ANY PORTIONS OF THE ABUTMENT ARE CONSTRUCTED. BEFORE THE BACKWALL IS CONSTRUCTED THE EMBANKMENT SHALL BE PLACED UP TO THE LEVEL OF THE SUBGRADE WITH A 1:1 SLOPE FROM THE BRIDGE SEAT. PAYMENT FOR BACKFILL AND NEW EMBANKMENT, 503.10, REQUIRED IN EXCESS OF 503, 518 AND 203 QUANTITIES SHALL BE INCLUDED IN THE PRICE BID FOR ITEM 203 EMBANKMENT.

FOUNDATION BEARING PRESSURE: ABUTMENT FOOTINGS, AS DESIGNED, PRODUCE A MAXIMUM BEARING PRESSURE OF 3.1 TONS PER SQ. FT.

UTILITY LINES: ALL EXPENSE INVOLVED IN RELOCATING AND/OR INSTALLING THE AFFECTED UTILITY LINES SHALL BE BORNE BY THE OWNERS. THE CONTRACTOR AND OWNERS ARE REQUESTED TO COOPERATE BY ARRANGING THEIR WORK IN SUCH A MANNER THAT INCONVENIENCE TO EITHER WILL BE HELD TO A MINIMUM.

ITEM SPECIAL - SEALING OF CONCRETE SURFACES (EPOXY): THE FOLLOWING CONCRETE SURFACES SHALL BE SEALED IN ACCORDANCE WITH PROPOSAL NOTE : (THE COLOR OF THE EPOXY SEALER SHALL BE PER FED. STD. 595A 13522)

1. ABUTMENT BRIDGE SEATS AND BREAST WALLS EXTENDING DOWNWARD TO FINISH GRADE AND FULL ABUTMENT WIDTH.

2. WINGWALL FACES ABOVE GRADE.

3. PARAPETS TO THE LIMITS SHOWN ON THE PLANS.

ITEM SPECIAL - FIELD PAINTING OF NEW STEEL, SYSTEM IZEU: THIS ITEM SHALL CONSIST OF FURNISHING ALL NECESSARY LABOR, MATERIALS, AND EQUIPMENT TO CLEAN AND PAINT ALL NEW STEEL SURFACES AS HEREIN SPECIFIED WITH THE FOLLOWING COATINGS:

ALL OF THE REQUIREMENTS CONTAINED IN THE "FIELD PAINTING OF NEW STEEL, SYSTEM OZEU PROPOSAL NOTE DATED JANUARY 26, 1990 SHALL APPLY.

MATERIALS

INORGANIC ZINC PRIME COAT IN ACCORDANCE WITH 708.17 SHALL BE SUBSTITUTED FOR ORGANIC ZINC RRIME COAT.

THE COLOR OF URETHANE FINISH COAT SHALL BE "DARK BROWN", FEDERAL SPECIFICATION NUMBER 595A 10080. AN ACTUAL SAMPLE OF THE PAINT PROPOSED FOR USE SHALL BE SUBMITTED BY THE CONTRACTOR FOR APPROVAL. THE INTERMEDIATE COAT COLOR SHALL BE PER FEDERAL STD. 595A 10219.

ABUTMENT WALL TEXTURE: ABUTMENTS AND WINGWALLS SHALL BE TEXTURED BY USING FORM LINERS ATTACHED TO FORMWORK PRIOR TO PLACING CONCRETE. AREAS TO RECEIVE TEXTURED CONCRETE SURFACE SHALL INCLUDE THE FULL LENGTH OF EXPOSED ABUTMENT BREAST WALL AND WINGWALLS FROM FINISHED GRADE/PAVEMENT UPWARD.

TEXTURED SURFACE SHALL CONSIST OF A 3/4" DEEP FRACTURED FIN TEXTURE. ACCEPTABLE PRODUCTS INCLUDE:

SYMONS CORPORATION
7603 OLD ROCKSIDE ROAD
INDEPENDENCE, OHIO 44131
PATTERN NO. P/C 30449

GREENSTREAK
3400 TREE COURT IND. BLVD.
ST. LOUIS, MO 63122
(800) 325-9504
PATTERN NO. 373

FITZGERALD CONSTRUCTION SALES
17376-A NEWHOPE AVENUE
FOUNTAIN VALLEY, CA 92708
(800) 227-2755
PATTERN NO. 16950

OR AN APPROVED ALTERNATE. THE CONTRACTOR SHALL SUBMIT A SAMPLE OF THE FINISHED CONCRETE TEXTURED SURFACE FOR APPROVAL.

PAYMENT FOR ALL MATERIALS AND LABOR REQUIRED FOR THE TEXTURED SURFACES, SHALL BE INCLUDED WITH ITEM 511 - CLASS C CONCRETE, Abutments or Wingwalls above Footings, As Per Plan.

JOHN DAVID JONES & ASSOC., INC. 3A/19
2162 FRONT STREET
CUYAHOGA FALLS, OHIO 44221
ENGINEERS ARCHITECTS PLANNERS

GENERAL NOTES

BRIDGE No. SUM-76-12.44
RAMP E-7 OVER RAMP E-4

DESIGNED	DRAWN	TRACED	CHECKED	REVIEWED	DATE	REVISED
JRS	JPM	-	BRH	PAK	12-28-88	

343371

F.H.W.A. REGION	STATE	PROJECT	
5	OHIO		

887
12.14

SUMMIT COUNTY
SUM-76-11.57

WINGWALL FOR DETAILS SEE SHEET 8 / 19

54'-10" | 54'-10"

5'-10" | 3 EQUAL SPACES @ 14'-0" = 42'-0" COUNTERFORT SPACING | 7'-0" | 7'-0" | 3 EQUAL SPACES @ 14'-0 = 42'-0" COUNTERFORT SPACING | 5'-10"

20 D801 @ 4'-4" =

℄ EXPANSION JOINT

109'-8"

13'-1" | 7" | 3'-8"

1'-7"

SLOPE TO DRAIN

12-ES14 @ 1'-0"

1SER 7-ES13 @ 1'-0" | 1'-0" | 8'-3" | 1'-8"

1'-7" | 3'-6" | 1'-0"

3'-0" | 5'-1"

1'-0" | ④ ℄ GIRDER | 4-EYS14 TO MATCH EYS09

4'-10 3/4"

SLOPE 3/4" BETWEEN BRIDGE SEATS

1'-6" | 1'-3" | 6" | 10'-5" | 1'-1 1/2" | 1'-1 1/2"(TYP.)

COUNTERFORT, FOR DETAILS SEE SHEET 7 / 19

℄ BEARINGS

1'-10" | 4'-9" | 6'-4" | 1'-6" | ③ ℄ GIRDER

1'-3" | 1'-3"(TYP.) | FINISH BRIDGE SEAT LEVEL

20°01'35" (TYP.) | ② ℄ GIRDER | ℄ E-7 N 80° 59' 00" E

19°41'53" TO LOCAL TANGENT | P.T. STA. 84+81.21

6-903 @ 1'-0" TOP
6-902 @ 1'-0" BOTT.

STA. 84+68.46

℄ BEARINGS STA. 84+76.73

1'-0"

① ℄ GIRDER

14-703 @ 1'-0" TOP
14-702 @ 1'-0" BOTT.

8-703 @ 1'-0" TOP
8-702 @ 1'-0" BOTT.

1-SER G-905 @ 1'-0" TOP
1-SER G-906 @ 1'-0" BOT.

10" | 9'-1" | 1'-0"

1-SER G-717 @ 1'-0" TOP
1-SER G-716 @ 1'-0" BOT.

2" | 1'-6" | 3'-5 3/4"

1'3" | 4 1/2" | 1'-0" | 9-ES15 @ 1'-0"

4"x4" KEY

12'-0"

RETAINING WALL SEE ROADWAY DRAWINGS

1'-3"

SLOPE TO DRAIN

1-SER 4-715 @ 1'-0" TOP
1-SER 4-904 @ 1'-0" BOT.

SHEET PILING LEFT IN PLACE

GIRDERS SPACING

9'-3 3/4" | 4'-7 1/4" | 13'-11" | 24'-9 7/8" | 24'-9 7/8" | 5'-1 3/4" | 19'-8 1/8" | 11'-7 3/8" | 9'-8"

NOTE:
ALL HORIZONTAL LONGITUDINAL DIMENSIONS SHOWN ARE MEASURED ALONG THE CENTERLINE OF BEARING LINE

LAP LENGTH	
#5	1'-4"
#6	2'-0"
#7	2'-7"

3-EYS09 N.F.
3-EYS10 F.F.

FOR DETAILS SEE SHEET 14 / 19

A 4 6

7 SETS OF EYS01, EYS08 AND EXS01

38-SETS E 602, E603 @ 1'-0"

E 4 6

2-EYS11 N.F. AND F.F.

ELEV. 1065.72 | ELEV. 1061.24 | ELEV. 1062.44 | ELEV. 1066.86

1-ES05 | 3-ES05 @ 1'-0" F.F. | 3-ES05 @ 1'-0" N.F. | 3-ES05 | 1-ES05 F.F. | 3-ES05

ELEV. 1064.94 | ELEV. 1065.38

B 4 6

5-ES07 @ 1'-0" N.F.

4-E707

7-ES06 @ 1'-0" F.F.

3-601 (SIDE)

7-601 @ 1'-0" F.F. | 15-606 @ 1'-0" F.F.

20-E707 @ 1'-0" N.F.
20- 708 @ 1'-0" F.F.

35-E705 @ 1'-0" N.F.
35- 706 @ 1'-0" F.F.

2'-4 1/2" (TYP.) | 7'-0" (TYP.)

6" Ø WEEP HOLE (TYP.)

3-ES05 @ 1'-0" E.F.

55-ES04 @ 1'-0"

4-E707

36-601 @ 1'-0" F.F.

56-E607 N.F.

22-E707 @ 1'-0" N.F.
22-708 @ 1'-0" F.F.

21-E709 @ 1'-0" N.F.
21- 706 @ 1'-0" F.F.

56-704 DOWELS TO MATCH 706 F.F.

PLAN

CONCRETE BETWEEN FOOTING & SHEET PILING HAS BEEN INCLUDED IN ITEM 511 (CLASS C FOOTING CONCRETE)

F 4 6

48 SETS EG02, EG03 @ 1'-0"

ELEV. 1063.47 | ELEV. 1067.81 | ELEV. 1064.47 | ELEV. 1068.89

1-E505 F.F.

3-E505

3-E505 @ 1'-0" E.F. (2 PLACES)

4-E707

44-ES04 @ 1'-0"

48-601 @ 1'-0" F.F.
48-E607 @ 1'-0" N.F.

22-E707 @ 1'-0" N.F.
22-708 @ 1'-0" F.F.

17-E710 @ 1'-0" N.F.
17- 711 @ 1'-0" F.F.

24-E707 @ 1'-0" N.F.
24-1708 @ 1'-0" F.F.

39-E712 @ 1'-0" N.F.
39- 711 @ 1'-0" F.F.

51-704 DOWELS TO MATCH 711 F.F.

FOR DETAIL SEE SHEET 14 / 19

C 4 6

2" Ø CONDUIT, SEE LIGHTING PLANS

ELEV. 1069.33

7 SETS OF EYS01, EYS08 AND EXS01

4-EYS12 E.F.

ELEV. 1069.84

5 SETS OF ES10 & ES09
1-EYS12 N.F.
1-EYS13 F.F.

D 4 7

1-E505 E.F.

LEVEL C.J.

14-E607 @ 1'-0"

4-EG10 @ 1'-0" F.F.

J 4 7

4-EG10 (SIDE)

24-ES08 @ 1'-0"

ABBREVIATIONS

C.J.	CONSTRUCTION JOINT
TYP.	TYPICAL
F.F.	FAR FACE
N.F.	NEAR FACE
ELEV.	ELEVATION
STA.	STATION
E.F.	EACH FACE

NOTES:
FOR RUSTICATION DETAIL SEE SHEET 6 / 19
FOR EXPANSION JOINT DETAILS SEE SHEET 7 / 19

FOR NOTES SEE SHEET 7 / 19

BOT. OF FOOTING EL. 1037.0

7 TOP / # 9 TOP | 2'-9" | 6'-0"

14-703 AND 6-903 (TYP.) @ 3 PLACES

14-702 AND 6-902 (TYP.) @ 3 PLACES

8-703, 6-717, 6-905
8-702, 6-716, 6-906

4-611 DOWELS TO MATCH EG10 F.F. ONLY

2'-0" | 4'-3" | # 7 BOTTOM / # 9 BOTTOM

106-701 @ 1'-0" TOP
106-901 @ 1'-0" BOTTOM

SHEET PILING LEFT IN PLACE

8'-6" (MIN)

16-6" Ø WEEP HOLE @ 7'-0"

1'-0"

4-715 TOP
4-904 BOTTOM

ELEVATION

LOWER EDGE OF SHEET PILING

JOHN DAVID JONES & ASSOC., INC.
2162 FRONT STREET
CUYAHOGA FALLS, OHIO 44221
ENGINEERS ARCHITECTS PLANNERS

4 / 19

REAR ABUTMENT

BRIDGE No. SUM-76-1244
RAMP E-7 OVER RAMP E-4

DESIGNED	DRAWN	TRACED	CHECKED	REVIEWED	DATE	REVISED
B.R.H.	B.R.H.	D.E.N.	G.F.D.	P.A.K.	1/90	

232281

F.H.W.A. REGION	STATE	PROJECT	
5	OHIO		

888
12.14

SUMMIT COUNTY
SUM-76-11.57

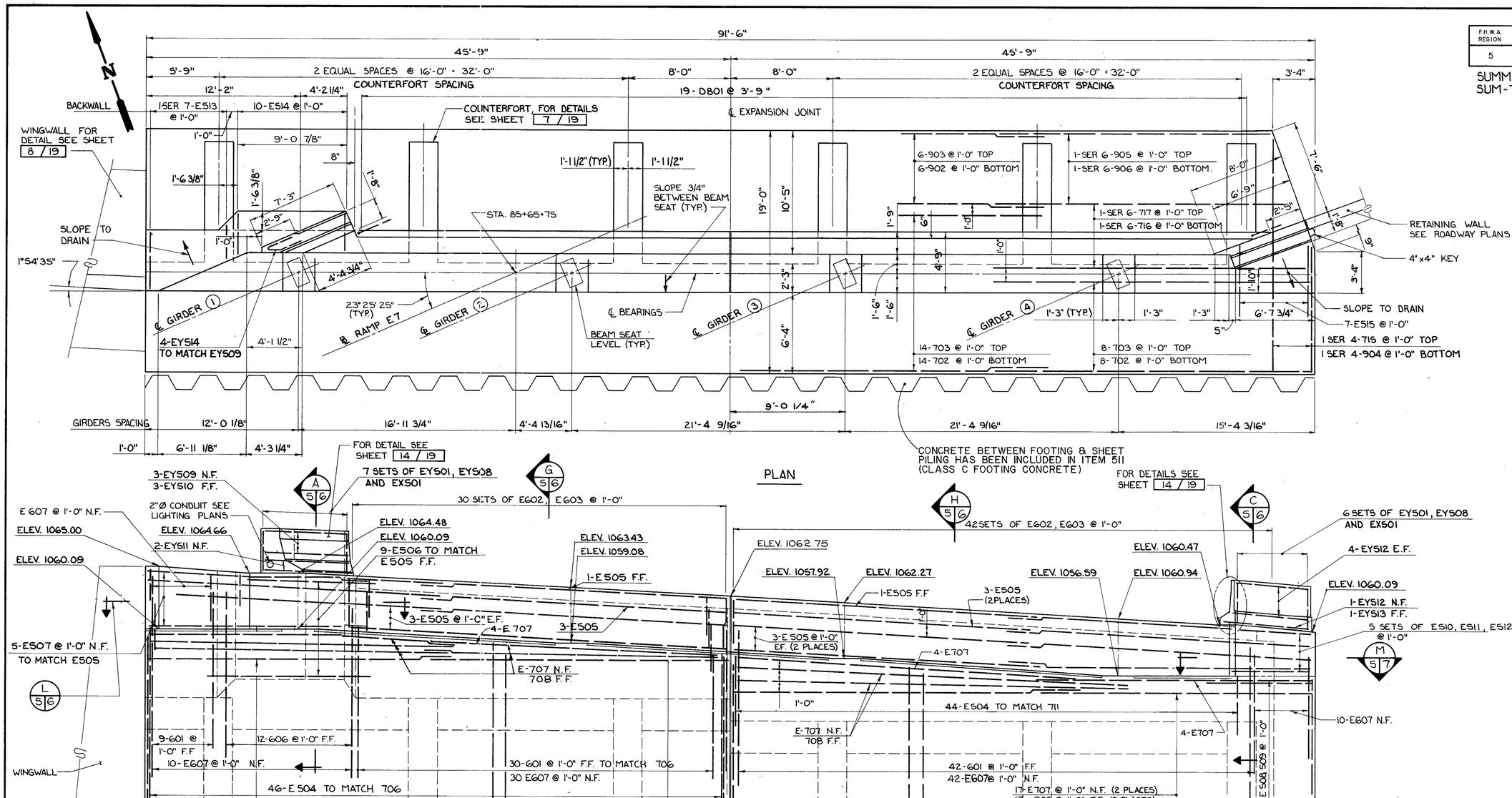

PLAN

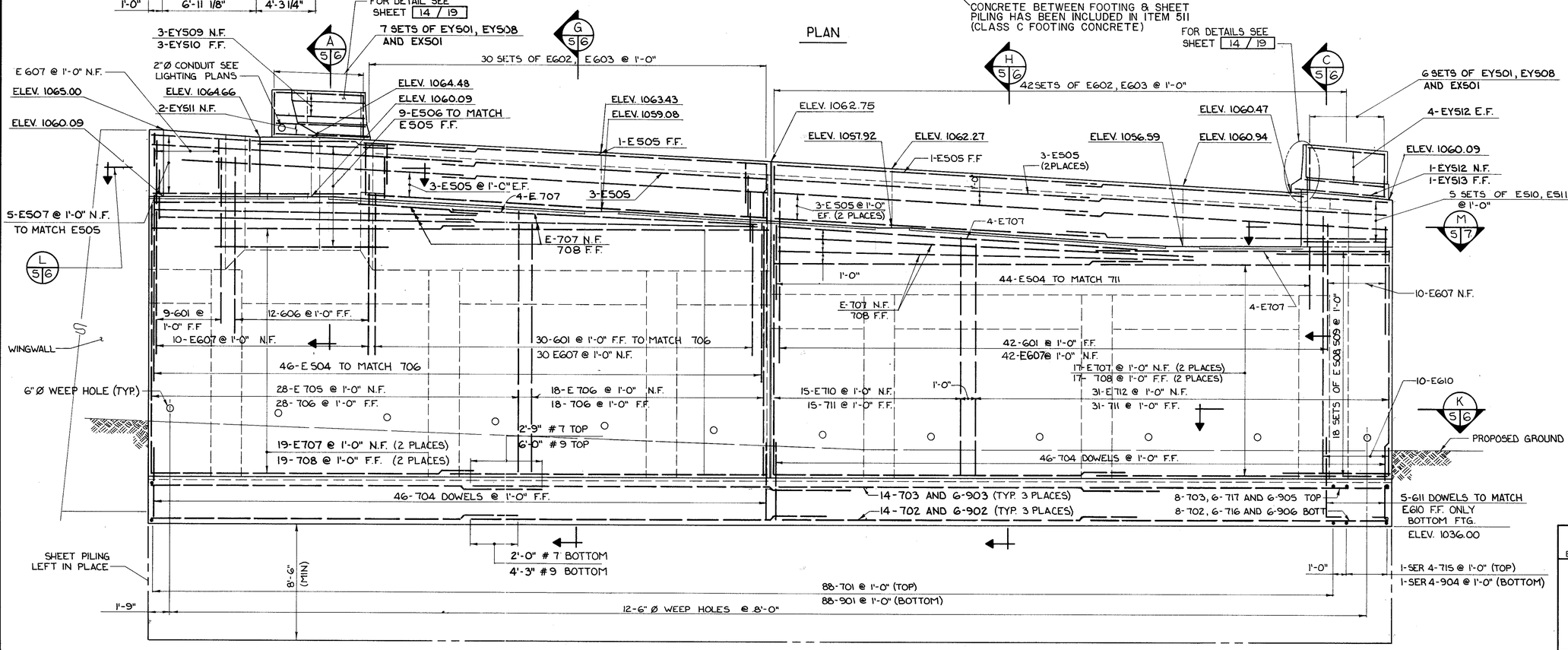

ELEVATION

LAP LENGTH	
#5	1'-4"
#6	2'-0"
#7	2'-7"

ABBREVIATIONS

N.F.	NEAR FACE
F.F.	FAR FACE
E.F.	EACH FACE
TYP.	TYPICAL
ELEV.	ELEVATION
C.J.	CONSTRUCTION JOINT
STA.	STATION

FOR RUSTICATION DETAILS SEE SHEET. 6 / 19
FOR EXPANSION JOINT DETAILS SEE SHEET 7 / 19

FOR NOTES SEE SHEET 7 / 19

JOHN DAVID JONES & ASSOC., INC. 5 / 19
2162 FRONT STREET
CUYAHOGA FALLS, OHIO 44221
ENGINEERS ARCHITECTS PLANNERS

FORWARD ABUTMENT

BRIDGE No. SUM-76-1244
RAMP E-7 OVER RAMP E-4

DESIGNED	DRAWN	TRACED	CHECKED	REVIEWED	DATE	REVISED
BRH	BRH	DEN	GFD	PAK	1/90	

232251

F.H.W.A. REGION	STATE	REGION	
5	OHIO		

889
1214

SUMMIT COUNTY
SUM-76-11.57

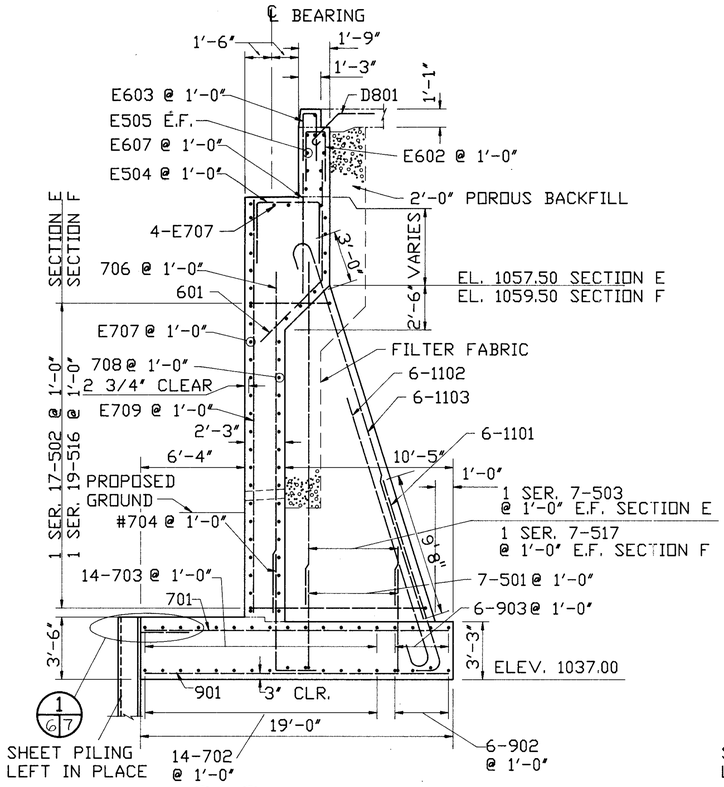

E/4/6 F/4/6 SECTION
REAR ABUTMENT

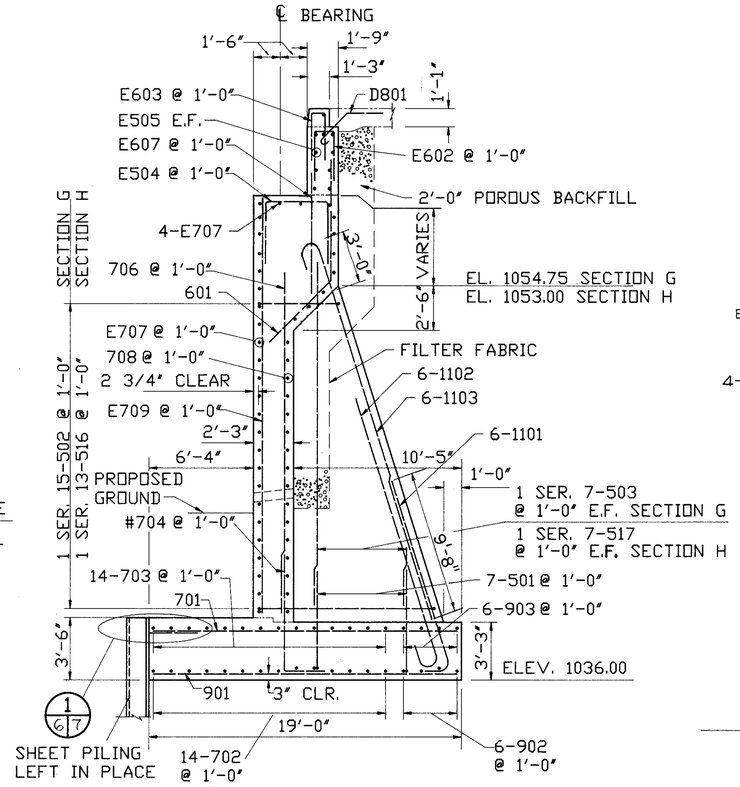

G/5/6 H/5/6 SECTION
FORWARD ABUTMENT

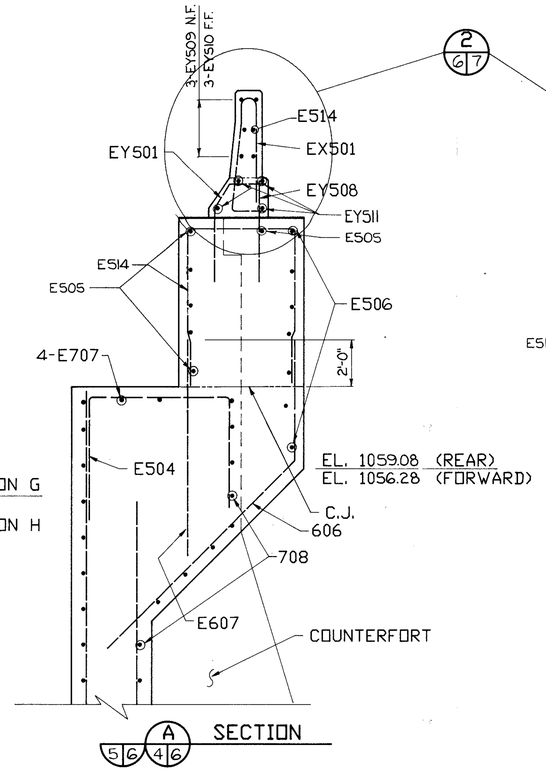

A/5/6 4/6 SECTION

NOTE:
RUSTICATIONS NOT SHOWN

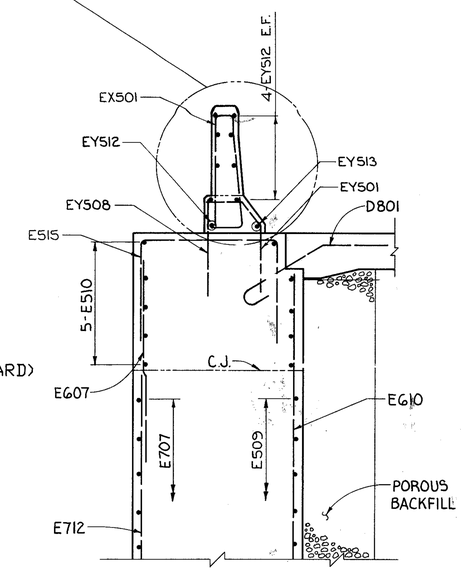

C/5/6 4/6 SECTION

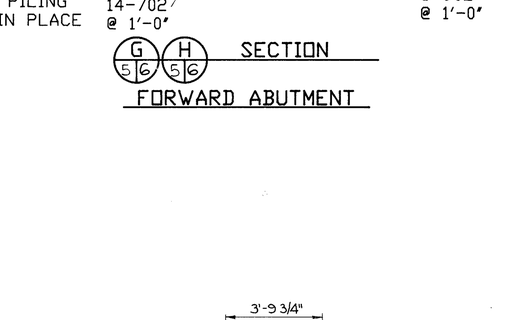

VERTICAL RUSTICATION

FOR NOTES SEE GENERAL NOTES SHEET 3 / 19 .

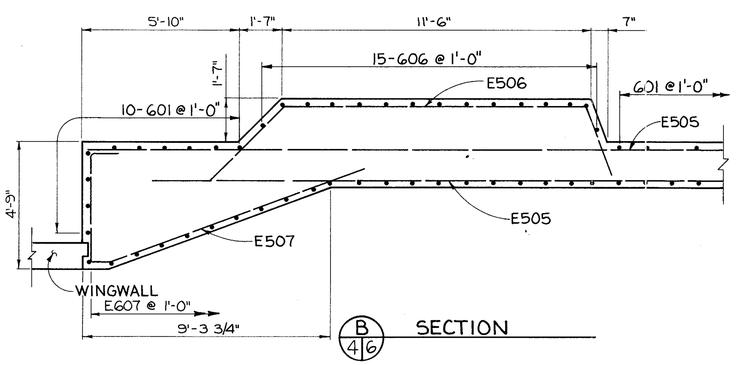

B/4/6 SECTION

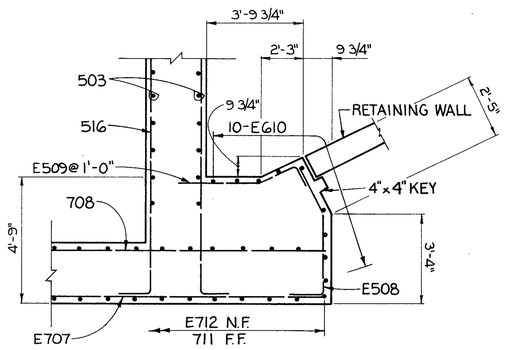

K/5/6 SECTION

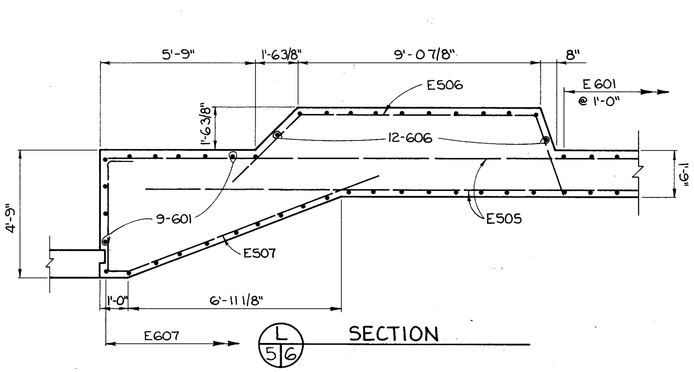

L/5/6 SECTION

ABBREVIATIONS

N.F.	NEAR FACE
F.F.	FAR FACE
E.F.	EACH FACE
TYP.	TYPICAL
EL.	ELEVATION
C.J.	CONSTRUCTION JOINT
SER.	SERIES

FOR NOTES SEE SHEET 7 / 19 .

JOHN DAVID JONES & ASSOC., INC. 6 / 19
2162 FRONT STREET
CUYAHOGA FALLS, OHIO 44221
ENGINEERS ARCHITECTS PLANNERS

ABUTMENT SECTIONS & DETAILS

BRIDGE NO. SUM-76-1244
RAMP E-7 OVER RAMP E-4

DESIGNED	DRAWN	TRACED	CHECKED	REVIEWED	DATE	REVISED
JRS	RWM	——	BRH	PAK	1/90	

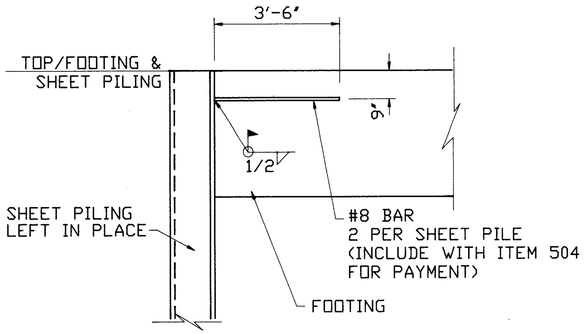

1/6|7 DETAIL

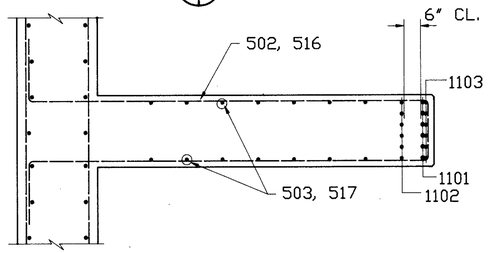

TYP. COUNTERFORT

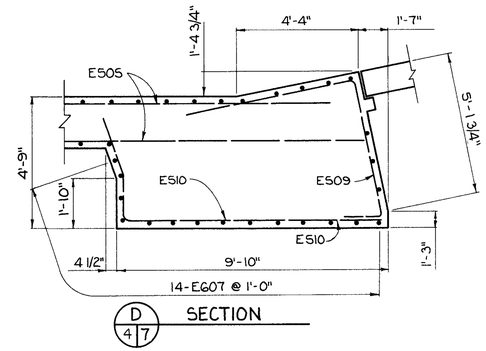

D 4|7 SECTION

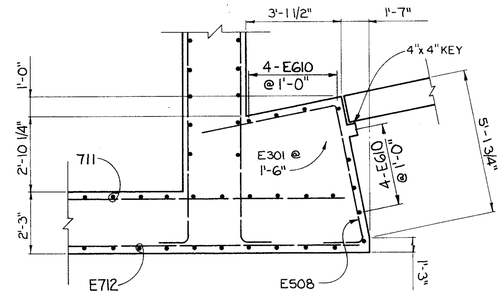

J 4|7 SECTION

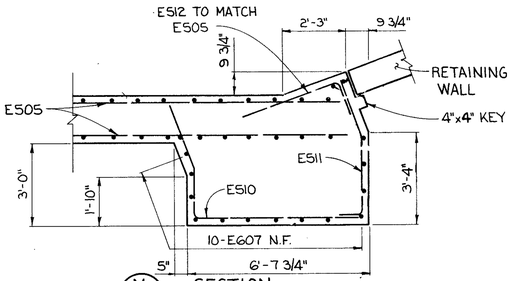

M 5|7 SECTION

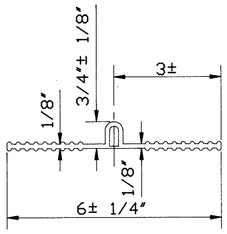

WATERSTOP DETAIL

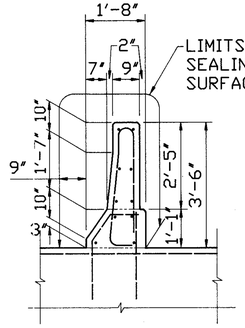

2|6|7 DETAIL

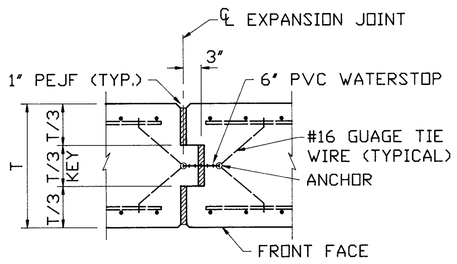

ABUTMENT

NOTE: 1" PEJF SHALL EXTEND CONTINUOUSLY FROM THE TOP OF THE FOOTING TO THE TOP OF THE BACKWALL. WATERSTOP AND KEY SHALL EXTEND FROM THE TOP OF THE FOOTING TO THE APPROACH SLAB SEAT TO FORM A CONTINUOUS WATERPROOF SEAL.

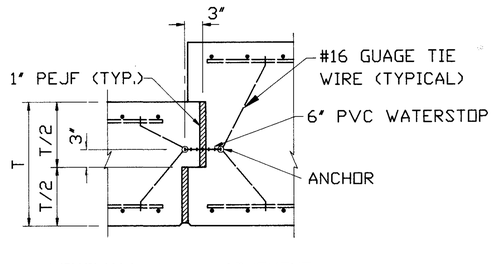

WINGWALL ABUTMENT

NOTE: SHEAR KEY SHALL EXTEND CONTINUOUSLY FROM THE BOTTOM OF THE HIGHER FOOTING TO THE TOP OF THE WALL. 1" PEJF AND WATERSTOP SHALL EXTEND FROM THE TOP OF THE HIGHER FOOTING TO 1'-0" BELOW THE TOP OF THE WALL TO FORM A CONTINUOUS WATERPROOF SEAL.

EXPANSION JOINT DETAILS

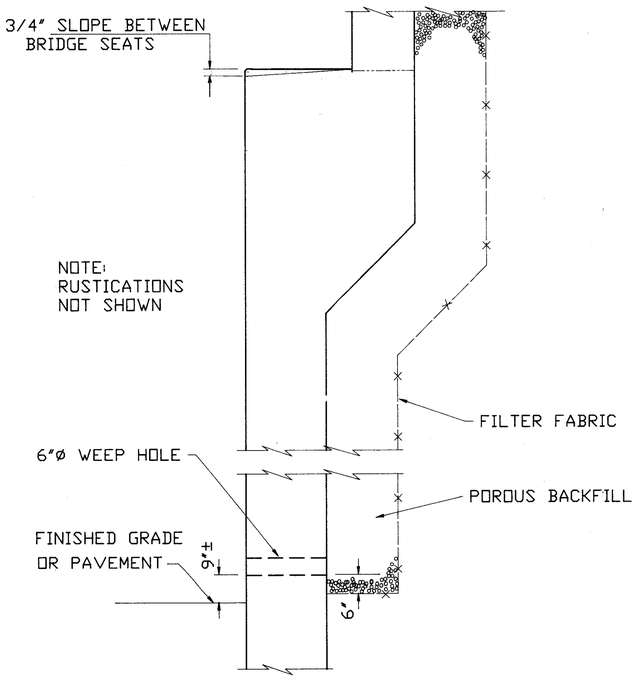

TYPICAL DRAINAGE DETAIL

F.H.W.A. REGION	STATE	REGION	
5	OHIO		

890
12.14

SUMMIT COUNTY
SUM-76-11.57

NOTES

1. STEEL SHEET PILING LEFT IN PLACE SHALL HAVE MINIMUM SECTION MODULII OF 48.4 AND 21.6 INCHES CUBED PER FOOT OF WALL FOR ABUTMENTS AND WINGWALLS , RESPECTIVELY .
2. POROUS BACKFILL , 2 FT. THICK , SHALL EXTEND UP TO THE PLANE OF THE SUBGRADE AND LATERALLY TO THE ENDS OF THE WING WALLS . PAYMENT FOR FILTER FABRIC CONFORMING TO CMS 712.09 TYPE A , B , OR C SHALL BE INCLUDED WITH ITEM 518 .
3. BRIDGE SEAT REINFORCING: REINFORCING STEEL IN THE VICINITY OF THE BRIDGE SEAT SHALL BE ACCURATELY PLACED TO AVOID INTERFERENCE WITH THE DRILLING OF BEARING ANCHOR HOLES OR THE PRE-SETTING OF BEARING ANCHORS .
4. BACKWALL CONCRETE: IN ADDITION TO THE PROVISION OF 511.08 , BACKWALL CONCRETE ABOVE THE OPTIONAL CONSTRUCTION JOINT AT THE APPROACH SLAB SEAT SHALL NOT BE PLACED UNTIL AFTER THE DECK CONCRETE IN THE SPAN ADJACENT TO THE ABUTMENT HAS BEEN PLACED .
5. PREFIX ALL REINFORCING BAR MARKS "AR" FOR REAR ABUTMENT , "WR" FOR REAR WINGWALL , "AF" FOR FORWARD ABUTMENT AND "WF" FOR FORWARD WINGWALL .
6. FOR DETAILS OF WING WALLS SEE SHEET 8 / 19 .
7. FOR SURFACE-MOUNT LIGHT FIXTURE DETAILS SEE LIGHTING PLANS .
8. CONCRETE INSERT ANCHOR ASSEMBLY , AS SHOWN ON STD. DWG. GR-1 , SHALL BE PROVIDED AT THE END OF THE RIGHT REAR WINGWALL FOR THE ATTACHMENT OF GUARDRAIL TERMINAL CONNECTORS AND INCLUDED WITH ABUTMENT CONCRETE FOR PAYMENT .
9. PVC WATERSTOP SHALL BE SPLICED BY MITERING AND HEAT FUSING ENDS TO FORM A WATERTIGHT JOINT . WATERSTOP SHALL BE CAPABLE OF ACCOMMODATING 1 1/2" OF JOINT MOVEMENT .
10. WATERSTOP INSTALLATION PROCEDURE
FOR THE FIRST POUR, THE WATERSTOP SHOULD BE HELD SECURELY IN PLACE BY THE USE OF SPLIT FORMS AND TIE-WIRES. FOR THE SECOND POUR, SECURE THE FREE END OF WATERSTOP IN PROPER POSITION WITH TIE-WIRES. ALTERNATE METHODS, AS APPROVED BY THE ENGINEER, MAY BE USED TO INSURE THE CORRECT POSITIONING OF THE WATERSTOP.

JOHN DAVID JONES & ASSOC., INC. 7 / 19
2162 FRONT STREET
CUYAHOGA FALLS, OHIO 44221
ENGINEERS ARCHITECTS PLANNERS

ABUTMENT
SECTIONS & DETAILS

BRIDGE NO. SUM-76-1244
RAMP E-7 OVER RAMP E-4

DESIGNED	DRAWN	TRACED	CHECKED	REVIEWED	DATE	REVISED
JRS	RWM	—	BRH	PAK	1/90	

F.H.W.A. REG.	STATE	PROJECT	
5	OHIO		

891
1214

SUMMIT COUNTY
SUM-76-11.57

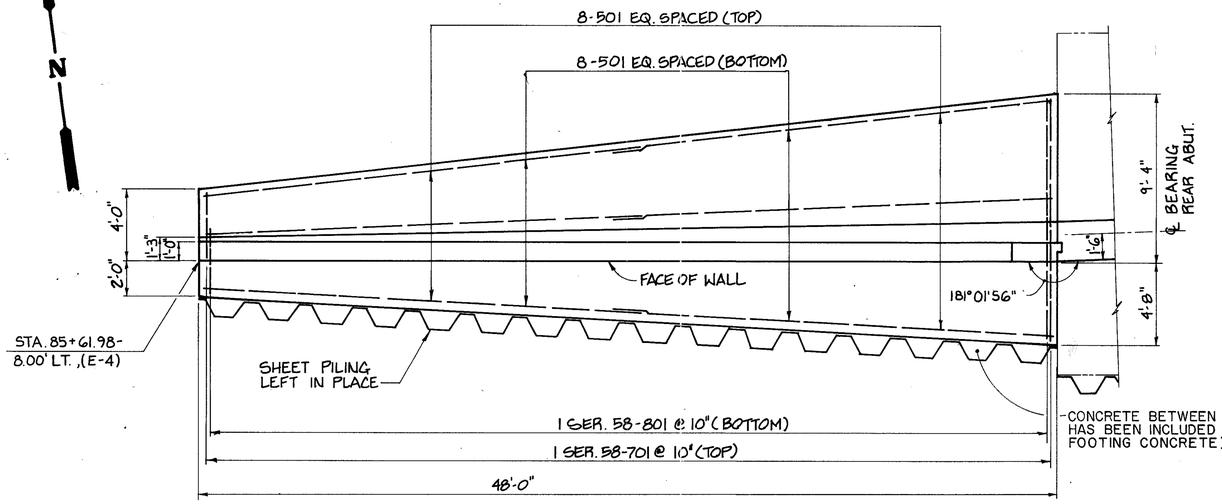

PLAN
RIGHT REAR WINGWALL

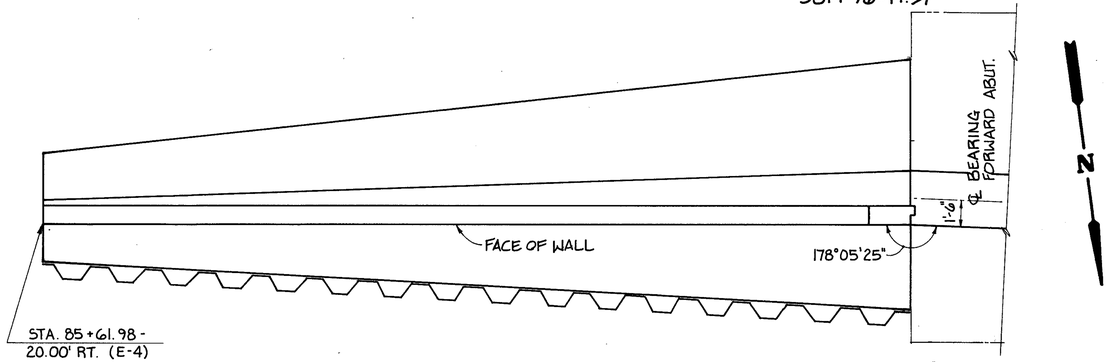

PLAN
LEFT FORWARD WINGWALL

FOR DIMENSIONS AND REINFORCING NOT SHOWN, SEE RIGHT REAR WINGWALL PLAN SECTION AND ELEVATION.

ELEVATIONS			
WINGWALL	ELEV."A"	ELEV."B"	ELEV."C"
RIGHT REAR	1064.94	1043.92	1037.00
LEFT FORWARD	1065.00	1044.00	1037.00

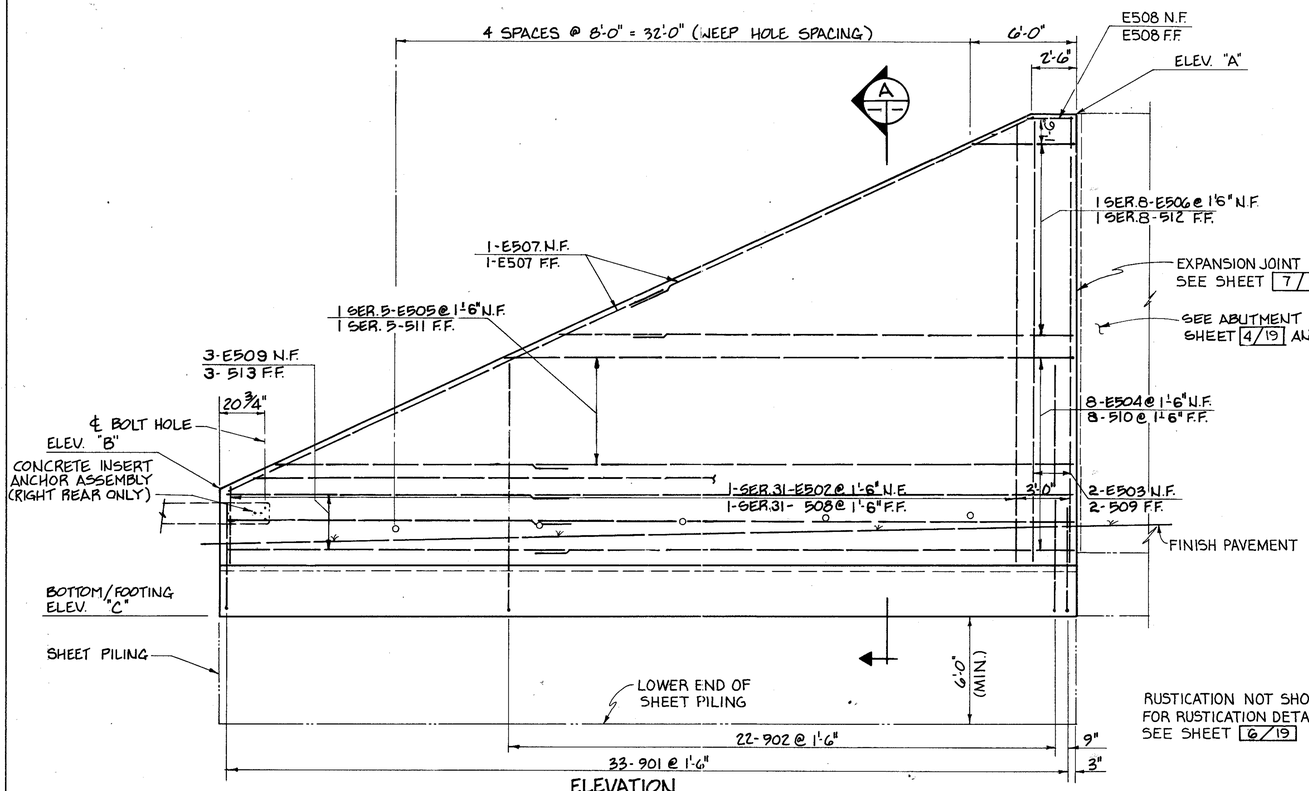

ELEVATION

RUSTICATION NOT SHOWN
FOR RUSTICATION DETAILS, SEE SHEET 6/19

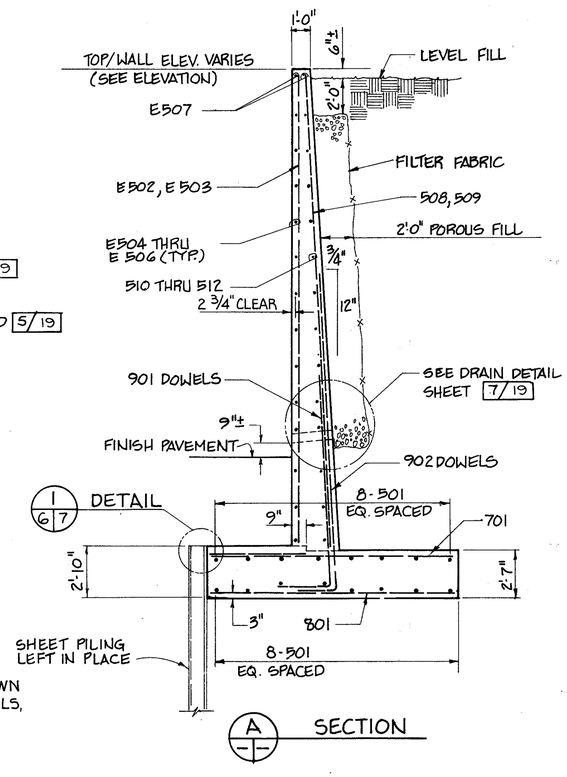

NOTES

1. POROUS BACKFILL, 2 FT. THICK, SHALL EXTEND LATERALLY TO THE ENDS OF THE WING WALLS. PAYMENT FOR FILTER FABRIC CONFORMING TO CMS 712.09 TYPE A, B OR C SHALL BE INCLUDED WITH ITEM 518.
2. PREFIX ALL BAR MARKS "WF" FOR RIGHT FORWARD WINGWALL AND "WR" FOR LEFT REAR WINGWALL, RESPECTIVELY.
3. CONCRETE INSERT ANCHOR ASSEMBLY, AS SHOWN ON STD. DWG. GR-1, SHALL BE PROVIDED AT THE END OF THE RIGHT FORWARD WINGWALL FOR ATTACHMENT OF GUARDRAIL TERMINAL CONNECTORS AND INCLUDED WITH ABUTMENT CONCRETE FOR PAYMENT.

ABBREVIATIONS

ABUT.	ABUTMENT
E.F.	EACH FACE
ELEV.	ELEVATION
EQ.	EQUALLY
SER.	SERIES
TYP.	TYPICAL
N.F.	NEAR FACE
F.F.	FAR FACE

FOR ADDITIONAL NOTES SEE 7/19

JOHN DAVID JONES & ASSOC., INC. 8/19
2162 FRONT STREET
CUYAHOGA FALLS, OHIO 44221
ENGINEERS ARCHITECTS PLANNERS

WINGWALL PLANS & ELEVATION

BRIDGE No. SUM-76-1244
RAMP E-7 OVER RAMP E-4

DESIGNED	DRAWN	TRACED	CHECKED	REVIEWED	DATE	REVISED
JRS	JPS	—	BRH	PAK	12/22/88	

BUDD 5

F.H.W.A. REGION	STATE	REGION	
5	OHIO		

892
12.14

SUMMIT COUNTY
SUM-76-11.57

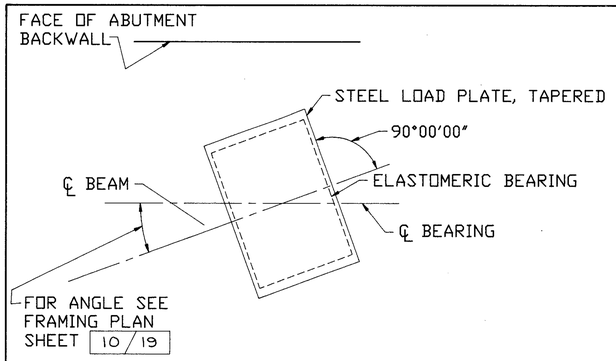

EXPANSION BEARING DETAIL

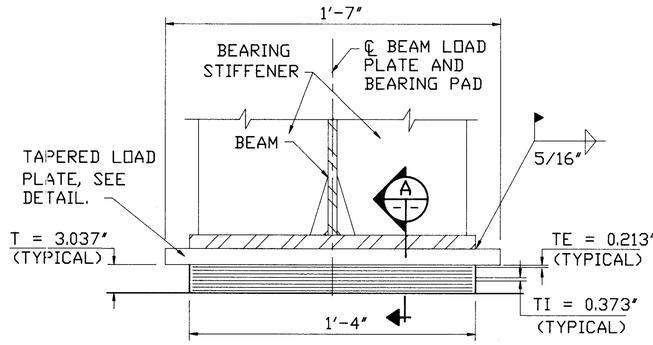

EXPANSION BEARING
N = 7 (TYPICAL)

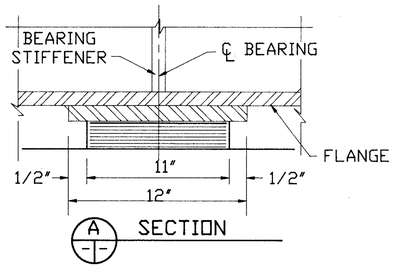

SECTION

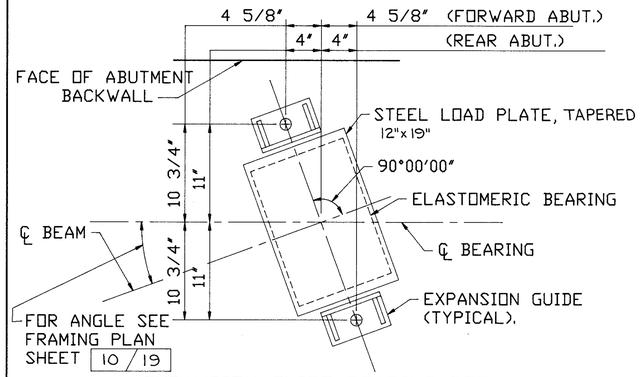

EXPANSION GUIDE BEARING DETAIL

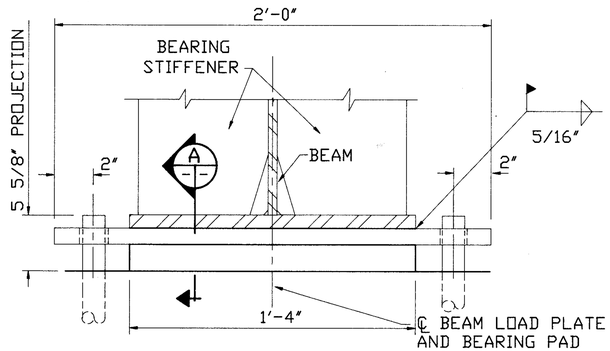

FIXED BEARING

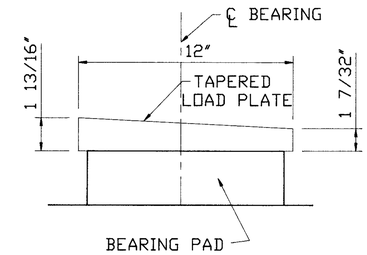

LOAD PLATE DETAIL

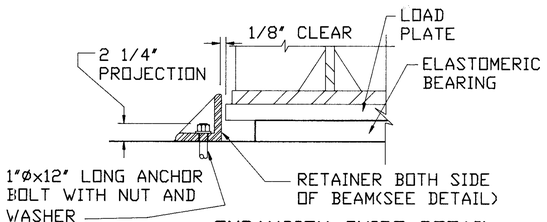

EXPANSION GUIDE DETAIL
APPLIES ONLY TO LOCATIONS DENOTED ON FRAMING PLAN

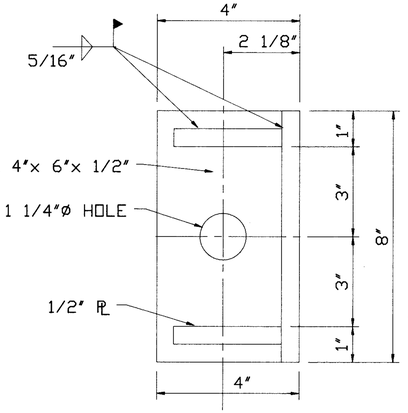

RETAINER DETAIL

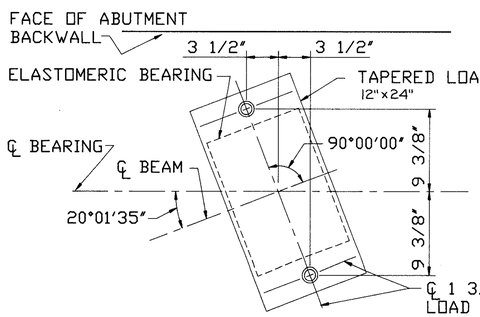

FIXED BEARING DETAIL

℄ 1 3/4"ø HOLE IN STEEL LOAD PLATE FOR 1 1/4"ø x 1'-7" ANCHOR ROD. GALVANIZED ACCORDING TO 711.02. INSTALL ANCHOR ROD ACCORDING TO 510. INCLUDE DOWEL HOLES AND ANCHOR RODS WITH ITEM 516 FOR PAYMENT.

ELASTOMERIC BEARINGS

GIRDER	FORWARD ABUTMENT	REAR ABUTMENT
1	EXPANSION W/GUIDES	EXPANSION
2	FIXED	EXPANSION W/GUIDES
3	FIXED	EXPANSION W/GUIDES
4	EXPANSION W/GUIDES	EXPANSION

BEARING NOTES

TOLERANCES:

INDIVIDUAL ELASTOMER LAYER THICKNESS: ±20 % OF DESIGN VALUE (NOT TO EXCEED ±1/8")

PLAN DIMENSIONS	-0, +1/4"
DESIGN THICKNESS ≤ 1 1/4"	-0, +1/8"
DESIGN THICKNESS > 1 1/4"	-0, +1/4"
EDGE COVER OF EMBEDDED LAMINATES	-0, +1/8"

DUROMETER: THE ELASTOMER SHALL BE 50 DUROMETER.

LOAD PLATE: THE STEEL LOAD PLATE SHALL BE BONDED BY VULCANIZATION TO THE ELASTOMER DURING THE MOLDING PROCESS.

WELDING OF THE LOAD PLATE TO THE SUPERSTRUCTURE SHALL BE CONTROLLED SO THAT THE PLATE TEMPERATURE AT THE ELASTOMER BONDED SURFACE SHALL NOT EXCEED 400 DEGREES F. AS DETERMINED BY THE USE OF PYROMETRIC STICKS OR OTHER TEMPERATURE MONITORING DEVICES.

BEARING ANCHOR RODS: AT THE OPTION OF THE CONTRACTOR, THE BEARING ANCHOR RODS (OR FORMED HOLES), LOCATED AND SUPPORTED BY TEMPLATES, MAY BE CAST-IN-PLACE.

BRIDGE SEAT REINFORCING: REINFORCING STEEL IN THE VICINITY OF THE BRIDGE SEAT SHALL BE ACCURATELY PLACED TO AVOID INTERFERENCE WITH THE DRILLING OF BEARING ANCHOR HOLES OR PRE-SETTING OF BEARING ANCHORS. BEARING SEATS SHALL BE LEVEL.

BEARING REPOSITIONING: IF DECK CONCRETE IS PLACED AT AN AMBIENT TEMPERATURE HIGHER THAN 80 DEGREES F OR LOWER THAN 40 DEGREES F AND THE BEARING SHEAR DEFLECTION EXCEEDS ONE-SIXTH OF THE BEARING HEIGHT AT 60 DEGREES ±10 DEGREES F, THE BEAMS OR GIRDERS SHALL BE RAISED TO ALLOW THE BEARINGS TO RETURN TO THEIR UNDEFORMED SHAPE AT 60 DEGREES ± 10 DEGREES F.

BASIS OF PAYMENT: THE UNIT BID PRICE SHALL INCLUDE ALL MATERIALS, LABOR AND INCIDENTALS NECESSARY TO FURNISH AND INSTALL LAMINATED ELASTOMERIC BEARING EITHER FIXED OR EXPANSION. PAYMENT WILL BE MADE AT THE CONTRACT PRICE FOR ITEM 516, LAMINATED ELASTOMERIC BEARINGS.

TEST SAMPLE: THE ELASTOMERIC BEARING MANUFACTURE SHALL SUPPLY A PLAIN ELASTOMERIC PAD FOR TESTING PURPOSES. THE PAD SHALL BE FURNISHED FROM THE SAME BATCH OF NEOPRENE THAT IS USED IN THE FABRICATION OF THE LAMINATED ELASTOMERIC BEARINGS AND THE FABRICATOR SHALL CERTIFY THE IDENTITY OF THE ELASTOMER. THE PAD SHALL HAVE A 1/2 INCH THICKSESS AND SHALL HAVE MINIMUM LENGTH AND WIDTH DIMENSIONS OF 6 INCHES. PAYMENT FOR THE TEST PAD WILL BE INCLUDED IN THE PRICE BID FOR ITEM 516, LAMINATED ELASTOMERIC BEARING.

LEGEND

N = NUMBER OF 14 GUAGE LAMINATES
T = TOTAL THICKNESS OF LAMINATED PAD
TE= THICKNESS OF EXTERIOR ELASTOMER LAYER(50 DUROMETER)
TI= THICKNESS OF INTERIOR ELASTOMER LAYER(50 DUROMETER)

JOHN DAVID JONES & ASSOC., INC. 9/19
2162 FRONT STREET
CUYAHOGA FALLS, OHIO 44221
ENGINEERS ARCHITECTS PLANNERS

BEARING DETAILS

BRIDGE NO. SUM-76-1244
RAMP E-7 OVER RAMP E-4

DESIGNED	DRAWN	TRACED	CHECKED	REVIEWED	DATE	REVISED
BRH	RCK	RCK	GFD	PAK	1/90	

F.H.W.A. REGION	STATE	REGION	
5	OHIO		

893
12/14

SUMMIT COUNTY
SUM-76-11.57

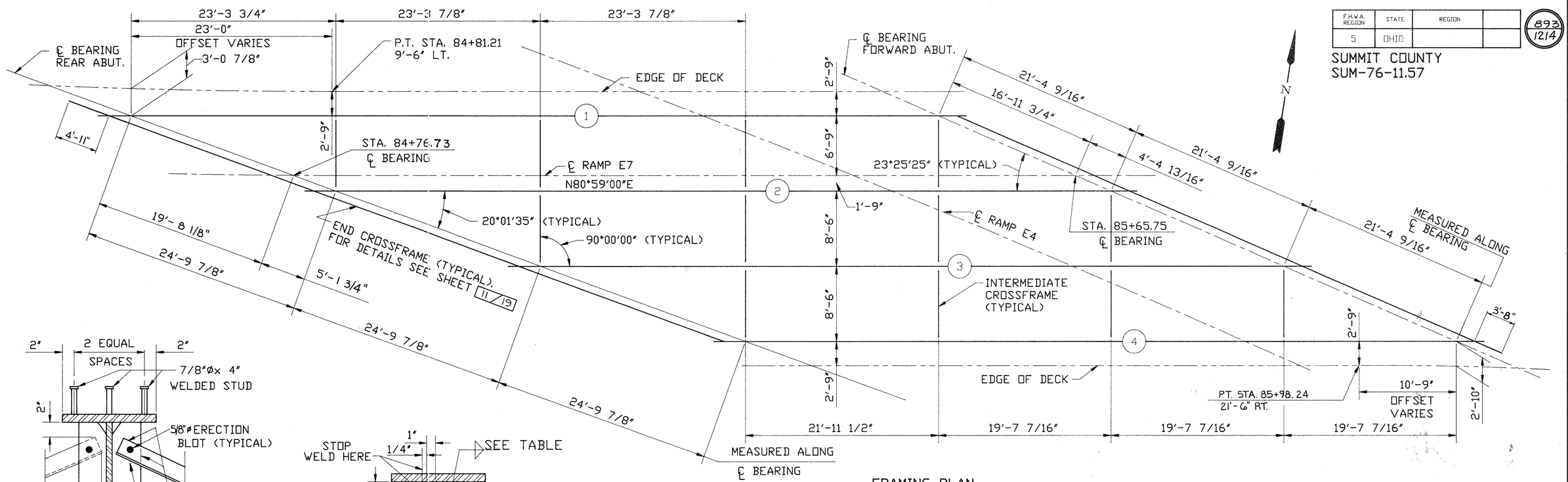

FRAMING PLAN

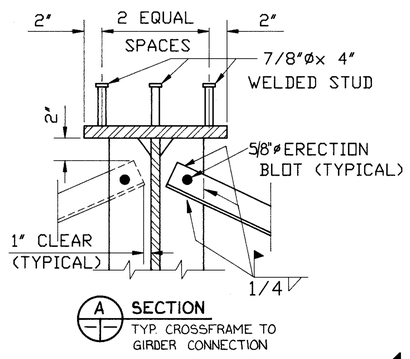

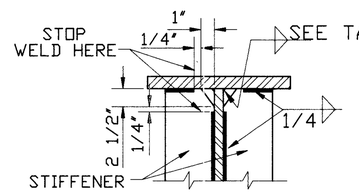

WELD DETAIL

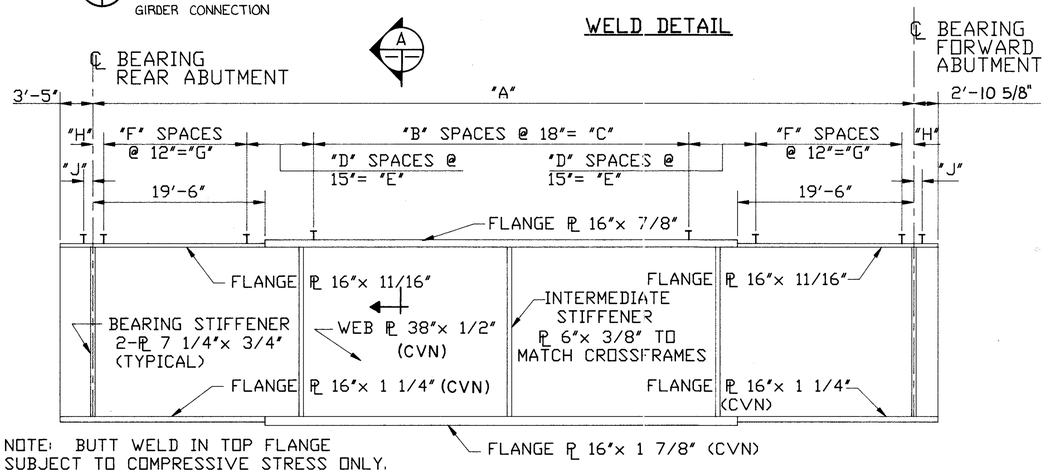

NOTE: BUTT WELD IN TOP FLANGE SUBJECT TO COMPRESSIVE STRESS ONLY. ALL FLANGE BUTT WELDS SHALL BE COMPLETE PENETRATION.

GIRDER ELEVATION

GIRDER DIMENSIONS									
GIRDER	A	B	C	D	E	F	G	H	J
1	91'-11"	28	42'-0"	6	7'-6"	17	17'-0"	5 1/2"	6 1/2"
2	88'-2 5/8"	27	40'-6"	6	7'-6"	16	16'-0"	4 5/16"	7 11/16"
3	84'-6 1/4"	26	39'-0"	6	7'-6"	15	15'-0"	3 1/8"	8 7/8"
4	80'-9 7/8"	25	37'-6"	6	7'-6"	14	14'-0"	1 15/16"	10 1/16"

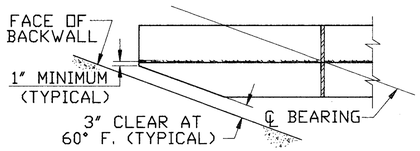

FLANGE DETAIL

NOTE: STEEL NOTCH TOUGHNESS REQUIREMENT (CHARPY V-NOTCH): WHERE A SHAPE OR PLATE IS DESIGNATED (CVN) THE MATERIAL SHALL MEET SPECIFIED MINIMUM NOTCH TOUGHNESS REQUIREMENTS AS SPECIFIED IN 711.01 OF CMS.

WELDED ATTACHMENT OF SUPPORTS FOR CONCRETE DECK FINISHING MACHINE MAY BE MADE TO THE FASCIA GIRDER TOP (COMPRESSION) FLANGES. ATTACHMENTS SHALL NOT BE MADE TO BOTTOM (TENSION) FLANGES. FILLET WELDS TO COMPRESSION FLANGES SHALL BE NOT CLOSER THAN 1" FROM EDGE OF FLANGE, BE NOT MORE THAN 2" LONG, AND BE NOT SMALLER THAN THE MINIMUM SIZE REQUIRED BY AASHTO.

ERECTION BOLT HOLE DIAMETERS IN CROSSFRAMES AND GIRDER STIFFENERS SHALL BE RESPECTIVELY 1/16" AND 1/4" LARGER THAN THE DIAMETER OF THE ERECTION BOLTS. UNLESS REPLACED BY PERMANENT HIGH STRENGTH BOLTS, ERECTION BOLTS SHALL REMAIN IN PLACE. LOCK WASHERS SHALL BE FURNISHED FOR OTHER THAN FULLY TORQUED HIGH STRENGTH ERECTION BOLTS. BOLTS SHALL BE FURNISHED AS PART OF ITEM 513 IN LIEU OF ERECTION BOLTS AND AT THE OPTION OF THE CONTRACTOR, ALTERNATIVE MEANS OF TEMPORARY BRACING MAY BE USED SUBJECT TO THE APPROVAL OF THE DIRECTOR (501.06).

FOR GIRDER CAMBER DETAILS, SEE SHEET 11/19
FOR GIRDER BEARING DETAILS, SEE SHEET 10/19

FLANGE TO WEB WELD SIZE	
THICKNESS OF THICKER PLATE (IN.)	MINIMUM SIZE OF FILLET WELD (IN.)
TO 3/4" INCLUSIVE	1/4
OVER 3/4" TO 1 1/2"	5/16
OVER 1 1/2" TO 2 1/4"	3/8

JOHN DAVID JONES & ASSOC., INC. 10/19
2162 FRONT STREET
CUYAHOGA FALLS, OHIO 44221
ENGINEERS ARCHITECTS PLANNERS

FRAMING PLAN AND GIRDER DETAILS

BRIDGE NO. SUM-76-1244
RAMP E-7 OVER RAMP E-4

DESIGNED	DRAWN	TRACED	CHECKED	REVIEWED	DATE	REVISED
JRS	RCK	RCK	BRH	PAK	1/90	

F.H.W.A. REGION	STATE	PROJECT	
5	OHIO		

894/1214

SUMMIT COUNTY
SUM-76 11.57

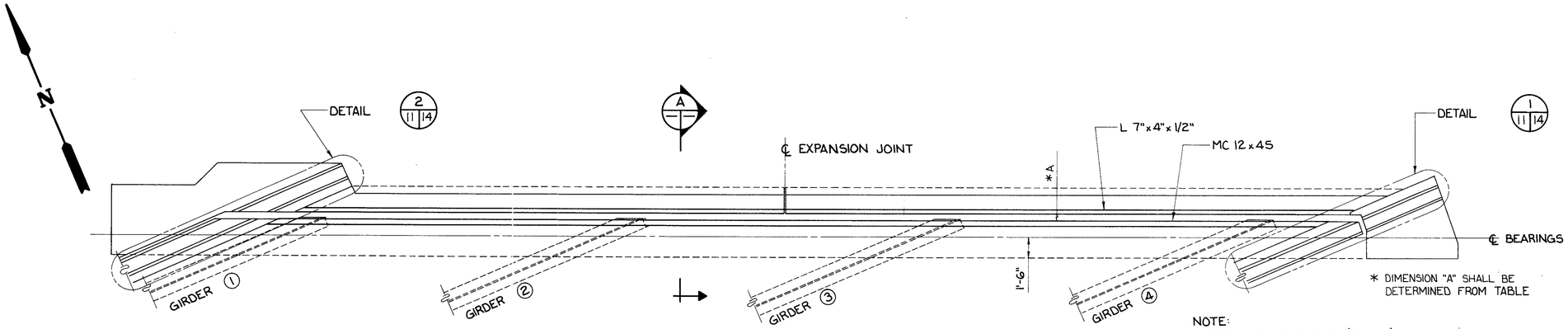

PLAN AT ABUTMENT

STRIP SEAL ADJUSTMENT TABLE	
AMBIENT TEMP. F°	JOINT OPENING DIMENSION "A"
40	2 13/16"
50	2 11/16"
60	2 9/16"
70	2 7/16"
80	2 5/16"
90	2 3/16"

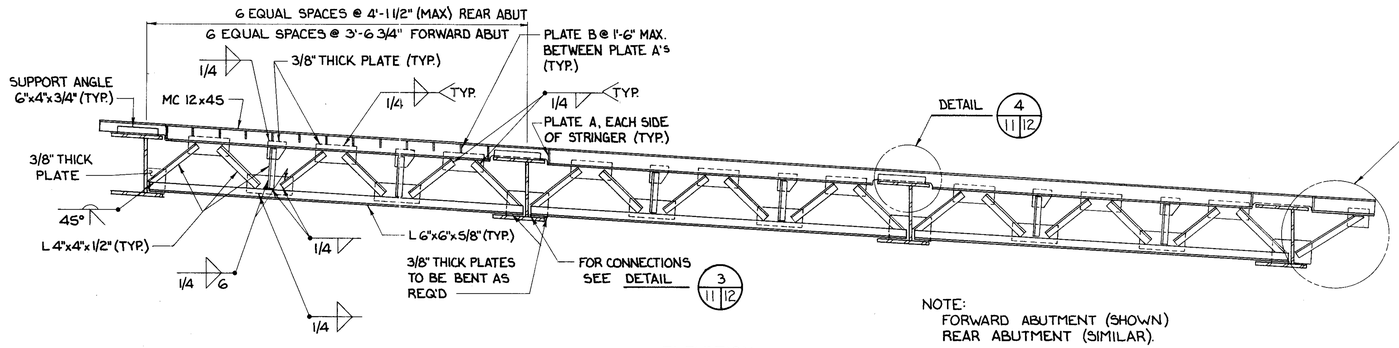

ELEVATION

NOTE:
FORWARD ABUTMENT (SHOWN)
REAR ABUTMENT (SIMILAR).
FOR DETAILS NOT SHOWN, SEE STANDARD DETAIL SD-1-69 SHEET 1 OF 4.

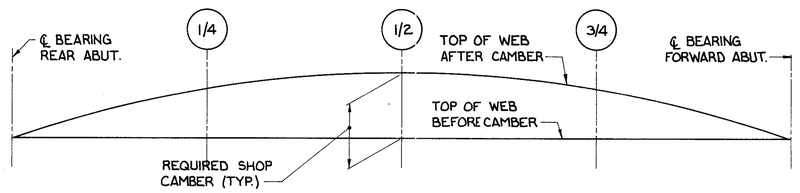

GIRDER CAMBER DIAGRAM

DEFLECTION AND CAMBER												
GIRDER	1			2			3			4		
POINT	1/4	1/2	3/4	1/4	1/2	3/4	1/4	1/2	3/4	1/4	1/2	3/4
DEFLECTION DUE TO WEIGHT OF STEEL	1/2"	5/8"	1/2"	3/8"	9/16"	3/8"	5/16"	1/2"	5/16"	1/4"	3/8"	1/4"
DEFLECTION DUE TO REMAINING DEAD LOAD	2 1/4"	3 1/4"	2 1/4"	1 7/8"	2 1/2"	1 3/4"	1 15/16"	2 5/8"	1 15/16"	1 7/16"	1 15/16"	1 7/16"
REQUIRED SHOP CAMBER	2 3/4"	3 7/8"	2 3/4"	2 1/4"	3 1/16"	2 1/8"	2 1/4"	3 1/8"	2 1/4"	1 11/16"	2 5/16"	1 11/16"

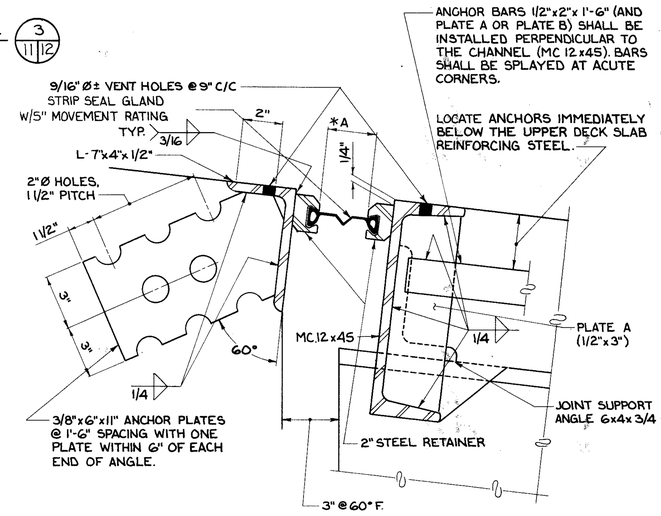

E/14/11 A SECTION

NOTES:

1. FOR END DAM DETAILS NOT SHOWN SEE SHEETS 12/19 AND 14/19.
2. FOR END CROSSFRAME DETAILS NOT SHOWN SEE STANDARD DRAWING SD-1-69, SHEET 1 OF 4.
3. INSTALLATION OF SEAL: DURING INSTALLATION OF THE SUPPORT/ARMOR FOR THE SUPERSTRUCTURE SIDE OF THE EXPANSION JOINT SEAL, THE SEATING OF GIRDERS ON BEARINGS SHALL BE CAREFULLY OBSERVED TO ASSURE THAT POSITIVE BEARING IS MAINTAINED.
4. FOR STRIP SEAL DETAILS NOT SHOWN AND NOTES SEE STANDARD DRAWING EXJ-4-87.
5. WORK THIS SHEET WITH SHEETS 12/19 AND 14/19.

NOTE:
THE JOINT ASSEMBLY SHALL BE PLACED SO THAT THE 7x4x1/2 ANGLE AND THE MC 12x45 CHANNEL REMAIN PARALLEL TO EACH OTHER AND PERPENDICULAR TO THE ROADWAY GRADIENT.

JOHN DAVID JONES & ASSOC., INC. 11/19
2162 FRONT STREET
CUYAHOGA FALLS, OHIO 44221
ENGINEERS ARCHITECTS PLANNERS

FRAMING DETAILS. I

BRIDGE No. SUM.-76-1244
RAMP E-7 OVER RAMP E-4

DESIGNED	DRAWN	TRACED	CHECKED	REVIEWED	DATE	REVISED
BRH	BRH	DEN	GFD	PAK	1/90	

239281

F.H.W.A. REGION	STATE	PROJECT	
5	OHIO		

895
1214

SUMMIT COUNTY
SUM-76-11.57

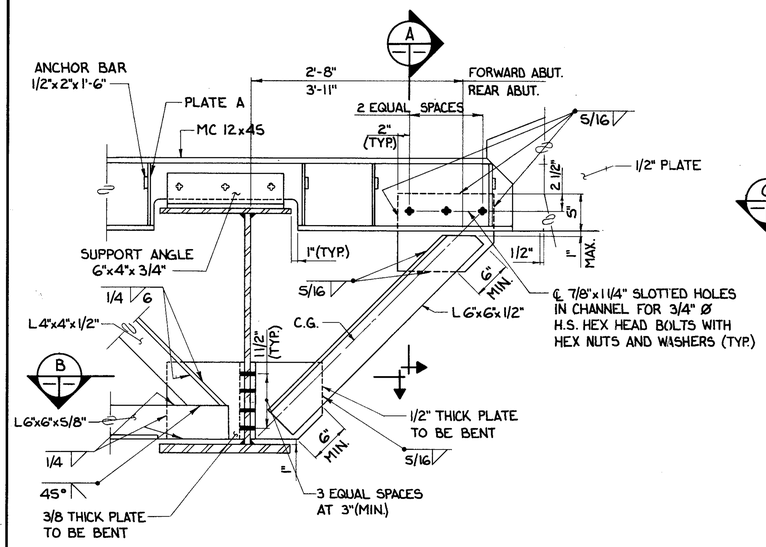

3 / 11 / 12 DETAIL
SCALE 1"=1'-0"

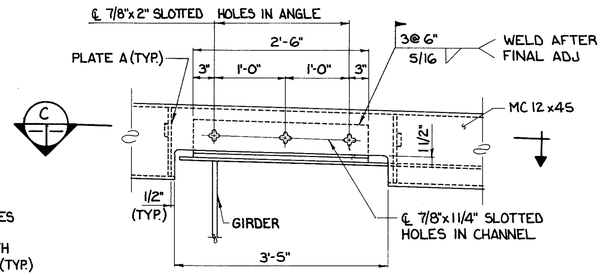

4 / 11 / 12 DETAIL
SCALE 1"=1'-0"

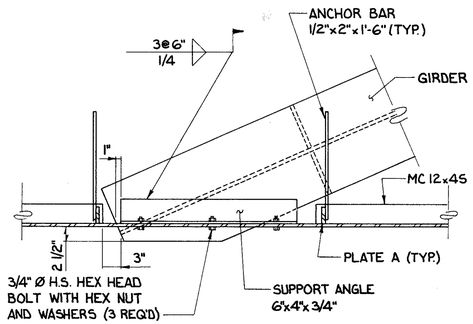

C SECTION
SCALE 1"=1'-0"

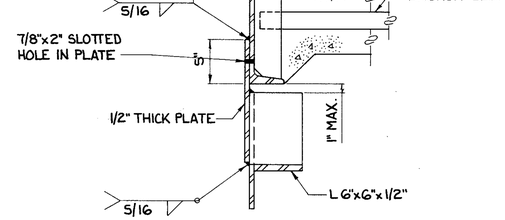

A SECTION
SCALE 1 1/2"=1'-0"

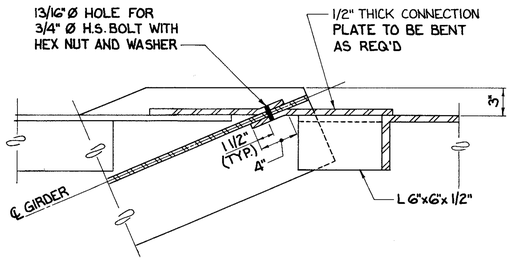

B SECTION
SCALE 1 1/2"=1'-0"

NOTES
1) FOR GIRDER DETAILS, SEE SHEET 10 / 19
2) FOR STRIP SEAL EXPANSION JOINT DETAILS, SEE SHEETS 11 / 19 14 / 19

JOHN DAVID JONES & ASSOC., INC. 12 / 19
2162 FRONT STREET
CUYAHOGA FALLS, OHIO 44221
ENGINEERS ARCHITECTS PLANNERS

FRAMING DETAILS II

BRIDGE No. SUM-76-1244
RAMP E-7 OVER RAMP E-4

DESIGNED	DRAWN	TRACED	CHECKED	REVIEWED	DATE	REVISED
BRH	BRH	DEN	GFD	PAK	1/90	

252281

LAP LENGTH	
#4	1'-4"
#5	1'-8"

F.H.W.A. REGION	STATE	REGION	
5	OHIO		

896
12/14

SUMMIT COUNTY
SUM-76-11.57

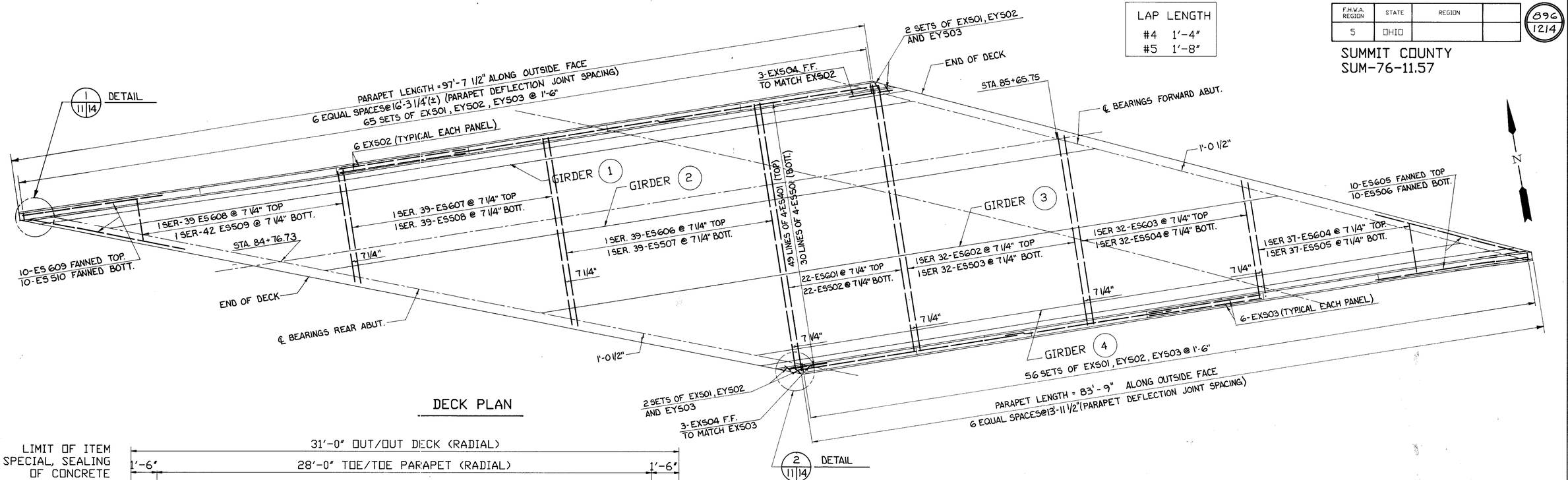

DECK PLAN

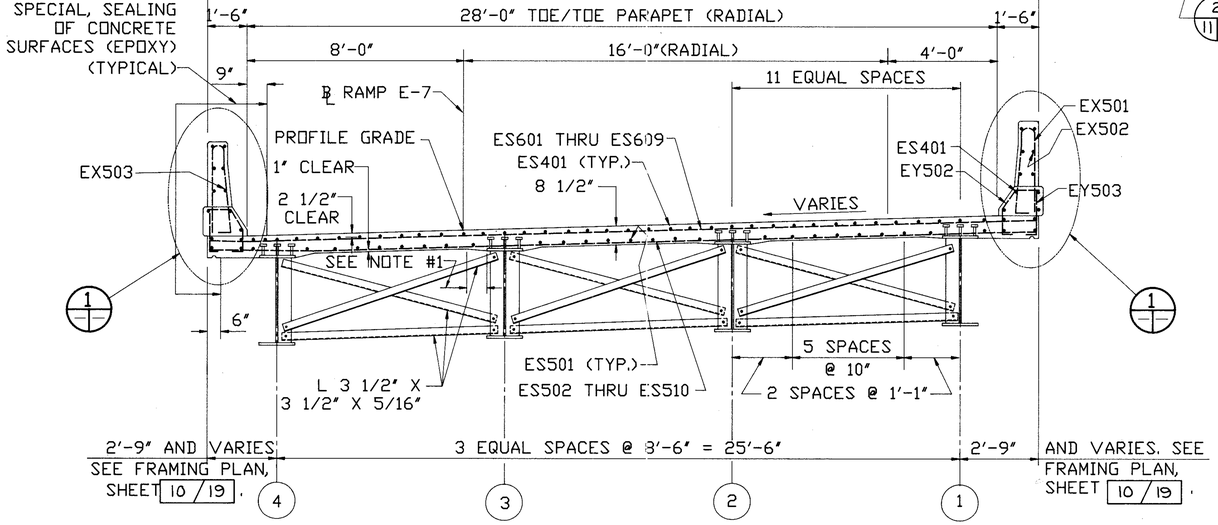

TRANSVERSE SECTION

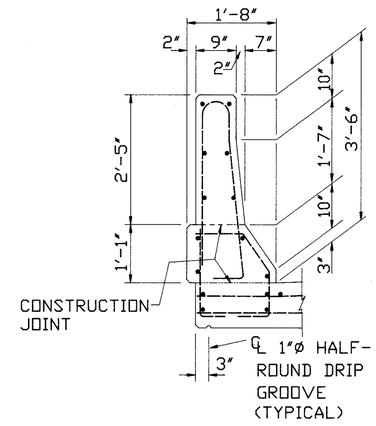

1/11/14 DETAIL

SCREED ELEVATION					
LOCATION	℄ BEARING REAR ABUT.	1/4	1/2	3/4	℄ BEARING FORWARD ABUT.
LEFT GUTTER	1069.07	1068.01	1066.94	1065.87	1064.65
RIGHT GUTTER	1065.47	1064.51	1063.42	1062.19	1060.80

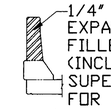

SECTION THROUGH DEFLECTION JOINT

ABBREVIATIONS

SPA.	SPACES
TYP.	TYPICAL
BOT.	BOTTOM
SER.	SERIES
ABUT.	ABUTMENT

NOTES

1. A HAUNCH WIDTH OF 9" SHALL BE USED FOR COMPUTING QUANTITY OF CONCRETE. HOWEVER, THE HAUNCH WIDTH MAY VARY BETWEEN 6" AND 12".
2. SCREED ELEVATIONS SHOWN ARE ELEVATIONS AT THE TOP OF DECK AT THE LOCATIONS SHOWN THAT ARE REQUIRED BEFORE CONCRETE IS PLACED. ALLOWANCE HAS BEEN MADE FOR THE DEAD LOAD DEFLECTIONS CAUSED BY THE WEIGHT OF CONCRETE.

* THIS IS THE DESIGN DIMENSION. THE QUANTITY OF DECK CONCRETE TO BE PAID FOR SHALL BE BASED UPON THIS DIMENSION, EVEN THOUGH DEVIATION FROM IT MAY BE NECESSARY BECAUSE THE TOP FLANGE OF THE GIRDER MAY NOT HAVE THE EXACT CAMBER OR CONFORMATION REQUIRED TO PLACE IT PARALLEL TO THE FINISHED GRADE. DEDUCTION SHALL BE MADE FOR VOLUME OF ENCASED STEEL PLATES AS PER 511.18

NOTES:
PREFORMED EXPANSION JOINT FILLER IN PARAPET DEFLECTION JOINT MAY BE EITHER 1/4" GRAY SPONGE RUBBER OR 1/4" GRAY CELLULAR POLYVINYL CHLORIDE (PVC) SPONGE. FILLER SHALL CONFORM TO AASHTO M-153, TYPE 1, EXCEPT DENSITY OF PVC SPONGE SHALL NOT BE LESS THAN 20 LBS. PER CU. FT..
CONCRETE PARAPETS ABOVE UPPER CONSTRUCTION JOINT SHALL BE PLACED IN ALTERNATE SECTIONS BY THE USE OF BULKHEADS AND AFTER PLACEMENT OF EXPANSION JOINT FILLER. EXPOSED EDGES OF THE FILLER SHALL BE FLUSH WITH THE SURFACE OF CONCRETE AND SHALL BE FREE OF MORTAR.

JOHN DAVID JONES & ASSOC., INC. 13/19
2162 FRONT STREET
CUYAHOGA FALLS, OHIO 44221
ENGINEERS ARCHITECTS PLANNERS

SLAB PLAN AND TYPICAL SECTION

BRIDGE No. SUM-76-1244
RAMP E7 OVER RAMP E4

DESIGNED	DRAWN	TRACED	CHECKED	REVIEWED	DATE	REVISED
JRS	EMB	RCK	BRH	PAK	1/90	

F.H.W.A. REGION	STATE	PROJECT	
5	OHIO		

897
1214

SUMMIT COUNTY
SUM-76-11.57

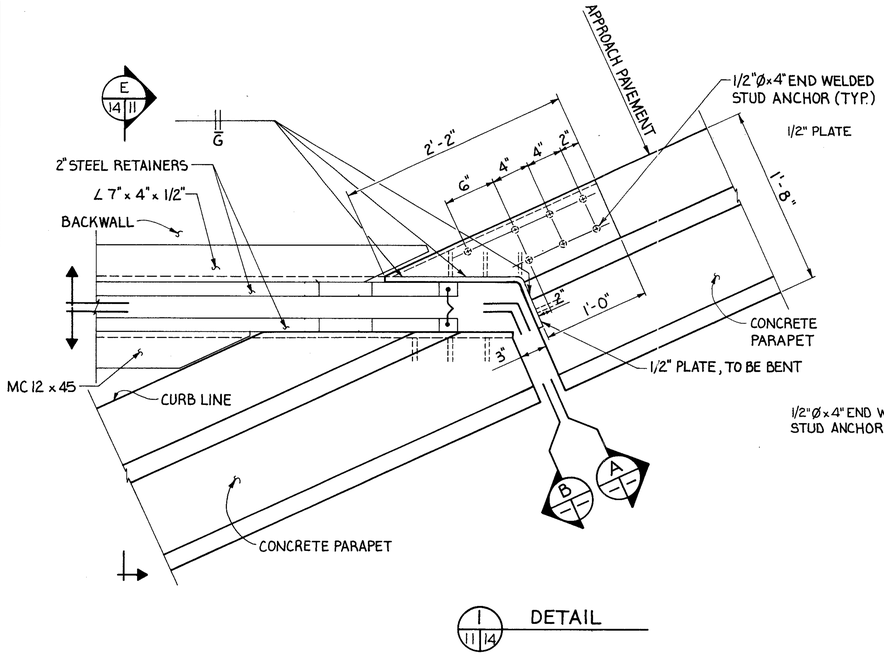

1 / 11 14 DETAIL

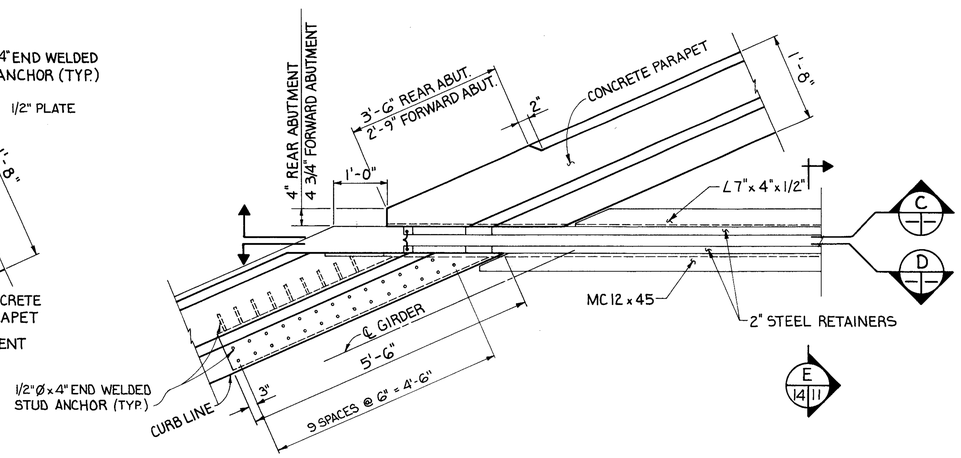

2 / 11 14 DETAIL

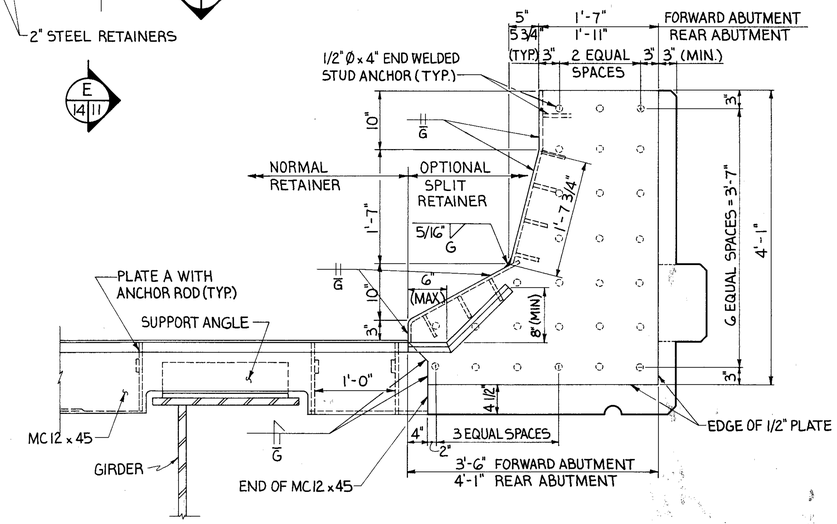

D SECTION

NOTE
1) WORK SHEET WITH SHEET 11 / 19

2) PAYMENT FOR 1/2" THICK STEEL PLATE IN CONCRETE PARAPET INCLUDING WELDED STUD ANCHORS AND PAINTING SHALL BE INCLUDED WITH ITEM 516-STRUCTURAL EXPANSION JOINTS.

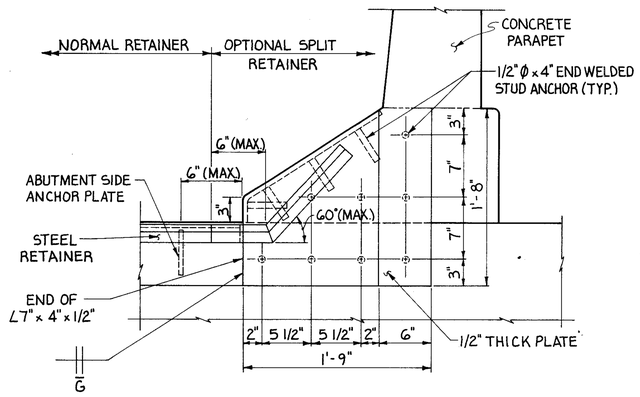

A SECTION

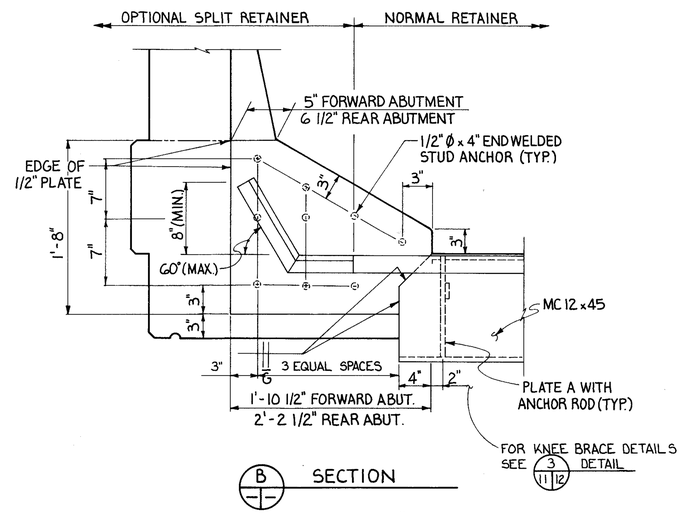

B SECTION

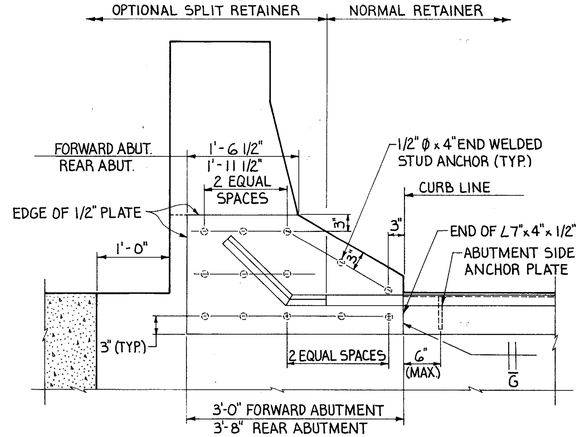

C SECTION

JOHN DAVID JONES & ASSOC., INC. 14 / 19
2162 FRONT STREET
CUYAHOGA FALLS, OHIO 44221
ENGINEERS ARCHITECTS PLANNERS

EXPANSION JOINT DETAILS

BRIDGE NO. SUM-76-1244
RAMP E-7 OVER RAMP E-4

DESIGNED	DRAWN	TRACED	CHECKED	REVIEWED	DATE	REVISED
BRH	JPS	—	GFD	PAK	1/90	

329281

F.H.W.A. REGION	STATE	PROJECT	
5	OHIO		

898
1214

SUMMIT COUNTY
SUM-76-11.57

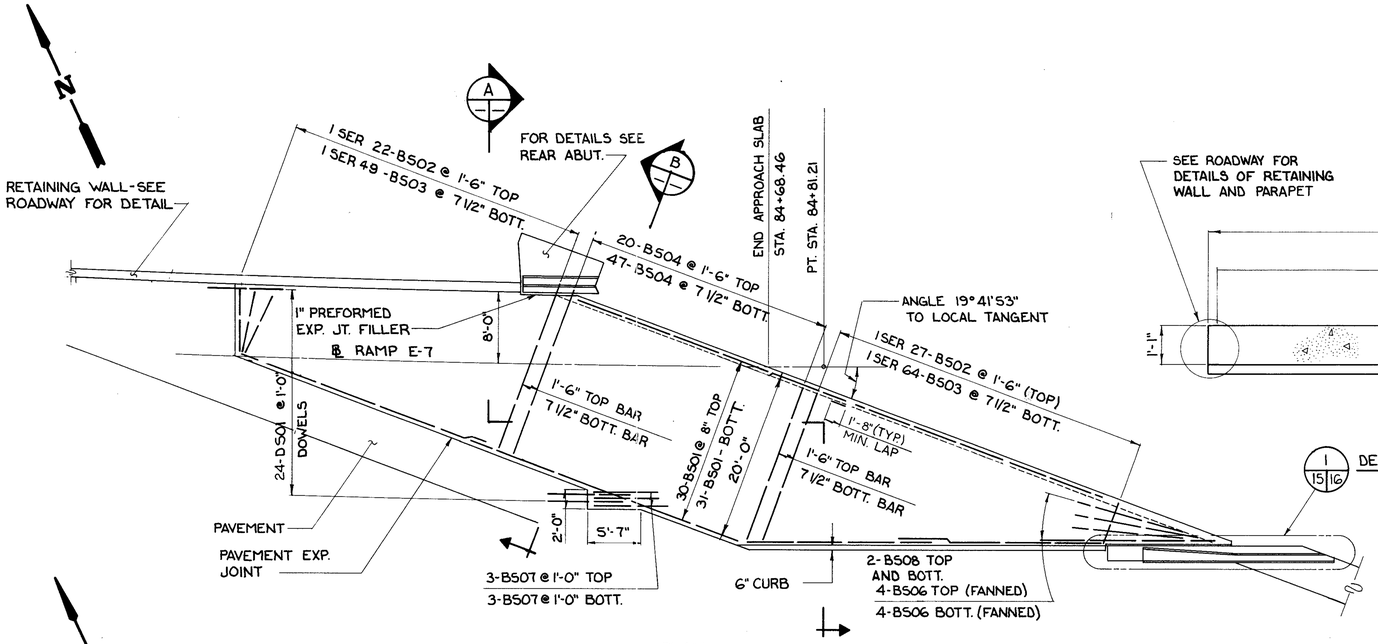

PLAN
REAR APPROACH SLAB

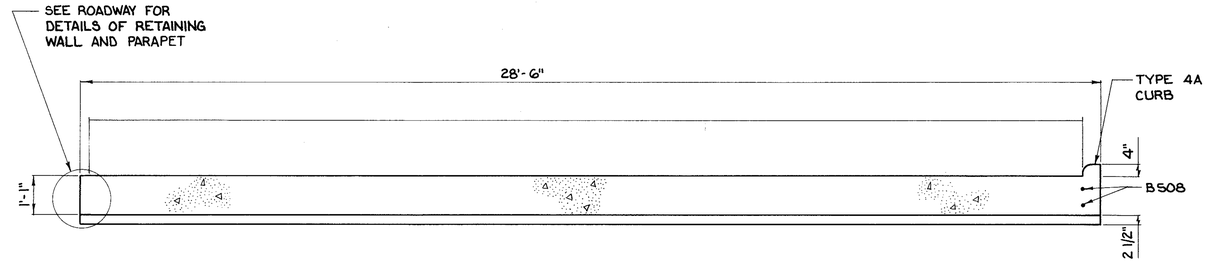

A SECTION

FOR NOTES SEE STANDARD DRAWING AS-1-81

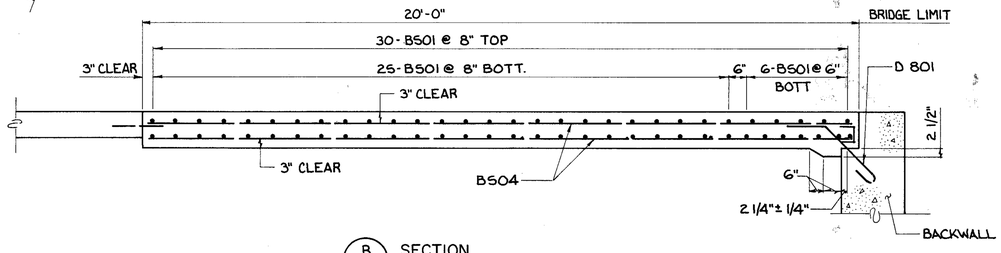

B SECTION

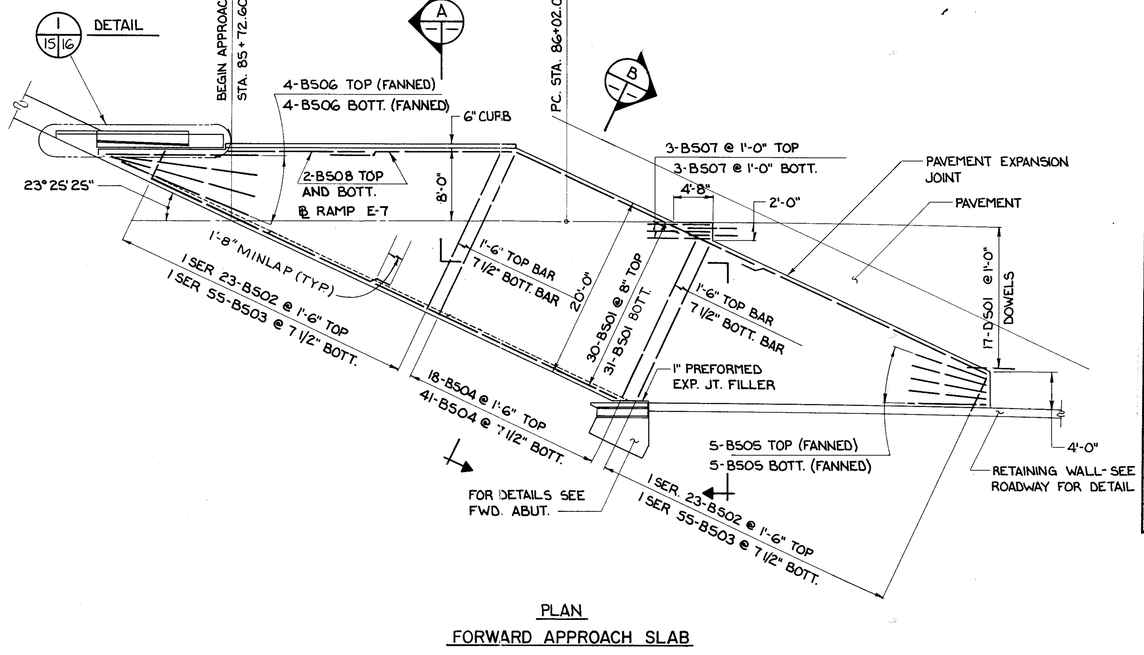

PLAN
FORWARD APPROACH SLAB

MARK	NO.	LENGTH	SER. INCR.	TYPE	WEIGHT
REAR APPROACH SLAB					
BR501	122	32'-0"		STR	4072
BR502	1 SER 22	7'-6" / 19'-0"	6 1/2	STR	304
BR503	1 SER 49	7'-6" / 19'-4"	3"	STR	686
BR504	67	19'-6"		STR	1363
BR505	10	10'-0"		STR	104
BR506	8	14'-3"		STR	119
BR507	6	7'-3"		STR	45
BR508	4	23'-6"		STR	93
BR509	1 SER 27	4'-11" / 19'-0"	6 1/2"	STR	337
BR510	1 SER 64	4'-11" / 19'-0"	2 3/4"	STR	810
D501	24	1'-6"		STR	38
				TOTAL =	7971

MARK	NO.	LENGTH	SER. INCR.	TYPE	WEIGHT
FORWARD APPROACH SLAB					
BA501	122	30'-0"		STR	3818
BA502	2 SER 23	4'-7" / 18'-10"	7 3/4	STR	562
BA503	2 SER 55	4'-7" / 19'-3"	3 1/4	STR	1367
BA504	59	19'-6"		STR	1120
BA505	10	8'-8"		STR	90
BA506	8	12'-0"		STR	100
BA507	6	6		STR	38
BA508	4	18'-6"		STR	77
D501	17	1'-6"		STR	27
				TOTAL	7200

JOHN DAVID JONES & ASSOC., INC.
2162 FRONT STREET
CUYAHOGA FALLS, OHIO 44221
ENGINEERS ARCHITECTS PLANNERS

15 / 19

REINFORCED CONCRETE APPROACH SLABS

BRIDGE No. SUM.-76-1244
RAMP E-7 OVER RAMP E-4

DESIGNED	DRAWN	TRACED	CHECKED	REVIEWED	DATE	REVISED
BRH	BRH	DEN	GFD	PAK	1/90	

539281

F.H.W.A. REGION	STATE	PROJECT	
5	OHIO		

899
1214

SUMMIT COUNTY
SUM-76-11.57

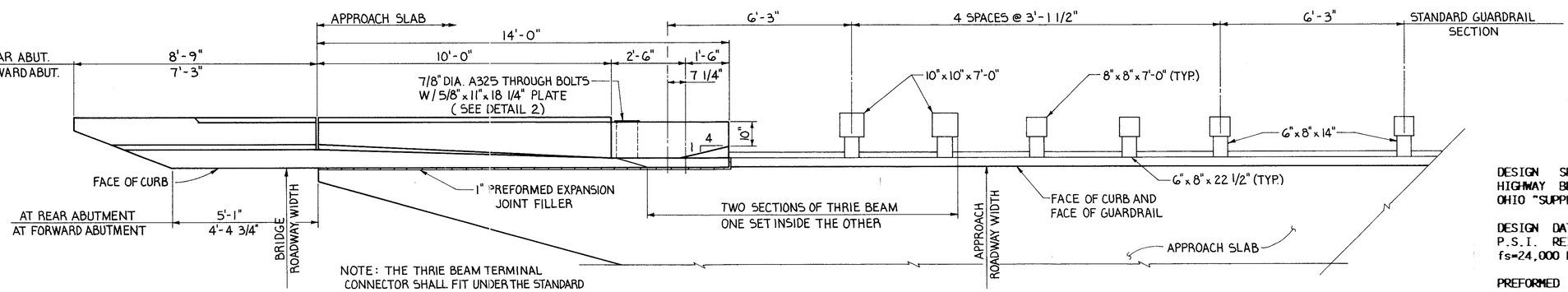

NOTE: THE THRIE BEAM TERMINAL CONNECTOR SHALL FIT UNDER THE STANDARD GUARDRAIL SECTION AT THE APPROACH END. ALL LAPS SHALL BE IN THE DIRECTION OF TRAFFIC.

1/15|16 DETAIL
PART PLAN @ ABUTMENT

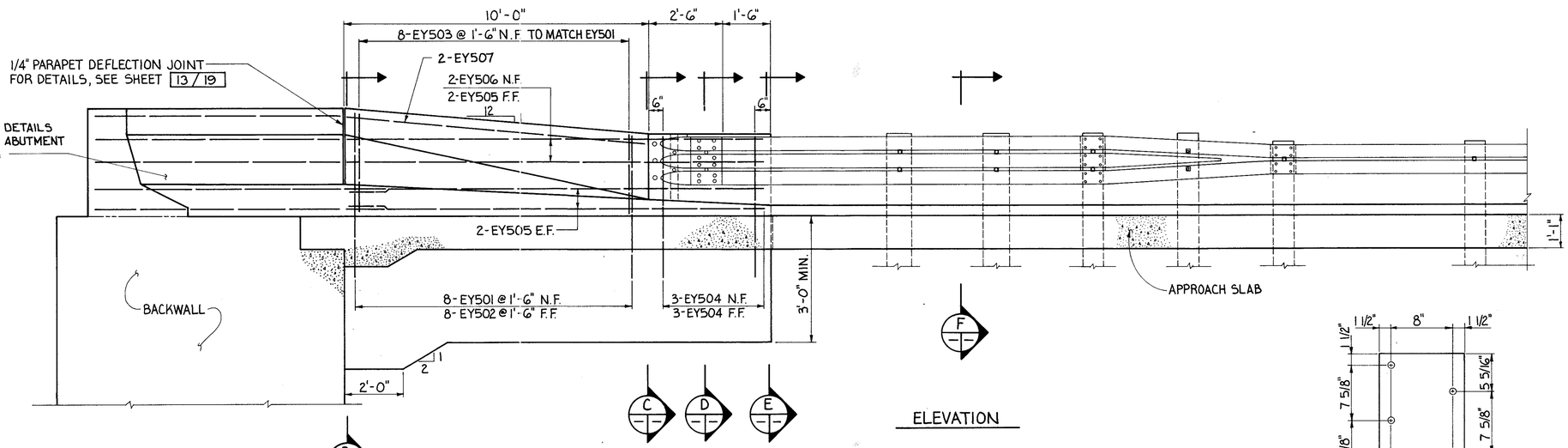

ELEVATION

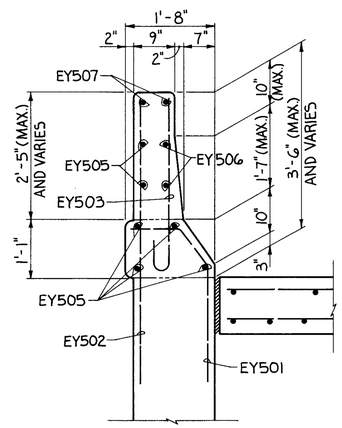

B SECTION

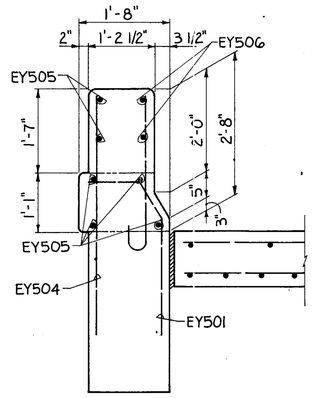

C SECTION

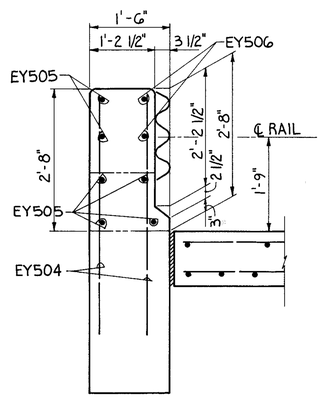

D SECTION

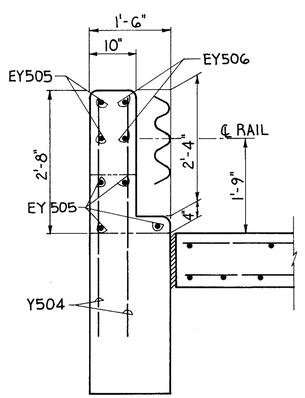

E SECTION

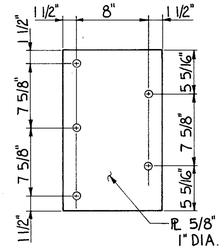

2 DETAIL

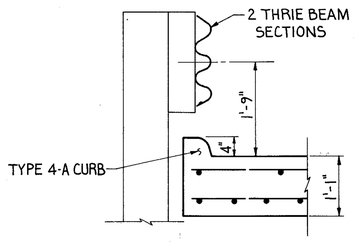

F SECTION

GENERAL NOTES

DESIGN SPECIFICATIONS: "STANDARD SPECIFICATIONS FOR HIGHWAY BRIDGES" ADOPTED BY AASHTO, 1989, INCLUDING THE OHIO "SUPPLEMENT" TO THESE SPECIFICATIONS.

DESIGN DATA: CONCRETE CLASS S fc=4500 P.S.I., fc=1500 P.S.I. REINFORCING STEEL ASTM A615, A616, 1617 GRADE 60 fs=24,000 P.S.I.

PREFORMED EXPANSION JOINT FILLER IN THE PARAPET DEFLECTION JOINTS MAY BE EITHER 1/4" GRAY SPONGE RUBBER OR 1/4" FILLER CELLULAR POLYVINYL CHLORIDE (PVC) SPONGE. SPONGE RUBBER FILLER SHALL CONFORM TO AASHTO M-153, TYPE 1. DENSITY OF PVC SPONGE NOT BE LESS THAN 20 LBS. PER CU. FT.

DEFLECTION JOINTS SHALL BE SPACED AT 16'-3" CENTERS, MAX., EXCEPT THAT FOR CONTINUOUS STRUCTURES THE PANELS SHALL BE FURTHER SUBDIVIDED IN THE NEGATIVE MOMENT REGION (OVER THE PIERS) INTO LENGTHS OR NOT LESS THAN 5'-0" NOR MORE THAN 7'-6". REINFORCING BARS SHALL NOT EXTEND THROUGH DEFLECTION JOINTS.

CONCRETE PARAPETS ABOVE UPPER CONSTRUCTION JOINT SHALL BE PLACED IN ALTERNATE SECTIONS BY THE USE OF BULKHEADS. CLOSING SECTIONS SHALL BE PLACED AFTER REMOVAL OF BULKHEADS AND AFTER PLACEMENT OF EXPANSION JOINT FILLER. EXPOSED EDGES OF THE FILLER SHALL BE FLUSH WITH THE SURFACE ON CONCRETE AND SHALL BE FREE OF MORTAR.

PAYMENT: ADDITIONAL GUARDRAIL COST IN EXCESS OF NORMAL GUARDRAIL COST, SUCH AS: TERMINAL CONNECTOR, STEEL PLATE, BOLTS, NUTS, PLATE WASHERS AND OTHER HARDWARE SHALL BE INCLUDED WITH BRIDGE TERMINAL ASSEMBLY FOR PAYMENT. QUANTITIES OF CONCRETE AND REINFORCING STEEL FOR PARAPET ARE INCLUDED WITH THEIR APPROPRIATE ITEM UNDER EITHER ABUTMENTS OR SUPERSTRUCTURE FOR PAYMENT.

POSTS SHALL BE SQUARE-SAWED PRESSURE TREATED WOOD AS PER 710.14. POSTS SHALL BE FABRICATED WITH SQUARE ENDS. BOLT HOLES SHALL BE BORED AND TOPS OF POSTS TRIMMED, IF REQUIRED, AFTER POSTS ARE SET. POSTS MAY BE SET IN DRILLED HOLES OR DRIVEN TO GRADE. STEEL POSTS AND BLOCKOUTS MAY BE FURNISHED AS AN ALTERNATE, PROVIDED THAT THE STRENGTH EQUALS OR EXCEEDS THE STRENGTH OF WOOD POSTS AND BLOCKOUTS.

FOR REINFORCING STEEL LIST SEE SHEETS 17/19 AND 18/19

JOHN DAVID JONES & ASSOC., INC. 16/19
2162 FRONT STREET
CUYAHOGA FALLS, OHIO 44221
ENGINEERS ARCHITECTS PLANNERS

BRIDGE RAILING DEFLECTOR PARAPET TYPE

BRIDGE No. SUM-76-1244
RAMP E-7 OVER RAMP E-4

DESIGNED	DRAWN	TRACED	CHECKED	REVIEWED	DATE	REVISED
BRH	JS	—	GFD	PAK	1/90	

529281

REAR ABUTMENT

MARK	NO.	LENGTH	SER. INCR.	TYPE	WEIGHT	A	B	C	D
AR1101	48	14'-5"		10	3677	2'-0"	12'-8"	4 5/16"	
AR 1102	48	19'-3"		6	4909	17'-8"			
AR 1103	48	23'-3"		6	5929	21'-8"			
AR 901	106	18'-6"		STR	6667				
AR 902	18	30'-9"		↓	1882				
AR 903	18	32'-0"			1958				
AR 904	1 SER 4	6'-10" / 16'-4"	3'-2"		158				
AR 905	1 SER 6	26'-10" / 28'-4"	3 3/4"		563				
AR 906	1 SER 6	25'-6" / 27'-2"	3 3/4"	STR	537				
AR 701	106	18'-6"		STR	4009				
AR 702	50	29'-0"		↓	2964				
AR 703	50	29'-9"		STR	3041				
AR 704	107	6'-7"		2	1440	1'-2"	5'-7"		
AR 706	56	16'-9"		STR	1917				
AR 708	88	28'-9"		↓	5171				
AR 711	56	18'-9"			2146				
AR 715	1 SER 4	6'-10" / 16'-4"	3'-2"		95				
AR 716	1 SER 6	26'-11" / 28'-6"	3 3/4"		340				
AR 717	1 SER 6	27'-11" / 29'-6"	3 3/4"	STR	352				
AR 601	94	12'-7"		4	1777	6'-8"	6'-0"	12"	12"
AR 606	15	11'-11"		4	268	8'-6"	3'-6"	12"	12"
AR 611	4	5'-10"		2	35	1'-0"	5'-0"		
AR 501	56	10'-7"		1	618	1'-6"	4'-8"		
AR 502	4 SER 17	11'-9" / 25'-1"	5"	33	1306	1'-11"	4'-4" / 11'-5"	10"	
AR 503	8 SER 7	3'-9" / 18'-9"	2'-6"	STR	657				
AR 516	4 SER 19	13'-1" / 25'-1"	4"	33	1513	1'-11"	5'-0" / 11'-0"	10"	
AR 517	8 SER 7	4'-2" / 20'-8"	2'-9"	STR	725				
AR 518	24	5'-5"		STR	136				
D 801	20	4'-7"		14	245	2'-4"			
		TOTAL UNCOATED BARS =			55,035				
EAR 705	35	20'-6"		STR	1467				
EAR 707	100	28'-9"		↓	5877				
EAR 709	21	21'-8"			930				
EAR 710	17	22'-9"			791				
EAR 712	39	23'-1"		STR	1840				

REAR ABUTMENT (CONTINUED)

MARK	NO.	LENGTH	SER. INCR.	TYPE	WEIGHT	A	B	C	D
EAR602	86	9'-1"		1	1173	1'-5"	4'-0"		
EAR603	86	5'-3"		1	678	11"	2'-4"		
EAR607	118	4'-8"		STR	828				
EAR610	8	28'-4"		STR	340				
EAR504	99	8'-6"		1	878	4'-3"	2'-3"		
EAR505	40	28'-0"		STR	1169				
EAR506	7	17'-7"		31	129	11'-0"			
EAR507	5	14'-5"		34	75	9'-8"	3'-3"		
EAR508	24	11'-2"		38	280	5'-10"	4'-6"	1'-0"	4"
EAR509	5	12'-4"		38	65	5'-10"	5'-8"	1'-0"	4"
EAR510	5	13'-3"		37	69	9'-4"	1'-9"	2'-2"	9"
EAR513	1 SER 7	8'-1" / 10'-4"	4 1/2"	1	68	2'-0" / 4'-3"	3'-2"		
EAR514	12	7'-10"		1	98		3'-6"		
EAR515	9	12'-6"		1	118		4'-3"		
EY501	22	3'-7"		9	83	8"	6"	2'-1"	8 1/2"
EY502	8	5'-2"		STR	43				
EY503	8	3'-10"		6	32	3'-3"			
EY504	6	4'-4"		STR	27				
EY505	6	13'-8"		STR	86	-			
EY506	2	13'-8"		35	29				
EY507	2	11'-9"		STR	25				
EY508	14	2'-9"		↓	40				
EY509	3	6'-7"			21				
EY510	3	8'-3"			26				
EY511	4	10'-0"			42				
EY512	9	8'-7"			81				
EY513	1	10'-0"		STR	10				
EY514	4	4'-5"		36	18	1'-7"	7"		
EX501	14	7'-0"		27	102	8"	3'-0"		
		TOTAL COATED BARS =			17538				

CALC. BY: JRS DATE:
CHECKED BY: RCK DATE: 12-30-88

F.H.W.A. REGION	STATE	PROJECT
5	OHIO	

900 / 1214

SUMMIT COUNTY
SUM-76-11.57

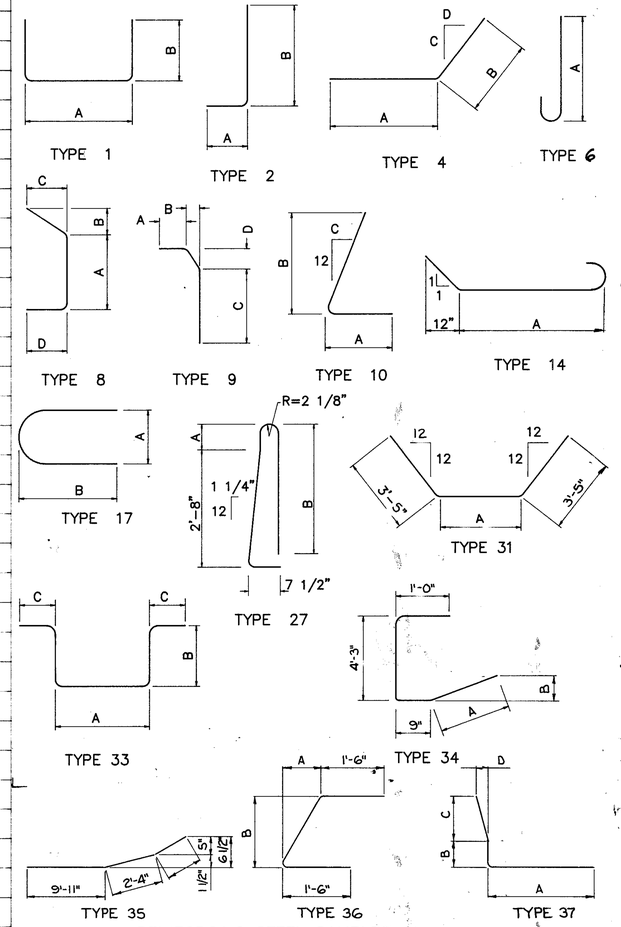

REINFORCING STEEL SAMPLES

REFER TO CMS SECTIONS 106.03, 700, 709.01 THROUGH 709.05 AND 709.08. SUFFICIENT ADDITIONAL REINFORCING STEEL SHALL BE PROVIDED FOR SAMPLING. RAMDOM SAMPLES SHALL BE REPLACED IN STRUCTURES BY THE ADDITIONAL STEEL , SPLICED IN ACCORDANCE WITH 509.08.

BAR MARKS PREFIXED WITH "E" INDICATE EPOXY COATED REQUIRED.

JOHN DAVID JONES & ASSOC., INC. 17 / 19
2162 FRUIT STREET
CUYAHOGA FALLS, OHIO 44221
ENGINEERS ARCHITECTS PLANNERS

REINFORCING STEEL LIST

BRIDGE Nº SUM-76-1244
RAMP E-7 OVER RAMP E-4

DESIGNED	DRAWN	TRACED	CHECKED	REVIEWED	DATE	REVISED
JRS	DEN	—	BRH	PAK	12-22-88	

MARK	NO.	LENGTH	SER. INCR.	TYPE	WEIGHT	A	B	C	D
FORWARD ABUTMENT									
AF 1101	48	14'-5"		10	3677	2'-0"	12'-8"	6"	
AF 1102	48	19'-1"		6	4867	17'-6"			
AF 1103	48	19'-11"		6	5079	18'-4"			
AF 901	88	18'-6"		STR.	5535				
AF 902	18	26'-1"			1696				
AF 903	18	27'-5"			1678				
AF 904	1 SER 4	9'-2" / 17'-7"	2'-9 1/2"		182				
AF 905	1 SER 6	24'-1" / 25'-10"	4 1/4"		509				
AF 906	1 SER 6	22'-9" / 24'-6"	4 1/4"	STR.	482				
AF 701	88	18'-6"		STR.	3328				
AF 702	50	24'-4"			2487				
AF 703	50	24-11"		STR.	2547				
AF 704	92	6'-7"		2	1238	1'-2"	5'-7"		
AF 706	47	14'-9"		STR.	1417				
AF 708	93	24'-8"			4689				
AF 711	47	13'-8"			1313				
AF 715	1 SER 4	9'-2" / 17'-7"	2'-9 1/2"		109				
AF 716	1 SER 4	23'-7" / 24'-9"	4 11/16"		198				
AF 717	1 SER 4	24'-2" / 25'-4"	4 11/16"	STR.	202				
AF 601	81	12'-7"		4	1531	6'-8"	6'-0"	12"	12"
AF 606	12	13'-2"		4	237	4'-9	8'-6"	12"	12"
AF 611	5	5'-10"		2	44	12"	5'-0"		
AF 501	42	10'-7		1	464	1'-6"	4'-8"		
AF 502	3 SER 15	11'-8" / 24'-6"	5 1/2"	33	849	1'-8"	4'-10" / 11'-1"	10"	
AF 503	3 SER 7	3'-4" / 16'-10"	2'-3"	STR.	221				
AF 516	3 SER 13	12'-6" / 22'-6"	6"	33	712	1'-8"	5'-7" / 11'-5"	10"	
AF 517	3 SER 7	15'-0" / 3'-0"	2'-0"	STR.	197				
AF 518	18	5'-10"		35	109	1'-4"	3'-0"	1'-9"	11"
D 801	19	4'-7"		14	233	2'-4"			
		TOTAL UNCOATED BARS =			45,730				
EAF 705	28	19'-5"		STR	1111				
EAF 707	93	24'-0"			4562				
EAF 709	18	18'-7"			684				
EAF 710	15	17'-8"			542				
EAF 712	31	15'-11"			1056				
EAF 713	4	13'-8"			112				
EAF 714	2	13'-7"		STR	56				

MARK	NO.	LENGTH	SER. INCR.	TYPE	WEIGHT	A	B	C	D
FORWARD ABUTMENT (CONTINUED)									
EAF602	73	9'-1"		1	996	1'-5"	4'-0"		
EAF603	73	5'-3"		1	576	11"	2'-4"		
EAF607	92	4'-10"		STR	668				
EAF610	10	19'-2"		STR	288				
EAF504	90	9'-0"		1	845	4'-3	2'-6"		
EAF505	40	23'-8"		STR	987				
EAF506	9	15'-2"		31	142	8'-7"			
EAF507	5	14'-8"		34	76	8'-11"	3'-6"		
EAF508	18	6'-0"		8	113	3'-1"	2'-0"	9"	1'-0"
EAF509	18	6'-6"		37	122	1'-0"	2'-3"	3'-5"	1'-3"
EAF510	5	10'-4"		37	54	6'-5"	1'-9"	2'-2"	9"
EAF511	5	6'-0"		8	31	3'-1"	2'-0"	9"	1'-0"
EAF512	5	4'-4"		2	23	1'-0"	3'-6"	1'-5"	1'-4"
EAF513	1 SER 7	9'-6" / 12'-0"	5"	1	78	1'-9" / 4'-3"	4'-0"		
EAF514	10	10'-0"		1	63	2'-3"	4'-0"		
EAF515	7	9'-4"		1	68	3'-9"	2'-11"		
EY501	21	3'-7"		9	79	8"	6"	2'-1"	8 1/2"
EY502	8	5'-2"		STR	43				
EY503	8	3'-10"		6	32	3'-3"			
EY504	6	4'-4"		STR	27				
EY505	12	13'-8"		STR	171				
EY506	2	13'-8"		35	29				
EY507	2	11'-9"		STR	25				
EY508	13	2'-9"			37				
EY509	3	5'-4"			17				
EY510	3	6'-9"			21				
EY511	4	8'-6"			35				
EY512	9	6'-3"			59				
EY513	1	7'-6"		STR	8				
EY514	4	4'-5"		36	18	1'-7"	7"		
EX501	13	7'-0"		27	95	8"	3'-0"		
		TOTAL COATED BARS =			13,949				

CALC. BY: JRS DATE: 11-22-88
CHECKED BY: RCK DATE: 1-2-89

F.H.W.A. REGION	STATE	PROJECT
5	OHIO	

901
1214

SUMMIT COUNTY
SUM-76-11.57

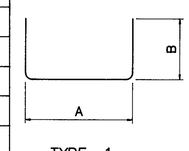

TYPE 1

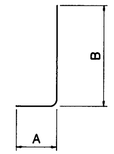

TYPE 2

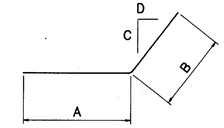

TYPE 4

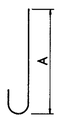

TYPE B

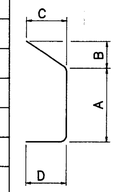

TYPE 8

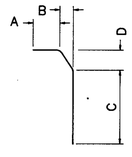

TYPE 9

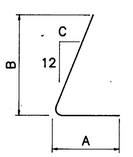

TYPE 10

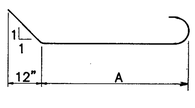

TYPE 14

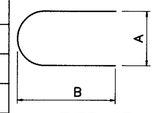

TYPE 17

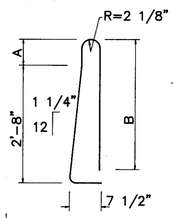

TYPE 27

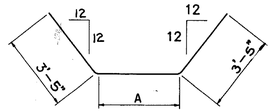

TYPE 31

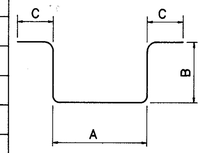

TYPE 33

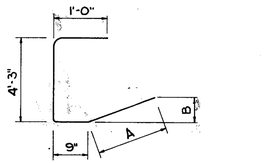

TYPE 34

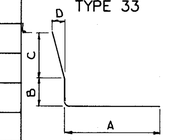

TYPE 37

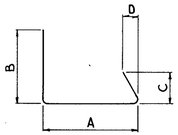

TYPE 38

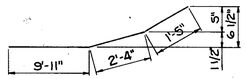

TYPE 35

REINFORCING STEEL SAMPLES

REFER TO CMS SECTIONS 106.03, 700, 709.01 THROUGH 709.05 AND 709.08. SUFFICIENT ADDITIONAL REINFORCING STEEL SHALL BE PROVIDED FOR SAMPLING. RAMDOM SAMPLES SHALL BE REPLACED IN STRUCTURES BY THE ADDITIONAL STEEL , SPLICED IN ACCORDANCE WITH 509.08.

BAR MARKS PREFIXED WITH "E" INDICATE EPOXY COATED REQUIRED

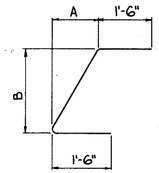

TYPE 36

JOHN DAVID JONES & ASSOC., INC.
2162 FRONT STREET
CUYAHOGA FALLS, OHIO 44221
ENGINEERS ARCHITECTS PLANNERS

18 / 19

REINFORCING STEEL LIST

BRIDGE Nº SUM-76-1244
RAMP E-7 OVER RAMP E-4

DESIGNED	DRAWN	TRACED	CHECKED	REVIEWED	DATE	REVISED
JRS	DEN	——	BRH	PAK	12-22-88	

MARK	NO.	LENGTH	SER. INCR.	TYPE	WEIGHT	A	B	C	D
RIGHT REAR WINGWALL									
WR901	33	8'-0"		2	898	2'-10"	5'-6"		
WR902	22	14'-4"		2	1072	2'-10"	11'-10"		
WR801	1 SER 58	5'-6" / 13'-6"	1 5/8"	STR	1471				
WR701	1 SER 58	5'-6" / 13'-6"	1 5/8"	STR	1126				
WR501	32	24'-10"		STR	829				
WR508	1 SER 31	4'-3" / 24'-11"	8 1/4"		472				
WR509	2	25'-3"			52				
WR510	8	30'-0"			250				
WR511	1 SER 5	3'-1" / 16'-1"	3'-3"		50				
WR512	1 SER 5	5'-5" / 28'-2"	3'-3"		88				
WR513	3	19'-4"		STR.	61				
		TOTAL UNCOATED BARS =			6369 LB.				
EWR502	1 SER 31	4'-0" / 24'-8"	8 1/4"	STR	464				
EWR503	2	25'-0"			52				
EWR504	8	30'-0"			250				
EWR505	1 SER 5	3'-1" / 16'-1"	3'-3"		50				
EWR506	1 SER 5	5'-5" / 28'-2"	3'-3"		88				
EWR507	4	26'-0"			108				
EWR508	2	2'-4"			5				
EWR509	3	19'-4"		STR.	61				
		TOTAL COATED BARS = 1078 LB.							
LEFT FORWARD WINGWALL									
WF901	33	8'-0"		2	898	2'-10"	5'-6"		
WF902	22	14'-4"		2	1072	2'-10"	11'-10"		
WF801	1 SER. 58	5'-6" / 13'-6"	1 5/8"	STR	1471				
WF701	1 SER 58	5'-6" / 13'-6"	1 5/8"	STR	1126				
WF501	32	24'-10"		STR	829				
WF508	1 SER 31	4'-3" / 24'-11"	8 1/4"		472				
WF509	2	25'-3"			52				
WF510	8	30'-0"			250				
WF511	1 SER 5	3'-1" / 16'-1"	3'-3"		50				
WF512	1 SER 8	5'-5" / 28'-2"	3'-3"		88				
WF513	3	19'-4"		STR.	61				
		TOTAL UNCOATED BARS =			6369 LB.				

MARK	NO.	LENGTH	SER. INCR.	TYPE	WEIGHT	A	B	C	D
FORWARD WINGWALL (CONTINUED)									
EWF502	1 SER 31	4'-0" / 24'-8"	8 1/4"	STR	464				
EWF503	2	25'-0"			52				
EWF504	8	30'-0"			250				
EWF505	1 SER 5	3'-1" / 16'-1"	3'-3"		50				
EWF506	1 SER 8	5'-5" / 28'-2"	3'-3"		88				
EWF507	4	26'-0"			108				
EWF508	2	2'-4"		STR.	5				
EWF509	3	19'-4"		STR.	61				
		TOTAL COATED BARS = 1078 LB.							
DECK SLAB									
ES601	22	30'-8"		STR	1013				
ES602	1 SER 32	22'-0" / 30'-1"	3 1/8"		1252				
ES603	1 SER 32	13'-8" / 21'-9"	3 1/8"		851				
ES604	1 SER 37	4'-0 1/2" / 13'-5"	3 1/8"		485				
ES605	10	13'-0"			195				
ES606	1 SER 39	21'-9 1/4" / 30'-1"	2 5/8"		1519				
ES607	1 SER 39	13'-3" / 21'-6 3/4"	2 5/8"		1020				
ES608	1 SER 42	4'-0 7/8" / 13'-0 1/2"	2 5/8"		540				
ES609	10	15'-6"			233				
ES501	120	25'-3"		STR	3160				
ES502	22	30'-8"			704				
ES503	1 SER 32	22'-0" / 30'-1"	3 1/8"		869				
ES504	1 SER 32	13'-8" / 21'-9"	3 1/8"		591				
ES505	1 SER 37	4'-0 1/2" / 13'-5"	3 1/8"		337				
ES506	10	13'-0"			136				
ES507	1 SER 39	21'-9 1/4" / 30'-1"	2 5/8"		1055				
ES508	1 SER 39	13'-3" / 21'-6 3/4"	2 5/8"		708				
ES509	1 SER 42	4'-0 7/8" / 13'-0 1/2"	2 5/8"		375				
ES510	10	15'-6"			162				
ES401	196	25'-0"		STR	3273				
EX501	125	7'-0"		27	913	8"	3'-0"		
EX502	36	15'-10"		STR	595				
EX503	36	13'-6"		STR	507				
EX504	6	4'-0"		STR	25				
EY502	125	3'-1"		9	402	10"	9"	6"	8 1/2"
EY503	125	2'-4"		2	304	10 1/2"	1'-7"		
		TOTAL COATED		BARS =	21,224	LB.			

CALC. BY: JRS DATE: 12-20-88
CHECKED BY: BRH DATE: 1-3-89

F.H.W.A. REGION	STATE	PROJECT
5	OHIO	

902
1214

SUMMIT COUNTY
SUM-76-11.57

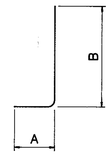

TYPE 2

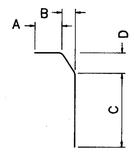

TYPE 9

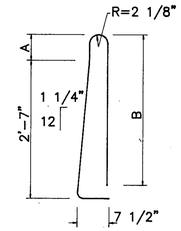

TYPE 27

BAR MARKS PREFIXED WITH "E" INDICATE EXPOXY COATED REQUIRED

REINFORCING STEEL SAMPLES

REFER TO CMS SECTIONS 106.03, 700, 709.01 THROUGH 709.05 AND 709.08. SUFFICIENT ADDITIONAL REINFORCING STEEL SHALL BE PROVIDED FOR SAMPLING. RAMDOM SAMPLES SHALL BE REPLACED IN STRUCTURES BY THE ADDITIONAL STEEL , SPLICED IN ACCORDANCE WITH 509.08.

JOHN DAVID JONES & ASSOC., INC.
2162 FRONT STREET
CUYAHOGA FALLS, OHIO 44221
ENGINEERS ARCHITECTS PLANNERS

19/19

REINFORCING STEEL LIST

BRIDGE No. SUM-76-1244
RAMP E-7 OVER RAMP E-4

DESIGNED	DRAWN	TRACED	CHECKED	REVIEWED	DATE	REVISED
JRS	EMB	—	BRH	PAK	1-3-89	

F.H.W.A. REG.	STATE	PROJECT	
5	OHIO		

903
1214

SUMMIT COUNTY
SUM-76-11.57

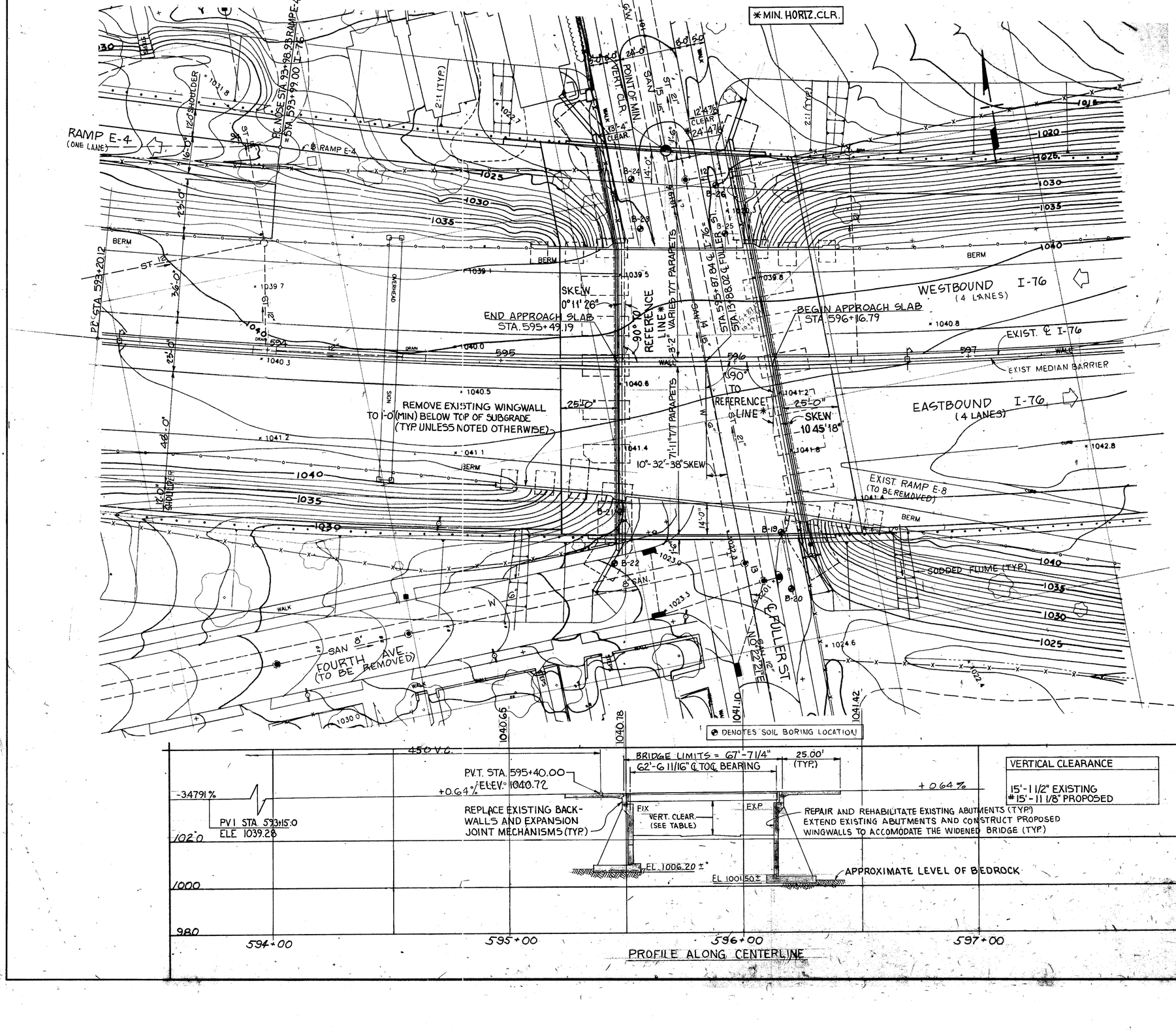

*SEE SHEET 2/34 FOR DEFINITION OF REFENCE LINE

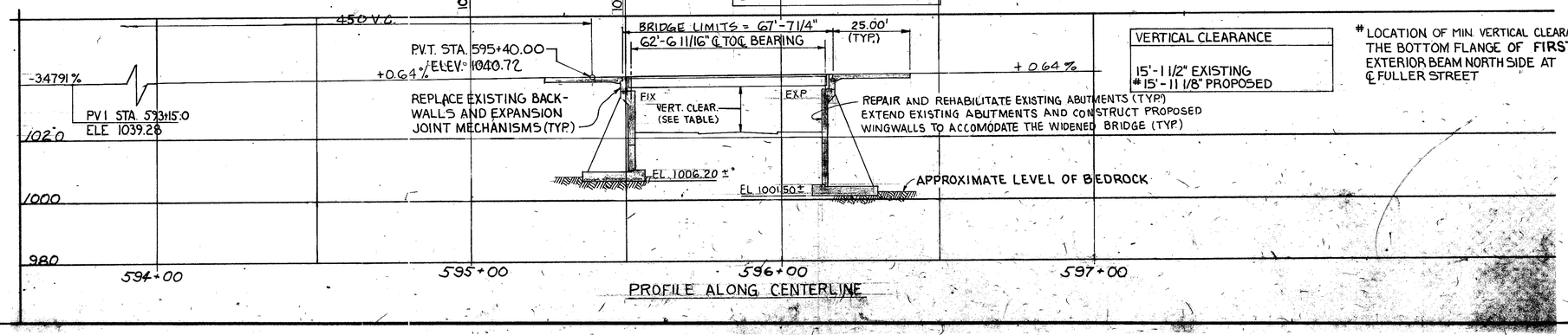

VERTICAL CLEARANCE
15'-11 1/2" EXISTING
#15'-11 1/8" PROPOSED

#LOCATION OF MIN. VERTICAL CLEARANCE THE BOTTOM FLANGE OF FIRST EXTERIOR BEAM NORTH SIDE AT ℄ FULLER STREET

CURVE DATA RAMP E-4

△ = 17°-32'-55"
Dc = 2°-48'-39"
R = 2038.2994'
T = 314.61'
L = 624.29'

CURVE DATA MAINLINE

△ = 21°-08'-51"
Dc = 1°-58'-30"
R = 2901.05
T = 541.54'
L = 1070.76'

UTILITIES

UTILITIES SHOWN ARE EXISTING AND REMAIN IN PLACE UNLESS NOTED OTHERWISE

DESIGN TRAFFIC

E.B. 1990 - 33,109 ADT
4,966 ADTT
2010 - 43,533 ADT
6,530 ADTT
W.B. 1990 - 32,832 ADT
4,925 ADTT
2010 - 43,168 ADT
6,475 ADTT

MAINTAIN TRAFFIC

BENCH MARK

TOP OF SOUTHWEST BOLT IN BASE OF LIGHT POST AT NORTHEAST CORNER OF INTERSECTION OF FULLER STREET AND THIRD AVENUE, ELEV. 1015.92

EXISTING STRUCTURE

DATE BUILT: 1958
STRUCTURE FILE NO. 7706308
TYPE: SIMPLE SPAN STEEL BEAM WITH REINFORCED CONCRETE DECK AND SUBSTRUCTURE
SPAN: VARIES 53'-11 1/4" to 75'-0" c/c BRGS.
ROADWAY: WESTBOUND 46'-0", EASTBOUND VARIES
LOADING: CF 2000
SKEW: 10°-42'-11" RT. FWD.
WEARING SURFACE: 6" ASPHALTIC CONCRETE
APPROACH SLAB: 15'-0" CONCRETE
ALIGNMENT: CURVE LT.
SUPERELEVEVATION: 0.03' PER FT.

PROPOSED STRUCTURE

TYPE: UPGRADE AND WIDEN EXISTING SIMPLE SPAN BRIDGE WITH REINFORCED CONCRETE DECK AND SUBSTRUCTURE, INCLUDING REPLACE DECK, UPGRADE PARAPETS AND MEDIAN BARRIER, CLEAN AND REPAINT STEEL SUPERSTRUCTURE, REPLACE BEARINGS, REPLACE APPROACH SLABS, INSTALL SEALED EXPANSION JOINT MECHANISMS REPAIR AND SEAL CONCRETE ABUTMENTS.
SPAN: VARIES 54'-0" to 76'-6" c/c BRGS.
ROADWAY: EASTBOUND 72'-0", WESTBOUND VARIES
LOADING: HS20-44 CASE I AND THE ALTERNATE MILITARY LOADING
SKEW: 10°-32'-38" RT. FWD.
WEARING SURFACE: 1" MONOLITHIC
APPROACH SLAB: 25'-0" CONCRETE (SPECIALY
ALIGNMENT: CURVE LT.
SUPERELEVATION: 0.03' PER FT.

EARTHWORK

EARTHWORK LIMITS SHOWN ARE APPROXIMATE. ACTUAL SLOPES SHALL CONFORM TO PLAN CROSS-SECTIONS.

JOHN DAVID JONES & ASSOC. INC. 1/34
2162 FRONT STREET
CUYAHOGA FALLS, OHIO 44221
ENGINEERS..... ARCHITECTS..... PLANNERS

SITE PLAN

BRIDGE No. SUM-76-12.67
OVER FULLER ST.

SUMMIT COUNTY FROM STA. 595+49.19
TO STA. 596+16.79

PRESENT TOPOGRAPHY		PROPOSED WORK			
SURVEYED	DRAWN	DESIGNED	DRAWN	CHECKED	REVIEWED
		JRS	JRS	JRO	PAK 4/8/87

F.H.W.A. REG.	STATE	PROJECT	
5	OHIO		

904
1214

SUMMIT COUNTY
SUM-76-11.57

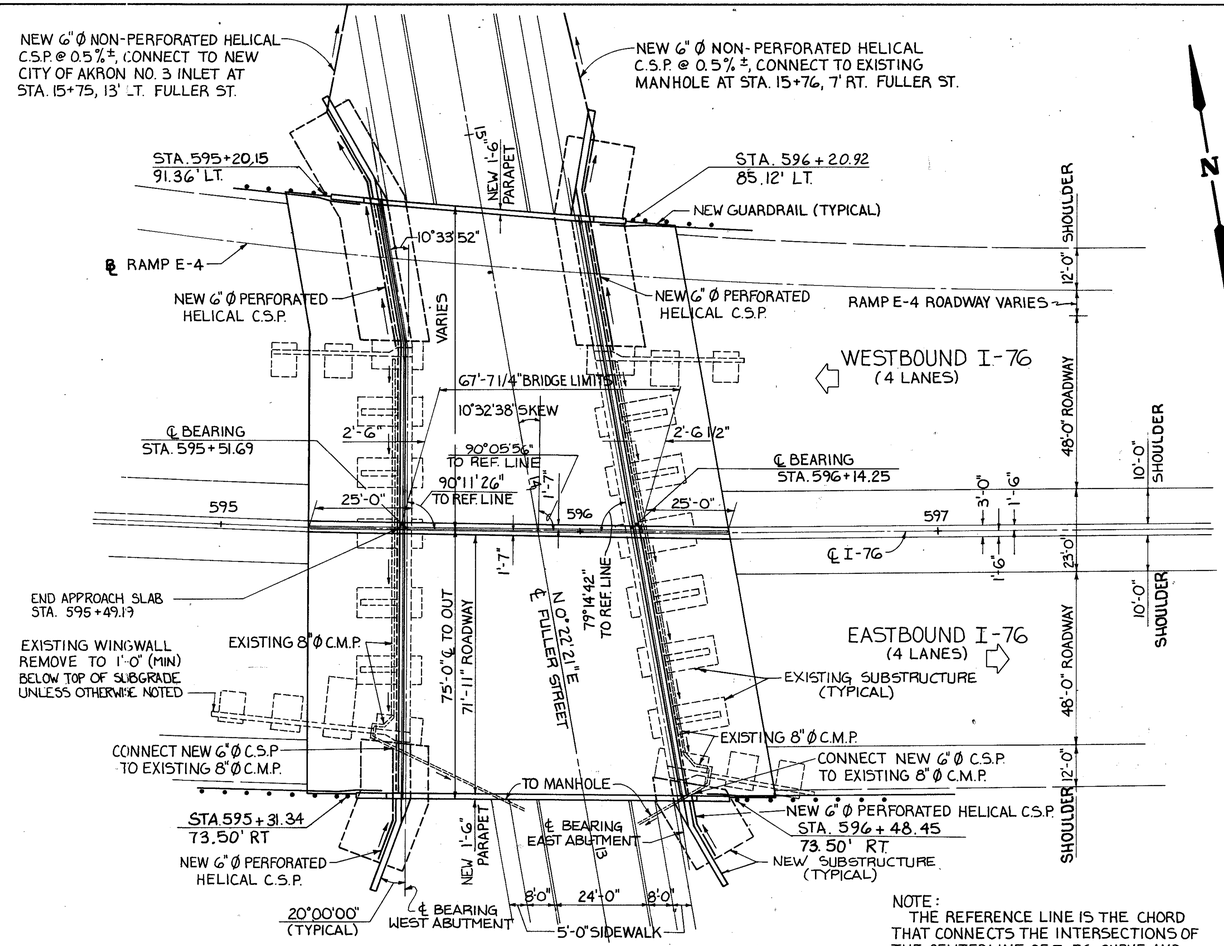

PLAN

NOTE:
THE REFERENCE LINE IS THE CHORD THAT CONNECTS THE INTERSECTIONS OF THE CENTERLINE OF I-76 CURVE AND THE CENTERLINES OF ABUTMENT BEARINGS. IT'S BEARING RELATIVE TO ℄ FULLER ST. IS N. 79°-05'-01" W.

NOTE
FOR TYPICAL SECTION OF EXISTING BRIDGE, SEE SHEET 5/34
FOR MODIFIED BRIDGE TYPICAL SECTION, SEE SHEET 5/34

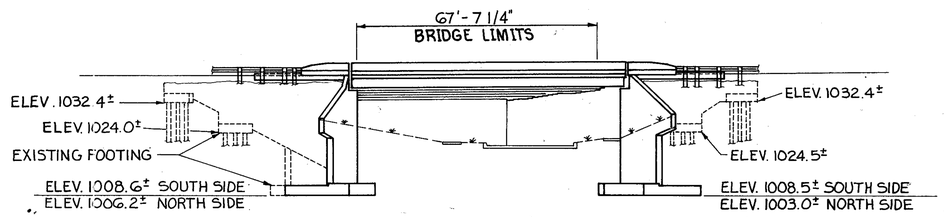

ELEVATION

JOHN DAVID JONES & ASSOC., INC.
2192 FRONT STREET
CUYAHOGA FALLS, OHIO 44221
ENGINEERS ARCHITECTS PLANNERS

2/34

GENERAL PLAN & ELEVATION

BRIDGE No. SUM-76-12.67
OVER FULLER ST.

DESIGNED	DRAWN	TRACED	CHECKED	REVIEWED	DATE	REVISED
JRS	RCK	JPM	BRH	PAK	12-7-88	

ESTIMATED QUANTITIES

QUANTITY CALCULATIONS
MADE BY: G.F.D DATE: 12-88
CHK'D BY: P.A.K. DATE: 1-90

F.H.W.A. REGION	STATE	PROJECT	
5	OHIO		

905
1214

SUMMIT COUNTY
SUM-76-11.57

ITEM	ITEM EXT.	TOTAL	UNIT	DESCRIPTION	ABUTMENTS	PIERS	SUPER STRUCTURE	GENERAL
202	11201	LUMP		PORTIONS OF STRUCTURES REMOVED (AS PER PLAN)				11305
503	21100	1517	CU.YD.	UNCLASSIFIED EXCAVATION	1517			
503	21104	428	CU.YD.	UNCLASSIFIED EXCAVATION INCLUDING ROCK	428			
509	15400	134044	LB.	REINFORCING STEEL, GRADE 60	133944			100
509	15800	74678	LB.	EPOXY COATED REINFORCING STEEL, GRADE 60	3324		71354	
510	11100	1694	EACH	DOWEL HOLES	1694			
511	33404	188	CU.YD.	Class S concrete, superstructure, using shrinkage compensating cement (See proposal note)	◆		188	
511	33410	LUMP		Class S concrete, using shrinkage compensating cement, for pre-placement testing (See proposal note)	◆		LUMP	
511	32203	188	CU.YD.	CLASS S CONCRETE, SUPERSTRUCTURE, AS PER PLAN			188	
511	44501	661	CU.YD.	CLASS "C" CONCRETE, ABUTMENT WALLS, As Per Plan	661			
511	51100	53	CU.YD.	CLASS "C" CONCRETE FACING (AS PER PLAN)	53			
511	46500	406	CU.YD.	CLASS "C" CONCRETE, FOOTINGS	406			
511	51100	6	CU.YD.	CLASS C CONCRETE PEDESTALS INCLUDING REINFORCING	6			
512	44400	27	SQ.YD.	TYPE "B" WATERPROOFING	27			
513	11100	176621	LB.	STRUCTURAL STEEL, ASTM A 36 (AISC CATEGORY I)			176621	
513	16000	500	LB.	STRUCTURAL STEEL FOR REHABILITATION			500	
516	11210	333	LIN.FT.	STRUCTURAL EXPANSION JOINTS INCL. ELASTOMERIC STRIP SEALS			333	
516	13600	328	SQ.FT.	1" PREFORMED EXPANSION JOINT FILLER	328			

ITEM	ITEM EXT.	TOTAL	UNIT	DESCRIPTION	ABUTMENTS	PIERS	SUPER STRUCTURE	GENERAL
516	30501	41	LIN.FT.	PVC WATERSTOP, AS PER PLAN	41			
516	44000	16	EACH	LAMINATED ELASTOMERIC BEARINGS 11" X 7" X 1-3/8" ELASTOMERIC PAD WITH 18" X 8" X 1-1/2" STEEL LOAD PLATE	16			
516	44000	20	EACH	LAMINATED ELASTOMERIC BEARINGS 12" X 8-1/2" X 1-1/2" ELASTOMERIC PAD WITH 18" X 9-1/2" X 1-1/2" STEEL LOAD PLATE	20			
516	44000	6	EACH	LAMINATED ELASTOMERIC BEARINGS 13" X 7-1/2" X 1-3/8" ELASTOMERIC PAD WITH 25" X 8-1/2" X 1-1/2" STEEL LOAD PLATE	6			
516	44000	6	EACH	LAMINATED ELASTOMERIC BEARINGS 13" X 7-1/2" X 1-3/8" ELASTOMERIC PAD WITH 18" X 8-1/2" X 1-1/2" STEEL LOAD PLATE	6			
518	21200	390	CU.YD.	POROUS BACKFILL with Filter Faboric	390			
518	41100	187	LIN.FT.	6" PERFORATED, HELICAL CORRUGATED STEEL PIPE, 707.01	187			
518	41200	148	LIN.FT.	6" NON-PERFORATED, HELICAL CORRUGATED STEEL PIPE, INCLUDING SPECIALS, 707.01	148			
518	62100	98	LIN.FT.	4" DIAM. PLASTIC PIPE, INCLUDING SPECIALS	98			
SPECIAL	51267502	144	SQ.YD.	SEALING CONCRETE SURFACES (EPOXY) (SEE PROPOSAL NOTE)	144			
SPECIAL	51267504	1015	SQ.YD.	SEALING CONCRETE SURFACES (NON-EPOXY) (SEE PROPOSAL NOTE)	714		301	
SPECIAL	51400050	10650	SQ.FT.	Surface Prep. OF EXISTING STEEL, SYSTEM OZEU* ▲			10650	
SPECIAL	51400056	10650	SQ.FT.	FIELD PAINTING OF EXISTING STEEL, Prime COAT SYSTEM OZEU* ▲			10650	
SPECIAL	51400060	10650	SQ.FT.	FIELD PAINTING OF EXISTING STEEL, INTERMEDIATE COAT, SYSTEM OZEU* ▲			10650	
SPECIAL	51400066	10650	SQ.FT.	FIELD PAINTING OF EXISTING STEEL, Finish COAT SYSTEM OZEU* ▲			10650	
SPECIAL	51400600	LUMP		PAINTING OF NEW STEEL, SYSTEM IZEU* ▲				
~~SPECIAL~~	~~51426300~~	~~LUMP~~		~~HAZARDOUS WASTE MANAGEMENT (SEE PROPOSAL NOTE)~~				
~~SPECIAL~~	~~51426510~~	~~LUMP~~		~~NON-HAZARDOUS WASTE MANAGEMENT (SEE PROPOSAL NOTE)~~				
519	11100	910	SQ.FT.	Patching CONCRETE STRUCTURE	910			
SPECIAL	53000200	LUMP		JACK STRUCTURE				
				* - SEE PROPOSAL NOTE				

▲ See General Notes for additional requirements

◆ These two items shall constitute one alternate bid to class S concrete, superstructure, as per plan.

ITEM 511 - CLASS S CONCRETE, SUPERSTRUCTURE, AS PER PLAN
Concrete shall be cured by method (a) water curing

JOHN DAVID JONES & ASSOC., INC.
2162 FRONT STREET
CUYAHOGA FALLS, OHIO 44221
ENGINEERS ARCHITECTS PLANNERS

33/34

QUANTITY TABLE

BRIDGE No. SUM-76-12.67
OVER FULLER ST.

DESIGNED	DRAWN	TRACED	CHECKED	REVIEWED	DATE	REVISED
JRS	EMB	—	BRH	PAK	11/90	

542371

F.H.W.A. REG.	STATE	PROJECT	
5	OHIO		

906
1214

SUMMIT COUNTY
SUM-76-11.57

REFERENCE SHALL BE MADE TO STANDARD DRAWINGS:

AS-1-81 DATED 11-27-81
SD-1-69 DATED 6-12-69

AND TO SUPPLEMENTAL SPECIFICATION (S):

836 DATED 11-12-85

DESIGN SPECIFICATIONS: MODIFICATIONS TO THIS STRUCTURE CONFORM TO "STANDARD SPECIFICATIONS FOR HIGHWAY BRIDGES" ADOPTED BY THE AMERICAN ASSOCIATION OF STATE HIGHWAY AND TRANSPORTATION OFFICIALS, 1983, INCLUDING THE 1984, 1985 AND 1986 INTERIM SPECIFICATIONS AND THE OHIO "SUPPLEMENT" TO THESE SPECIFICATIONS.

DESIGN LOADING - HS20-44 CASE I. AND THE ALTERNATE MILITARY LOADING.

DESIGN STRESSES

CONCRETE CLASS S - COMPRESSIVE STRENGTH 4500 P.S.I.
CONCRETE CLASS C - COMPRESSIVE STRENGTH 4000 P.S.I.
REINFORCING STEEL - ASTM A615, A616, A617 - GRADE 60 MINIMUM YIELD STRENGTH 60,000 P.S.I.
STRUCTURAL STEEL ASTM A36 - YIELD STRENGTH 36,0000 P.S.I.

DECK PROTECTION METHOD: EPOXY COATED REINFORCING STEEL, TOP AND BOTTOM MATS.

SEALING OF PARAPET SURFACES.

MONOLITHIC WEARING SURFACE IS ASSUMED, FOR DESIGN PURPOSES, TO BE 1" THICK.

EXISTING STRUCTURE VERIFICATION: DETAILS AND DIMENSIONS SHOWN ON THESE PLANS PERTAINING TO THE EXISTING STRUCTURE HAVE BEEN OBTAINED FROM PLANS OF THE EXISTING STRUCTURE AND/OR FROM FIELD OBSERVATIONS AND MEASUREMENTS. CONSEQUENTLY, THEY ARE INDICATIVE OF THE EXISTING STRUCTURE AND THE PROPOSED WORK, BUT, THEY SHALL BE CONSIDERED TENTATIVE AND APPROXIMATE. THE CONTRACTOR IS REFERRED TO CMS SECTIONS 102.05, 105.02 AND 513.02.

CONTRACT BID PRICES SHALL BE BASED UPON A RECOGNITION OF THE UNCERTAINTIES DESCRIBED ABOVE AND UPON A PREBID EXAMINATION OF THE EXISTING STRUCTURE BY THE CONTRACTOR. HOWEVER, ALL PROJECT WORK SHALL BE BASED UPON ACTUAL DETAILS AND DIMENSIONS WHICH HAVE BEEN VERIFIED BY THE CONTRACTOR IN THE FIELD.

REPLACEMENT OF EXISTING REINFORCING STEEL: ANY EXISTING REINFORCING BARS WHICH ARE TO BE INCORPORATED INTO THE NEW WORK AND WHICH ARE MADE UNUSABLE BY THE CONTRACTOR'S CONCRETE REMOVAL OPERATIONS SHALL BE REPLACED WITH NEW STEEL AT HIS COST. ANY EXISTING REINFORCING BARS DEEMED BY THE ENGINEER TO BE UNUSABLE BECAUSE OF CORROSION SHALL BE REPLACED WITH NEW STEEL. AN ALLOWANCE OF 100 POUNDS IS INCLUDED IN ITEM 509 FOR THIS PURPOSE.

MAINTENANCE OF TRAFFIC: TWO LANES OF TRAFFIC WITH A MINIMUM HORIZONTAL WIDTH OF 26'-0" AND A MINIMUM VERTICAL CLEARANCE OF 13'-8" SHALL BE MAINTAINED ON FULLER STREET AT ALL TIMES. THE CONTRACTOR SHALL SAFEGUARD THE TRAVELING PUBLIC BY PROVIDING PLATFORMS, NETS OR OTHER SUITABLE PROTECTION. HIS PROPOSED METHOD SHALL BE SUBMITTED TO THE DIRECTOR AND SHALL HAVE BEEN APPROVED BEFORE REMOVAL WORK BEGINS.

MAINLINE I-76 TRAFFIC SHALL BE MAINTAINED AS INDICATED ON THE ROADWAY PLANS.

UTILITY LINES: ALL EXPENSE INVOLVED IN RELOCATING THE AFFECTED UTILITY LINES SHALL BE BORNE BY THE OWNERS. THE CONTRACTOR AND OWNERS ARE REQUESTED TO COOPERATE BY ARRANGING THEIR WORK IN SUCH A MANNER THAT INCONVENIENCE TO EITHER WILL BE HELD TO A MINIMUM.

PROPOSED WORK - SUGGESTED SEQUENCE OF OPERATIONS

1. INSTALL TEMPORARY BARRIERS AS PER ITEM 622 AND MAINTAIN TRAFFIC.
2. REMOVE PORTIONS OF STRUCTURE INDICATED IN PHASE 1 CONSTRUCTION INCLUDING: ASPHALT OVERLAY, CONCRETE DECK, END DAMS, RAILINGS, PARAPETS, CROSS FRAMES, BEAMS, WINGWALLS, APPROACH SLABS, BACKWALLS AND EXISTING BEARING DEVICES.
3. JACK REMAINING EXISTING BEAMS.
4. INSTALL PEDESTALS OR SHIMS AND NEW ELASTOMERIC BEARING DEVICES ON EXISTING BRIDGE SEATS.
5. RESET EXISTING BEAMS TO REMAIN.
6. CONSTRUCT ABUTMENT EXTENSIONS AND WINGWALLS.
7. INSTALL NEW ELASTOMERIC BEARING DEVICES.
8. INSTALL NEW BEAMS, CROSSFRAMES AND EXPANSION JOINT DEVICE ON WIDENED PORTION OF BRIDGE AS INDICATED IN PHASE 1 CONSTRUCTION.
9. CONSTRUCT NEW DECK, PARAPETS AND BACKWALLS TO LIMITS SHOWN IN PHASE 1 CONSTRUCTION.
10. MOVE TEMPORARY BARRIERS AND REPLACE AS SHOWN IN PHASE 2 CONSTRUCTION AND AS PER ITEM 622 AND MAINTAIN TRAFFIC ON NEW PORTION OF BRIDGE.
11. REMOVE REMAINING EXISTING PORTIONS OF STRUCTURE TO BE REMOVED INCLUDING ASPHALT OVERLAY, CONCRETE DECK, MEDIAN BARRIERS, APPROACH SLABS, PORTIONS OF END DAMS AND BACKWALLS.
12. REPAIR ABUTMENT BREASTWALLS AND REPLACE BACKWALLS.
13. INSTALL NEW EXPANSION JOINT DEVICES.
14. CONSTRUCT NEW DECK, MEDIAN PARAPETS, AND BACKWALLS TO LIMITS SHOWN IN PHASE 2 CONSTRUCTION.
15. INSTALL REMAINING CROSS FRAMES.
16. CONSTRUCT DECK CLOSURE STRIPS.
17. REMOVE TEMPORARY BARRIERS.

ITEM 202 - PORTIONS OF STRUCTURES REMOVED: THIS WORK SHALL INCLUDE THE REMOVAL AND DISPOSAL OF THE FOLLOWING:

1. WINGWALLS TO THE LIMITS SHOWN ON THE PLANS.
2. ABUTMENT BACKWALLS TO THE LIMITS SHOWN ON THE PLANS.
3. APPROACH SLABS.
4. BRIDGE DECK WITH ASPHALT WEARING SURFACE, PARAPETS AND METAL RAILINGS.
5. EXCAVATION AND BACKFILL INCIDENTAL TO THE ABOVE.
6. BEAMS AND CROSSFRAMES AS SHOWN ON FRAMING PLAN.

THE EXISTING REINFORCING SHALL BE PRESERVED AND/OR MODIFIED AS SHOWN ON THE PLANS.

PAYMENT FOR THE WORK DESCRIBED SHALL BE INCLUDED IN THE PRICE BID FOR ITEM 202 - PORTIONS OF STRUCTURES REMOVED.

ITEM 511 - CLASS C CONCRETE, PEDESTALS, INCLUDING REINFORCING: THIS WORK SHALL INCLUDE ALL MATERIALS AND LABOR NECESSARY TO INSTALL THE CONCRETE PEDESTALS SHOWN ON THE PLANS, INCLUDING SURFACE PREPARATION, DOWEL HOLES, REINFORCING, GROUT, AND CONCRETE.

ITEM SPECIAL - JACKING STRUCTURE: THE LUMP SUM PRICE BID FOR THIS ITEM SHALL INCLUDE THE FURNISHING OF ALL MATERIALS, LABOR, EQUIPMENT AND INCIDENTALS NECESSARY TO RAISE, SUPPORT AND LOWER THE SUPERSTRUCTURE.

JACKING SHALL BE DONE IN SUCH A MANNER THAT NO STRESSES SHALL BE INDUCED INTO THE BEAMS AT ANY TIME. DURING JACKING THE DIFFERENTIAL MOVEMENT BETWEEN ADJACENT BEAMS SHALL NOT EXCEED ONE-QUARTER (1/4) INCH.

THE CONTRACTOR SHALL SUBMIT DRAWINGS AND A DESCRIPTION OF THE METHODS TO BE USED TO RAISE THE SUPERSTRUCTURE TO THE DIRECTOR FOR APPROVAL NO LESS THAN FIFTEEN (15) BUSINESS DAYS PRIOR TO COMMENCEMENT OF THIS OPERATION.

EMBANKMENT CONSTRUCTION: THE EMBANKMENTS SHALL BE CONSTRUCTED TO THE LEVEL OF THE SUBGRADE FOR A MINIMUM DISTANCE OF 100 FEET BACK OF THE ABUTMENTS. EXCAVATION MAY THEN BE MADE FOR THE ABUTMENTS.

~~ITEM 519 - PATCHING CONCRETE STRUCTURE AS PER PLAN: AT THE LOCATIONS WHERE LOOSE, DISINTEGRATED OR UNSOUND CONCRETE EXTENDS BEYOND THE LIMITS NOTED IN ITEM 511 - CLASS C CONCRETE (AS PER PLAN) THE CONTRACTOR SHALL REMOVE THE CONCRETE TO EXPOSE A SOUND CONCRETE SURFACE, PREPARE THE SURFACE AND PLACE NEW CLASS "C" CONCRETE. ALL OF THESE ITEMS OF WORK AND REPAIR SHALL BE AS DESCRIBED IN THE NOTE TITLED ITEM 511 - CLASS "C" CONCRETE (AS PER PLAN). PAYMENT FOR THIS WORK SHALL BE MEASURED ON A SQUARE FOOT BASIS AND SHALL INCLUDE ONLY THOSE AREAS WHERE THE DEPTH OF PATCHING EXCEEDS THE LIMITS NOTED IN ITEM 511 - CLASS "C" CONCRETE (AS PER PLAN) THE PAYMENT SHALL INCLUDE ALL NECESSARY LABOR, EQUIPMENT, MATERIALS AND INCIDENTALS NECESSARY TO PERFORM THE REQUIRED WORK. SINCE ALL QUANTITIES OF PATCHING SHOWN ON THE PLANS ARE ONLY ESTIMATES, ACTUAL PATCHING QUANTITIES WILL BE DETERMINED THROUGH FIELD INSPECTION AND SOUNDING.~~

ALL LOOSE AND DISINTEGRATED CONCRETE SHALL BE REMOVED FROM DESIGNATED AREAS IN ACCORDANCE WITH ITEM 519.03. ALSO INCLUDED IN ITEM SPECIAL - PATCHING CONCRETE STRUCTURE ARE THE BEAM SEATS TO BE REHABILITATED AS SHOWN ON SHEETS 7/34 AND 12/34.

ITEM 511 - CLASS "C" CONCRETE FACING, AS PER PLAN: AFTER ALL LOOSE AND DISINTEGRATED CONCRETE HAS BEEN REMOVED, THE ENTIRE FRONT FACES OF THE ABUTMENTS SHALL BE PREPARED IN ACCORDANCE WITH ITEM 519.04 AND REINFORCED WITH 3 X 3 - W 1.4 X 2 1.4 OR 2 X 2 - W 0.9 X 2 0.9 WELDED WIRE FABRIC AS SHOWN IN THE REFACING OF EXISTING ABUTMENT SECTION ON SHEET 7/34.

IN ONE OPERATION, CLASS C CONCRETE SHALL BE PLACED TO A DEPTH WHICH PROVIDES AN ADDITIONAL 4" OF CONCRETE OVER THE ENTIRE SURFACE OF THE ORIGINAL ABUTMENT. THIS CONCRETE SHALL BE TEXTURED IN ACCORDANCE WITH THE GENERAL NOTE "ABUTMENT WALL TEXTURE".

PREPARATION OF SURFACES; CLEANING OF EXISTING REINFORCEMENT; INSTALLATION OF WELDED STEEL WIRE FABRIC; HOOK BARS AND PLACEMENT OF CLASS "C" CONCRETE SHALL BE PAID FOR UNDER ITEM 511 - CLASS "C" CONCRETE FACING, AS PER PLAN.

THE QUANTITY SHALL BE THE TOTAL VOLUME IN CUBIC YARDS OF ALL SURFACES RECEIVING NEW CLASS "C" CONCRETE REGARDLESS OF THICKNESS.

FOR DIAGRAM "REFACING OF EXISTING ABUTMENTS", SEE SHEET 7/34

ABUTMENT WALL TEXTURE: ABUTMENTS AND WINGWALLS SHALL BE TEXTURED BY USING FORM LINERS ATTACHED FOR FORMWORK PRIOR TO PLACING CONCRETE. AREAS TO RECEIVE TEXTURED CONCRETE SURFACE SHALL INCLUDE THE FULL LENGTH OF EXPOSED ABUTMENT BREAST WALLS AND WINGWALLS FORM ONE-FOOT BELOW FINISHED GRADE/PAVEMENT UPWARD.

TEXTURED SURFACE SHALL CONSIST OF A 3/4" DEEP FRACTURED FIN TEXTURE. ACCEPTABLE PRODUCTS INCLUDE:

SYMONS CORPORATION
7603 OLD ROCKSIDE ROAD
INDEPENDENCE, OH 44131
PATTERN NO. P/C 30449

GREENSTREAK
3400 TREE COURT IND. BLVD.
ST. LOUIS, MO 63122
(800) 325-9504
PATTERN NO. 373

FITZGERALD CONSTRUCTION SALES
17376-A NEWHOPE AVENUE
FOUNTAIN VALLEY, CA 92708
(800) 227-2755
PATTERN NO. 16950

OR AN APPROVED ALTERNATE. THE CONTRACTOR SHALL SUBMIT A SAMPLE OF THE FINISHED CONCRETE TEXTURED SURFACE FOR APPROVAL.

PAYMENT FOR ALL MATERIALS AND LABOR REQUIRED FOR THE TEXTURED SURFACES SHALL BE INCLUDED WITH ITEM 511 - CLASS C CONCRETE, ABUTMENT WALL (AS PER PLAN), And Class C concrete facing, as per plan.

ITEM SPECIAL - FIELD PAINTING OF NEW STEEL, SYSTEM OZEU: THIS ITEM SHALL CONSIST OF FURNISHING ALL NECESSARY LABOR, MATERIALS, AND EQUIPMENT TO CLEAN AND PAINT ALL NEW STEEL SURFACES AS HEREIN SPECIFIED WITH THE FOLLOWING COATINGS:

INORGANIC ZINC PRIME COAT (SHOP APPLIED)
EPOXY INTERMEDIATE COAT (FIELD APPLIED)
URETHANE FINISH COAT (FIELD APPLIED)

ALL OF THE REQUIREMENTS CONTAINED IN THE "FIELD PAINTING OF EXISTING STEEL, SYSTEM OZEU" PROPOSAL NOTE DATED FEB 26, 1991 SHALL APPLY, WITH THE FOLLOWING MODIFICATIONS:

MATERIALS

INORGANIC ZINC PRIME COAT IN ACCORDANCE WITH 708.11 SHALL BE SUBSTITUTED FOR ORGANIC ZINC PRIME COAT.

THE COLOR OF URETHANE FINISH COAT SHALL BE "DARK BROWN", FEDERAL SPECIFICATION NUMBER 595A 10080. AN ACTUAL SAMPLE OF THE PAINT PROPOSED FOR USE SHALL BE SUBMITTED BY THE CONTRACTOR FOR APPROVAL. THE INTERMEDIATE COAT COLOR SHALL BE PER FEDERAL STD. 595A 10219.

PREPARATION

PRIOR TO APPLICATION OF THE PRIME COAT, STEEL SHALL BE PREPARED IN ACCORDANCE WITH 514.04.

ITEM SPECIAL - FIELD PAINTING OF EXISTING STEEL, SYSTEM OZEU: ALL OF THE REQUIREMENTS CONTAINED IN THE "FIELD PAINTING OF EXISTING STEEL, SYSTEM OZEU" PROPOSAL NOTE ~~DATED FEBRUARY 26, 1991~~ SHALL APPLY. EXISTING RAILING SHALL BE PAINTED AS PART OF THE QUANTITY.

THE COLOR OF URETHANE FINISH COAT SHALL BE "DARK BROWN", FEDERAL SPECIFICATION NUMBER 595A 10080. AN ACTUAL SAMPLE OF THE PAINT PROPOSED FOR USE SHALL BE SUBMITTED BY THE CONTRACTOR FOR APPROVAL. THE INTERMEDIATE COAT COLOR SHALL BE PER FEDERAL STD. 595A 10219.

JOHN DAVID JONES & ASSOC., INC.
2162 FRONT STREET
CUYAHOGA FALLS, OHIO 44221
ENGINEERS ARCHITECTS PLANNERS

4/34

GENERAL NOTES

BRIDGE No. SUM-76-12.67
OVER FULLER ST.

DESIGNED	DRAWN	TRACED	CHECKED	REVIEWED	DATE	REVISED
RCK	DEN	—	BRH	PAK	12-7-88	

GENERAL NOTES

F.H.W.A. REGION	STATE	PROJECT	
5	OHIO		

906A 1214

SUMMIT COUNTY
SUM-76-11.57

ITEM 513 - STRUCTURAL STEEL (A36) FOR REHABILITATION

THIS ITEM SHALL CONSIST OF FURNISHING THE NECESSARY LABOR, MATERIALS, AND EQUIPMENT FOR STIFFENER REPAIRS AS SHOWN IN THE CONTRACT DRAWINGS AT THE CROSS FRAME LOCATION, AS DIRECTED BY THE ENGINEER, AND FOR PATCHING OR REPLACEMENT OF ANY CORRODED STEEL SHAPES AS DIRECTED BY THE ENGINEER.

THE ESTIMATED NUMBER OF REPAIRS AT THE LOCATIONS IN THE PLANS IS APPROXIMATE ONLY AND IS USED TO ARRIVE AT A TOTAL QUANTITY OF STRUCTURAL STEEL FOR REPAIRS. THIS QUANTITY INCLUDES THE WEIGHT OF HIGH-STRENGTH BOLTS REQUIRED FOR REPAIRS AT THE LOCATIONS.

NO DEFINITE LOCATIONS OF STEEL SHAPES WITH SUFFICIENT SECTION LOSS TO WARRANT REMOVAL WERE DETERMINED IN A PRIOR BRIDGE INSPECTION. THESE LOCATIONS, IF ANY, SHALL BE DETERMINED BY THE ENGINEER AFTER DECK REMOVAL. AN ALLOWANCE OF 500 LBS. HAS BEEN ADDED TO THE ESTIMATED QUANTITY FOR PATCHING OR REPLACEMENT OF CORRODED STEEL. ANY WELDING REQUIRED SHALL BE INCLUDED FOR PAYMENT WITH THIS ITEM.

MATERIALS

THE STRUCTURAL STEEL REQUIRED FOR REPAIR PURPOSES SHALL BE ASTM A36, UNLESS NOTED OTHERWISE. HIGH-STRENGTH BOLTS SHALL CONFORM TO ASTM A325. FABRICATION DRAWINGS AND CERTIFICATION (MILL TEST, ETC.) WILL BE HANDLED AT THE PROJECT LEVEL BY THE ENGINEER.

CONSTRUCTION

THE CONTRACTOR SHALL SANDBLAST AND INSPECT THE EXISTING STRUCTURE TO DETERMINE THE EXACT NUMBER AND EXTENT OF REPAIRS REQUIRED. THE CONTRACTOR SHALL OBTAIN THE WRITTEN APPROVAL OF THE ENGINEER AS TO THE NUMBER OF REPAIRS AND EXTENT OF REPAIRS AT EACH INDIVIDUAL LOCATION BEFORE FABRICATION OF ANY STRUCTURAL STEEL OR COMMENCING ANY STEEL REPAIR WORK. IT IS THE CONTRACTOR'S RESPONSIBILITY TO DETERMINE THE EXACT LENGTHS OF STEEL SHAPES REQUIRED TO MAKE THE REPAIRS. HIGH STRENGTH BOLTS SHALL BE INSTALLED IN ACCORDANCE WITH ITEM 513 OF THE CMS. WELDING SHALL BE IN ACCORDANCE WITH AASHTO ARTICLE 1.7.21.

METHOD OF MEASUREMENT

THE QUANTITY WILL BE MEASURED AS THE ACTUAL WEIGHT IN POUNDS OF STRUCTURAL STEEL USED TO MAKE APPROVED REPAIRS. THE QUANTITY SO MEASURED SHALL INCLUDE ALL LABOR, MATERIALS, WELDING, EQUIPMENT, SHORING AND INCIDENTAL NECESSARY FOR SANDBLASTING, INSPECTION BY THE ENGINEER, REMOVAL AND REPLACEMENT OF THE CROSS FRAMES AND SATISFACTORILY PERFORMING THE REPAIRS IN ACCORDANCE WITH THE PLANS AND SPECIFICATIONS AND AS DIRECTED BY THE ENGINEER.

BASIS OF PAYMENT

PAYMENT WILL BE MADE AT THE CONTRACT UNIT PRICE BID PER POUND FOR "ITEM 513 - STRUCTURAL STEEL (A36) FOR REHABILITATION".

ITEM SPECIAL - SEALING OF CONCRETE SURFACES (EPOXY)
THE COLOR OF THE EPOXY SEALER SHALL BE PER FEDERAL STANDARD 595A 13522.

543371

JOHN DAVID JONES & ASSOC., INC. 4A/34
2162 FRONT STREET
CUYAHOGA FALLS, OHIO 44221
ENGINEERS ARCHITECTS & PLANNERS

GENERAL NOTES

BRIDGE NO. SUM-76-12.67
OVER FULLER ST.

DESIGNED	DRAWN	TRACED	CHECKED	REVIEWED	DATE	REVISED
RCK	DEN	—	BRH	PAK	12-88	

F.H.W.A. REGION	STATE	REGION	
5	OHIO		

907
1214

SUMMIT COUNTY
SUM-76-11.57

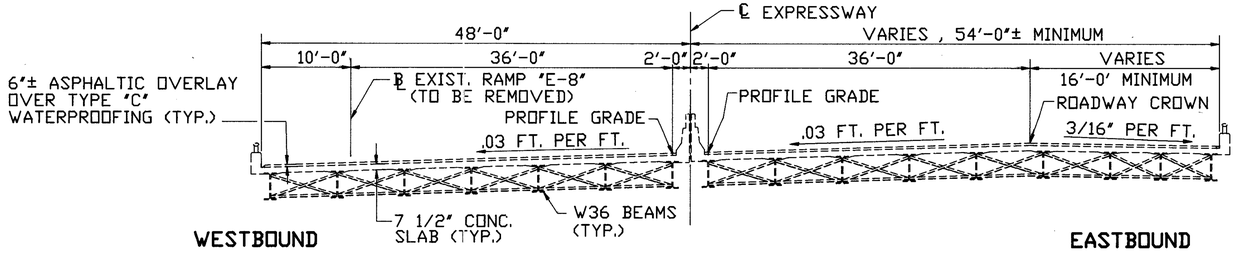

EXISTING TRANSVERSE SECTION

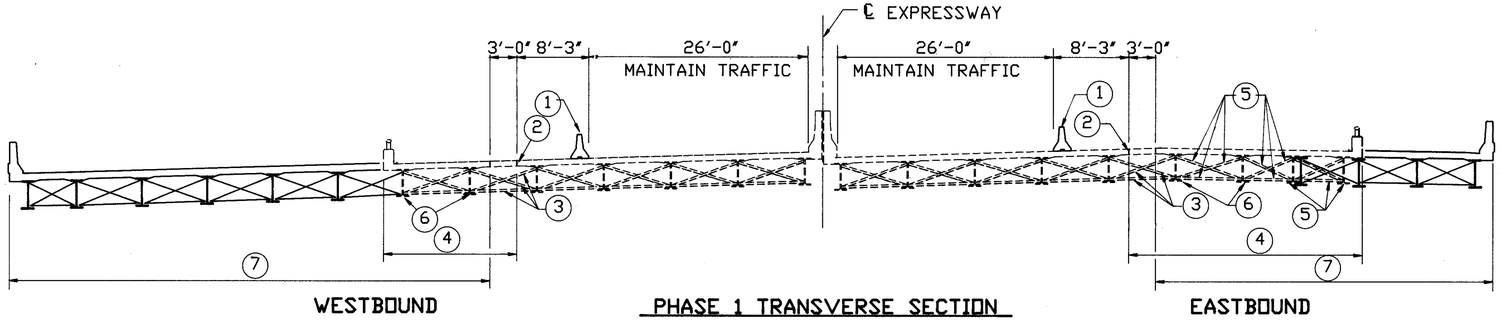

PHASE 1 TRANSVERSE SECTION

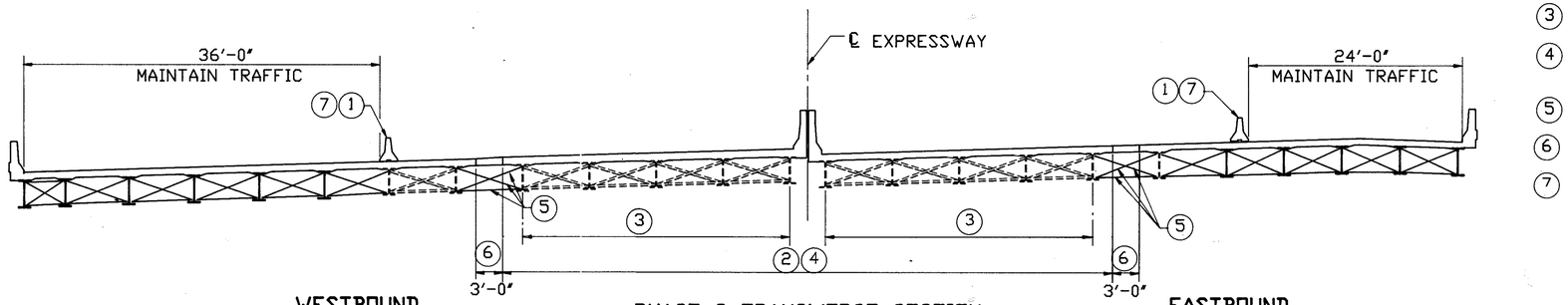

PHASE 2 TRANSVERSE SECTION

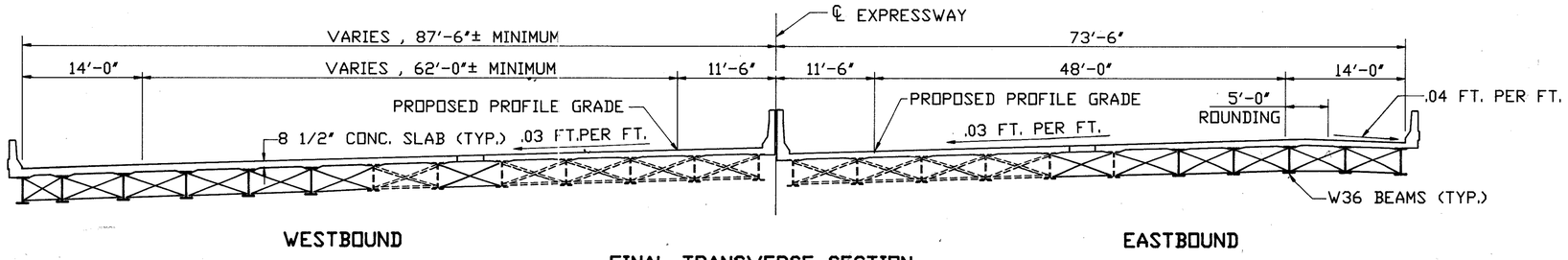

FINAL TRANSVERSE SECTION

PHASE 1 SEQUENCE

(1) INSTALL TEMPORARY BARRIER AND MAINTAIN TRAFFIC.

(2) CUT CONCRETE DECK , FULL DEPTH AND FULL LENGTH OF DECK.

(3) REMOVE CROSSFRAMES SHOWN-(INCIDENTAL TO ITEM 202)(SEE SHEET 17/34 FOR LOCATIONS)

(4) REMOVE PORTION OF DECK SHOWN , INCLUDING ASPHALT OVERLAY , CONCRETE DECK , PARAPET AND RAILING.

(5) REMOVE BEAMS AND CROSSFRAMES SHOWN.

(6) JACK BEAMS SHOWN TO PROPOSED VERTICAL POSITION.

(7) CONSTRUCT PROPOSED WIDENED DECK TO LIMITS SHOWN , INCLUDING BEAMS , CROSSFRAMES , NEW BEARINGS , CONCRETE DECK AND 42" PARAPETS.

PHASE 2 SEQUENCE

(1) MOVE TEMPORARY BARRIERS AND MAINTAIN TRAFFIC.

(2) REMOVE REMAINDER OF DECK.

(3) JACK REMAINING SUPERSTRUCTURE TO PROPOSED VERTICAL POSITION.

(4) CONSTRUCT DECK TO LIMITS SHOWN , INCLUDING CONCRETE DECK AND 50" MEDIAN PARAPETS.

(5) INSTALL CROSSFRAMES-(INCIDENTAL TO ITEM 513)(SEE SHEET 17/34 FOR LOCATIONS)

(6) CONSTRUCT DECK CLOSURE STRIPS.

(7) REMOVE TEMPORARY BARRIERS.

NOTES:
1. FOR DETAILS OF TEMPORARY CONCRETE BARRIERS, APPROPRIATE NOTES AND QUANTITIES SEE MAINTENANCE OF TRAFFIC PLANS.
2. SEQUENCE OF BRIDGE CONSTRUCTION SHALL BE COORDINATED WITH ALL OTHER CONSTRUCTION SEQUENCING.

JOHN DAVID JONES & ASSOC., INC. 5/34
2162 FRONT STREET
CUYAHOGA FALLS, OHIO 44221
ENGINEERS ARCHITECTS PLANNERS

MAINTENANCE OF TRAFFIC AND PHASE CONSTRUCTION DETAILS

BRIDGE No. SUM-76-1267
OVER FULLER STREET

DESIGNED	DRAWN	TRACED	CHECKED	REVIEWED	DATE	REVISED
JRS	RWM	—	BRH	PAK	12-7-88	

F.H.W.A. REG.	STATE	PROJECT	
5	OHIO		

908
1214

SUM-76-11.57

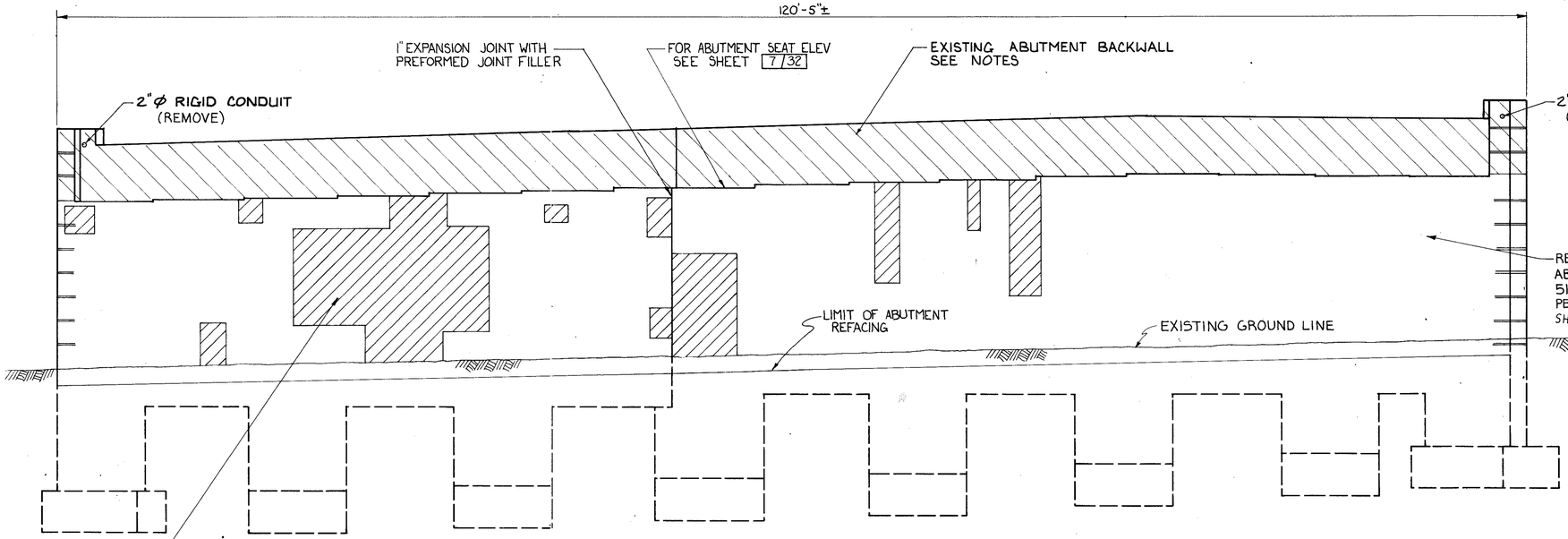

EAST ABUTMENT ELEVATION
LOOKING EAST

ITEM SPECIAL - PATCHING CONCRETE STRUCTURE
ESTIMATED REMOVAL AREAS
EAST ABUTMENT: 250 SQ. FT.
WEST ABUTMENT: 520 SQ. FT.

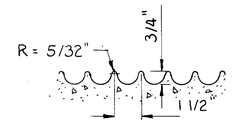

VERTICAL RUSTICATION
FOR ABUTMENT AND WINGWALLS SEE GENERAL NOTES.

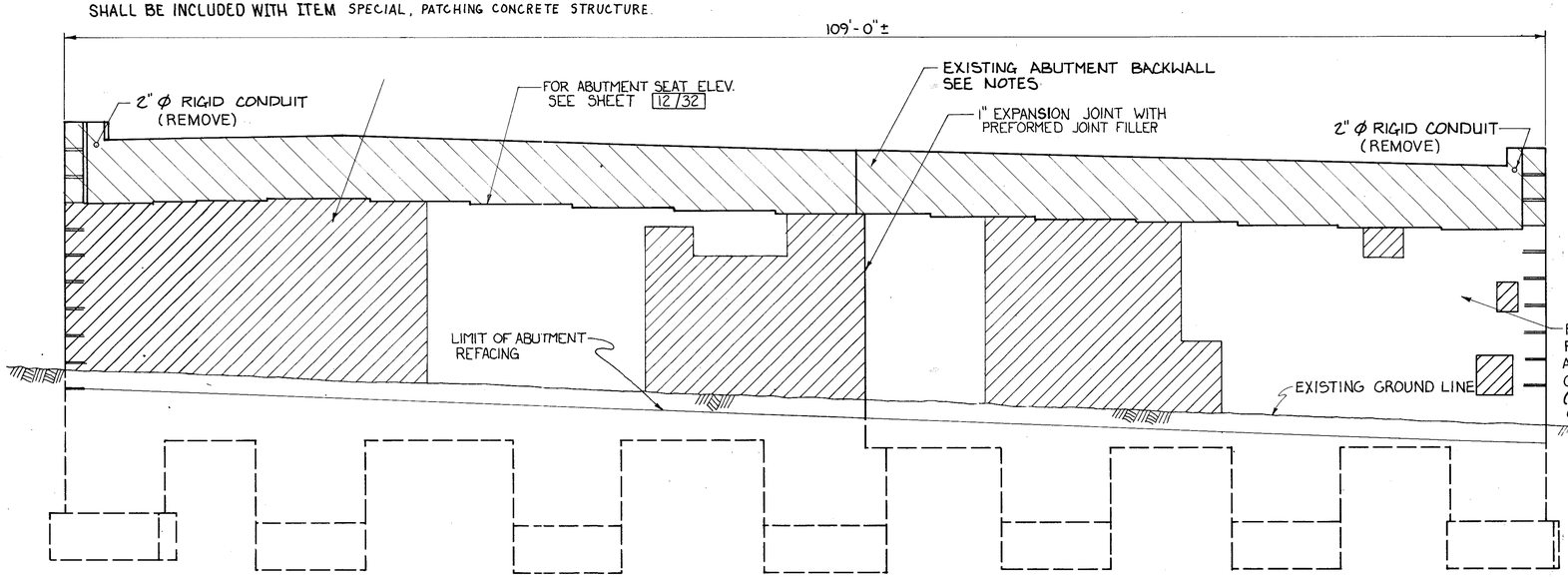

WEST ABUTMENT ELEVATION
LOOKING WEST

REMOVE EXISTING ABUTMENT BACKWALL INCLUDING CURTAIN WALLS FROM THE BEAM SEAT CONSTRUCTION JOINT UPWARD. PRESERVE VERTICAL REINFORCEMENT IN THE BACKWALL AND CUT AS SHOWN IN SECTION A 7/12. VERTICAL REINFORCEMENT AT THE ENDS OF THE EXISTING ABUTMENTS AND OUTSIDE THE LIMITS OF THE PROPOSED BACKWALL SHALL BE REMOVED TO 2" BELOW THE BEAM SEAT ELEVATION. PAYMENT SHALL BE MADE UNDER ITEM 202 - PORTIONS OF STRUCTURES REMOVED.

AREAS OF CONCRETE REMOVED TO RECESS THE ABOVE MENTIONED REINFORCEMENT SHALL BE PATCHED TO THE LEVEL OF THE BEAM SEATS IN ACCORDANCE WITH ITEM 519.

PAYMENT FOR THIS 519 PATCHING SHALL BE INCLUDED WITH ITEM 202, PORTIONS OF STRUCTURES REMOVED (AS PER PLAN).

JOHN DAVID JONES & ASSOC., INC. 6/34
2162 FRONT STREET
AHOGA FALLS, OHIO 44221
ENGINEERS ARCHITECTS PLANNERS

ABUTMENT DEMOLITION AND REPAIR DETAILS

BRIDGE NO. SUM-76-1267
OVER FULLER ST.

DESIGNED	DRAWN	TRACED	CHECKED	RE-VIEWED	DATE	RE-VISED
RCK	RCK	—	BRH	PAK	12-7-88	

86005

F.H.W.A. REG.	STATE	PROJECT	
5	OHIO		

909
1214

SUM-76-11.57

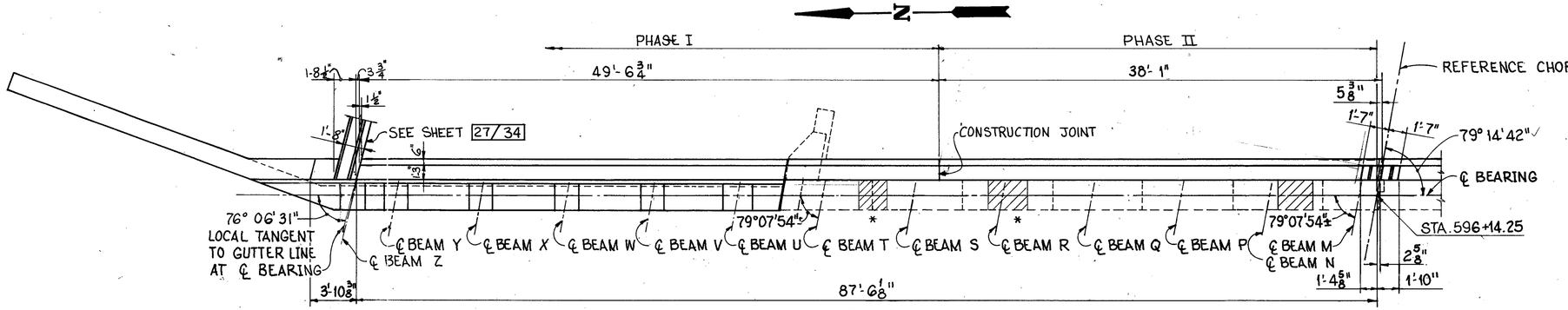

PLAN

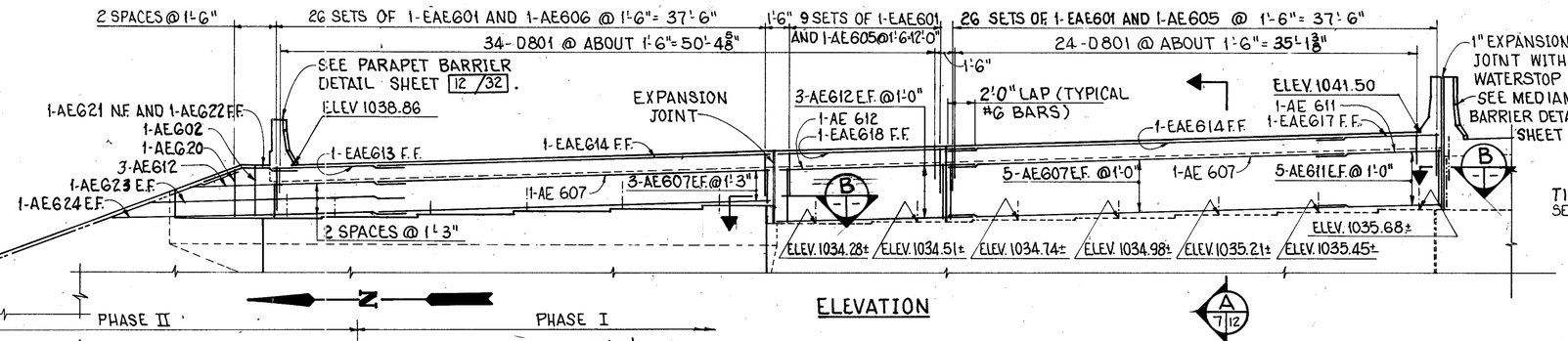

ELEVATION

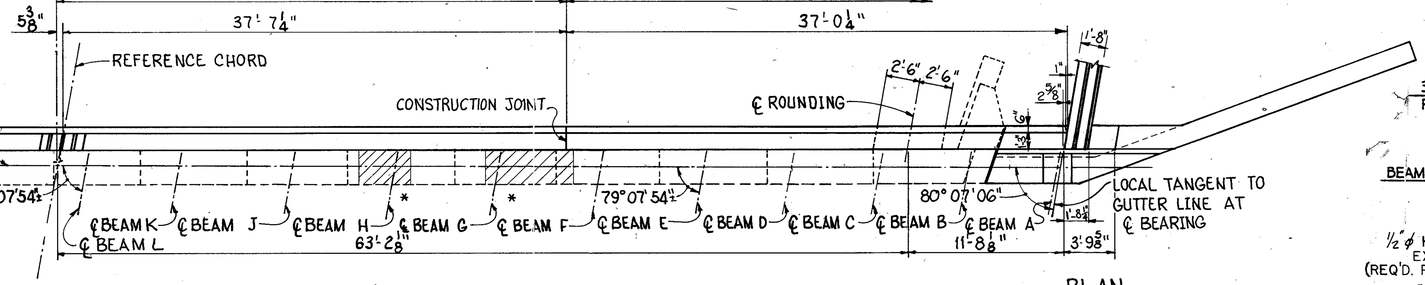

* ITEM SPECIAL - PATCHING CONCRETE STRUCTURE
ESTIMATED REMOVAL AREAS = 30 SQ. FT.

PLAN

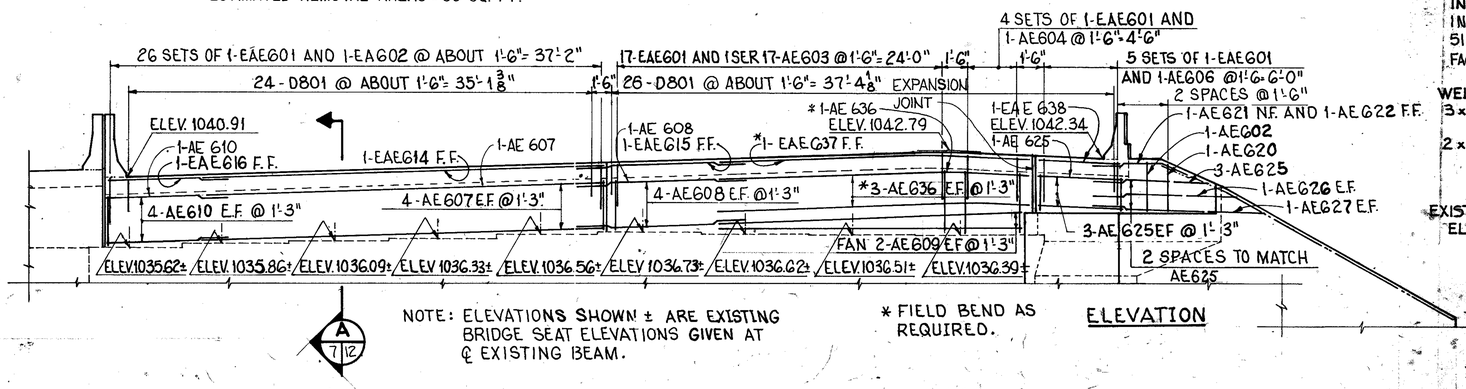

NOTE: ELEVATIONS SHOWN ± ARE EXISTING BRIDGE SEAT ELEVATIONS GIVEN AT ℄ EXISTING BEAM.

* FIELD BEND AS REQUIRED.

ELEVATION

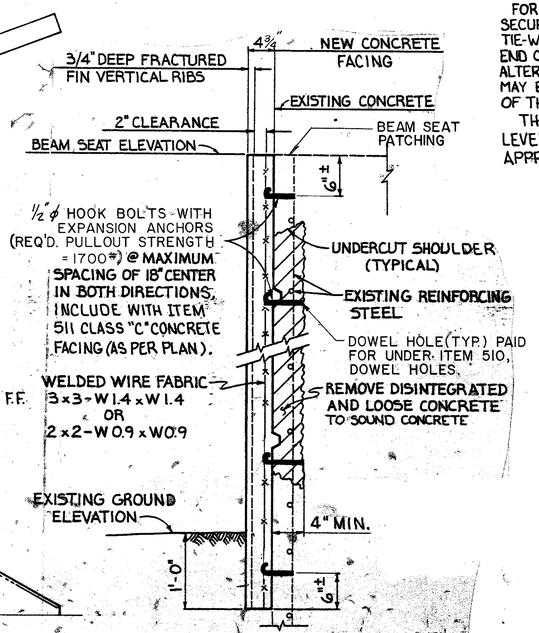

REFACING OF EXISTING ABUTMENTS

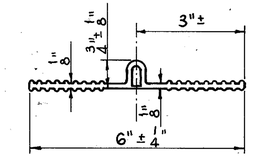

WATERSTOP DETAIL

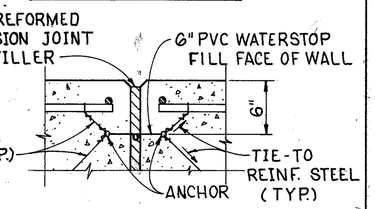

SECTION B (-|-) 12/7

NOTE:
FOR THE FIRST POUR, THE WATERSTOP SHOULD BE HELD SECURELY IN PLACE BY THE USE OF SPLIT FORMS AND TIE-WIRES. FOR THE SECOND POUR, SECURE THE FREE END OF WATERSTOP IN PROPER POSITION WITH TIE-WIRES. ALTERNATE METHODS, AS APPROVED BY THE ENGINEER, MAY BE USED TO INSURE THE CORRECT POSITIONING OF THE WATERSTOP.

THE WATERSTOP SHALL EXTEND FROM THE LEVEL OF THE BRIDGE SEAT UP TO THE APPROACH SLAB SEAT.

▨ —APPROXIMATE LOCATIONS OF AREAS OF DISINTEGRATED CONCRETE TO BE REMOVED

NOTE:
FOR ADDITIONAL NOTES SEE SHEET 8/34.

JOHN DAVID JONES & ASSOC., INC. 7/34
2162 FRONT STREET
CUYAHOGA FALLS, OHIO 44221
ENGINEERS · ARCHITECTS · PLANNERS

EAST ABUTMENT BACKWALL DETAILS

BRIDGE NO. SUM-76-1267
OVER FULLER STREET

DESIGNED	DRAWN	TRACED	CHECKED	REVIEWED	DATE	REVISED
RCK	RCK	RCK	BRH	PAK	12-7-88	

FHWA REG	STATE	PROJECT	
5	OHIO		

910
12.14

SUMMIT COUNTY
SUM-76-11.57

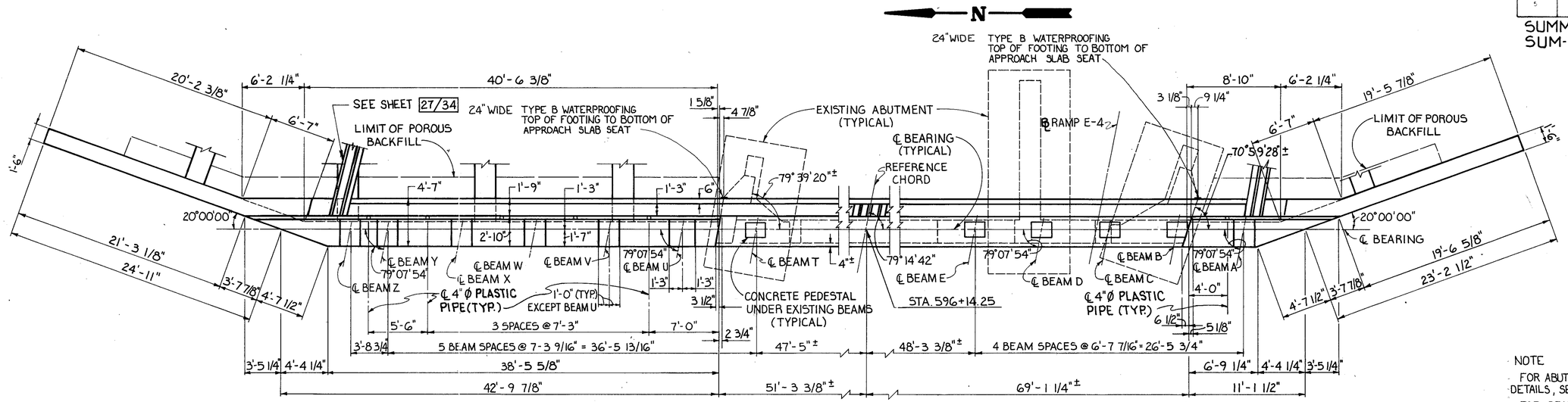

PLAN

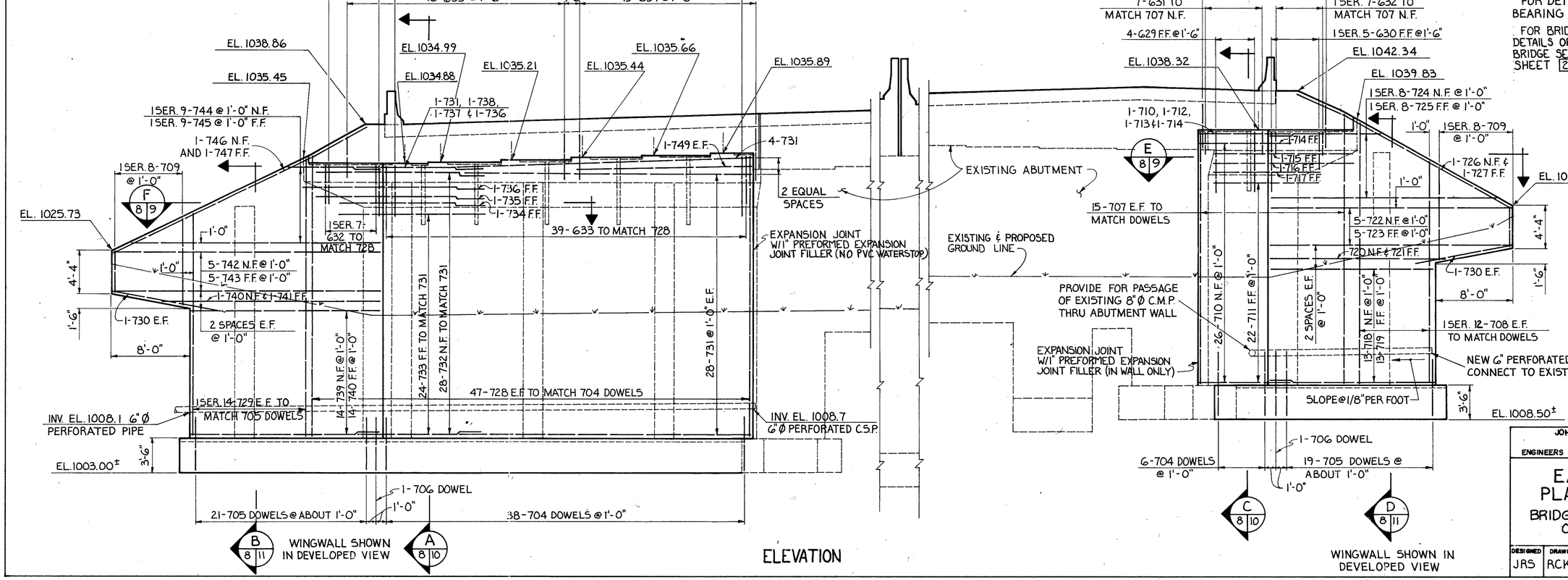

ELEVATION

NOTE

FOR ABUTMENT AND WINGWALLS, RUSTICATION DETAILS, SEE SHEET 6/34.

FOR BEAM SEAT DRAINAGE DETAIL, SEE SHEET 16/34.

FOR DETAILS OF BACKWALL, SEE EAST ABUTMENT BACKWALL DETAILS, SHEET 7/34.

FOR FOOTING PLAN, SEE EAST ABUTMENT FOOTING PLAN AND SECTIONS, SHEET 9/34.

FOR DETAILS OF BEARINGS, SEE BEARING DETAILS, SHEET 18/34.

FOR BRIDGE SEAT ELEVATIONS, AND DETAILS OF PEDESTALS AT EXISTING BRIDGE SEATS, SEE PEDESTAL DETAILS, SHEET 23/34.

ABBREVIATIONS

E.F.	EACH FACE
EL.	ELEVATION
F.F.	FAR FACE
N.F.	NEAR FACE
SER.	SERIES
TYP.	TYPICAL

PREFIX ALL BAR MARKS WITH AE FOR EAST ABUTMENT.

JOHN DAVID JONES & ASSOC., INC. 8/34
2162 FRONT STREET
CUYAHOGA FALLS, OHIO 44221
ENGINEERS ARCHITECTS PLANNERS

EAST ABUTMENT PLAN & ELEVATION

BRIDGE No. SUM-76-12 67
OVER FULLER ST.

DESIGNED	DRAWN	TRACED	CHECKED	REVIEWED	DATE	REVISED
JRS	RCK	JPM	BRH	PAK	12-7-88	

F.H.W.A. REG.	STATE	PROJECT	
5	OHIO		

9.11
12.14

SUMMIT COUNTY
SUM-76-11.57

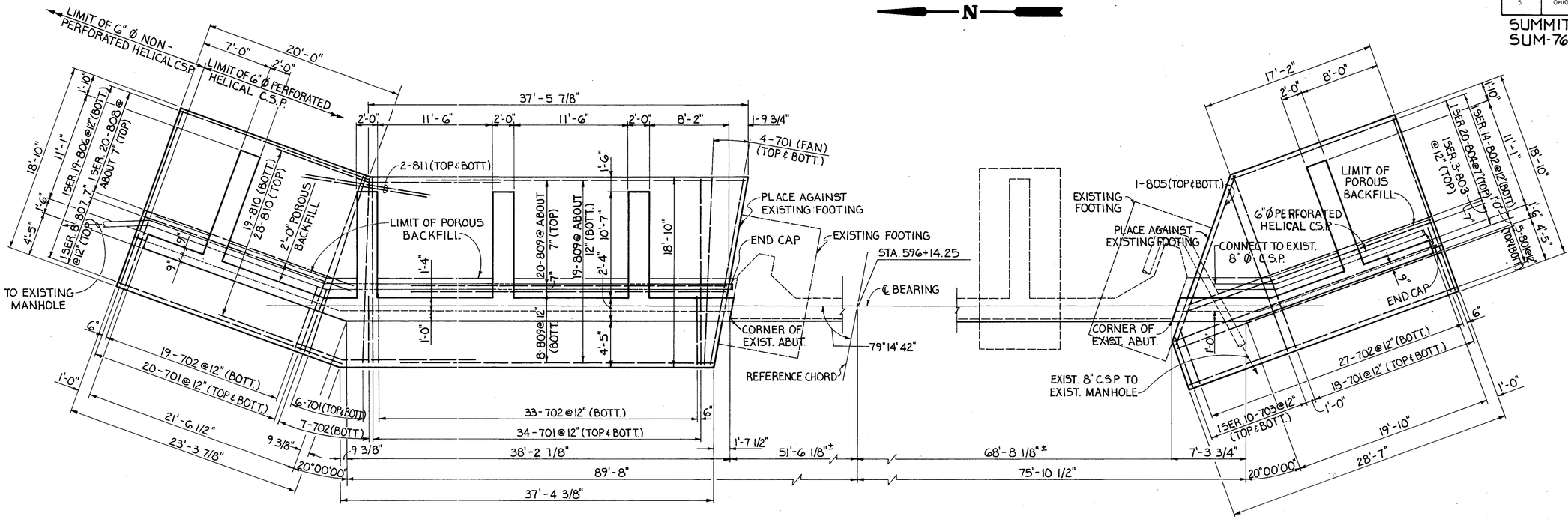

FOOTING PLAN

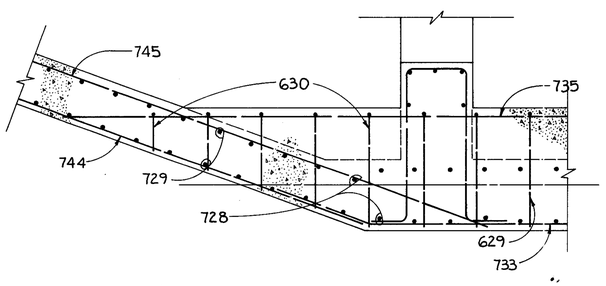

F 8|9 SECTION
ABUTMENT WALL
TEXTURE NOT SHOWN

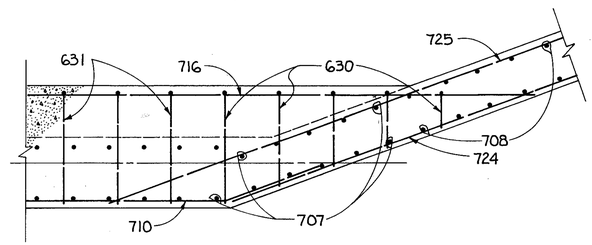

E 8|9 SECTION
ABUTMENT WALL
TEXTURE NOT SHOWN

NOTES:

FOR TERMINATION OF 6" C.S.P. SEE GENERAL PLAN AND ELEVATION SHEET 2/34

FOR ADDITIONAL NOTES, SEE EAST ABUTMENT PLAN AND ELEVATION SHEET 8/34

PREFIX ALL BAR MARKS WITH AE FOR EAST ABUTMENT

JOHN DAVID JONES & ASSOC., INC. 9/34
2162 FRONT STREET
CUYAHOGA FALLS, OHIO 44221
ENGINEERS ARCHITECTS PLANNERS

EAST ABUTMENT FOOTING PLAN AND SECTIONS

BRIDGE No. SUM-76-12 67
OVER FULLER ST.

DESIGNED	DRAWN	TRACED	CHECKED	REVIEWED	DATE	REVISED
JRS	JPM	—	BRH	PAK	12-7-88	

F.H.W.A. REGION	STATE	REGION	
5	OHIO		

912/1214

SUMMIT COUNTY
SUM-76-11.57

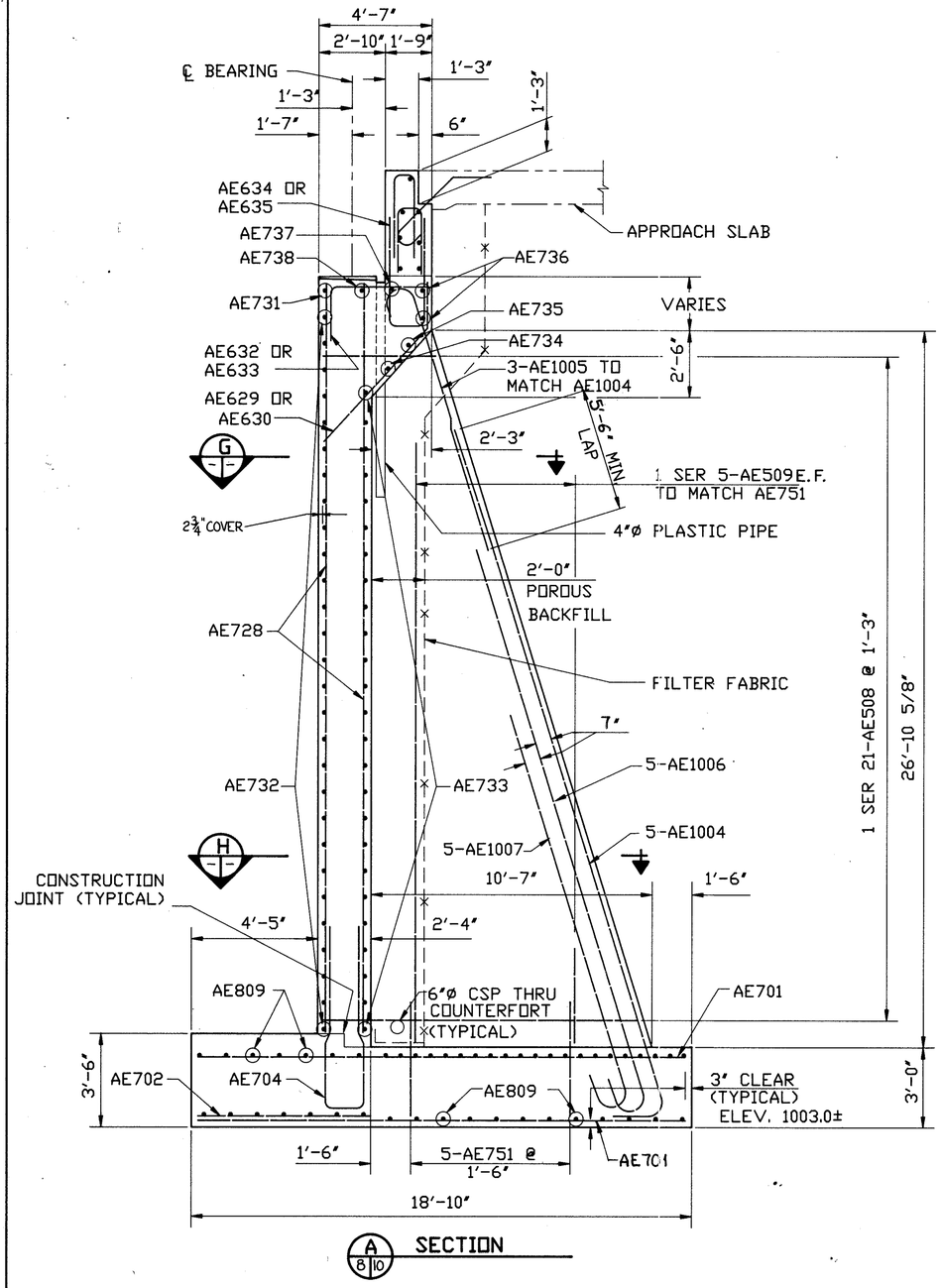

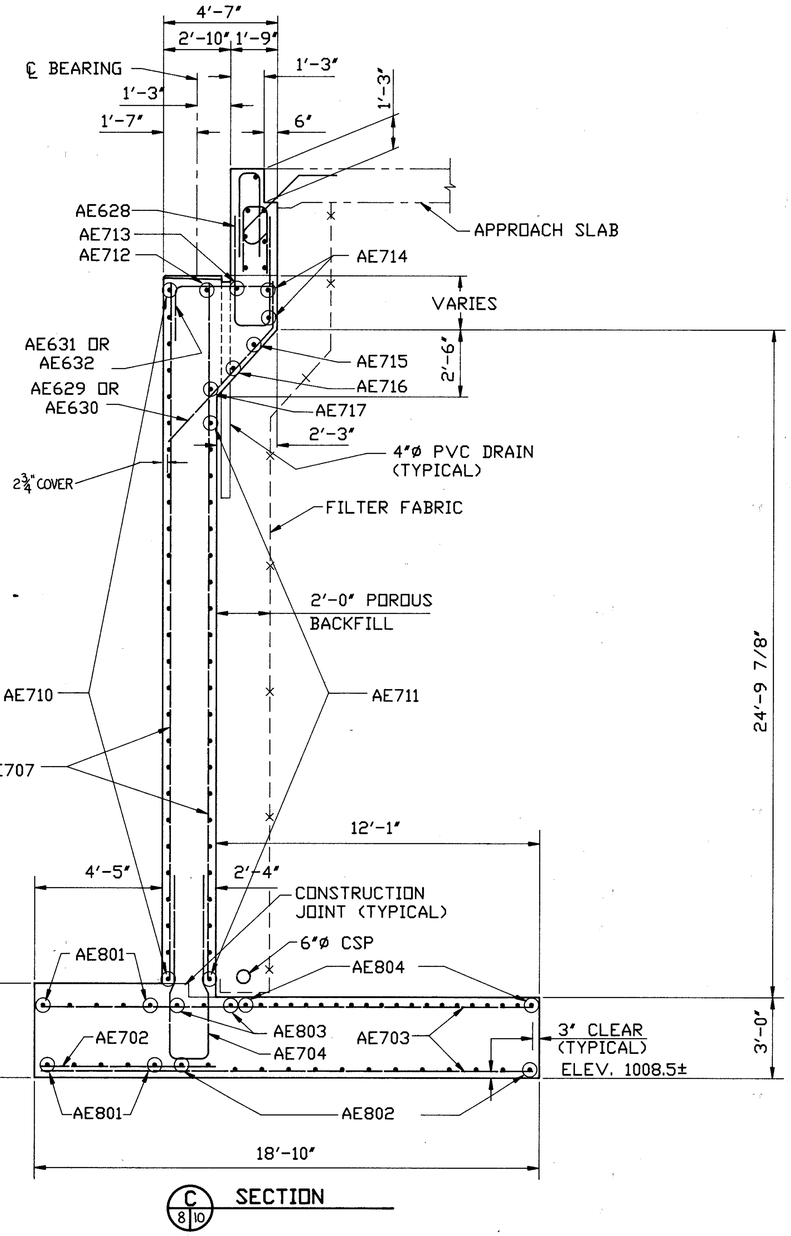

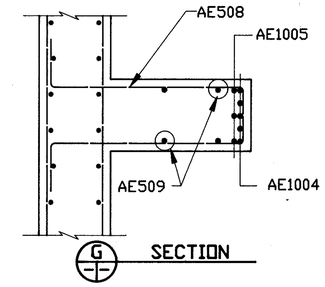

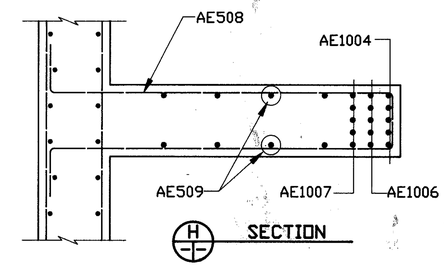

NOTES:

FOR DETAILS OF BRIDGE SEAT DRAINAGE, POROUS BACKFILL AND FILTER FABRIC SEE TYPICAL DRAINAGE DETAIL ON WINGWALL SECTIONS AT EAST ABUTMENT SHEET 11/34.

FOR WINGWALL DETAILS SEE SHEET 11/34.

FOR EXPANSION JOINT DETAILS SEE SHEET 24/34.

FOR DETAILS OF BACKWALL SEE SHEET 7/34.

JOHN DAVID JONES & ASSOC., INC. 10/34
2162 FRONT STREET
CUYAHOGA FALLS, OHIO 44221
ENGINEERS ARCHITECTS PLANNERS

EAST ABUTMENT SECTIONS

BRIDGE NO. SUM-76-1267
OVER FULLER STREET

DESIGNED	DRAWN	TRACED	CHECKED	REVIEWED	DATE	REVISED
J.R.S.	R.C.K.	R.C.K.	BRH	PAK	12-7-88	

F.H.W.A. REGION	STATE	REGION	
5	OHIO		

913
1214

SUMMIT COUNTY
SUM-76-11.57

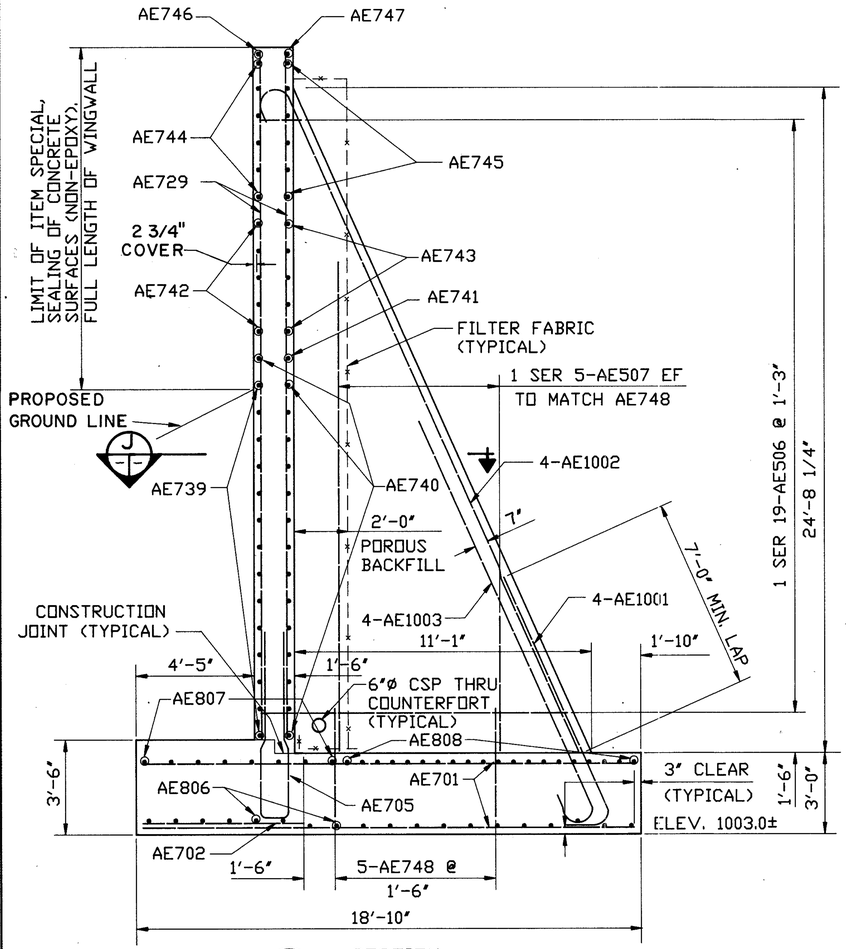

B 8|11 SECTION

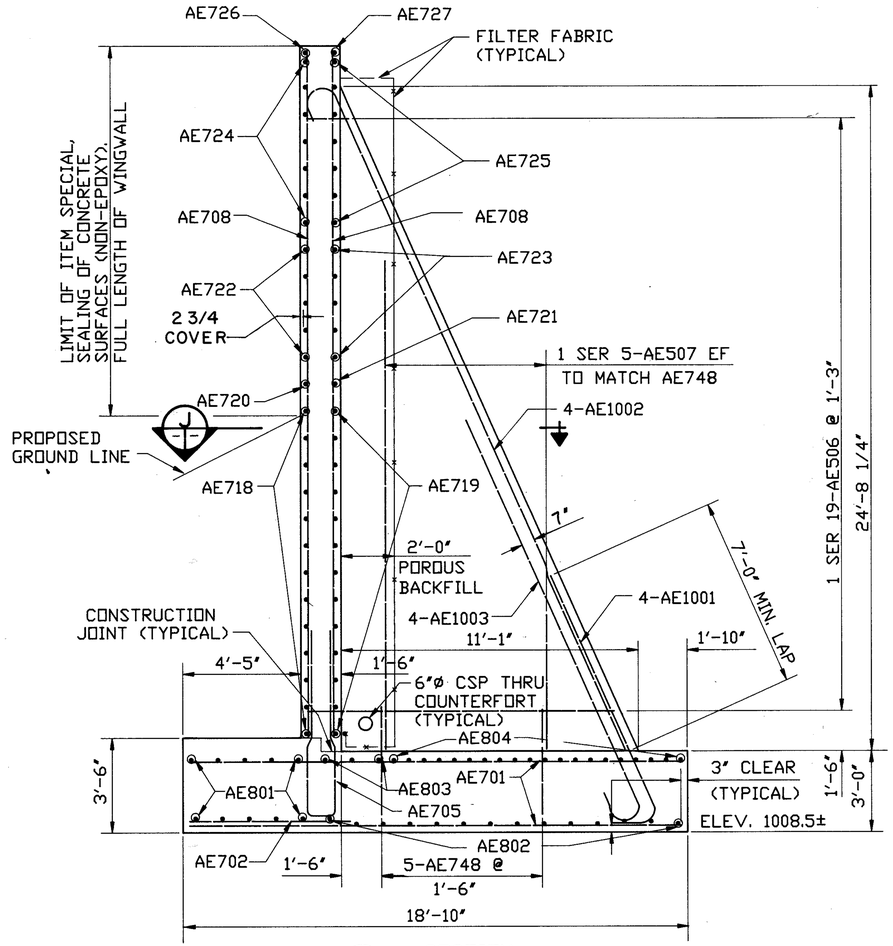

D 8|11 SECTION

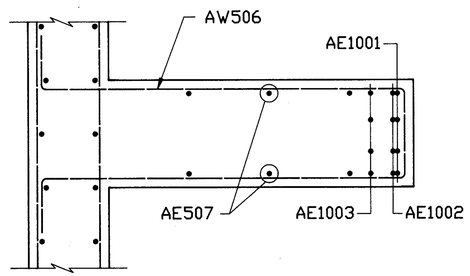

J SECTION

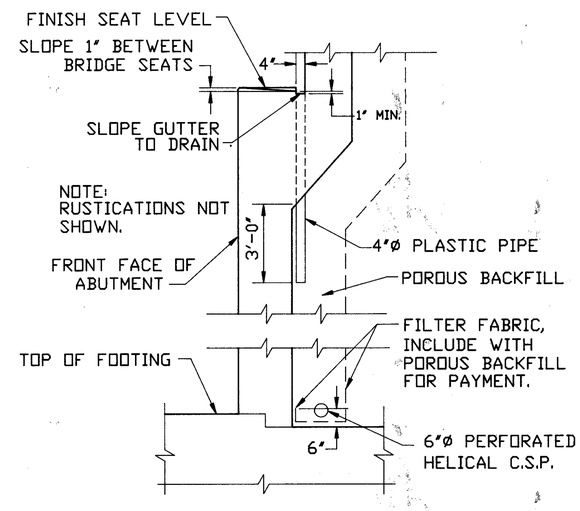

TYPICAL DRAINAGE DETAIL

NOTES:
FOR DETAILS OF ABUTMENT SEE SHEET 10/34 .

JOHN DAVID JONES & ASSOC., INC. 11/34
2162 FRONT STREET
CUYAHOGA FALLS, OHIO 44221
ENGINEERS ARCHITECTS PLANNERS

WINGWALL SECTIONS AT EAST ABUTMENT

BRIDGE NO. SUM-76-1267
OVER FULLER STREET

DESIGNED	DRAWN	TRACED	CHECKED	REVIEWED	DATE	REVISED
J.R.S.	R.C.K.	R.W.M.	BRH	PAK	12-7-88	

FHWA REG.	STATE	PROJECT	
5	OHIO		

914
1214

SUM-76-11.57

▨ — APPROXIMATE LOCATION OF AREAS OF DISINTEGRATED CONCRETE TO BE REMOVED

* PREFIX BARMARKS:
AW FOR WEST ABUTMENT
AE FOR EAST ABUTMENT

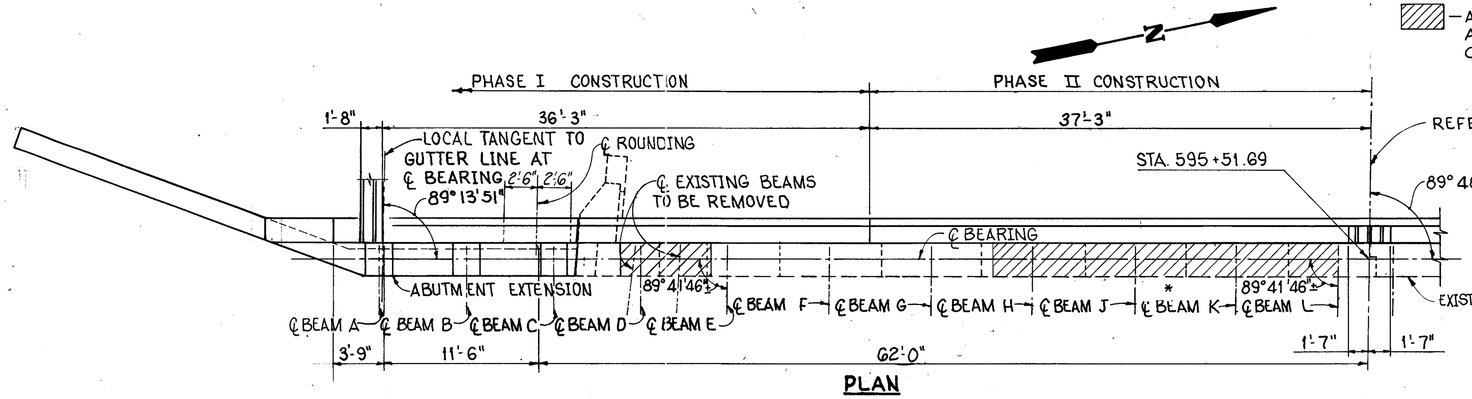

PLAN

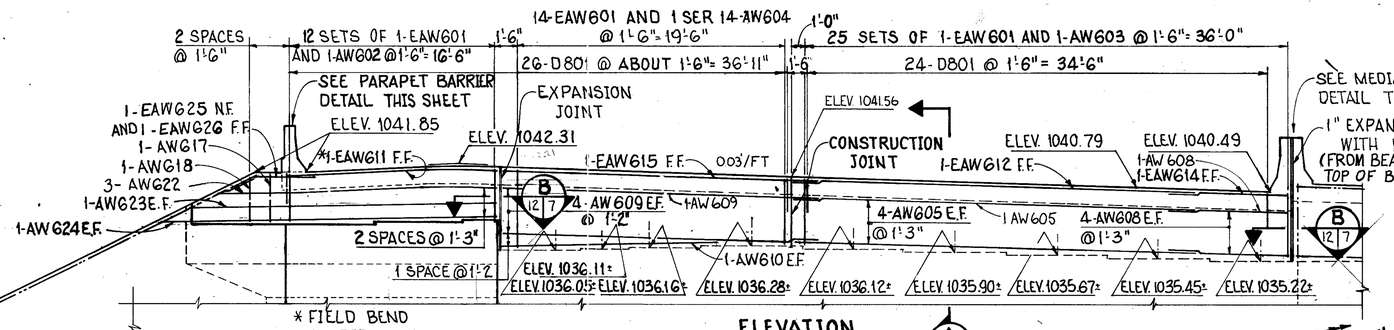

ELEVATION

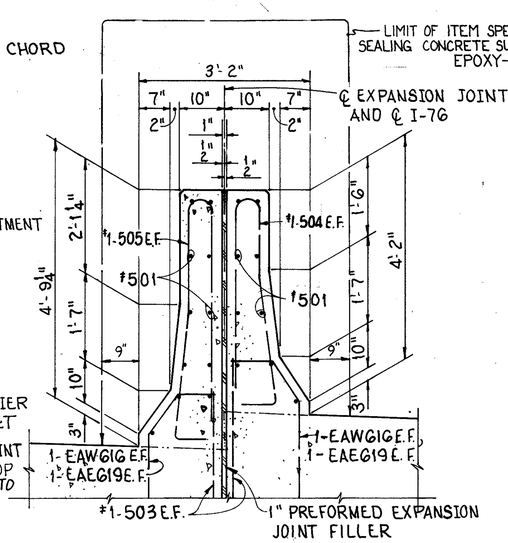

MEDIAN

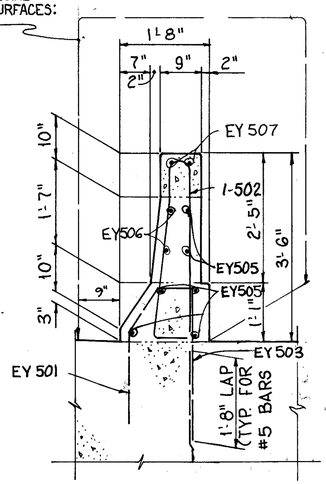

PARAPET

BARRIER DETAILS

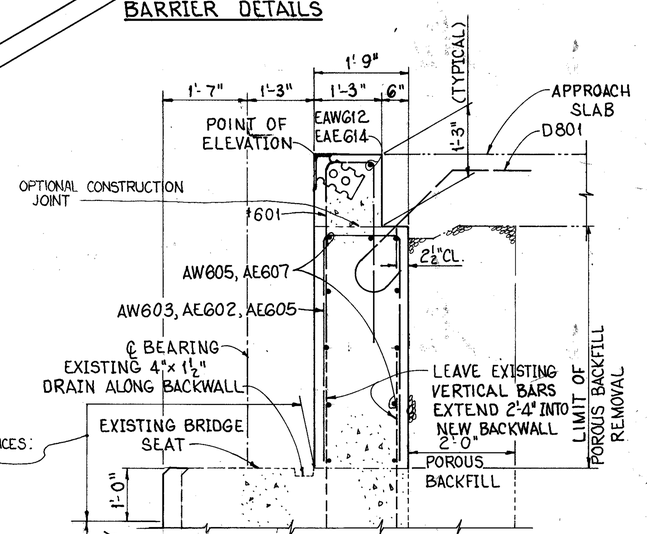

SECTION A (-|- 7 12)

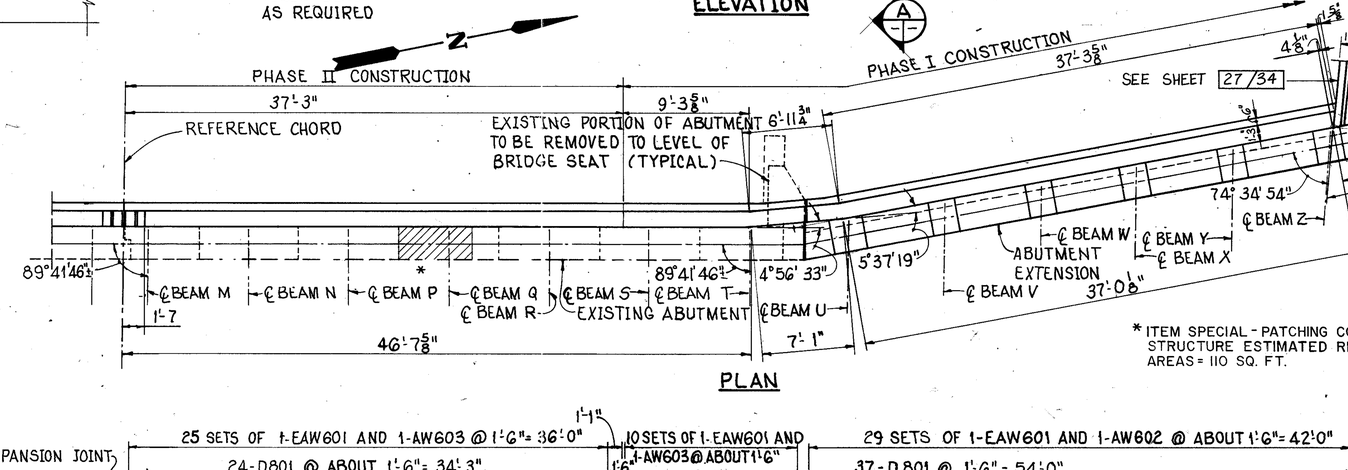

* ITEM SPECIAL - PATCHING CONCRETE STRUCTURE ESTIMATED REMOVAL AREAS = 110 SQ. FT.

PLAN

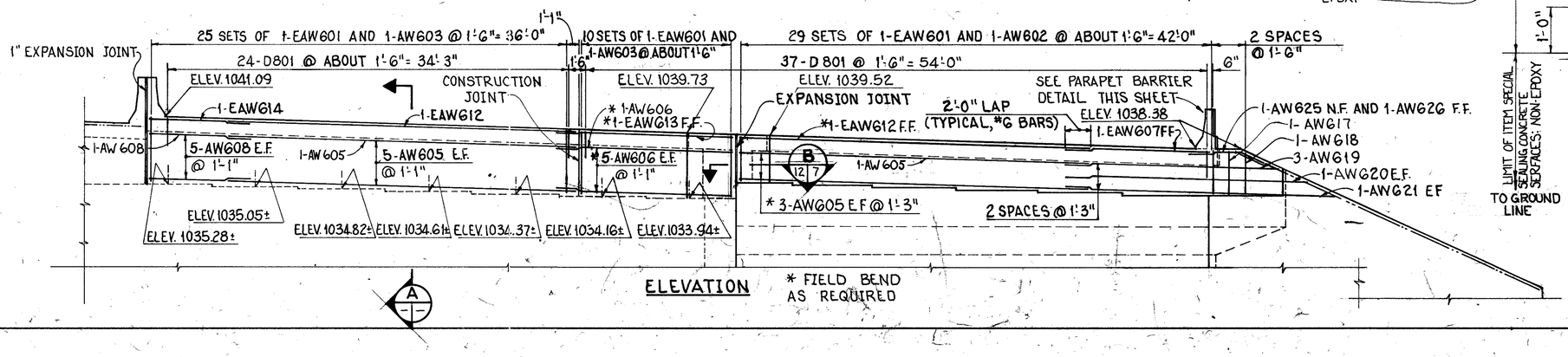

ELEVATION

* FIELD BEND AS REQUIRED

NOTE:
FOR ADDITIONAL NOTES AND DETAILS SEE SHEET 13/34

JOHN DAVID JONES & ASSOC., INC. 12/34
2162 FRONT STREET
CUYAHOGA FALLS, OHIO 44221
ENGINEERS ARCHITECTS PLANNERS

WEST ABUTMENT BACKWALL DETAILS

BRIDGE No. SUM-76-12 67
OVER FULLER ST.

DESIGNED	DRAWN	TRACED	CHECKED	REVIEWED	DATE	REVISED
RCK	RCK	RCK	BRH	PAK	12-7-88	

FHWA REG	STATE	PROJECT	
5	OHIO		

9/5
12/14

SUMMIT COUNTY
SUM-76-11.57

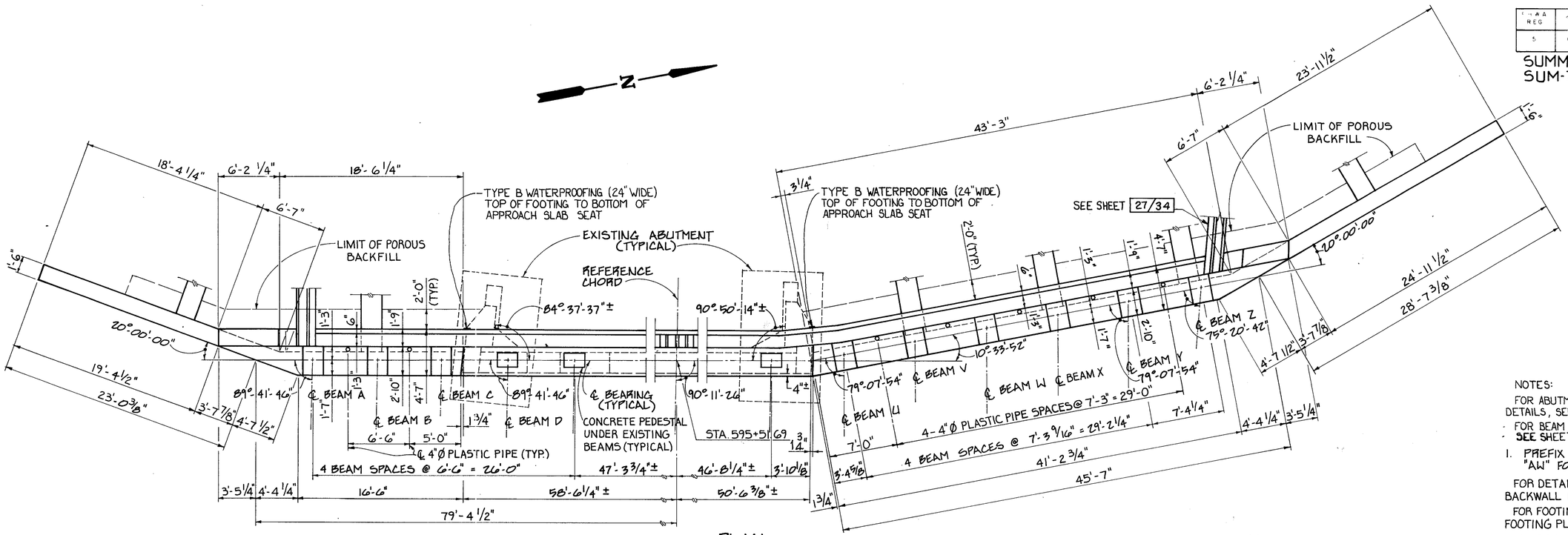

PLAN

NOTES:

FOR ABUTMENTS AND WINGWALLS RUSTICATION DETAILS, SEE SHEET. 6/34

FOR BEAM SEAT DRAINAGE DETAILS, SEE SHEET. 16/34

1. PREFIX ALL BAR MARKS WITH "AW" FOR WEST ABUTMENT.

FOR DETAILS OF BACKWALL, SEE ABUTMENT BACKWALL DETAILS, SHEET 12/34.

FOR FOOTING PLAN, SEE WEST ABUTMENT FOOTING PLAN AND SECTIONS, SHEET 14/34.

FOR BRIDGE SEAT ELEVATIONS AND DETAILS OF PEDESTALS AT EXISTING BRIDGE SEATS SEE PEDESTALS DETAILS SHEET 23/34

FOR DETAILS OF BEARINGS, SEE BEARING DETAILS, SHEET 18/34

ABBREVIATIONS
E.F. EACH FACE
E.L. ELEVATION
F.F. FAR FACE
N.F. NEAR FACE
SER. SERIES

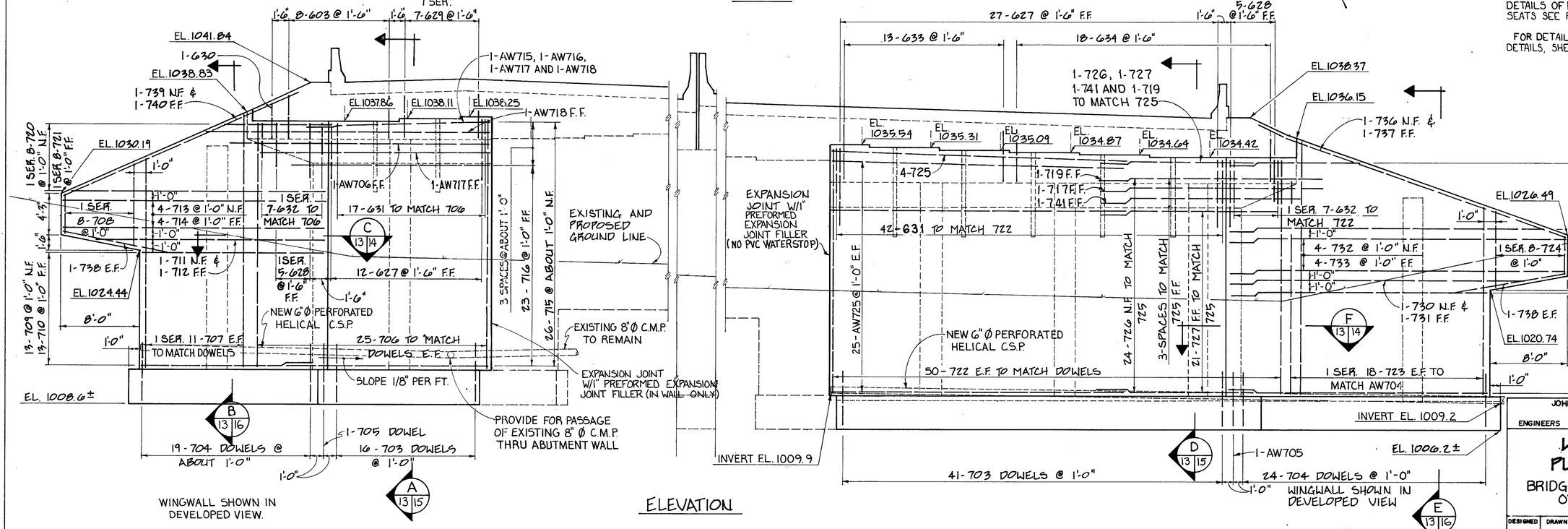

ELEVATION

JOHN DAVID JONES & ASSOC., INC. 13/34
2162 FRONT STREET
CUYAHOGA FALLS, OHIO 44221
ENGINEERS ARCHITECTS PLANNERS

WEST ABUTMENT PLAN & ELEVATION

BRIDGE No. SUM-76-12 67
OVER FULLER ST.

DESIGNED	DRAWN	TRACED	CHECKED	REVIEWED	DATE	REVISED
RCK	RCK	JPS	BRH	PAK	12-7-88	

FHWA REG	STATE	PROJECT	
5	OHIO		

916
1214

SUMMIT COUNTY
SUM-76-11.57

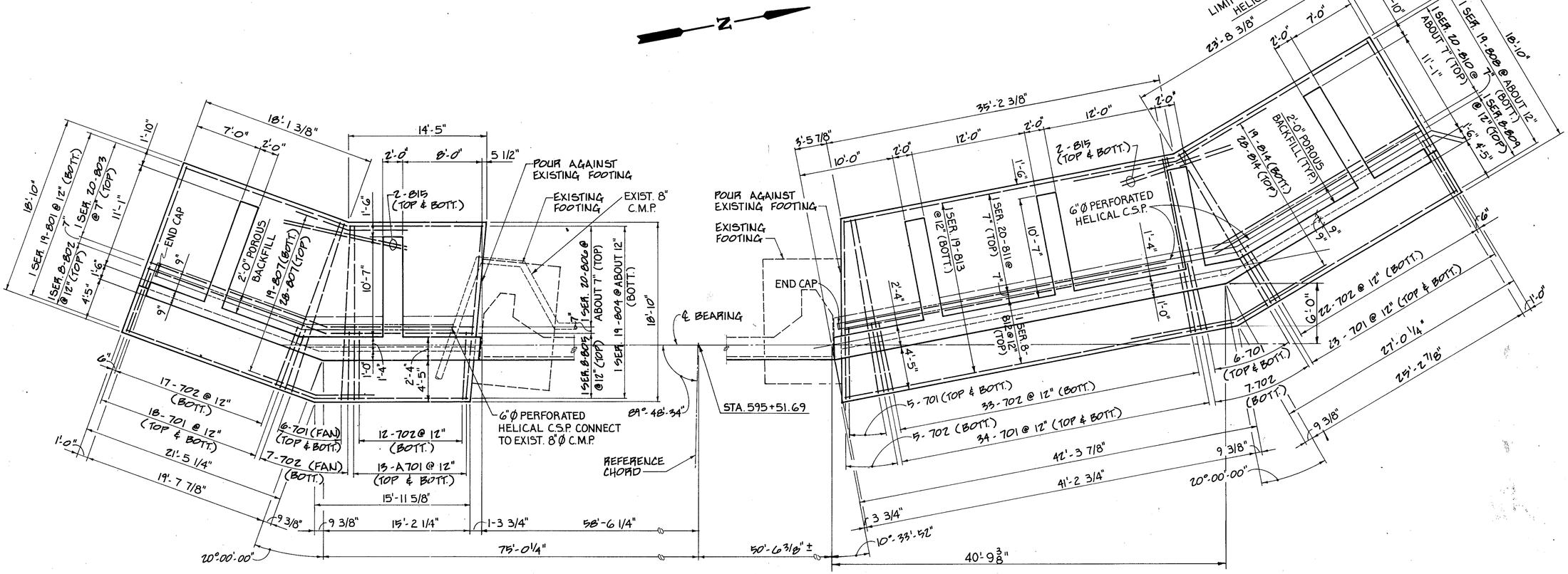

PLAN

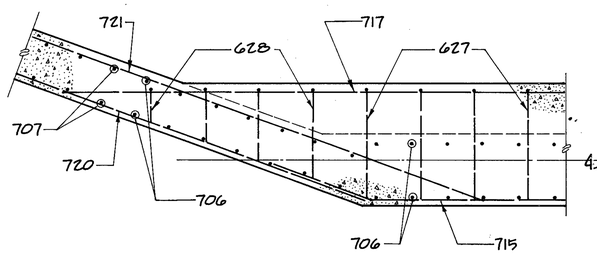

℄ BRG. WEST ABUTMENT

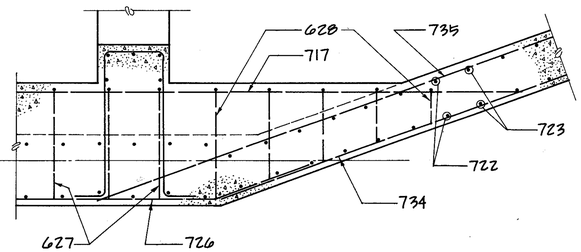

C 13|14 SECTION
ABUTMENT WALL
TEXTURING NOT SHOWN

F 13|14 SECTION
ABUTMENT WALL
TEXTURING NOT SHOWN

NOTES:

FOR TERMINATION OF 6" Ø C.S.P. SEE GENERAL PLAN AND ELEVATION SHEET 2/34.

FOR ADDITIONAL NOTES, SEE WEST ABUTMENT PLAN AND ELEVATION SHEET 13/34.

PREFIX ALL BAR MARKS WITH AW FOR WEST ABUTMENT.

JOHN DAVID JONES & ASSOC., INC. 14/34
2162 FRONT STREET
CUYAHOGA FALLS, OHIO 44221
ENGINEERS ARCHITECTS PLANNERS

WEST ABUTMENT FOOTING PLAN & SECTIONS

BRIDGE No. SUM-76-12 67
OVER FULLER ST.

DESIGNED	DRAWN	TRACED	CHECKED	REVIEWED	DATE	REVISED
JPS	JPS	—	BRH	PAK	12-7-88	

F.H.W.A. REGION	STATE	REGION	
5	OHIO		

917
12.14

SUMMIT COUNTY
SUM-76-11.57

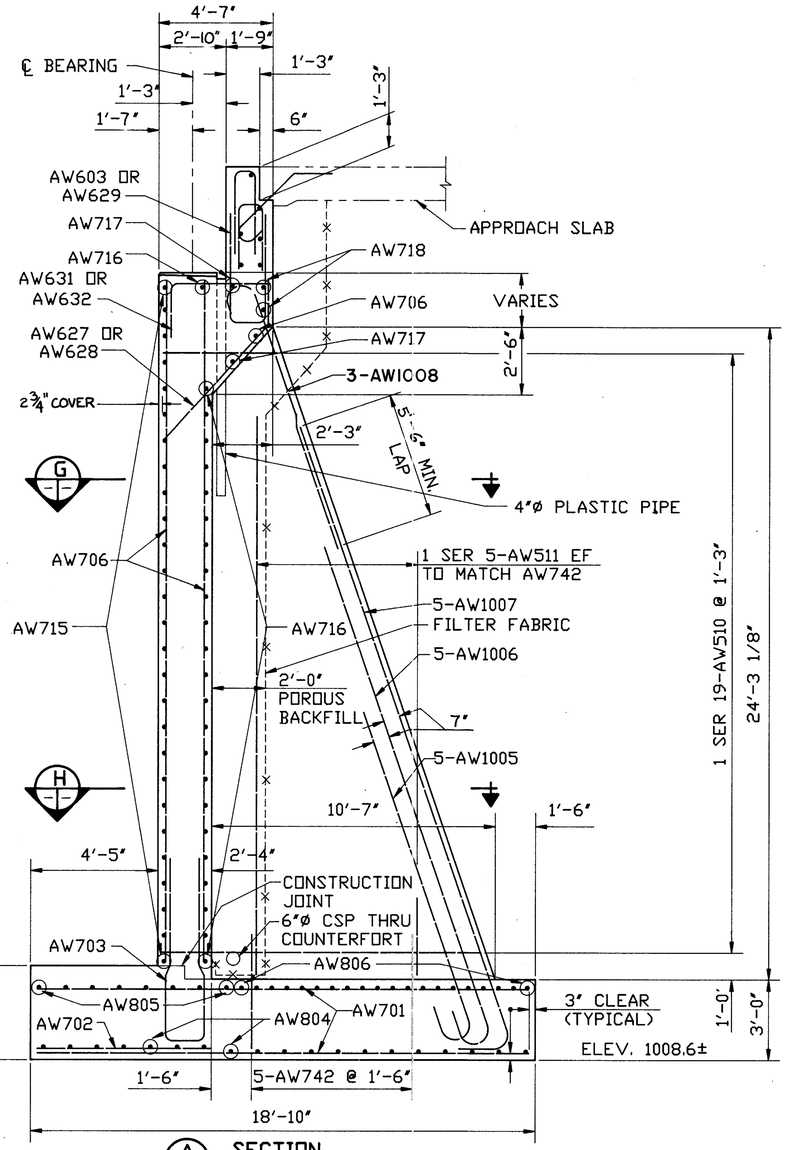

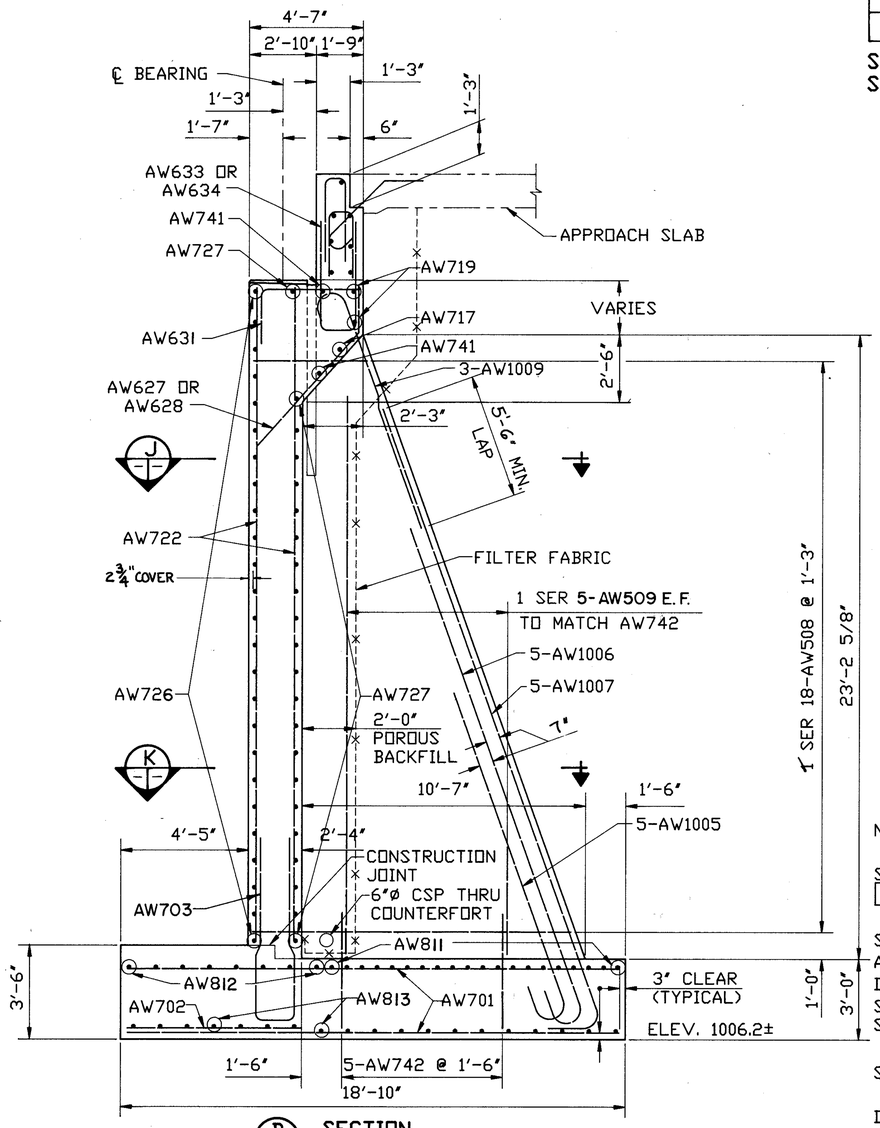

NOTES:

FOR DETAILS OF BACKWALL SEE ABUTMENT BACKWALL SHEET 12 / 34 .

FOR DETAILS OF BRIDGE SEAT DRAINAGE, POROUS BACKFILL, AND FILTER FABRIC SEE TYPICAL DRAINAGE DETAIL ON WINGWALL SECTIONS AT WEST ABUTMENT; SHEET 16 / 34 .

FOR WINGWALL DETAILS SEE SHEET 16 / 34 .

FOR EXPANSION JOINT DETAILS SEE SHEET 24 / 34 .

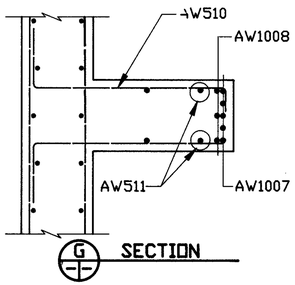

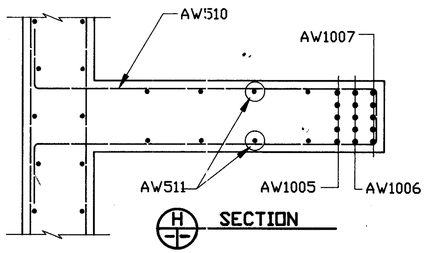

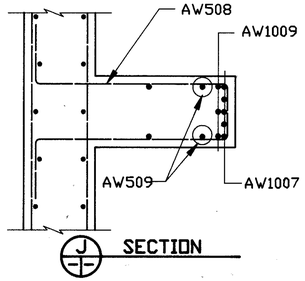

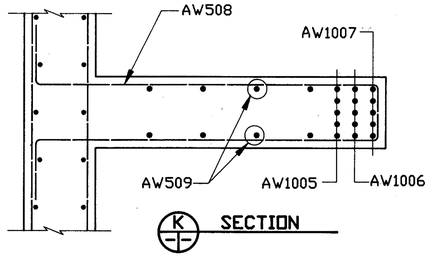

JOHN DAVID JONES & ASSOC., INC. 15 / 34
2162 FRONT STREET
CUYAHOGA FALLS, OHIO 44221
ENGINEERS ARCHITECTS PLANNERS

WEST ABUTMENT SECTIONS

BRIDGE NO. SUM-76-1267
OVER FULLER STREET

DESIGNED	DRAWN	TRACED	CHECKED	REVIEWED	DATE	REVISED
J.R.S.	R.K.	–	BRH	PAK	12-7-88	

F.H.W.A. REGION	STATE	REGION	
5	OHIO		

SUMMIT COUNTY
SUM-76-11.57

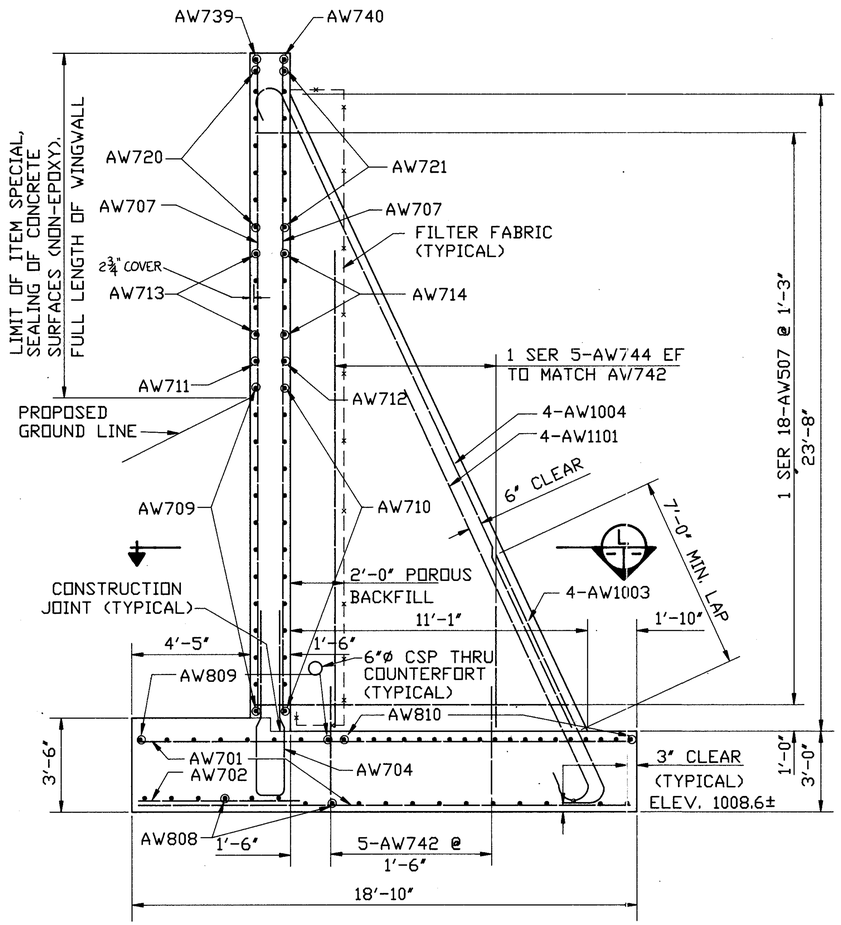

B SECTION

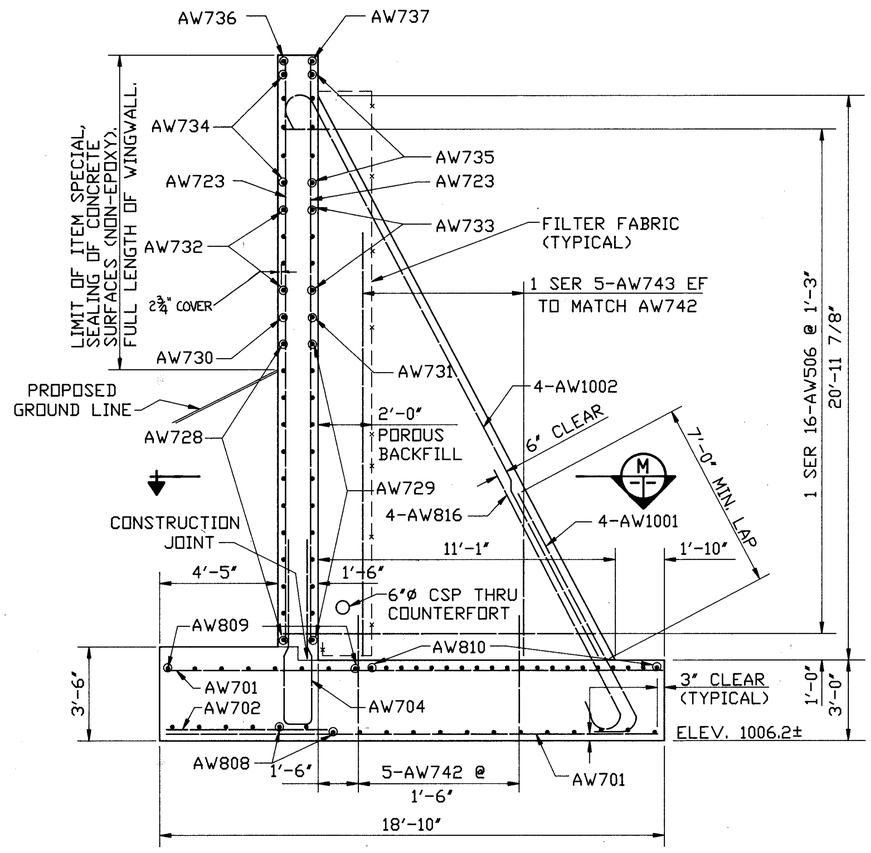

E SECTION

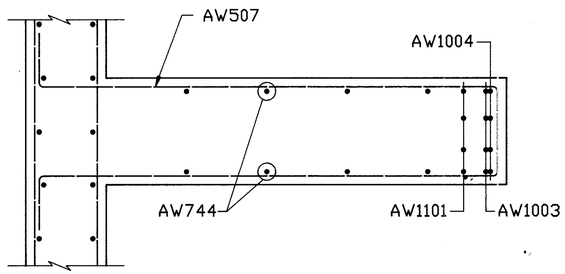

L SECTION

RUSTICATION NOT SHOWN

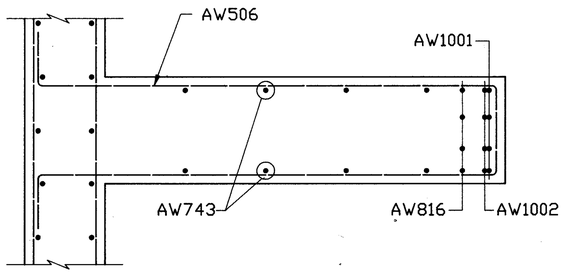

M SECTION

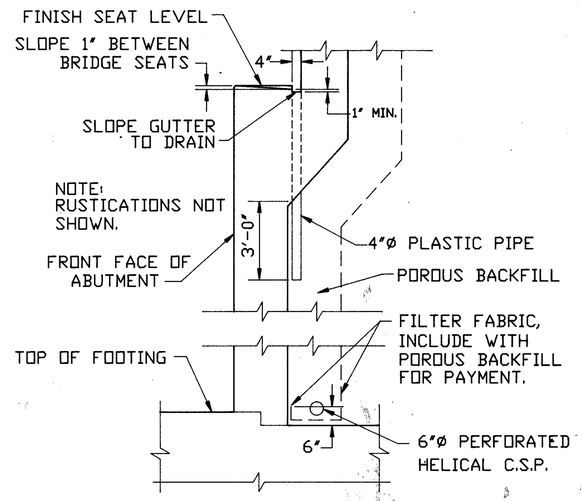

TYPICAL DRAINAGE DETAIL

NOTES:
FOR ABUTMENT DETAILS SEE SHEET 15/34 .

JOHN DAVID JONES & ASSOC., INC. 16/34
2162 FRONT STREET
CUYAHOGA FALLS, OHIO 44221
ENGINEERS ARCHITECTS PLANNERS

WINGWALL SECTIONS AT WEST ABUTMENT

BRIDGE NO. SUM-76-1267
OVER FULLER STREET

DESIGNED	DRAWN	TRACED	CHECKED	REVIEWED	DATE	REVISED
J.R.S.	R.C.K.	R.C.K.	BRH	PAK	12-7-88	

F.H.W.A. REGION	STATE	REGION	
5	OHIO		

919
12.14

SUMMIT COUNTY
SUM-76-11.57

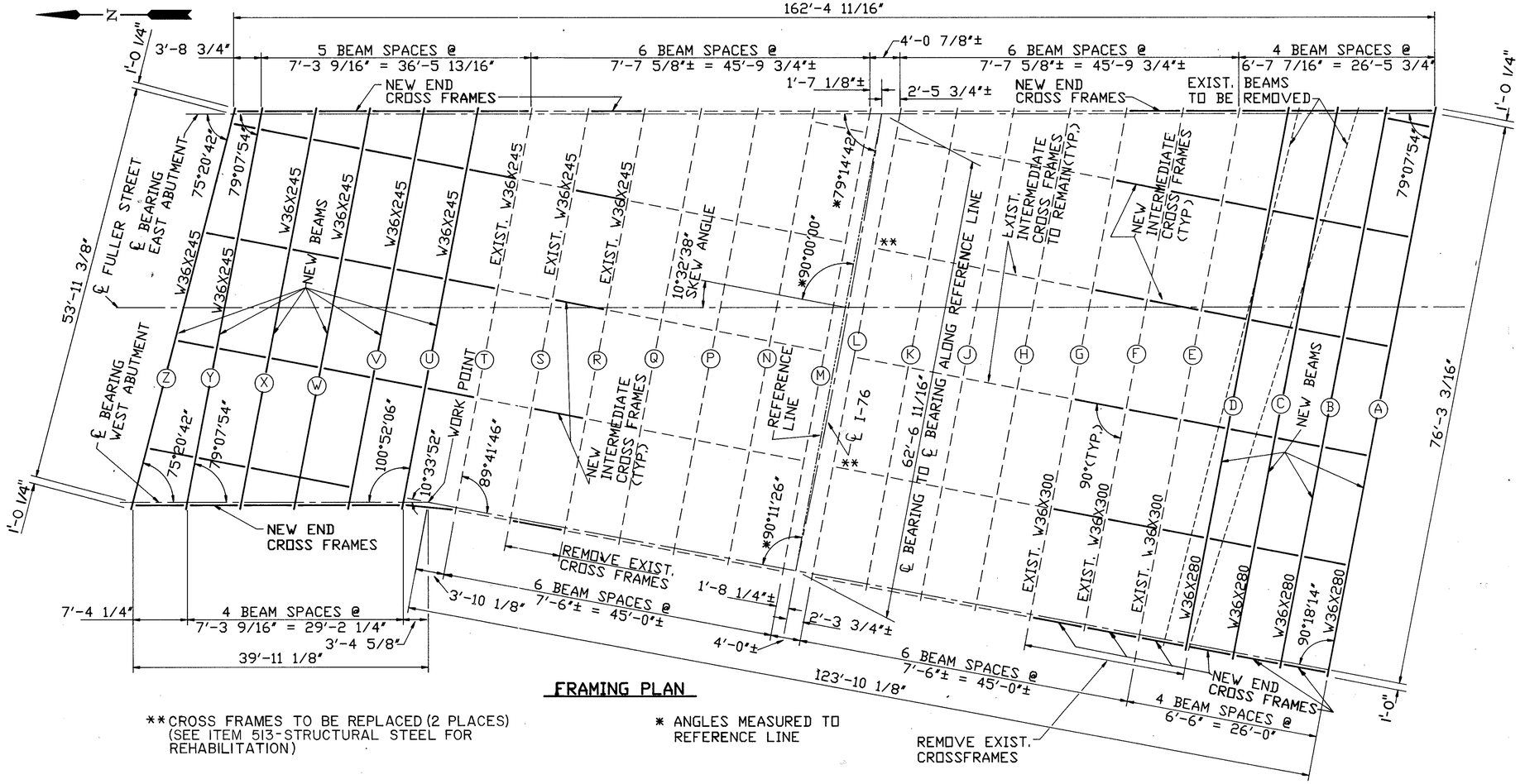

FRAMING PLAN

** CROSS FRAMES TO BE REPLACED (2 PLACES) (SEE ITEM 513-STRUCTURAL STEEL FOR REHABILITATION)

* ANGLES MEASURED TO REFERENCE LINE

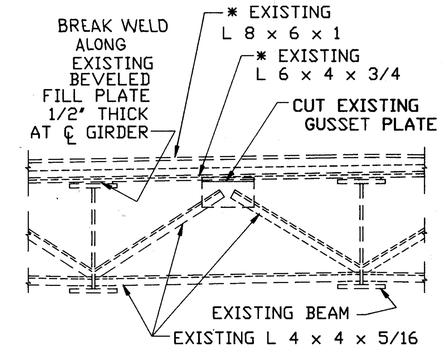

* - EXISTING MEMBERS TO BE REMOVED NEW MEMBERS TO BE INSTALLED FOR DETAILS SEE SHEET 24/34

EXISTING EXPANSION JOINT REMOVAL

NOTES:

FOR DETAILS OF BEARING UNITS, TYPE AND LOCATION, SEE SHEET 18/34

FOR EXPANSION JOINT DETAILS, SEE SHEET 24/34

DEFLECTIONS ARE MEASURED TO THE NEAREST 1/16 OF AN INCH.

LOCATION OF END CROSS FRAMES SHALL BE ADJUSTED TO ACCOMMODATE THE EXPANSION JOINT ASSEMBLY. SEE EXPANSION JOINT DETAILS SHEET 24/34

FOR DETAILS OF END CROSS FRAMES, SEE O.D.O.T STD. DWG. SD-1-69

BEAM			
A	14'-4 3/8"	4 SPACES @ 15'-0" = 60'-0"	1'-10 13/16"
B	14'-4 13/16"	3 SPACES @ 15'-0" = 45'-0"	15'-7 13/16"
C	14'-5 1/4"	3 SPACES @ 15'-0" = 45'-0"	14'-4 13/16"
D	14'-5 5/8"	3 SPACES @ 15'-0" = 45'-0"	13'-1 7/8"
U	15'-7 7/8"	2 SPACES @ 15'-0" = 30'-0"	7'-5 7/8"
V	2'-0 7/16"	3 SPACES @ 15'-0" = 45'-0"	6'-1 5/16"
W	3'-4 15/16"	3 SPACES @ 15'-0" = 45'-0"	4'-8 13/16"
X	4'-9	3 SPACES @ 15'-0" = 45'-0"	3'-4 5/16"
Y	6'-2"	3 SPACES @ 15'-0" = 45'-0"	1'-11 3/4"
Z	7'-6 3/4"	3 SPACES @ 15'-0 3/8" = 45'-1 1/3"	1'-3 1/2"

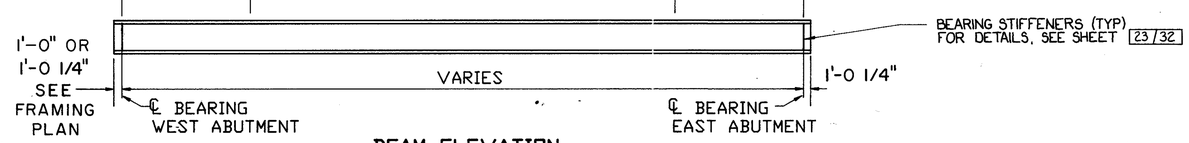

BEAM ELEVATION
(SPACING OF CROSS FRAMES)

DEFLECTION AND CAMBER (INCHES)

BEAM	A			B			C			D			U-Y			Z		
POINT	1/4	1/2	3/4	1/4	1/2	3/4	1/4	1/2	3/4	1/4	1/2	3/4	1/4	1/2	3/4	1/4	1/2	3/4
DEFLECTION DUE TO WEIGHT OF STEEL	5/16	3/8	5/16	1/4	3/8	1/4	1/4	3/8	1/4	1/4	5/16	1/4	1/16	1/8	1/16	1/16	1/8	1/16
DEFLECTION DUE TO REMAINING DEAD LOAD	5/8	7/8	5/8	3/4	1	3/4	11/16	15/16	11/16	5/8	7/8	5/8	1/4	5/16	1/4	3/16	1/4	3/16
ADJUSTMENT REQUIRED FOR HORIZONTAL CURVE	1/16	1/8	1/16	1/16	1/8	1/16	-1/16	-1/16	-1/16	-1/16	-1/16	-1/16	-1/16	-1/16	-1/16	-1/16	-1/16	-1/16
REQUIRED SHOP CAMBER	1	1 3/8	1	1 1/16	1 1/2	1 1/16	7/8	1 1/8	7/8	13/16	1 1/8	13/16	1/4	3/8	1/4	3/16	5/16	3/16

JOHN DAVID JONES & ASSOC., INC. 17/34
2162 FRONT STREET
CUYAHOGA FALLS, OHIO 44221
ENGINEERS ARCHITECTS PLANNERS

FRAMING PLAN AND BEAM ELEVATIONS

BRIDGE No. SUM-76-1267
OVER FULLER ST.

DESIGNED	DRAWN	TRACED	CHECKED	REVIEWED	DATE	REVISED
JRS	RWM	—	BRH	PAK	12-7-88	

FHWA REGION	STATE	REGION		920 12.14
5	OHIO			

SUMMIT COUNTY
SUM.-76-11.57

BEARINGS

BEAM	WEST ABUTMENT DIMENSIONS WP	LP	W	L	T	TE	TI	N	TOTAL LOAD (KIPS)	TYPE	EAST ABUTMENT DIMENSIONS WP	LP	W	L	T	TE	TI	N	TOTAL LOAD (KIPS)	TYPE	BEAM
A	18"	8"	11"	7"	1 3/8"	0.130"	0.182"	5	71	EXP.	18"	8"	11"	7"	1 3/8"	0.130"	0.182"	5	71	EXP.	A
B	18"	9 1/2"	12"	8 1/2"	1 1/2"	0.151"	0.212"	5	77	EXP.	18"	9 1/2"	12"	8 1/2"	1 1/2"	0.151"	0.212"	5	77	EXP.	B
C	18"	9 1/2"	12"	8 1/2"	1 1/2"	0.151"	0.212"	5	77	EXP.	18"	9 1/2"	12"	8 1/2"	1 1/2"	0.151"	0.212"	5	77	EXP.	C
D	18"	9 1/2"	12"	8 1/2"	1 1/2"	0.151"	0.212"	5	77	EXP.	18"	9 1/2"	12"	8 1/2"	1 1/2"	0.151"	0.212"	5	77	EXP.	D
E	25"	8 1/2"	13"	7 1/2"	1 3/8"	0.132"	0.185"	5	77	FIXED	18"	8 1/2"	13"	7 1/2"	1 3/8"	0.132"	0.185"	5	77	EXP.W/GUIDES	E
F	25"	8 1/2"	13"	7 1/2"	1 3/8"	0.132"	0.185"	5	77	FIXED	18"	8 1/2"	13"	7 1/2"	1 3/8"	0.132"	0.185"	5	77	EXP.W/GUIDES	F
G	25"	8 1/2"	13"	7 1/2"	1 3/8"	0.132"	0.185"	5	77	FIXED	18"	8 1/2"	13"	7 1/2"	1 3/8"	0.132"	0.185"	5	77	EXP.W/GUIDES	G
H	18"	9 1/2"	12"	8 1/2"	1 1/2"	0.151"	0.212"	5	77	EXP.	18"	9 1/2"	12"	8 1/2"	1 1/2"	0.151"	0.212"	5	77	EXP.	H
J	18"	9 1/2"	12"	8 1/2"	1 1/2"	0.151"	0.212"	5	77	EXP.	18"	9 1/2"	12"	8 1/2"	1 1/2"	0.151"	0.212"	5	77	EXP.	J
K	18"	9 1/2"	12"	8 1/2"	1 1/2"	0.151"	0.212"	5	77	EXP.	18"	9 1/2"	12"	8 1/2"	1 1/2"	0.151"	0.212"	5	77	EXP.	K
L	18"	8"	11"	7"	1 3/8"	0.130"	0.182"	5	69	EXP.	18"	8"	11"	7"	1 3/8"	0.130"	0.182"	5	69	EXP.	L
M	18"	8"	11"	7"	1 3/8"	0.130"	0.182"	5	69	EXP.	18"	8"	11"	7"	1 3/8"	0.130"	0.182"	5	69	EXP.	M
N	18"	9 1/2"	12"	8 1/2"	1 1/2"	0.151"	0.212"	5	77	EXP.	18"	9 1/2"	12"	8 1/2"	1 1/2"	0.151"	0.212"	5	77	EXP.	N
P	18"	9 1/2"	12"	8 1/2"	1 1/2"	0.151"	0.212"	5	77	EXP.	18"	9 1/2"	12"	8 1/2"	1 1/2"	0.151"	0.212"	5	77	EXP.	P
Q	18"	9 1/2"	12"	8 1/2"	1 1/2"	0.151"	0.212"	5	77	EXP.	18"	9 1/2"	12"	8 1/2"	1 1/2"	0.151"	0.212"	5	77	EXP.	Q
R	18"	9 1/2"	12"	8 1/2"	1 1/2"	0.151"	0.212"	5	77	EXP.	18"	9 1/2"	12"	8 1/2"	1 1/2"	0.151"	0.212"	5	77	EXP.	R
S	25"	8 1/2"	13"	7 1/2"	1 3/8"	0.132"	0.185"	5	77	FIXED	18"	8 1/2"	13"	7 1/2"	1 3/8"	0.132"	0.185"	5	77	EXP.W/GUIDE	S
T	25"	8 1/2"	13"	7 1/2"	1 3/8"	0.132"	0.185"	5	77	FIXED	18"	8 1/2"	13"	7 1/2"	1 3/8"	0.132"	0.185"	5	77	EXP.W/GUIDE	T
U	25"	8 1/2"	13"	7 1/2"	1 3/8"	0.132"	0.185"	5	77	FIXED	18"	8 1/2"	13"	7 1/2"	1 3/8"	0.132"	0.185"	5	77	EXP.W/GUIDE	U
V	18"	8"	11"	7"	1 3/8"	0.130"	0.182"	5	68	EXP.	18"	8"	11"	7"	1 3/8"	0.130"	0.182"	5	68	EXP.	V
W	18"	8"	11"	7"	1 3/8"	0.130"	0.182"	5	68	EXP.	18"	8"	11"	7"	1 3/8"	0.130"	0.182"	5	68	EXP.	W
X	18"	8"	11"	7"	1 3/8"	0.130"	0.182"	5	68	EXP.	18"	8"	11"	7"	1 3/8"	0.130"	0.182"	5	68	EXP.	X
Y	18"	8"	11"	7"	1 3/8"	0.130"	0.182"	5	68	EXP.	18"	8"	11"	7"	1 3/8"	0.130"	0.182"	5	68	EXP.	Y
Z	18"	8"	11"	7"	1 3/8"	0.130"	0.182"	5	68	EXP.	18"	8"	11"	7"	1 3/8"	0.130"	0.182"	5	68	EXP.	Z

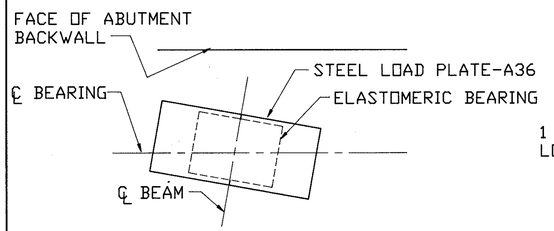

EXPANSION BEARING DETAIL

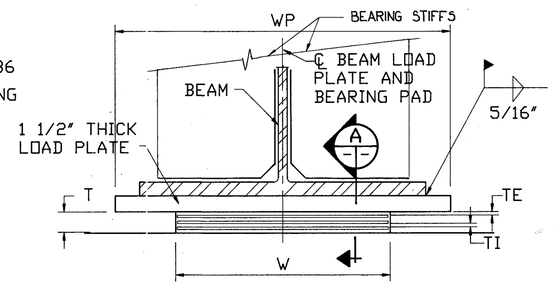

EXPANSION BEARING

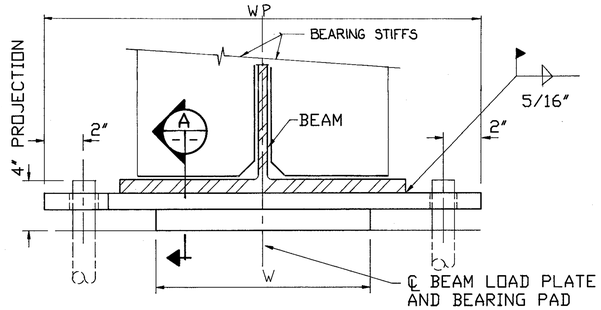

FIXED BEARING

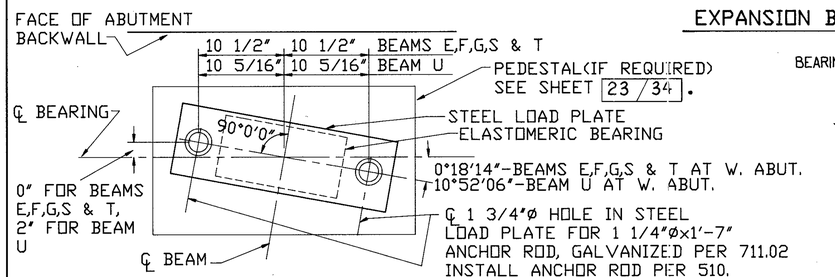

FIXED BEARING DETAIL

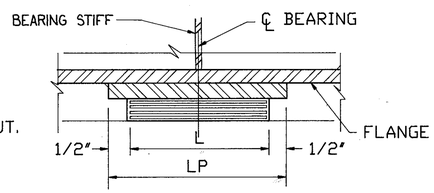

A SECTION

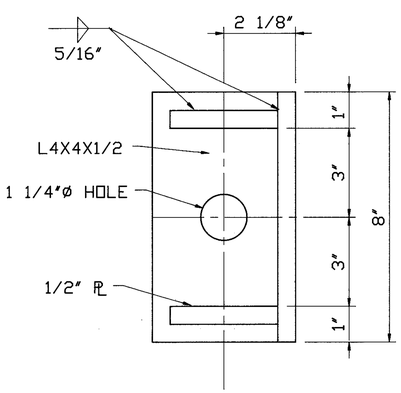

RETAINER DETAIL

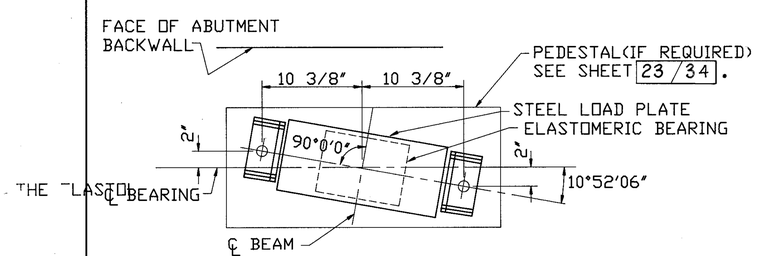

EXPANSION GUIDE BEARING DETAIL

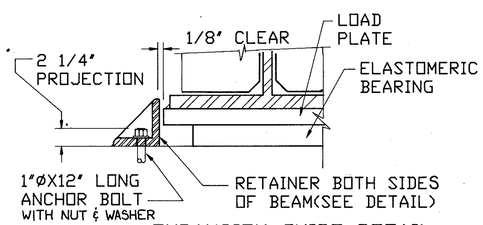

EXPANSION GUIDE DETAIL
APPLIES ONLY TO LOCATIONS DENOTED IN TABLE

BEARING NOTES

TOLERANCES:

INDIVIDUAL ELASTOMER LAYER THICKNESS: ±20 % OF DESIGN VALUE (NOT TO EXCEED ± 1/8")

PLAN DIMENSIONS	-0, +1/4"
DESIGN THICKNESS < 1 1/4"	-0, +1/8"
DESIGN THICKNESS > 1 1/4"	-0, +1/4"
EDGE COVER EMBEDDED LAMINATES	-0, +1/8"

DUROMETER: THE ELASTOMER SHALL BE 50 DUROMETER.

LOAD PLATE: THE STEEL LOAD PLATE SHALL BE BOUNDED BY VULCANIZATION TO THE ELASTOMER DURING THE MOLDING PROCESS.

WELDING OF THE LOAD PLATE TO THE SUPERSTRUCTURE SHALL BE CONTROLLED SO THAT THE PLATE TEMPERATURE AT THE ELASTOMER BOUNDED SURFACE SHALL NOT EXCEED 400 DEGREES F, AS DETERMINED BY THE USE OF PYROMETRIC STICKS OR OTHER TEMPERATURE MONITERING DEVICES.

BEARING ANCHOR RODS: AT THE OPTION OF THE CONTRACTOR, THE BEARING ANCHOR RODS (OR FORMED HOLES), LOCATED AND SUPPORTED BY TEMPLATES, MAY BE CAST-IN-PLACE.

BRIDGE SEAT REINFORCING: REINFORCING STEEL IN THE VICINITY OF THE BRIDGE SEAT SHALL BE ACCURATELY PLACED TO AVOID INTERFERENCE WITH THE DRILLING OF BEARING ANCHOR HOLES OR PRE-SETTING OF BEARING ANCHORS, BEARING SEATS SHALL BE LEVEL.

BEARING REPOSITIONING: IF DECK CONCRETE IS PLACED AT AN AMBIENT TEMPERATURE HIGHER THAN 80 DEGREES F OR LOWER THAN 40 DEGREES F AND THE BEARING SHEAR DEFLECTION EXCEEDS ONE-SIXTH OF THE BEARING HEIGHT AT 60 DEGREES ± 10 DEGREES F, THE BEAMS OR GIRDERS SHALL BE RAISED TO ALLOW THE BEARINGS TO RETURN TO THEIR UNDEFORMED SHAPE AT 60 DEGREES ± 10 DEGREES F.

BASIS OF PAYMENT: THE UNIT BID PRICE SHALL INCLUDE ALL MATERIALS, LABOR AND INCIDENTALS NECESSARY TO FURNISH AND INSTALL LAMINATED ELASTOMERIC BEARING EITHER FIXED OR EXPANSION. PAYMENT WILL BE MADE AT THE CONTRACT PRICE FOR ITEM 516 EACH, LAMINATED ELASTOMERIC BEARINGS.

THE ELASTOMERIC BEARING MANUFACTURER SHALL SUPPLY A PLAIN ELASTOMERIC PAD FOR TESTING PURPOSES. THE PAD SHALL BE FURNISHED FROM THE SAME BATCH OF NEOPRENE THAT IS USED IN THE FABRICATION OF THE LAMINATED ELASTOMERIC BEARINGS AND THE FABRICATOR SHALL CERTIFY THE IDENTITY OF THE ELASTOMER. THE PAD SHALL HAVE A 1/2 INCH THICKNESS, AND SHALL HAVE MINIMUM LENGTH AND WIDTH DIMENSIONS OF 6 INCHES. PAYMENT FOR THE TEST PAD WILL BE INCLUDED IN THE PRICE BID FOR THE BEARINGS.

LEGEND

WP= WIDTH OF LOAD PLATE
LP= LENGTH OF LOAD PLATE
W= WIDTH OF BEARING PAD
L= LENGTH OF BEARING PAD
N= NUMBER OF 14 GAGE LAMINATES
T= TOTAL THICKNESS OF LAMINATED PAD
TE= THICKNESS OF EXTERIOR ELASTOMER LAYER(50 DUROMETER)
TI= THICKNESS OF INTERIOR ELASTOMER LAYER(50 DUROMETER)

JOHN DAVID JONES & ASSOC., INC. 18/34
2162 FRONT STREET
CUYAHOGA FALLS, OHIO 44221
ENGINEERS ARCHITECTS PLANNERS

BEARING DETAILS

BRIDGE No.SUM-76-1267
OVER FULLER ST

DESIGNED	DRAWN	TRACED	CHECKED	REVIEWED	DATE	REVISED
JRS	EMB	-	BRH	PAK	12-7-88	

F.H.W.A. REGION	STATE	REGION	
5	OHIO		

921
1214

SUMMIT COUNTY
SUM-76-11.57

N

89'-2 5/8"

℄ BEARING EAST ABUTMENT

℄ I-76

12-ESN402 TO MATCH ESN401 (TOP)
10-ESN502 TO MATCH ESN501 (BOTT.)

40-ESN403 TO MATCH ESN401 (TOP)
36-ESN503 TO MATCH ESN501 (BOTT.)

7-ESN413 TO MATCH ESN401(TOP)
6-ESN513 TO MATCH ESN501(BOTT.)

4-ESN513
IN PARAPET

10 1/2"

55'-8 1/8"

38 SETS OF 1-ESN524, 1-ESN525 AND 1-ESN526 @ ABOUT 1'-6" = 55'-2"

3 PARAPET DEFLECTION JOINT MEASURED ALONG THE 3-ESN523 EACH FACE

13'-8 1/8"

3-ESN530 EACH FACE

R=2024.30'

1'-6"

4-ESN502
IN PARAPET

4-ESN501
IN PARAPET

24-ESN604
@ ABOUT 7 1/4"(TOP)
24-ESN517
@ ABOUT 7 1/4"(BOTT.)

7 1/4"

23-ESN603 @ 7 1/4"
(TOP)
23-ESN516 @ 7 1/4"
(BOTT.)

23-ESN602 @ 7 1/4"
(TOP)
23-ESN515 @ 7 1/4"
(BOTT.)

90-ESN605 @ 7 1/4" (TOP)
90-ESN518 @ 7 1/4" (BOTT.)

6-ESN404 TO MATCH ESN401(TOP)
5-ESN504 TO MATCH ESN501(BOTT.)

6-ESN405 TO MATCH ESN401(TOP)
5-ESN505 TO MATCH ESN501(BOTT.)

6-ESN406 TO MATCH ESN401(TOP)
5-ESN506 TO MATCH ESN501(BOTT.)

LONGITUDINAL CONSTRUCTION JOINT. FOR DETAIL SEE SHEET 21/32

6-ESN407 TO MATCH ESN401(TOP)
6-ESN507 TO MATCH ESN501(BOTT.)

6-ESN408 TO MATCH ESN401(TOP)
6-ESN508 TO MATCH ESN501(BOTT.)

94-ESN606 @ 7 1/4" (TOP)
94-ESN519 @ 7 1/4" (BOTT.)

6-ESN409 TO MATCH ESN401(TOP)
5-ESN509 TO MATCH ESN501(BOTT.)

6-ESN410 TO MATCH ESN401(TOP)
5-ESN510 TO MATCH ESN501(BOTT.)

6-ESN411 TO MATCH ESN401(TOP)
6-ESN511 TO MATCH ESN501(BOTT.)

6-ESN412 TO MATCH ESN401(TOP)
5-ESN512 TO MATCH ESN501(BOTT.)

31-ESN401 TO MATCH ESN401 (TOP)
27-ESN501 TO MATCH ESN501 (BOTT.)

R=2899.47'

1'-6"

3-ESN527
EACH FACE

11'-11 3/8"

3-ESN528 EACH FACE

4 PARAPET DEFLECTION JOINT MEASURED ALONG GUTTER LINE

SPACES AT 13'-0" = 52'-0"

1-ESN529 @ ABOUT 1'-6" = 63'-9"

44 SETS OF 1-ESN524, 1-ESN525 AND 1-ESN526 @ ABOUT 1'-6" = 63'-9"

A=64'-2 5/8"

52-ENS401 (TOP)
46-ENS501 (BOTT.)

61-ESN401 (TOP)
54-ESN501 (BOTT.)

GUTTER LINE

MEDIAN GUTTER LINE

20-ESN601 @ 7 1/4"
(TOP)
20-ESN514 @ 7 1/4"
(BOTT.)

℄ BEARING WEST ABUTMENT

10 1/2"

38'-5 3/4"

7'-1 1/2"

1 SER. 3-ESN607
TO MATCH ESN606 (TOP)
1 SER. 3-ESN520
TO MATCH ESN519 (BOTT.)

1 SER. 9-ESN608 @ 7 1/4"(TOP)
1 SER. 9-ESN521 @ 7 1/4" (BOTT.)

46'-6 3/4"

FAN 2-ESN609(TOP)
FAN 2-ESN522(BOTT.)

NOTE:
FOR SCREED ELEVATIONS SEE SHEET 23/34.
FOR TYPICAL TRANSVERSE SECTION, PARAPET AND MEDIAN DETAILS SEE SHEET 21/34.

SLAB PLAN
NORTH ROADWAY

JOHN DAVID JONES & ASSOC., INC. 19/34
2162 FRONT STREET
CUYAHOGA FALLS, OHIO 44221
ENGINEERS ARCHITECTS PLANNERS

SLAB PLAN
NORTH ROADWAY

BRIDGE No. SUM-76-1267
OVER FULLER ST.

DESIGNED	DRAWN	TRACED	CHECKED	REVIEWED	DATE	REVISED
JRS	RWM	-	BRH	PAK	12-7-88	

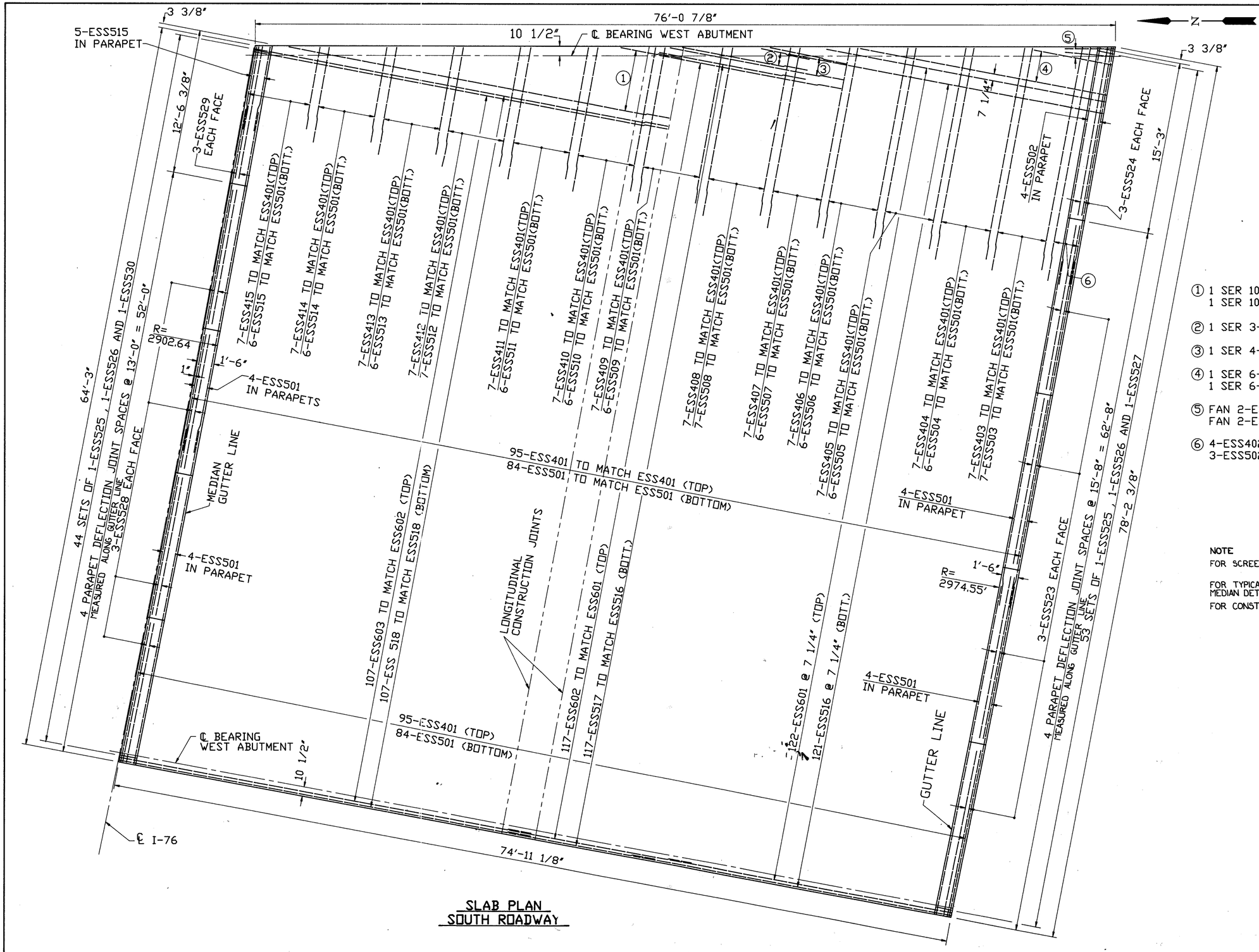

SLAB PLAN
SOUTH ROADWAY

F.H.W.A. REGION	STATE	REGION	
5	OHIO		

922
1214

SUMMIT COUNTY
SUM-76-11.57

① 1 SER 10 ESS604 TO MATCH ESS602 (TOP)
1 SER 10 ESS519 TO MATCH ESS517 (BOTT.)

② 1 SER 3-ESS520 TO MATCH ESS516 (BOTT.)

③ 1 SER 4-ESS605 TO MATCH ESS601 (TOP)

④ 1 SER 6-ESS606 @ 7 1/4" (TOP)
1 SER 6-ESS521 @ 7 1/4" (BOTT.)

⑤ FAN 2-ESS607 @ 7 1/4" (TOP)
FAN 2-ESS522 @ 7 1/4" (BOTT.)

⑥ 4-ESS402 TO MATCH ESS401(TOP)
3-ESS502 TO MATCH ESS501(BOTT.)

NOTE
FOR SCREED ELEVATIONS, SEE SHEET 23/34.

FOR TYPICAL TRANSVERSE SECTION-PARAPET AND MEDIAN DETAILS, SEE SHEET 22/34.

FOR CONSTRUCTION JOINT DETAILS, SEE SHEET 22/34..

JOHN DAVID JONES & ASSOC., INC. 20/34
2162 FRONT STREET
CUYAHOGA FALLS, OHIO 44221
ENGINEERS ARCHITECTS PLANNERS

SLAB PLAN
SOUTH ROADWAY

BRIDGE No. SUM-76-1267
OVER FULLER ST.

DESIGNED	DRAWN	TRACED	CHECKED	REVIEWED	DATE	REVISED
JRS	RWM	-	BRH	PAK	12-7-88	

F.H.W.A. REGION	STATE	REGION	
5	OHIO		

923
12/4

SUMMIT COUNTY
SUM-76-11.57

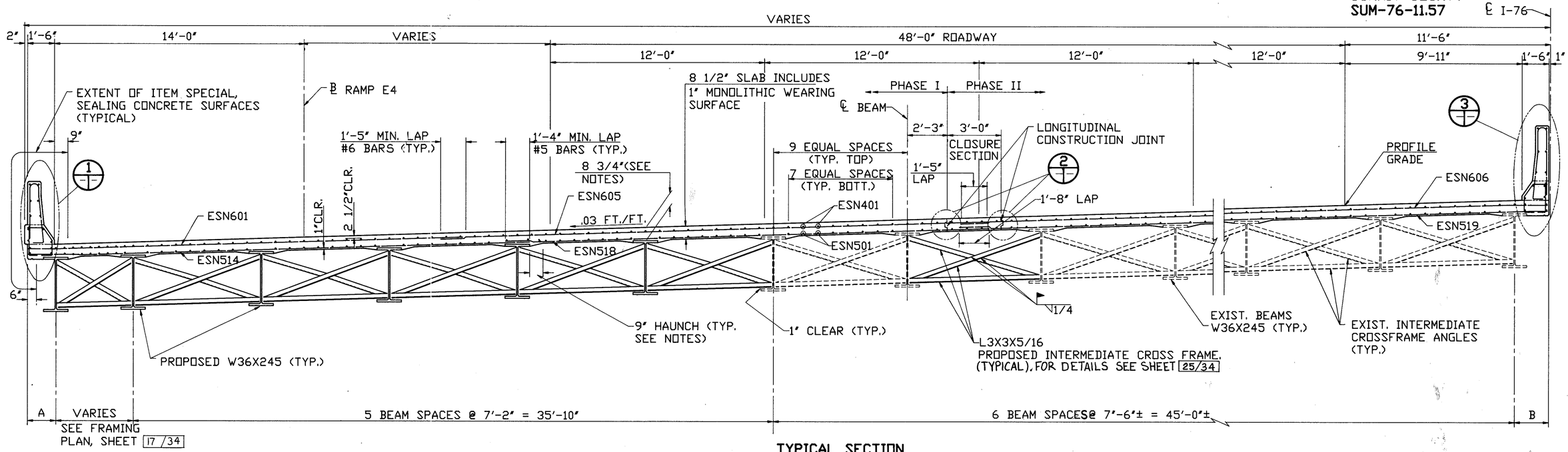

TYPICAL SECTION NORTH ROADWAY

DIMENSIONS					
LOCATION	℄ BRG. W. ABUT.	1/4	1/2	3/4	℄ BRG. E. ABUT.
A	1'-8 1/8"	1'-6 1/2"	1'-6"	1'-6 1/2"	1'-8 1/8"
B	1'-7 1/4"	1'-8 3/8"	1'-8 1/2"	1'-7 5/8"	1'-5 3/4"

NOTES :

A HAUNCH WIDTH OF 9" SHALL BE USED FOR COMPUTING QUANTITY OF CONCRETE, HOWEVER, THE HAUNCH WIDTH MAY VARY BETWEEN 6" AND 12" PROVIDED THAT THE SLOPE SHALL BE NOT MORE THAN 1:4 FOR A HAUNCH LESS THAN 9" WIDTH.

FOR SLAB PLAN SEE SHEET 19/34

FOR STRUCTURAL STEEL DETAILS, SEE FRAMING PLAN AND STRUCTURAL STEEL DETAILS, SHEET 17/34

DECK SLAB DEPTH IS THE DISTANCE SHOWN FROM TOP OF DECK SLAB TO TOP OF STEEL BEAM IS THE DESIGN DIMENSION. THE QUANTITY OF DECK CONCRETE TO BE PAID FOR SHALL BE BASED ON THIS DIMENSION, EVEN THOUGH DEVIATION FROM IT MAY BE NECESSARY BECAUSE THE TOP FLANGE OF BEAM MAY NOT HAVE THE EXACT CAMBER OR CONFORMATION REQUIRED TO PLACE IT PARALLEL TO THE FINISHED GRADE.

CROSSFRAMES IN THE CLOSURE SECTION BAY SHALL BE INSTALLED AFTER THE DECK CONCRETE ON BOTH SIDES OF THIS SECTION HAS BEEN PLACED AND JUST BEFORE THE CLOSURE SECTION CONCRETE HAS BEEN PLACED.

FOR PARAPET PLACEMENT AND DEFLECTION JOINT NOTES, SEE SHEET 27/34

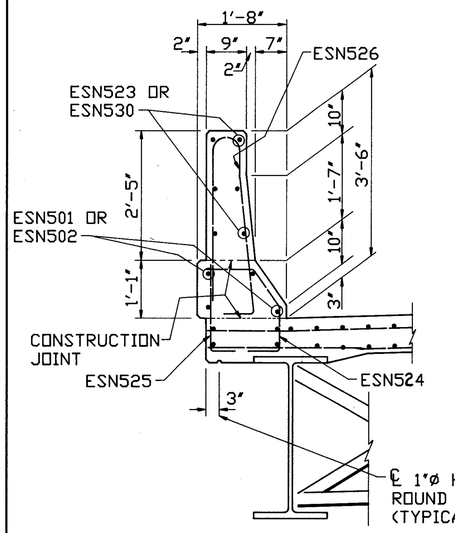

1 DETAIL

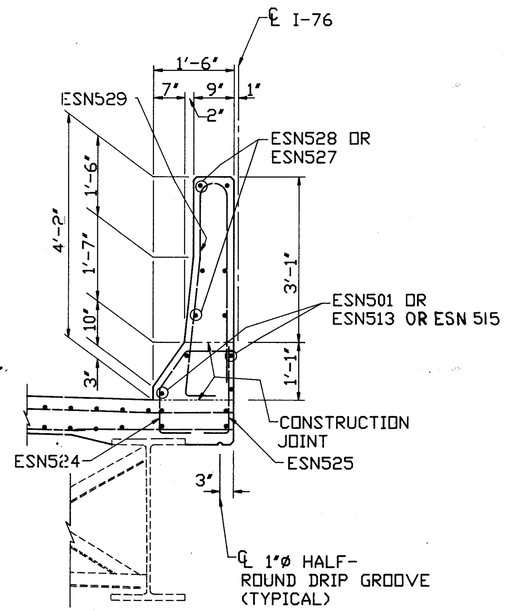

3 DETAIL

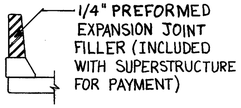

SECTION THROUGH DEFLECTION JOINT

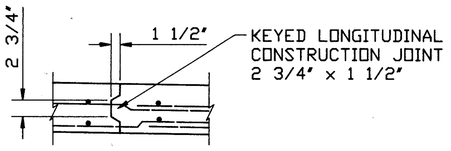

2 DETAIL

JOHN DAVID JONES & ASSOC., INC. 21/34
2162 FRONT STREET
CUYAHOGA FALLS, OHIO 44221
ENGINEERS ARCHITECTS PLANNERS

TYPICAL SECTION NORTH ROADWAY

BRIDGE No. SUM-76-1267
OVER FULLER STREET

DESIGNED	DRAWN	TRACED	CHECKED	REVIEWED	DATE	REVISED
JRS	RWM	-	BRH	PAK	12-7-88	

F.H.W.A. REGION	STATE	REGION	
5	OHIO		

924
1214

SUMMIT COUNTY
SUM-76-11.57

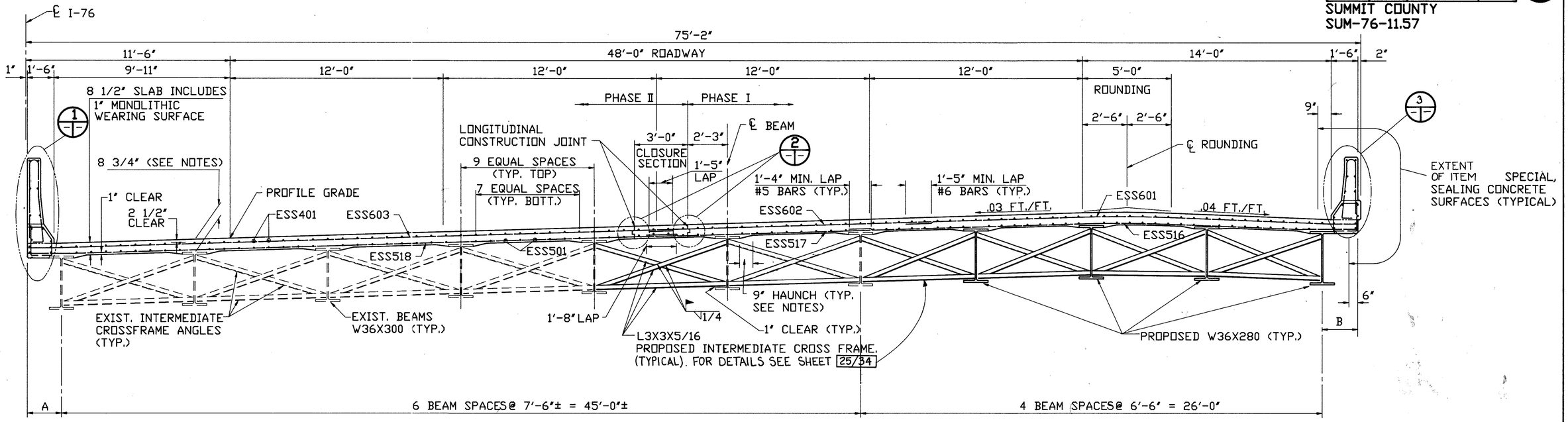

TYPICAL SECTION SOUTH ROADWAY

DIMENSIONS					
LOCATION	℄ BRG. W. ABUT.	1/4	1/2	3/4	℄ BRG. E. ABUT.
A	2'-2 3/4"	2'-1 5/8"	2'-1 1/2"	2'-2 3/8"	2'-4 1/4"
B	1'-8 3/8"	1'-9 1/2"	1'-9 1/4"	1'-7 1/2"	1'-4 3/8"

NOTES :

A HAUNCH WIDTH OF 9" SHALL BE USED FOR COMPUTING QUANTITY OF CONCRETE, HOWEVER, THE HAUNCH WIDTH MAY VARY BETWEEN 6" AND 12" PROVIDED THAT THE SLOPE SHALL BE NOT MORE THAN 1:4 FOR A HAUNCH LESS THAN 9" WIDE.

FOR SLAB PLAN SEE SHEET 20/34

FOR STRUCTURAL STEEL DETAILS, SEE FRAMING PLAN AND STRUCTURAL STEEL DETAILS, SHEET 17/34

DECK SLAB DEPTH IS THE DISTANCE SHOWN FROM TOP OF DECK SLAB TO TOP OF STEEL BEAM IS THE DESIGN DIMENSION. THE QUANTITY OF DECK CONCRETE TO BE PAID FOR SHALL BE BASED ON THIS DIMENSION, EVEN THOUGH DEVIATION FROM IT MAY BE NECESSARY BECAUSE THE TOP FLANGE OF BEAM MAY NOT HAVE THE EXACT CAMBER OR CONFORMATION REQUIRED TO PLACE IT PARALLEL TO THE FINISHED GRADE.

CROSSFRAMES IN THE CLOSURE SECTION BAY SHALL BE INSTALLED AFTER THE DECK CONCRETE ON EITHER SIDE OF THIS SECTION HAS BEEN PLACED AND JUST BEFORE THE CLOSURE SECTION CONCRETE HAS BEEN PLACED.

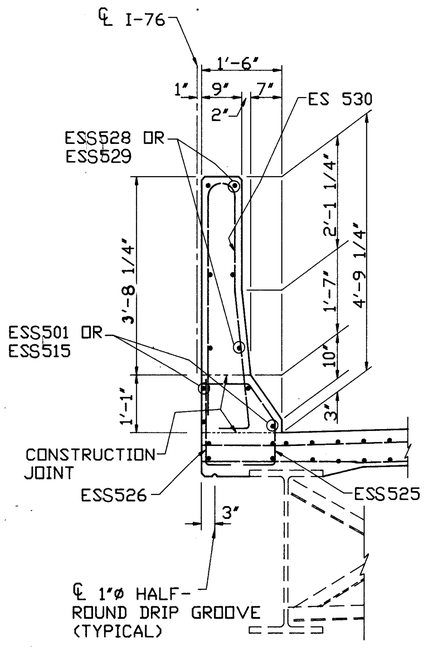

1 DETAIL

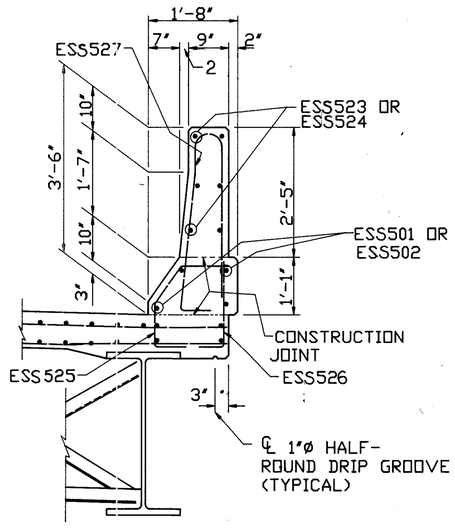

3 DETAIL

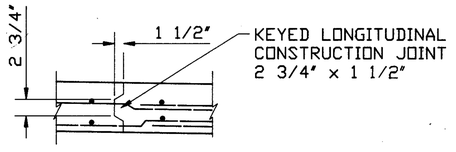

2 DETAIL

JOHN DAVID JONES & ASSOC., INC. 22/34
2162 FRONT STREET
CUYAHOGA FALLS, OHIO 44221
ENGINEERS ARCHITECTS PLANNERS

TYPICAL SECTION SOUTH ROADWAY

BRIDGE No. SUM-76-1267
OVER FULLER STREET

DESIGNED	DRAWN	TRACED	CHECKED	REVIEWED	DATE	REVISED
JRS	RWM	-	BRH	PAK	12-7-88	

F.H.W.A. REGION	STATE	REGION	
5	OHIO		

925
1214

SUMMIT COUNTY
SUM-76-11.57

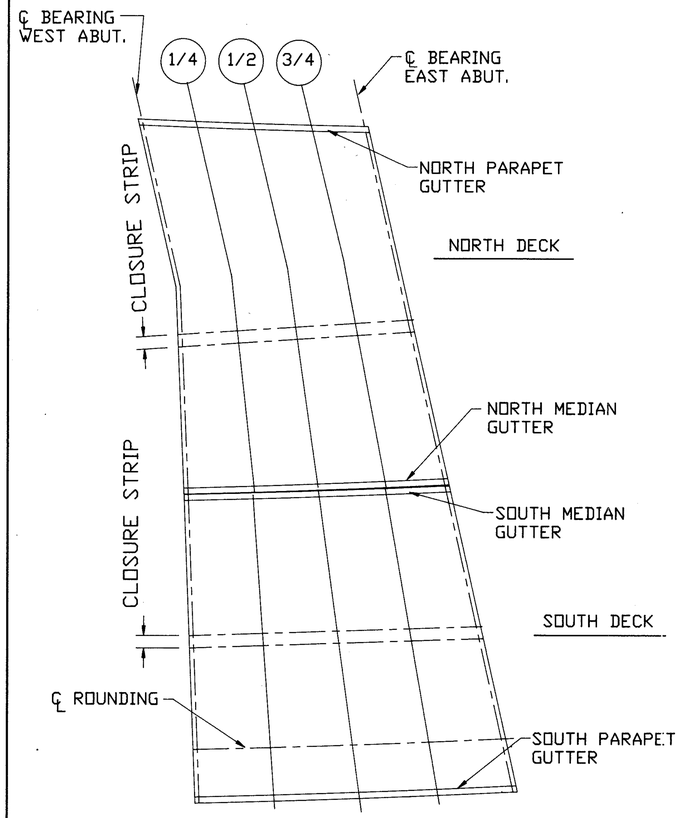

SCREED ELEVATION PLAN

PEDESTALS

BEAM	WEST ABUTMENT				EAST ABUTMENT			
	SEAT ELEVATION		PEDESTAL SIZE		SEAT ELEVATION		PEDESTAL SIZE	
	EXISTING(±)	PROPOSED	LENGTH	HEIGHT(±)	EXISTING(±)	PROPOSED	LENGTH	HEIGHT(±)
A	———	1037.86	——	——	———	1038.32	——	——
B	———	1038.11	——	——	1036.39	1038.56	24"	2'2"
C	———	1038.25	——	——	1036.39	1038.72	24"	2'-4"
D	1036.05	1038.05	24"	2'-0"	1036.51	1038.52	24"	2'-0 1/8"
E	1036.16	1037.84	30"	1'-8 1/4"	1036.62	1038.30	30"	1'-8 1/8"
F	1036.28	1037.62	30"	1'-4"	1036.73	1038.07	30"	1'-4 1/8"
G	1036.12	1037.39	30"	1'-3 1/4"	1036.56	1037.83	30"	1'-3 1/4"
H	1035.90	1037.16	24"	1'-3 1/8"	1036.33	1037.59	24"	1'-3 1/8"
J	1035.67	1036.93	24"	1'-3 1/8"	1036.09	1037.36	24"	1'-3 1/4"
K	1035.45	1036.71	24"	1'-3 1/8"	1035.86	1037.12	24"	1'-3 1/8"
L	1035.22	1036.49	24"	1'-3 1/4"	1035.62	1036.90	24"	1'-3 3/8"
M	1035.28	1037.11	24"	1'-10"	1035.68	1037.51	24"	1'-10"
N	1035.05	1036.88	24"	1'-10"	1035.45	1037.27	24"	1'-9 7/8"
P	1034.82	1036.65	24"	1'-10"	1035.21	1037.04	24"	1'-10"
Q	1034.61	1036.43	24"	1'-9 7/8"	1034.98	1036.80	24"	1'-9 7/8"
R	1034.37	1036.20	24"	1'-10"	1034.74	1036.57	24"	1'-10"
S	1034.16	1035.98	30"	1'-9 7/8"	1034.51	1036.34	30"	1'-10"
T	1033.94	1035.76	30"	1'-9 7/8"	1034.28	1036.11	30"	1'-10"
U	———	1035.54	——	———	———	1035.89	——	———
V	———	1035.31	——	———	———	1035.66	——	———
W	———	1035.09	——	———	———	1035.44	——	———
X	———	1034.87	——	———	———	1035.21	——	———
Y	———	1034.64	——	———	———	1034.99	——	———
Z	———	1034.42	——	———	———	1034.88	——	———

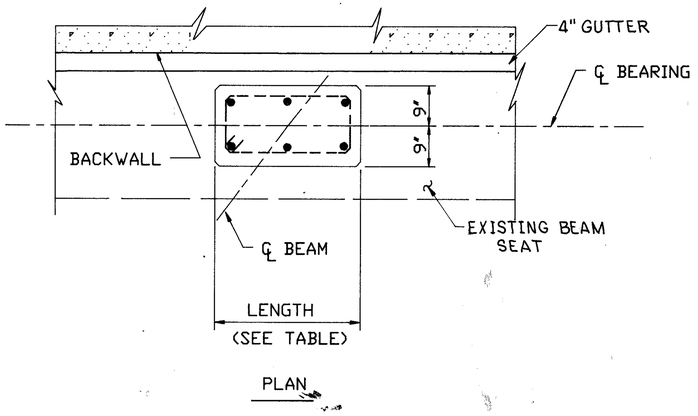

PLAN

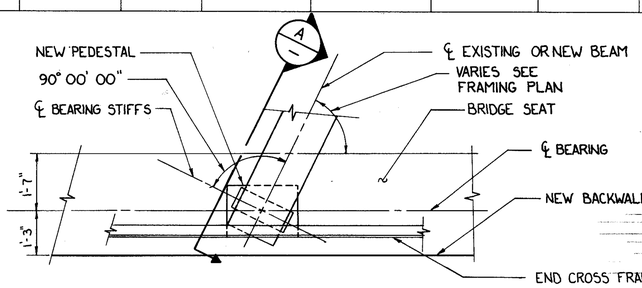

PLAN
BEARING DETAILS

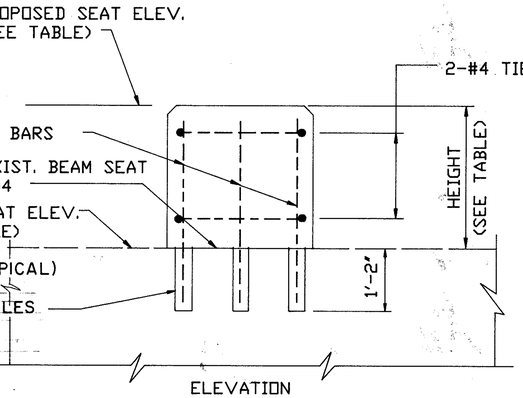

ELEVATION

PEDESTAL DETAIL

	LOCATION	℄ BEARING WEST. ABUT.	1/4	1/2	3/4	℄ BEARING EAST. ABUT.
	SCREED ELEVATION					
NORTH DECK	NORTH PARAPET GUTTER	1038.83	1038.54	1038.65	1038.76	1038.85
	NORTH EDGE CLOSURE STRIP	1040.02	1040.13	1040.23	1040.31	1040.38
	SOUTH EDGE CLOSURE STRIP	1040.11	1040.22	1040.32	1040.41	1040.48
	NORTH MEDIAN GUTTER	1041.10	1041.23	1041.34	1041.43	1041.49
SOUTH DECK	SOUTH MEDIAN GUTTER	1040.50	1040.63	1040.75	1040.83	1040.90
	NORTH EDGE CLOSURE STRIP	1041.48	1041.64	1041.77	1041.86	1041.92
	SOUTH EDGE CLOSURE STRIP	1041.57	1041.74	1041.87	1041.96	1042.01
	℄ ROUNDING	1042.32	1042.49	1042.63	1042.72	1042.78
	SOUTH PARAPET GUTTER	1041.86	1042.03	1042.17	1042.27	1042.34

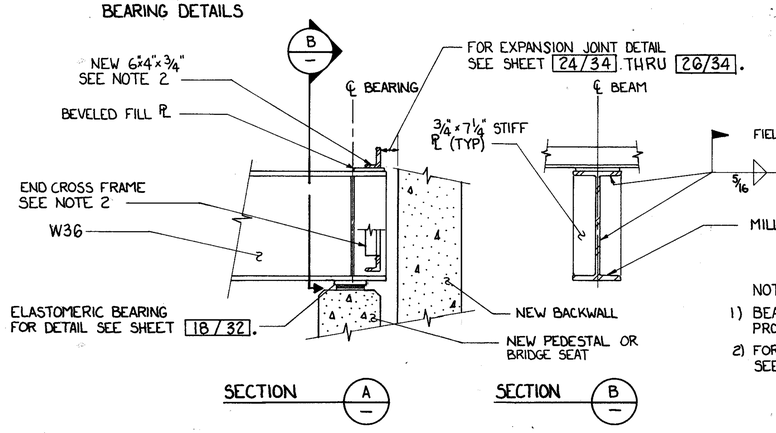

NOTE:
1) BEARING STIFFNERS SHALL BE PROVIDED ON ALL BEAMS
2) FOR DETAILS OF CROSS FRAME, SEE O.D.O.T STD DWG SD-1-69

JOHN DAVID JONES & ASSOC., INC. 23/34
2162 FRONT STREET
CUYAHOGA FALLS, OHIO 44221
ENGINEERS ARCHITECTS PLANNERS

SCREED ELEVATIONS AND PEDESTAL DETAILS

BRIDGE NO.SUM-76-12.67
OVER FULLER ST

DESIGNED	DRAWN	TRACED	CHECKED	REVIEWED	DATE	REVISED
JRS	EMB	—	BRH	PAK	12-7-88	

F.H.W.A. REG.	STATE	PROJECT	
5	OHIO		

926
1214

SUMMIT COUNTY
SUM-76-11.57

EXPANSION JOINT @ MEDIAN:
EXPANSION JOINT SHALL BE DISCONTINUOUS AT MEDIAN, DETAILS OF JOINT TERMINATION INSIDE THE MEDIAN SHALL BE SIMILAR TO THE DETAILS OF JOINT INSIDE THE PARAPET.

NOTES:

JOINTS IN RETAINERS shall have watertight, partial penetration butt welds completely around the outer periphery of the abutting surfaces. Welds which will be in contact with the seal gland and/or joint armor shall be ground smooth.

THE MINIMUM LENGTH OF RETAINER shall be 6'-0" between joints unless otherwise shown.

CONCRETE UNDER JOINT ARMOR shall be hand packed, if necessary, to achieve solid filling.

JOINTS IN END DAM ARMOR: Transverse joints in superstructure angles shall have complete penetration butt welds. Transverse joints in abutment angle shall be closely butted with a minimum of 6'-0" between joints. Welds in contact with seal glands shall be ground flush.

PLAN AT ABUTMENT
FOR SKEWED (OVER 15°) BRIDGES WITH DEFLECTOR PARAPET RAILING

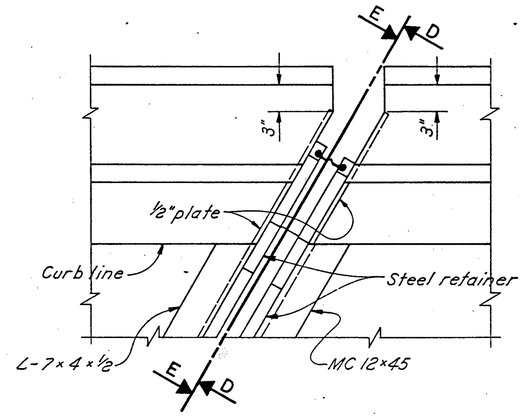

DETAIL B

STRIP SEAL ADJUSTMENT TABLE	
AMBIENT TEMPERATURE	JOINT OPENING
40° F	1 13/16"
50° F	1 11/16"
60° F	1 5/8
70° F	1 9/16"
80° F	1 1/2"
90° F	1 3/8"

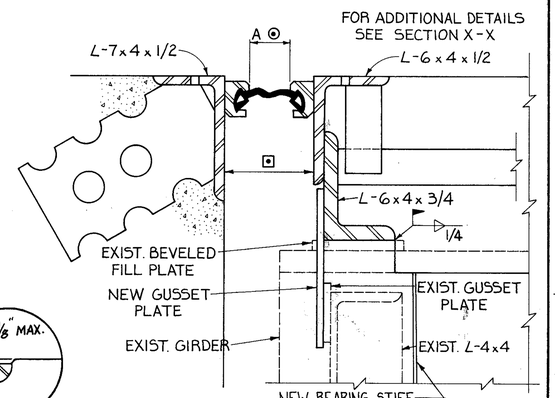

SECTION AT EXISTING GIRDER

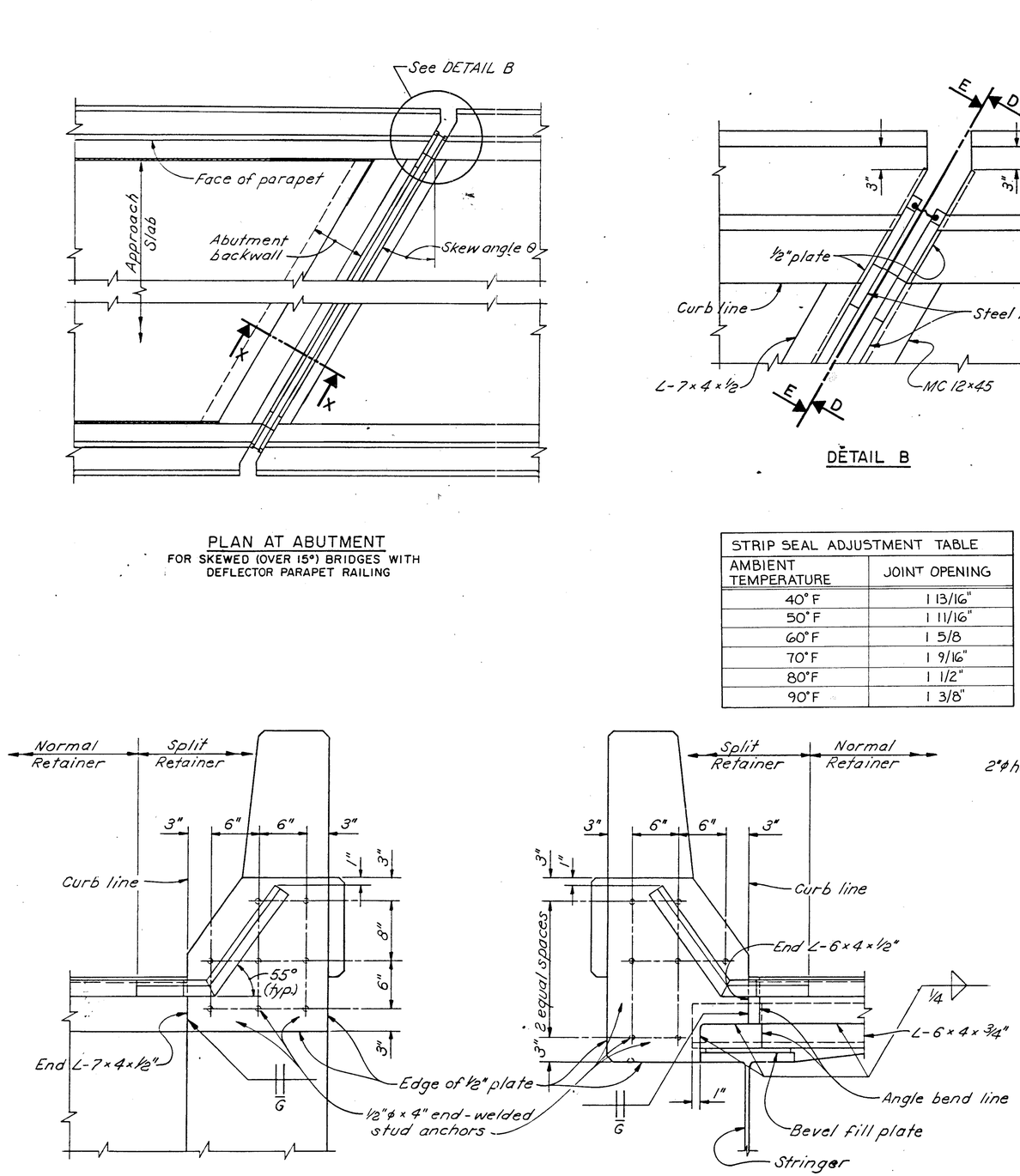

SECTION C-C ⚠

SECTION D-D ⚠

⚠ PARAPET JOINT ARMOR ANCHORS:
IN LIEU OF THE ½"ø 4" END-WELDED STUDS SHOWN, ALTERNATE METHODS OF ANCHORING THE JOINT ARMOR MAY BE USED, SUBJECT TO APPROVAL BY THE DIRECTOR.

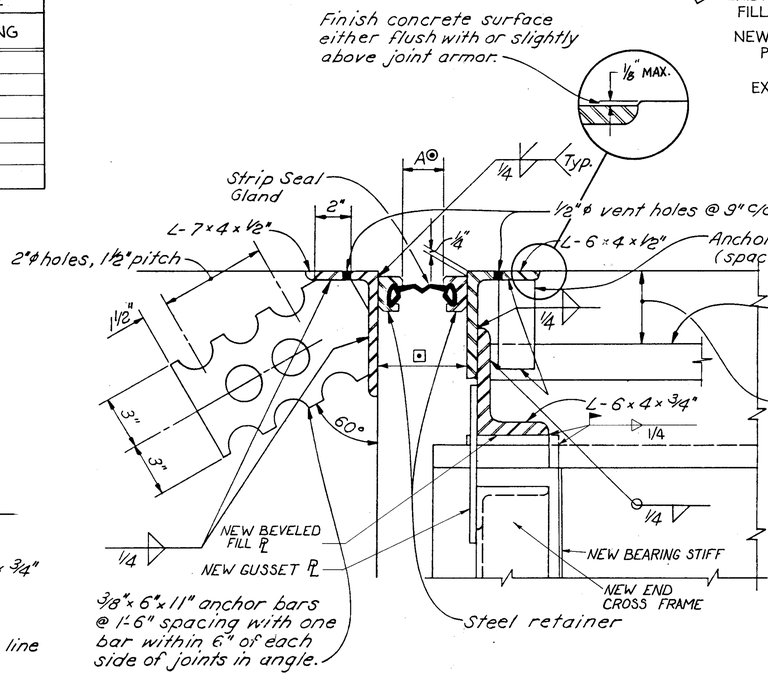

SECTION X-X

◉-Dimension "A", SEE STRIP SEAL ADJUSTMENT TABLE.

⊡- THIS DIMENSION IS THE SUM OF (2. x STEEL RETAINER WIDTH) + (DIM. "A").

NOTES:
FOR STRUCTURAL STEEL DETAILS, SEE SHEET 17/34.
FOR DECK SLAB DETAILS, SEE SHEETS 19/34 AND 20/34.
FOR TYPICAL TRANSVERSE SECTIONS SEE SHEETS 21/34 AND 22/34.
FOR WEST ABUTMENT BACKWALL DETAILS, SEE SHEET 12/34.
FOR EAST ABUTMENT BACKWALL DETAILS, SEE SHEET 7/34.

JOHN DAVID JONES & ASSOC., INC.
2162 FRONT STREET
CUYAHOGA FALLS, OHIO 44221
ENGINEERS ARCHITECTS PLANNERS

24/34

EXPANSION JOINT DETAILS

BRIDGE NO. SUM-76-12.67
OVER FULLER ST.

DESIGNED	DRAWN	TRACED	CHECKED	REVIEWED	DATE	REVISED
JRS	RCK	JM	BRH	PAK	12-7-88	

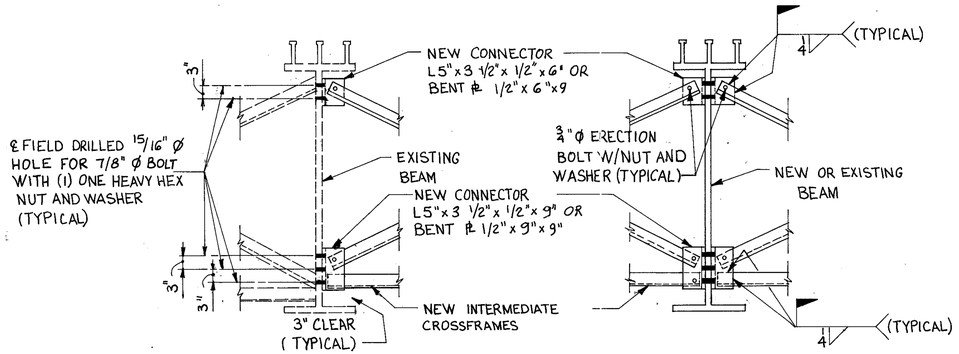

CONNECTION DETAIL
(TYPICAL AT BEAMS: G, R, S & T)

CONNECTION DETAIL
(TYPICAL AT BEAMS: A, B, C, D, E, F, U, V, W, X, Y & Z

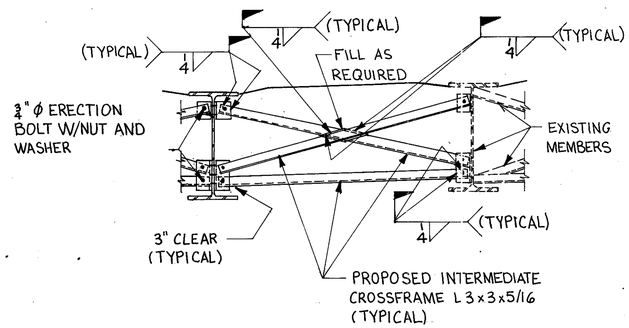

TYPICAL INTERMEDIATE CROSSFRAME

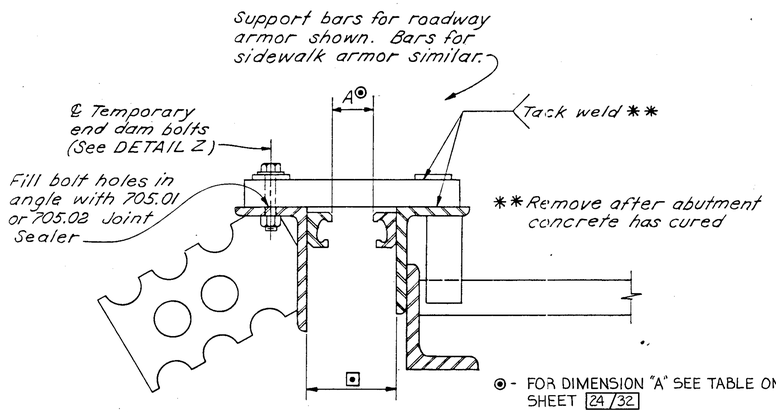

JOINT ARMOR ADJUSTMENT DETAIL

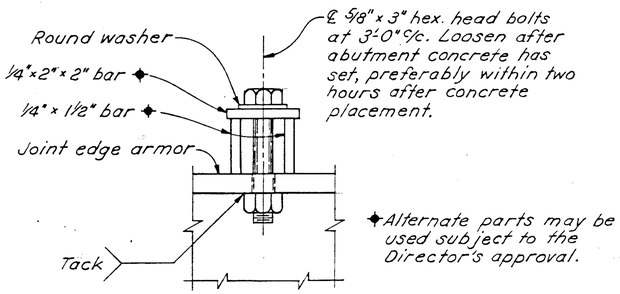

DETAIL Z
TEMPORARY SUPPORT BARS

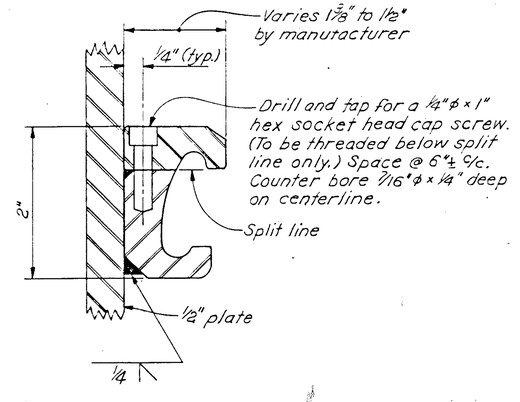

SPLIT RETAINER DETAIL
NORMAL RETAINER SIMILAR

The split retainer shown above is a normal extrusion which has been modified as indicated.
When joint upturns are greater than 60° (from horizontal), split retainers are required. When joint upturns are 60° or less, split retainers are optional.
Steel retainers shall be welded at all miters (below the line where split).

STRIP SEAL GLAND TABLE			
SEAL MOVEMENT RATING	MANUFACTURER & DESIGNATION*		
	D. S. BROWN	STRUCTURAL ACCESSORIES	WATSON BOWMAN & ACME
3"	SS300	30 SS	S-300

*OR AN APPROVED ALTERNATE

JOHN DAVID JONES & ASSOC., INC.
2162 FRONT STREET
CUYAHOGA FALLS, OHIO 44221
ENGINEERS ARCHITECTS PLANNERS

25/34

EXPANSION JOINT & CROSSFRAME CONNECTION DETAILS

BRIDGE NO. SUM-76-12.67
OVER FULLER ST.

DESIGNED	DRAWN	TRACED	CHECKED	REVIEWED	DATE	REVISED
JRS	RCK	-	BRH	PAK	12-7-88	

F.H.W.A. REG.	STATE	PROJECT	
5	OHIO		

928
1214

SUMMIT COUNTY
SUM-76-11.57

GENERAL NOTES

MATERIALS : A588 OR A36 WITH PAINT AS SPECIFIED FOR THE MAIN STRUCTURAL STEEL, EXCEPT THAT SYSTEM OZEU SHALL BE USED WHEN THE MAIN STRUCTURAL STEEL IS TO REMAIN UNPAINTED. PAINTING SHALL BE DONE IN THE FIELD EXCEPT THAT A WASH COAT OF PRIMER SHALL BE APPLIED IN THE SHOP TO ALL SURFACES, INCLUDING THOSE TO BE EMBEDDED IN CONCRETE, TO PREVENT RUSTING AND RUST RUN-OFF. THE WASH COAT SHALL BE REMOVED FROM ALL SURFACES BY SANDBLASTING DURING SURFACE PREPARATION FOR THE FIELD PAINTING. THE FIELD PAINT SHALL CONSIST OF ONE PRIME COAT FOR SYSTEMS A & OZEU OR TWO PRIME COATS FOR SYSTEM B, ONE INTERMEDIATE COAT FOR SYSTEM OZEU, AND ONE FINISH COAT FOR THE SYSTEM USED. A CLOSED CELL BACKER ROD OR SIMILAR MATERIAL SHALL BE INSERTED INTO THE RETAINER GROOVES TO MASK THEM OFF DURING THE PAINTING. STEEL PORTIONS OF THE JOINTS THAT ARE TO BE ENCASED IN CONCRETE OR SURFACES THAT ARE TO BE IN CONTACT WITH CONCRETE MAY REMAIN UNPAINTED.

The preformed strip seal gland shall be extruded polychloroprene material meeting the requirements of ASTM D2628. Due to the configurations of the Strip Seal, the recovery test is not applicable. Physical Properties shall meet the requirements specified in Table "E" this sheet.

Each lot strip seal glands shall be tested by the manufacturer or an accredited laboratory to insure compliance with these provisions. Two certified copies of the qualification test data indicating that the tested materials comply with these provisions shall be submitted to the testing laboratory.

Each strip seal gland design, shape, width, depth and thickness shall be approved by the Director. Material acceptance will be based upon laboratory evaluation of certified test data and the TE-30 field inspection report.

Lubricant - adhesive used to install the preformed strip seals shall be a polyurethane and hydrocarbon solvent mixture as specified by the seal manufacturer (unless otherwise approved by the Director). It shall have suitable consistency at the temperature at which the seals are installed and shall be compatible with the seals and the steel retainers.

SPLICE OR JOINT IN SEAL GLAND: Seal glands for bridge deck joints shall be furnished in one continuous piece unless a shop fabricated splice, field splice or field butt joint is indicated on the plans or approved by the engineer.

Completed splices shall have no offsets on exterior surfaces, and after installation, there shall be no evidence of bond failure at the splices.

For other than straight seals without intermediate splices, seal glands shall be shop fabricated in accordance with approved shop drawings. Shop drawing dimensions for existing joints or for joints which are being modified shall be based on field measurements provided by the contractor.

PREPARATIONS FOR INSTALLATION: To avoid the subsequent contamination of the prepared surfaces, all surfaces of elastomeric strip seal glands shall be cleaned with methyl ethyl ketone (MEK), toluene (T) or other approved solvent using clean disposable cloths.

The bonding surfaces of the steel extrusions (the interior of the anchor grooves) shall be prepared to Grade Sa 3, ASTM D2200. Preparation shall be accomplished not more than 24 hours prior to adhesive bonding.

INSTALLATION: Immediately prior to application of lubricant-adhesive, bonding surfaces shall be clean, dry and warmer than 45°F, and they shall be maintained at or above this temperature until the adhesive has cured. Lubricant-adhesive shall be applied liberally to both steel and elastomeric bonding surfaces using a stiff brush if necessary to achieve a complete and relatively uniform coating. Then the bulbed edges of the elastomeric seal shall be inserted into the anchor grooves. After installation, excess lubricant - adhesive shall be removed from the exposed seal surfaces.

Seal glands shall be installed with equipment designed or specifically adapted for the installation of elastomeric joint seal glands. This equipment shall not elongate the seal gland or cause structural damage to the completed installation.

MEASUREMENT for pay purposes shall be based on the linear foot of sealed joint system, measured horizontally along the joint centerlines and between the outer limits of the fabricated joint, furnished and placed, including all labor, materials and equipment necessary to complete the joint in place, which includes the joint armor, anchoring devices, temporary supports and end crossframe gusset plates. Payment shall be made per linear foot for Item 516 "Structural Expansion Joints, including Elastomeric Strip Seals."

CONSTRUCTION PROCEDURE :

1. Abutment backwall concrete shall not be placed until after superstructure concrete in the span adjacent to the abutment has been placed.
2. Place backwall concrete during stable or rising ambient temperatures and conclude placement at or immediately before the day's peak ambient temperature.
3. Not more than four hours prior to the day's peak ambient temperature, set abutment expansion joint width to Dimension "A" See STRIP SEAL ADJUSTMENT TABLE, see sheet 24/34.
4. Loosen temporary joint armor bolts after initial set of concrete, preferably not later than two hours after conclusion of concrete placement.

TABLE E
(PHYSICAL PROPERTIES OF SEAL ELEMENT)

PROPERTY	REQUIREMENT	ASTM METHOD
TENSILE STRENGTH, MIN. P.S.I.	2000	D412
ELONGATION AT BREAK, MIN. PERCENT	250	D412
HARDNESS, TYPE A DUROMETER	50 MIN. 65 MAX.	D2240 (MODIFIED)
OVEN AGING, 70 HR. AT 212° F TENSILE STRENGTH, LOSS, MAX. ELONGATION, LOSS, MAX. HARDNESS, TYPE A DUROMETER (POINTS CHANGE)	 20 PERCENT 20 PERCENT 0 TO +10	D573
OZONE RESISTANCE 20 PERCENT STRAIN, 300 PPHM, IN AIR AT 104°F (WIPED WITH TOLUENE TO REMOVE SURFACE CONTAMINATION)	NO CRACKS	D1149

JOHN DAVID JONES & ASSOC., INC.
2152 FRONT STREET
CUYAHOGA FALLS, OHIO 44221
ENGINEERS ARCHITECTS PLANNERS

26/34

EXPANSION JOINT DETAILS

BRIDGE NO. SUM-76-12.67
OVER FULLER ST.

DESIGNED	DRAWN	TRACED	CHECKED	REVIEWED	DATE	REVISED
JRS	RCK	-	BRH	PAK	12-7-88	

F.H.W.A. REGION	STATE	PROJECT	
5	OHIO		

929
1214

SUMMIT COUNTY
SUM-76-11.57

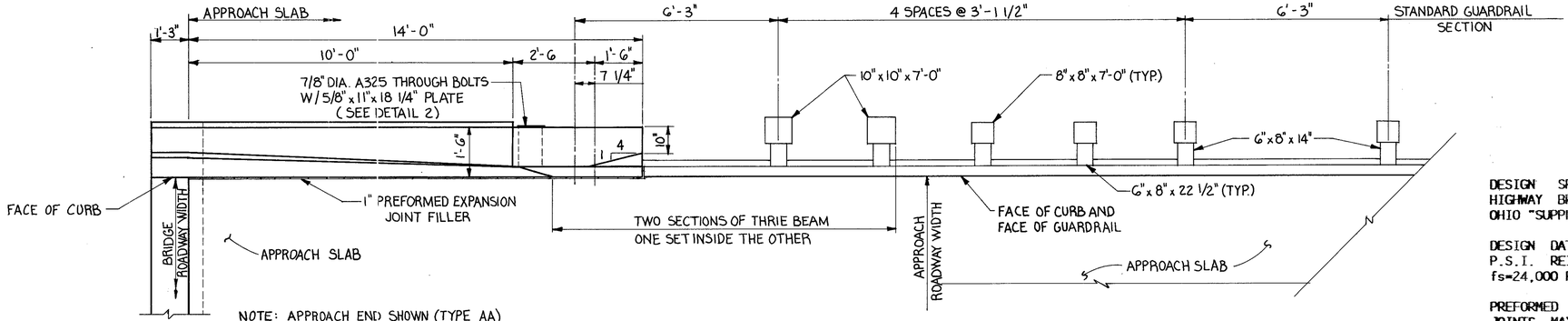

NOTE: APPROACH END SHOWN (TYPE AA) TRAILING END SIMILAR (TYPE AT) (SEE STD. DRAWING GR-3)

1/15|16 DETAIL
PART PLAN @ ABUTMENT

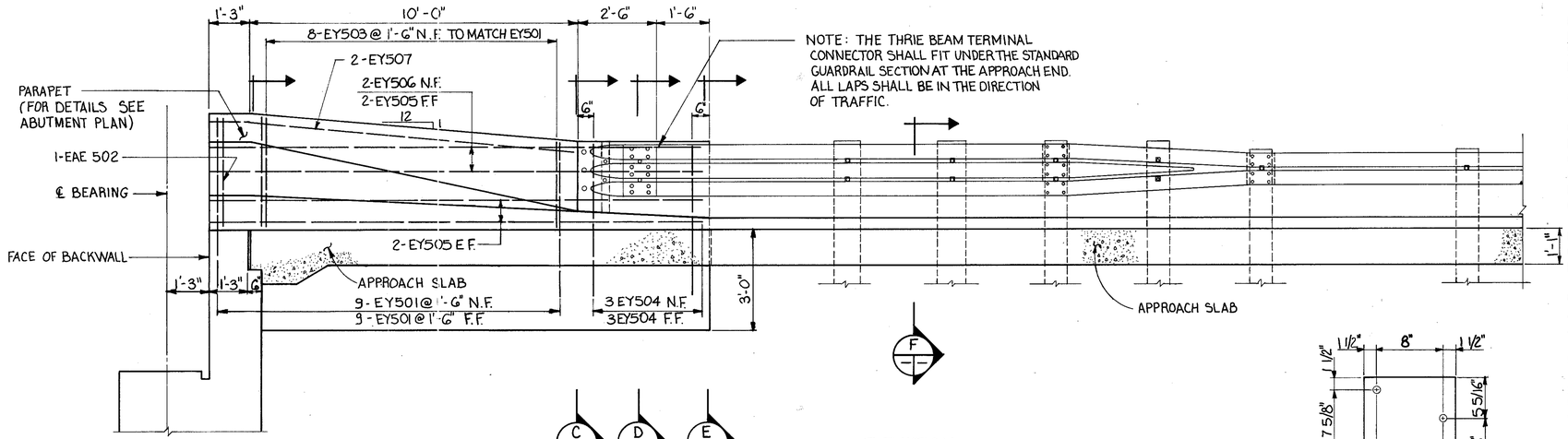

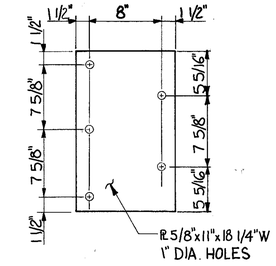

2 DETAIL

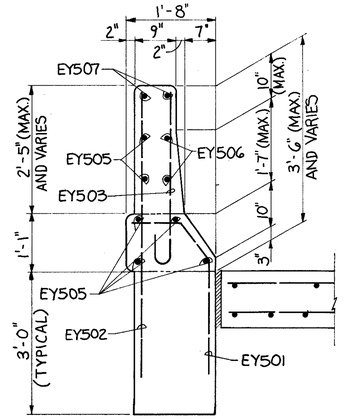

B SECTION

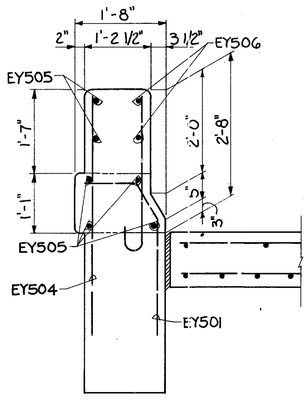

C SECTION

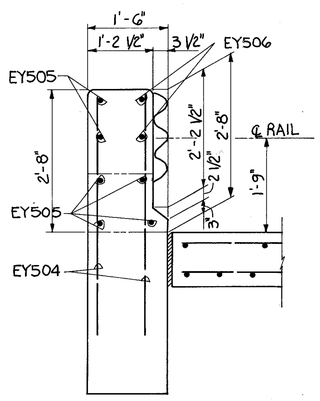

D SECTION

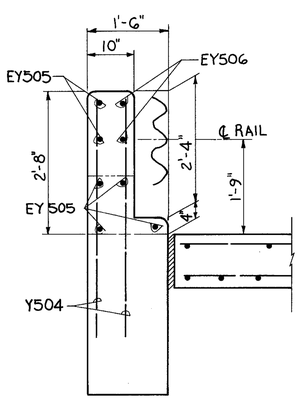

E SECTION

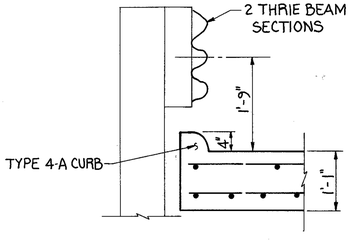

F SECTION

GENERAL NOTES

DESIGN SPECIFICATIONS: "STANDARD SPECIFICATIONS FOR HIGHWAY BRIDGES" ADOPTED BY AASHTO, 1989, INCLUDING THE OHIO "SUPPLEMENT" TO THESE SPECIFICATIONS.

DESIGN DATA: CONCRETE CLASS S fc=4500 P.S.I., fc=1500 P.S.I. REINFORCING STEEL ASTM A615, A616, 1617 GRADE 60 fs=24,000 P.S.I.

PREFORMED EXPANSION JOINT FILLER IN THE PARAPET DEFLECTION JOINTS MAY BE EITHER 1/4" GRAY SPONGE RUBBER OR 1/4" FILLER CELLULAR POLYVINYL CHLORIDE (PVC) SPONGE. SPONGE RUBBER FILLER SHALL CONFORM TO AASHTO M-153, TYPE 1. DENSITY OF PVC SPONGE NOT BE LESS THAN 20 LBS. PER CU. FT.

DEFLECTION JOINTS SHALL BE SPACED AT 16'-0" CENTERS, MAX., EXCEPT THAT FOR CONTINUOUS STRUCTURES THE PANELS SHALL BE FURTHER SUBDIVIDED IN THE NEGATIVE MOMENT REGION (OVER THE PIERS) INTO LENGTHS OR NOT LESS THAN 5'-0" NOR MORE THAN 7'-6". REINFORCING BARS SHALL NOT EXTEND THROUGH DEFLECTION JOINTS.

CONCRETE PARAPETS ABOVE UPPER CONSTRUCTION JOINT SHALL BE PLACED IN ALTERNATE SECTIONS BY THE USE OF BULKHEADS. CLOSING SECTIONS SHALL BE PLACED AFTER REMOVAL OF BULKHEADS AND AFTER PLACEMENT OF EXPANSION JOINT FILLER. EXPOSED EDGES OF THE FILLER SHALL BE FLUSH WITH THE SURFACE ON CONCRETE AND SHALL BE FREE OF MORTAR.

PAYMENT: ADDITIONAL GUARDRAIL COST IN EXCESS OF NORMAL GUARDRAIL COST, SUCH AS: TERMINAL CONNECTOR, STEEL PLATE, BOLTS, NUTS, PLATE WASHERS AND OTHER HARDWARE SHALL BE INCLUDED WITH BRIDGE TERMINAL ASSEMBLY FOR PAYMENT. QUANTITIES OF CONCRETE AND REINFORCING STEEL FOR PARAPET ARE INCLUDED WITH THEIR APPROPRIATE ITEM UNDER EITHER ABUTMENTS OR SUPERSTRUCTURE FOR PAYMENT.

POSTS SHALL BE SQUARE-SAWED PRESSURE TREATED WOOD AS PER 710.14. POSTS SHALL BE FABRICATED WITH SQUARE ENDS. BOLT HOLES SHALL BE BORED AND TOPS OF POSTS TRIMMED, IF REQUIRED, AFTER POSTS ARE SET. POSTS MAY BE SET IN DRILLED HOLES OR DRIVEN TO GRADE. STEEL POSTS AND BLOCKOUTS MAY BE FURNISHED AS AN ALTERNATE, PROVIDED THAT THE STRENGTH EQUALS OR EXCEEDS THE STRENGTH OF WOOD POSTS AND BLOCKOUTS.

WORK THIS DRAWING WITH STANDARD CONSTRUCTION DRAWING GR-3 (BRIDGE TERMINAL ASSEMBLIES)

FOR REINFORCING STEEL LIST SEE BRIDGE TERMINAL PARAPETS, SHEET 32/34

JOHN DAVID JONES & ASSOC., INC. 27/34
2162 FRONT STREET
CUYAHOGA FALLS, OHIO 44221
ENGINEERS ARCHITECTS PLANNERS

BRIDGE RAILING DEFLECTOR PARAPET TYPE

BRIDGE No. SUM-76-1267 OVER FULLER ST.

DESIGNED	DRAWN	TRACED	CHECKED	REVIEWED	DATE	REVISED
GFD	DB	—	PAK		6/90	

929261

F.H.W.A. REGION	STATE	PROJECT	
5	OHIO		

930
1214

SUMMIT COUNTY
SUM-76-11.57

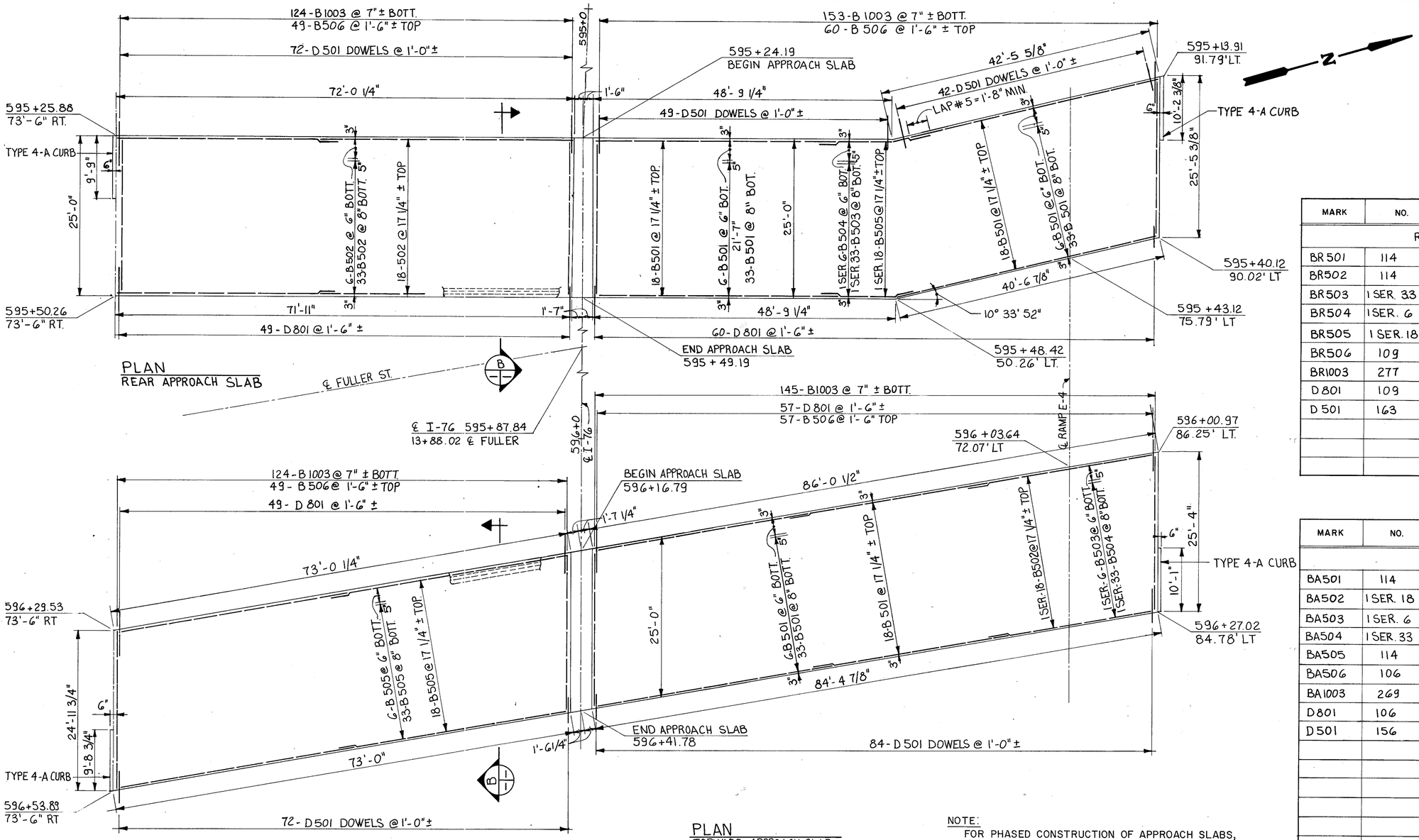

MARK	NO.	LENGTH	SER. INCR.	TYPE	A
REAR APPROACH SLAB					
BR501	114	40'-0"	—	STR.	
BR502	114	36'-8"	—	STR.	
BR503	1 SER. 33	12'-6" 14'-3"	5/8"	4	2'-3" 4'-0"
BR504	1 SER. 6	12'-3" 12'-6"	5/8" ±	4	2'-0" 2'-3"
BR505	1 SER. 18	12'-3" 14'-3"	1 3/8" ±	4	2'-0" 4'-0"
BR506	109	24'-6"	—	STR.	
BR1003	277	25'-11"	—	6	24'-6"
D801	109	5'-1"	—	SEE DETAIL	
D501	163	1'-6"		PAV'T. DOWELS	

MARK	NO.	LENGTH	SER. INCR.	TYPE	A
FORWARD APPROACH SLAB					
BA501	114	30'-0"	—	STR.	
BA502	1 SER. 18	28'-10" 27'-3"	1 1/8"	STR.	
BA503	1 SER. 6	28'-10" 28'-8"	3/8"	STR.	
BA504	1 SER. 33	28'-8" 27'-3"	1/2" ±	STR.	
BA505	114	37'-1"	—	STR.	
BA506	106	24'-6"	—	STR.	
BA1003	269	25'-11"	—	6	24'-6"
D801	106	5'-1"	—	SEE DETAIL	
D501	156	1'-6"		PAV'T. DOWELS	

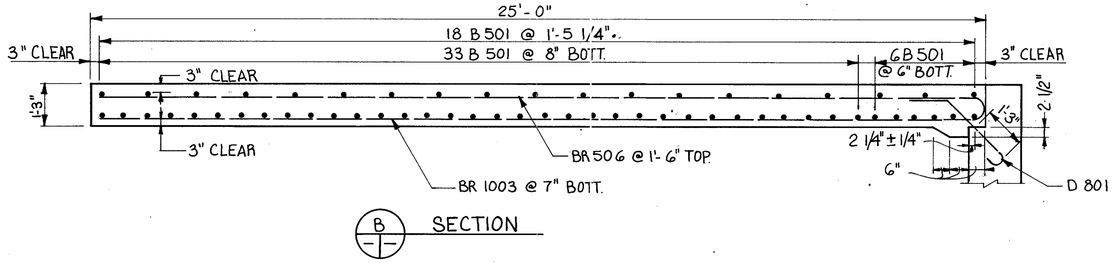

NOTE:
FOR PHASED CONSTRUCTION OF APPROACH SLABS, #5 BARS SHALL BE LAPPED 1'-8" OR HAVE MECHANICAL CONNECTIONS CAPABLE OF DEVELOPING 125° OF THE YIELD POINT OF THE BAR. SPLICES ARE CONSIDERED INCIDENTAL TO ITEM 611, REINFORCED CONCRETE APPROACH SLABS.

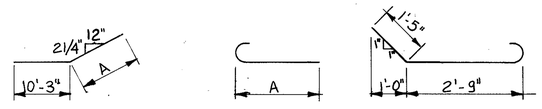

JOHN DAVID JONES & ASSOC., INC. 28/34
2162 FRONT STREET
CUYAHOGA FALLS, OHIO 44221
ENGINEERS ARCHITECTS PLANNERS

REINFORCED CONCRETE APPROACH SLABS

BRIDGE NO. SUM-76-12.67
OVER FULLER ST.

DESIGNED	DRAWN	TRACED	CHECKED	REVIEWED	DATE	REVISED
GFD	DB		BRH	PAK	6/21/90	

MARK	NO.	LENGTH	SER. INCR.	TYPE	WEIGHT	A	B	C	D
EAST ABUTMENT									
AE1001	8	11'-7"		34	399	1'-10"	9'-9"	5 3/8"	
AE1002	8	29'-4"		6	1010	27'-10"			
AE1003	8	17'-9"		6	611	16'-3"			
AE1004	15	26'-3"		34	1694	1'-10"	24'-5"	3 3/4"	
AE1005	9	15'-5"		6	1327	14'-0"			
AE1006	15	21'-2"		6	1366	19'-8"			
AE1007	15	14'-8"		6	947	13'-2"			
AE801	10	28'-1"		STR	750				
AE802	1 SER 14	16'-10" / 28'-1"	10 3/8"	↓	840				
AE803	1 SER. 3	26'-4" / 28'-1"	10 1/2"		218				
AE804	1 SER 20	16'-10" / 25'-11"	5 3/4"		1142				
AE805	2	17'-8"			94				
AE806	1 SER 19	19'-8 1/2" / 23'-1"	2 1/4"		1084				
AE807	1 SER 8	21'-9" / 23'-1"	2 1/4"		479				
AE808	1 SER 20	19'-8 1/2" / 21'-10"	1 1/4"	↓	1109				
AE809	47	30'-0"		STR	3765				
AE810	47	19'-4"		4	2426	13'-6"	6'-0"	12"	4 3/8"
AE811	4	12'-0"		STR	128				
DB01	108	4'-11"		14	1418	2'-7"			
AE701	164	18'-4"		STR	6146				
AE702	86	6'-0"		STR	1055				
AE703	2 SER 10	4'-6" / 16'-10 1/2"	1'-4 1/2"	STR	437				
AE704	44	14'-8"		1	1319	1'-6"	6'-9"		
AE705	40	14'-2"		1	1158	1'-0"	6'-9"		
AE706	2	14'-6"		1	60	1'-4"	6'-9"		
AE707	30	26'-0"		STR	1594				
AE708	2 SER 12	28'-0" / 22'-0"	6"	STR	1226				
AE709	2 SER 8	18'-6" / 8'-10"	8 1/4"	1	447	1'-10"	8'-11" / 4'-1"		
AE710	27	9'-8"		4	534	7'-1"	2'-7"	12"	4 3/8"
AE711	22	10'-9"		STR	484				
AE712	1	10'-4"		STR.	21				
AE713	1	13'-1"		↓	27				
AE714	2	16'-0"			65				
AE715	1	15'-8"			32				
AE716	1	13'-6"			28				
AE717	1	11'-4"			23				
AE718	13	19'-8"			523				
AE719	13	22'-10"			607				
AE720	1	22'-5"			46				
AE721	1	25'-7"			52				
AE722	5	27'-8"			283				
AE723	5	30'-10"			315				
AE724	1 SER 8	26'-3" / 11'-0"	2'-0 1/8"	↓	305				
AE725	1 SER 8	29'-5" / 14'-2"	2'-0 1/8"	STR	356				
AE726	1	27'-2"		4	56	22'-9"	4'-5"	12"	4 3/8"

MARK	NO.	LENGTH	SER. INCR.	TYPE	WEIGHT	A	B	C	D
EAST ABUTMENT (CONTINUED)									
AE727	1	25'-9"		4	53	21'-8"	4'-1"		4 3/8"
AE728	94	28'-3"		STR	5428				
AE729	2 SER 14	29'-8" / 22'-10"	5 7/8"	STR	1502				
AE730	4	10'-0"		STR	82				
AE731	61	30'-0"		STR	3741				
AE732	28	13'-2"		4	754	10'-7"	2'-7"	12"	4 3/8"
AE733	24	15'-0"		STR	736				
AE734	1	17'-9"		↓	36				
AE735	1	20'-3"			42				
AE736	2	20'-10"			85				
AE737	1	17'-5"			36				
AE738	1	14'-4"			29				
AE739	14	21'-2"			606				
AE740	15	24'-4"			746				
AE741	1	27'-6"			56				
AE742	5	29'-2"			298				
AE743	5	32'-4"			330				
AE744	1 SER 9	27'-3" / 11'-1"	2'-0 1/4"	↓	353				
AE745	1 SER 9	30'-5" / 13'-10"	2'-0 7/8"	STR	407				
AE746	1	29'-11"		4	61	24'-6"	5'-5"	12"	4 3/8"
AE747	1	29'-0"		4	59	23'-4"	5'-8"	12"	4 3/8"
AE748	10	9'-8"		1	198	1'-8"	4'-4"		
AE749	2	18'-10"		STR	77				
AE751	15	4'-5"		STR	136				
AE602	28	8'-5		1	354	1'-5"	3'-8"		
AE603	1 SER 17	10'-11" / 8'-9"	7/8"	1	251	1'-5"	4'-11" / 3'-10"		
AE604	4	10'-7"		1	64	1'-5"	4'-9"		
AE605	35	9'-7"		1	504	1'-5"	4'-3"		
AE606	31	6'-1"		1	283	1'-5"	2'-6"		
AE607	27	30'-0"		STR	1217				
AE608	9	12'-6"		↓	169				
AE609	4	21'-0"			126				
AE610	9	9'-2"			124				
AE611	11	10'-10"			179				
AE612	10	15'-5"		STR	232				
AE620	2	8'-1"		1	24	1'-5"	3'-6"		
AE621	2	6'-5"		4	20	4'-3"	2'-2"	12"	6"
AE622	2	4'-3"		4	13	2'-1"	2'-2"	12"	6"
AE623	2	17'-10"		4	54	17'-4"	0'-6"	12"	4 3/8"
AE624	2	20'-4"		4	61	17'-4"	3'-0"	12"	4 3/8"
AE625	10	7'-5"		STR	111				
AE626	2	10'-2"		4	31	8'-7"	11'-7"	12"	4 3/8"
AE627	2	12'-6"		4	38	8'-7"	3'-11"	12"	4 3/8"
AE628	9	9'-1"		1	123	1'-5"	4'-0"		
AE629	30	7'-2"		4	323	5'-9"	1'-5"	12"	1'-1 5/16"
AE630	2 SER 5	7'-1" / 3'-10"		4	82	5'-8" / 2'-5"	1'-5"	12"	1'-1 5/16"

CALC. BY: RCK DATE: 11-22-88
CHECKED BY: GFD DATE: 1-2-89

F.H.W.A. REGION	STATE	PROJECT
5	OHIO	

931/1214

SUMMIT COUNTY
SUM-76-11.57

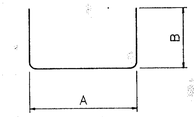

TYPE 1

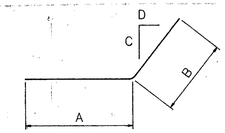

TYPE 4

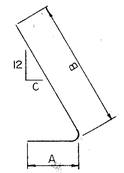

TYPE 34

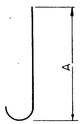

TYPE 6

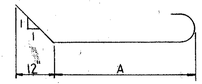

TYPE 14

REINFORCING STEEL SAMPLES

REFER TO CMS SECTIONS 106.03, 700, 709.01 THROUGH 709.05 AND 709.08. SUFFICIENT ADDITIONAL REINFORCING STEEL SHALL BE PROVIDED FOR SAMPLING. RANDOM SAMPLES SHALL BE REPLACED IN STRUCTURES BY THE ADDITIONAL STEEL , SPLICED IN ACCORDANCE WITH 509.08.

JOHN DAVID JONES & ASSOC., INC.
2162 FRONT STREET
CUYAHOGA FALLS, OHIO 44221
ENGINEERS ARCHITECTS PLANNERS

29/34

REINFORCING STEEL LIST

BRIDGE No. SUM-76-12.67
OVER FULLER ST.

DESIGNED	DRAWN	TRACED	CHECKED	REVIEWED	DATE	REVISED
RCK	EMB	-	BRH	PAK	12-7-88	

MARK	NO.	LENGTH	SER. INCR.	TYPE	WEIGHT	A	B	C	D
EAST ABUTMENT (CONTINUED)									
AE631	7	5'-8"		2	60	2'-0"	3'-10"		
AE632	2 SER 7	8'-10" / 5'-2"	4 3/8"	2	147	2'-0"	3'-6" / 1'-3"		
AE633	39	6'-8"		2	391	3'-0"	3'-10"		
AE634	13	11'-3"		1	220	1'-5"	5'-1"		
AE635	16	9'-11"		1	238	1'-5"	4'-5"		
AE636	7	22'-3"		STR	234				
AE506	2 SER 19	26'-5" / 6'-3"		33	648	1'-8"	11'-9" / 1'-8"	10 1/2"	
AE507	4 SER 5	19'-0" / 5'-8"	3'-4"	STR	257				
AE508	3 SER 21	26'-9" / 11'-3"	4 5/8"	33	1248		11'-11" / 4'-2"		
AE509	6 SER 5	25'-10" / 5'-7"	5'-0 3/4"	STR	492				
	TOTAL UNCOATED BARS =				62,175				
EAE601	113	7'-3"		1	1231	1'-1"	3'-3"		
EAE613	1	8'-5"		STR	13				
EAE614		30'-0"			135				
EAE615	1	12'-6"			19				
EAE616	1	9'-2"			14				
EAE617	1	10'-10"			16				
EAE618	1	15'-5"		STR	23				
EAE619	4	3'-11"		9	24	9"	6"	2'-4"	8 1/2"
EAE637	1	22'-3"		STR	34				
EAE638	1	7'-5"		STR	11				
EAE501	40	0'-11"		STR	39				
EAE502	2	6'-11"		27	15	3'-0"	8'-0"	2'-7"	
EAE503	8	2'-9"		STR	23				
EAE504	2	8'-3"		27	17	3'-8"	1'-4"	2'-7"	
EAE505	2	9'-5"		27	20	4'-3"	1'-11"	2'-7"	
	TOTAL COATED BARS =				1634				

MARK	NO.	LENGTH	SER. INCR.	TYPE	WEIGHT	A	B	C	D

CALC. BY: RCK DATE: 11-22-88
CHECKED BY: GFD DATE: 1-2-89

F.H.W.A. REGION	STATE	PROJECT
5	OHIO	

932
1214

SUMMIT COUNTY
SUM-76-11.57

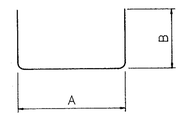

TYPE 1

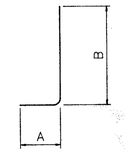

TYPE 2

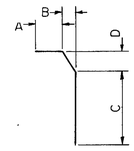

TYPE 9

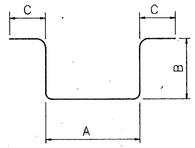

TYPE 33

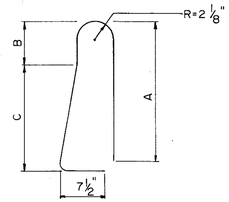

TYPE 27

'E' PREFIX INDICATES BAR IS TO BE EPOXY COATED.

REINFORCING STEEL SAMPLES

REFER TO CMS SECTIONS 106.03, 700, 709.01 THROUGH 709.05 AND 709.08. SUFFICIENT ADDITIONAL REINFORCING STEEL SHALL BE PROVIDED FOR SAMPLING. RANDOM SAMPLES SHALL BE REPLACED IN STRUCTURES BY THE ADDITIONAL STEEL , SPLICED IN ACCORDANCE WITH 509.08.

JOHN DAVID JONES & ASSOC., INC.
2162 FRONT STREET
CUYAHOGA FALLS, OHIO 44221
ENGINEERS ARCHITECTS PLANNERS

30/34

REINFORCING STEEL LIST

BRIDGE No. SUM-76-12.67
OVER FULLER ST.

DESIGNED	DRAWN	TRACED	CHECKED	REVIEWED	DATE	REVISED
RCK	EMB	-	BRH	PAK	12-7-88	

MARK	NO.	LENGTH	SER. INCR.	TYPE	WEIGHT	A	B	C	D
WEST ABUTMENT									
AW1101	4	18'-2"		6	386	16'-9"			
AW1001	4	11'-8"		34	201	1'-10"	9'-11"	6 5/16"	
AW1002	4	25'-11"		6	446	24'-6"			
AW1003	4	11'-8"		34	201	1'-10"	9'-10"	5 5/8"	
AW1004	4	28'-3"		6	486	26'-10"			
AW1005	20	15'-5"		6	1327	14'-0"			
AW1006	20	21'-2"		6	1822	19'-9"			
AW1007	20	26'-4"		34	2266	1'-10"	24'-6"		4 1/4"
AW1008	3	12'-5"		6	161	11'-0"			
AW1009	9	11'-5"		6	442	10'-0"			
AW801	1 SER 19	17'-10 1/2" / 21'-3"	2 1/4"	STR	993				
AW802	1 SER 8	19'-11" / 21'-3"	2 1/4"	↓	440				
AW803	1 SER 20	17'-10 1/2" / 19'-10"	1 1/4"		1007				
AW804	1 SER 19	14'-4" / 15'-10"	1"		765				
AW805	1 SER 8	15'-3" / 15'-10"	1"		332				
AW806	1 SER 20	14'-4" / 15'-3"	9/16"	STR	790				
AW807	47	11'-10"		4	1485	6'-0"	6'-0"	12	4 3/8"
AW808	1 SER 19	23'-6" / 26'-10"	2 1/4"	STR	1277				
AW809	1 SER 8	25'-6" / 26'-10"	2 1/4"	↓	559				
AW810	1 SER 20	23'-6" / 26'-9"	1 3/16"		1342				
AW811	1 SER 20	28'-5" / 32'-6"	2 9/16"		1627				
AW812	1 SER 8	32'-6 1/2" / 35'-2"	4 1/2"	↓	766				
AW813	1 SER 19	28'-5" / 35'-2"	4 1/2"	STR	1613				
AW814	47	18'-10"		4	2364	13'-0"	6'-0"	12	4 3/8"
AW815	8	12'-0"		STR	256				
AW816	4	11'-10"		6	127	10'-11"			
D801	111	4'-11"		14	1457	2'-7"			
AW701	210	18'-4"		STR	7869				
AW702	103	6'-0"		STR	1263				
AW703	57	14'-8"		1	1709	1'-6"	6'-9"		
AW704	43	14'-2"		1	1245	1'-0"	6'-9"		
AW705	2	14'-6"		1	59	1'-4"	6'-9"		
AW706	51	25'-7"		STR	667				
AW707	2 SER 11	26'-10" / 21'-8"	5 5/8"	STR	1090				
AW708	1 SER 8	18'-0" / 15'-8"	8"	1	275	1'-2"	8'-7" / 3'-11"		
AW709	13	19'-4"		STR	514				
AW710	13	22'-6"		↓	598				
AW711	1	24'-0"			49				
AW712	1	27'-2"			56				
AW713	4	27'-4"		↓	224				
AW714	4	30'-6"		STR	250				
AW715	27	18'-11"		4	1044	16'-4"	2'-7"		4 3/8"
AW716	24	21'-4"		STR	1047				
AW717	3	23'-11"		↓	147				
AW718	2	26'-9"		↓	110				
AW719	2	23'-9"		STR	97				

MARK	NO.	LENGTH	SER. INCR.	TYPE	WEIGHT	A	B	C	D
WEST ABUTMENT (CONTINUED)									
AW720	1 SER 8	27'-4" / 10'-4"	2'-5 1/8"	STR	308				
AW721	1 SER 8	27'-8" / 10'-8"	2'-5 1/8"	↓	310				
AW722	100	24'-6"		↓	5008				
AW723	2 SER 18	26'-0" / 19'-11"	4 5/16"	STR	1689				
AW724	1 SER 8	17'-2" / 8'-10"	7 1/8"	1	213	1'-2"	8'-2" / 4'-0"		
AW725	54	30'-0"		STR	3311				
AW726	25	16'-3"		4	831	2'-7"	13'-8"		4 3/8"
AW727	22	19'-0"		STR	854				
AW728	12	25'-0"		↓	613				
AW729	12	28'-2"		↓	691				
AW730	1	31'-0"		↓	64				
AW731	1	34'-2"		↓	70				
AW732	4	33'-0"		↓	270				
AW733	4	36'-2"		↓	296				
AW734	1 SER 8	32'-1" / 14'-11"	2'-5 7/16"	↓	384				
AW735	1 SER 8	35'-3" / 18'-1"	2'-5 7/16"	STR	436				
AW736	1	31'-6"		4	65	26'-9"	4'-9"	12"	4 3/8"
AW737	1	30'-5"		4	62	25'-8"	4'-9"	12"	4 3/8"
AW738	4	10'-0"		STR	82				
AW739	1	26'-10"		4	55	22'-4"	4'-6"	12"	4 3/8"
AW740	1	26'-2"		4	54	21'-3"	4'-11"	12"	4 3/8"
AW741	2	21'-6"		STR	88				
AW742	30	10'-0"		1	614	1'-8"	4'-4"		
AW743	2 SER 5	16'-2" / 4'-9"	2'-10 1/4"	STR	214				
AW744	2 SER 5	18'-3" / 5'-5"	3'-2 1/2"	STR	242				
AW602	41	6'-3"		1	385	1'-5"	2'-6"		
AW 603	68	9'-3"		1	945	1'-5"	4'-0"		
AW 604	1 SER 14	10'-1" / 8'-11"	3/4"	1	200	1'-5"	4'-5" / 3'-10"		
AW 605	27	30'-0"		STR	1217				
AW 606	11	15'-3"		↓	252				
AW 608	20	9'-0"		↓	270				
AW 609	9	23'-1"		↓	312				
AW 610	2	15'-5"		STR	46				
AW 617	2	8'-7"		1	26	1'-5"	3'-8"		
AW 618	2	7'-9"		1	23	1'-5"	3'-3"		
AW 619	3	18'-9"		STR	85				
AW 620	2	21'-8"		4	65	19'-7"	2'-1"	12"	4 3/8"
AW 621	2	24'-8"		4	74	19'-7"	5'-1"	12"	4 3/8"
AW 622	3	21'-3"		STR	96				
AW 623	2	23'-0"		STR	69				
AW 624	2	25'-6"		4	77	23'-6"	2'-0"	12"	4 3/8"
AW 627	39	7'-2"		4	420	5'-9"	1'-5"	12"	1-1 5/16"
AW 628	2 SER 5	6'-5" / 3'-10"	7 3/4"	4	77	5'-0" / 2'-5"	1'-5"	12"	1-1 5/16"
AW 629	1 SER 7	10'-7" / 9'-9"	7/8"	1	107	1'-5"	4'-8" / 4'-3"		
AW 630	1	8'-3"		1	13	1'-5"	3'-7"		
AW 631	59	7'-1"		2	628	3'-2"	4'-1"		
AW 632	2 SER 7	6'-8" / 4'-10"	3'-11/16"	2	121	3'-2"	3'-6" / 1'-8"		

CALC. BY: RCK DATE: 11/22/88
CHECKED BY: GFD DATE: 1/2/88

F.H.W.A. REGION	STATE	PROJECT
5	OHIO	

933
1214

SUMMIT COUNTY
SUM-76-11.57

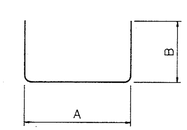

TYPE 1

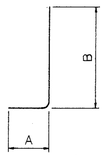

TYPE 2

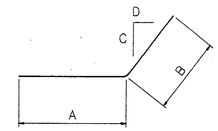

TYPE 4

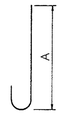

TYPE 6

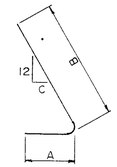

TYPE 34

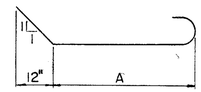

TYPE 14

REINFORCING STEEL SAMPLES

REFER TO CMS SECTIONS 106.03, 700, 709.01 THROUGH 709.05 AND 709.08. SUFFICIENT ADDITIONAL REINFORCING STEEL SHALL BE PROVIDED FOR SAMPLING. RANDOM SAMPLES SHALL BE REPLACED IN STRUCTURES BY THE ADDITIONAL STEEL , SPLICED IN ACCORDANCE WITH 509.08.

JOHN DAVID JONES & ASSOC., INC.
2162 FRONT STREET
CUYAHOGA FALLS, OHIO 44221
ENGINEERS ARCHITECTS PLANNERS

31 / 34

REINFORCING STEEL LIST

BRIDGE No. SUM-76-12.67
OVER FULLER ST.

DESIGNED	DRAWN	TRACED	CHECKED	REVIEWED	DATE	REVISED
RCK	EMB	–	BRH	PAK	12-7-88	

MARK	NO.	LENGTH	SER. INCR.	TYPE	WEIGHT	A	B	C	D
WEST ABUTMENT (CONTINUED)									
AW633	13	11'-7"		1	226	1'-5"	5'-3"		
AW634	18	10'-1"		1	273	1'-5"	4'-6"		
AW506	1 SER 16	26'-3" / 6'-3"	8"	33	271	1'-8"	11'-8" / 1'-8"	10½"	
AW507	1 SER 18	26'-3" / 6'-3"	7 1/16"	33	305	1'-8"	11'-8" / 1'-3"	10½"	
AW508	3 SER 18	26'-7" / 11'-3"	5 7/16"	33	1065	1'-8"	11'-10" / 4'-2"	10½"	
AW509	6 SER 5	20'-9" / 4'-0"	4'-2¼"	STR	387				
AW510	1 SER 19	26'-9" / 12'-1"	5 3/16"	33	385	1'-8"	11'-11" / 4'-7"	10½"	
AW511		21'-9" / 4'-3"	4'-4½"	STR	136				
		TOTAL UNCOATED BARS = 71,905 LBS.							
EAW601	115	7'-3"		1	1252	11"	3'-3"		
EAW607	1	13'-6"		STR	21				
EAW611	1	16'-9"			25				
EAW612	3	30'-0"			135				
EAW613	1	15'-3"			23				
EAW614	2	9'-0"			28				
EAW615	1	23'-1"		STR	35				
EAW616	4	3'-11"		9	24	9"	6"	2'-4"	8½"
EAW625	2	6'-5"		4	20	4'-3"	2'-2"	12"	4 3/8"
EAW626	2	4'-3"		4	13	2'-2"	2'-1"	12"	4 3/8"
EAW501	40	11"		STR	39				
EAW502	2	6'-11"		27	15	3'-0"	8"	2'-7"	
EAW503	8	2'-9"		STR	23				
EAW504	2	8'-3"		27	17	3'-8"	1'-4"	2'-7"	
EAW505	2	9'-5"		27	20	4'-3"	1'-11"	2'-7"	
		TOTAL COATED BARS =			1690	LBS.			

MARK	NO.	LENGTH	SER. INCR.	TYPE	WEIGHT	A	B	C	D
BRIDGE TERMINAL PARAPETS									
EY501	36	3'-11"		9	147	9"	6"	2'-4"	8½"
EY502	36	5'-2"		STR	194	STR			
EY503	32	3'-10		6	128	3'-3"			
EY504	24	4'-4"		STR	109				
EY505	24	14'-11"		STR	374				
EY506	8	14'-11"		STR	125				
EY507	8	11'-0"		4	92	9'-11"	1'-1"	1"	12"
				TOTAL COATED BARS = 1169 LBS					

CALC. BY: RCK DATE: 11-22-88
CHECKED BY: GFD DATE: 1-2-89

F.H.W.A. REGION	STATE	PROJECT
5	OHIO	

934
1214

SUMMIT COUNTY
SUM-76-11.57

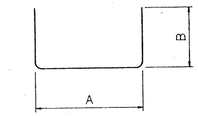

TYPE 1

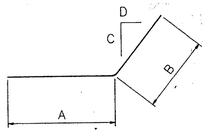

TYPE 4

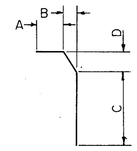

TYPE 9

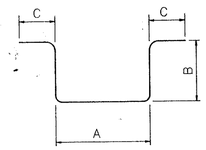

TYPE 33

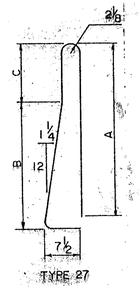

TYPE 27

'E' PREFIX INDICATES BAR IS TO BE EPOXY COATED.

REINFORCING STEEL SAMPLES

REFER TO CMS SECTIONS 106.03, 700, 709.01 THROUGH 709.05 AND 709.08. SUFFICIENT ADDITIONAL REINFORCING STEEL SHALL BE PROVIDED FOR SAMPLING. RANDOM SAMPLES SHALL BE REPLACED IN STRUCTURES BY THE ADDITIONAL STEEL, SPLICED IN ACCORDANCE WITH 509.08.

JOHN DAVID JONES & ASSOC., INC.
2162 FRONT STREET
CUYAHOGA FALLS, OHIO 44221
ENGINEERS ARCHITECTS PLANNERS

32/34

REINFORCING STEEL LIST

BRIDGE No. SUM-76-12.67
OVER FULLER ST.

DESIGNED	DRAWN	TRACED	CHECKED	REVIEWED	DATE	REVISED
RCK	EMB	-	BRH	PAK	12-7-88	

MARK	NO.	LENGTH	SER. INCR.	TYPE	WEIGHT	A	B	C	D
NORTH SLAB									
ESN601	20	28'-0"		STR	841				
ESN602	23	27'-4"			945				
ESN603	23	26'-4"			910				
ESN604	24	25'-4"			913				
ESN605	90	30'-5"			4112				
ESN606	94	36'-7"			5165				
ESN607	1 SER 3	4'-11" / 11'-7"	3'-4"		37				
ESN608	1 SER 9	6'-7" / 33'-3"	3'-4"		269				
ESN609	2	3'-2"		STR	10				
ESN501	139	30'-0"		STR	4349				
ESN502	14	26'-11"			393				
ESN503	36	26'-1"			980				
ESN504	5	27'-1"			142				
ESN505	5	28'-1"			146				
ESN506	5	29'-1"			152				
ESN507	6	30'-1"			157				
ESN508	6	31'-1"			195				
ESN509	5	3'-5"			18				
ESN510	5	4'-5"			23				
ESN511	6	5'-5"			34				
ESN512	5	6'-5"			34				
ESN513	10	7'-2"			75				
ESN514	20	24'-3"			506				
ESN515	23	23'-6"			564				
ESN516	23	22'-6"			540				
ESN517	24	21'-6"			538				
ESN518	90	34'-2"			3208				
ESN519	94	36'-9"			3603				
ESN520	1 SER 3	5'-10" / 11'-8"	3'-4"		28				
ESN521	1 SER 9	6'-7" / 33'-3"	3'-4"		187				
ESN522	2	3'-2"			7				
ESN523	18	13'-6"		STR	254				
ESN524	82	3'-3"		13	278	11"	9"	6"	8½"
ESN525	82	2'-5"		2	207	1'-8"	10½"		
ESN526	38	6'-11"		27	268	3'-0"	8"	2'-7"	"
ESN527	6	12'-6"		STR	78				
ESN528	24	12'-3"		STR	307				
ESN529	44	8'-3"		27	371	3'-8"	1'-4"	2'-7"	"
ESN530	6	13'-2"		STR	83				
ESN401	144	30'-0"		STR	2886				
ESN402	12	26'-7"			213				
ESN403	40	25'-9"			688				
ESN404	6	26'-9"			107				
ESN405	6	27'-9"			111				
ESN406	6	28'-9"			116				
ESN407	6	29'-9"		STR	119				

MARK	NO.	LENGTH	SER. INCR.	TYPE	WEIGHT	A	B	C	D
NORTH SLAB (CONTINUED)									
ESN408	6	30'-9"		STR	124				
ESN409	6	2'-9"			11				
ESN410	6	3'-9"			15				
ESN411	6	4'-9"			19				
ESN412	6	5'-9"			23				
ESN413	7	6'-9"	STR	STR	32				
		TOTAL COATED BARS =			35,391	LBS.			

CALC. BY: RCK DATE: 11-22-88
CHECKED BY: GFD DATE: 1-2-89

F.H.W.A. REGION	STATE	PROJECT
5	OHIO	

935
1214

SUMMIT COUNTY
SUM-76-11.57

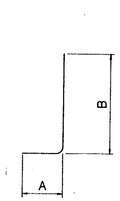

TYPE 2

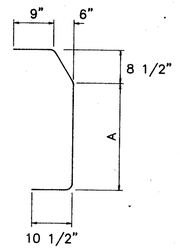

TYPE 13

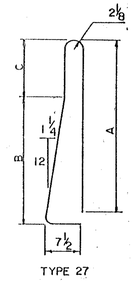

TYPE 27

'E' PREFIX INDICATES BAR IS TO BE EPOXY COATED.

REINFORCING STEEL SAMPLES

REFER TO CMS SECTIONS 106.03, 700, 709.01 THROUGH 709.05 AND 709.08. SUFFICIENT ADDITIONAL REINFORCING STEEL SHALL BE PROVIDED FOR SAMPLING. RANDOM SAMPLES SHALL BE REPLACED IN STRUCTURES BY THE ADDITIONAL STEEL , SPLICED IN ACCORDANCE WITH 509.08.

JOHN DAVID JONES & ASSOC., INC.
2182 FRONT STREET
CUYAHOGA FALLS, OHIO 44221
ENGINEERS ARCHITECTS PLANNERS

33/34

REINFORCING STEEL LIST

BRIDGE No. SUM-76-12.67
OVER FULLER ST.

DESIGNED	DRAWN	TRACED	CHECKED	REVIEWED	DATE	REVISED
RCK	EMB		BRH	PAK	12-7-88	

MARK	NO.	LENGTH	SER. INCR.	TYPE	WEIGHT	A	B	C	D
			SOUTH SLAB						
ESS601	122	25'-1"		STR	4597				
ESS602	117	15'-11"			2797				
ESS603	107	36'-8"			5893				
ESS604	1 SER 10	3'-3" / 33'-3"	3'-4"		274				
ESS605	1 SER 4	4'-10" / 14'-10"	3'-4"		59				
ESS606	1 SER 6	5'-4" / 22'-0"	3'-4"		123				
ESS607	2	3'-6"		STR	11				
ESS501	184	30'-0"		STR	5757				
ESS502	8	20'-0"			167				
ESS503	7	19'-7"			143				
ESS504	6	18'-7"			117				
ESS505	6	17'-7"			110				
ESS506	6	16'-7"			104				
ESS507	6	15'-7"			98				
ESS508	7	14'-7"			106				
ESS509	6	13'-7"			85				
ESS510	6	12'-7"			79				
ESS511	6	11'-7"			73				
ESS512	7	10'-7"			77				
ESS513	6	9'-7"			60				
ESS514	6	8'-7"			54				
ESS515	11	7'-7"			87				
ESS516	121	28'-3"			3566				
ESS517	117	12'-9"			1556				
ESS518	107	36'-9"			4102				
ESS519	1 SER 10	3'-5" / 33'-5"	3'-4"		192				
ESS520	1 SER 3	5'-2" / 11'-10"	3'-4"		27				
ESS521	1 SER 6	5'-4" / 22'-0"	3'-4"		86				
ESS522	2	3'-6"			8				
ESS523	24	15'-2"			380				
ESS524	6	15'-1"		STR	95				
ESS525	97	3'-3"		9	329	11"	9"	6"	8½"
ESS526	97	2'-5"		2	245	1'-8"	10½"		
ESS527	53	6'-11"		27	382	3'-0"	8"	2'-7"	
ESS528	24	12'-6"		STR	313				
ESS529	6	12'-4"		STR	77				
ESS530	44	9'-5"		27	425	4'-3"	1'-11"	2'-7"	
ESS401	190	30'-0"		STR	3808				
ESS402	4	20'-3"			54				
ESS403	7	19'-3"			90				
ESS404	7	18'-3"			86				
ESS405	7	17'-3"			81				
ESS406	7	16'-3"			76				
ESS407	7	15'-3"			72				
ESS408	7	14'-3"			67				
ESS409	7	13'-3"		STR	62				

MARK	NO.	LENGTH	SER. INCR.	TYPE	WEIGHT	A	B	C	D
			SOUTH SLAB (CONTINUED)						
ESS410	7	12'-3"		STR	58				
ESS411	7	11'-3"			53				
ESS412	7	10'-3"			48				
ESS413	7	9'-3"			43				
ESS414	7	8'-3"			39				
ESS415	7	7'-3"		STR	34				
		TOTAL COATED BARS =			35,963	LBS.			

CALC. BY: RCK DATE: 11-22-88
CHECKED BY: GFD DATE: 1-2-89

F.H.W.A. REGION	STATE	PROJECT
5	OHIO	

936
1214

SUMMIT COUNTY
SUM-76-11.57

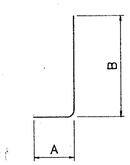

TYPE 2

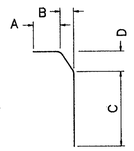

TYPE 9

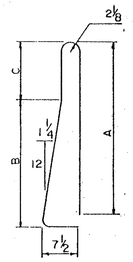

TYPE 27

'E' PREFIX INDICATES BAR IS TO BE EPOXY COATED.

REINFORCING STEEL SAMPLES

REFER TO CMS SECTIONS 106.03, 700, 709.01 THROUGH 709.05 AND 709.08. SUFFICIENT ADDITIONAL REINFORCING STEEL SHALL BE PROVIDED FOR SAMPLING. RANDOM SAMPLES SHALL BE REPLACED IN STRUCTURES BY THE ADDITIONAL STEEL, SPLICED IN ACCORDANCE WITH 509.08.

JOHN DAVID JONES & ASSOC., INC.
2162 FRONT STREET
CUYAHOGA FALLS, OHIO 44221
ENGINEERS ARCHITECTS PLANNERS

34/34

REINFORCING STEEL LIST

BRIDGE No. SUM-76-12.67
OVER FULLER ST.

DESIGNED	DRAWN	TRACED	CHECKED	REVIEWED	DATE	REVISED
RCK	EMB	-	BRH	PAK	12-7-88	

F.H.W.A. REG.	STATE	PROJECT	
5	OHIO		

937
12.14

SUMMIT COUNTY
SUM 76 - 11.57

EARTHWORK LIMITS SHOWN ARE APPROXIMATE. ACTUAL SLOPES SHALL CONFORM TO PLAN CROSS SECTIONS.

EXISTING STRUCTURE

TYPE: 7 SPAN CONTINUOUS STEEL GIRDER WITH CONCRETE DECK AND SUBSTRUCTURE.

SKEW: VARIES

SPANS: 133'-0", 62'-0", 120'-0", 131'-0", 119'-0", 130'-0" AND 113'-0" ℄ TO ℄ BEARINGS.

ROADWAY: 2 @ 38'-0" EACH WITH 4'-0" MEDIAN, 3'-0" SIDEWALK.

LOADING: CF 2000

WEARING SURFACE: 2½" ASPHALTIC CONCRETE.

APPROACH SLAB: 25'-0"

ALIGNMENT: CURVE LT., TANGENT

SUPERELEVATION: VARIES

SLOPE PROTECTION: NONE

PROPOSED STRUCTURE

TYPE: 7 SPAN CONTINUOUS NON-COMPOSITE A-36 PAINTED STEEL GIRDERS WITH REINFORCED CONCRETE DECK AND SUBSTRUCTURE

SKEW: VARIES

SPANS: 133'-0", 62'-0", 120'-0", 131'-0", 119'-0" 130'-0" AND 113'-0" ℄ TO ℄ OF BEARINGS.

ROADWAY: 2 @ 72'-2" TOE TO TOE OF PARAPET

LOADINGS: HS-20-44 (CASE I) & ALTERNATE MILITARY LOADING

WEARING SURFACE: 1" MONOLITHIC CONCRETE

APPROACH SLAB: 30'-0" (AS-1-81 MODIFIED)

ALIGNMENT: CURVE LT. TANGENT

SUPERELEVATION: VARIES

SLOPE PROTECTION NONE

TRAFFIC – YEAR 2009
EAST BOUND ADT = 42,498 ADTT = 6,375
WEST BOUND ADT = 42,142 ADTT = 6,321

McCOY ASSOCIATES INC. 1/120
CONSULTING ENGINEERS
AKRON, OHIO

SITE PLAN

BRIDGE NO. SUM. 76-1277
AKRON EAST EXPRESSWAY
WEST VIADUCT
SUMMIT COUNTY STA. 600+55.23
STA. 608+69.03

DESIGNED	DRAWN	TRACED	CHECKED	REVIEWED	DATE	REVISED
TAB	DAK		JBH	JBH	9-30-85	

F.H.W.A. REG.	STATE	PROJECT	
5	OHIO		

938
1214

SUMMIT COUNTY
SUM 76 - 11.57

CURVE DATA

CURVE NO. 3	CURVE NO. 9-1
Δ = 21°08'51"	Δ = 15°43'50"
D_c = 1°58'30"	D_c = 4°00'00"
R = 2901.052'	R = 1432.395'
L_c = 1070.759'	L_c = 393.262'
CH = 1064.692'	CH = 392.028'

PIER PILES
PIERS 2, 3 SOUTH & 4
14" C.I.P. REINFORCED CONCRETE
EST'D PAY LENGTH = 27 L.F.

PIER 3 NORTH
66" DRILLED SHAFTS
EST'D PAY LENGTH = 50 L.F.

McCOY ASSOCIATES INC. 2/120
CONSULTING ENGINEERS
AKRON, OHIO

SITE PLAN

BRIDGE NO. SUM. 76-1277
AKRON EAST EXPRESSWAY
WEST VIADUCT
SUMMIT COUNTY STA. 600+55.23
STA. 608+69.03

DESIGNED	DRAWN	TRACED	CHECKED	REVIEWED	DATE	REVISED
TAB	DAK		JBH	JBH	3-30-89	

F.H.W.A. REG.	STATE	PROJECT	
5	OHIO		

939
1214

SUMMIT COUNTY
SUM 76 - 11.57

CURVE DATA

CURVE NO. 9-2
$\Delta = 43°12'13.5"$
$D_C = 8°00'00"$
$R = 716.197'$
$T = 283.590'$
$CH. = 527.343'$

STA. 606+88.65
BEGIN 40:1 TAPER

STA. 609+97.55
40:1 TAPER

℄ PIER NO. 5

℄ PIER NO. 6

BEARING EAST ABUTMENT

CRUSHED AGGREGATE SLOPE PROTECTION

8" C.S.P.

LITTLE CUYAHOGA RIVER

AKRON-BARBERTON BELT LINE

BEGIN APPROACH SLAB
STA. 608+69.03

℄ I-76

STA. 608+31.00 ℄ I-76
STA. 209+54.89 ℄ AKRON-BARBERTON BELT LINE

SKEW 23°-18'-58"

EX. 8" C.S.P.

℄ RAMP E-10

P.C. STA. 610+51.64
59.5' RT. I-76
STA. 10+51.64 ℄ RAMP E-10

STA. 610+66.91

EXISTING HORIZONTAL CLEARANCE = 27'-8½" (MIN.)

8" C.S.P.

BEGIN APPROACH SLAB
STA. 9+43.14

STA. 606+23.34
N 84°57'27"E

℄ SIGN SUPPORTS
STA. 606+70

STA. 607+53.19

65°10'14"

SKEW 23°18'57"

SKEW 23°17'49"

4 SPA. @ 12'-0" = 48'-0"

11'-6" | 11'-6"

1'-6" | 4'-0" VARIES

℄ RAMP E-9

CURVE NO. 9-1 (SEE SHT. 2)

7°39'14"

℄ LIGHT SUPPORT
607+38 RT.

60" SAN.

STA. 8+43.41
P.C. ℄ RAMP E-9

CURVE NO. 9-2

℄ LIGHT SUPPORT
8+91 RT.

SAN. 18" ST.

PIER PILES

14" C.I.P. REINFORCED CONCRETE
EST'D AVG. PAY LENGTH
= 27 L.F. PIER 4 & PIER 5 NORTH
= 32 L.F. PIER 5 SOUTH
66" DIAMETER DRILLED SHAFTS
EST'D AVG. PAY LENGTH = 35 L.F. PIER 6

ABUTMENT PILES (FORWARD ABUTMENT)

14" C.I.P. REINFORCED CONCRETE
EST'D AVG. PAY LENGTH
= 32 L.F. NORTH EXTENSION
= 27 L.F. SOUTH EXTENSION

1042.27 | 1041.44 | 1040.61 | 1039.78 | 1038.95 | 1038.12 | 1037.29 | 1036.87 | 1036.47 | 1036.08 | 1035.71 | 1035.36 | 1035.03 | 1034.72 | 1034.42 | P.V.I. EL. = 1033.96'

1060 | 1040 | 1020 | 1000 | 980

BRIDGE LIMITS = 813.80'

30'-0" APPROACH SLAB

P.V.C.

350' V.C.

PROPOSED HORIZONTAL CLEARANCE = 27'-0" (MIN.)

PROPOSED PROFILE

EXP.

HIGH WATER LEVEL = 996.0±
NORMAL WATER LEVEL = 994.0±
3 6'-0"

EL. = 998.2±

AKRON BARBERTON R.R.
3 VERTICAL CLEARANCE
REQUIRED = 23.00'
PROPOSED = 25.04'
EXISTING 25.79'

EL. 989.8±

60" SAN.

EL. 981.0±

PIER NO. 6

EL. 999.0±

AKRON BARBERTON BELT LINE
2 RUNS PER DAY
20 M.P.H. (MAXIMUM SPEED)

PIER NO. 4

PIER NO. 5

605+00 | 606+00 | 607+00 | 608+00 | 609+00 | 610+00

McCOY ASSOCIATES INC. 3/120
CONSULTING ENGINEERS
AKRON, OHIO

SITE PLAN

BRIDGE NO. SUM. 76-1277
AKRON EAST EXPRESSWAY
WEST VIADUCT
SUMMIT COUNTY STA. 600+55.23
STA. 608+69.03

DESIGNED	DRAWN	TRACED	CHECKED	REVIEWED	DATE	REVISED
TAB	DAK		JBH	JBH	3-30-67	

FHWA REGION	STATE	PROJECT	
5	OHIO		

94c 12.14

SUMMIT COUNTY
SUM 76-11.57

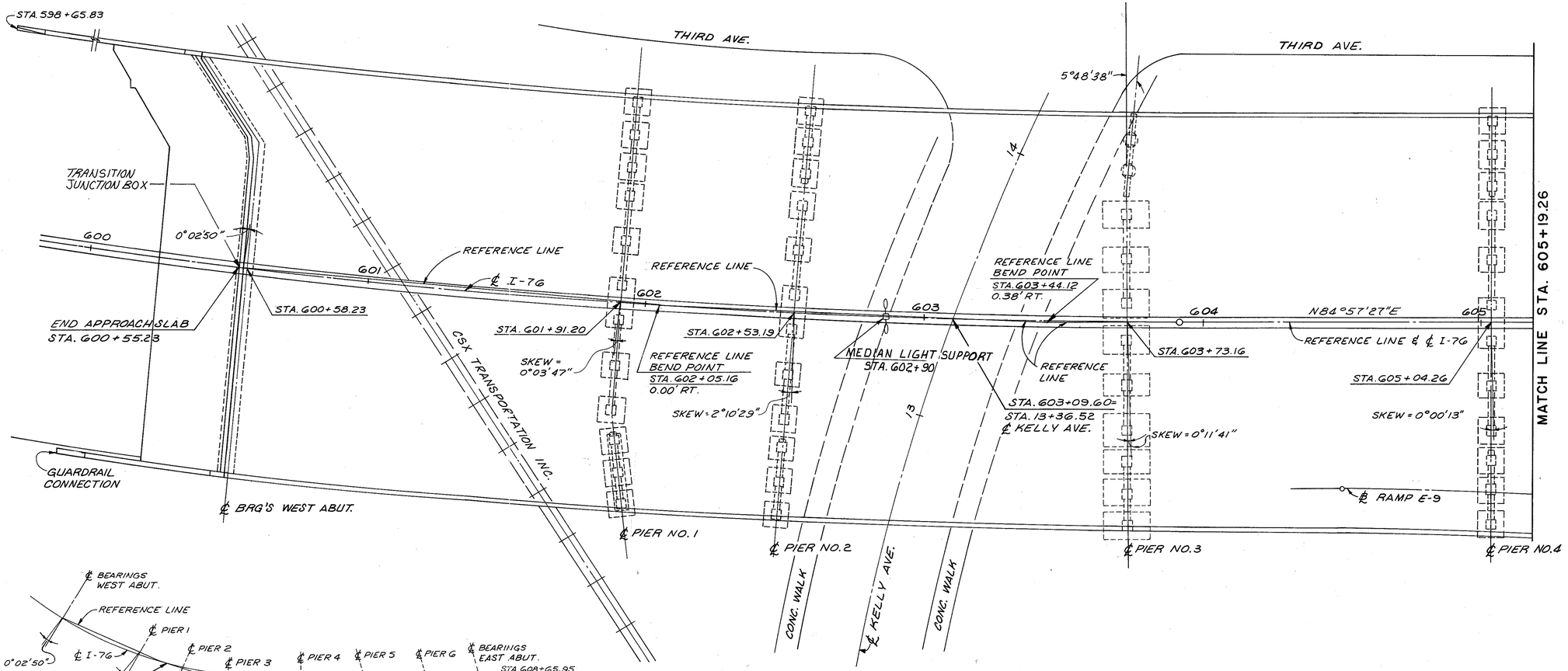

PLAN

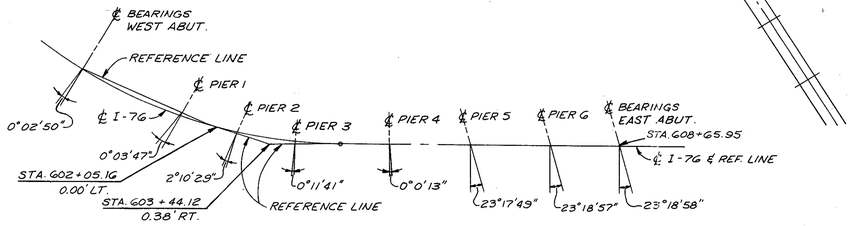

REFERENCE LINE DIAGRAM

NOT TO SCALE

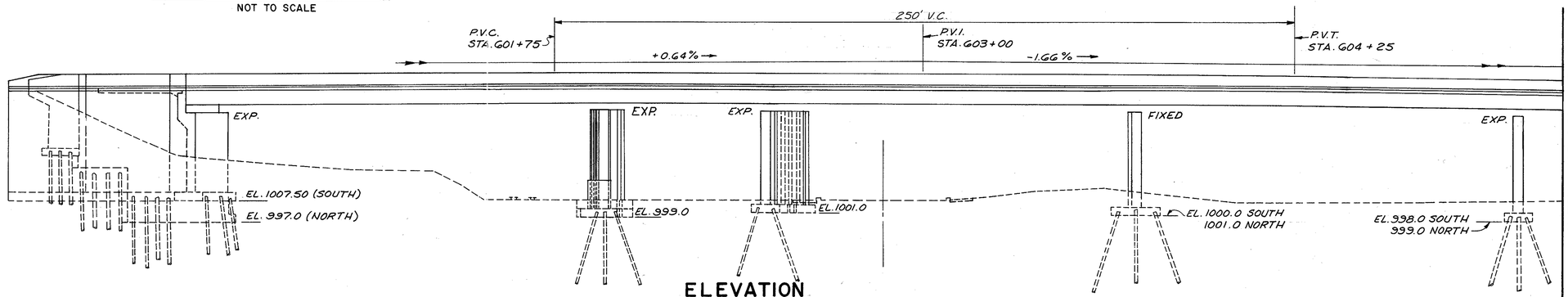

ELEVATION

NOTES

1. FOR LIGHTING CONDUIT-EXPANSION FITTING, SEE STANDARD DRAWING HL-30.31.
2. FOR TRANSITION JUNCTION BOX DETAILS, SEE SHEET 704.

McCOY ASSOCIATES INC. 4/120
CONSULTING ENGINEERS
AKRON, OHIO

GENERAL PLAN & ELEVATION

BRIDGE NO. SUM 76-1277
AKRON EAST EXPRESSWAY
WEST VIADUCT

DESIGNED	DRAWN	TRACED	CHECKED	REVIEWED	DATE	REVISED
TAB	DAK		JBH	JBH	3-30-89	

FHWA REGION	STATE	PROJECT	
5	OHIO		

941
1214

SUMMIT COUNTY
SUM 76-11.57

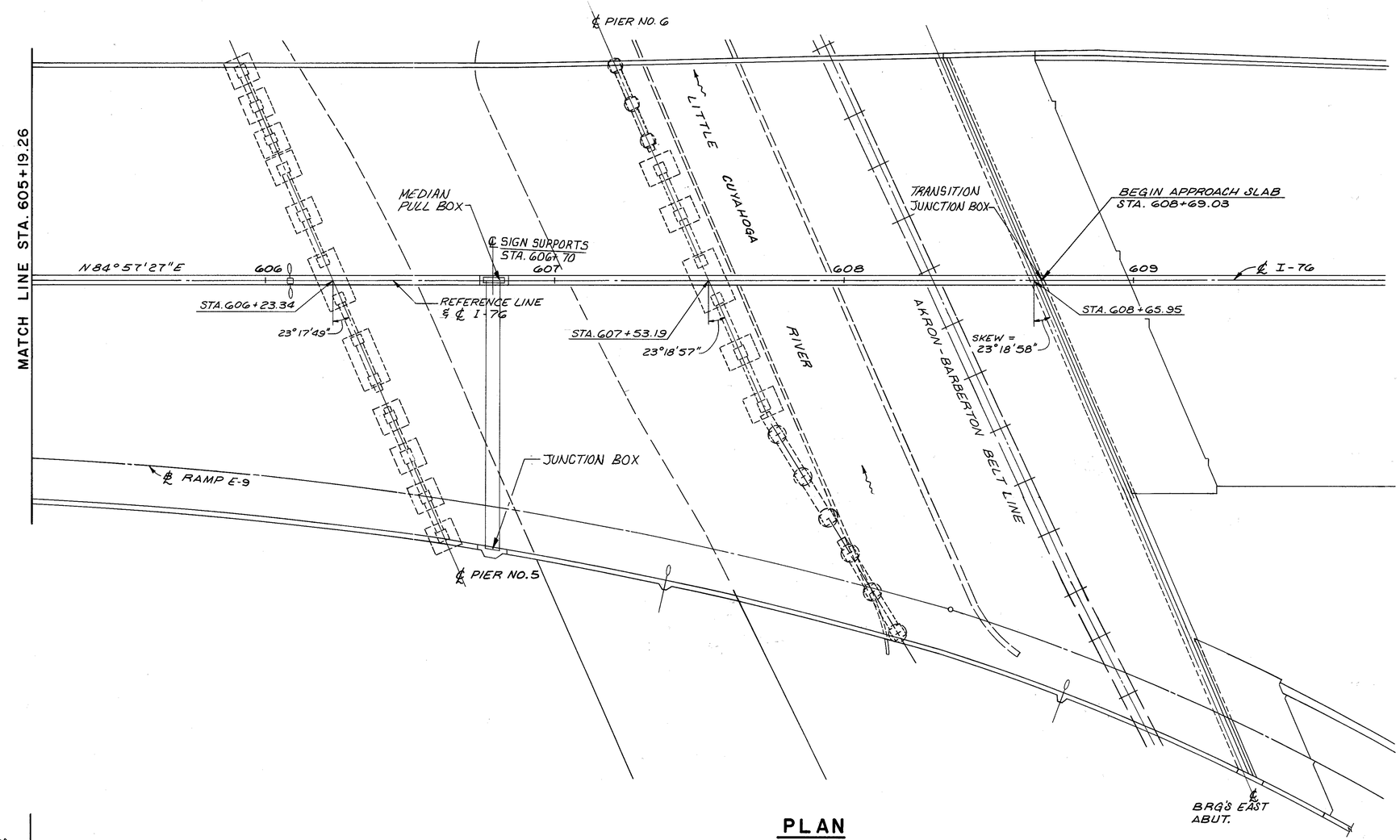

PLAN

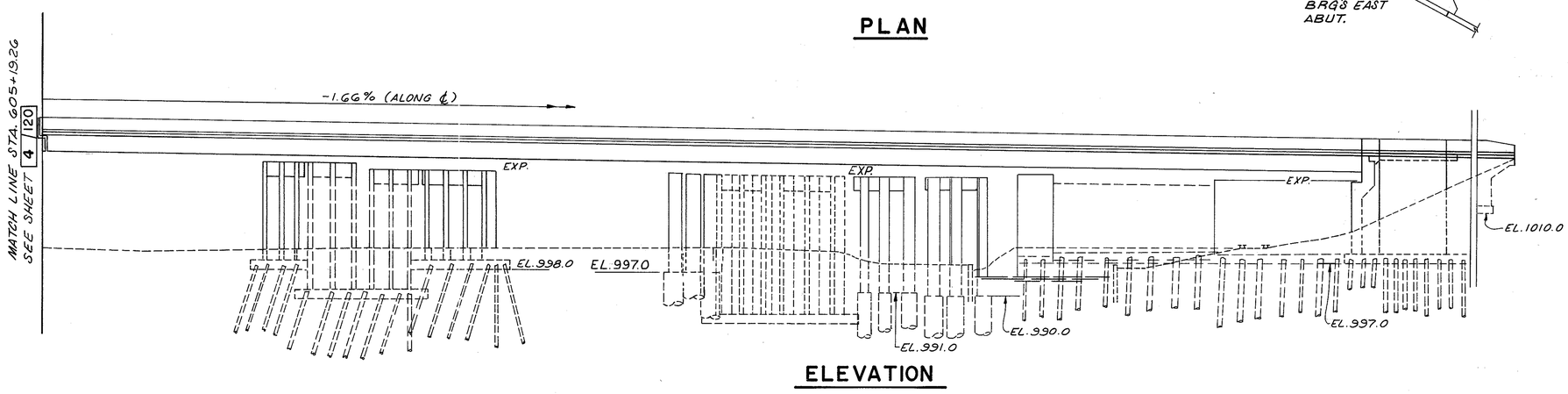

ELEVATION

NOTES

1. FOR LIGHTING CONDUIT EXSPANSION FITTING, SEE STANDARD DRAWING HL-30.31.
2. FOR TRANSITION JUNCTION BOX DETAILS, SEE SHEET 704.

McCOY ASSOCIATES INC. 5/120
CONSULTING ENGINEERS
AKRON, OHIO

GENERAL PLAN & ELEVATION

BRIDGE NO. SUM 76-1277
AKRON EAST EXPRESSWAY
WEST VIADUCT

DESIGNED	DRAWN	TRACED	CHECKED	REVIEWED	DATE	REVISED
TAB	DAK		JBH	JBH	3-30-89	

STRUCTURAL GENERAL NOTES

FHWA REGION	STATE	PROJECT	
5	OHIO		

842 12.14

SUMMIT COUNTY
SUM. 76-11.57

REFERENCE

SHALL BE MADE TO STANDARD DRAWINGS:

AS-1-81	DATED	11-27-81
EXJ-4-81	DATED	01-05-89
RB-1-55	REVISED	02-02-59
SD-1-69	DATED	06-12-69

AND TO SUPPLEMENTAL SPECIFICATION:

836 DATED 11-12-85

DESIGN SPECIFICATIONS®

THIS STRUCTURE CONFORMS TO "STANDARD SPECIFICATIONS FOR HIGHWAY BRIDGES" ADOPTED BY THE AMERICAN ASSOCIATION OF STATE HIGHWAY AND TRANSPORTATION OFFICIALS, 1989 AND THE OHIO "SUPPLEMENT" TO THESE SPECIFICATIONS.

DESIGN DATA:

DESIGN LOADING	-	HS 20-44 (CASE I) AND ALTERNATE MILITARY LOADING
CONCRETE CLASS S	-	COMPRESSIVE STRENGTH 4500 PSI
CONCRETE CLASS C	-	COMPRESSIVE STRENGTH 4000 PSI
REINFORCING STEEL	-	ASTM A615, A616, OR A617 - GRADE 60, MINIMUM YIELD STRENGTH 60,000 PSI
STRUCTURAL STEEL PROPOSED	-	ASTM A36, UNIT STRESS 20,000 PSI
STRUCTURAL STEEL EXISTING	-	ASTM A7 OR A373, UNIT STRESS 18,000 PSI

DECK PROTECTION METHOD:

EPOXY COATED REINFORCING STEEL, BOTH MATS.
CONCRETE PROTECTION: PARAPETS

MONOLITHIC WEARING SURFACE

MONOLITHIC WEARING SURFACE IS ASSUMED, FOR DESIGN PURPOSES, TO BE 1" THICK.

EXISTING STRUCTURE VERIFICATION

DETAILS AND DIMENSIONS SHOWN ON THESE PLANS PERTAINING TO THE EXISTING STRUCTURE HAVE BEEN OBTAINED FROM PLANS OF THE EXISTING STRUCTURE AND/OR FROM FIELD OBSERVATIONS AND MEASUREMENTS. CONSEQUENTLY, THEY ARE INDICATIVE OF THE EXISTING STRUCTURE AND THE PROPOSED WORK BUT THEY SHALL BE CONSIDERED TENTATIVE AND APPROXIMATE. THE CONTRACTOR IS REFERRED TO CMS SECTIONS 102.05, 105.02 AND 513.02.

PLANS OF EXISTING STRUCTURE ARE AVAILABLE AT THE OHIO DEPARTMENT OF TRANSPORTATION, DISTRICT FOUR , 705 OAKWOOD STREET, RAVENNA, OHIO 44266, FOR THE CONTRACTOR'S EXAMINATION.

CONTRACT BID PRICES SHALL BE BASED UPON A RECOGNITION OF THE UNCERTAINTIES DESCRIBED ABOVE AND UPON A PREBID EXAMINATION OF THE EXISTING STRUCTURE BY THE CONTRACTOR. HOWEVER, ALL PROJECT WORK SHALL BE BASED UPON ACTUAL DETAILS AND DIMENSIONS WHICH HAVE BEEN VERIFIED BY THE CONTRACTOR IN THE FIELD.

REPLACEMENT OF EXISTING REINFORCING STEEL

ANY EXISTING REINFORCING BARS WHICH ARE TO BE INCORPORATED INTO THE NEW WORK AND WHICH ARE MADE UNUSABLE BY THE CONTRACTOR'S CONCRETE REMOVAL OPERATIONS SHALL BE REPLACED WITH NEW STEEL AT HIS COST. ANY EXISTING REINFORCING BARS DEEMED BY THE ENGINEER TO BE UNUSABLE BECAUSE OF CORROSION SHALL BE REPLACED WITH NEW STEEL. AN ALLOWANCE OF 5000 POUNDS IS INCLUDED IN ITEM 509, EPOXY COATED REINFORCING STEEL, GRADE 60, FOR THIS PURPOSE.

PORTIONS OF STRUCTURES REMOVED

REMOVAL OF PORTIONS OF EXISTING STRUCTURE AS SHOWN ON THE CONTRACT DRAWINGS SHALL CONFORM IN ALL RESPECTS TO ITEM 202 OF THE STATE OF OHIO DEPARTMENT OF TRANSPORTATION CONSTRUCTION AND MATERIALS SPECIFICATIONS.

THE CONTRACTOR SHALL PREPARE DETAILED PROCEDURES AND PLANS FOR REMOVAL OF PORTIONS OF THE EXISTING STRUCTURE INCLUDING METHODS OF PROTECTING EXISTING OR RELOCATED UTILITIES AND PROTECTING THE PEDESTRIAN AND THE VEHICULAR TRAFFIC WITHIN THE LIMITS OF THE PROJECT. SUCH PLANS SHALL INCLUDE INFORMATION AS TO EQUIPMENT AND MATERIALS TO BE USED, PERSONNEL, SUPERVISION, THE HOURS OF OPERATION AND DURATION OF THE JOB. THE PROTECTION OF UTILITY LINES SHALL INCLUDE THOSE LINES OWNED BY GOODYEAR.

THIS WORK SHALL INCLUDE ASPHALT WEARING COURSES; CONCRETE DECK; WALKWAYS; PARAPETS; RAILING; RAILING CONNECTION MEMBERS; GIRDERS G&H; FLOORBEAMS, STIFFENERS, CROSSFRAMES AND CONNECTION MEMBERS BETWEEN GIRDERS G&H; BEARINGS FOR GIRDERS G&H; FINGER JOINT ASSEMBLIES; ABUTMENT BACKWALLS; TOP OF WINGWALLS AS SHOWN ON THE DETAIL PLANS; EXPANSION ROLLERS AT GIRDERS F THRU L; AND EXISTING PIER No. THREE.

THESE PLANS SHALL BE APPROVED BY THE ENGINEER AND RAILROADS BEFORE COMMENCING ANY DEMOLITION OPERATION. THE REVIEW AND APPROVAL BY THE ENGINEER AND RAILROADS SHALL NOT RELIEVE THE CONTRACTOR OF HIS FULL RESPONSIBILITY FOR SAFE DEMOLITION OPERATIONS. THE CONTRACTOR SHALL BE AND SHALL REMAIN RESPONSIBLE FOR A SAFE DEMOLITION OPERATION.

PILE DESIGN LOADS

THE DESIGN LOAD FOR THE ABUTMENT PILES IS 58 TONS PER PILE, THE DESIGN LOAD FOR THE WINGWALL PILES IS 58 TONS PER PILE AND THE DESIGN LOAD FOR THE PIER PILES IS 55 TONS PER PILE.

MAINTENANCE OF TRAFFIC

REFER TO SHEETS NUMBERED 21 THRU 88 OF THE MAINTENANCE OF TRAFFIC PLANS.

UTILITY LINES

ALL EXPENSE INVOLVED IN RELOCATING (INSTALLING) THE AFFECTED UTILITY LINES SHALL BE BORNE BY THE OWNER(S). THE CONTRACTOR AND OWNER(S) ARE REQUESTED TO COOPERATE BY ARRANGING THEIR WORK IN SUCH A MANNER THAT INCONVENIENCE TO EITHER WILL BE HELD TO A MINIMUM. THE CONTRACTOR SHALL TREAT THE UTILITY LINES OWNED BY GOODYEAR CORPORATION THE SAME AS ALL OTHER UTILITIES.

CUTTING OR BENDING OF REINFORCING BARS

ANY CUTTING OR BENDING OF REINFORCING BARS NECESSARY TO ACCOMMODATE THE UTILITY OPENINGS OR ANY OTHER ESSENTIAL ELEMENT OF WORK RELATED TO THE PROJECT, SHALL BE INCLUDED IN THE PRICE BID PER POUND FOR "ITEM 509 - REINFORCING STEEL-GRADE 60," AND/OR "ITEM 509 - EPOXY COATED REINFORCING STEEL, GRADE 60," UNLESS OTHERWISE NOTED.

ITEM 202 - REMOVAL FOR REUSE OF EXISTING STEEL BEARINGS

EXISTING STEEL BEARINGS SHALL BE REMOVED FOR REUSE. CARE SHALL BE EXERCISED IN REMOVING SOLE PLATES FOR REUSE WHERE REQUIRED.

GIRDERS AND PLATES SHALL BE GROUND SMOOTH PRIOR TO REWELDING OF SOLE PLATES.

ITEM SPECIAL - RAISING EXISTING STRUCTURAL STEEL

THIS ITEM CONSISTS OF THE FOLLOWING:

1. SUBMIT A DESCRIPTION OF THE METHODS AND EQUIPMENT TO BE USED FOR REVIEW AND APPROVAL BY THE DIRECTOR. THE REVIEW AND APPROVAL BY THE DIRECTOR SHALL NOT RELIEVE THE CONTRACTOR OF HIS FULL RESPONSIBILITY FOR SAFE OPERATIONS.

2. RAISING THE EXISTING STRUCTURAL STEEL GIRDERS AND OTHER STRUCTURAL STEEL COMPONENTS INCLUDING FLOOR BEAMS, STRINGERS AND FRAMING THAT ARE TO REMAIN IN THE PROPOSED STRUCTURE TO AN ELEVATION ABOVE THE PROPOSED LOCATION TO PERMIT CONSTRUCTION OF NEW PEDESTALS AND THE REMOVAL OF EXISTING BEARING WHERE THEY ARE TO BE REPLACED. ALL GIRDERS IN A UNIT SHALL BE RAISED SIMULTANEOUSLY AT A UNIFORM RATE. REMOVAL OF EXISTING SLAB, EXPANSION JOINT FINGER PLATES AND EXTERIOR RAILING SHALL BE COMPLETED PRIOR TO JACKING OF THE GIRDERS.

MEASUREMENT AND PAYMENT

PAYMENT WILL BE MADE AT THE CONTRACT LUMP SUM PRICE BID FOR "ITEM SPECIAL - RAISING EXISTING STRUCTURAL STEEL" AND SHALL INCLUDE ALL LABOR, MATERIAL, EQUIPMENT, AND INCIDENTALS NECESSARY TO COMPLETE THE WORK AS DESCRIBED HEREIN.

ITEM SPECIAL - SEALING OF CONCRETE SURFACES, EPOXY

SPECIFIED CONCRETE SURFACES SHALL BE PROTECTED USING MATERIALS SPECIFIED IN THE PROPOSAL, SEE SHEET NO. 6/120 FOR DETAIL OF AREAS TO BE PROTECTED. SEE THE PROPOSAL FOR SURFACE PREPARATION REQUIREMENTS, APPLICATION, RATES, MATERIAL REQUIREMENTS, APPLICATION PROCEDURES AND MEASUREMENT AND PAYMENT. *

ITEM 510 - DOWEL HOLES

THIS ITEM SHALL BE PERFORMED AS INDICATED ON THE PLANS OR AS DIRECTED BY THE ENGINEER AND SHALL BE USED TO REPLACE THE DETERIORATED BARS WHICH WERE TO REMAIN, OR PLACING NEW DOWEL BARS WHERE A NEW CONCRETE SECTION IS BEING ATTACHED TO THE REMAINING PORTIONS OF EXISTING CONCRETE. AN ALLOWANCE OF 500 DOWEL HOLES IS INCLUDED IN THE ESTIMATED QUANTITY OF ITEM 510 IN REPLACING DETERIORATED BARS.

THE DOWEL BARS ARE TO BE PAID FOR UNDER "ITEM 509 - EPOXY COATED REINFORCING STEEL, GRADE 60" AND THE DOWEL HOLES ARE TO BE PAID FOR UNDER "ITEM 510 - DOWEL HOLES".

CONTINGENCY QUANTITIES

THE CONTRACTOR SHALL NOT ORDER MATERIALS OR PERFORM WORK LISTED IN THE GENERAL SUMMARY FOR ITEMS DESIGNATED BY PLAN NOTE TO BE USED "AS DIRECTED BY THE ENGINEER" UNLESS AUTHORIZED BY THE ENGINEER. THE ACTUAL WORK LOCATIONS AND QUANTITIES USED AT THE ENGINEER'S DISCRETION SHALL BE MADE A MATTER OF RECORD BY INCORPORATION INTO THE FINAL CHANGE ORDER GOVERNING COMPLETION OF THIS PROJECT.

ITEM 507 14 INCH CAST-IN-PLACE REINFORCED CONCRETE PILES AS PER PLAN, PILE WALL THICKNESS

THE RESPONSIBILITY OF CHOOSING AND PROVIDING A SATISFACTORY PILE WALL THICKNESS FOR THIS PROJECT SHALL BE BORNE BY THE CONTRACTOR EXCEPT THAT THE PILE WALL THICKNESS SHALL NOT BE LESS THAN 0.25 INCHES. IF A PILE WALL THICKNESS GREATER THAN 0.25 INCHES IS NECESSARY TO RESIST THE PILE INSTALLATION DRIVING STRESS, THE CONTRACTOR SHALL MAKE THIS DETERMINATION AND SHALL FURNISH A PILE WITH AN ACCEPTABLE WALL THICKNESS. MONOTUBE PILES ARE NOT REQUIRED TO COMPLY WITH THE ABOVE SPECIFIED MINIMUM PILE WALL THICKNESS. IF MONOTUBE PILES ARE USED, THE PILE WALL THICKNESS SHALL NOT BE LESS THAN 0.200 INCHES AND THE PILES SHALL SATISFY ALL THE REQUIREMENTS OF 507.

PILE HAMMER

THE PILE HAMMER USED TO INSTALL THE CAST-IN-PLACE REINFORCED CONCRETE PILES SHALL HAVE A STATE'S ENERGY RATING OF NOT LESS THAN 18,000 FOOT-POUNDS. THIS REQUIREMENT DOES NOT RELIEVE THE CONTRACTOR FROM 108.05 WHICH STATES THAT THE CONTRACTOR IS TO PROVIDE SUFFICIENT EQUIPMENT FOR PROSECUTING THE REQUIRED WORK. REFER TO "ODOT'S MANUAL OF PROCEDURES FOR STRUCTURES" TO OBTAIN THE STATE'S ENERGY RATING.

ITEM 518 POROUS BACKFILL with Filter Fabric

TO ENSURE THAT ANY FINE SOIL PARTICLES INCLUDED WITHIN THE EMBANKMENT TO BE PLACED BEHIND THE REAR AND FORWARD ABUTMENT DO NOT MIGRATE INTO AND THROUGH THE VOIDS OF THE POROUS BACKFILL MATERIAL LOCATED BEHIND THE REAR AND FORWARD ABUTMENT, FILTER FABRIC, 712.09 TYPE A, SHALL BE PLACED BETWEEN THE 518 POROUS BACKFILL MATERIAL AND THE 203 EMBANKMENT MATERIAL TO THE LIMITS AS SHOWN IN THE PLANS. PAYMENT FOR THE FILTER FABRIC SHALL BE INCLUDED IN THE UNIT PRICE BID PER CUBIC YARD FOR THE ITEM 518 POROUS BACKFILL w/Filter Fabric, WHICH SHALL INCLUDE ALL LABOR, MATERIALS, EQUIPMENT AND INCIDENTALS NECESSARY TO COMPLETE THIS WORK.

* THE COLOR SPECIFICATION OF THE EPOXY SEALER SHALL BE IN ACCORDANCE WITH THE FEDERAL STANDARD 595A AND THE COLOR OF THE EPOXY SEALER SHALL BE NO. 13522.

McCOY ASSOCIATES, INC.
CONSULTING ENGINEERS
AKRON, OHIO

5A/120

STRUCTURAL GENERAL NOTES

BRIDGE NO. SUM. 76-1277
AKRON EAST EXPRESSWAY
WEST VIADUCT

DESIGNED	DRAWN	TRACED	CHECKED	REVIEWED	DATE	REVISED
JBH	JWD		JGC	JBH	11-13-91	

526691

STRUCTURAL GENERAL NOTES

FHWA REGION	STATE	PROJECT	
5	OHIO		

943/1214

SUMMIT COUNTY
SUM. 76-11.57

ITEM 506 STATIC LOAD TEST, AS PER PLAN

THE CONTRACTOR SHALL PERFORM A STATIC LOAD TEST ON ONE OF THE INITIALLY INSTALLED PIER PILES OR ON A PILE INSTALLED NEAR AN ABUTMENT OR PIER LOCATION. THE INSTALLED LENGTHS OF THE PILES TO BE LOAD TESTED SHALL NOT BE MORE THAN THE PLAN ESTIMATED PAY LENGTHS. THE CONTRACTOR SHALL FURNISH THE DIRECTOR (ATTENTION: BUREAU OF BRIDGES) A COPY OF A TYPED REPORT DESCRIBING THE PROCEDURES AND RESULTS OF THE STATIC LOAD TEST. PAYMENT FOR THIS REPORT IS CONSIDERED INCIDENTAL TO THE COST OF THE STATIC LOAD TEST.

ABUTMENT WALL TEXTURE

ABUTMENTS AND WINGWALLS SHALL BE TEXTURED BY USING FORM LINERS ATTACHED TO FORMWORK PRIOR TO PLACING CONCRETE, AREAS TO RECEIVE TEXTURED CONCRETE SURFACE SHALL INCLUDE THE FULL LENGTH OF EXPOSED ABUTMENT BREAST WALLS AND WINGWALLS FROM FINISHED GRADE OR PAVEMENT TO THE TOP OF THE WALL.

TEXTURED SURFACE SHALL CONSIST OF A 3/4" DEEP FRACTURED FIN TEXTURE. ACCEPTABLE PRODUCTS INCLUDE:

SYMONS CORPORATION
7603 OLD ROCKSIDE RD.
INDEPENDENCE, OH 44131
(216) 524-5240
PATTERN NO. P/C 30449

GREENSTREAK
3400 TREE COURT IND. BLVD.
ST. LOUIS, MO 63122
(800) 325-9504
PATTERN NO. 373

FITZGERALD CONSTRUCTION SALES
17376-A NEWHOPE AVENUE
FOUNTAIN VALLEY, CA 92708
(800) 227-2755
PATTERN NO. 16950

OR AN APPROVED ALTERNATE. THE CONTRACTOR SHALL SUBMIT A SAMPLE OF THE FINISHED CONCRETE TEXTURED SURFACE FOR APPROVAL.

PAYMENT FOR ALL MATERIALS AND LABOR REQUIRED FOR THE TEXTURED SURFACES SHALL BE INCLUDED WITH ITEM 511 - CLASS C CONCRETE, ABUTMENTS, AS PER PLAN.

ITEM SPECIAL - PAINTING OF NEW STEEL, SYSTEM IZEU

ALL OF THE REQUIREMENTS CONTAINED IN THE "PAINTING OF NEW STEEL, SYSTEM IZEU" PROPOSAL NOTE SHALL APPLY.

THE COLOR OF URETHANE FINISH COAT SHALL BE "DARK BROWN" FEDERAL SPECIFICATION NUMBER 595A 10080. THE COLOR OF EPOXY INTERMEDIATE COAT SHALL BE "TAN" FEDERAL SPECIFICATIONS NUMBER 595A10219. AN ACTUAL SAMPLE OF THE PAINT PROPOSED FOR USE SHALL BE SUBMITTED BY THE CONTRACTOR FOR APPROVAL.

ITEM SPECIAL - FIELD PAINTING OF EXISTING STEEL, SYSTEM OZEU

ALL OF THE REQUIREMENTS CONTAINED IN THE "FIELD PAINTING OF EXISTING STEEL, SYSTEM OZEU" PROPOSAL NOTE SHALL APPLY.

THE COLOR OF URETHANE FINISH COAT SHALL BE "DARK BROWN" FEDERAL SPECIFICATION NUMBER 595A 10080. THE COLOR OF EPOXY INTERMEDIATE COAT SHALL BE "TAN" FEDERAL SPECIFICATIONS NUMBER 595A10219. AN ACTUAL SAMPLE OF THE PAINT PROPOSED FOR USE SHALL BE SUBMITTED BY THE CONTRACTOR FOR APPROVAL.

REINFORCING STEEL SAMPLES

REFER TO CMS SECTION 106.03, 709.01 THROUGH 709.03 AND 709.08. SUFFICIENT REINFORCING STEEL SHALL BE PROVIDED FOR SAMPLING. RANDOM SAMPLES SHALL BE REPLACED IN THE STRUCTURE BY THE ADDITIONAL STEEL, SPLICED IN ACCORDANCE WITH 509.08.

ITEM 513 - STRUCTURAL STEEL FOR REHABILITATION, AS PER PLAN

STRUCTURAL STEEL UNDER THIS ITEM WILL NOT REQUIRE SHOP DRAWINGS PRIOR TO FABRICATION. THE CONTRACTOR SHALL MAKE NECESSARY MEASUREMENTS AND PREPARE SKETCHES, DRAWINGS, TABLES, ETC. THE ENGINEER SHALL HAVE AUTHORITY AND RESPONSIBILITY FOR ENSURING THAT THE FABRICATED STEEL IS ACCEPTABLE. TECHNICAL ASSISTANCE WILL BE PROVIDED ON REQUEST BY THE BUREAU OF BRIDGES. MILL TEST REPORTS AND SHIPPING DOCUMENTS SHALL BE SUBMITTED TO THE ENGINEER FOR REVIEW AND APPROVAL PRIOR TO INCORPORATING STEEL ITEMS INTO THE WORK, AS REQUIRED BY 501.07. AFTER FABRICATION THE CONTRACTOR SHALL SUBMIT SHOP DRAWINGS TO THE ENGINEER FOR REVIEW AND APPROVAL TO ENSURE THAT THE DRAWINGS DEPICT THE STEEL AS ACTUALLY INCORPORATED INTO THE WORK. THE ENGINEER WILL THEN SEND ONE APPROVED SET TO THE BUREAU OF BRIDGES FOR INFORMATION. PAY WEIGHTS SHALL BE COMPUTED IN COMPLIANCE WITH 513 OF THE CONSTRUCTION AND MATERIAL SPECIFICATIONS AND SUBMITTED TO THE ENGINEER FOR HIS REVIEW AND APPROVAL. THE FABRICATOR SHALL FURNISH A 35 MILLIMETER MICROFILM COPY OF EACH SHOP DRAWING, WHICH SHALL BE MOUNTED ON AN APERTURE CARD AS SPECIFIED IN 501.05.

A QUANTITY OF 20,000 POUNDS HAS BEEN INCLUDED IN ITEM 513, STRUCTURAL STEEL FOR REHABILITATION, A36, AS PER PLAN TO BE USED AS DIRECTED BY THE ENGINEER FOR REPLACEMENT OF EXISTING END FRAMES, CROSS FRAMES AND STIFFENERS TO REMAIN IN PLACE.

PAYMENT SHALL INCLUDE REMOVAL OF DETERIORATED MEMBERS AND ALL MATERIAL, EQUIPMENT AND LABOR REQUIRED TO PROVIDE REPLACEMENT IN KIND.

EXISTING RIVET AND STRUCTURAL STEEL REMOVAL

EXISTING RIVETS THAT ARE IN HOLES USED TO CONNECT NEW MATERIAL TO EXISTING MATERIAL, EXISTING RIVETS THAT MUST BE REMOVED TO REMOVE EXISTING STEEL, AND RIVETS DIRECTED TO BE REMOVED BY THE ENGINEER SHALL BE REMOVED WITH CARE.

ALL EXISTING RIVETS TO BE REMOVED SHALL FIRST HAVE THE HEADS CUT OFF AND THEN THE REMAINDER OF THE RIVET REMOVED BY DRILLING. PUNCHING MAY BE USED TO REMOVE LOOSE FITTING SHANKS. RIVET REMOVAL METHODS SHALL NOT DAMAGE BASE MATERIAL THAT IS TO REMAIN IN PLACE. BURNING THROUGH THE RIVET SHANK IS NOT AN ACCEPTABLE REMOVAL METHOD. THE CONTRACTOR SHALL SUBMIT DETAILS OF THE PROPOSED RIVET REMOVAL METHOD FOR APPROVAL BY THE ENGINEER PRIOR TO BEGINNING WORK.

EXISTING STRUCTURAL STEEL WHICH IS INDICATED TO BE REMOVED BY CUTTING MAY BE FLAME CUT TO STRAIGHT LINES. ALL FLAME CUT EDGES SHALL BE GROUND SMOOTH. ALL OTHER STRUCTURAL STEEL SHALL BE REMOVED BY DISCONNECTING BY REMOVAL OF EXISTING RIVETS. ANY DAMAGE TO EXISTING MATERIAL TO REMAIN IN PLACE DUE TO THE CONTRACTOR'S REMOVAL OPERATION SHALL BE REPAIRED TO THE SATISFACTION OF THE ENGINEER AT THE COST OF THE CONTRACTOR.

PAYMENT FOR RIVET REMOVAL PROCEDURES, AND CAREFUL STRUCTURAL STEEL REMOVAL SHALL BE INCLUDED WITH ITEM 202-PORTIONS OF STRUCTURE REMOVED.

BOLTED CONNECTION TO EXISTING STEEL

AT LOCATIONS INDICATED ON THE PLANS AND AS DIRECTED BY THE ENGINEER, NEW STRUCTURAL STEEL SHALL BE CONNECTED TO EXISTING STRUCTURAL STEEL USING EXISTING RIVET OR BOLT HOLES AND NEW BOLTS. RIVET REMOVAL PROCEDURES ARE DESCRIBED IN THE GENERAL NOTE ABOVE.
PAYMENT FOR RIVET OR BOLT REMOVAL IS INCLUDED WITH ITEM 202-PORTIONS OF STRUCTURE REMOVED. HOLES IN NEW MATERIAL SHALL BE MADE BY ANY OF THE FOLLOWING METHODS (TO BE SELECTED BY THE CONTRACTOR):

1. CAREFUL FIELD MEASUREMENTS AND EXAMINATION OF EXISTING SHOP DRAWINGS BY THE CONTRACTOR SHALL BE USED FOR LOCATING HOLES IN NEW MATERIAL TO BE SUBPUNCHED OR DRILLED UNDERSIZE IN THE SHOP. THE HOLE SHALL BE 3/16 INCH LESS IN DIAMETER THAN THE NOMINAL DIAMETER OF THE NEW BOLT. THE HOLES SHALL BE REAMED TO PROPER SIZE IN THE FIELD AFTER FIT-UP TO THE EXISTING RIVET OR BOLT HOLES.

2. MAKE TEMPLATES IN THE FIELD OF HOLE PATTERNS AND LOCATIONS AFTER REMOVAL OF RIVETS OR BOLTS. USE THE FIELD TEMPLATES IN THE SHOP TO PUNCH OR DRILL STANDARD SIZE HOLES. THE HOLES SHALL BE REAMED IN THE FIELD AFTER FIT-UP TO THE EXISTING RIVET OR BOLT HOLES.

3. FURNISH NEW STRUCTURAL STEEL WITHOUT SHOP HOLES FOR CONNECTION TO EXISTING RIVET OR BOLT HOLES. HOLES IN NEW MATERIAL TO BE FIELD DRILLED AND REAMED TO MATCH EXISTING RIVET OR BOLT LOCATION.

RIVET HOLES NOT USED FOR BOLTED CONNECTIONS SHALL BE LEFT OPEN. EXISTING MATERIAL WITHOUT HOLES FOR CONNECTION TO NEW MATERIAL SHALL BE FIELD DRILLED.

ALL HOLES THROUGH NEW AND EXISTING MATERIAL SHALL BE REAMED AFTER ASSEMBLY. THE FINAL HOLES MAY BE OVERSIZED: 3/16 INCH MORE IN DIAMETER FOR 7/8 INCH AND LESS NOMINAL DIAMETER BOLTS; AND 1/4 INCH MORE IN DIAMETER FOR 1 INCH NOMINAL DIAMETER BOLTS. HARDENED WASHERS SHALL BE USED ON BOTH SIDES OF OVERSIZED HOLES.

ADDITIONAL REQUIREMENTS FOR HOLES SHALL BE PER 513.14. SHOP HOLES THAT DO NOT MATCH EXISTING RIVET HOLES SHALL BE FIELD DRILLED.

EXISTING MATERIAL SHALL BE CLEANED AND PRIME PAINTED BEFORE CONNECTING NEW MATERIAL.

THE COST OF ALL MATERIAL, EQUIPMENT AND LABOR FOR CONNECTING NEW MATERIAL TO EXISTING MATERIAL SHALL BE INCLUDED AS INCIDENTAL TO THE PERTINENT NEW MATERIAL PAY ITEM.

SHOP ASSEMBLY OF STRUCTURAL STEEL (ITEM 513)

STRUCTURAL STEEL FOR THE EASTBOUND WIDENING IN (FROM FIELD SPLICE 14'-5" EAST OF PIER 4 TO THE EAST ABUTMENT) SHALL BE FIT-UP IN THE SHOP IN SECTIONS PRIOR TO SHIPPING. FIT-UP SHALL BE MADE OF THE LONGEST OVERLAPPING SECTIONS POSSIBLE BASED ON AVAILABLE SPACE WITH THE FOLLOWING SECTIONS AS MINIMUM LENGTHS:

SECTION 1 - FIELD SPLICE TO GIRDER BB BEND POINT NO. 2
GIRDERS R,S,T & BB

SECTION 2 - GIRDER BB BEND POINTS NO. 1 TO NO. 3
GIRDERS R,S,T,U & BB

SECTION 3 - GIRDER BB BEND POINTS NO. 2 TO NO. 4
GIRDERS S,T,U,V,W,X & BB

SECTION 4 - GIRDER BB BEND POINT NO. 3 TO EAST ABUTMENT
GIRDERS T,U,V,W,X,Y,Z,AA & BB

THE ABOVE WORK SHALL BE INCLUDED IN ITEM 513, STRUCTURAL STEEL (AISC CATEGORY III), AS PER PLAN FOR PAYMENT.

SEQUENCE OF CONSTRUCTION

THE REQUIRED ITEMS OF WORK TO BE PERFORMED FOR REMOVAL OF PORTIONS OF EXISTING STRUCTURE AND THE WIDENING AND REHABILITATION CONSTRUCTION SHALL INCLUDE, BUT NOT BE LIMITED TO THE FOLLOWING:

PHASE 2 CONSTRUCTION

A. INSTALL TEMPORARY TRAFFIC BARRIER TO DIVERT TRAFFIC TO THE CENTER OF THE BRIDGE. (SEE MAINTENANCE OF TRAFFIC PLANS)

B. REMOVE PORTIONS OF SLABS & APPROACH SLABS, PORTIONS OF ABUTMENT BACKWALLS, ALL WINGWALLS, THE 2 EXTERIOR STEEL GIRDERS AT THE SOUTHEAST RAMP, EXISTING SIDEWALKS AND SUPPORTS AND END DAM ANGLES AS SHOWN ON THE PLANS. (SEE SHEETS 13/120 THRU 24/120)

C. DRIVE PILING, PLACE DRILLED SHAFTS, CONSTRUCT NEW PORTIONS OF ABUTMENTS AND PIERS, PLACE NEW GIRDERS, INSTALL NEW END CROSSFRAMES AND INTERMEDIATE CROSSFRAMES, PLACE NEW BEARINGS, PLACE EXTERIOR PORTIONS OF DECK SLABS, BACKWALLS, APPROACH SLABS AND REPAIR ABUTMENTS AND PIERS AS SHOWN ON PLANS.

McCOY ASSOCIATES, INC.
CONSULTING ENGINEERS
AKRON, OHIO

58/120

STRUCTURAL GENERAL NOTES

BRIDGE NO. SUM. 76-1277
AKRON EAST EXPRESSWAY
WEST VIADUCT

DESIGNED	DRAWN	TRACED	CHECKED	REVIEWED	DATE	REVISED
JBH	JWD		JGC	JBH	11-13-91	

520891

STRUCTURAL GENERAL NOTES

PHASE 4 CONSTRUCTION

D. RELOCATE TEMPORARY TRAFFIC BARRIERS TO DIVERT TRAFFIC. (SEE MAINTENANCE OF TRAFFIC PLANS)

E. REMOVE MEDIAN BARRIERS, REMAINING PORTIONS OF SLABS, APPROACH SLABS, ABUTMENT BACKWALLS, AND END DAM ANGLES AS SHOWN ON THE PLANS. (SEE SHEETS 13/120 THRU 24/120)

F. REPAIR ABUTMENTS AS SHOWN ON THE PLANS, REPLACE BACKWALLS, REMOVE AND REPLACE EXISTING PIER NO. 3, (CAREFULLY REMOVE CONCRETE FOOTINGS FROM PILES TO BE REUSED, CUT-OFF REMAINING PILES ONE FOOT BELOW PROPOSED BOTTOM OF FOOTING ELEVATION. PILING TO BE REUSED WHICH IS DAMAGED BY THE CONTRACTOR'S REMOVAL OPERATION SHALL BE REPAIRED OR REPLACED TO THE SATISFACTION OF THE ENGINEER AT THE CONTRACTOR'S EXPENSE. SEE SHEETS 57/120 AND 57A/120 FOR PILING LOCATIONS. THE CONTRACTOR SHALL SUBMIT A DETAILED PLAN FOR SUPPORT OF THE EXISTING BRIDGE DURING REMOVAL AND REPLACEMENT OF PIER THREE. THESE PLANS SHALL BE APPROVED BY THE ENGINEER PRIOR TO COMMENCING ANY DEMOLITION). RAISE GIRDERS, PLACE REUSED BEARINGS, PLACE DECK SLABS (EXCEPT FOR 3' - 6" CLOSURE SECTIONS), MEDIAN BARRIERS AND APPROACH SLABS.

CLOSURE PHASE

G. INSTALL CROSS-FRAMES AT THE CLOSURE SECTIONS.

H. PLACE 3' - 6" CLOSURE SECTIONS.

I. REMOVE TEMPORARY BARRIERS AND INSTALL COMPRESSION SEAL IN ONE CONTINUOUS PIECE AT WEST ABUTMENT.

THE CONTRACTOR SHALL BE RESPONSIBLE TO COORDINATE MAINLINE, CITY, STREET AND STRUCTURE WORK IN THE RESPECTIVE PHASES.

NEOPRENE DRAINAGE TROUGH

A. DESCRIPTION

THIS WORK SHALL INCLUDE FURNISHING AND INSTALLING AT THE EAST ABUTMENT EXPANSION JOINTS THE NEOPRENE TROUGHS, DOWNSPOUTS AND BITUMINOUS COATING AS DETAILED IN THE PLANS AND IN ACCORDANCE WITH THE SPECIFICATIONS. ALL STRUCTURAL STEEL, PLATES AND ANCHOR STUDS ARE INCLUDED WITH ITEM 516 STRUCTURAL STEEL EXPANSION JOINTS.

B. MATERIALS

1. NYLON REINFORCED NEOPRENE SHEET (TROUGH AND DOWNSPOUT) - DUPONT'S FAIRPRENE NN-003, 3/32" THICK, CHEMPRENE, 1/8" THICK, OIL STATES RUBBER CO. OR AN APPROVED EQUAL.

THE ONE-PLY MATERIAL SHALL CONFORM TO ASTM D751 AND THE FOLLOWING:

BREAKING STRENGTH, GRAB, W x F, MINIMUM	700 X 700 LBS.
ADHESION, 1" STRIP, 2" MIN., MINIMUM	9 LBS.
BURSTING STRENGTH (MULLEN), MINIMUM PSI	1,400
HEAT AGING, 180° BEND WITHOUT CRACKING AFTER 70 HOURS AT	212°F
LOW TEMPERATURE BRITTLENESS, ASTM D2136 PASS FLEX TEST AFTER 5 HOURS AT	-40°F

2. BITUMINOUS COATING - THE COATING SHALL CONFORM TO THE LATEST EDITION OF FEDERAL SPECIFICATION WW-P-4058, COATING F.

C. FABRICATION

TROUGH SHOP DRAWINGS SHALL BE PREPARED TO CONTROL THE WORK. THEY SHALL BE COORDINATED BY THE CONTRACTOR WITH THE STRUCTURAL STEEL FABRICATOR AND SHALL BE SUBMITTED TO THE DIRECTOR FOR APPROVAL PRIOR TO THE BEGINNING OF TROUGH FABRICATION.

ALL JOINTS OR SEAMS IN THE TROUGH SHALL BE LAP SPLICED NYLON REINFORCED NEOPRENE SHEETS WHICH SHALL EXTEND AT LEAST 4" ON BOTH SIDES OF EACH JOINT. SPLICES SHALL BE VULCANIZED BONDED UNDER HEAT AND PRESSURE IN THE SHOP.

ENDS OF TROUGHS SHALL BE CLOSED WITH THE END REINFORCED AS DESCRIBED ABOVE FOR JOINTS OR SEAMS.

HOLES IN THE TROUGHS SHALL BE LOCATED WITH THE AID OF A TEMPLATE FURNISHED BY THE STRUCTURAL STEEL FABRICATOR.

D. BITUMINOUS COATING APPLICATION

THE BITUMINOUS COATING SHALL BE BRUSH OR TROWEL APPLIED, PRIOR TO ITS APPLICATION SURFACES SHALL BE WIPED WITH A SUITABLE SOLVENT USING CLEAN DRY CLOTHS TO REMOVE CONTAMINANT TRACES. SURFACES SHALL BE DRY AND WARMER THAN 40° DURING COATING APPLICATION. COATING THICKNESS SHALL BE NOT LESS THAN 1/16 OF AN INCH.

E. MEASUREMENT AND PAYMENT

NEOPRENE DRAINAGE TROUGH MEASUREMENT WILL BE BASED ON THE ACTUAL NUMBER OF LINEAL FEET OF DRAINAGE TROUGH (MEASURED ALONG THE TOP OF THE TROUGH) COMPLETE AND IN PLACE AND WILL BE PAID FOR AT THE CONTRACT UNIT PRICE BID FOR ITEM SPECIAL, NEOPRENE DRAINAGE TROUGH. THIS PRICE SHALL BE PAYMENT IN FULL FOR FURNISHING ALL MATERIALS, EQUIPMENT, LABOR, AND INCIDENTALS NECESSARY TO COMPLETE THIS WORK.

REMOVAL OF WELDED ATTACHMENTS

WELDED ATTACHMENTS SHALL BE REMOVED FROM TOP FLANGES OF EXISTING GIRDERS AND BEAMS IN TENSION AREAS AFTER CONCRETE DECK REMOVAL BY GRINDING. GIRDER AND BEAM FLANGES SHALL BE GROUND SMOOTH. REMOVAL OF WELDED ATTACHMENTS SHALL BE INCLUDED WITH ITEM 202, PORTIONS OF STRUCTURES REMOVED FOR PAYMENT.

ITEM 511 - CLASS C CONCRETE, ABUTMENTS, AS PER PLAN

ALL LOOSE AND DISINTEGRATED OR UNSOUND CONCRETE SHALL BE REMOVED TO A MINIMUM DEPTH OF 4 INCHES (3 INCHES ON TOP HORIZONTAL SURFACES) FROM AREAS TO BE REPAIRED AS SPECIFIED UNDER CMS ITEM 519.03. THE AREAS TO BE PATCHED SHALL BE PREPARED AND WELDED STEEL WIRE FABRIC AND HOOK BOLTS WITH EXPANSION ANCHORS SHALL BE INSTALLED AS SPECIFIED UNDER CMS ITEMS 519.02, 519.04 AND 519.05. CLASS "C" CONCRETE SHALL THEN BE PLACED, INCLUDING AREAS TO BE PATCHED, AN ADDITIONAL 4 INCHES OF NEW CONCRETE OVER THE ENTIRE FACE OF THE ABUTMENT AND AN ADDITIONAL 4 1/2 INCHES OVER THE BEAM SEATS.

REMOVAL OF EXISTING CONCRETE, PREPARATION OF SURFACES TO BE PATCHED, INSTALLATION OF WELDED STEEL WIRE FABRIC AND HOOK BOLTS WITH EXPANSION ANCHORS AND PLACEMENT OF NEW CLASS "C" CONCRETE SHALL BE PAID UNDER THIS ITEM.

THE QUANTITY SHALL BE THE TOTAL AREA IN SQUARE FEET OF ALL ABUTMENT SURFACES RECEIVING NEW CLASS C CONCRETE REGARDLESS OF THICKNESS.

ALL INSPECTION TOOLS, EQUIPMENT, MATERIALS AND INCIDENTALS NECESSARY FOR THE ENGINEER TO SOUND 100% OF THE CONCRETE ABUTMENTS, WINGWALLS AND BEAM SEATS SHALL BE SUPPLIED BY THE CONTRACTOR AT THE REQUEST OF THE ENGINEER. PAYMENT SHALL BE INCIDENTAL TO ITEM 511 CLASS "C" CONCRETE, ABUTMENTS, AS PER PLAN.

~~ITEM 519 Patching Concrete Structure, As Per Plan~~

~~AT THE LOCATIONS WHERE LOOSE, DISINTEGRATED OR UN-SOUND CONCRETE EXTENDS BEYOND THE LIMITS NOTED IN ITEM 511 - CLASS C CONCRETE, ABUTMENTS (AS PER PLAN) THE CONTRACTOR SHALL REMOVE THE CONCRETE TO EXPOSE A SOUND CONCRETE SURFACE, PREPARE THE SURFACE AND PLACE NEW CLASS "C" CONCRETE. ALL OF THESE ITEMS OF WORK AND REPAIR SHALL BE AS DESCRIBED IN THE NOTE TITLED ITEM 511 - CLASS "C" CONCRETE, ABUTMENTS (AS PER PLAN). PAYMENT FOR THIS WORK SHALL BE MEASURED ON A SQUARE FOOT BASIS AND SHALL INCLUDE ONLY THOSE AREAS WHERE THE DEPTH OF PATCHING EXCEEDS THE LIMITS NOTED IN ITEM 511 - CLASS "C" CONCRETE, ABUTMENTS (AS PER PLAN) THE PAYMENT SHALL INCLUDE ALL NECESSARY LABOR, EQUIPMENT, MATERIALS AND INCIDENTALS NECESSARY TO PERFORM THE REQUIRED WORK. SINCE ALL QUANTITIES OF PATCHING SHOWN ON THE PLANS ARE ONLY ESTIMATES, ACTUAL PATCHING QUANTITIES WILL BE DETERMINED THROUGH FIELD INSPECTION AND SOUNDING.~~

ITEM 516 - BEARING DEVICE, MISC.

WHEN EXISTING BEARINGS DESIGNATED FOR REUSE ARE DETERMINED TO BE UNSALVAGEABLE BY THE ENGINEER, THEY SHALL BE REPLACED BY NEW BEARINGS AS FOLLOWS WHEN DIRECTED BY THE ENGINEER:

AT PIER 1 - USE NEW *R-375 BEARINGS
AT PIER 2 - USE NEW R-400 BEARINGS
AT PIER 3 - USE NEW *B-375 BEARINGS
AT PIER 4 - USE NEW *R-375 BEARINGS

SEE SHEET 76/120 FOR BEARING DETAILS.

PAYMENT FOR ALL MATERIALS AND LABOR TO FURNISH AND INSTALL THE NEW BEARINGS SHALL BE INCLUDED IN ITEM 516- BEARING DEVICE, MISC. AN ESTIMATED QUANTITY OF 6 EACH HAS BEEN INCLUDED IN THE ESTIMATED QUANTITIES FOR THIS PURPOSE.

ITEM 516, REFURBISH BEARING DEVICES, AS PER PLAN

THIS ITEM INCLUDES THE RESETTING OF EXISTING STEEL BEARINGS THAT HAVE BEEN DESIGNATED FOR REUSE AND RELOCATION ON SHEET 76/120 . THIS ITEM SHALL ALSO INCLUDE THE COST OF REMOVAL AND REPLACING CONCRETE REMOVED TO OBTAIN SUFFICIENT CROSS-SECTIONAL AREA OF THE EXISTING ANCHOR BOLT TO WELD PROPERLY, SEE DETAIL "A" ON SHEET 52/120 .

ITEM 614 - MAINTAINING TRAFFIC

THE ELASTOMERIC COMPRESSION SEAL AT THE WEST ABUTMENT SHALL BE INSTALLED IN ONE CONTINUOUS PIECE FOR EASTBOUND LANES AND ONE CONTINUOUS PIECE FOR WESTBOUND LANES. PRIOR TO OPENING PHASE 2 CONSTRUCTION TO TRAFFIC, THE CONTRACTOR SHALL INSTALL TEMPORARY SEALS IN THE PORTION TO BE OPENED TO TRAFFIC.

AT THE CONCLUSION OF PHASE 4 CONSTRUCTION AND PLACEMENT OF THE CLOSURE SECTION, THE TEMPORARY SEAL SHALL BE REMOVED AND FULL WIDTH SEALS SHALL BE INSTALLED. THE CONTRACTOR SHALL BE PERMITTED TO SET-UP THE NECESSARY LANE CLOSURES ON A DAY AND AT A TIME APPROVED BY THE ENGINEER TO FACILITATE INSTALLATION OF THE FULL WIDTH SEALS. ALL NECESSARY TRAFFIC CONTROL TO ACCOMPLISH THIS WORK AND COSTS OF THE TEMPORARY SEAL INCLUDING INSTALLATION, REMOVAL AND DISPOSAL SHALL BE INCIDENTAL TO ITEM 614, MAINTAINING TRAFFIC.

McCOY ASSOCIATES, INC.
CONSULTING ENGINEERS
AKRON, OHIO

5C/120

STRUCTURAL GENERAL NOTES

BRIDGE NO. SUM. 76-1277
AKRON EAST EXPRESSWAY
WEST VIADUCT

DESIGNED	DRAWN	TRACED	CHECKED	REVIEWED	DATE	REVISED
JBH	JWD		J&C	JBH	11-19-91	

820681

ESTIMATED QUANTITIES

ITEM	ITEM EXT.	TOTAL	UNIT	DESCRIPTION	SUPER.	PIERS	ABUT'S	W.WALL	GENERAL
202	11200	LUMP		PORTIONS OF STRUCTURE REMOVED					L.S.
202	98000	LUMP		REMOVAL FOR RE-USE OF EXISTING STEEL BEARINGS	L.S.				
503	11100	LUMP		COFFERDAMS, CRIBS AND SHEETING					L.S.
503	21100	5770	C.Y.	UNCLASSIFIED EXCAVATION		1820	2450	1500	
505	11100	LUMP		PILE DRIVING EQUIPMENT MOBILIZATION					L.S.
506	11101	LUMP		STATIC LOAD TEST, AS PER PLAN					L.S.
507	42201	17,531	L.F.	14" DIA. C.I.P. REINFORCED CONCRETE PILES, AS PER PLAN		6246	5623	5662	
507	92200	48	L.F.	PREBORED HOLES				48	
SPEC.	50794920	415	L.F.	66" DIA. DRILLED SHAFTS		415			
509	15400	704,076	LB.	REINFORCING STEEL, GRADE 60		390,116	157,382	156,578	
509	15800	1,185,349	LB.	EPOXY COATED REINFORCING STEEL, GRADE 60	1,144,581		28,172	7596	5000
510	11100	700	EA.	DOWEL HOLES			200		500
511	31503	4492	C.Y.	CLASS S CONCRETE, SUPERSTRUCTURE, AS PER PLAN	4492				
511	43000	1078	C.Y.	CLASS C CONCRETE, PIERS		1078			
511	45501	6485	S.F.	CLASS C CONCRETE, ABUTMENTS, AS PER PLAN			6485		
511	45700	1240	C.Y.	CLASS C CONCRETE, ABUTMENTS			1240		
511	46200	770	C.Y.	CLASS C CONCRETE, Retaining Wall or Wing wall				770	
511	46500	1823	C.Y.	CLASS C CONCRETE, FOOTINGS		504	582	737	
*● 511	33404	4491	C.Y.	Class S Concrete, superstructure using shrinkage compensating cement *▲	4492				
*● 511	33410	LUMP		Class S concrete, using shrinkage compensating cement for prepour testing ●	L.S.				
512	44400	30	S.Y.	TYPE B WATERPROOFING			30		
SPEC.	51267502	5284	S.Y.	SEALING OF CONCRETE SURFACES, EPOXY *▲	2960		1294	1030	
513	11701	2,870,600	LB.	STRUCTURAL STEEL, A36, AISC CATEGORY III, AS PER PLAN	2,870,600				
513	12301	20,700	LB.	STRUCTURAL STEEL, A588, CATEGORY III, AS PER PLAN	20,700				
513	14800	128,576	LB.	FRACTURE CRITICAL STRUCTURAL STEEL, A36, CATEGORY III	128,576				
513	16001	226,700	LB.	STRUCTURAL STEEL FOR REHABILITATION, A36, AS PER PLAN	206,700				20,000
SPEC.	51317700	LUMP		RAISING EXISTING STRUCTURAL STEEL	L.S.				
513	20000	3645	EA.	WELDED STUD SHEAR CONNECTORS	3645				
513	21200	LUMP		TRIMMING OF BEAM END	L.S.				
SPEC.	51400100	LUMP		Surface Prep. OF EXISTING STEEL, SYSTEM OZEU *▲	L.S.				
SPEC.	51400200	LUMP		FIELD PAINTING OF EXISTING STEEL, PRIME COAT, SYSTEM OZEU *▲	L.S.				
SPEC.	51400300	LUMP		FIELD PAINTING OF EXISTING STEEL, INTERMEDIATE COAT, SYSTEM OZEU *▲	L.S.				
SPEC.	51400400	LUMP		FIELD PAINTING OF EXISTING STEEL, FINISH COAT, SYSTEM OZEU *▲	L.S.				
SPEC.	51400610	3,226,576	LB.	PAINTING OF NEW STEEL, SYSTEM IZEU *▲	3,226,576				
516	11210	160	L.F.	STRUCTURAL EXPANSION JOINTS INCLUDING ELASTOMERIC STRIP SEALS, 4"	160				
516	12200	270	L.F.	STRUCTURAL STEEL EXPANSION JOINT	270				
516	13600	1266	S.F.	1" PREFORMED EXPANSION JOINT FILLER			257	1009	
516	30500	414	L.F.	P.V.C. WATERSTOP			71	343	
516	45305	24	EA.	REFURBISH BEARING DEVICES, As Per Plan	24				
516	46900	6	EA.	BEARING DEVICE, MISC.					6
518	21200	1197	C.Y.	POROUS BACKFILL, WITH FILTER FABRIC			644	553	
518	42200	505	L.F.	8" PERFORATED C.S.P., 707.01			175	330	
518	42300	206	L.F.	8" NON-PERFORATED C.S.P., INCLUDING SPECIALS, 707.01			176	30	
SPEC.	51862100	279	L.F.	NEOPRENE DRAINAGE TROUGH	279				
519	11100	2321	S.F.	PATCHING CONCRETE STRUCTURES		921	1400		
[redacted]	[redacted]	[redacted]	[redacted]	~~PATCHING Concrete Structures~~			~~1400~~		
523	11100	15	HR.	DYNAMIC LOAD TEST					15

QUANTITIES	
CALC. BY: JMH	DATE: 12/88
CHKD. BY: MAM	DATE: 11/89

FHWA REGION	STATE	PROJECT	
5	OHIO		

945 / 1214

SUMMIT COUNTY
SUM 76-11.57

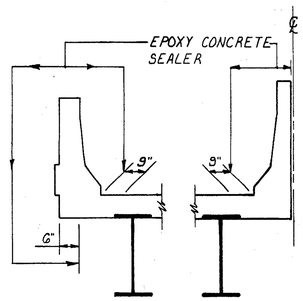

SUPERSTRUCTURE

Class S concrete superstructure, as per plan - Concrete shall be cured by method(a) watercuring

● These two items shall constitute one alternate bid to class S concrete superstructure, as per plan

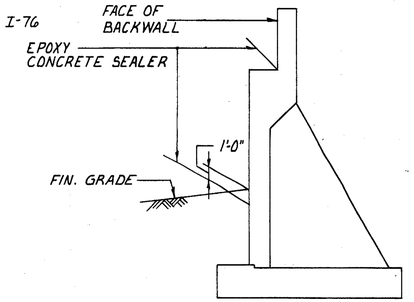

SECTION THRU EXIST. AND PROPOSED ABUTMENTS

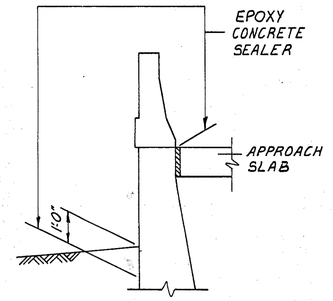

SECTION THRU WINGWALLS

LIMITS OF CONCRETE SEALER

THE CONCRETE SEALER SHALL BE APPLIED AS DESCRIBED IN THE PROPOSAL UNDER "SEALING OF CONCRETE SURFACES".

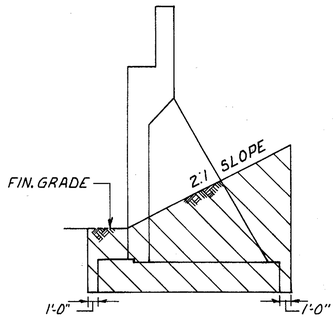

SECTION THRU ABUTMENT

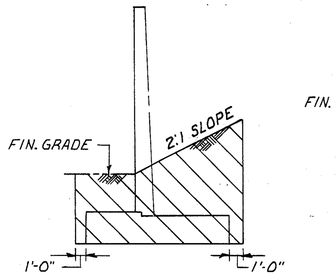

SECTION THRU WINGWALL

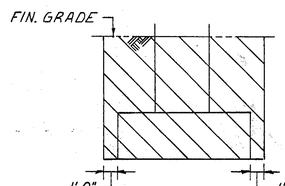

SECTION THRU PIER

LIMITS OF UNCLASSIFIED EXCAVATION

SEE SHT. Nº 13/120 & 14/120 FOR LIMITS OF UNCLASSIFIED EXCAVATION FOR EXISTING ABUTMENTS

*SEE PROPOSAL NOTE.

▲SEE GENERAL NOTES FOR ADDITIONAL DETAILS

McCOY ASSOCIATES INC. 6/120
CONSULTING ENGINEERS
AKRON, OHIO

ESTIMATED QUANTITIES

BRIDGE NO. SUM. 76-1277
AKRON EAST EXPRESSWAY
WEST VIADUCT

DESIGNED	DRAWN	TRACED	CHECKED	REVIEWED	DATE	REVISED
JMH	A.M. M.A.M.	JW.D	M.A.M.	JBH	3-31-89	JGC

FHWA REGION	STATE	PROJECT	
5	OHIO		

946
12.14

SUMMIT COUNTY
SUM 76-11.57

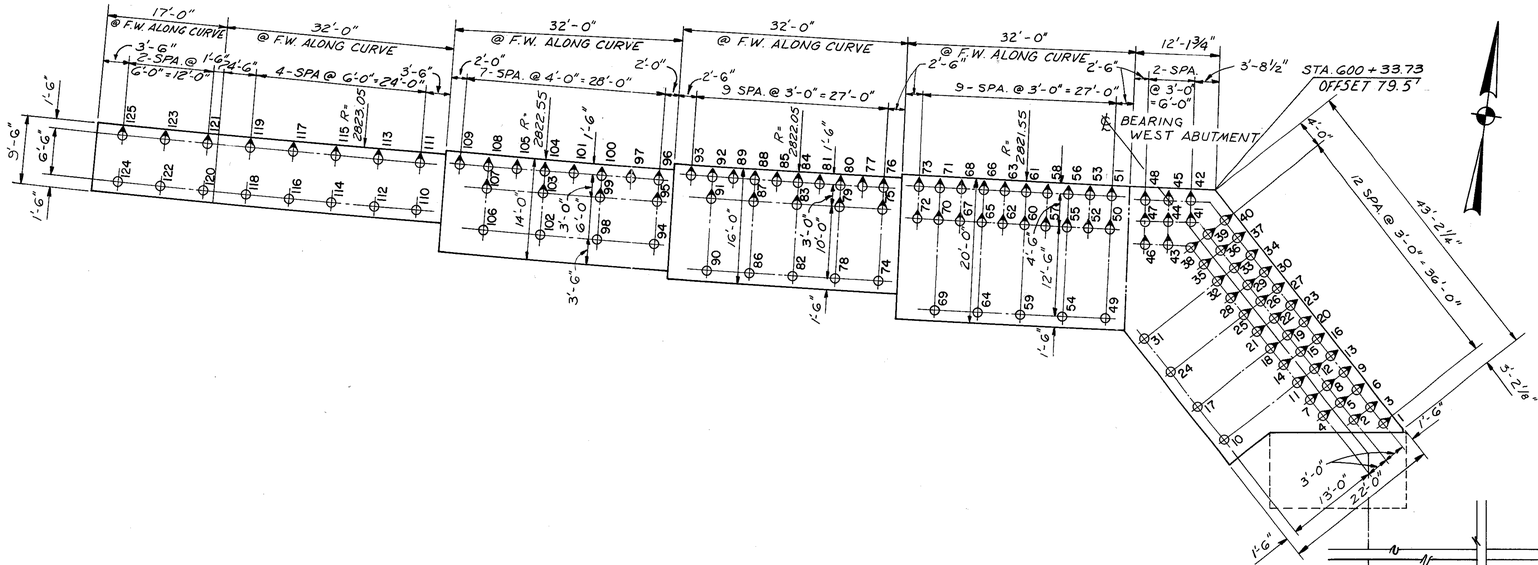

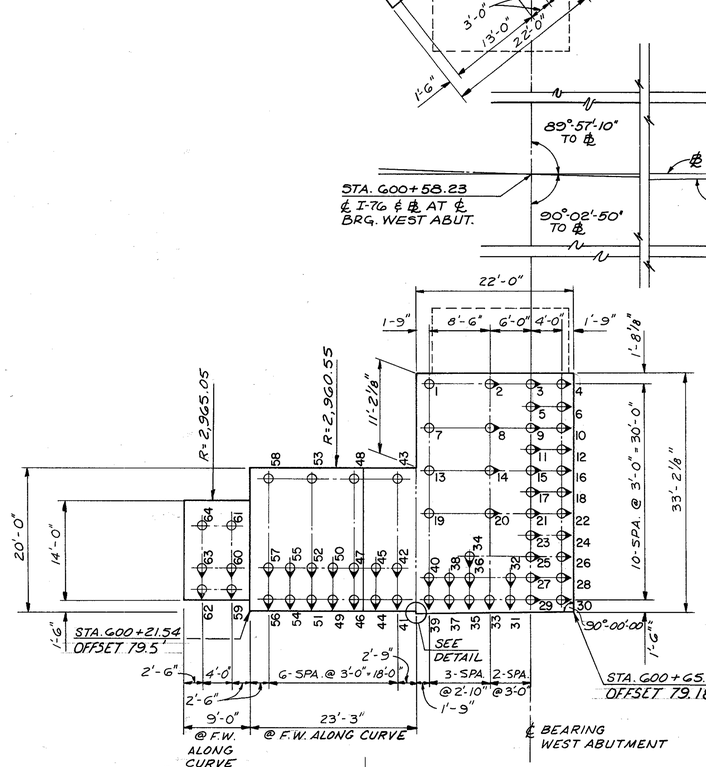

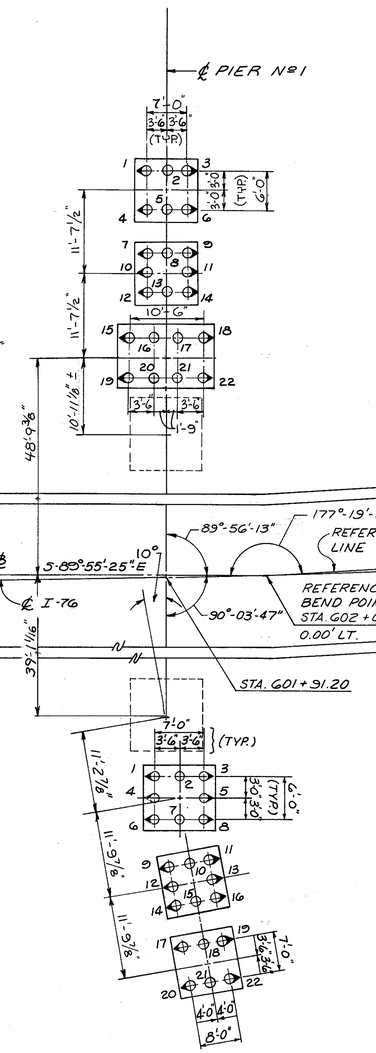

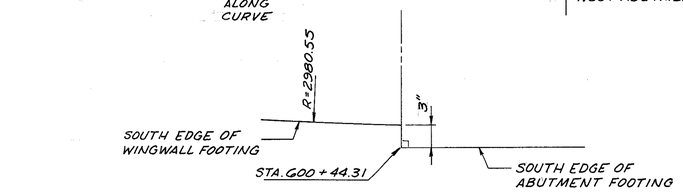

DETAIL
NOT TO SCALE

PILE TABLE

	PILE Nº	PILE TYPE	VERT. PILES QTY.	VERT. PILES EST. LENGTH	BATTERED PILES QTY.	BATTERED PILES EST. LENGTH
W.ABUT.-N.	1-48	14" ø C.I.P. R.C.	4	22'	44	23'
N.W.-W.WALL	49-53	14" ø C.I.P. R.C.	1	29'	4	31'
N.W.-W.WALL	54-73	14" ø C.I.P. R.C.	4	22'	16	23'
N.W.-W.WALL	74-77	14" ø C.I.P. R.C.	1	29'	3	31'
N.W.-W.WALL	78-93	14" ø C.I.P. R.C.	4	22'	12	23'
N.W.-W.WALL	94-97	14" ø C.I.P. R.C.	1	29'	3	31'
N.W.-W.WALL	98-109	14" ø C.I.P. R.C.	3	22'	9	23'
N.W.-W.WALL	110-111	14" ø C.I.P. R.C.	1	26'	1	28'
N.W.-W.WALL	112-119	14" ø C.I.P. R.C.	4	22'	4	23'
N.W.-W.WALL	120-121	14" ø C.I.P. R.C.	1	26'	1	28'
N.W.-W.WALL	122-125	14" ø C.I.P. R.C.	2	22'	2	23'
W.ABUT.-S	1-40	14" ø C.I.P. R.C.	4	22'	36	23'
S.W.-W.WALL	41-45	14" ø C.I.P. R.C.	1	22'	4	23'
S.W.-W.WALL	46-50	14" ø C.I.P. R.C.	1	29'	4	31'
S.W.-W.WALL	51-58	14" ø C.I.P. R.C.	2	22'	6	23'
S.W.-W.WALL	59-61	14" ø C.I.P. R.C.	1	26'	2	28'
S.W.-W.WALL	62-64	14" ø C.I.P. R.C.	1	22'	2	23'
P1-N	1-22	14" ø C.I.P. R.C.	8	27'	14	28'
P1-S	1-22	14" ø C.I.P. R.C.	6	27'	16	28'
P2-N	1-14	14" ø C.I.P. R.C.	2	27'	12	28'
P2-S	1-14	14" ø C.I.P. R.C.	2	27'	12	28'

NOTES

1. PILES SHOWN ⊙ SHALL BE BATTERED IN THE DIRECTION INDICATED AS FOLLOWS:
   ABUTMENTS - 1:3
   PIERS - 1:4
2. PILES SHALL BE DRIVEN TO A MINIMUM BEARING CAPACITY AS FOLLOWS:
   ABUTMENTS: 58 TONS PER PILE.
   PIERS 1&2: 55 TONS PER PILE.
3. REFER TO WEST ABUTMENT, PIER 1 & PIER 2 DETAILS FOR ADDITIONAL DIMENSIONS.
4. F.W. = FACE OF WALL

McCOY ASSOCIATES INC.
CONSULTING ENGINEERS
AKRON, OHIO

7/120

FOUNDATION LAYOUT PLAN

BRIDGE NO. SUM. 76-1277
AKRON EAST EXPRESSWAY
WEST VIADUCT

DESIGNED	DRAWN	TRACED	CHECKED	REVIEWED	DATE	REVISED
H.G.S. T.E.N.	J.D.P.	M.R.A.	R.A.K.	J.B.H.	3-30-89	

FHWA REGION	STATE	PROJECT	
5	OHIO		

947
1214

SUMMIT COUNTY
SUM 76-11.57

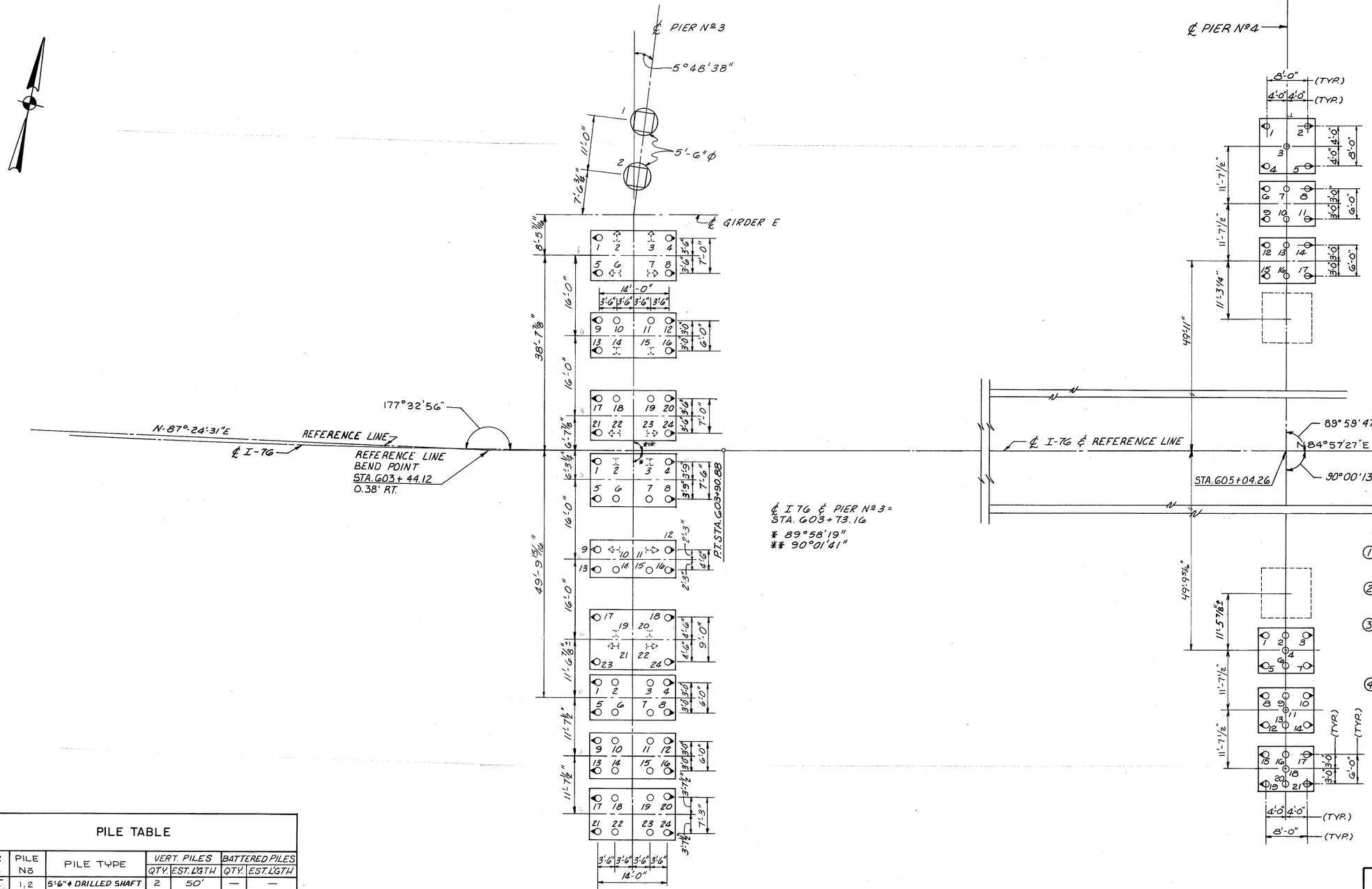

PILE TABLE

PIER Nº	PILE Nº	PILE TYPE	VERT. PILES QTY.	VERT. PILES EST. LGTH	BATTERED PILES QTY.	BATTERED PILES EST. LGTH
P3-NE	1,2	5'6"ϕ DRILLED SHAFT	2	50'	—	—
P3-NI	1-24	14"ϕ C.I.P. R.C.	4	27'	12	28
		EXISTING 14 BP 73	2	48	6	50
P3-SI	1-24	14"ϕ C.I.P. R.C.	4	27'	12	28
		EXISTING 14 BP 73	4	48'	4	50
P3-SE	1-24	14"ϕ C.I.P. R.C.	12	27'	12	28
P4-N	1-17	14"ϕ C.I.P. R.C.	5	27'	12	28
P4-S	1-21	14"ϕ C.I.P. R.C.	9	27'	12	28

NOTES:

1. PILES SHOWN ⊙ SHALL BE BATTERED 1:4 IN THE DIRECTION INDICATED.
2. PILES SHALL BE DRIVEN TO A MINIMUM BEARING CAPACITY OF 55 TONS PER PILE.
3. FOR DRILLED SHAFT SPECIFICATIONS, SEE SHEET Nº 12A/120 FOR DRILLED SHAFT INSPECTION RECORD SEE SHEET Nº 12B/120
4. REFER TO PIER 3 ℄ PIER 4 DETAILS FOR ADDITIONAL DIMENSIONS.

McCOY ASSOCIATES INC.
CONSULTING ENGINEERS
AKRON, OHIO

8/120

FOUNDATION LAYOUT PLAN

BRIDGE NO. SUM. 76-1277
AKRON EAST EXPRESSWAY
WEST VIADUCT

DESIGNED	DRAWN	TRACED	CHECKED	REVIEWED	DATE	REVISED
H.G.S. T.E.N.	DAK		R.A.K.	J.B.H.	3-30-89	

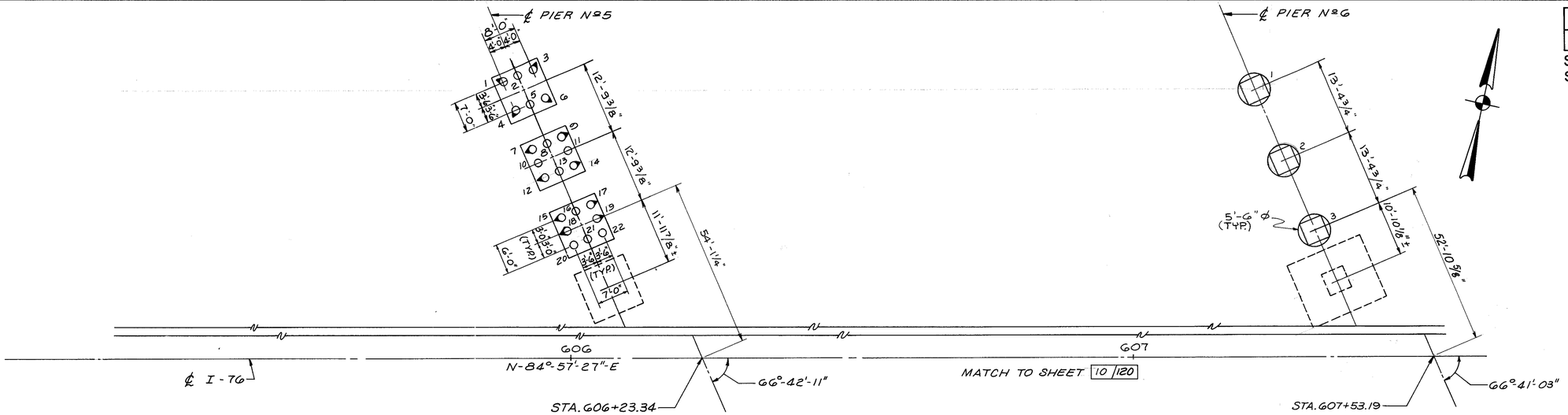

FHWA REGION	STATE	PROJECT	
5	OHIO		

948
12/14

SUMMIT COUNTY
SUM 76-11.57

NOTES

1. PILES SHOWN ⚲ SHALL BE BATTERED 1:4 IN THE DIRECTION INDICATED.
2. PILES SHALL BE DRIVEN TO A MINIMUM BEARING CAPACITY OF 55 TONS PER PILE.
3. FOR DRILLED SHAFT SPECIFICATIONS SEE SHEET 12A/120. FOR DRILLED SHAFT INSPECTION RECORD SEE SHEET 12B/120.
4. REFER TO PIER 5 & PIER 6 DETAILS FOR ADDITIONAL DIMENSIONS.

PILE TABLE

PIER Nō	PILE Nō	PILE TYPE	VERT. PILES QTY.	VERT. PILES EST. L'GTH	BATTERED PILES QTY.	BATTERED PILES EST. L'GTH
P5-N	1-22	14"ϕ C.I.P. R.C.	10	27'	12	28'
P6-N	1-3	5'-6"ϕ DRILLED SHAFT	3	35'	—	—

McCOY ASSOCIATES INC. 9/120
CONSULTING ENGINEERS
AKRON, OHIO

FOUNDATION LAYOUT PLAN
NORTH BRIDGE

BRIDGE NO. SUM 76-1277
AKRON EAST EXPRESSWAY
WEST VIADUCT

DESIGNED	DRAWN	TRACED	CHECKED	REVIEWED	DATE	REVISED
H.G.S. T.E.N.	D.A.K. M.R.A.		R.A.K.	J.B.H.	9-30-89	

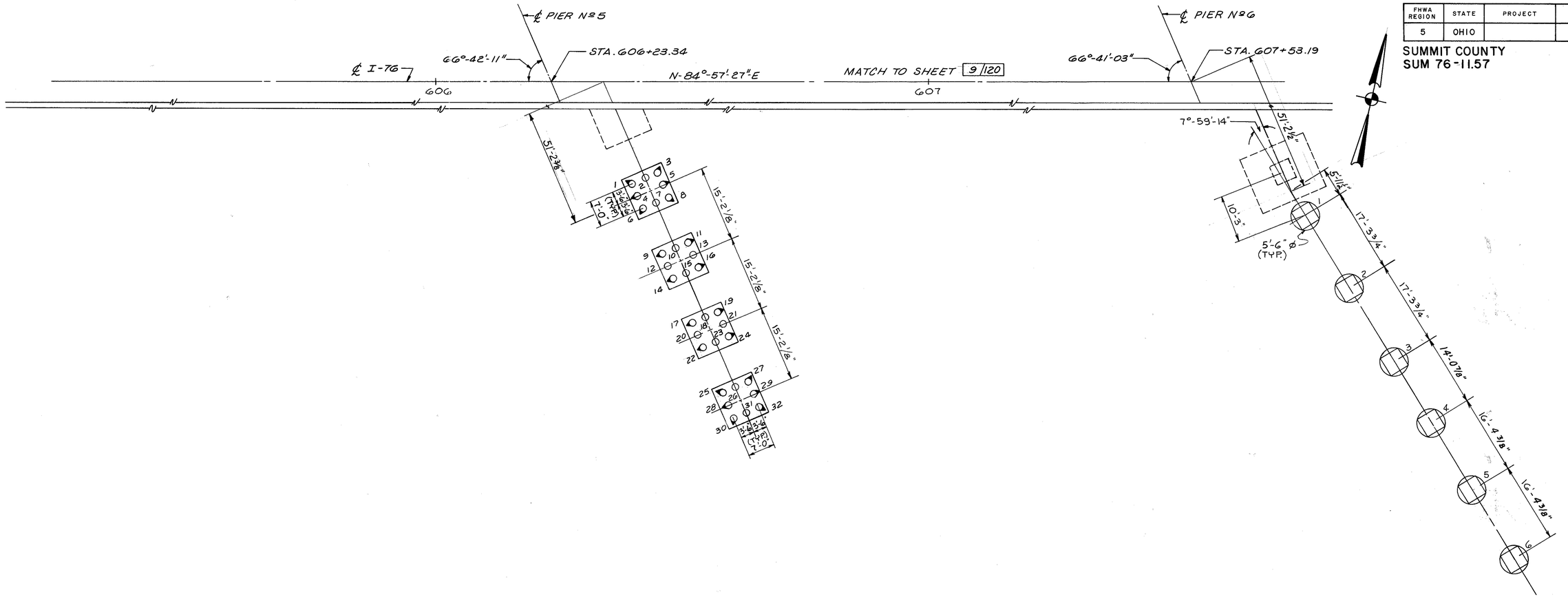

NOTES:

(1) SEE SHEET 9/120 FOR NOTES.

PILE TABLE

PIER No	PILE No	PILE TYPE	VERT. PILES QTY	VERT. PILES EST. L'GTH	BATTERED PILES QTY	BATTERED PILES EST. L'GTH
P5-S	1-32	14"ø C.I.P. R.C.	12	32'	20	33'
P6-S	1-6	5'-6"ø DRILLED SHAFT	6	35'	—	—

FHWA REGION	STATE	PROJECT	
5	OHIO		

943
12.14

SUMMIT COUNTY
SUM 76-11.57

McCOY ASSOCIATES INC. 10/120
CONSULTING ENGINEERS
AKRON, OHIO

FOUNDATION LAYOUT PLAN
SOUTH BRIDGE
BRIDGE NO. SUM. 76-1277
AKRON EAST EXPRESSWAY
WEST VIADUCT

DESIGNED	DRAWN	TRACED	CHECKED	REVIEWED	DATE	REVISED
H.G.S. T.E.N.	D.A.K.		R.A.K.	J.B.H.	3-30-89	

FHWA REGION	STATE	PROJECT	
5	OHIO		

950
1214

SUMMIT COUNTY
SUM 76-11.57

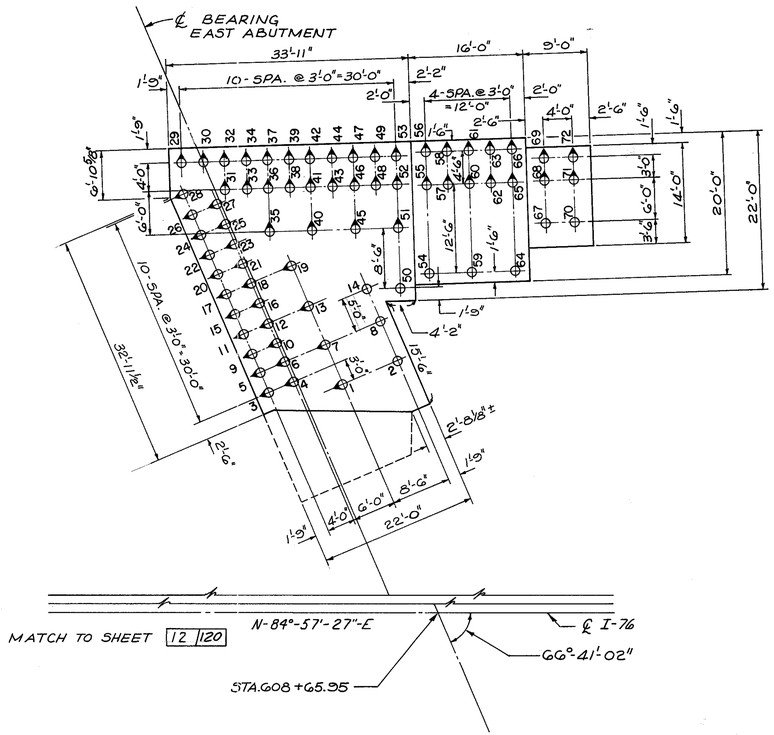

NOTES:

(1) PILES SHOWN ⚲ SHALL BE BATTERED 1:3 IN THE DIRECTION SHOWN.

(2) PILES SHALL BE DRIVEN TO A MINIMUM BEARING CAPACITY OF 58 TONS PER PILE.

(3) REFER TO EAST ABUTMENT DETAILS FOR ADDITIONAL DIMENSIONS.

PILE TABLE

	PILE Nº	PILE TYPE	VERT. PILES QTY.	VERT. PILES EST. LENGTH	BATTERED PILES QTY.	BATTERED PILES EST. LENGTH
E. ABUT-N.	1-53	14"Ø C.I.P. R.C.	4	32'	49	34'
NE.-W. WALL	54-56	14"Ø C.I.P. R.C.	1	36'	2	38'
N.E.-W. WALL	57-58	14"Ø C.I.P. R.C.	0	0	2	41'
N.E.-W. WALL	59-66	14"Ø C.I.P. R.C.	2	32'	6	34'
N.E.-W. WALL	67-69	14"Ø C.I.P. R.C.	1	36'	2	38'
N.E.-W. WALL	70-72	14"Ø C.I.P. R.C.	1	32'	2	34'

McCOY ASSOCIATES INC. 11 120
CONSULTING ENGINEERS
AKRON, OHIO

FOUNDATION LAYOUT PLAN
NORTH BRIDGE
BRIDGE NO. SUM. 76-1277
AKRON EAST EXPRESSWAY
WEST VIADUCT

DESIGNED	DRAWN	TRACED	CHECKED	REVIEWED	DATE	REVISED
T.E.N.	J.D.P.		R.A.K.	J.B.H.	3-30-89	

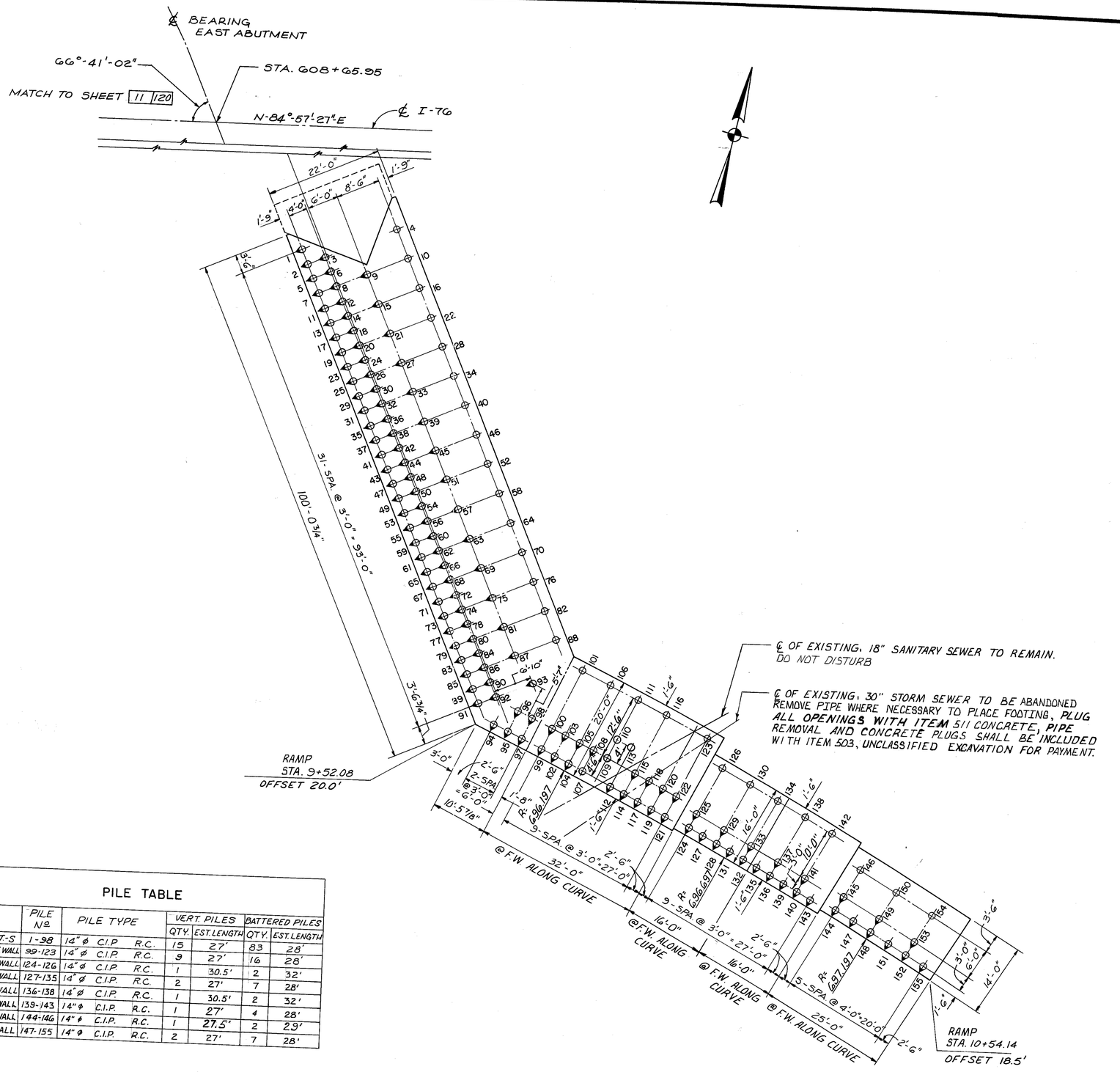

PILE TABLE							
	PILE Nº	PILE TYPE	VERT. PILES		BATTERED PILES	
			QTY.	EST. LENGTH	QTY.	EST. LENGTH
E. ABUT-S	1-98	14" ø C.I.P. R.C.	15	27'	83	28'
S.E.-W. WALL	99-123	14" ø C.I.P. R.C.	9	27'	16	28'
S.E.-W. WALL	124-126	14" ø C.I.P. R.C.	1	30.5'	2	32'
S.E.-W. WALL	127-135	14" ø C.I.P. R.C.	2	27'	7	28'
S.E.-W. WALL	136-138	14" ø C.I.P. R.C.	1	30.5'	2	32'
S.E.-W. WALL	139-143	14" ø C.I.P. R.C.	1	27'	4	28'
S.E.-W. WALL	144-146	14" ø C.I.P. R.C.	1	27.5'	2	29'
S.E.-W. WALL	147-155	14" ø C.I.P. R.C.	2	27'	7	28'

FHWA REGION	STATE	PROJECT	
5	OHIO		

951
12.14

SUMMIT COUNTY
SUM 76-11.57

NOTES:

1. PILES SHOWN ⚲ SHALL BE BATTERED 1:3 IN THE DIRECTION SHOWN.
2. PILES SHALL BE DRIVEN TO A MINIMUM BEARING CAPACITY OF 58 TONS PER PILE.
3. REFER TO EAST ABUTMENT DETAILS FOR ADDITIONAL DIMENSIONS.
4. SEE ROADWAY DRAWINGS-DRAINAGE PLANS FOR SEWER DETAILS.
5. STATIONING IS ℄ I-76 UNLESS NOTED OTHERWISE.
6. F.W. = FACE OF WALL
7. PREBORE HOLES FOR PILES 109, 112, 113 AND 115 TO APPROXIMATE ELEVATION 985.0 TO MISS 18" SANITARY SEWER. EST'D PAY LENGTH = 12 LF PER HOLE.

McCOY ASSOCIATES INC.
CONSULTING ENGINEERS
AKRON, OHIO

12 120

FOUNDATION LAYOUT PLAN
SOUTH BRIDGE

BRIDGE NO. SUM. 76-12.77
AKRON EAST EXPRESSWAY
WEST VIADUCT

DESIGNED	DRAWN	TRACED	CHECKED	REVIEWED	DATE	REVISED
T.A.B. T.E.N.	J.D.P.		R.A.K.	J.B.H.	3-30-89	

FHWA REGION	STATE	PROJECT	
5	OHIO		

952
12/14

SUMMIT COUNTY
SUM-76 -11.57

ITEM SPECIAL - DRILLED SHAFTS

DESCRIPTION
THIS ITEM SHALL CONSIST OF FURNISHING AND INSTALLING DRILLED SHAFTS OF THE TYPE AND SIZE SPECIFIED IN THE PLANS. THE CONTRACTOR SHALL FURNISH ALL LABOR, MATERIAL, AND APPURTENANCES REQUIRED TO COMPLETE THE WORK AS SPECIFIED. THE LENGTH(S) OF THE DRILLED SHAFTS SHOWN IN THESE PLANS HAS BEEN ESTIMATED FROM AVAILABLE SUBSURFACE INFORMATION. THE CONTRACTOR IS EXPECTED TO FURNISH THE PROPOSED DRILLED SHAFTS AS PER THESE PLAN REQUIREMENTS, WITH THE UNDERSTANDING THAT THE ACTUAL LENGTH REQUIRED BASED ON CONDITIONS ENCOUNTERED DURING CONSTRUCTION, MAY DIFFER FROM THE ESTIMATED LENGTH SHOWN IN THE PLANS.

THE REQUIRED LENGTH OF THE DRILLED SHAFT IS 35 FEET FOR PIERS 6N & 6S
THE REQUIRED LENGTH OF THE DRILLED SHAFT IS 50 FEET FOR PIER 3N
THE LOCATION AND ELEVATION OF THE TOP OF THE DRILLED SHAFT SHALL BE CONSTRUCTED TO THE LIMITS AS SHOWN ON THE PLANS.

A CASING WILL BE NECESSARY FOR THE CONSTRUCTION OF EACH PIER DRILLED SHAFT AND THE CASINGS SHALL BE LEFT IN PLACE.

CONTRACTOR QUALIFICATION
THE CONTRACTOR SHALL SUBMIT INFORMATION TO THE ENGINEER TO DOCUMENT THAT HIS PERSONNEL ARE EXPERIENCED IN THE CONSTRUCTION OF DRILLED SHAFTS OF THE TYPE AND SIZE SPECIFIED ON THE PLANS. THIS INFORMATION SHALL BE SUBMITTED AT THE PRECONSTRUCTION CONFERENCE. THE PROJECT ENGINEER IS REQUESTED TO INFORM BUREAU OF BRIDGES. ATTENTION: FOUNDATION ENGINEER (TEL. 614-466-2399) OF THE DATES WHEN THE CONTRACTOR WILL BE CONSTRUCTING THE DRILLED SHAFTS.

SEQUENCE OF INSTALLATION
THE INSTALLATION SEQUENCE SHALL BE SUCH THAT NO DRILLED SHAFT IS INSTALLED ADJACENT TO EITHER AN OPEN DRILLED SHAFT EXCAVATION OR A DRILLED SHAFT IN WHICH THE CONCRETE HAS LESS THAN A SEVEN DAY CURE. INSTALLING THE SHAFTS IN AN ALTERNATING SEQUENCE OR ANY OTHER SEQUENCE THAT MEETS THIS CRITERIA IS PERMISSIBLE.

CASING
THE CASINGS SHALL BE MADE OF STEEL. SHALL BE WATER TIGHT AND SHALL BE OF AMPLE STRENGTH TO WITHSTAND HANDLING PRESSURES AND EXTERNAL SUBSURFACE PRESSURES. THE CASING LENGTH SHALL BE AS NECESSARY TO CONSTRUCT EACH DRILLED SHAFT.

EXCAVATION
WHEN OBJECTS SUCH AS LARGE BOULDERS ARE ENCOUNTERED, THEY SHALL BE REMOVED. BLASTING METHODS MAY BE USED AND WHEN USED, SHALL BE CONDUCTED SO AS TO AVOID DISTURBANCE TO THE BEDROCK FOUNDATION BELOW AND OUTSIDE THE LIMITS OF THE PROPOSED DRILLED SHAFT EXCAVATIONS.

DEWATERING
THE CONTRACTOR SHALL BE RESPONSIBLE FOR CONTROLLING ANY INCOMING WATER TO THE EXTENT THAT THE SHAFT EXCAVATION IS MAINTAINED DRY ENOUGH FOR PERFORMANCE OF THE REQUIRED INSPEOTION OPERATION. THE PREFERRED METHOD OF CONSTRUCTION IS TO PLACE THE CONCRETE IN A CLEAN, DRY EXCAVATION. THE CONTRACTOR IS TO SEAL WATER OUT OF THE DRILLED SHAFT EXCAVATION.

BOTTOM CLEANOUT
THE BOTTOM OF THE COMPLETED DRILLED SHAFT EXCAVATION SHALL BE CLEAN.

APPROVAL BEFORE CONCRETE PLACEMENT
THE CONTRACTOR SHALL SUBMIT TO THE PROJECT ENGINEER FOR APPROVAL A WRITTEN PLAN OF STEPS AND PROCEDURES HE PROPOSES TO FOLLOW WHEN PLACING AND MONITORING THE CONCRETE PLACEMENT. CONCRETE SHALL NOT BE PLACED IN THE DRILLED SHAFT EXCAVATION WITHOUT PRIOR APPROVAL FROM THE ENGINEER. THE DRILLED SHAFT EXCAVATION SHALL BE INSPECTED IMMEDIATELY BEFORE THE CONCRETE IS PLACED. NOTE THAT THROUGH THE WATER THE INSPECTION SHALL BE BE LIMITED TO PROBING AND MEASURING.

CONCRETE PLACEMENT
THE CONCRETE FOR THE DRILLED SHAFTS SHALL BE PLACED AS PER 511 EXCEPT AS MODIFIED BY THE PLANS. THE CONCRETE PLACEMENT OPERATION SHALL BE CONTINUOUS FROM START TO FINISH. THE CONCRETE FOR THE BEDROCK SOCKET SHALL BE PLACED AGAINST THE INSITU BEDROCK AND SHALL BE PLACED PROMPTLY AFTER THE FINAL INSPECTION OF THE SHAFT.
THE CONCRETE SHALL BE PLACED IN A CLEAN DRY EXCAVATION. CARE SHALL BE TAKEN TO ASSURE THAT CONCRETE IS NOT BEING PLACED IN MOVING WATER.

IF THE ENGINEER DETERMINES THAT DEWATERING IS NOT PRACTICABLE. THE CONTRACTOR WILL BE GIVEN PERMISSION TO PLACE THE CONCRETE UNDER WATER. TO PLACE CONCRETE UNDER WATER, THE DRILLED SHAFT EXCAVATION SHALL BE FILLED WITH WATER TO SUCH A DEPTH THAT ALL WATER MOTION HAS CEASED. THE CONCRETE SHALL THEN BE PLACED BY MEANS OF A CONCRETE PUMP. THE CONCRETE PUMP PIPE SHALL HAVE A DIAMETER THAT IS NOT LESS THAN 4 INCHES. THE CONCRETE PUMP EQUIPMENT SHALL BE SO ARRANGED THAT NO VIBRATIONS RESULT WHICH MIGHT DAMAGE FRESH CONCRETE. PIPES CARRYING CONCRETE FROM THE PUMP TO THE SHAFT SHOULD BE ARRANGED WITH A MINIMUM NUMBER OF BENDS. THE PIPE USED TO CONVEY THE CONCRETE TO THE BOTTOM OF THE DRILLED SHAFT EXCAVATION SHALL BE ANCHORED TO THE STEEL CASING TO PREVENT THE PIPE FROM UNDULATING DURING THE INITIAL PLACEMENT OF THE CONCRETE.

THE PUMPING EQUIPMENT SHALL BE SUITABLE IN KIND AND ADEQUATE IN CAPACITY FOR THE WORK REQUIRED. THE USE OF ALUMINUM PIPE AS A CONVEYANCE FOR THE CONCRETE WILL NOT BE PERMITTED. AN ADEQUATE QUANTITY OF GROUT, MORTAR OR CONCRETE WITH COARSE AGGREGATE OMITTED SHALL BE PUMPED THROUGH THE EQUIPMENT AHEAD OF THE SPECIFICATION CONCRETE TO PROVIDE LUBRICATION TO THE PUMPING SYSTEM. THE CONCRETE USED FOR LUBRICATION SHALL NOT BE PLACED IN THE SHAFT. THE LUBRICATION PROCESS WILL NOT BE REPEATED AS LONG AS THE PUMPING OPERATIONS ARE CONTINUOUS. THE OPERATION OF THE PUMP SHALL BE SUCH THAT A CONTINUOUS STREAM OF CONCRETE WITHOUT AIR POCKETS IS PRODUCED, IN ORDER TO PREVENT THE CONTAMINATION OF THE CONCRETE PLACED INITIALLY AT THE BOTTOM OF THE SHAFT. THE OUTLET END OF THE THE PUMPING PIPE SHALL BE SEALED WITH A DIAPHRAM OR PLUG THAT IS FLUSHED OUT WHEN THE HYDROSTATIC PRESSURE FROM THE COLUMN OF CONCRETE EXCEEDS THAT OF THE WATER IN THE SHAFT. THE INITIAL RATE OF CONCRETE PLACEMENT MUST BE CAREFULLY CONTROLLED SO AS NOT TO LIFT OR DISPLACE THE CAGE OF REINFORCING STEEL. THE CONVEYING SYSTEM SHALL BE WATER TIGHT AND THE OUTLET END SHALL ALWAYS REMAIN WELL BELOW THE TOP OF THE FRESHLY PLACED CONCRETE. THE PREFERRED CONCRETE PLACEMENT PROCEDURE IS TO MAINTAIN THE OUTLET END OF THE PUMPING SYSTEM AT APPROXIMATELY 15 FEET BELOW THE TOP OF THE FRESH CONCRETE. WHEN THE CONCRETE REACHES THE TOP OF THE DRILLED SHAFT COLUMN ALL LAITANCE SHALL BE REMOVED.

TOLERANCES
THE CONTRACTOR SHALL LOCATE AND CONSTRUCT THE TOP CENTER OF THE PIER DRILLED SHAFTS WITHIN A TWO-INCH RADIUS OF THE POSITION INDICATED BY THE PLANS. THE SHAFTS ARE TO BE INSTALLED VERTICALLY AND MUST BE WITHIN 1.0 PERCENT OF PLUMB FOR THE TOTAL LENGTH OF THE DRILLED SHAFT.

CONCRETE
CONCRETE FOR ALL DRILLED SHAFTS SHALL BE CLASS S CONCRETE AND SHALL BE IN ACCORDANCE WITH 511. EXCEPT AS MODIFIED AND SUPPLEMENTED HEREIN. THE REQUIRED SLUMP IS SIX (6) INCHES, PLUS OR MINUS ONE-HALF INCH. THE MAXIMUM WATER TO CEMENT RATIO SHALL BE 0.50. IF CONCRETE IS PLACED UNDER WATER, THE REQUIREMENTS OF ADDING 10 PERCENT MORE CEMENT TO THE CONCRETE MIX SHALL BE WAIVED. THE TOP 5 TO 10 FEET OF CONCRETE IN THE DRILLED SHAFTS ARE REQUIRED TO BE VIBRATED. ONLY A MINIMAL VIBRATORY EFFORT IS NECESSARY. SPECIAL CARE SHALL BE TAKEN NOT TO OVER-VIBRATE THE DRILLED SHAFT CONCRETE.

REINFORCING STEEL
REINFORCING STEEL SHALL MEET THE REQUIREMENTS OF 509. THE REINFORCING STEEL SHALL BE GRADE 60. THE SPIRAL REINFORCING STEEL MAY BE PLAIN BARS ASTM A82 OR A615. THE REINFORCING STEEL CAGE SHALL BE COMPLETELY ASSEMBLED PRIOR TO PLACEMENT. SEE PLAN SHEETS FOR DETAILS OF REINFORCING STEEL. THE REINFORCING STEEL SHOULD BE PLACED AT PLAN LOCATIONS.

INSPECTION
THE CONTRACTOR SHALL PROVIDE AND MAINTAIN SUITABLE MEANS FOR ACCESS AND SAFE DESCENT INTO ALL DRILLED SHAFT EXCAVATIONS THAT ARE PROTECTED BY A CASING AND HAVE A DIAMETER THAT IS LARGE ENOUGH TO ALLOW A PERSON TO SAFELY ENTER AND PERFORM THE REQUIRED INSPECTION. ACCESS MAY BE PROVIDED BY A POSITIVE FORWARD AND REVERSE HYDRAULIC WINCH OR POWER-UP AND POWER-DOWN HOIST ON A CRANE. THE METHOD CHOSEN FOR ENTERING OR LEAVING THE SHAFT SHALL BE CONVENIENT, SAFE AND NOT UNCOMFORTABLE FOR THE USER. THE CONTRACTOR SHALL ALSO PROVIDE PROTECTIVE CLOTHING FOR THOSE MAKING AN INSPECTION OF THE SHAFT.

AN INSPECTION RECORD CHART HAS BEEN INCLUDED WITH THE PLANS ON SHEET 12B OF 120 AND SHOULD BE COMPLETED BY THE ENGINEER. MEASUREMENTS SHOULD BE OBTAINED PRIOR TO PLACING CONCRETE. THE CONTRACTOR SHOULD PROVIDE ALL NECESSARY EQUIPMENT NEEDED TO OBTAIN MEASUREMENTS FOR COMPLETEING THE CHART. THE CONTRACTOR SHALL ASSIST THE ENGINEER IN OBTAINING THESE MEASUREMENTS. WHEN THE INSPECTION RECORD CHART IS COMPLETED, THE PROJECT ENGINEER SHOULD SUBMIT A COPY TO THE BUREAU OF BRIDGES:
ATTENTION: FOUNDATION ENGINEER.

SAFETY PROVISIONS
THE CONTRACTOR SHALL HAVE AT THE JOB SITE ALL EQUIPMENT AND MATERIALS NEEDED TO PROVIDE SAFE CONSTRUCTION AND INSPECTION OF THE DRILLED SHAFTS AS REQUIRED BY CITY, STATE AND FEDERAL SAFETY REQUIREMENTS.

SAFETY PROVISIONS SHALL INCLUDE, BUT NOT BE LIMITED TO THE REQUIREMENTS SPECIFIED BY THE PLANS, SPECIAL PROVISIONS, AND PROPOSAL.

THE CONTRACTOR SHALL PROVIDE CONTINUOUS SURVEILLANCE OF ALL PERSONS IN THE DRILLED SHAFT EXCAVATIONS. AT ALL TIMES WHEN A PERSON IS IN THE DRILLED SHAFT EXCAVATION. PROVISIONS SHALL BE MADE FOR PUMPING FRESH AIR TO SAID PERSON. ALL LIGHTING SHALL BE WITH ELECTRICAL LIGHTS. MECHANICAL EQUIPMENT USED INSIDE THE SHAFTS SHALL BE OPERATED BY AIR OR ELECTRICITY. THE USE OF GASOLINE ENGINES OR OTHER TYPES OF EQUIPMENT PRODUCING FUMES THAT MAY ENTER THE EXCAVATION WILL NOT BE PERMITTED. THE CONTRACTOR SHALL PROVIDE GAS DETECTION AND OXYGEN ANALYZERS, AND SHALL TEST THE DRILLED SHAFT EXCAVATION ATMOSPHERE QUALITATIVELY THROUGHOUT THE COLUMN'S ENTIRE LENGTH AND ASSURE THAT THE QUANTITIES OF GASES AND OXYGEN PRESENT ARE IN SAFE AMOUNT AND SAFE PROPORTION PRIOR TO PERMITTING ANY PERSON TO ENTER THE SHAFT.

METHOD OF MEASUREMENT
THE TOTAL PAY LENGTH OF EACH DRILLED SHAFT SHALL BE THE COMPLETED AND ACCEPTED LENGTH, MEASURED ALONG THE AXIS OF THE DRILLED SHAFT FROM THE BOTTOM OF THE BEDROCK SOCKET TO THE PROPOSED TOP ELEVATION, AS PER PLAN.

BASIS OF PAYMENT
PAYMENT FOR FURNISHING AND INSTALLING DRILLED SHAFTS WILL BE MADE AT THE CONTRACT UNIT PRICE PER LINEAR FOOT OF ACCEPTED SHAFT LENGTH AS PER ITEM SPECIAL - "5'-6" DIAMETER DRILLED SHAFTS". WHICH SHALL INCLUDE ALL LABOR, MATERIALS, AND EQUIPMENT NECESSARY TO COMPLETE THE ITEMS AS SPECIFIED.

DESIGN PARAMETERS
THE DRILLED SHAFT IS REQUIRED TO SUPPORT A 550 TON WORKING LOAD (LIVE AND DEAD LOAD) WHICH IS ASSUMED TO BE RESISTED BY SHAFT ADHESION AND BY SHAFT END BEARING PRESSURE. THE ALLOWABLE ADHESION IS 1.0 TON PER SQUARE FOOT WHICH IS ASSUMED TO ACT ALONG THE BOTTOM 40 FEET OF THE DRILLED SHAFT FOR PIER 3N AND ALONG THE BOTTOM 20 FEET OF THE DRILLED SHAFT FOR PIERS 6N AND 6S. THE ALLOWABLE END BEARING PRESSURE IS 25 TONS PER SQUARE FOOT.

STATE OF OHIO
DEPARTMENT OF TRANSPORTATION
BUREAU OF BRIDGES AND STRUCTURAL DESIGN
12A/120

DRILLED SHAFT NOTES
BRIDGE NO. SUM-76 -1277
AKRON EAST EXPRESSWAY
WEST VIADUCT
SUMMIT COUNTY

DESIGNED	DRAWN	TRACED	CHECKED	REVIEWED	DATE	REVISED
JPH	RJS	RJS	RLE	RLE	10/1/89	

INSPECTION RECORD FOR DRILLED SHAFTS

FHWA REGION	STATE	PROJECT	
5	OHIO		

953
12.14

SUM-76 -11.57
SUMMIT COUNTY

PROJECT NO. _____

GENERAL CONTRACTOR _____
DRILLING CONTRACTOR _____
PROJECT ENGINEER _____

TYPE & MODEL OF DRILLING MACHINERY _____
MAX. CONTINUOUS TORQUE _____ FT.-LB.
CROWD (MAX. CONTINUOUS DOWNWARD FORCE) _____ LBS.

TYPE OF CONCRETE PUMP _____
HOSE DIAMETER _____ INCHES
CAPACITY _____ CU. FT./MIN.

COST PER LINEAL FOOT _____
ABOVE THE BEDROCK SOCKET _____
IN BEDROCK SOCKET _____
TYPE OF ROCK _____

SUBSTRUCTURE UNIT		DATE AND TIME OF DRILLING		APPROX. ELEVATION OF TOP OF OVER BURDEN	LENGTH OF DRILLED SHAFTS ABOVE THE BEDROCK SOCKET				OBSTRUCTIONS ENCOUNTERED			LENGTH OF DRILLED SHAFTS IN BEDROCK SOCKET			STEEL CASING			REINFORCING STEEL				CONCRETE					TOLERANCES			PLAN SHAFT DIAMETER (INCH)	CONSTRUCTED SHAFT DIAMETER (INCH)
																		VERTICAL		SPIRAL							DEVIATION FROM PLUMB		DEVIATION OF COLUMN TOP CENTER FROM PLAN LOCATION HORIZONTALLY (INCH)		
PIER OR ABUT	SHAFT NO.	STARTED DATE / TIME	FINISHED DATE / TIME		THROUGH AIR (FEET)	THROUGH WATER (FEET)	THROUGH OVER BURDEN (FEET)	PAY LENGTH (FEET)	NUMBER	SIZE (INCH)	ELAPSED TIME FOR REMOVAL (HR.)	APPROX. ELEVATION OF TOP OF BEDROCK	ELEV. OF BOTT. OF BEDROCK SOCKET	LENGTH OF BEDROCK SOCKET (FEET)	LENGTH (FEET)	CASING GAUGE	WAS CASING LEFT IN PLACE ?	BAR SIZE NO.	NO. OF REBARS	BAR SIZE NO.	PITCH (INCH)	SLUMP TEST RESULT (INCH)	CYLINDER STRENGTH f'c (P.S.I.)	AIR TEMP. (F)	TIME NEEDED TO PLACE CONCRETE (HR.)	QUANTITY (CU.YD.)	N-S (INCH)	E-W (INCH)			

FHWA REGION	STATE	PROJECT	
5	OHIO		

954
12.14

SUMMIT COUNTY
SUM 76-11.57

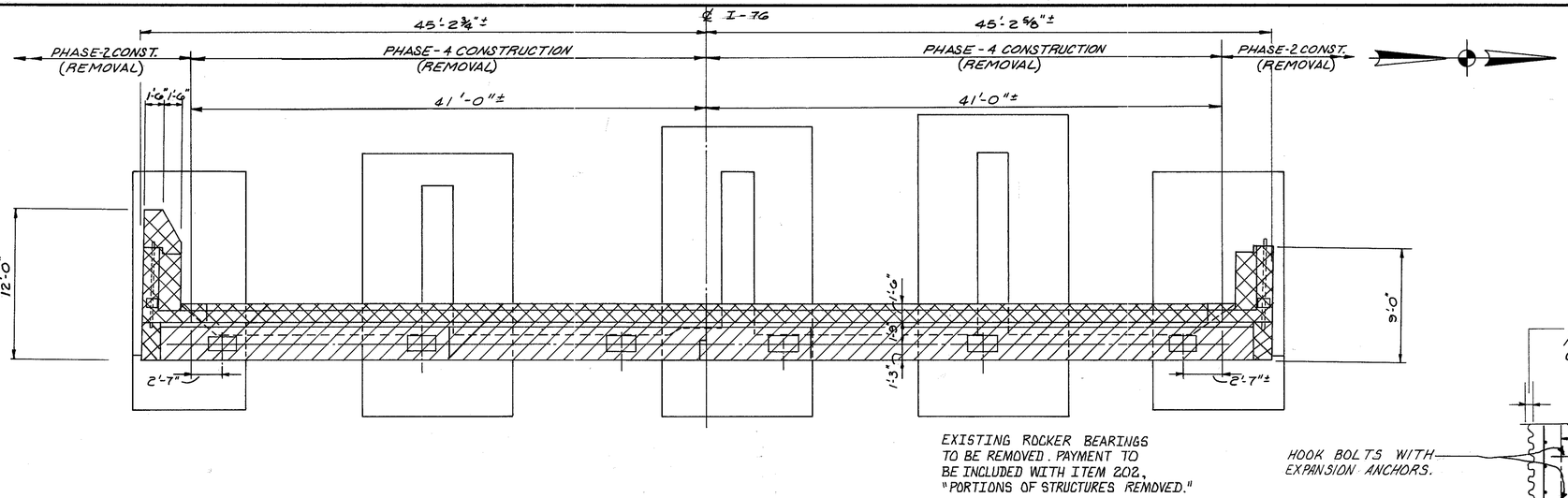

EXISTING ROCKER BEARINGS TO BE REMOVED. PAYMENT TO BE INCLUDED WITH ITEM 202, "PORTIONS OF STRUCTURES REMOVED."

PLAN

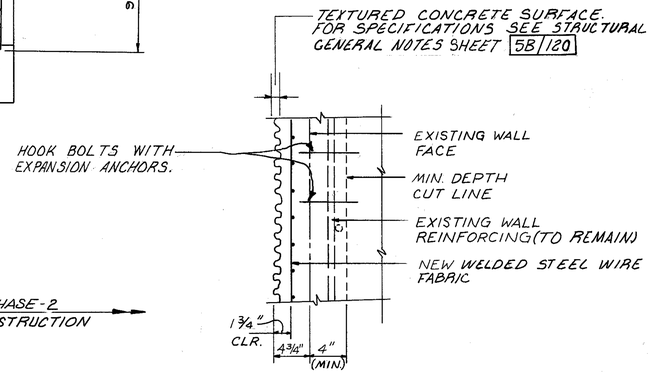

SECTION B-B

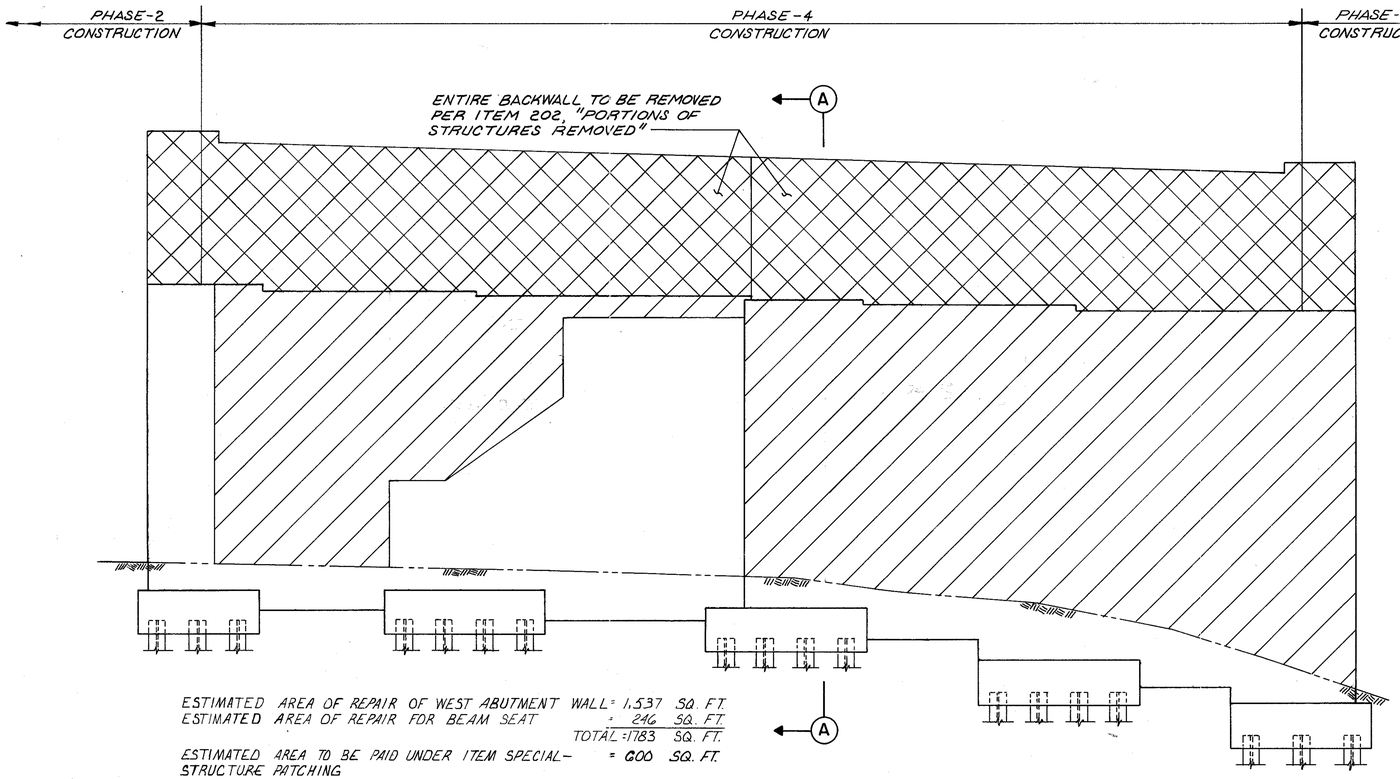

ESTIMATED AREA OF REPAIR OF WEST ABUTMENT WALL = 1,537 SQ. FT.
ESTIMATED AREA OF REPAIR FOR BEAM SEAT + 246 SQ. FT.
TOTAL = 1783 SQ. FT.

ESTIMATED AREA TO BE PAID UNDER ITEM SPECIAL- STRUCTURE PATCHING = 600 SQ. FT.

ELEVATION

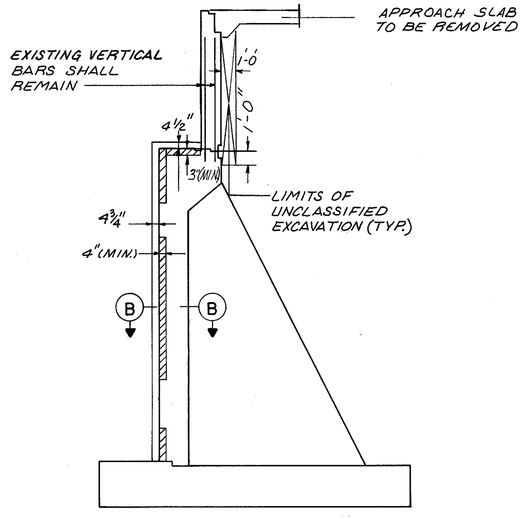

SECTION A-A

NOTES

1. SEE ITEM 511, CLASS C CONCRETE, ABUTMENTS, AS PER PLAN AND ITEM SPECIAL, STRUCTURE PATCHING NOTES ON SHEET 5C/120 FOR DESCRIPTION OF WORK.
2. FOR ADDITIONAL NOTES SEE SHEET 14/120

LEGEND

- INDICATES LIMITS OF EXISTING STRUCTURES TO BE TOTALLY REMOVED, AS PER ITEM 202.
- INDICATES AREA REQUIRING REMOVAL OF UNSOUND CONCRETE AND PREPARATION PER CMS ITEM 519. THE AREA SHOWN ARE APPROXIMATE. WHEN DEPTH OF REPAIR EQUALS 4" (3" ON HORIZONTAL SURFACES), ALL WORK WILL BE INCLUDED IN ITEM 511, CLASS "C" CONCRETE, ABUTMENTS, AS PER PLAN FOR PAYMENT. WHEN DEPTH OF REPAIR EXCEEDS 4" (3" ON HORIZONTAL SURFACES) PAYMENT SHALL BE MADE UNDER ITEM SPECIAL, STRUCTURE PATCHING.

McCOY ASSOCIATES INC. 13/120
CONSULTING ENGINEERS
AKRON, OHIO

DEMOLITION AND REPAIRS
WEST ABUTMENT

BRIDGE Nº. SUM. 76-1277
AKRON EAST EXPRESSWAY
WEST VIADUCT

DESIGNED	DRAWN	TRACED	CHECKED	REVIEWED	DATE	REVISED
T.A.B.	DAK		M.A.M.	JBH	3-30-85	

12276

FHWA REGION	STATE	PROJECT	
5	OHIO		

955
12.14

SUMMIT COUNTY
SUM 76 - 11.57

PHASE-2 CONST. (REMOVAL) | PHASE- 4 CONSTRUCTION (REMOVAL) | PHASE- 4 CONSTRUCTION (REMOVAL) | PHASE-2 CONSTRUCTION (REMOVAL)

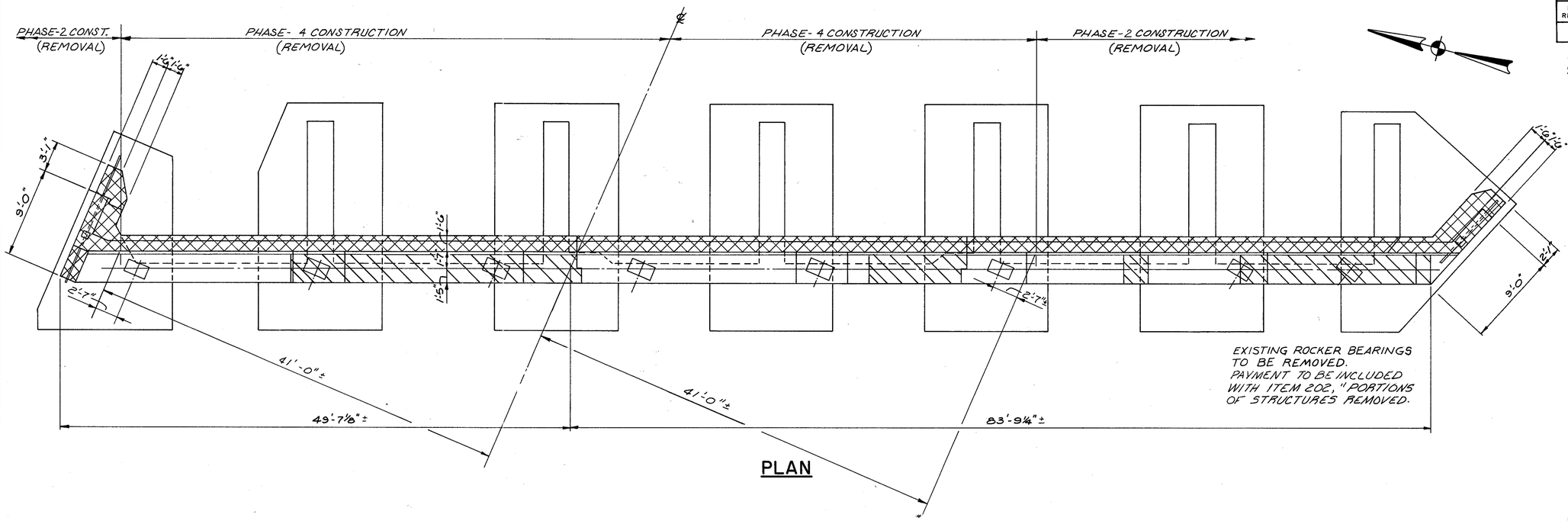

EXISTING ROCKER BEARINGS TO BE REMOVED. PAYMENT TO BE INCLUDED WITH ITEM 202, "PORTIONS OF STRUCTURES REMOVED.

PLAN

PHASE-2 CONSTRUCTION | PHASE-4 CONSTRUCTION | PHASE-2 CONSTRUCTION

ENTIRE BACKWALL TO BE REMOVED PER ITEM 202, "PORTIONS OF STRUCTURES REMOVED"

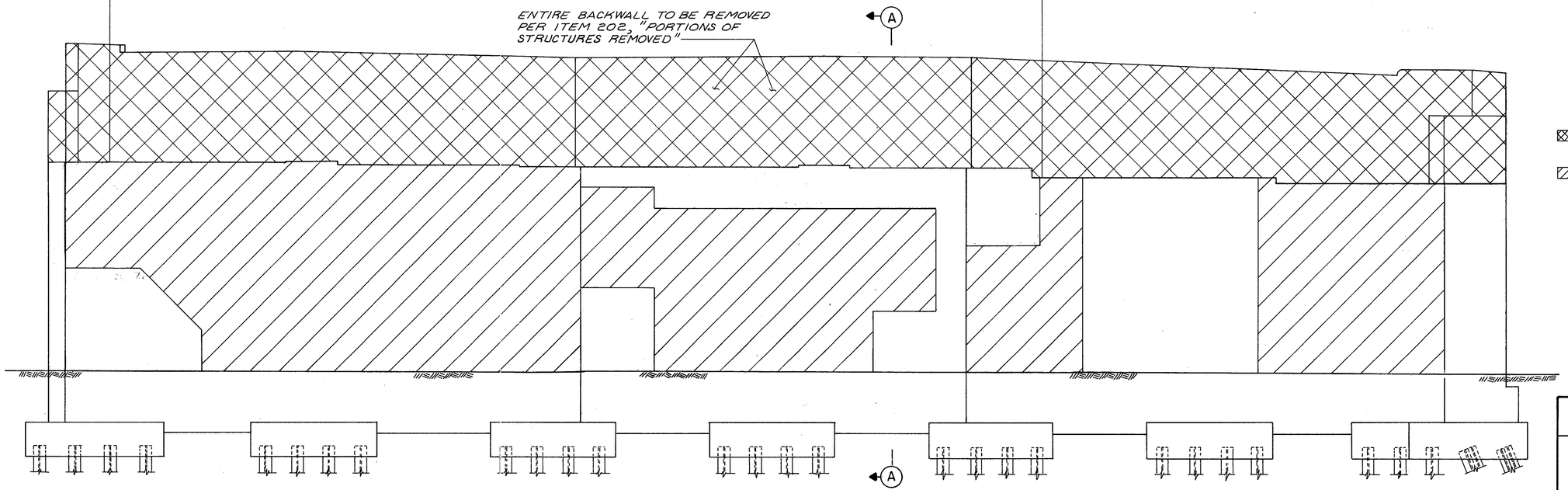

ESTIMATED AREA OF REPAIR OF WEST ABUTMENT WALL = 2,083 SQ. FT.
ESTIMATED AREA OF REPAIR FOR BEAM SEAT = 183 SQ. FT.
TOTAL = 2,266 SQ. FT.

ESTIMATED AREA TO BE PAID UNDER ITEM SPECIAL, STRUCTURE PATCHING = 800 SQ. FT.

ELEVATION

NOTES

(1) CARE SHALL BE TAKEN IN REMOVING EXISTING CONCRETE TO AVOID DAMAGING EXISTING REINFORCING. WHERE EXISTING BARS ARE DETERIORATED OR DAMAGED, NEW DOWELS OF THE SAME SIZE AND 60 DIA. LONGER THAN THE SECTION BEING REPLACED SHALL BE PROVIDED. EMBED DOWELS 30 DIA., AS DIRECTED BY THE ENGINEER, INTO EXISTING CONCRETE WITH NON-SHRINK GROUT. PAYMENT FOR REMOVAL OF EXISTING CONCRETE SHALL BE INCLUDED WITH ITEM 202, PORTIONS OF STRUCTURE REMOVED. PAYMENT FOR REPLACING DETERIORATED BARS SHALL BE INCLUDED WITH ITEM 509 EPOXY COATED REINFORCING STEEL AND ITEM 510 - DOWEL HOLES. ESTIMATED QUANTITIES OF 1,000 POUNDS OF ITEM 509, EPOXY COATED REINFORCING STEEL AND 200 EACH, ITEM 510 - DOWEL HOLES HAVE BEEN PROVIDED FOR USE AS DIRECTED BY THE ENGINEER.

(2) FOR SECTION A-A SEE SHEET 13 / 120

(3) FOR ADDITIONAL NOTES SEE SHEET 13 / 120

LEGEND

- INDICATES LIMITS OF EXISTING STRUCTURES TO BE TOTALLY REMOVED, AS PER ITEM 202.
- INDICATES AREA REQUIRING REMOVAL OF UNSOUND CONCRETE AND PREPARATION PER CMS ITEM 519. WHEN DEPTH OF REPAIR EQUALS 4" (3" HORIZONTAL SURFACES), ALL WORK WILL BE INCLUDED IN ITEM 511, CLASS C CONCRETE, ABUTMENTS, AS PER PLAN FOR PAYMENT. WHEN DEPTH EXCEEDS 4" (3" HORIZONTAL SURFACES), PAYMENT SHALL BE MADE UNDER ITEM SPECIAL, STRUCTURE PATCHING. THE AREAS SHOWN ARE APPROXIMATE.

McCOY ASSOCIATES INC. 14 / 120
CONSULTING ENGINEERS
AKRON, OHIO

DEMOLITION AND REPAIRS EAST ABUTMENT

BRIDGE Nº. SUM. 76-1277
AKRON EAST EXPRESSWAY
WEST VIADUCT

DESIGNED	DRAWN	TRACED	CHECKED	REVIEWED	DATE	REVISED
T.A.B.	D.A.K.		M.A.M.	J.B.H.	3-30-89	

22176

FHWA REGION	STATE	PROJECT	
5	OHIO		

956
1214

SUMMIT COUNTY
SUM 76-11.57

NOTES

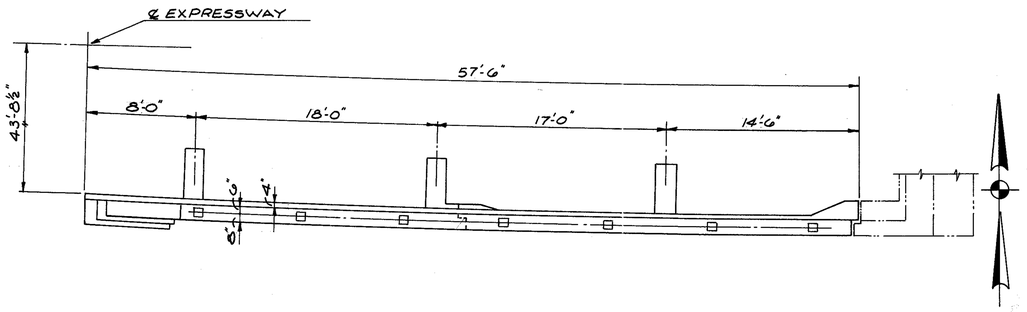

PLAN

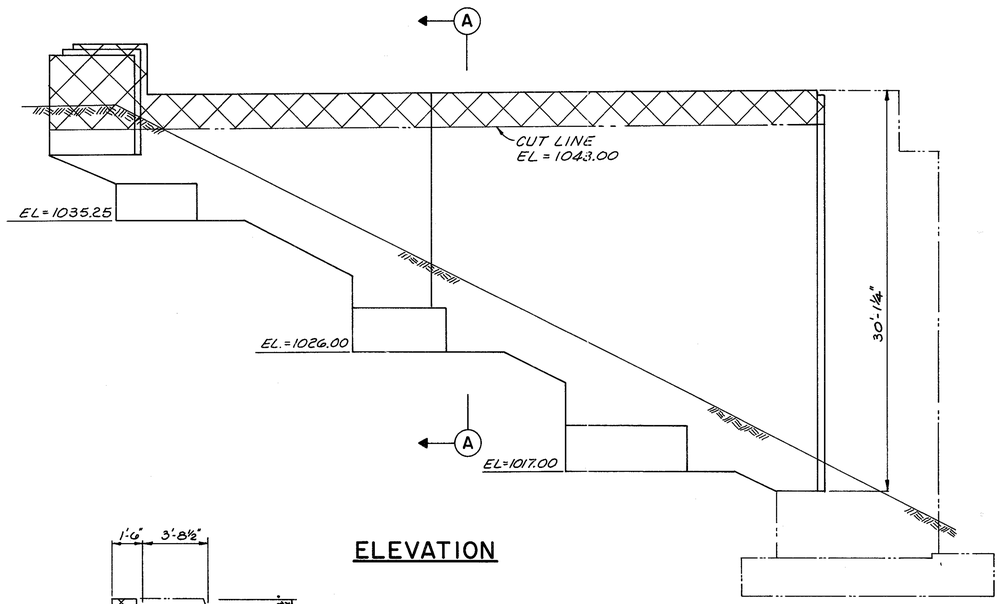

ELEVATION

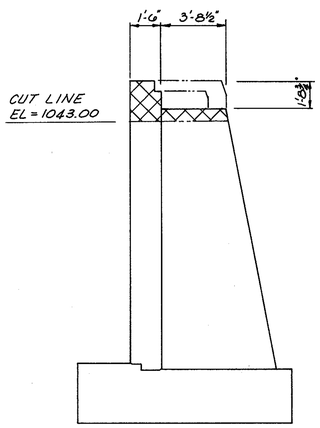

SECTION A-A

LEGEND

- INDICATES LIMITS OF EXISTING STRUCTURES TO BE TOTALLY REMOVED, AS PER ITEM 202.
- INDICATES AREA TO BE REPAIRED BY ITEM 519 - PATCHING CONCRETE STRUCTURES. THE AREAS SHOWN ON THIS DRAWING ARE APPROXIMATE. FINAL DETERMINATION OF THE AREAS TO BE REPAIRED WILL BE MADE BY THE ENGINEER AT THE TIME OF CONSTRUCTION.

McCOY ASSOCIATES INC.
CONSULTING ENGINEERS
AKRON, OHIO

15/120

DEMOLITION
WEST ABUTMENT WINGWALLS

BRIDGE Nº. SUM. 76-1277
AKRON EAST EXPRESSWAY
WEST VIADUCT

DESIGNED	DRAWN	TRACED	CHECKED	REVIEWED	DATE	REVISED
T.A.B.	D.A.K.		M.A.M.	J.B.H.	3-30-89	

72276

FHWA REGION	STATE	PROJECT	
5	OHIO		

957
12/14

SUMMIT COUNTY
SUM 76 - 11.57

NOTES

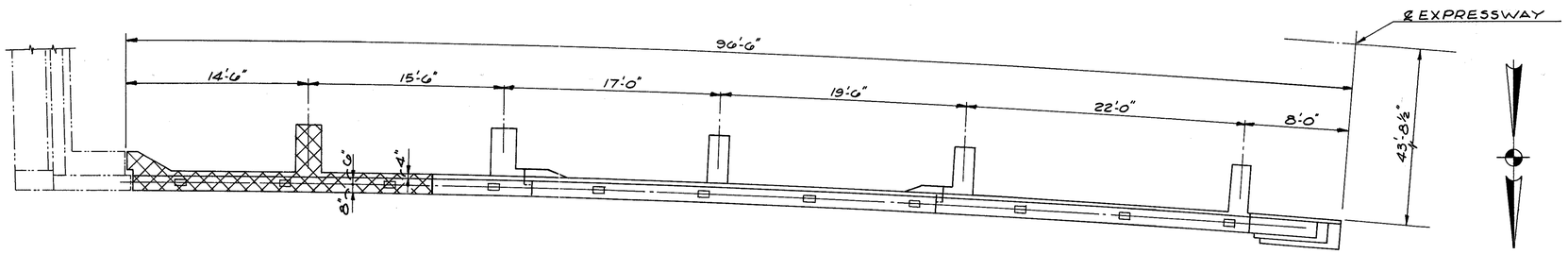

PLAN

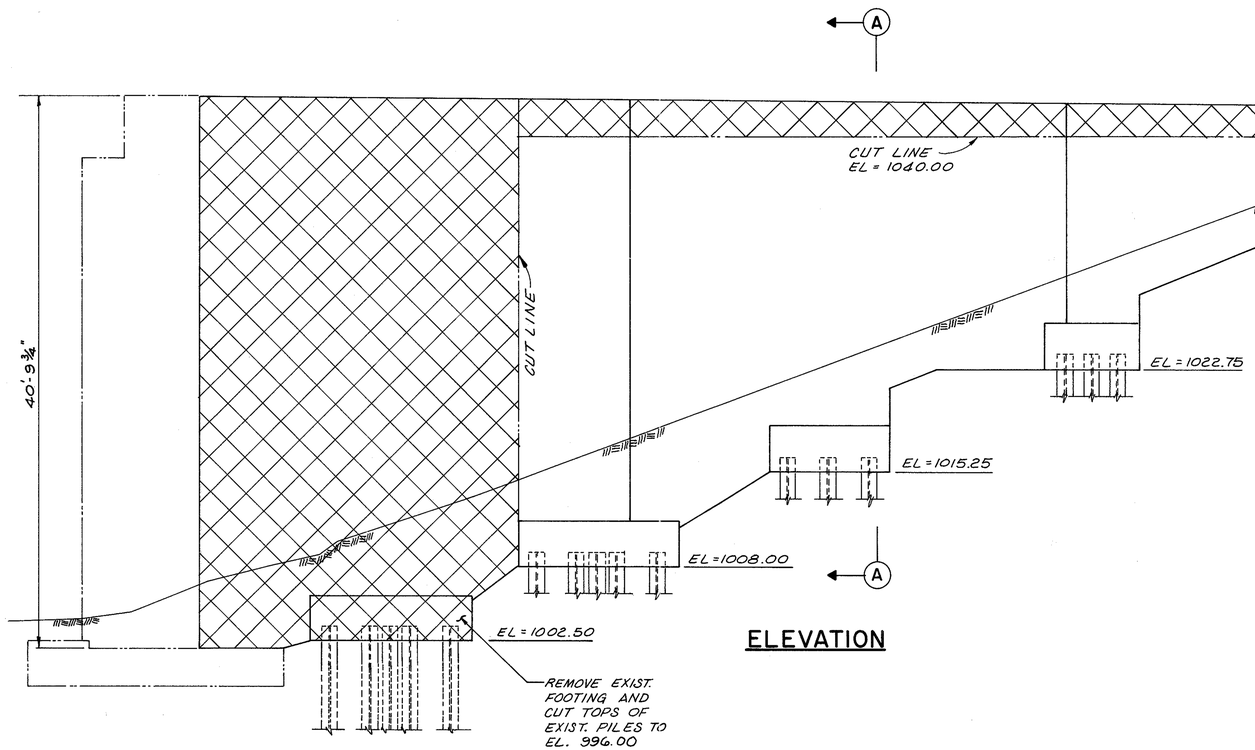

ELEVATION

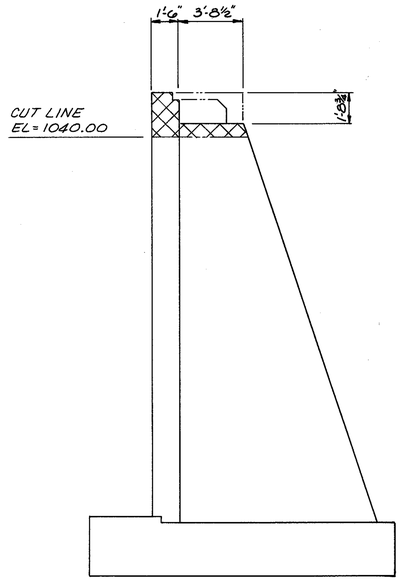

SECTION A-A

LEGEND

- INDICATES LIMITS OF EXISTING STRUCTURES TO BE TOTALLY REMOVED, AS PER ITEM 202.
- INDICATES AREA TO BE REPAIRED BY ITEM 519 - PATCHING CONCRETE STRUCTURES. THE AREAS SHOWN ON THIS DRAWING ARE APPROXIMATE. FINAL DETERMINATION OF THE AREAS TO BE REPAIRED WILL BE MADE BY THE ENGINEER AT THE TIME OF CONSTRUCTION.

McCOY ASSOCIATES INC. 16/120
CONSULTING ENGINEERS
AKRON, OHIO

DEMOLITION
WEST ABUTMENT WINGWALLS

BRIDGE Nº. SUM. 76 - 1277
AKRON EAST EXPRESSWAY
WEST VIADUCT

DESIGNED	DRAWN	TRACED	CHECKED	REVIEWED	DATE	REVISED
T.A.B.	D.A.K.		M.A.M.	JBH	3-30-87	

22276

FHWA REGION	STATE	PROJECT	
5	OHIO		

958
12.14

SUMMIT COUNTY
SUM 76-11.57

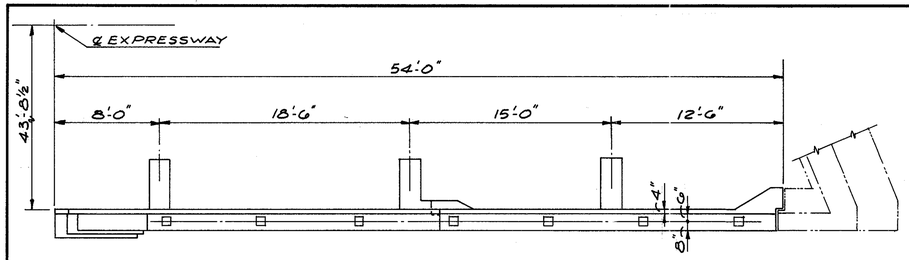

PLAN

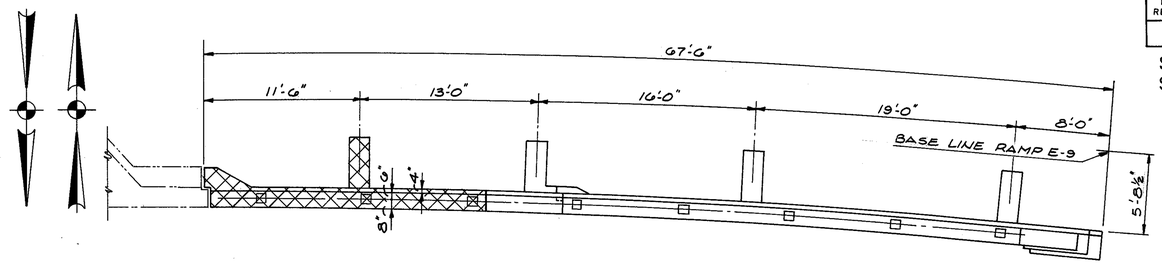

PLAN

NOTES

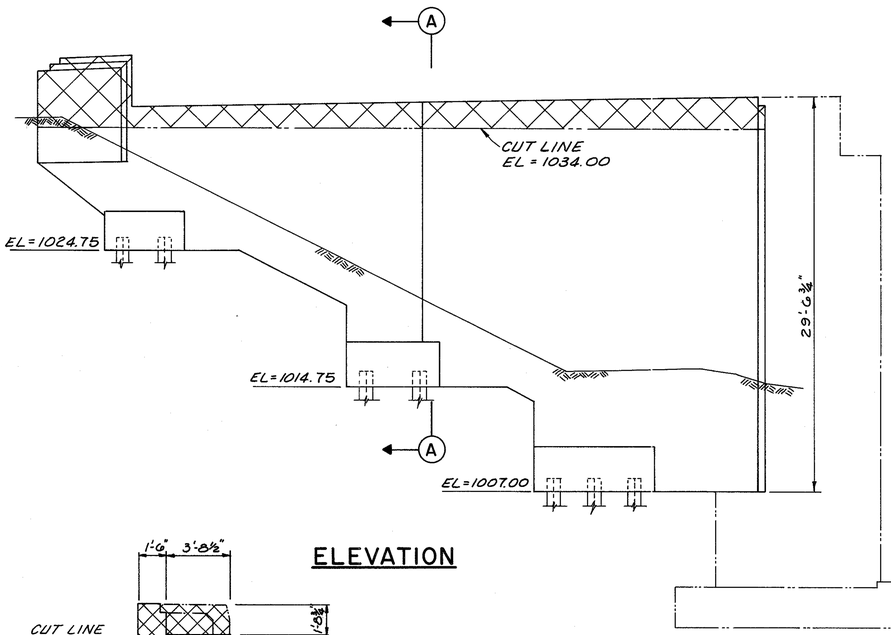

ELEVATION

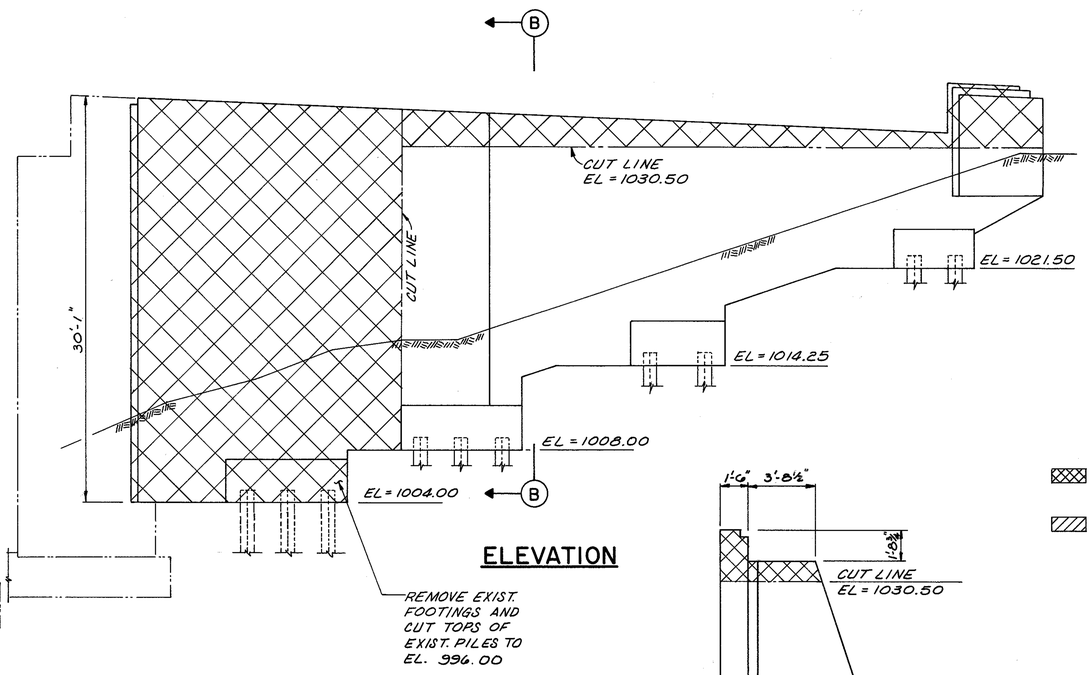

ELEVATION

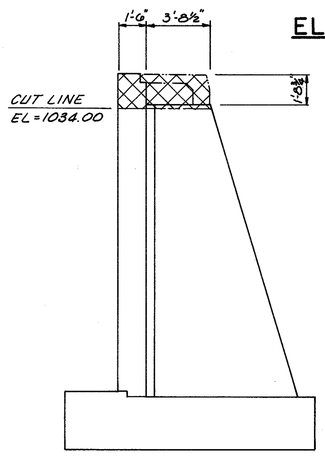

SECTION A-A

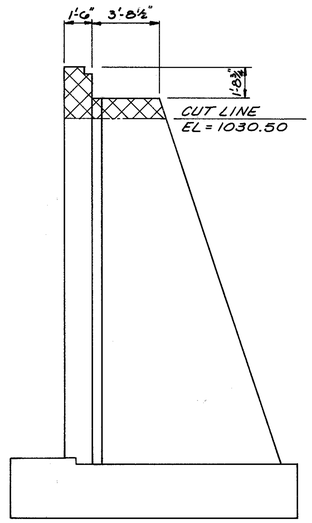

SECTION B-B

LEGEND

- INDICATES LIMITS OF EXISTING STRUCTURES TO BE TOTALLY REMOVED, AS PER ITEM 202.
- INDICATES AREA TO BE REPAIRED BY ITEM 519 - PATCHING CONCRETE STRUCTURES. THE AREAS SHOWN ON THIS DRAWING ARE APPROXIMATE. FINAL DETERMINATION OF THE AREAS TO BE REPAIRED WILL BE MADE BY THE ENGINEER AT THE TIME OF CONSTRUCTION.

McCOY ASSOCIATES INC.
CONSULTING ENGINEERS
AKRON, OHIO

17 / 120

DEMOLITION
EAST ABUTMENT WINGWALLS

BRIDGE Nº. SUM. 76-1277
AKRON EAST EXPRESSWAY
WEST VIADUCT

DESIGNED	DRAWN	TRACED	CHECKED	REVIEWED	DATE	REVISED
T.A.B.	D.A.K.		M.A.M.	JBH	3-30-83	

72276

FHWA REGION	STATE	PROJECT	
5	OHIO		

959
1214

SUMMIT COUNTY
SUM 76-11.57

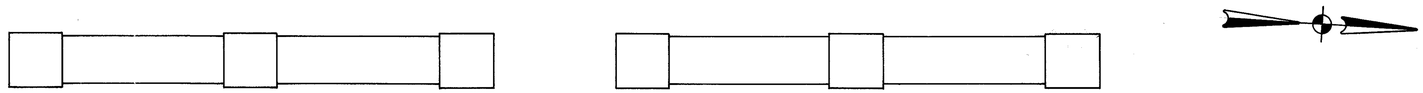

PLAN

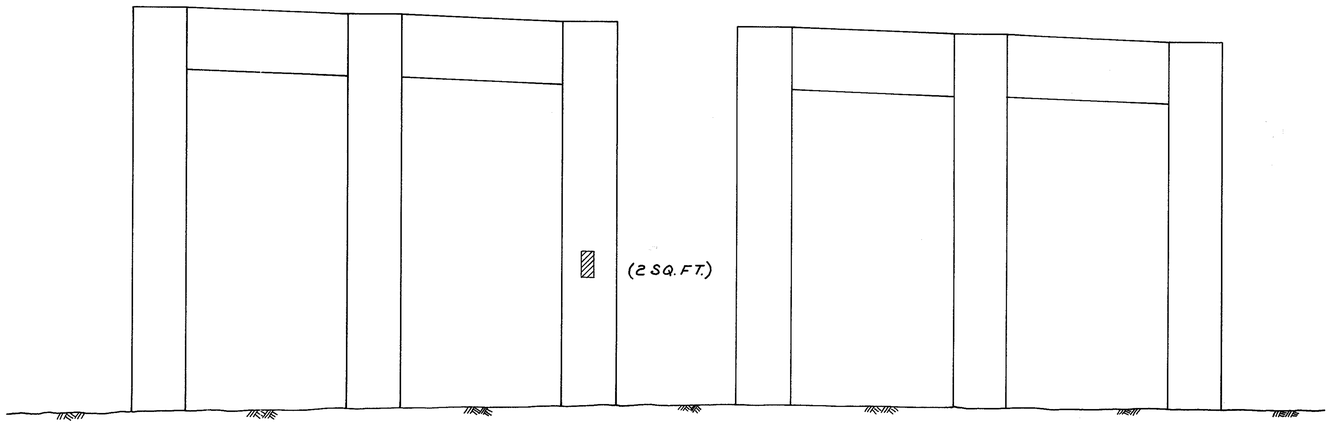

WEST ELEVATION

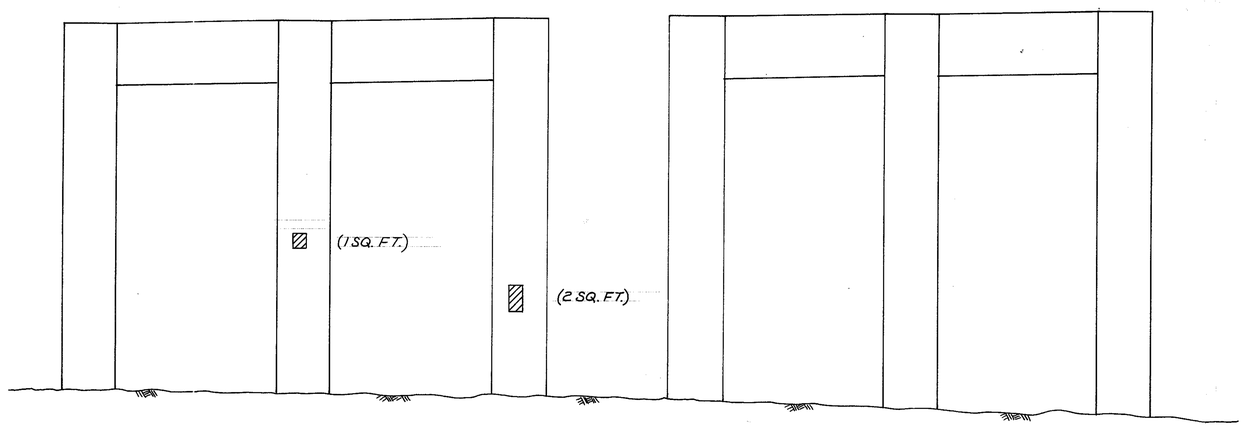

EAST ELEVATION

LEGEND
▨ INDICATES AREA TO BE REPAIRED BY ITEM 519 - PATCHING CONCRETE STRUCTURES. (TOTAL THIS SHT. = 5 S.F.)

McCOY ASSOCIATES INC. 18/120
CONSULTING ENGINEERS
AKRON, OHIO

SUBSTRUCTURE REPAIRS
PIER 1
BRIDGE NO. SUM. 76-1277
AKRON EAST EXPRESSWAY
WEST VIADUCT

DESIGNED	DRAWN	TRACED	CHECKED	REVIEWED	DATE	REVISED
T.A.B.	DAK		M.A.M.	JBH	3-30-89	

FHWA REGION	STATE	PROJECT	
5	OHIO		

960
12.14

SUMMIT COUNTY
SUM 76-11.57

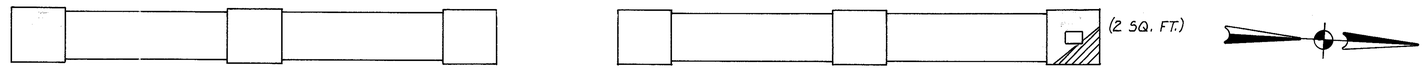

PLAN

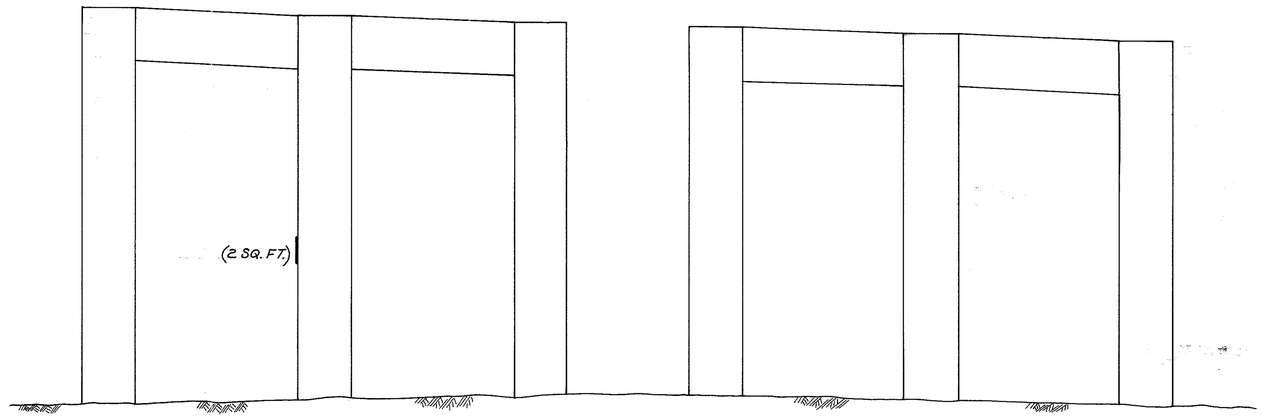

WEST ELEVATION

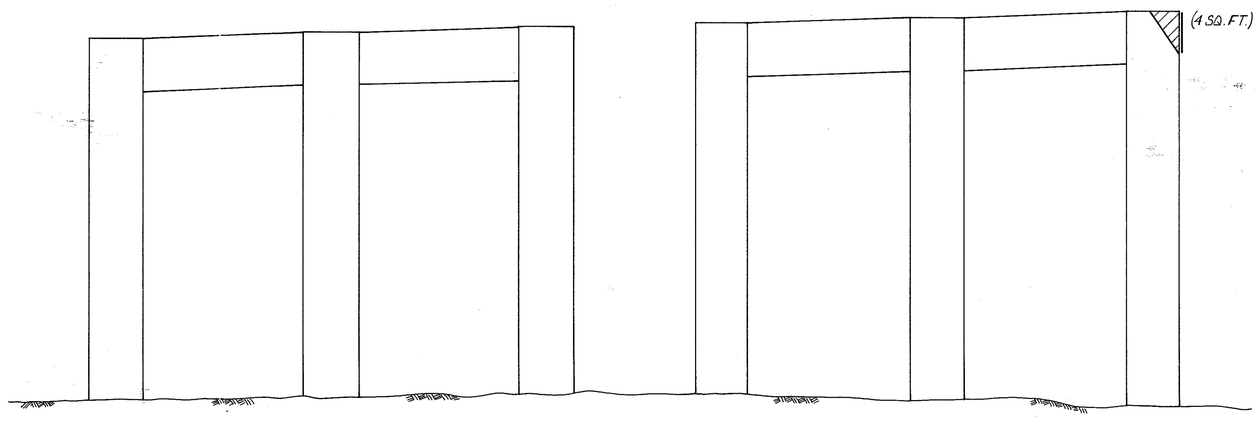

EAST ELEVATION

LEGEND
▨ INDICATES AREA TO BE REPAIRED BY ITEM 519 - PATCHING CONCRETE STRUCTURES. (TOTAL THIS SHT = 8 S.F.)

NOTE: SHEET 20/120 IS NOT USED

McCOY ASSOCIATES INC. 19/120
CONSULTING ENGINEERS
AKRON, OHIO

SUBSTRUCTURE REPAIRS
PIER 2
BRIDGE NO. SUM. 76-1277
AKRON EAST EXPRESSWAY
WEST VIADUCT

DESIGNED	DRAWN	TRACED	CHECKED	REVIEWED	DATE	REVISED
T.A.B.	DAK		M.A.M.	JBH	3-30-65	

FHWA REGION	STATE	PROJECT	
5	OHIO		

961
12.14

SUMMIT COUNTY
SUM 76-11.57

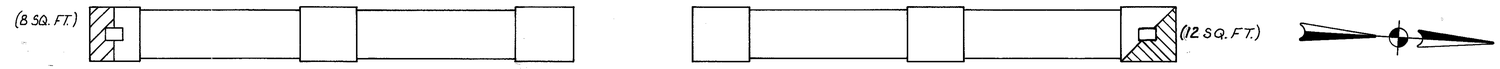

PLAN

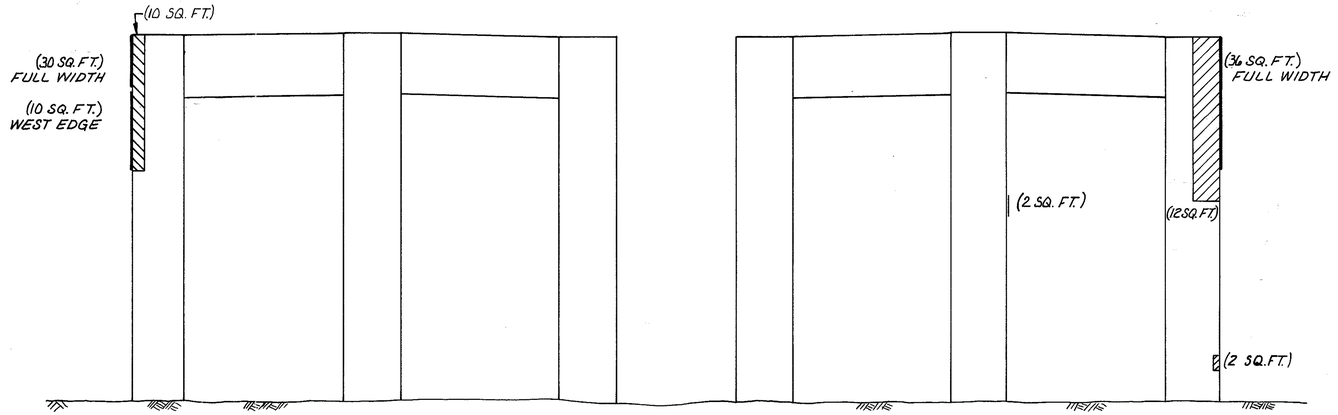

WEST ELEVATION

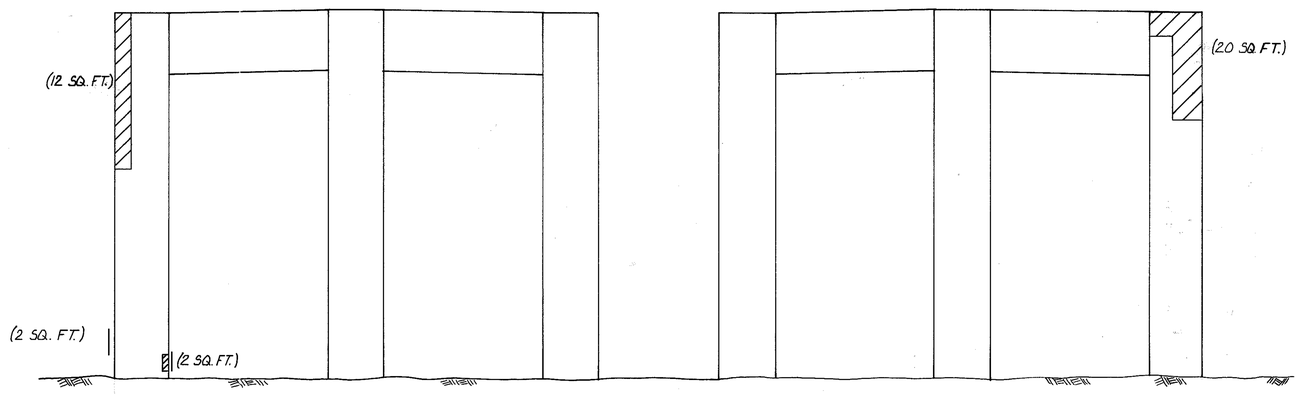

EAST ELEVATION

LEGEND
▨ INDICATES AREA TO BE REPAIRED BY ITEM 519 – PATCHING CONCRETE STRUCTURES. (TOTAL THIS SHT. = 146 S.F.)

NOTE: SHEET 20/120 IS NOT USED.

McCOY ASSOCIATES INC. 21/120
CONSULTING ENGINEERS
AKRON, OHIO

SUBSTRUCTURE REPAIRS
PIER 4
BRIDGE NO. SUM. 76-1277
AKRON EAST EXPRESSWAY
WEST VIADUCT

DESIGNED	DRAWN	TRACED	CHECKED	REVIEWED	DATE	REVISED
T.A.B.	DAK		M.A.M.	JBH	3-30-83	

FHWA REGION	STATE	PROJECT	
5	OHIO		

962
12.14

SUMMIT COUNTY
SUM 76-11.57

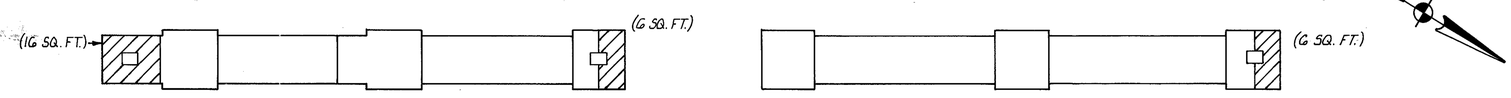

PLAN

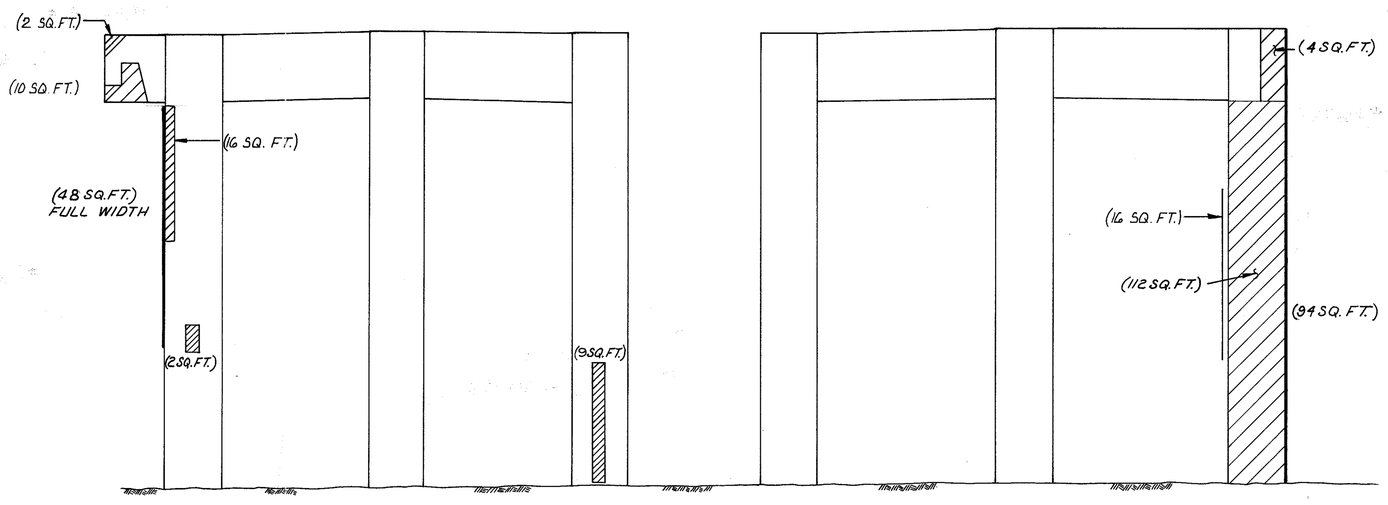

EAST ELEVATION

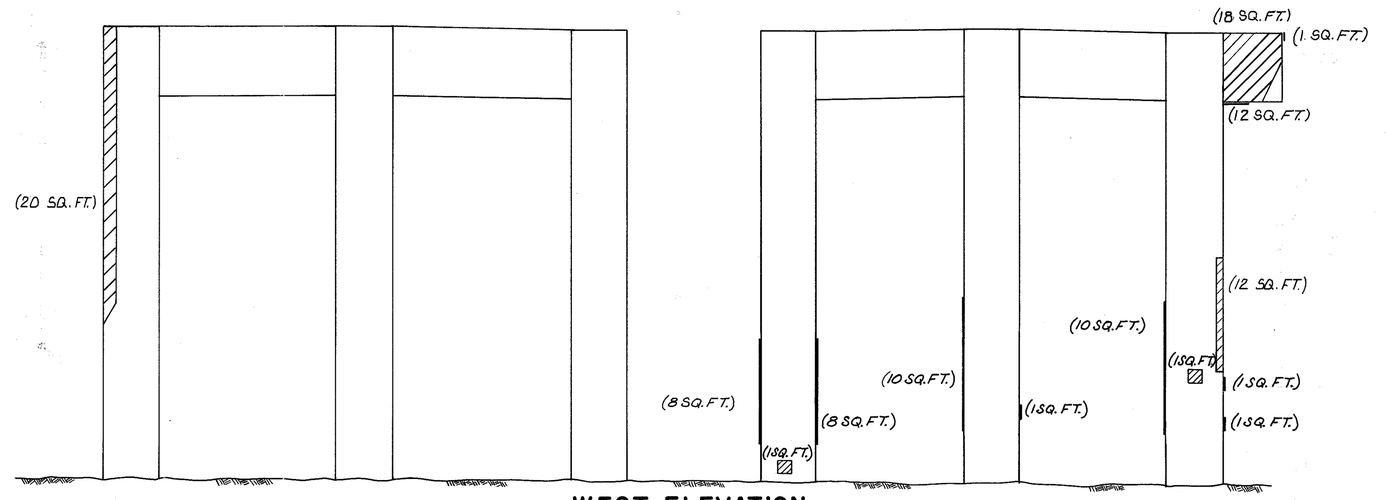

WEST ELEVATION

LEGEND
INDICATES AREA TO BE REPAIRED BY ITEM 519 – PATCHING CONCRETE STRUCTURE (TOTAL THIS SHT. = 445 S.F.)

McCOY ASSOCIATES INC. 22/120
CONSULTING ENGINEERS
AKRON, OHIO

SUBSTRUCTURE REPAIRS
PIER 5
BRIDGE NO. SUM. 76-1277
AKRON EAST EXPRESSWAY
WEST VIADUCT

DESIGNED	DRAWN	TRACED	CHECKED	REVIEWED	DATE	REVISED
T.A.B.	DAK		M.A.M.	JBH	3-30-85	

FHWA REGION	STATE	PROJECT	
5	OHIO		

963
12.14

SUMMIT COUNTY
SUM 76-11.57

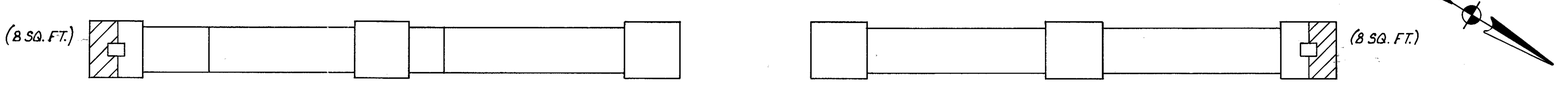

PLAN

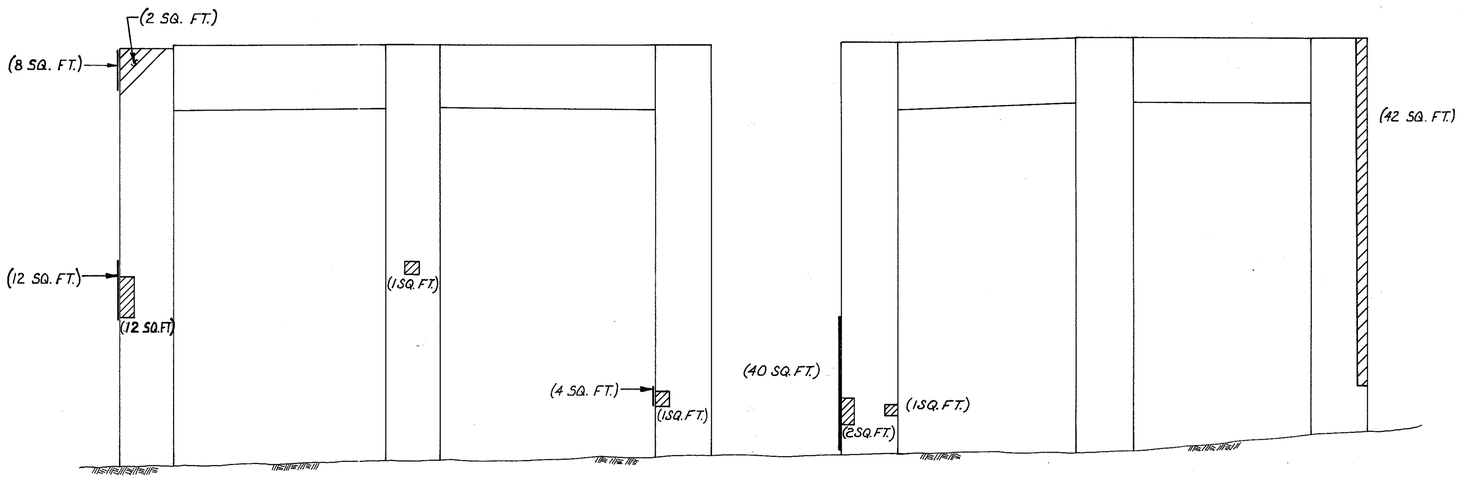

WEST ELEVATION

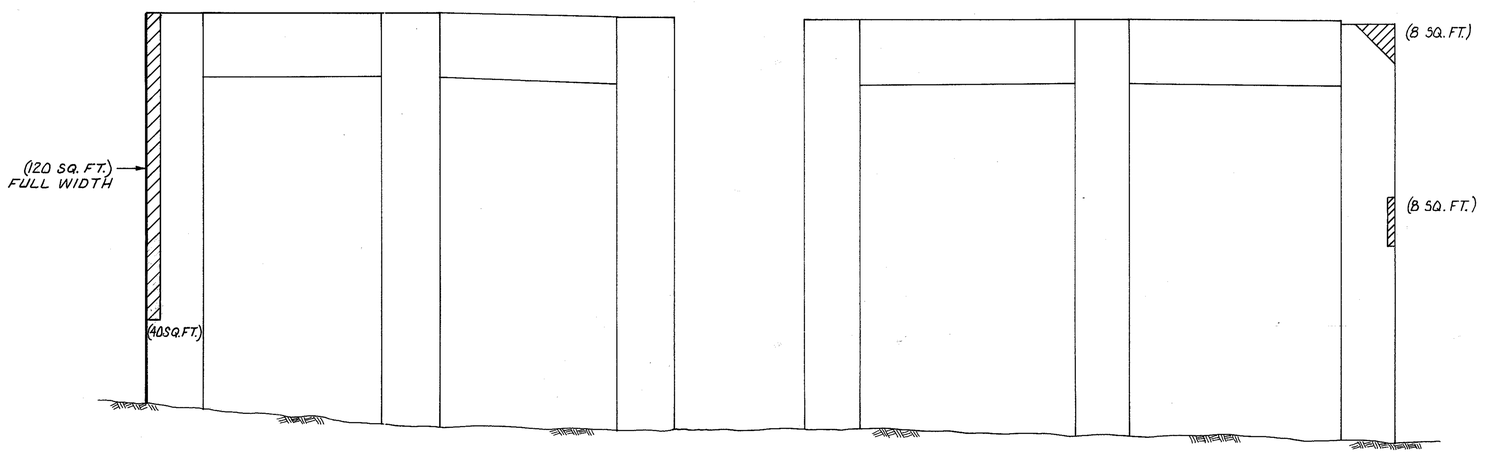

EAST ELEVATION

LEGEND
INDICATES AREA TO BE REPAIRED BY ITEM 519 – PATCHING CONCRETE STRUCTURES. (TOTAL THIS SHT. = 317 S.F.)

McCOY ASSOCIATES INC. 23/120
CONSULTING ENGINEERS
AKRON, OHIO

SUBSTRUCTURE REPAIRS
PIER 6
BRIDGE NO. SUM. 76-1277
AKRON EAST EXPRESSWAY
WEST VIADUCT

DESIGNED	DRAWN	TRACED	CHECKED	REVIEWED	DATE	REVISED
T.A.B.	DAK		M.A.M.	JBH	3-30-85	

FHWA REGION	STATE	PROJECT	
5	OHIO		

964
1214

SUMMIT COUNTY
SUM 76-11.57

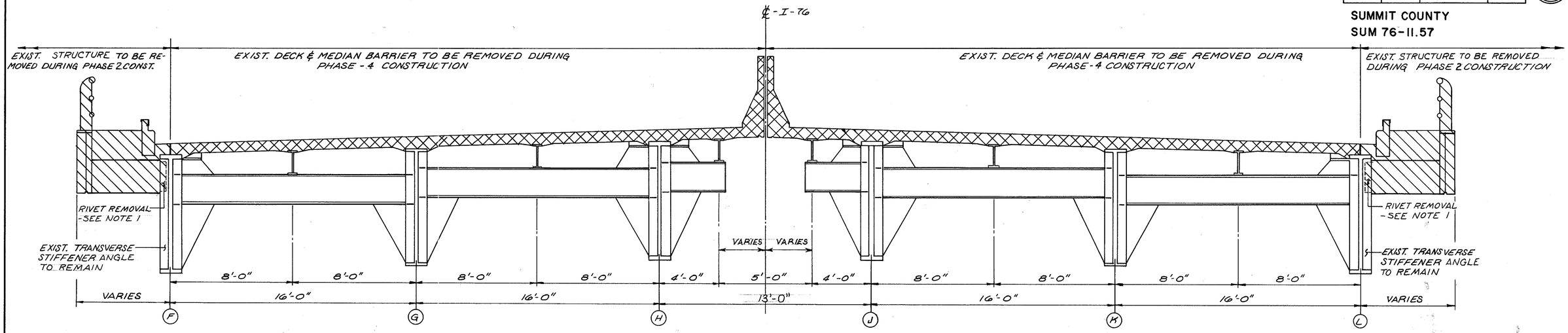

WEST BOUND

EAST BOUND

EXISTING TRANSVERSE SECTION

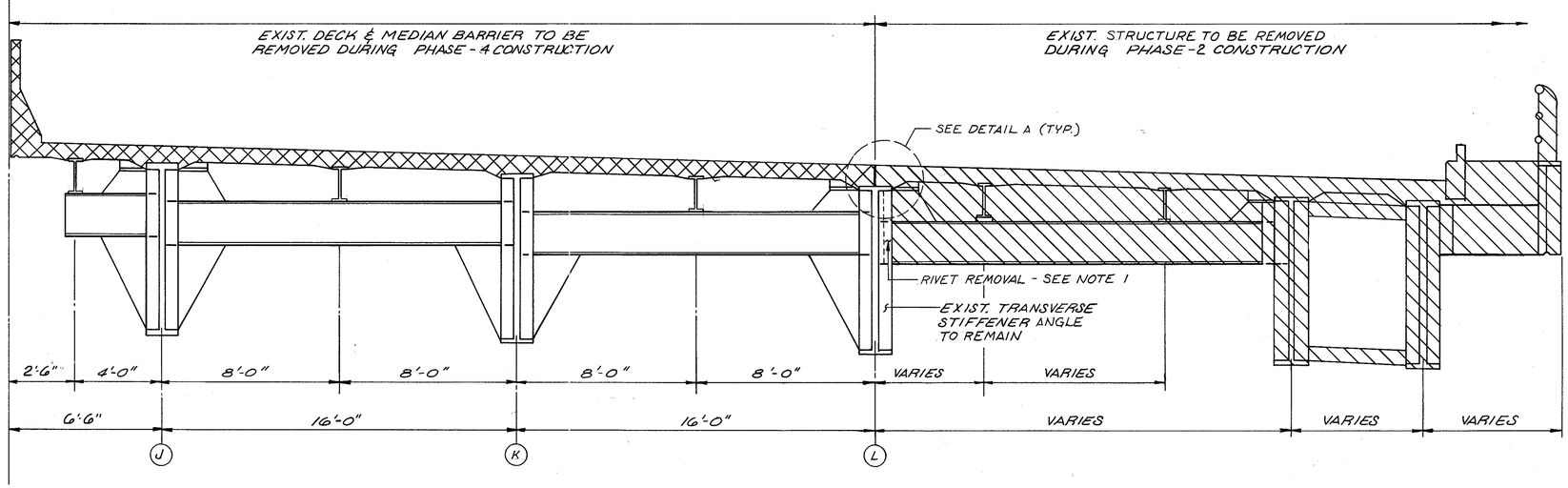

EXISTING TRANSVERSE SECTION (EAST BOUND AT APPROXIMATE STATION 608+75)

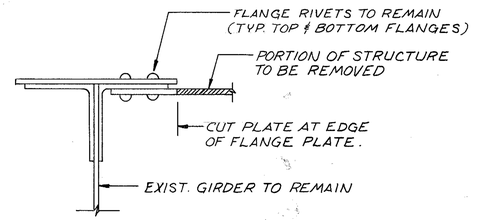

DETAIL A

LEGEND

INDICATES LIMITS OF EXISTING STRUCTURES TO BE REMOVED DURING PHASE 2, AS PER ITEM 202.

INDICATES LIMITS OF EXISTING STRUCTURES TO BE REMOVED DURING PHASE 4, AS PER ITEM 202.

NOTES

(1) REMOVE RIVETS IN OUTSTANDING LEG OF INTERMEDIATE STIFFENER ANGLES. THESE RIVETS TO REMAIN AT BEARING STIFFENER ANGLES. AT BEARING STIFFENER ANGLES, REMOVE RIVETS IN PORTION OF FILL PLATE PROTRUDING FROM BEARING STIFFENER ANGLES.

McCOY ASSOCIATES INC. 24/120
CONSULTING ENGINEERS
AKRON, OHIO

STRUCTURAL REMOVAL & REPAIR DETAILS

BRIDGE NO. SUM. 76-1277
AKRON EAST EXPRESSWAY
WEST VIADUCT

DESIGNED	DRAWN	TRACED	CHECKED	REVIEWED	DATE	REVISED
T. A. B.	DAK MRA		M.A.M.	JBH	3-30-83	

FHWA REGION	STATE	PROJECT	
5	OHIO		

965
1214

SUMMIT COUNTY
SUM 76-11.57

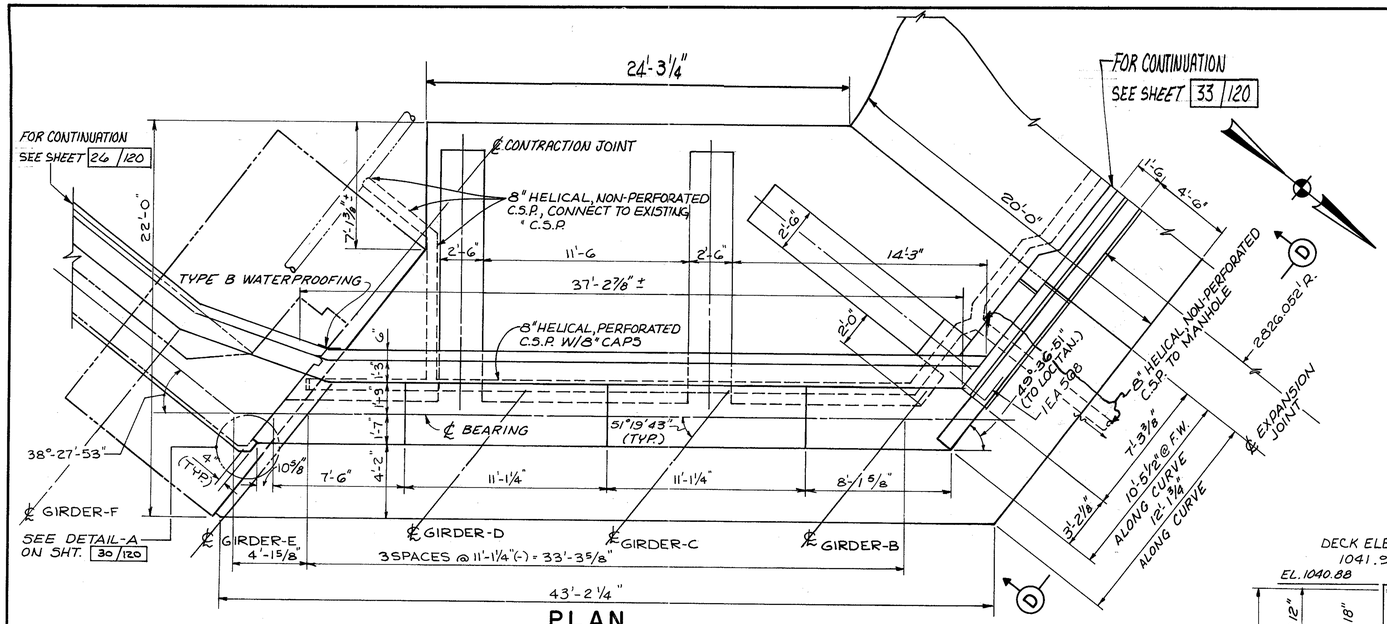

PLAN

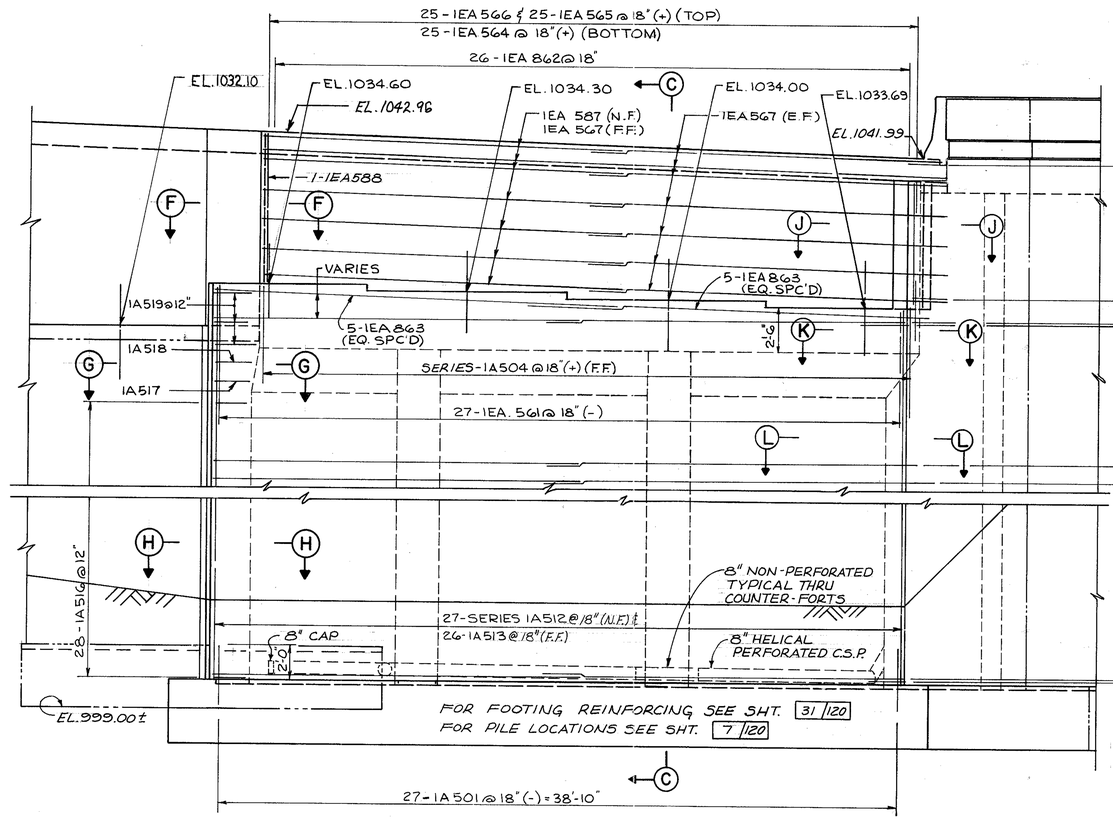

ELEVATION

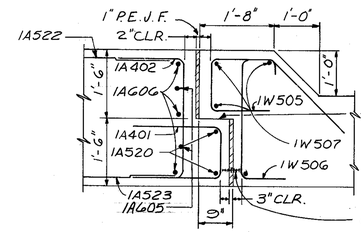

SECTION S-S

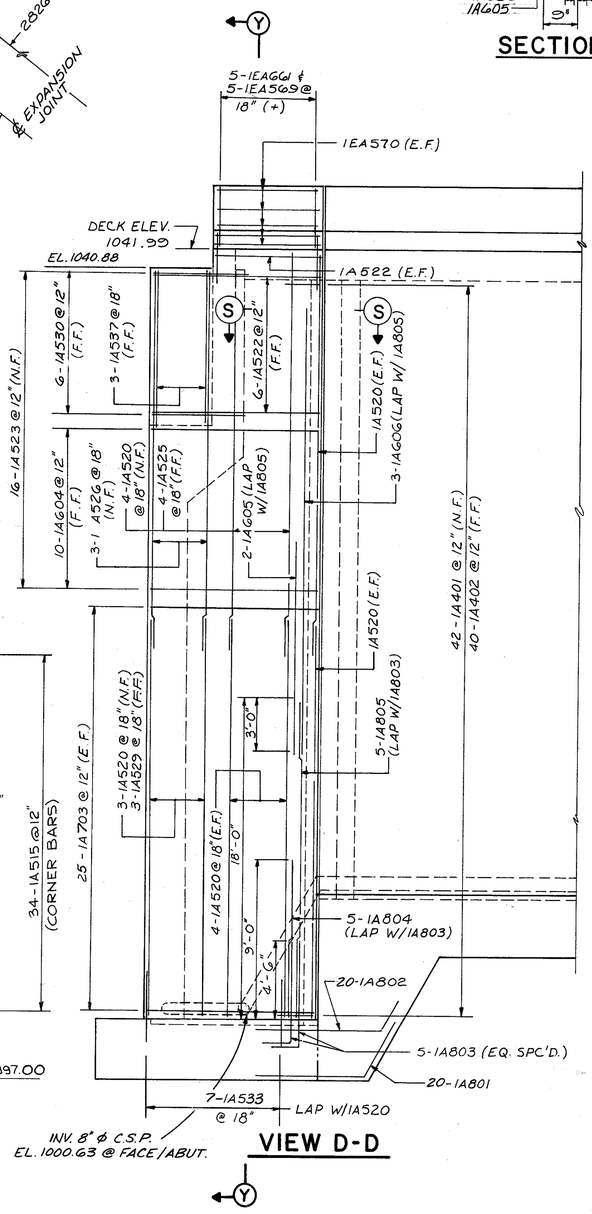

VIEW D-D

NOTES:

1. TYPICAL BAR LAPS, UNLESS OTHERWISE SHOWN
   #11=81"; TOP BARS = 113"
   #10=66"; TOP BARS = 92"
   #9=51"; TOP BARS = 72"
   #8=41"; TOP BARS = 57"
   #7=31"; TOP BARS = 43"
   #6=24"; TOP BARS = 34"
   #5=20"; TOP BARS = 29"
2. ABBREVIATIONS
   F.W. = FACE OF WALL
   N.F. = NEAR FACE
   F.F. = FAR FACE
   E.F. = EACH FACE
3. ELEVATIONS FOR PAVEMENT BREAK LINES ARE GIVEN AT THE FACE OF THE BACKWALL & THE CENTERLINE OF THE PAVEMENT BREAK.
4. SEE SHEET 29/120 FOR ADDITIONAL DETAILS.
5. SEE SHEET 31/120 FOR FOOTING DETAILS.
6. ALL CHANGES IN DIRECTION IN THE 8" HELICAL PERFORATED C.S.P. SHALL BE MADE USING STANDARD FACTORY MADE BENDS.

McCOY ASSOCIATES INC. 25/120
CONSULTING ENGINEERS
AKRON, OHIO

WEST ABUTMENT DETAILS

BRIDGE NO. SUM. 76-1277
AKRON EAST EXPRESSWAY
WEST VIADUCT

DESIGNED	DRAWN	TRACED	CHECKED	REVIEWED	DATE	REVISED
TAB	DAK M.R.A.		RGS	JBH	3-31-89	

FHWA REGION	STATE	PROJECT	
5	OHIO		

966
12.14

SUMMIT COUNTY
SUM 76-11.57

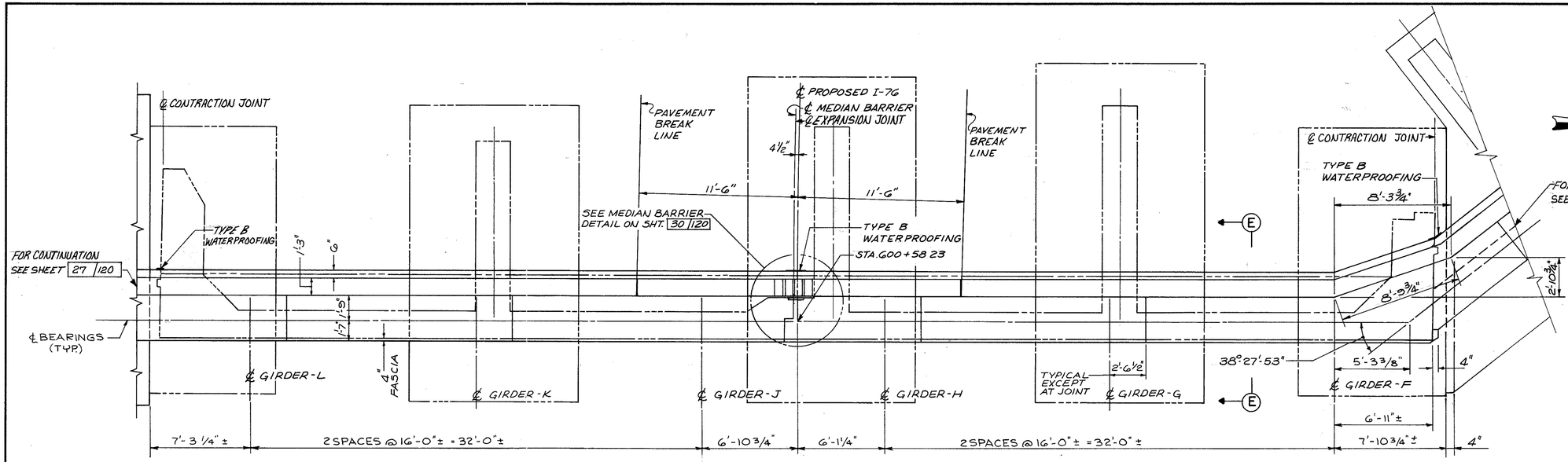

PLAN

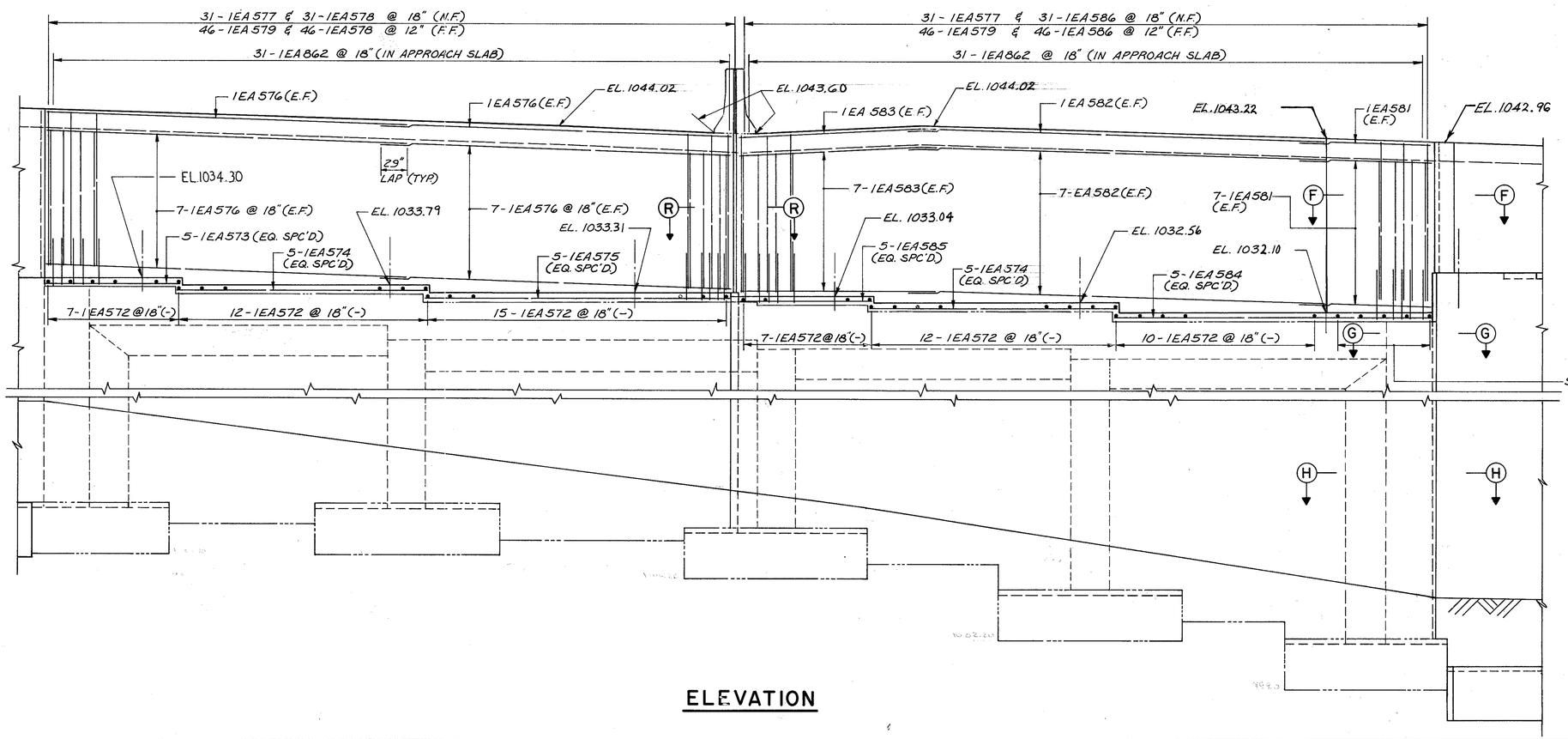

ELEVATION

NOTES:

1. SEE SHEET 30 120 FOR ADDITIONAL DETAILS.
2. SEE NOTES 1-3, SHEET 25 120 FOR ADDITIONAL NOTES.

McCOY ASSOCIATES INC. 26 120
CONSULTING ENGINEERS
AKRON, OHIO

WEST ABUTMENT DETAILS

BRIDGE NO. SUM. 76-1277
AKRON EAST EXPRESSWAY
WEST VIADUCT

DESIGNED	DRAWN	TRACED	CHECKED	REVIEWED	DATE	REVISED
TAB	J.D.P.		RGS	JBH	3-31-89	

FHWA REGION	STATE	PROJECT	
5	OHIO		

967
12.14

SUMMIT COUNTY
SUM 76-11.57

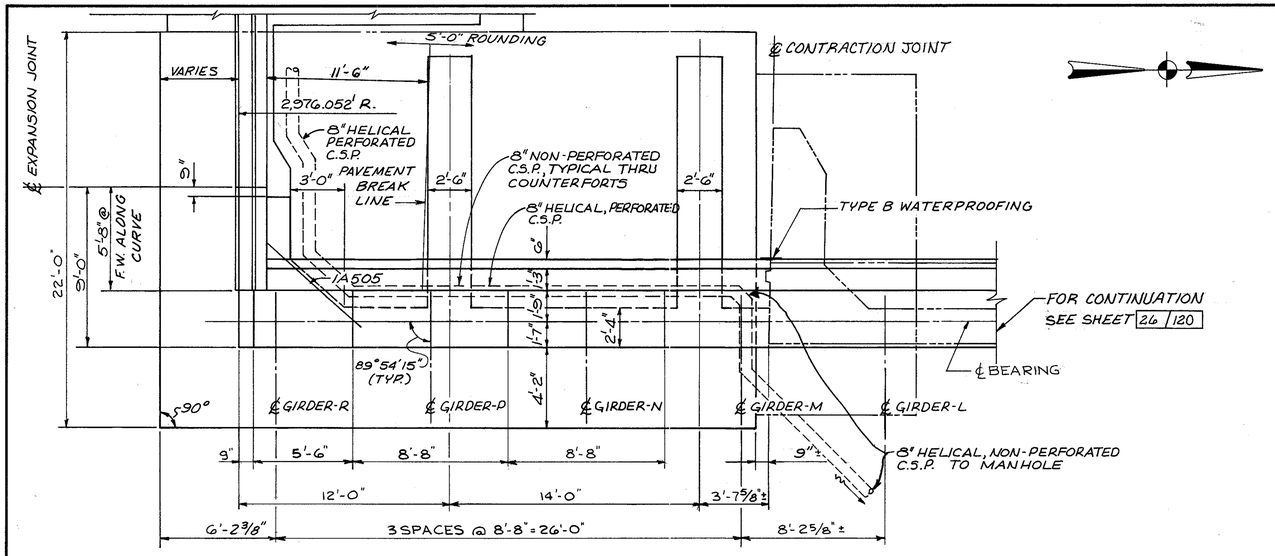

PART PLAN

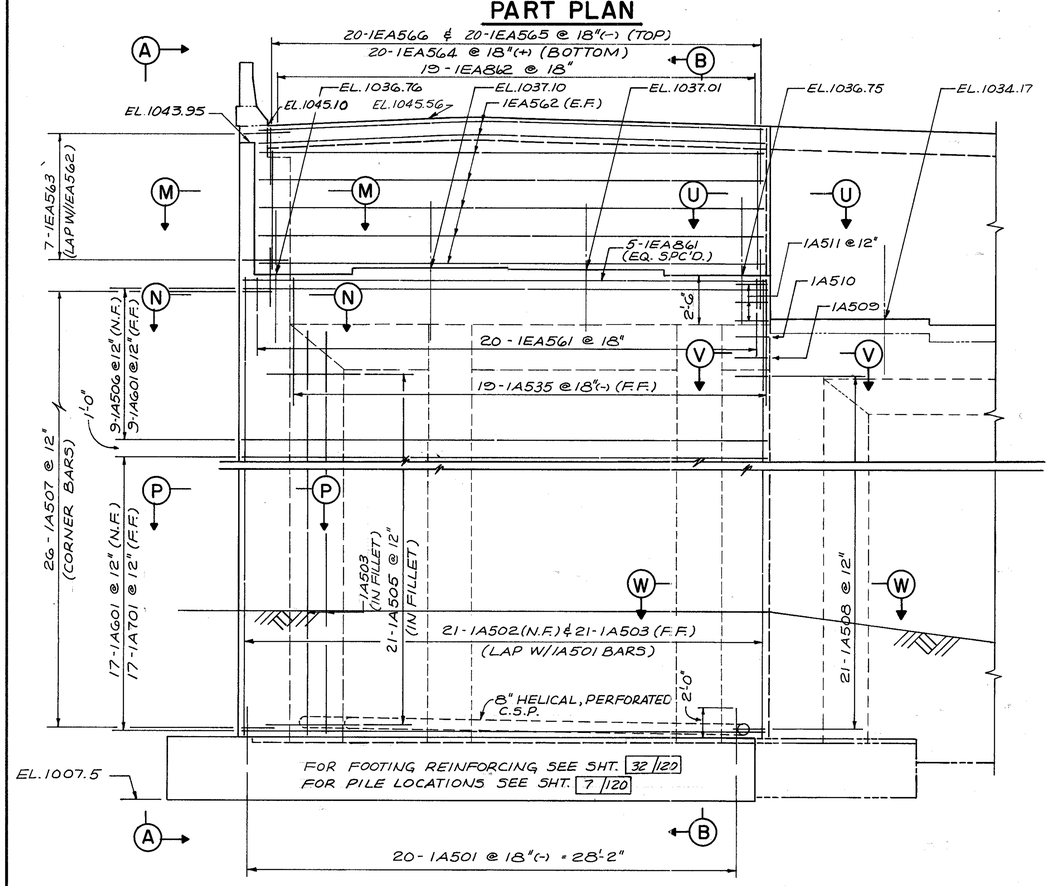

ELEVATION

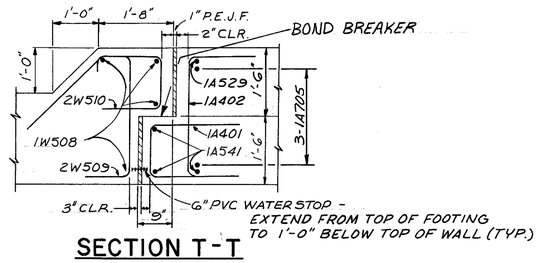

SECTION T-T

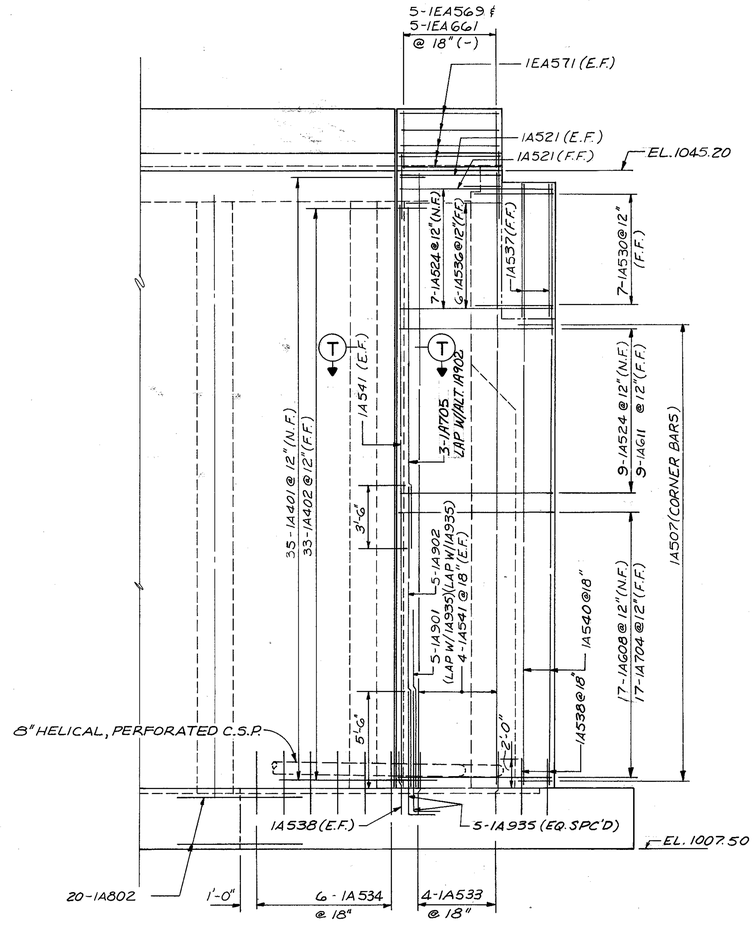

VIEW A-A

NOTES:

1. SEE SHEET 29 120 FOR ADDITIONAL DETAILS.
2. SEE SHEET 32 120 FOR FOOTING DETAILS.
3. SEE NOTES 1-3, SHEET 25 120

McCOY ASSOCIATES INC. 27 120
CONSULTING ENGINEERS
AKRON, OHIO

WEST ABUTMENT DETAILS

BRIDGE NO. SUM. 76-1277
AKRON EAST EXPRESSWAY
WEST VIADUCT

DESIGNED	DRAWN	TRACED	CHECKED	REVIEWED	DATE	REVISED
TAB	DAK JOP	M.R.A.	RGS	JBH	3-31-89	

FHWA REGION	STATE	PROJECT	
5	OHIO		

968
12.14

SUMMIT COUNTY
SUM 76-11.57

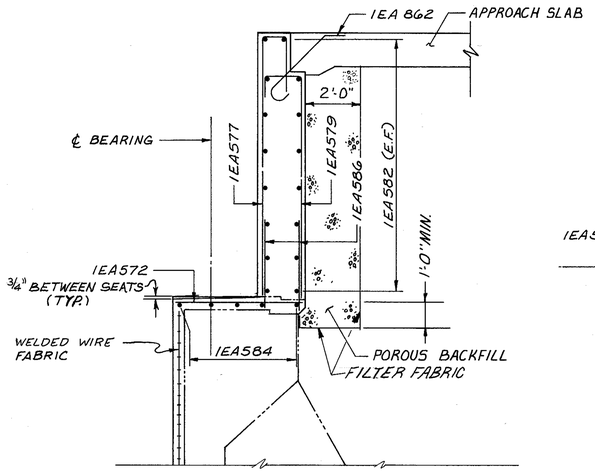

SECTION E-E

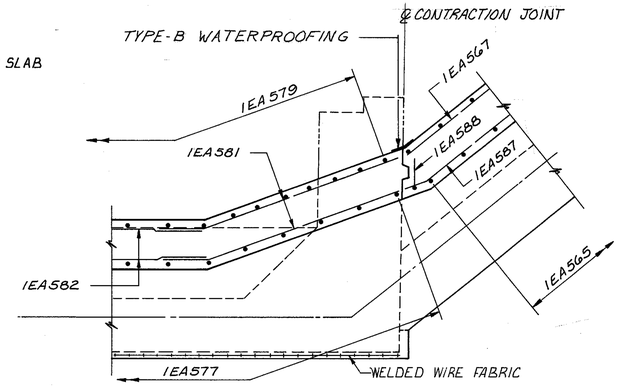

SECTION F-F

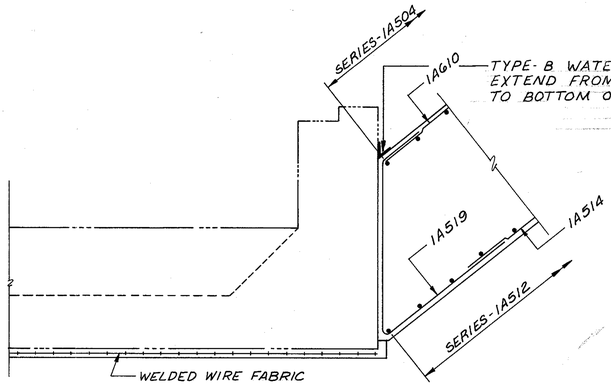

SECTION G-G

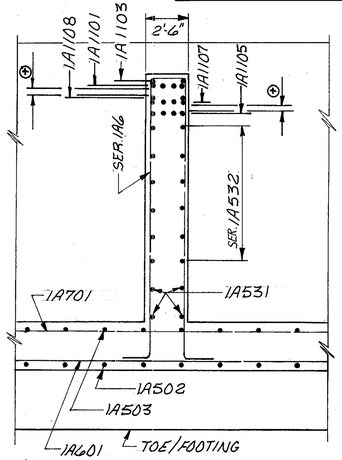

SECTION BB-BB

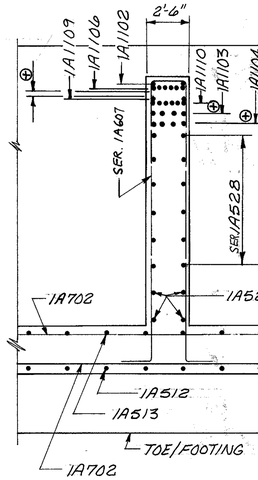

SECTION CC-CC

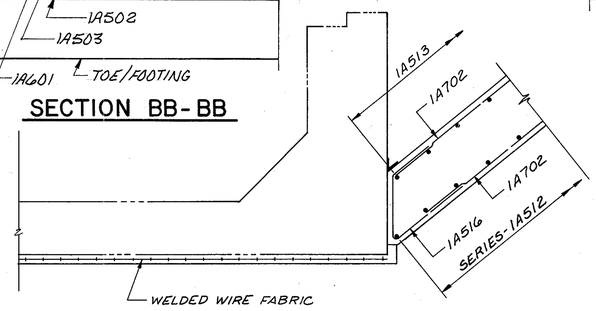

SECTION H-H

NOTES:

1. SEE NOTES 1 & 2, SHEET 25/120 FOR ADDITIONAL NOTES.
2. ⊕ - INDICATES 2½" (MIN.), CLEAR BETWEEN ROWS OF BARS.

SECTION B-B

SECTION C-C

McCOY ASSOCIATES INC. 28/120
CONSULTING ENGINEERS
AKRON, OHIO

WEST ABUTMENT DETAILS

BRIDGE NO. SUM. 76-1277
AKRON EAST EXPRESSWAY
WEST VIADUCT

DESIGNED	DRAWN	TRACED	CHECKED	REVIEWED	DATE	REVISED
TAB	DAK		RGS	JBH	3-31-89	

FHWA REGION	STATE	PROJECT	
5	OHIO		

969
12.14

SUMMIT COUNTY
SUM 76-11.57

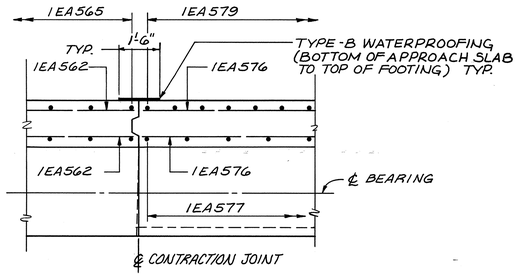

SECTION U-U

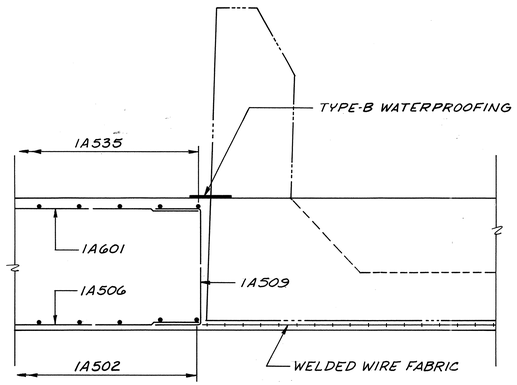

SECTION V-V

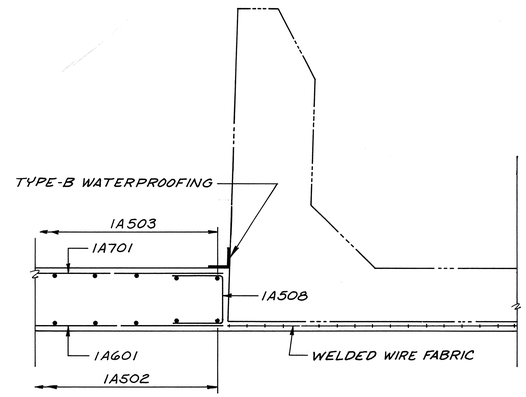

SECTION W-W

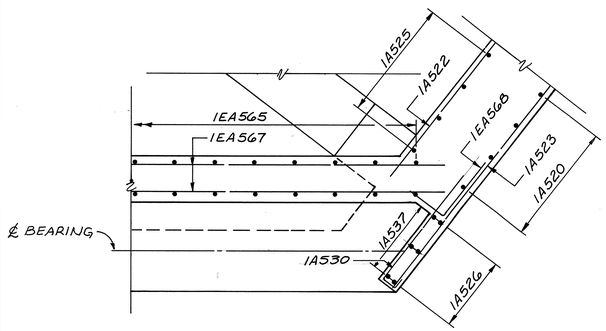

SECTION J-J

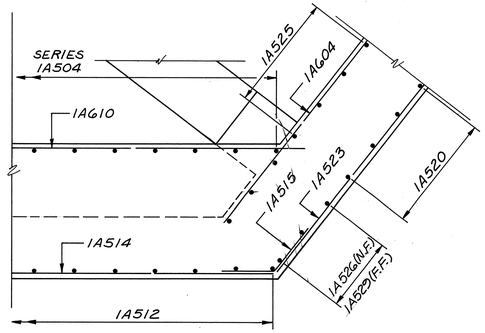

SECTION K-K

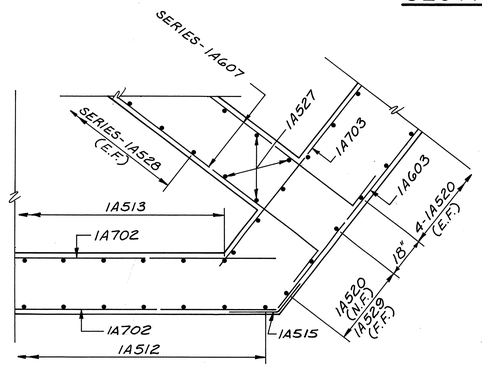

SECTION L-L

NOTES:

① SEE NOTES 1 & 2, SHEET 25/120 FOR ADDITIONAL NOTES.

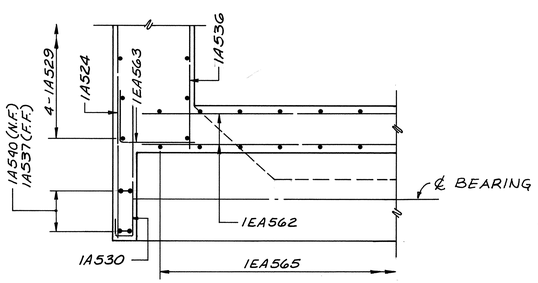

SECTION M-M

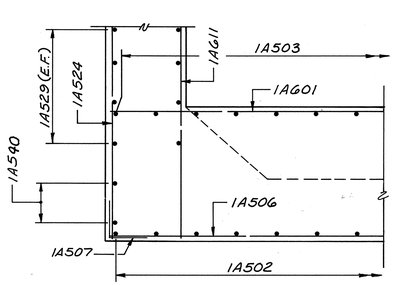

SECTION N-N

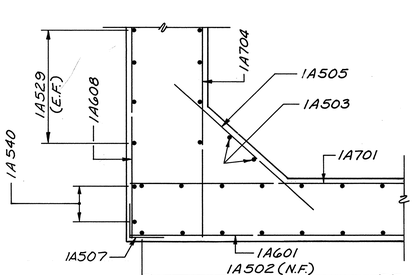

SECTION P-P

McCOY ASSOCIATES INC. 23/120
CONSULTING ENGINEERS
AKRON, OHIO

WEST ABUTMENT DETAILS

BRIDGE NO. SUM. 76-1277
AKRON EAST EXPRESSWAY
WEST VIADUCT

DESIGNED	DRAWN	TRACED	CHECKED	REVIEWED	DATE	REVISED
JBH	J.D.P.		RGS	JBH	3-31-89	

FHWA REGION	STATE	PROJECT	
5	OHIO		

970
12/14

SUMMIT COUNTY
SUM 76-11.57

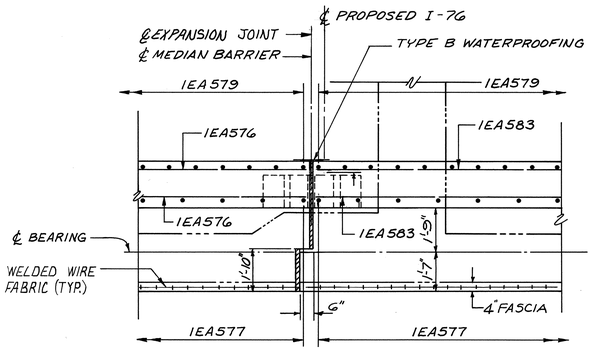

SECTION R-R

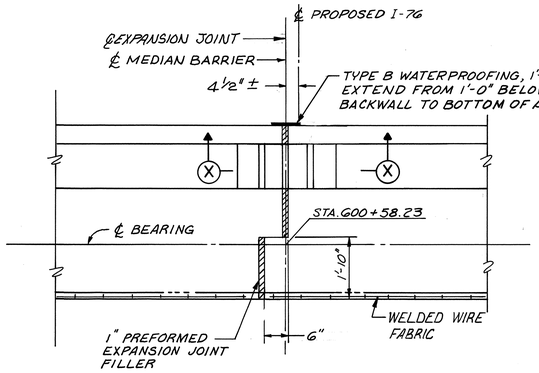

MEDIAN BARRIER DETAIL
WEST ABUTMENT

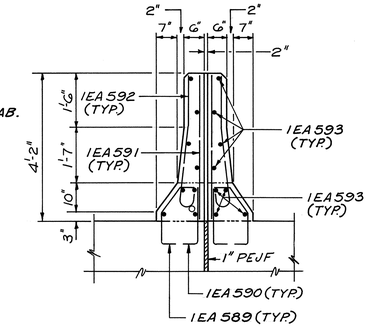

SECTION X-X

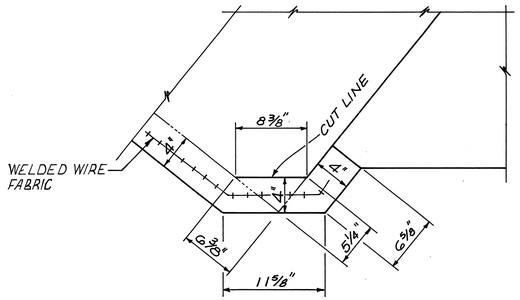

DETAIL - A

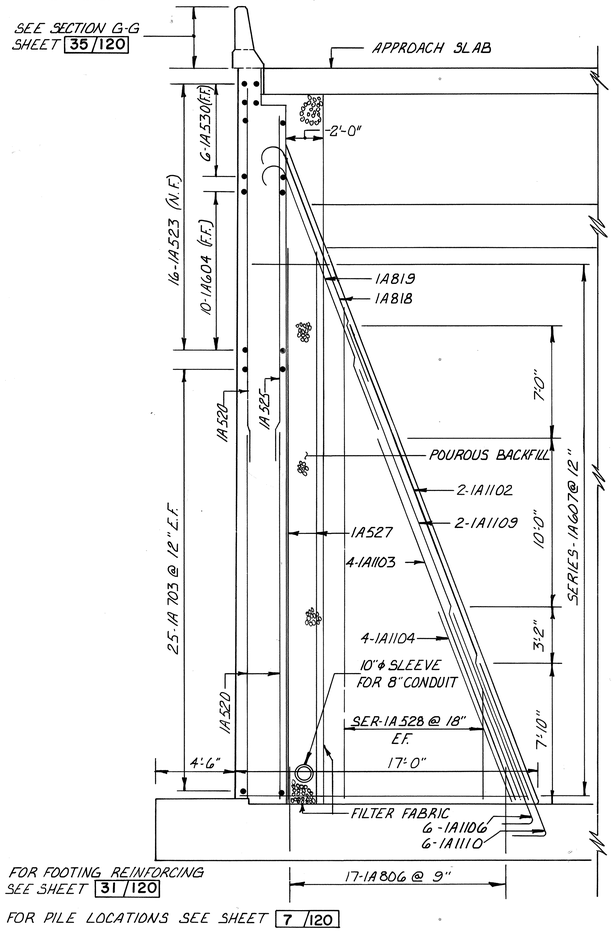

SECTION Y-Y

NOTES:

① SEE NOTES 1 & 2, SHEET 25/120 FOR ADDITIONAL NOTES.

McCOY ASSOCIATES INC. 30/120
CONSULTING ENGINEERS
AKRON, OHIO

WEST ABUTMENT DETAILS

BRIDGE NO. SUM. 76-1277
AKRON EAST EXPRESSWAY
WEST VIADUCT

DESIGNED	DRAWN	TRACED	CHECKED	REVIEWED	DATE	REVISED
JBH	DAK		RGS	JBH	3-31-89	

FHWA REGION	STATE	PROJECT	
5	OHIO		

97/124

SUMMIT COUNTY
SUM 76-11.57

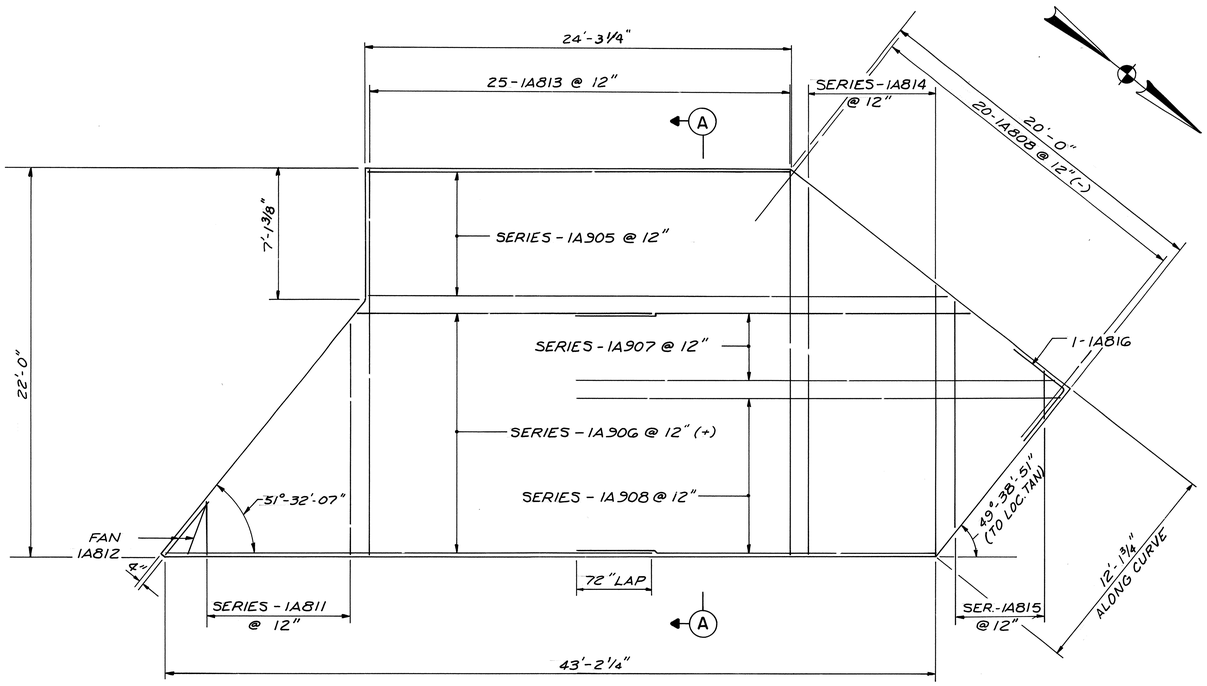

REINFORCING IN TOP OF FOOTING

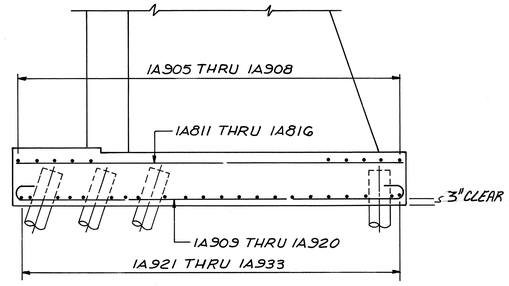

SECTION A-A

NOTES:

1. REFER TO WEST ABUTMENT DETAILS FOR ADDITIONAL PLAN DIMENSIONS.
2. SEE NOTES 1 & 2, SHEET 25/120 FOR ADDITIONAL NOTES.

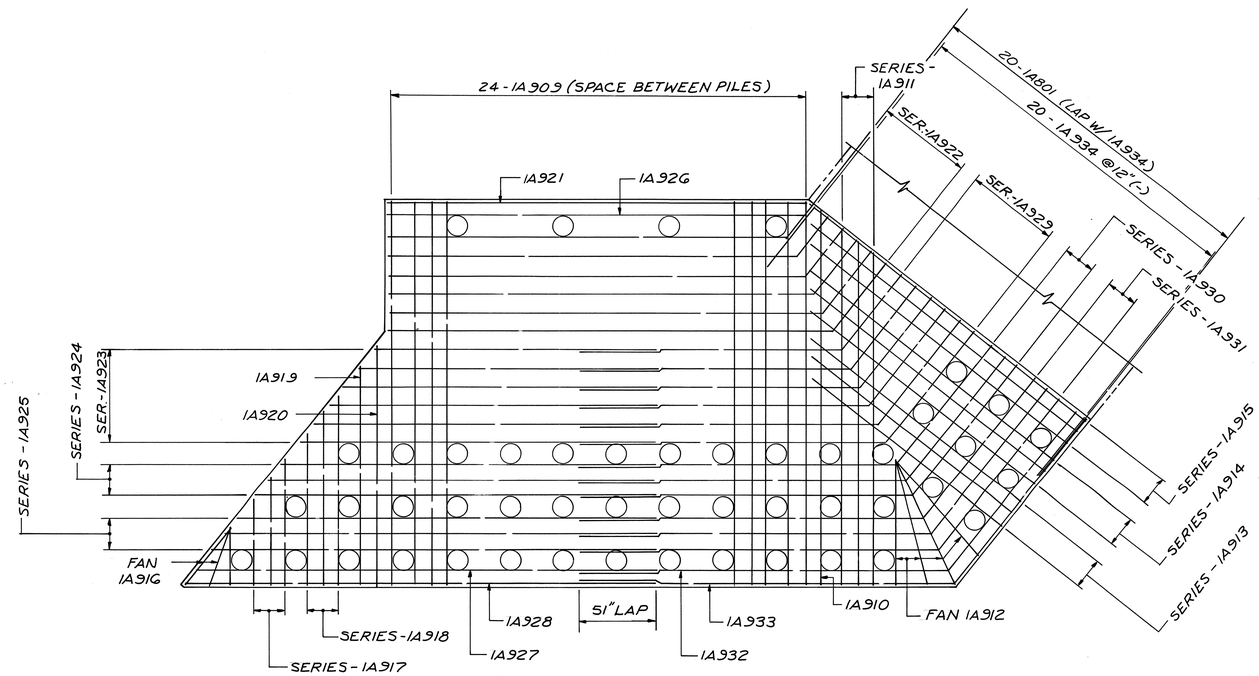

REINFORCING IN BOTTOM OF FOOTING

McCOY ASSOCIATES INC. 31/120
CONSULTING ENGINEERS
AKRON, OHIO

NORTHWEST ABUTMENT FOOTING REINFORCING

BRIDGE NO. SUM. 76-1277
AKRON EAST EXPRESSWAY
WEST VIADUCT

DESIGNED	DRAWN	TRACED	CHECKED	REVIEWED	DATE	REVISED
JBH	J.D.P.	M.R.A.	JMH	JBH	3-31-89	

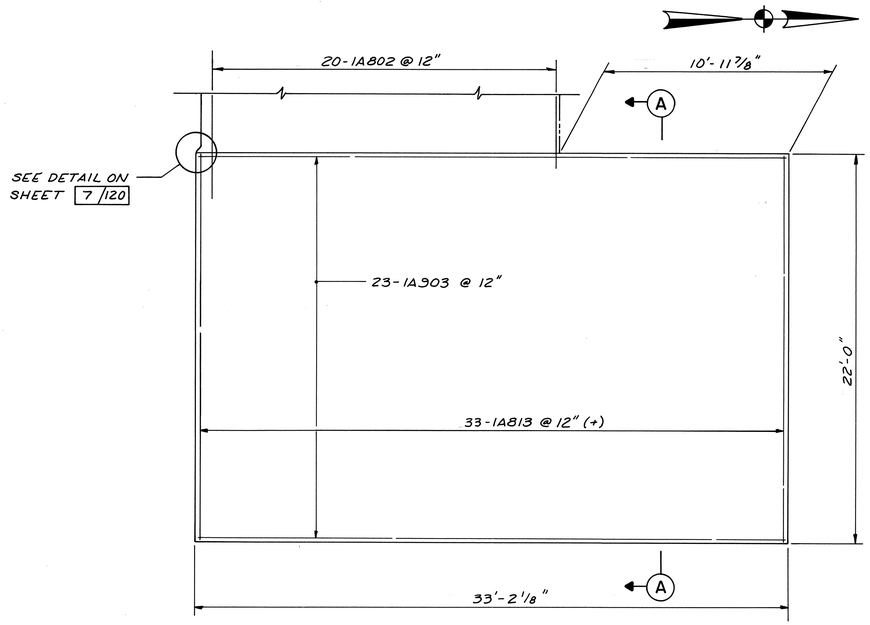

REINFORCING IN TOP OF FOOTING

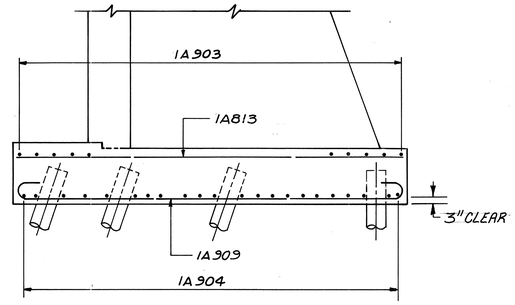

SECTION A - A

FHWA REGION	STATE	PROJECT	
5	OHIO		

972
12.14

SUMMIT COUNTY
SUM 76-11.57

NOTES:

1. REFER TO WEST ABUTMENT DETAILS FOR ADDITIONAL PLAN DIMENSIONS.
2. SEE NOTES 1 & 2, SHEET 25/120 FOR ADDITIONAL NOTES.

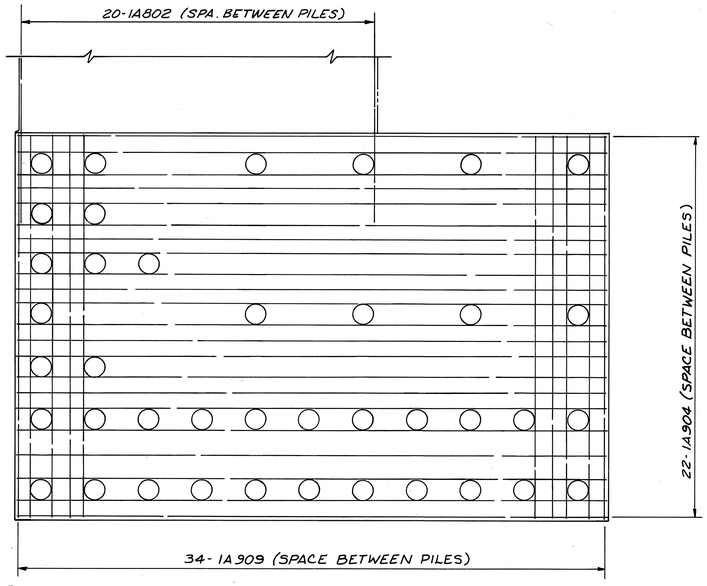

REINFORCING IN BOTTOM OF FOOTING

2276

McCOY ASSOCIATES INC. 32/120
CONSULTING ENGINEERS
AKRON, OHIO

SOUTHWEST ABUTMENT FOOTING REINFORCING

BRIDGE NO. SUM. 76-1277
AKRON EAST EXPRESSWAY
WEST VIADUCT

DESIGNED	DRAWN	TRACED	CHECKED	REVIEWED	DATE	REVISED
JBH	J.D.P.	M.R.A.	JMH	JBH	3-31-89	

FHWA REGION	STATE	PROJECT	
5	OHIO		

973
12.14

SUMMIT COUNTY
SUM 76-11.57

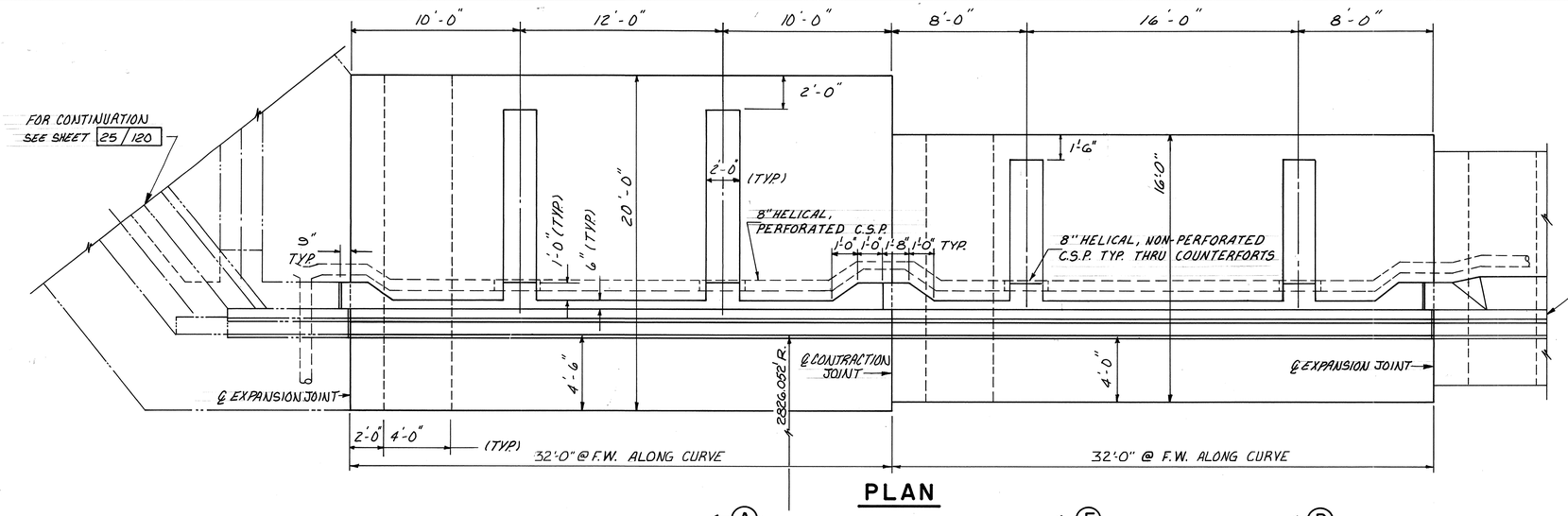

PLAN

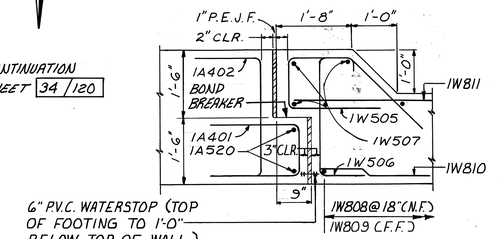

SECTION K-K

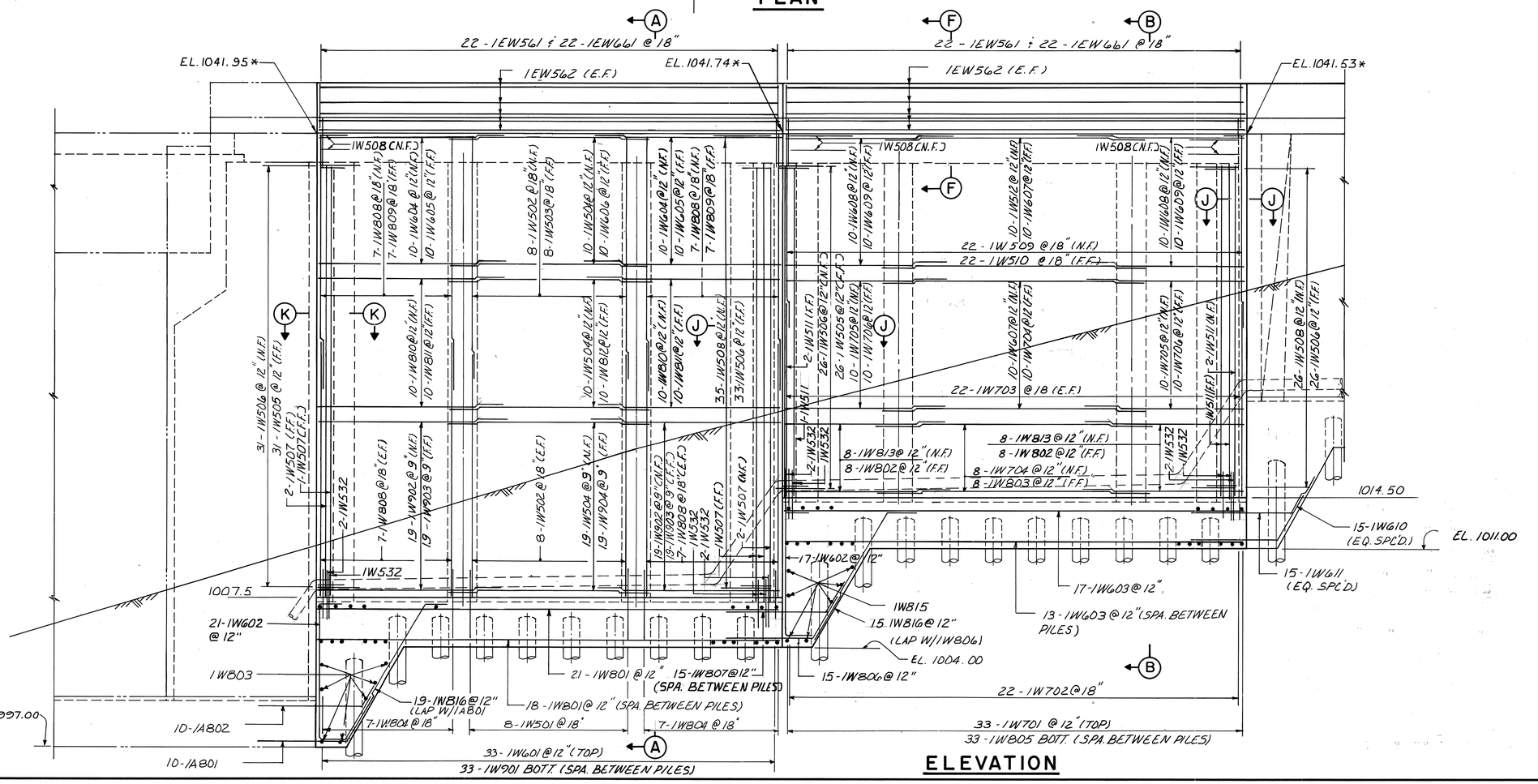

ELEVATION

NOTES

1. *- INDICATES ELEVATION GIVEN AT TOE OF PARAPET & TOP OF APPROACH SLAB
2. SEE SHEET 35/120 FOR ADDITIONAL DETAILS.
3. SEE NOTES 1 & 2, SHEET 25/120 FOR ADDITIONAL NOTES.

McCOY ASSOCIATES INC. 33/120
CONSULTING ENGINEERS
AKRON, OHIO

NORTHWEST WINGWALL DETAILS

BRIDGE NO. SUM. 76-1277
AKRON EAST EXPRESSWAY
WEST VIADUCT

DESIGNED	DRAWN	TRACED	CHECKED	REVIEWED	DATE	REVISED
T.E.N.	J.D.P.		JMH	JBH	3-31-89	

FHWA REGION	STATE	PROJECT	
5	OHIO		

974
12.14

SUMMIT COUNTY
SUM 76-11.57

FOR CONTINUATION SEE SHEET 33 /120

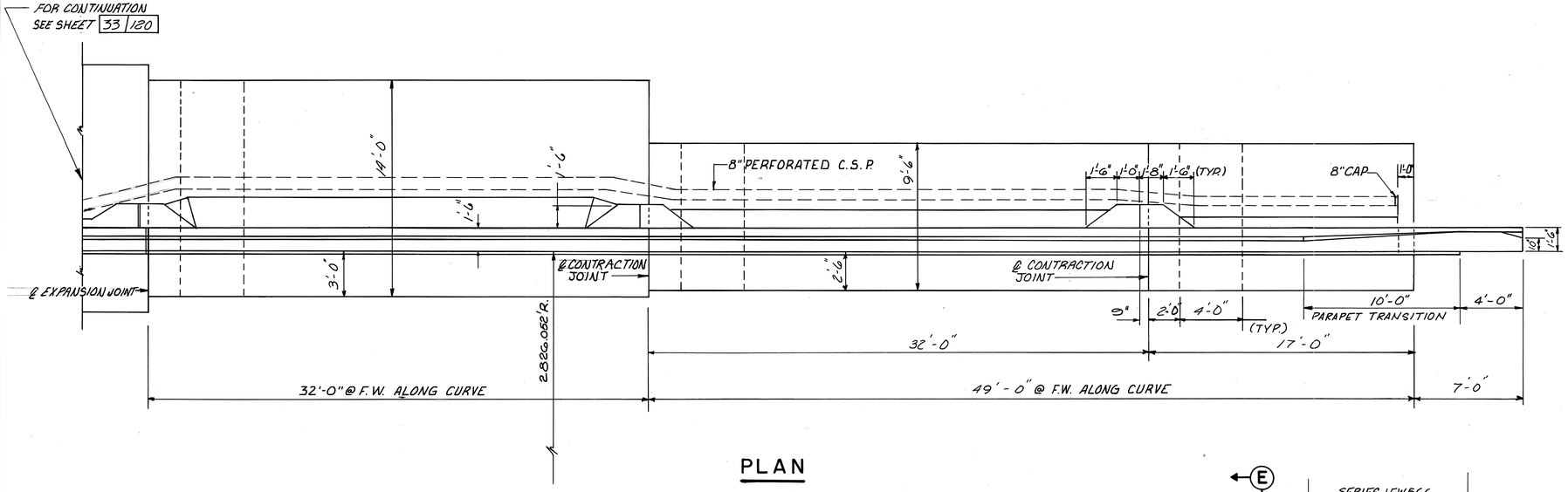

PLAN

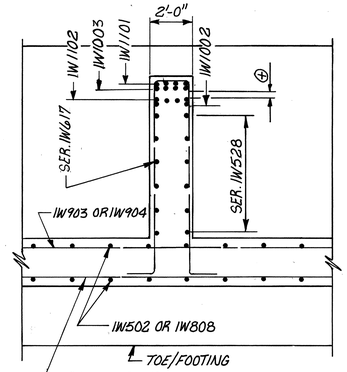

SECTION L-L

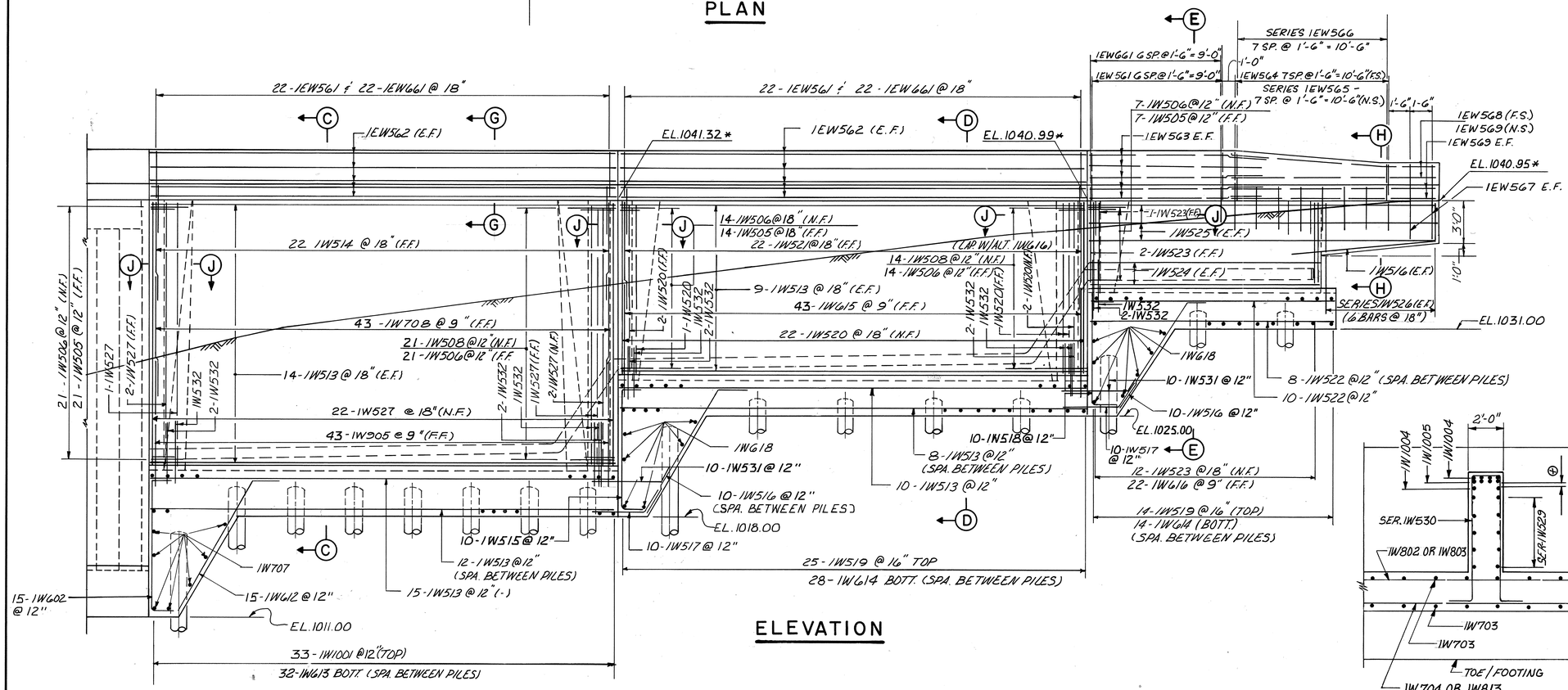

ELEVATION

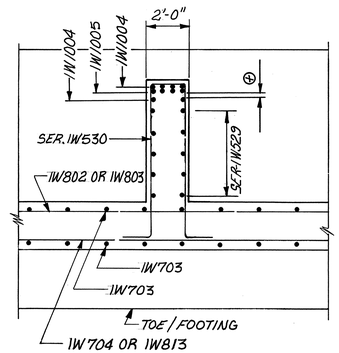

SECTION M-M

NOTES

1. *-INDICATES ELEVATION GIVEN AT TOE OF PARAPET & TOP OF APPROACH SLAB.
2. SEE NOTES 1&2, SHEET T 25/120 FOR ADDITIONAL NOTES.
3. SEE SHEET 35/120 FOR ADDITIONAL DETAILS.
4. ⊕- INDICATES 2½" (MIN.) CLEAR BETWEEN ROWS OF BARS.

McCOY ASSOCIATES INC. 34/120
CONSULTING ENGINEERS
AKRON, OHIO

NORTHWEST WINGWALL DETAILS

BRIDGE NO. SUM. 76-1277
AKRON EAST EXPRESSWAY
WEST VIADUCT

DESIGNED	DRAWN	TRACED	CHECKED	REVIEWED	DATE	REVISED
T.E.N.	J.D.P.		JMH	JBH	3-31-89	

FHWA REGION	STATE	PROJECT	
5	OHIO		

975
1214

SUMMIT COUNTY
SUM 76-11.57

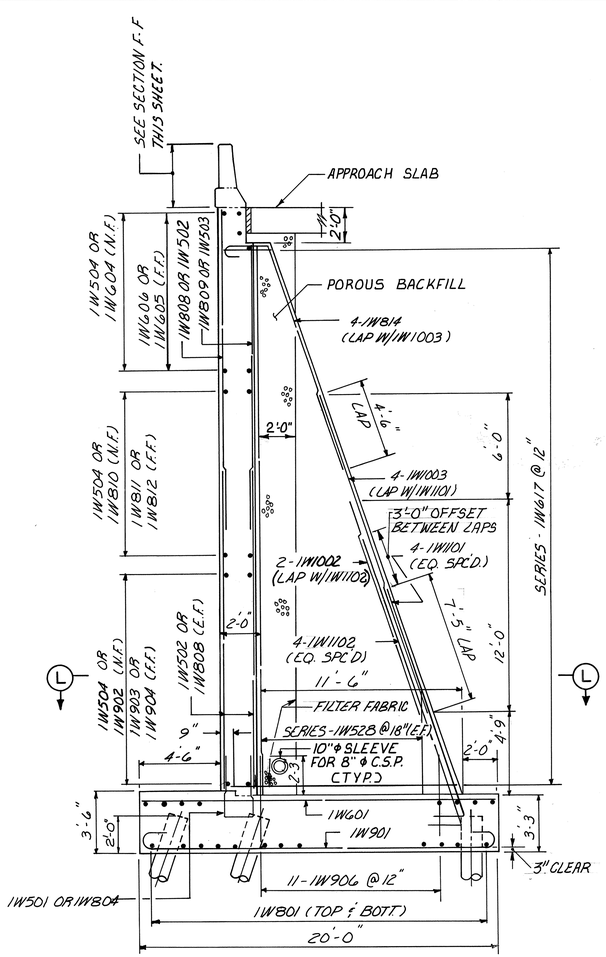

SECTION A-A

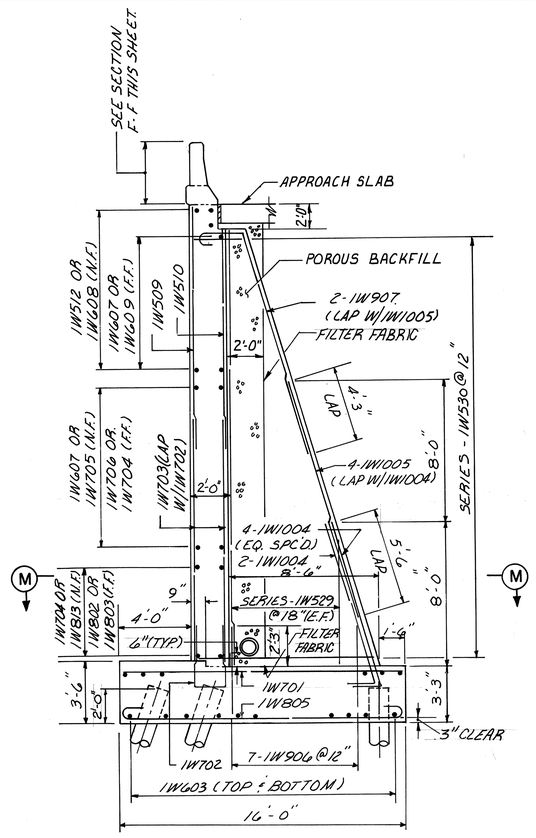

SECTION B-B

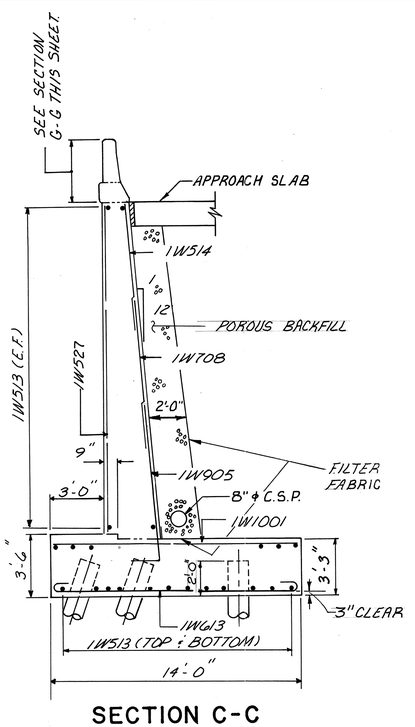

SECTION C-C

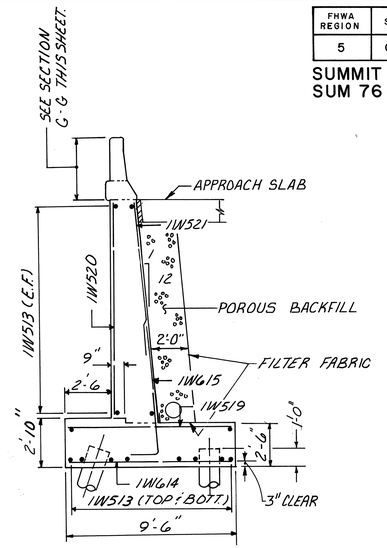

SECTION D-D

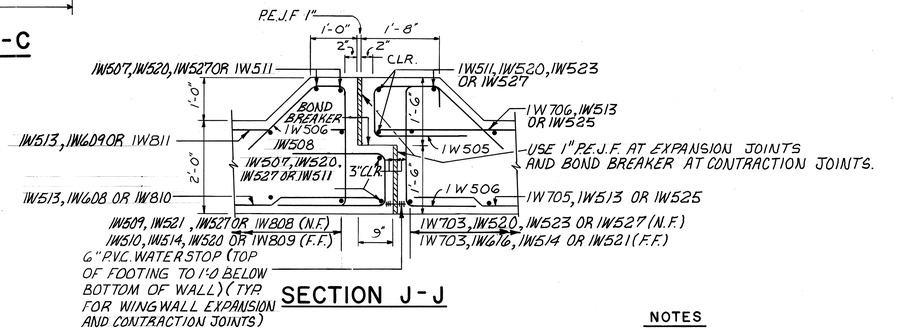

SECTION J-J

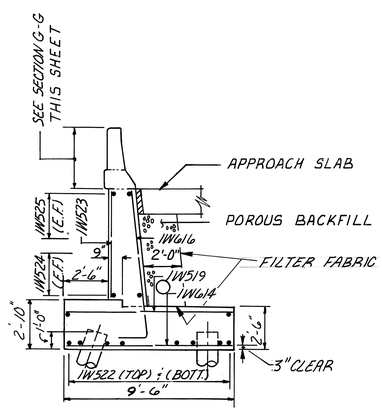

SECTION E-E

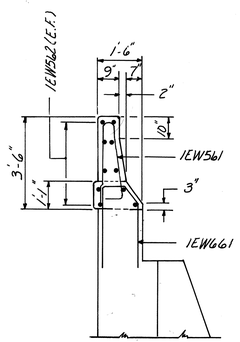

SECTION F-F

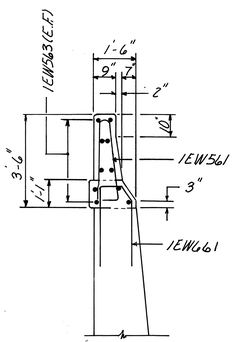

SECTION G-G

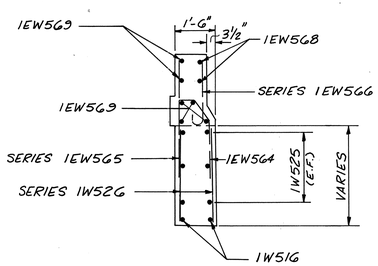

SECTION H-H

NOTES

1. SEE NOTES 1 & 2, SHEET 25/120 FOR ADDITIONAL NOTES.
2. SEE SHEET 34/120 FOR ADDITIONAL DETAILS.

McCOY ASSOCIATES INC. 35/120
CONSULTING ENGINEERS
AKRON, OHIO

NORTHWEST WINGWALL DETAILS

BRIDGE NO. SUM. 76-1277
AKRON EAST EXPRESSWAY
WEST VIADUCT

DESIGNED	DRAWN	TRACED	CHECKED	REVIEWED	DATE	REVISED
T.E.N.	J.D.P.		J.M.H.	J.B.H.	3-31-89	

FHWA REGION	STATE	PROJECT	
5	OHIO		

976
1214

SUMMIT COUNTY
SUM 76-11.57

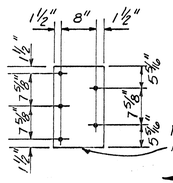

DETAIL B

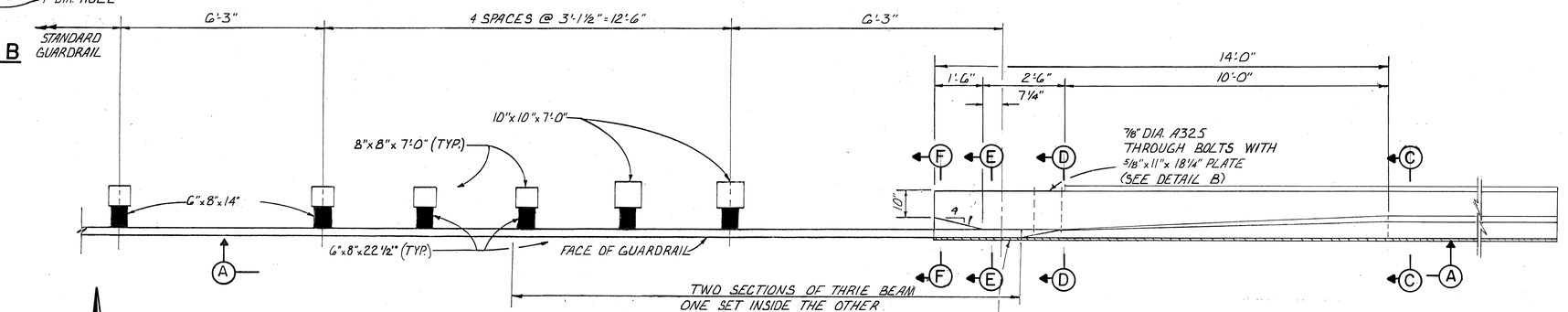

PART PLAN AT ABUTMENT

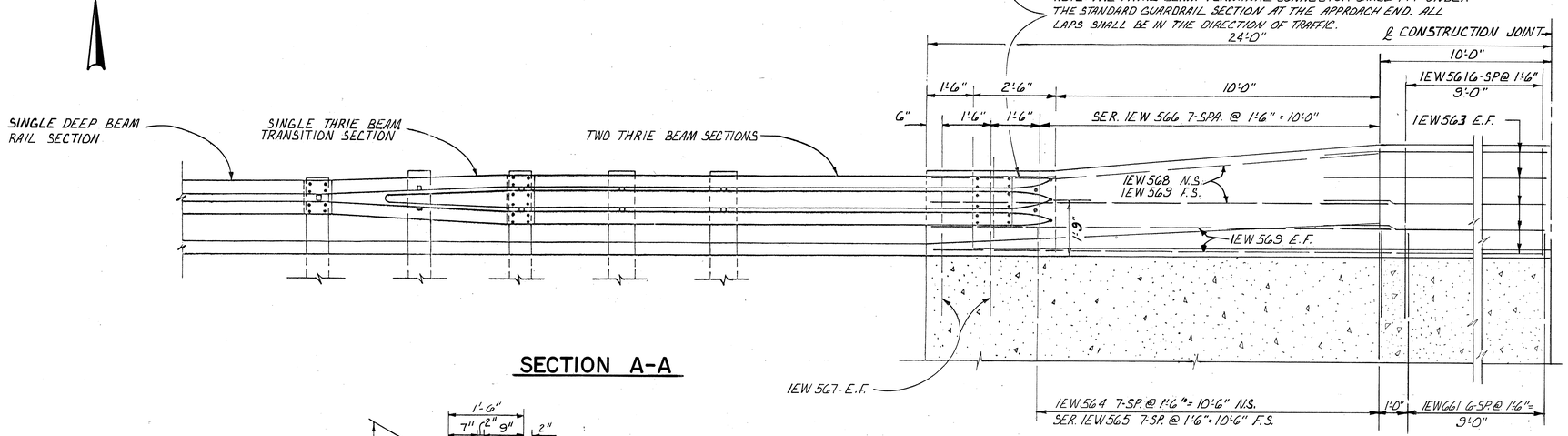

SECTION A-A

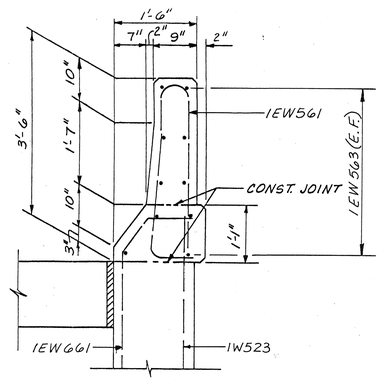

SECTION C-C

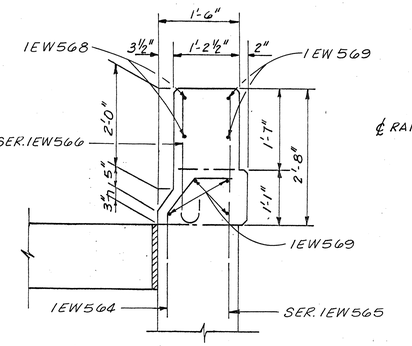

SECTION D-D

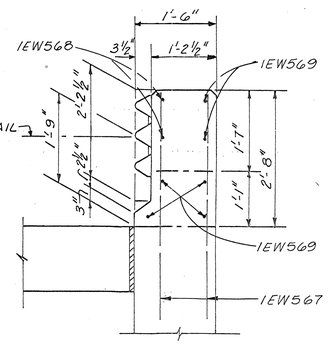

SECTION E-E

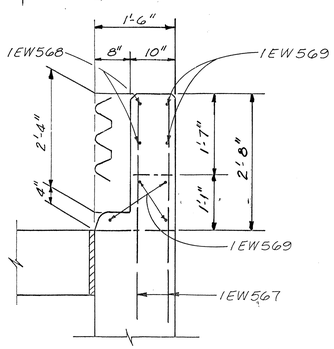

SECTION F-F

GENERAL NOTES

DESIGN SPECIFICATIONS: "STANDARD SPECIFICATIONS FOR HIGHWAY BRIDGES" ADOPTED BY AASHTO 1989. INCLUDING THE OHIO "SUPPLEMENT" TO THESE SPECIFICATIONS.

DESIGN DATA: CONCRETE CLASS S f'_c=4500 P.S.I., f_c=1500 P.S.I. REINFORCING STEEL ASTM A615, A616 OR A617 GRADE 60 f_s=24,000 P.S.I.

PREFORMED EXPANSION JOINT FILLER IN THE PARAPET DEFLECTION JOINTS MAY BE EITHER 1/4" GRAY SPONGE RUBBER OR 1/4" GRAY CELLULAR POLYVINYL CHLORIDE (PVC) SPONGE. SPONGE RUBBER FILLER SHALL CONFORM TO AASHTO M-153, TYPE 1. DENSITY OF PVC SPONGE NOT TO BE LESS THAN 20 LBS. PER CU. FT.

DEFLECTION JOINTS SHALL BE SPACED AT 16'-0" CENTERS, MAX., EXCEPT THAT FOR CONTINUOUS STRUCTURES THE PANELS SHALL BE FURTHER SUBDIVIDED IN THE NEGATIVE MOMENT REGION (OVER THE PIERS) INTO LENGTHS OF NOT LESS THAN 5'-0" NOR MORE THAN 7'-6". REINFORCING BARS SHALL NOT EXTEND THROUGH DEFLECTION JOINTS.

CONCRETE PARAPETS ABOVE UPPER CONSTRUCTION JOINT SHALL BE PLACED IN ALTERNATE SECTIONS BY THE USE OF BULKHEADS. CLOSING SECTIONS SHALL BE PLACED AFTER REMOVAL OF BULKHEADS AND AFTER PLACEMENT OF EXPANSION JOINT FILLER. EXPOSED EDGES OF THE FILLER SHALL BE FLUSH WITH THE SURFACE OF CONCRETE AND SHALL BE FREE OF MORTAR.

PAYMENT: ADDITIONAL GUARDRAIL COST IN EXCESS OF NORMAL GUARDRAIL COST, SUCH AS: TERMINAL CONNECTOR, STEEL PLATE, BOLTS, NUTS, PLATE WASHERS AND OTHER HARDWARE SHALL BE INCLUDED WITH BRIDGE TERMINAL ASSEMBLY FOR PAYMENT. QUANTITIES OF CONCRETE AND REINFORCING STEEL FOR PARAPET ARE INCLUDED WITH THEIR APPROPRIATE ITEM UNDER EITHER ABUTMENTS OR SUPERSTRUCTURE FOR PAYMENT.

POSTS SHALL BE SQUARE-SAWED PRESSURE TREATED WOOD AS PER 710.14. POSTS SHALL BE FABRICATED WITH SQUARE ENDS. BOLT HOLES SHALL BE BORED AND TOPS OF POSTS TRIMMED. IF REQUIRED, AFTER POSTS ARE SET, POSTS MAY BE SET IN DRILLED HOLES OR DRIVEN TO GRADE. STEEL POSTS AND BLOCKOUTS MAY BE FURNISHED AS AN ALTERNATE, PROVIDED THAT THE STRENGTH EQUALS OR EXCEEDS THE STRENGTH OF WOOD POSTS AND BLOCKOUTS.

McCOY ASSOCIATES, INC.
CONSULTING ENGINEERS
AKRON, OHIO

35A/120

NORTHWEST WINGWALL PARAPET TRANSITION

BRIDGE NO. SUM. 76-1277
AKRON EAST EXPRESSWAY
WEST VIADUCT

DESIGNED	DRAWN	TRACED	CHECKED	REVIEWED	DATE	REVISED
GCK	DAK		JGC	JBH	7-19-90	

520681

FHWA REGION	STATE	PROJECT	
5	OHIO		

977
12.14

SUMMIT COUNTY
SUM 76-11.57

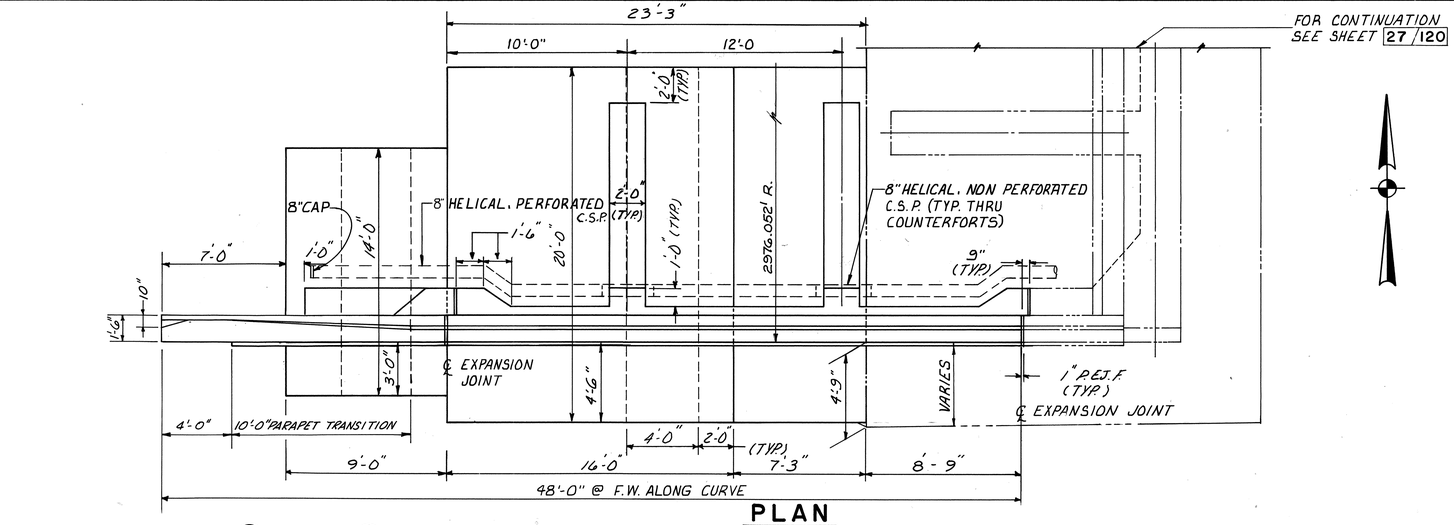

PLAN

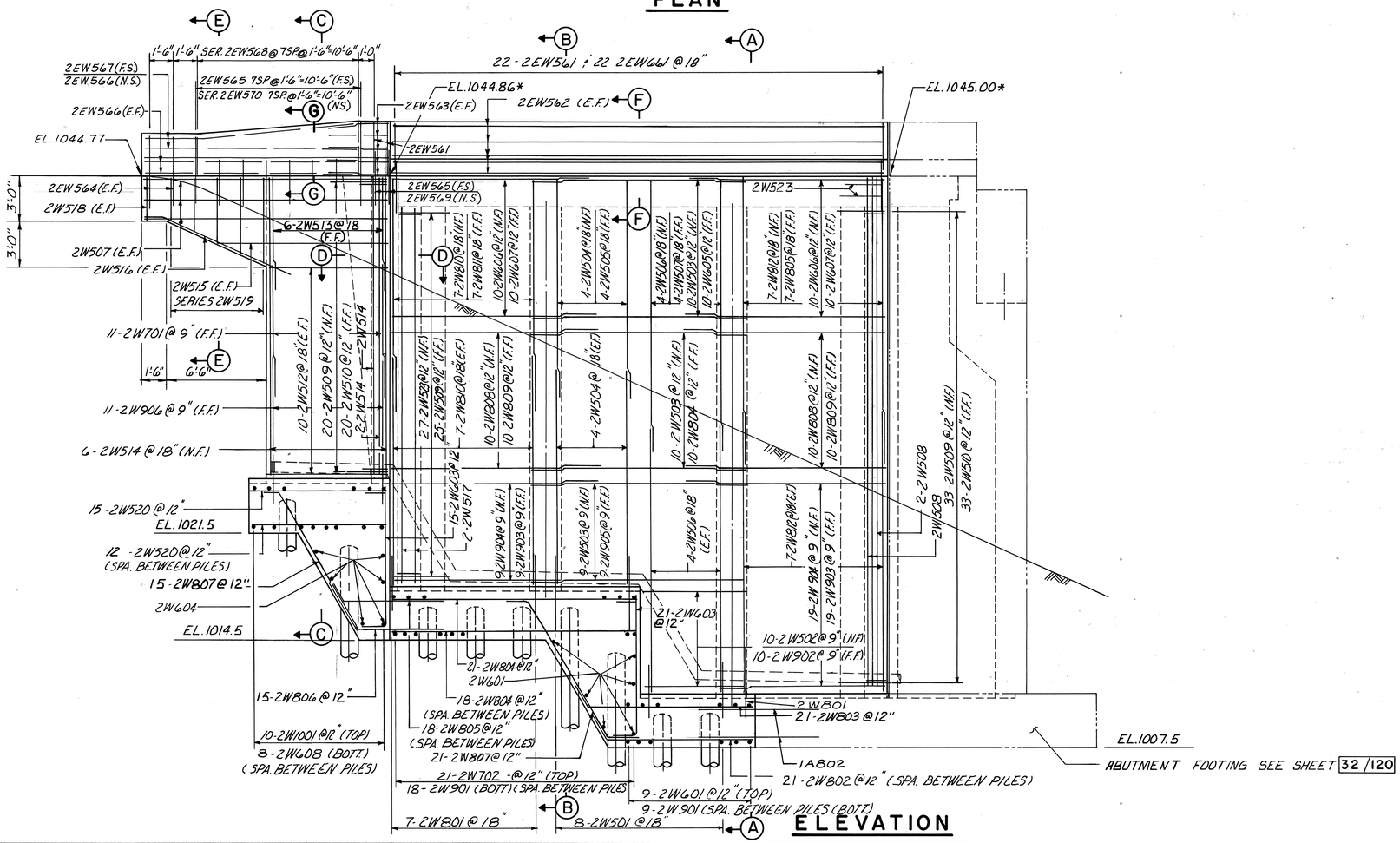

ELEVATION

NOTES

1. *-INDICATES ELEVATION GIVEN AT TOE OF PARAPET & TOP OF APPROACH SLAB.
2. SEE SHEET 37/120 FOR ADDITIONAL DETAILS.
3. SEE NOTES 1 & 2, SHEET 25/120 FOR ADDITIONAL NOTES.

McCOY ASSOCIATES INC. 36/120
CONSULTING ENGINEERS
AKRON, OHIO

SOUTHWEST WINGWALL DETAILS

BRIDGE NO. SUM. 76-1277
AKRON EAST EXPRESSWAY
WEST VIADUCT

DESIGNED	DRAWN	TRACED	CHECKED	REVIEWED	DATE	REVISED
T.E.N.	J.D.P.		JMH	JBH	3-31-89	

FHWA REGION	STATE	PROJECT	
5	OHIO		

978
1214

SUMMIT COUNTY
SUM 76-11.57

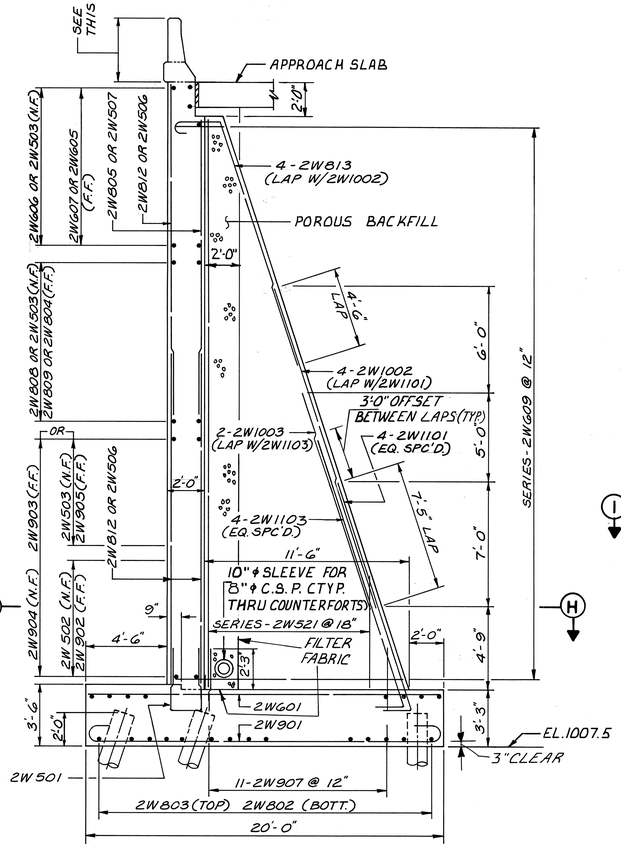

SECTION A-A

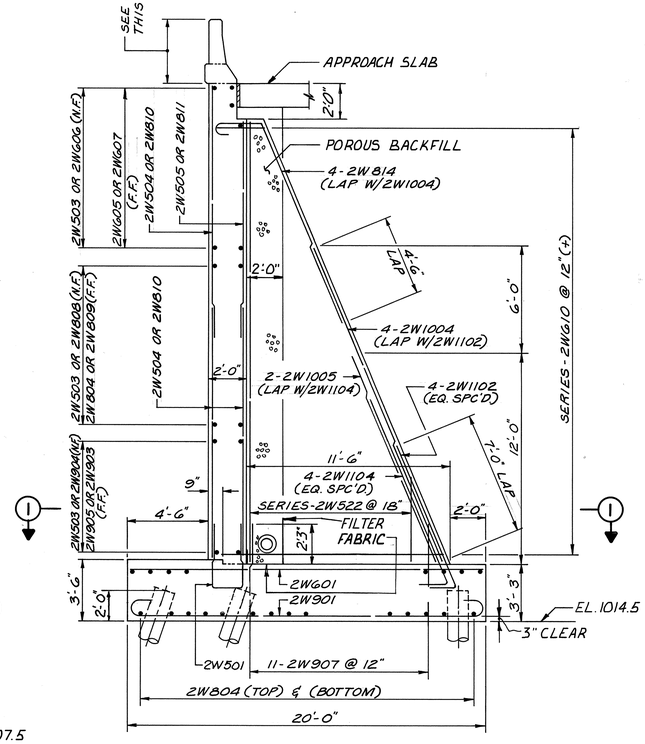

SECTION B-B

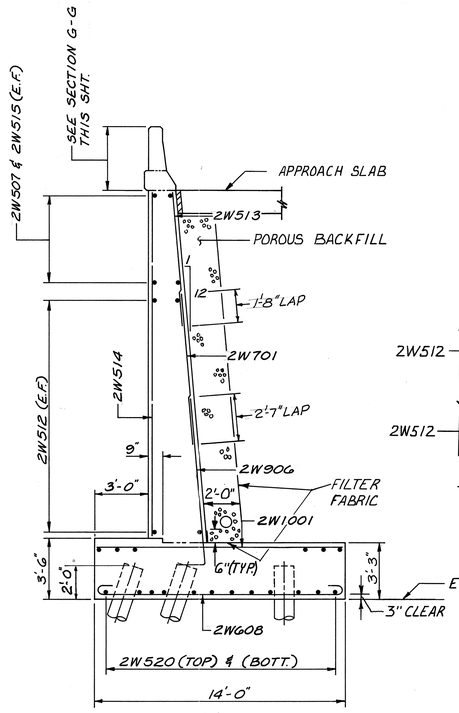

SECTION C-C

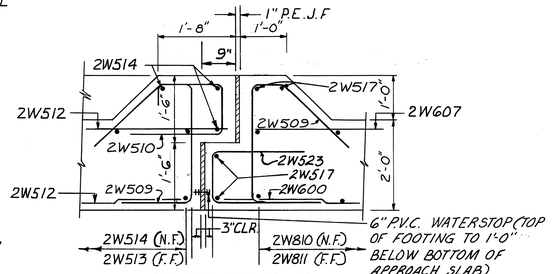

SECTION D-D

NOTES

(1) SEE NOTES 1&2, SHEET 25/120 FOR ADDITIONAL NOTES.

⊕ - INDICATES 2½" (MIN.) CLEAR BETWEEN ROWS OF BARS.

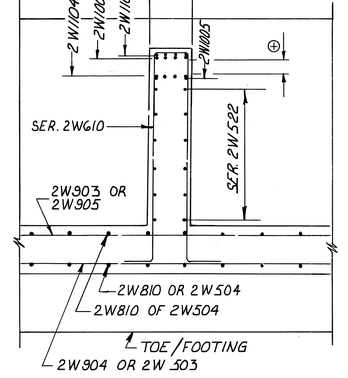

SECTION I-I

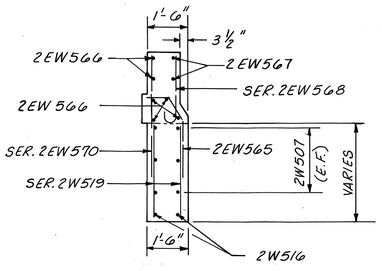

SECTION E-E

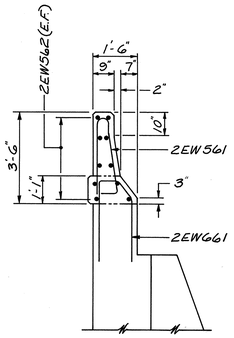

SECTION F-F

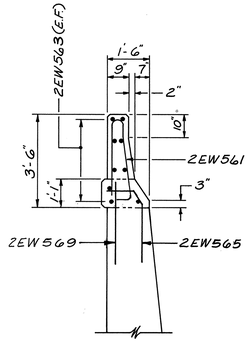

SECTION G-G

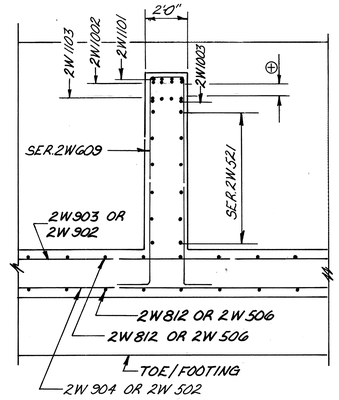

SECTION H-H

McCOY ASSOCIATES INC. 37/120
CONSULTING ENGINEERS
AKRON, OHIO

SOUTHWEST WINGWALL DETAILS

BRIDGE NO. SUM. 76-1277
AKRON EAST EXPRESSWAY
WEST VIADUCT

DESIGNED	DRAWN	TRACED	CHECKED	REVIEWED	DATE	REVISED
T.E.N.	J.D.P.	CT	JMH	JBH	3-31-89	

FHWA REGION	STATE	PROJECT	
5	OHIO		

979/1214

SUMMIT COUNTY
SUM 76-11.57

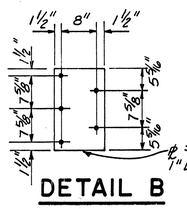

DETAIL B

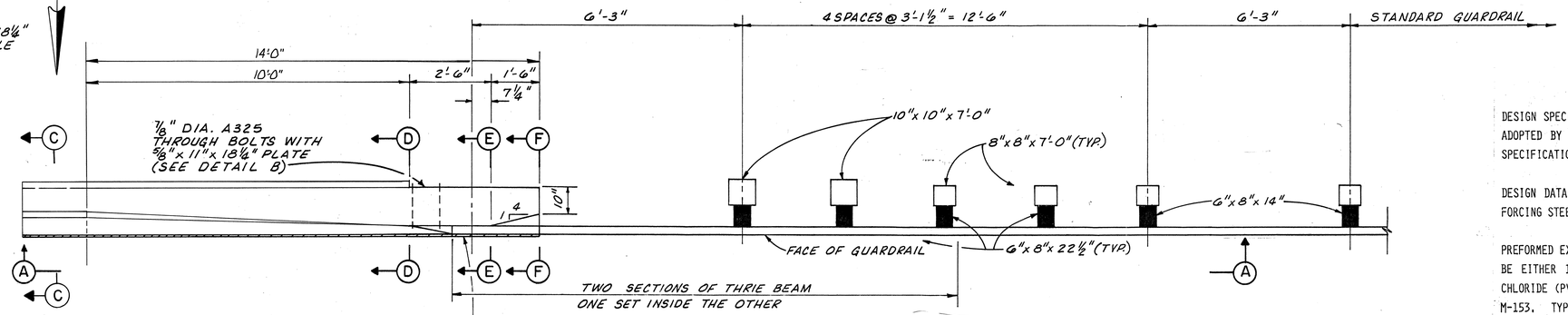

PART PLAN AT ABUTMENT

NOTE: THE THRIE BEAM TERMINAL CONNECTOR SHALL FIT UNDER THE STANDARD GUARDRAIL SECTION AT THE APPROACH END. ALL LAPS SHALL BE IN THE DIRECTION OF TRAFFIC.

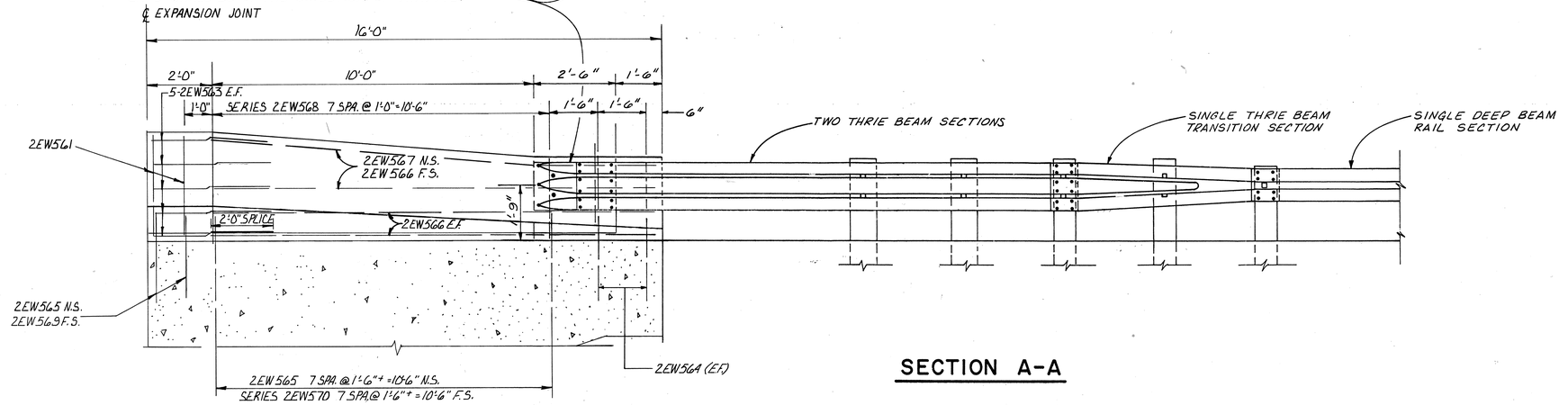

SECTION A-A

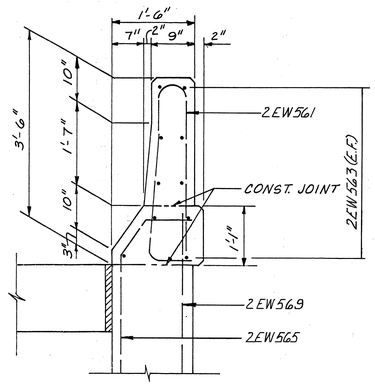

SECTION C-C

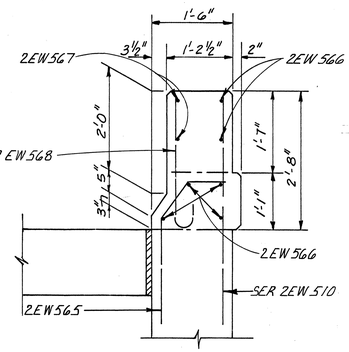

SECTION D-D

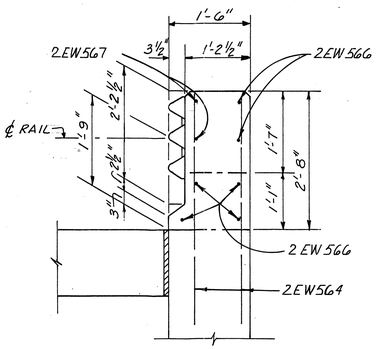

SECTION E-E

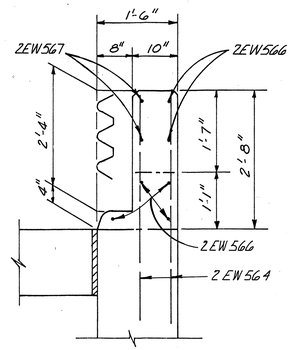

SECTION F-F

GENERAL NOTES

DESIGN SPECIFICATIONS: "STANDARD SPECIFICATIONS FOR HIGHWAY BRIDGES" ADOPTED BY AASHTO 1989, INCLUDING THE OHIO "SUPPLEMENT" TO THESE SPECIFICATIONS.

DESIGN DATA: CONCRETE CLASS S f'_c=4500 P.S.I. f_c=1500 P.S.I. REINFORCING STEEL ASTM A615, A616 OR A617 GRADE 60 f_s=24,000 P.S.I.

PREFORMED EXPANSION JOINT FILLER IN THE PARAPET DEFLECTION JOINTS MAY BE EITHER 1/4" GRAY SPONGE RUBBER OR 1/4" GRAY CELLULAR POLYVINYL CHLORIDE (PVC) SPONGE. SPONGE RUBBER FILLER SHALL CONFORM TO AASHTO M-153, TYPE I. DENSITY OF PVC SPONGE NOT BE LESS THAN 20 LBS. PER CU. FT.

DEFLECTION JOINTS SHALL BE SPACED AT 16'-0" CENTERS, MAX., EXCEPT THAT FOR CONTINUOUS STRUCTURES THE PANELS SHALL BE FURTHER SUBDIVIDED IN THE NEGATIVE MOMENT REGION (OVER THE PIERS) INTO LENGTHS OF NOT LESS THAN 5'-0" NOR MORE THAN 7'-6". REINFORCING BARS SHALL NOT EXTEND THROUGH DEFLECTION JOINTS.

CONCRETE PARAPETS ABOVE UPPER CONSTRUCTION JOINT SHALL BE PLACED IN ALTERNATE SECTIONS BY THE USE OF BULKHEADS. CLOSING SECTIONS SHALL BE PLACED AFTER REMOVAL OF BULKHEADS AND AFTER PLACEMENT OF EXPANSION JOINT FILLER. EXPOSED EDGES OF THE FILLER SHALL BE FLUSH WITH THE SURFACE OF CONCRETE AND SHALL BE FREE OF MORTAR.

PAYMENT: ADDITIONAL GUARDRAIL COST IN EXCESS OF NORMAL GUARDRAIL COST, SUCH AS: TERMINAL CONNECTOR, STEEL PLATE, BOLTS, NUTS, PLATE WASHERS AND OTHER HARDWARE SHALL BE INCLUDED WITH BRIDGE TERMINAL ASSEMBLY FOR PAYMENT. QUANTITIES OF CONCRETE AND REINFORCING STEEL FOR PARAPET ARE INCLUDED WITH THEIR APPROPRIATE ITEM UNDER EITHER ABUTMENTS OR SUPERSTRUCTURE FOR PAYMENT.

POSTS SHALL BE SQUARE-SAWED PRESSURE TREATED WOOD AS PER 710.14, POSTS SHALL BE FABRICATED WITH SQUARE ENDS, BOLT HOLES SHALL BE BORED AND TOPS OF POSTS TRIMMED, IF REQUIRED, AFTER POSTS ARE SET, POSTS MAY BE SET IN DRILLED HOLES OR DRIVEN TO GRADE. STEEL POSTS AND BLOCKOUTS MAY BE FURNISHED AS AN ALTERNATE, PROVIDED THAT THE STRENGTH EQUALS OR EXCEEDS THE STRENGTH OF WOOD POSTS AND BLOCKOUTS.

McCOY ASSOCIATES, INC. 37A/120
CONSULTING ENGINEERS
AKRON, OHIO

SOUTHWEST WINGWALL PARAPET TRANSITION

BRIDGE NO. SUM. 76-1277
AKRON EAST EXPRESSWAY
WEST VIADUCT

DESIGNED	DRAWN	TRACED	CHECKED	REVIEWED	DATE	REVISED
GCK	DAK		JGC	JBH	7-1990	

S24691

FHWA REGION	STATE	PROJECT	
5	OHIO		

980
1214

SUMMIT COUNTY
SUM 76-11.57

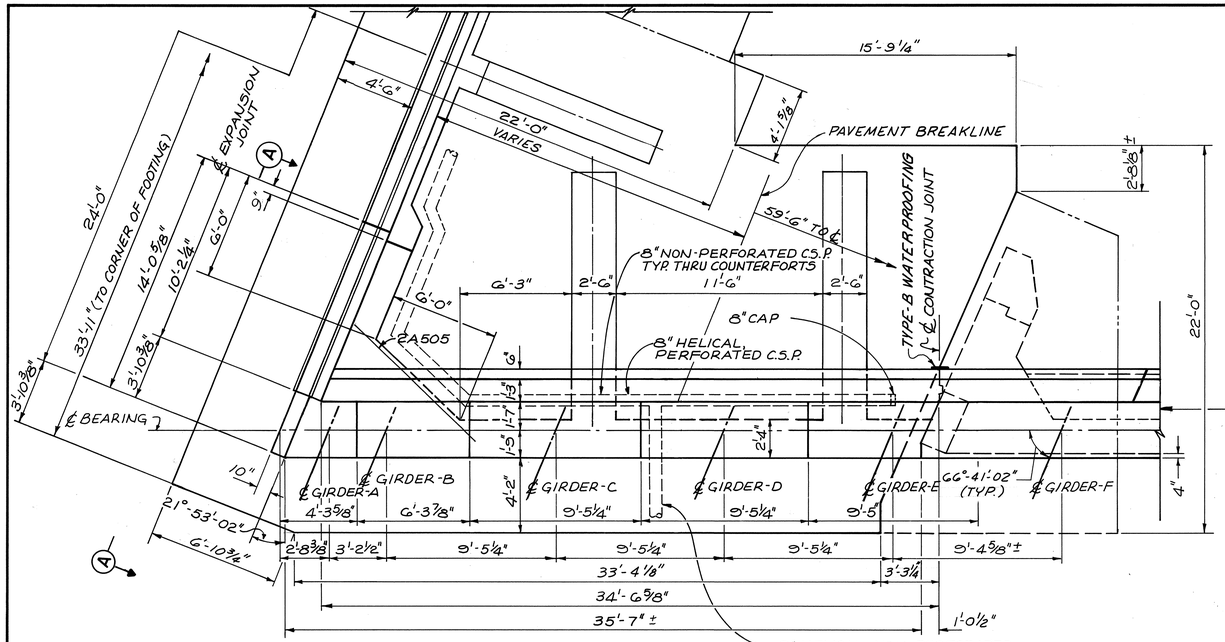

FOR CONTINUATION SEE SHEET 39/120

PART PLAN

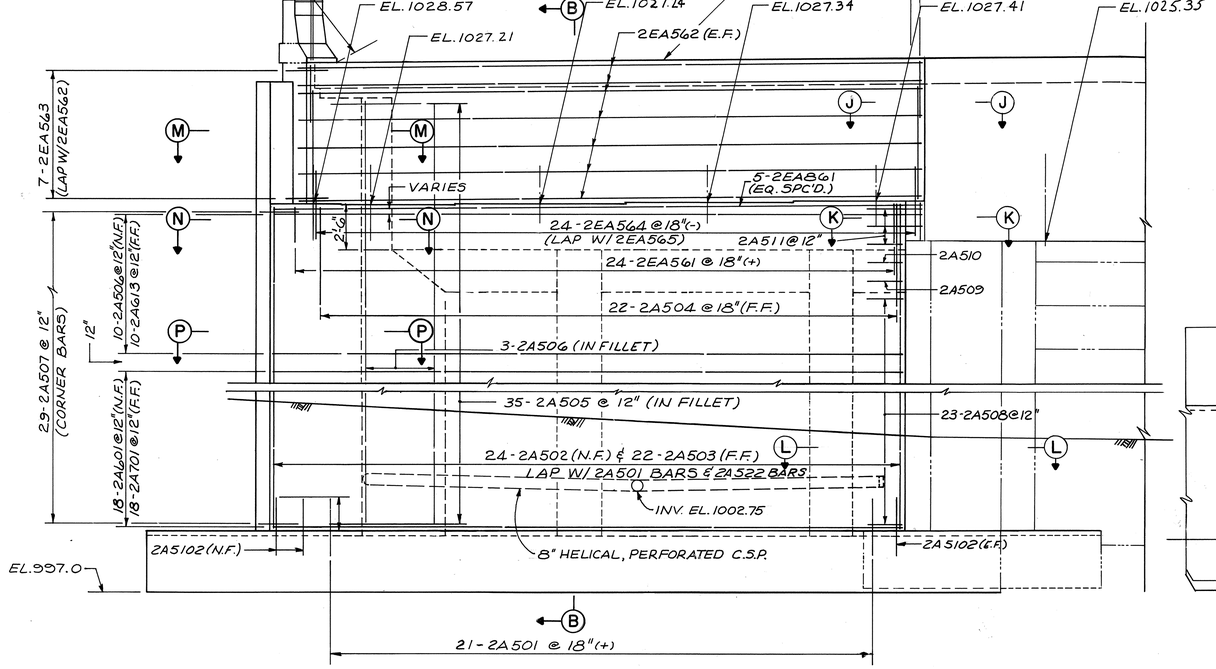

ELEVATION

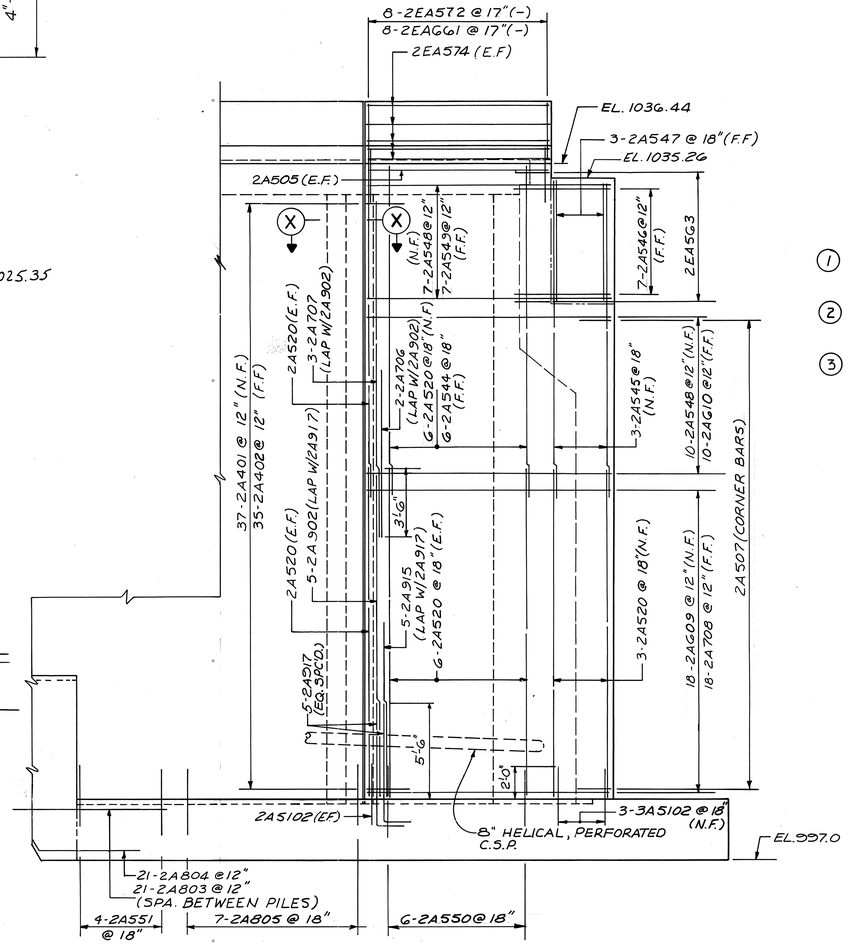

VIEW A-A

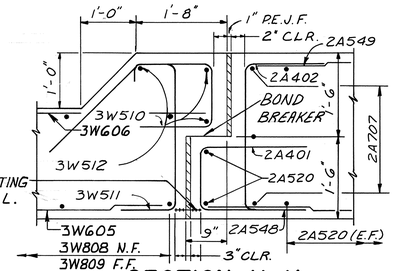

SECTION X-X

6" PVC WATER STOP. EXTEND FROM TOP OF FOOTING TO 1'-0" BELOW TOP OF WALL.

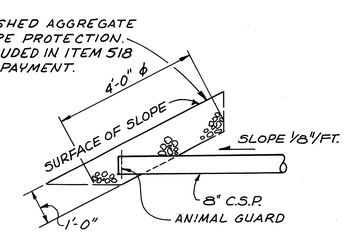

DETAIL-A

NOTES

1. SEE SHEET 46/120 FOR FOOTING DETAILS.
2. SEE SHEETS 42/120 & 43/120 FOR ADDITIONAL DETAILS.
3. SEE NOTES 1-3, SHEET 25/120 FOR ADDITIONAL NOTES.

McCOY ASSOCIATES INC. 38/120
CONSULTING ENGINEERS
AKRON, OHIO

EAST ABUTMENT DETAILS

BRIDGE NO. SUM. 76-1277
AKRON EAST EXPRESSWAY
WEST VIADUCT

DESIGNED	DRAWN	TRACED	CHECKED	REVIEWED	DATE	REVISED
T.E.N.	DAK JDP		JMH	JBH	3-31-89	

FHWA REGION	STATE	PROJECT	
5	OHIO		

SUMMIT COUNTY
SUM 76-11.57

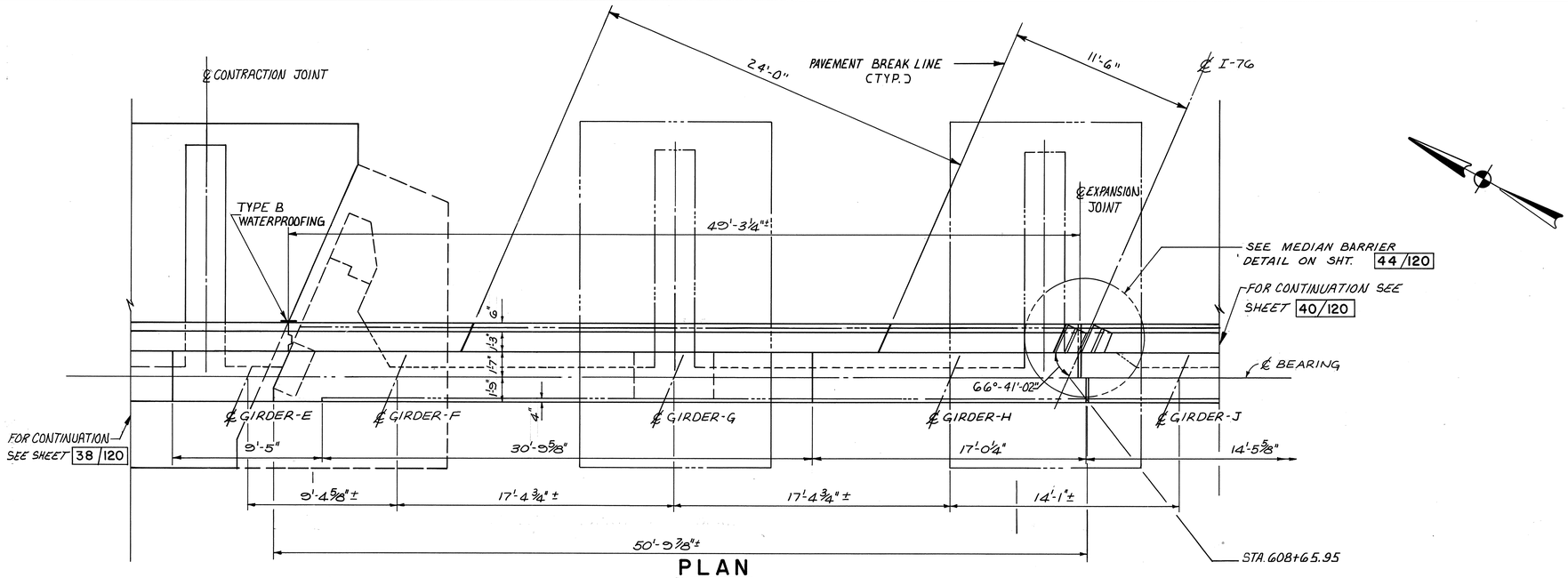

PLAN

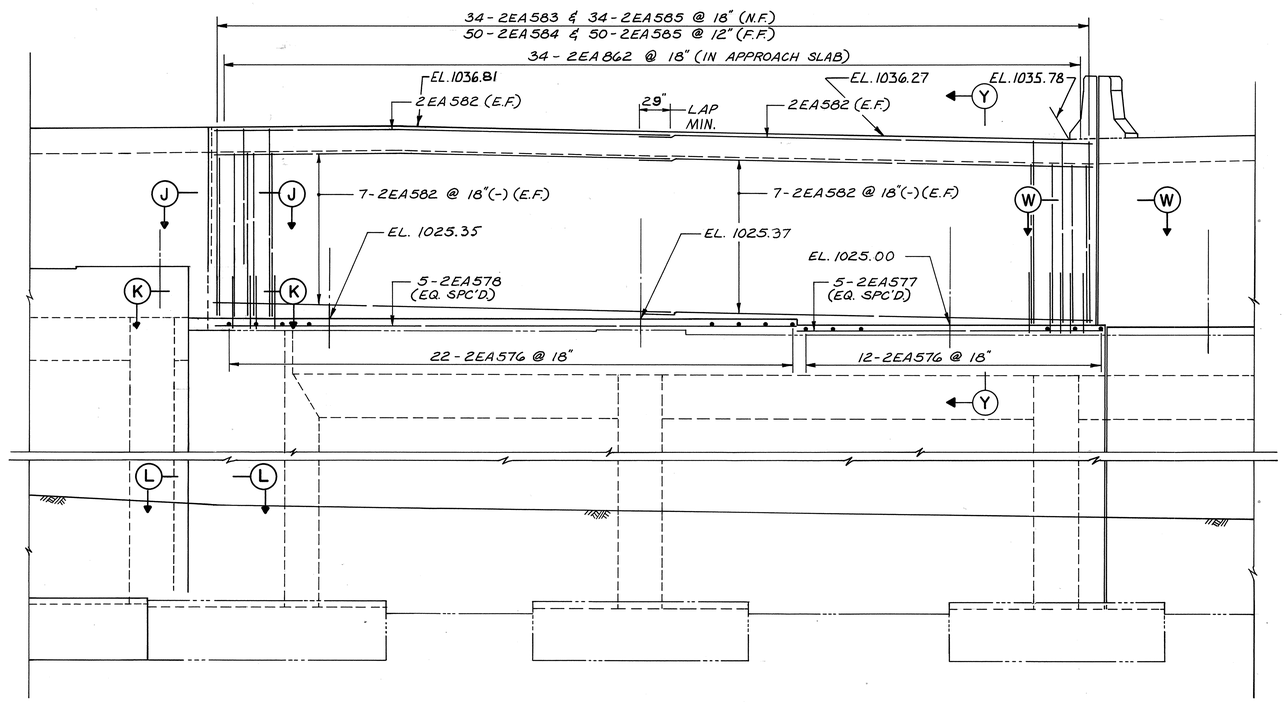

ELEVATION

NOTES

(1) SEE SHEETS 43/120 & 44/120 & 45/120 FOR ADDITIONAL DETAILS.

(2) SEE NOTES 1-3, SHEET 25/120 FOR ADDITIONAL NOTES

McCOY ASSOCIATES INC. 39/120
CONSULTING ENGINEERS
AKRON, OHIO

EAST ABUTMENT DETAILS

BRIDGE NO. SUM. 76-1277
AKRON EAST EXPRESSWAY
WEST VIADUCT

DESIGNED	DRAWN	TRACED	CHECKED	REVIEWED	DATE	REVISED
T.E.N.	DAK JDP		JMH	JBH	3-31-89	

FHWA REGION	STATE	PROJECT	
5	OHIO		

982
12.14

SUMMIT COUNTY
SUM 76-11.57

SEE MEDIAN BARRIER DETAIL ON SHT. 44/120

℄ I-76

℄ EXPANSION JOINT

11'-6"

24'-0"

PAVEMENT BREAKLINE (TYP.)

36'-0"

℄ EXPANSION JOINT

℄ CONTRACTION JOINT

TYPE B WATERPROOFING

85'-9 3/4"

80'-0 3/8" APPROACH SLAB SEAT

66° 41' 02"

6'-4 5/8" ±

℄ BEARING

FOR CONTINUATION SEE SHEET 41/120

℄ GIRDER-J

℄ GIRDER-K

℄ GIRDER-L

℄ GIRDER-M

℄ GIRDER-N

℄ GIRDER-P

℄ GIRDER-R

℄ GIRDER-S

15'-7 3/4" | 17'-6" | 13'-4 7/8" | 9'-4 1/2" | 9'-5 1/4" | 9'-5 1/4" | 9'-5 1/2" | 10'-1" | 9'-5 1/4"

6'-10 3/4" | 17'-6" | 17'-6" | 9'-3 3/4" | 9'-5 1/4" | 9'-5 1/4" | 9'-5 1/2"

37'-0" ±

40'-10 3/8" ±

9 3/4"

83'-0 5/8" ±

FOR CONTINUATION SEE SHEET 39/120

PLAN

5-2EA583 & 5-2EA585 @ 18" (N.F.)
8-2EA584 & 8-2EA585 @ 12" (F.F.)

26-2EA583 & 26-2EA585 @ 18" (N.F.)
38-2EA584 & 38-2EA585 @ 12" (F.F.)
26-2EA862 @ 18" (IN APPROACH SLAB)

23-2EA592 & 23-2EA585 @ 19" (N.F.)
36-2EA593 & 36-2EA575 @ 12" (F.F.)
29-2EA862 @ 18" (IN APPROACH SLAB)

5-2EA5101 @ 12" (TOP)
5-2EA565 (BOTT.) & 5-EA585 CN.F., BOTT.)
& 5-EA575 (F.F., BOTT.) @ 12"

EL. 1035.76 | EL. 1036.12 | EL. 1036.33 | EL. 1035.54

(Y) | 2EA587 (E.F.) | 29" LAP (MIN.) | 2EA587 (E.F.)

2EA591 (E.F.) | 29" LAP (MIN.) (Z) | 2EA591 (E.F.)

7-2EA587 @ 18" (-) (E.F.) | 7-2EA587 @ 18" (-) (E.F.)

EL. 1024.91 | EL. 1025.05 | EL. 1024.79 | EL. 1026.79 | EL. 1026.60 | EL. 1026.23 | EL. 1026.41 | EL. 1027.13

5-2EA586 (EQ. SPC'D.) | 5-2EA577 (EQ. SPC'D.) | 5-2EA576 (EQ. SPC'D.) | (W) | 5-2EA591 @ 18" (E.F.) | 5-2EA591 @ 18" (E.F.) | 5-2EA594 (EQ.-SPC'D.) | SERIES-2EA590 (EQ. SPC'D.) | (G) | (G)

(H) | (H)

10-2EA576 @ 18" | 12-2EA576 @ 18" (+) | 4-2EA576 @ 18" | 2EA588 (E.F.) | 2A556 (E.F.) | 2A556 (N.F.) 2A557 (F.F.) | 3-2A534

(Y) | 5-2EA574 (EQ. SPC'D.) | (Z)

6-2EA576 @ 18" | 26-2EA589 @ 18" (-)

ELEVATION

NOTES

(1) SEE SHEETS 42/120, 44/120 & 45/120 FOR ADDITIONAL DETAILS.

(2) SEE NOTES 1-3, SHEET 25/120 FOR ADDITIONAL NOTES.

McCOY ASSOCIATES INC. 40/120
CONSULTING ENGINEERS
AKRON, OHIO

EAST ABUTMENT DETAILS

BRIDGE NO. SUM. 76-1277
AKRON EAST EXPRESSWAY
WEST VIADUCT

DESIGNED	DRAWN	TRACED	CHECKED	REVIEWED	DATE	REVISED
T.E.N.	J.D.P.		J.M.H.	J.B.H.	3-31-89	

FHWA REGION	STATE	PROJECT	
5	OHIO		

SUMMIT COUNTY
SUM 76-11.57

983
12/4

PLAN

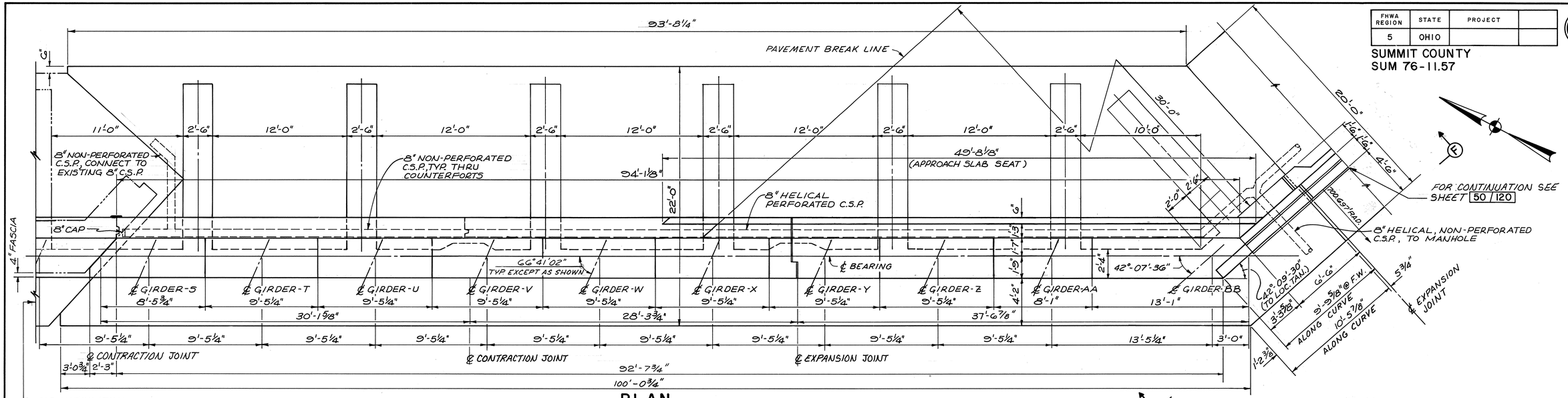

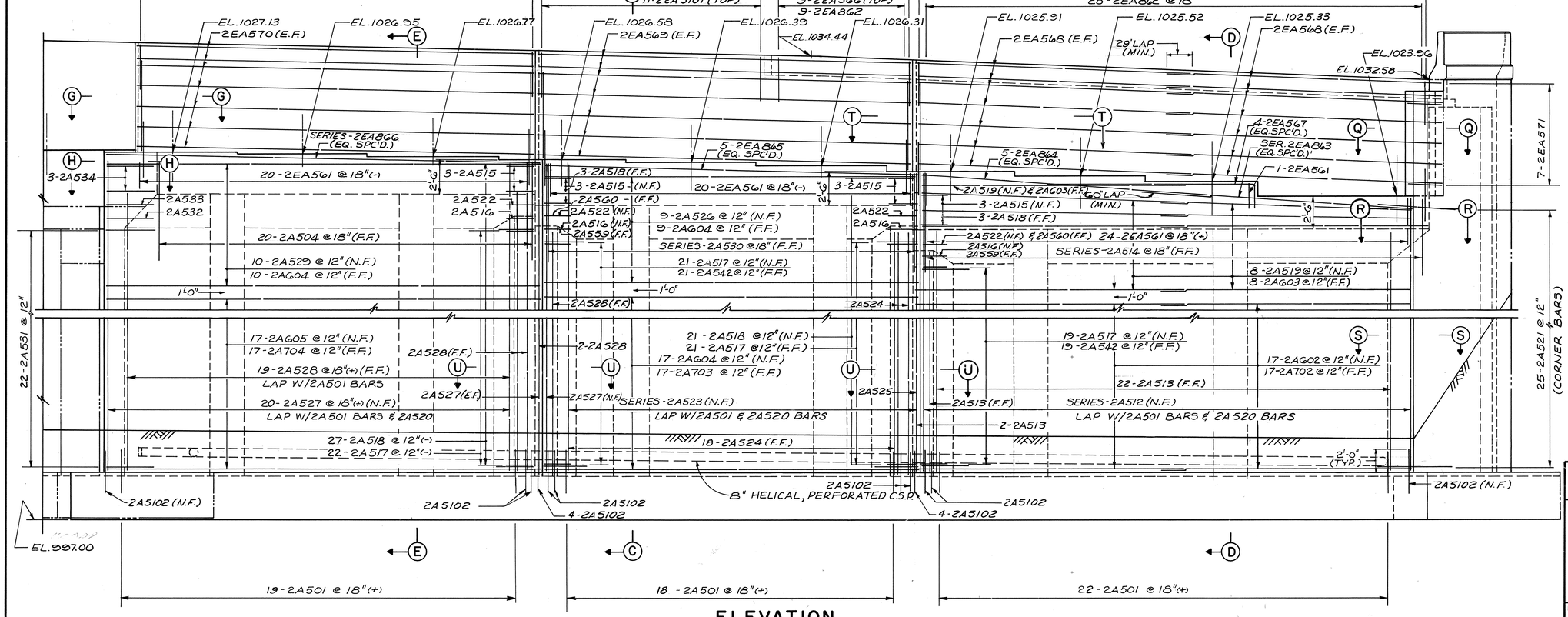

ELEVATION

NOTES

(1) SEE SHEET 47 120 FOR FOOTING DETAILS.

(2) SEE NOTES 1-3 SHEET 25 120 FOR ADDITIONAL NOTES.

McCOY ASSOCIATES INC. 41 120
CONSULTING ENGINEERS
AKRON, OHIO

EAST ABUTMENT DETAILS

BRIDGE NO. SUM. 76-1277
AKRON EAST EXPRESSWAY
WEST VIADUCT

DESIGNED	DRAWN	TRACED	CHECKED	REVIEWED	DATE	REVISED
T.E.N.	J.D.P.		JMH	JBH	3-31-89	

FHWA REGION	STATE	PROJECT	
5	OHIO		

984
1214

SUMMIT COUNTY
SUM 76-11.57

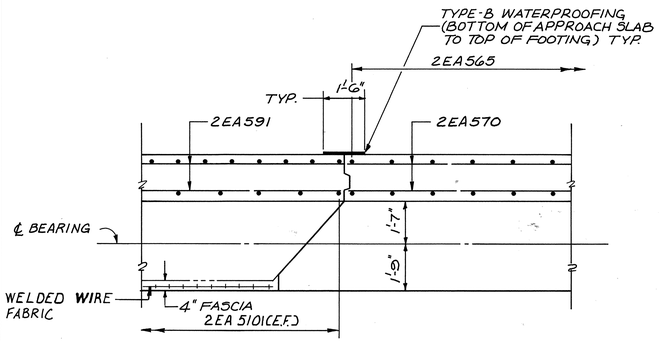

SECTION G-G

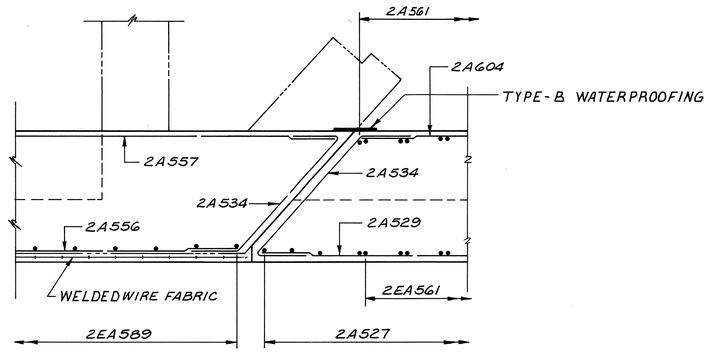

SECTION H-H

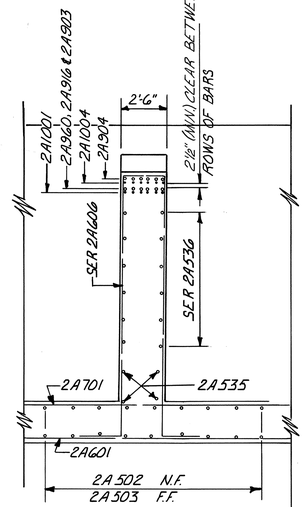

SECTION CC-CC

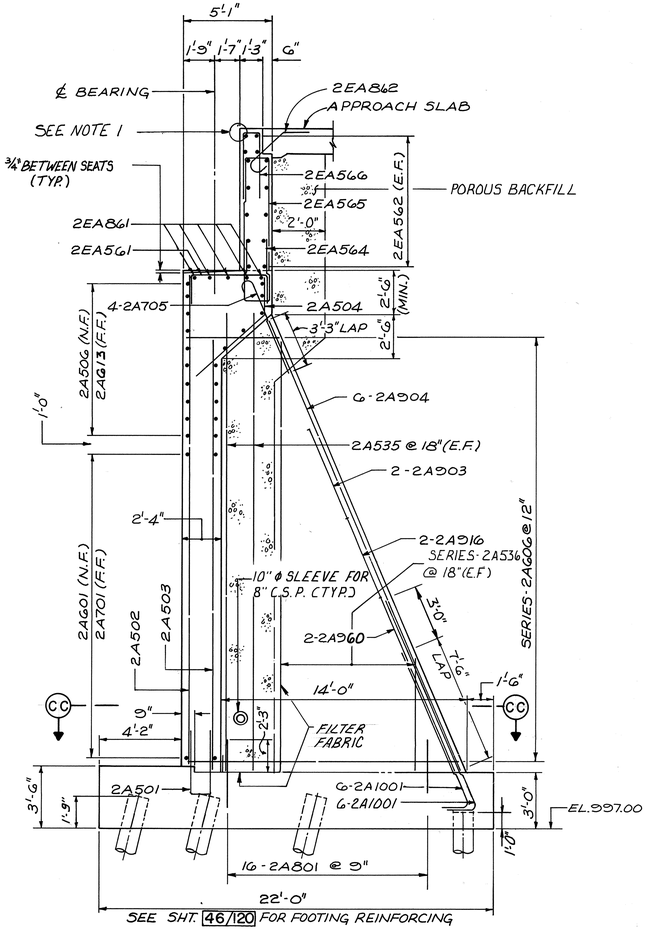

SECTION B-B

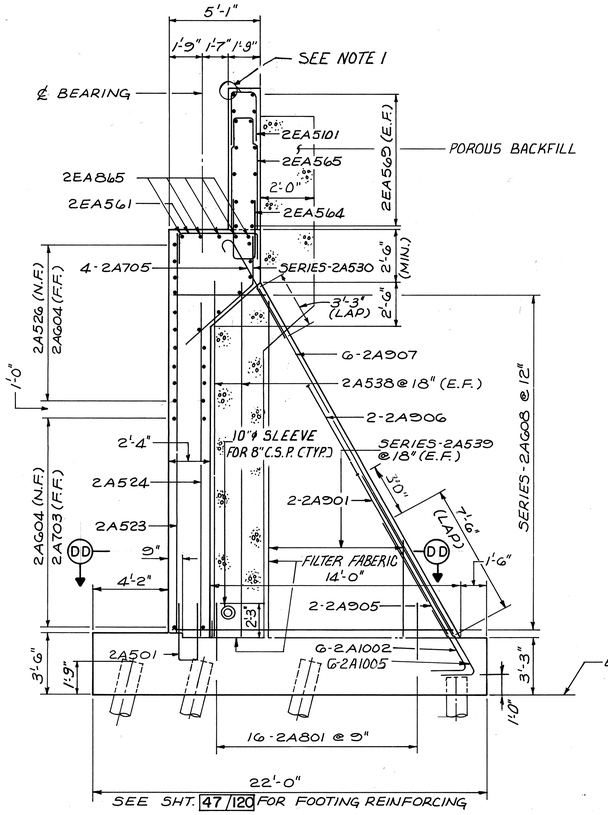

SECTION C-C

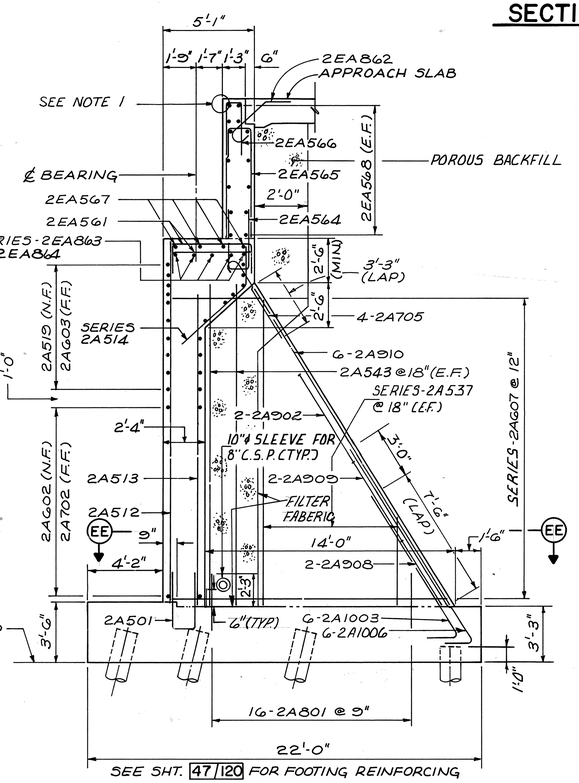

SECTION D-D

NOTES

1. FOR EXPANSION JOINT DETAILS SEE SHEETS 80/120 THRU 82B/120.
2. SEE NOTES 1 & 2. SHEET 25/120 FOR ADDITIONAL NOTES.

McCOY ASSOCIATES INC. 42/120
CONSULTING ENGINEERS
AKRON, OHIO

EAST ABUTMENT DETAILS

BRIDGE NO. SUM. 76-1277
AKRON EAST EXPRESSWAY
WEST VIADUCT

DESIGNED	DRAWN	TRACED	CHECKED	REVIEWED	DATE	REVISED
T.E.N.	DAK JDP		JMH	JBH	3-31-89	

FHWA REGION	STATE	PROJECT	
5	OHIO		

985
1214

SUMMIT COUNTY
SUM 76-11.57

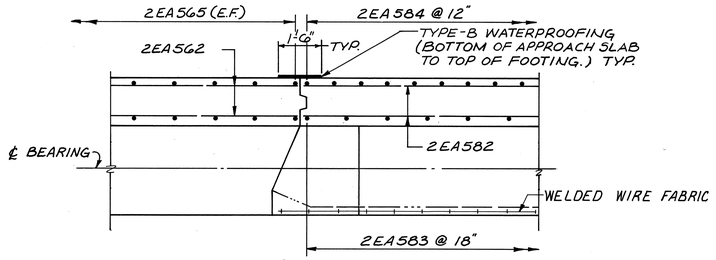

SECTION J-J

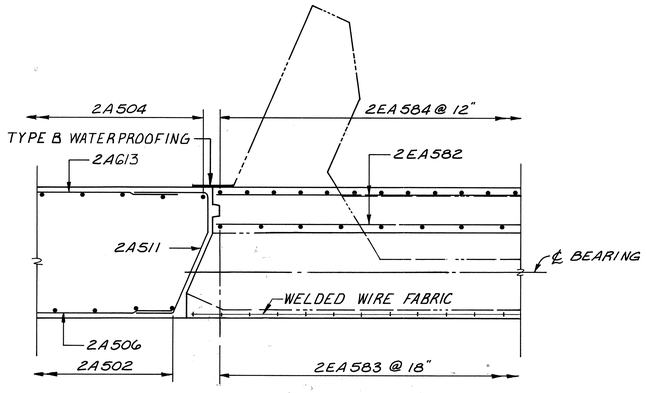

SECTION K-K

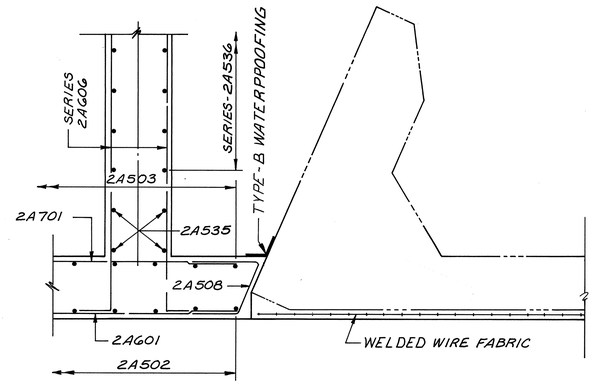

SECTION L-L

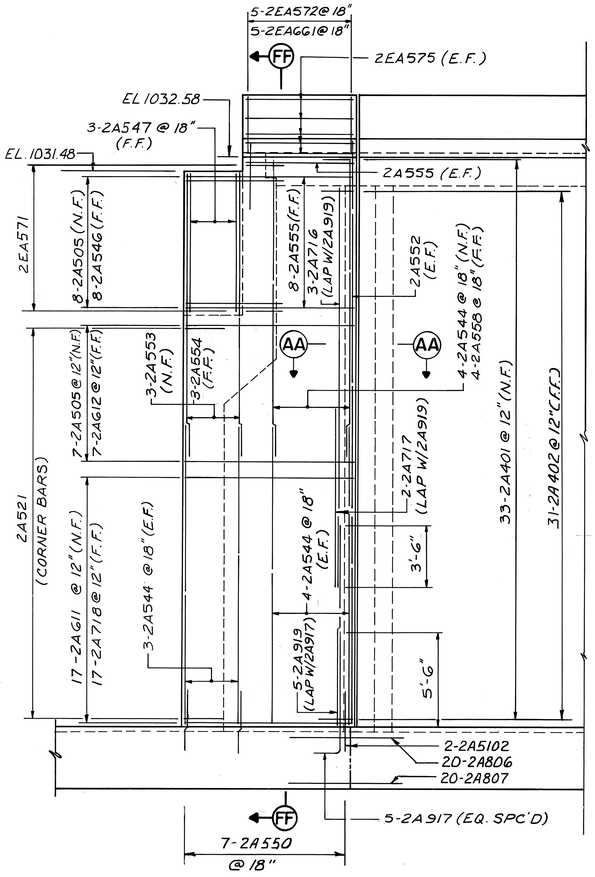

VIEW F-F

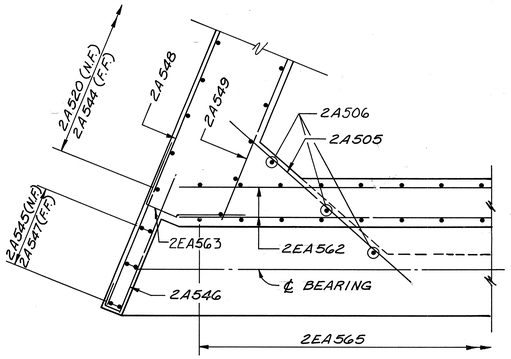

SECTION M-M

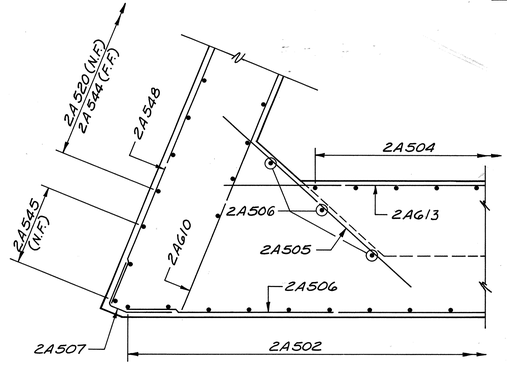

SECTION N-N

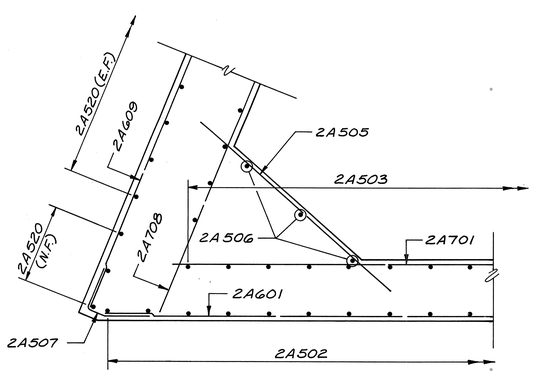

SECTION P-P

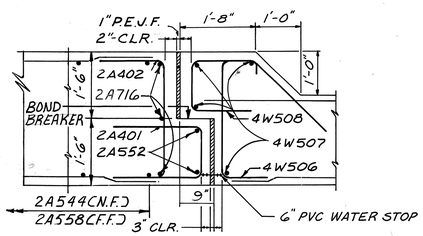

SECTION AA-AA

NOTES

(1) SEE NOTES 1&2, SHEET 25/120 FOR ADDITIONAL NOTES.

McCOY ASSOCIATES INC. 43/120
CONSULTING ENGINEERS
AKRON, OHIO

EAST ABUTMENT DETAILS

BRIDGE NO. SUM. 76-1277
AKRON EAST EXPRESSWAY
WEST VIADUCT

DESIGNED	DRAWN	TRACED	CHECKED	REVIEWED	DATE	REVISED
T.E.N.	DAK JDP		JMH	JBH	3-31-87	

FHWA REGION	STATE	PROJECT	
5	OHIO		

986/1214

SUMMIT COUNTY
SUM 76-11.57

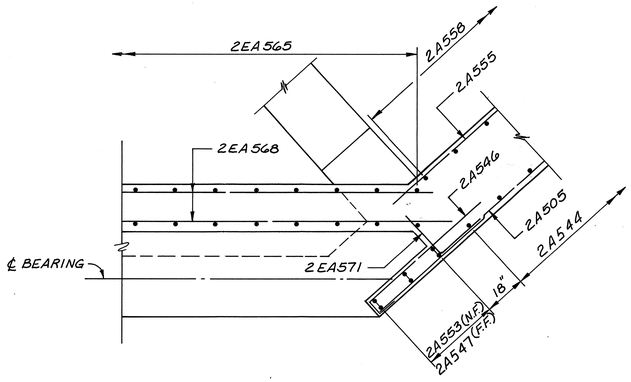

SECTION Q-Q

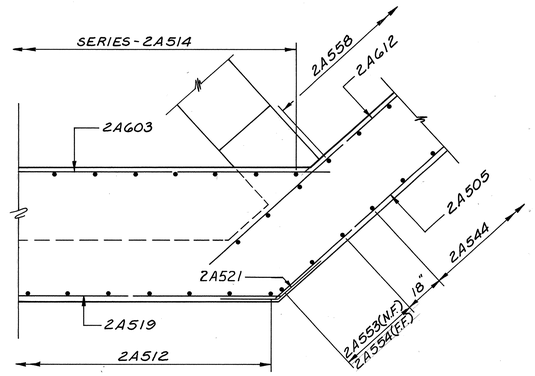

SECTION R-R

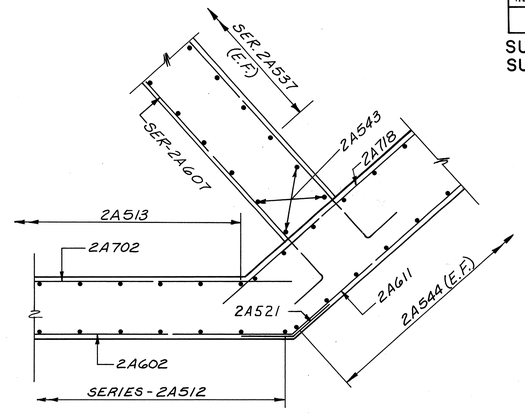

SECTION S-S

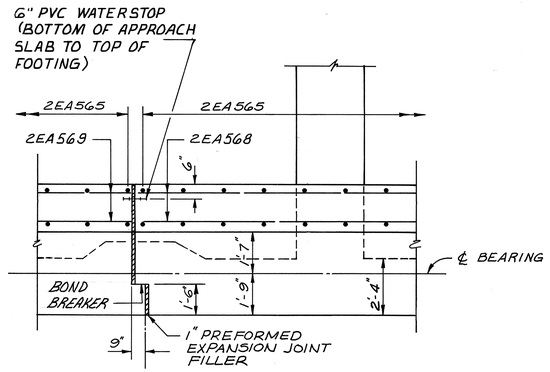

SECTION T-T

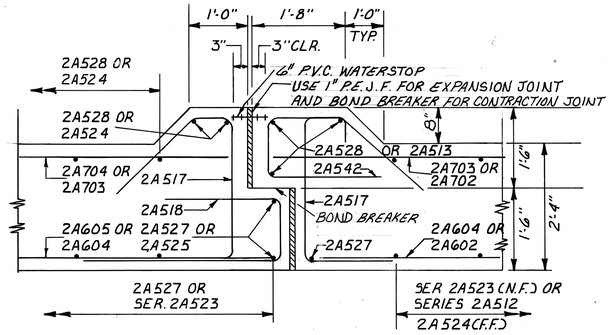

SECTION U-U

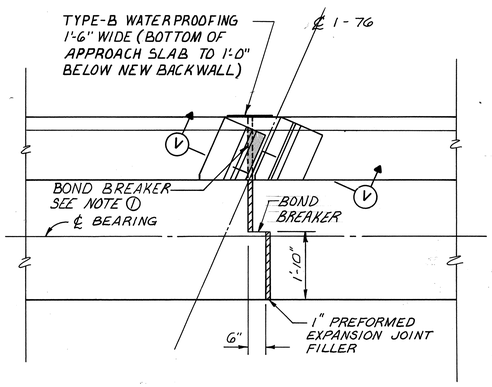

MEDIAN BARRIER DETAIL

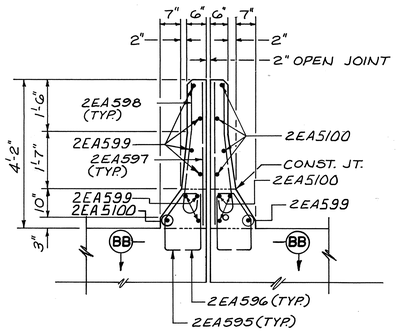

SECTION V-V

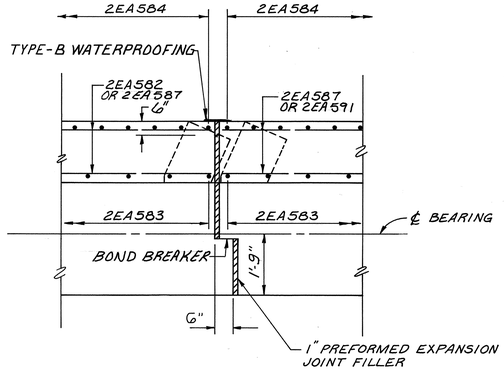

SECTION W-W

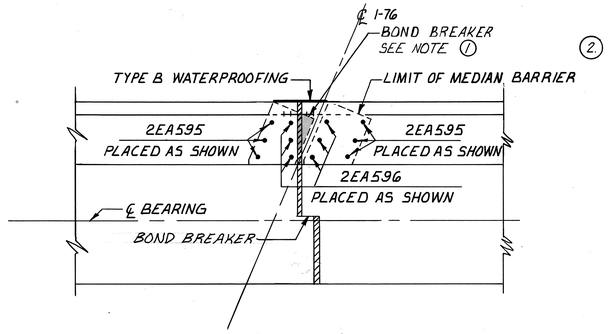

SECTION BB-BB

NOTES

① BOND BREAKER SHALL BE APPLIED AT THE JOINT BETWEEN THE TOP OF THE BACKWALL AND THE BOTTOM CORNER OF THE MEDIAN BARRIER (SHADED AREAS).

② SEE NOTES 1 & 2, SHEET 25/120 FOR ADDITIONAL NOTES.

McCOY ASSOCIATES INC. 44/120
CONSULTING ENGINEERS
AKRON, OHIO

EAST ABUTMENT DETAILS

BRIDGE NO. SUM. 76-1277
AKRON EAST EXPRESSWAY
WEST VIADUCT

DESIGNED	DRAWN	TRACED	CHECKED	REVIEWED	DATE	REVISED
T.E.N.	DAK JDP		JMH	JBH	3-31-89	

FHWA REGION	STATE	PROJECT	
5	OHIO		

987
1214

SUMMIT COUNTY
SUM 76-11.57

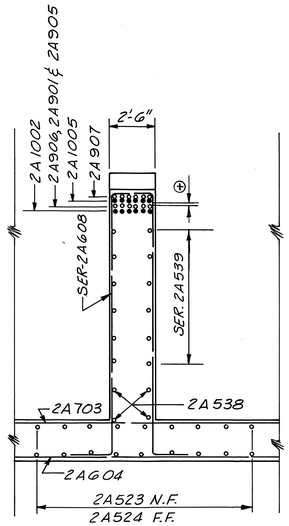

SECTION DD-DD

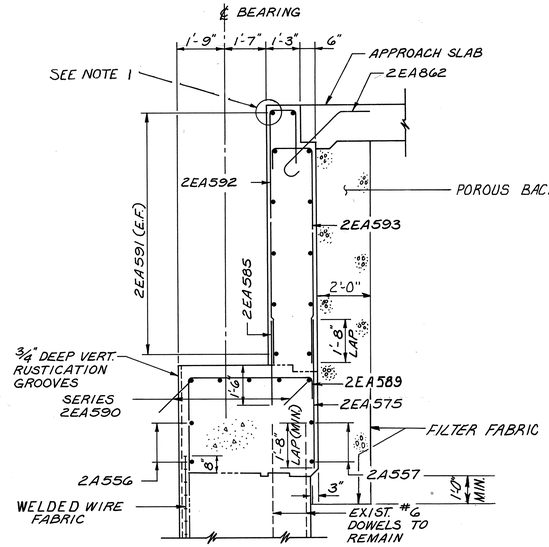

SECTION Z-Z

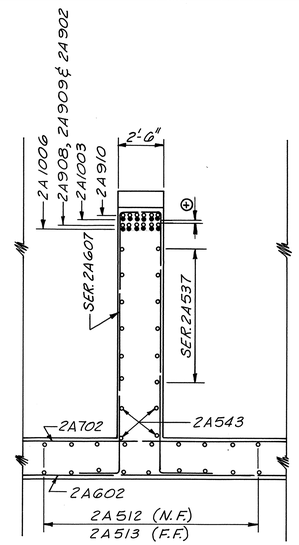

SECTION EE-EE

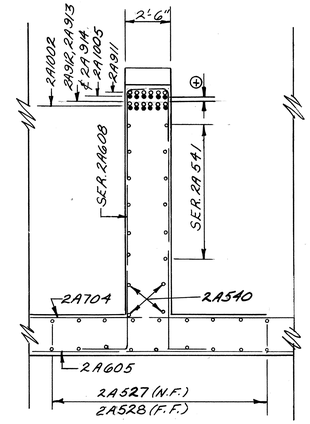

SECTION GG-GG

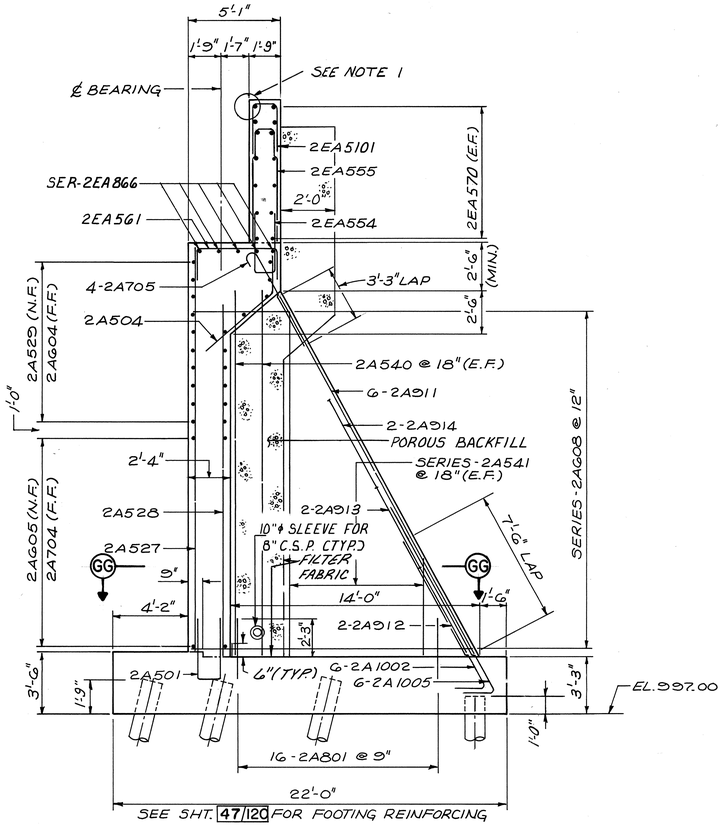

SEE SHT. 47/120 FOR FOOTING REINFORCING

SECTION E-E

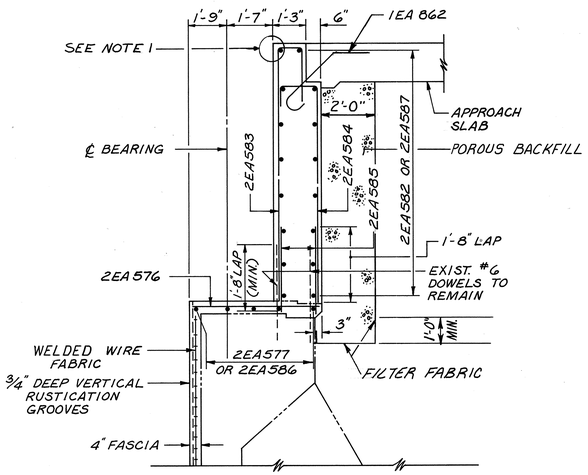

SECTION Y-Y

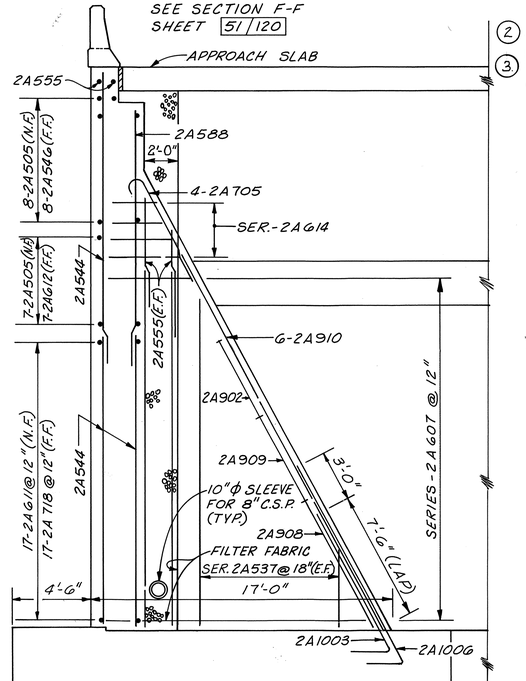

SEE FOOTING DETAILS SHEET 47/120

SECTION FF-FF

NOTES

1. FOR EXPANSION JOINT DETAILS SEE SHEETS 80/120 THRU 828/120
2. SEE NOTES 1 & 2, SHEET 25/120
3. ⊕ INDICATES 2½" (MIN.) CLEAR BETWEEN ROWS OF BARS.

McCOY ASSOCIATES INC. 45/120
CONSULTING ENGINEERS
AKRON, OHIO

EAST ABUTMENT DETAILS

BRIDGE NO. SUM. 76-1277
AKRON EAST EXPRESSWAY
WEST VIADUCT

DESIGNED	DRAWN	TRACED	CHECKED	REVIEWED	DATE	REVISED
T.E.N.	JDP DAK		JMH	JBH	3-31-89	

FHWA REGION	STATE	PROJECT	
5	OHIO		

988
12.14

SUMMIT COUNTY
SUM 76-11.57

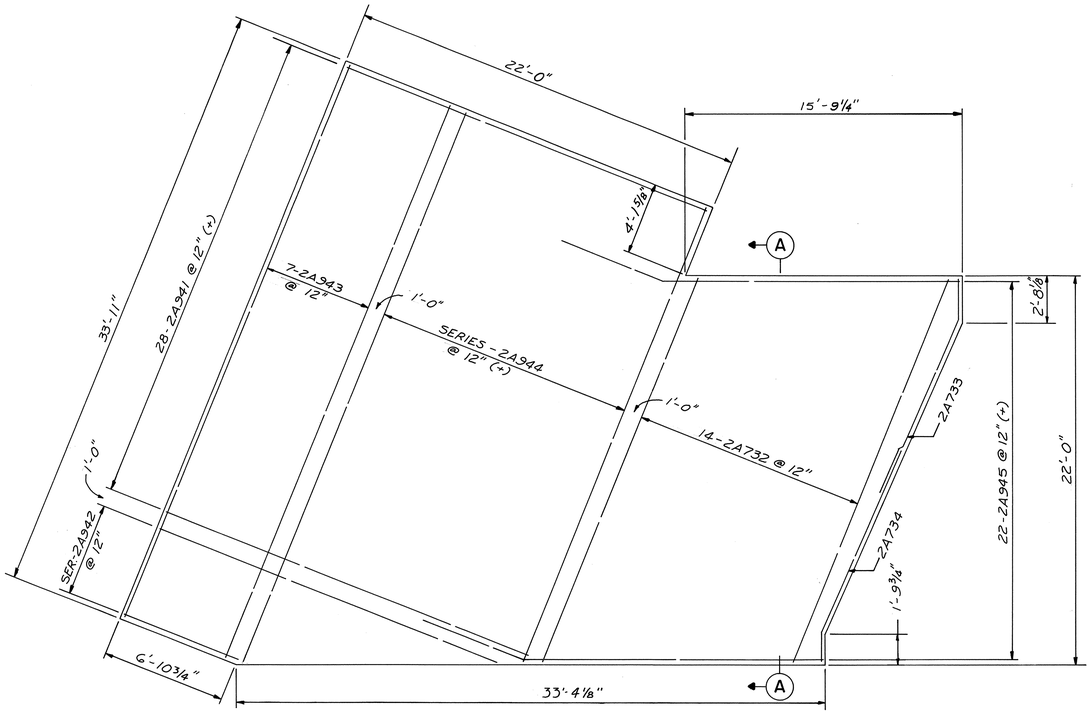

REINFORCING IN TOP OF FOOTING

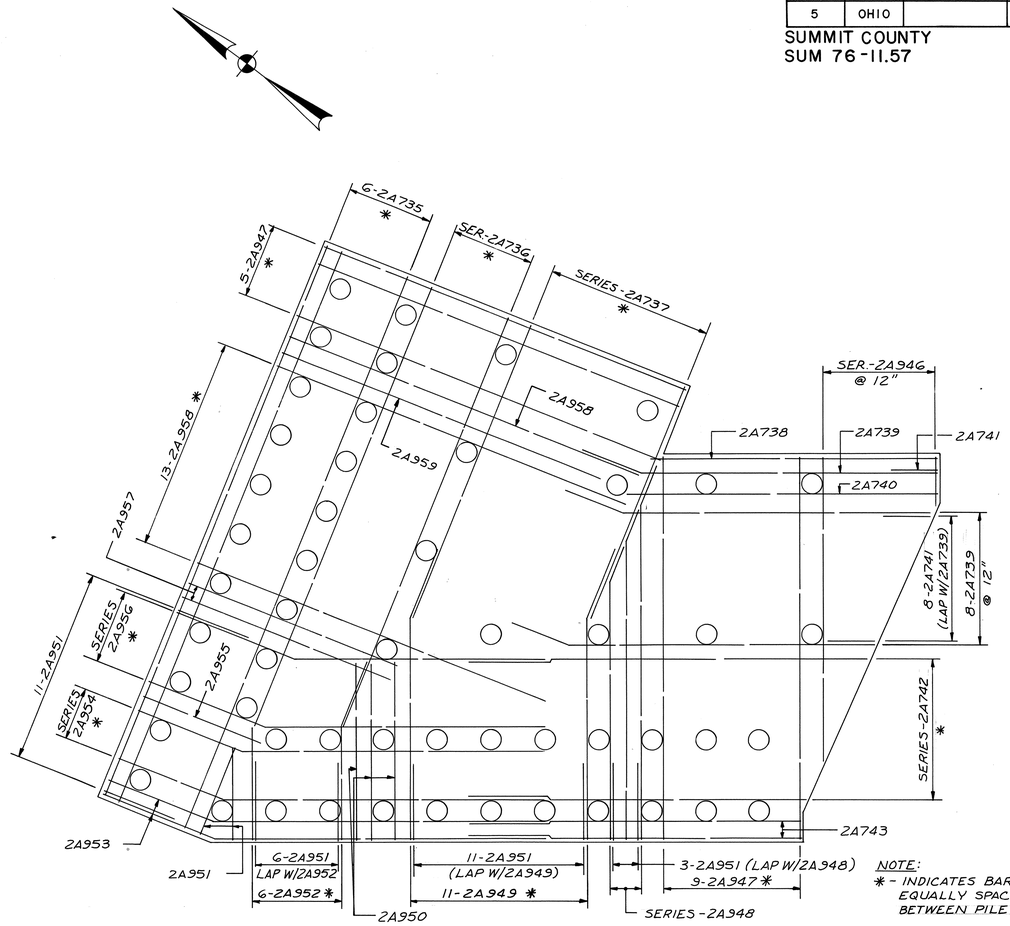

REINFORCING IN BOTTOM OF FOOTING

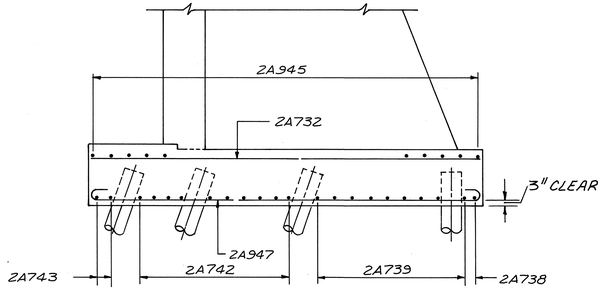

SECTION A-A

NOTES

1. REFER TO EAST ABUTMENT DETAILS FOR ADDITIONAL PLAN DIMENSIONS.
2. SEE NOTES 1&2, SHEET 25/120

McCOY ASSOCIATES INC.
CONSULTING ENGINEERS
AKRON, OHIO

46/120

NORTHEAST ABUTMENT FOOTING REINFORCING

BRIDGE NO. SUM. 76-1277
AKRON EAST EXPRESSWAY
WEST VIADUCT

DESIGNED	DRAWN	TRACED	CHECKED	REVIEWED	DATE	REVISED
T.E.N.	J.D.P.	MRA	JMH	JBH	3-31-89	

22176

FHWA REGION	STATE	PROJECT	
5	OHIO		

989
1214

SUMMIT COUNTY
SUM 76-11.57

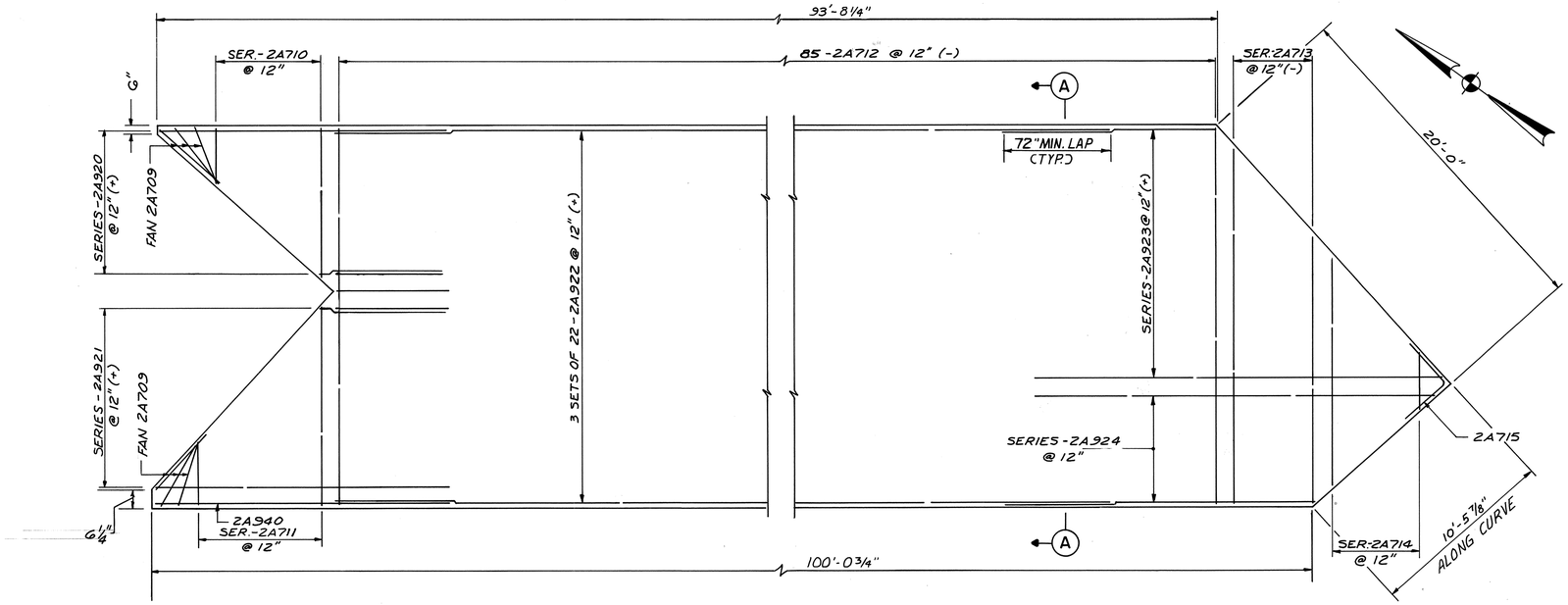

REINFORCING IN TOP OF FOOTING

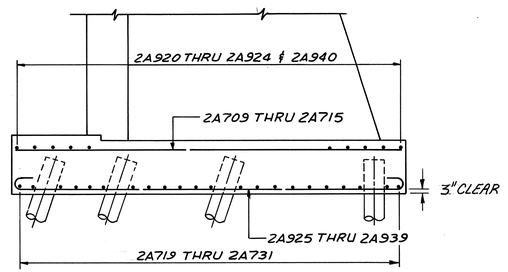

SECTION A-A

NOTES

1. REFER TO EAST ABUTMENT DETAILS FOR ADDITIONAL PLAN DIMENSIONS.
2. SEE NOTES 1 & 2, SHEET 25/120 FOR ADDITIONAL NOTES.

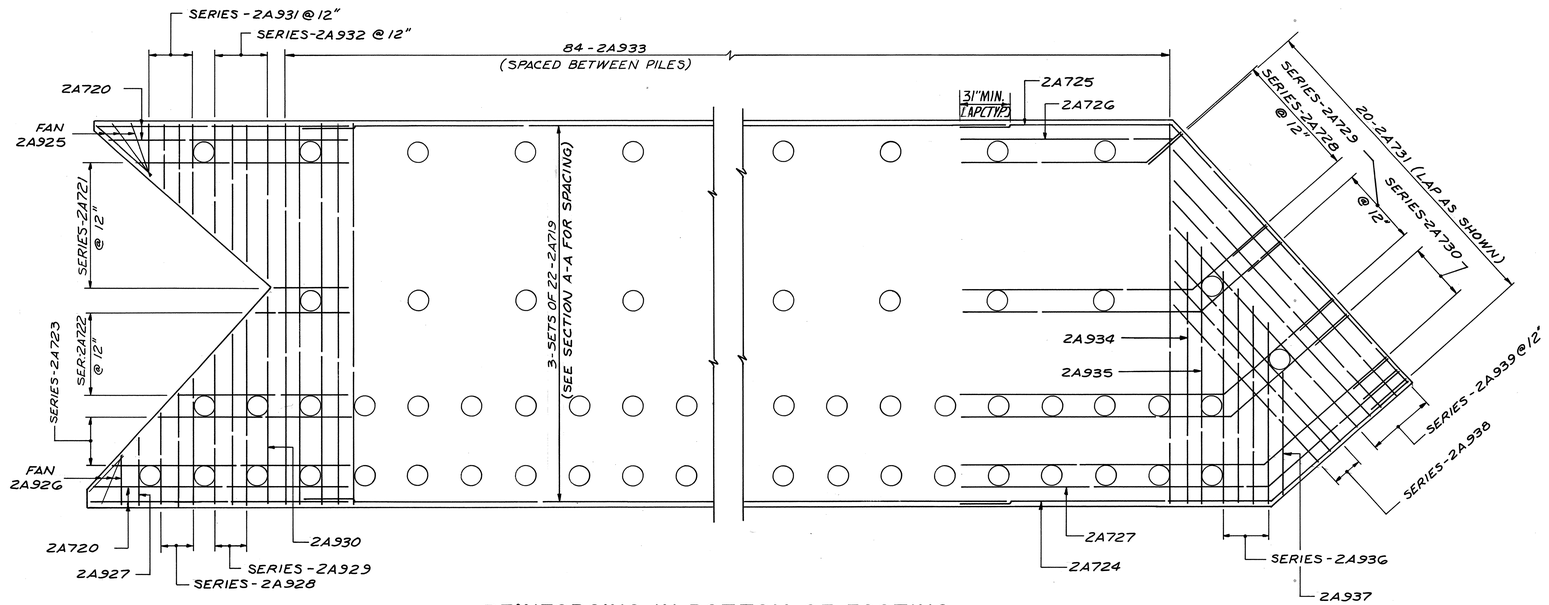

REINFORCING IN BOTTOM OF FOOTING

McCOY ASSOCIATES INC. 47/120
CONSULTING ENGINEERS
AKRON, OHIO

SOUTHEAST ABUTMENT FOOTING REINFORCING

BRIDGE NO. SUM. 76-1277
AKRON EAST EXPRESSWAY
WEST VIADUCT

DESIGNED	DRAWN	TRACED	CHECKED	REVIEWED	DATE	REVISED
T.E.N.	J.D.P.		JMH	JBH	3-31-89	

FHWA REGION	STATE	PROJECT	
5	OHIO		

990
1214

SUMMIT COUNTY
SUM 76-11.57

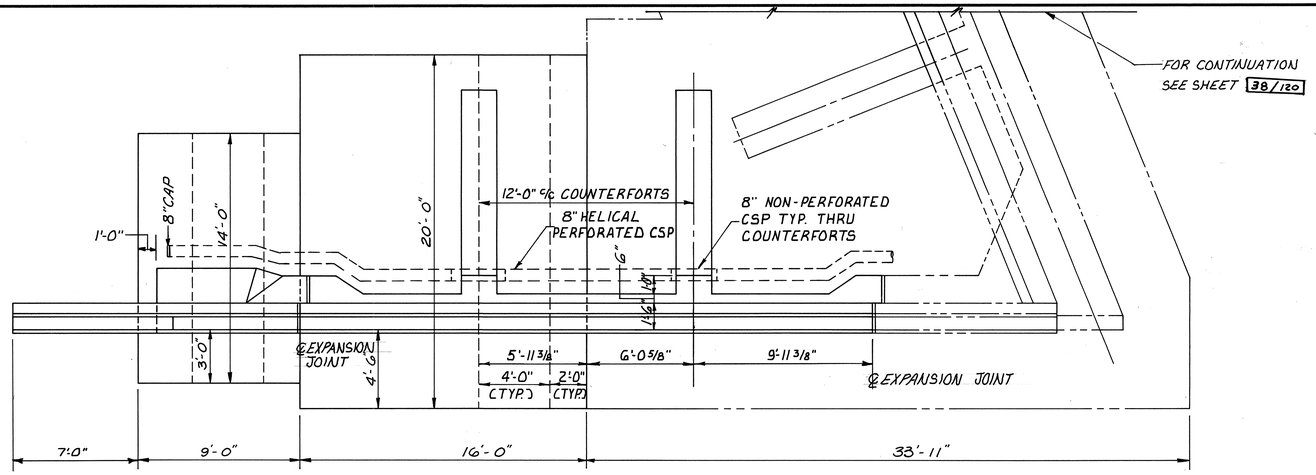

PLAN

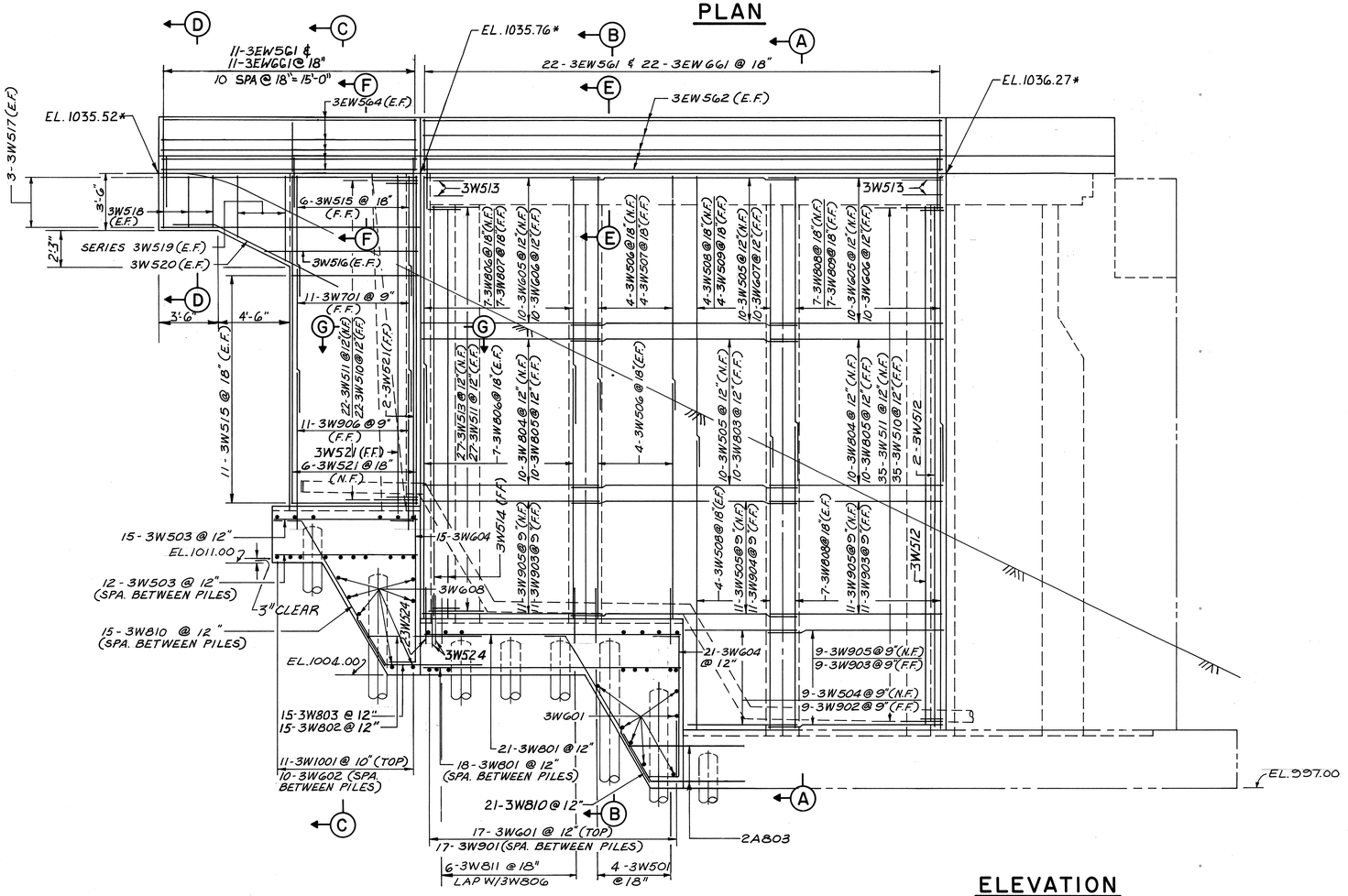

ELEVATION

NOTES

1. *-INDICATES ELEVATION GIVEN AT TOE OF PARAPET AND TOP OF APPROACH SLAB.
2. SEE SHEET 49/120 FOR ADDITIONAL DETAILS.
3. SEE NOTES 1&2, SHEET 25/120 FOR ADDITIONAL NOTES.

McCOY ASSOCIATES INC. 48/120
CONSULTING ENGINEERS
AKRON, OHIO

NORTHEAST WINGWALL DETAILS

BRIDGE NO. SUM. 76-1277
AKRON EAST EXPRESSWAY
WEST VIADUCT

DESIGNED	DRAWN	TRACED	CHECKED	REVIEWED	DATE	REVISED
T.E.N.	J.D.P.	G.T.	J.M.H.	J.B.H.	3-31-89	

FHWA REGION	STATE	PROJECT	
5	OHIO		

SUMMIT COUNTY
SUM 76-11.57

991
1214

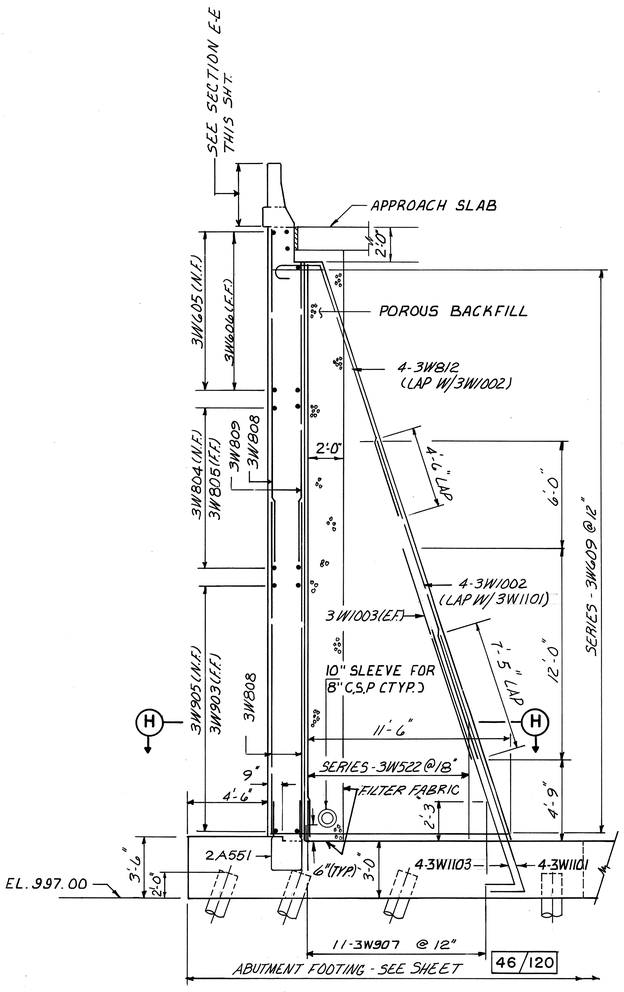

SECTION A-A

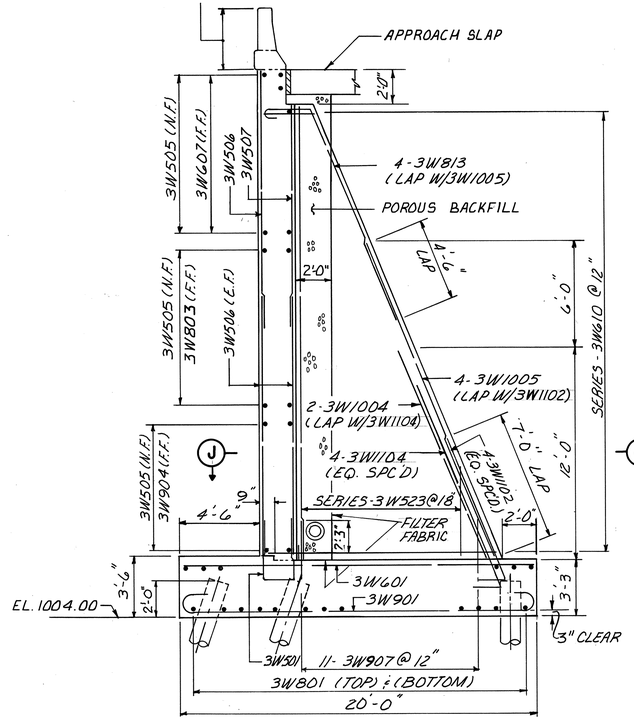

SECTION B-B

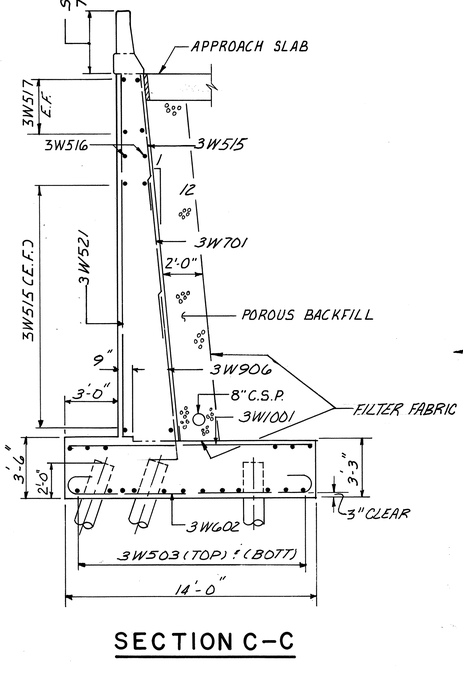

SECTION C-C

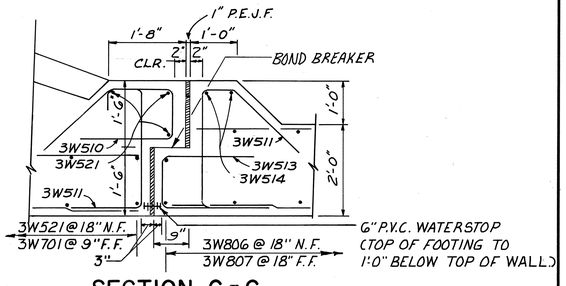

SECTION G-G

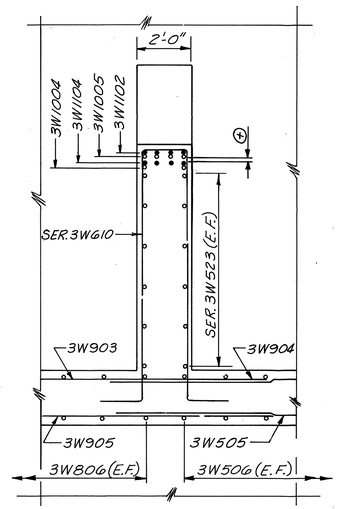

SECTION J-J

NOTES

(1) ⊕ INDICATES 2½" (MIN.) CLEAR BETWEEN ROWS OF BARS

(2) SEE NOTES 1 & 2, SHEET 25/120 FOR ADDITIONAL NOTES.

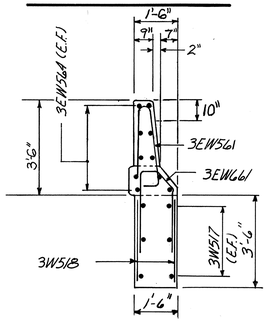

SECTION D-D

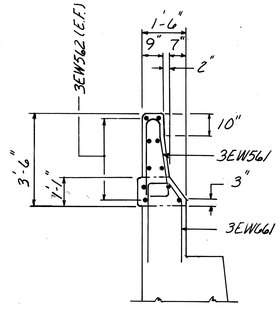

SECTION E-E

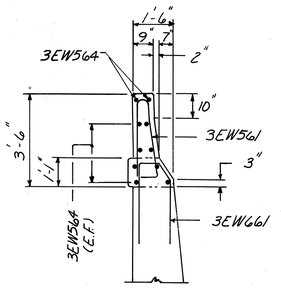

SECTION F-F

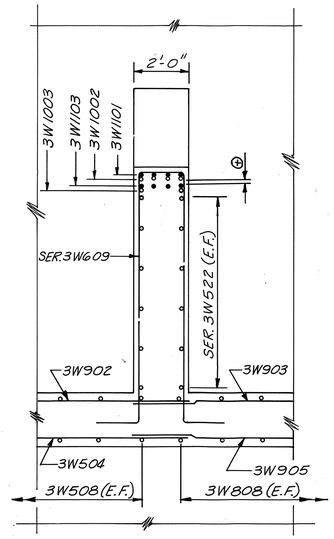

SECTION H-H

McCOY ASSOCIATES INC. 49/120
CONSULTING ENGINEERS
AKRON, OHIO

NORTHEAST WINGWALL DETAILS

BRIDGE NO. SUM. 76-1277
AKRON EAST EXPRESSWAY
WEST VIADUCT

DESIGNED	DRAWN	TRACED	CHECKED	REVIEWED	DATE	REVISED
T.E.N.	J.D.P.		J.M.H.	J.B.H.	3-31-89	

FHWA REGION	STATE	PROJECT	
5	OHIO		

992
1214

SUMMIT COUNTY
SUM 76-11.57

FOR CONTINUATION SEE SHEET 41/120

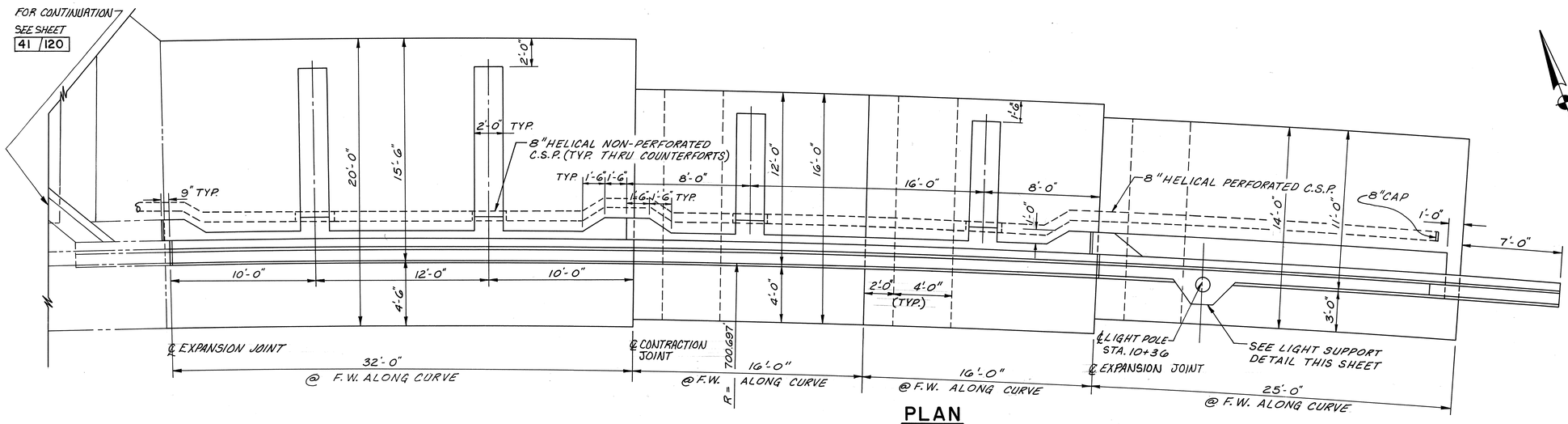

PLAN

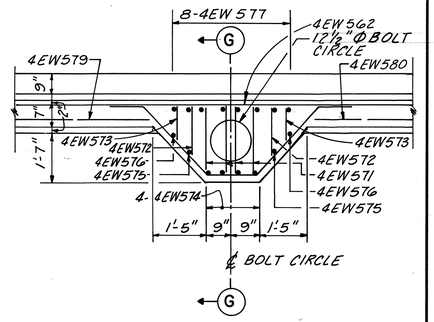

LIGHT SUPPORT DETAIL

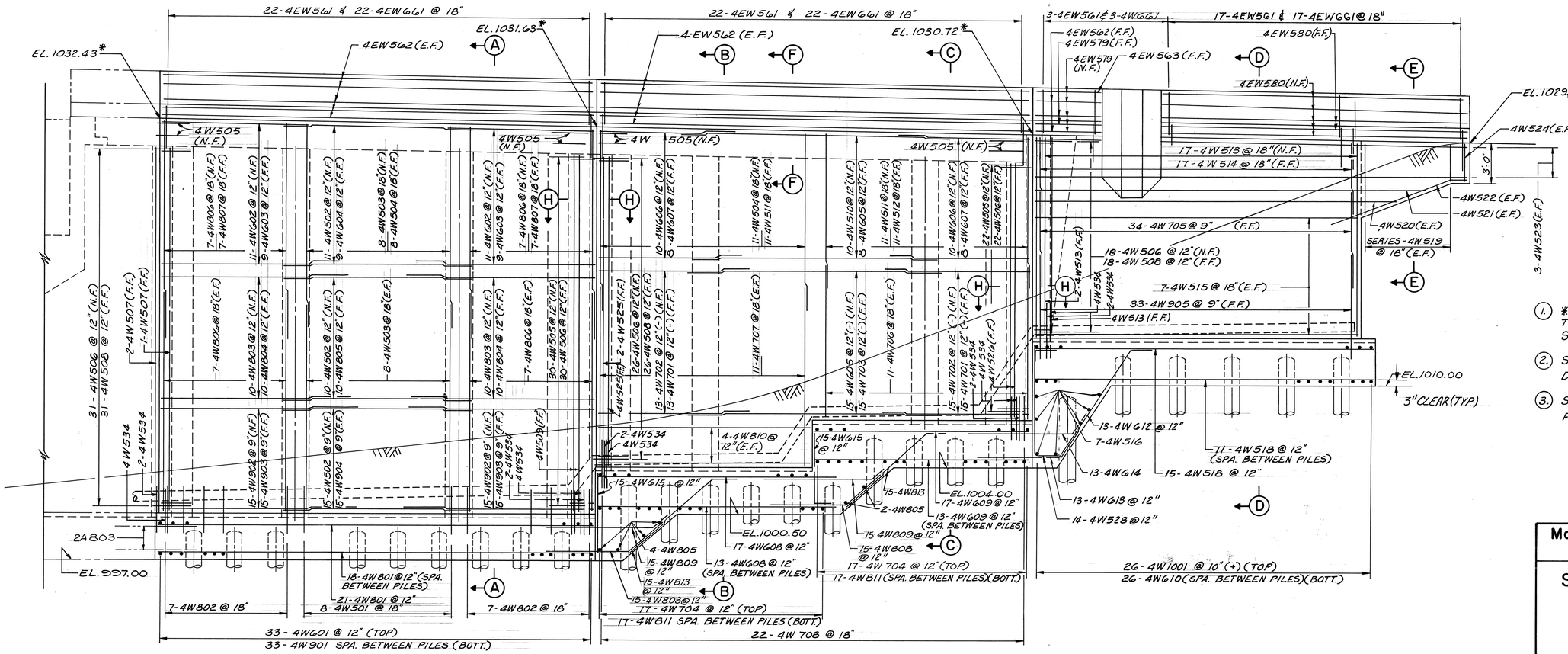
22-4EW561 & 22-4EWG61 @ 18"
EL. 1031.63*
4EW562(E.F.)
A
22-4EW561 & 22-4EWG61 @ 18"
4-EW562 (E.F.)
B
F
EL. 1030.72*
C
3-4EW561 & 3-4WG61
17-4EW561 & 17-4EWG61 @ 18"
4EW562(F.F.)
4EW579(F.F.)
4EW579 (N.F.)
4EW563(F.F.)
D
4EW580(F.F.)
4EW580(N.F.)
E
EL. 1032.43*
EL. 1029.70*
4W505 (N.F.)
4W505 (N.F.)
4W505 (N.F.)
4W524(E.F.)
17-4W513 @ 18"(N.F.)
17-4W514 @ 18"(F.F.)
3'-0"
4W522(E.F.)
4W521(E.F.)
4W520(E.F.)
SERIES-4W519 @ 18"(E.F.)
3-4W523(E.F.)
34-4W705 @ 9" (F.F.)
18-4W506 @ 12"(N.F.)
18-4W508 @ 12"(F.F.)
7-4W515 @ 18"(E.F.)
33-4W905 @ 9"(F.F.)
4W513(F.F.)
EL. 1010.00
3"CLEAR(TYP.)
13-4WG12 @ 12"
7-4W516
11-4W518 @ 12" (SPA. BETWEEN PILES)
13-4WG14
15-4W518 @ 12"
13-4WG13 @ 12"
14-4W528@12"
EL. 1004.00
17-4WG09@12"
13-4WG09@12" (SPA. BETWEEN PILES)
15-4W809@12"
15-4W808 @12"
17-4W704 @12"(TOP)
17-4W811(SPA. BETWEEN PILES)(BOTT.)
26-4W1001 @ 10"(+)(TOP)
26-4WG10(SPA. BETWEEN PILES)(BOTT.)
4W505 (N.F.)
7-4W806@18"(N.F.)
7-4W807@18"(F.F.)
11-4WG02@12"(N.F.)
9-4WG03@12"(F.F.)
11-4W502@12"(N.F.)
9-4WG04@12"(F.F.)
8-4W503@18"(N.F.)
8-4W504@18"(F.F.)
11-4WG02@12"(N.F.)
9-4WG03@12"(F.F.)
7-4W806@18"(N.F.)
7-4W807@18"(F.F.)
10-4WG06@12"(N.F.)
8-4WG07@12"(F.F.)
11-4W504@18"(N.F.)
11-4W511@18"(F.F.)
10-4WG05@12"(F.F.)
11-4W511@18"(N.F.)
11-4W512@18"(F.F.)
10-4WG06@12"(N.F.)
8-4WG07@12"(F.F.)
22-4W505@12"(N.F.)
22-4W506@12"(F.F.)
31-4W506 @ 12"(N.F.)
31-4W508 @ 12"(F.F.)
2-4W507(F.F.)
1-4W507(F.F.)
7-4W806@18"(E.F.)
10-4W803@12"(N.F.)
10-4W804@12"(F.F.)
8-4W503@18"(E.F.)
10-4W803@12"(N.F.)
10-4W804@12"(F.F.)
7-4W806@18"(E.F.)
30-4W505@12"(N.F.)
30-4W506@12"(F.F.)
10-4W803@12"(N.F.)
10-4W804@12"(F.F.)
10-4W805@12"(F.F.)
8-4W503@18"(E.F.)
10-4W502@12"(N.F.)
10-4W805@12"(F.F.)
15-4W902@9"(N.F.)
15-4W903@9"(F.F.)
15-4W904
15-4W902@9"(N.F.)
15-4W903@9"(F.F.)
15-4W904
4W534
2-4W534
4W534
2-4W534
4W534
2-4W534
4W534
4W534

FHWA REGION	STATE	PROJECT	
5	OHIO		

993
1214

SUMMIT COUNTY
SUM 76-11.57

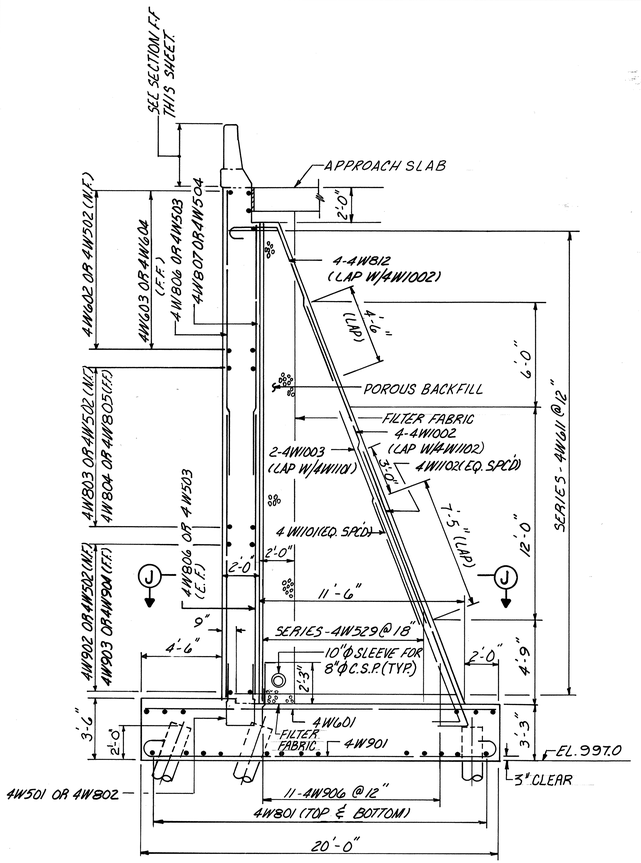

SECTION A-A

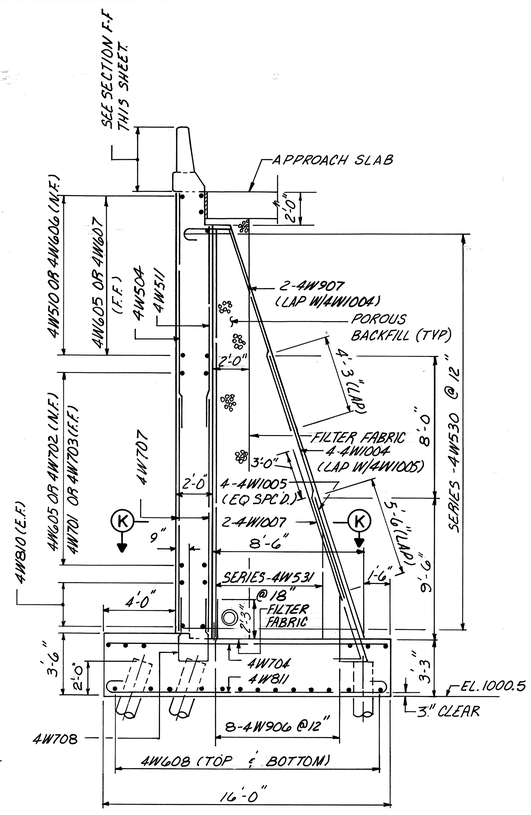

SECTION B-B

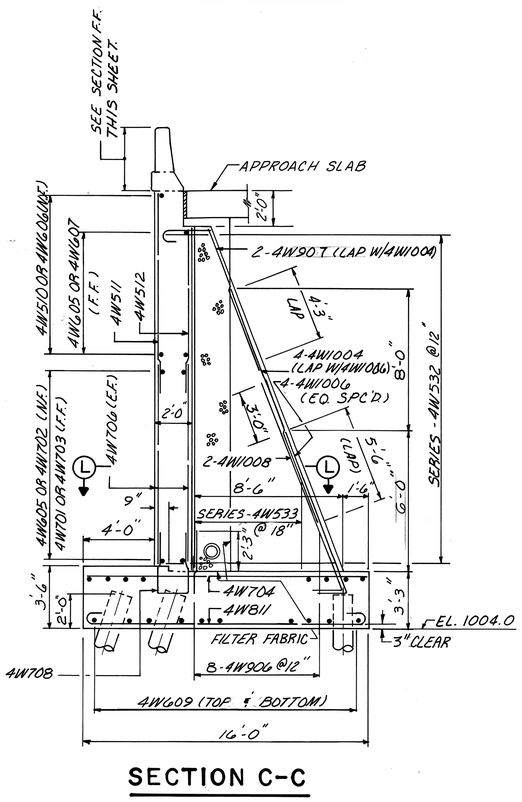

SECTION C-C

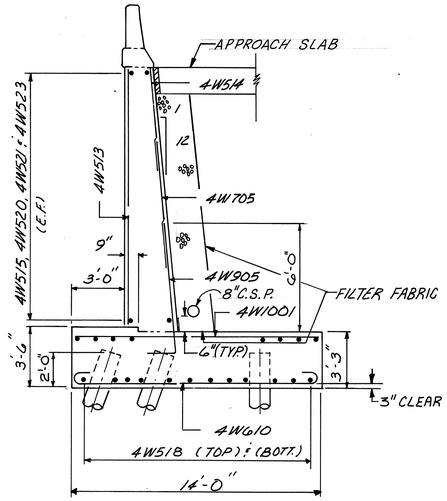

SECTION D-D

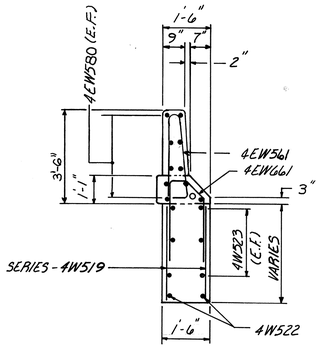

SECTION E-E

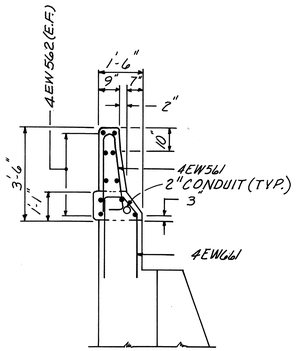

SECTION F-F

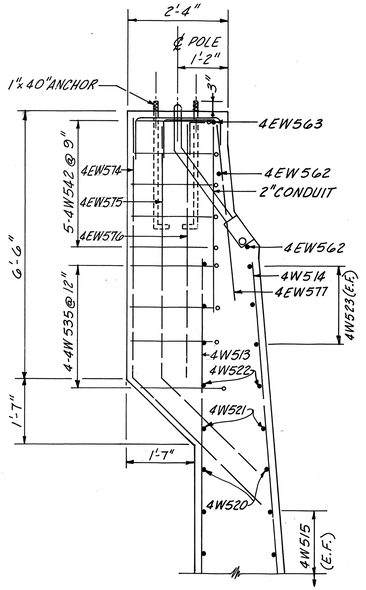

SECTION G-G

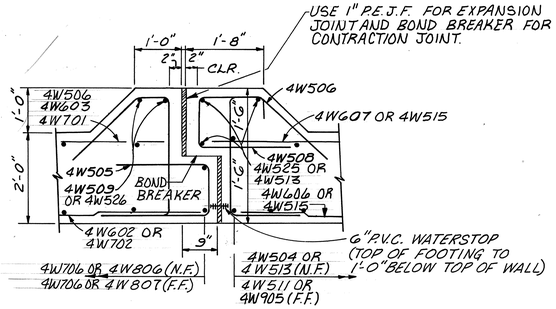

SECTION H-H

NOTES

(1.) SEE NOTES 1 & 2, SHEET 25/120 FOR ADDITIONAL NOTES

McCOY ASSOCIATES INC. 51/120
CONSULTING ENGINEERS
AKRON, OHIO

SOUTHEAST WINGWALL DETAILS

BRIDGE NO. SUM. 76-1277
AKRON EAST EXPRESSWAY
WEST VIADUCT

DESIGNED	DRAWN	TRACED	CHECKED	REVIEWED	DATE	REVISED
T.E.N.	J.D.P.		J.M.H.	JBH	3-31-89	

FHWA REGION	STATE	PROJECT	
5	OHIO		

994
12.14

SUMMIT COUNTY
SUM 76-11.57

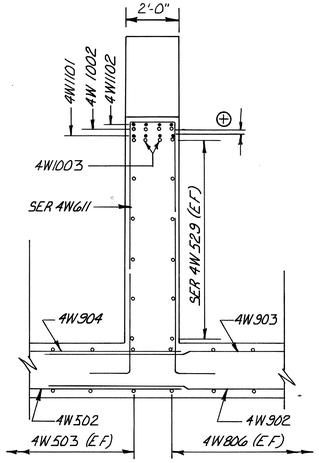

SECTION J-J

⊕ - INDICATES 2 1/2" (MIN.) CLEAR BETWEEN ROWS OF BARS.

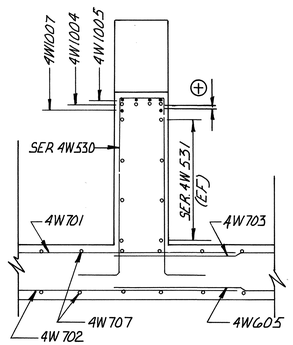

SECTION K-K

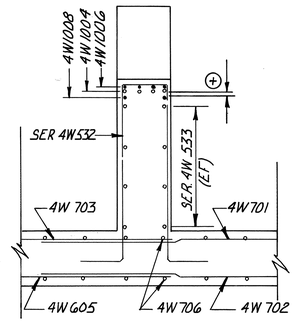

SECTION L-L

McCOY ASSOCIATES, INC.
CONSULTING ENGINEERS
AKRON, OHIO

51A/120

SOUTHEAST WINGWALL DETAILS

BRIDGE NO. SUM. 76-1277
AKRON EAST EXPRESSWAY
WEST VIADUCT

DESIGNED	DRAWN	TRACED	CHECKED	REVIEWED	DATE	REVISED
JMH	J.W.D.		JBH	JBH	11-01-93	

320591

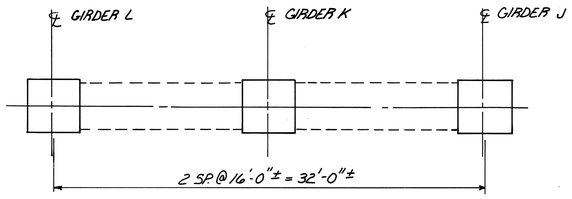

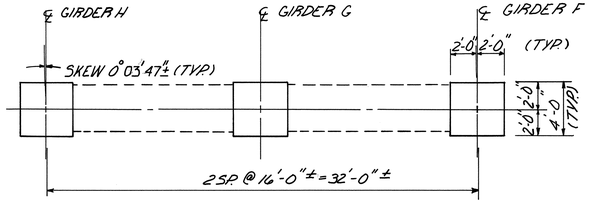

PLAN

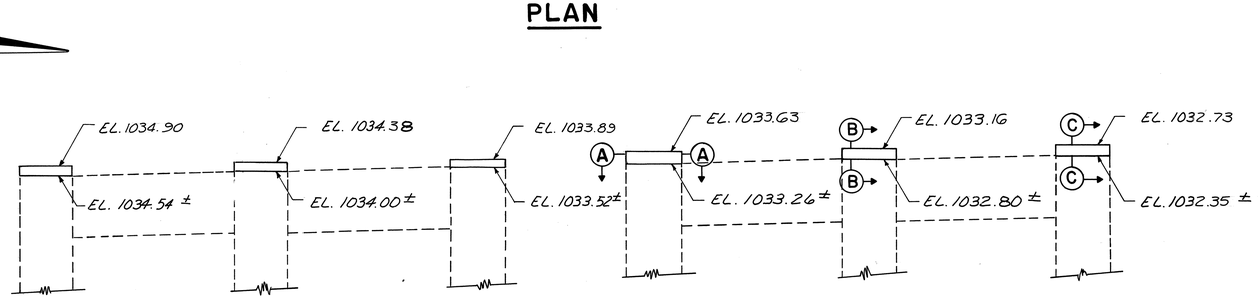

ELEVATION

PIER Nº 1

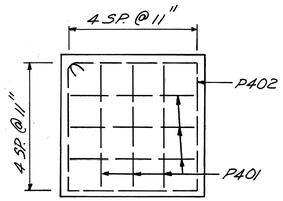

SECTION A-A

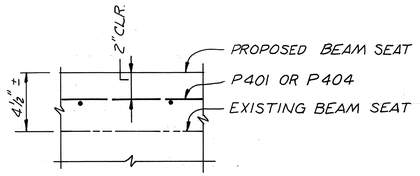

SECTION B-B

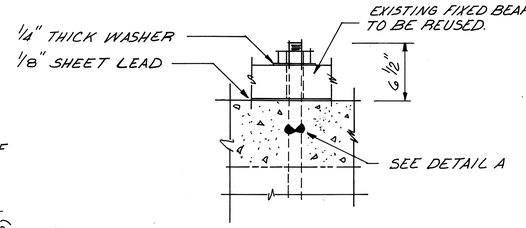

SECTION C-C

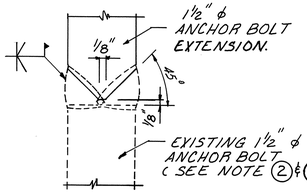

DETAIL A

NOTES:

① EXISTING CAP ELEVATIONS SHALL BE VARIFIED IN THE FIELD

② CUT EXISTING ANCHOR BOLTS TO BE EXTENDED AT 2 INCHES ABOVE EXISTING TOP OF CAP.

③ IF THE EXISTING ANCHOR BOLT DOES NOT HAVE SUFFICIENT CROSS-SECTIONAL AREA TO WELD PROPERLY, REMOVE CONCRETE TO A DEPTH TO OBTAIN SUITABLE MATERIAL WITH SUFFICIENT CROSS-SECTIONAL AREA TO WELD PROPERLY. THE COST OF REMOVING AND REPLACING THE CONCRETE SHALL BE INCLUDED IN THE UNIT PRICE BID FOR ITEM 516, REFURBISH BEARING DEVICES, AS PER PLAN.

④ PIER CAPS ARE TO BE SOUNDED AND DETERIORATED CONCRETE REMOVED FROM THE PIER CAP BEFORE COMPLETING THE REPAIR SHOWN IN SECTION C-C.

⑤ ALL WORK SHOWN SHALL BE COORDINATED WITH RAISING EXISTING STRUCTURAL STEEL.

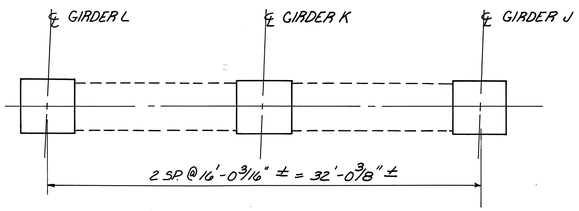

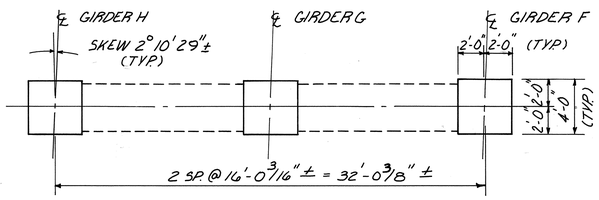

PLAN

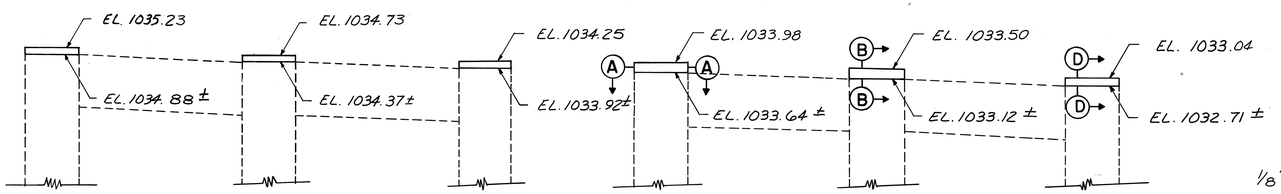

ELEVATION

NOTE: FOR LOCATION AND QUANTITY FOR PATCHING PIER NO. 2 SEE SHEET 19/120

PIER Nº 2

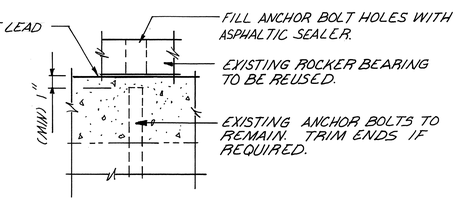

SECTION D-D

FHWA REGION	STATE	PROJECT	
5	OHIO		

995
12.14

SUMMIT COUNTY
SUM 76-11.57

McCOY ASSOCIATES INC. 52/120
CONSULTING ENGINEERS
AKRON, OHIO

PIERS Nº 1&2 MODIFICATIONS

BRIDGE NO. SUM. 76-1277
AKRON EAST EXPRESSWAY
WEST VIADUCT

DESIGNED	DRAWN	TRACED	CHECKED	REVIEWED	DATE	REVISED
T.E.N.	T.E.N.	A.M.	JBH	JBH	3-30-89	

FHWA REGION	STATE	PROJECT	
5	OHIO		

996
12.14

SUMMIT COUNTY
SUM 76-11.57

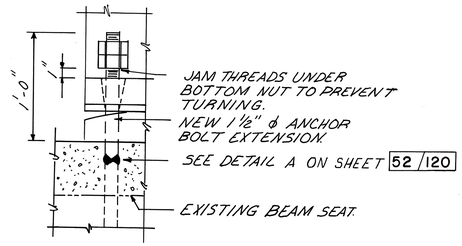

SECTION E-E

NOTES:

1. ABBREVIATIONS
   U.N.O. = UNLESS NOTED OTHERWISE
2. FOR SECTIONS A-A, B-B, C-C, NOTES & DETAIL A SEE SHEET 52/120
3. EXISTING CAP ELEVATIONS SHALL BE VERIFIED IN THE FIELD.

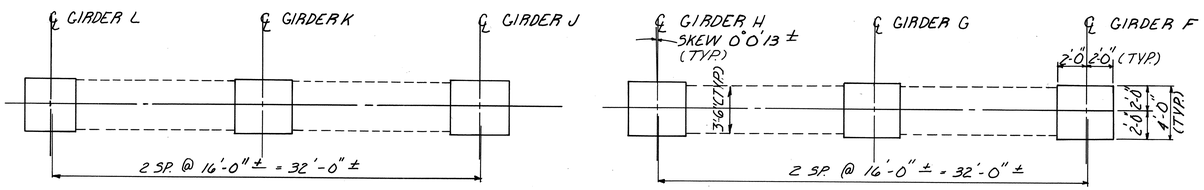

PLAN

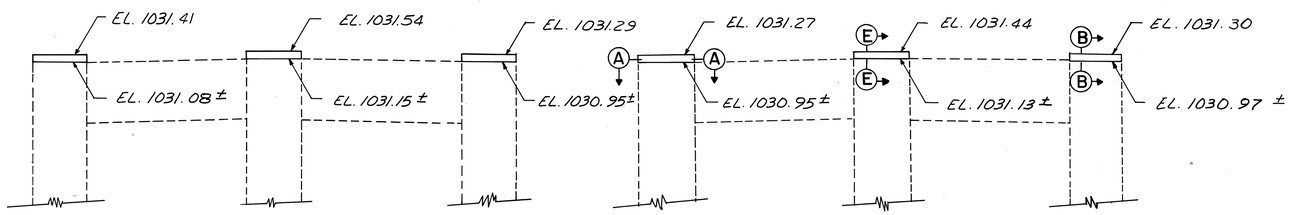

ELEVATION
PIER Nº 4

NOTE: FOR LOCATION AND QUANTITY OF PATCHING SEE SHEET 21/120.

McCOY ASSOCIATES INC. 53/120
CONSULTING ENGINEERS
AKRON, OHIO

PIER Nº 4 MODIFICATIONS

BRIDGE NO. SUM. 76-1277
AKRON EAST EXPRESSWAY
WEST VIADUCT

DESIGNED	DRAWN	TRACED	CHECKED	REVIEWED	DATE	REVISED
T.E.N.	T.E.N.	A.M.	JBH	JBH	3-30-69	

FHWA REGION	STATE	PROJECT	
5	OHIO		

997
1214

SUMMIT COUNTY
SUM 76-11.57

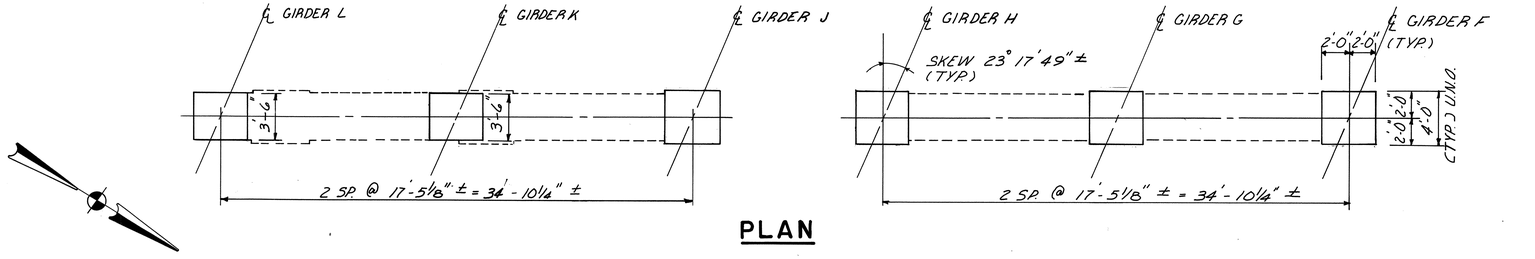

PLAN

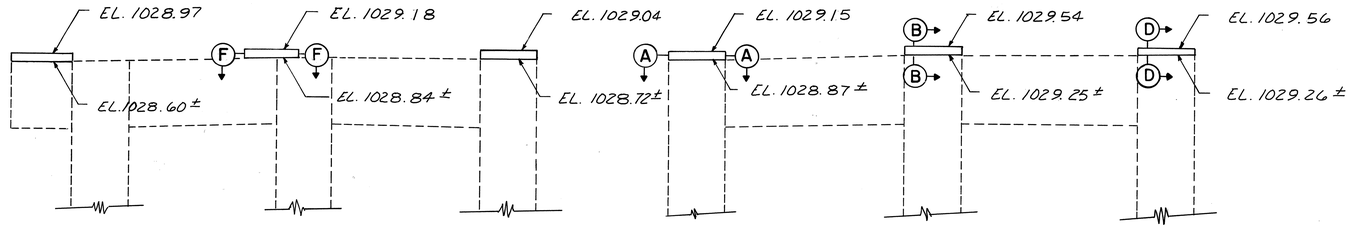

ELEVATION

NOTE: FOR LOCATION AND QUANTITIES FOR PIER NO. 5 PATCHING SEE SHEET 22/120

PIER Nº 5

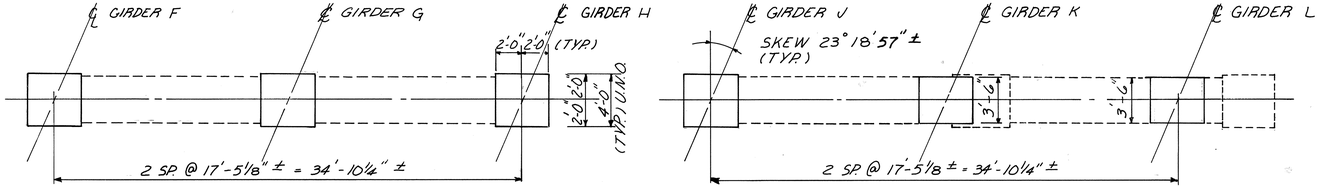

PLAN

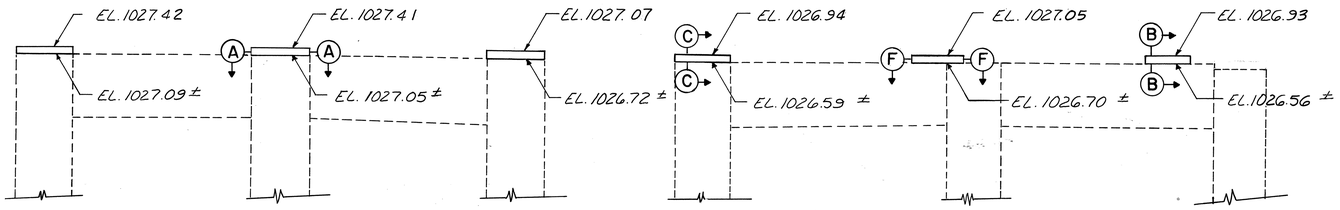

ELEVATION

NOTE: FOR LOCATIONS AND QUANTITIES FOR PIER NO. 6 PATCHING SEE SHEET 23/120

PIER Nº 6

NOTES:

1. ABBREVIATIONS
   U.N.O. = UNLESS NOTED OTHERWISE
2. FOR SECTIONS A-A, B-B, C-C & D-D, SEE SHEET 52/120
   FOR SECTION E-E & F-F, SEE SHEET 53/120
3. EXISTING CAP ELEVATIONS SHALL BE VERIFIED IN THE FIELD.

McCOY ASSOCIATES INC. 54/120
CONSULTING ENGINEERS
AKRON, OHIO

PIERS Nº 5&6 MODIFICATIONS

BRIDGE NO. SUM. 76-1277
AKRON EAST EXPRESSWAY
WEST VIADUCT

DESIGNED	DRAWN	TRACED	CHECKED	REVIEWED	DATE	REVISED
T.E.N.	T.E.N.	A.M.	JBH	JBH	3-30-89	

FHWA REGION	STATE	PROJECT	
5	OHIO		

998
1214

SUMMIT COUNTY
SUM 76-11.57

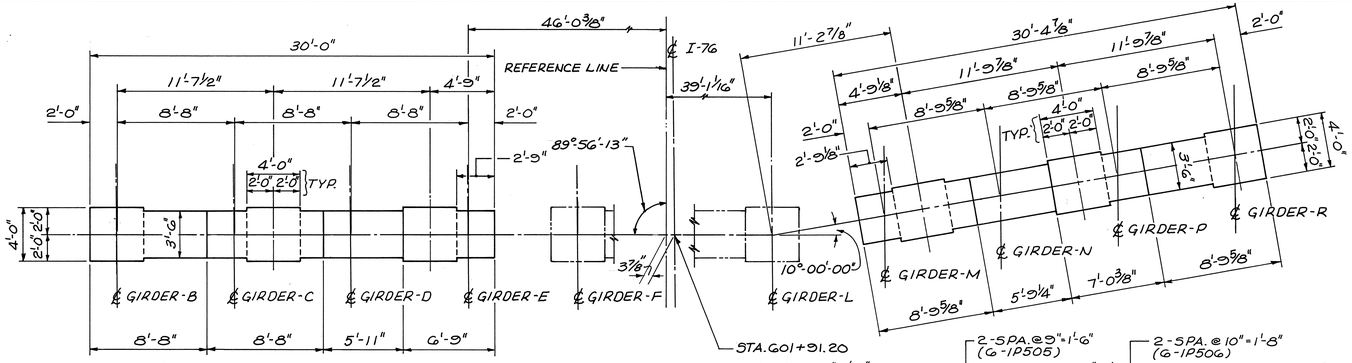

PLAN

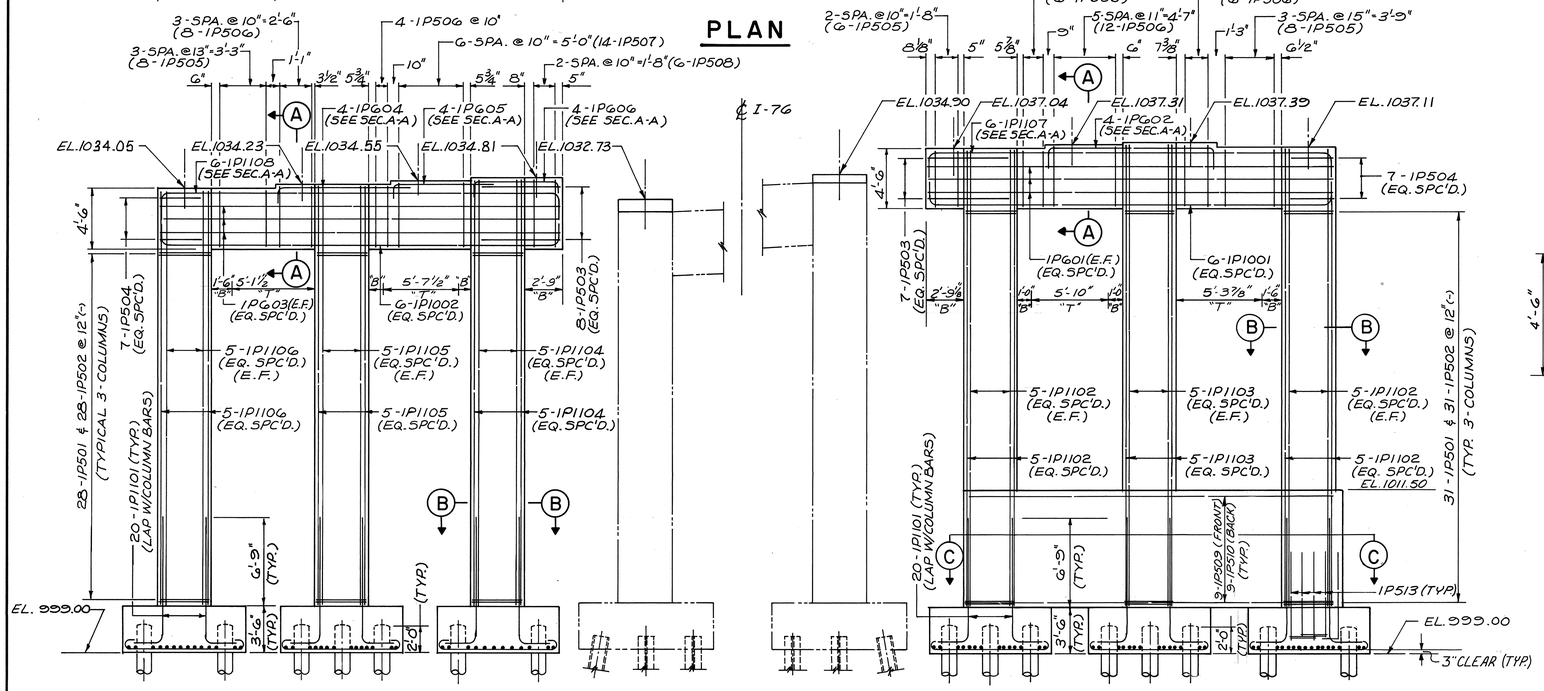

ELEVATION

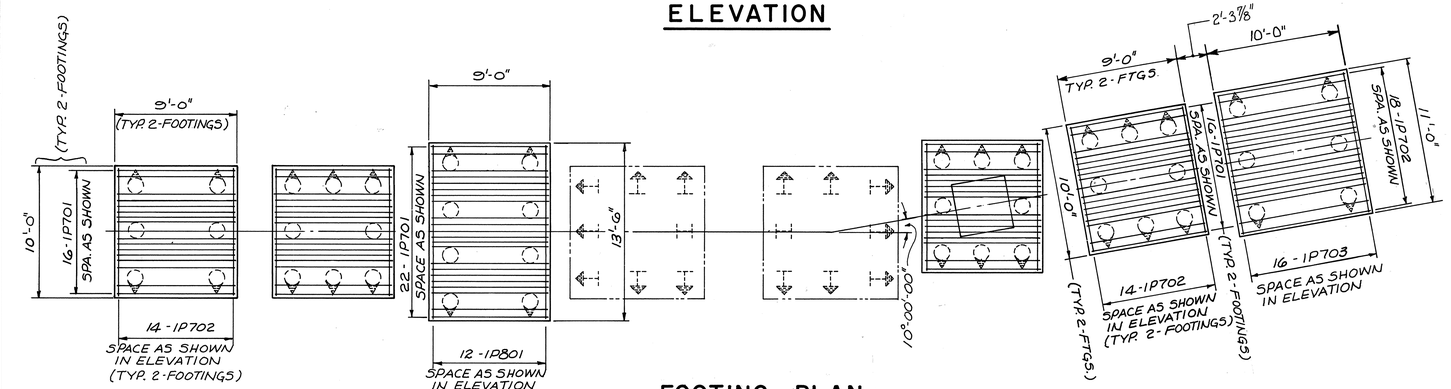

FOOTING PLAN

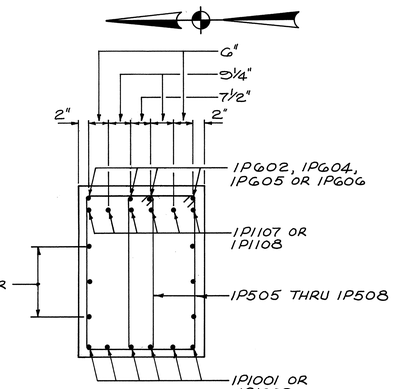

SECTION A-A

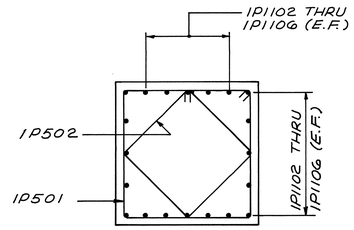

SECTION B-B

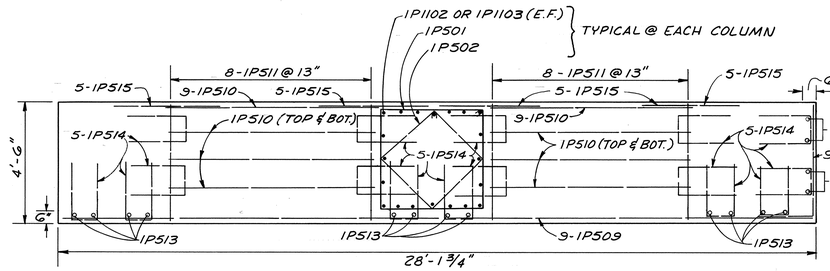

SECTION C-C (CRASH WALL DETAIL)

NOTES

1. ABBREVIATIONS:
   E.F. = EACH FACE
2. IN PIER CAPS, HOOKS SHALL BE PLACED AT TOP WHERE NOTED "T" AND AT BOTTOM WHERE NOTED "B".
3. BEARING SEAT REINFORCING: REINFORCING STEEL IN THE VICINITY OF THE BRIDGE SEAT SHALL BE ACCURATELY PLACED TO AVOID INTERFERENCE WITH THE DRILLING OF BEARING ANCHOR HOLES OR THE PRESETTING OF BEARING ANCHORS.
4. BEARING ANCHORS: AT THE OPTION OF THE CONTRACTOR, BEARING ANCHORS (OR FORMED HOLES) LOCATED AND SUPPORTED BY TEMPLATES, MAY BE CAST IN PLACE.

McCOY ASSOCIATES INC. 55/120
CONSULTING ENGINEERS
AKRON, OHIO

PIER Nº 1 DETAILS

BRIDGE NO. SUM. 76-1277
AKRON EAST EXPRESSWAY
WEST VIADUCT

DESIGNED	DRAWN	TRACED	CHECKED	REVIEWED	DATE	REVISED
H.G.S. T.E.N.	J.D.P.		JBH	JBH	9-30-80	

FHWA REGION	STATE	PROJECT	
5	OHIO		

999
12.14

SUMMIT COUNTY
SUM 76-11.57

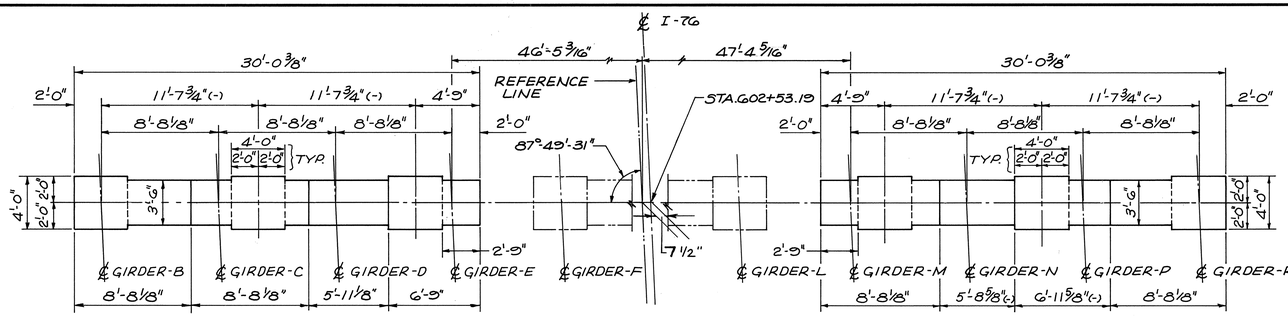

PLAN

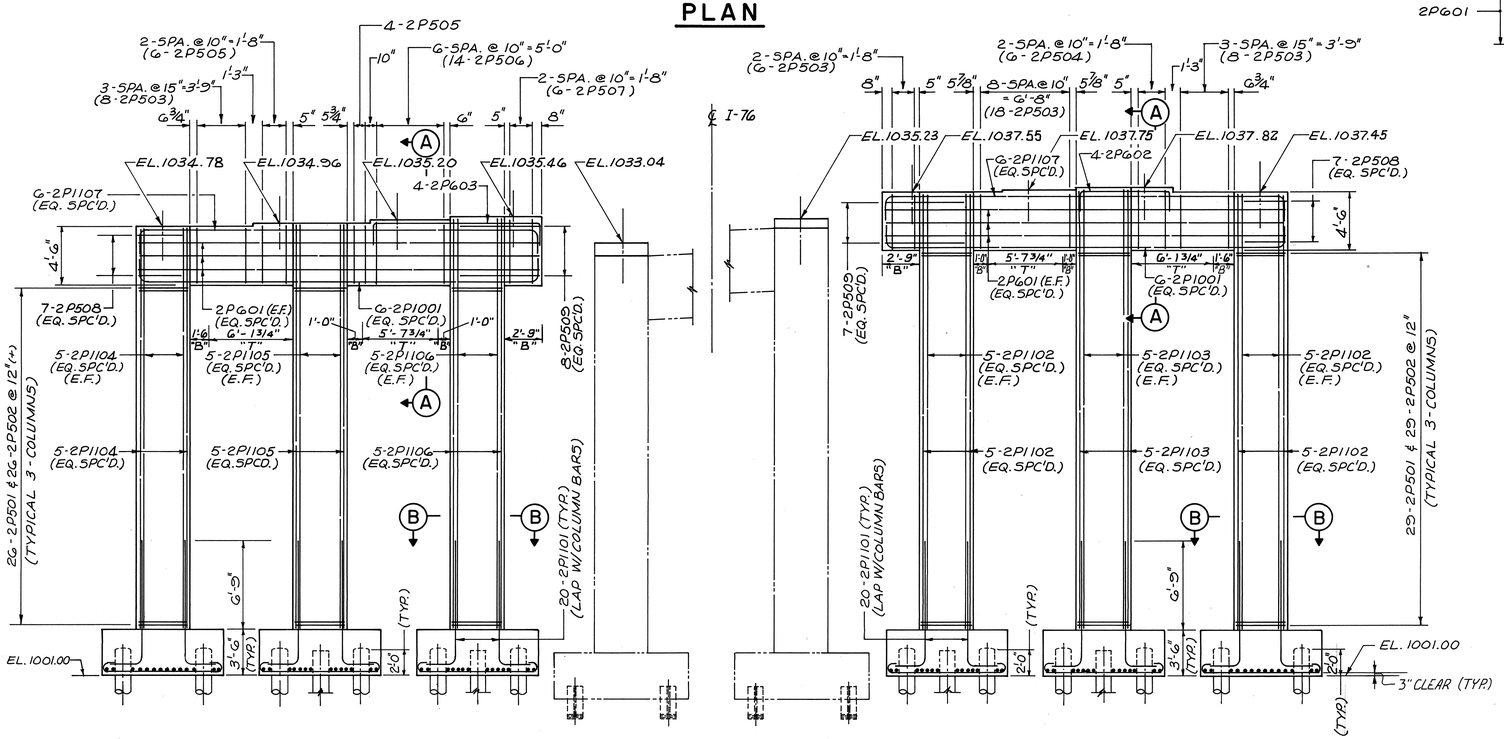

ELEVATION

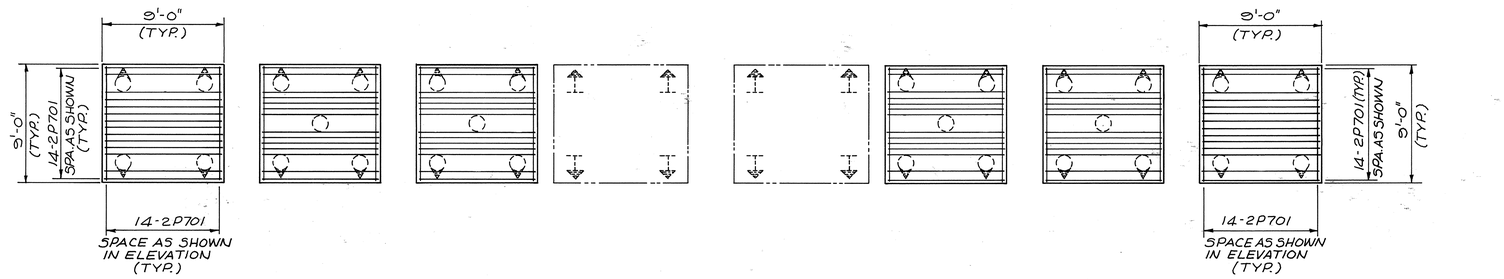

FOOTING PLAN

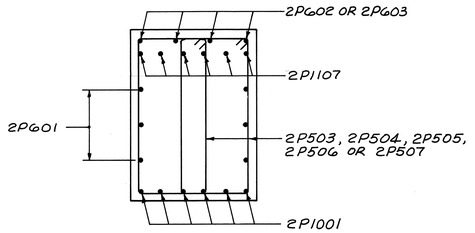

SECTION A-A

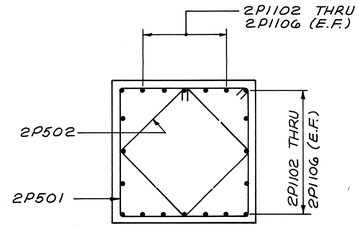

SECTION B-B

NOTES:

1. ABBREVIATIONS
   E.F. = EACH FACE
2. IN PIER CAPS, HOOKS SHALL BE PLACED AT TOP WHERE NOTED "T" AND AT BOTTOM WHERE NOTED "B"

McCOY ASSOCIATES INC. 56/120
CONSULTING ENGINEERS
AKRON, OHIO

PIER Nº 2 DETAILS

BRIDGE NO. SUM. 76-1277
AKRON EAST EXPRESSWAY
WEST VIADUCT

DESIGNED	DRAWN	TRACED	CHECKED	REVIEWED	DATE	REVISED
H.G.S. T.E.N.	J.D.P.		JBH	JBH	3-30-89	

FHWA REGION	STATE	PROJECT	
5	OHIO		

1002
1214

SUMMIT COUNTY
SUM 76-11.57

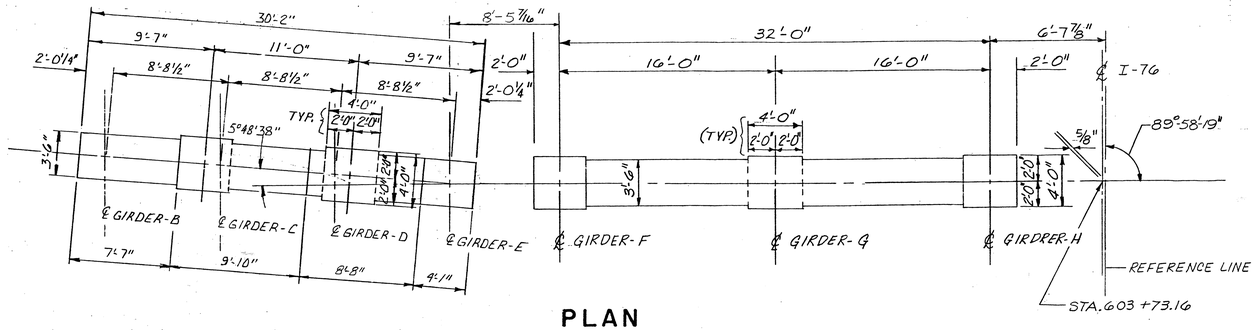

PLAN

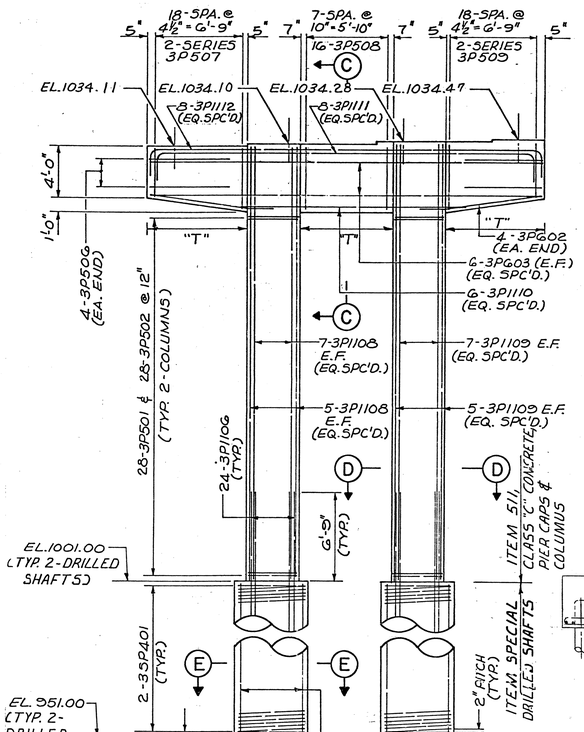

ELEVATION

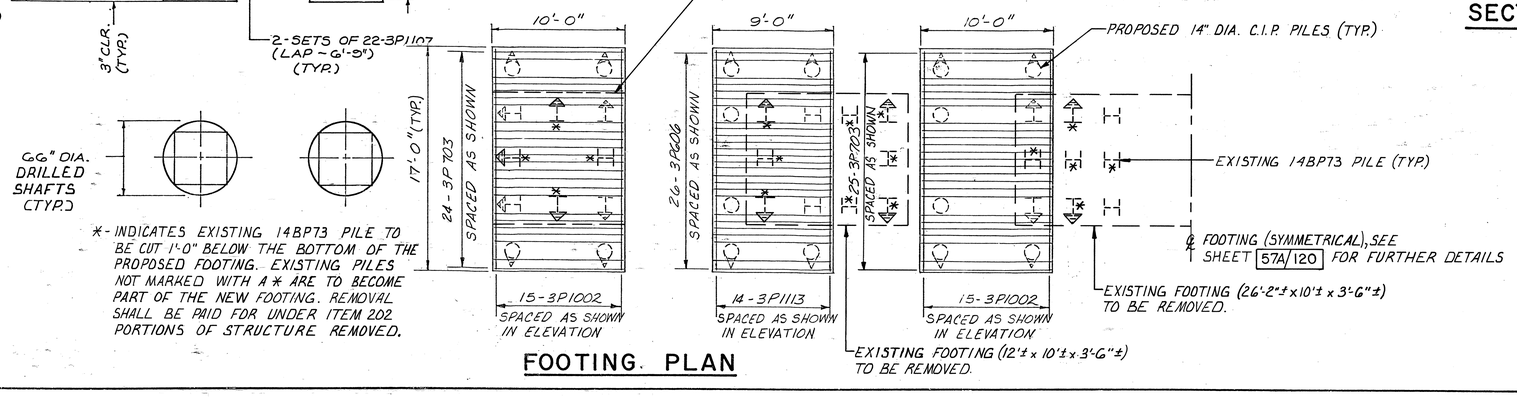

*- INDICATES EXISTING 14BP73 PILE TO BE CUT 1'-0" BELOW THE BOTTOM OF THE PROPOSED FOOTING. EXISTING PILES NOT MARKED WITH A * ARE TO BECOME PART OF THE NEW FOOTING. REMOVAL SHALL BE PAID FOR UNDER ITEM 202 PORTIONS OF STRUCTURE REMOVED.

FOOTING PLAN

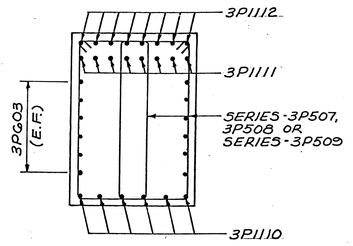

SECTION C-C

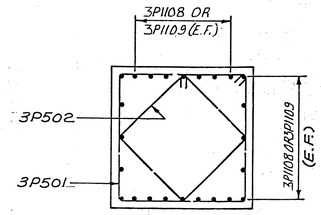

SECTION D-D

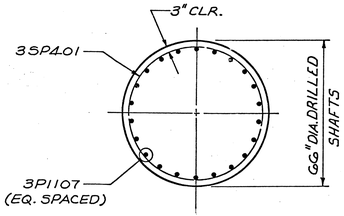

SECTION E-E

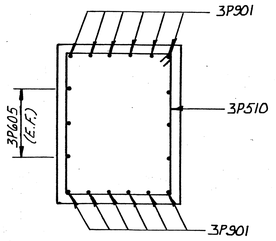

SECTION A-A

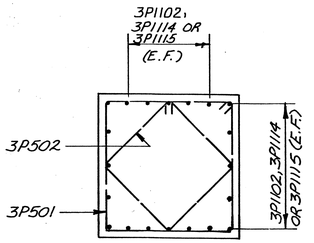

SECTION B-B

NOTES

1. FOR DRILLED SHAFT SPECIFICATIONS, SEE SHEET Nº 12A/120. FOR DRILLED SHAFT CHART, SEE SHEET Nº 12B/120
2. FOR ADDITIONAL NOTES, SEE SHEET 55/120

McCOY ASSOCIATES, INC. 57/120
CONSULTING ENGINEERS
AKRON, OHIO

PIER Nº3 NORTH DETAIL

BRIDGE NO. SUM. 76-1277
AKRON EAST EXPRESSWAY
WEST VIADUCT

DESIGNED	DRAWN	TRACED	CHECKED	REVIEWED	DATE	REVISED
H.G.S. T.E.N.	J.D.P. D.A.K.		JBH	JBH	3-30-89	JGG

220891

FHWA REGION	STATE	PROJECT	
5	OHIO		

1001 12.14

SUMMIT COUNTY
SUM 76-11.57

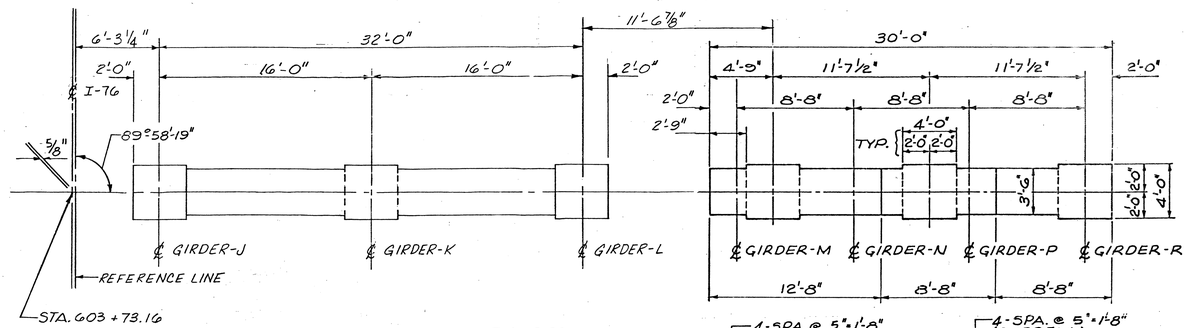

PLAN

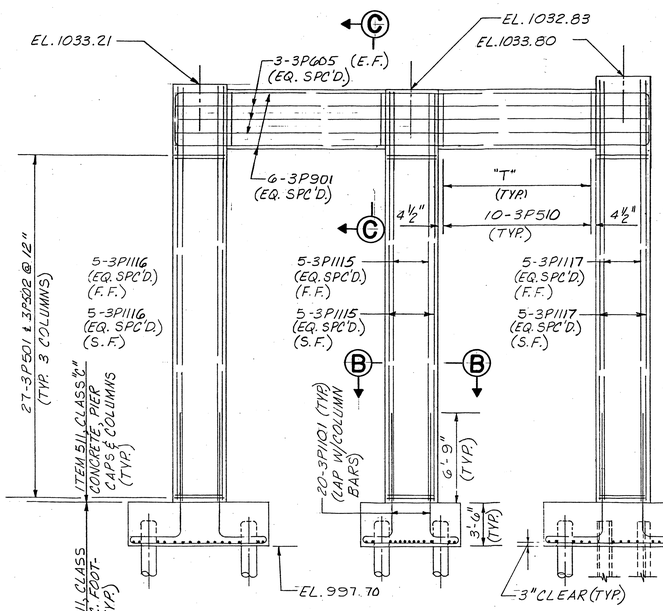

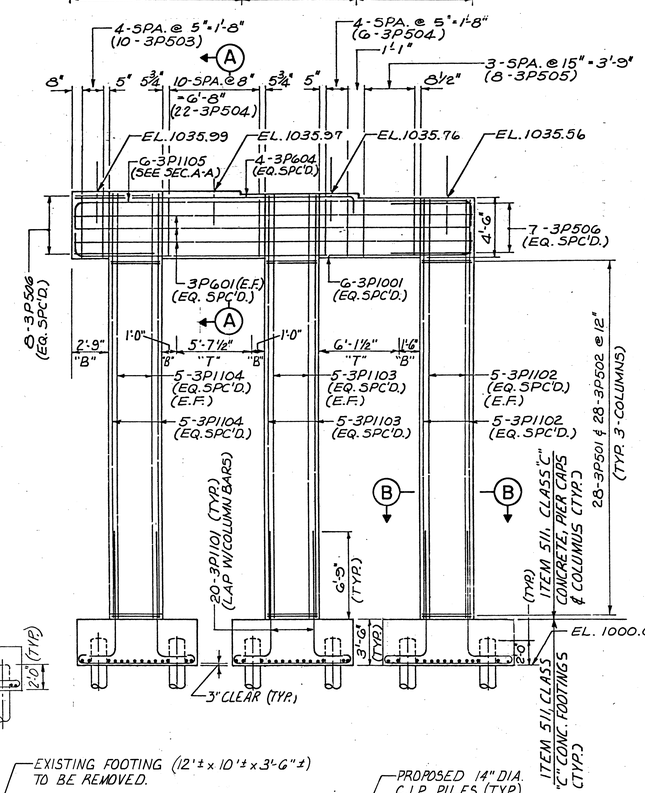

ELEVATION

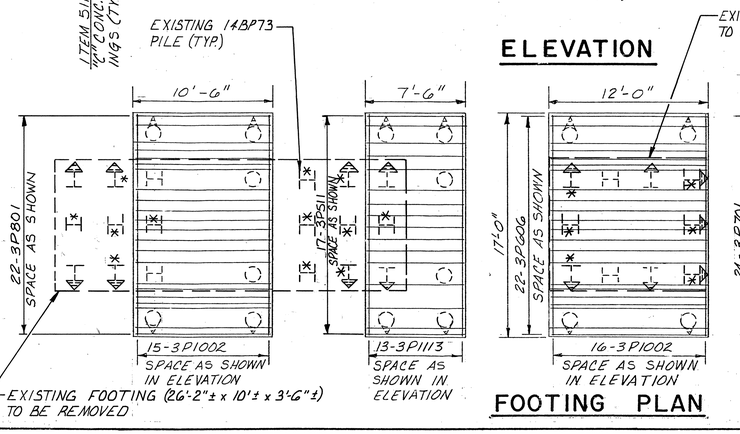

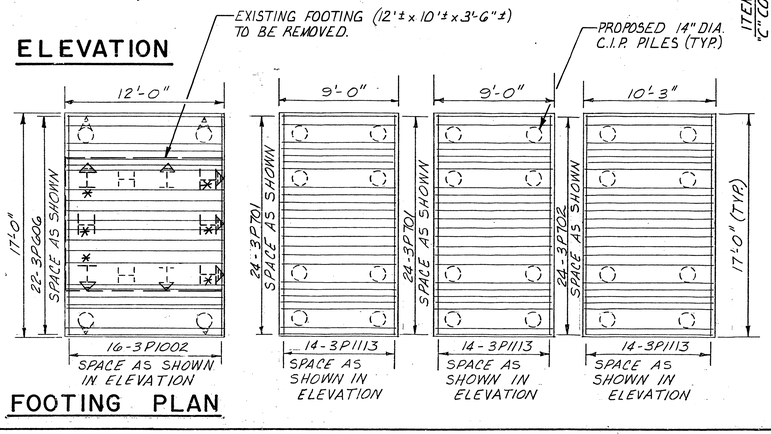

FOOTING PLAN

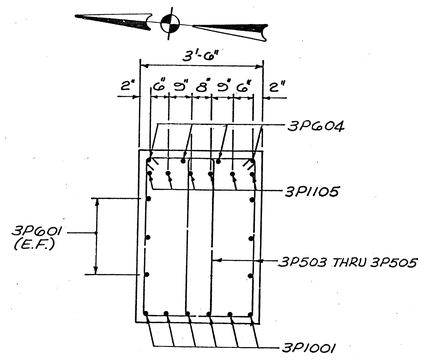

SECTION A-A

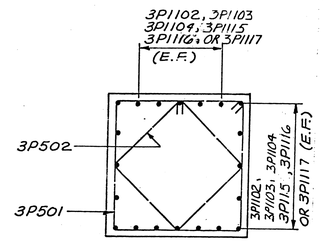

SECTION B-B

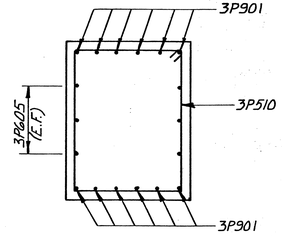

SECTION C-C

NOTES

① FOR ADDITIONAL NOTES, SEE SHEET 55/120

* - INDICATES EXISTING 14BP73 PILE TO BE CUT 1'-0" BELOW THE BOTTOM OF THE PROPOSED FOOTING. EXISTING PILES NOT MARKED WITH A * ARE TO BECOME PART OF THE NEW FOOTING. REMOVAL SHALL BE PAID FOR UNDER ITEM 202 PORTIONS OF STRUCTURE REMOVED.

McCOY ASSOCIATES, INC. 57A/120
CONSULTING ENGINEERS
AKRON, OHIO

PIER Nº3 SOUTH DETAIL

BRIDGE NO. SUM. 76-1277
AKRON EAST EXPRESSWAY
WEST VIADUCT

DESIGNED	DRAWN	TRACED	CHECKED	REVIEWED	DATE	REVISED
H.G.S. T.E.N.	J.D.P. D.A.K.		JBH	JBH	3-30-79	JGC

528881

FHWA REGION	STATE	PROJECT	
5	OHIO		

1002
12/14

SUMMIT COUNTY
SUM 76-11.57

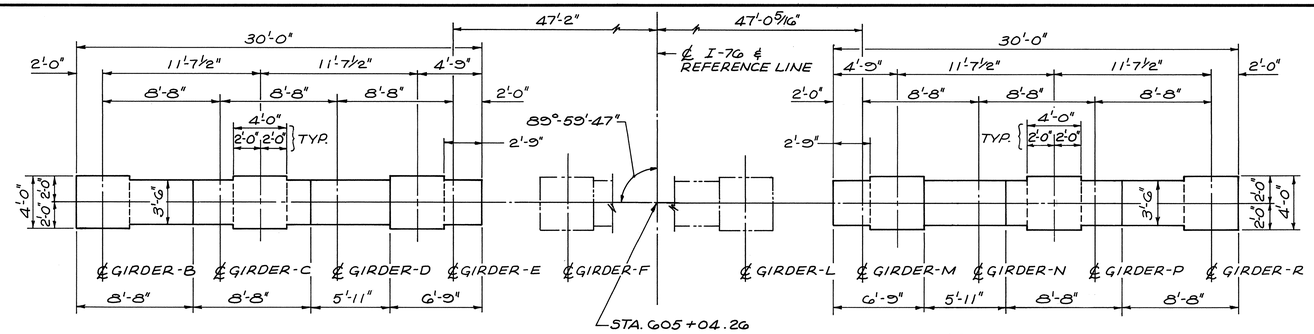

PLAN

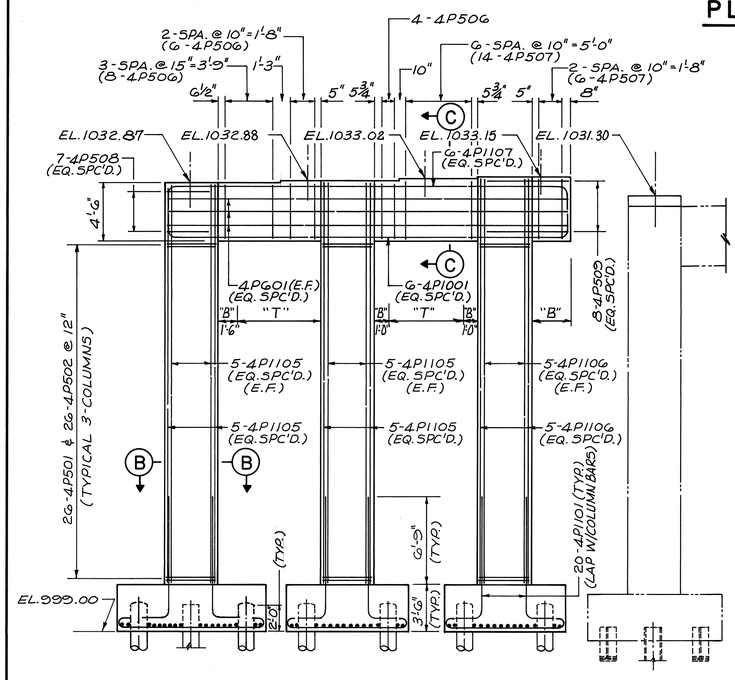

ELEVATION

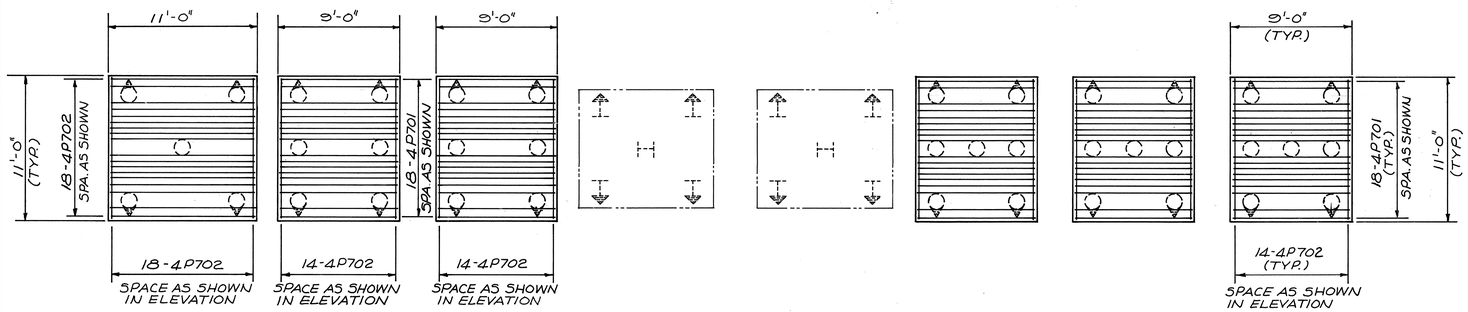

FOOTING PLAN

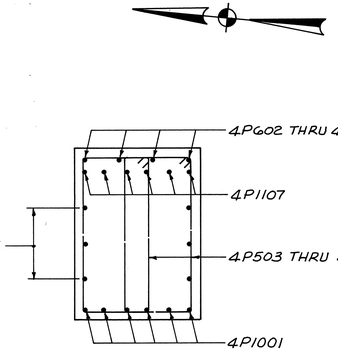

SECTION A-A

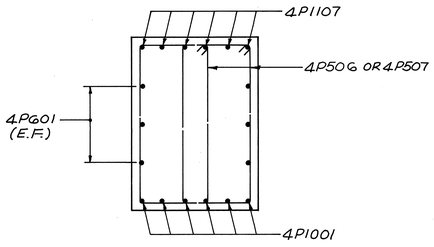

SECTION C-C

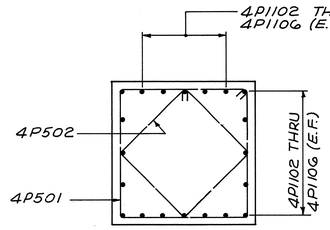

SECTION B-B

NOTES:

1. ABBREVIATIONS
   E.F. = EACH FACE
2. IN PIER CAPS, HOOKS SHALL BE PLACED AT TOP WHERE NOTED "T" AND AT BOTTOM WHERE NOTED "B"
3. BEARING SEAT REINFORCING STEEL IN THE VICINITY OF THE BRIDGE SEAT SHALL BE ACCURATELY PLACED TO AVOID INTERFERENCE WITH THE DRILLING OF BEARING ANCHOR HOLES OR THE PRE SETTING OF BEARING ANCHORS
4. BEARING ANCHORS: AT THE OPTION OF THE CONTRACTOR, BEARING ANCHORS (OR FORMED HOLES) LOCATED AND SUPPORTED BY TEMPLATES MAY BE CAST IN PLACE.

McCOY ASSOCIATES INC. 58/120
CONSULTING ENGINEERS
AKRON, OHIO

PIER Nº 4 DETAILS

BRIDGE NO. SUM. 76-1277
AKRON EAST EXPRESSWAY
WEST VIADUCT

DESIGNED	DRAWN	TRACED	CHECKED	REVIEWED	DATE	REVISED
H.G.S. T.E.N.	J.D.R.		JBH	JBH	3-30-87	

FHWA REGION	STATE	PROJECT	
5	OHIO		

1003
1214

SUMMIT COUNTY
SUM 76-11.57

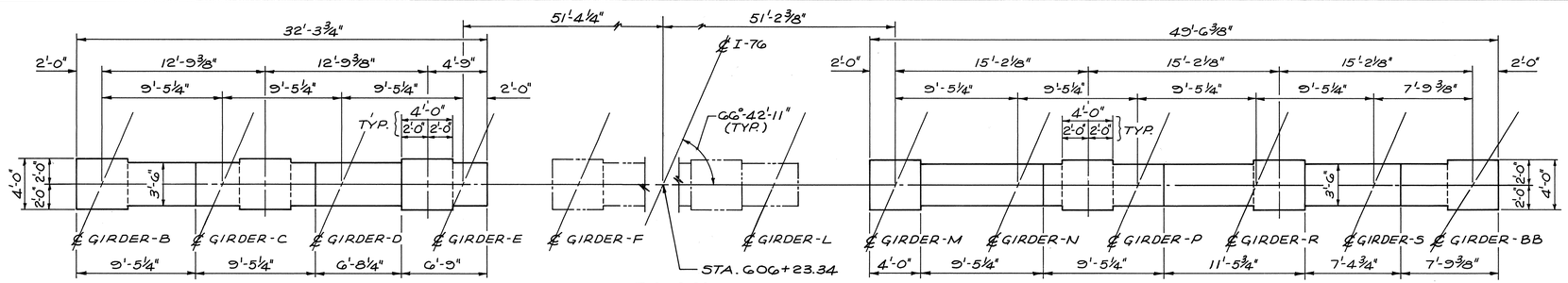

PLAN

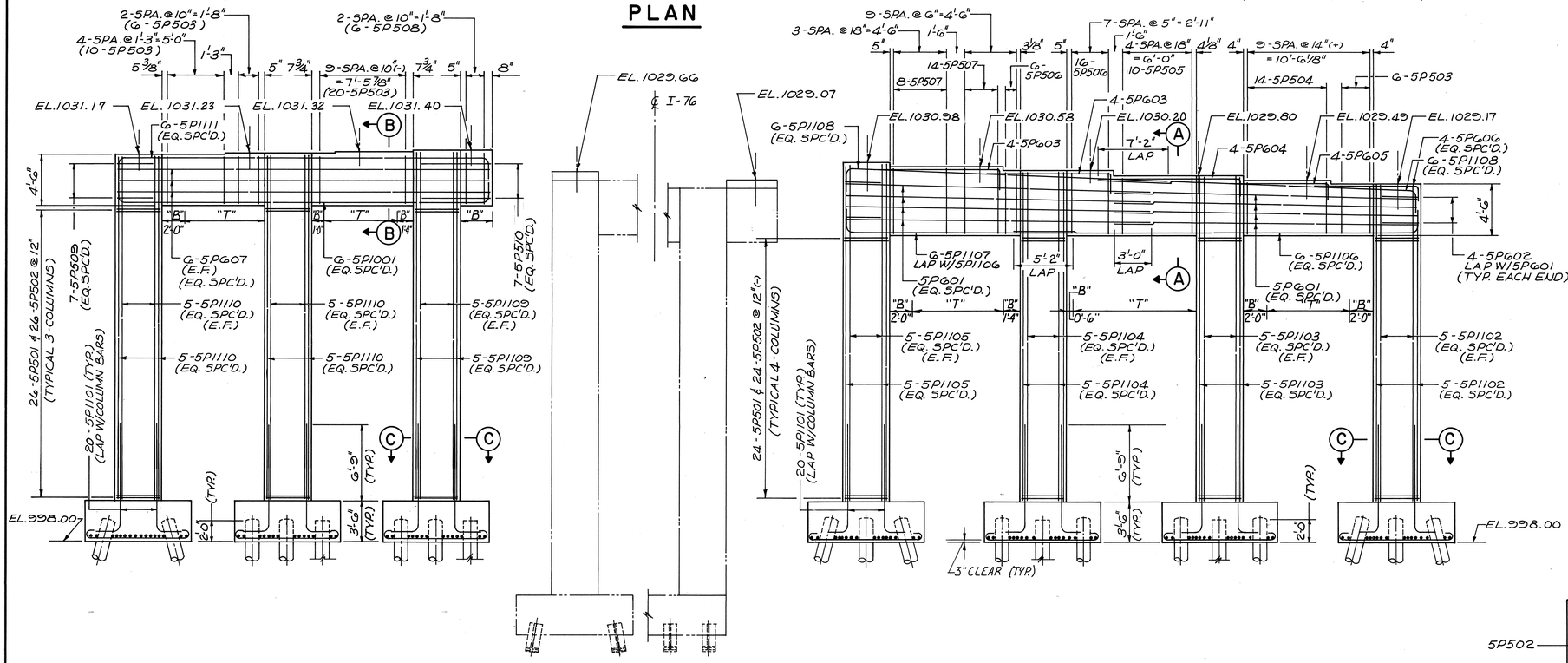

ELEVATION

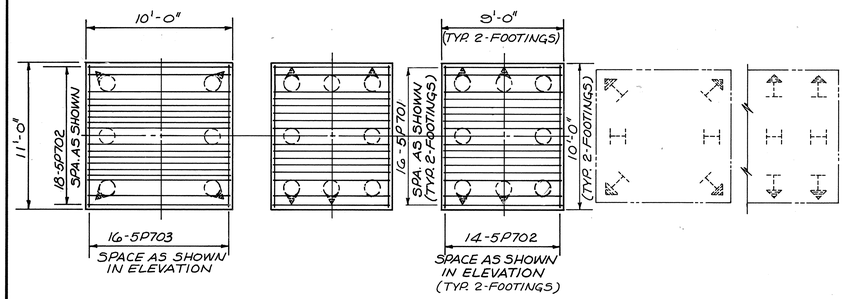

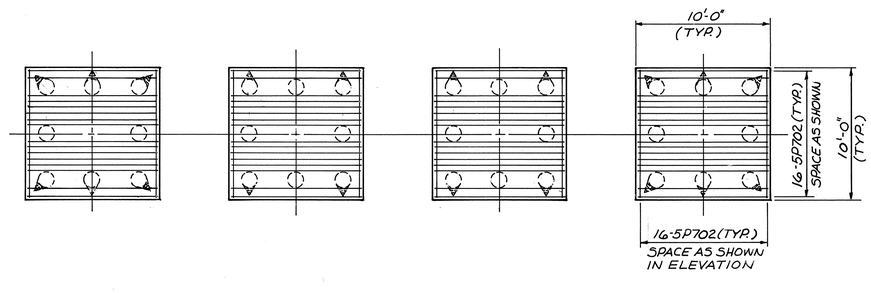

FOOTING PLAN

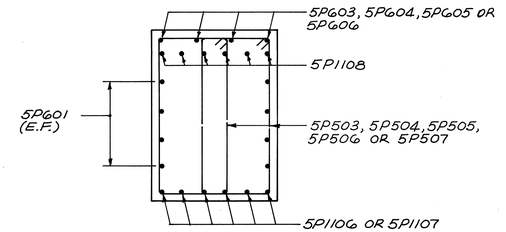

SECTION A-A

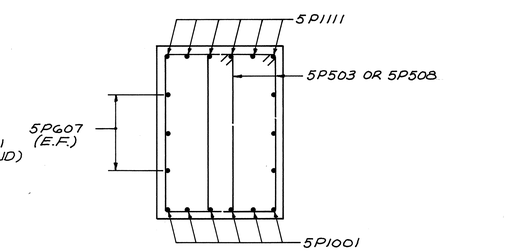

SECTION B-B

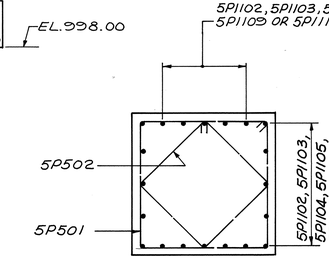

SECTION C-C

NOTES:

1. ABBREVIATIONS
   E.F. = EACH FACE
2. IN PIER CAPS, HOOKS SHALL BE PLACED AT TOP WHERE NOTED "T" AND AT BOTTOM WHERE NOTED "B"
3. BEARING SEAT REINFORCING: STEEL IN THE VICINITY OF THE BRIDGE SEAT SHALL BE ACCURATELY PLACED TO AVOID INTERFERENCE WITH THE DRILLING OF BEARING ANCHOR HOLES OR THE PRE SETTING OF BEARING ANCHORS
4. BEARING ANCHORS: AT THE OPTION OF THE CONTRACTOR, BEARING ANCHORS (OR FORMED HOLES) LOCATED AND SUPPORTED BY TEMPLATES MAY BE CAST IN PLACE.

McCOY ASSOCIATES INC. 59/120
CONSULTING ENGINEERS
AKRON, OHIO

PIER Nº 5 DETAILS

BRIDGE NO. SUM. 76-1277
AKRON EAST EXPRESSWAY
WEST VIADUCT

DESIGNED	DRAWN	TRACED	CHECKED	REVIEWED	DATE	REVISED
H.G.S. T.E.N.	J.D.P.		J.B.H.	J.B.H.	3-30-89	

FHWA REGION	STATE	PROJECT	
5	OHIO		

1004 / 1214

SUMMIT COUNTY
SUM 76-11.57

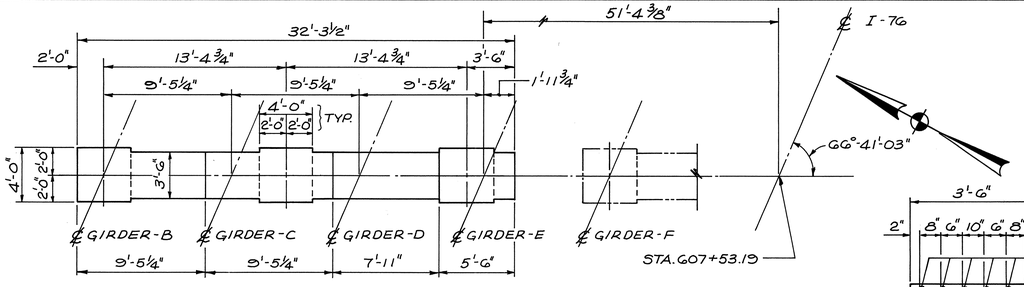

PLAN

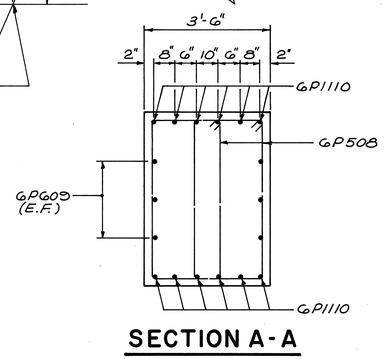

SECTION A-A

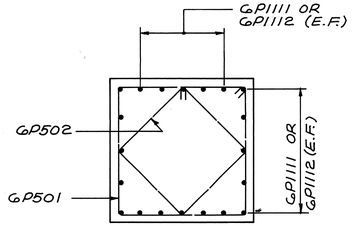

SECTION B-B

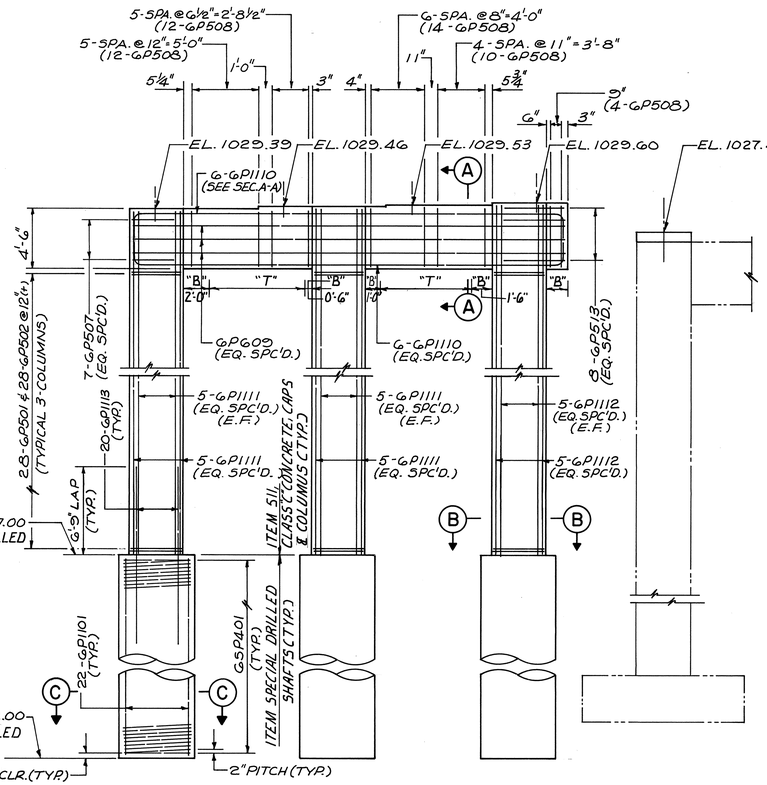

ELEVATION

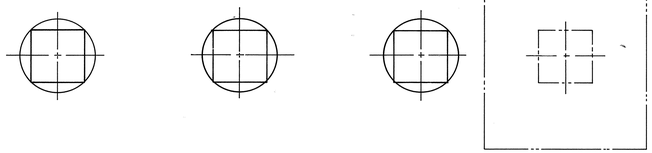

FOOTING PLAN

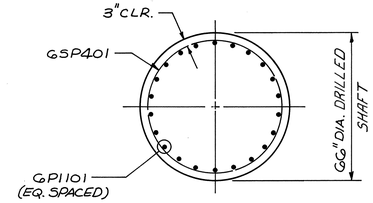

SECTION C-C

NOTES:

① FOR DRILLED SHAFT SPECIFICATIONS, SEE SHEET Nº 12A/120 FOR DRILLED SHAFT CHART, SEE SHEET Nº 12B/120

② FOR ADDITIONAL NOTES, SEE SHEET Nº 55/120

McCOY ASSOCIATES INC. 60/120
CONSULTING ENGINEERS
AKRON, OHIO

PIER Nº 6 DETAILS (NORTH)

BRIDGE NO. SUM. 76-1277
AKRON EAST EXPRESSWAY
WEST VIADUCT

DESIGNED	DRAWN	TRACED	CHECKED	REVIEWED	DATE	REVISED
H.G.S. T.E.N.	J.D.P.		J.B.H.	J.B.H.	3-30-89	

FHWA REGION	STATE	PROJECT	
5	OHIO		

1005 / 1214

SUMMIT COUNTY
SUM 76-11.57

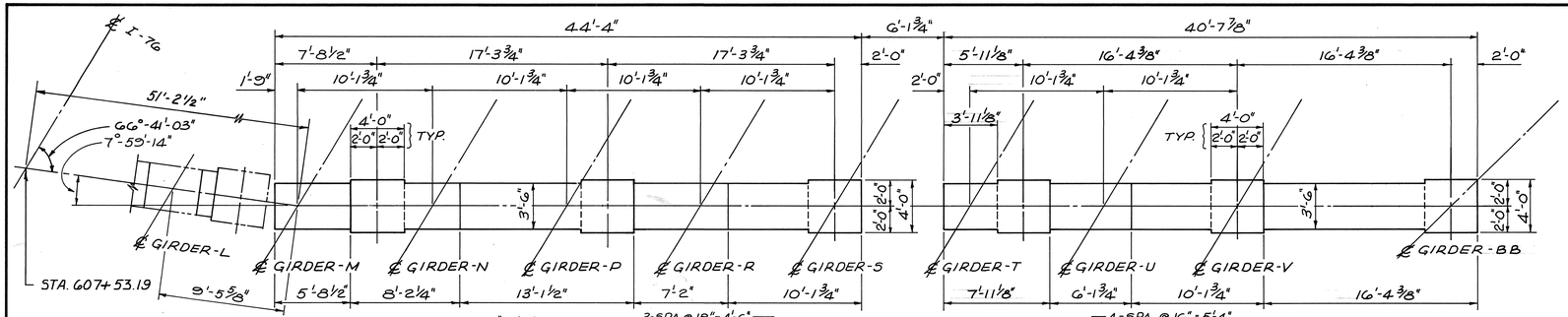

PLAN

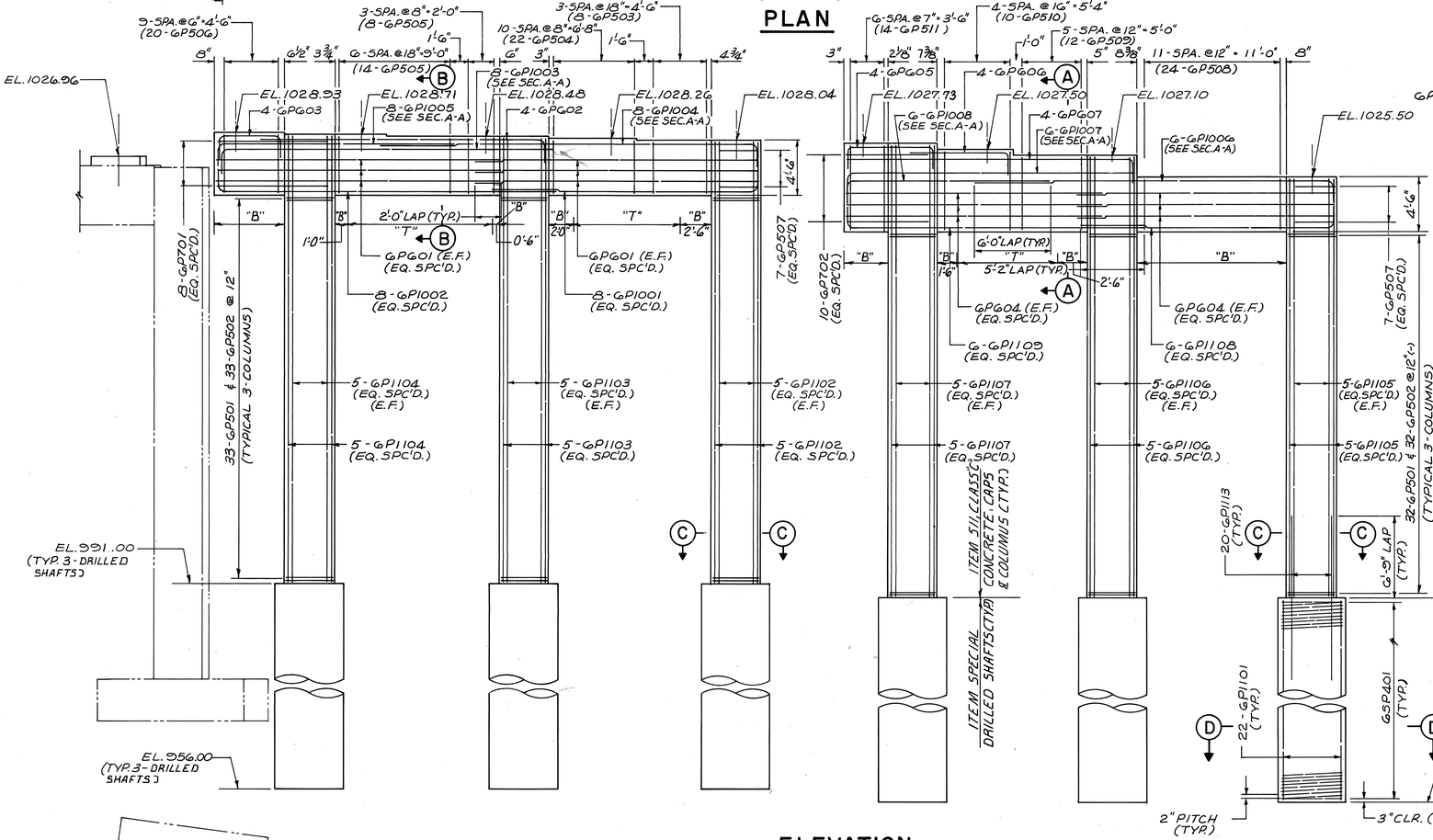

ELEVATION

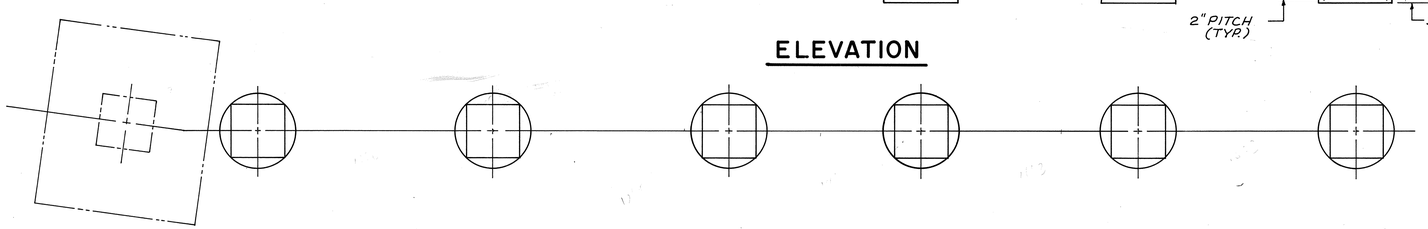

FOOTING PLAN

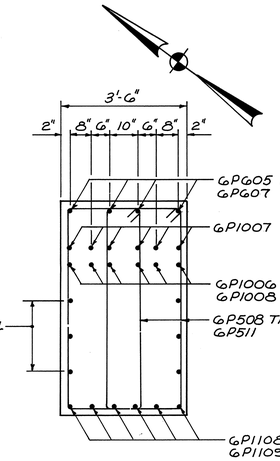

SECTION A-A

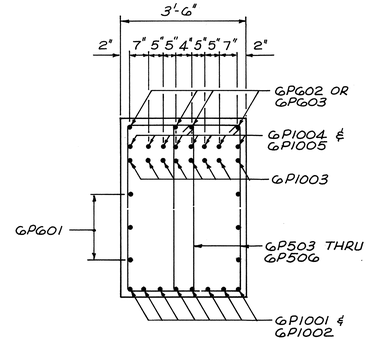

SECTION B-B

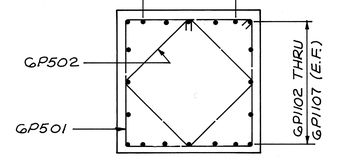

SECTION C-C

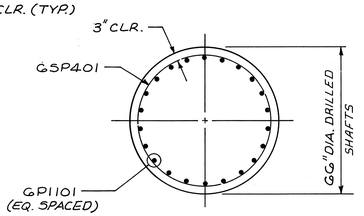

SECTION D-D

NOTES:

1. FOR **DRILLED** SHAFT SPECIFICATIONS, SEE SHEET Nº 12A/120 FOR DRILLED SHAFT CHART, SEE SHEET Nº 12B/120
2. FOR ADDITIONAL NOTES, SEE SHEET Nº 55/120

McCOY ASSOCIATES INC. 61/120
CONSULTING ENGINEERS
AKRON, OHIO

PIER Nº 6 DETAILS (SOUTH)

BRIDGE NO. SUM. 76-1277
AKRON EAST EXPRESSWAY
WEST VIADUCT

DESIGNED	DRAWN	TRACED	CHECKED	REVIEWED	DATE	REVISED
H.G.S. T.E.N.	J.D.P.		JBH	JBH	3-30-87	

FHWA REGION	STATE	PROJECT	
5	OHIO		

1006
12.14

SUMMIT COUNTY
SUM 76-11.57

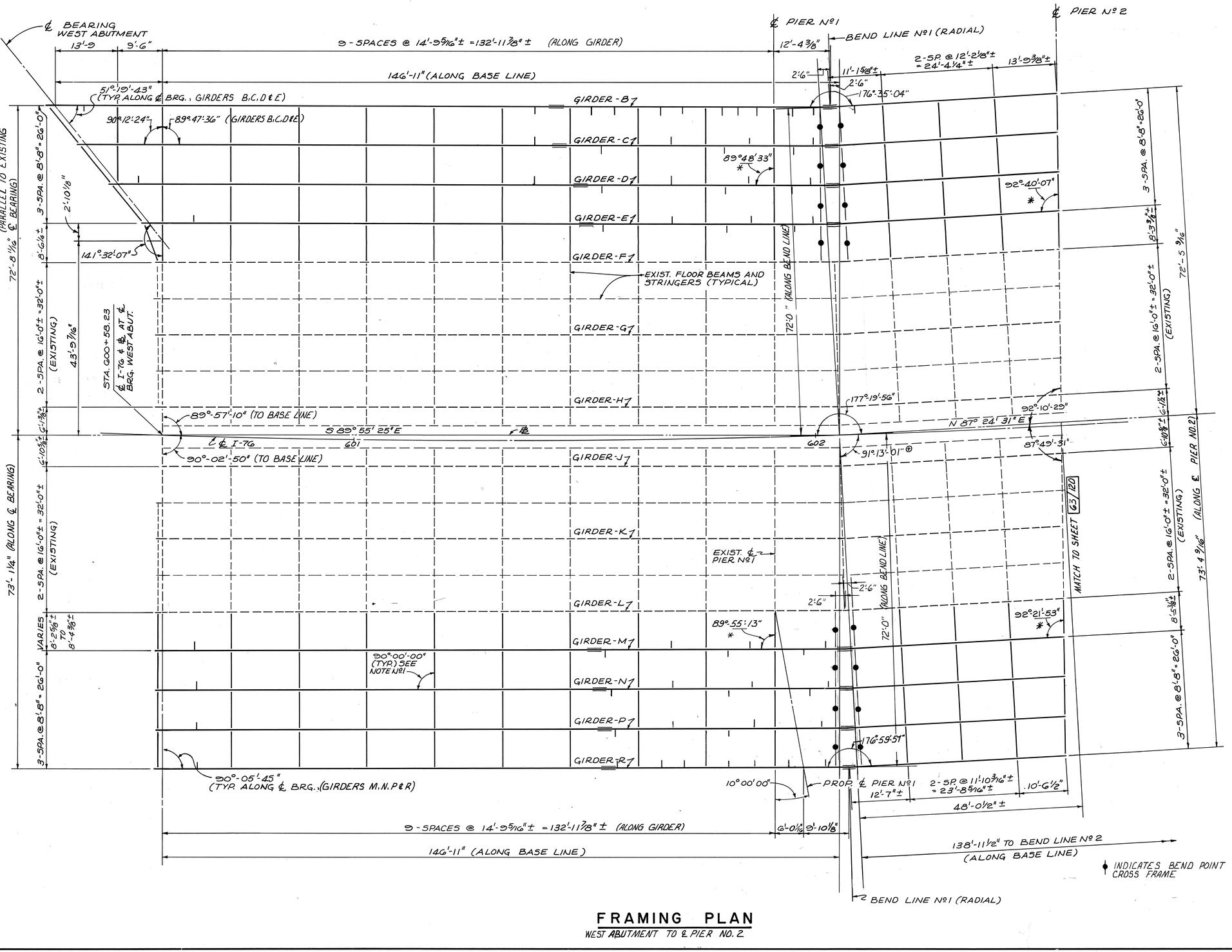

FRAMING PLAN
WEST ABUTMENT TO ℄ PIER NO. 2

NOTES

1. ALL PROPOSED INTERMEDIATE CROSSFRAMES SHALL BE INSTALLED AT A 90°-00'-00" ANGLE WITH RESPECT TO THE PROPOSED GIRDERS UNLESS OTHERWISE SHOWN.
2. * INDICATES TYPICAL ALONG ℄ PIER FROM ℄ TO OUTSIDE GIRDER.
3. | INDICATES INTERMEDIATE STIFFENER. INTERMEDIATE STIFFENERS SHALL BE SINGLE PLATES PLACED AS SHOWN ON THE FRAMING PLAN, EQUALLY SPACED BETWEEN CROSSFRAMES OR CROSSFRAMES AND BEARING STIFFENERS AT PIER, OR CROSSFRAME AND BEARING STIFFENER AT ABUTMENT.
4. FOR GIRDER DETAILS, SEE SHEETS 70/120 THRU 75/120
5. FOR FRAMING DETAILS, SEE SHEETS 68/120 THRU 69/120
6. FOR SPLICE DETAILS, SEE SHEETS 77/120 THRU 78/120
7. FOR BEARING DETAILS, SEE SHEET 76/120
8. FOR EXPANSION JOINT DETAILS, SEE SHEETS 79/120 THRU 82A/120
9. FOR DEFLECTION AND CAMBER DETAILS, SEE SHEETS 86/120 THRU 90/120
10. ⊕ INDICATES BASE LINE TO BEND LINE
11. CROSS-FRAMES BETWEEN PROPOSED GIRDERS AND EXISTING GIRDERS SHALL BE INCLUDED IN ITEM 513, STRUCTURAL STEEL FOR REHABILITATION, AS PER PLAN.

McCOY ASSOCIATES INC. 62/120
CONSULTING ENGINEERS
AKRON, OHIO

FRAMING PLAN

BRIDGE NO. SUM. 76-1277
AKRON EAST EXPRESSWAY
WEST VIADUCT

DESIGNED	DRAWN	TRACED	CHECKED	REVIEWED	DATE	REVISED
T.A.B.	J.D.P.		RGS	JBH	3-31-89	

FHWA REGION	STATE	PROJECT	
5	OHIO		

1007
1214

SUMMIT COUNTY
SUM 76-11.57

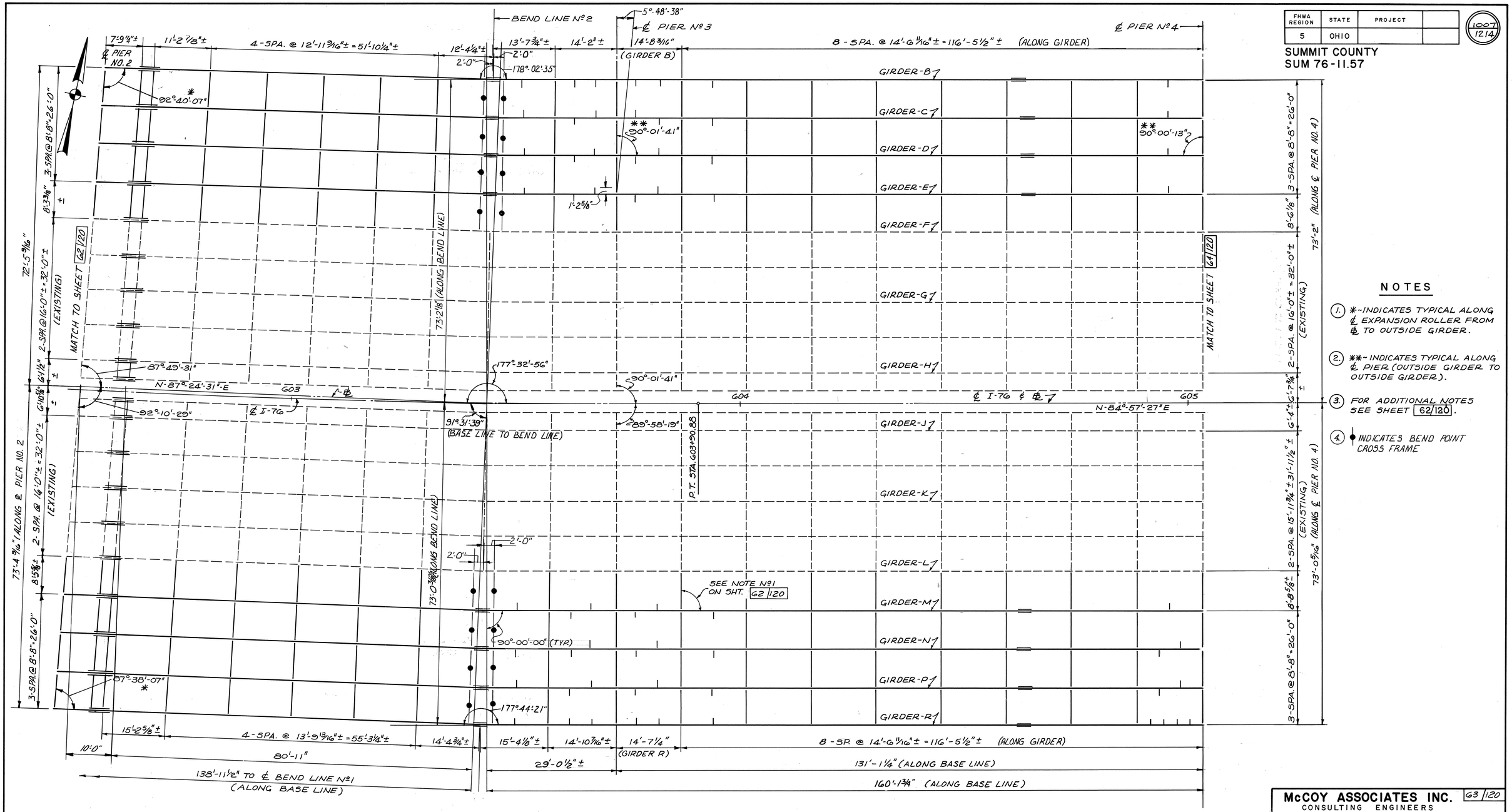

NOTES

1. *~INDICATES TYPICAL ALONG ℄ EXPANSION ROLLER FROM ℄ TO OUTSIDE GIRDER.
2. **~INDICATES TYPICAL ALONG ℄ PIER (OUTSIDE GIRDER TO OUTSIDE GIRDER).
3. FOR ADDITIONAL NOTES SEE SHEET 62/120.
4. ♦ INDICATES BEND POINT CROSS FRAME

FRAMING PLAN

℄ PIER NO. 2 ℄ PIER NO. 4

McCOY ASSOCIATES INC. 63/120
CONSULTING ENGINEERS
AKRON, OHIO

FRAMING PLAN

BRIDGE NO. SUM. 76-1277
AKRON EAST EXPRESSWAY
WEST VIADUCT

DESIGNED	DRAWN	TRACED	CHECKED	REVIEWED	DATE	REVISED
T.A.B.	J.D.P.		RGS	JBH	3-31-89	

FHWA REGION	STATE	PROJECT	
5	OHIO		

1008
1214

SUMMIT COUNTY
SUM 76-11.57

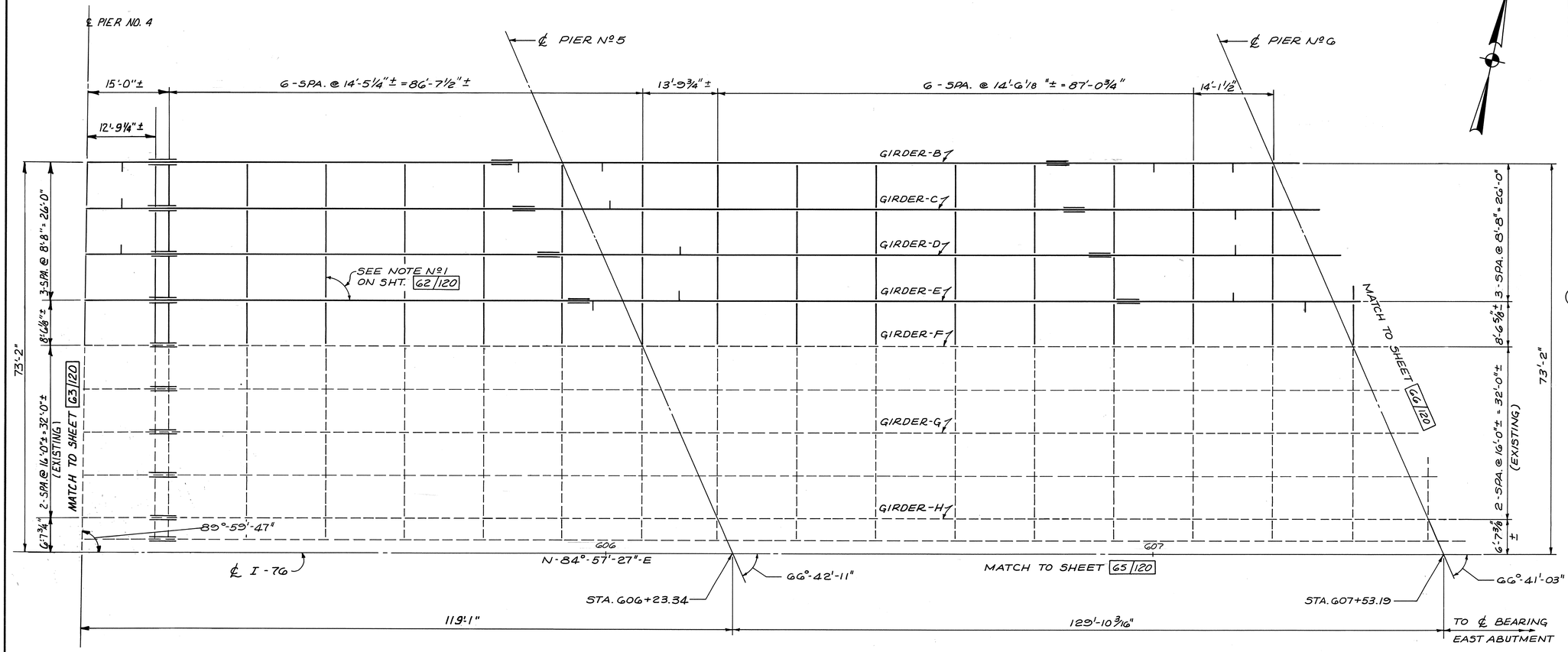

FRAMING PLAN

℄ PIER NO. 4 TO ℄ PIER NO. 6
(NORTH SIDE)

NOTES

1. FOR ADDITIONAL NOTES SEE SHEET 62/120.

McCOY ASSOCIATES INC. 64/120
CONSULTING ENGINEERS
AKRON, OHIO

FRAMING PLAN

BRIDGE NO. SUM. 76-1277
AKRON EAST EXPRESSWAY
WEST VIADUCT

DESIGNED	DRAWN	TRACED	CHECKED	REVIEWED	DATE	REVISED
T.A.B.	J.D.P.		RGS	JBH	3-31-89	

FHWA REGION	STATE	PROJECT	
5	OHIO		

1009
12.14

SUMMIT COUNTY
SUM 76-11.57

℄ PIER NO. 4

℄ PIER Nº 5

℄ PIER Nº 6

119'-1"

123'-10 3/16"

112'-9 1/8" ℄ BEARING
EAST ABUTMENT

12'-9 1/16"

℄ I-76

66°-42'-11"

STA. 606+23.34

N-84°-57'-27"E

66°-41'-03"

STA. 607+53.19

MATCH TO SHEET 64/120

90°-00'-13"

73'-0 5/16"

6'-4"±

3-SPA. @ 8'-8" = 26'-0"

8'-8 3/4"

12-SPA. @ 15'-1 3/4" = 181'-1 1/2"±
MATCH TO SHEET 63/120

89°-59'-47" TYP. ALONG ℄ PIER

2'-6"

88'-10 1/16"

SEE NOTE Nº1 ON SHEET 62/120

GIRDER-J

GIRDER-K

GIRDER-L

GIRDER-M

GIRDER-N

GIRDER-P

GIRDER-R

GIRDER-S

GIRDER-T

GIRDER-U

GIRDER V

GIRDER W

2-SPA. @ 16'-0"± = 32'-0"±
(EXISTING)

8-SPA. @ 8'-8" = 69'-4"

121'-8 1/8"

MATCH TO SHEET 67/120

4"10'13"

SEE DETAIL 2 ON SHEET 69/120

GIRDER-BB

175°-36'-00"

BEND POINT Nº1, SEE DETAIL ON SHEET 78/120

SEE DETAIL 1 ON SHEET 68/120

SEE DETAIL 1 ON SHEET 68/120

176° 19' 42"

BEND POINT Nº 2, SEE DETAIL ON SHEET 78/120

178° 12' 24"

BEND POINT NO. 3, SEE DETAIL ON SHEET 78/120

SEE DETAIL 1 ON SHEET 68/120

SEE DETAIL 1 ON SHEET 68/120

SEE DETAIL 1 ON SHEET 68/120

7-SPA. @ 15'-1 25/32"± = 106'-0 13/32"±

2-SPA. @ 14'-11"± = 29'-10"±

15'-9"

15'-2"

95'-6 7/8"

88'-10 7/8"

13'-9 21/32"

57'-6 1/8"

52'-8 1/4"

8-SPA. @ 14'-6 9/32"± = 116'-2 11/32"±

47'-10 3/4"

52'-8 1/4"

13'-9 21/32"

36'-9 3/8"

37'-9 3/4"

34'-7 7/8"

66'-9"

14'-11"±

FRAMING PLAN

FROM ℄ PIER NO. 4 TO ℄ PIER NO. 6
(SOUTH BRIDGE)

NOTES

1. FOR ADDITIONAL NOTES SEE SHEET 62/120.
2. INDICATES BEND POINT CROSSFRAME.
3. SEE STRUCTURAL NOTES FOR SHOP ASSEMBLY REQUIREMENTS FOR GIRDERS R THRU B-B SHEET 5C/120

McCOY ASSOCIATES INC. 65/120
CONSULTING ENGINEERS
AKRON, OHIO

FRAMING PLAN

BRIDGE NO. SUM. 76-1277
AKRON EAST EXPRESSWAY
WEST VIADUCT

DESIGNED	DRAWN	TRACED	CHECKED	REVIEWED	DATE	REVISED
T.A.B.	J.D.P.		RGS	JBH	3-31-89	

020814

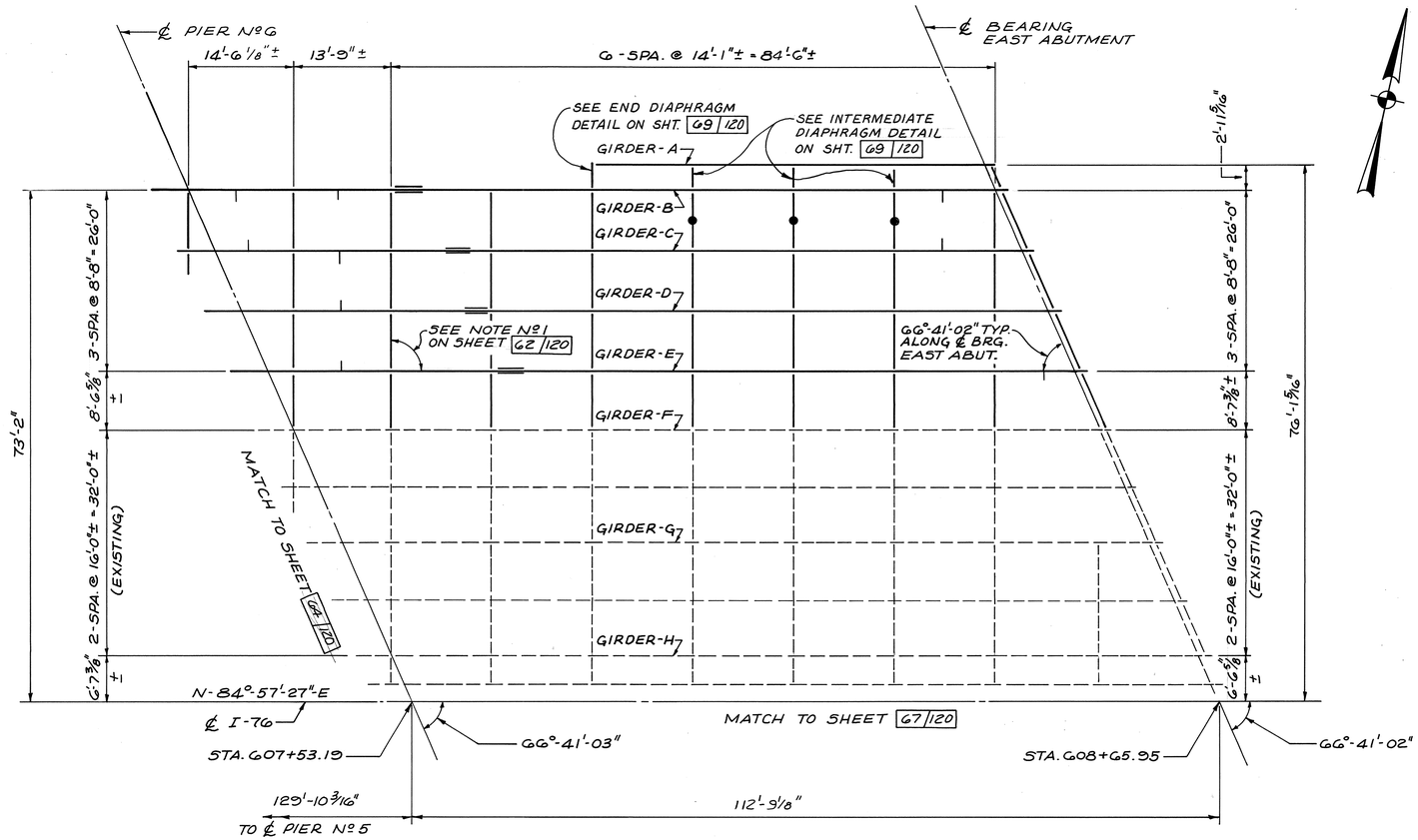

FRAMING PLAN

℄ PIER Nº6 TO ℄ BEARING EAST ABUTMENT
(NORTH SIDE)

FHWA REGION	STATE	PROJECT	
5	OHIO		

1010
1214

SUMMIT COUNTY
SUM 76-11.57

NOTES

1. FOR ADDITIONAL NOTES SEE SHEET 62/120.
2. ● INDICATES BEND POINT CROSS FRAME.

McCOY ASSOCIATES INC. 66/120
CONSULTING ENGINEERS
AKRON, OHIO

FRAMING PLAN

BRIDGE NO. SUM. 76-1277
AKRON EAST EXPRESSWAY
WEST VIADUCT

DESIGNED	DRAWN	TRACED	CHECKED	REVIEWED	DATE	REVISED
T.A.B.	J.O.P.		RGS	JBH	3-31-89	

FHWA REGION	STATE	PROJECT	
5	OHIO		

1011
1214

SUMMIT COUNTY
SUM 76-11.57

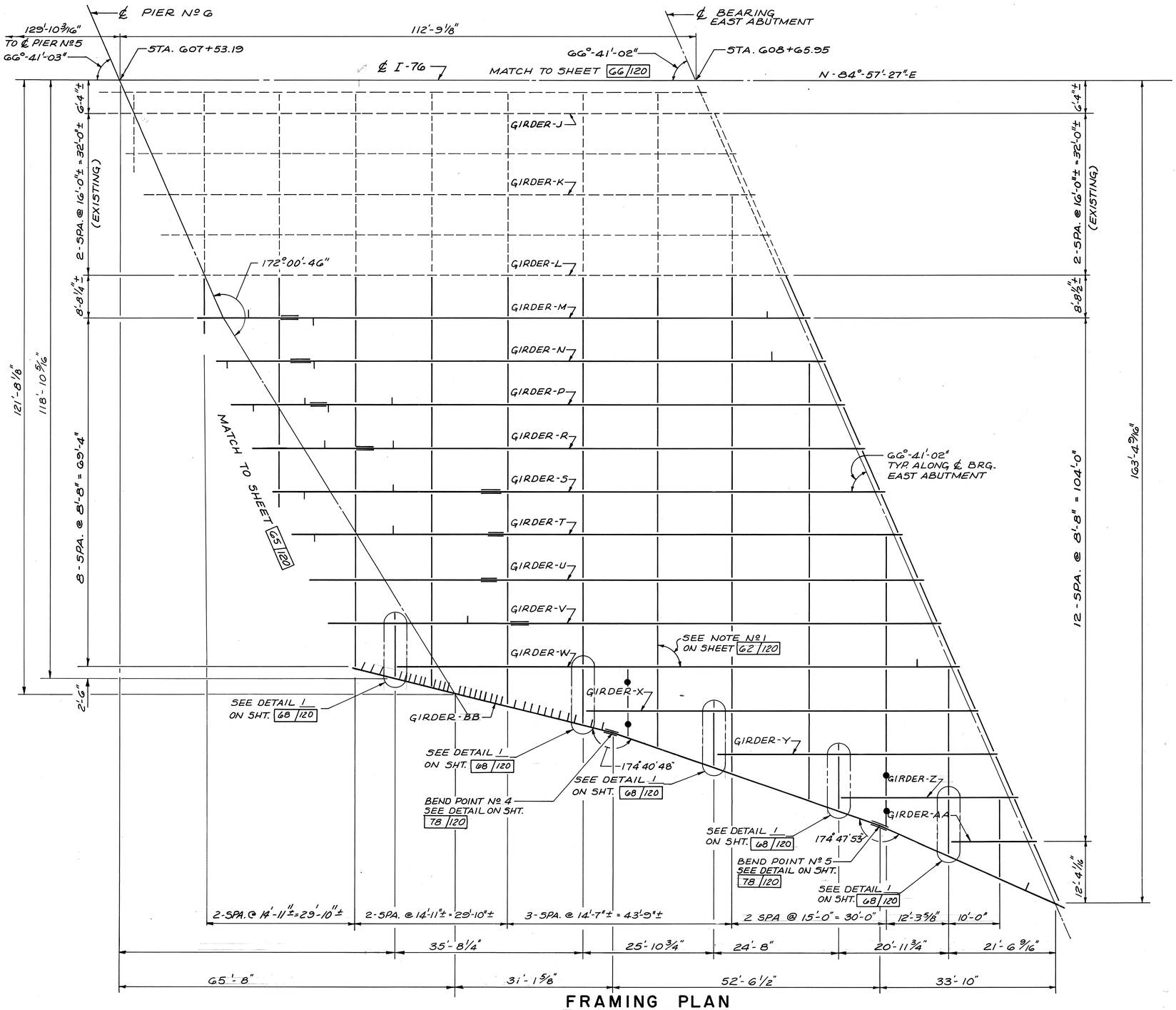

FRAMING PLAN

℄ PIER Nº6 TO ℄ BEARING EAST ABUTMENT
(SOUTH BRIDGE)

NOTES

1. FOR ADDITIONAL NOTES SEE SHEET 62/120.
2. INDICATES BEND POINT CROSSFRAME.
3. SEE STRUCTURAL NOTES, SHEET 5C/120 FOR SHOP ASSEMBLY REQUIREMENTS FOR GIRDERS R THRU B-B

McCOY ASSOCIATES INC. 67/120
CONSULTING ENGINEERS
AKRON, OHIO

FRAMING PLAN

BRIDGE NO. SUM. 76-1277
AKRON EAST EXPRESSWAY
WEST VIADUCT

DESIGNED	DRAWN	TRACED	CHECKED	REVIEWED	DATE	REVISED
T.A.B.	J.D.P.		RGS	J.B.H.	3-31-89	

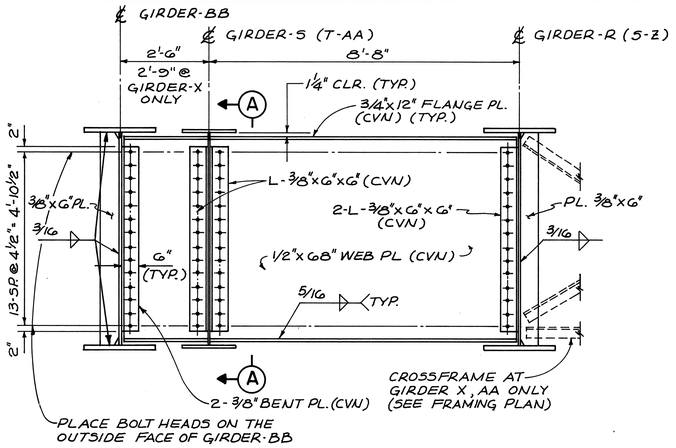

END DIAPHRAGM - GIRDERS S THRU Z & AA

(END DIAPHRAGM AT GIRDER - S, SHOWN)

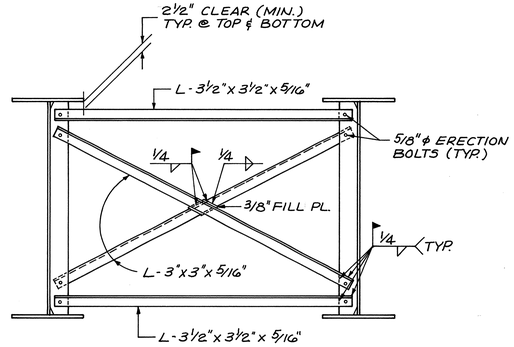

BEND POINT CROSS-FRAME

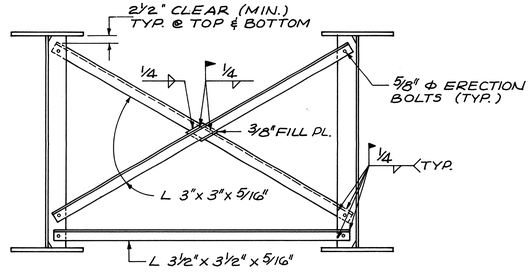

INTERMEDIATE CROSS-FRAME

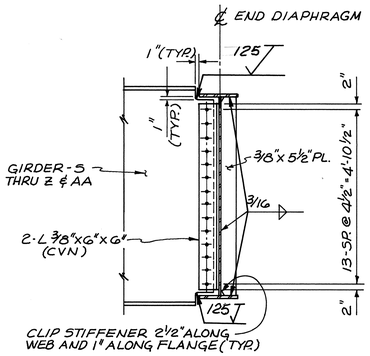

SECTION A-A

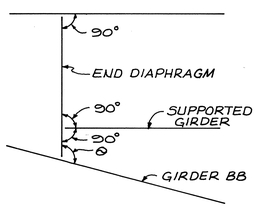

SUPPORTED GIRDER	ANGLE θ
S	98° 34' 13"
T	98° 34' 13"
U	102° 14' 31"
V	104° 02' 07"
W	104° 02' 07"
X	104° 02' 07"
Y	109° 21' 19"
Z	109° 21' 19"
AA	114° 33' 26"

DETAIL 1

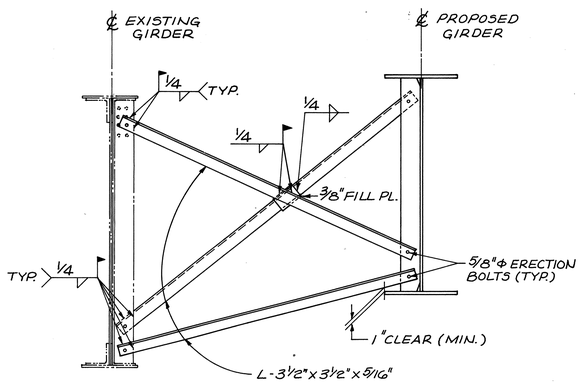

INTERMEDIATE CROSS-FRAME

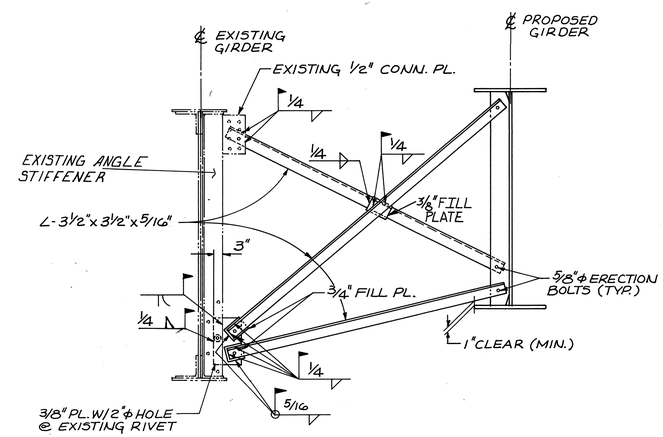

INTERMEDIATE CROSS-FRAME

AT EXISTING PIER

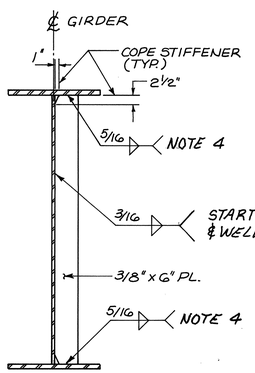

INTERMEDIATE STIFFENER DETAIL

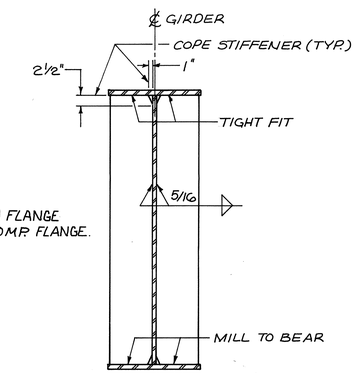

BEARING STIFFENER DETAIL

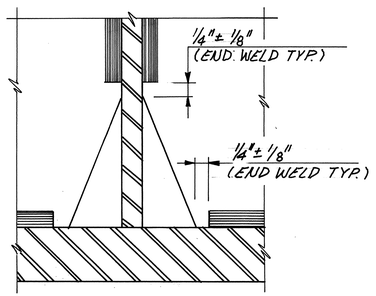

STIFFENER WELD DETAIL

FHWA REGION	STATE	PROJECT	
5	OHIO		

1012 / 12.14

SUMMIT COUNTY
SUM 76-11.57

NOTES

1. FOR FRAMING PLANS, SEE SHEETS 62/120 THRU 67/120
2. FOR GIRDER ELEVATIONS, SEE SHEETS 70/120 THRU 75/120
3. WHERE A SHAPE OR PLATE IS DESIGNATED "CVN", THE MATERIAL SHALL MEET SPECIFIED MINIMUM TOUGHNESS REQUIREMENTS
4. WELD TO THE COMPRESSION FLANGE ONLY WITH A TIGHT FIT TO THE TENSION FLANGE AT ALL INTERMEDIATE STIFFENERS WHERE CROSSFRAMES ARE NOT CONNECTED. WELD TO BOTH TENSION AND COMPRESSION FLANGE AT ALL STIFFENER LOCATIONS WHERE A CROSSFRAME IS CONNECTED.
5. BOLTS FOR DIAPHRAGMS SHALL BE 1" ϕ A325 HIGH STRENGTH UNLESS OTHERWISE NOTED.

McCOY ASSOCIATES INC. 68/120
CONSULTING ENGINEERS
AKRON, OHIO

FRAMING DETAILS

BRIDGE NO. SUM. 76-1277
AKRON EAST EXPRESSWAY
WEST VIADUCT

DESIGNED	DRAWN	TRACED	CHECKED	REVIEWED	DATE	REVISED
TEN.	J.D.P.		RGS	JBH	3-31-89	

12376

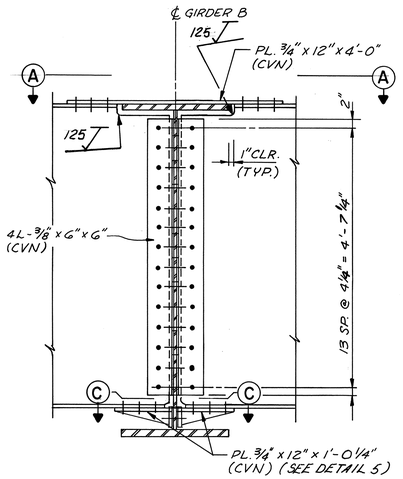

DETAIL 1

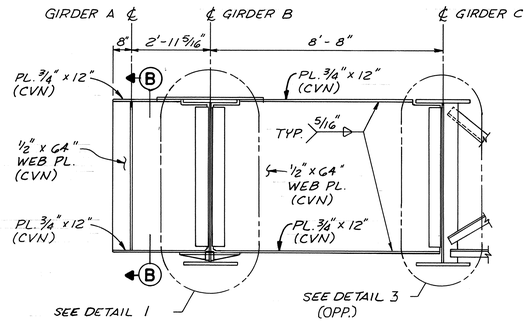

END DIAPHRAGM - GIRDER A

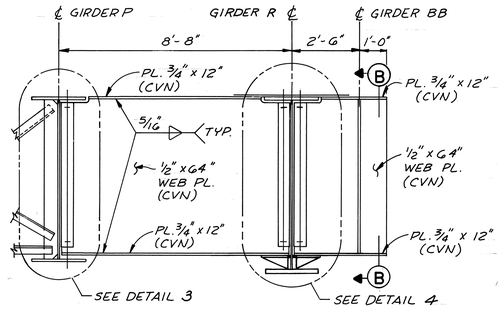

END DIAPHRAGM - GIRDER BB

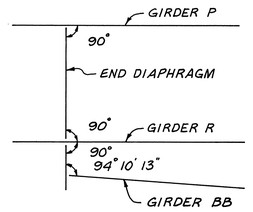

DETAIL 2

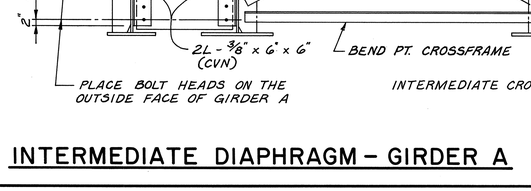

SECTION AA

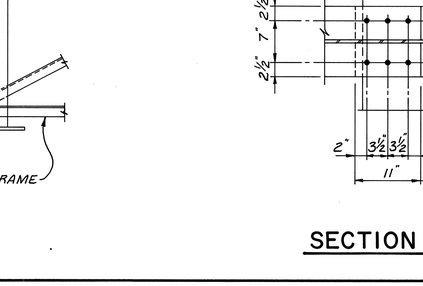

SECTION BB

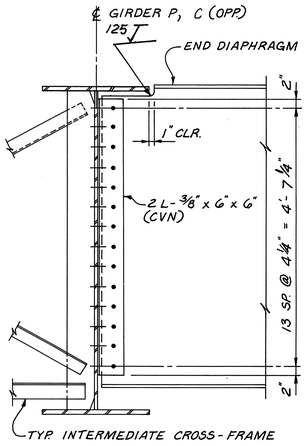

DETAIL 3

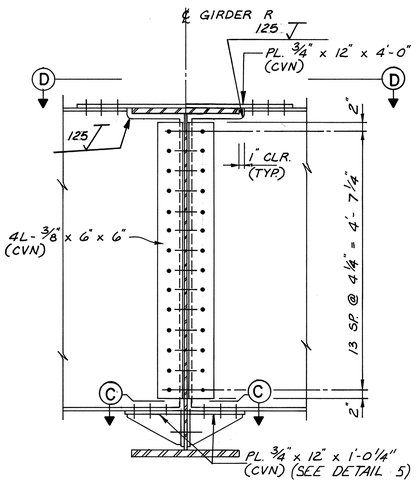

DETAIL 4

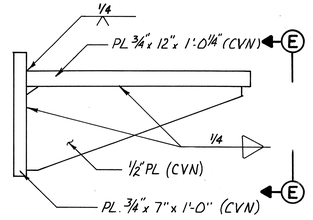

DETAIL 5

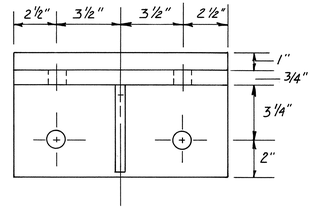

SECTION E E

NOTES

1. FOR NOTES, SEE SHEET 68/120
2. BOLTS FOR DIAPHRAGMS SHALL BE 1" ϕ A325 (HIGH STRENGTH) UNLESS OTHERWISE NOTED.

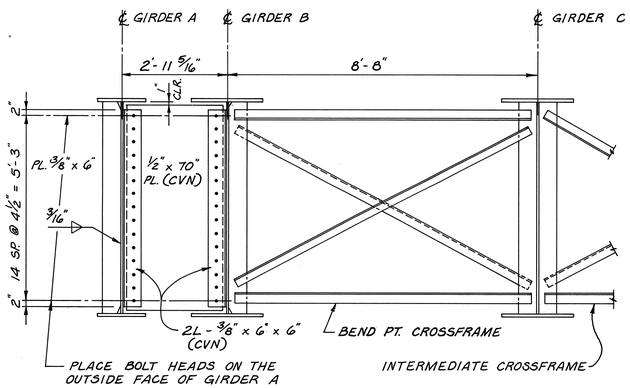

INTERMEDIATE DIAPHRAGM - GIRDER A

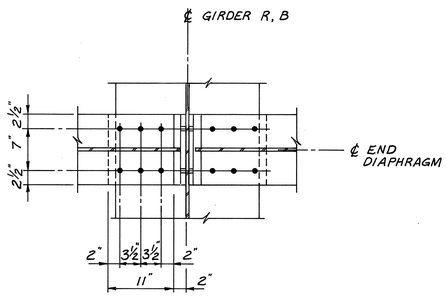

SECTION CC

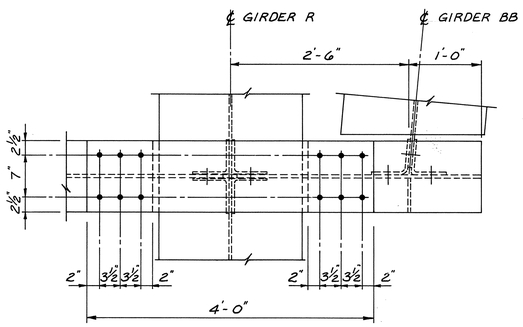

SECTION DD

FHWA REGION	STATE	PROJECT	
5	OHIO		

1013
1214

SUMMIT COUNTY
SUM 76-11.57

McCOY ASSOCIATES INC. 69/120
CONSULTING ENGINEERS
AKRON, OHIO

FRAMING DETAILS

BRIDGE NO. SUM. 76-1277
AKRON EAST EXPRESSWAY
WEST VIADUCT

DESIGNED	DRAWN	TRACED	CHECKED	REVIEWED	DATE	REVISED
T.E.N.	T.E.N.	M.R.A.		JBH	3-31-89	

FHWA REGION	STATE	PROJECT	
5	OHIO		

1014
1214

SUMMIT COUNTY
SUM 76-11.57

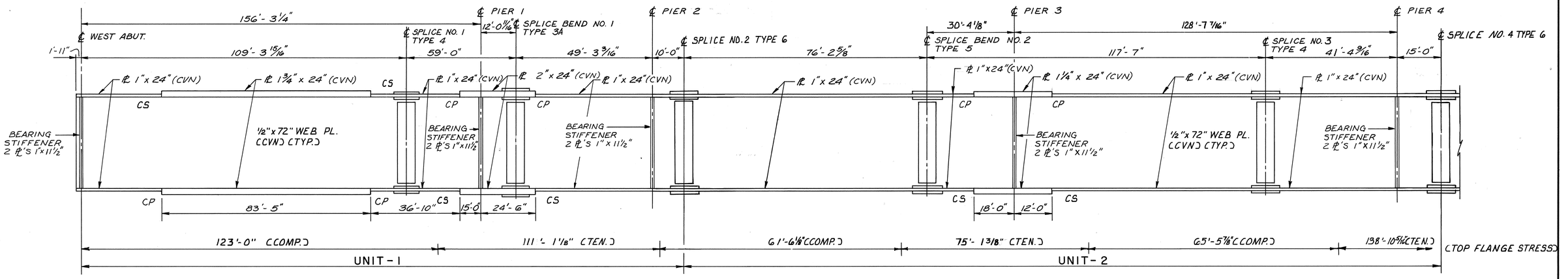

GIRDER ELEVATION

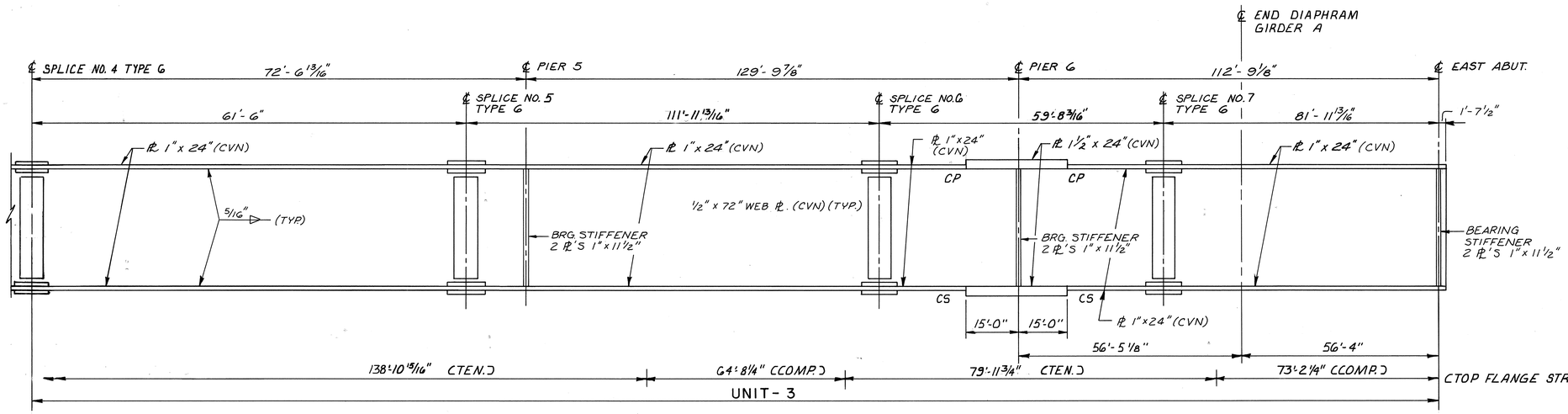

GIRDER ELEVATION

NOTES

1. WELDED ATTACHMENTS FOR FINISHING MACHINE SUPPORTS MAY BE MADE TO THE TOP FLANGE ANYWHERE ALONG THE FASCIA GIRDERS EXCEPT IN AREAS MARKED (TEN.)
2. CS- INDICATES BUTT WELD SUBJECT TO COMPRESSIVE STRESS ONLY
3. FOR FRAMING PLANS, SEE SHEETS 62/120 THRU 67/120
4. FOR FRAMING NOTES, SEE SHEET 62/120
5. CP- INDICATES FULL PENETRATION BUTT WELD
6. A36 STEEL SHALL BE USED FOR NEW GIRDERS
7. ALL FLANGE AND WEB STEEL SHALL BE (CVN). THE MATERIAL SHALL MEET SPECIFIED MINIMUM NOTCH TOUGHNESS REQUIREMENTS AS SPECIFIED IN 711.01 OF CMS.

McCOY ASSOCIATES INC. 70/120
CONSULTING ENGINEERS
AKRON, OHIO

GIRDER ELEVATION B

BRIDGE NO. SUM. 76-1277
AKRON EAST EXPRESSWAY
WEST VIADUCT

DESIGNED	DRAWN	TRACED	CHECKED	REVIEWED	DATE	REVISED
T.A.B.	GT		T.E.N.	JBH	3-31-89	

FHWA REGION	STATE	PROJECT	
5	OHIO		

1015
1214

SUMMIT COUNTY
SUM 76-11.57

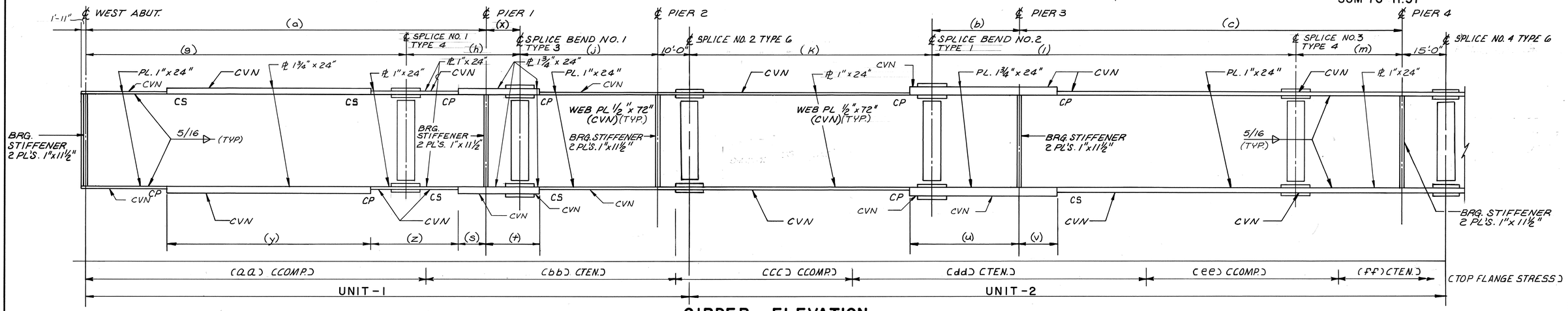

GIRDER ELEVATION

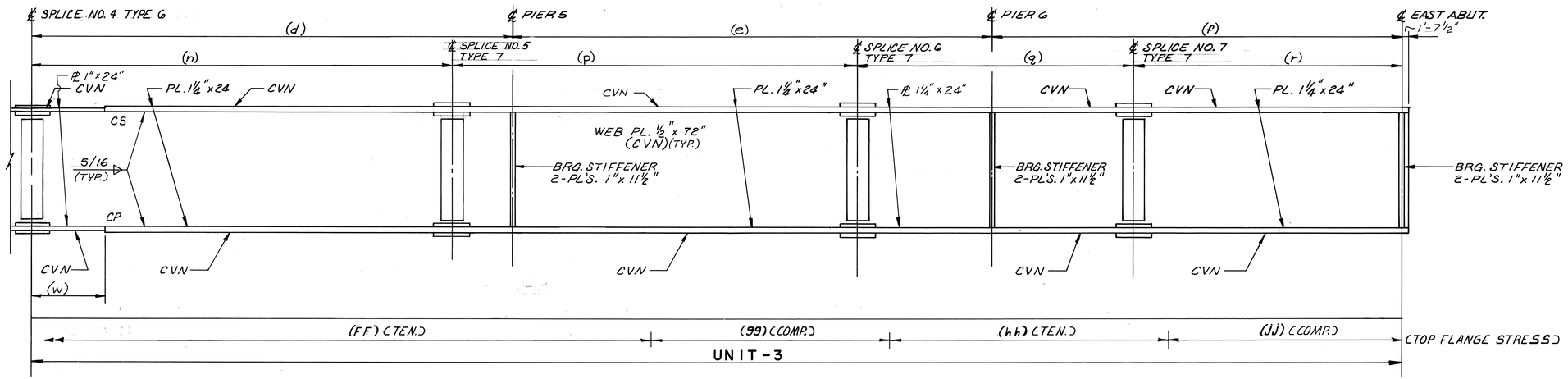

GIRDER ELEVATION

GIRDER	DIMENSION																									
	(a)	(b)	(c)	(d)	(e)	(f)	(g)	(h)	(j)	(k)	(l)	(m)	(n)	(p)	(q)	(r)	(s)	(t)	(u)	(v)	(w)	(x)	(y)	(z)		
C	149'-4 5/16"	29'-7 7/16"	129'-5 5/16"	76'-3 5/8"	129'-9 7/8"	112'-9 1/8"	103'-0 13/16"	58'-7"	49'-1 7/16"	76'-9 1/4"	119'-9 3/8"	39'-4"	67'-3"	100'-0"	71'-9"	79'-10 5/8"	15'-0"	18'-5"	34'-6"	13'-1"	12'-7"	12'-3½"	84'-8"	34'-10"		
D	142'-5 7/16"	28'-10 11/16"	130'-4½"	80'-0 3/8"	129'-9 5/16"	112'-9 1/8"	100'-2 5/8"	54'-9"	48'-11¾"	77'-3 13/16"	119'-11 3/16"	39'-4"	70'-6"	100'-5"	72'-9½"	78'-10 15/16"	15'-0"	18'-5"	34'-10"	13'-1"	13'-6"	12'-6 7/16"	80'-6"	32'-9"		
E	135'-6 9/16"	28'-3 3/8"	131'-1 9/16"	83'-9 3/16"	129'-10"	112'-9 1/8"	94'-10 1/2"	53'-5"	48'-10"	77'-10 7/16"	120'-0 15/16"	39'-4"	74'-10"	101'-10"	70'-9½"	78'-10 13/16"	15'-0"	18'-5"	35'-1"	13'-1"	14'-5"	12'-8 15/16"	64'-11"	30'-8"		

GIRDER																
	(aa)	(bb)	(cc)	(dd)	(ee)	(ff)	(gg)	(hh)	(jj)							
C	118'-9 5/8"	106'-6"	60'-10"	79'-11 7/8"	64'-11 1/8"	143'-00"	67'-11¼"	71'-4 3/16"	77'-2 1/4"							
D	113'-10 3/16"	105'-5 3/8"	61'-8 1/8"	77'-9 3/4"	65'-4 9/16"	148'-0 5/16"	67'-3 1/4"	71'-3"	77'-4 3/16"							
E	107'-9 5/8"	105'-6"	58'-0 3/4"	80'-2 1/4"	65'-8 7/8"	153-3 1/4"	66'-7 13/16"	71'-1 7/16"	77'-5 1/4"							

NOTES

(1) FOR NOTES, SEE SHEET 70/120

McCOY ASSOCIATES INC. 71/120
CONSULTING ENGINEERS
AKRON, OHIO

GIRDER ELEVATION C, D & E

BRIDGE NO. SUM. 76-1277
AKRON EAST EXPRESSWAY
WEST VIADUCT

DESIGNED	DRAWN	TRACED	CHECKED	REVIEWED	DATE	REVISED
RGS	GT		T.E.N.	JBH	3-31-89	

FHWA REGION	STATE	PROJECT	
5	OHIO		

1016
1214

SUMMIT COUNTY
SUM 76-11.57

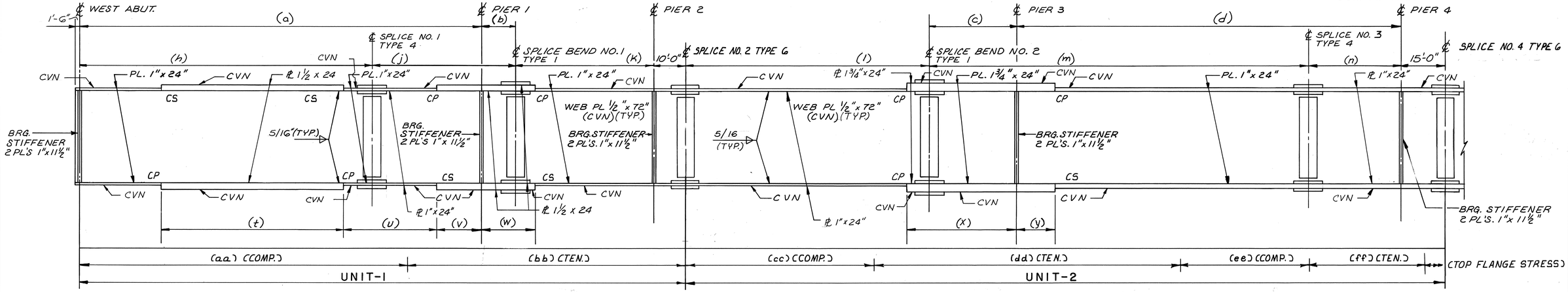

GIRDER ELEVATION

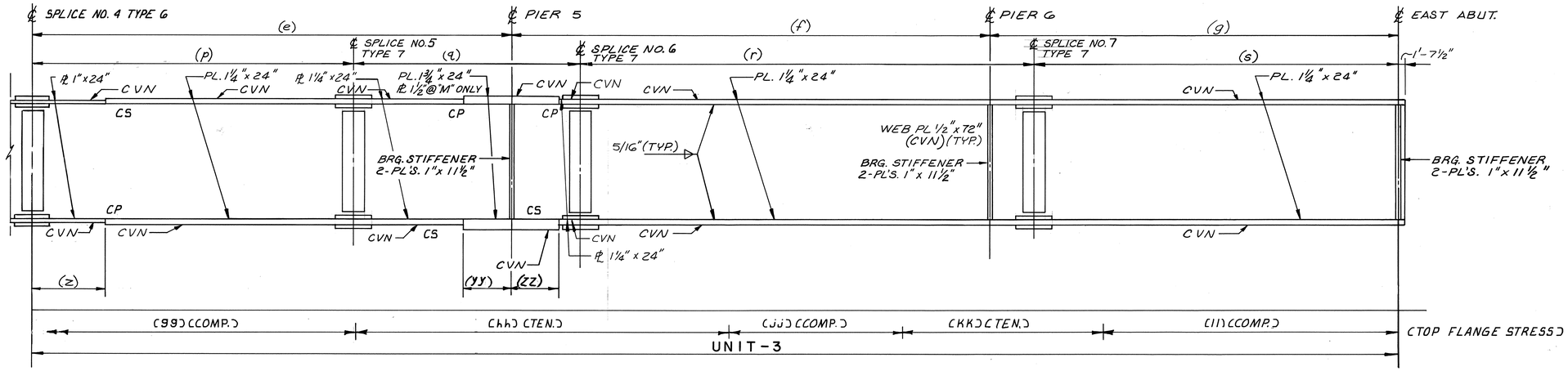

GIRDER ELEVATION

GIRDER	DIMENSION																										
	(a)	(b)	(c)	(d)	(e)	(f)	(g)	(h)	(j)	(k)	(L)	(m)	(n)	(p)	(q)	(r)	(s)	(t)	(u)	(v)	(w)	(x)	(y)	(z)	(yy)	(zz)
M	134'-5"	13'-9"	29'-8¾"	131'-0⅝"	124'-3⅛"	129'-10⅞"	112'-9⅛"	94'-1"	54'-1"	47'-3"	84'-0¹¹⁄₁₆"	121'-5¹¹⁄₁₆"	39'-4"	82'-9½"	78'-6"	102'-2"	103'-6"	62'-2"	30'-4"	15'-0"	18'-4"	37'-5"	13'-1½"	29'-5"	13'-10"	13'-0"
N	135'-11⅝"	12'-5⅜"	29'-10⅞"	131'-0⅞"	128'-0¾"	131'-4⅞"	111'-2⅛"	95'-2"	53'-2⅝"	47'-1⅝"	84'-7¹¹⁄₁₆"	121'-7¹¹⁄₁₆"	39'-4"	85'-8"	81'-4"	102'-2"	101'-6⅝"	63'-0"	30'-9½"	15'-0"	17'-10"	37'-8"	13'-1½"	27'-2"	14'-2"	13'-0"
P	137'-5⅝"	11'-1¾"	30'-0¹⁵⁄₁₆"	131'-0⅞"	131'-9⅜"	132'-11⅝"	109'-8⅝"	96'-3"	52'-4⅜"	46'-11⅜"	85'-1⅞"	121'-9¾"	39'-4"	85'-11"	84'-10"	102'-2"	101'-6⅝"	67'-3"	31'-3"	15'-0"	17'-4"	37'-11"	13'-1½"	29'-2"	14'-8"	13'-0"
	(aa)	(bb)	(cc)	(dd)	(ee)	(ff)	(gg)	(hh)	(jj)	(kk)	(LL)																
M	108'-10⅜"	105'-6³⁄₁₆"	68'-5⅞"	78'-9¹⁵⁄₁₆"	42'-2"	85'-8¼"	61'-5¾"	85'-4"	38'-10¹³⁄₁₆"	80'-4⅞"	76'-7¹⁵⁄₁₆"																
N	110'-1¹³⁄₁₆"	104'-4¹³⁄₁₆"	69'-4⅛"	79'-4⅞"	39'-9⅛"	86'-8 1⁄8"	65'-1½"	86'-10"	42'-8³⁄₄"	76'-4¹³⁄₁₆"	75'-11½"																
P	111'-8"	103'-1 5⁄16"	70'-2⅛"	79'-11⅞"	36'-3⅛"	88'-7 11⁄16"	69'-5⅞"	88'-2¾"	41'-11¾"	79'-9½"	72'-9⅝"																

NOTES

(1) FOR NOTES, SEE SHEET 70/120

McCOY ASSOCIATES INC. 72/120
CONSULTING ENGINEERS
AKRON, OHIO

GIRDER ELEVATION M, N & P

BRIDGE NO. SUM. 76-1277
AKRON EAST EXPRESSWAY
WEST VIADUCT

DESIGNED	DRAWN	TRACED	CHECKED	REVIEWED	DATE	REVISED
RGS	DAK		T.E.N.	JBH	3-31-89	

FHWA REGION	STATE	PROJECT	
5	OHIO		

(10)17
12)14

SUMMIT COUNTY
SUM 76-11.57

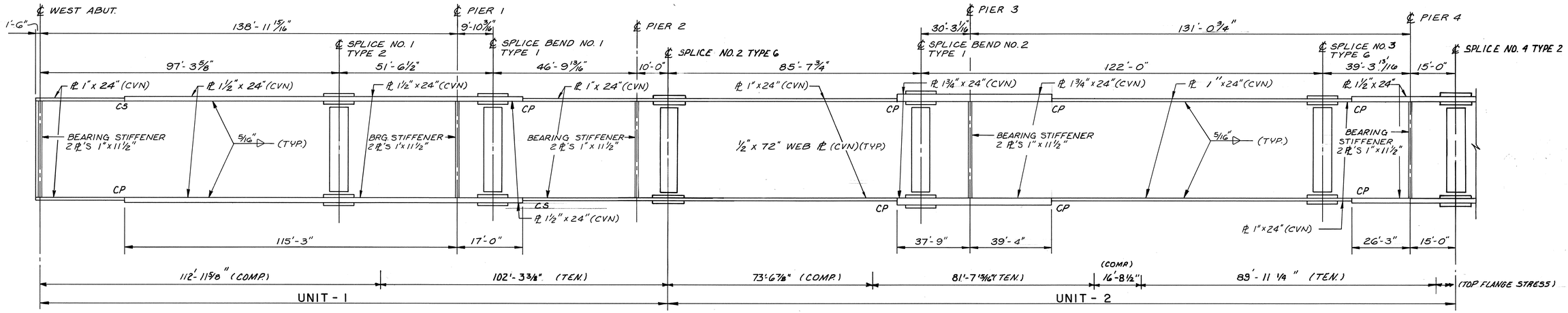

GIRDER ELEVATION

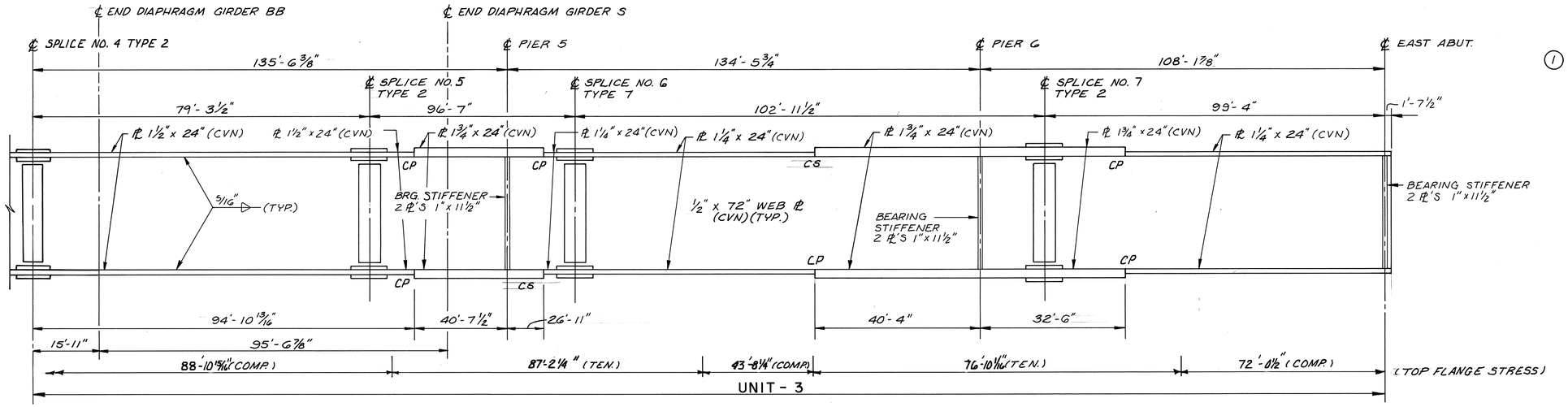

GIRDER ELEVATION

NOTES

(1) FOR NOTES, SEE SHEET 70/120

McCOY ASSOCIATES INC. 73/120
CONSULTING ENGINEERS
AKRON, OHIO

GIRDER ELEVATION R

BRIDGE NO. SUM. 76-1277
AKRON EAST EXPRESSWAY
WEST VIADUCT

DESIGNED	DRAWN	TRACED	CHECKED	REVIEWED	DATE	REVISED
RGS	GT		T.E.N.	JBH	3-31-89	

FHWA REGION	STATE	PROJECT	
5	OHIO		

1018
12.14

SUMMIT COUNTY
SUM 76-11.57

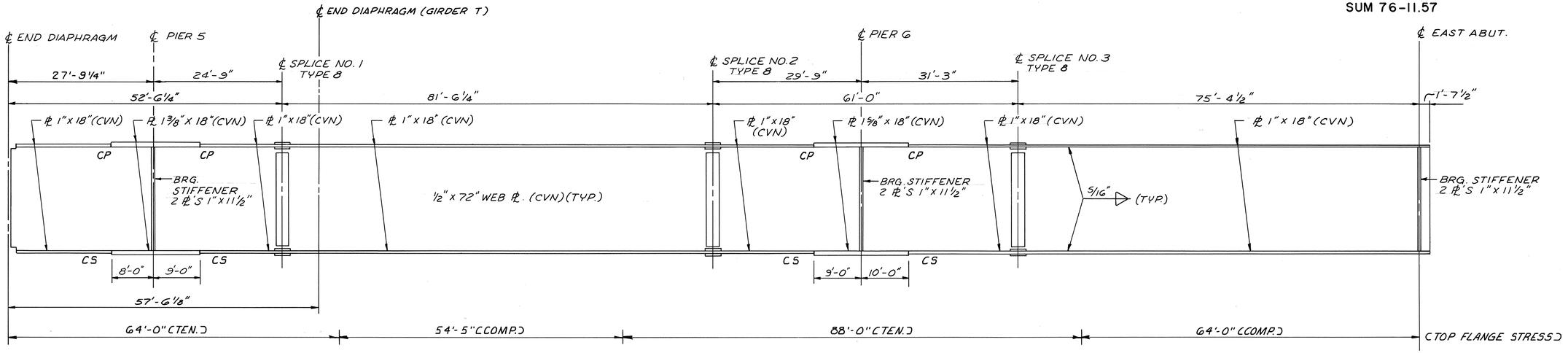

GIRDER S ELEVATION

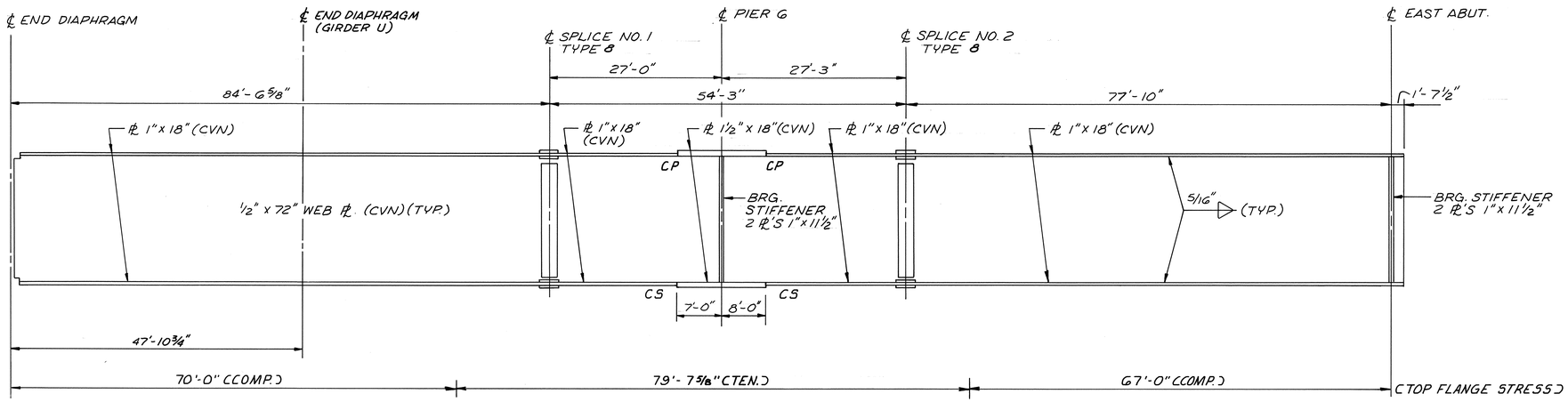

GIRDER T ELEVATION

NOTES

(1) FOR NOTES, SEE SHEET 70/120

McCOY ASSOCIATES INC. 74/120
CONSULTING ENGINEERS
AKRON, OHIO

GIRDER ELEVATION S, T

BRIDGE NO. SUM. 76-1277
AKRON EAST EXPRESSWAY
WEST VIADUCT

DESIGNED	DRAWN	TRACED	CHECKED	REVIEWED	DATE	REVISED
T.E.N.	T.E.N.	MRA	T.E.N.	JBH	3-31-89	

72176

FHWA REGION	STATE	PROJECT	
5	OHIO		

1019
1214

SUM-76-11.57

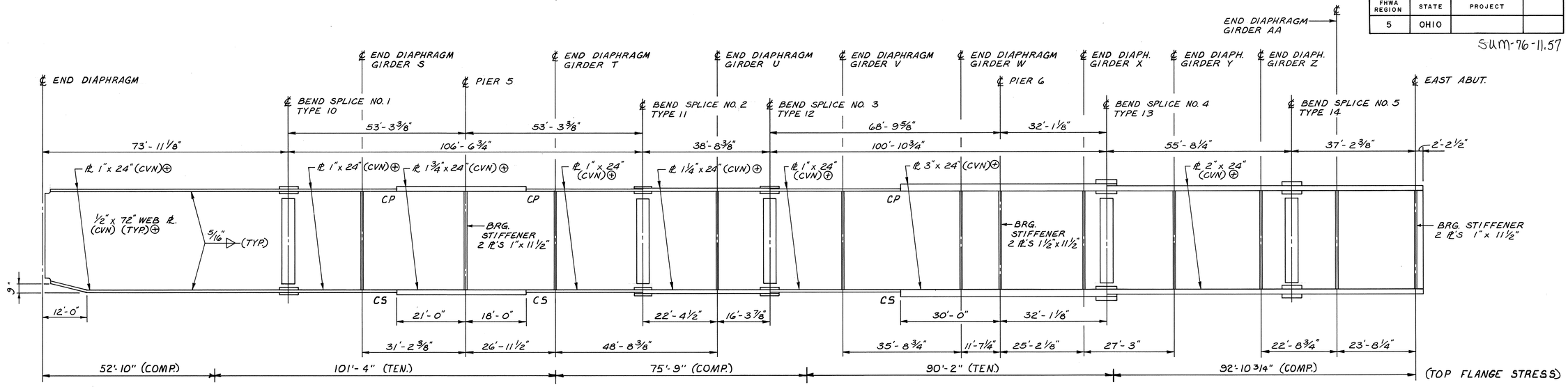

GIRDER BB ELEVATION

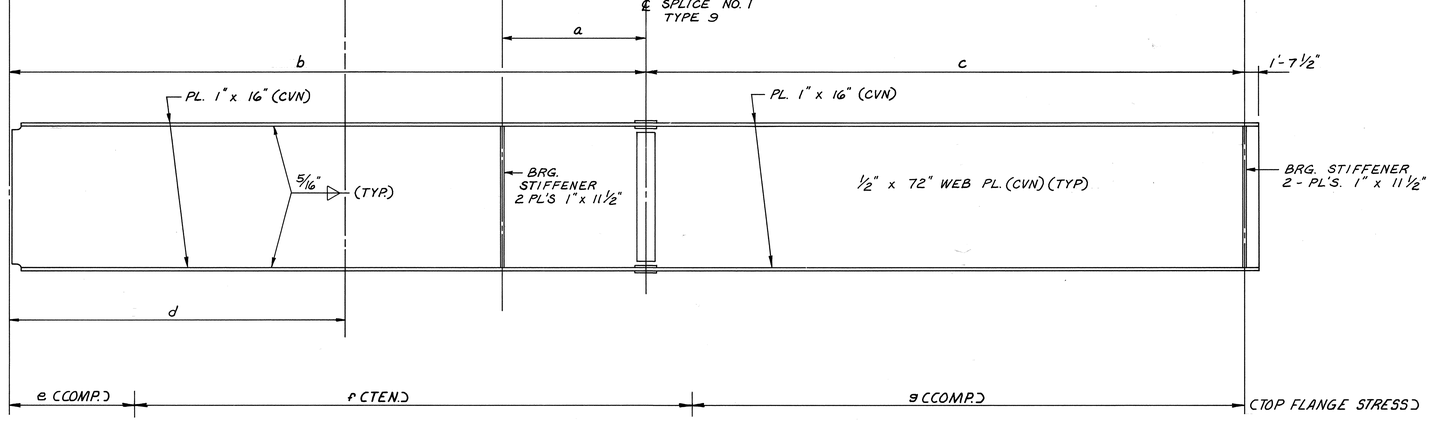

GIRDER U,V ELEVATION

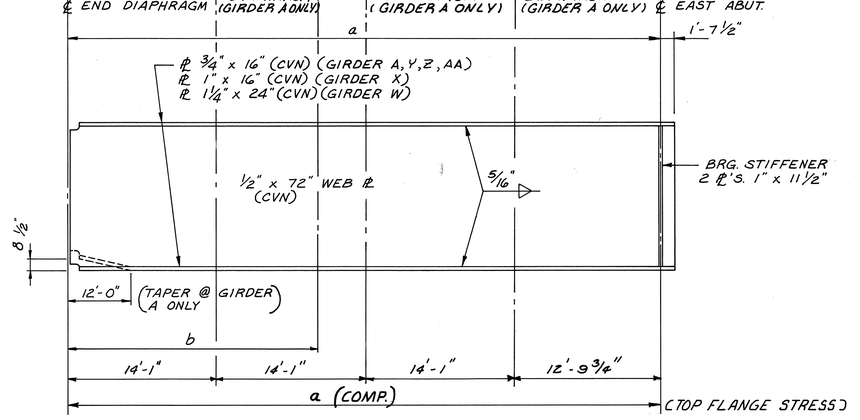

GIRDER A,W,X,Y,Z, & AA ELEVATION

⊕ GIRDER BB IS A FRACTURE CRITICAL MEMBER AND SHALL CONFORM TO THE AASHTO PUBLICATION: GUIDE SPECIFICATIONS FOR FRACTURE CRITICAL NON-REDUNDANT STEEL BRIDGE MEMBERS. DATED 1978 INCLUDING ALL INTERIM SPECIFICATIONS. HOWEVER, THE INSPECTION REQUIREMENTS OF THE PLAN WHICH PERTAIN TO THE ENGINEER OR HIS REPRESENTATIVE SHALL NOT BE BINDING ON THE ENGINEER OR HIS REPRESENTATIVE. THE CHARPY V NOTCH REQUIREMENTS IN TABLE 7.1 FOR ZONE 2, A36 STEEL SHALL BE 25 FT-LBS @ 40°F.

GIRDER	DIMENSION						
	(a)	(b)	(c)	(d)	(e)	(f)	(g)
A	55'-0 3/4"						
U	20'-0"	88'-11 1/8"	83'-6 1/2"	36'-9 3/8"	17'-6"	77'-5 5/8"	78'-0"
V	19'-6"	58'-11"	80'-6 1/4"	34'-7 7/8"	—	62'-5 1/4"	77'-0"
W	108'-6 1/8"	35'-8 1/4"					
X	76'-6 3/4"	25'-10 1/16"					
Y	54'-4 5/8"	24'-8 1/16"					
Z	33'-5 5/8"	20'-11 3/4"					
AA	16'-2 3/4"						

NOTES

(1) FOR NOTES, SEE SHEET 70/120

McCOY ASSOCIATES INC. 75/120
CONSULTING ENGINEERS
AKRON, OHIO

GIRDER ELEVATIONS
A, U THRU Z, AA, BB
BRIDGE NO. SUM.76-1277
AKRON EAST EXPRESSWAY
WEST VIADUCT

DESIGNED	DRAWN	TRACED	CHECKED	REVIEWED	DATE	REVISED
T.E.N.	T.E.N.	GT	T.E.N.	JBH	3-31-89	

FHWA REGION	STATE	PROJECT	
5	OHIO		

1020
12.14

SUMMIT COUNTY
SUM 76-11.57

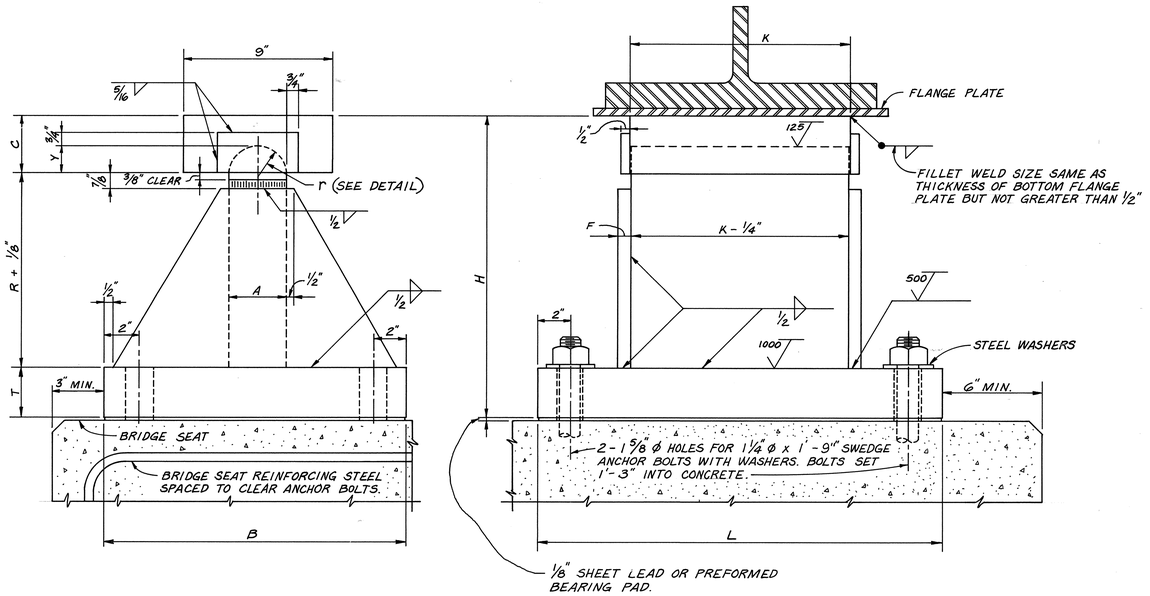

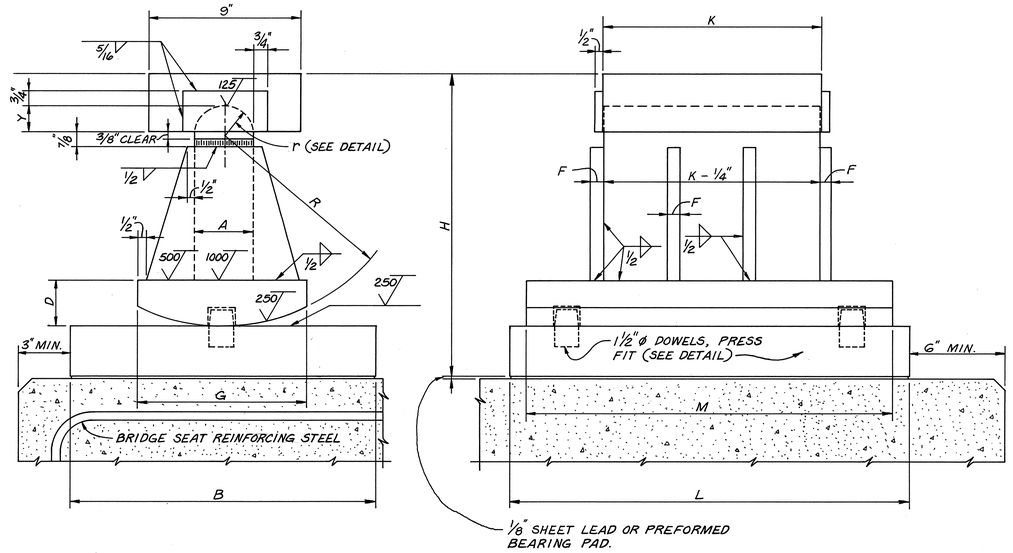

STRUCTURAL STEEL BOLSTER

SEE TABLE BELOW FOR ADDITIONAL DIMENSIONS

		DIMENSIONS (INCHES)													WEIGHT EACH (LB.)		MAXIMUM LOAD (LB.)
		A	B	C	D	F	G	H	K	L	M	R	T	Y	BOLSTER	ROCKER	
B-325	R-325	4	21	4	3 1/2	3/4	13	20 3/8	15	29	26	13	3 1/4	1 15/16	1060	1240	325,000
B-350	R-350	4	22	4	3 1/2	3/4	14	21 1/8	15	30	27	13 1/2	3 1/2	1 15/16	1170	1385	350,000
	R-350A	4	23	4	4	1	14	24 1/4	18	30	22	18	4	1 15/16			350,000
B-375	R-375	4	23	4 1/2	3 3/4	7/8	14	22 3/8	16	31	28	14	3 3/4	1 15/16	1350	1585	375,000
	R-375A	6	23	4 1/2	3 3/4	7/8	14	22 3/8	16	31	28	14	3 3/4	2 15/16			375,000
	R-400	4 1/2	24	4 1/2	4	7/8	14 1/2	23 1/8	17	33	30	14 1/2	4	2 3/16	1575	1865	400,000
	R-425	4 1/2	25	4 1/2	4	7/8	15	23 3/8	17	34	31	15	4	2 3/16		1960	425,000
	R-450	4 1/2	25	4 1/2	4 1/4	1	15 1/2	24 1/8	18	35	32	15 1/2	4	2 3/16		2100	450,000
	R-650	5	27	5 1/2	4 1/2	1	19	29 5/8	22	38	36	19 1/2	4 1/2	2 7/16			650,000

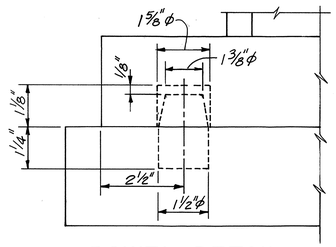

DOWEL DETAIL

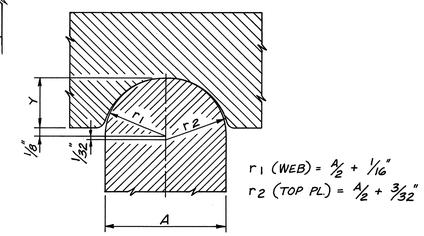

TOP BEARING DETAIL

STRUCTURAL STEEL ROCKER

SEE TABLE BELOW FOR ADDITIONAL DIMENSIONS

GIRDER / SUPPORT	A	B	C	D	E	F	G	H	J	K	L	M	N	P	R	S	T	U	V	W	X	Y	Z	A-A	B-B
WEST ABUT.	—	R-175	R-175	R-175	R-175	R-175	R-325	R-325	R-325	R-325	R-325	R-175	R-175	R-175	R-175	—	—	—	—	—	—	—	—	—	—
PIER 1	—	R-375	R-400	R-375	R-375	E-3	E-1	E-1	E-1	E-1	E-3	R-350	R-350	R-350	R-325	—	—	—	—	—	—	—	—	—	—
PIER 2	—	R-175	R-200	R-200	R-200	E-3	E-2	E-2	E-2	E-2	E-3	R-225	R-225	R-225	R-225	—	—	—	—	—	—	—	—	—	—
PIER 3	—	B-325	B-375	B-375	B-375	F-2	F-1	F-1	F-2	F-1	F-2	B-350	B-350	B-350	B-325	—	—	—	—	—	—	—	—	—	—
PIER 4	—	R-250	R-300	R-300	R-300	E-3	E-1	E-1	E-1	E-1	E-3	R-375	R-375	R-375	R-450	—	—	—	—	—	—	—	—	—	—
PIER 5	—	R-400	R-400	R-400	R-400	*R-400	*R-400	*R-400	*R-400	*R-400	*R-400	R-400	R-400	R-400	R-400	R-425	—	—	—	—	—	—	—	—	R-425
PIER 6	—	R-375A	R-375A	R-375A	R-375A	*R-375A	*R-375A	*R-375A	*R-375A	*R-375A	*R-375A	R-375A	R-375A	R-375A	R-375A	R-375	R-375	R-325	R-325	R-325	—	—	—	—	R-650
EAST ABUT.	R-75	R-350A	R-350A	R-350A	R-350A	R-350A	R-350A	R-350A	R-350A	R-350A	R-350A	R-350A	R-350A	R-350A	R-350A	R-150	R-150	R-150	R-150	R-150	R-125	R-125	R-125	R-75	R-275

NOTE: FOR EXISTING BEARING E-1, E-2, E-3, F-1, AND F-2 SEE NOTE (1) THIS SHEET.

BEARING LOCATION TABLE

* INDICATES A588 HIGH STRENGTH STEEL.

NOTES

(1) EXISTING BEARINGS TO BE REUSED AND/OR MOVED ARE AS FOLLOWS:

A. PIER 1
BEARINGS FROM GIRDERS G, H, J AND K AT PIER 5 SHALL BE MOVED TO GIRDERS G, H, J AND K AT PIER 1. BEARINGS FROM GIRDERS G AND K AT THE WEST ABUTMENT SHALL BE MOVED TO GIRDERS F AND L AT PIER 1.

B. PIER 2
BEARINGS ON ALL GIRDERS AT PIER 2 SHALL REMAIN.

C. PIER 3
BEARINGS FROM GIRDERS G, J AND K AT PIER 1 SHALL BE MOVED TO GIRDERS F, J AND L AT PIER 3. BEARINGS AT GIRDERS G, H AND K AT PIER 3 SHALL REMAIN.

D. PIER 4
BEARINGS FROM GIRDERS G AND K AT THE EAST ABUTMENT SHALL BE MOVED TO GIRDERS F AND L AT PIER 4. BEARINGS AT GIRDERS G, H, J AND K AT PIER 4 SHALL REMAIN.

(2) FOR ROCKERS R-75, R-125, R-150, R-175, R-200, R-225, R-250, R-275 AND R-300 SEE STANDARD DRAWING RB-1-55.

McCOY ASSOCIATES INC. 76/120
CONSULTING ENGINEERS
AKRON, OHIO

BEARING DETAILS

BRIDGE NO. SUM. 76-1277
AKRON EAST EXPRESSWAY
WEST VIADUCT

DESIGNED	DRAWN	TRACED	CHECKED	REVIEWED	DATE	REVISED
JBH	CT		M.A.M.	JBH	3-30-89	

FHWA REGION	STATE	PROJECT	
5	OHIO		

(102.1) 12.14

SUMMIT COUNTY
SUM 76-11.57

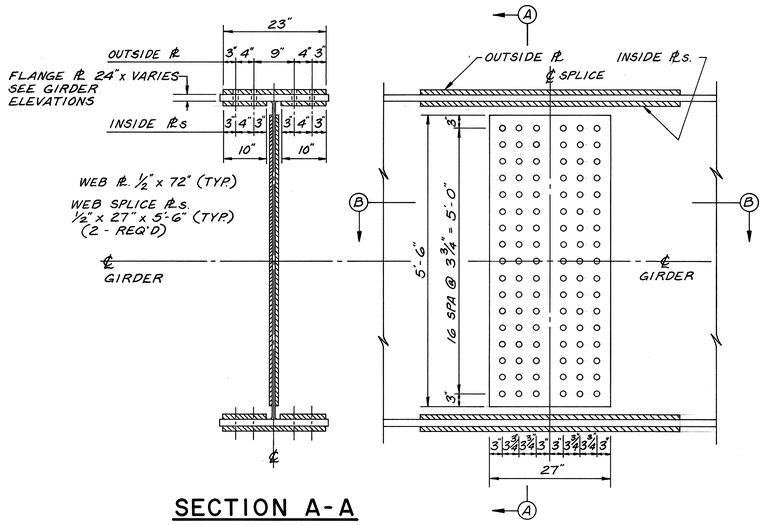

SECTION A-A

GIRDER SPLICE DETAIL A

TYPE 1-7,3A

WEB SPLICE (TYP.)

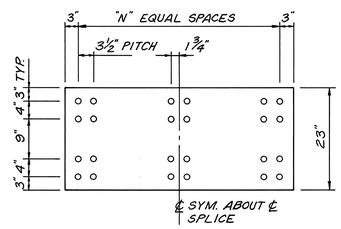

OUTSIDE FLANGE SPLICE PL.

TYPE 1-7, 10-14,3A

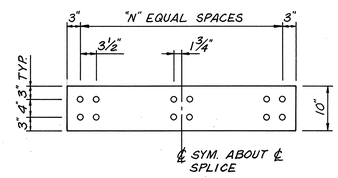

INSIDE FLANGE SPLICE PLS.

TYPE 1-7, 10-14,3A

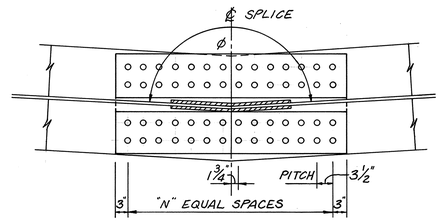

SECTION B-B

GIRDER SPLICE DATA

TYPE	FLANGE SPLICE: FLANGE PLATES OUTSIDE (2 - REQ'D)	FLANGE SPLICE: FLANGE PLATES INSIDE (4 - REQ'D)	FLANGE SPLICE: Ø	FLANGE SPLICE: "N"	FLANGE SPLICE: FLANGE BOLTS (1" DIA.)	WEB SPLICE: WEB PLATE (2 REQ'D)	WEB SPLICE: WEB BOLTS (1" DIA.)	REMARKS
1	¾" x 23" x 3'-8½"	¾" x 10" x 3'-8½"	178°-02'-34" @ BEND NO. 2 @ GIRDERS C, D, E 176°-59'-58" @ BEND NO. 1 @ GIRDERS M, N, P, R 177°-44'-20" @ BEND NO. 2 @ GIRDERS M, N, P, R	11	48 TOP 48 BOT.	½" x 27" x 5'-6"	102	@ BENDS - SEE SECTION B-B
2	¾" x 23" x 3'-8½"	¾" x 10" x 3'-8½"	———	11	48 TOP 48 BOT.	" " "	"	
3	⅞" x 23" x 4'-3½"	⅞" x 10" x 4'-3½"	176°-35'-04" @ BEND NO. 1 @ GIRDERS C, D, E	13	56 TOP 56 BOT.	" " "	"	@ BEND - SEE SECTION B-B
4	¾" x 23" x 3'-1½"	¾" x 10" x 3'-1½"	———	9	40 TOP 40 BOT.	" " "	"	
5	½" x 23" x 2'-6½"	½" x 10" x 2'-6½"	178°-02'-34" @ BEND NO. 2 @ GIRDER B	7	32 TOP 32 BOT.	" " "	"	@ BEND - SEE SECTION B-B
6	½" x 23" x 2'-6½"	½" x 10" x 2'-6½"	———	7	32 TOP 32 BOT	" " "	"	
7	⅝" x 23" x 3'-1½"	⅝" x 10" x 3'-1½"	———	9	40 TOP 40 BOT	" " "	"	
3A	1" x 23" x 4'-10½"	1" x 10" x 4'-10½"	176°-35'-04" @ BEND NO. 1 @ GIRDER B	15	64 TOP 64 BOT	" " "	"	@ BEND - SEE SECTION - B-B

NOTES:

1. HIGH STRENGTH BOLTS SHALL BE 1" Ø A 325 UNLESS NOTED OTHERWISE.
2. ALL SPLICE MATERIAL EXCEPT FILL PLATES SHALL BE "CVN" AND SHALL MEET MINIMUM NOTCH TOUGHNESS REQUIREMENTS AS SPECIFIED IN 711.01 OF CMS
3. BOLTS SHALL BE PLACED WITH THEIR HEADS ON THE OUTSIDE FACE OF EXTERIOR BEAMS AND ON THE BOTTOM OF THE BOTTOM FLANGES AND THE TOP OF TOP FLANGES

McCOY ASSOCIATES INC. 77/120
CONSULTING ENGINEERS
AKRON, OHIO

SPLICE DETAILS I

BRIDGE NO. SUM. 76-1277
AKRON EAST EXPRESSWAY
WEST VIADUCT

DESIGNED	DRAWN	TRACED	CHECKED	REVIEWED	DATE	REVISED
RGS	RGS	GT	JBH	JBH	3-30-89	

FHWA REGION	STATE	PROJECT	
5	OHIO		

10222
12.14

SUMMIT COUNTY
SUM 76 - 11.57

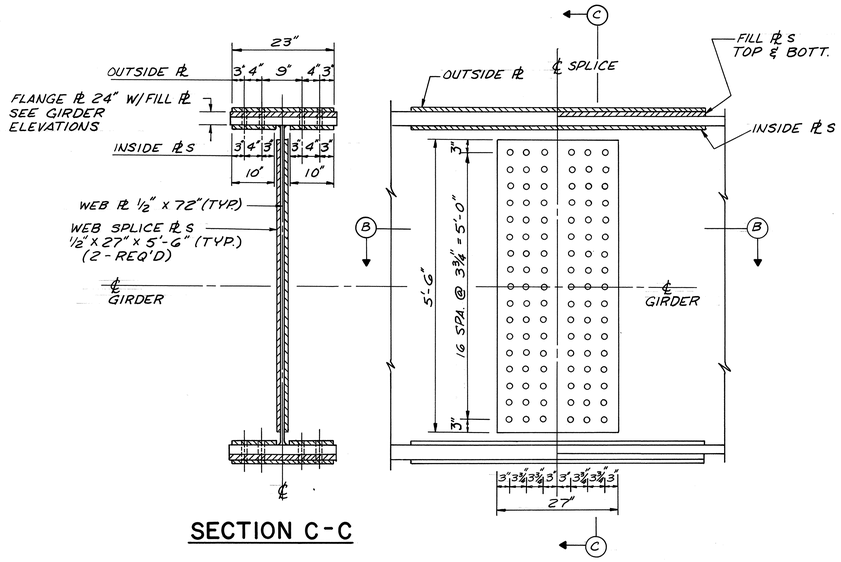

SECTION C-C

GIRDER SPLICE DETAIL W/ FILL PL.

TYPE 10-14

WEB SPLICE (TYP.)

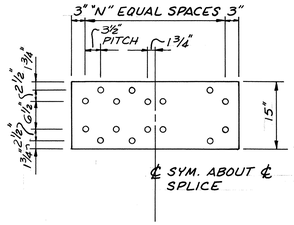

OUTSIDE FLANGE SPLICE PL.

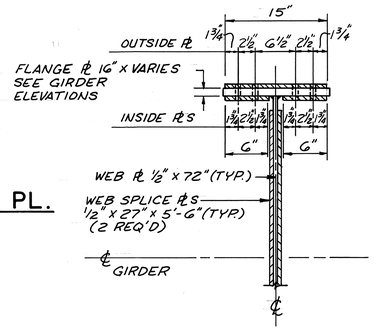

TYPICAL SECTION

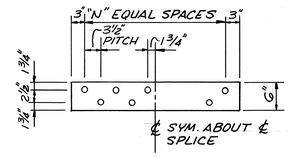

INSIDE FLANGE SPLICE PLS.

GIRDER SPLICE DETAILS, TYPE 9

NOTES:

1. FOR GIRDER SPLICE DETAIL A, SECTION B-B AND TYPE 10-14 FLANGE SPLICE PLATE DETAILS, SEE SHEET 77/120
2. SEE NOTES 1, 2 & 3 ON SHEET 77/120

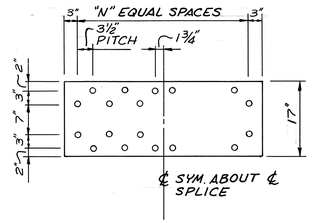

OUTSIDE FLANGE SPLICE PL.

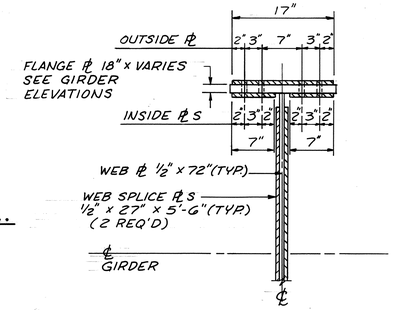

TYPICAL SECTION

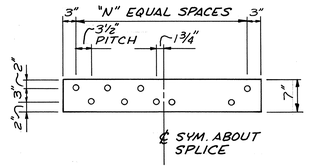

INSIDE FLANGE SPLICE PLS.

GIRDER SPLICE DETAILS, TYPE 8

GIRDER SPLICE DATA

TYPE	FLANGE SPLICE: FLANGE PLATES: OUTSIDE (2 - REQ'D)	FLANGE SPLICE: FLANGE PLATES: INSIDE (4 - REQ'D)	FLANGE SPLICE: Ø	FLANGE SPLICE: "N"	FLANGE SPLICE: FLANGE BOLTS (1" DIA.)	WEB SPLICE: WEB PLATE (2 - REQ'D)	WEB SPLICE: WEB BOLTS (1" DIA.)	REMARKS
8	1/2" x 17" x 3'-8 1/2"	1/2" x 7" x 3'-8 1/2"	———	11	24 TOP 24 BOT.	1/2" x 27" x 5'-6"	102	SEE GIRDER SPLICE - DETAIL A FOR WEB PLATES
9	1/2" x 15" x 3'-1 1/2"	1/2" x 6" x 3'-1 1/2"	———	11	20 TOP 20 BOT.	" " "	"	SEE GIRDER SPLICE - DETAIL A FOR WEB PLATES
10	1/2" x 23" x 2'-6 1/2"	1/2" x 10" x 2'-6 1/2"	175°-36'-00" @ BEND NO. 1 ~ GIRDER BB	7	32 TOP 32 BOT.	" " "	"	@ BEND - SEE SECTION B-B (SIM.)
11	1/2" x 23" x 4'-3 1/2"	1/2" x 10" x 4'-3 1/2"	176°-19'-42" @ BEND NO. 2 ~ GIRDER BB	13	56 TOP 56 BOT.	" " "	"	FILL ℄ 1/4" x 24" x 2'-1 3/4" TOP & BOT. REQ'D. @ BEND SEE SECTION B-B (SIM.)
12	1/2" x 23" x 4'-3 1/2"	1/2" x 10" x 4'-3 1/2"	178°-12'-24" @ BEND NO. 3 ~ GIRDER BB	13	56 TOP 56 BOT.	" " "	"	FILL ℄ 1/4" x 24" x 2'-1 3/4" TOP & BOT. REQ'D. @ BEND SEE SECTION B-B (SIM)
13	7/8" x 23" x 5'-5 1/2"	7/8" x 10" x 5'-5 1/2"	174°-40'-48" @ BEND NO. 4 ~ GIRDER BB	17	72 TOP 72 BOT.	" " "	"	FILL ℄ 1" x 24" x 2'-8 3/4" TOP & BOT. REQ'D. @ BEND SEE SECTION B-B (SIM.)
14	1" x 23" x 4'-10 1/2"	1" x 10" x 4'-10 1/2"	174°-47'-53" @ BEND NO. 5 ~ GIRDER BB	15	64 TOP 64 BOT.	" " "	"	@ BEND - SEE SECTION B-B (SIM.)

McCOY ASSOCIATES INC. 78/120
CONSULTING ENGINEERS
AKRON, OHIO

SPLICE DETAILS II

BRIDGE NO. SUM. 76-1277
AKRON EAST EXPRESSWAY
WEST VIADUCT

DESIGNED	DRAWN	TRACED	CHECKED	REVIEWED	DATE	REVISED
RGS	RGS	MRA	JBH	JBH	3-30-87	

12276

FHWA REGION	STATE	PROJECT	
5	OHIO		

102.2 / 1214

SUMMIT COUNTY
SUM 76 - 11.57

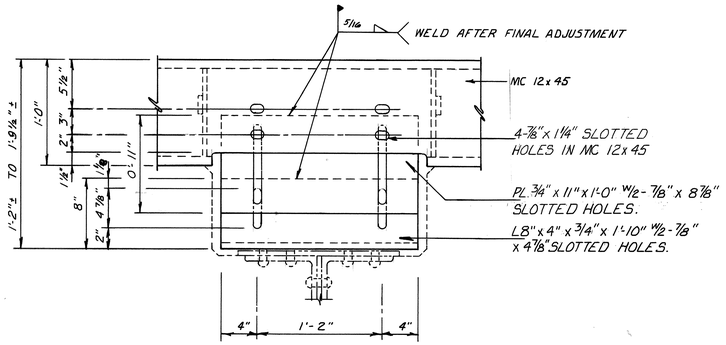

DETAIL 1

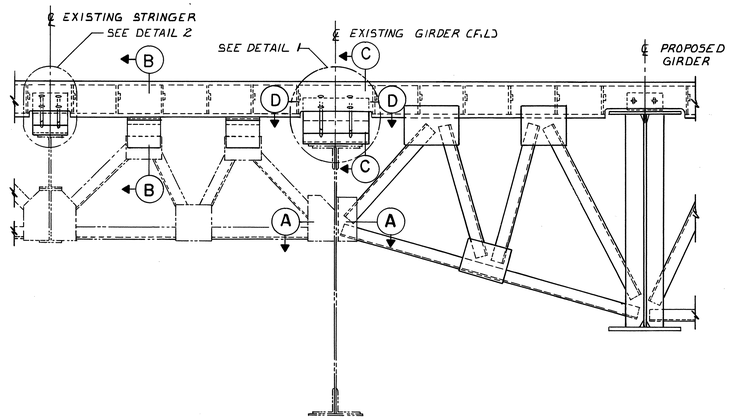

PARTIAL END CROSSFRAME DETAIL

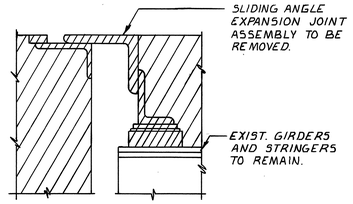

REMOVAL DETAIL

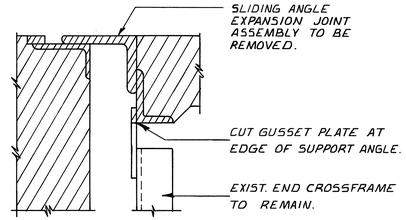

REMOVAL DETAIL

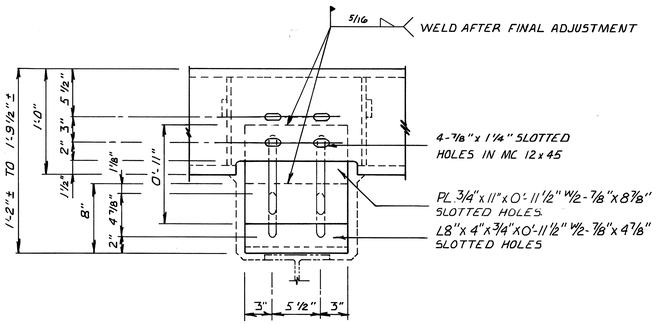

DETAIL 2

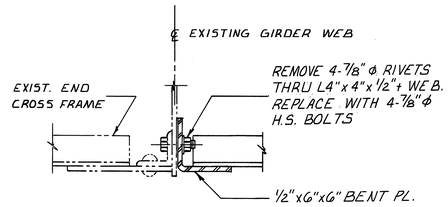

SECTION A A

TABLE A	
TEMPERATURE °F	JOINT OPENING (IN.) (DIM. "A")
90	1⅛"
80	1⅜"
70	1⅝"
60	1 13/16"
50	2⅛"
40	2⅜"
30	2⅝"

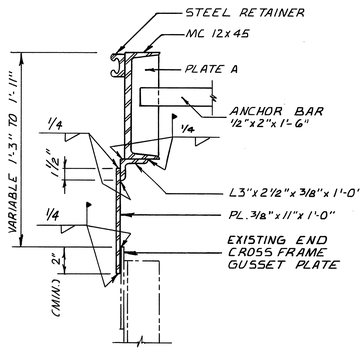

SECTION BB

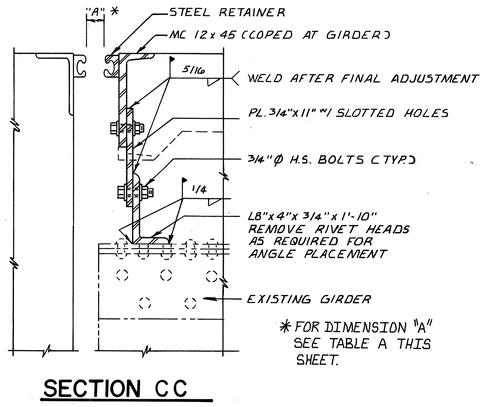

* FOR DIMENSION "A" SEE TABLE A THIS SHEET.

SECTION CC

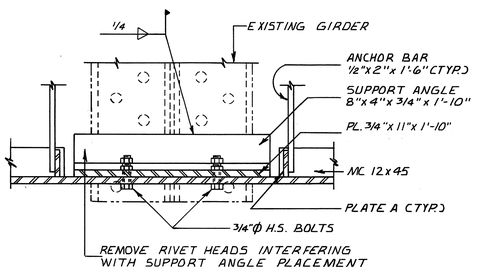

SECTION DD

NOTES

1. FOR ADDITIONAL DETAILS SEE STANDARD DRAWING EXJ-4-87.
2. FOR FRAMING PLANS, SEE SHEETS 62/120 THRU 67/120.
3. FOR SLAB PLANS, SEE SHEETS 91/120 THRU 96/120.
4. ALL BOLTS SHALL BE HIGH STRENGTH A-325.

McCOY ASSOCIATES, INC. 79/120
CONSULTING ENGINEERS
AKRON, OHIO

EXPANSION JOINT DETAILS AT WEST ABUTMENT

BRIDGE NO. SUM 76 - 1277
AKRON EAST EXPRESSWAY
WEST VIADUCT

DESIGNED	DRAWN	TRACED	CHECKED	REVIEWED	DATE	REVISED
T.E.N.	T.E.N.	J.W.O.	J.B.H.	J.B.H.	3-31-89	

320691

FHWA REGION	STATE	PROJECT	
5	OHIO		

1024
1214

SUMMIT COUNTY
SUM 76-11.57

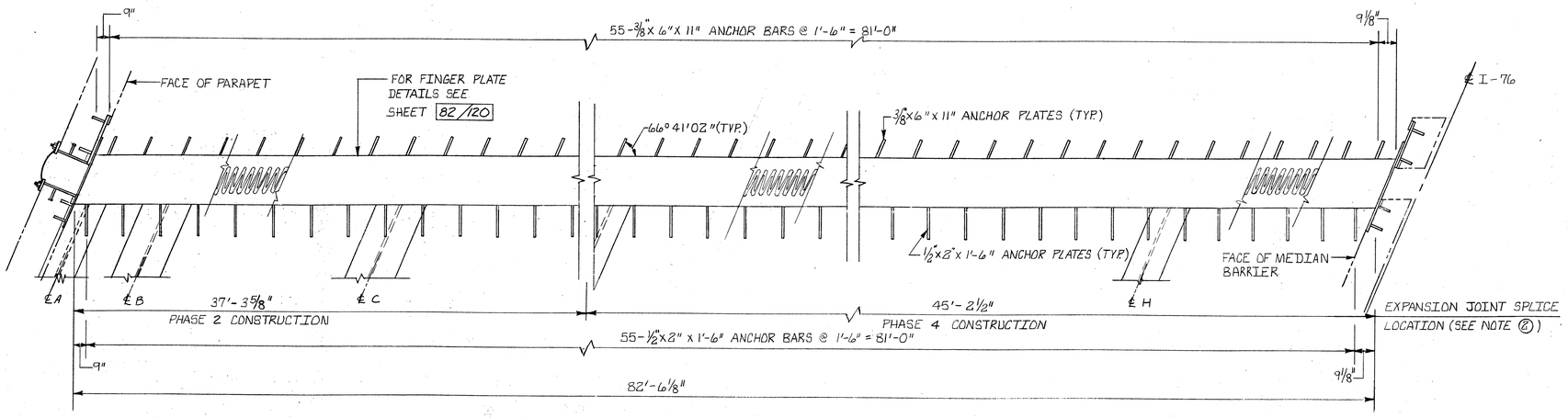

EXPANSION JOINT PLAN - EAST ABUTMENT

(WEST BOUND)
(CONCRETE NOT-SHOWN)

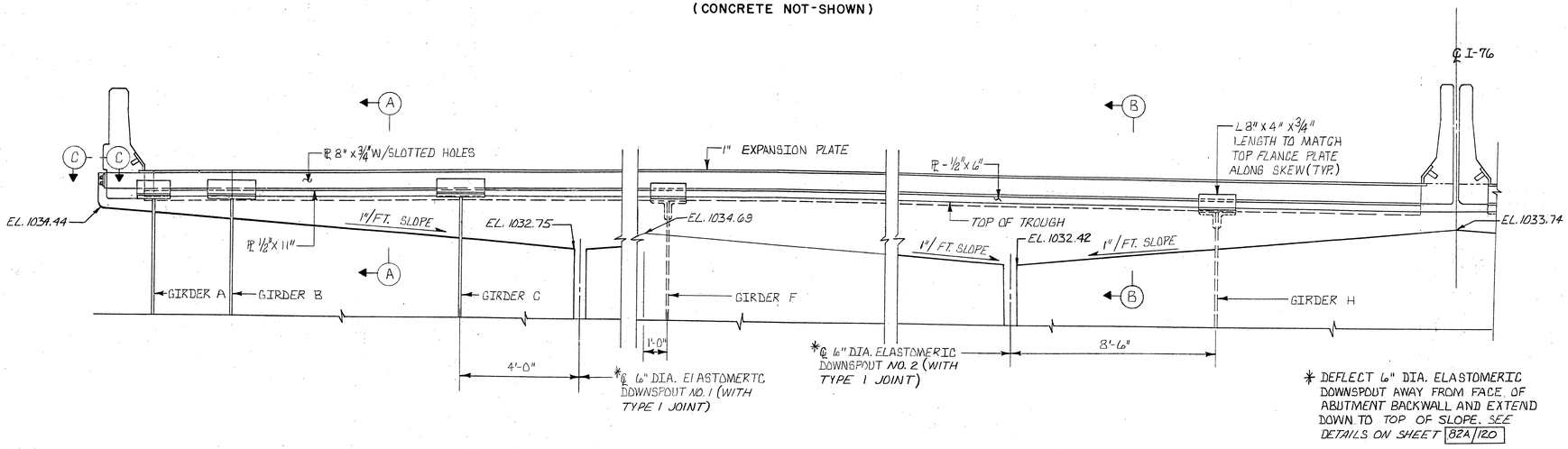

TRANSVERSE SECTION AT EAST ABUTMENT

(WEST BOUND)

NOTES

1. FOR SECTION A-A, B-B AND TROUGH DETAILS SHEETS 82/120 AND 82A/120
2. THE EXPANSION JOINT SPLICE SHALL BE FIELD WELDED AND THE ELASTOMERIC TROUGH SHALL BE SPLICED WITH A TYPE 2 JOINT. SEE SHEET 82/120 FOR ELASTOMERIC SPLICE DETAILS.
3. FOR CURB PLATE DETAILS SEE STANDARD DRAWING SD-1-89 SHEET 2 OF 4.
4. FOR END CROSSFRAME DETAILS SEE SHEET 82B/120
5. CONCRETE SURFACE ADJACENT TO FINGER PLATES SHALL BE FINISHED FLUSH WITH OR SLIGHTLY ABOVE THE STEEL JOINT SURFACE

McCOY ASSOCIATES, INC.
CONSULTING ENGINEERS
AKRON, OHIO

80/120

EXPANSION JOINT DETAILS AT EAST ABUTMENT

BRIDGE NO. SUM.76-1277
AKRON EAST EXPRESSWAY
WEST VIADUCT

DESIGNED	DRAWN	TRACED	CHECKED	REVIEWED	DATE	REVISED
JGC	PNA		JBH	JBH	7-19-90	

S20691

FHWA REGION	STATE	PROJECT	
5	OHIO		

1025
1214

SUMMIT COUNTY
SUM. 76-11.57

NOTES

1. FOR NOTES SEE SHEET 80/120

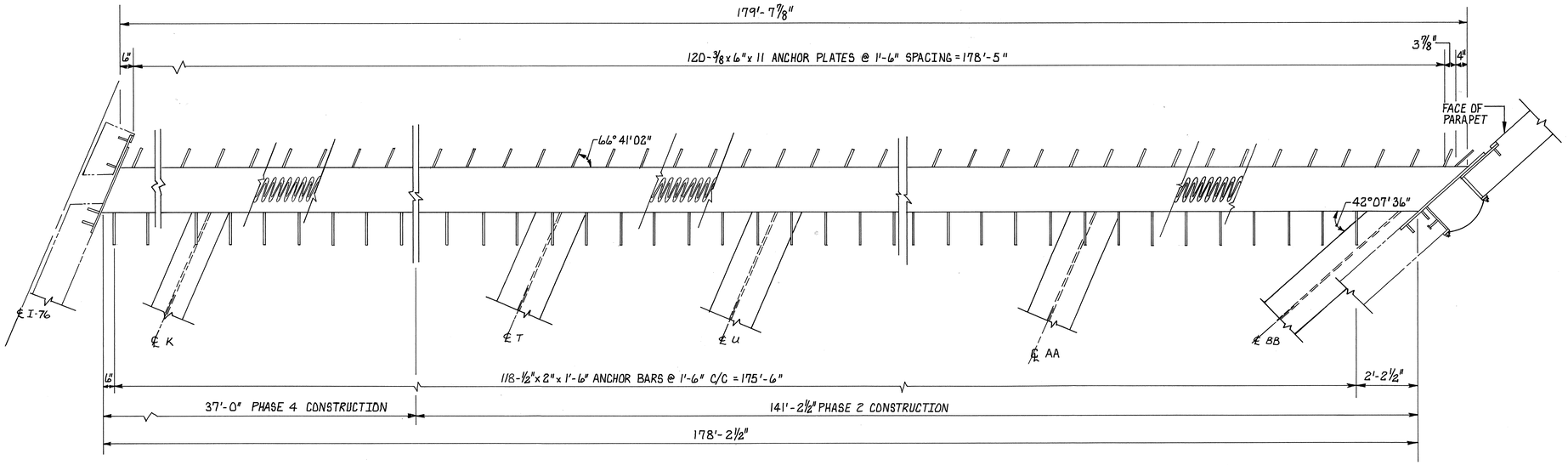

EXPANSION JOINT PLAN - EAST ABUTMENT

(EAST BOUND)
(CONCRETE NOT SHOWN)

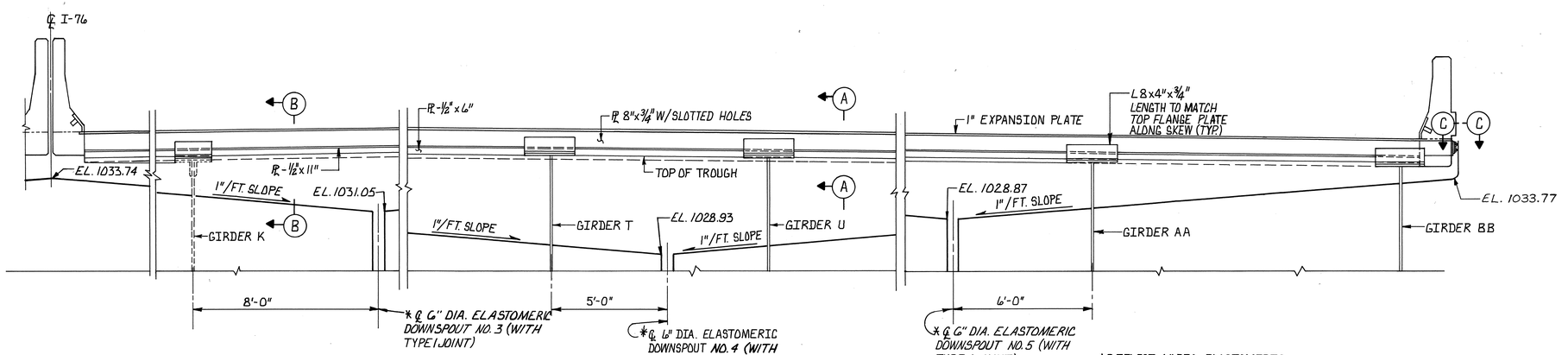

NOTE: THE CROWN OF THE BOTTOM OF THE ELASTOMERIC TROUGH IS LOCATED 4'-0" SOUTH OF GIRDER M BETWEEN DOWNSPOUTS NO. 3 AND NO. 4 AT AN ELEVATION OF 1032.95 AND 3'-6" SOUTH OF GIRDER W BETWEEN DOWNSPOUTS NO. 4 AND NO. 5 AT AN ELEVATION OF 1031.17

*DEFLECT 6" DIA. ELASTOMERIC DOWN SPOUT AWAY FROM FACE OF ABUTMENT BACKWALL AND EXTEND DOWN TO TOP OF SLOPE. SEE DETAILS ON SHEET 82A/120.

TRANSVERSE SECTION AT EAST ABUTMENT

(EAST BOUND)

McCOY ASSOCIATES, INC.
CONSULTING ENGINEERS
AKRON, OHIO

81/120

EXPANSION JOINT DETAILS AT EAST ABUTMENT

BRIDGE NO. SUM. 76-1277
AKRON EAST EXPRESSWAY
WEST VIADUCT

DESIGNED	DRAWN	TRACED	CHECKED	REVIEWED	DATE	REVISED
JGC	PNA		JBH	JBH	7-19-90	

220591

FHWA REGION	STATE	PROJECT	
5	OHIO		

102.6
1214

SUMMIT COUNTY
SUM 76-11.57

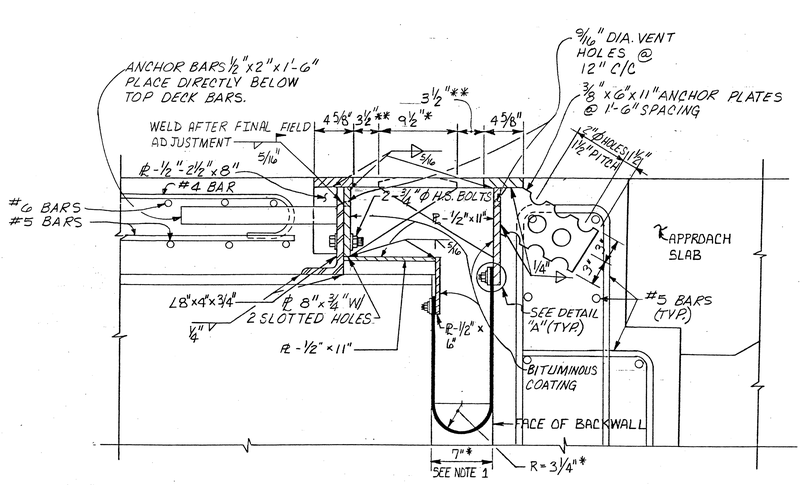

* DIMENSION @ 60° F

** JOINT OPENING DIMENSION @ 60° F. FOR OTHER DIMENSIONS SEE TABLE A. THIS SHEET.

SECTION A-A

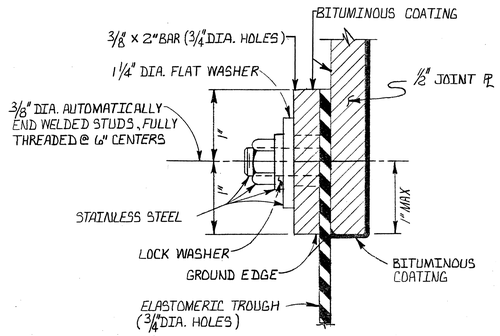

DETAIL "A"

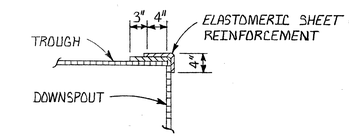

TYPE 1 JOINT

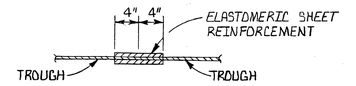

TYPE 2 JOINT

NOTES

(1) THE EXISTING GIRDERS SHALL BE TRIMMED TO PROVIDE 1" OF CLEARANCE FROM THE EAST ABUTMENT BACKWALL @ 60°F. AND SHALL BE PAID UNDER ITEM 513 TRIMMING OF BEAM END.

(2) FOR ADDITIONAL DETAILS AND NOTES SEE SHEETS 80/120 81/120 AND 82A/120

TABLE A	
EXPANSION JOINT OPENING	
TEMPERATURE (°F)	OPENING (INCHES)
90	2 1/4
80	2 11/16
70	3 1/16
60	3 1/2
50	3 15/16
40	4 5/16
30	4 3/4

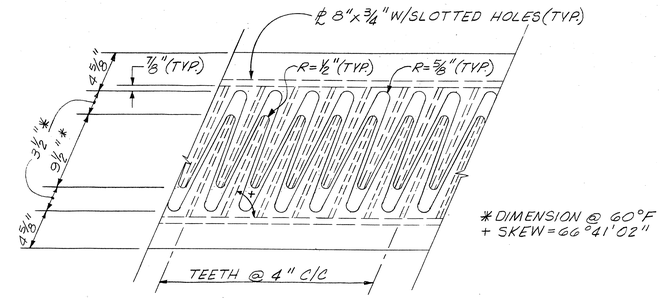

* DIMENSION @ 60°F
+ SKEW = 66°41'02"

FINGER PLATE DETAIL

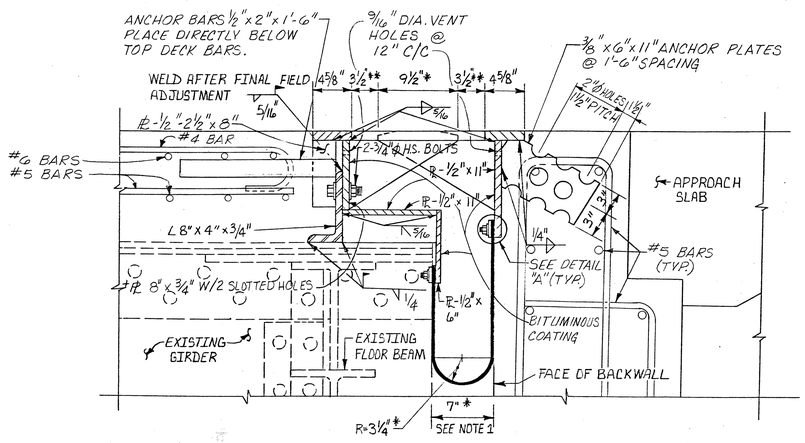

* DIMENSION @ 60° F

** JOINT OPENING DIMENSION @ 60° F. FOR OTHER DIMENSIONS SEE TABLE A. THIS SHEET.

\+ AN ADDITIONAL PLATE SHALL BE INCLUDED BETWEEN THE L 8"x 4"x ¾" AND THE PL 8"x¾" AT GIRDERS F & L. FOR DETAILS SEE END CROSSFRAME DETAIL ON SHEET 82B/120 .

SECTION B-B

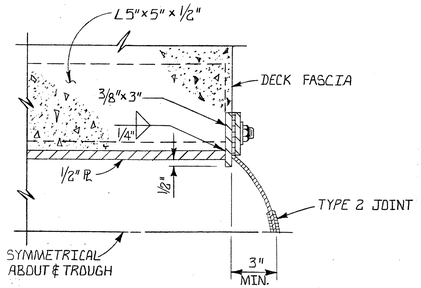

SECTION C-C

McCOY ASSOCIATES, INC. 82/120
CONSULTING ENGINEERS
AKRON, OHIO

EXPANSION JOINT DETAIL AT EAST ABUTMENT

BRIDGE NO. SUM. 76-1277
AKRON EAST EXPRESSWAY
WEST VIADUCT

DESIGNED	DRAWN	TRACED	CHECKED	REVIEWED	DATE	REVISED
JGC	PNA		JBH	JBH	7-19-90	

520691

FHWA REGION	STATE	PROJECT	
5	OHIO		

1027
1214

SUMMIT COUNTY
SUM 76-11.57

NOTES

1. FOR DOWNSPOUT LOCATIONS SEE SHEETS 80/120 AND 81/120
2. DOWNSPOUTS AND FITTINGS TO BE INCLUDED WITH ITEM SPECIAL, NEOPRENE DRAINAGE TROUGH FOR PAYMENT.

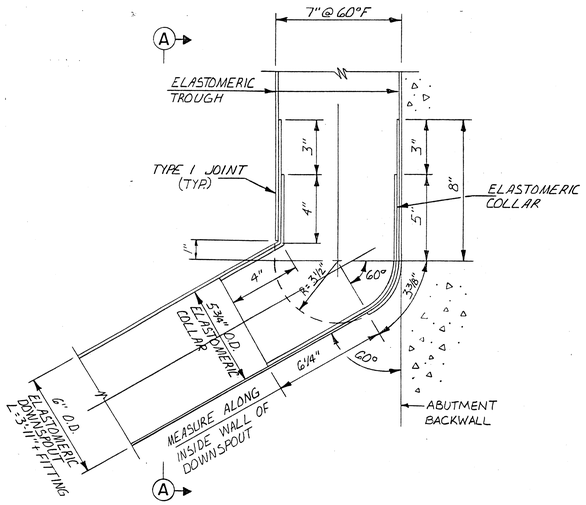

DETAIL 1

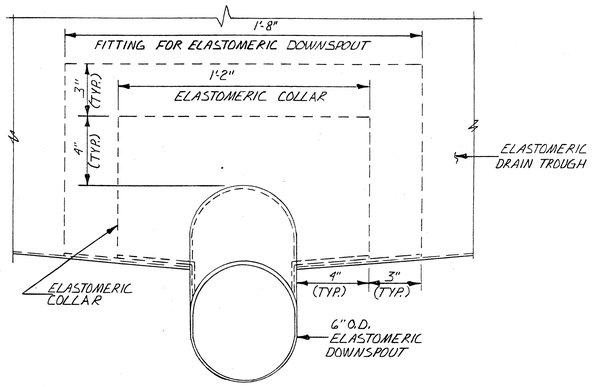

SECTION A-A

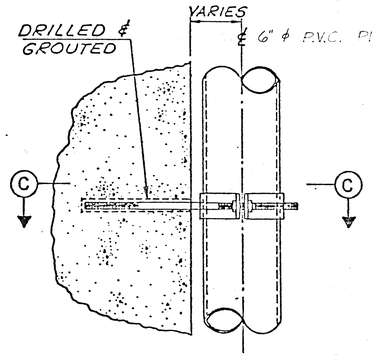

MOUNTING BRACKET DETAIL

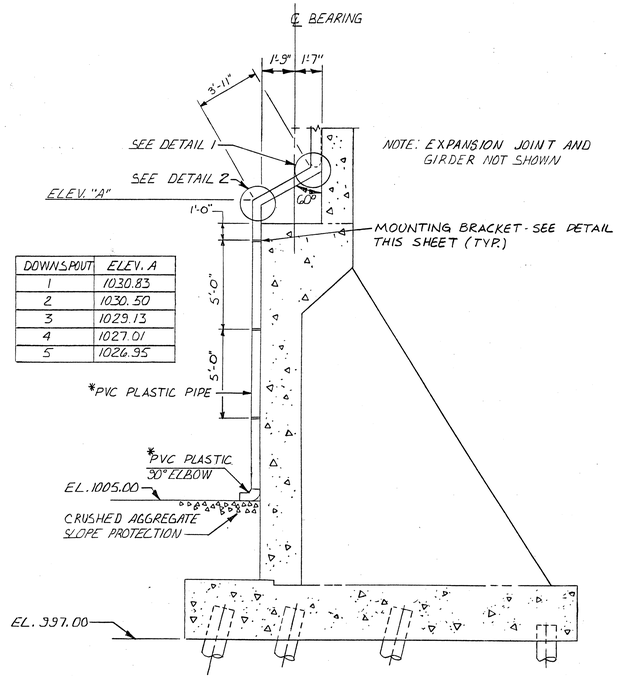

DOWNSPOUT	ELEV. A
1	1030.83
2	1030.50
3	1029.13
4	1027.01
5	1026.95

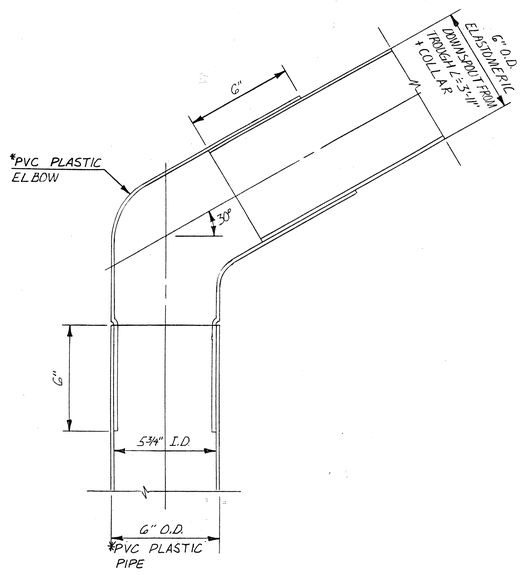

DETAIL 2

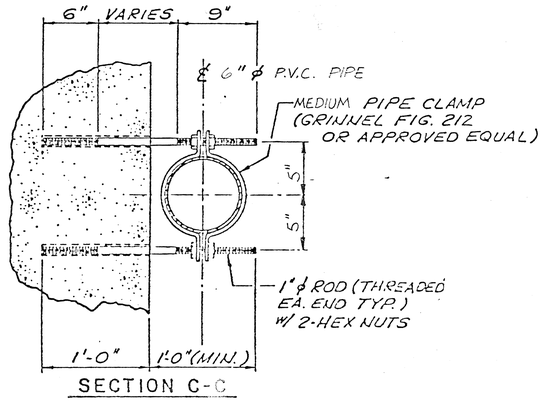

SECTION C-C

* PVC PIPE AND FITTINGS SHALL MEET 707.19 AND ARE INCLUDED WITH ITEM SPECIAL, NEOPRENE DRAINAGE TROUGH FOR PAYMENT.

McCOY ASSOCIATES, INC.
CONSULTING ENGINEERS
AKRON, OHIO

82A/120

EXPANSION JOINT DETAIL AT EAST ABUTMENT

BRIDGE NO. SUM 76-1277
AKRON EAST EXPRESSWAY
WEST VIADUCT

DESIGNED	DRAWN	TRACED	CHECKED	REVIEWED	DATE	REVISED
JGC	JWD		JBH	JBH	8-21-90	

FHWA REGION	STATE	PROJECT	
5	OHIO		

1028
12.14

SUMMIT COUNTY
SUM 76-11.57

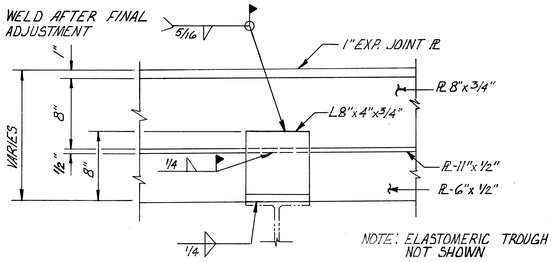

DETAIL 1

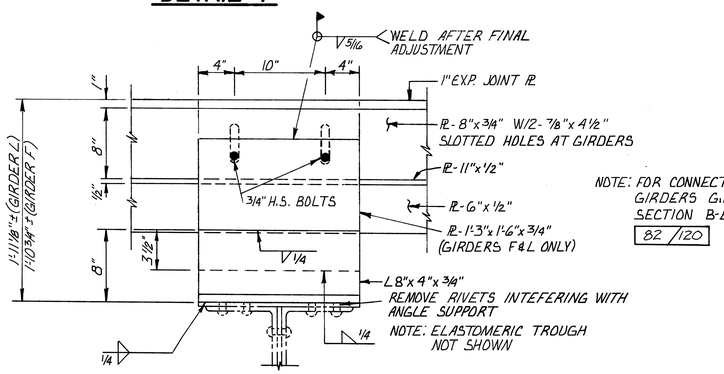

NOTE: FOR CONNECTIONS AT EXISTING GIRDERS G,H,J AND K SEE SECTION B-B ON SHEET 82/120

DETAIL 2

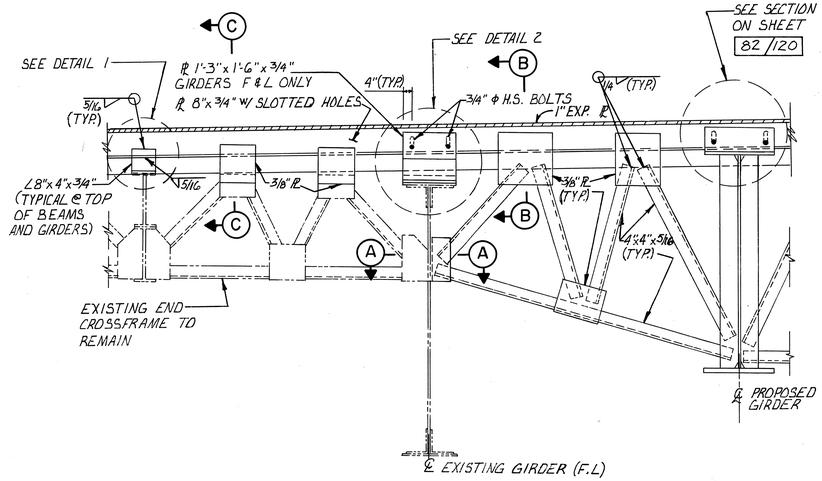

PARTIAL END CROSSFRAME DETAIL

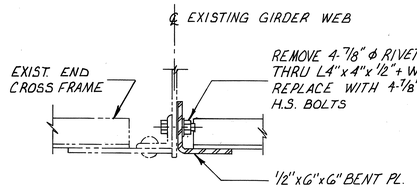

SECTION A-A

SECTION B-B

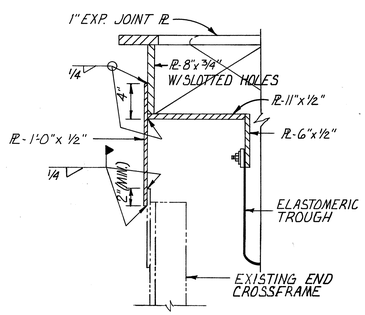

SECTION C-C

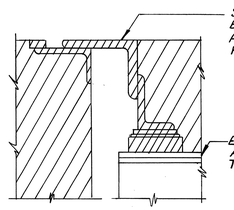

REMOVAL DETAIL

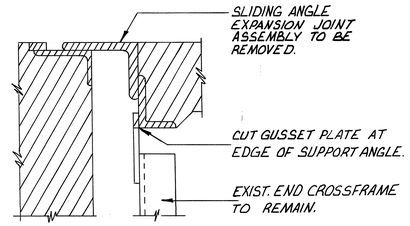

REMOVAL DETAIL

NOTES:

1. ALL BOLTS SHALL BE HIGH STRENGTH A-325
2. FOR EXPANSION JOINT DETAILS SEE SHEETS 80/120 THRU 82A/120

McCOY ASSOCIATES INC. 82B/120
CONSULTING ENGINEERS
AKRON, OHIO

EXPANSION JOINT DETAILS AT EAST ABUTMENT

BRIDGE NO. SUM. 76-1277
AKRON EAST EXPRESSWAY
WEST VIADUCT

DESIGNED	DRAWN	TRACED	CHECKED	REVIEWED	DATE	REVISED
JGC	JWO		JBH	JBH	7-19-90	

FHWA REGION	STATE	PROJECT	
5	OHIO		

1029
1214

SUMMIT COUNTY
SUM 76-11.57

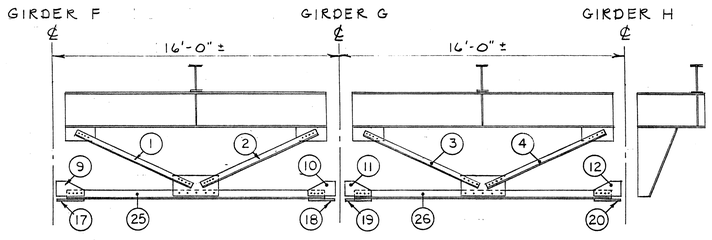

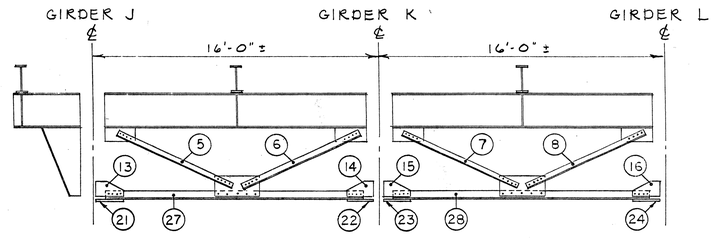

NOTES

1. QUANTITIES FOR MEMBERS, PORTIONS OF MEMBERS AND RIVETS REQUIRING REPLACEMENT ARE BASED UPON A FIELD INSPECTION IN OCTOBER OF 1988. ADDITIONAL MEMBERS MAY REQUIRE REPLACEMENT AT THE TIME OF CONSTRUCTION AS DIRECTED BY THE ENGINEER. ALL REPAIRS WILL BE PAID FOR UNDER ITEM 202, PORTIONS OF STRUCTURES REMOVED AND ITEM 513, STRUCTURAL STEEL FOR REHABILITATION, AS PER PLAN.
2. SEE SHEET 83A/120 AND 83B/120 FOR SPLICE DETAILS AT REMOVED EXPANSION ROLLER.

CROSSFRAMES AT EXPANSION ROLLERS

	MEMBERS TO BE REPLACED																										
	1	2	3	4	5	6	7	8	9	10	11	12	13	14	15	16	17	18	19	20	21	22	23	24	25	26	27	28
ROLLER #1-WEST SIDE		X							X	X	X	X	X	X	X	X	X	X	X	X	X	X	X	X	X	X	X	X
-EAST SIDE									X	X	X	X	X	X	X	X	X	X	X	X	X	X	X	X	X	X	X	X
ROLLER #2-WEST SIDE			X	X					X	X	X	X	X	X	X	X	X	X	X	X	X	X	X	X	X	X	X	X
-EAST SIDE			X	X					X	X	X	X	X	X	X	X	X	X	X	X	X	X	X	X	X	X	X	X

MEMBERS	TYPE
1-8	L 4"×4"×3/8"
9-16	1/2" PL.
17-24	1/2" PL.
25-28	ST 6×20

TOTAL WEIGHT OF REPLACED CROSS FRAME MEMBERS INCLUDING A-325 HIGH STRENGTH BOLTS = 10,200#
TOTAL WEIGHT OF ANGLES REPLACED AT REMOVED EXP. ROLLERS 8860#
19,060#

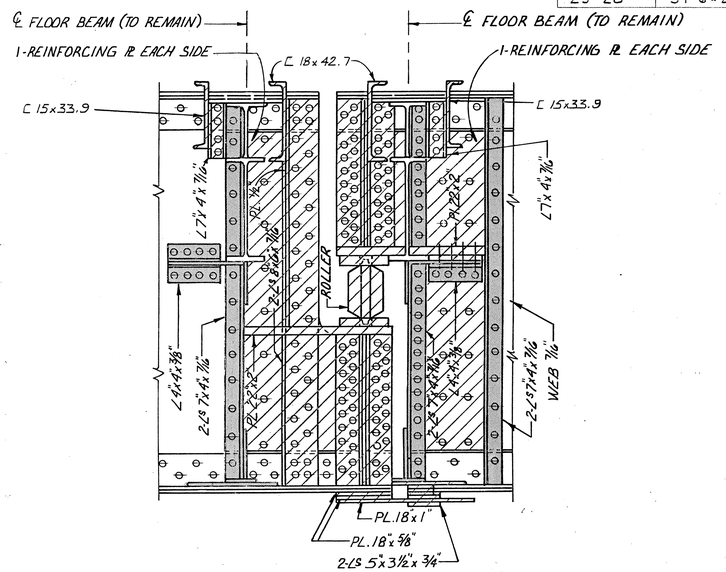

EXISTING EXPANSION JOINT REMOVAL DETAIL
WITH K-TYPE BRACING BELOW FLOOR BEAM

LEGEND

STEEL TO BE REMOVED

STEEL TO BE REMOVED AND REPLACE IN KIND.

STEEL TO REMAIN (EXCEPT WHERE TO BE REPLACED, SEE SHEETS 84 AND 85.)

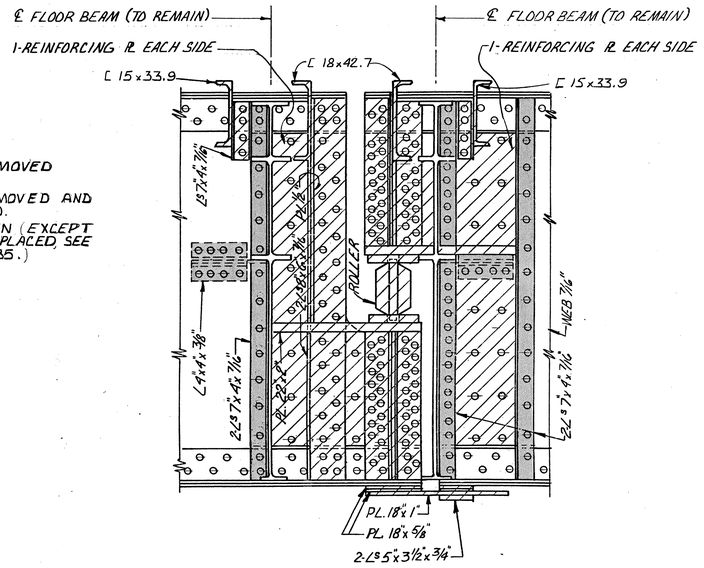

EXISTING EXPANSION JOINT REMOVAL DETAIL
WITH KNEE BRACE BELOW FLOOR BEAM

McCOY ASSOCIATES INC. 83/120
CONSULTING ENGINEERS
AKRON, OHIO

EXISTING EXPANSION ROLLER REMOVAL

BRIDGE NO. SUM. 76-1277
AKRON EAST EXPRESSWAY
WEST VIADUCT

DESIGNED	DRAWN	TRACED	CHECKED	REVIEWED	DATE	REVISED
T.E.N.	T.E.N.		JBH	JBH	3-31-89	

FHWA REGION	STATE	PROJECT	
5	OHIO		

1030
1214

SUMMIT COUNTY
SUM 76-11.57

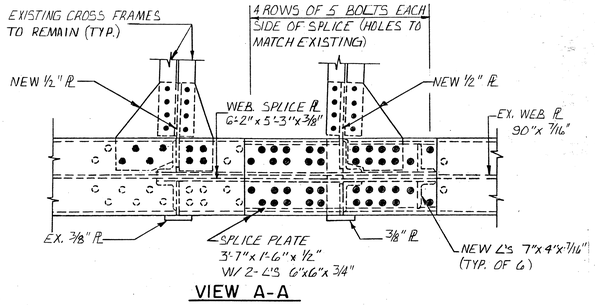

VIEW A-A

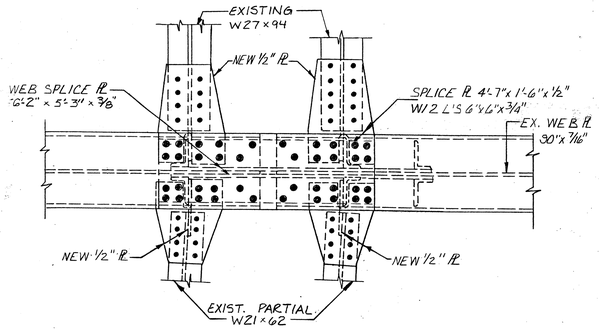

VIEW B-B

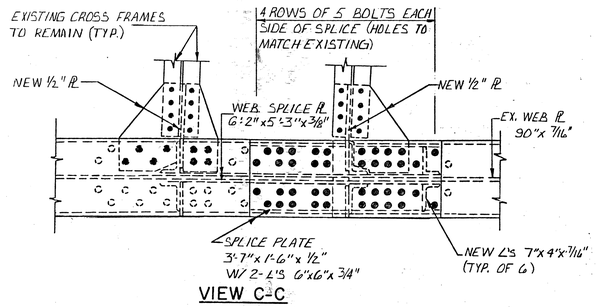

VIEW C-C

NOTES

1. QUANTITIES FOR SPLICES AT REMOVED EXPANSION ROLLERS WILL BE PAID FOR UNDER ITEM 513 STRUCTURAL STEEL FOR REHABILITATION, AS PER PLAN. DIMENSION OF SPLICE PLATES AND EXISTING RIVET HOLE LOCATIONS SHALL BE FIELD VERIFIED.
2. BOLTS SHALL REPLACE REMOVED RIVETS AND SHALL BE A-325 - ⅞" ϕ BOLTS.
3. SEE SHEET 83/120 FOR REMOVAL DETAILS.
4. FOR SECTIONS E-E AND F-F SEE SEE SHEET 83B/120
5. SEE SHEET 58/120 FOR NOTES ON "EXISTING RIVET AND STRUCTURAL STEEL REMOVAL" AND "BOLTED CONNECTIONS TO EXISTING STEEL".
6. ALL SPLICE PLATES AND ANGLES SHALL BE A36 STEEL (CVN) AND SHALL MEET SPECIFIED MINIMUM NOTCH TOUGHNESS REQUIREMENTS AS SPECIFIED IN 711.01 OF CMS

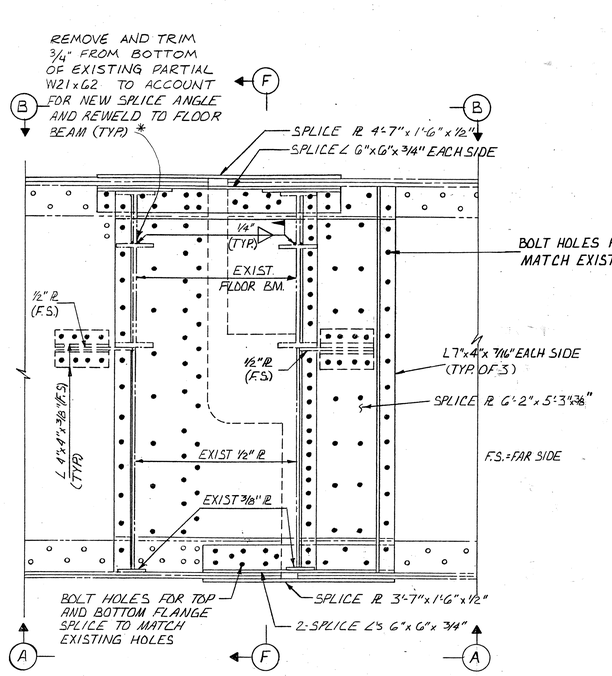

SPLICE DETAIL AT REMOVED EXPANSION ROLLER
WITH KNEE BRACING BELOW FLOOR BEAM

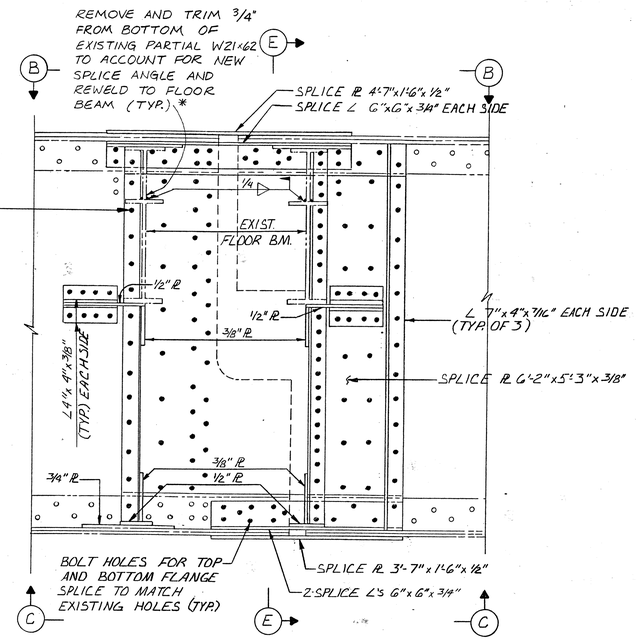

SPLICE DETAIL AT REMOVED EXPANSION ROLLER
WITH K-TYPE BRACING BELOW BEAM
*SEE NOTES ON SHEET 83B/120

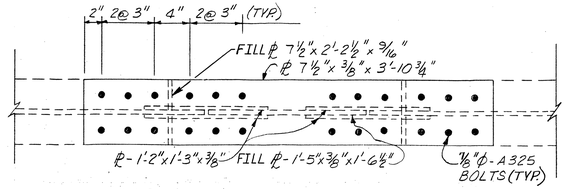

VIEW D-D

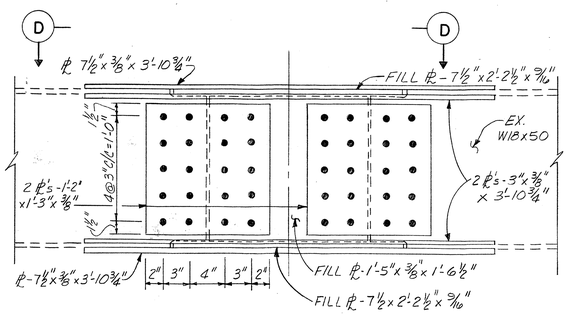

SPLICE AT W18x50 BEAMS
BETWEEN GIRDERS

McCOY ASSOCIATES INC. 83A/120
CONSULTING ENGINEERS
AKRON, OHIO

SPLICE DETAILS AT REMOVED EXPANSION ROLLER

BRIDGE NO. SUM. 76-1277
AKRON EAST EXPRESSWAY
WEST VIADUCT

DESIGNED	DRAWN	TRACED	CHECKED	REVIEWED	DATE	REVISED
JGC	DAK		JBH	JBH	7-13-90	

FHWA REGION	STATE	PROJECT	
5	OHIO		

1031
12.14

SUMMIT COUNTY
SUM 76-11.57

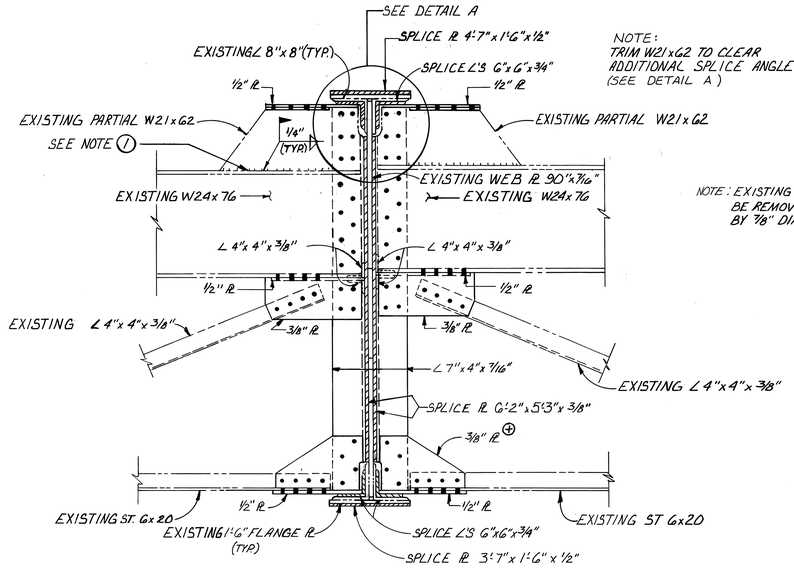

NOTE:
TRIM W21x62 TO CLEAR ADDITIONAL SPLICE ANGLE (SEE DETAIL A)

NOTE: EXISTING RIVETS THAT ARE TO BE REMOVED SHALL BE REPLACED BY 7/8" DIA. A325 BOLTS.

SECTION E–E

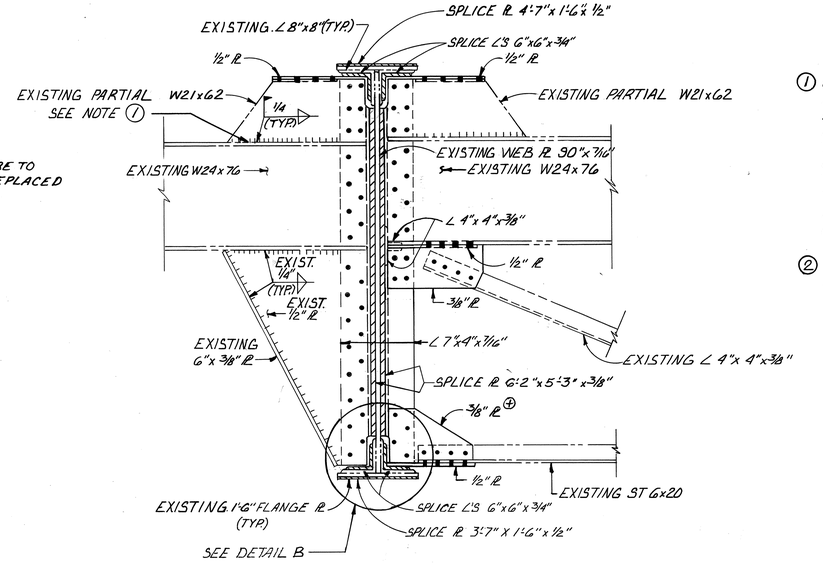

SECTION F–F

NOTES

(1) EXISTING WELD SHALL BE REMOVED BY THE AIR-ARC PROCESS. THE CONTRACTOR SHALL USE EXTREME CAUTION TO PREVENT DAMAGE TO THE BEAM FLANGE WHICH IS TO REMAIN. FLANGE TOP SHALL THEN BE GROUND SMOOTH PRIOR TO REWELDING OF THE PARTIAL W21x62. ANY DAMAGE TO EXISTING MATERIAL TO REMAIN IN PLACE DUE TO THE CONTRACTOR'S REMOVAL OPERATIONS SHALL BE REPAIRED TO THE SATISFACTION OF THE ENGINEER AT THE COST OF THE CONTRACTOR.

(2) FOR OTHER DETAILS AT REMOVED EXPANSION ROLLER SEE SHEETS 83 / 120 AND 83A / 120

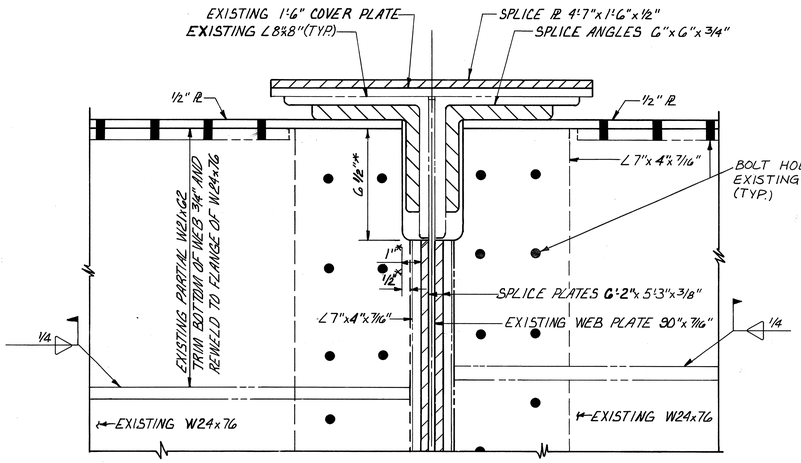

* DIMENSIONS OF CUT REQUIRED BY THE 6"x6"x¾" SPLICE ANGLE. PRIOR TO CUTTING THESE DIMENSIONS SHALL BE FIELD VARIFIED.

DETAIL A

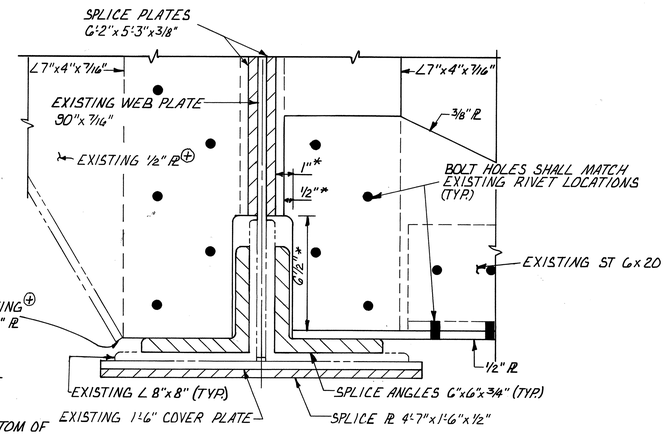

NOTE: BOLT HOLES THROUGH WEB AND FLANGE NOT SHOWN. SEE SHEET 83A / 120 FOR DETAILS

⊕TRIM ¾" OFF BOTTOM OF PLATE TO ACCOUNT FOR NEW L 6"x6"x¾"

DETAIL B

McCOY ASSOCIATES, INC. CONSULTING ENGINEERS AKRON, OHIO		83B/120

SPLICE DETAILS AT REMOVED EXPANSION ROLLER

BRIDGE NO. SUM 76-1277
AKRON EAST EXPRESSWAY
WEST VIADUCT

DESIGNED	DRAWN	TRACED	CHECKED	REVIEWED	DATE	REVISED
JGC	JWD		JBH	JBH	8-21-20	

22691

FHWA REGION	STATE	PROJECT	
5	OHIO		

1032
1214

SUMMIT COUNTY
SUM. 76 – 11.57

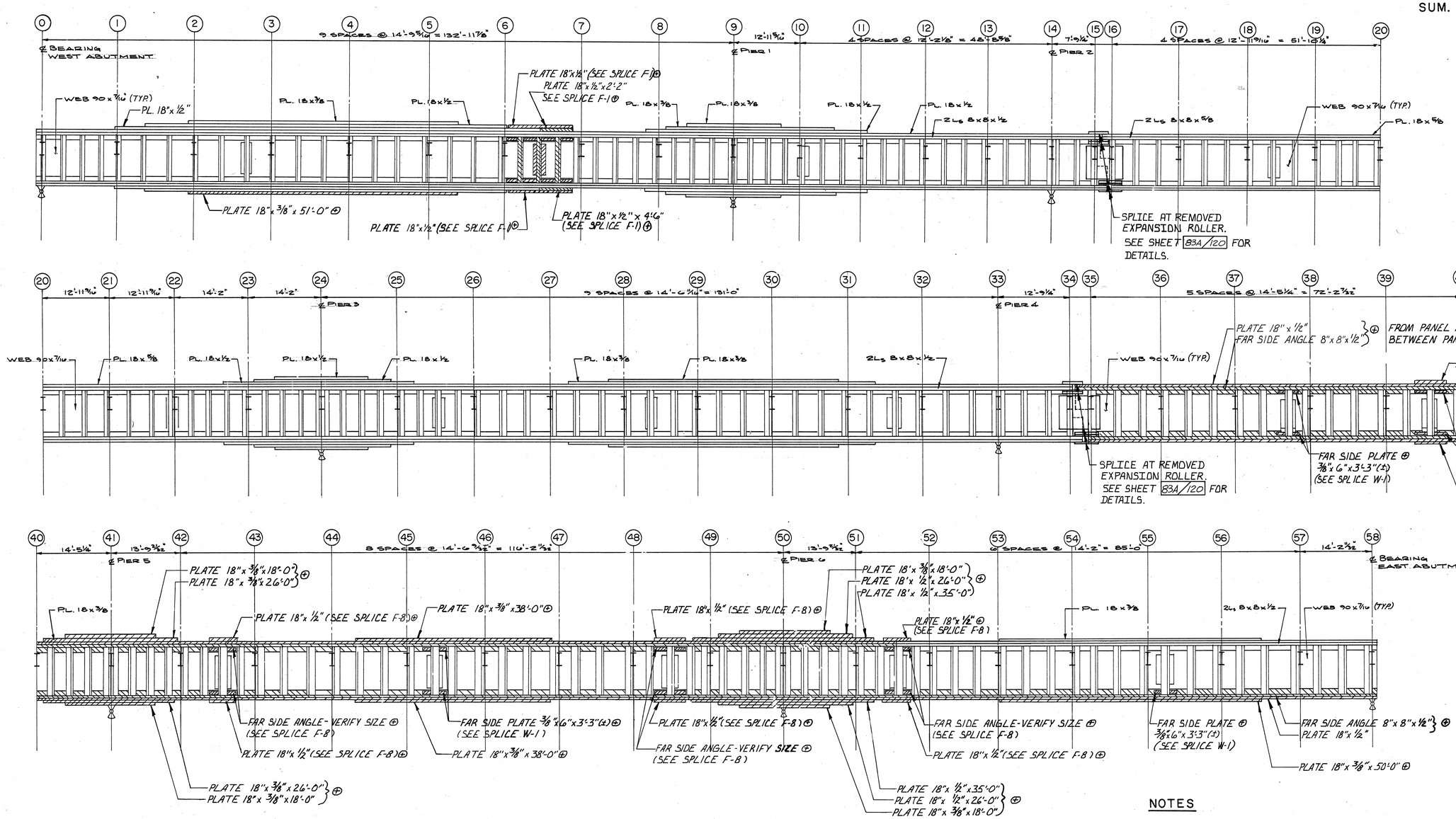

NOTES

1. FOR TYPICAL FLANGE DETAIL AND NOTES SEE SHEET 85/120
2. FOR LEGEND SEE SHEET 85/120

McCOY ASSOCIATES INC. 84/120
CONSULTING ENGINEERS
AKRON, OHIO

GIRDER REPAIRS
GIRDER F

BRIDGE NO. SUM. 76-1277
AKRON EAST EXPRESSWAY
WEST VIADUCT

DESIGNED	DRAWN	TRACED	CHECKED	REVIEWED	DATE	REVISED
JBH	JBH		T.E.N.	JBH	3-31-89	

73776

FHWA REGION	STATE	PROJECT	
5	OHIO		

1033
1214

SUMMIT COUNTY
SUM. 76 - 11.57

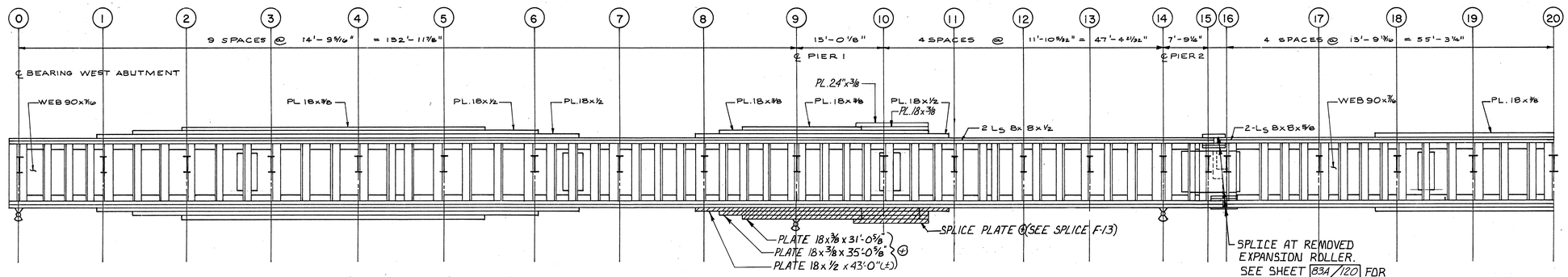

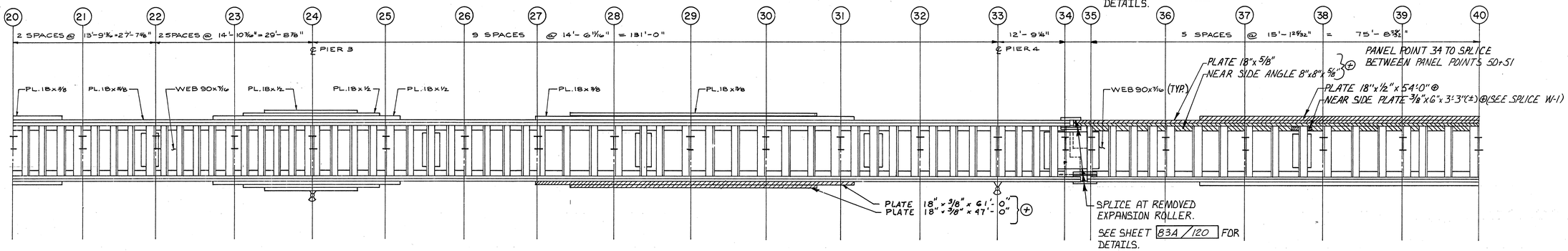

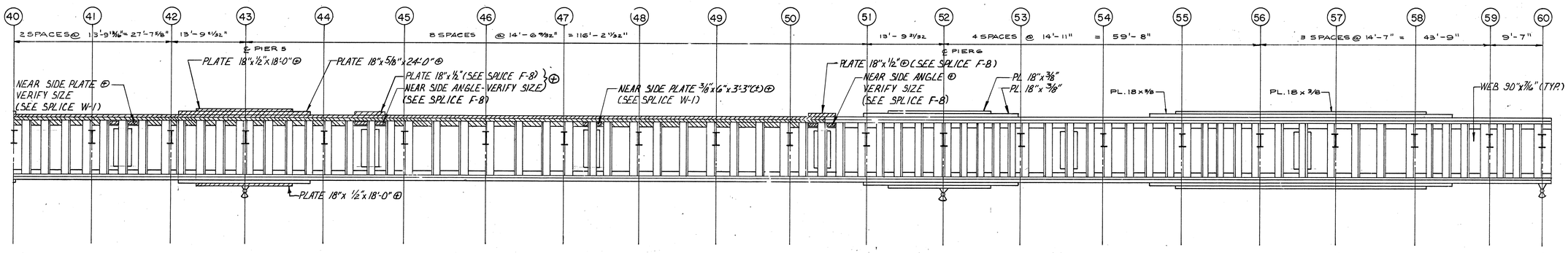

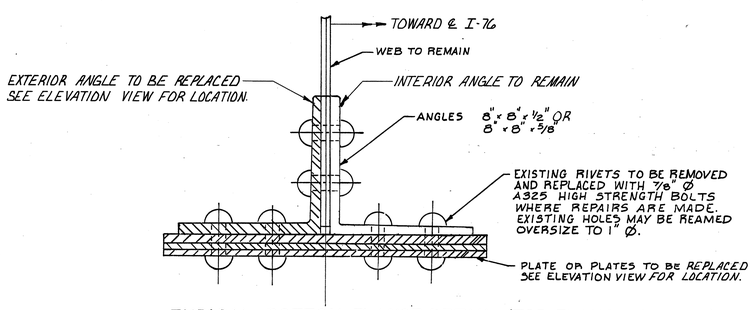

TYPICAL BOTTOM FLANGE DETAIL-(TOP FLANGE SIMILAR)

NOTES

1. (+) - PLATES OR ANGLES TO BE REMOVED AND REPLACED.
2. (9) - INDICATES PANEL POINT, FROM AS-BUILT DRAWINGS.
3. NEW STEEL SHALL BE INCLUDED FOR PAYMENT UNDER ITEM 513, STRUCTURAL STEEL (AISC CATEGORY I), AS PER PLAN. PAINTING OF NEW STEEL SHALL BE PAID UNDER ITEM SPECIAL PAINTING OF NEW STEEL, SYSTEM IZEU, AS PER PLAN (INCLUDING PRIME COAT, INTERMEDIATE COAT AND FINISH COAT.)
4. CONTRACTOR SHALL SUBMIT DETAILED PLANS AND PROCEDURES FOR SUPPORT OF GIRDERS AND OTHER MEMBERS TO REMAIN DURING REMOVAL AND REPAIR OPERATIONS FOR APPROVAL BY THE ENGINEER BEFORE COMMENCING ANY REPAIR OPERATIONS.
5. REMOVAL OF EXISTING STEEL AND EXISTING RIVETS SHALL BE INCLUDED WITH ITEM 202 - PORTIONS OF STRUCTURES REMOVED FOR PAYMENT. (SEE GENERAL NOTES PAGE 5B/120)
6. PAYMENT FOR NEW BOLTS TO CONNECT NEW STEEL TO EXISTING STEEL SHALL BE INCLUDED AS INCIDENTAL TO ITEM 513, STRUCTURAL STEEL (AISC CATEGORY 1); AS PER PLAN.
7. FOR ADDITIONAL DETAILS SEE SHEET 85A/120

McCOY ASSOCIATES INC. 85/120
CONSULTING ENGINEERS
AKRON, OHIO

GIRDER REPAIRS
GIRDER L

BRIDGE NO. SUM. 76-1277
AKRON EAST EXPRESSWAY
WEST VIADUCT

DESIGNED	DRAWN	TRACED	CHECKED	REVIEWED	DATE	REVISED
JBH	JBH		T.E.J.	JBH	3-31-87	

12776

FHWA REGION	STATE	PROJECT	
5	OHIO		

1034
1214

SUMMIT COUNTY
SUM 76-11.57

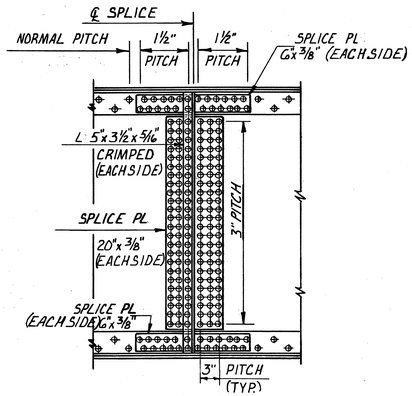

WEB SPLICE W-1

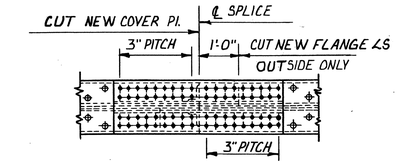

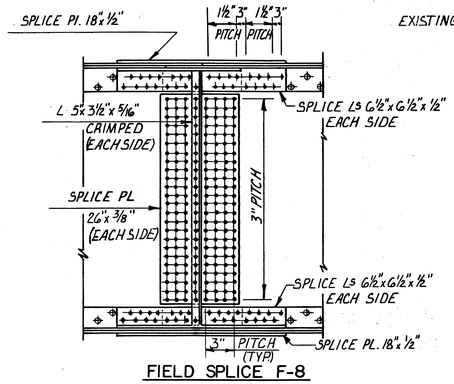

FIELD SPLICE F-8

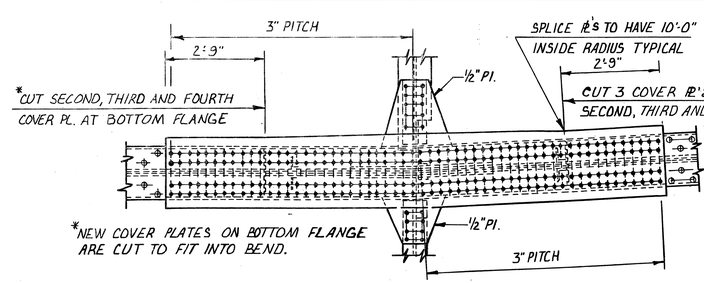

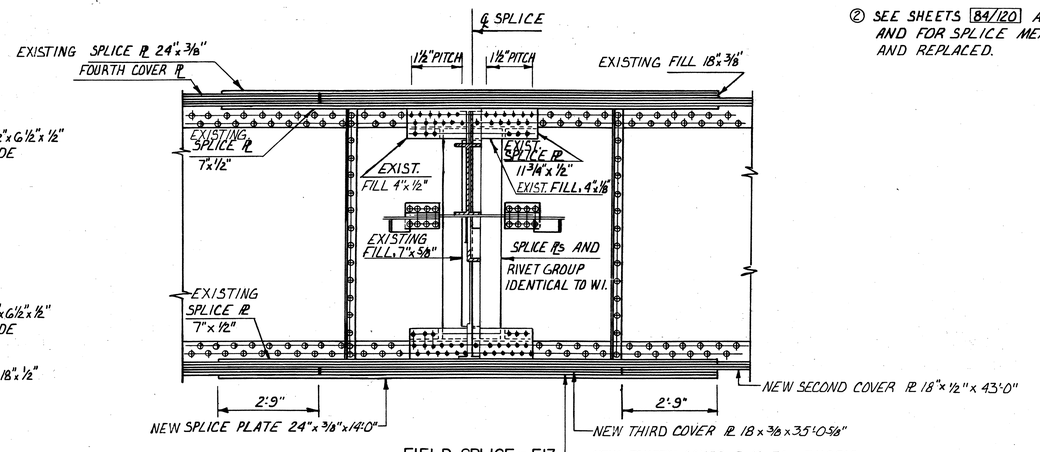

FIELD SPLICE-F13

NOTES

① EXISTING SPLICES W-1, F-8 AND F-13 SHOWN FROM AS-BUILT PLANS. CONTRACTOR SHALL FIELD VERIFY ALL DIMENSIONS AND LENGTHS OF PLATES AND ANGLES TO BE REPLACED.

② SEE SHEETS 84/120 AND 85/120 FOR LOCATION OF SPLICES AND FOR SPLICE MEMBERS THAT ARE TO BE REMOVED AND REPLACED.

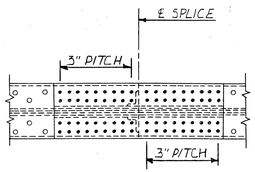

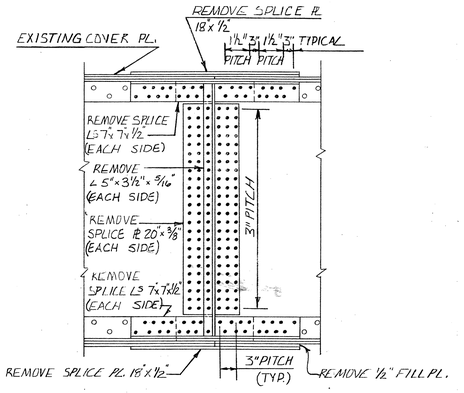

REMOVAL DETAIL FOR EXISTING SPLICE F-1

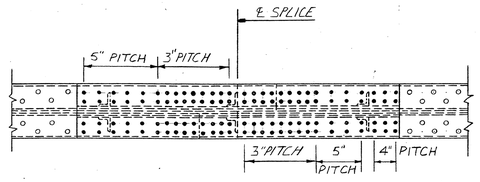

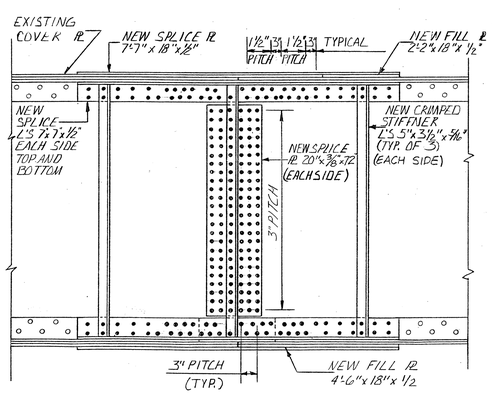

REPAIR AT EXISTING FIELD SPLICE F-1

McCOY ASSOCIATES INC. 85A/120
CONSULTING ENGINEERS
AKRON, OHIO

GIRDER REPAIR SPLICE DETAILS

BRIDGE NO: SUM. 76-1277
AKRON EAST EXPRESSWAY
WEST VIADUCT

DESIGNED	DRAWN	TRACED	CHECKED	REVIEWED	DATE	REVISED
JBH	JWD		JGC	JBH	7-19-90	

FHWA REGION	STATE	PROJECT	
5	OHIO		

1035
1214

SUMMIT COUNTY
SUM 76-11.57

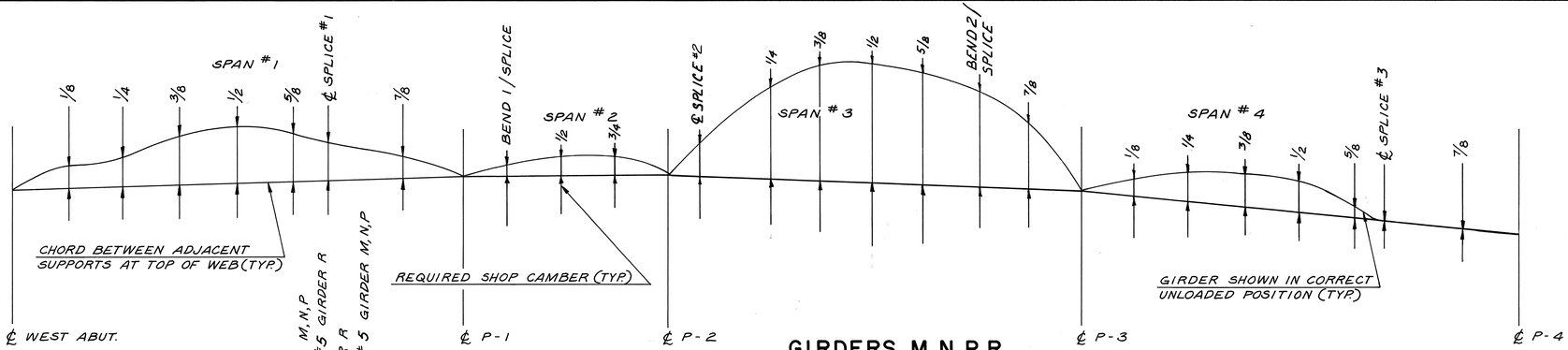

GIRDERS M,N,P,R

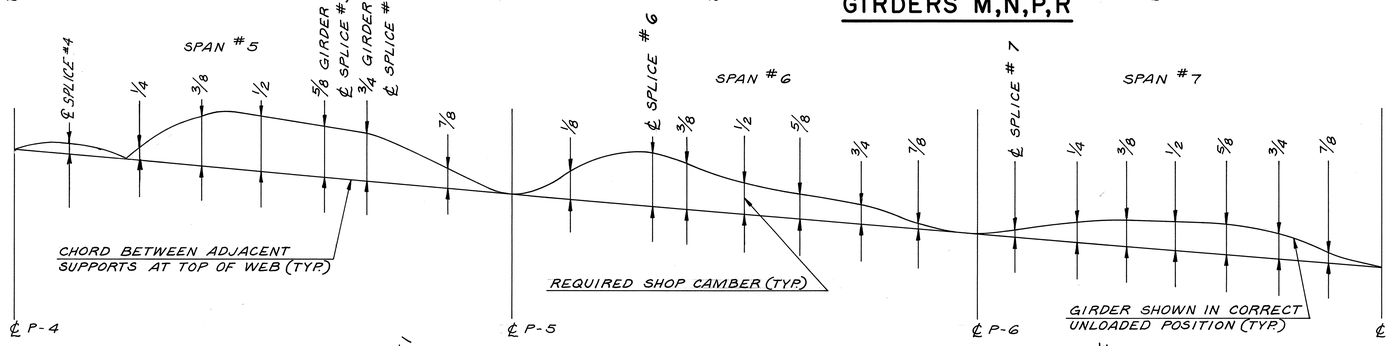

GIRDERS M,N,P,R

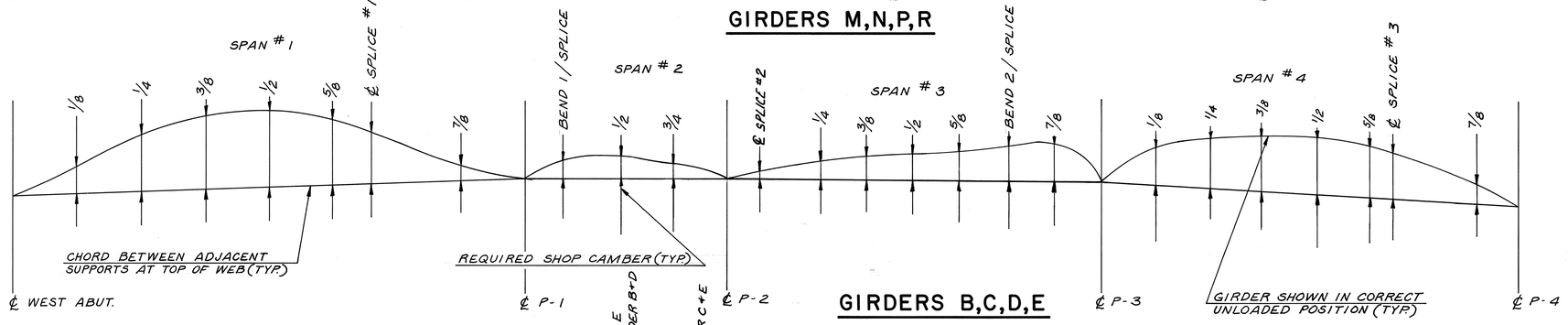

GIRDERS B,C,D,E

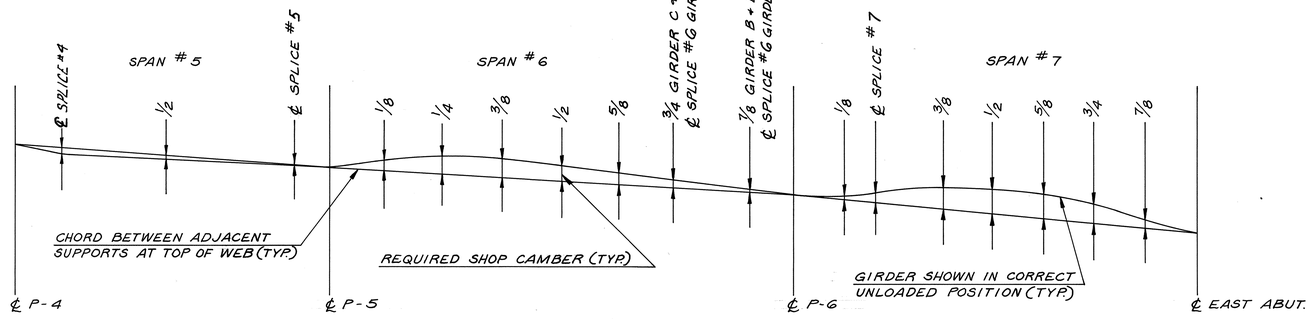

GIRDERS B,C,D,E

NOTES

1. FOR FRAMING PLANS AND GIRDER DETAILS, SEE SHEETS 62/120 THRU 82/120
2. A POSITIVE CAMBER VALUE MEANS THE CAMBER ABOVE AND A NEGATIVE CAMBER MEANS THE CAMBER BELOW THE CHORD BETWEEN ADJACENT SUPPORTS
3. FOR DEFLECTION AND CAMBER TABLES SEE SHEETS 88/120 THRU 90/120

McCOY ASSOCIATES INC. 86/120
CONSULTING ENGINEERS
AKRON, OHIO

CAMBER DIAGRAMS

BRIDGE NO. SUM. 76-1277
AKRON EAST EXPRESSWAY
WEST VIADUCT

DESIGNED	DRAWN	TRACED	CHECKED	REVIEWED	DATE	REVISED
SMS	GT		JMH	JBH	3-31-83	

FHWA REGION	STATE	PROJECT	
5	OHIO		

1036
1214

SUMMIT COUNTY
SUM 76-11.57

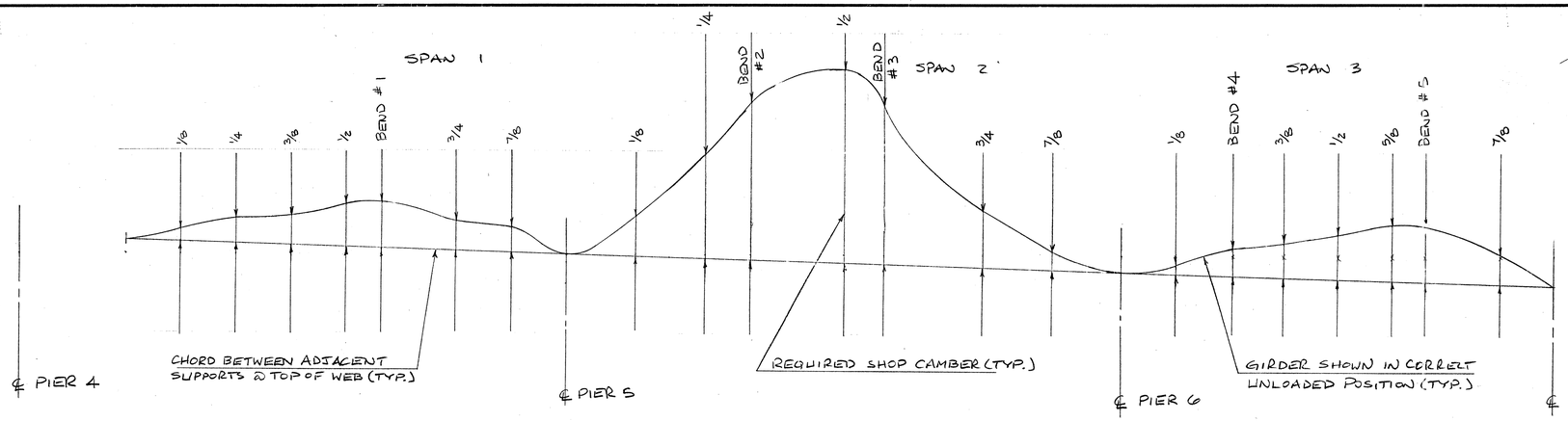

GIRDER B-B

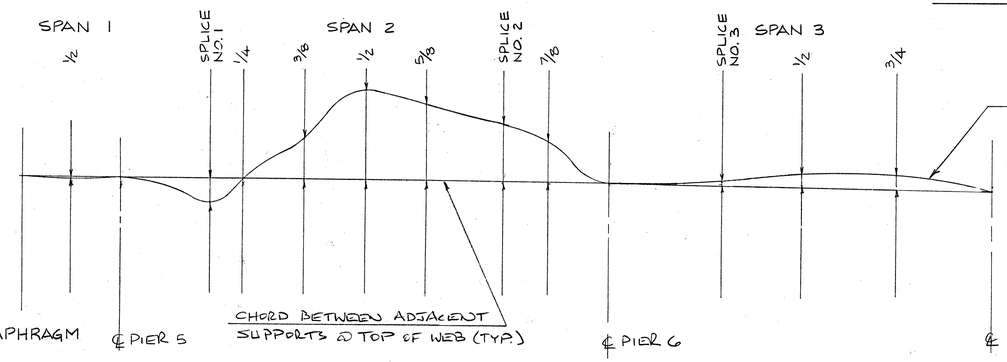

GIRDER S

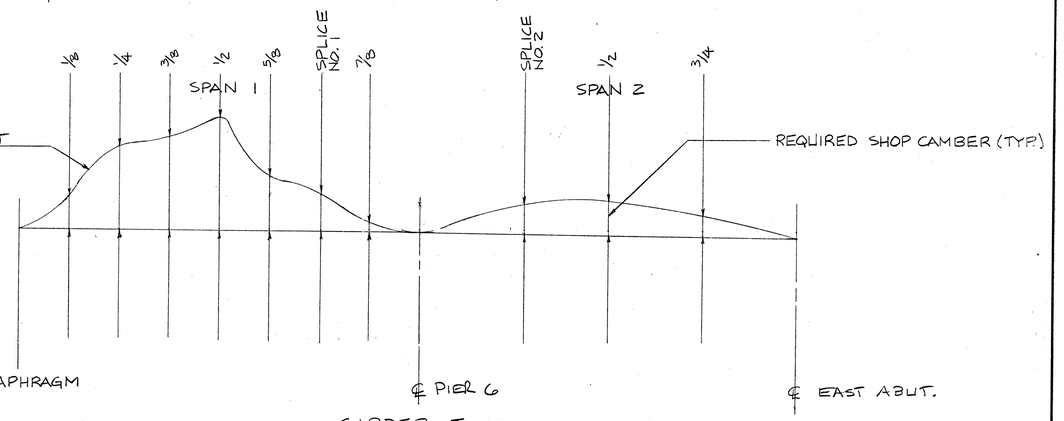

GIRDER T

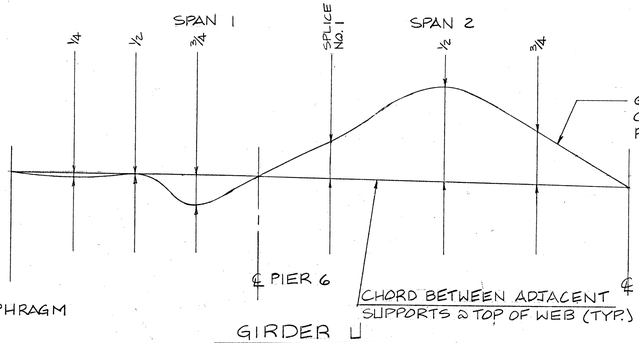

GIRDER U

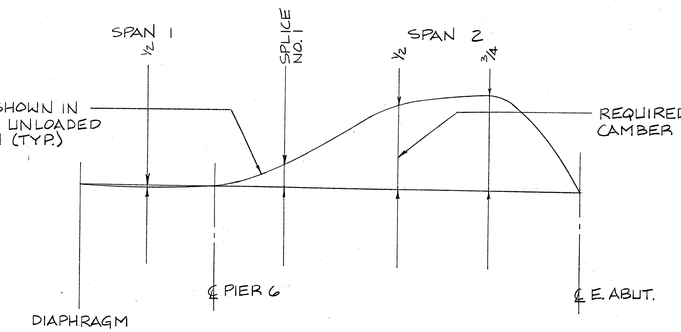

GIRDER V

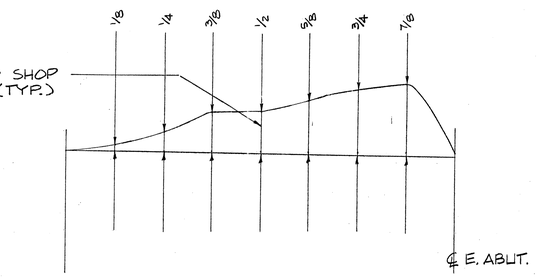

GIRDER W

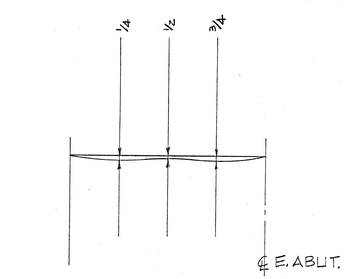

GIRDERS X,Y,A

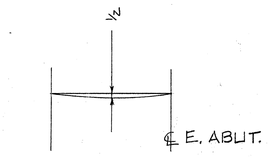

GIRDERS Z, A-A

NOTES

1. FOR NOTES SEE SHEET 86/120

McCOY ASSOCIATES INC. 87/120
CONSULTING ENGINEERS
AKRON, OHIO

CAMBER DIAGRAMS

BRIDGE NO. SUM 76-1277
AKRON EAST EXPRESSWAY
WEST VIADUCT

DESIGNED	DRAWN	TRACED	CHECKED	REVIEWED	DATE	REVISED
R.G.S.	R.A.K.		R.A.K.	J.B.H.	3-31-89	

FHWA REGION	STATE	PROJECT	
5	OHIO		

1037
12.14

SUMMIT COUNTY
SUM 76-11.57

GIRDER B					GIRDER C					GIRDER D					GIRDER E				
LOCATION	DEFLECTION DUE TO WT. OF STEEL	DEFLECTION DUE TO RE-MAINING DL	ADJ. REQ'D FOR CURVATURE	REQ'D SHOP CAMBER	LOCATION	DEFLECTION DUE TO WT. OF STEEL	DEFLECTION DUE TO RE-MAINING DL	ADJ. REQ'D FOR CURVATURE	REQ'D SHOP CAMBER	LOCATION	DEFLECTION DUE TO WT. OF STEEL	DEFLECTION DUE TO RE-MAINING DL	ADJ. REQ'D FOR CURVATURE	REQ'D SHOP CAMBER	LOCATION	DEFLECTION DUE TO WT. OF STEEL	DEFLECTION DUE TO RE-MAINING DL	ADJ. REQ'D FOR CURVATURE	REQ'D SHOP CAMBER
WEST ABUT.					WEST ABUT.					WEST ABUT.					WEST ABUT.				
1/8 POINT	7/16"	13/16"	- 1/4"	1"	1/8 POINT	3/8"	13/16"	- 1/8"	1 1/8"	1/8 POINT	5/16"	11/16	—	1"	1/8 POINT	1/4"	3/16"	- 1/8"	11/16
1/4 POINT	11/16"	1 3/8"	- 1/4"	1 13/16"	1/4 POINT	5/8"	1 7/16"	- 1/8"	1 15/16"	1/4 POINT	1/2"	1 3/16"	- 1/4"	1 7/16"	1/4 POINT	7/16"	1"	- 1/4"	1 3/16"
3/8 POINT	7/8"	1 11/16"	- 3/8"	2 3/16"	3/8 POINT	13/16"	1 13/16"	- 1/4"	2 3/8"	3/8 POINT	5/8"	1 1/2"	- 1/8"	2"	3/8 POINT	9/16"	1 1/4"	- 3/8"	1 7/16"
1/2 POINT	1/8"	1 3/4"	- 1/4"	2 3/8"	1/2 POINT	13/16"	1 7/8"	- 3/8"	2 5/16	1/2 POINT	11/16"	1 13/16"	- 1/4"	1 13/16"	1/2 POINT	9/16"	1 3/16"	- 1/4"	1 5/8
5/8 POINT	3/4"	1 1/2"	- 1/4"	2"	5/8 POINT	11/16"	1 5/8"	- 3/8"	1 13/16	5/8 POINT	9/16"	1 3/8"	- 1/8"	1 3/16"	5/8 POINT	1/2"	1 1/8"	- 1/8"	1 1/2"
SPLICE NO. 1	5/8"	1 1/4"	- 1/4"	1 5/8"	SPLICE NO. 1	5/8"	1 1/16	- 7/16"	1 5/8"	SPLICE NO. 1	1/2"	1 1/8"	- 1/8"	1 1/2"	SPLICE NO. 1	3/8"	1 5/16"	- 3/8"	1 5/16"
7/8 POINT	1/4"	7/16"	- 1/8"	3/16"	7/8 POINT	1/4"	1/2"	- 1/8"	5/8"	7/8 POINT	3/16"	5/8"	- 1/8"	7/16"	7/8 POINT	1/8"	3/8"	—	1/2"
PIER 1					PIER 1					PIER 1					PIER 1				
BEND 1/SPL.	- 1/16"	- 1/8"	3/8"	3/16"	BEND 1/SPL.	- 1/16"	- 3/16"	3/8"	1/8"	BEND 1/SPL.	- 1/16"	- 3/16"	1/2"	1/4"	BEND 1/SPL.	- 1/16"	- 1/8"	1/2"	5/16"
1/2 POINT	- 1/8"	- 1/4"	5/8"	1/4"	1/2 POINT	- 1/8"	- 1/4"	1/2"	1/8"	1/2 POINT	- 1/8"	- 1/4"	5/8"	1/8"	1/2 POINT	- 1/16"	- 3/16"	3/8"	1/8"
3/4 POINT	- 1/16"	- 3/16"	1/2"	1/4"	3/4 POINT	- 1/16"	- 3/16"	3/8"	1/8"	3/4 POINT	- 1/16"	- 3/16"	1/2"	1/4"	3/4 POINT	- 1/16"	- 1/8"	3/8"	3/16"
PIER 2					PIER 2					PIER 2					PIER 2				
SPLICE NO.2	1/16"	1/8"	1/8"	5/16"	SPLICE NO.2	1/16"	1/8"	1/8"	5/16"	SPLICE NO.2	1/16"	1/8"	1/8"	5/16"	SPLICE NO.2	1/16"	1/8"	1/4"	7/16"
1/4 POINT	3/16"	3/8"	- 1/8"	7/16"	1/4 POINT	3/16"	7/16"	—	3/8"	1/4 POINT	1/8"	3/8"	1/4"	3/8"	1/4 POINT	1/8"	3/8"	1/2"	1"
3/8 POINT	3/16"	7/16"	- 5/8"	—	3/8 POINT	3/16"	1/2"	- 3/8"	5/16"	3/8 POINT	3/16"	1/2"	1/8"	13/16	3/8 POINT	3/16"	7/16"	1/2"	1 1/8"
1/2 POINT	3/16"	7/16"	1/8"	3/4"	1/2 POINT	3/16"	1/2"	1/4"	13/16"	1/2 POINT	3/16"	1/2"	1/2"	1 3/16"	1/2 POINT	3/16"	7/16"	3/4"	1 3/8"
5/8 POINT	3/16"	3/8"	1/2"	1 1/16"	5/8 POINT	3/16"	3/8"	5/8"	1 3/16	5/8 POINT	1/8"	3/8"	7/8"	1 3/8"	5/8 POINT	1/8"	3/8"	1 1/16"	1 7/16"
BEND 2/SPL.	1/8"	1/4"	5/8"	1"	BEND 2/SPL.	1/8"	1/4"	3/4"	1 1/8"	BEND 2/SPL.	1/16"	3/16"	7/8"	1 1/8"	BEND 2/SPL.	1/16"	3/16"	1"	1 1/4"
7/8 POINT	—	1/16"	1/2"	3/16"	7/8 POINT	1/16"	1/16"	3/8"	1/2"	7/8 POINT	1/16"	1/16"	1/2"	5/8"	7/8 POINT	—	1/16"	5/8"	11/16"
PIER 3					PIER 3					PIER 3					PIER 3				
1/8 POINT	1/16"	1/8"	1 3/16"	1 3/8"	1/8 POINT	—	1/8"	1 1/16"	1 3/16"	1/8 POINT	—	1/8"	1"	1 1/8"	1/8 POINT	1/16"	1/8"	13/16"	1"
1/4 POINT	1/8"	5/16"	1 5/16"	2 3/8"	1/4 POINT	1/8"	5/16"	1 3/16"	2 1/4"	1/4 POINT	1/8"	3/16"	1 7/16"	1 7/8"	1/4 POINT	1/8"	3/8"	1 3/16"	1 13/16"
3/8 POINT	3/16"	1/2"	2 3/4"	3 7/16"	3/8 POINT	3/16"	5/16"	2 3/16"	2 5/16"	3/8 POINT	3/16"	5/16"	1 5/16"	2 1/16"	3/8 POINT	3/16"	5/16"	1 7/16"	2 3/16"
1/2 POINT	1/4"	5/8"	2 1/4"	3 1/2"	1/2 POINT	3/16"	11/16	1 1/16"	1 5/16"	1/2 POINT	3/8"	1/16	1 7/16"	2 1/2"	1/2 POINT	1/4"	11/16"	1 5/16"	1 7/8"
5/8 POINT	1/4"	3/16"	1 5/16"	2 3/4"	5/8 POINT	3/16"	5/16	1 3/16"	2 1/16"	5/8 POINT	3/16"	11/16"	1 11/16"	1 15/16	5/8 POINT	3/16"	11/16"	3/4"	1 7/8"
SPLICE NO.3	3/16"	1/2"	1 1/16"	1 3/4"	SPLICE NO.3	3/16"	3/16	1 1/16	1 5/16	SPLICE NO.3	3/16	3/16"	3/4"	1 1/2"	SPLICE NO.3	3/16"	3/16	3/4"	1 1/2"
7/8 POINT	1/16"	3/16"	1/2"	3/4"	7/8 POINT	1/16	1/4"	3/8"	1 1/16"	7/8 POINT	1/16"	1/4"	3/8"	1 1/16"	7/8 POINT	1/16"	1/4"	1/2"	3/16"
PIER 4					PIER 4					PIER 4					PIER 4				
SPLICE NO.4	- 1/16"	- 1/16"	—	- 1/8"	SPLICE NO.4	—	- 1/16"	—	- 1/16"	SPLICE NO.4	—	- 1/16"	—	- 1/16"	SPLICE NO.4	—	- 1/16"	—	- 1/16"
1/2 POINT	- 1/16"	- 1/8"	—	- 3/16"	1/2 POINT	—	- 1/16"	—	- 1/16"	1/2 POINT	—	- 1/16"	—	- 1/16"	1/2 POINT	—	- 1/16	—	- 1/16
SPLICE NO.5	—	- 1/16"	—	- 1/16"	SPLICE NO.5	—	- 1/16"	—	- 1/16"	SPLICE NO.5	—	- 1/16"	—	- 1/16"	SPLICE NO.5	—	- 1/16"	—	- 1/16"
PIER 5					PIER 5					PIER 5					PIER 5				
1/8 POINT	1/16"	3/16"	—	1/4"	1/8 POINT	1/16"	3/16"	—	1/4"	1/8 POINT	1/16"	3/16"	—	1/4"	1/8 POINT	1/16"	3/16"	—	1/4"
1/4 POINT	3/16"	7/16"	—	5/8"	1/4 POINT	3/16"	7/16"	—	5/8"	1/4 POINT	1/8"	7/16"	—	9/16"	1/4 POINT	1/8"	7/16"	—	9/16"
3/8 POINT	1/4"	9/16"	—	13/16"	3/8 POINT	1/4"	5/8"	—	7/8"	3/8 POINT	3/16"	9/16"	—	3/4"	3/8 POINT	3/16"	9/16"	—	3/4"
1/2 POINT	1/4"	9/16"	—	13/16"	1/2 POINT	1/4"	5/8"	—	7/8"	1/2 POINT	1/4"	5/8"	—	7/8"	1/2 POINT	1/4"	5/8"	—	7/8"
5/8 POINT	3/16"	1/2"	—	11/16"	SPLICE NO.6	1/8"	7/16"	—	9/16"	5/8 POINT	3/16"	1/2"	—	11/16"	SPLICE NO.6	1/8"	3/8"	—	1/2"
SPLICE NO.6	1/8"	1/4"	—	3/8"	3/4 POINT	1/8"	5/16"	—	7/16"	SPLICE NO.6	1/8"	7/16"	—	9/16"	3/4 POINT	1/8"	5/16"	—	7/16"
7/8 POINT	1/16"	1/16"	—	1/8"	7/8 POINT	1/16"	1/8"	—	3/16"	7/8 POINT	1/16"	1/8"	—	3/16"	7/8 POINT	1/16"	1/8"	—	3/16"
PIER 6					PIER 6					PIER 6					PIER 6				
1/8 POINT	—	1/16"	—	1/16"	1/8 POINT	—	1/16"	—	1/16"	1/8" POINT	1/16"	1/16"	—	1/8"	1/8 POINT	1/16"	1/16"	—	1/8"
SPLICE NO.7	1/16"	1/4"	—	5/16"	SPLICE NO.7	1/8"	5/16"	—	7/16"	SPLICE NO.7	1/8"	5/16"	—	7/16"	SPLICE NO.7	1/8"	5/16"	—	7/16"
3/8 POINT	1/8"	3/8"	—	1/2"	3/8 POINT	3/16"	7/16"	—	9/16"	3/8 POINT	3/16"	7/16"	—	9/16"	3/8 POINT	3/16"	7/16"	—	5/8"
1/2 POINT	3/16'	1/2"	—	1/16"	1/2 POINT	3/16"	9/16"	—	3/4"	1/2 POINT	3/16"	9/16"	—	3/4"	1/2 POINT	3/16"	9/16"	—	3/4"
5/8 POINT	3/16"	1/2"	—	11/16"	5/8 POINT	3/16"	9/16"	—	3/4"	5/8 POINT	3/16"	9/16"	—	3/4"	5/8 POINT	3/16"	9/16"	—	3/4"
3/4 POINT	3/16"	7/16"	—	5/8"	3/4 POINT	3/16"	7/16"	—	5/8"	3/4 POINT	3/16"	7/16"	—	5/8"	3/4 POINT	3/16"	7/16"	—	5/8"
7/8 POINT	1/8"	1/4"	—	3/8"	7/8 POINT	1/8"	1/4"	—	3/8"	7/8 POINT	1/8"	1/4"	—	3/8"	7/8 POINT	1/8"	1/4"	—	3/8"
EAST ABUT.					EAST ABUT.					EAST ABUT.					EAST ABUT.				

NOTES

(1) FOR NOTES, SEE SHEET 86/120

McCOY ASSOCIATES INC.
CONSULTING ENGINEERS
AKRON, OHIO

DEFLECTION & CAMBER TABLES

BRIDGE NO. SUM 76-1277
AKRON EAST EXPRESSWAY
WEST VIADUCT

DESIGNED	DRAWN	TRACED	CHECKED	REVIEWED	DATE	REVISED
SMS	GT		JMH	JBH	3-31-89	

FHWA REGION	STATE	PROJECT	
5	OHIO		

1038
12.14

SUMMIT COUNTY
SUM 76 – 11.57

GIRDER M					GIRDER N					GIRDER P					GIRDER R				
LOCATION	DEFLECTION DUE TO WT. OF STEEL	DEFLECTION DUE TO RE-MAINING DL	ADJ. REQ'D FOR CURVATURE	REQ'D SHOP CAMBER	LOCATION	DEFLECTION DUE TO WT. OF STEEL	DEFLECTION DUE TO RE-MAINING DL	ADJ. REQ'D FOR CURVATURE	REQ'D SHOP CAMBER	LOCATION	DEFLECTION DUE TO WT. OF STEEL	DEFLECTION DUE TO RE-MAINING DL	ADJ. REQ'D FOR CURVATURE	REQ'D SHOP CAMBER	LOCATION	DEFLECTION DUE TO WT. OF STEEL	DEFLECTION DUE TO RE-MAINING DL	ADJ. REQ'D FOR CURVATURE	REQ'D SHOP CAMBER
WEST ABUT.					WEST ABUT.					WEST ABUT.					WEST ABUT.				
1/8 POINT	1/4	11/16	-1/8	13/16	1/8 POINT	1/4	11/16	-1/4	11/16	1/8 POINT	1/4	11/16	1/2	1 3/16	1/8 POINT	5/16	3/4	1/4	1 5/16
1/4 POINT	7/16	1 1/8	-1/4	1 3/16	1/4 POINT	1/2	1 3/16	-1/4	1 7/16	1/4 POINT	1/2	1 1/4	1/4	2"	1/4 POINT	9/16	1 3/8	3/8	2 5/16
3/8 POINT	9/16	1 7/16	-1/4	1 3/4	3/8 POINT	9/16	1 1/2	-1/2	1 13/16	3/8 POINT	5/8	1 5/16	1/2	2 1/16	3/8 POINT	11/16	1 11/16	1/2	2 7/8
1/2 POINT	3/16	1 1/2	-1/4	1 9/16	1/2 POINT	5/8	1 9/16	-1/8	2 1/16	1/2 POINT	5/8	1 5/8	1/2	2 3/4	1/2 POINT	11/16	1 11/16	3/8	2 3/4
5/8 POINT	1/2	1 5/16	-1/8	1 11/16	5/8 POINT	1/2	1 3/8	-1/4	1 5/8	5/8 POINT	9/16	1 3/8	5/8	2 3/16	5/8 POINT	9/16	1 1/2	1/2	2 3/16
SPLICE NO. 1	7/16	1 1/16	-1/8	1 3/8	SPLICE NO. 1	7/16	1 1/8	-1/8	1 7/16	SPLICE NO. 1	7/16	1 3/16	1/2	2 1/8	SPLICE NO. 1	7/16	1 1/8	3/8	1 13/16
7/8 POINT	3/16	7/16	—	5/8	7/8 POINT	3/16	7/16	—	5/8	7/8 POINT	3/16	7/16	3/8	1	7/8 POINT	3/16	1/2	3/8	1 1/16
PIER 1					PIER 1					PIER 1					PIER 1				
BEND 1/SPL.	-1/16	-3/16	1/2	1/4	BEND 1/SPL.	-1/16	-3/16	5/8	3/8	BEND 1/SPL.	-1/16	-3/16	3/8	1/8	BEND 1/SPL.	-1/16	-3/16	3/8	1/8
1/2 POINT	-1/8	-1/4	5/8	1/4	1/2 POINT	-1/8	-1/4	3/4	3/8	1/2 POINT	-1/8	-1/4	13/16	7/16	1/2 POINT	-1/8	-1/4	1/2	-1/8
3/4 POINT	-1/16	-3/16	3/8	1/8	3/4 POINT	-1/16	-3/16	1/2	1/4	3/4 POINT	-1/16	-3/16	1/2	1/4	3/4 POINT	-1/16	-3/16	3/8	1/8
PIER 2					PIER 2					PIER 2					PIER 2				
SPLICE NO. 2	1/16	3/16	13/16	1 1/16	SPLICE NO. 2	1/16	3/16	13/16	1 1/16	SPLICE NO. 2	1/16	3/16	15/16	1 3/16	SPLICE NO. 2	1/16	1/8	15/16	1 1/8
1/4 POINT	3/16	3/16	2 3/16	2 5/16	1/4 POINT	3/16	3/16	2 1/2	3 1/4	1/4 POINT	3/16	9/16	3	3 3/4	1/4 POINT	1/4	5/8	2 7/8	3 3/4
3/8 POINT	1/4	3/4	3 1/4	4 1/4	3/8 POINT	1/4	3/4	3 1/2	4 1/2	3/8 POINT	1/4	13/16	3 13/16	4 7/8	3/8 POINT	3/16	13/16	3 13/16	4 13/16
1/2 POINT	1/4	3/4	3 1/8	4 1/8	1/2 POINT	1/4	13/16	3 1/4	4 5/16	1/2 POINT	5/16	13/16	3 5/8	4 3/4	1/2 POINT	5/16	7/8	3 3/4	4 5/16
5/8 POINT	1/4	5/8	2 3/4	3 5/8	5/8 POINT	1/4	5/8	2 3/4	3 3/8	5/8 POINT	1/4	11/16	2 7/8	3 13/16	5/8 POINT	1/4	3/4	2 3/4	3 3/4
BEND 2/SPL.	1/8	3/8	1 5/16	2 7/16	BEND 2/SPL.	1/8	3/8	2 3/16	2 11/16	BEND 2/SPL.	1/8	1/16	1 15/16	2 1/2	BEND 2/SPL.	1/8	7/16	1 15/16	2 1/2
7/8 POINT	1/16	1/8	1 3/16	1 3/8	7/8 POINT	1/16	1/8	1 5/16	1 1/2	7/8 POINT	1/16	3/16	1/16	1 3/16	7/8 POINT	1/16	3/16	1 1/16	1 3/16
PIER 3					PIER 3					PIER 3					PIER 3				
1/8 POINT	—	1/16	3/8	7/16	1/8 POINT	—	—	1/4	1/4	1/8 POINT	—	—	3/8	3/8	1/8 POINT	—	—	1/4	1/4
1/4 POINT	1/16	3/16	5/8	5/8	1/4 POINT	1/16	1/8	3/8	9/16	1/4 POINT	1/16	1/8	3/8	3/8	1/4 POINT	—	1/8	1/4	3/8
3/8 POINT	1/8	5/16	1/4	11/16	3/8 POINT	1/16	1/4	1/4	9/16	3/8 POINT	1/16	1/4	—	5/16	3/8 POINT	1/16	1/4	-1/8	3/16
1/2 POINT	1/8	3/8	—	1/2	1/2 POINT	1/8	5/16	—	7/16	1/2 POINT	1/8	5/16	-1/4	3/16	1/2 POINT	1/16	3/16	-1/2	-1/8
5/8 POINT	1/8	5/16	1/8	3/16	5/8 POINT	1/16	1/4	—	5/16	5/8 POINT	1/16	3/16	-1/2	-1/4	5/8 POINT	—	1/4	-5/8	-3/8
SPLICE NO. 3	1/16	1/4	—	5/16	SPLICE NO. 3	1/16	3/16	—	1/4	SPLICE NO. 3	1/16	1/8	-1/2	-5/16	SPLICE NO. 3	—	1/8	-3/4	-5/8
7/8 POINT	—	—	1/8	1/8	7/8 POINT	—	—	1/4	1/4	7/8 POINT	—	—	-5/8	-5/8	7/8 POINT	—	—	-1/2	-1/2
PIER 4					PIER 4					PIER 4					PIER 4				
SPLICE NO. 4	1/16	-3/16	5/8	3/8	SPLICE NO. 4	1/16	3/16	-1/8	1/8	SPLICE NO. 4	1/16	3/16	-3/8	-1/8	SPLICE NO. 4	1/8	3/16	-1/4	1/16
1/4 POINT	3/16	7/16	-5/8	—	1/4 POINT	3/16	1/2	-5/8	1/16	1/4 POINT	3/16	5/8	-5/8	3/16	1/4 POINT	5/16	5/8	-5/8	5/16
3/8 POINT	1/4	11/16	-13/16	1/8	3/8 POINT	1/4	3/4	-3/4	1/4	3/8 POINT	5/16	9/16	-15/16	5/16	3/8 POINT	7/16	1 1/8	-13/16	3/8
1/2 POINT	1/4	3/4	-1 1/16	-1/16	1/2 POINT	5/16	7/8	-1 1/16	1/8	1/2 POINT	3/8	1	-1 1/16	5/16	1/2 POINT	7/16	1	-15/16	1/2
5/8 POINT	1/4	11/16	-3/4	3/16	5/8 POINT	1/4	3/4	-13/16	3/16	5/8 POINT	5/16	7/8	-13/16	3/8	SPLICE NO. 5	7/16	7/8	13/16	7/8
SPLICE NO. 5	3/16	1/2	-5/8	1/16	SPLICE NO. 5	3/16	5/8	-3/4	1/16	SPLICE NO. 5	1/4	3/4	-5/8	3/8	3/4 POINT	9/16	9/16	5/8	1/4
7/8 POINT	1/16	3/16	-1/4	—	7/8 POINT	1/16	3/16	-1/4	—	7/8 POINT	1/16	1/4	-3/8	—	7/8 POINT	1/8	1/4	1/4	1/8
PIER 5					PIER 5					PIER 5					PIER 5				
1/8 POINT	—	—	—	—	1/8 POINT	—	—	-1/4	-1/4	1/8 POINT	—	—	-5/8	-5/8	1/8 POINT	—	—	-13/16	-13/16
SPLICE NO. 6	1/16	3/16	—	1/4	SPLICE NO. 6	1/16	1/4	-1/4	-1/16	SPLICE NO. 6	1/16	3/16	-1/4	—	SPLICE NO. 6	1/16	1/4	-1/2	-3/16
3/8 POINT	1/16	1/4	—	5/16	3/8 POINT	1/8	3/16	1/8	9/16	3/8 POINT	1/16	1/4	—	5/16	3/8 POINT	1/16	5/16	2 3/16	2 9/16
1/2 POINT	1/8	3/16	1/8	3/16	1/2 POINT	1/8	3/16	1/2	1"	1/2 POINT	1/8	3/8	1 13/16	2 3/16	1/2 POINT	1/8	7/16	1 15/16	2 1/2
5/8 POINT	1/16	1/4	1/8	1/16	5/8 POINT	1/8	5/16	13/16	1 1/4	5/8 POINT	1/8	5/16	1 11/16	2 1/8	5/8 POINT	1/16	3/8	2 3/8	2 13/16
3/4 POINT	1/16	1/8	1/8	5/16	3/4 POINT	1/16	3/16	5/8	7/8	3/4 POINT	1/16	-3/16	1 1/16	1 5/16	3/4 POINT	1/16	1/4	1 1/16	2
7/8 POINT	—	—	—	—	7/8 POINT	—	1/16	1/4	5/16	7/8 POINT	—	1/16	5/8	11/16	7/8 POINT	—	1/16	—	1/16
PIER 6					PIER 6					PIER 6					PIER 6				
SPLICE NO. 7	—	1/16	-1/8	-1/16	SPLICE NO. 7	—	1/16	3/8	7/16	SPLICE NO. 7	—	1/8	—	1/8	SPLICE NO. 7	—	1/16	—	1/16
1/4 POINT	1/8	3/8	-1/4	1/4	1/4 POINT	1/8	5/16	-1/4	3/16	1/4 POINT	1/8	5/16	-1/8	5/16	1/4 POINT	1/8	1/4	-1/2	-1/8
3/8 POINT	3/16	9/16	-1/4	1/2	3/8 POINT	3/16	9/16	-1/4	1/2	3/8 POINT	3/16	1/2	-1/4	7/16	3/8 POINT	3/16	7/16	-3/4	-1/8
1/2 POINT	1/4	11/16	-3/8	5/16	1/2 POINT	1/4	11/16	-3/8	3/16	1/2 POINT	3/16	5/8	-3/8	3/8	1/2 POINT	3/16	9/16	-5/8	1/8
5/8 POINT	1/4	11/16	-3/8	3/16	5/8 POINT	1/4	11/16	-1/2	7/16	5/8 POINT	3/16	5/8	-3/8	3/8	5/8 POINT	3/16	9/16	-1/2	1/4
3/4 POINT	3/16	9/16	-3/8	3/8	3/4 POINT	3/16	9/16	-3/8	3/8	3/4 POINT	3/16	1/2	-3/8	5/16	3/4 POINT	3/16	1/2	-1/2	3/16
7/8 POINT	1/8	3/16	-1/4	3/16	7/8 POINT	1/8	5/16	-1/4	3/16	7/8 POINT	1/8	5/16	-1/4	3/16	7/8 POINT	1/16	1/4	-1/4	1/16
EAST ABUT.					EAST ABUT.					EAST ABUT.					EAST ABUT.				

NOTES

(1) FOR NOTES, SEE SHEET 86/120

(2) ALL DIMENSIONS ARE IN INCHES

McCOY ASSOCIATES INC. 89/120
CONSULTING ENGINEERS
AKRON, OHIO

DEFLECTION & CAMBER TABLES

BRIDGE NO. SUM 76-1277
AKRON EAST EXPRESSWAY
WEST VIADUCT

DESIGNED	DRAWN	TRACED	CHECKED	REVIEWED	DATE	REVISED
SMS	GT		JMH	JBH	3-31-89	

FHWA REGION	STATE	PROJECT	
5	OHIO		

1039
12.14

SUMMIT COUNTY
SUM 76-11.57

GIRDER A

LOCATION	DEFLECTION DUE TO WT. OF STEEL	DEFLECTION DUE TO RE-MAINING DL	ADJ. REQ'D FOR CURVATURE	REQ'D SHOP CAMBER
DIAPHRAGM				
1/4 PT.	—	—	0	
1/2 PT.	—	—	0	
3/4 PT.	—	—	-1/8"	
EAST ABUT.				

GIRDER S

LOCATION	DEFLECTION DUE TO WT. OF STEEL	DEFLECTION DUE TO RE-MAINING DL	ADJ. REQ'D FOR CURVATURE	REQ'D SHOP CAMBER
DIAPHRAM				
1/2 PT.	0	-1/16"	0	-1/16"
PIER 5				
SPLICE	1/8"	3/8"	-15/16"	-11/16"
1/4 PT.	3/16"	9/16"	-3/4"	0
3/8 PT.	1/4"	13/16"	1/8"	1 3/16"
1/2 PT.	1/4"	7/8"	1 1/16"	2 9/16"
5/8 PT.	1/4"	3/4"	1 3/16"	2 3/16"
SPLICE	1/8"	7/16"	1 1/16"	1 5/8"
7/8 PT.	1/16"	3/16"	15/16"	1 3/16"
PIER 6				
SPLICE	1/16"	1/4"	-1/4"	1/16"
1/2 PT.	1/8"	7/16"	-1/4"	5/16"
3/4 PT.	1/8"	3/8"	-1/8"	3/8"
EAST ABUT.				

GIRDER T

GIRDER B-B				
1/8 PT.	1/8"	5/16"	1/2"	15/16"
1/4 PT.	3/16"	5/8"	1 9/16"	2 3/8"
3/8 PT.	3/16"	3/4"	1 11/16"	2 5/8"
1/2 PT.	3/16"	11/16"	1 5/16"	3 3/16"
5/8 PT.	3/16"	9/16"	13/16"	1 9/16"
SPLICE	1/8"	5/16"	5/8"	1 1/16"
7/8 PT.	0	1/8"	1/8"	1/4"
PIER 6				
SPLICE	1/16"	1/4"	1/2"	13/16"
1/2 PT.	1/8"	7/16"	3/8"	15/16"
3/4 PT.	1/8"	7/16"	0	9/16"
EAST. ABUT.				

GIRDER U

GIRDER B-B				
1/8 PT.	0	0	-1/8"	-1/8"
1/2 PT.	0	0	0	0
3/4 PT.	0	-1/16"	-3/8"	-13/16"
PIER 6				
SPLICE	1/16"	5/16"	5/8"	1"
1/2 PT.	3/16"	3/4"	1 1/16"	2 5/8"
3/4 PT.	3/16"	5/8"	5/8"	1 1/16"
EAST ABUT.				

GIRDER V

GIRDER B-B				
1/2 PT.	0	-1/16"	0	-1/16"
PIER 6				
SPLICE	1/8"	5/16"	1/4"	5/8"
1/2 PT.	3/16"	3/4"	1 1/16"	2 3/8"
3/4 PT.	3/16"	9/16"	1 15/16"	2 1/16"
EAST ABUT.				

GIRDER W

GIRDER B-B				
1/8 PT.	1/8"	7/16"	-3/8"	3/16"
1/4 PT.	5/16"	3/4"	-1/2"	9/16"
3/8 PT.	3/8"	1"	-1/4"	1 1/8"
1/2 PT.	3/8"	1 1/16"	-1/4"	1 3/16"
5/8 PT.	3/8"	1"	1/8"	1 1/2"
3/4 PT.	1/4"	3/4"	13/16"	1 13/16"
7/8 PT.	1/8"	7/16"	1 1/16"	2"
EAST ABUT.				

GIRDER X

GIRDER B-B				
1/4 PT.	1/16"	5/16"	-1/2"	-1/8"
1/2 PT.	1/8"	7/16"	-5/8"	-1/16"
3/4 PT.	1/16"	5/16"	-1/2"	-1/8"
EAST ABUT.				

GIRDER Y

GIRDER B-B				
1/4 PT.	0	1/16"	-1/4"	-3/16"
1/2 PT.	1/16"	1/8"	-3/8"	-3/16"
3/4 PT.	0	1/8"	-1/8"	0
EAST ABUT.				

GIRDER Z

GIRDER B-B				
1/2 PT.	0	0	-1/8"	-1/8"
EAST ABUT.				

GIRDER A-A

GIRDER B-B				
1/2 PT.	0	0	0	0
EAST ABUT.				

GIRDER B-B

DIAPHRAGM				
1/8 PT.	1/16"	5/16"	0	3/8"
1/4 PT.	1/8"	1/2"	1/8"	3/4"
3/8 PT.	1/8"	1/2"	1/4"	7/8"
1/2 PT.	1/8"	3/8"	3/4"	1 1/4"
BEND	1/16"	1/4"	1 1/16"	1 3/8"
3/4 PT.	0	-1/8"	1"	7/8"
7/8 PT.	-1/16"	-1/8"	15/16"	3/4"
PIER 5				
1/8 PT.	1/8"	9/16"	1/2"	13/16"
1/4" PT.	5/16"	13/16"	1 9/16"	3 1/16"
BEND	1/16"	1 1/2"	2 11/16"	4 5/8"
1/2 PT.	1/16"	1 5/8"	3 5/8"	5 1/16"
BEND	3/8"	1 7/16"	2 7/8"	4 1/16"
3/4 PT.	3/16"	11/16"	13/16"	1 1/16"
7/8 PT.	1/16"	3/16"	5/16"	9/16"
PIER 6				
1/8 PT.	1/16"	1/8"	1/16"	1/4"
BEND	3/16"	3/8"	1/4"	13/16"
3/8 PT.	1/4"	5/8"	1/8"	1"
1/2 PT.	3/8"	13/16"	1/8"	1 3/16"
5/8 PT.	3/8"	7/8"	3/8"	1 5/8"
BEND	5/16"	3/4"	9/16"	1 5/8"
7/8 PT.	3/16"	3/8"	5/16"	7/8"
EAST ABUT.				

NOTES

(1) FOR NOTES, SEE SHEET 86/120

McCOY ASSOCIATES, INC. 90/120
CONSULTING ENGINEERS
AKRON, OHIO

DEFLECTION & CAMBER TABLES

BRIDGE NO. SUM 76-1277
AKRON EAST EXPRESSWAY
WEST VIADUCT

DESIGNED	DRAWN	TRACED	CHECKED	REVIEWED	DATE	REVISED
JMH	D.A.K.		RAK	JBH	3-31-89	

220891

FHWA REGION	STATE	PROJECT	
5	OHIO		

1040
12.14

SUMMIT COUNTY
SUM 76 - 11.57

PARAPET PANEL SPACING 10'-1 1/8"
7-PANELS @ 16'-0" = 112'-0"
℄ BEARING WEST ABUTMENT
℄ PIER Nº1
18-PANELS @ 6'-0" = 108'-0"
BEND LINE Nº1
℄ PIER Nº2
9'-5"
℄ OPTIONAL CONSTRUCTION JOINT Nº1

6- ES512 IN PANEL
230-ES 573 @ 12" (N.F.)
230-ES 574 @ 12" (F.F.)
ES 404 TOP ES 504 BOTT.
6- ES 509 PER PANEL
ES 401 TOP OF CURB OVER PIER
ES 402 TOP OF CURB OVER PIER

SERIES- ES 603 @ 6½" TOP
SERIES- ES 503 @ 6½" BOTT.
4- ES 502 8 SETS IN CURB
6- ES 508 PER PANEL
264-ES 623 @ 6½" TOP
264-ES 561 @ 6½" BOTT.
91-ES 623 @ 6½" TOP
91-ES 561 @ 6½" BOTT.
FAN 10- ES 623 @ 6½" TOP
FAN 10- ES 561 @ 6½" BOTT.
FAN 15- ES 623 @ 6½" TOP
FAN 15- ES 561 @ 6½" BOTT.

SERIES- ES 405 TOP
SERIES- ES 513 BOTT.
264- ES 624 @ 6½" TOP
264- ES 501 @ 6½" BOTT.
91- ES 624 @ 6½" TOP
91- ES 501 @ 6½" BOTT.
FAN 9- ES 624 @ 6½" TOP
FAN 9- ES 501 @ 6½" BOTT.
100 ES 430 (TOP)
89 ES 582 (BOTTOM)

SERIES- ES 406 TOP (FAN)
SERIES- ES 514 BOTT. (FAN)
FAN 17- ES 624 @ 6½" TOP
FAN 17- ES 501 @ 6½" BOTT.

SERIES- ES 605 @ 6½" TOP (FAN)
SERIES- ES 506 @ 6½" BOTT. (FAN)
ES 604 TOP
ES 505 BOTT.
ES 629 TOP
ES 583 BOTT.
94- ES 401 (2 SETS) TOP OF SLAB OVER PIER
94- ES 402 TOP OF SLAB OVER PIER
264- ES 602 @ 6½" TOP
264- ES 562 @ 6½" BOTT.
91- ES 602 @ 6½" TOP
91- ES 562 @ 6½" BOTT.
FAN 7- ES 602 @ 6½" TOP
FAN 7- ES 562 @ 6½" BOTT.
MATCH LINE SEE SHEET 92/120

75'-4½"
100 - ES 401 TOP (6 SETS)
89 - ES 502 BOTT. (6 SETS)
PARAPET PANEL SPACING 7'-11 5/8"
6-PANELS @ 15'-0" = 90'-0"
FAN 19- ES 602 @ 6½" TOP
FAN 19- ES 562 @ 6½" BOTT.
100- ES 403 TOP
89- ES 507 BOTT.
18-PANELS @ 6'-0" = 108'-0"
264- ES 601 @ 6½" TOP
264- ES 501 @ 6½" BOTT.
91- ES 601 @ 6½" TOP
91- ES 501 @ 6½" BOTT.
FAN 5- ES 601 @ 6½" TOP
FAN 5- ES 501 @ 6½" BOTT.
206-ES 575 @ 12" (N.F.)
206-ES 573 @ 12" (F.F.)
ES 401 TOP OF CURB OVER PIER
FAN 20- ES 601 @ 6½" TOP
FAN 20- ES 501 @ 6½" BOTT.
ES 402 TOP OF CURB OVER PIER
2" JOINT BETWEEN SLABS AND BARRIERS

4½" SEE DETAIL A SHEET 97/120
℄ I-76
℄ 2" JOINT BETWEEN SLABS & BARRIERS
4- ES 581 IN PANEL
4- ES 502 6 SETS IN CURB
4- ES 519 PER PANEL
4- ES 508 PER PANEL
4- ES 507 IN CURB
FAN 10- ES 601 @ 6½" TOP
FAN 10- ES 501 @ 6½" BOTT.

G01
G02
266- ES 601 @ 6½" TOP
266- ES 501 @ 6½" BOTT.
91- ES 601 @ 6½" TOP
91- ES 501 @ 6½" BOTT.
206-ES 575 @ 12" (N.F.)
206-ES 573 @ 12" (F.F.)
FAN 15- ES 601 @ 6½" TOP
FAN 15- ES 501 @ 6½" BOTT.
100 ES 430 (TOP)
89 ES 582 (BOTTOM)
94- ES 401 (2 SETS) TOP OF SLAB OVER PIER
FAN 18- ES 602 @ 6½" TOP
FAN 18- ES 562 @ 6½" BOTT.
94- ES 402 TOP OF SLAB OVER PIER
FAN 9- ES 602 @ 6½" TOP
FAN 9- ES 562 @ 6½" BOTT.
266- ES 602 @ 6½" TOP
266- ES 562 @ 6½" BOTT.
91- ES 602 @ 6½" TOP
91- ES 562 @ 6½" BOTT.

74'-7½"
266- ES 624 @ 6½" TOP
266- ES 501 @ 6½" BOTT.
91- ES 624 @ 6½" TOP
91- ES 501 @ 6½" BOTT.
FAN 7- ES 624 @ 6½" TOP
FAN 7- ES 501 @ 6½" BOTT.
100- ES 403 TOP
89- ES 507 BOTT.
266- ES 623 @ 6½" TOP
266- ES 561 @ 6½" BOTT.
FAN 19- ES 624 @ 6½" TOP
FAN 19- ES 501 @ 6½" BOTT.
FAN 5- ES 623 @ 6½" TOP
FAN 5- ES 561 @ 6½" BOTT.
FAN 20- ES 623 @ 6½" TOP
FAN 20- ES 561 @ 6½" BOTT.
91- ES 623 @ 6½" TOP
91- ES 561 @ 6½" BOTT.
4- ES 502 6 SETS IN CURB
6- ES 508 PER PANEL
6- ES 583 IN PANEL
6- ES 509 PER PANEL
ES 401 TOP OF CURB OVER PIER
ES 402 TOP OF CURB OVER PIER
4- ES 507 IN CURB

RADIAL
PARAPET PANEL SPACING 8'-8½"
207-ES 573 @ 12"(-) (N.F.)
207-ES 574 @ 12"(-) (F.F.)
6-PANELS @ 16'-0" = 96'-0"
17-PANELS @ 6'-0" = 102'-0"
SECTION 1 = 205'-2⅞" ALONG ℄ I-76

SLAB PLAN

SECTION 1
WEST ABUTMENT TO STA. 602+62.63

NOTES

1. MINIMUM SPLICE LENGTHS
   #4 BARS = 16"
   #5 BARS = 20"
   #6 BARS = 24"

McCOY ASSOCIATES INC. 91/120
CONSULTING ENGINEERS
AKRON, OHIO

DECK SLAB PLAN

BRIDGE NO. SUM. 76-1277
AKRON EAST EXPRESSWAY
WEST VIADUCT

DESIGNED	DRAWN	TRACED	CHECKED	REVIEWED	DATE	REVISED
T.A.B.	J.D.P.		G.C.K.	J.B.H.	3-31-89	

FHWA REGION	STATE	PROJECT	
5	OHIO		

1041
12.14

SUMMIT COUNTY
SUM 76 - 11.57

PARAPET PANEL SPACING
15'-0 ¼" — 3-PANELS @ 16'-0" = 48'-0"
℄ OPTIONAL CONSTRUCTION JOINT Nº 1
14-PANELS @ 6'-0" = 84'-0"
BEND LINE Nº 2
℄ PIER Nº 3
9'-0"
4-PANELS @ 16'-0" = 64'-0"
5-PANELS @ 6'-0" = 30'-0"
℄ PIER Nº 4
℄ OPTIONAL CONSTRUCTION JOINT NO. 2
14'-5"

250-ES 573 @ 12" (N.F.)
250-ES 574 @ 12" (F.F.)
ES408 TOP OF CURB OVER PIER
ES401 TOP OF CURB OVER PIER
ES401 TOP OF CURB OVER PIER

132-ES 623 @ 6½" TOP
132-ES 561 @ 6½" BOTT.
4- ES563 IN CURB
4- ES502 8 SETS IN CURB
6- ES572 IN PANEL
6- ES509 PER PANEL
6- ES508 PER PANEL
6- ES517 IN PANEL
312-ES 623 @ 6½" TOP
312-ES 561 @ 6½" BOTT.
6- ES509 PER PANEL
6- ES508 PER PANEL

FAN 5- ES623 @ 6½" TOP
FAN 5- ES561 @ 6½" BOTT.
SERIES ES428 TOP
SERIES ES 579 BOTT.
132- ES 624 @ 6½" TOP
132- ES501 @ 6½" BOTT.
FAN 7- ES624 @ 6½" TOP
FAN 7- ES501 @ 6½" BOTT.
FAN 17- 623 @ 6½" TOP
FAN 17- 561 @ 6½" BOTT.
FAN 18- 624 @ 6½" TOP
FAN 18- 501 @ 6½" BOTT.
312- ES 624 @ 6½" TOP
312- ES 501 @ 6½" BOTT.
100 ES 430 (TOP)
89 ES 582 (BOTTOM)

SERIES- ES 409 TOP
SERIES- ES 516 BOTT.
100-ES 430 (TOP) LAP WITH ES401
89-ES 582 (BOTTOM) LAP WITH ES502
100- ES 401 TOP (8 SETS)
89- ES502 BOTT. (8 SETS)
130- ES602 @ 6½" TOP
130- ES562 @ 6½" BOTT.
93- ES 401 (2 SETS) TOP OF SLAB OVER PIER
93- ES 401 TOP OF SLAB OVER PIER
312- ES 602 @ 6½" TOP
312- ES 562 @ 6½" BOTT.
75'-0"
FAN 9- ES602 @ 6½" TOP
FAN 9- ES562 @ 6½" BOTT.
FAN 19- ES602 @ 6½" TOP
FAN 19- ES562 @ 6½" BOTT.
93- ES 408 TOP OF SLAB OVER PIER

9'-1¼"
15'-0" (2 PANELS @ 7'-6" = 15'-0")
2-PANELS @ 15'-0" = 30'-0"
14-PANELS @ 6'-0" = 84'-0"
9'-0"
4-PANELS @ 16'-0" = 64'-0"
5-PANELS @ 6'-0" = 30'-0"
PARAPET PANEL SPACING
(SEE DETAIL A SHEET 97/120)
132- ES 601 @ 6½" TOP
132- ES501 @ 6½" BOTT.
312- ES601 @ 6½" TOP
312- #ES 501 @ 6½" BOTT.
256-ES 575 @ 12" (N.F.)
256-ES 573 @ 12" (F.F.)
FAN 10- ES601 @ 6½" TOP
FAN 10- ES501 @ 6½" BOTT.
FAN 20- ES601 @ 6½" TOP
FAN 20- ES501 @ 6½" BOTT.
4- ES517 IN PANEL
4- ES509 PER PANEL
ES 401 TOP OF CURB OVER PIER
ES408 TOP OF CURB OVER PIER
℄ I-76
℄ 2" JOINT
℄ LIGHT SUPPORTS STA. 604+50.15 SEE SHEET 98/120 FOR DETAILS
℄ I-76 AND 2" JOINT BETWEEN SLABS
4- ES502 8 SETS IN CURB
4- ES566 IN PANEL
4- ES565 IN CURB
603 4-ES511 PER PANEL
4- ES519 PER PANEL
604 ES 401 TOP OF CURB OVER PIER
4- ES508 PER PANEL
605
P.T. STA. 603+50.88
139- ES601 @ 6½" TOP
139- ES501 @ 6½" BOTT.
315- ES 601 @ 6½" TOP
315- ES 501 @ 6½" BOTT.
256-ES 575 @ 12" (N.F.)
256-ES 573 @ 12" (F.F.)
FAN 5- ES601 @ 6½" TOP
FAN 5- ES501 @ 6½" BOTT.
4- ES508 PER PANEL
FAN 17- ES 601 @ 6½" TOP
FAN 17- ES501 @ 6½" BOTT.
SERIES ES 429 TOP
SERIES ES 580 BOTT.
139- ES602 @ 6½" TOP
139- ES562 @ 6½" BOTT.
315- ES 602 @ 6½" TOP
315- ES 562 @ 6½" BOTT.
100 ES 430 (TOP)
90 ES 582 (BOTTOM)
100-ES 430 (TOP) LAP WITH ES401
89-ES 582 (BOTTOM) LAP WITH ES502
FAN 7- ES602 @ 6½" TOP
FAN 7- ES562 @ 6½" BOTT.
FAN 18- ES602 @ 6½" TOP
FAN 18- ES 562 @ 6½" BOTT.
93- ES 401 (2 SETS) TOP OF SLAB OVER PIER
93- ES 401 TOP OF SLAB OVER PIER
MATCH LINE SEE SHEET 91/120
MATCH LINE SEE SHEET 93/120
FAN 9- ES624 @ 6½" TOP
FAN 9- ES501 @ 6½" BOTT.
FAN 19- ES 624 @ 6½" TOP
FAN 19- ES501 @ 6½" BOTT.
75'-0"
93- ES408 TOP OF SLAB OVER PIER
139- ES624 @ 6½" TOP
139- ES501 @ 6½" BOTT.
315- ES 624 @ 6½" TOP
315- ES501 @ 6½" BOTT.
100- ES 401 TOP (8 SETS)
89- ES502 BOTT. (8 SETS)
125- ES 625 @ 6½" TOP
125- ES 567 @ 6½" BOTT.
5
190- ES 623 @ 6½" TOP
190- ES 561 @ 6½" BOTT.
ES408 TOP OF CURB OVER PIER
ES 401 TOP OF CURB OVER PIER
FAN 10- ES 623 @ 6½" TOP
FAN 10- ES 561 @ 6½" BOTT.
139- ES 623 @ 6½" TOP
139- ES 561 @ 6½" BOTT.
FAN 20- ES 623 @ 6½" TOP
FAN 20- ES 561 @ 6½" BOTT.
6- ES517 IN PANEL
4- ES502 8 SETS IN CURB
SERIES- ES 407 TOP
SERIES- ES 515 BOTT.
6- ES508 PER PANEL
ES 401 TOP OF CURB OVER PIER
262-ES 573 @ 12" (N.F.)
262-ES 574 @ 12" (F.F.)
6- ES509 PER PANEL
6- ES508 PER PANEL
PARAPET PANEL SPACING
4-PANELS @ 16'-0" = 64'-0"
6- ES520 IN PANEL
6- ES509 PER PANEL
14-PANELS @ 6'-0" = 84'-0"
9'-0"
4-PANELS @ 16'-0" = 64'-0"
P.C. STA. 604+50.15 = STA. 4+50.15 ℄ RAMP E
5-PANELS @ 6'-0" = 30'-0"
11'-5"
4-ES 564 IN CURB

SLAB PLAN
SECTION 2
STA. 602+62.63 TO STA. 605+18.68

NOTES

UNIT 2

1. LENGTH OF SLAB ALONG ℄ I-76 IS 255'-8¼"

2. MINIMUM SPLICE LENGTHS
   # 4 BARS = 16"
   # 5 BARS = 20"
   # 6 BARS = 24"

McCOY ASSOCIATES INC. 92/120
CONSULTING ENGINEERS
AKRON, OHIO

DECK SLAB PLAN

BRIDGE NO. SUM. 76-1277
AKRON EAST EXPRESSWAY
WEST VIADUCT

DESIGNED	DRAWN	TRACED	CHECKED	REVIEWED	DATE	REVISED
T.A.B.	J.D.P.		GCK	JBH	3-31-89	

FHWA REGION	STATE	PROJECT	
5	OHIO		

1042
12.14

SUMMIT COUNTY
SUM 76 - 11.57

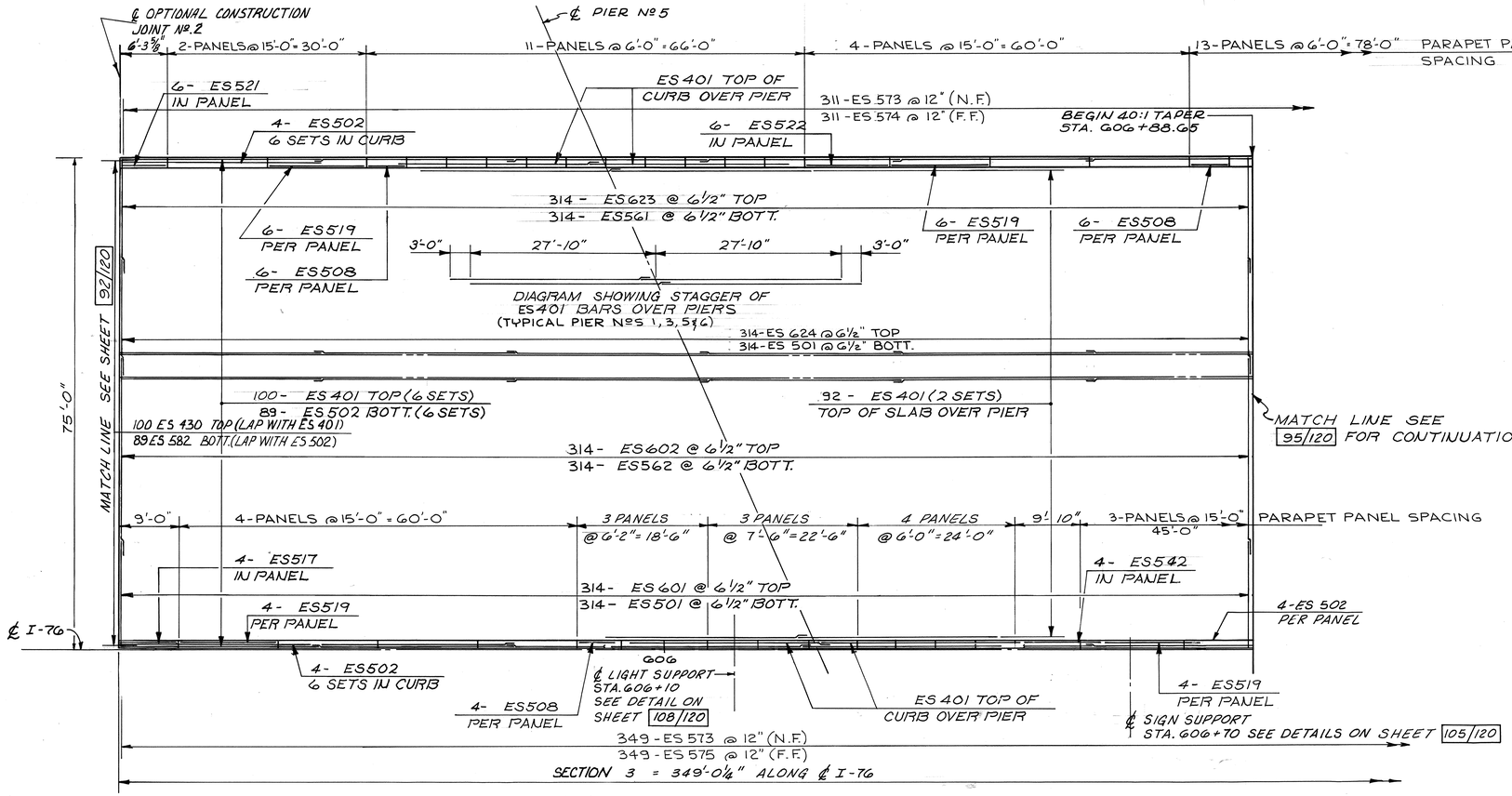

SLAB PLAN

SECTION 3 STA. 605+18.68 STA. 606+88.65

(NORTH SIDE)

NOTES

1. MINIMUM SPLICE LENGTHS
   #4 BARS = 16"
   #5 BARS = 20"
   #6 BARS = 24"

McCOY ASSOCIATES INC. 93/120
CONSULTING ENGINEERS
AKRON, OHIO

DECK SLAB PLAN

BRIDGE NO. SUM. 76-1277
AKRON EAST EXPRESSWAY
WEST VIADUCT

DESIGNED	DRAWN	TRACED	CHECKED	REVIEWED	DATE	REVISED
T.A.B.	J.D.P.		G.C.K.	JBH	3-31-83	

FHWA REGION	STATE	PROJECT	
5	OHIO		

1043
1214

SUMMIT COUNTY
SUM 76-11.57

NOTES

1. FOR SIGN SUPPORT DETAILS SEE SHEET 105/120
2. FOR LIGHT SUPPORT DETAILS SEE SHEET 98/120
3. MINIMUM SPLICE LENGTHS
   #4 BARS = 16"
   #5 BARS = 20"
   #6 BARS = 24"

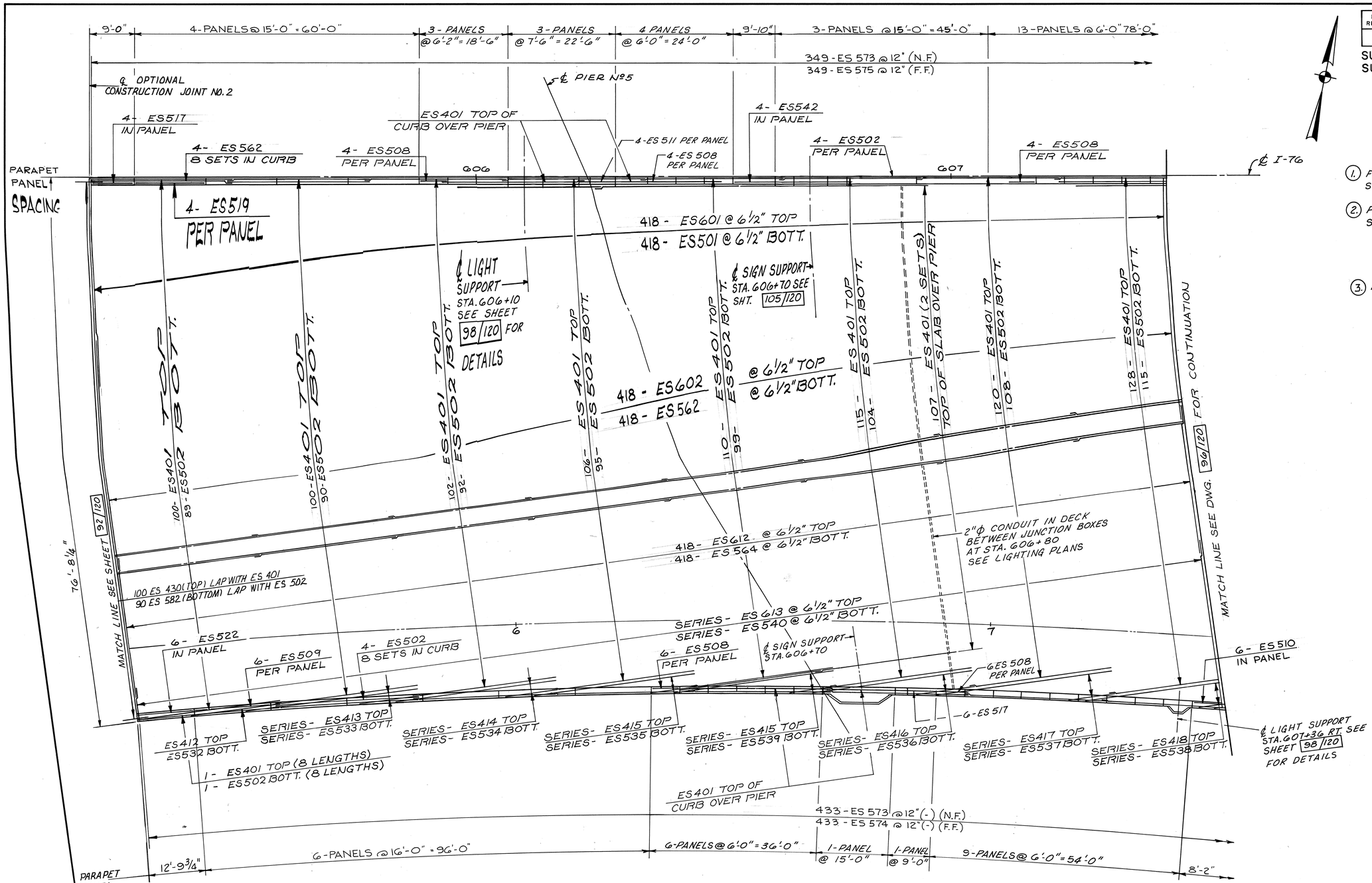

SLAB PLAN

SECTION 3 STATION 605+18.68 TO STATION 607+45.50
(SOUTH BRIDGE)

McCOY ASSOCIATES INC
CONSULTING ENGINEERS
AKRON, OHIO

DECK SLAB PLA

BRIDGE NO. SUM. 76-12
AKRON EAST EXPRESSW
WEST VIADUCT

DESIGNED	DRAWN	TRACED	CHECKED	REVIEWE
T.A.B.	J.D.P.		G.C.K.	JBH

FHWA REGION	STATE	PROJECT	
5	OHIO		

1044
12.14

SUMMIT COUNTY
SUM 76-11.57

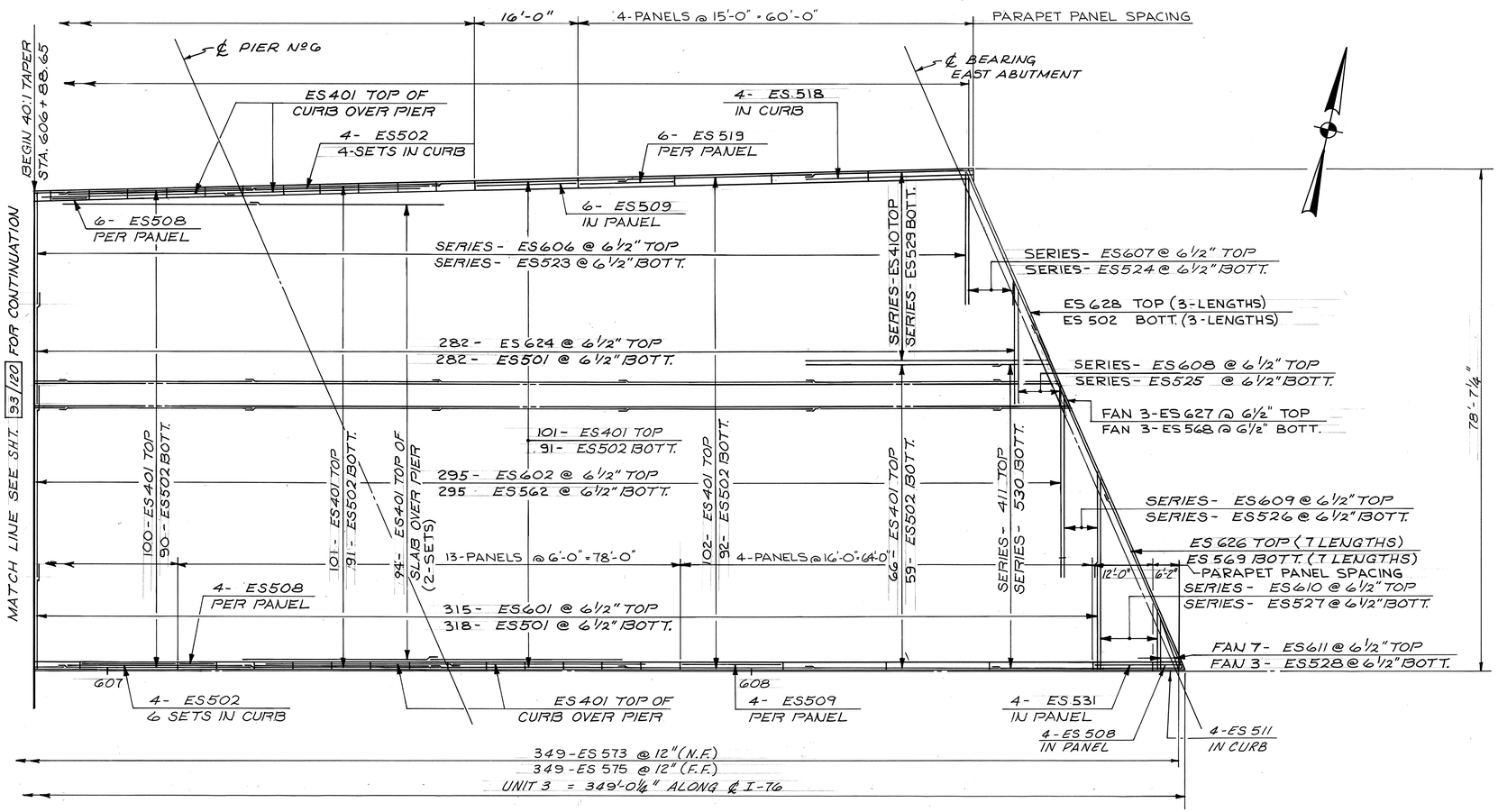

SLAB PLAN

SECTION 3 STATION 606+88.65 TO ℄ BEARING EAST ABUTMENT
(NORTH BRIDGE)

NOTES

1. MINIMUM SPLICE LENGTHS
   # 4 BARS = 16"
   # 5 BARS = 20"
   # 6 BARS = 24"

McCOY ASSOCIATES INC. 95/120
CONSULTING ENGINEERS
AKRON, OHIO

DECK SLAB PLAN

BRIDGE NO. SUM. 76-1277
AKRON EAST EXPRESSWAY
WEST VIADUCT

DESIGNED	DRAWN	TRACED	CHECKED	REVIEWED	DATE	REVISED
T.A.B.	J.D.P.		G.C.K.	JBH	3-31-89	

FHWA REGION	STATE	PROJECT	
5	OHIO		

1045
12.14

SUMMIT COUNTY
SUM 76-11.57

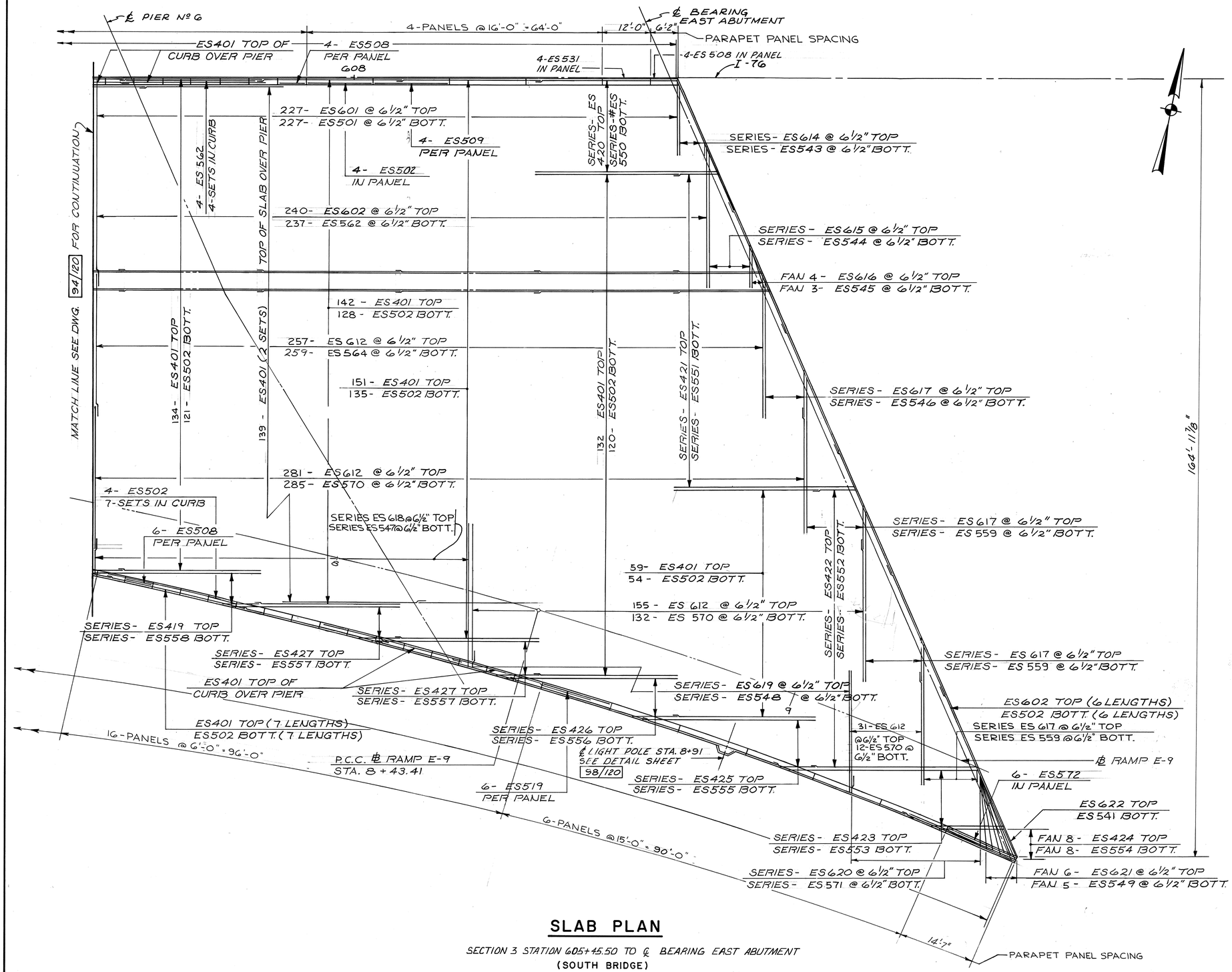

SLAB PLAN

SECTION 3 STATION 605+45.50 TO ℄ BEARING EAST ABUTMENT
(SOUTH BRIDGE)

NOTES

1. FOR LIGHT SUPPORT DETAILS SEE SHEET 98/120
2. MINIMUM SPLICE LENGTHS
   #4 BARS = 16"
   #5 BARS = 20"
   #6 BARS = 24"

McCOY ASSOCIATES INC. 96/120
CONSULTING ENGINEERS
AKRON, OHIO

DECK SLAB PLAN

BRIDGE NO. SUM. 76-1277
AKRON EAST EXPRESSWAY
WEST VIADUCT

DESIGNED	DRAWN	TRACED	CHECKED	REVIEWED	DATE	REVISED
T.A.B.	J.D.P.		G.C.K.	J.B.H.	3-31-89	

FHWA REGION	STATE	PROJECT	
5	OHIO		

1046
1214

SUMMIT COUNTY
SUM 76-11.57

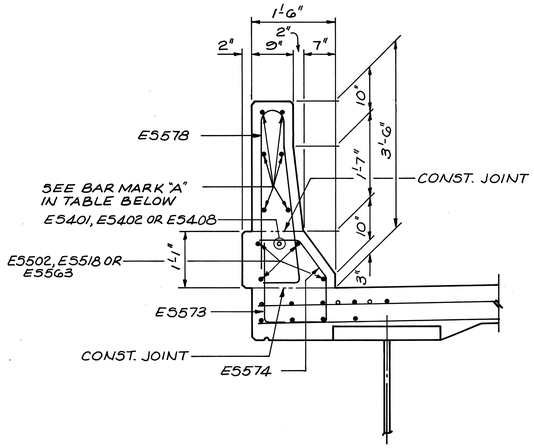

SECTION THRU PARAPET
SCALE: 3/4"=1'-0"

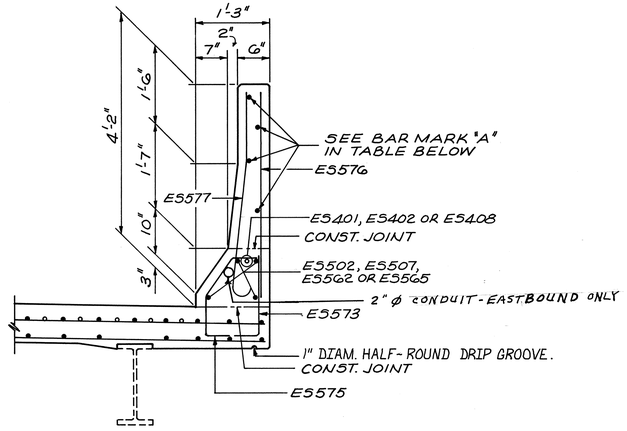

SECTION THRU MEDIAN BARRIER
SCALE: 3/4"=1'-0"

FOR ADDITIONAL BARRIER DETAILS @ LIGHT SUPPORTS AND SIGN SUPPORT SEE SHEETS 98/120 & 105/120 .

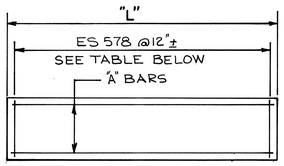

TYPICAL PARAPET PANEL

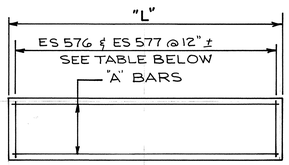

TYPICAL MEDIAN BARRIER PANEL

NO. OF PARAPET PANELS E-BOUND	NO. OF PARAPET PANELS W-BOUND	LENGTH "L"	BAR MARK "A"	NO. OF ES 578 PER PANEL
67	61	6'-0"	ES 508	7
1		8'-2"	ES 510	9
1		8'-8½"	ES 583	9
2	1	9'-0"	ES 517	10
	1	10'-1⅛"	ES 512	10
	1	6'-3⅝"	ES 521	7
1		11'-5"	ES 520	12
1		12'-9¾"	ES 522	14
1		14'-7"	ES 572	15
6	10	15'-0"	ES 519	16
22	15	16'-0"	ES 509	17
	1	15'-0¼"	ES 572	15

NO. OF MEDIAN PANELS E-BOUND	NO. OF MEDIAN PANELS W-BOUND	LENGTH "L"	BAR MARK "A"	NO. OF ES576 AND ES577 PER PANEL
54	54	6'-0"	ES 508	7
3	3	7'-6"	ES 511	8
1	1	9'-1⅛"	ES 566	9
2	2	9'-0"	ES 517	10
1	1	9'-10"	ES 542	10
1	1	7'-11⅜"	ES 581	8
4	4	6'-2"	ES 508	7
1	1	12'-0"	ES 531	13
15	15	15'-0"	ES 519	16
4	4	16'-0"	ES 509	17

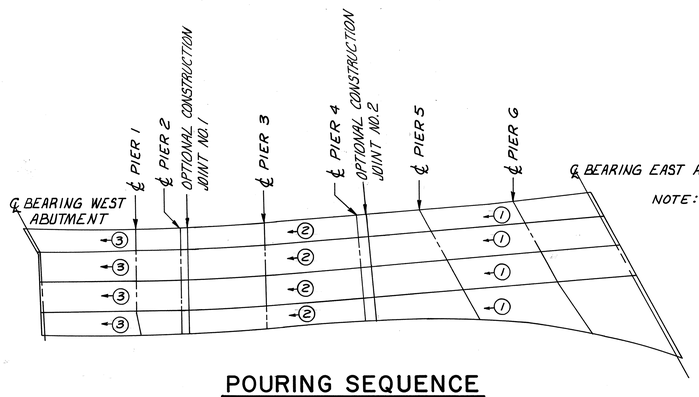

POURING SEQUENCE

NOTE: THE CONTRACTOR MAY SUBMIT, FOR APPROVAL BY THE DIRECTOR, ALTERNATE SCHEMES OF PLACING SLAB. THE SEQUENCE OF SLAB CONSTRUCTION DOES NOT APPLY TO THE MEDIAN AND PARAPETS.

STATION	OFFSET
G00+25.43 TO G03+44.27	4½" RT.
G03+44.27 TO G03+90.88	VARIES 4½" RT. TO 0"
G03+90.88 TO G08+99.03	0"

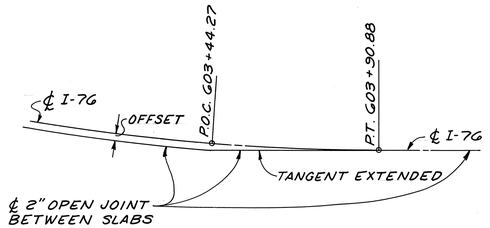

DETAIL A
℄ SLABS & ℄ I-76
NOT TO SCALE

McCOY ASSOCIATES INC. 97/120
CONSULTING ENGINEERS
AKRON, OHIO

SUPERSTRUCTURE DETAILS

BRIDGE NO. SUM. 76-1277
AKRON EAST EXPRESSWAY
WEST VIADUCT

DESIGNED	DRAWN	TRACED	CHECKED	REVIEWED	DATE	REVISED
JBH	J.D.P.		M.A.M.	JBH	3-31-89	

FHWA REGION	STATE	PROJECT	
5	OHIO		

1047
1214

SUMMIT COUNTY
SUM 76 - 11.57

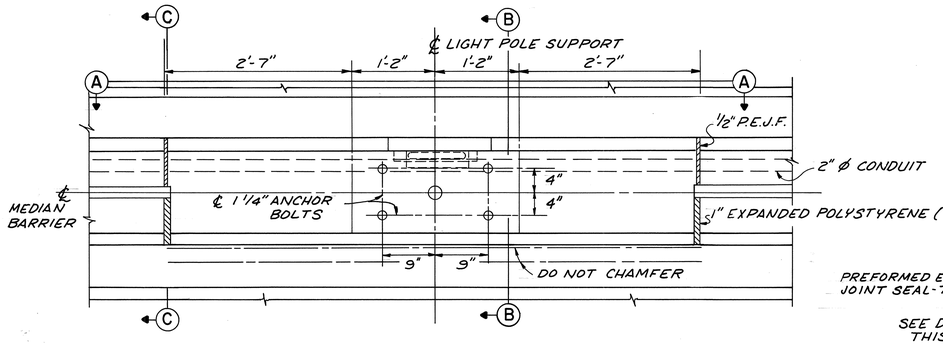

PLAN

LIGHT POLE SUPPORT

STA. 602 + 90 & STA. 606 + 10

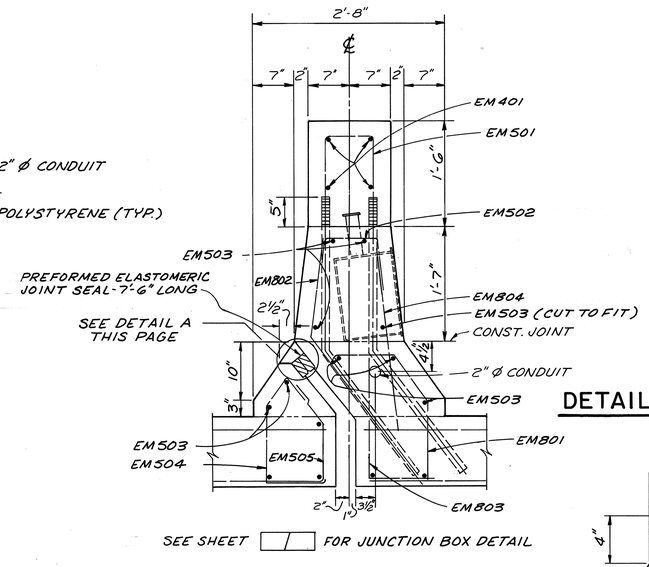

SEE SHEET ☐ FOR JUNCTION BOX DETAIL

SECTION B-B

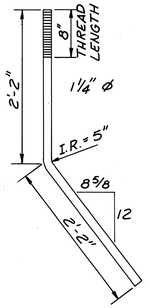

I.R. = INSIDE RADIUS

DETAIL OF BENT ANCHOR BOLT

NOTE:
FOR ADDITIONAL DETAILS, SEE LIGHTING PLANS & NOTES.

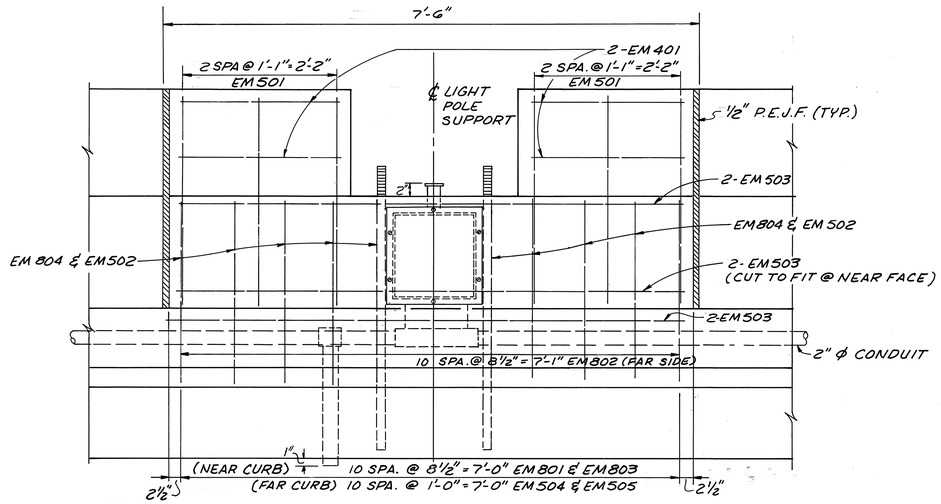

SECTION A-A

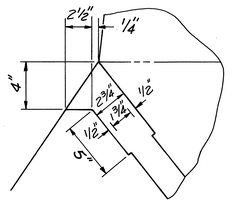

DETAIL A

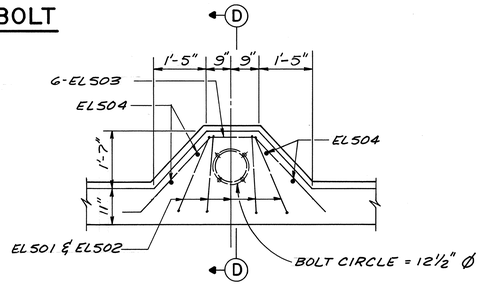

LIGHT PILASTER DETAIL

NOTE: FOR DETAILS NOT SHOWN, SEE STD. DRG. HL-20.14
STA. 607 + 38 RT. & STA. 8 + 91 RT.

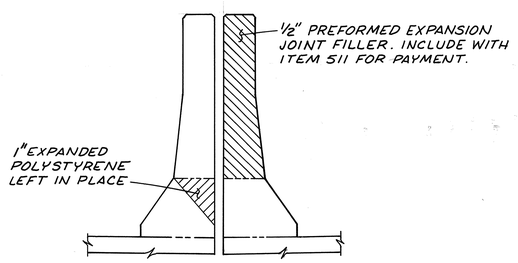

SECTION C-C

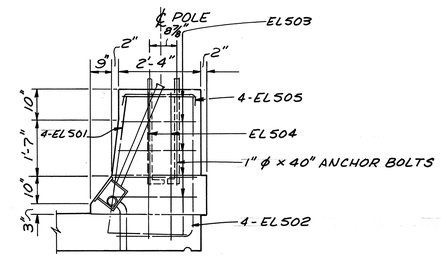

SECTION D-D

McCOY ASSOCIATES, INC. 98/120
CONSULTING ENGINEERS
AKRON, OHIO

LIGHT SUPPORT PARAPET DETAILS

BRIDGE NO. SUM. 76-1277
AKRON EAST EXPRESSWAY
WEST VIADUCT

DESIGNED	DRAWN	TRACED	CHECKED	REVIEWED	DATE	REVISED
JBH	M.R.A.		M.A.M.	JBH	3-31-89	

S20681

FHWA REGION	STATE	PROJECT	
5	OHIO		

1048
1214

SUMMIT COUNTY
SUM 76-11.57

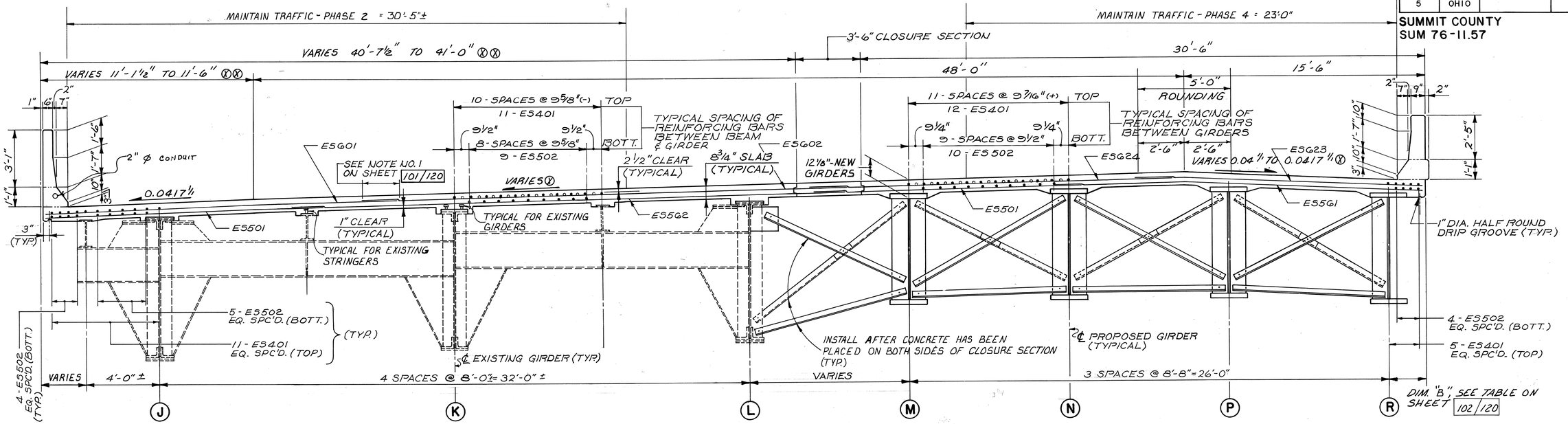

EASTBOUND LANES (LOOKING EAST)

STA. 600+53.23 TO STA. 604+22.08

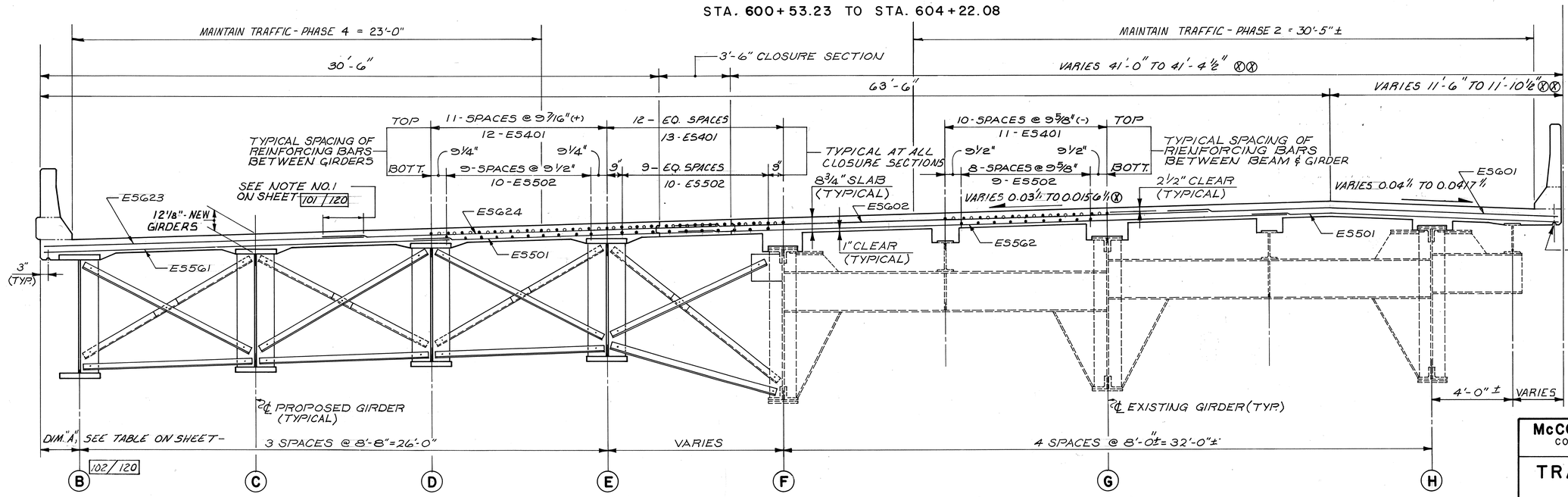

WESTBOUND LANES (LOOKING EAST)

STA. 600+53.23 TO STA. 604+22.08

ⓧ SEE ROADWAY TYPICAL SECTIONS
ⓧⓧ SEE DETAIL A SHEET 97/120

NOTES

1. FOR ADDITIONAL NOTES, SEE SHEET 101/120

McCOY ASSOCIATES INC. 99/120
CONSULTING ENGINEERS
AKRON, OHIO

TRANSVERSE SECTION

BRIDGE NO. SUM. 76-1277
AKRON EAST EXPRESSWAY
WEST VIADUCT

DESIGNED	DRAWN	TRACED	CHECKED	REVIEWED	DATE	REVISED
TAB	J.D.P.		JBH	JBH	3-31-89	

FHWA REGION	STATE	PROJECT	
5	OHIO		

1049
12.14

SUMMIT COUNTY
SUM 76-11.57

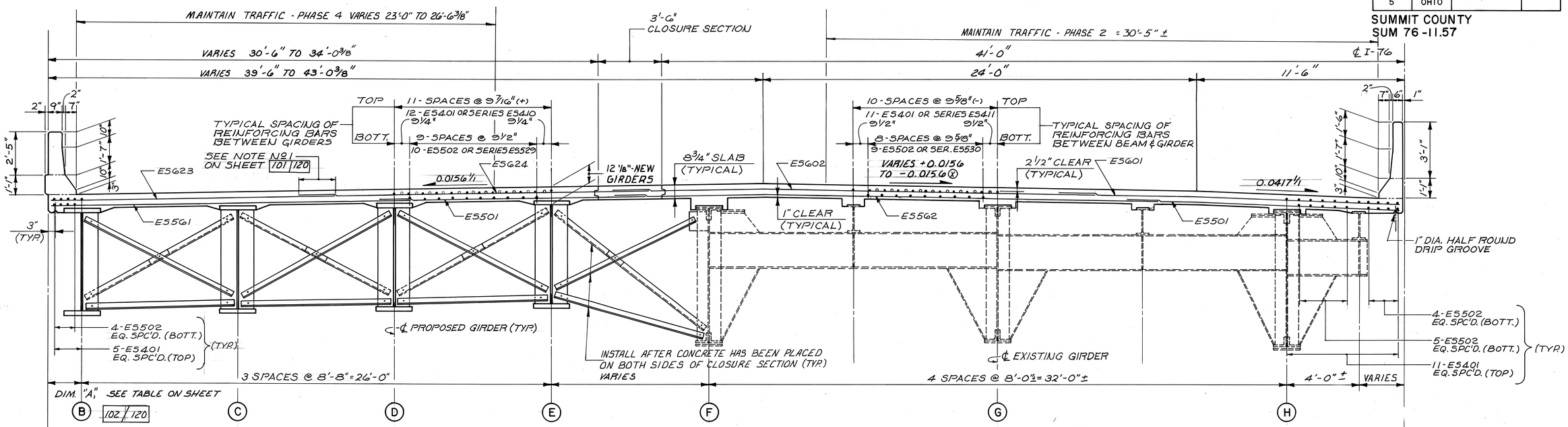

WESTBOUND LANES

STA. 604+22.08 TO STA. 608+69.03

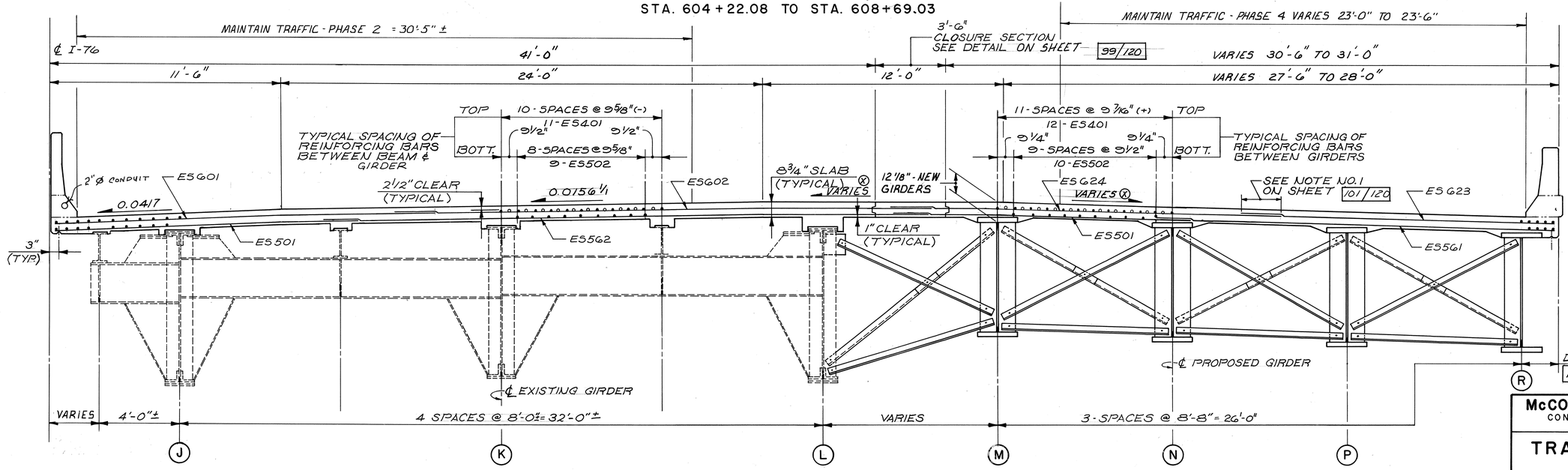

EASTBOUND LANES

STA. 604+22.08 TO STA. 604+91.82

(X) SEE ROADWAY TYPICAL SECTIONS

NOTES:

1. GIRDER A NOT SHOWN. SEE FRAMING PLAN SHEET 66/120
2. SEE SLAB PLAN FOR ADDITIONAL BARS AT NORTH SLAB WIDENING PIER 6 TO EAST ABUTMENT ON SHEET 95/120
3. FOR ADDITIONAL NOTES, SEE SHEET 101/120

McCOY ASSOCIATES INC. 100/120
CONSULTING ENGINEERS
AKRON, OHIO

TRANSVERSE SECTION

BRIDGE NO. SUM. 76-1277
AKRON EAST EXPRESSWAY
WEST VIADUCT

DESIGNED	DRAWN	TRACED	CHECKED	REVIEWED	DATE	REVISED
TAB	J.D.P.		JBH	JBH	3-31-89	

FHWA REGION	STATE	PROJECT	
5	OHIO		

1050
1214

SUMMIT COUNTY
SUM 76-11.57

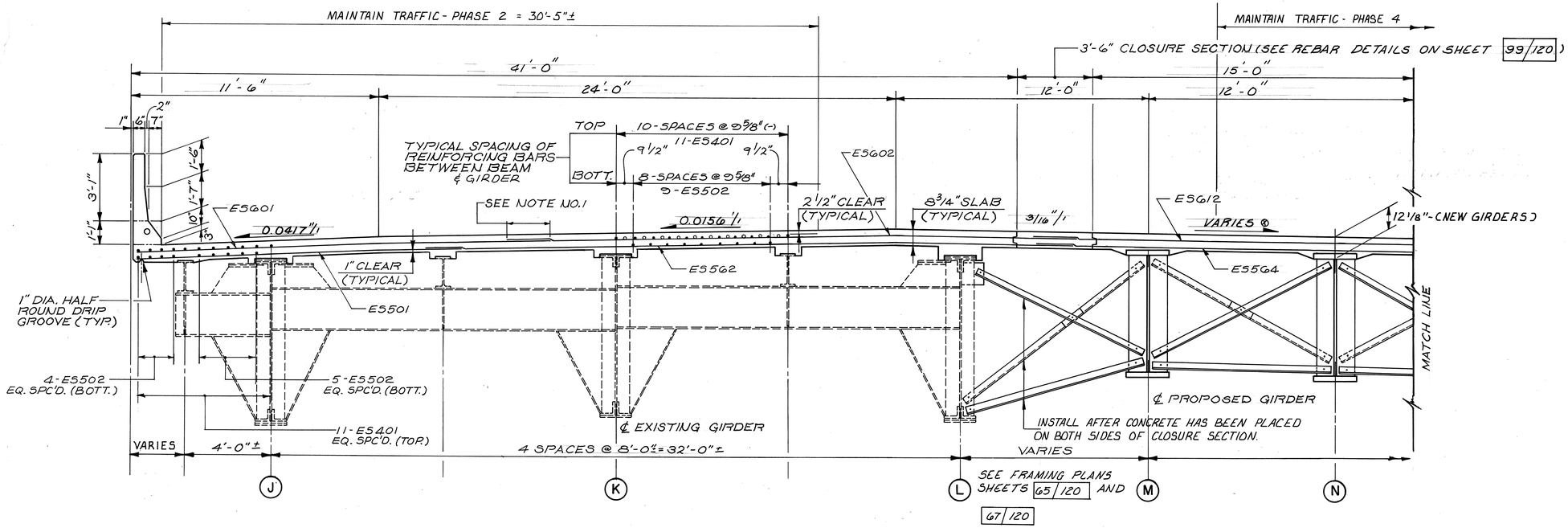

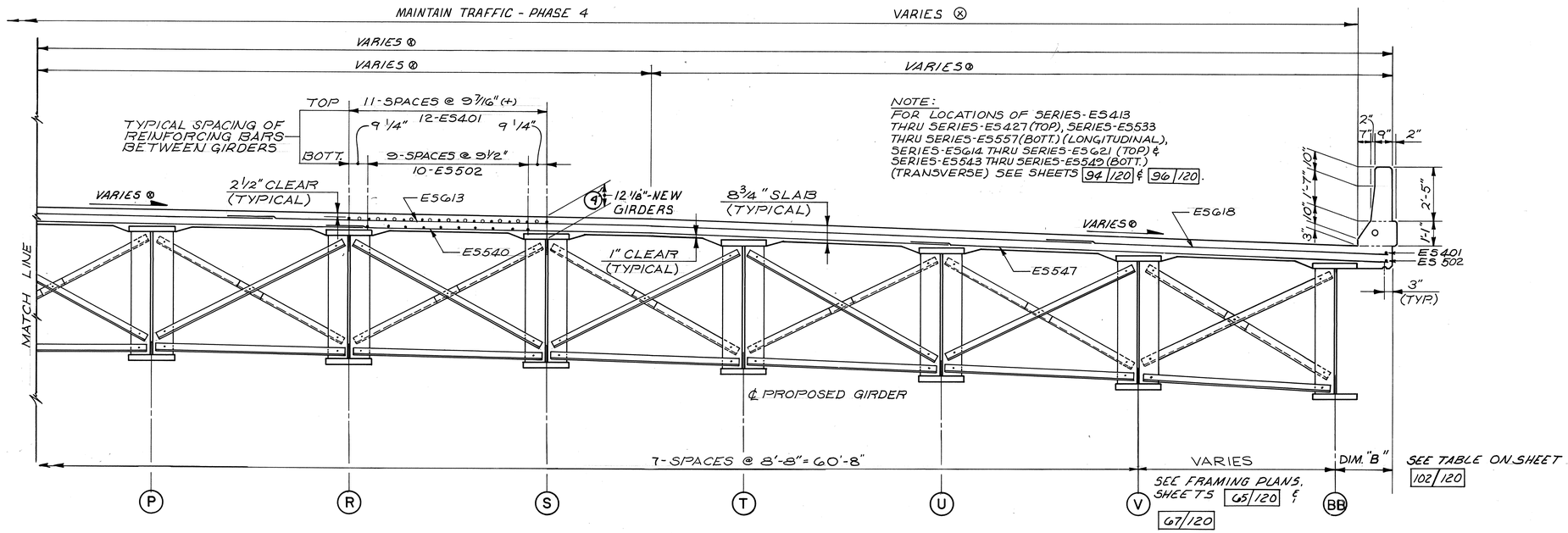

EASTBOUND LANES

STA. 604+91.82 TO STA. 608+69.03

⊗ SEE ROADWAY TYPICAL SECTIONS

NOTES

1. TYPICAL REINFORCING BAR LAPS:

   #4 = 16"
   #5 = 20"
   #6 = 24"

2. FOR SCREED ELEVATION TABLES, SEE SHEETS 103/120 & 103A/120

3. GIRDERS W, X, Y, Z & A-A NOT SHOWN, SEE FRAMING PLANS SHEETS 65/120 AND 67/120 FOR LOCATION.

4. APPROXIMATE STATION 608+00 SHOWN, SEE FRAMING PLAN FOR GIRDER DETAILS SHEETS 65/120 AND 67/120

5. THIS IS THE DESIGN DIMENSION. THE QUANTITY OF DECK CONCRETE TO BE PAID FOR SHALL BE BASED UPON THIS DIMENSION EVEN THOUGH DEVIATION FROM IT MAY BE NECESSARY BECAUSE THE TOP FLANGE OF THE GIRDER MAY NOT HAVE THE EXACT CAMBER REQUIRED.

6. FOR ELECTRICAL CONDUIT ON BRIDGE, SEE LIGHTING PLAN

7. A HAUNCH WIDTH OF 9" SHALL BE USED FOR COMPUTING QUANTITY OF CONCRETE AT NEW GIRDERS, EVEN THOUGH THE HAUNCH WIDTH MAY VARY BETWEEN 6" AND 12" PROVIDED THAT THE SLOPE SHALL NOT BE MORE THAN 1:4 FOR A HAUNCH LESS THAN 9" IN WIDTH

8. FOR HAUNCH DETAILS AT EXISTING GIRDERS, SEE SHEET 104/120

McCOY ASSOCIATES INC. 101/120
CONSULTING ENGINEERS
AKRON, OHIO

TRANSVERSE SECTION

BRIDGE NO. SUM. 76-1277
AKRON EAST EXPRESSWAY
WEST VIADUCT

DESIGNED	DRAWN	TRACED	CHECKED	REVIEWED	DATE	REVISED
TAB	J.D.P.		JBH	JBH	3-31-89	

FHWA REGION	STATE	PROJECT	
5	OHIO		

1051
1214

SUMMIT COUNTY
SUM. 76 - 11.57

LOCATION	DIMENSION A	REFERENCE GIRDER
WEST ABUTMENT	3'-0"	B
1/8 POINT	2'-5 7/8"	B
1/4 POINT	2'-1 3/8"	B
3/8 POINT	1'-10 3/8"	B
SPLICE	1'-9"	B
5/8 POINT	1'-9 3/8"	B
3/4 POINT	1'-11 1/4"	B
7/8 POINT	2'-2 7/8"	B
PIER 1	2'-8"	B
BEND LINE 1	3'-0"	B
1/2 POINT	2'-6 1/8"	B
3/4 POINT	2'-2 1/4"	B
PIER 2	1'-11 1/2"	B
SPLICE	1'-10 1/4"	B
1/4 POINT	1'-9"	B
3/8 POINT	1'-9"	B
1/2 POINT	1'-10"	B
5/8 POINT	1'-11 7/8"	B
SPLICE	2'-2 3/8"	B
7/8 POINT	1'-11 7/8"	B
PIER 3	1'-10 1/2"	B
1/8 POINT	1'-10"	B
1/4 POINT	1'-10"	B
3/8 POINT	1'-10"	B
SPLICE	1'-10"	B
5/8 POINT	1'-10"	B
3/4 POINT	1'-10"	B
7/8 POINT	1'-10"	B
PIER 4	1'-10"	B
SPLICE	1'-10"	B

LOCATION	DIMENSION A	REFERENCE GIRDER
1/2 POINT	1'-10"	B
SPLICE	1'-10"	B
PIER 5	1'-10"	B
1/8 POINT	1'-10"	B
1/4 POINT	1'-10"	B
3/8 POINT	1'-10"	B
1/2 POINT	1'-10"	B
SPLICE	1'-10"	B
3/4 POINT	1'-10 1/8"	B
7/8 POINT	2'-3"	B
PIER 6	2'-8"	B
1/8 POINT	3'-0"	B
1/4 POINT	3'-4 3/8"	B
SPLICE	3'-5 1/8"	B
1/2 POINT	4'-0 7/8"	B
5/8 POINT	1'-5 3/4"	A
3/4 POINT	1'-10"	A
7/8 POINT	2'-2 1/8"	A
EAST ABUTMENT	2'-6"	A

LOCATION	DIMENSION B	REFERENCE GIRDER
WEST ABUTMENT	1'-11"	A
1/8 POINT	2'-3"	A
1/4 POINT	2'-5 7/8"	A
3/8 POINT	2'-7 1/2"	A
SPLICE	2'-7 3/4"	A
5/8 POINT	2'-7"	A
3/4 POINT	2'-4 7/8"	A
7/8 POINT	2'-1 1/2"	A
PIER 1	1'-9 1/8"	A
BEND LINE 1	1'-6"	A
1/2 POINT	1'-10 3/4"	A
3/4 POINT	2'-1 1/2"	A
PIER 2	2'-3 3/8"	A
SPLICE	2'-4 1/4"	A
1/4 POINT	2'-4 3/8"	A
3/8 POINT	2'-3 7/8"	A
1/2 POINT	2'-2"	A
5/8 POINT	1'-11 1/8"	A
SPLICE	1'-7 1/8"	A
7/8 POINT	1'-9 3/8"	A
PIER 3	1'-11"	A
1/8 POINT	1'-11 5/8"	A
SPLICE	1'-11 5/8"	A
3/8 POINT	1'-11 5/8"	A
1/2 POINT	1'-11 3/8"	A
5/8 POINT	1'-11 3/4"	A
3/4 POINT	2'-1 1/2"	A
SPLICE	2'-6 3/4"	A
PIER 4	3'-0"	A

LOCATION	DIMENSION B	REFERENCE GIRDER
BEGIN GIRDER B-B	2'-0 1/4"	B-B
1/8 POINT	1'-10 7/8"	B-B
1/4 POINT	1'-11 5/8"	B-B
3/8 POINT	2'-2 1/2"	B-B
1/2 POINT	2'-7 1/2"	B-B
BEND POINT 1	3'-0"	B-B
5/8 POINT	2'-4 3/8"	B-B
3/4 POINT	2'-1 1/8"	B-B
PIER 5	2'-0"	B-B
1/8 POINT	2'-1 5/8"	B-B
1/4 POINT	2'-6 7/8"	B-B
BEND POINT 2	3'-0"	B-B
1/2 POINT	2'-6 1/2"	B-B
BEND POINT 3	2'-6"	B-B
3/4 POINT	1'-10 7/8"	B-B
7/8 POINT	1'-10 1/4"	B-B
PIER 6	2'-0 3/4"	B-B
1/8 POINT	2'-5 1/8"	B-B
BEND POINT 4	3'-1 1/8"	B-B
3/8 POINT	2'-7 1/2"	B-B
1/2 POINT	2'-5 7/8"	B-B
5/8 POINT	2'-8 1/4"	B-B
BEND POINT 5	2'-11 7/8"	B-B
7/8 POINT	2'-2 1/8"	B-B
EAST ABUTMENT	2'-0 1/8"	B-B

McCOY ASSOCIATES, INC.
CONSULTING ENGINEERS
AKRON, OHIO

102/120

SLAB OFFSETS

BRIDGE NO. SUM. 76-1277
AKRON EAST EXPRESSWAY
WEST VIADUCT

DESIGNED	DRAWN	TRACED	CHECKED	REVIEWED	DATE	REVISED
JMH	M.A.M.	A.M.	M.A.M.	J.B.H.	3-30-89	

320891

FHWA REGION	STATE	PROJECT	
5	OHIO		

1052
12.14

SUMMIT COUNTY
SUM 76–11.57

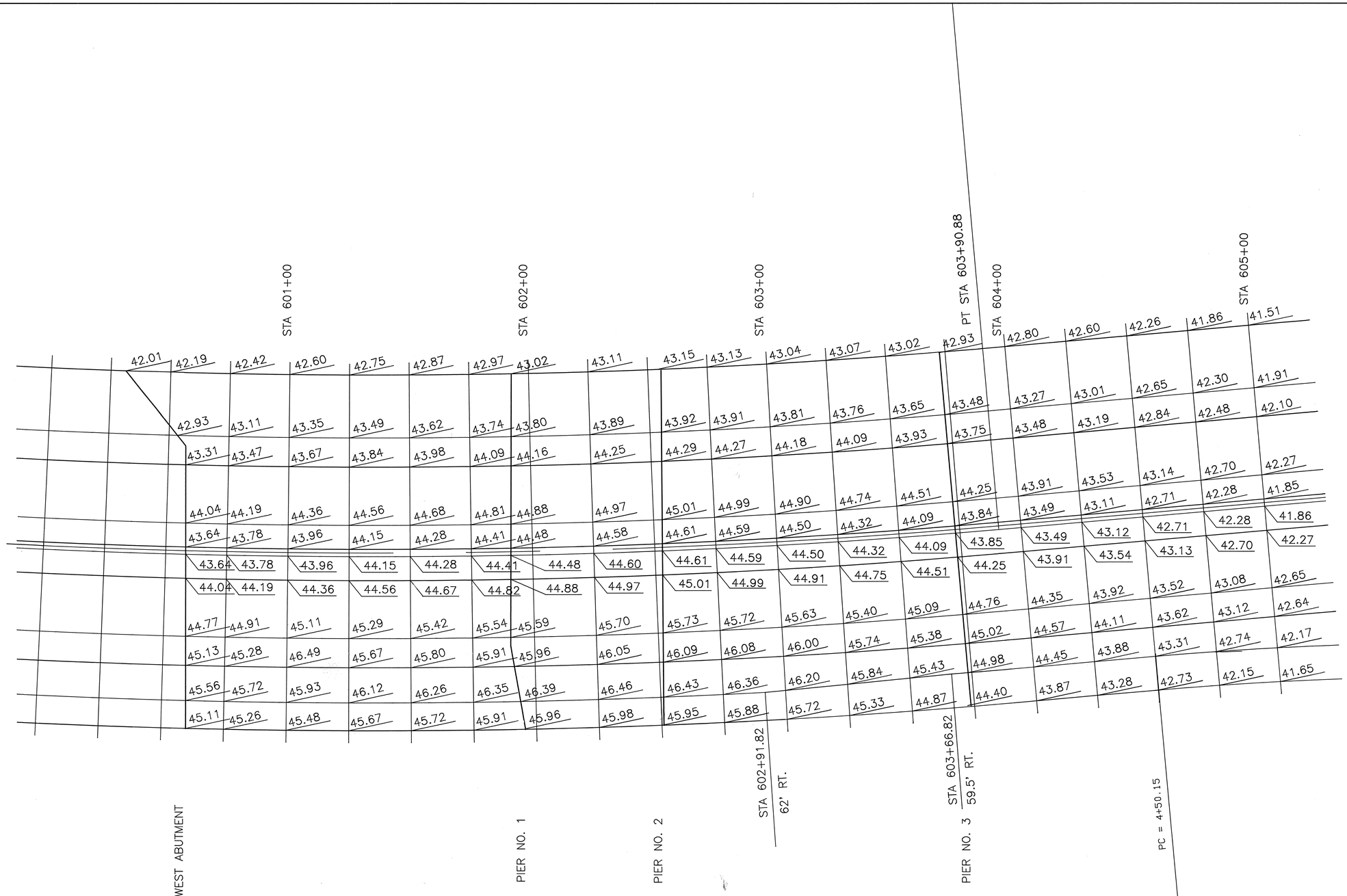

NOTES

1. THE ELEVATIONS SHOWN ARE TOP OF CONCRETE SLAB ELEVATIONS WHICH ARE REQUIRED BEFORE THE CONCRETE IS PLACED. PROPER ALLOWANCE HAS BEEN MADE FOR THE DEAD LOAD DEFLECTIONS CAUSED BY THE WEIGHT OF THE CONCRETE SLAB.
2. FOR TRUE ELEVATIONS ADD 1000 TO ELEVATIONS SHOWN .

McCOY ASSOCIATES INC. 103/120
CONSULTING ENGINEERS
AKRON, OHIO

SCREED ELEVATIONS

BRIDGE NO. SUM 76–1277
AKRON EAST EXPRESSWAY
WEST VIADUCT

DESIGNED	DRAWN	TRACED	CHECKED	REVIEWED	DATE	REVISED
J.M.H.	CAD		R.A.K.	J.B.H.	3/89	

FHWA REGION	STATE	PROJECT	
5	OHIO		

1053/1214

SUMMIT COUNTY
SUM 76–11.57

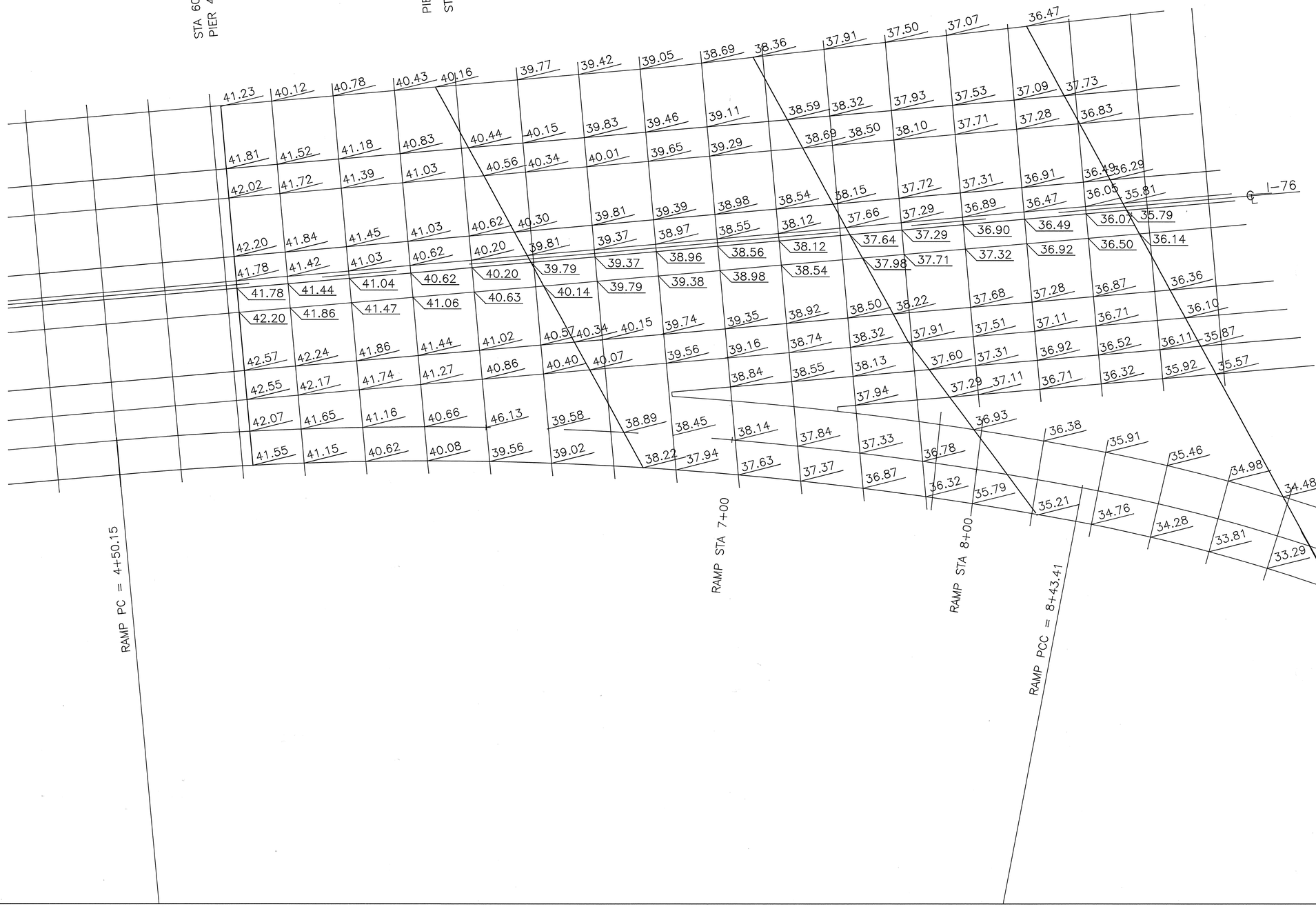

NOTES

1. THE ELEVATIONS SHOWN ARE TOP OF CONCRETE SLAB ELEVATIONS WHICH ARE REQUIRED BEFORE THE CONCRETE IS PLACED. PROPER ALLOWANCE HAS BEEN MADE FOR THE DEAD LOAD DEFLECTIONS CAUSED BY THE WEIGHT OF THE CONCRETE SLAB.
2. FOR TRUE ELEVATIONS ADD 1000 TO ELEVATIONS SHOWN.

McCOY ASSOCIATES INC. 103A/120
CONSULTING ENGINEERS
AKRON, OHIO

SCREED ELEVATIONS

BRIDGE NO. SUM 76–1277
AKRON EAST EXPRESSWAY
WEST VIADUCT

DESIGNED	DRAWN	TRACED	CHECKED	REVIEWED	DATE	REVISED
J.M.H.	CAD		R.A.K.	J.B.H.	3/89	

FHWA REGION	STATE	PROJECT	
5	OHIO		

1054
12.14

SUMMIT COUNTY
SUM. 76 - 11.57

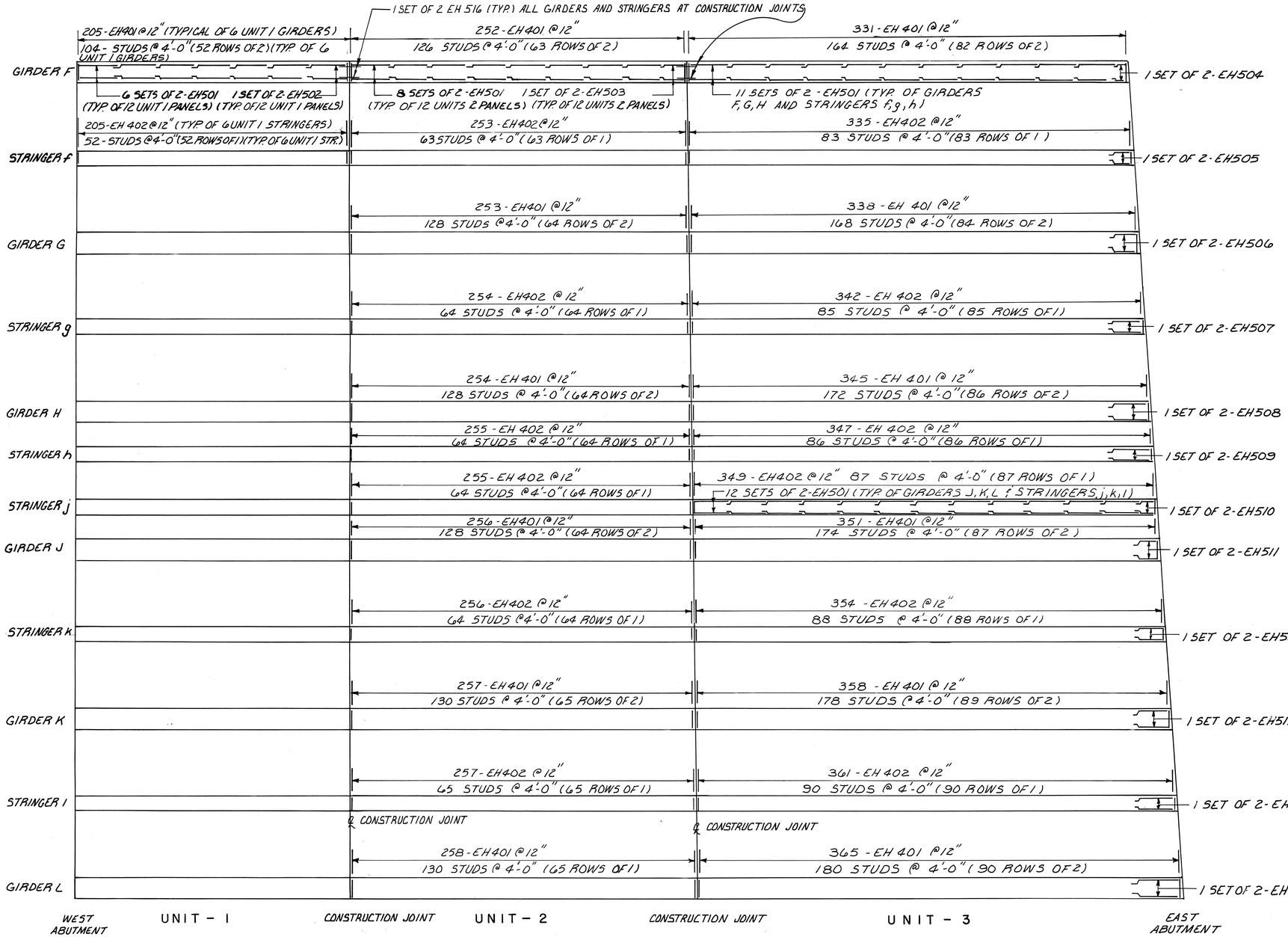

UNIT 1 FROM WEST ABUTMENT TO 602+62.63
UNIT 2 602+62.63 TO 605+18.68
UNIT 3 605+18.68 TO EAST ABUTMENT

SCHEMATIC PLAN

SLAB HAUNCHES AT EXISTING GIRDERS AND STRINGERS

NOTES:

1. MINIMUM STEEL REINFORCING LAP LENGTH SHALL BE 20" FOR NO. 5 BARS.
2. MINIMUM CLEARANCE OF ALL REINFORCING STEEL FROM THE FACE OF THE CONCRETE SHALL BE 2 1/2".

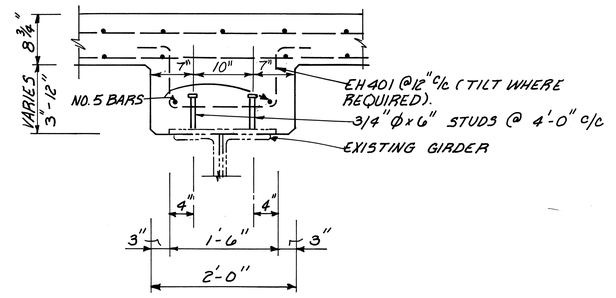

TYPICAL SLAB HAUNCH DETAIL AT EXISTING GIRDER

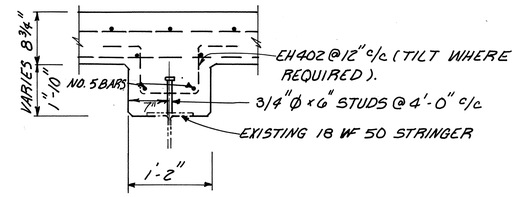

TYPICAL SLAB HAUNCH DETAIL AT EXISTING STRINGER

McCOY ASSOCIATES INC. 104/120
CONSULTING ENGINEERS
AKRON, OHIO

SLAB HAUNCH PLAN

BRIDGE NO. SUM. 76-1277
AKRON EAST EXPRESSWAY
WEST VIADUCT

DESIGNED	DRAWN	TRACED	CHECKED	REVIEWED	DATE	REVISED
T.E.N.	M.A.M.	A.M.	M.A.M.	J.B.H.	3-30-89	

72276

FHWA REGION	STATE	PROJECT	
5	OHIO		

105S
12.14

SUM-76-11.57

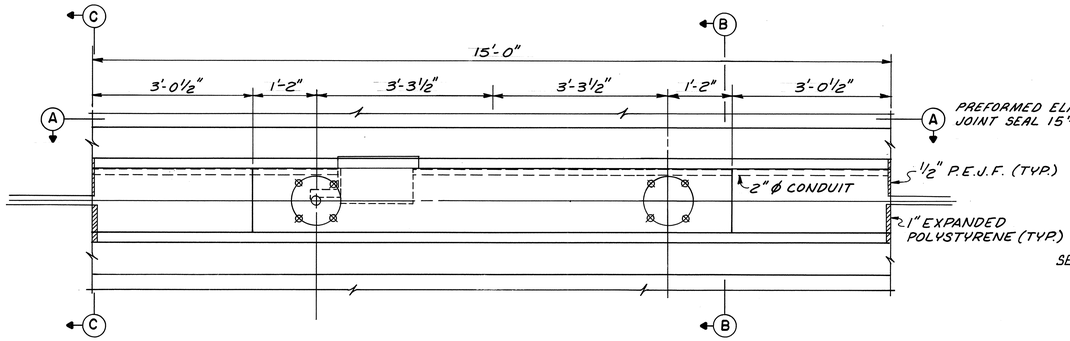

PLAN
SIGN POLE SUPPORT
STA. 606 + 70

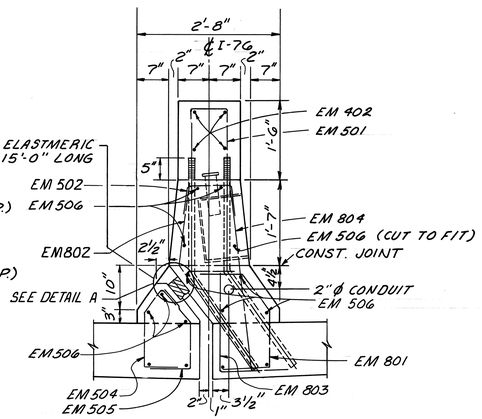

SECTION B-B

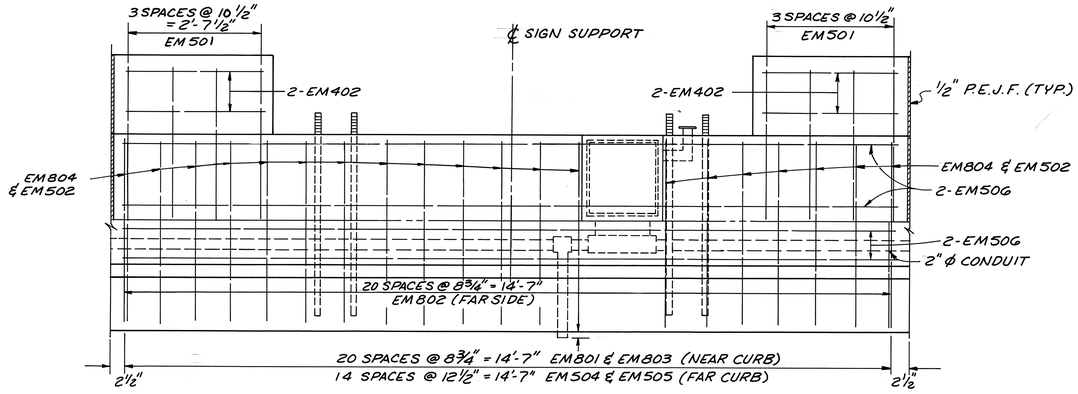

SECTION A-A

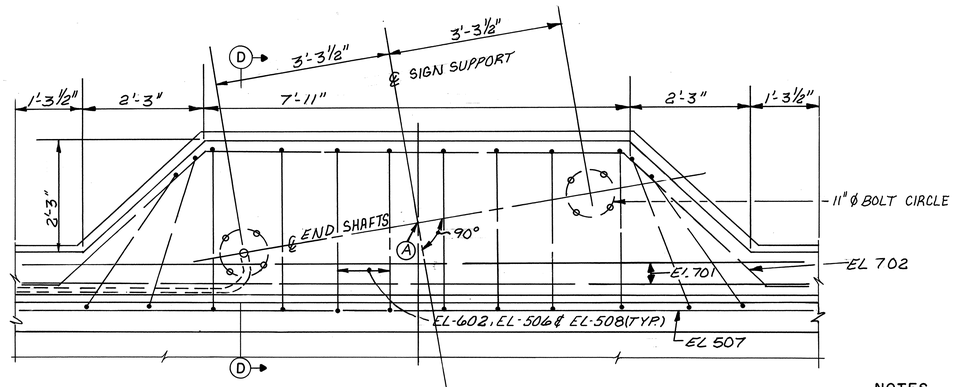

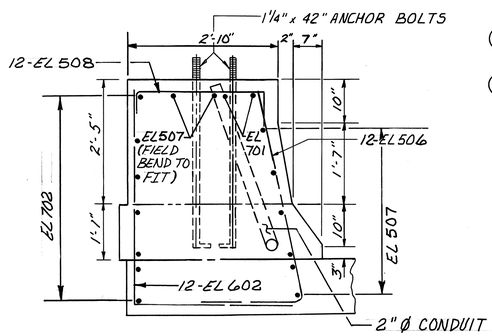

SECTION D-D

NOTES

1. FOR DETAIL A, SECTION C-C & BENT ANCHOR BOLT DETAIL, SEE SHEET 98/120
2. FOR ADDITIONAL DETAILS, SEE SIGNING PLANS AND NOTES.
3. POINT A = STA. 606+70, 92.72' RT.

McCOY ASSOCIATES, INC. 105/120
CONSULTING ENGINEERS
AKRON, OHIO

SIGN SUPPORT PARAPET DETAILS

BRIDGE NO. SUM. 76-1277
AKRON EAST EXPRESSWAY
WEST VIADUCT

DESIGNED	DRAWN	TRACED	CHECKED	REVIEWED	DATE	REVISED
JBH	MRA		M.A.M.	JBH	3-31-89	

220891

FHWA REGION	STATE	PROJECT	
5	OHIO		

1056
1214

SUMMIT COUNTY
SUM 76–11.57

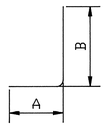

1

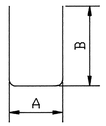

2

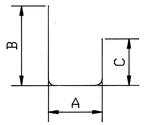

3

4

5

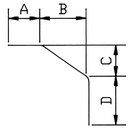

7

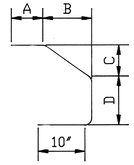

8

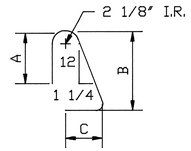

9

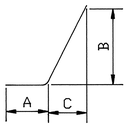

10

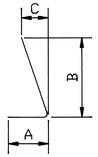

11

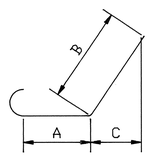

13

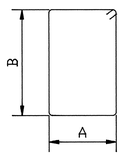

14

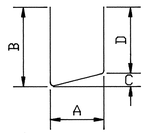

15

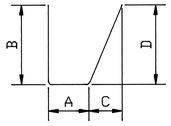

16

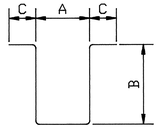

20

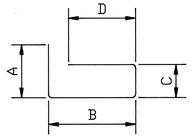

26

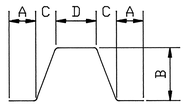

22

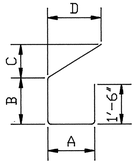

33

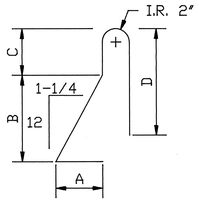

34

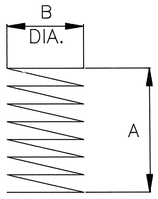

38

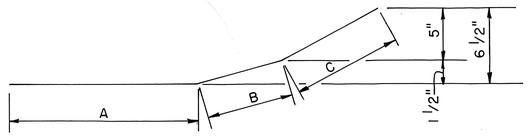

39

NOTES

1. BENDING DIAGRAMS SHOWN ON THIS DRAWING ARE THE BAR TYPES TO BE USED FOR THE ABUTMENTS, PIERS, AND WINGWALLS

McCOY ASSOCIATES INC. 106/120
CONSULTING ENGINEERS
AKRON, OHIO

BENDING DIAGRAMS

BRIDGE NO. SUM 76–1277
AKRON EAST EXPRESSWAY
WEST VIADUCT

DESIGNED	DRAWN	TRACED	CHECKED	REVIEWED	DATE	REVISED
R.A.K.	CAD		R.A.K.	J.B.H.	3/89	

REINFORCING SCHEDULE WEST ABUTMENT

FHWA REGION	STATE	PROJECT	
5	OHIO		

1057 / 12.14

SUMMIT COUNTY
SUM 76–11.57

MARK	No. REQ'D	LENGTH	TYPE	NORTH	SOUTH			DIMENSIONS A	B	C	D	INCRM.	WEIGHT LBS.
1A1101	8	12'–9"	11		8			2'–0"	9'–8"	4'–8"			542
1A1102	6	29'–5"	ST.	6									938
1A1103	16	21'–9"	ST.	12	4								1849
1A1104	12	12'–3"	ST.	12									781
1A1105	8	25'–6"	ST.		8								1084
1A1106	18	13'–8"	11	18				2'–0"	11'–0"	4'–0"			1307
1A1107	8	15'–9"	11		8			2'–0"	12'–4"	6'–0"			669
1A1108	4	18'–9"	ST.		4								398
1A1109	6	26'–5"	ST.	6									842
1A1110	18	16'–8"	11	18				2'–0"	13'–10"	5'–0"			1594
1A901	5	10'–0"	ST.		5								170
1A902	5	17'–0"	ST.		5								289
1A903	23	32'–8"	ST.		23								2,555
1A904	22	34'–6"	5		22			32'–8"					2,581
1A905	1 SET	24'–0"TO	ST.	1 SET									768
	OF 8	32'–6"		OF 8								1'–2 5/8"	
1A906	1 SET	18'–3"TO	ST.	1 SET								9 3/4"	1,119
	OF 14	28'–9"		OF 14									
1A907	1 SET	22'–3"TO	ST.	1 SET								1'–7"	335
	OF 4	27'–0"		OF 4									
1A908	1 SET	20'–3"TO	ST.	1 SET								9 3/8"	808
	OF 10	27'–3"		OF 10									
1A909	58	24'–0"	5	24	34			21'–6"					4,732
1A910	1	23'–6"	5	1				21'–10"					80
1A911	1 SET	21'–3"TO	5	1 SET				18'–9"TO				9"	224
	OF 3	22'–9"		OF 3				20'–3"					
1A912	4	9'–3"	4	4				8'–0"					126
1A913	1 SET	14'–9"TO	4	1 SET				13'–6"TO				9"	158
	OF 3	16'–3"		OF 3				15'–0"					
1A914	1 SET	17'–3"TO	4	1 SET				16'–0"TO				7 1/2"	182
	OF 3	18'–6"		OF 3				17'–3"					
1A915	1 SET	19'–6"TO	4	1 SET				18'–3"TO				7 1/2"	205
	OF 3	20'–9"		OF 3				19'–6"					
1A916	2	5'–3"	4	2				4'–0"					36
1A917	1 SET	7'–6"TO	5	1 SET				5'–0"TO				1'–0"	87
	OF 3	9'–6"		OF 3				7'–0"					
1A918	1 SET	11'–0"TO	5	1 SET				8'–6"TO				1'–1 1/2"	124
	OF 3	13'–3"		OF 3				10'–9"					
1A919	1	14'–6"	5	1				12'–0"					49
1A920	1	16'–0"	5	1				13'–6"					54
1A921	1	26'–6"	5	1				24'–0"					90
1A922	1 SET	24'–2"TO	10	1 SET				22'–3"TO	1'–9"TO	1'–6"TO		6"	544
	OF 6	29'–2"		OF 6				24'–9"	3'–9"	2'–10"			
1A923	1 SET	17'–0"TO	4	1 SET				15'–9"TO				10 1/4"	390
	OF 6	21'–3"		OF 6				20'–0"					
1A924	1 SET	22'–3"TO	4	1 SET				21'–0"TO				7 1/2"	233
	OF 3	23'–6"		OF 3				22'–3"					
1A925	1 SET	24'–6"TO	4	1 SET				23'–3"TO				9"	258
	OF 3	26'–0"		OF 3				24'–9"					
1A926	1	24'–9"	4	1				23'–6"					84
1A927	1	26'–9"	4	1				25'–6"					91
1A928	1	27'–6"	4	1				26'–3"					94
1A929	1 SET	19'–8"TO	10	1 SET				14'–8"TO	4'–3"TO	3'–3"TO		6"	454
	OF 6	24'–10"		OF 6				17'–2"	6'–3"	5'–0"			
1A930	1 SET	26'–0"TO	10	1 SET				17'–9"TO	6'–9"TO	5'–3"TO		5"	274
	OF 3	27'–8"		OF 3				18'–7"	7'–6"	5'–9"			
1A931	1 SET	28'–11"TO	10	1 SET				19'–3"TO	7'–10"TO	6'–2"TO		5 1/2"	303
	OF 3	30'–7"		OF 3				20'–2"	8'–6"	6'–8"			
1A932	1	31'–9"	10	1				20'–9"	9'–0"	7'–0"			108
1A933	1	32'–5"	10	1				21'–0"	9'–4"	7'–4"			110
1A934	20	6'–0"	4	20				4'–9"					408
1A935	10	8'–9"	1		10			1'–7"	7'–6"				298
1A801	20	9'–4"	10	20				6'–0"	3'–0"	1'–9"			498
1A802	40	10'–0"	ST.		40								1,068
1A803	10	8'–7"	1	10				1'–4"	7'–6"				229
1A804	5	9'–0"	ST.	5									120
1A805	5	18'–0"	ST.	5									240
1A806	85	12'–3"	2	51	34			2'–2"	5'–3"				2,780
1A807	4	9'–8"	4	4				8'–9"					103
1A808	20	8'–0"	10	20				6'–9"	1'–2"	8"			427

MARK	No. REQ'D	LENGTH	TYPE	NORTH	SOUTH			DIMENSIONS A	B	C	D	INCRM.	WEIGHT LBS.
1A809	4	10'–5"	4		4			9'–6"					111
1A810	4	12'–8"	4	4				11'–9"					135
1A811	1 SET	3'–0"TO	ST.	1 SET								1'–3"	192
	OF 9	13'–0"		OF 9									
1A812	2	3'–6"	ST.	2									19
1A813	58	21'–6"	ST.	25	33								3,329
1A814	1 SET	15'–0"TO	ST.	1 SET								9 3/4"	381
	OF 8	20'–8"		OF 8									
1A815	1 SET	2'–6"TO	ST.	1 SET								2'–1"	124
	OF 6	13'–0"		OF 6									
1A816	1	6'–9"	1	1				3'–6"	3'–6"				18
1A817	4	13'–5"	4		4			12'–6"					143
1A818	2	17'–5"	4	2				16'–6"					93
1A819	2	20'–5"	4	2				19'–6"					109
1A701	17	29'–3"	ST.		17								1,016
1A702	96	20'–7"	ST.	96									4,039
1A703	50	10'–1"	ST.	50									1,031
1A704	17	7'–9"	ST.		17								269
1A705	3	18'–7"	ST.		3								114
1A601	26	29'–3"	ST.		26								1,142
1A604	10	9'–3"	ST.	10									139
1A605	2	12'–0"	ST.	2									36
1A606	3	25'–0"	ST.	3									113
1A607	3 SETS	14'–0"TO	20	3 SETS				2'–2"	4'–9"TO	1'–6"		8 1/2"	3,422
	OF 31	35'–0"		OF 31					15'–3"				
1A608	17	8'–6"	ST.		26								295
1A609	2 SETS	14'–0"TO	20		2 SETS			2'–2"	4'–9"TO	1'–6"		5 7/8"	1,707
	OF 23	35'–5"			OF 23				15'–6"				
1A610	20	21'–4"	ST.	20									641
1A611	9"	7'–9"	ST.		9								143
1A501	47	8'–9"	2	27	20			2'–0"	3'–6"				429
1A502	21	25'–5"	ST.		21								557
1A503	23	22'–9"	ST.		23								546
1A504	1 SET	7'–0"TO	10	1 SET				2'–2"TO	3'–8"	3'–4"		1/2"	202
	OF 26	7'–11"		OF 26				3'–1"					
1A505	21	7'–0"	ST.		21								153
1A506	9	29'–3"	ST.		9								275
1A507	26	3'–10"	1		26			2'–0"	2'–0"				104
1A508	21	5'–1"	2		21			2'–0"	1'–8"				111
1A509	1	5'–11"	2		1			2'–10"	1'–8"				6
1A510	1	7'–0"	2		1			3'–11"	1'–8"				7
1A511	3	7'–10"	2		3			4'–9"	1'–8"				25
1A512	1 SET	32'–10"TO	ST.	1 SET								3/8"	938
	OF 27	33'–9"		OF 27									
1A513	26	29'–10"	ST.	26									809
1A514	20	20'–2"	ST.	20									421
1A515	34	3'–10"	10	34				2'–0"	1'–7"	1'–4"			136
1A516	28	7'–2"	15	28				2'–0"	3'–3"	1'–7"	1'–8"		209
1A517	1	9'–2"	15	1				2'–10"	3'–11"	2'–3"	1'–8"		10
1A518	1	11'–2"	15	1				3'–11"	4'–9"	3'–1"	1'–8"		12
1A519	3	12'–11"	15	3				4'–9"	5'–5"	3'–9"	1'–8"		40
1A520	19	21'–5"	ST.	19									424
1A521	3	5'–3"	ST.		3								16
1A522	8	6'–11"	ST.	8									58
1A523	16	10'–1"	ST.	16									168
1A524	3	8'–6"	ST.	16									142
1A525	4	19'–7"	ST.	4									82
1A526	3	20'–7"	ST.	3									64
1A527	12	31'–0"	ST.	12									388
1A528	6 SETS	6'–6"TO	ST.	6 SETS								4'–6"	666
	OF 6	29'–0"		OF 6									
1A529	3	32'–9"	ST.	3									102
1A530	13	6'–5"	3	6	7			5"	5'–0"	1'–2"			87
1A531	8	23'–6"	ST.		8								196
1A532	4 SETS	6'–6"TO	ST.		4 SETS							3'–1 1/4"	357
	OF 6	22'–0"			OF 6								
1A533	11	9'–5"	2	7	4			2'–8"	3'–6"				108
1A534	6	8'–5"	2		6			1'–8"	3'–6"				53
1A535	19	7'–0"	10		19			2'–2"	3'–8"	3'–4"			139
1A536	6	4'–7"	ST.		6								29

NOTE:

SEE SHEET NO. 106/120 FOR BENDING DIAGRAM TYPES.

McCOY ASSOCIATES INC. 107 / 120
CONSULTING ENGINEERS
AKRON, OHIO

REINFORCING SCHEDULE

BRIDGE NO. SUM. 76–1277
AKRON EAST EXPRESSWAY
WEST VIADUCT

DESIGNED	DRAWN	TRACED	CHECKED	REVIEWED	DATE	REVISED
J.D.P.	M.R.A.		J.M.H.	JBH	3-31-89	

REINFORCING SCHEDULE WEST ABUTMENT

FHWA REGION	STATE	PROJECT	
5	OHIO		

1058
1214

SUMMIT COUNTY
SUM 76–11.57

MARK	No. REQ'D	LENGTH	TYPE	NORTH	SOUTH			DIMENSIONS A	B	C	D	INCRM.	WEIGHT LBS.
1A537	2	9'–7"	3		2			5"	8'–3"	1'–2"			20
1A538	4	4'–4"	1		4			1'–0"	3'–6"				18
1A540	2	32'–7"	ST.		2								68
1A541	10	31'–9"	ST.		10								331
1A401	77	5'–0"	2	42	35			1'–2"	2'–0"				257
1A402	73	6'–6"	2	40	33			2'–8"	2'–0"				317
TOTAL WEST ABUTMENT (NON–EPOXY COATED BARS) = **62,416**													

MARK	No. REQ'D	LENGTH	TYPE	NORTH	SOUTH			DIMENSIONS A	B	C	D	INCRM.	WEIGHT LBS.
EPOXY COATED BARS													
1EA861	5	29'–3"	ST.		5								390
1EA862	107	4'–11"	13	57	50			2'–9"	1'–5"	1'–0"			1,404
1EA863	10	21'–10"	ST.	10									583
1EA661	13	9'–0"	7	8	5			9"	6"	8"	3'–6"		176
1EA561	47	8'–0"	2	27	20			4'–9"	1'–9"				392
1EA562	14	28'–5"	ST.		14								415
1EA563	7	4'–6"	1		7			2'–0"	2'–8"				33
1EA564	45	7'–10"	2	25	20			1'–5"	3'–4"				367
1EA565	45	13'–8"	2	25	20			1'–5"	6'–3"				641
1EA566	45	6'–6"	2	25	20			11"	2'–11"				305
1EA567	21	19'–5"	ST.	21									425
1EA568	7	3'–10"	1	7				1'–6"	2'–6"				28
1EA569	10	6'–8"	34	5	5			8"	2'–7"	8"	3'–0"		70
1EA570	10	6'–11"	ST.	10									72
1EA571	10	5'–4"	ST.		10								56
1EA572	63	4'–9"	ST.	29	34								312
1EA573	5	8'–8"	ST.		5								45
1EA574	10	16'–0"	ST.	5	5								166
1EA575	5	19'–10"	ST.		5								103
1EA576	32	24'–0"	ST.		32								801
1EA577	62	12'–8"	3	31	31			11"	10'–0"	2'–0"			820
1EA578	77	2'–10"	ST.		77								228
1EA579	92	10'–6"	3	46	46			1'–5"	8'–7"	9"			1,008
1EA580	1 SET OF 6	5'–0" TO 7'–0"	ST.									5"	38
1EA581	16	11'–11"	10	16				7'–4"	1'–2"	3'–6"			199
1EA582	16	27'–3"	ST.	16									455
1EA583	16	12'–6"	ST.	16									209
1EA584	5	20'–5"	ST.	5									106
1EA585	5	8'–2"	ST.	5									43
1EA586	77	3'–6"	ST.	77									281
1EA587	7	20'–5"	10	7				19'–7"	5"	1'–1"			149
1EA588	1	10'–4"	3	1				11"	7'–8"	2'–0"			11
1EA589	6	2'–6"	8	3	3			5"	6"	5"	9"		16
1EA590	6	1'–9"	1	3	3			5"	1'–6"				10
1EA591	6	3'–10"	ST.	3	3								24
1EA592	6	4'–5"	4	3	3			31'–10"					28
1EA593	16	11"	ST.	8	8								16
TOTAL WEST ABUTMENT (EPOXY COATED BARS) = 10,425													

NOTE:

SEE SHEET NO. 106/120 FOR BENDING DIAGRAM TYPES.

McCOY ASSOCIATES INC. 108/120
CONSULTING ENGINEERS
AKRON, OHIO

REINFORCING SCHEDULE

BRIDGE NO. SUM. 76–1277
AKRON EAST EXPRESSWAY
WEST VIADUCT

DESIGNED	DRAWN	TRACED	CHECKED	REVIEWED	DATE	REVISED
J.D.P.	M.R.A.		J.M.H.	JBH	3-31-89	

REINFORCING SCHEDULE EAST ABUTMENT

MARK	No. REQ'D	LENGTH	TYPE	NORTH	SOUTH			DIMENSIONS A	B	C	D	INCRM.	WEIGHT LBS.
2A1001	12	11'-4"	11	12				1'-10"	9'-0"	4'-0"			585
2A1002	24	11'-3"	11		24			1'-10"	8'-10"	4'-2"			1,162
2A1003	18	10'-10"	11		18			1'-10"	8'-8"	3'-6"			839
2A1004	12	14'-4"	11	12				1'-10"	11'-3"	5'-2"			740
2A1005	24	14'-3"	11		24			1'-10"	11'-7"	4'-7"			1,472
2A1006	18	13'-10"	11		18			1'-10"	11'-5"	4'-7"			1,071
2A901	4	14'-0"	ST.		4								190
2A902	11	18'-6"	ST.	5	6								692
2A903	4	21'-4"	ST.	4									290
2A904	12	27'-11"	ST.	12									1,139
2A905	4	9'-0"	ST.		4								122
2A906	4	19'-4"	ST.		4								263
2A907	12	26'-0"	ST.		12								1,061
2A908	6	8'-1"	ST.		6								165
2A909	6	13'-6"	ST.		6								275
2A910	16	24'-0"	ST.		16								1,306
2A911	12	23'-10"	ST.		12								972
2A912	4	9'-8"	ST.		4								131
2A913	4	14'-4"	ST.		4								195
2A914	4	19'-10"	ST.		4								270
2A915	5	10'-4"	ST.	5									176
2A916	4	15'-10"	ST.	4									215
2A917	15	8'-6"	1	10	5			1'-6"	7'-4"				434
2A919	5	11'-6"	ST.		5								196
2A920	1 SET	7'-0" TO	ST.		1 SET							1'-1 1/2"	352
	OF 9	16'-0"			OF 9								
2A921	1 SET	7'-0" TO	ST.		1 SET							11 1/8"	490
	OF 12	17'-0"			OF 12								
2A922	66	30'-0"	ST.		66								6,732
2A923	1 SET	12'-0" TO	ST.		1 SET							11"	845
	OF 14	23'-6"			OF 14								
2A924	1 SET	17'-0" TO	ST.		1 SET							1'-0"	558
	OF 8	24'-0"			OF 8								
2A925	3	3'-6"	ST.		3								36
2A926	3	3'-0"	ST.		3								31
2A927	1	6'-3"	5		1			3'-9"					21
2A928	1 SET	7'-6" TO	5		1 SET			5'-0" TO				1'-0"	87
	OF 3	9'-6"			OF 3			7'-0"					
2A929	1 SET	11'-0" TO	5		1 SET			8'-6" TO				1'-0"	122
	OF 3	13'-0"			OF 3			10'-6"					
2A930	1	14'-3"	5		1			11'-9"					48
2A931	1 SET	5'-3" TO	5		1 SET			2'-9" TO				9"	87
	OF 4	7'-6"			OF 4			5'-0"					
2A932	1 SET	8'-6" TO	5		1 SET			6'-0" TO				11"	134
	OF 4	11'-3"			OF 4			8'-9"					
2A933	84	24'-0"	5		84			21'-6"					6,854
2A934	1	16'-9"	4		1			15'-6"					57
2A935	1	15'-9"	4		1			14'-6"					54
2A936	1 SET	11'-6" TO	4		1 SET			10'-3" TO				1'-0"	177
	OF 4	14'-6"			OF 4			13'-3"					
2A937	1	8'-3"	4		1			7'-0"					28
2A938	1 SET	13'-3" TO	4		1 SET			12'-0" TO				1'-0"	145
	OF 3	15'-3"			OF 3			14'-0"					
2A939	1 SET	16'-6" TO	4		1 SET			15'-3" TO				1'-0 3/4"	317
	OF 5	20'-9"			OF 5			19'-6"					
2A940	1	16'-6"	ST.		1								56
2A941	28	21'-6"	ST.	28									2,047
2A942	1 SET	6'-9" TO	ST.	1 SET								2'-8"	275
	OF 6	20'-3"		OF 6									
2A943	7	33'-5"	ST.	7									795
2A944	1 SET	27'-6" TO	ST.	1 SET								5"	1,549
	OF 15	33'-3"		OF 15									
2A945	22	22'-6"	10	22				16'-6"	2'-3"	5'-9"			1,683
2A946	1 SET	5'-3" TO	5	1 SET				2'-9" TO				2'-4 1/2"	295
	OF 7	19'-6"		OF 7				17'-0"					
2A947	14	24'-0"	5	14				21'-6"					1,142
2A948	1 SET	16'-4" TO	10	1 SET				14'-6" TO	9"	2'-0'		2'-1 1/2"	188
	OF 3	20'-6'		OF 3				18'-9"					
2A949	11	16'-5"	10	11				12'-6"	1'-6"	4'-0"			614
2A950	3	11'-3"	4	3				10'-0"					115
2A951	33	5'-6"	4	33				4'-3"					617

MARK	No. REQ'D	LENGTH	TYPE	NORTH	SOUTH			DIMENSIONS A	B	C	D	INCRM.	WEIGHT LBS.
2A952	6	10'-2"	10	6				6'-3"	1'-6"	4'-0"			207
2A953	2	24'-4"	10	2				18'-6"	2'-3'	5'-9"			165
2A954	1 SET	22'-10" TO	10	1 SET				17'-0" TO	2'-3"	5'-9"		3"	397
	OF 5	23'-10		OF 5				18'-0"					
2A955	1	8'-6"	4	1				2'-3"					29
2A956	1 SET	20'-7" TO	10	1 SET				14'-0" TO	2'-6"	6'-6"		5 1/4"	366
	OF 5	22'-5"		OF 5				15'-9"					
2A957	2	13'-9"	4	2				12'-6"					94
2A958	14	22'-3"	4	14				21'-0"					1,059
2A959	1	20'-3"	4	1				19'-0"					69
2A960	4	10'-11"	ST.										148
2A801	88	10'-3'	2	32	56			2'-2"	4'-3"				2,408
2A802	27	6'-0"	ST.		27								433
2A803	21	9'-11"	10	21				6'-7"	3'-2"	1'-10"			556
2A804	21	6'-6"	10	21				3'-3"	3'-2"	1'-10"			364
2A805	7	12'-1"	2	7				1'-8"	5'-5"				226
2A806	20	4'-4"	ST.		20								231
2A807	20	6'-9"	ST.										360
2A701	18	33'-0'	ST.	18									1,214
2A702	30	19'-9"	ST.		30								1,211
2A703	17	27'-11"	ST.		17								970
2A704	17	28'-5"	ST.		17								987
2A705	40	7'-0'	4	8	32			6'-2"					572
2A706	2	9'-6"	ST.	2									39
2A707	3	19'-3"	ST.	3									118
2A708	18	12'-0'	ST.	18									442
2A709	6	4'-0"	ST.		6								49
2A710	1 SET	3'-0" TO	ST.		1 SET							11"	82
	OF 7	8'-6"			OF 7								
2A711	1 SET	3'-6" TO	ST.		1 SET							1'-1 1/4"	121
	OF 8	11'-3"			OF 8								
2A712	85	21'-6"	ST.		85								3,735
2A713	1 SET	15'-3" TO	ST.		1 SET							1'-3"	181
	OF 5	20'-3"			OF 5								
2A714	1 SET	3'-0" TO	ST.		1 SET							2'-0"	98
	OF 6	13'-0"			OF 6								
2A715	1	5'-10"	1		1			3'-0"	3'-0"				12
2A716	3	22'-9"	ST.		3								140
2A717	2	10'-0"	ST.		2								41
2A718	17	10'-8"	ST.		17								371
2A719	66	26'-0"	ST.		66								3,508
2A720	4	15'-4"	4		4			14'-6"					125
2A721	1 SET	4'-10" TO	4		1 SET			4'-0" TO				1'-1 3/4"	144
	OF 8	12'-10"			OF 8			12'-0"					
2A722	1 SET	6'-1" TO	4		1 SET			5'-3" TO				10 1/4"	101
	OF 6	10'-4"			OF 6			9'-6"					
2A723	1 SET	11'-4" TO	4		1 SET			10'-6" TO				11"	104
	OF 4	14'-1"			OF 4			13'-3"					
2A724	1	27'-4"	10		1			17'-4"	6'-9"	7'-7"			56
2A725	1	12'-10"	4		1			12'-0"					26
2A726	1	12'-0"	ST.		1								25
2A727	1	27'-1"	10		1			17'-3"	6'-9"	7'-4"			55
2A728	1 SET	12'-11" TO	10		1 SET			10'-6" TO	1'-9" TO	1'-11" TO		4 1/4"	256
	OF 8	18'-4"			OF 8			13'-0"	3'-8"	4'-1"			
2A729	1 SET	19'-2" TO	10		1 SET			13'-6" TO	4'-0" TO	4'-4" TO		3"	257
	OF 6	22'-9"			OF 6			14'-9"	5'-6"	6'-0"			
2A730	1 SET	23'-5" TO	10		1 SET			15'-0" TO	5'-9" TO	6'-4" TO		8"	202
	OF 4	26'-0"			OF 4			17'-0"	6'-2"	6'-9"			
2A731	20	5'-1"	4		20			4'-3"					208
2A732	14	23'-3"	ST.	14									665
2A733	1	14'-0"	10	1				11'-8"	1'-0"	2'-3"			29
2A734	1	12'-9"	10	1				11'-3"	8"	1'-6"			26
2A735	6	35'-2"	5	6				33'-6"					431
2A736	1 SET	25'-7" TO	4	1 SET				24'-9" TO				4 1/4"	324
	OF 6	27'-4"		OF 6				26'-6"					
2A737	1 SET	14'-10" TO	4	1 SET				14'-0" TO				4 1/2"	376
	OF 11	18'-7"		OF 11				17'-9"					

FHWA REGION	STATE	PROJECT	
5	OHIO		

1059
1214

SUMMIT COUNTY
SUM 76-11.57

NOTE:

SEE SHEET NO. 106/120 FOR BENDING DIAGRAM TYPES.

McCOY ASSOCIATES INC. 109/120
CONSULTING ENGINEERS
AKRON, OHIO

REINFORCING SCHEDULE

BRIDGE NO. SUM. 76--1277
AKRON EAST EXPRESSWAY
WEST VIADUCT

DESIGNED	DRAWN	TRACED	CHECKED	REVIEWED	DATE	REVISED
J.D.P.	M.R.A.		J.M.H.	JBH	3-31-89	

REINFORCING SCHEDULE EAST ABUTMENT

FHWA REGION	STATE	PROJECT	
5	OHIO		

1060
1214

SUMMIT COUNTY
SUM 76-11.57

MARK	No. REQ'D	LENGTH	TYPE	NORTH	SOUTH			DIMENSIONS A	B	C	D	INCRM.	WEIGHT LBS.
2A738	1	16'-10"	4	1				16'-0"					34
2A739	9	20'-7"	10	9				17'-3"	1'-3"	3'-3"			379
2A740	1	18'-1"	4	1				17'-3"					37
2A741	9	3'-5"	4	9				2'-7"					63
2A742	1 SET	19'-7" TO	4	1 SET				18'-9" TO				5 1/4"	392
	OF 9	23'-1"		OF 9				22'-3"					
2A743	2	19'-4"	4	2				18'-6"					79
2A601	18	35'-3"	ST.	18									953
2A602	27	19'-0"	ST.		27								771
2A603	17	19'-9"	ST.		17								504
2A604	36	27'-7"	ST.		36								1,491
2A605	17	30'-7"	ST.		17								781
2A606	2 SETS	14'-6" TO	20	2 SETS				2'-2"	5'-0" TO	1'-6"		5"	1,840
	OF 25	34'-6"		OF 25					15'-0"				
2A607	4 SETS	14'-6" TO	20		4 SETS			2'-2"	5'-0" TO	1'-6"		6 1/8"	3,123
	OF 21	35'-0"			OF 21				15'-3"				
2A608	4 SETS	14'-6" TO	20		4 SETS			2'-2"	5'-0" TO	1'-6"		5 5/8"	3,420
	OF 23	35'-0"			OF 23				15'-3"				
2A609	18	13'-8"	ST.	18									369
2A610	10	12'-0"	ST.	10									180
2A611	17	9'-5"	ST.		17								240
2A612	7	10'-8"	ST.		7								78
2A613	10	33'-0"	ST.	10									496
2A614	**1 SET**	**9'-8" TO**	**20**		**1 SET OF**			**2'-2"**	**2'-6" TO**	**1'-6"**		**6"**	**80**
	OF 5	**11'-8"**			**5**				**4'-6"**				
2A501	80	8'-9"	2	21	59			2'-0"	3'-6"				730
2A502	24	27'-6"	ST.	24									659
2A503	22	26'-4"	ST.	22									568
2A504	42	7'-0"	10	22	20			2'-2"	3'-8"	3'-4"			307
2A505	53	9'-5"	ST.	38	15								521
2A506	13	35'-3"	ST.	13									478
2A507	29	5'-5"	16	29				8"	2'-6"	2'-4"	11"		164
2A508	23	6'-1"	15	23				2'-0"	2'-6"	10"	1'-8"		146
2A509	1	7'-2"	15	1				2'-10"	2'-9"	1'-1"	1'-8"		7
2A510	1	8'-10"	15	1				3'-11"	3'-3"	1'-7"	1'-8"		9
2A511	3	11'-10"	15	3				4'-9"	4'-6"	2'-1"	1'-8"		37
2A512	1 SET	23'-2" TO	ST.		1 SET							1"	604
	OF 24	25'-1"			OF 24								
2A513	25	19'-11"	ST.		25								519
2A514	1 SET	7'-0" TO	10		1 SET			2'-2" TO	3'-8"	3'-4"		7/8"	199
	OF 24	8'-11"			OF 24			4'-1"					
2A515	12	7'-10"	2		12			4'-9"	1'-8"				98
2A516	4	5'-11"	2		4			2'-10"	1'-8"				25
2A517	83	6'-5"	33		83			2'-8"	7"	1'-5"	1'-5"		555
2A518	43	4'-11"	2		43			1'-2"	2'-0"				221
2A519	17	19'-0"	ST.		17								337
2A520	25	18'-9"	ST.	25									489
2A521	25	5'-10"	10		25			2'-6"	2'-4"	2'-7"			152
2A522	4	7'-0"	2		4			3'-11"	1'-8"				29
2A523	1 SET	25'-0" TO	ST.		1 SET							1/2"	503
	OF 19	25'-9"			OF 19								
2A524	20	22'-3"	ST.		20								464
2A525	1	24'-11"	ST.		1								26
2A526	9	27'-11"	ST.		9								262
2A527	22	25'-9"	ST.		22								591
2A528	19	22'-11"	ST.		19								454
2A529	10	30'-7"	ST.		10								319
2A530	1 SET	7'-0" TO	10					2'-2" TO	3'-8"	3'-4"		1/2"	153
	OF 20	7'-8"						2'-10"					
2A531	22	5'-10	15		22			2'-0"	1'-8"	1'-10"	1'-8"		134
2A532	1	6'-11"	15		1			2'-10"	1'-8"	2'-7"	1'-8"		7
2A533	1	8'-5"	15		1			3'-11"	1'-8"	3'-7"	1'-8"		9
2A534	6	9'-6"	15		6			4'-9"	1'-8"	4'-4"	1'-8"		59
2A535	8	25'-6"	ST.	8									213

MARK	No. REQ'D	LENGTH	TYPE	NORTH	SOUTH			DIMENSIONS A	B	C	D	INCRM.	WEIGHT LBS.
2A536	4 SETS	6'-3" TO	ST.	4 SETS								3'-7 1/2"	383
	OF 6	24'-4"		OF 6									
2A537	6 SETS	6'-0" TO	ST.		4 SETS							2'-6"	493
	OF 6	20'-3"			OF 6								
2A538	8	23'-2"	ST.		8								193
2A539	4 SETS	6'-4" TO	ST.		4 SETS							3'-1 1/2"	355
	OF 6	22'-0"			OF 6								
2A540	8	23'-10"	ST.		8								199
2A541	4 SETS	6'-6" TO	ST.		4 SETS							3'-2"	363
	OF 6	22'-6"			OF 6								
2A542	40	4'-2"	26		40			1'-6"	1'-2"	1'-5"	6"		174
2A543	12	21'-3"	ST.		12								266
2A544	24	16'-10"	ST.	6	18								421
2A545	3	17'-6"	ST.	3									55
2A546	15	8'-2"	3	7	8			6"	5'-6"	2'-5"			128
2A547	6	10'-8"	3	3	3			6"	8'-9"	1'-8"			67
2A548	17	13'-8"	ST.	17									242
2A549	7	8'-7"	ST.	7									63
2A550	13	9'-5"	2	6	7			2'-8"	3'-6"				128
2A551	4	8'-5"	2	4				1'-8"	3'-6"				35
2A552	2	31'-10"	ST.		2								66
2A553	3	15'-9"	ST.		3								49
2A554	3	8'-0"	ST.		3								25
2A555	14	6'-2"	ST.		10								90
2A556	6	20'-5"	ST.		6								128
2A557	2	24'-5"	ST.		2								51
2A558	4	15'-0"	ST.		4								63
2A559	2	5'-0"	26		2			1'-6"	2'-0"	1'-5"	6"		10
2A560	2	5'-11"	26		2			1'-6"	2'-11"	1'-5"	6"		12
2A5102	28	3'-6"	ST.	9	19								102
2A401	68	5'-0"	2	37	31			1'-2"	2'-0"				227
2A402	68	6'-6"	2	35	33			2'-8"	2'-0"				295

TOTAL EAST ABUTMENT (NON-EPOXY COATED BARS) = 94,966

NOTE:

SEE SHEET NO. 106/120 FOR BENDING DIAGRAM TYPES.

McCOY ASSOCIATES INC. 110/120
CONSULTING ENGINEERS
AKRON, OHIO

REINFORCING SCHEDULE

BRIDGE NO. SUM. 76-1277
AKRON EAST EXPRESSWAY
WEST VIADUCT

DESIGNED	DRAWN	TRACED	CHECKED	REVIEWED	DATE	REVISED
J.D.P.	M.R.A.		J.M.H.	JBH	3-31-89	

REINFORCING SCHEDULE EAST ABUTMENT

FHWA REGION	STATE	PROJECT	
5	OHIO		

(1061) 12/14

SUMMIT COUNTY
SUM 76–11.57

MARK	No. REQ'D	LENGTH	TYPE	NORTH	SOUTH			DIMENSIONS A	B	C	D	INCRM.	WEIGHT LBS.
					EPOXY COATED BARS								
2EA861	5	35'–3"	ST.	5									471
2EA862	147	4'–11"	13	57	90			2'–9"	1'–5"	1'–0"			1,930
2EA863	1 SET	20'–1" TO	ST.		1 SET							5"	
	OF 5	22'–9"			OF 5								286
2EA864	5	20'–1"	ST.		5								268
2EA865	5	27'–11"	ST.		5								373
2EA866	1 SET	27'–6" TO	ST.									7"	383
	OF 5	29'–10"											
2EA661	13	8'–10"	7	8	5			9"	6"	8"	3'–5"		172
2EA561	89	8'–0"	2	24	65			4'–9"	1'–9"				743
2EA562	14	34'–4"	ST.	14									501
2EA563	7	6'–2"	16	7				1'–4"	2'–6"	2'–4"	11"		45
2EA564	90	8'–8"	2	24	66			1'–5"	3'–9"				814
2EA565	95	13'–8"	2	24	71			1'–5"	6'–3"				1,354
2EA566	59	7'–0"	2	24	35			11"	3'–2"				431
2EA567	4	16'–6"	1		4			15'–0"	1'–8"				69
2EA568	28	22'–4"	ST.		28								652
2EA569	14	27'–11"	ST.		14								408
2EA570	14	27'–6"	ST.		14								402
2EA571	7	3'–9"	1		7			2'–0"	2'–0"				27
2EA572	13	6'–8"	34	8	5			8"	2'–7"	8"	3'–0"		90
2EA574	15	9'–9"	ST.	10	5								153
2EA575	50	6'–2"	ST.		50								322
2EA576	71	4'–9"	ST.	34	37								352
2EA577	10	17'–0"	ST.	5	5								177
2EA578	5	32'–6"	ST.	5									169
2EA582	32	25'–3"	ST.	32									843
2EA583	65	12'–8"	3	34	31			11"	10'–0"	2'–0"			859
2EA584	96	10'–6"	3	50	46			1'–5"	8'–7"	9"			1,051
2EA585	189	3'–4"	ST.	84	105								657
2EA586	5	14'–6"	ST.		5								76
2EA587	32	20'–3"	ST.		32								676
2EA588	4	7'–6"	ST.		4								31
2EA589	26	7'–8"	3		26			4'–8"	2'–6"	9"			208
2EA590	1 SET	19'–6" TO	ST.		1 SET							6 3/4"	108
	OF 5	21'–9"			OF 5								
2EA591	24	24'–6"	ST.		24								613
2EA592	23	10'–11"	3		23			11"	7'–9"	2'–6"			262
2EA593	36	8'–5"	3		36			1'–5"	6'–6"	9"			316
2EA594	5	18'–6"	ST.		5								96
2EA595	6	2'–6"	8	3	3			5"	6"	5"	9"		16
2EA596	6	1'–9"	1	3	3			5"	1'–6"				11
2EA597	6	3'–10"	ST.	3	3								24
2EA598	6	4'–5"	4	3	3			3'–10"					28
2EA599	8	1'–1"	ST.	7	1								9
2EA5100	8	1'–6"	ST.	1	7								13
2EA5101	33	7'–6"	2		33			1'–5"	3'–2"				258
								TOTAL EAST ABUTMENT (EPOXY COATED BARS) = 16,747					

MARK	No. REQ'D	LENGTH	TYPE					DIMENSIONS A	B	C	D	INCRM.	WEIGHT LBS.

NOTE:

SEE SHEET NO. 106/120 FOR BENDING DIAGRAM TYPES.

McCOY ASSOCIATES INC. 111/120
CONSULTING ENGINEERS
AKRON, OHIO

REINFORCING SCHEDULE

BRIDGE NO. SUM. 76–1277
AKRON EAST EXPRESSWAY
WEST VIADUCT

DESIGNED	DRAWN	TRACED	CHECKED	REVIEWED	DATE	REVISED
J.D.P.	M.R.A.		J.M.H.	JBH	3-31-89	

REINFORCING SCHEDULE WINGWALLS

FHWA REGION	STATE	PROJECT	
5	OHIO		

1062
12.14

SUMMIT COUNTY
SUM 76–11.57

MARK	No. REQ'D	LENGTH	TYPE	DIMENSIONS A	B	C	D	INCRM.	WEIGHT LBS.
NORTHWEST WINGWALL (NON–EPOXY COATED BARS)									
1W1101	8	17'–3"	11	2'–0"	14'–10"	4'–9"			733
1W1102	8	20'-3"	11	2'-0"	17'-8"	5'-8"			861
1W1001	33	13'–6"	ST.						1,917
1W1002	4	15'–8"	ST.						270
1W1003	8	19'–0"	ST.						654
1W1004	12	10'–8"	11	1'–6"	9'–3"	2'–3"			551
1W1005	8	13'–11"	ST.						479
1W901	33	22'–0"	5	19'–6"					2,468
1W902	38	13'–7"	ST.						1,755
1W903	38	13'–9"	ST.						1,777
1W904	19	16'–3"	ST.						1,050
1W905	43	10'–3"	11	1'–6"	9'–0"	10"			1,498
1W906	36	8'–1"	2	1'–8"	3'–6"				989
1W907	4	19'–11"	13	2'–6"	12'–9"	3'–9"			271
1W801	39	31'–6"	ST.						3280
1W802	16	11'–2"	ST.						358
1W803	15	19'–6"	ST.						781
1W804	14	8'–3"	2	1'–8"	3'–6"				308
1W805	33	17'–4"	5	15'–6"					1,527
1W806	15	9'–2"	10	6'–0"	3'–0"	1'–9"			367
1W807	15	9'–1"	10	8'–3"	11"	6"			364
1W808	42	18'–9"	ST.						2,103
1W809	14	16'–8"	ST.						626
1W810	20	13'–7"	ST.						725
1W811	20	12'–6"	ST.						667
1W812	10	15'–5"	ST.						412
1W813	16	10'–10"	ST.						347
1W814	8	16'–10"	13	2'–6"	13'–7"	4'–3"			360
1W815	7	15'–8"	ST.						293
1W816	34	12'–1"	10	11'–3"	11'	6"			1,097
1W701	33	15'–6"	ST.						1,045
1W702	22	8'–4"	2	1'–8"	3'–6"				375
1W703	44	13'–5"	ST.						207
1W704	18	18'–7"	ST.						502
1W705	20	9'–11"	ST.						365
1W706	20	10'–2"	ST.						416
1W707	7	13'–8"	ST.						196
1W708	43	8'–3"	ST.						725
1W601	33	19'–6"	ST.						967
1W602	53	12'–6"	2	9'–9"	1'–6"				995
1W603	30	31'–6"	ST.						1,419
1W604	20	13'–7"	ST.						408
1W605	24	11'–10"	ST.						427
1W606	12	14'–0"	ST.						252
1W607	22	18'–0"	ST.						595
1W608	20	9'–8"	ST.						293
1W609	24	9'–6"	ST.						342
1W610	15	5'–10"	10	4'–0"	1'–9"	1'–0"			131
1W611	15	7'–4"	10	6'–6"	11"	6"			165
1W612	15	12'–1"	10	11'–3"	11"	6"			272
1W613	32	14'–10"	5	13'–6"					713
1W614	42	10'–4"	5	9'–0"					652
1W615	43	8'–11"	11	1'–6"	7'–7"	8"			576
1W616	22	9'–9"	11	1'–6"	8'–5"	8"			322
1W617	2 SETS	9'–0" TO	20	1'–8"	2'–6" TO	1'–6"		3 7/8"	1,826
	OF 32	29'–0"			12'–6"				
1W618	13	9'–0"	ST						176

MARK	No. REQ'D	LENGTH	TYPE	DIMENSIONS A	B	C	D	INCRM.	WEIGHT LBS.
1W501	8	8'–5"	2	1'–8"	3'–6"				70
1W502	24	17'–11"	ST.						449
1W503	8	15'–9"	ST.						132
1W504	39	13'–8"	ST.						556
1W505	99	4'–9"	26	2'–0"	1'–2"	1'–5"	6"		490
1W506	195	6'–4"	33	2'–8"	7"	1'–5"	1'–5"		1,288
1W507	7	31'–10"	ST.						233
1W508	102	4'–11"	2	1' -2"	2'–0"				523
1W509	22	14'–5"	ST.						331
1W510	22	13'–5"	ST.						308
1W511	7	24'–9"	ST.						181
1W512	10	17'–8"	ST.						184
1W513	91	31'–6"	ST.						2,990
1W514	22	7'–0"	ST.						161
1W515	10	12'–0"	2	9'–9"					125
1W516	22	12'–2"	10	11'–3"	11"	6"			279
1W517	20	5'–2"	10	3'–8"	1'–5"	10"			108
1W518	10	10'–8"	2	8'–0"	1'–6"				106
1W519	39	9'–0"	ST.						366
1W520	27	13'–0"	ST.						366
1W521	22	8'–6"	ST.						195
1W522	18	16'–6"	ST.						310
1W523	15	6'–8"	ST.						104
1W524	4	15'–8"	ST.						65
1W525	6	23'–8"	ST.						148
1W526	2 SETS	2'–8" TO	ST.					2"	39
	OF 6	3'–6"							
1W527	29	19'–6"	ST.						590
1W528	4 SETS	5'–9" TO	ST.					4'–2 1/2"	537
	OF 7	31'–0"							
1W529	4 SETS	6'–9" TO	ST.					4'–3"	319
	OF 5	23'–10"							
1W530	2 SETS	9'–2" TO	20	1'–8"	2'–6" TO	1'–6"		3 1/2"	843
	OF 25	23'–2"			9'–6"				
1W531	20	6'–11"	10	6'–0"	11"	6"			144
1W532	31	5'–3"	ST.						267
TOTAL NORTHWEST WINGWALL (NON–EPOXY COATED BARS) = 57,057									
NORTHWEST WINGWALL (EPOXY COATED BARS)									
1EW661	96	6'–10"	7	9"	6"	8"	2'–5"		985
1EW561	95	6'–8"	34	8"	2'–7"	8"	3'–0"		661
1EW562	40	31'–8"	ST.						1,321
1EW563	10	11'–8"	ST.						122
1EW564	8	3'–7"	7	8"	6"	8 1/2"	2'–1"		30
SERIES	1SET :	4'–4" TO	ST.					1 1/2"	40
1EW565	OF 8	5'–2"							
SERIES	1 SET	3'–3" TO	4	2'–5" TO				1 1/2"	30
1EW566	OF 8	3'–10"		3'–3"					
1EW567	4	4'–4"	ST.						18
1EW568	2	14'–2"	39	10'–5"	2'–4"	1'–5"			30
1EW569	6	14'–2"	ST.						89
TOTAL NORTHWEST WINGWALL (EPOXY COATED BARS) = 3,326									

NOTES:

REINFORCING STEEL

BAR SIZE AND LOCATION ARE INDICATED IN THE BAR MARK. THE FIRST DIGIT, IF PRESENT, AND ALPHABETICAL LETTER\LETTERS INDICATE LOCATION. THE NEXT DIGIT OF A THREE DIGIT SERIES, OR THE NEXT TWO DIGITS OF A FOUR DIGIT SERIES INDICATE BAR SIZE NUMBER.

EXAMPLES: 1A501
- NO. 5 SIZE BAR
- LOCATION = ABUTMENT NO. 1

3P401
- NO. 4 SIZE BAR
- LOCATION = PIER NO. 3

ALL BAR DIMENSIONS ARE GIVEN OUT TO OUT.

REINFORCING STEEL SAMPLES

REFER TO CMS SECTIONS 106.03, 700, 709.01 THROUGH 709.05 AND 709.08. SUFFICIENT ADDITIONAL REINFORCING STEEL SHALL BE PROVIDED FOR SAMPLING. RANDOM SAMPLES SHALL BE REPLACED IN THE STRUCTURES BY THE ADDITIONAL STEEL, SPLICED IN ACCORDANCE WITH 509.08.

SEE SHEET NO. 106/120 FOR BENDING DIAGRAM TYPES.

McCOY ASSOCIATES INC. 112/120
CONSULTING ENGINEERS
AKRON, OHIO

REINFORCING SCHEDULE

BRIDGE NO. SUM. 76–1277
AKRON EAST EXPRESSWAY
WEST VIADUCT

DESIGNED	DRAWN	TRACED	CHECKED	REVIEWED	DATE	REVISED
J.D.P.	CAD		JMH	JBH	3-31-85	

REINFORCING SCHEDULE WINGWALLS

FHWA REGION	STATE	PROJECT	
5	OHIO		

1063
12.14

SUMMIT COUNTY
SUM 76–11.57

MARK	No. REQ'D	LENGTH	TYPE	DIMENSIONS A	B	C	D	INCRM.	WEIGHT LBS.
SOUTHWEST WINGWALL (NON–EPOXY COATED BARS)									
2W1101	4	17'–2"	11	2'–0"	14'–9"	4'–9"			365
2W1102	4	11'–11"	11	2'–0"	9'–6"	3'–10"			253
2W1103	4	20'-2"	11	2'-0"	17'-7"	5'-8"			429
2W1104	4	14'-11"	11	2'-0"	12'-4"	4'-11"			317
2W1001	10	13'–6"	ST.						581
2W1002	4	18'–11"	ST.						326
2W1003	2	15'-7"	ST.						134
2W1004	4	19'–6"	ST.						336
2W1005	2	16'-0"	ST.						138
2W901	27	21'–4"	5	19'–6"					1,958
2W902	10	9'–11"	ST.						269
2W903	28	11'–11"	ST.						1,134
2W904	28	13'–7"	ST.						1,293
2W905	9	16'–3"	ST.						497
2W906	11	11'–11"	11	1'–6"	10'–6"	11"			446
2W907	22	9'–1"	2	1'–8"	4'–0"				679
2W801	7	8'–3"	2	1'–8"	3'–6"				154
2W802	21	12'–2"	10	8'–11"	3'–0"	1'–9"			682
2W803	21	11'–1"	10	10'–3"	11"	6"			505
2W804	49	15'–6"	ST.						2,028
2W805	25	9'–1"	10	8'–3"	11"	6"			606
2W806	8	9'–3"	10	6'–0"	3'–0"	1'–9"			198
2W807	36	12'–1"	10	11'–3"	11"	6'			1,161
2W808	20	12'–10"	ST.						685
2W809	20	13'–0"	ST.						694
2W810	21	14'–11"	ST.						836
2W811	7	13'–0"	ST.						243
2W812	21	18'–5"	ST.						1,033
2W813	4	17'–7"	13	2'–6"	14'–5"	4'–5"			188
2W814	4	15'–2"	13	2'–6"	12'–0"	4'–7"			162
2W701	11	8'–7"	ST.						193
2W702	21	19'–6'	ST.						837
2W601	15	19'–6"	ST.						439
2W603	36	12'–6"	2	9'–9"	1'–6"				676
2W604	6	13'–6"	ST.						122
2W605	10	13'–8"	ST.						205
2W606	20	11'–8"	ST.						350
2W607	20	11'–10"	ST.						355
2W608	8	14'–6"	5	13'–6"					174
2W609	1 SET	9'–0" TO	20	1'–8"	2'–6" TO	1'–6"		3 3/4"	942
	OF 33	29'–0"			12'–6"				
2W610	1 SET	9'–0" TO	20	1'–8"	2'–6" TO	1'–6"		5"	713
	OF 25	29'–0"			12'–6"				
2W501	8	8'–5"	2	1'–8"	3'–6"				70
2W502	10	6'–8"	ST.						70
2W503	29	13'–8"	ST.						413
2W504	12	14'–0"	ST.						175
2W505	4	12'–1"	ST.						50
2W506	12	17'–7"	ST.						220
2W507	10	15'–8"	ST.						163
2W508	4	33'–5"	ST.						139
2W509	78	6'–4"	33	2'–8"	7"	1'–5"	1'–5"		515
2W510	53	4'–9"	26	2'–0"	1'–2"	1'–5"	6"		263
2W511	26	3'–2"	1	1'–4"	2'–0"				86
2W512	20	7'–8"	ST.						160
2W513	6	7'–4"	ST.						46
2W514	9	19'–5"	ST.						182
2W515	2	11'–0"	ST.						23
2W516	2	10'–4"	10	1'–0"	4'–0"	8'–6"			22

MARK	No. REQ'D	LENGTH	TYPE	DIMENSIONS A	B	C	D	INCRM.	WEIGHT LBS.
2W517	4	24'–6"	ST.						102
2W518	2	2'–8"	ST.						6
2W519	1 SET	2'–10" TO	ST.					8"	22
	OF 5	5'–6"							
2W520	27	8'–6"	ST.						239
2W521	2 SETS	6'–4" TO	ST.					4'–2 5/8"	278
	OF 7	31'–8"							
2W522	2 SETS	4'–9" TO	ST.					3'–3"	212
	OF 7	24'–4"							
2W523	29	4'–11"	2	1'–2"	2'–0"				148
TOTAL SOUTHWEST WINGWALL (NON–EPOXY COATED BARS) = 26,940									
SOUTHWEST WINGWALL (EPOXY COATED BARS)									
2EW661	22	6'–10"	7	9"	6"	8"	2'–5"		226
2EW561	24	6'–8"	34	8"	2'–7"	8"	3'–0"		167
2EW562	10	31'–8"	ST.						330
2EW563	10	3'–10"	ST.						40
2EW564	4	4'–4"	ST.						18
2EW565	10	3'–7"	7	8"	6"	8 1/2"	2'–1"		37
2EW566	6	14'–2"	ST.						89
2EW567	2	14'–2"	39	10'-5"	2'–4"	1'-5"			30
SERIES	1 SET	3'-3" TO	4	2'-5" TO				1 1/2"	30
2EW568	OF 8	3'–10"		3'-3"					
2EW569	2	2'–9"	ST.						6
SERIES	1 SET	4'-4" TO	ST.						40
2EW570	OF 8	5'–2"						1 1/2"	
TOTAL SOUTHWEST WINGWALL (EPOXY COATED BARS) = 1,013									

NOTES:

REINFORCING STEEL

BAR SIZE AND LOCATION ARE INDICATED IN THE BAR MARK. THE FIRST DIGIT, IF PRESENT, AND ALPHABETICAL LETTER\LETTERS INDICATE LOCATION. THE NEXT DIGIT OF A THREE DIGIT SERIES, OR THE NEXT TWO DIGITS OF A FOUR DIGIT SERIES INDICATE BAR SIZE NUMBER.

EXAMPLES: 1A501
- NO. 5 SIZE BAR
- LOCATION = ABUTMENT NO. 1

3P401
- NO. 4 SIZE BAR
- LOCATION = PIER NO. 3

ALL BAR DIMENSIONS ARE GIVEN OUT TO OUT.

REINFORCING STEEL SAMPLES

REFER TO CMS SECTIONS 106.03, 700, 709.01 THROUGH 709.05 AND 709.08. SUFFICIENT ADDITIONAL REINFORCING STEEL SHALL BE PROVIDED FOR SAMPLING. RANDOM SAMPLES SHALL BE REPLACED IN THE STRUCTURES BY THE ADDITIONAL STEEL, SPLICED IN ACCORDANCE WITH 509.08.

SEE SHEET NO. 106/120 FOR BENDING DIAGRAM TYPES.

McCOY ASSOCIATES INC. 112A/120
CONSULTING ENGINEERS
AKRON, OHIO

REINFORCING SCHEDULE

BRIDGE NO. SUM. 76–1277
AKRON EAST EXPRESSWAY
WEST VIADUCT

DESIGNED	DRAWN	TRACED	CHECKED	REVIEWED	DATE	REVISED
J.D.P.	CAD		JMH	JBH	3-31-89	

REINFORCING SCHEDULE WINGWALLS

FHWA REGION	STATE	PROJECT	
5	OHIO		

1064/1214

SUMMIT COUNTY
SUM 76–11.57

MARK	No. REQ'D	LENGTH	TYPE	DIMENSIONS A	B	C	D	INCRM.	WEIGHT LBS.
NORTHEAST WINGWALL (NON–EPOXY COATED BARS)									
3W1101	4	17'–6"	11	2'–0"	15'–1"	4'–9"			372
3W1102	4	11'–9"	11	2'–0"	9'–7"	3'–9"			250
3W1103	4	20'–6"	11	2'–0"	17'–11"	5'–8"			436
3W1104	4	14'–9"	11	2'–0"	12'–4"	4'–10"			313
3W1001	11	13'–6"	ST.						639
3W1002	4	18'–11"	ST.						326
3W1003	2	12'–7"	ST.						108
3W1004	2	12'–11"	ST.						111
3W1005	4	19'–5"	ST.						334
3W901	17	22'–0"	5	19'–6"					1,272
3W902	9	7'–11"	ST.						242
3W903	31	13'–10"	ST.						1,458
3W904	11	16'–3"	ST.						608
3W905	31	13'–7"	ST.						1,432
3W906	9	10'–8"	11	1'–6"	9'–6"	11"			326
3W907	22	12'–1"	2	1'–8"	5'–6"				302
3W801	39	15'–6"	ST.						1,614
3W802	15	9'–1"	10	8'–3"	11"	6"			364
3W803	10	9'–3"	10	6'–0"	3'–0"	1'–9"			247
3W804	20	12'–10"	ST.						685
3W805	20	13'–0"	ST.						694
3W806	21	16'–0"	ST.						897
3W807	7	14'–1"	ST.						263
3W808	21	19'–6"	ST.						1,097
3W809	7	17'–6"	ST.						327
3W810	36	12'–1"	10	11'–3"	11"	6"			1,161
3W811	7	8'–3"	2	1'–8"	3'–6"				154
3W812	4	19'–2"	13	2'–6"	15'–9"	8'–5"			205
3W813	4	16'–2"	13	2'–6"	13'–0"	5'–0"			173
3W814	15	6'–6"	10	3'–3"	3'–2"	1'–10"			260
3W701	11	9'–0"	ST.						202
3W601	24	19'–6"	ST.						703
3W602	17	14'–10"	5	13'–6"					379
3W603	11	9'–6"	ST.						157
3W604	36	12'–6"	2	9'–9"	1'–6"				676
3W605	20	11'–8"	ST.						351
3W606	20	11'–10"	ST.						355
3W607	10	14'–0"	ST.						210
3W608	7	13'–6"	ST.						142
3W609	1 SET	9'–0" TO	20	1'–8"	2'–6" TO	1'–6"			1,027
	OF 36	29'–0"			12'–6"				
3W610	1 SET	9'–0" TO	20	1'–8"	2'–6" TO	1'–6"			771
	OF 27	29'–0"			12'–6"				
3W501	4	8'–5"	2	1'–8"	3'–6"				35
3W503	27	8'–6"	ST.						239
3W504	9	6'–8"	ST.						63
3W505	31	13'–8"	ST.						442
3W506	12	15'–2"	ST.						190
3W507	4	13'–3"	ST.						55
3W508	12	18'–7"	ST.						233
3W509	4	16'–8"	ST.						70
3W510	57	4'–9"	26	2'–0"	1'–2"	1'–5"	6"		282
3W511	86	6'–4"	33	2'–8"	7"	1'–5"	1'–5"		568
3W512	3	33'–4"	ST.						104
3W513	31	4'–11"	2	1'–2"	2'–0"				159
3W514	2	25'–11"	ST.						54
3W515	28	7'–8"	ST.						224
3W516	2	9'–6"	ST.						20
3W517	6	15'–8"	ST.						98
3W518	6	3'–2"	ST.						20
3W519	2 SETS	3'–9" TO	ST.					9"	28
	OF 3	5'–3"							
3W520	2	10'–10"	10	2'–6"	4'–0"	7'–6"			23
3W521	9	21'–9"	ST.						204
3W522	2 SETS	6'–6" TO	ST.					4'–4"	285
	OF 7	32'–6"							
3W523	2 SETS	5'–3" TO	ST.					3'–5"	228
	OF 7	26'–0"							
3W524	4	5'–3"	ST.						22
NORTHEAST WINGWALL TOTAL (NON–EPOXY COATED BARS) = 25,305									
NORTHEAST WINGWALL (EPOXY COATED BARS)									
3EW661	33	6'–10"	7'	9"	6"	8"	2'–5"		339
3EW561	34	6'–8"	34	8"	2'–7"	8"	3'–0"		236
3EW562	10	31'–8"	ST.						330
3EW563	2	15'–7"	10	6'–10"	1'–2"	8'–10"			32
3EW564	8	15'–8"	ST.						131
TOTAL NORTHEAST WINGWALL(EPOXY COATED BARS) = 1,068									

NOTE:

REINFORCING STEEL

BAR SIZE AND LOCATION ARE INDICATED IN THE BAR MARK. THE FIRST DIGIT, IF PRESENT, AND ALPHABETICAL LETTER\LETTERS INDICATE LOCATION. THE NEXT DIGIT OF A THREE DIGIT SERIES, OR THE NEXT TWO DIGITS OF A FOUR DIGIT SERIES INDICATE BAR SIZE NUMBER.

EXAMPLES: 1A501
- 5 — NO. 5 SIZE BAR
- A — LOCATION = ABUTMENT NO. 1

3P401
- 4 — NO. 4 SIZE BAR
- P — LOCATION = PIER NO. 3

ALL BAR DIMENSIONS ARE GIVEN OUT TO OUT.

REINFORCING STEEL SAMPLES

REFER TO CMS SECTIONS 106.03, 700, 709.01 THROUGH 709.05 AND 709.08. SUFFICIENT ADDITIONAL REINFORCING STEEL SHALL BE PROVIDED FOR SAMPLING. RANDOM SAMPLES SHALL BE REPLACED IN THE STRUCTURES BY THE ADDITIONAL STEEL, SPLICED IN ACCORDANCE WITH 509.08.

SEE SHEET NO. 106/120 FOR BENDING DIAGRAM TYPES.

McCOY ASSOCIATES INC.
CONSULTING ENGINEERS
AKRON, OHIO

REINFORCING SCHEDULE

BRIDGE NO. SUM. 76–1277
AKRON EAST EXPRESSWAY
WEST VIADUCT

DESIGNED	DRAWN	TRACED	CHECKED	REVIEWED	DATE	REVISED
J.D.P.	M.R.A.		JMH	JBH	3-31-89	

REINFORCING SCHEDULE WINGWALLS

FHWA REGION	STATE	PROJECT	
5	OHIO		

1065 12/14

SUMMIT COUNTY
SUM 76–11.57

MARK	No. REQ'D	LENGTH	TYPE	DIMENSIONS A	B	C	D	INCRM.	WEIGHT LBS.
SOUTHEAST WINGWALL (NON–EPOXY COATED)									
4W1101	8	17'–7"	11	2'–0"	14'–9"	5'–3"			747
4W1102	8	20'-7"	11	2'-0"	17'-7"	6'-3"			875
4W1001	26	13'–6"	ST.						1,193
4W1002	8	19'–3"	ST.						524
4W1003	4	12'–10"	ST.						175
4W1004	8	14'–0"	ST.						381
4W1005	4	14'–6"	11	1'–10"	12'–6"	3'–8"			250
4W1006	4	11'–3"	11	1'–10"	9'–3"	3'–2"			194
4W1007	2	17'-6"	11	1'-10"	14'-5"	4'-6"			151
4W1008	2	14'-3"	11	1'-10"	12'-1"	4'-2"			123
4W901	33	22'–0"	5	19'–6"					2,468
4W902	30	14'–7"	ST.						1,487
4W903	30	15'–3"	ST.						1,556
4W904	15	16'–4"	ST.						833
4W905	33	8'–8"	11	1'–6"	7'–6"	9"			972
4W906	30	8'–1"	2	1'–8"	3'–6"				824
4W907	4	16'–4"	13	2'–6"	12'–7"	3'–6"			222
4W801	39	31'–8"	ST.						3,298
4W802	14	8'–3"	2	1'–8"	3'–6"				308
4W803	20	13'–10"	ST.						739
4W804	20	14'–7'	ST.						779
4W805	16	15'–5"	ST.						659
4W806	42	17'–7"	ST.						1,972
4W807	14	15'–10"	ST.						592
4W808	30	9'–2"	10	6'–0"	2'–3"	2'–7"			735
4W809	30	9'–1"	10	8'–3"	8"	9"			727
4W810	8	15'–8"	ST.						335
4W811	35	17'–4"	5	15'–6"					1,620
4W812	8	15'–4"	13	2'–6"	12'–2"	4'–0"			328
4W813	30	10'–4"	10	9'–6"	8"	9"			827
4W701	30	11'–10"	ST.						725
4W702	30	11'–2"	ST.						684
4W703	15	19'–2"	ST.						588
4W704	34	15'–6"	ST.						1,077
4W705	34	7'–2"	ST.						498
4W706	22	11'–4"	ST.						509
4W707	22	14'–0"	ST.						630
4W708	22	8'–4"	2	1'–8"	3'–6"				375
4W601	33	19'–6"	ST.						967
4W602	22	12'–8"	ST.						419
4W603	18	13'–5"	ST.						363
4W604	9	14'–0"	ST.						189
4W605	23	18'–5"	ST.						636
4W606	20	10'–8"	ST.						321
4W607	16	11'–5"	ST.						274
4W608	30	17'–6"	ST.						789
4W609	30	15'–8"	ST.						706
4W610	26	14'–6"	5	13'–6"					566
4W611	2 SETS	9'–0"TO	20	1'–8"	2'–6"TO	1'–6"		4"	1,712
	OF 30	29'–0"			12'–6"				
4W612	13	12'–1"	10	11'–3"	11"	6"			236
4W613	13	5'–10"	10	4'–0"	1'–9"	1'–0"			114
4W614	13	7'–4"	10	6'–6"	11"	6"			143
4W615	30	9'–3"	2	6'–3"	1'–8"				417
4W501	8	8'–5"	2	1'–8"	3'–6"				70
4W502	33	13'–8"	ST.						471
4W503	24	16'–8"	ST.						417
4W504	19	14'–11"	ST.						296
4W505	60	4'–11"	2	1'–2"	2'–0"				933
4W506	130	6'–4"	33	2'–8"	7"	1'–5"	1'–5"		859

MARK	No. REQ'D	LENGTH	TYPE	DIMENSIONS A	B	C	D	INCRM.	WEIGHT LBS.
4W507	3	29'–8"	ST.						93
4W508	77	4'–3"	26	1'–6"	1'–2"	1'–5"	6"		341
4W509	4	28'–10"	ST.						120
4W510	10	17'–8"	ST.						195
4W511	22	12'–11"	ST.						296
4W512	11	11'–2"	ST.						128
4W513	20	16'–10"	ST.						351
4W514	17	5'–9"	ST.						102
4W515	14	24'–8"	ST.						360
4W516	7	13'–6"	ST.						99
4W518	26	24'–6"	ST.						664
4W519	2 SETS	2'–8"TO	ST.					7 3/4"	41
	OF 5	5'–3"							
4W520	2	26'–9"	ST.						56
4W521	2	28'–9"	ST.						60
4W522	2	10'–4"	10	1'–0"	3'–3"	8'–9"			22
4W523	6	31'. 8"	ST.						198
4W524	2	2'–8"	ST.						6
4W525	3	25'–4"	ST.						79
4W526	4	20'–10"	ST.						87
4W527	14	7'–0""	ST.						102
4W528	14	12'–6"	2	9'–9"	1'–6"				183
4W529	4 SETS	6'–0"TO	ST.					3'-10 1/2"	515
	OF 7	29'–3"							422
4W530	1 SET	9'–2"TO	20	1'–8"	2'–6"TO	1'–6"		3 1/2"	422
	OF 25	23'–2"			9'–6"				
4W531	2 SETS	7'–3"TO	ST.					4'–5 1/2"	168
	OF 5	25'–0"							
4W532	1 SET	9'–2"TO	20	1'–8"	2'–6"TO	1'–6"		3 7/8"	388
	OF 23	23'–2"			9'–6"				
4W533	2 SETS	6'–1"TO	ST.					3'–5"	142
	OF 5	21'–5"							
4W534	17	8'–3"	2	1'–8"	3'–6"				146
4W535	4	8'–3"	22	1'–0"	2'–0"	1'–10"	1'–4"		34
TOTAL SOUTHEAST WINGWALL (NON–EPOXY COATED BARS) = 47,276									
SOUTHEAST WINGWALL (EOXY COATED BARS)									
4EW661	64	6'–10"	7	9"	6"	8"	2'–5"		657
			7						
4EW561	64	6'–8"	34	8"	2'–7"	8"	3'–0"		445
4EW562	22	31'–8"	ST.						727
4EW563	1	31'–7"	10	22'–10"	1'–2"	8'–10"			66
4EW576	2	6'–4"	ST.						13
4EW577	8	5'–4"	11	1'–0"	4'–6"	6"			44
4EW578	5	8'–3"	22	1'–0"	2'–0"	1'–10"	1'–4"		43
4EW579	7	4'–6"	ST.						33
4EW580	7	22'–0"	ST.						161
TOTAL SOUTHEAST WINGWALL (EPOXY COATED BARS) = 2,189									

NOTES:

REINFORCING STEEL

BAR SIZE AND LOCATION ARE INDICATED IN THE BAR MARK. THE FIRST DIGIT, IF PRESENT, AND ALPHABETICAL LETTER\LETTERS INDICATE LOCATION. THE NEXT DIGIT OF A THREE DIGIT SERIES, OR THE NEXT TWO DIGITS OF A FOUR DIGIT SERIES INDICATE BAR SIZE NUMBER.

EXAMPLES: 1A501
- NO. 5 SIZE BAR
- LOCATION = ABUTMENT NO. 1

3P401
- NO. 4 SIZE BAR
- LOCATION = PIER NO. 3

ALL BAR DIMENSIONS ARE GIVEN OUT TO OUT.

REINFORCING STEEL SAMPLES

REFER TO CMS SECTIONS 106.03, 700, 709.01 THROUGH 709.05 AND 709.08. SUFFICIENT ADDITIONAL REINFORCING STEEL SHALL BE PROVIDED FOR SAMPLING. RANDOM SAMPLES SHALL BE REPLACED IN THE STRUCTURES BY THE ADDITIONAL STEEL, SPLICED IN ACCORDANCE WITH 509.08.

SEE SHEET NO. 106/120 FOR BENDING DIAGRAM TYPES.

McCOY ASSOCIATES INC. 113A/120
CONSULTING ENGINEERS
AKRON, OHIO

REINFORCING SCHEDULE

BRIDGE NO. SUM. 76–1277
AKRON EAST EXPRESSWAY
WEST VIADUCT

DESIGNED	DRAWN	TRACED	CHECKED	REVIEWED	DATE	REVISED
J.D.P.	CAD		JMH	JBH	3-31-89	

REINFORCING SCHEDULE PIERS

FHWA REGION	STATE	PROJECT	
5	OHIO		

1066 12.14

SUMMIT COUNTY
SUM 76–11.57

MARK	No. REQ'D	LENGTH	TYPE	NORTH	SOUTH			DIMENSIONS A	B	C	D	INCRM.	WEIGHT LBS.
PIER 1													
1P1101	120	11'–6"	1	60	60			9'–10"	2'–0"				7,332
1P1102	40	34'–2"	ST.		40								7,261
1P1103	20	34'–6"	ST.		20								3,666
1P1104	20	31'–10"	ST.	20									3,383
1P1105	20	31'–4"	ST.	20									3,329
1P1106	20	31'–1"	ST.	20									3,303
1P1107	6	33'–4"	2		6			30'–0"	2'–0"				1,063
1P1108	6	33'–0"	2	6				29'–8"	2'–0"				1,052
1P1001	6	33'–0"	2		6			30'–0"	1'–10"				852
1P1002	6	32'–8"	2	6				29'–8"	1'–10"				843
1P801	12	14'–10"	5	12				13'–0"					475
1P701	86	10'–2"	5	54	32			8'–6"					1,787
1P702	74	11'–2"	5	28	46			9'–6"					1,689
1P703	16			16				10'–6"					398
1P601	6	30'–0"	ST.		6								270
1P602	4	14'–1"	2		4			12'–5"	1'–0"				85
1P603	6	29'–8"	ST.	6									267
1P604	4	10'–4"	1	4				9'–6"	1'–0"				62
1P605	4	7'–7"	1	4				6'–9"	1'–0"				46
1P606	4	8'–1"	2	4				6'–5"	1'–0"				49
1P501	177	15'–2"	14	84	93			3'–8"	3'–8"				2,800
1P502	177	10'–10"	14	84	93			2'–7"	2'–7"				2,000
1P503	15	14'–11"	2	8	7			3'–2"	6'–0"				233
1P504	14	8'–11"	2	7	7			3'–2"	3'–0"				130
1P505	28	12'–10"	14	8	20			2'–0"	4'–2"				375
1P506	30	13'–4"	14	12	18			2'–0"	4'–5"				417
1P507	14	13'–10"		14				2'–0"	4'–8"				202
1P508	6	14'–4"		6				2'–0"	4'–11"				90
1P509	9	27'–9"	ST.		9								260
1P510	30	7'–6"	ST.		30								235
1P511	16	26'–2"	14		16			4'–2"	8'–6"				437
1P512	9	6'–0"	1		9			4'–2"	2'–0"				56
1P513	16	8'–10"	1		16			7'–0"	2'–0"				147
1P514	80	4'–9"	2		80			1'–0"	2'–0"				396
1P515	20	4'–0"	ST.		20								83
1P401	36	3'–8"	ST.	18	18								88
1P402	6	14'–6"	14	3	3			3'–6"	3'–6"				58
												TOTAL PIER 1 =	45,219
PIER 2													
2P1101	120	11'–6"	1	60	60			9'–10"	2'–0"				7,332
2P1102	40	32'–7"	ST.		40								6,925
2P1103	40	32'–11"	ST.		40								6,995
2P1104	20	29'–10"	ST.	20									3,170
2P1105	20	30'–0"	ST.	20									3,188
2P1106	20	30'–7"	ST.	20									3,250
2P1107	12	33'–0"	2	6	6			29'–8"	2'–0"				2,104
2P1001	12	32'–8"	2	6	6			29'–8"	1'–0"				1,686
2P701	168	10'–2"	5	84	84			8'–6"					3,492
2P601	12	29'–8"	ST.	6	6								534
2P602	4	8'–3"	2		4			6'–7"	1'–0"				50
2P603	4	13'–11"	2	4				12'–3"	1'–0"				84

MARK	No. REQ'D	LENGTH	TYPE	NORTH	SOUTH			DIMENSIONS A	B	C	D	INCRM.	WEIGHT LBS.
2P501	165	15'–2"	14	78	87			3'–8"	3'–8"				2,610
2P502	165	10'–10"	14	78	87			2'–7"	2'–7"				1,864
2P503	40	12'–10"	14	8	32			2'–0"	4'–2"				535
2P504	6	13'–6"	14		6			2'–0"	4'–6"				84
2P505	10	13'–4"	14	10				2'–0"	4'–5"				139
2P506	14	13'–10"	14	14				2'–0"	4'–8"				202
2P507	6	14'–4"	14	6				2'–0"	4'–11"				90
2P508	14	8'–11"	2	7	7			3'–2"	3'–0"				130
2P509	15	14'–11"	2	8	7			3'–2"	6'–0"				233
P401	36	3'–8"	ST.	18	18								88
P402	6	14'–6"	14	3	3			3'–6"	3'–6"				58
												TOTAL PIER 2 =	44,843
PIER 3													
3P1101	180	11'–6"	1	60	120			9'–10"	2'–0"				10,998
3P1102	40	31'–6"	ST.	20	20								6,694
3P1103	20	32'–0"	ST.		20								3,400
3P1104	20	32'–1"	ST.		20								3,409
3P1105	6	33'–0"	2		6			29'–8"	2'–0"				1,052
3P1106	48	13'–6"	ST.	48									3,443
3P1107	88	28'–2"	ST.	88									13,169
3P1108	24	32'–8"	ST.	24									4,165
3P1109	24	32'–10"	ST.	24									4,187
3P1110	6	15'–0"	ST.	6									478
3P1111	8	32'–0"	2	8				28'–8"	2'–0"				1,360
3P1112	8	33'–0"	2	8				29'–8"	2'–0"				1,403
3P1113	69	19'–8"	5	14	55			16'–6"					7,210
3P1114	20	31'–1"	ST.	20									3,303
3P1115	40	31'–2"	ST.	20	20								6,624
3P1116	20	31'–8"	ST.		20								3,365
3P1117	20	32'–3"	ST.		20								3,427
3P1001	6	32'–8"	2		6			29'–8"	1'–10"				843
3P1002	61	19'–4"	5	30	31			16'–6"					5,075
3P901	24	34'–10"	5	12	12			31'–8"					2,842
3P801	22	11'–10"	5		22			10'–0"					695
3P701	48	10'–2"	5		48			8'–6"					997
3P702	24	11'–5"	5		24			9'–9"					560
3P703	49	11'–2"	5	49				9'–6"					1,118
3P601	6	29'–8"	ST.		6								267
3P602	8	9'–3"	10	8				2'–0"	11"	7'–3"			111
3P603	12	29'–8"	ST.	12									535
3P604	4	21'–10"	1		4			21'–0"	1'–0"				131
3P605	12	31'–8"	ST.	6	6								571
3P606	48	9'–10"	5	26	22			8'–6"					710
3P501	302	15'–2"	14	137	165			3'–8"	3'–8"				4,777
3P502	302	10'–10"	14	137	165			2'–7"	2'–7"				3,412
3P503	10	14'–0"	14		10			2'–0"	4'–9"				146
3P504	28	13'–6"	14		28			2'–0"	4'–6"				394
3P505	8	12'–10"	14		8			2'–0"	4'–2"				107
3P506	23	14'–11"	2	8	15			3'–2"	6'–0"				358
3P507	2 SETS	11'–6" TO	14	2 SETS				2'–0"	3'–6" TO			3/4"	502
	OF 19	13'–8"		OF 19					4'–7"				
3P508	16	14'–0"	14	16				2'–0"	4'–9"				234
3P509	2 SETS	12'–2" TO		2 SETS				2'–0"	3'–10" TO			3/4"	525
	OF 19	14'–4"		OF 19					4'–11"				
3P510	40	15'–2"	5	20	20			3'–2"	4'–2"				633
3P511	17	8'–2"	5		17			7'–0"					149
												TOTAL PIER 3 =	103,379
3SP401	4	24'–9"	38					24'–9"	5'–0"	2"			

NOTE:

SEE SHEET NO. 106/120 FOR BENDING DIAGRAM TYPES.

McCOY ASSOCIATES INC. 114/120
CONSULTING ENGINEERS
AKRON, OHIO

RIENFORCING SCHEDULE

BRIDGE NO. SUM. 76–1277
AKRON EAST EXPRESSWAY
WEST VIADUCT

DESIGNED	DRAWN	TRACED	CHECKED	REVIEWED	DATE	REVISED
J.G.C.	CAD		J.B.H.	J.B.H.	7/19/90	

REINFORCING SCHEDULE PIERS

FHWA REGION	STATE	PROJECT	
5	OHIO		

106/120
12-14

SUMMIT COUNTY
SUM 76-11.57

MARK	No. REQ'D	LENGTH	TYPE	NORTH	SOUTH			DIMENSIONS A	B	C	D	INCRM.	WEIGHT LBS.
PIER 4													
4P1101	120	11'-6"	1	60	60			9'-10"	2'-0"				7,332
4P1102	20	30'-6"	ST.		20								3,241
4P1103	20	31'-3"	ST.										3,321
4P1104	20	31'-9"	ST.										3,374
4P1105	40	30'-0"	ST.										6,376
4P1106	20	30'-4"	ST.										3,223
4P1107	12	33'-0"	2	6	6			29'-8"	2'-0"				2,104
4P1001	12	32'-8"	2	6	6			29'-8"	1'-10"				1,686
4P701	90	10'-2"	5	36	54			8'-6"					1,871
4P702	106	12'-2"	5	64	42			10'-6"					2,637
4P601	12	29'-8"	ST.	6	6								534
4P602	4	8'-1"	2		4			6'-5"	1'-0"				49
4P603	4	8'-3"	1		4			7'-5"	1'-0"				50
4P604	4	11'-0"	1		4			10'-2"	1'-0"				66
4P501	159	15'-2"	14	78	81			3'-8"	3'-8"				2,515
4P502	159	10'-10"	14	78	81			2'-7"	2'-7"				1,796
4P503	6	15'-4"	14		6			2'-0"	5'-5"				96
4P504	14	14'-8"	14		14			2'-0"	5'-1"				214
4P505	10	14'-0"	14		10			2'-0"	4'-9"				146
4P506	26	12'-10"	14	18	8			2'-0"	4'-2"				348
4P507	20	13'-4"	14	20				2'-0"	4'-5"				278
4P508	14	8'-11"	2	7	7			3'-2"	3'-0"				130
4P509	16	14'-11"	2	8	8			3'-2"	6'-0"				248
P401	36	3'-8"	ST.	18	18								88
P402	6	14'-6"	14	3	3			3'-6"	3'-6"				58
												TOTAL PIER 4 =	41,781
PIER 5													
5P1101	140	11'-6"	1	60	80			2'-0"	9'-10"				8,554
5P1102	20	27'-4"	ST.		20								2,904
5P1103	20	27'-11"	ST.		20								2,966
5P1104	20	28'-4"	ST.		20								3,011
5P1105	20	29'-1"	ST.		20								3,090
5P1106	6	36'-4"	1		6			34'-8"	2'-0"				1,158
5P1107	6	21'-4"	1		6			19'-8"	2'-0"				680
5P1108	12	29'-10"			12			28'-2"	2'-0"				1,902
5P1109	20	29'-7"	ST.	20									3,144
5P1110	40	29'-4"	ST.	40									6,234
5P1111	6	35'-3"	2	6				31'-11"	2'-0"				1,124
5P1001	6	34'-11"	2	6				31'-11"	1'-10"				901
5P701	32	10'-2"	5	32				8'-6"					665
5P702	51	11'-2"	5	46	128			9'-6"					3,972
5P703	16	12'-2"	5	16									398

MARK	No. REQ'D	LENGTH	TYPE	NORTH	SOUTH			DIMENSIONS A	B	C	D	INCRM.	WEIGHT LBS.
5P601	16	26'-2"	ST.		16								629
5P602	8	8'-10"	2		8			3'-2"	3'-0"				106
5P603	8	11'-7"	1		8			10'-3"	1'-6"				139
5P604	4	13'-8"	1		4			12'-4"	1'-6"				82
5P605	4	9'-7"	1		4			8'-3"	1'-6"				58
5P606	4	9'-11"	1					8'-7"	1'-6"				60
5P607	6	31'-11"	ST.	6									288
5P501	174	15'-2"	14	78	96			3'-8"	3'-8"				2,753
5P502	174	10'-10"	14	78	96			2'-7"	2'-7"				1,966
5P503	42	12'-10"	14	36	6			2'-0"	4'-2"				562
5P504	14	13'-4"	14		14			2'-0"	4'-5"				195
5P505	10	14'-0"	14		10			2'-0"	4'-9"				146
5P506	22	14'-10"	14		22			2'-0"	5'-2"				340
5P507	22	15'-6"	14		22			2'-0"	5'-6"				356
5P508	6	13'-2"	14	6				2'-0"	4'-4"				82
5P509	7	8'-11"	2	7				3'-2"	3'-0"				65
5P510	7	14'-11"	2	7				3'-2"	6'-0"				109
P401	30	3'-8"	ST.	18	12								73
P402	4	14'-6"	14	3	1			3'-6"	3'-6"				39
P403	2	13'-6"	14		2			3'-6"	3'-0"				18
P404	6	3'-2"	ST.		6								13
												TOTAL PIER 5 =	48,782

NOTE:

SEE SHEET NO. 106/120 FOR BENDING DIAGRAM TYPES.

McCOY ASSOCIATES INC. 115/120
CONSULTING ENGINEERS
AKRON, OHIO

REINFORCING SCHEDULE

BRIDGE NO. SUM. 76-1277
AKRON EAST EXPRESSWAY
WEST VIADUCT

DESIGNED	DRAWN	TRACED	CHECKED	REVIEWED	DATE	REVISED
J.D.P.	M.R.A.		JBH	JBH	3-31-89	

REINFORCING SCHEDULE PIERS

FHWA REGION	STATE	PROJECT	
5	OHIO		

1068
1214

SUMMIT COUNTY
SUM 76–11.57

MARK	No. REQ'D	LENGTH	TYPE	NORTH	SOUTH			DIMENSIONS A	B	C	D	INCRM.	WEIGHT LBS.
PIER 6													
6P1101	198	34'–6"	ST.	66	132								36,293
6P1102	20	36'–8"	ST.		20								3,896
6P1103	20	37'–1"	ST.		20								3,940
6P1104	20	38'–3"	ST.		20								4,064
6P1105	20	35'–2"	ST.		20								3,737
6P1106	20	36'–9"	ST.		20								3,905
6P1107	20	37'–6"	ST.		20								3,985
6P1108	6	22'–6"	1		6			20'–10"	2'–0"				717
6P1109	6	26'–4"	1		6			24'–8"	2'–0"				839
6P1110	12	35'–3"	2	12				31'–11"	2'–0"				2,247
6P1111	40	32'–0"	ST.	40									6,801
6P1112	20	32'–3"	ST.	20									3,427
6P1113	180	13'–6"	ST.	60	120								12,911
6P1001	8	23'–2"	1		8			21'–8"	1'–10"				798
6P1002	8	29'–0"	1		8			27'–6"	1'–10"				998
6P1003	8	28'–6"	1		8			27'–0"	1'–10"				981
6P1004	8	32'–4"	1		8			30'–10"	1'–10"				1,113
6P1005	8	20'–8"	1		8			19'–2"	1'–10"				711
6P1006	6	30'–10"	1		6			29'–4"	1'–10"				796
6P1007	6	24'–6"	1		6			23'–0"	1'–10"				633
6P1008	6	18'–6"	1		6			17'–0"	1'–10"				478
6P701	8	21'–10"	2		8			3'–2"	9'–6"				357
6P702	10	18'–10"	2		10			3'–2"	8'–0"				385
6P601	12	23'–0"	ST.		12								415
6P602	4	23'–10"	1		4			23'–0"	1'–0"				143
6P603	4	7'–0"	2		4			5'–4"	1'–0"				42
6P604	12	21'–2"	ST.		12								382
6P605	4	9'–3"	2		4			7'–7"	1'–0"				56
6P606	4	4'–10"	1		4			4'–0"	1'–0"				29
6P607	4	24'–8"	1		4			23'–10"	1'–0"				
6P609	6	31'–11"	ST.	6									
6P501	279	15'–2"	14	84	195			3'–8"	3'–8"				4,414
6P502	279	10'–10"	14	84	195			2'–7"	2'–7"				3,152
6P503	8	12'–4"	14		8			1'–9"	4'–2"				103
6P504	22	12'–10"	14		22			1'–9"	4'–5"				294
6P505	22	13'–2"	14		22			1'–9"	4'–7"				302
6P506	20	14'–2"	14		20			1'–9"	5'–1"				296
6P507	21	8'–11"	2	7	14			3'–2"	3'–0"				195
6P508	76	12'–10"	14	52	24			2'–0"	4'–2"				1,017
6P509	12	16'–0"	14		12			2'–0"	5'–9"				200
6P510	10	16'–10"	14		10			2'–0"	6'–2"				176
6P511	14	17'–6"	14		14			2'–0"	6'–6"				256
6P513	8	11'–11"	2	8				3'–2"	4'–6"				99
P401	30	3'–8"	ST.	18	12								73
P402	4	14'–6"	14	3	1			3'–6"	3'–6"				39
P403	2	13'–6"	14		2			3'–6"	3'–0"				18
P404	6	3'–2"	ST.		6								13
												TOTAL PIER 6 =	106,162
6SP401	9	34'–6"	38	3	6			34'–6"	5'–0"	2"			

MARK	No. REQ'D	LENGTH	TYPE	NORTH	SOUTH			DIMENSIONS A	B	C	D	INCRM.	WEIGHT LBS.

NOTE:

SEE SHEET NO. 106/120 FOR BENDING DIAGRAM TYPES.

McCOY ASSOCIATES INC. 116/120
CONSULTING ENGINEERS
AKRON, OHIO

REINFORCING SCHEDULE

BRIDGE NO. SUM. 76–1277
AKRON EAST EXPRESSWAY
WEST VIADUCT

DESIGNED	DRAWN	TRACED	CHECKED	REVIEWED	DATE	REVISED
J.D.P.	M.R.A.		JBH	JBH	3-31-89	

REINFORCING SCHEDULE SUPERSTRUCTURE

FHWA REGION	STATE	PROJECT	
5	OHIO		

1069 12.14

SUMMIT COUNTY
SUM 76–11.57

WESTBOUND LANES

MARK	No. REQ'D	LENGTH	TYPE	UNIT 1	UNIT 2	UNIT 3	DIMENSIONS A	B	C	D	INCRM.	WEIGHT LBS.
HAUNCHES												
EH501	300	30'–0"	ST.	72	96	132						9,387
EH502	12	34'–9"	ST.	12								435
EH503	6 SETS	25'–0" TO	ST.		6 SETS						6 3/4"	330
EH504	OF 2	27'-9 3/4"	ST.		OF 2	2						41
EH505	2	19'–7"	ST.			2						48
EH506	2	23'–0"	ST.			2						55
EH507	2	26'–5"	ST.			2						62
EH508	2	29'–11"	ST.			2						69
EH509	2	33'–3"	ST.			2						73
EH516	24	5'-0"	ST.									125
EH401	2,388	3'–8"	20	615	759	1,014						5,849
EH402	2,401	2'–8"	20	615	762	1,024						4,277
												WESTBOUND LANES TOTAL = 20,752

EASTBOUND LANES

MARK	No. REQ'D	LENGTH	TYPE	UNIT 1	UNIT 2	UNIT 3	DIMENSIONS A	B	C	D	INCRM.	WEIGHT LBS.
HAUNCHES												
EH501	312	30'–0"	ST.	72	96	144						9,762
EH502	12	34'–9"	ST.	12								435
EH503	6 SETS	28'–4 1/2"	ST.		6 SETS						6 3/4"	373
	OF 2	TO 31'-2 1/4"			OF 2							
EH510	2	8'–11"	ST.			2						19
EH511	2	10'–7"	ST.			2						22
EH512	2	14'–1"	ST.			2						29
EH513	2	17'–6"	ST.			2						37
EH514	2	20'–11"	ST.			2						44
EH515	2	24'–5"	ST.			2						51
EH516	24	5'-0"	ST.									125
EH401	2,460	3'–8"	20	615	771	1,074						6,025
EH402	2,447	2'–8"	20	615	768	1,064						4,359
												EASTBOUND LANES TOTAL = 21,281
SIGN SUPPORTS												
EM801	21	3'-1"	8			21	10"	5"	7"	1'-1"		173
EM802	21	3'-6"	10			21	1'-5"	1'-6"	1'-6"			196
EM803	21	2'-5"	1			21	10"	1'-9"				136
EM804	20	2'-9"	ST			20						147
EM501	8	6'-5"	2			8	10"	2'-11"				54
EM502	20	2'-3"	36			20	10"	10"	10"	1¼"		47
EM506	8	14'-8"	ST			8						122
EM402	8	2'-8"	ST			8						22
EL701	2	14'-8"	ST			2						60
EL702	7	12'-4"	22			7	8"	2'-6"	2'-9"	7'-8"		176
EL602	12	6'-10"	1			12	3'-0"	4'-0"				123
EL506	12	6'-0"	11			12	2'-0"	4'-0"	6"			75
EL507	8	14'-8"	ST			8						122
EL508	12	3'-3"	2			12	2'-6"	6"				41
												TOTAL 1494
												1494 LBS. TO UNIT THREE ON SHEET 120/120
LIGHT SUPPORT												
EM801	22	3'-1"	8		11	11	10"	5"	7"	1'-1"		181
EM802	22	3'-6"	10		11	11	1'-5"	1'-6"	1'-6"			205
EM803	22	2'-5"	1		11	11	10"	1'-9"				142
EM804	20	2'-9"	ST		10	10						147
EM501	12	6'-5"	2		6	6	10"	2'-11"				80
EM502	20	2'-3"	36		10	10	10"	10"	10"	1¼"		47
EM503	14	7'-2"	ST		7	7						105
EM401	16	2'-3"	ST		8	8						38
EL501	8	6'-0"	11			8	2'-0"	4'-0"	6"			50
EL502	8	6'-2"	1			8	4'-0"	2'-4"				51
EL503	12	7'-10"	22			12	6"	2'-1"	1'-10"	1'-4"		98
EL504	8	4'-2"	ST			8						35
EL505	8	3'-11"	2			8	1'-10"	6"				33
												LIGHT SUPPORTS TOTAL = 1,212
												460 LBS. TO UNIT TWO ON SHEET 119/120
												752 LBS. TO UNIT THREE ON SHEET 120/120

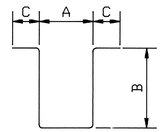

20

NOTE:

ALL HAUNCH REINFORCING STEEL IS CARRIED TO SHEETS 117/120 THRU 120/120.

SIGN SUPPORT AND LIGHT SUPPORT REINFORCING STEEL IS CARRIED TO SHEETS 119/120 THRU 120/120.

FOR BENDING DIAGRAMS, SEE SHEET 120/120

McCOY ASSOCIATES INC. 116A/120
CONSULTING ENGINEERS
AKRON, OHIO

REINFORCING SCHEDULE

BRIDGE NO. SUM. 76–1277
AKRON EAST EXPRESSWAY
WEST VIADUCT

DESIGNED	DRAWN	TRACED	CHECKED	REVIEWED	DATE	REVISED
J.D.P.	M.R.A.		JMH	JBH	3-31-89	

REINFORCING SCHEDULE SUPERSTRUCTURE

FHWA REGION	STATE	PROJECT	
5	OHIO		

1070
1214

SUMMIT COUNTY
SUM 76-11.57

MARK	No. REQ'D.	LENGTH	TYPE	PHASE I	PHASE II			DIMENSIONS A	B	C	D	INCRM.	WEIGHT LBS.
WESTBOUND SECTION 1													
ES 601	380	19'-2"	ST.		380								10,940
ES 602	381	26'-8"	ST.		381								15,261
ES 603	1 SET OF	8'-6" TO	ST.	1 SET OF								8 1/8"	1,004
	34	30'-10"		34									
ES 604	2	22'-0"	ST.	2									66
ES 605	1 SET OF	7'-9" TO	ST.	1 SET OF								3 5/8"	77
	6	9'-3"		6									
ES 623	380	15'-8"	ST.	380									8,942
ES 624	381	19'-8"	ST.	381									11,255
ES 629	1	10'-0"	ST.										15
ES 501	759	15'-0"	ST.	379	380								11,875
ES 502	590	30'-0"	ST.	248	342								18,461
ES 503	1 SET OF	8'-6" TO	ST.	1 SET OF								8 1/8"	697
	34	30'-10"		34									
ES 504	4	25'-8"	ST.	4									107
ES 505	2	21'-10"	ST.	2									46
ES 506	1 SET OF	7'-9" TO	ST.	1 SET OF								3 1/2"	53
	6	9'-3"		6									
ES 507	93	35'-6"	ST.	36	57								3443
ES 508	180	5'-8"	ST.	108	72								1064
ES 509	42	15'-8"	ST.	42									686
ES 512	6	9'-7"	ST.	6									60
ES 513	1 SET OF	9'-8" TO	ST.	1 SET OF								6 1/2"	550
	30	25'-6"		30									
ES 514	1 SET OF	9'-2" TO	ST.	1 SET OF								8"	111
	9	14'-6"		9									
ES 519	24	14'-8"	ST.		24								367
ES 561	378	19'-10"	ST.	378									7,819
ES 562	381	30'-4"	ST.		381								12,054
ES 573	436	1'-9"	1	230	206			5"	1'-6"				796
ES 574	230	2'-7"	8	230				8"	6"	8"	10"		620
ES 575	206	2'-1"	8		206			5"	6"	5"	9"		448
ES 576	230	3'-10"	ST.		230								919
ES 577	230	4'-5"	4		230			3'-10"					1,060
ES 578	255	6'-11"	34	255				7 1/2"	2'-7"	8"	3'-0"		1,840
ES 583	1	10'-0"	ST.										10
ES 581	4	7'-6"	ST.		4								31
ES 401	790	30'-0"	ST.	324	466								15,832
ES 402	95	25'-0"	ST.	39	56								1,586
ES 403	100	33'-6"	ST.	41	59								2,238
ES 404	4	25'-2"	ST.	4									67
ES 405	1 SET OF	9'-4" TO	ST.	1 SET OF								6"	367
	32	25'-0"		32									
ES 406	1 SET OF	8'-10" TO	ST.	1 SET OF								8"	69
	9	14'-2"		9									
HAUNCHES - SEE SHEET 116A/120													5,290
									WESTBOUND SECTION 1 TOTAL =				136,116

MARK	No. REQ'D	LENGTH	TYPE	PHASE I	PHASE II			DIMENSIONS A	B	C	D	INCRM.	WEIGHT LBS.
WESTBOUND SECTION 2													
ES 601	474	19'-2"	ST.		474								13,646
ES 602	470	26'-8"	ST.		470								18,825
ES 623	466	15'-8"	ST.	466									10,966
ES 624	469	19'-8"	ST.	469									13,854
ES 501	943	15'-0"	ST.	467	476								14,753
ES 502	776	30'-0"	ST.	320	456								24,281
ES 508	190	5'-8"	ST.	114	76								1,123
ES 509	58	15'-8"	ST.	42	16								947
ES 516	1 SET OF	25'-0 7/8"	ST.		1 SET OF							13/16"	1,485
	53	TO 28'-8"	ST.		53								
ES 517	10	8'-8"	ST.	6	4								90
ES 519	12	14'-8"	ST.		16								184
ES 561	464	19'-10"	ST.	464									9,598
ES 562	472	30'-4"	ST.		472								14,933
ES 563	4	19'-11"	ST.	4									83
ES 565	4	28'-8"	ST.		4								120
ES 566	4	8'-9"	ST.		4								37
ES 572	6	14'-8"	ST.	6									92
ES 573	506	1'-9"	1	250	256			5"	1'-6"				923
ES 574	250	2'-7"	8	250				8"	6"	8"	10"		674
ES 575	256	2'-1"	8		256			5"	6"	5"	9"		556
ES 576	283	3'-10"	ST.		283								1131
ES 577	283	4'-5"	4		283			3'-10"					1,304
ES 578	277	6'-11"	34	277				7 1/2"	2'-7"	8"	3'-0"		1,998
ES 579	1 SET OF	23'-7"	ST.	1 SET OF								13/16"	912
	36	TO 25'-0"	ST.	36									
ES 511	4	7'-2"	ST.										30
ES 582	89	5'-0"	ST.	40	49								464
ES 401	1085	30'-0"	ST.	445	640								21,744
ES 408	95	11'-0"	ST.	39	56								698
ES 409	1 SET OF	23'-5 3/4"	ST.		1 SET OF							3/4"	975
	59	TO 24'-0"			59								
ES 428	1 SET OF	20'-0" TO	ST.	1 SET OF								3/4"	595
	41	23'-5"		41									
ES 430	100	5'-0"	ST.	45	55								334
HAUNCHES - SEE SHEET 116A/120													6,613
LIGHT SUPPORT													
EM 503	2	7'-2"	ST.		2								15
EM 504	8	2'-11"	35		8			1'-1"	4 1/2"	3"			24
EM 505	8	1'-11"	16		8			10"	9"	6"	4"		16
									WESTBOUND SECTION 2 TOTAL =				164,023

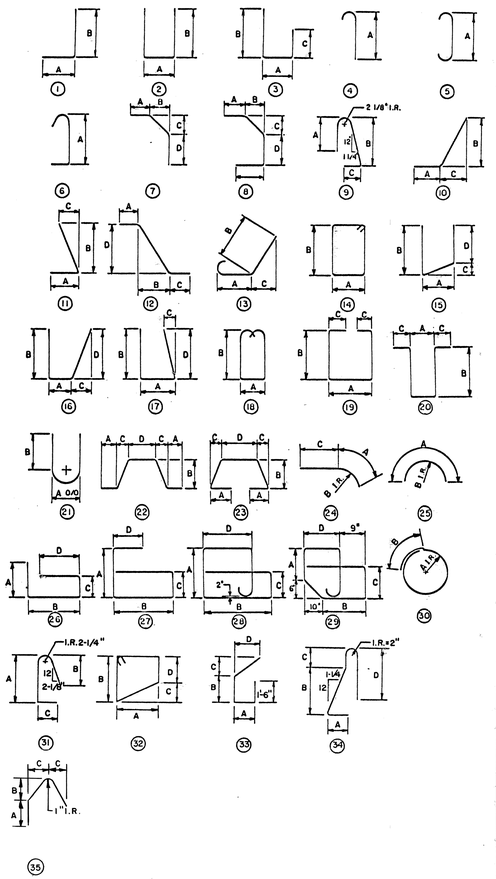

McCOY ASSOCIATES INC. 117/120
CONSULTING ENGINEERS
AKRON, OHIO

REINFORCING SCHEDULE

BRIDGE NO. SUM. 76-1277
AKRON EAST EXPRESSWAY
WEST VIADUCT

DESIGNED	DRAWN	TRACED	CHECKED	REVIEWED	DATE	REVISED
J.D.P.	E.B.		G.C.K.	J.P.H	3-31-89	

REINFORCING SCHEDULE SUPERSTRUCTURE

FHWA REGION	STATE	PROJECT	
5	OHIO		

1071 / 1214

SUMMIT COUNTY
SUM 76 -11.57

MARK	No. REQ'D.	LENGTH	TYPE	PHASE I	PHASE II			DIMENSIONS A	B	C	D	INCRM.	WEIGHT LBS.
WESTBOUND SECTION 3													
ES 601	629	19'-2"	ST.		629								18,108
ES 602	609	26'-8"	ST.		609								24,393
ES 606	1 SET OF	15'-8"	ST.	1 SET OF								3/16"	6,992
	266	TO 19'-4"		266									
ES 607	1 SET OF	3'-0"	ST.	1 SET OF								1'-4 3/8"	218
	13	TO 19'-4"		13									
ES 608	1 SET OF	3'-0" TO	ST.		1 SET OF							1'-4 5/8"	221
	13	19'-8"			13								
ES 609	1 SET OF	3'-0" TO	ST.		1 SET OF							1'-3 1/2"	378
	18	25'-0"			18								
ES 610	1 SET OF	9'-6" TO	ST.		1 SET OF							1'-3 1/2"	168
	8	18'-6"			8								
ES 611	1 SET OF	8'-6" TO	ST.		1 SET OF							1"	92
	7	9'-0"			7								
ES 623	314	15'-8"	ST.	314									7,389
ES 624	596	19'-8"	ST.	596									17,605
ES 626	7	17'-10"	ST.		7								187
ES 627	1 SET OF	3'-0" TO	ST.		1 SET OF							1 1/2"	14
	3	3'-3"			3								
ES 628	3	30'-4"	ST.	3									137
ES 511	8	7'-2"	ST.		8								60
ES 501	1226	15'-0"	ST.	594	632								19,181
ES 502	1045	30'-0"	ST.	408	637								32,698
ES 508	228	5'-8"	ST.	144	84								1348
ES 509	22	15'-8"	ST.	6	16								359
ES 517	4	8'-8"	ST.		4								36
ES 518	4	32'-0"	ST.	4									134
ES 519	84	14'-8"	ST.	60	24								1285
ES 521	6	5'-11"	ST.	6									37
ES 523	1 SET OF	19'-10"	ST.	1 SET OF								3/16"	6,011
	266	TO 23'-6"		266									
ES 524	1 SET OF	3'-0" TO	ST.	1 SET OF								1'-3 3/8"	235
	17	23'-6"		17									
ES 525	1 SET OF	3'-0" TO	ST.		1 SET OF							1'-4"	94
	10	15'-0"			10								
ES 526	1 SET OF	3'-0" TO	ST.		1 SET OF							1'-2 3/4"	396
	23	30'-0"			23								
ES 527	1 SET OF	3'-6" TO	ST.		1 SET OF							1'-3 3/8"	96
	10	15'-0"			10								
ES 528	1 SET OF	3'-6" TO	ST.		1 SET OF							3"	12
	3	4'-0"			3								
ES 529	1 SET OF	32'-0	ST.	1 SET OF								5 3/8"	1,205
	30	TO 45'0"		30									
ES 530	1 SET OF	16'0" TO	ST.		1 SET OF							4 3/8"	1,631
	59	37'-0"			59								
ES 531	4	11'-8"	ST.		4								49
ES 561	312	19'-10"	ST.	312									6,455
ES 562	609	30'-4"	ST.		609								19,267
ES 568	1 SET OF	3'-0" TO	ST.		1 SET OF							1 1/2"	10
	3	3'-3"			3								
ES 569	7	27'-6"	ST.		7								201
ES 542	4	9'-6"	ST.		4								40
ES 573	660	1'-9"	1	311	349			5"	1'-6"				1,205
ES 574	311	2'-7"	8	311				8"	6"	8"	10"		838

MARK	No. REQ'D	LENGTH	TYPE	PHASE I	PHASE II			DIMENSIONS A	B	C	D	INCRM.	WEIGHT LBS.
ES 575	349	2'-1"	8		349			5"	6"	5"	9"		758
ES 576	348	3'-10"	ST		348								1,391
ES 577	348	4'-5"	4		348			3'-10"					1,603
ES 578	352	6'-11	34	352				7 1/2"	2'-7"	8"	3'-0"		2,539
ES 582	89	5'-0"	ST.	40	49								464
ES 401	1450	30'-0"	ST.	568	882								29058
ES 410	1 SET OF	28'4"TO	ST.	1 SET OF								4 7/8"	768
	33	41'4"		33									
ES 411	1 SET OF	12'4"TO	ST.		1 SET OF							3 7/8"	1007
	66	33'4"			66								
ES 430	100	5'-0"	ST.	45	55								334
HAUNCHES - SEE SHEET 116A/120													8,898
LIGHT SUPPORTS													
EM 503	2	7'-2"	ST.		2								15
EM 504	8	2'-11"	35		8			1'-1"	4 1/2"	3"			24
EM 505	8	1'-11"	16		8			10"	9"	6"	4"		16
SIGN SUPPORTS													
EM 504	15	2'-11"	35		15			1'-1"	4 1/2"	3"			46
EM 505	15	1'-11"	16		15			10"	9"	6"	4		30
EM 506	3	14'-8"	ST.		3								46

REINFORCING SCHEDULE SUPERSTRUCTURE

FHWA REGION	STATE	PROJECT	
5	OHIO		

1072
1214

SUMMIT COUNTY
SUM 76 - 11.57

MARK	No. REQ'D.	LENGTH	TYPE	PHASE I	PHASE II			DIMENSIONS A	B	C	D	INCRM.	WEIGHT LBS.
EASTBOUND SECTION 1													
ES 601	382	19'-2"	ST.		382								10,997
ES 602	384	26'-8"	ST.		384								15,380
ES 623	382	15'-8	ST.	382									8,989
ES 624	383	19'-8"	ST.	383									11,314
ES 501	763	15'-0"	ST.	381	382								11.937
ES 502	582	30'-0"	ST.	240	342								18,211
ES 507	97	35'-6	ST.	40	57								3,592
ES 508	174	5'-8"	ST.	102	72								1,028
ES 509	36	15'-8"	ST.	36									588
ES 510	6	7'-10"	ST.	6									49
ES 519	24	14'-8"	ST.		24								367
ES 561	380	19'-10"	ST.	380									7,861
ES 562	384	30'-4"	ST.		384								12,149
ES 573	413	1'-9"	1	207	206			5"	1'-6"				754
ES 574	207	2'-7"	8	207				8"	6"	8"	10"		558
ES 575	206	2'-1	8		206			5"	6"	5"	9"		448
ES 576	230	3'-10"	ST.		230								920
ES 577	230	4'-5"	4		230			3'-10"					1,060
ES 578	230	6'-11"	34	230				7½"	2'-7"	8"	3'-0"		1,659
ES 583	6	8'-4"	ST.										512
ES 581	4	7'-6"	ST.		4								31
ES 401	790	30'-0"	ST.	324	466								15,832
ES 402	95	25'-0"	ST.	39	56								1,587
ES 403	100	33'-6"	ST.	41	59								2,238
HAUNCHES - SEE SHEET 116A/120													5,290
												EASTBOUND SECTION 1 TOTAL=	132.891
EASTBOUND SECTION 2													
ES 601	476	19'-2"	ST.		476								13,703
ES 602	479	26'-8"	ST.		479								19,186
ES 623	359	15'-8"	ST.	359									8,448
ES 624	482	19'-8"	ST.	482									14,238
ES 625	125	17'-5"	ST.	125									3,270
ES 501	958	15'-0"	ST.	480	478								14.988
ES 502	776	30'-0"	ST.	320	456								24,281
ES 508	190	5'-8"	ST.	114	76								1,123
ES 509	64	15'-8"	ST.	48	16								1,046
ES 515	1SET OF	32'-3⅜	ST.	1SET OF								13/16"	1,257
	36	TO 34'-8"		36									
ES 517	10	8'-8"	ST.	6	4								90
ES 519	12	14'-8"	ST.		16								184
ES 520	6	11'-1"	ST.	6									69
ES 561	355	19'-10"	ST.	355									7,344
ES 562	483	30'-4"	ST.		483								15,281
ES 564	4	34'-8"	ST.	4									145
ES 565	4	28'-8"	ST.		4								120
ES 566	4	8'-9"	ST.		4								37
ES 567	125	21'-7"	ST.	125									2,814
ES 573	518	1'-9"	1	262	256			5"	1'-6"				945
ES 574	262	2'-7"	8	262				8"	6"	8"	10"		706

MARK	No. REQ'D	LENGTH	TYPE	PHASE I	PHASE II			DIMENSIONS A	B	C	D	INCRM.	WEIGHT LBS.
ES 575	256	2'-1"	8		256			5"	6"	5"	9"		556
ES 576	283	3'-10"	ST.		283								1,131
ES 577	283	4'-5"	4		283			3'-10"					1,304
ES 578	291	6'-11"	34	291				7½"	2'-7"	8"	3'-0"		2,099
ES 580	1SET OF	28'-8"	ST.		1SET OF							13/16"	1,684
	53	TO 32'-3"			53								
ES511	4	7'-2"	ST.		4								30
ES582	89	5'-0"	ST.	40	49								464
ES 430	100	5'-0"	ST.	45	55								334
ES 401	1085	30'-0"	ST.	445	640								21,743
ES 407	1SET OF	29'-7⅛	ST.	1SET OF								3/4"	845
	41	TO 32'-1"		41									
ES 408	95	11'-0"	ST.	39	56								698
ES 429	1SET OF	25'-11"	ST.		1SET OF							3/4"	1,093
	59	TO 29'-6⅜"			59								
HAUNCHES - SEE SHEET 116A/120													6,696
LIGHT SUPPORT - SEE SHEET						116A/120							460
												EASTBOUND SECTION 2 TOTAL=	168,412
EASTBOUND SECTION 3													
ES 601	645	19'-2"	ST.		645								18,569
ES 602	664	26'-8"	ST.	6	658								26,595
ES 612	1142	28'-0"	ST.	1142									48,028
ES 613	1SET OF	9'-0" TO	ST.	1SET OF								7/8"	14,754
	418	38'-0"		418									
ES 614	1SET OF	3'-0 TO	ST.		1SET OF							1'-3¼"	180
	12	17'-0"			12								
ES 615	1SET OF	8'-6" TO	ST.		1SET OF							1'-2⅛"	377
	15	25'-0"			15								
ES 616	1SET OF	7'-0" TO	ST.		1SET OF							4"	45
	4	8'-0"			4								
ES 617	4SETS	3'-0"	ST.	4SETS								1'-3½"	1,832
	OF 20	TO 27'-6"		OF 20									
ES 618	1 SET	11'-0" TO	ST.	1 SET								1⅝"	4,495
	OF 146	30'-0"		OF 146									
ES 619	1SET	4'-0" TO	ST.	1SET								2⅛"	3,753
	OF 147	30'-0"		OF 147									
ES 620	1SET OF	4'-0" TO	ST.	1SET OF								2¾"	728
	51	15'-0"		51									
ES 621	1SET OF	13'-0" TO	ST	1SET								1'-0"	140
	6	18'-0"		OF 6									
ES 622	1	13'-6"	ST.	1									20
ES511	8	7'-2"	ST.		8								60
ES517	10	8'-8"	ST.	6	4								90
ES 501	645	15'-0"	ST.		645								10,091
ES 502	1431	30'-0"	ST.	831	600								44,776
ES 508	264	5'-8"	ST.	180	84								1,560
ES 509	52	15'-8"	ST.	36	16								850
ES 510	6	7'-10"	ST.	6									49
ES 519	54	14'-8"	ST.	30	24								826
ES 522	6	12'-6"	ST.	6									78
ES 531	4	11'-8"	ST.		4								49
ES 532	1	19'-0"	ST.	1									20
ES 533	1SET OF	12'-6" TO	ST.	1SET OF								8'-0"	102
	4	36'-6"		4									
ES 534	1 SET	11'-6" TO	ST.	1SET OF								7'-4"	94
	OF 4	33'-6"		4									

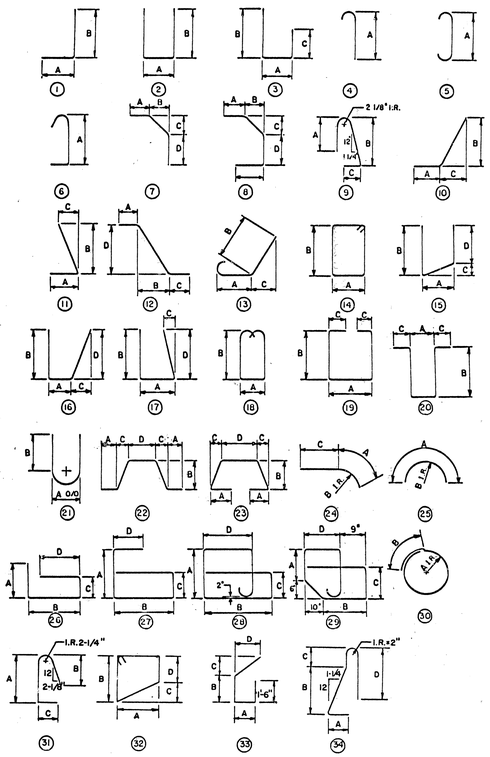

McCOY ASSOCIATES INC.
CONSULTING ENGINEERS
AKRON, OHIO

119/120

REINFORCING SCHEDULE

BRIDGE NO. SUM. 76-1277
AKRON EAST EXPRESSWAY
WEST VIADUCT

DESIGNED	DRAWN	TRACED	CHECKED	REVIEWED	DATE	REVISED
J.D.P.	E.B.		G.C.K.	JBH	3-31-87	

REINFORCING SCHEDULE SUPERSTRUCTURE

FHWA REGION	STATE	PROJECT	
5	OHIO		

1073
1214

SUMMIT COUNTY
SUM 76-11.57

MARK	No. REQ'D.	LENGTH	TYPE	PHASE I	PHASE II			DIMENSIONS A	B	C	D	INCRM.	WEIGHT LBS.
EASTBOUND SECTION 3													
ES 535	1 SET OF	9'-0" TO	ST.	1 SET OF								4'-9 5/8"	131
	6	33'-0"		6									
ES 536	1 SET OF	10'-6" TO	ST.	1 SET OF								3'-7"	155
	7	32'-0		7									
ES 537	1 SET OF	8'-0" TO	ST.	1 SET OF								3'-10 1/4"	179
	8	35'-0"		8									
ES 538	1 SET OF	9'-6" TO	ST.	1 SET OF								3'-2 5/8"	173
	8	32'-0"		8									
ES 539	1 SET OF	10'-0" TO	ST.	1 SET OF								4'-7 1/4"	135
	6	33'-0"		6									
ES 540	1 SET OF	4'-6" TO	ST.	1 SET OF								7/8"	8,283
	418	33'-6"		418									
ES 541	1	11'-8"	ST.	1									12
ES 542	4	9'-2"	ST.		4								38
ES 543	1 SET OF	3'-0" TO	ST.		1 SET OF							1'-2 1/4"	73
	9	12'-6"			9								
ES 544	1 SET OF	8'-6" TO	ST.		1 SET OF							1'-3 3/8"	332
	17	29'-0"			17								
ES 545	1 SET OF	7'-0" TO	ST.		1 SET OF							6"	23
	3	8'-0"			3								
ES 546	1 SET OF	3'-0" TO	ST.	1 SET OF								1'-3 1/8"	438
	24	32'-0"		24									
ES 547	1 SET OF	6'-0" TO	ST.	1 SET OF								1 5/8"	3267
	174	30'-0"		174									
ES 548	1 SET OF	3'-0" TO	ST.	1 SET OF								2 3/8"	2427
	141	30'-0"		141									
ES 549	1 SET OF	11'-0" TO	ST.	1 SET OF								9"	65
	5	14'-0"		5									
ES 550	1 SET OF	34'-0"	ST.		1 SET OF							4"	991
	25	TO 42'-0"			25								
ES 551	1 SET OF	14'-0" TO	ST.	1 SET OF								4"	2512
	86	42'-0"		86									
ES 552	1 SET OF	13'-0" TO	ST.	1 SET OF								4 7/8"	1763
	65	39'-0"		65									
ES 553	1 SET OF	19'-0" TO	ST.	1 SET OF								1'-6 3/4"	599
	17	44'-0"		17									
ES 554	1 SET OF	13'-6" TO	ST.	1 SET OF								6 7/8"	129
	8	17'-6"		8									
ES 555	1 SET OF	8'-0" TO	ST.	1 SET OF								2'-0 1/2"	349
	15	36'-8"		15									
ES 556	1 SET OF	9'-10" TO	ST.	1 SET OF								2'-4 7/8"	289
	12	36'-4"		12									
ES 557	2 SETS	9'-4" TO	ST.	2 SETS								2'-10 5/8"	466
	OF 10	35'-4"		OF 10									
ES 558	1 SET OF	8'-4" TO	ST.	1 SET OF								2'-10 3/4"	262
	11	37'-4"		11									
ES 559	3 SETS	3'-0" TO	ST.	3 SETS								1'-3 1/8"	939
	20	27'-0"		20									
ES 560	6	14'-3"	ST.	6									89
ES 562	703	30'-4"	ST.		703								22,241
ES 564	675	32'-0"	ST.	675									22,529
ES 570	429	27'-8"	ST.	429									12,380
ES 571	1 SET OF	4'-0" TO	ST.	1 SET OF								2 7/8"	259
	32	11'-6"		32									
ES 573	782	1'-9"	1	433	349			5"	1'-6"				1,427
ES 574	433	2'-7"	8	433				8"	6"	8"	10"		1,167
ES 575	349	2'-1"	8		349			5"	6"	5"	9"		758
ES 576	347	3'-10"	ST.		347								1,387
ES 577	347	4'-5"	4		347			3'-10"					1,598
ES 578	178	6'-11"	34	178				7 1/2"	2'-7"	8"	3'-0"		1,284

MARK	No. REQ'D	LENGTH	TYPE	PHASE I	PHASE II			DIMENSIONS A	B	C	D	INCRM.	WEIGHT LBS.
ES 582	90	5'-0"	ST.	40	50								469
ES 430	100	5'-0"	ST.	45	55								334
ES 401	2010	30'-0"	ST.	1116	894								40,280
ES 412	1	19'-0"	ST.	1									13
ES 413	1 SET OF	12'-6 TO	ST.	1 SET OF								8'-2"	66
	4	37'-0"		4									
ES 414	1 SET OF	11'-0" TO	ST.	1 SET OF								7'-8"	60
	4	34'-0"		4									
ES 415	2 SETS	10'-0" TO	ST.	2 SETS								4'-10"	176
	6	34'-0"		6									
ES 416	1 SET OF	12'-6" TO	ST.	1 SET OF								3'-7"	109
	7	34'-0"		7									
ES 417	1 SET OF	10'-0" TO	ST.	1 SET OF								3'-10 1/4"	126
	8	37'-0"		8									
ES 418	1 SET OF	12'-0" TO	ST.	1 SET OF								3'-5 1/8"	128
	8	36'-0"		8									
ES 419	1 SET OF	8'-0" TO	ST.	1 SET OF								2'-10 7/8"	165
	11	37'-0"		11									
ES 420	1 SET OF	34'-0" TO	ST.		1 SET OF							3 1/2"	711
	28	42'-0"			28								
ES 421	1 SET OF	14'-0" TO	ST.	1 SET OF								4 1/8"	1,552
	83	42'-0"		83									
ES 422	1 SET OF	13'-0" TO	ST.	1 SET OF								4 1/4"	1,285
	74	39'-0"		74									
ES 423	1 SET OF	19'-0" TO	ST.	1 SET OF								1'-4 5/8"	400
	19	44'-0"		19									
ES 424	1 SET OF	13'-6" TO	ST.	1 SET OF								6 7/8"	83
	8	17'-6"		8									
ES 425	1 SET OF	8'-0" TO	ST.	1 SET OF								1'-10 3/8"	235
	16	36'-0"		16									
ES 426	1 SET OF	8'-0" TO	ST.	1 SET OF								2'-4"	191
	13	36'-0"		13									
ES 427	2 SETS	9'-0" TO	ST.	2 SETS								2'-7 1/4"	323
	OF 11	35'-0"		OF 11									
HAUNCHES - SEE SHEET 11LA/120													9,295
SIGN SUPPORTS - SEE SHEET 12A/120													1,494
LIGHT SUPPORTS - SEE SHEET 12A/120													752
												EASTBOUND SECTION 3 TOTAL =	327,407
												EASTBOUND SECTION 1 & 2 TOTAL =	628,710

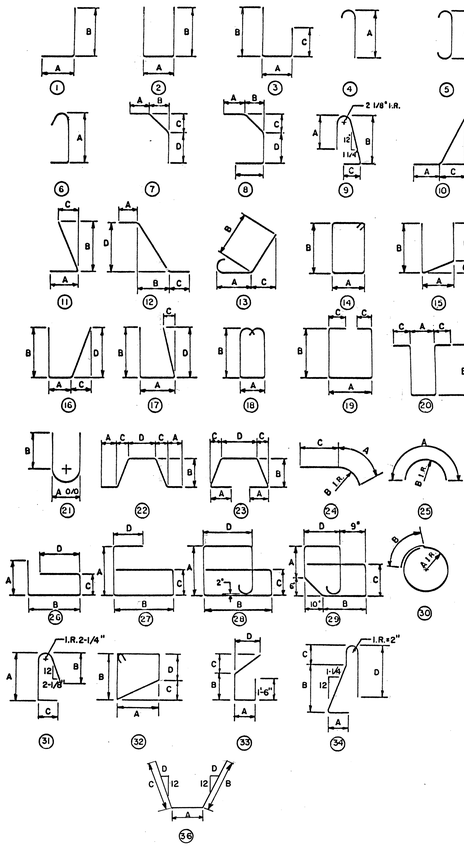

McCOY ASSOCIATES INC.
CONSULTING ENGINEERS
AKRON, OHIO

120/120

REINFORCING SCHEDULE

BRIDGE NO. SUM. 76-1277
AKRON EAST EXPRESSWAY
WEST VIADUCT

DESIGNED	DRAWN	TRACED	CHECKED	REVIEWED	DATE	REVISED
J.D.P.	E.B.		G.C.K.	JBH	3-31-83	

FHWA REGION	STATE	PROJECT	
5	OHIO		

1074
12.14

Sum-76-11.57

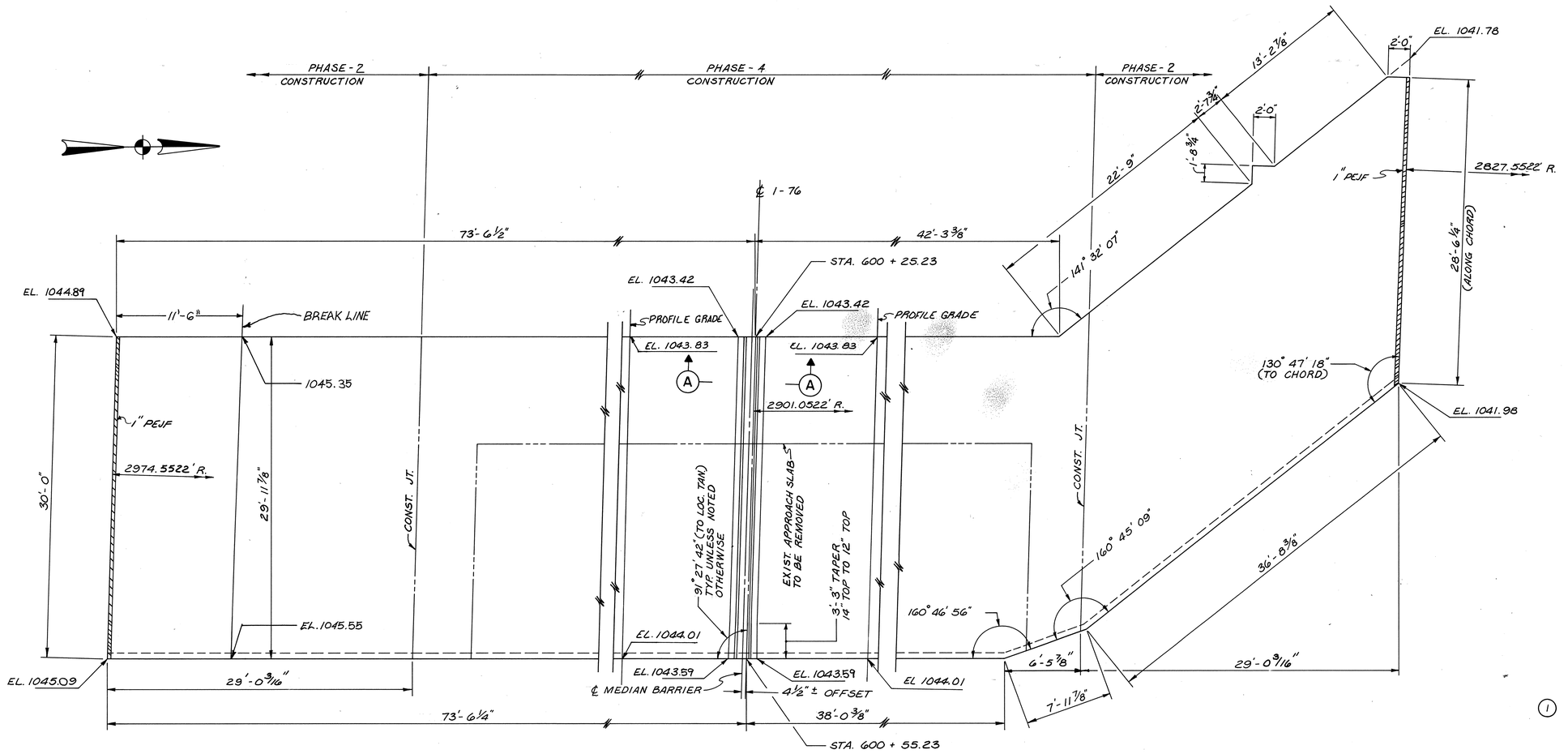

PLAN

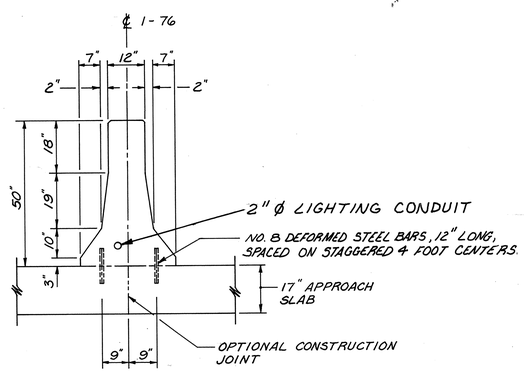

SECTION A-A

NOTES

1. FOR ADDITIONAL DETAILS, REINFORCING, AND NOTES SEE STANDARD DRAWINGS AS-1-81, SHEETS 1 THRU 3 AND MC-9 STANDARD CONSTRUCTION DWGS.
2. MEDIAN BARRIER SHALL BE INCLUDED WITH ITEM 622, CONCRETE BARRIER FOR PAYMENT
3. THE ELEVATIONS SHOWN ARE GIVEN AT THE TOP OF THE WEARING SURFACE.
4. SPLICES SHALL BE MADE USING A MECHANICAL SLICE SYSTEM. THE MECHANICAL SPLICE SYSTEM SHALL BE CAPABLE OF DEVELOPING 125 PERCENT OF THE YIELD STRENGTH OF THE BARS CONNECTED.

McCOY ASSOCIATES INC. 120A/120
CONSULTING ENGINEERS
AKRON, OHIO

APPROACH SLAB DETAILS WEST ABUTMENT

BRIDGE NO. SUM. 76-1277
AKRON EAST EXPRESSWAY
WEST VIADUCT

DESIGNED	DRAWN	TRACED	CHECKED	REVIEWED	DATE	REVISED
JMH	J.O.P.	GT	JBH	JBH	3-30-89	

12276

FHWA REGION	STATE	PROJECT	
5	OHIO		

1075
12.14

SUM-76-11.57

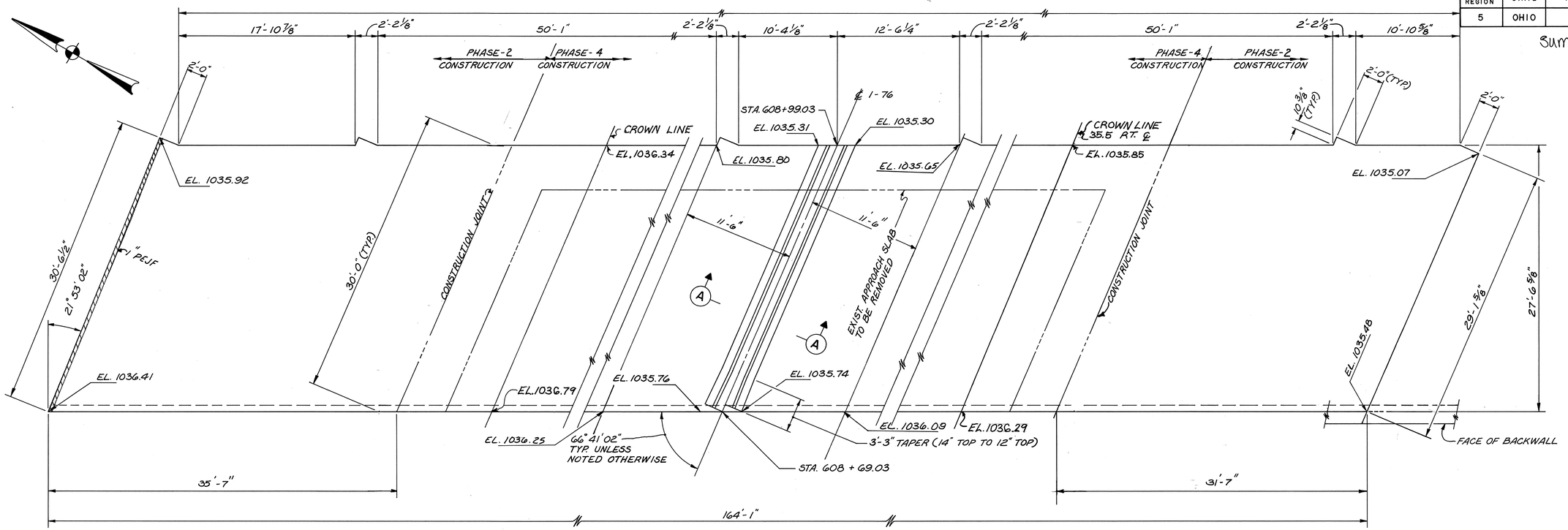

PLAN

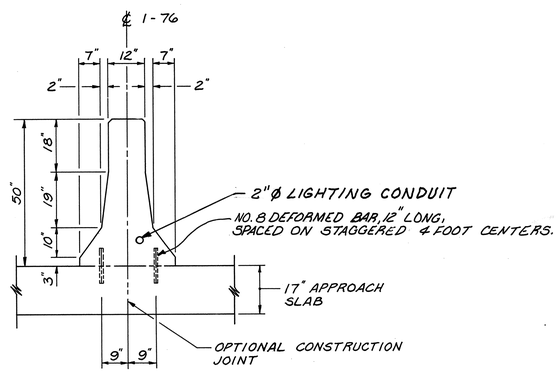

SECTION A-A

NOTES

1. FOR ADDITIONAL DETAILS, REINFORCING, AND NOTES SEE STANDARD DRAWINGS AS-1-81, SHEETS 1 THRU 3 AND MC-9 STANDARD CONST. DRAWINGS.
2. MEDIAN BARRIER SHALL BE INCLUDED WITH ITEM 622, CONCRETE BARRIER FOR PAYMENT
3. THE ELEVATIONS SHOWN ARE GIVEN AT THE TOP OF THE WEARING SURFACE.
4. SPLICES SHALL BE MADE USING A MECHANICAL SLICE SYSTEM. THE MECHANICAL SPLICE SYSTEM SHALL BE CAPABLE OF DEVELOPING 125 PERCENT OF THE YIELD STRENGTH OF THE BARS CONNECTED.

McCOY ASSOCIATES INC.
CONSULTING ENGINEERS
AKRON, OHIO

120B/120

APPROACH SLAB DETAILS EAST ABUTMENT

BRIDGE NO. SUM. 76-1277
AKRON EAST EXPRESSWAY
WEST VIADUCT

DESIGNED	DRAWN	TRACED	CHECKED	REVIEWED	DATE	REVISED
JMH	J.D.P.	CT	JBH	JBH	3-30-89	

12776

FHWA REGION	STATE	PROJECT	
5	OHIO		

1076
1214

Sum-76-11.57

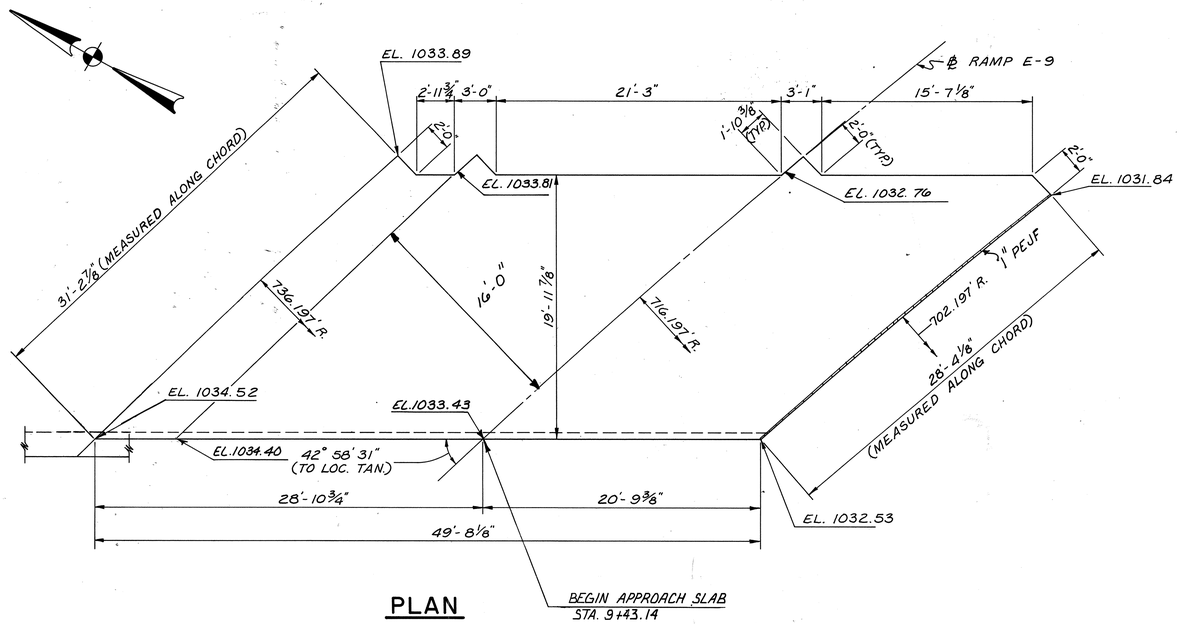

PLAN

APPROACH SLAB, RAMP E-9

NOTES

1. FOR ADDITIONAL DETAILS, REINFORCING, AND NOTES SEE STANDARD DRAWINGS AS-1-81, SHEETS 1 THRU 3.
2. THE ELEVATIONS SHOWN ARE GIVEN AT THE TOP OF THE WEARING SURFACE.
3. SPLICES SHALL BE MADE USING A MECHANICAL SPLICE SYSTEM. THE MECHANICAL SPLICE SYSTEM SHALL BE CAPABLE OF DEVELOPING 125 PERCENT OF THE YIELD STRENGTH OF THE BARS CONNECTED.

McCOY ASSOCIATES INC. 1200/120
CONSULTING ENGINEERS
AKRON, OHIO

APPROACH SLAB DETAILS RAMP E-9

BRIDGE NO. SUM. 76-1277
AKRON EAST EXPRESSWAY
WEST VIADUCT

DESIGNED	DRAWN	TRACED	CHECKED	REVIEWED	DATE	REVISED
JMH	J.D.P.	GT	JBH	JBH	3-30-89	

12276

F.H.W.A. REG.	STATE	PROJECT	
5	OHIO		

1077
1214

SUMMIT COUNTY
SUM 76-11.57

CURVE DATA

CURVE Nº 1
Δ = 15°04'49"
Dc = 4°00'00"
R = 1432.395'
T = 189.600'
Lc = 377.009'
CH = 375.922
E = 12.494

EXISTING STRUCTURE

TYPE: SIMPLE SPAN STEEL ROLLED BEAM WITH CONCRETE DECK AND SUBSTRUCTURE.
SKEW: 23°19'49" RIGHT FORWARD
SPAN: 68'-1" ℄ TO ℄ BEARINGS
ROADWAY: VARIES
LOADING: CF2000
WEARING SURFACE: 4"± ASPHALT CONC.
APPROACH SLAB: 25'-0"
ALIGNMENT: TANGENT
SUPERELEVATION: NONE
SLOPE PROTECTION: NONE

PROPOSED STRUCTURE

TYPE: SIMPLE SPAN COMPOSITE REINFORCED CONCRETE DECK WITH STEEL ROLLED BEAMS AND REINFORCED CONCRETE COUNTERFORTED ABUTMENTS
SKEW: 23°08'22" RIGHT FORWARD
SPAN: VARIES ℄ TO ℄ BEARINGS
ROADWAY: VARIES (SEE PLAN)
LOADING: HS 20-44 (CASE I) AND ALTERNATE MILITARY LOADING
WEARING SURFACE: MONOLITHIC CONCRETE
APPROACH SLABS: 25'-0" (AS-1-81)
ALIGNMENT: TANGENT
SUPERELEVATION: NONE
SLOPE PROTECTION: NONE

EARTHWORK LIMITS SHOWN ARE APPROXIMATE. ACTUAL SLOPES SHALL CONFORM TO PLAN CROSS-SECTIONS. SEE SHEET NO.'S 290 (1214) THRU 351 (1214)

TRAFFIC
WEST BOUND
5700 ADTT. YR. 2000
EAST BOUND
5750 ADTT. YR. 2000

BENCHMARK:
TOP OF N.E. BOLT (CHISELED X) OF BASE OF I-76 WEST ℄ EAST SIGN. EAST SIDE OF MARTHA 75'± SOUTH OF ENGLEWOOD EL.=1022.525

~~FOR SOIL BORING LOCATIONS & LOGS SEE SHEET NO.'S ( ) THRU ( )~~

McCOY ASSOCIATES INC.
CONSULTING ENGINEERS
AKRON, OHIO

1 / 31

SITE PLAN

BRIDGE NO. SUM 76-1296
AKRON EAST EXPRESSWAY
OVER MARTHA AVENUE
SUMMIT COUNTY STA. 610+81.52
611+54.83

DESIGNED	DRAWN	TRACED	CHECKED	REVIEWED	DATE	REVISED
TAB	JJM DAK		JMH	MSC	2-29-88	

FHWA REGION	STATE	PROJECT	
5	OHIO		

1078 12.14

SUMMIT COUNTY
SUM 76-11.57

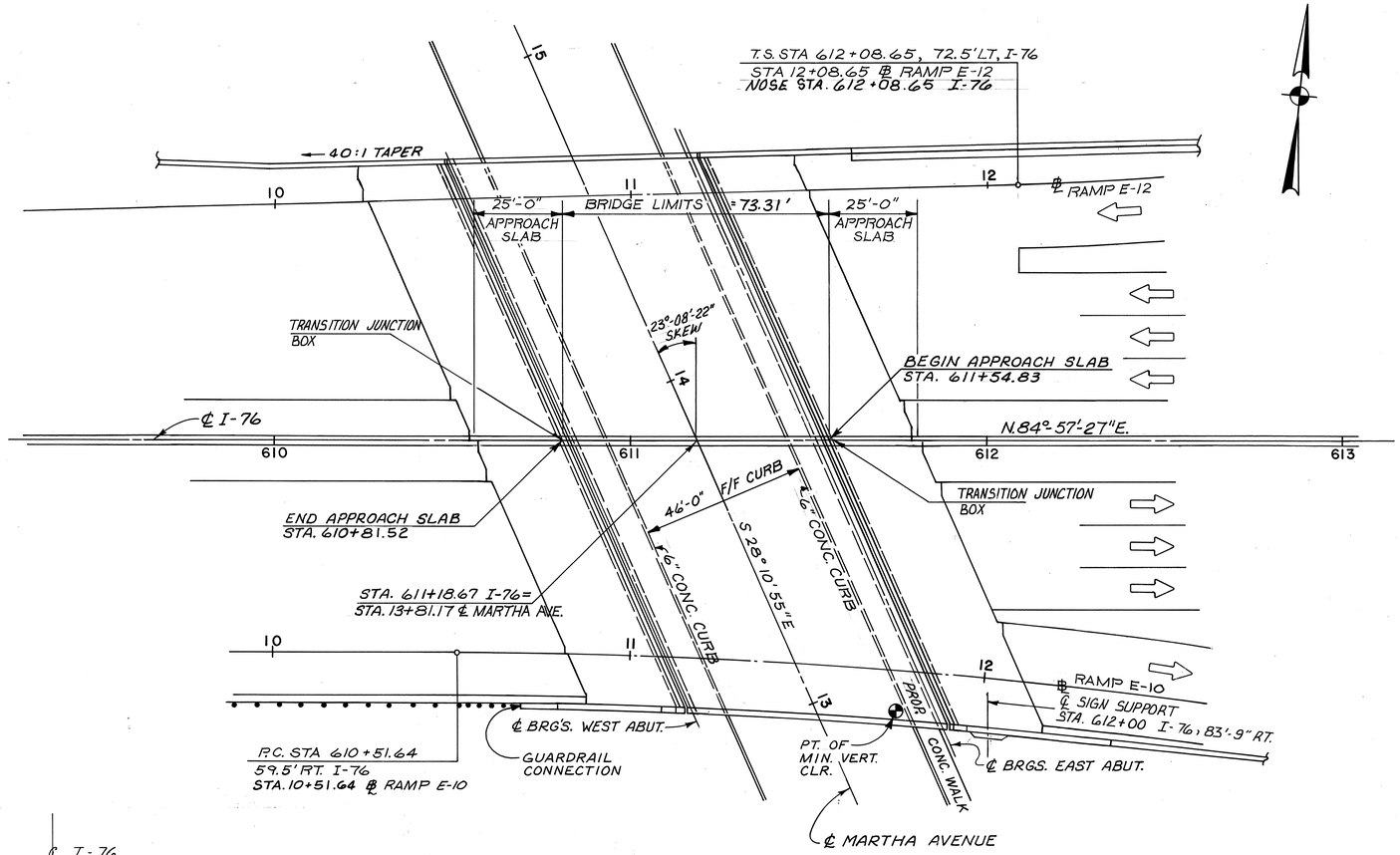

PLAN

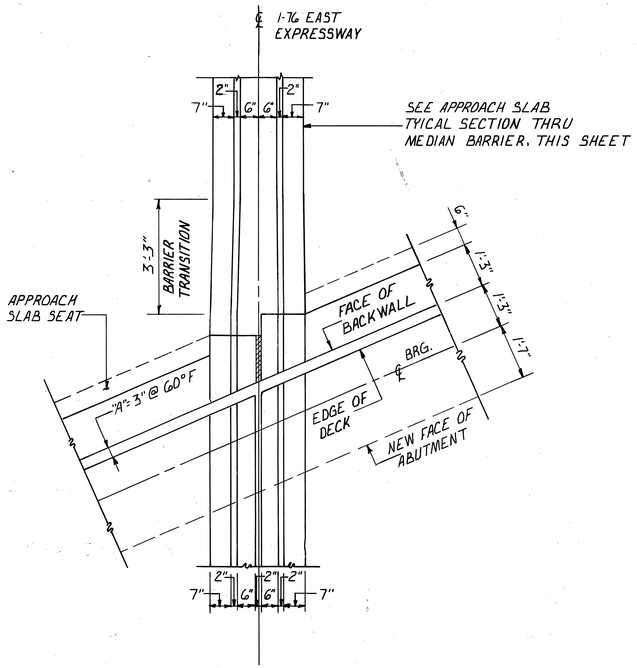

MEDIAN BARRIER TRANSITION DETAIL

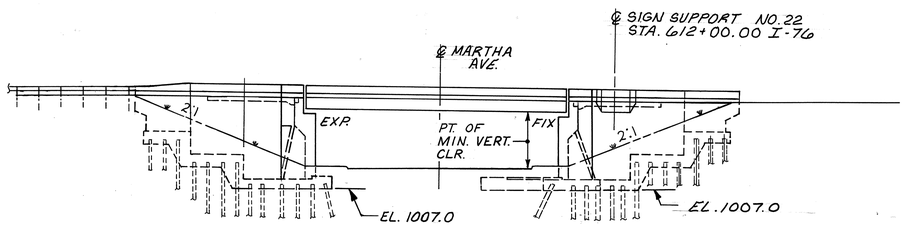

ELEVATION

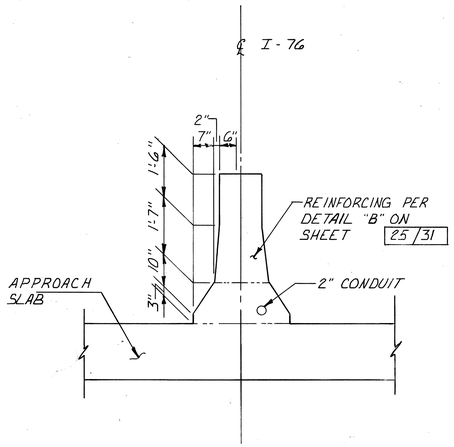

APPROACH SLAB TYPICAL SECTION THRU MEDIAN BARRIER

NOTES

(1) REFER TO STD. DWG. AS-1-81 FOR ADDITIONAL APPROACH SLAB DETAILS.

NOTES

(1.) FOR LIGHTING CONDUIT EXPANSION FITTING DETAILS, SEE STANDARD DRAWING HL-30.31.

(2.) FOR TRANSITION JUNCTION BOX DETAILS, SEE SHEET 704/1214

(3) FOR GUARDRAIL CONNECTION DETAILS SEE SHEET NO. 17A/31

(4) FOR STRUCTURAL NOTES SEE SHEET NO.S 2A/31 THRU 2B/31

McCOY ASSOCIATES INC. 2/31
CONSULTING ENGINEERS
AKRON, OHIO

GENERAL PLAN & ELEVATION

BRIDGE NO. SUM 76-1296
AKRON EAST EXPRESSWAY
OVER MARTHA AVENUE
SUMMIT COUNTY STA 610+81.52
STA 611+54.83

DESIGNED	DRAWN	TRACED	CHECKED	REVIEWED	DATE	REVISED
TAB	B.M.R.		JMH	MSC	2-29-88	

22776

FHWA REGION	STATE	PROJECT	
5	OHIO		

1079
1214

SUMMIT COUNTY
SUM. 76-11.57

STRUCTURAL GENERAL NOTES

REFERENCE SHALL BE MADE TO STANDARD DRAWINGS:

AS-1-81	DATED	11-27-81
EXJ-2-81	REVISED	04-02-84
RB-1-55	REVISED	02-02-59
SD-1-69	DATED	06-12-69

AND TO SUPPLEMENTAL SPECIFICATIONS:

836	DATED	11-12-85
849	DATED	12-24-85
949	DATED	09-26-86

DESIGN SPECIFICATIONS: THIS STRUCTURE CONFORMS TO THE "STANDARD SPECIFICATIONS FOR HIGHWAY BRIDGES" ADOPTED BY THE AMERICAN ASSOCIATION ON STATE HIGHWAY AND TRANSPORTATION OFFICIALS, 1983 ALONG WITH THE 1984, 1985 AND 1986 INTERIMS AND THE OHIO "SUPPLEMENT" TO THESE SPECIFICATIONS.

DESIGN DATA:

DESIGN LOADING	-	HS 20-44 (CASE I) AND ALTERNATE MILITARY LOADING
CONCRETE CLASS S	-	COMPRESSIVE STRENGTH 4500 PSI
CONCRETE CLASS C	-	COMPRESSIVE STRENGTH 4000 PSI
REINFORCING STEEL	-	ASTM A615, A616, OR A617 - GRADE 60, MINIMUM YIELD STRENGTH 60,000 PSI
STRUCTURAL STEEL EXISTING	-	ASTM A7, UNIT STRESS 18,000 PSI
STRUCTURAL STEEL PROPOSED	-	ASTM A36, UNIT STRESS 20,000 PSI

ITEM 202 PORTIONS OF STRUCTURES REMOVED

REMOVAL OF PORTIONS OF EXISTING STRUCTURE AS SHOWN ON THE CONTRACT DRAWINGS SHALL CONFORM IN ALL RESPECTS TO ITEM 202 OF THE STATE OF OHIO DEPARTMENT OF TRANSPORTATION CONSTRUCTION AND MATERIALS SPECIFICATIONS.

THE CONTRACTOR SHALL PREPARE DETAILED PROCEDURES AND PLANS FOR REMOVAL OF PORTIONS OF THE EXISTING STRUCTURE INCLUDING METHODS OF PROTECTING EXISTING OR RELOCATED UTILITIES AND PROTECTING THE PEDESTRIAN AND THE VEHICULAR TRAFFIC WITHIN THE LIMITS OF THE PROJECT. SUCH PLANS SHALL INCLUDE INFORMATION AS TO EQUIPMENT AND MATERIALS TO BE USED, PERSONNEL, SUPERVISION, THE HOURS OF OPERATION AND DURATION OF THE JOB.

THE REQUIRED ITEMS TO BE REMOVED UNDER THIS ITEM SHALL INCLUDE BUT NOT BE LIMITED TO THE FOLLOWING:

ASPHALT WEARING SURFACE, CONCRETE SUPERSTRUCTURE, ABUTMENT BACKWALLS, STRUCTURAL STEEL BEAMS, CROSS-FRAMES, EXPANSION JOINTS AND WINGWALLS TO THE LIMITS SHOWN ON THE DRAWINGS. CARE SHALL BE TAKEN DURING REMOVAL OF CROSS-FRAMES TO PREVENT DAMAGE TO THE BEAMS.

THESE PLANS SHALL BE APPROVED BY THE ENGINEER BEFORE COMMENCING ANY DEMOLITION OPERATION. THE REVIEW AND APPROVAL BY THE ENGINEER SHALL NOT RELIEVE THE CONTRACTOR OF HIS FULL RESPONSIBILITY FOR SAFE DEMOLITION OPERATIONS. THE CONTRACTOR SHALL BE AND SHALL REMAIN RESPONSIBLE FOR A SAFE DEMOLITION OPERATION.

PILE DESIGN LOADS: THE DESIGN LOAD FOR THE ABUTMENT PILES IS 45 TONS PER PILE AND THE DESIGN LOAD FOR THE WINGWALL PILES IS 45 TONS PER PILE.

MAINTENANCE OF TRAFFIC: REFER TO SHEETS NUMBERED 21 THRU 88 OF THE MAINTENANCE OF TRAFFIC PLANS.

DECK PROTECTION METHOD:

EPOXY COATED REINFORCING STEEL, BOTH MATS.
CONCRETE PROTECTION: PARAPETS.

MONOLITHIC WEARING SURFACE: IS ASSUMED, FOR DESIGN PURPOSES, TO BE 1" THICK.

EXISTING STRUCTURE VERIFICATION: DETAILS AND DIMENSIONS SHOWN ON THESE PLANS PERTAINING TO THE EXISTING STRUCTURE HAVE BEEN OBTAINED FROM PLANS OF THE EXISTING STRUCTURE AND/OR FROM FIELD OBSERVATIONS AND MEASUREMENTS. CONSEQUENTLY, THEY ARE INDICATIVE OF THE EXISTING STRUCTURE AND THE PROPOSED WORK BUT THEY SHALL BE CONSIDERED TENTATIVE AND APPROXIMATE. THE CONTRACTOR IS REFERRED TO CMS SECTIONS 102.05, 105.02, AND 513.02. PLANS OF THE EXISTING STRUCTURE ARE AVAILABLE FOR REVIEW AT THE OHIO DEPARTMENT OF TRANSPORTATION, DISTRICT FOUR OFFICES, 705 OAKWOOD STREET, RAVENNA, OHIO 44266.

CONTRACT BID PRICES SHALL BE BASED UPON A RECOGNITION OF THE UNCERTAINTIES DESCRIBED ABOVE AND UPON A PREBID EXAMINATION OF THE EXISTING STRUCTURE BY THE CONTRACTOR. HOWEVER, ALL PROJECT WORK SHALL BE BASED UPON ACTUAL DETAILS AND DIMENSIONS WHICH HAVE BEEN VERIFIED BY THE CONTRACTOR IN THE FIELD.

REPLACEMENT OF EXISTING REINFORCING STEEL: ANY EXISTING REINFORCING BARS WHICH ARE TO BE INCORPORATED INTO THE NEW WORK AND WHICH ARE MADE UNUSABLE BY THE CONTRACTOR'S CONCRETE REMOVAL OPERATIONS SHALL BE REPLACED WITH NEW STEEL AT HIS COST. ANY EXISTING REINFORCING BARS DEEMED BY THE ENGINEER TO BE UNUSABLE BECAUSE OF CORROSION SHALL BE REPLACED WITH NEW STEEL. AN ALLOWANCE OF 1500 FOUNDS IS INCLUDED IN ITEM 509, REINFORCING STEEL, GRADE 60 AND 1500 POUNDS ITEM 509, EPOXY COATED REINFORCING STEEL, GRADE 60 FOR THIS PURPOSE.

UTILITY LINES: ALL EXPENSE INVOLVED IN RELOCATING THE AFFECTED UTILITY LINES SHALL BE BORNE BY THE OWNER(S). THE CONTRACTOR AND OWNER(S) ARE REQUESTED TO COOPERATE BY ARRANGING THEIR WORK IN SUCH A MANNER THAT INCONVENIENCE TO EITHER WILL BE HELD TO A MINIMUM.

CUTTING OR BENDING OF REINFORCING BARS: ANY CUTTING OR BENDING OF REINFORCING BARS NECESSARY TO ACCOMMODATE THE UTILITY OPENINGS OR ANY OTHER ESSENTIAL ELEMENT OF WORK RELATED TO THE PROJECT, SHALL BE INCLUDED IN THE PRICE BID PER POUND FOR "ITEM 509 - REINFORCING STEEL-GRADE 60," AND/OR "ITEM 509 - EPOXY COATED REINFORCING STEEL, GRADE 60," UNLESS OTHERWISE NOTED.

ITEM SPECIAL - SEALING OF CONCRETE SURFACES: SPECIFIED CONCRETE SURFACES SHALL BE SEALED USING MATERIALS SPECIFIED IN THE PROPOSAL, SEE SHEET NO. 3/23 FOR DETAIL OF AREAS TO BE SEALED AND SEALER TYPE TO BE USED. SEE THE PROPOSAL FOR SURFACE PREPARATION REQUIREMENTS, APPLICATION, RATES, MATERIAL REQUIREMENTS, APPLICATION PROCEDURES AND MEASUREMENT AND PAYMENT. *

ITEM 202 - REMOVAL FOR REUSE OF EXISTING STEEL BEAMS AND BEARINGS

AFTER THE EXISTING CONCRETE DECK AND THE BEAM CROSS-FRAMES HAVE BEEN REMOVED, THE CONTRACTOR SHALL REMOVE THE EXISTING BEAMS AND BEARINGS. THE BEAMS SHALL BE STORED FOR RE-USE.

SOLE PLATES SHALL BE REMOVED WHERE REQUIRED, THE CONTRACTOR SHALL EXERCISE CAUTION TO PREVENT DAMAGE TO THE BEAM AND SOLE PLATE. AFTER REMOVAL OF SOLE PLATES AND CROSS-FRAMES, THE BEAMS SHALL BE GROUND SMOOTH PRIOR TO ATTACHING NEW CROSS-FRAMES AND/OR REUSED SOLE PLATES.

PAYMENT WILL BE MADE AT THE CONTRACT LUMP SUM PRICE BID FOR "ITEM 202 - REMOVAL FOR REUSE OF EXISTING STEEL BEAMS AND BEARINGS" AND SHALL INCLUDE ALL LABOR, MATERIAL, EQUIPMENT AND INCIDENTALS NECESSARY TO COMPLETE THE WORK AS DESCRIBED HEREIN.

ITEM 513 - ERECTION OF EXISTING STRUCTURAL STEEL

WORK SHALL INCLUDE:

PLACING OR EXTENDING ANCHOR BOLTS AT FIXED BEARINGS, PLACING EXISTING BEARINGS ON NEW ABUTMENT PEDESTALS, TRIMMING OF EXISTING BEAMS AS REQUIRED AND ERECTING THE EXISTING BEAMS.

PAYMENT SHALL BE MADE AT THE LUMP SUM PRICE BID AND SHALL INCLUDE ALL LABOR, MATERIAL, EQUIPMENT AND INCIDENTALS REQUIRED TO COMPLETE THE WORK DESCRIBED.

ITEM 510 - DOWEL HOLES

THIS ITEM SHALL BE PERFORMED AS INDICATED ON THE PLANS OR AS DIRECTED BY THE ENGINEER AND SHALL BE USED TO REPLACE THE DETERIORATED BARS WHICH WERE TO REMAIN, OR PLACING NEW DOWEL BARS WHERE A NEW CONCRETE SECTION IS BEING ATTACHED TO THE REMAINING PORTIONS OF EXISTING CONCRETE. AN ALLOWANCE OF 100 DOWEL HOLES IS INCLUDED IN THE ESTIMATED **QUANTITY OF ITEM 510 IN REPLACING DETERIORATED BARS.**

THE DOWEL BARS ARE TO BE PAID FOR UNDER "ITEM 509 - REINFORCING STEEL, GRADE 60" AND THE DOWEL HOLES ARE TO BE PAID FOR UNDER "ITEM 510 - DOWEL HOLES".

ITEM 507 12" DIAMETER CAST-IN-PLACE REINFORCED CONCRETE PILES, AS PER PLAN

PILE WALL THICKNESS:

THE RESPONSIBILITY OF CHOOSING AND PROVIDING A SATISFACTORY PILE WALL THICKNESS FOR THIS PROJECT SHALL BE BORNE BY THE CONTRACTOR EXCEPT THAT THE PILE WALL THICKNESS SHALL NOT BE LESS THAN 0.220 INCHES. IF A PILE WALL THICKNESS GREATER THAN 0.220 INCHES IS NECESSARY TO RESIST THE PILE INSTALLATION DRIVING STRESS, THE CONTRACTOR SHALL MAKE THIS DETERMINATION AND SHALL FURNISH A PILE WITH AN ACCEPTABLE WALL THICKNESS. MONOTUBE PILES ARE NOT REQUIRED TO COMPLY WITH THE ABOVE SPECIFIED MINIMUM PILE WALL THICKNESS. IF MONOTUBE PILES ARE USED, THE CONTRACTOR IS RESPONSIBLE FOR PROVIDING A MONOTUBE PILE WITH A WALL THICKNESS THAT WILL CONFORM TO ALL APPLICABLE REQUIREMENTS OF 507. THE CONTRACTOR MAY FURNISH A PILE WITH A WALL THICKNESS OF LESS THAN 0.220 INCHES (SUCH AS A MANDREL DRIVEN PILE) PROVIDED THAT REINFORCING STEEL IS FURNISHED FOR THE TOP PORTION OF EACH PILE AS FOLLOWS: THE REINFORCING STEEL SHALL BE 30 FEET IN LENGTH AND SHALL CONSIST OF A CAGE CONSTRUCTED WITH FOUR NUMBER SIX BARS TIED WITH A NUMBER TWO SPIRAL HAVING A SIX INCH PITCH AND THREE CLOSURE TURNS AT EACH END OF THE CAGE, THE CLEARANCE SHALL BE TWO INCHES.

PILE HAMMER:

THE PILE HAMMER USED TO INSTALL THE CAST-IN-PLACE REINFORCED CONCRETE PILES SHALL HAVE A STATE'S ENERGY RATING OF NOT LESS THAN 16,000 FOOT-POUNDS. THIS REQUIREMENT DOES NOT RELIEVE THE CONTRACTOR FROM 108.05 WHICH STATES THAT THE CONTRACTOR IS TO PROVIDE SUFFICIENT EQUIPMENT FOR PROSECUTING THE REQUIRED WORK. REFER TO "ODOT'S MANUAL OF PROCEDURES FOR STRUCTURES" TO OBTAIN THE STATE'S ENERGY RATING".

* THE COLOR SPECIFICATION OF THE EPOXY SEALER SHALL BE IN ACCORDANCE WITH THE FEDERAL STANDARD 595A AND THE COLOR OF THE EPOXY SEALER SHALL BE NO. 13522

McCOY ASSOCIATES, INC. 2A/31
CONSULTING ENGINEERS
AKRON, OHIO

STRUCTURAL GENERAL NOTES
BRIDGE NO. SUM. 76-1296
AKRON EAST EXPRESSWAY
OVER MARTHA AVENUE
SUMMIT COUNTY STA. 610+81.52
611+54.83

DESIGNED	DRAWN	TRACED	CHECKED	REVIEWED	DATE	REVISED
JBH	PNA		MSC	MSC	10/89	

520691

FHWA REGION	STATE	PROJECT	
5	OHIO		

1080
1214

SUMMIT COUNTY
SUM. 76-11.57

STRUCTURAL GENERAL NOTES

ITEM 518 POROUS BACKFILL, with filter fabric

TO ENSURE THAT FINE SOIL PARTICLES INCLUDED WITHIN THE EMBANKMENT DO NOT MIGRATE INTO AND THROUGH THE VOIDS OF THE POROUS BACKFILL MATERIAL, FILTER FABRIC, 712.09 TYPE A, SHALL BE PLACED BETWEEN THE 518 POROUS BACKFILL MATERIAL AND THE 203 EMBANKMENT MATERIAL TO THE LIMITS AS SHOWN IN THE PLANS. PAYMENT FOR THE FILTER FABRIC SHALL BE INCLUDED IN THE UNIT PRICE BID PER CUBIC YARD FOR THE ITEM 518 POROUS BACKFILL, with filter fabric WHICH SHALL INCLUDE ALL LABOR, MATERIALS, EQUIPMENT AND INCIDENTALS NECESSARY TO COMPLETE THE ABOVE WORK.

ABUTMENT WALL TEXTURE: ABUTMENTS AND WINGWALLS SHALL BE TEXTURED BY USING FORM LINERS ATTACHED TO FORMWORK PRIOR TO PLACING CONCRETE. AREAS TO RECEIVE TEXTURED CONCRETE SURFACE SHALL INCLUDE THE FULL LENGTH OF EXPOSED ABUTMENT BREAST WALLS AND WINGWALLS FROM FINISHED GRADE OR PAVEMENT TO THE TOP OF THE WALL.

TEXTURED SURFACE SHALL CONSIST OF A 3/4" DEEP FRACTURED FIN TEXTURE. ACCEPTABLE PRODUCTS INCLUDE:

SYMONS CORPORATION
7603 OLD ROCKSIDE
INDEPENDENCE, OH 44131
(216) 524-5240
PATTERN NO. P/C 30449

GREENSTREAK
3400 TREE COURT IND. BLVD.
ST. LOUIS, MO 63122
(800) 325-9504
PATTERN NO. 373

FITZGERALD CONSTRUCTION SALES
17376-A NEWHOPE AVENUE
FOUNTAIN VALLEY, CA 92708
(800) 227-2755
PATTERN NO. 16950

OR AN APPROVED ALTERNATE. THE CONTRACTOR SHALL SUBMIT A SAMPLE OF THE FINISHED CONCRETE TEXTURED SURFACE FOR APPROVAL.

PAYMENT FOR ALL MATERIALS AND LABOR REQUIRED FOR THE TEXTURED SURFACES SHALL BE INCLUDED WITH ITEM 511 - CLASS C CONCRETE, ABUTMENTS, AS PER PLAN.

ITEM 614 - MAINTAINING TRAFFIC

THE ELASTOMERIC STRIP SEALS AT THE ABUTMENTS SHALL BE INSTALLED IN ONE CONTINUOUS PIECE FOR EASTBOUND LANES AND ONE CONTINUOUS PIECE FOR WESTBOUND LANES. PRIOR TO OPENING PHASE 2 CONSTRUCTION TO TRAFFIC, THE CONTRACTOR SHALL INSTALL TEMPORARY SEALS IN THE PORTION TO BE OPENED TO TRAFFIC.

AT THE CONCLUSION OF PHASE 4 CONSTRUCTION AND PLACEMENT OF THE CLOSURE SECTION, THE TEMPORARY SEAL SHALL BE REMOVED AND FULL WIDTH SEALS SHALL BE INSTALLED. THE CONTRACTOR SHALL BE PERMITTED TO SET-UP THE NECESSARY LANE CLOSURES ON A DAY AND AT A TIME APPROVED BY THE ENGINEER TO FACILITATE INSTALLATION OF THE FULL WIDTH SEALS. ALL NECESSARY TRAFFIC CONTROL TO ACCOMPLISH THIS WORK AND COSTS OF THE TEMPORARY SEAL INCLUDING INSTALLATION, REMOVAL AND DISPOSAL SHALL BE INCIDENTAL TO ITEM 614, MAINTAINING TRAFFIC.

ITEM SPECIAL - FIELD PAINTING OF EXISTING STEEL, SYSTEM OZEU

ALL OF THE REQUIREMENTS CONTAINED IN THE "FIELD PAINTING OF EXISTING STEEL, SYSTEM OZEU" PROPOSAL NOTE SHALL APPLY.

THE COLOR OF URETHANE FINISH COAT SHALL BE "DARK BROWN" FEDERAL SPECIFICATION NUMBER 595A 10080. THE COLOR OF EPOXY INTERMEDIATE COAT SHALL BE "TAN" FEDERAL SPECIFICATIONS NUMBER 595A10219. AN ACTUAL SAMPLE OF THE PAINT PROPOSED FOR USE SHALL BE SUBMITTED BY THE CONTRACTOR FOR APPROVAL.

ITEM SPECIAL - PAINTING OF NEW STEEL, SYSTEM IZEU

ALL OF THE REQUIREMENTS CONTAINED IN THE "PAINTING OF NEW STEEL, SYSTEM IZEU" PROPOSAL NOTE SHALL APPLY.

THE COLOR OF URETHANE FINISH COAT SHALL BE "DARK BROWN" FEDERAL SPECIFICATION NUMBER 595A 10080. THE COLOR OF EPOXY INTERMEDIATE COAT SHALL BE "TAN" FEDERAL SPECIFICATION NUMBER 595A10219. AN ACTUAL SAMPLE OF THE PAINT PROPOSED FOR USE SHALL BE SUBMITTED BY THE CONTRACTOR FOR APPROVAL.

ITEM 516 - STRUCTURAL EXPANSION JOINTS INCLUDING ELASTOMERIC COMPRESSION SEALS

STEEL SHALL BE PAINTED AS SPECIFIED FOR ITEM SPECIAL - FIELD PAINTING OF NEW STEEL, SYSTEM OZEU WITH THE EXCEPTION THAT THE PRIME COAT SHALL BE FIELD APPLIED.

ITEM 516 - BEARING DEVICE, MISC.

WHEN EXISTING BEARINGS DESIGNATED FOR REUSE ARE DETERMINED TO BE UNSALVAGEABLE BY THE ENGINEER, THEY SHALL BE REPLACED BY NEW BEARINGS AS FOLLOWS WHEN DIRECTED BY THE ENGINEER:

AT WEST ABUTMENT - USE NEW R-100 BEARINGS
AT EAST ABUTMENT - USE NEW B-100 BEARINGS

SEE STANDARD DRAWING RB-1-55 FOR BEARING DETAILS AND SHEET 21/31 FOR EXISTING BEARINGS TO BE REPLACED.

PAYMENT FOR ALL MATERIALS AND LABOR TO FURNISH AND INSTALL THE NEW BEARINGS SHALL BE INCLUDED IN ITEM 516- BEARING DEVICE, MISC. AN ESTIMATED QUANTITY OF 10 EACH HAS BEEN INCLUDED IN THE ESTIMATED QUANTITIES FOR THIS PURPOSE.

ITEM 516, REFURBISH BEARING DEVICES, AS PER PLAN

THIS ITEM INCLUDES THE RESETTING OF EXISTING STEEL BEARINGS THAT HAVE BEEN DESIGNATED FOR REUSE AND RELOCATION ON SHEET 21/31. THIS ITEM SHALL ALSO INCLUDE THE COST OF REMOVAL AND REPLACING CONCRETE REMOVED TO OBTAIN SUFFICIENT CROSS-SECTIONAL AREA OF THE EXISTING ANCHOR BOLT TO WELD PROPERLY, SEE DETAIL "A" ON SHEET 23/31 .

ITEM 511 - CLASS C CONCRETE, ABUTMENTS, AS PER PLAN

ALL LOOSE AND DISINTEGRATED OR UNSOUND CONCRETE SHALL BE REMOVED TO A MINIMUM DEPTH OF 4 INCHES (3 INCHES ON TOP HORIZONTAL SURFACES) FROM AREAS TO BE REPAIRED AS SPECIFIED UNDER CMS ITEM 519.03. THE AREAS TO BE PATCHED SHALL BE PREPARED AND WELDED STEEL WIRE FABRIC AND HOOK BOLTS WITH EXPANSION ANCHORS SHALL BE INSTALLED AS SPECIFIED UNDER CMS ITEMS 519.02, 519.04 AND 519.05. CLASS "C" CONCRETE SHALL THEN BE PLACED, INCLUDING AREAS TO BE PATCHED AND AN ADDITIONAL 4 INCHES OF NEW CONCRETE OVER THE ENTIRE FACE OF THE ABUTMENTS. REMOVAL OF EXISTING CONCRETE, PREPARATION OF SURFACES TO BE PATCHED, INSTALLATION OF WELDED STEEL WIRE FABRIC AND HOOK BOLTS WITH EXPANSION ANCHORS AND PLACEMENT OF NEW CLASS "C" CONCRETE SHALL BE PAID UNDER THIS ITEM.

THE QUANTITY SHALL BE THE TOTAL AREA IN SQUARE FEET OF ALL ABUTMENT SURFACES RECEIVING NEW CLASS C CONCRETE REGARDLESS OF THICKNESS.

ALL INSPECTION TOOLS, EQUIPMENT, MATERIALS AND INCIDENTALS NECESSARY FOR THE ENGINEER TO SOUND 100% OF THE CONCRETE ABUTMENTS, WINGWALLS AND BEAM SEATS SHALL BE SUPPLIED BY THE CONTRACTOR AT THE REQUEST OF THE ENGINEER. PAYMENT SHALL BE INCIDENTAL TO ITEM 511 CLASS "C" CONCRETE, ABUTMENTS, AS PER PLAN.

ITEM 519 Patching Concrete Structure, As Per Plan

AT THE LOCATIONS WHERE LOOSE, DISINTEGRATED OR UN-SOUND CONCRETE EXTENDS BEYOND THE LIMITS NOTED IN ITEM 511 - CLASS C CONCRETE, ABUTMENTS (AS PER PLAN) THE CONTRACTOR SHALL REMOVE THE CONCRETE TO EXPOSE A SOUND CONCRETE SURFACE, PREPARE THE SURFACE AND PLACE NEW CLASS "C" CONCRETE. ALL OF THESE ITEMS OF WORK AND REPAIR SHALL BE AS DESCRIBED IN THE NOTE TITLED ITEM 511 - CLASS "C" CONCRETE, ABUTMENTS (AS PER PLAN). PAYMENT FOR THIS WORK SHALL BE MEASURED ON A SQUARE FOOT BASIS AND SHALL INCLUDE ONLY THOSE AREAS WHERE THE DEPTH OF PATCHING EXCEEDS THE LIMITS NOTED IN ITEM 511 - CLASS "C" CONCRETE, ABUTMENTS (AS PER PLAN) THE PAYMENT SHALL INCLUDE ALL NECESSARY LABOR, EQUIPMENT, MATERIALS AND INCIDENTALS NECESSARY TO PERFORM THE REQUIRED WORK. SINCE ALL QUANTITIES OF PATCHING SHOWN ON THE PLANS ARE ONLY ESTIMATES, ACTUAL PATCHING QUANTITIES WILL BE DETERMINED THROUGH FIELD INSPECTION AND SOUNDING.

THE CONTRACTOR IS RESPONSIBLE FOR COORDINATING STRUCTURE PATCHING OF THE ABUTMENT SEATS WITH THE JACKING AND REFURBISHING/REPLACEMENT OF BOLSTERS, ROCKERS AND BEARING DEVICES AND THE PATCHING REQUIRED UNDER THE BEARING DEVICES.

McCOY ASSOCIATES, INC.
CONSULTING ENGINEERS
AKRON, OHIO

28/31

STRUCTURAL GENERAL NOTES

BRIDGE NO. SUM. 76-1296
AKRON EAST EXPRESSWAY
OVER MARTHA AVENUE
SUMMIT COUNTY STA. 610+81.52
611+54.83

DESIGNED	DRAWN	TRACED	CHECKED	REVIEWED	DATE	REVISED
JBH	PNA		MSC	MSC	10/89	

526691

ESTIMATED QUANTITIES

ITEM	TOTAL	UNIT	DESCRIPTION	SUPER.	ABUT'S.	W.WALL	GENERAL	ITEM EXT.
202	LUMP		PORTIONS OF STRUCTURES REMOVED				L.S.	11200
202	LUMP		REMOVAL FOR RE-USE OF EXISTING STEEL BEAMS AND BEARINGS	L.S.				98000
503	3,500	C.Y.	UNCLASSIFIED EXCAVATION		900	2,600		21100
503	LUMP		COFFERDAMS, CRIBS, AND SHEETING				L.S.	11100
505	LUMP		PILE DRIVING EQUIPMENT MOBILIZATION				L.S.	11100
507	7,590	L.F.	12" ϕ CAST-IN-PLACE REINFORCED CONCRETE PILES,		5,116	2,444		22201
			AS PER PLAN					
509	104,629	LB.	EPOXY COATED REINFORCING STEEL. GRADE 60	84,484	14,362	4,283	1500	15800
509	78,319	LB.	REINFORCING STEEL, GRADE 60		49,635	27,184	1500	15400
510	148	EA.	DOWEL HOLES		48		100	11100
511	488	C.Y.	CLASS C CONCRETE, FOOTINGS		295	193		46500
511	111	C.Y.	CLASS C CONCRETE, ABUTMENTS, AS PER PLAN		111			45501
511	401	C.Y.	CLASS C CONCRETE, ABUTMENTS		401			45700
511	168	C.Y.	CLASS C CONCRETE, Retaining Wall or Wingwall			168		46200
511	354	C.Y.	CLASS S CONCRETE, SUPERSTRUCTURE, AS PER PLAN	354				31503
512	165	S.Y.	TYPE B WATERPROOFING		165			44400
513	208,100	LB.	STRUCTURAL STEEL (AISC CATEGORY I), AS PER PLAN	208,100				11101
513	4,767	E.A.	WELDED STUD SHEAR CONNECTORS	4,767				20000
513	LUMP	L.S.	ERECTION OF EXISTING STRUCTURAL STEEL	L.S.				16600
516	350	L.F.	STRUCTURAL EXPANSION JOINTS INCLUDING	350				10500
			ELASTOMERIC COMPRESSION SEALS					
516	336	S.F.	1" PREFORMED EXPANSION JOINT FILLER		72	264		13600
516	155	L.F.	P.V.C. WATERSTOP, 6"			155		30500
516	29	EA.	REFURBISH BEARING DEVICE, AS PER PLAN	29				45305
516	10	EA.	BEARING DEVICE, MISC.	10				46900
518	160	L.F.	8" PERFORATED, C.S.P, 707.01		160			42200
518	230	L.F.	8" NON-PERFORATED, C.S.P, 707.01 including specials		230			42300
518	330	C.Y.	POROUS BACKFILL, WITH FILTER FABRIC		260	70		21800
511	354	C.Y.	Class S concrete, superstructure, using shrinkage compensating cement * ∝	354				33404
511	LUMP		Class S concrete using shrinkage compensating cement for pre-placement testing * ∝	L.S.				33410
SPECIAL	1460	S.Y.	SEALING OF CONCRETE SURFACES (EPOXY) (SEE PROPOSAL NOTE) ▲	269	769	422		51267502
SPECIAL	208,100	LB.	PAINTING OF NEW STEEL, SYSTEM IZEU * ▲	208,100				51400610
SPECIAL	13100	S.F.	Surface Preparation OF EXISTING STEEL,	13100				51400050
			SYSTEM OZEU * ▲					
SPECIAL	13100	S.F.	FIELD PAINTING OF EXISTING STEEL, PRIME COAT,	13100				51400056
			SYSTEM OZEU * ▲					
SPECIAL	13100	S.F.	FIELD PAINTING OF EXISTING STEEL, INTERMEDIATE	13100				51400060
			COAT, SYSTEM OZEU * ▲					
SPECIAL	13100	S.F.	FIELD PAINTING OF EXISTING STEEL, FINISH COAT,	13100				51400066
			SYSTEM OZEU * ▲					
519	800	S.F.	PATCHING Concrete Structure		800			11100

∝ These two items shall constitute one alternate bid to class S concrete, superstructure, as per plan

ITEM 511-CLASS S CONCRETE SUPERSTRUCTURE-AS PER PLAN-
Curing shall be by method(a) water curing

* SEE PROPOSAL NOTE.
▲ SEE GENERAL NOTES FOR ADDITIONAL DETAILS.

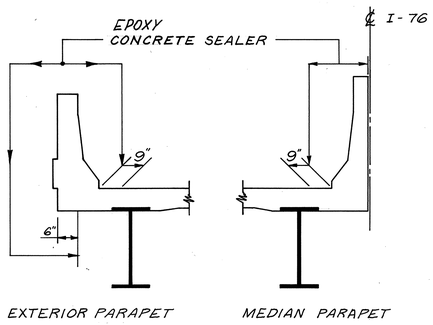

SUPERSTRUCTURE

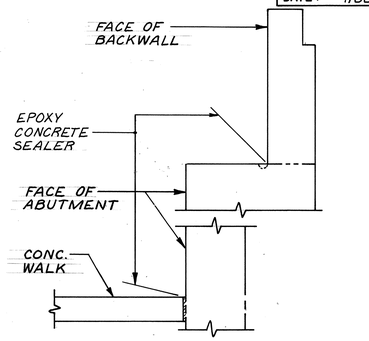

SECTION THRU EXIST. AND PROPOSED ABUTMENTS

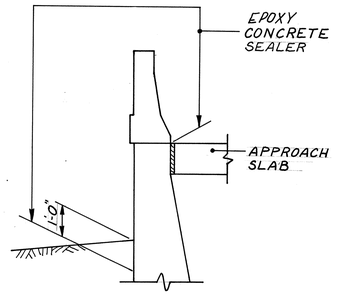

SECTION THRU WINGWALLS

LIMITS OF CONCRETE SEALER

THE CONCRETE PROTECTION SHALL BE APPLIED AS DESCRIBED IN THE PROPOSAL UNDER "SEALING OF CONCRETE SURFACES"

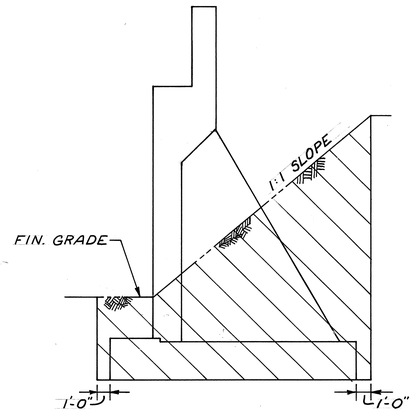

SECTION THRU ABUTMENT

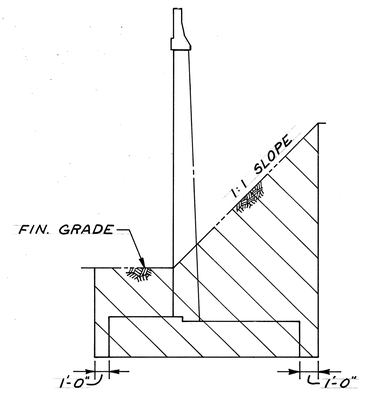

SECTION THRU WINGWALL

LIMITS OF UNCLASSIFIED EXCAVATION

SEE SHT NO.S 4/31 & 6/31 FOR LIMITS OF UNCLASSIFIED EXCAVATION FOR EXISTING ABUTMENTS

NOTES

① FOR STRUCTURAL NOTES SEE SHT 2A/31 AND 2B/31

QUANTITIES	
CALC. BY:	JMH
DATE:	1/88
CHKD. BY:	MAM
DATE:	1/88

FHWA REGION	STATE	PROJECT	
5	OHIO		

(108) 1214

SUMMIT COUNTY
SUM 76-11.57

McCOY ASSOCIATES INC. 3/31
CONSULTING ENGINEERS
AKRON, OHIO

ESTIMATED QUANTITIES

BRIDGE NO. SUM 76-1296
AKRON EAST EXPRESSWAY
OVER MARTHA AVENUE
SUMMIT COUNTY STA. 610+81.52
611+54.83

DESIGNED	DRAWN	TRACED	CHECKED	REVIEWED	DATE	REVISED
J.M.H.	GT		TAB	MSC	2-29-88	

FHWA REGION	STATE	PROJECT	
5	OHIO		

1082
12.14

SUMMIT COUNTY
SUM 76 – 11.57

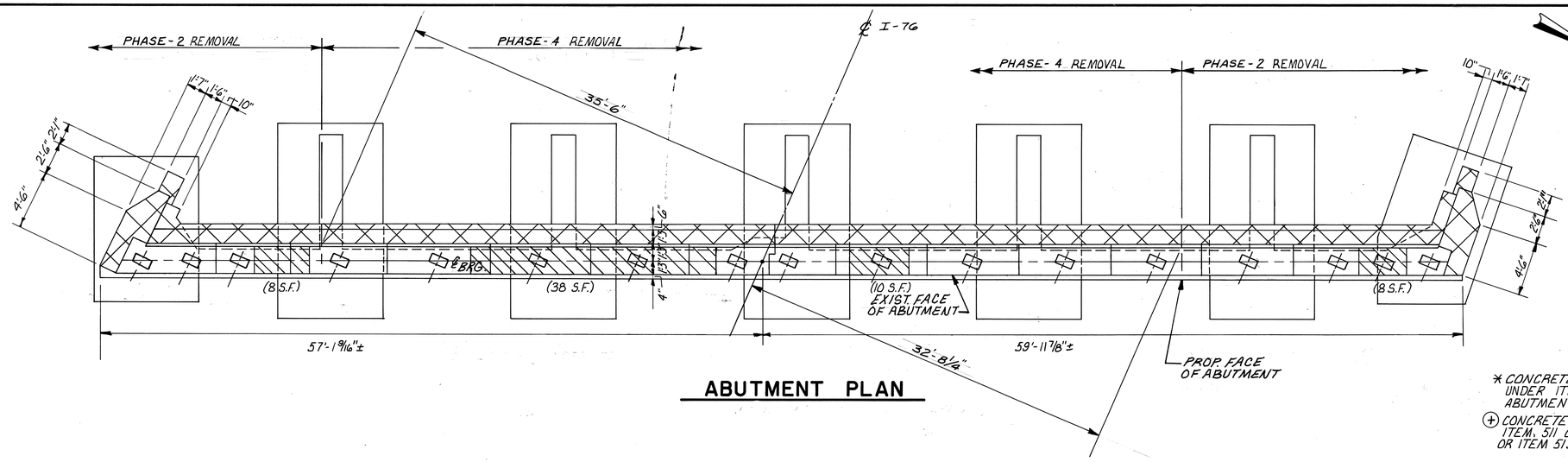

ABUTMENT PLAN

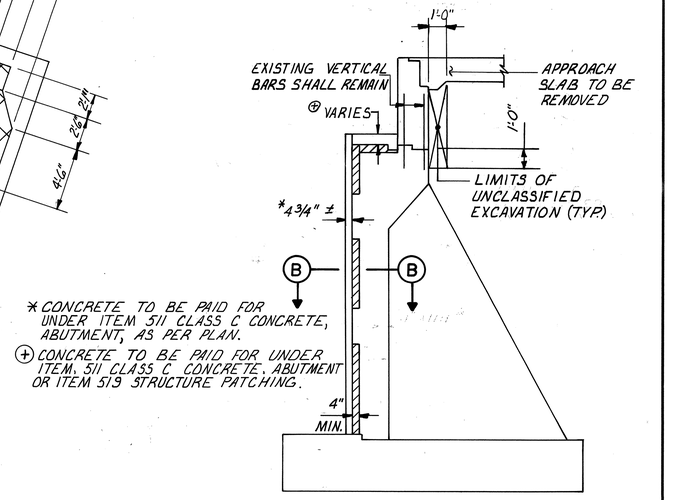

* CONCRETE TO BE PAID FOR UNDER ITEM 511 CLASS C CONCRETE, ABUTMENT, AS PER PLAN.

⊕ CONCRETE TO BE PAID FOR UNDER ITEM, 511 CLASS C CONCRETE, ABUTMENT OR ITEM 519 STRUCTURE PATCHING.

SECTION A-A

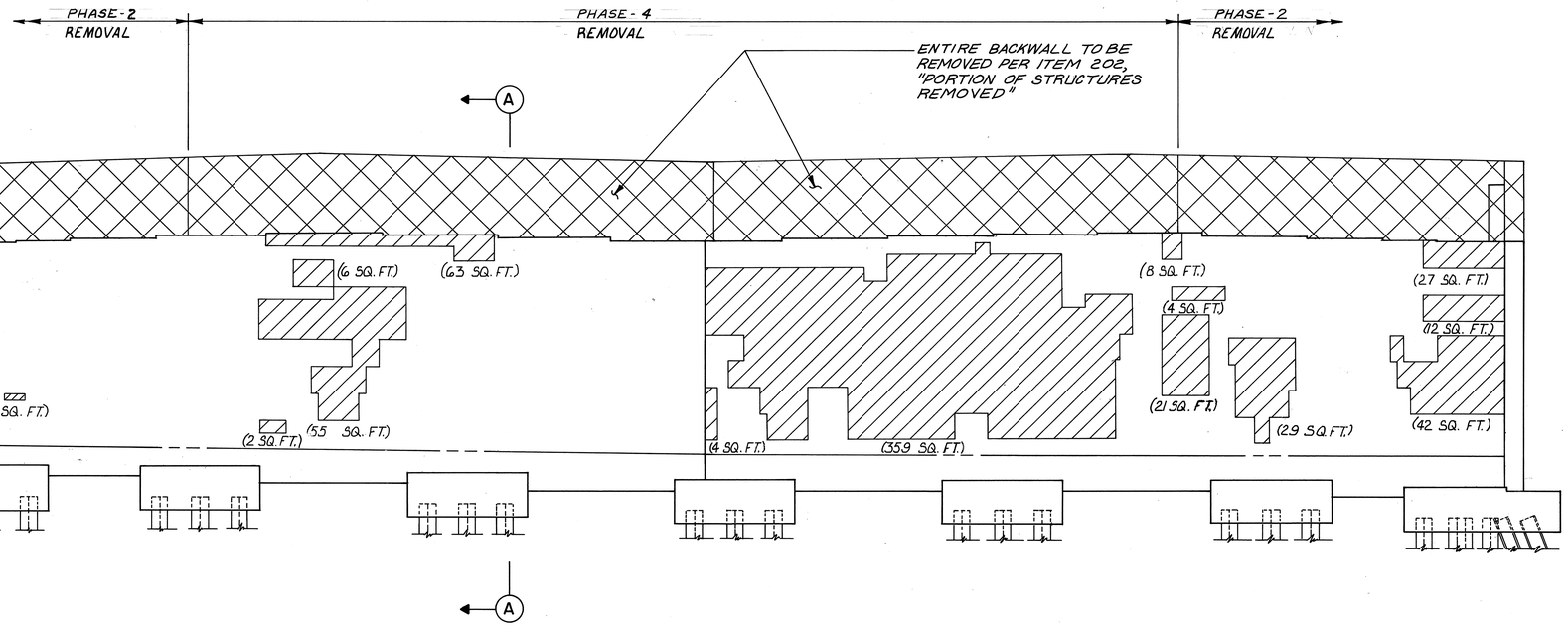

ABUTMENT ELEVATION

LEGEND

▨ INDICATES LIMITS OF EXISTING STRUCTURES TO BE TOTALLY REMOVED, AS PER ITEM 202.

▨ INDICATES AREA REQUIRING REMOVAL OF UNSOUND CONCRETE AND PREPARATION PER CMS ITEM 519. WHEN DEPTH OF REPAIR EQUALS 4" (3" HORIZONTAL SURFACES), ALL WORK WILL BE INCLUDED IN ITEM 511, CLASS C CONCRETE, ABUTMENTS, AS PER PLAN FOR PAYMENT. WHEN DEPTH EXCEEDS 4" (3" HORIZONTAL SURFACES), PAYMENT SHALL BE MADE UNDER ITEM SPECIAL, STRUCTURE PATCHING. THE AREAS SHOWN ARE APPROXIMATE.

TOTAL ITEM 511-CLASS "C" CONCRETE ABUTMENT, AS PER PLAN (THIS SHEET.)

NEW CONCRETE OVER ABUTMENT = 2105 S.F.

ESTIMATED AREA OF REPAIR FOR WEST ABUTMENT WALL = 633 SQ. FT.
ESTIMATED AREA OF REPAIR FOR BEAM SEAT = 64 SQ. FT.
TOTAL = 697 SQ. FT.

ESTIMATED AREA TO BE PAIR FOR UNDER ITEM 519 STRUCTURE PATCHING = 200 SQ. FT.

NOTES

(1) SEE ITEM 511 CLASS C CONCRETE, ABUTMENT, AS PER PLAN AND ITEM SPECIAL STRUCTURE PATCHING NOTES ON SHEET 28 | 31 FOR DESCRIPTION OF WORK.

(2) FOR ADDITIONAL NOTES SEE SHEET 5 | 31

(3) FOR SECTION B-B SEE SHEET 5 | 31

McCOY ASSOCIATES INC. 4 | 31
CONSULTING ENGINEERS
AKRON, OHIO

DEMOLITION AND REPAIRS WEST ABUTMENT

BRIDGE NO. SUM 76 – 1296
AKRON EAST EXPRESSWAY
OVER MARTHA AVENUE
SUMMIT COUNTY STA. 610+81.52
611+54.83

DESIGNED	DRAWN	TRACED	CHECKED	REVIEWED	DATE	REVISED
TAB	DAK		RPL	MSC	2-29-88	

FHWA REGION	STATE	PROJECT	
5	OHIO		

1083
12.14

SUMMIT COUNTY
SUM 76-11.57

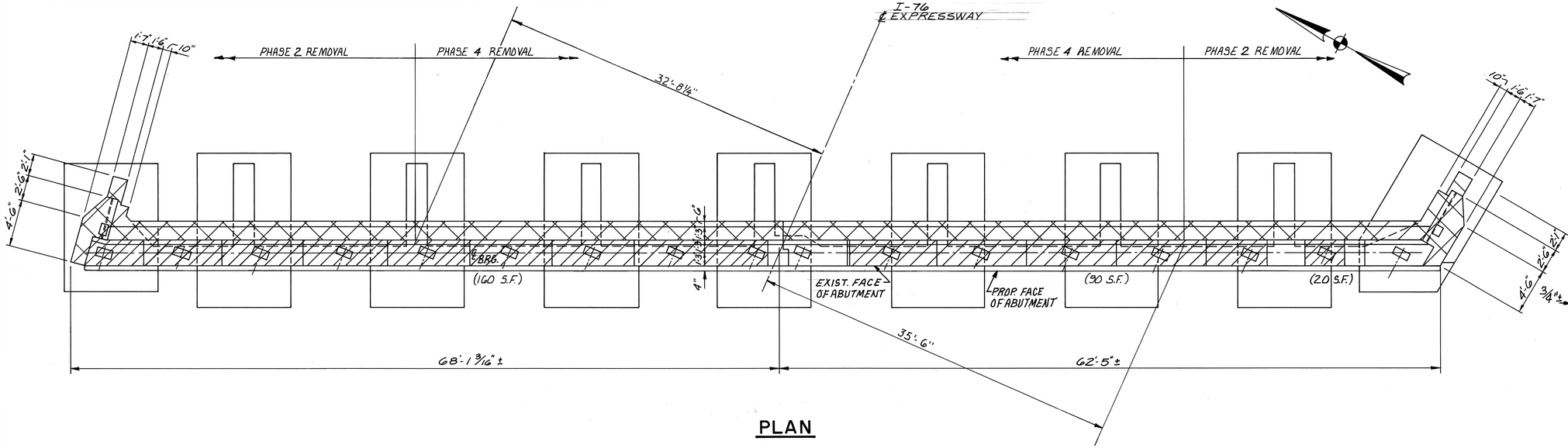

PLAN

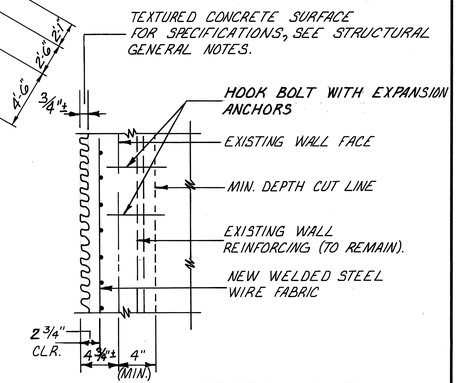

SECTION B-B

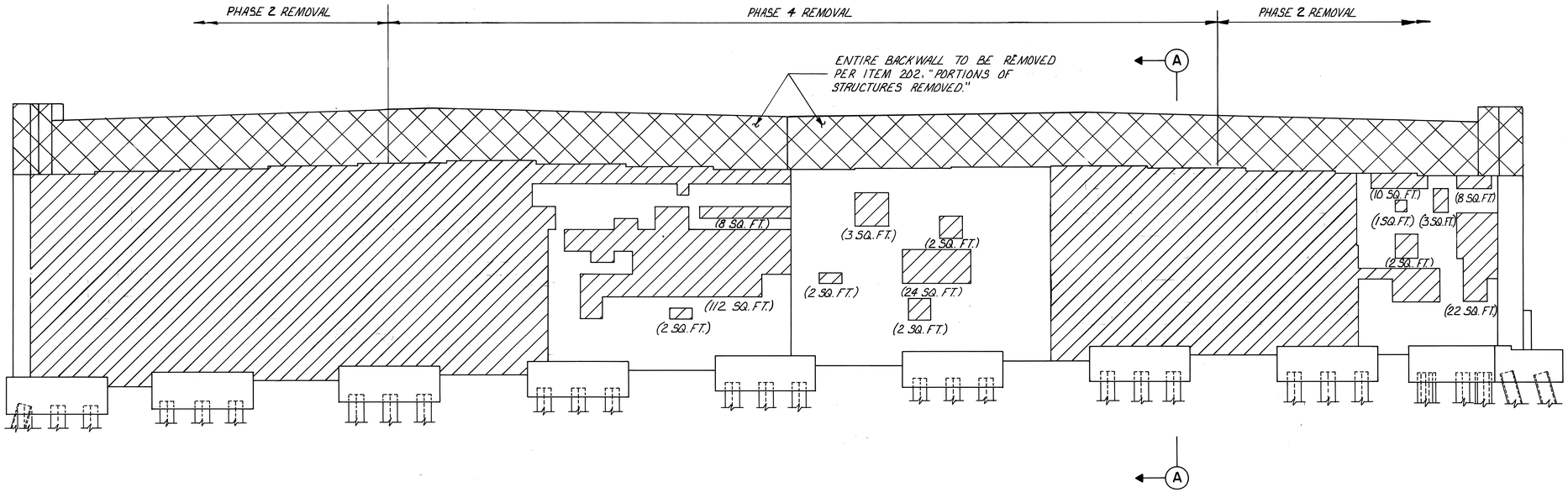

ELEVATION

NOTES

1. CARE SHALL BE TAKEN IN REMOVING EXISTING CONCRETE TO AVOID DAMAGING EXISTING REINFORCING. WHERE EXISTING BARS ARE DETERIORATED OR DAMAGED, NEW DOWELS OF THE SAME SIZE AND 60 DIA. LONGER THAN THE SECTION BEING REPLACED SHALL BE PROVIDED. EMBED DOWELS 30 DIA., AS DIRECTED BY THE ENGINEER INTO EXISTING CONCRETE WITH NON-SHRINK GROUT. PAYMENT FOR REMOVAL OF EXISTING CONCRETE SHALL BE INCLUDED WITH ITEM 202 PORTIONS OF STRUCTURE REMOVED. PAYMENT FOR REPLACING DETERIORATED BARS SHALL BE INCLUDED WITH ITEM 509 EPOXY COATED REINFORCING STEEL AND ITEM 510 DOWEL HOLES.
2. FOR ADDITIONAL NOTES SEE SHT. 4/31
3. FOR SECTION A-A SEE SHEET 4/31

LEGEND

- INDICATES LIMITS OF EXISTING STRUCTURES TO BE TOTALLY REMOVED, AS PER ITEM 202.
- INDICATES AREA REQUIRING REMOVAL OF UNSOUND CONCRETE AND PREPARATION PER CMS ITEM 519. WHEN DEPTH OF REPAIR EQUALS 4" (3" HORIZONTAL SURFACES), ALL WORK WILL BE INCLUDED IN ITEM 511, CLASS C CONCRETE, ABUTMENTS, AS PER PLAN FOR PAYMENT. WHEN DEPTH EXCEEDS 4" (3" HORIZONTAL SURFACES) PAYMENT SHALL BE MADE UNDER ITEM SPECIAL, STRUCTURE PATCHING. THE AREAS SHOWN ARE APPROXIMATE.

TOTAL ITEM 511-CLASS "C" CONCRETE ABUTMENT, AS PER PLAN (THIS SHEET)

NEW CONCRETE OVER = 2381 S.F.
ABUTMENT FACE

ESTIMATED AREA OF REPAIR FOR EAST ABUTMENT WALL = 1450 SQ. FT.
ESTIMATED AREA OF REPAIR FOR BEAM SEAT = 270 SQ. FT.
TOTAL = 1,720 SQ. FT.

ESTIMATED AREA TO BE PAID FOR UNDER ITEM 519 STRUCTURE PATCHING = 600 SQ. FT.

McCOY ASSOCIATES INC. 5/31
CONSULTING ENGINEERS
AKRON, OHIO

DEMOLITION AND REPAIRS EAST ABUTMENT

BRIDGE NO. SUM 76-1296
AKRON EAST EXPRESSWAY
OVER MARTHA AVENUE
SUMMIT COUNTY STA. 610+81.52
611+54.83

DESIGNED	DRAWN	TRACED	CHECKED	REVIEWED	DATE	REVISED
M.A.M.	CT		MSC	MSC	10/89	

FHWA REGION	STATE	PROJECT	
5	OHIO		

1084
12.14

SUMMIT COUNTY
SUM 76 - 11.57

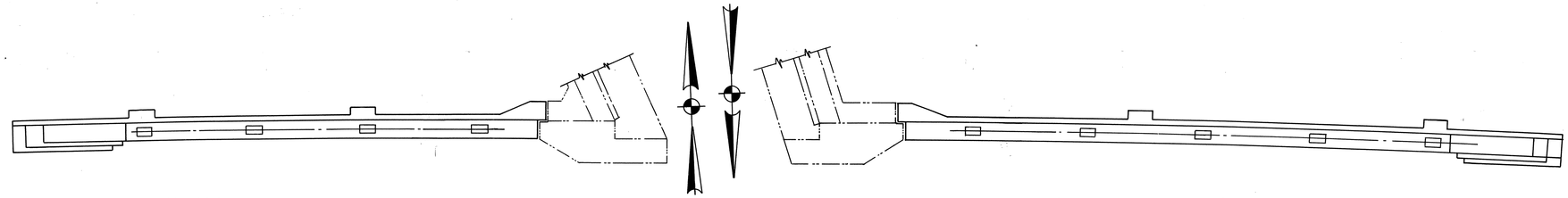

WINGWALL PLAN

SOUTHWEST WINGWALL SHOWN (S.W.W.)
NORTHEAST WINGWALL SIMILAR (N.E.W.)

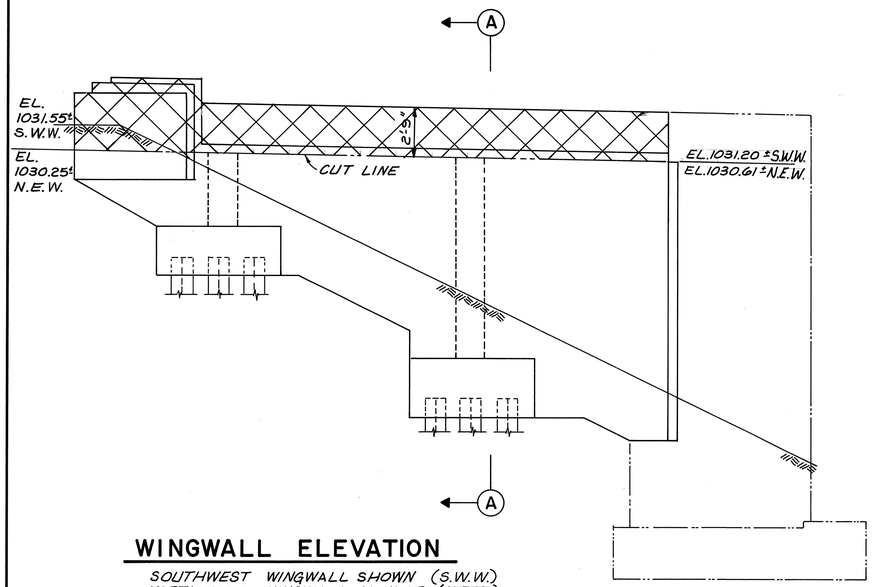

WINGWALL ELEVATION

SOUTHWEST WINGWALL SHOWN (S.W.W.)
NORTHEAST WINGWALL SIMILAR (N.E.W.)

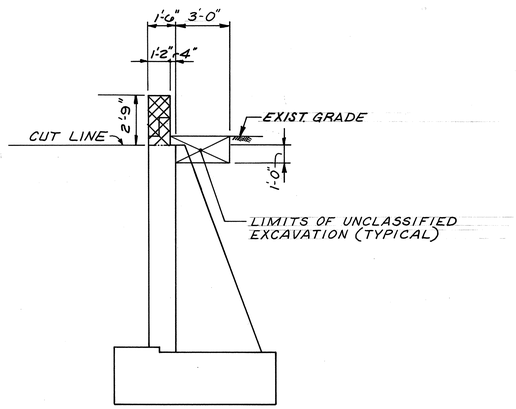

SECTION A-A

WINGWALL PLAN

NORTHWEST WINGWALL SHOWN (N.W.W.)
SOUTHEAST WINGWALL SIMILAR (S.E.W.)

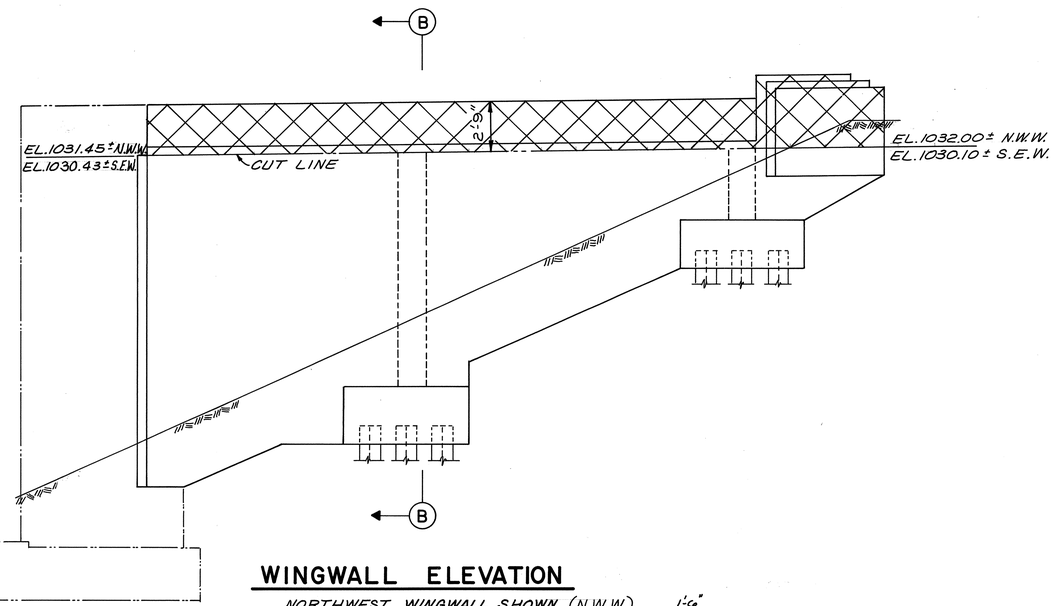

WINGWALL ELEVATION

NORTHWEST WINGWALL SHOWN (N.W.W.)
SOUTHEAST WINGWALL SIMILAR (S.E.W.)

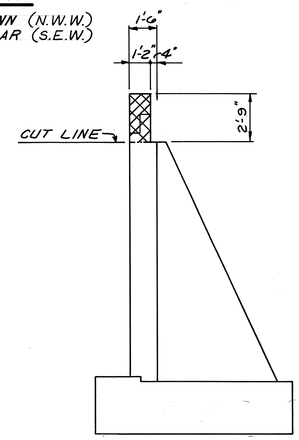

SECTION B-B

NOTES

1. TOPS OF EXISTING WINGWALLS SHALL BE REMOVED DURING PHASE-1 CONSTRUCTION. SEE SHEET 26/31 FOR CONSTRUCTION PHASING NOTES.
2. EXISTING RAILINGS OR OTHER MISCELLANEOUS ITEMS ON WINGWALLS SHALL BE INCLUDED WITH ITEM 202, PORTIONS OF STRUCTURES REMOVED.
3. FOR ADDITIONAL NOTES SEE SHEET 4/31.

LEGEND

INDICATES LIMITS OF EXISTING STRUCTURES TO BE TOTALLY REMOVED, AS PER ITEM 202.

McCOY ASSOCIATES INC. 6/31
CONSULTING ENGINEERS
AKRON, OHIO

STRUCTURAL REMOVAL & REPAIR DETAILS

BRIDGE NO. SUM 76-1296
AKRON EAST EXPRESSWAY
OVER MARTHA AVENUE
SUMMIT COUNTY STA. 610+81.52
611+54.83

DESIGNED	DRAWN	TRACED	CHECKED	REVIEWED	DATE	REVISED
TAB	DAK		RPL	MSC	2-29-88	

22276

FHWA REGION	STATE	PROJECT	
5	OHIO		

1085
12-14

SUMMIT COUNTY
SUM 76-11.57

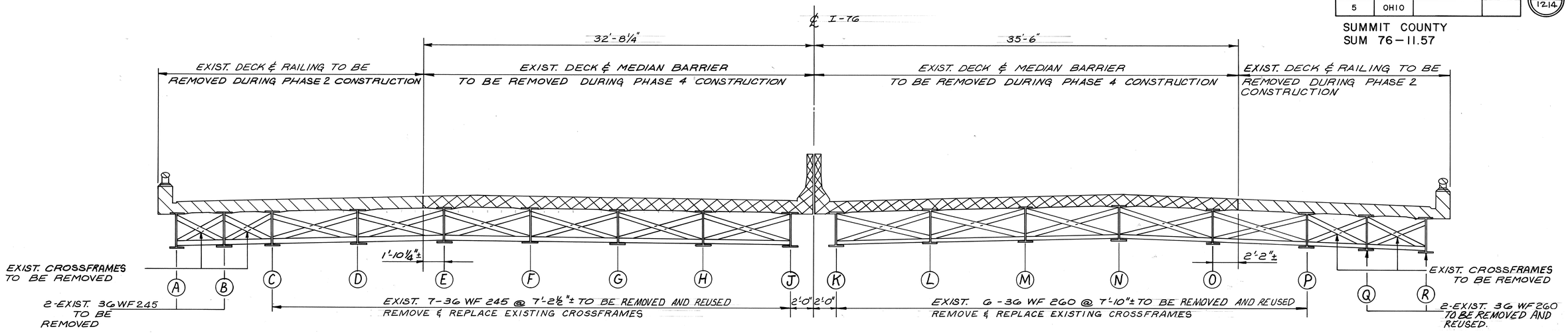

WESTBOUND

EASTBOUND

EXISTING TRANSVERSE SECTION

LEGEND

- PHASE 2 REMOVAL
- PHASE 4 REMOVAL
- (G) EXIST. BEAM LETTER

NOTES

(1) THE FOLLOWING ARE THE APPROXIMATE QUANTITIES FOR SOME OF THE MAJOR ITEMS OF REMOVAL:

ITEM	APPROXIMATE QUANTITY
A) SUPERSTRUCTURE CONCRETE	= 210 C.Y.
B) ASPHALT	= 95 C.Y.
C) RAILING	= 290 L.F.
D) STRUCTURAL STEEL	= 68,500 LBS.
E) SUBSTRUCTURE CONCRETE (ABUTMENTS & WINGWALLS)	= 111 C.Y.

THE ABOVE REMOVAL QUANTITES HAVE BEEN ARRIVED AT USING THE EXISTING STRUCTURE PLANS AND HAVE BEEN GIVEN FOR INFORMATION ONLY AND ARE NOT TO BE USED FOR ANY OTHER PURPOSE. IT IS THE CONTRACTOR'S RESPONSIBILITY TO ARRIVE AT THE REMOVAL QUANTITIES TO BE USED TO BASE HIS BID PRICE FOR ITEM 202 PORTIONS OF STRUCTURE REMOVED.

(2) EXISTING BEARINGS SHALL BE REMOVED FOR RE-USE AND SHALL BE INCLUDED FOR PAYMENT WITH ITEM 202, REMOVAL FOR RE-USE OF EXISTING STEEL BEAMS AND BEARINGS.

(3) EXISTING BEAMS (C) THRU (R) SHALL BE REMOVED FOR RE-USE AND SHALL BE INCLUDED FOR PAYMENT WITH ITEM 202, REMOVAL FOR RE-USE OF EXISTING STEEL BEAMS AND BEARINGS. SEE STRUCTURAL GENERAL NOTES FOR STORAGE, CLEANING, PAINTING AND MOMENT PLATE CONNECTION NOTES.

(4) SEE SHEET 21/31 FOR LOCATION OF EXISTING BEARINGS TO BE RE-USED AND FOR LOCATIONS OF BEARINGS TO BE REPLACED. SEE SHEET 28/31 FOR DESCRIPTION OF PAY ITEMS FOR ITEMS 516, BEARING DEVICE, MISC. AND REBURBISH BEARING DEVICES, AS PER PLAN.

McCOY ASSOCIATES INC. 7/31
CONSULTING ENGINEERS
AKRON, OHIO

STRUCTURAL REMOVAL & REPAIR DETAILS

BRIDGE NO. SUM 76-1296
AKRON EAST EXPRESSWAY
OVER MARTHA AVENUE
SUMMIT COUNTY STA. 610+81.52
611+54.83

DESIGNED	DRAWN	TRACED	CHECKED	REVIEWED	DATE	REVISED
TAB	DAK		RPL	MSC	2-29-88	

FHWA REGION	STATE	PROJECT	
5	OHIO		

1086
1214

SUMMIT COUNTY
SUM 76 - 11.57

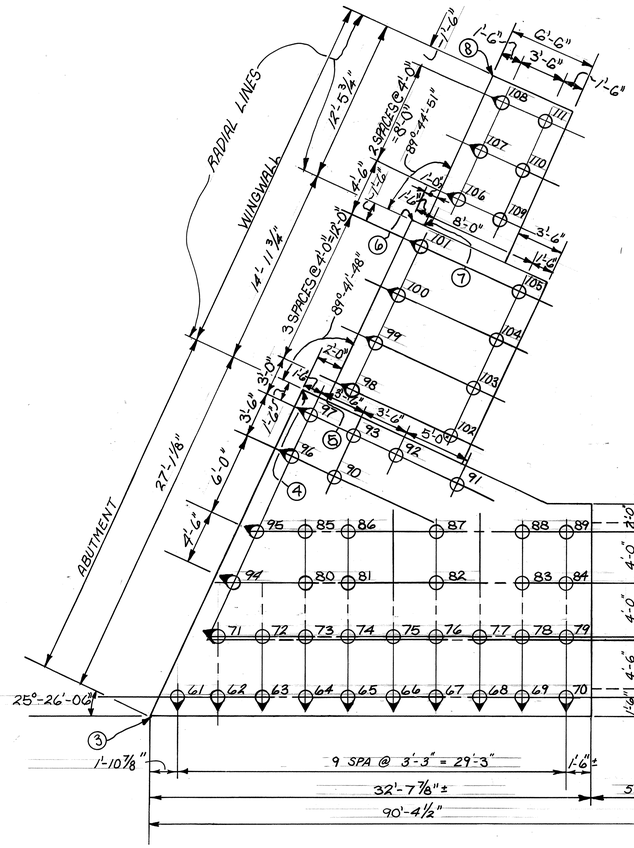

S.W. ABUTMENT & WING-WALL
PILING PLAN

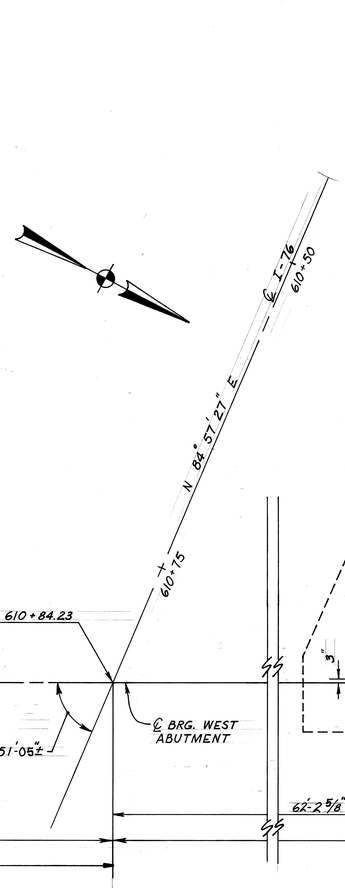

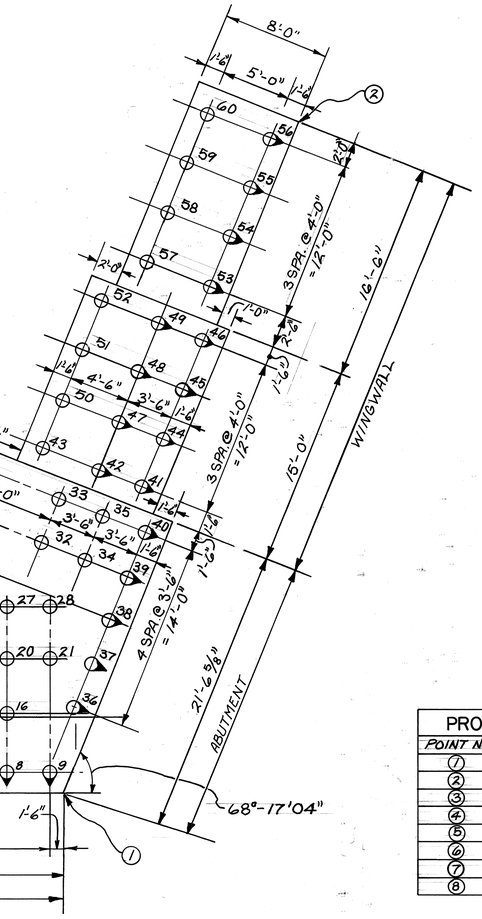

N.W. ABUTMENT & WING-WALL
PILING PLAN

NOTES

1. ALL PILES SHALL BE 12"ϕ CAST-IN-PLACE REINFORCED CONCRETE PILES.
2. PILES SHOWN THUS ⊙ SHALL BE BATTERED 1:4 IN THE DIRECTION INDICATED.
3. PILES SHALL BE DRIVEN TO A MINIMUM BEARING CAPACITY OF 45 TONS PER PILE FOR THE ABUTMENTS AND WINGWALLS.
4. FOR ABUTMENT FOOTING REINFORCEMENT DETAILS, SEE SHEET 15/31
5. THE 12" CAST-IN-PLACE REINFORCED CONCRETE PILES HAVE A DESIGN LOAD OF 39.9 TONS PER PILE FOR ABUTMENT PILES.
6. FOR PILE CUT-OFF ELEVATIONS AND ESTIMATED PILE LENGTHS SEE PILE TABLE ON SHT. 9/31

PROPOSED FOOTING STATION & OFFSET		
POINT NO.	STATION	OFFSET
①	610+54.51	84.14' LT.
②	610+01.54	80.32' LT.
③	611+25.05	80.84' RT.
④	610+97.98	79.76' RT.
⑤	610+98.03	78.26' RT.
⑥	610+83.06	77.85' RT.
⑦	610+83.08	76.85' RT.
⑧	610+70.60	76.63' RT.

McCOY ASSOCIATES INC. 8/31
CONSULTING ENGINEERS
AKRON, OHIO

PILING PLAN
WEST ABUTMENT

BRIDGE NO. SUM 76-1296
AKRON EAST EXPRESSWAY
OVER MARTHA AVENUE
SUMMIT COUNTY STA. 610+81.52
611+54.83

DESIGNED	DRAWN	TRACED	CHECKED	REVIEWED	DATE	REVISED
TAB	GT		RPL	MSC	2-29-88	

FHWA REGION	STATE	PROJECT	
5	OHIO		

1087
1214

SUMMIT COUNTY
SUM 76-11.57

NOTES

(1) FOR ADDITIONAL NOTES SEE SHEET 8 | 31 .

(2) FOR ABUTMENT FOOTING REINFORCEMENT SEE SHEET 15 | 31

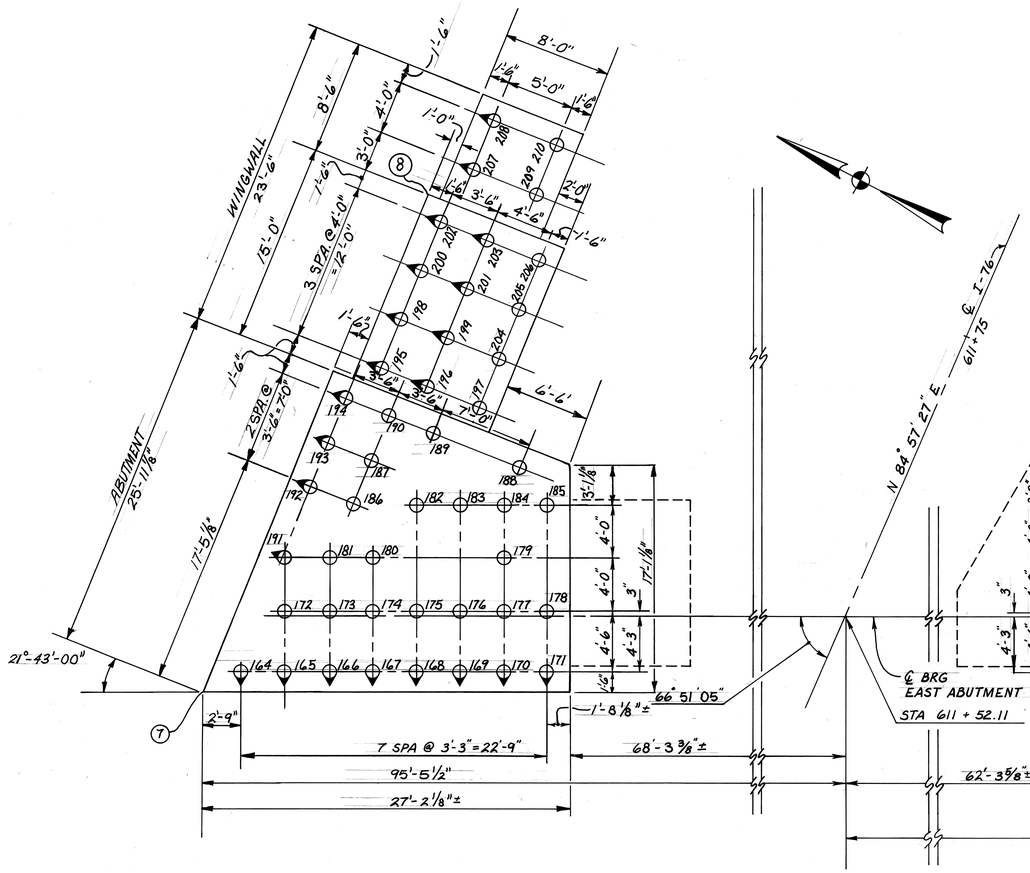

N.E. ABUTMENT & WING-WALL PILING PLAN

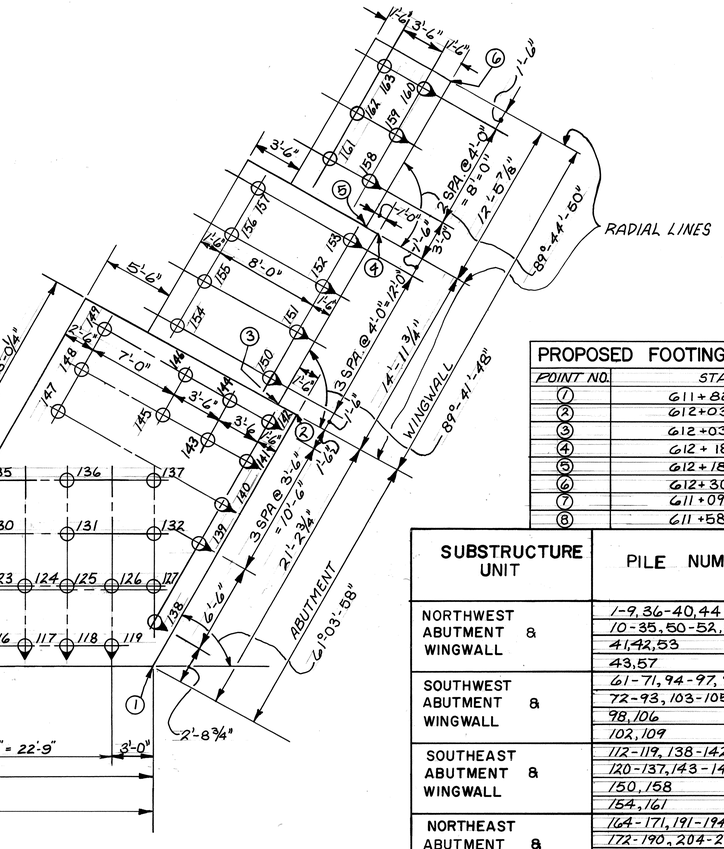

S.E. ABUTMENT & WING-WALL PILING PLAN

PROPOSED FOOTING STATION & OFFSET

POINT NO.	STATION	OFFSET
①	611+82.21	85.03' RT.
②	612+03.33	87.17' RT.
③	612+03.50	85.68' RT.
④	612+18.38	87.36' RT.
⑤	612+18.49	86.37' RT.
⑥	612+30.89	87.90' RT.
⑦	611+09.30	85.52' LT.
⑧	611+58.78	84.25' LT.

SUBSTRUCTURE UNIT	PILE NUMBER	BATTERED	EST. LENGTH
NORTHWEST ABUTMENT & WINGWALL	1-9, 36-40, 44-49, 54-56	✓	41 L.F.
	10-35, 50-52, 58-60		40 L.F.
	41, 42, 53	✓	48 L.F.
	43, 57		47 L.F.
SOUTHWEST ABUTMENT & WINGWALL	61-71, 94-97, 99-101, 107, 108	✓	31 L.F.
	72-93, 103-105, 110, 111		30 L.F.
	98, 106	✓	38 L.F.
	102, 109		37 L.F.
SOUTHEAST ABUTMENT & WINGWALL	112-119, 138-142, 151-153, 159, 160	✓	31 L.F.
	120-137, 143-149, 155-157, 162, 163		30 L.F.
	150, 158	✓	38 L.F.
	154, 161		37 L.F.
NORTHEAST ABUTMENT & WINGWALL	164-171, 191-194, 198-203, 208	✓	41 L.F.
	172-190, 204-206, 210		40 L.F.
	195, 196, 207	✓	48 L.F.
	197, 209		47 L.F.

McCOY ASSOCIATES INC. 9 | 31
CONSULTING ENGINEERS
AKRON, OHIO

PILING PLAN EAST ABUTMENT

BRIDGE NO. SUM 76-1296
AKRON EAST EXPRESSWAY
OVER MARTHA AVENUE
SUMMIT COUNTY STA. 610+81.52
611+54.83

DESIGNED	DRAWN	TRACED	CHECKED	REVIEWED	DATE	REVISED
TAB	GT		RPL	MJC	2-29-88	

FHWA REGION	STATE	PROJECT	
5	OHIO		

1088
12.14

SUMMIT COUNTY
SUM 76-11.57

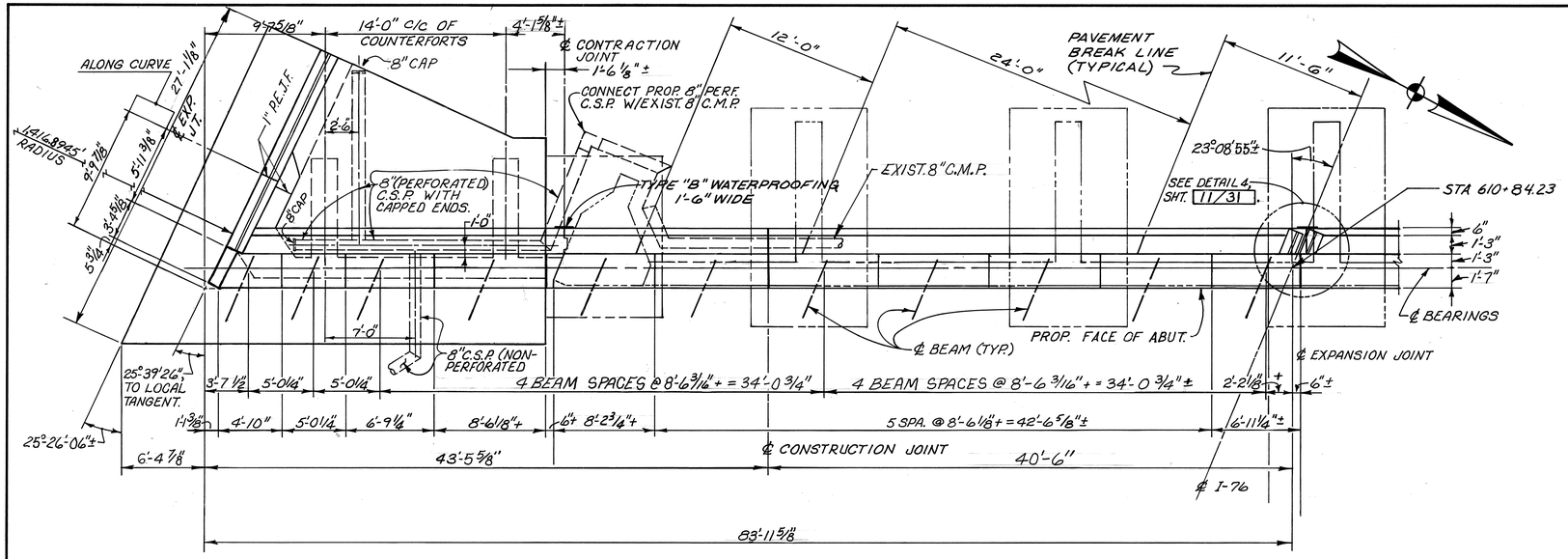

HALF PLAN

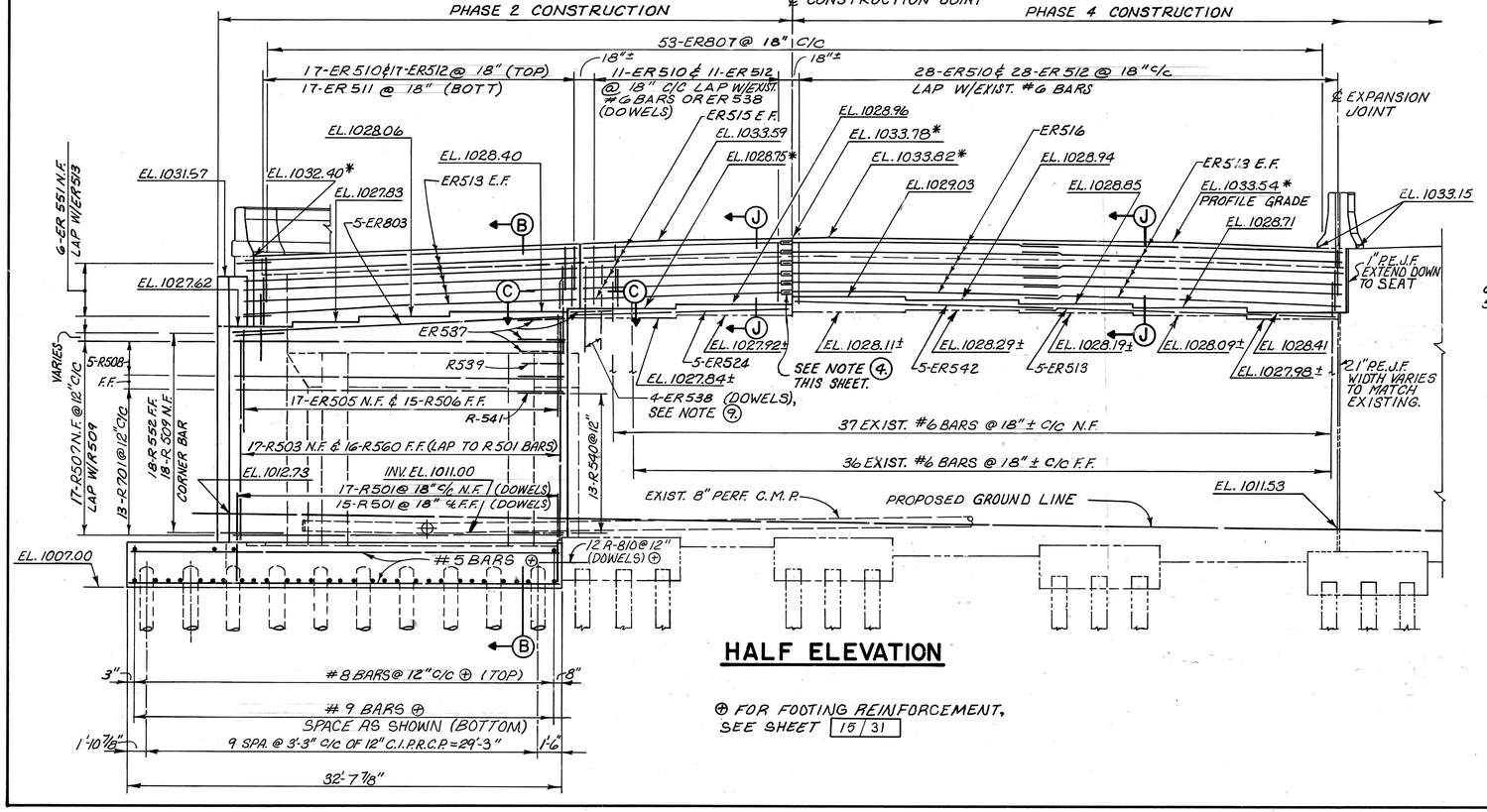

HALF ELEVATION

⊕ FOR FOOTING REINFORCEMENT, SEE SHEET 15/31

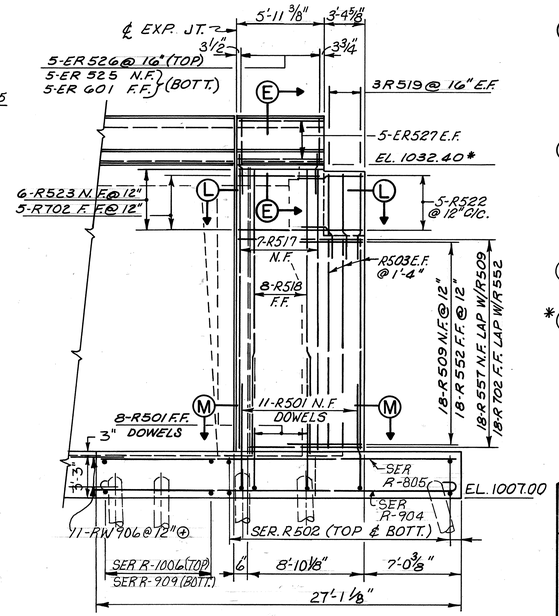

PARTIAL END ELEVATION
(LOOKING NORTH)

NOTES

1. UNLESS OTHERWISE SHOWN THE MIN. BAR LAPS ARE AS FOLLOWS:
   #5 = 1'-8", #7 = 2'-7", #9 = 4'-3",
   #6 = 2'-0", #8 = 3'-5", #10 = 5'-6".
2. ABBREVIATIONS USED ARE:
   N.F. = NEAR FACE.
   F.F. = FAR FACE.
   E.F. = EACH FACE.
   P.E.J.F. = PREFORMED EXPANSION JOINT FILLER.
3. THE PREFIX "E" HAS BEEN ADDED TO ALL REINFORCING BARS TO BE EPOXY COATED. THE PREFIX "R" DENOTES WEST ABUT. REINF. BARS. THE PREFIX "F" DENOTES EAST ABUT. REINF. BARS.
4. MECHANICAL SPLICES USED SHALL DEVELOP 125% BAR STRENGTH AND SHALL BE INCLUDED WITH ITEM 509 FOR PAYMENT.
5. BRIDGE SEAT REINFORCING: REINFORCING STEEL IN THE VICINITY OF THE BRIDGE SEAT SHALL BE ACCURATELY PLACED TO AVOID INTERFERENCE WITH THE DRILLING OF BEARING ANCHOR HOLES OR THE PRE-SETTING OF BEARING ANCHORS.
6. BEARING ANCHORS: AT THE OPTION OF THE CONTRACTOR, BEARING ANCHORS, LOCATED AND SUPPORTED BY TEMPLATES, MAY BE CAST IN PLACE.
7. POROUS BACKFILL, 2 FT. THICK, SHALL EXTEND UP TO THE PLANE OF THE SUBGRADE AND LATERALLY TO THE ENDS OF THE WING WALLS.
8. BACKWALL CONCRETE: IN ADDITION TO THE PROVISIONS OF 511.08, BACKWALL CONCRETE ABOVE THE OPTIONAL CONSTRUCTION JOINT AT THE APPROACH SLAB SEAT SHALL NOT BE PLACED UNTILL AFTER THE DECK CONCRETE IN THE SPAN ADJACENT TO THE ABUTMENT HAS BEEN PLACED.
9. ADDITIONAL DOWELS MAY BE NECESSARY DEPENDING UPON EXISTING BACKWALL REINFORCEMENT. DOWEL HOLE SHALL BE 1 1/8" ⌀ x 1'-2" MIN. DEPTH.
10. FOR ADDITIONAL SECTIONS SEE SHT. 14/31
*11. ELEVATION GIVEN AT TOP AND FACE OF ABUTMENT BACKWALL.

McCOY ASSOCIATES INC. 10/31
CONSULTING ENGINEERS
AKRON, OHIO

WEST ABUTMENT DETAILS

BRIDGE NO. SUM 76-1296
AKRON EAST EXPRESSWAY
OVER MARTHA AVENUE
SUMMIT COUNTY STA. 610+81.52
611+54.83

DESIGNED	DRAWN	TRACED	CHECKED	REVIEWED	DATE	REVISED
TAB	BMR		RPL	MSC	2-29-88	

FHWA REGION	STATE	PROJECT	
5	OHIO		

1089
12.14

SUMMIT COUNTY
SUM 76 11.57

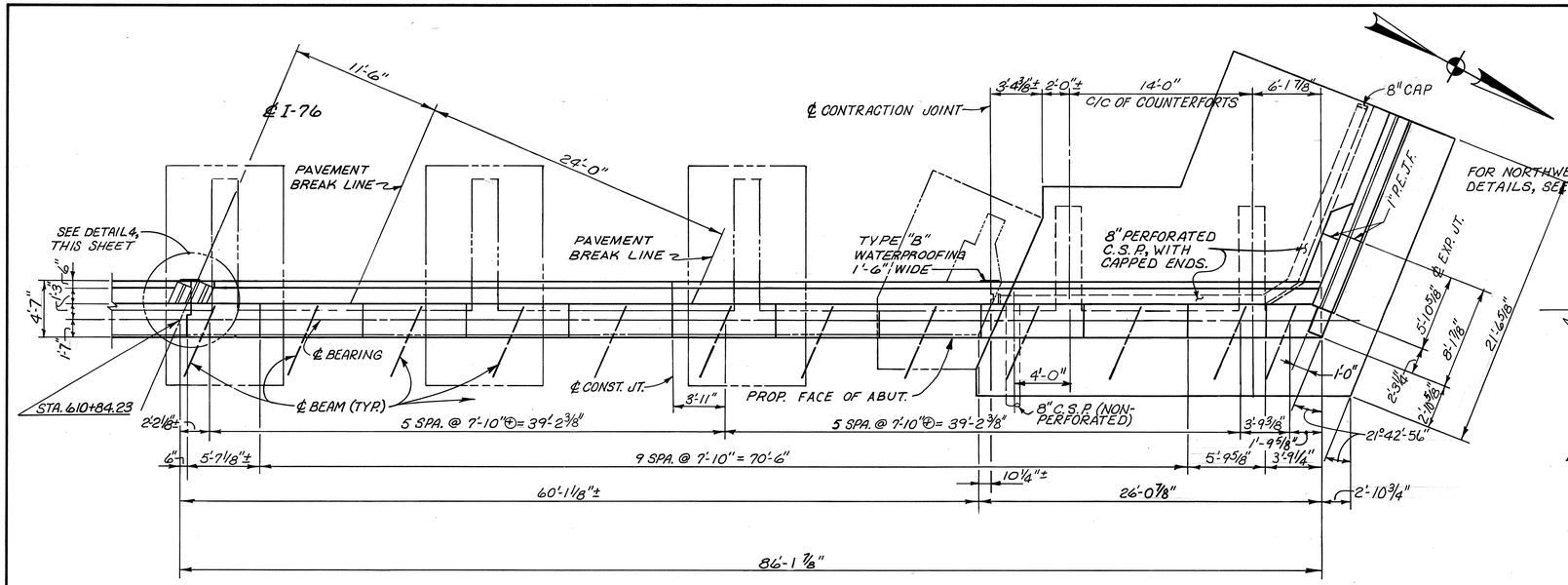

HALF PLAN

FOR NORTHWEST WING WALL DETAILS, SEE SHT. 16/31.

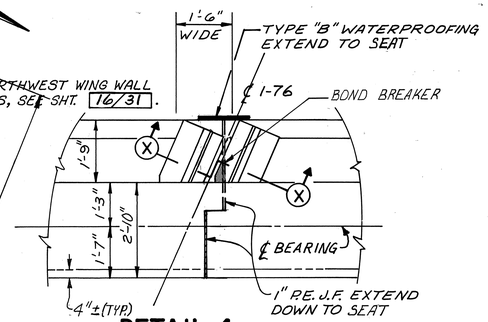

DETAIL 4

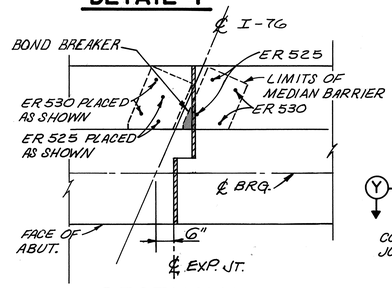

SECTION Y-Y

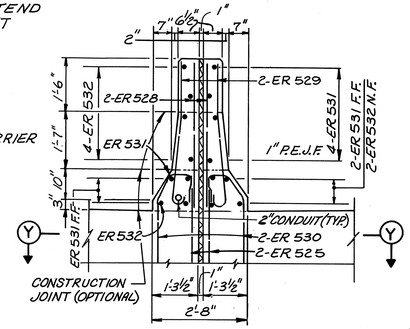

SECTION X-X

58-ER807 @ 18" C/C

PHASE 4 CONSTRUCTION — ℄ CONSTRUCTION JOINT — PHASE 2 CONSTRUCTION

25-ER 510 & 25-ER 514 @ 18" LAP W/EXIST. #6 BARS

16-ER 510 & 16-ER 514 @ 18" LAP W/EXIST. #6 BARS OR ER 538

18-ER 510 & 18-ER 512 (TOP)

18-ER 511 (BOTT.)

℄ EXPANSION JOINT

EL. 1039.16*

EL. 1033.62* PROFILE GRADE

EL. 1034.06*

EL. 1034.09*

SEE NOTE ④ ON SHT. 10/31

4-ER 538 (DOWELS) SEE NOTE ③ ON SHT. 10/31

EL. 1028.94

EL. 1028.83

EL. 1028.86

EL. 1033.60*

EL. 1032.77

ER 513 E.F.

ER 548 E.F.

ER 547 E.F.

ER 546 E.F. EL. 1029.03

5-ER 806

1" P.E.J.F. EXTEND DOWN TO SEAT

5-ER 513

5-ER 524

5-ER 535

3-ER 537

R 539

R 541

5-R 544 F.F.

EL. 1028.44

EL. 1028.02±

EL. 1028.77

EL. 1028.14±

EL. 1028.98

EL. 1028.27±

EL. 1029.12

EL. 1028.40±

EL. 1029.26

EL. 1028.42±

EL. 1029.32

EL. 1028.27±

EL. 1029.23

EL. 1028.12±

EL. 1028.05±

EL. 1029.11

EL. 1027.97

1" P.E.J.F. WIDTH VARIES TO MATCH EXISTING.

17-ER 505 N.F. & 15-R 506 F.F.

38-EXIST. #6 BARS @ 18"± E.F.

17-R 543 N.F. & 16-R 504 F.F. (LAP W/R 501)

15-R 540 @ 12"

EL. 1011.53

EXIST. 8" C.M.P.

TOP OF PROPOSED GROUNDLINE

16-R 501 @ 18" N.F. (DOWELS)

15-R 501 @ 18" F.F. (DOWELS)

INV. EL. 1009.85

EL. 1011.57

15-R 503 @ 12" F.F.

20-R 545 @ 12" CORNER BARS

19-R 513 @ 12" N.F.

10-R 501 N.F.

9-R 501 F.F. DOWELS

EL. 1006.00

12-R 810 @ 12"

#5 BARS ⊕

#8 BARS @ 12" ⊕ (TOP)

#9 BARS SPACE AS SHOWN (BOTT) ⊕

R-1007 (TOP) ⊕ R-910 (BOTT)

1'-3"

8 SPA. @ 3'-3" C/C OF 12" C.I.P.R.C.P. = 26'-0"

1'-6"

28'-8 3/8"

FOR ADDITIONAL PILING DETAILS, SEE SHEET 8/31.

HALF ELEVATION

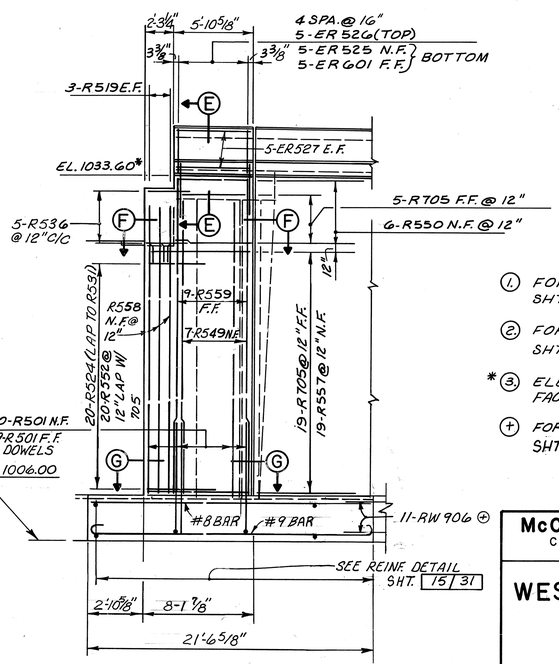

FOR PILE DETAILS, SEE SHEET 8/31

PARTIAL END ELEVTION
(LOOKING SOUTH)

NOTES

1. FOR ADDITIONAL NOTES SEE SHT. 10/31
2. FOR ADDITIONAL SECTIONS SEE SHT. 14/31
* ③ ELEVATIONS GIVEN AT TOP AND FACE OF ABUTMENT BACKWALL
⊕ FOR FOOTING REINFORCING SEE SHT. 15/31

McCOY ASSOCIATES INC. 11/31
CONSULTING ENGINEERS
AKRON, OHIO

WEST ABUTMENT DETAILS

BRIDGE NO. SUM 76-1296
AKRON EAST EXPRESSWAY
OVER MARTHA AVENUE
SUMMIT COUNTY STA. 610+81.52
611+54.83

DESIGNED	DRAWN	TRACED	CHECKED	REVIEWED	DATE	REVISED
TAB	BMR		RPL	MBC	2-29-88	

FHWA REGION	STATE	PROJECT	
5	OHIO		

1090
1214

SUMMIT COUNTY
SUM 76-11.57

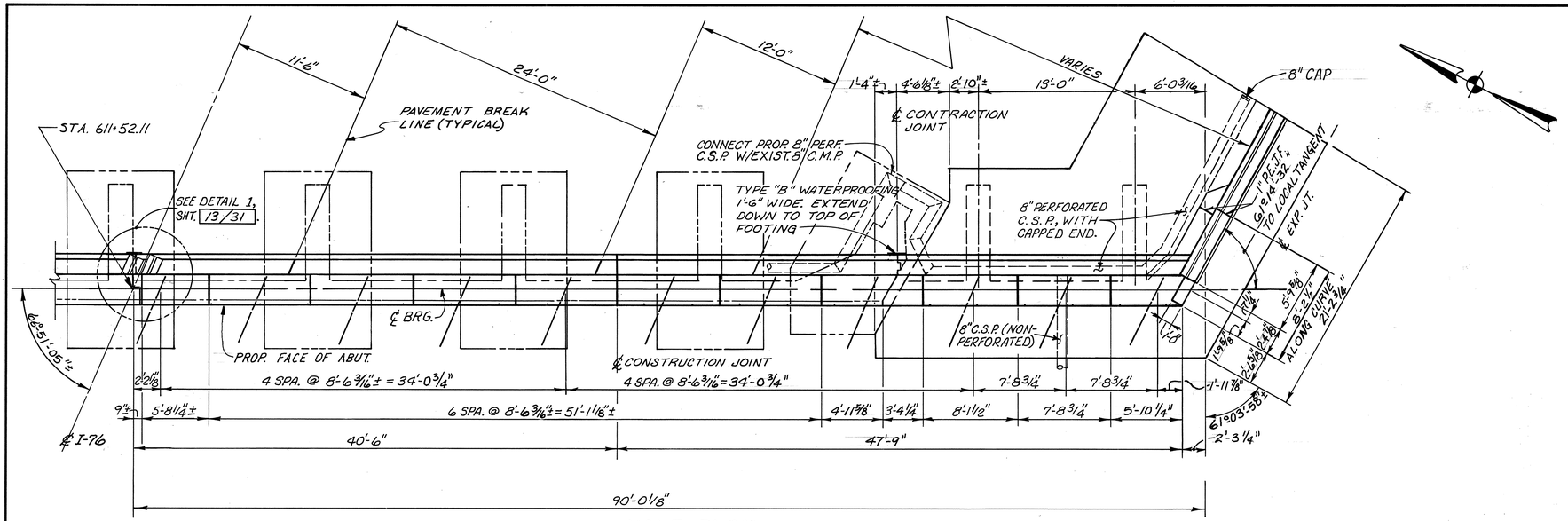

HALF PLAN

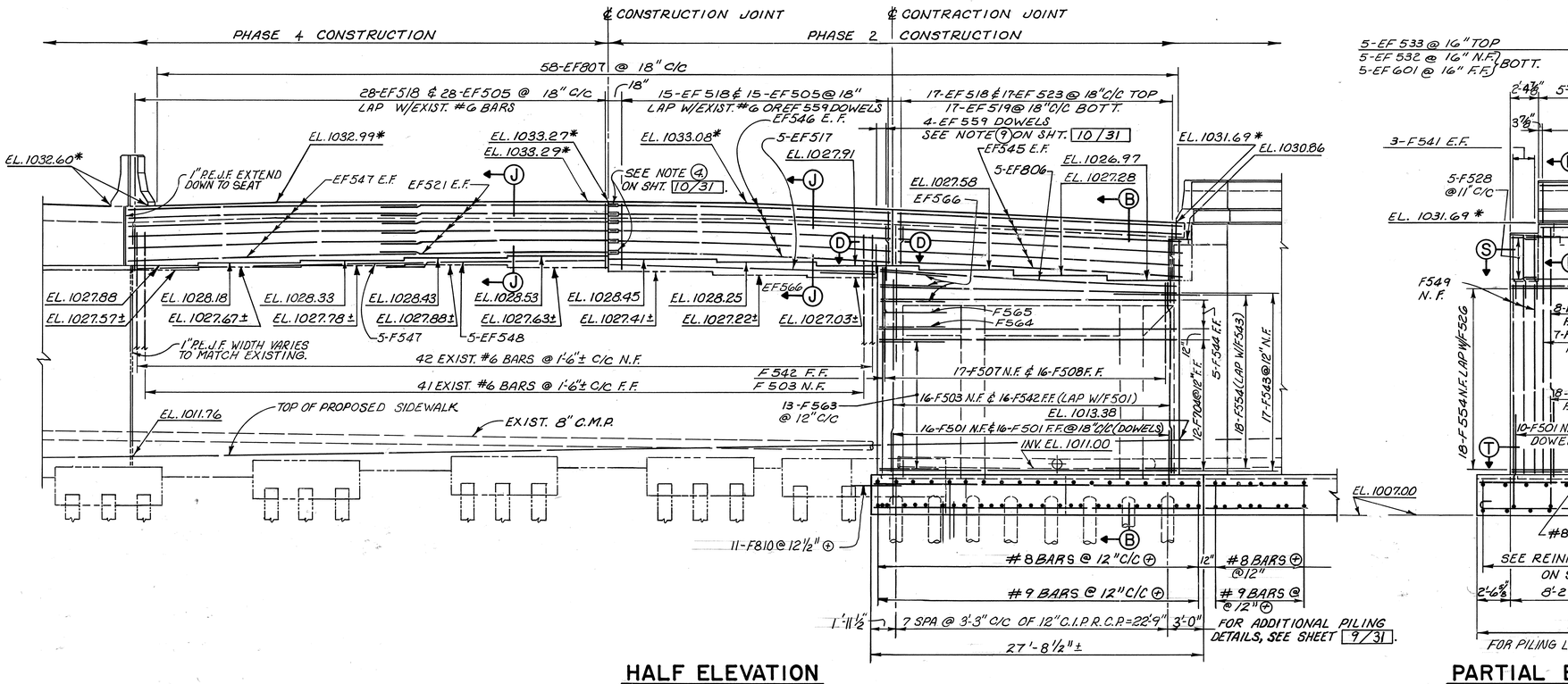

HALF ELEVATION

⊕ FOR FOOTING REINFORCEMENT SEE SHEET 15/31

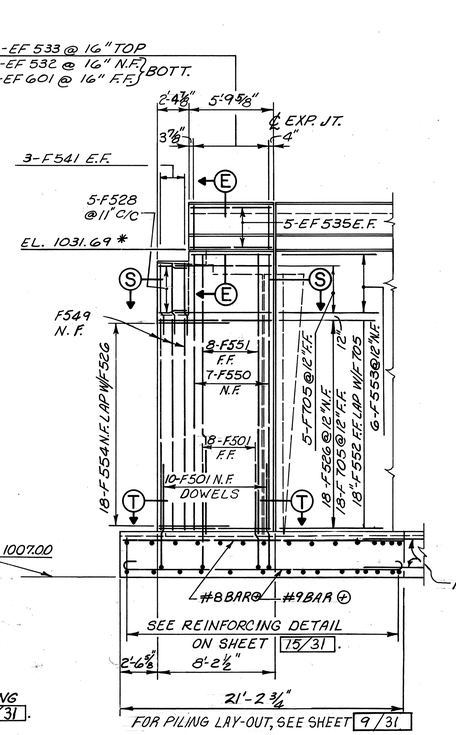

PARTIAL END ELEVATION
(LOOKING NORTH)

NOTES

1. FOR ADDITIONAL NOTES SEE SHT. 10/31
2. FOR ADDITIONAL SECTIONS & DETAILS SEE SHT. 14/31
3. * ELEVATIONS GIVEN AT TOP AND FACE OF ABUTMENT BACKWALL

McCOY ASSOCIATES INC. 12/31
CONSULTING ENGINEERS
AKRON, OHIO

EAST ABUTMENT DETAILS

BRIDGE NO. SUM 76-1296
AKRON EAST EXPRESSWAY
OVER MARTHA AVENUE
SUMMIT COUNTY STA. 610+81.52
611+54.83

DESIGNED	DRAWN	TRACED	CHECKED	REVIEWED	DATE	REVISED
TAB	BMR		RPL	MSC	2-29-88	

FHWA REGION	STATE	PROJECT	
5	OHIO		

1091
12.14

SUMMIT COUNTY
SUM 76 - 11.57

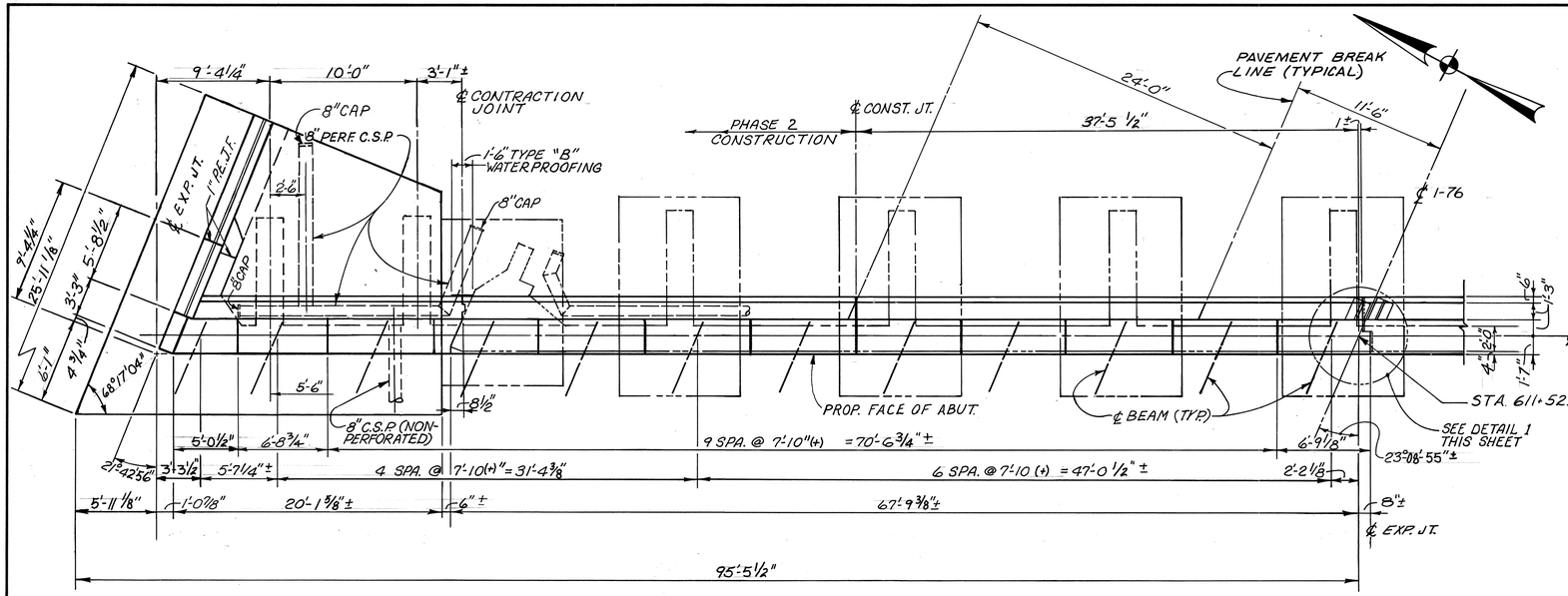

HALF PLAN

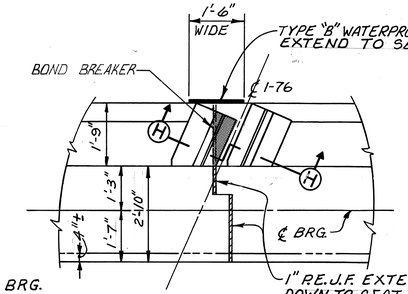

DETAIL 1

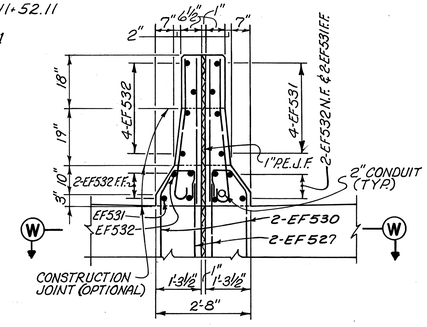

SECTION H-H

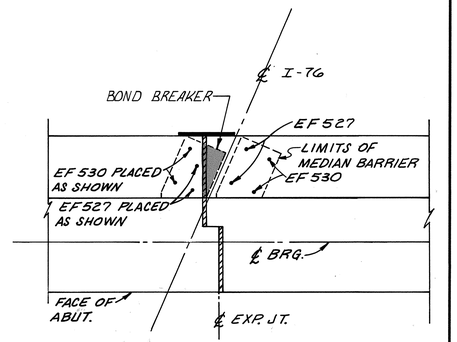

SECTION W-W

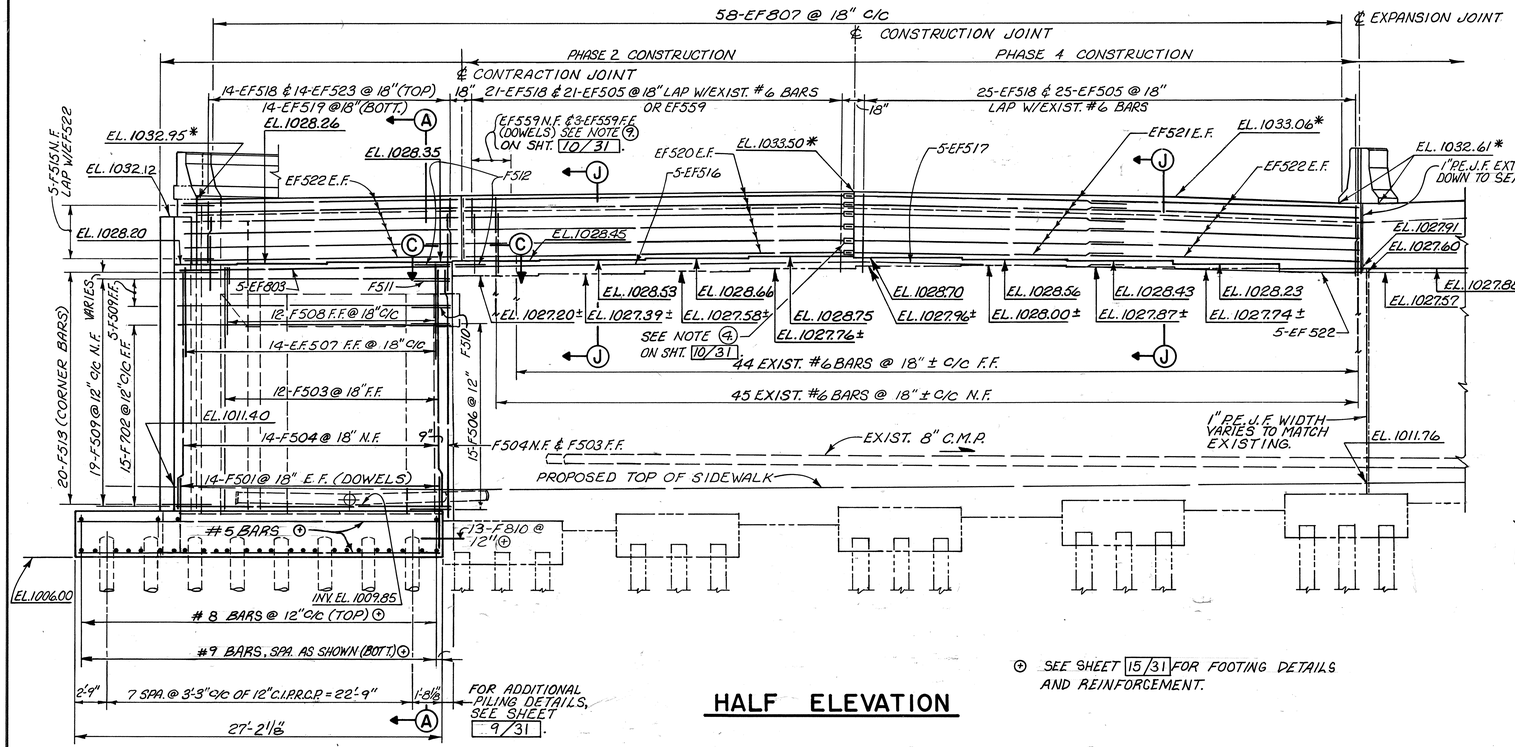

HALF ELEVATION

⊕ SEE SHEET 15/31 FOR FOOTING DETAILS AND REINFORCEMENT.

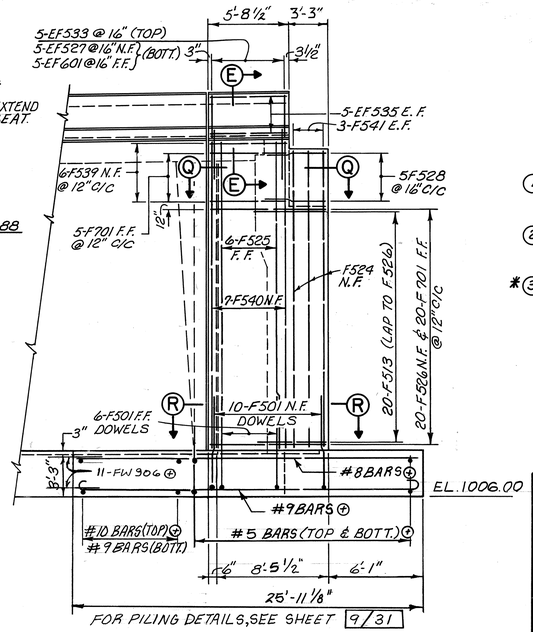

FOR PILING DETAILS, SEE SHEET 9/31

PARTIAL END ELEVATION
(LOOKING SOUTH)

NOTES

① FOR ADDITIONAL NOTES, SEE SHT. 10/31.

② FOR ADDITIONAL SECTIONS, SEE SHT. 14/31.

*③ ELEVATIONS GIVEN AT TOP AND FACE OF ABUTMENT BACKWALL.

McCOY ASSOCIATES INC. 13/31
CONSULTING ENGINEERS
AKRON, OHIO

EAST ABUTMENT DETAILS

BRIDGE NO. SUM 76-1296
AKRON EAST EXPRESSWAY
OVER MARTHA AVENUE
SUMMIT COUNTY STA. 610+81.52
611+54.83

DESIGNED	DRAWN	TRACED	CHECKED	REVIEWED	DATE	REVISED
TAB	BMR		RPL	MSC	2-29-88	

FHWA REGION	STATE	PROJECT	
5	OHIO		

SUMMIT COUNTY
SUM 76 – 11.57

1092
12.14

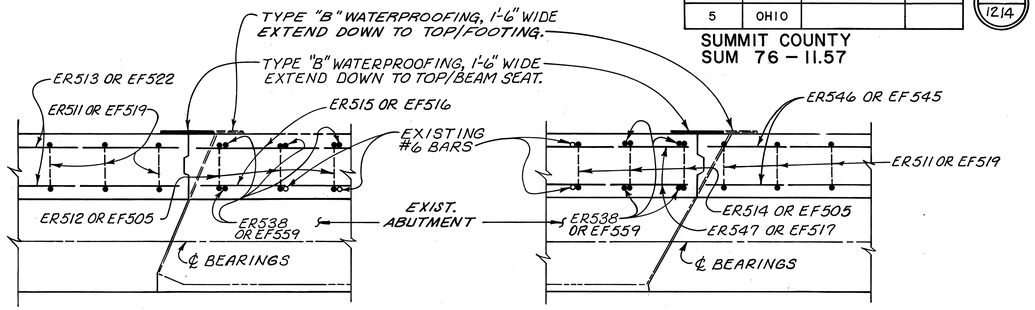

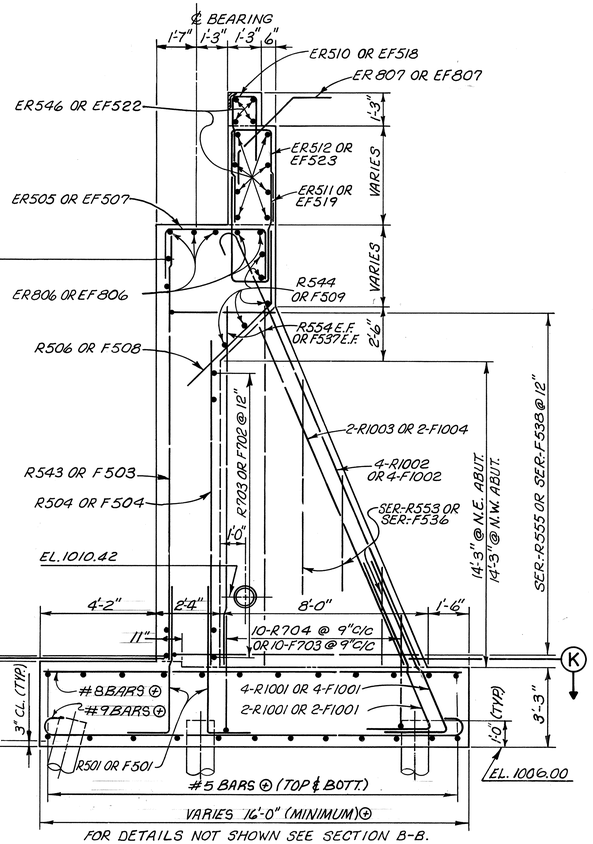

FOR DETAILS NOT SHOWN SEE SECTION B-B.

SECTION A–A

⊕ SEE SHEET 15/31 FOR FOOTING DETAILS AND REINFORCEMENT

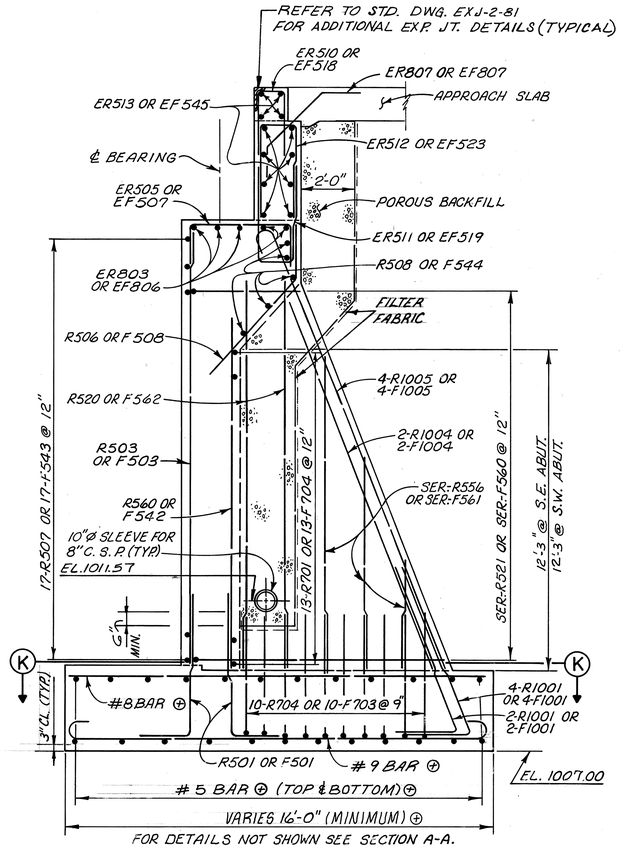

FOR DETAILS NOT SHOWN SEE SECTION A-A.

SECTION B–B

SECTION C–C

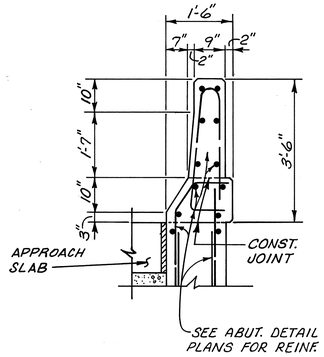

SECTION D–D

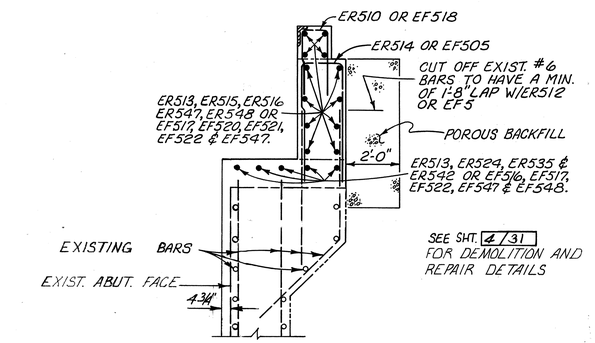

SECTION J–J

SECTION E–E

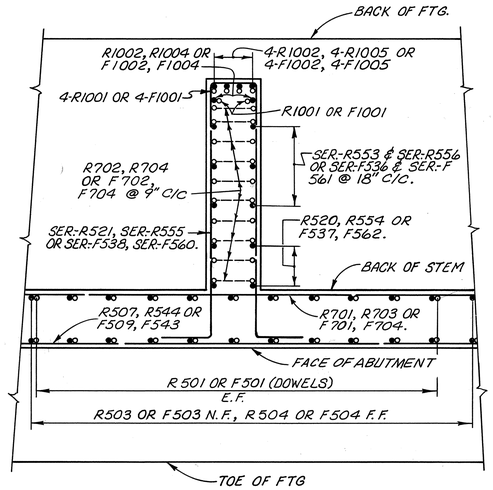

SECTION K–K

NOTES

(1) FOR ADDITIONAL NOTES SEE SHT. 10/31

McCOY ASSOCIATES INC. 14/31
CONSULTING ENGINEERS
AKRON, OHIO

ABUTMENT DETAILS

BRIDGE NO. SUM 76–1296
AKRON EAST EXPRESSWAY
OVER MARTHA AVENUE
SUMMIT COUNTY STA. 610+81.52
611+54.83

DESIGNED	DRAWN	TRACED	CHECKED	REVIEWED	DATE	REVISED
TAB	BMR		RPL	MBC	2-29-88	

FHWA REGION	STATE	PROJECT	
5	OHIO		

1093
1214

SUMMIT COUNTY
SUM. 76-11.57

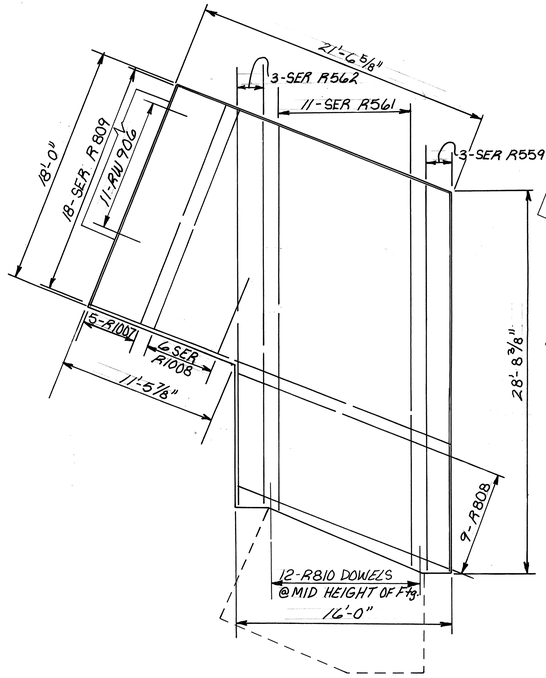

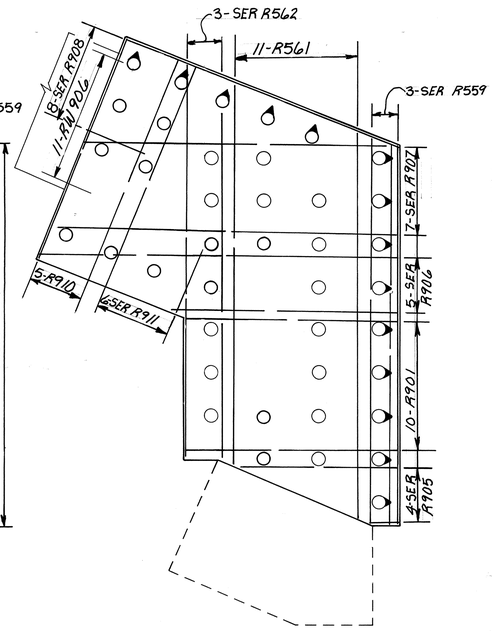

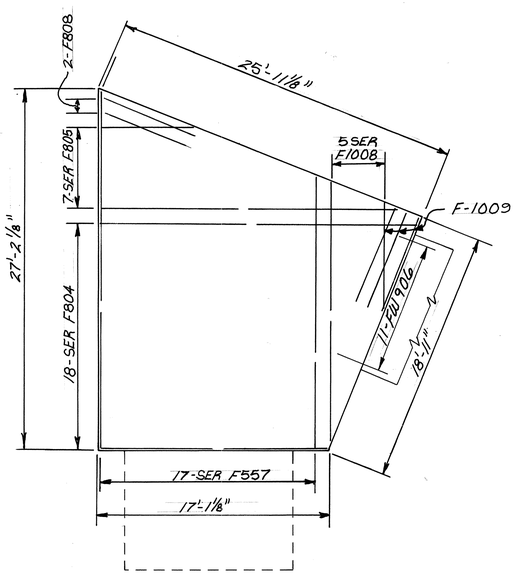

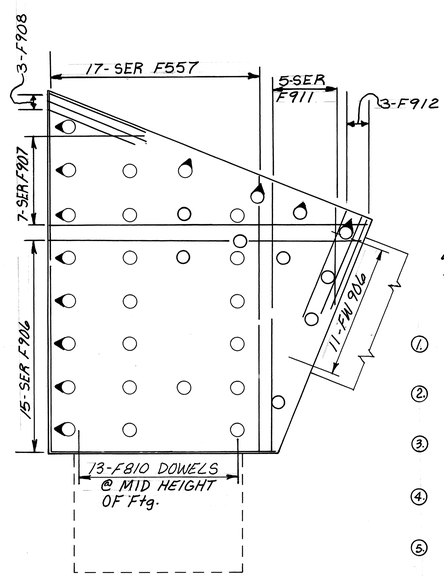

NOTES

1. FOR PILING DETAILS, SEE SHEETS 8/31 AND 9/31
2. FOR NORTHWEST ABUTMENT DETAILS, SEE SHEET 11/31
3. FOR SOUTHWEST ABUTMENT DETAILS, SEE SHEET 10/31
4. FOR NORTHEAST ABUTMENT DETAILS, SEE SHEET 13/31
5. FOR SOUTHEAST ABUTMENT DETAILS, SEE SHEET 12/31

REINFORCING IN TOP

REINFORCING IN BOTTOM

NORTHWEST FOOTING

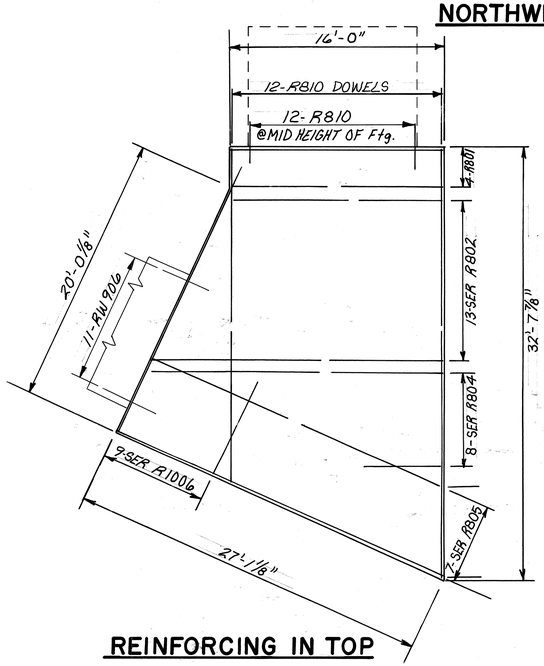

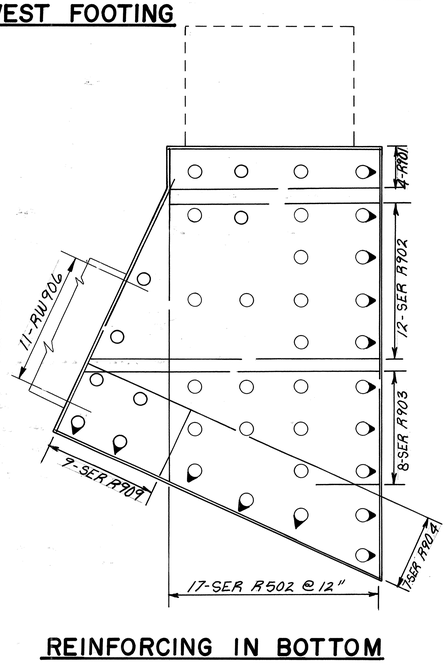

REINFORCING IN TOP

REINFORCING IN BOTTOM

SOUTHWEST FOOTING

NORTHEAST FOOTING

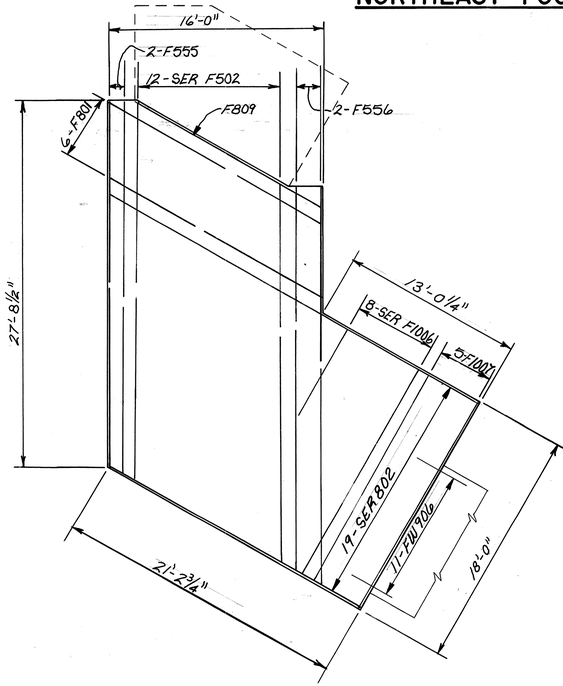

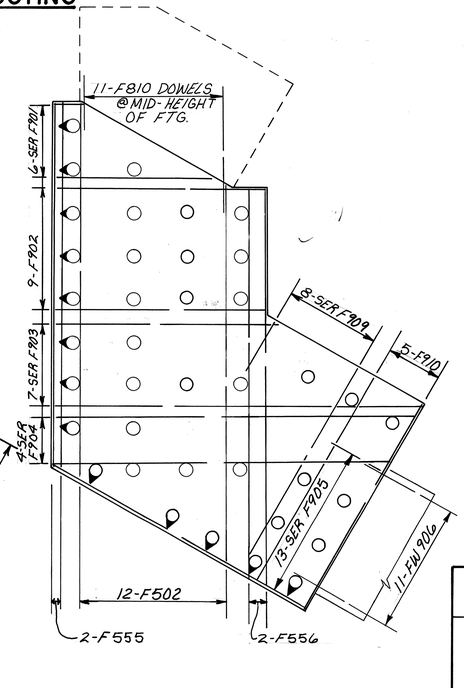

REINFORCING IN TOP

REINFORCING IN BOTTOM

SOUTHEAST FOOTING

McCOY ASSOCIATES, INC. 15/31
CONSULTING ENGINEERS
AKRON, OHIO

ABUTMENT FOOTING REINFORCEMENT

BRIDGE NO. SUM 76-1296
AKRON EAST EXPRESSWAY
OVER MARTHA AVENUE
SUMMIT COUNTY STA. 610+81.52
611+54.83

DESIGNED	DRAWN	TRACED	CHECKED	REVIEWED	DATE	REVISED
TAB	J.W.D.		J.B.H.	MSC	10/89	

520691

FHWA REGION	STATE	PROJECT	
5	OHIO		

1094
1214

SUMMIT COUNTY
SUM 76-11.57

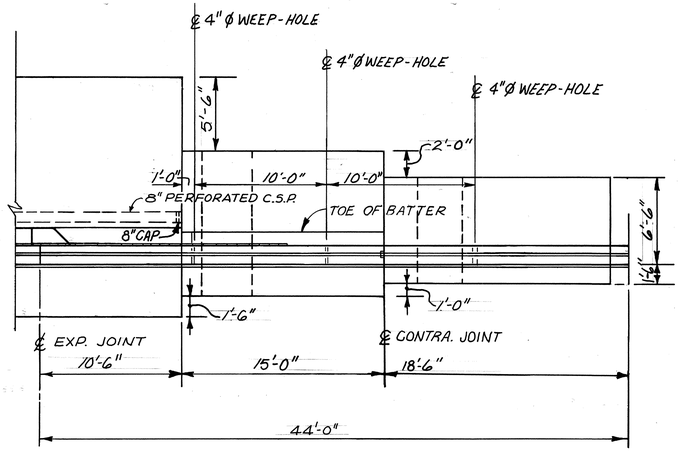

FOR ABUTMENT DETAILS, SEE SHEET 11/31.
FOR ABUTMENT FOOTING DETAILS, SEE SHEET 15/31

PLAN
NORTHWEST WINGWALL

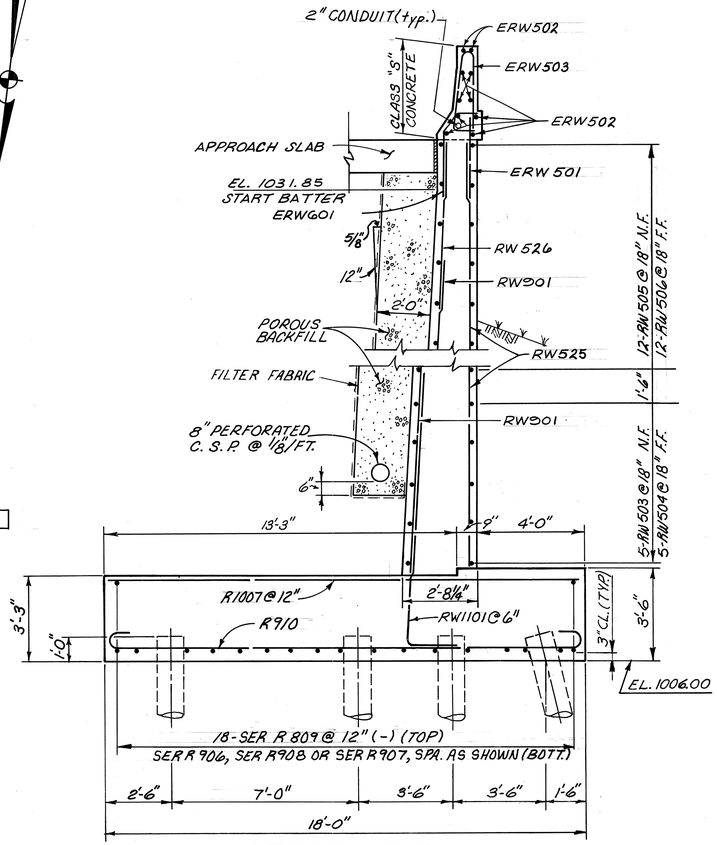

SECTION P-P

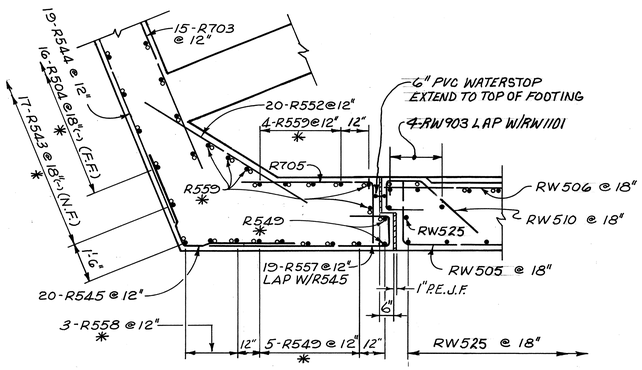

SECTION G-G

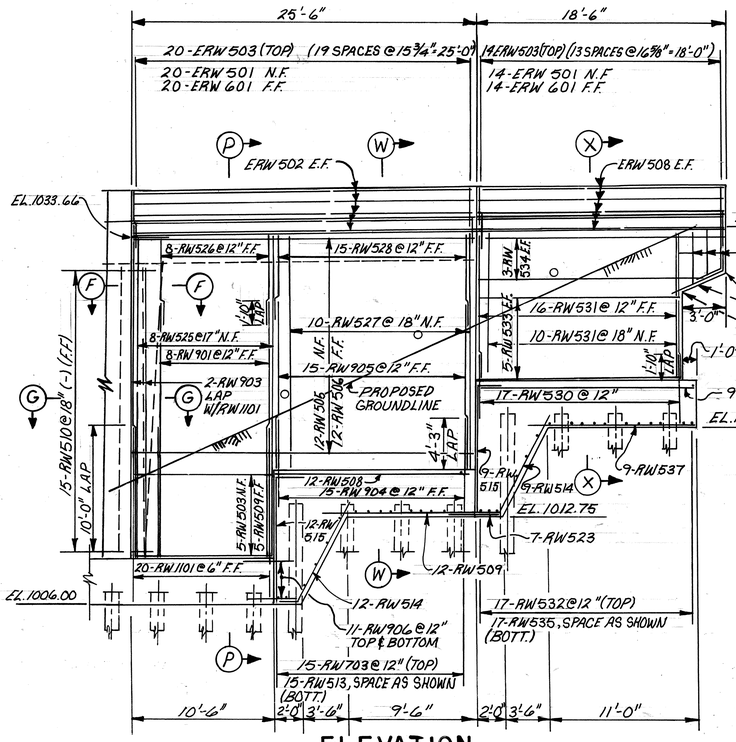

ELEVATION
NORTHWEST WINGWALL

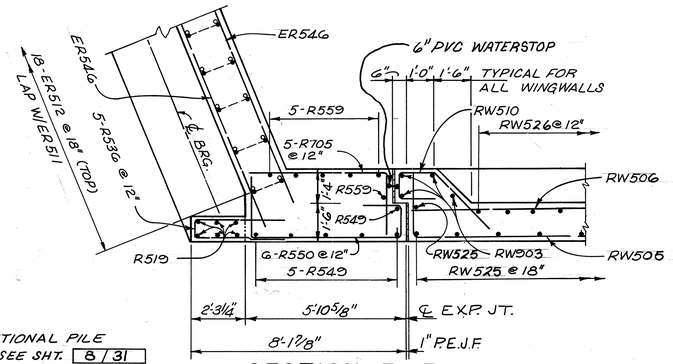

FOR ADDITIONAL PILE DETAILS SEE SHT. 8/31

SECTION F-F

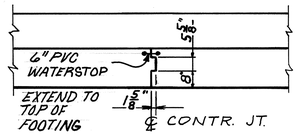

CONTRACTION JOINT DETAIL

NOTES
1. FOR ADDITIONAL NOTES SEE SHT. 10/31 & 19/31
2. FOR SECTIONS W-W & X-X, SEE SHEET 20/31
3. * INDICATES - LAP WITH R501 BARS.

McCOY ASSOCIATES INC. 16/31
CONSULTING ENGINEERS
AKRON, OHIO

NORTHWEST WINGWALL & DETAILS

BRIDGE NO. SUM 76-1296
AKRON EAST EXPRESSWAY
OVER MARTHA AVENUE
SUMMIT COUNTY STA. 610+81.52
611+54.83

DESIGNED	DRAWN	TRACED	CHECKED	REVIEWED	DATE	REVISED
TAB	J.D.P. BMR		RPL	MSC	2-29-88	

FHWA REGION	STATE	PROJECT	
5	OHIO		

1095
12.14

SUMMIT COUNTY
SUM 76-11.57

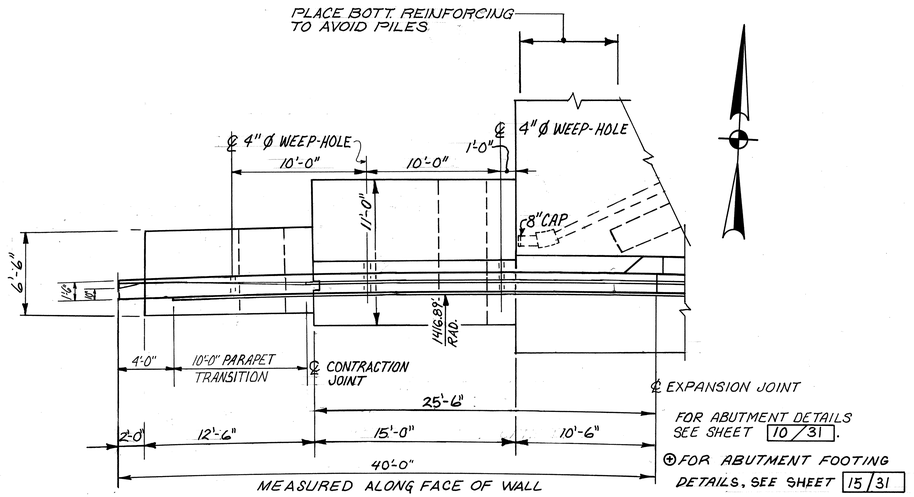

PLAN
SOUTHWEST WINGWALL

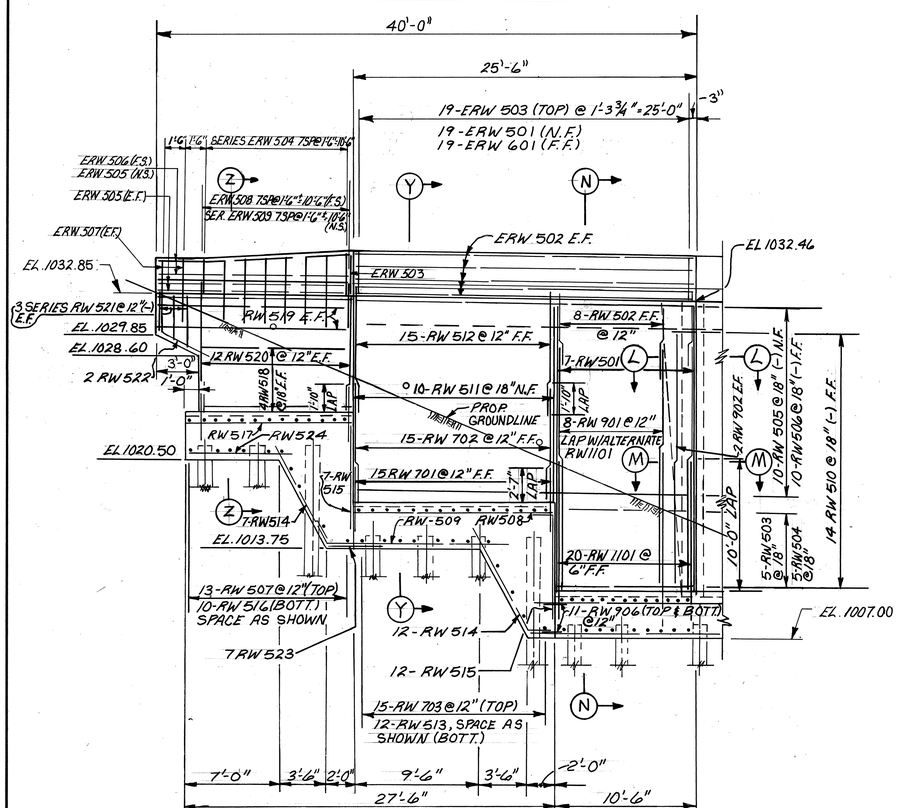

ELEVATION
SOUTHWEST WINGWALL

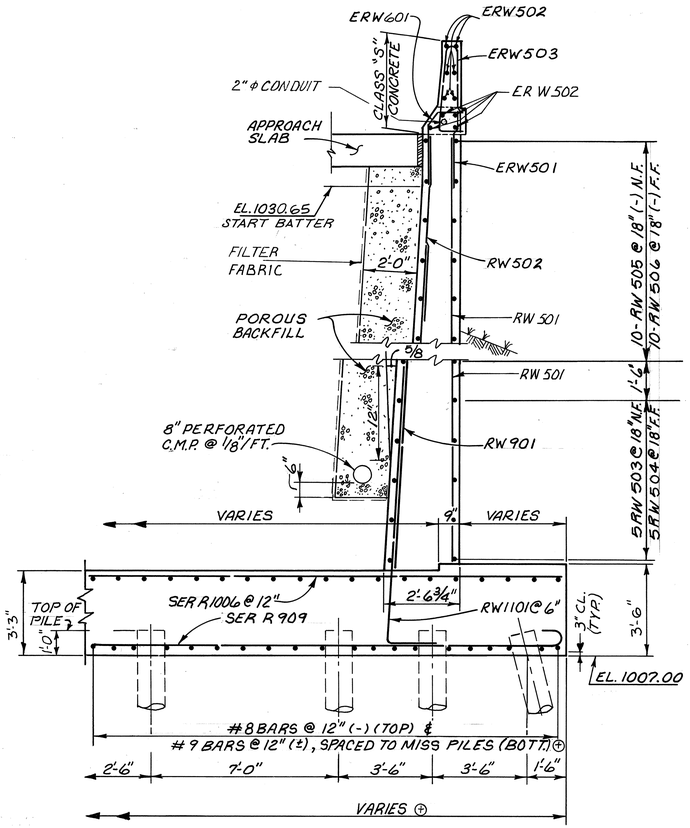

SECTION N-N

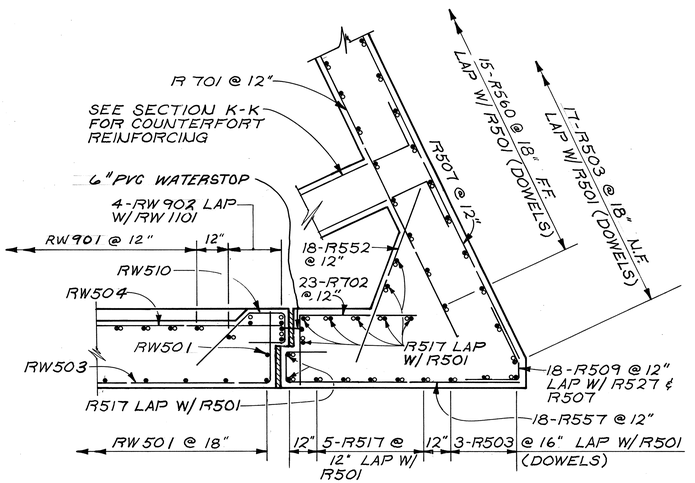

SECTION M-M

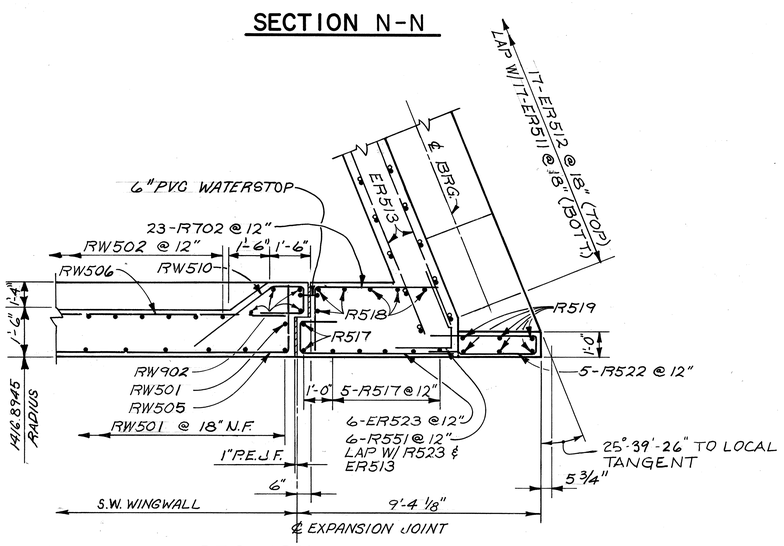

SECTION L-L

NOTES

1. SEE SHEET 17A/31 FOR ADDITIONAL BRIDGE RAILING DEFLECTION PARAPET DETAILS.
2. FOR ADDITIONAL NOTES SEE SHT. 10/31
3. FOR CONTRACTION JOINT DETAIL SEE SHT. 16/31
4. FOR SECTIONS Y-Y AND Z-Z, SEE SHT. 20/31
5. FOR PILING PLAN, SEE SHEET 8/31

McCOY ASSOCIATES INC. 17/31
CONSULTING ENGINEERS
AKRON, OHIO

SOUTHWEST WINGWALL & DETAILS

BRIDGE NO. SUM 76-1296
AKRON EAST EXPRESSWAY
OVER MARTHA AVENUE
SUMMIT COUNTY STA. 610+81.52
611+54.83

DESIGNED	DRAWN	TRACED	CHECKED	REVIEWED	DATE	REVISED
TAB	BMR		RPL	MSC	2-29-88	

FHWA REGION	STATE	PROJECT	
5	OHIO		

1096
12.14

SUMMIT COUNTY
SUM 76-11.57

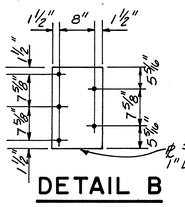

DETAIL B

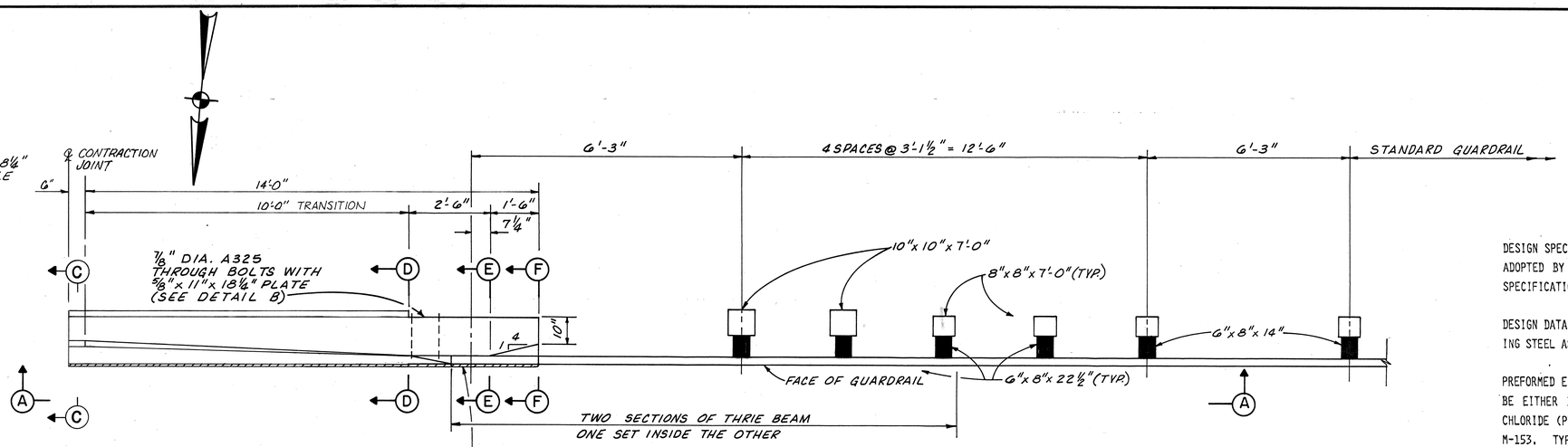

PART PLAN OF SOUTH PARAPET AT WEST ABUTMENT

NOTE: THE THRIE BEAM TERMINAL CONNECTOR SHALL FIT UNDER THE STANDARD GUARDRAIL SECTION AT THE APPROACH END. ALL LAPS SHALL BE IN THE DIRECTION OF TRAFFIC.

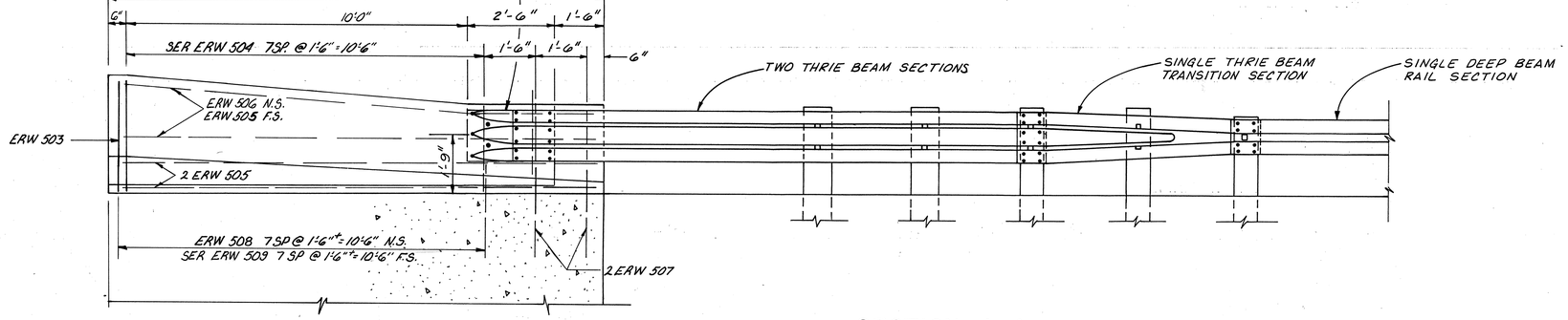

SECTION A-A

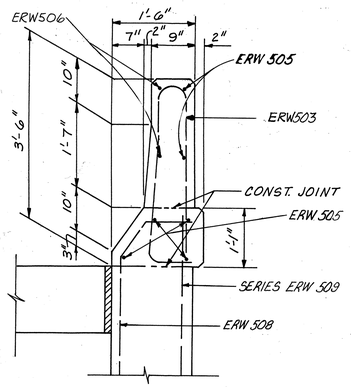

SECTION C-C

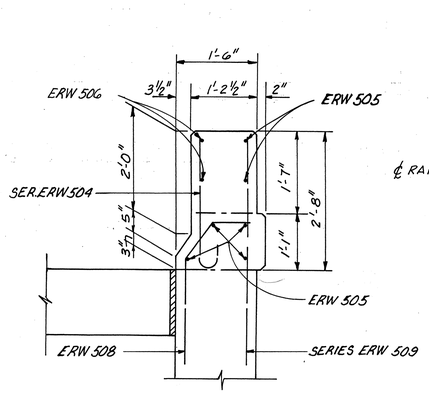

SECTION D-D

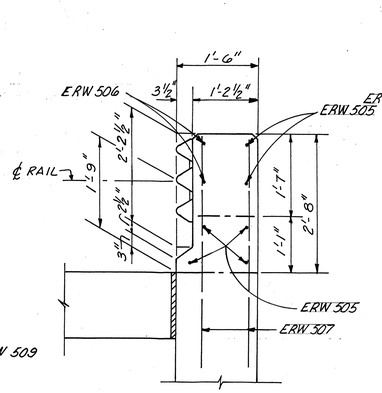

SECTION E-E

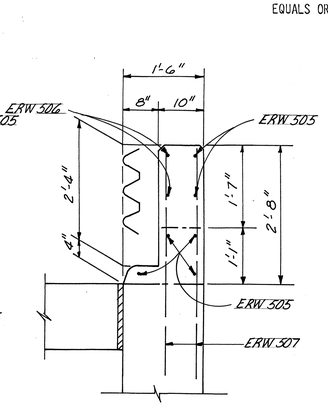

SECTION F-F

GENERAL NOTES

DESIGN SPECIFICATIONS: "STANDARD SPECIFICATIONS FOR HIGHWAY BRIDGES" ADOPTED BY AASHTO 1989, INCLUDING THE OHIO "SUPPLEMENT" TO THESE SPECIFICATIONS.

DESIGN DATA: CONCRETE CLASS S f'c=4500 P.S.I. fc=1500 P.S.I. REINFORCING STEEL ASTM A615, A616 OR A617 GRADE 60 fs=24,000 P.S.I.

PREFORMED EXPANSION JOINT FILLER IN THE PARAPET DEFLECTION JOINTS MAY BE EITHER 1/4" GRAY SPONGE RUBBER OR 1/4" GRAY CELLULAR POLYVINYL CHLORIDE (PVC) SPONGE. SPONGE RUBBER FILLER SHALL CONFORM TO AASHTO M-153, TYPE I. DENSITY OF PVC SPONGE NOT BE LESS THAN 20 LBS. PER CU. FT.

DEFLECTION JOINTS SHALL BE SPACED AT 16'-0" CENTERS, MAX.. EXCEPT THAT FOR CONTINUOUS STRUCTURES THE PANELS SHALL BE FURTHER SUBDIVIDED IN THE NEGATIVE MOMENT REGION (OVER THE PIERS) INTO LENGTHS OF NOT LESS THAN 5'-0" NOR MORE THAN 7'-6". REINFORCING BARS SHALL NOT EXTEND THROUGH DEFLECTION JOINTS.

CONCRETE PARAPETS ABOVE UPPER CONSTRUCTION JOINT SHALL BE PLACED IN ALTERNATE SECTIONS BY THE USE OF BULKHEADS. CLOSING SECTIONS SHALL BE PLACED AFTER REMOVAL OF BULKHEADS AND AFTER PLACEMENT OF EXPANSION JOINT FILLER. EXPOSED EDGES OF THE FILLER SHALL BE PLUSH WITH THE SURFACE OF CONCRETE AND SHALL BE FREE OF MORTAR.

PAYMENT: ADDITIONAL GUARDRAIL COST IN EXCESS OF NORMAL GUARDRAIL COST, SUCH AS: TERMINAL CONNECTOR, STEEL PLATE, BOLTS, NUTS, PLATE WASHERS AND OTHER HARDWARE SHALL BE INCLUDED WITH BRIDGE TERMINAL ASSEMBLY FOR PAYMENT. QUANTITIES OF CONCRETE AND REINFORCING STEEL FOR PARAPET ARE INCLUDED WITH THEIR APPROPRIATE ITEM UNDER EITHER ABUTMENTS OR SUPERSTRUCTURE FOR PAYMENT.

POSTS SHALL BE SQUARE-SAWED PRESSURE TREATED WOOD AS PER 710.14. POSTS SHALL BE FABRICATED WITH SQUARE ENDS. BOLT HOLES SHALL BE BORED AND TOPS OF POSTS TRIMMED. IF REQUIRED, AFTER POSTS ARE SET, POSTS MAY BE SET IN DRILLED HOLES OR DRIVEN TO GRADE. STEEL POSTS AND BLOCKOUTS MAY BE FURNISHED AS AN ALTERNATE, PROVIDED THAT THE STRENGTH EQUALS OR EXCEEDS THE STRENGTH OF WOOD POSTS AND BLOCKOUTS.

McCOY ASSOCIATES, INC.
CONSULTING ENGINEERS
AKRON, OHIO

17A/31

BRIDGE RAILING DEFLECTOR PARAPET TYPE

BRIDGE NO. SUM 76-1296
AKRON EAST EXPRESSWAY
OVER MARTHA AVENUE
SUMMIT COUNTY STA. 610+81.52
611+54.83

DESIGNED	DRAWN	TRACED	CHECKED	REVIEWED	DATE	REVISED
GCK	DAK		JGC	JBH	8-15-90	

520691

FHWA REGION	STATE	PROJECT	
5	OHIO		

1097
12.14

SUMMIT COUNTY
SUM 76-11.57

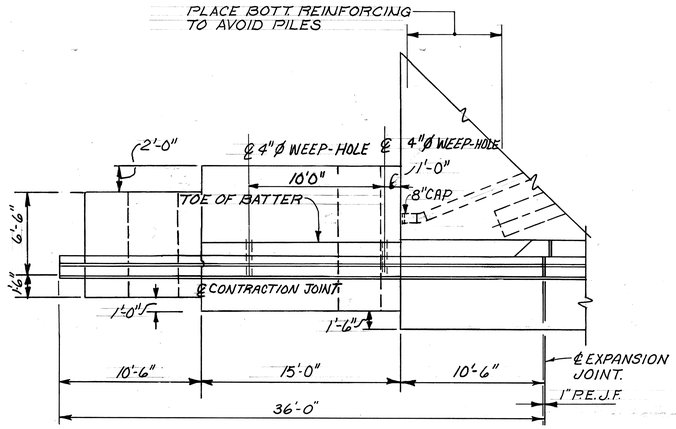

FOR ABUTMENT DETAILS, SEE SHEET 13/31.

PLAN
NORTHEAST WINGWALL

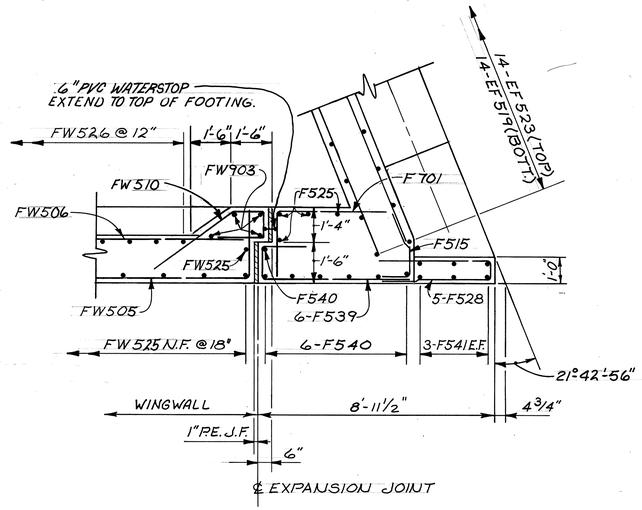

SECTION Q-Q

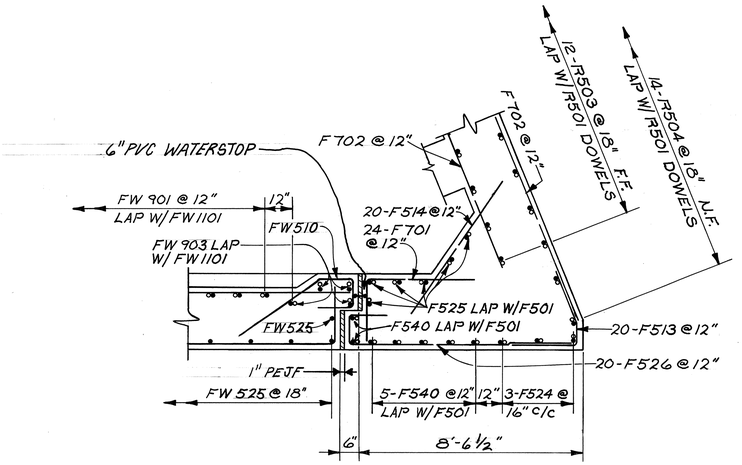

SECTION R-R

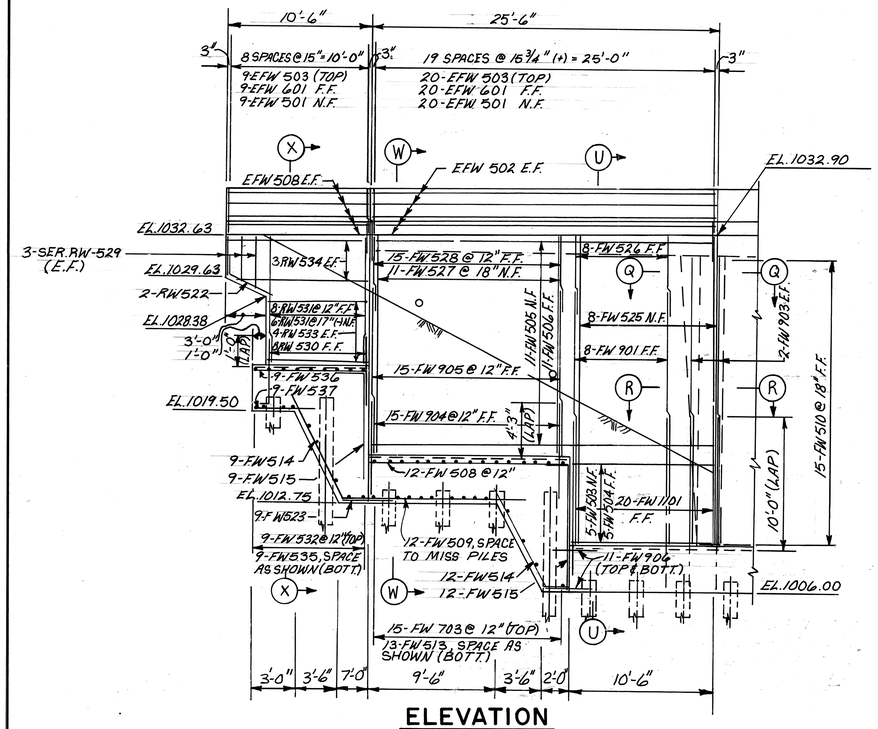

ELEVATION
NORTHEAST WINGWALL

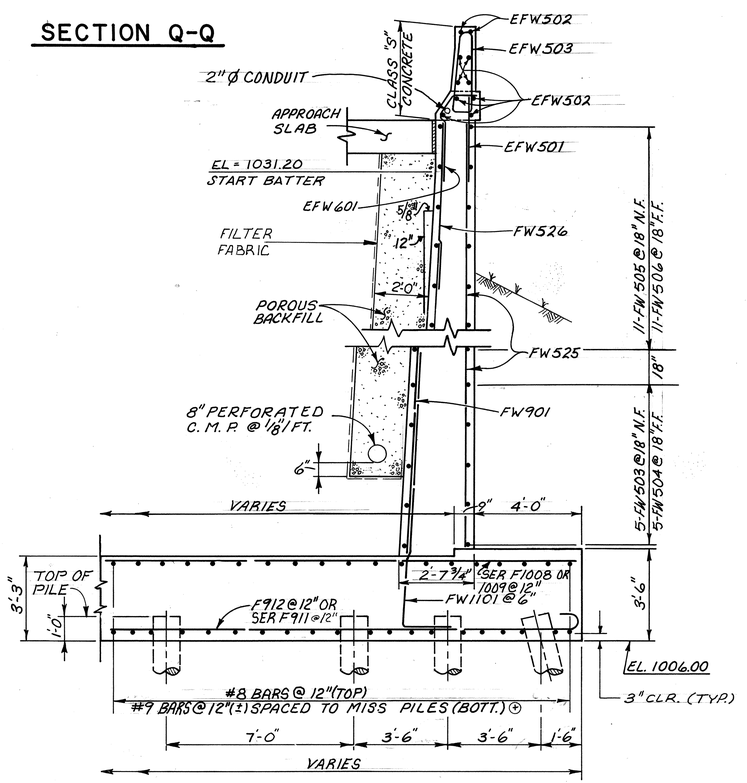

SECTION U-U

NOTES

1. SEE SHEET ⊖ FOR ADDITIONAL BRIDGE RAILING DEFLECTION PARAPET DETAILS.
2. FOR ADDITIONAL NOTES SEE SHT. 10/31
3. FOR CONTRACTION JOINT DETAIL SEE SHT. 16/31
4. FOR SECTIONS W-W AND X-X, SEE SHT. 20/31
+. FOR ABUTMENT FOOTING DETAILS, SEE SHT. 15/31

McCOY ASSOCIATES INC. 18/31
CONSULTING ENGINEERS
AKRON, OHIO

NORTHEAST WINGWALL & DETAILS

BRIDGE NO. SUM 76-1296
AKRON EAST EXPRESSWAY
OVER MARTHA AVENUE
SUMMIT COUNTY STA. 610+81.52
611+54.83

DESIGNED	DRAWN	TRACED	CHECKED	REVIEWED	DATE	REVISED
TAB	BMR		RPL	MSC	2-29-88	

FHWA REGION	STATE	PROJECT	
5	OHIO		

1098
12.14

SUMMIT COUNTY
SUM 76-11.57

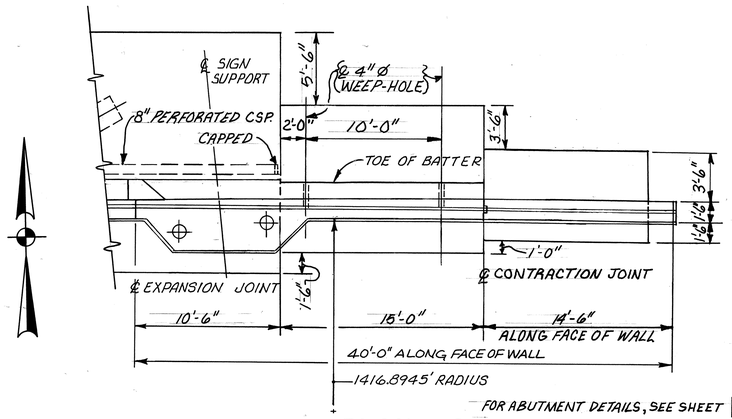

PLAN
(SOUTHEAST WINGWALL)

FOR ABUTMENT DETAILS, SEE SHEET 12/31

⊕ FOR ABUTMENT FOOTING DETAILS, SEE SHEET 15/31

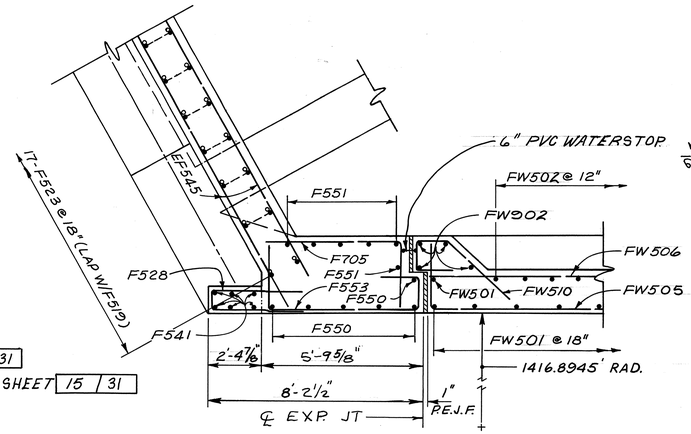

SECTION S-S

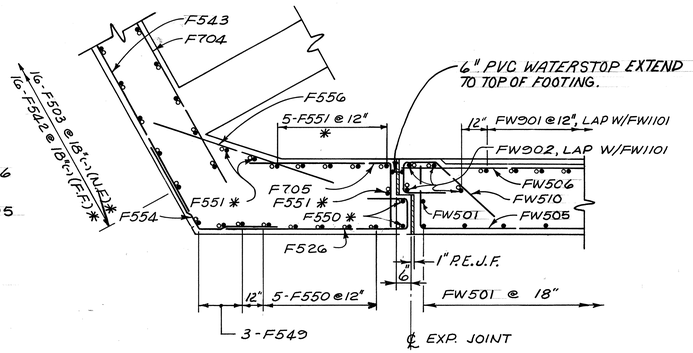

SECTION T-T

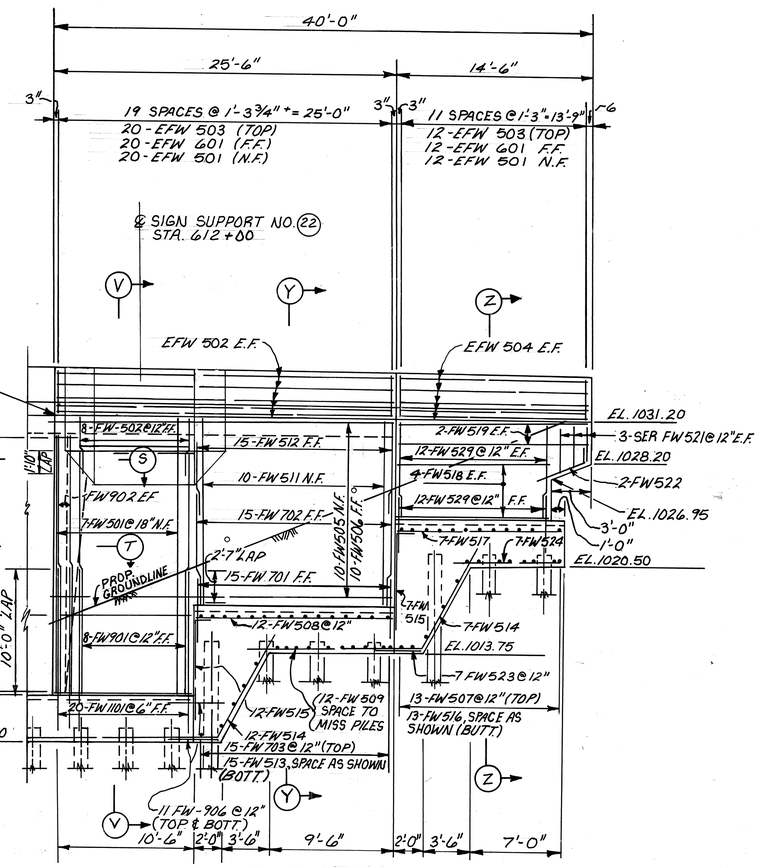

ELEVATION
(SOUTHEAST WINGWALL)

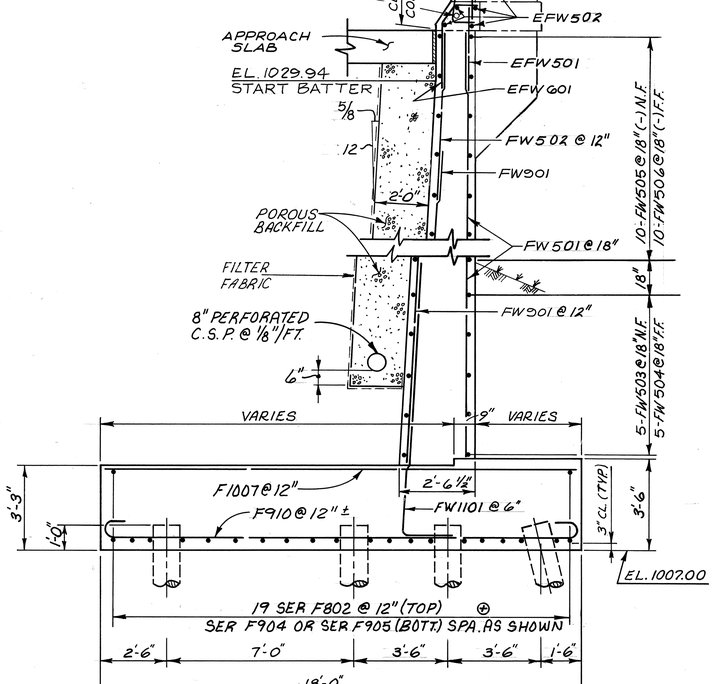

SECTION V-V

NOTES

1. FOR SIGN SUPPORT DETAILS, SEE SHEET 20/31
2. FOR SECTIONS Y-Y AND Z-Z, SEE SHT. 20/31
3. FOR ADDITIONAL NOTES SEE SHT. 10/31
4. FOR CONTRACTION JOINT DETAILS SEE 16/31
5. * INDICATES, LAP WITH F501 BARS.
6. ABBREVIATIONS:
   N.F. = NEAR FACE
   F.F. = FAR FACE
   E.F. = EACH FACE
   EL. = ELEVATION
   BOTT. = BOTTOM

McCOY ASSOCIATES INC.
CONSULTING ENGINEERS
AKRON, OHIO

19/31

SOUTHEAST WINGWALL & DETAILS

BRIDGE NO. SUM 76-1296
AKRON EAST EXPRESSWAY
OVER MARTHA AVENUE
SUMMIT COUNTY STA. 610+81.52
611+54.83

DESIGNED	DRAWN	TRACED	CHECKED	REVIEWED	DATE	REVISED
TAB	BMR		RPL	MSC	2-29-88	

FHWA REGION	STATE	PROJECT	
5	OHIO		

1099
12.14

SUMMIT COUNTY
SUM. 76-11.57

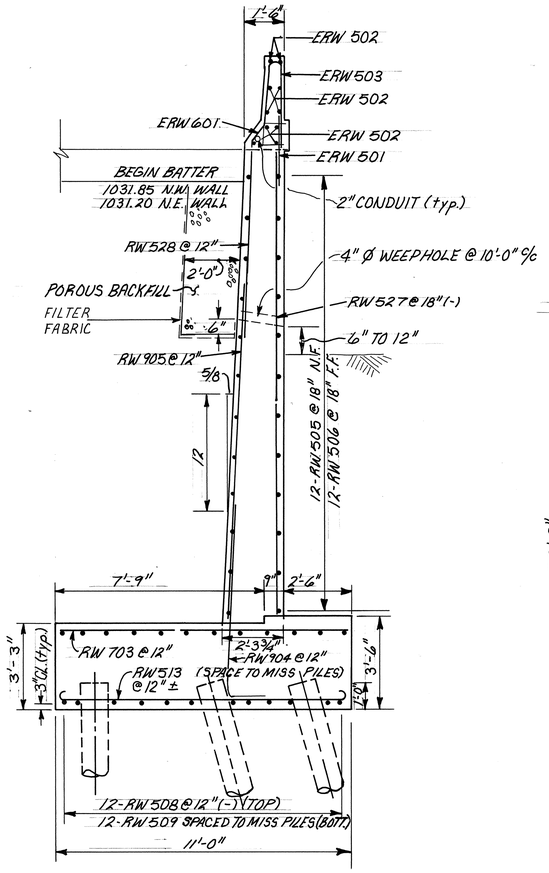

SECTION W-W

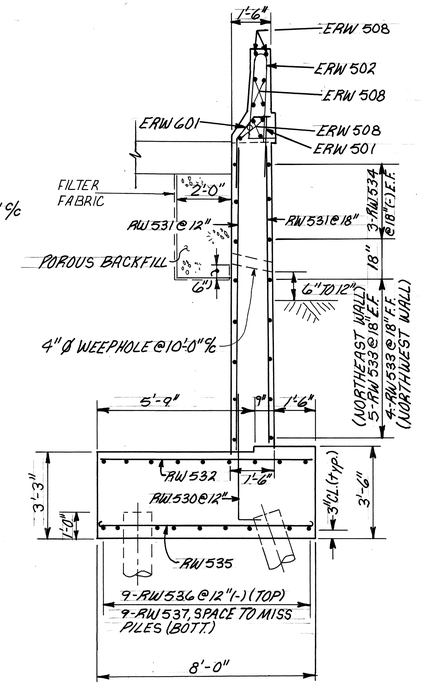

SECTION X-X

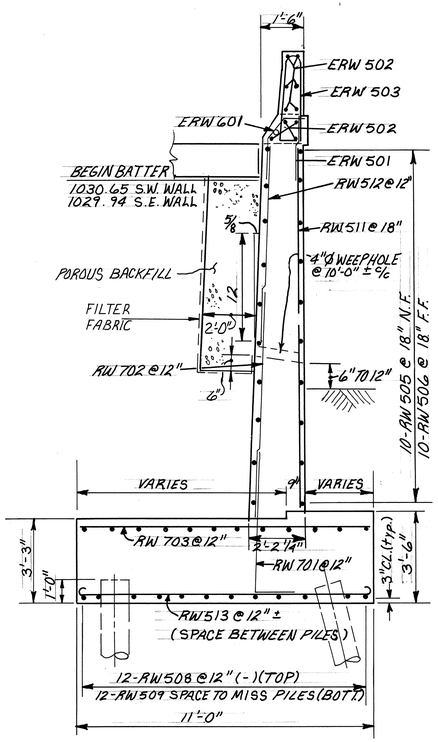

SECTION Y-Y

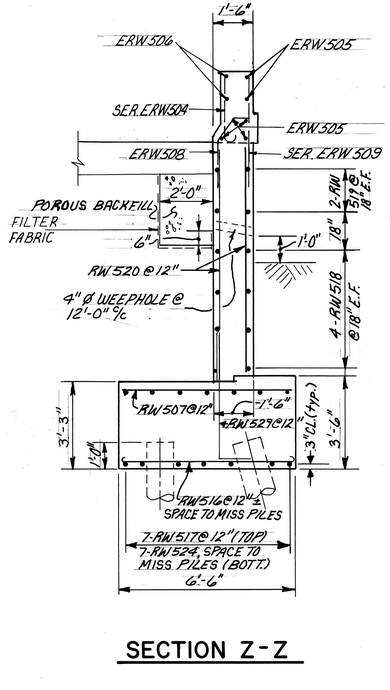

SECTION Z-Z

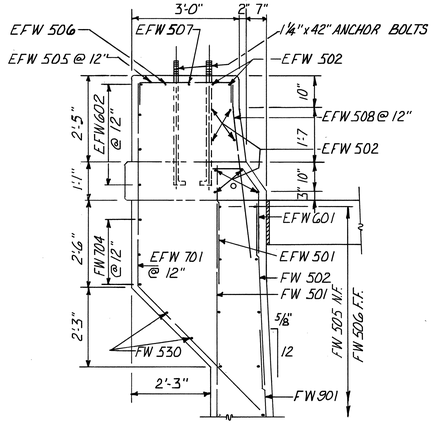

SECTION A-A

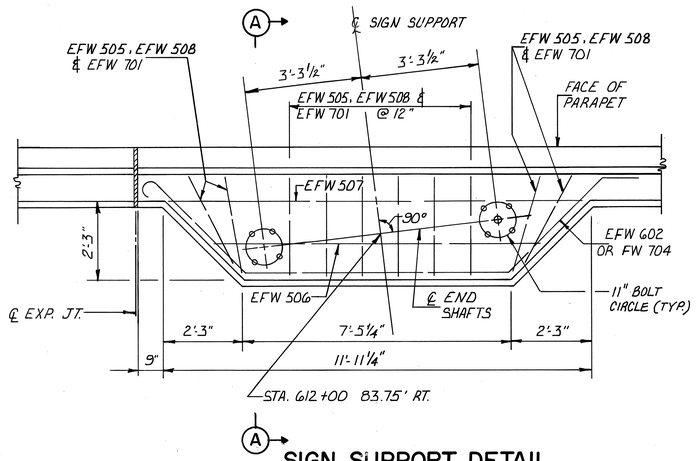

SIGN SUPPORT DETAIL

NOTES

1. SECTIONS W-W AND X-X; BARS SHOWN FOR NORTHWEST WINGWALL, FOR NORTHEAST WINGWALL CHANGE ALL BAR PREFIXES TO FW OR EFW.
2. SECTIONS Y-Y AND Z-Z; BARS SHOWN FOR SOUTHWEST WINGWALL, FOR SOUTHEAST WINGWALL, CHANGE ALL BAR PREFIXES TO FW OR EFW.
3. FOR NORTHWEST WINGWALL, SEE SHEET 16/31
   FOR NORTHEAST WINGWALL, SEE SHEET 18/31
   FOR SOUTHWEST WINGWALL, SEE SHEET 17/31
   FOR SOUTHEAST WINGWALL, SEE SHEET 19/31

McCOY ASSOCIATES INC. 20/31
CONSULTING ENGINEERS
AKRON, OHIO

WINGWALL DETAILS

BRIDGE NO. SUM. 76-1296
AKRON EAST EXPRESSWAY
OVER MARTHA AVENUE
SUMMIT COUNTY STA. 610+81.52
STA. 611+54.83

DESIGNED	DRAWN	TRACED	CHECKED	REVIEWED	DATE	REVISED
MSC	JBK	PNR	JBK	MSC	10/89	

72276

FHWA REGION	STATE	PROJECT	
5	OHIO		

1100
12.14

SUMMIT COUNTY
SUM 76-11.57

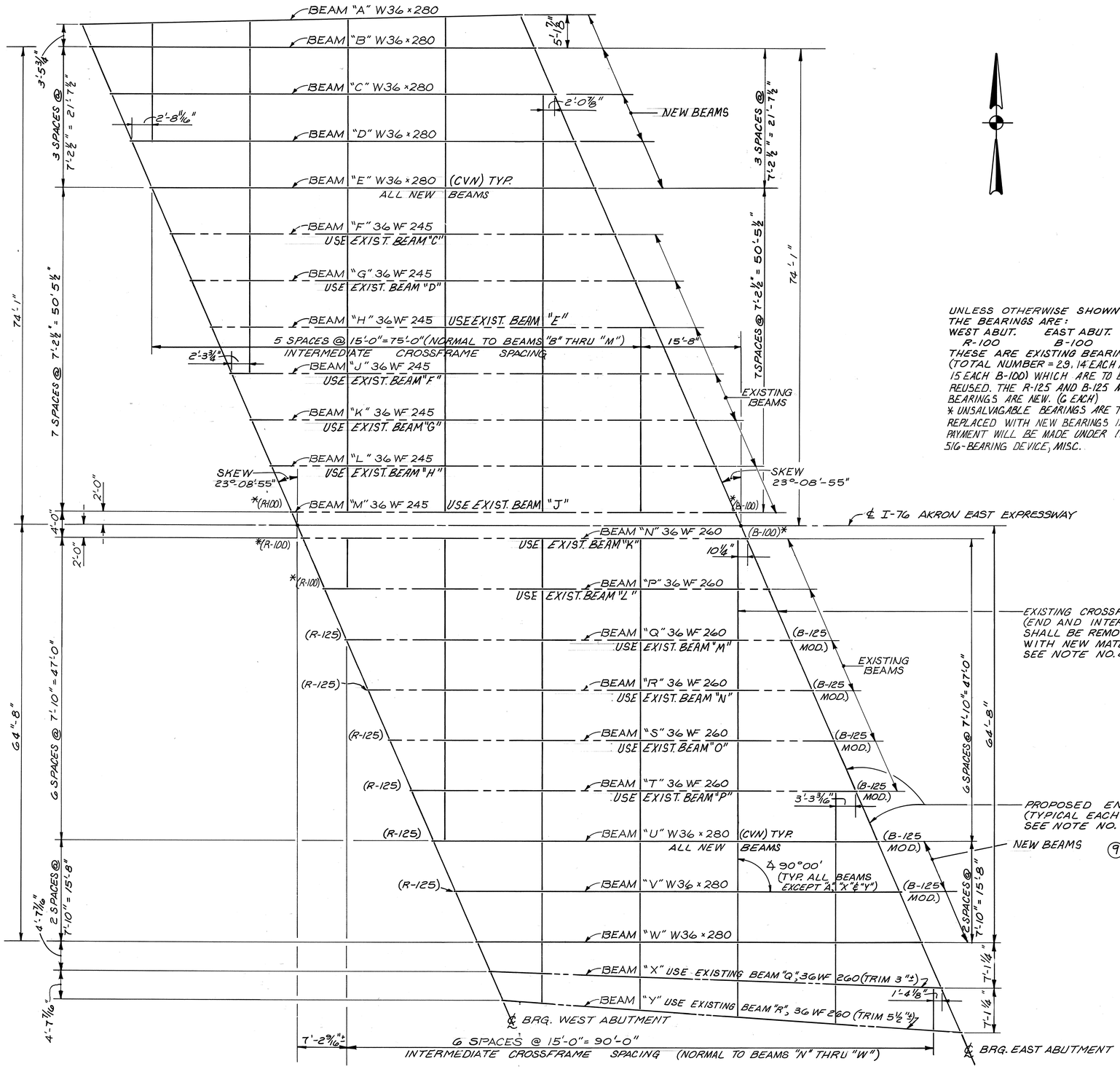

UNLESS OTHERWISE SHOWN THE BEARINGS ARE:

WEST ABUT.	EAST ABUT.
R-100	B-100

THESE ARE EXISTING BEARINGS (TOTAL NUMBER = 29, 14 EACH R-100, 15 EACH B-100) WHICH ARE TO BE REUSED. THE R-125 AND B-125 MODIFIED BEARINGS ARE NEW. (6 EACH)
* UNSALVAGABLE BEARINGS ARE TO BE REPLACED WITH NEW BEARINGS IN KIND. PAYMENT WILL BE MADE UNDER ITEM 516-BEARING DEVICE, MISC.

NOTES

(1) FOR TRANSVERSE CROSS SECTIONS SEE SHEETS 24/31 & 25/31.

(2) FOR ADDITIONAL NOTES AND DETAILS SEE SHEETS 22/31 & 23/31.

(3) REFERENCE SHALL BE MADE TO STD. DWG. SD-1-69 AND EXJ-2-81 FOR DETAILS OF END CROSSFRAMES AND EXPANSION JOINTS. SEAL SHALL BE A 4" Seal in lieu of the 5" Seal shown.

(4) PAYMENT FOR REMOVAL OF EXISTING CROSSFRAMES SHALL BE INCLUDED WITH ITEM 202, PORTIONS OF STRUCTURES REMOVED, AND PAYMENT FOR REPLACEMENT OF EXISTING CROSSFRAMES SHALL BE INCLUDED WITH ITEM 513, STRUCTURAL STEEL (AISC CATEGORY I), AS PER PLAN

(5) INSTALLATION OF SEAL: DURING INSTALLATION OF THE SUPPORT/ARMOR FOR THE SUPERSTRUCTURE SIDE OF THE EXPANSION JOINT SEAL, THE SEATING OF BEAMS ON BEARINGS SHALL BE CAREFULLY OBSERVED TO ASSURE THAT POSITIVE BEARING IS MAINTAINED. PROPER VERTICAL FIT OF THE SUPPORT/ARMOR ON THE BEAMS SHALL BE ACHIEVED BY POSITIONING OF THE BEVEL FILL PLATES RATHER THAN BY CLAMPING FORCE.

(6) ERECTION BOLTS: HOLE DIAMETER IN THE CROSSFRAMES AND BEAM STIFFENERS SHALL BE RESPECTIVELY 1/16" AND 1/4" LARGER THAN THE DIAMETER OF THE ERECTION BOLTS. UNLESS REPLACED BY PERMANENT HIGH STRENGTH BOLTS, ERECTION BOLTS SHALL REMAIN IN PLACE. LOCK WASHERS SHALL BE FURNISHED FOR OTHER THAN FULLY TORQUED HIGH STRENGTH ERECTION BOLTS. BOLTS SHALL BE FURNISHED AS PART OF 513.

IN LIEU OF ERECTION BOLTS AND AT THE OPTION OF THE CONTRACTOR, ALTERNATIVE MEANS OF TEMPORARY BRACING MAY BE USED SUBJECT TO THE APPROVAL OF THE DIRECTOR (501.06).

(7) REFER TO SHTS. 23/31, 24/31 AND 25/31 FOR INTERMEDIATE CROSSFRAME DETAILS.

(8) PAYMENT FOR TRIMMING EXISTING BEAMS "Q" AND "R" TO PROPER LENGTH AND RELOCATING ALL EXISTING BEAMS, BEARINGS AND SOLE PLATES SHALL BE INCLUDED WITH ITEM 513, ERECTION OF EXISTING STEEL BEAMS AND BEARINGS. PAYMENT FOR REMOVAL OF ALL EXISTING STEEL BEAMS, BEARINGS AND SOLE PLATES SHALL BE INCLUDED WITH ITEM 202, REMOVAL FOR RE-USE OF EXISTING STEEL BEAMS AND BEARINGS.

(9) FOR LOCATION OF EXISTING BEAMS "Q" AND "R" ON EXISTING STRUCTURE SEE THE EXISTING TRANSVERSE SECTION ON SHEET 7/31.

McCOY ASSOCIATES INC. 21/31
CONSULTING ENGINEERS
AKRON, OHIO

FRAMING PLAN

BRIDGE NO. SUM 76-1296
AKRON EAST EXPRESSWAY
OVER MARTHA AVENUE
SUMMIT COUNTY STA. 610+81.52
611+54.83

DESIGNED	DRAWN	TRACED	CHECKED	REVIEWED	DATE	REVISED
RPL	DAK		TAB	MJC	2-29-88	

FHWA REGION	STATE	PROJECT	
5	OHIO		

(1101 1214)

SUMMIT COUNTY
SUM 76 - 11.57

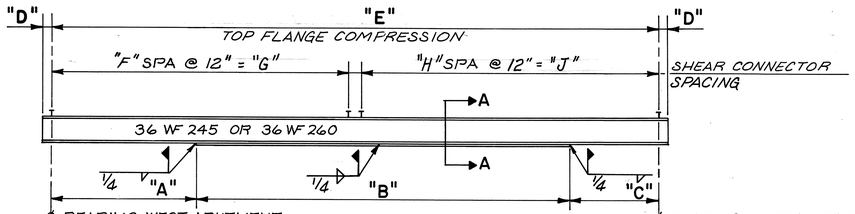

EXISTING BEAM ELEVATION

EXISTING BEAM DIMENSION TABLE									
BEAM	DIMENSION								
	"A"	"B"	"C"	"D"	"E"	"F"	"G"	"H"	"J"
"F" TO "L"	6'-0"	55'-10 9/16"	6'-0"	0'-11 11/16"	67'-10 9/16"	33	33'-0"	34	34'-0"
"P" TO "T"	6'-0"	55'-10 9/16"	6'-0"	0'-11 11/16"	67'-10 9/16"	33	33'-0"	34	34'-0"
"M" & "N"	6'-0"	55'-10 9/16"	6'-0"	0'-11 11/16"	67'-10 9/16"	33	33'-0"	34	34'-0"
"X"	6'-0"	56'-11 3/16"	6'-0"	0'-11 7/8"	68'-11 13/16"	34	34'-0"	34	34'-0"
"Y"	6'-0"	58'-2 3/16"	6'-0"	1'-0 1/16"	70'-2 3/16"	34	34'-0"	35	35'-0"

NOTE: BEAM LENGTHS AND DIMENSIONS ARE INFORMATION ONLY AND THE CONTRACTOR SHALL VERIFY ALL DIMENSIONS.

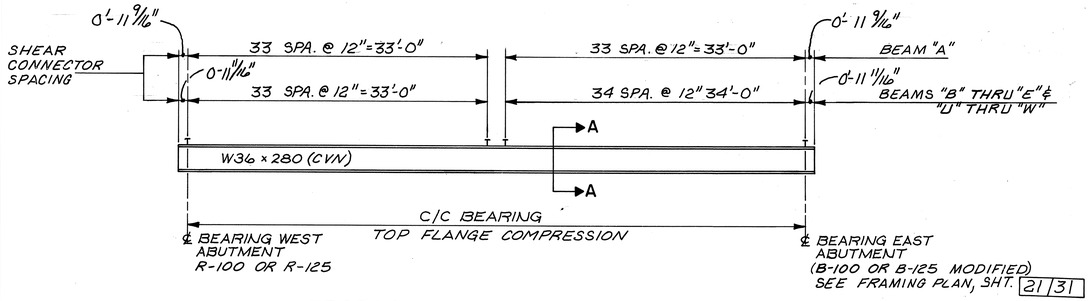

PROPOSED BEAM ELEVATION

PROPOSED BEAM DIMENSION TABLE								
BEAM	A	B	C	D	E	U	V	W
C/C BEARINGS	67'-2 3/16"	67'-10 9/16"	67'-10 9/16"	67'-10 9/16"	67'-10 9/16"	67'-10 9/16"	67'-10 9/16"	67'-10 9/16"

DEFLECTION AND CAMBER (SEE LAYOUT DIAGRAM AT RIGHT)																								
BEAMS	Ⓐ			Ⓑ			Ⓒ			Ⓓ			Ⓔ			Ⓤ			Ⓥ			Ⓦ		
POINTS	1/4	1/2	3/4	1/4	1/2	3/4	1/4	1/2	3/4	1/4	1/2	3/4	1/4	1/2	3/4	1/4	1/2	3/4	1/4	1/2	3/4	1/4	1/2	3/4
DEFLECTION DUE TO WEIGHT OF STEEL	3/16"	1/4"	3/16"	3/16"	1/4"	3/16"	3/16"	1/4"	3/16"	3/16"	1/4"	3/16"	3/16"	1/4"	3/16"	3/16"	1/4"	3/16"	3/16"	1/4"	3/16"	3/16"	1/4"	3/16"
DEFLECTION DUE TO REMAINING DEAD LOAD	5/16"	7/16"	5/16"	3/8"	1/2"	3/8"	7/16"	5/8"	7/16"	7/16"	5/8"	7/16"	7/16"	5/8"	7/16"	1/2"	11/16"	1/2"	1/2"	11/16"	1/2"	7/16"	5/8"	7/16"
ADJUSTMENT REQUIRED FOR VERTICAL CURVE	-1/8"	-1/4"	-1/8"	-1/4"	-1/4"	-1/4"	-1/8"	-1/4"	-1/8"	-1/8"	-1/4"	-1/4"	-1/4"	-1/4"	-1/4"	-1/4"	-1/4"	-1/8"	-1/8"	-1/4"	0"	-1/4"	-1/4"	-1/8"
REQUIRED SHOP CAMBER	7/16"	7/16"	3/8"	5/16"	1/2"	5/16"	1/2"	5/8"	1/2"	1/2"	5/8"	3/8"	3/8"	5/8"	3/8"	7/16"	11/16"	9/16"	9/16"	11/16"	11/16"	3/8"	5/8"	1/2"

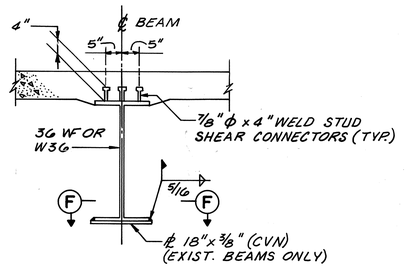

SECTION A-A

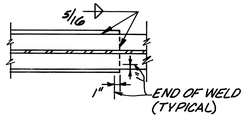

SECTION F-F

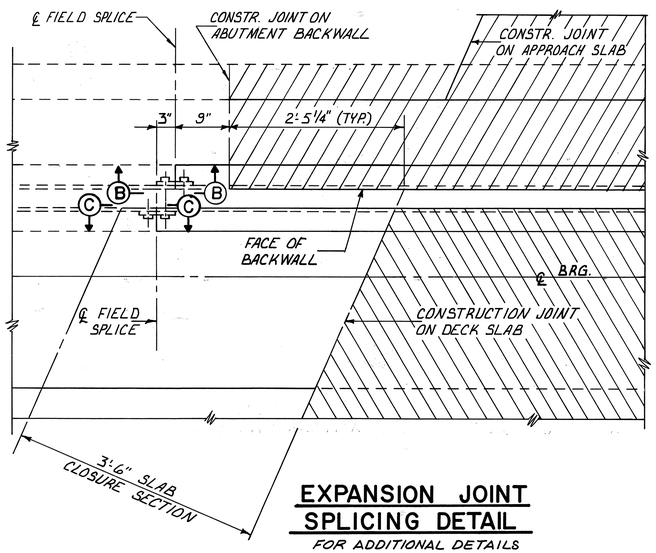

EXPANSION JOINT SPLICING DETAIL

FOR ADDITIONAL DETAILS SEE STD. DWG. EXJ-2-81

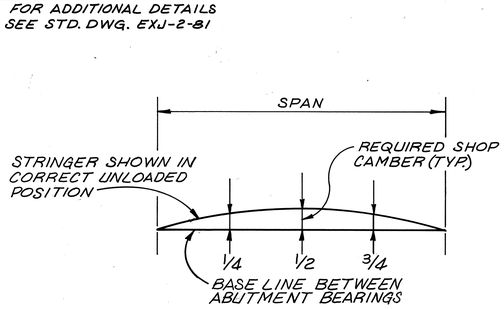

LAYOUT DIAGRAM

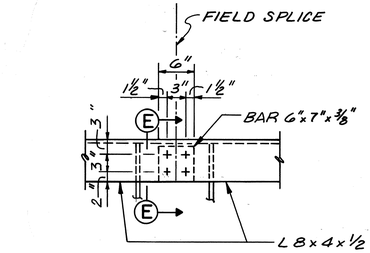

SECTION B-B

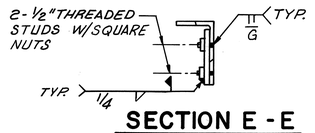

SECTION E-E

NOTES

1. EXISTING ROCKERS AND BOLSTERS SHALL BE REMOVED, CLEANED, REPAINTED AND RE-USED AT THE LOCATIONS SHOWN ON THE FRAMING PLAN, SEE SHEET 21 31 WORK SHALL BE PAID UNDER ITEM 516, REFURBISH BEARING DEVICES, AS PER PLAN.
2. EXISTING ROCKERS AND BOLSTERS SHALL BE REUSED UNLESS DEEMED UNSALVAGABLE BY THE ENGINEER. REPLACEMENT SHALL BE PAID FOR UNDER ITEM 516 BEARING DEVICE, MISC. A QUANTITY OF 10 EACH HAS BEEN PROVIDED FOR USE AS DIRECTED BY THE ENGINEER. 6 NEW R-125 ROCKERS AND 6 NEW B-125 MODIFIED BOLSTERS SHALL BE PROVIDED. FOR THE NEW MODIFIED BOLSTERS INCREASE THE DISTANCE FROM THE EDGE OF THE BASE PLATE TO THE 1 5/8" ϕ HOLES FOR ANCHOR BOLTS FROM 2" TO 2 1/2". SEE DETAIL, SHEET 23 31 FOR ADDITIONAL DETAILS OF THE ROCKERS AND BOLSTERS SEE STANDARD DWG. RB-1-55.
3. WELDED ATTACHMENT OF SUPPORTS FOR CONCRETE DECK FINISHING MACHINE MAY BE MADE ALONG THE TOP FLANGE OF ANY BEAM. FILLET WELDS TO COMPRESION FLANGES SHALL BE NOT CLOSER THAN 1" FROM EDGE OF FLANGE, BE NOT MORE THAN 2" LONG, AND BE NOT SMALLER THAN THE MINIMUM SIZE REQUIRED BY AASHTO.
4. FOR ADDITIONAL NOTES SEE SHT. 21 31
5. WHERE A SHAPE OR PLATE IS DESIGNATED (CVN) THE MATERIAL SHALL MEET SPECIFIED MINIMUM NOTCH TOUGHNESS REQUIREMENTS AS SPECIFIED IN 711.01 OF CMS.

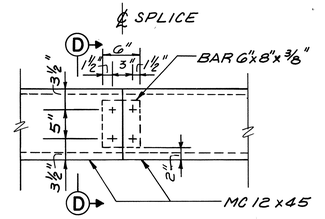

SECTION C-C

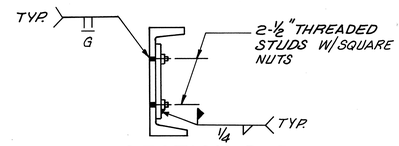

SECTION D-D

McCOY ASSOCIATES INC. 22 31
CONSULTING ENGINEERS
AKRON, OHIO

BEAM ELEVATIONS & DETAILS

BRIDGE NO. SUM 76-12.96
AKRON EAST EXPRESSWAY
OVER MARTHA AVENUE
SUMMIT COUNTY STA. 610+81.52
611+54.83

DESIGNED	DRAWN	TRACED	CHECKED	REVIEWED	DATE	REVISED
RPL	DAK		TAB	MSC	2-29-88	

FHWA REGION	STATE	PROJECT	
5	OHIO		

1102
1214

SUMMIT COUNTY
SUM 76-11.57

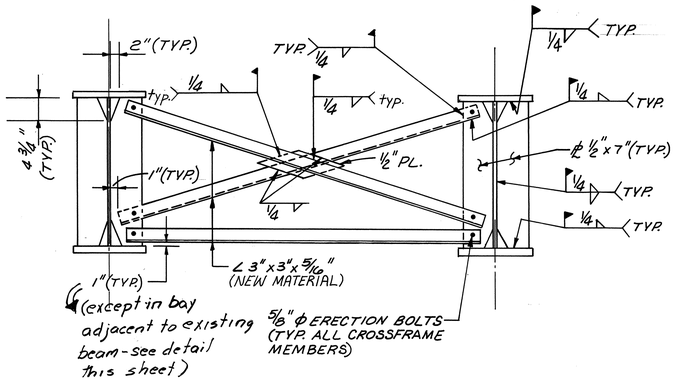

CROSSFRAME AND STIFFENER DETAILS - NEW BEAMS

LOCATION / DESCRIPTION	℄ BRG. WEST ABUT.	1/4 POINT	1/2 POINT	3/4 POINT	℄ BRG. EAST ABUT.
*STATION	611+15.82	611+33.32	611+50.83	611+68.33	611+85.83
OFFSET	2'-6 3/4"	2'-2 5/8"	2'-1 1/8"	2'-2 1/4"	2'-6"

*STATIONS GIVEN TO POINTS LOCATED ON BEAM "Y". FOR LOCATIONS, SEE TRANSVERSE SECTION ON SHEET 25/31

TABLE OF DECK SLAB OFFSETS

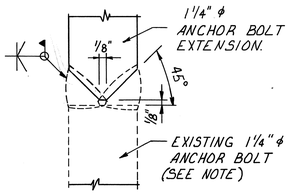

DETAIL A

NOTES

1. FOR EXISTING AND PROPOSED BEARING TYPE AND LOCATION SEE FRAMING PLAN, SHEET 21/31.
2. AT THE EXISTING WEST ABUTMENT, THE EXISTING AND THE PROPOSED ROCKER BEARINGS SHALL NOT BE ANCHOR TO THE ABUTMENT SEAT. THE EXISTING ANCHOR BOLTS SHALL BE CUT OFF AT THE EXISTING ABUTMENT SEAT.
3. AT THE EXISTING EAST ABUTMENT, THE EXISTING AND PROPOSED BOLSTER BEARINGS SHALL BE ANCHORED BY EXTENDING THE EXISTING 1 1/4" ϕ ANCHOR BOLT AS SHOWN IN DETAIL 'A'. THIS SHALL INCLUDE THE EXISTING B-100 BEARINGS TO BE REUSED AND THE NEW B-125 MODIFIED BEARINGS TO BE PROVIDED.
4. AT THE PROPOSED WIDENED PORTIONS OF THE EAST ABUTMENT, THE EXISTING B-100 BEARINGS TO BE REUSED AND THE PROPOSED B-125 MODIFIED BEARINGS SHALL BE ANCHOR WITH NEW 1 1/4" ϕ x 1'-8" SWEDGE ANCHOR BOLTS WITH WASHERS AND NUTS. BOLTS SHALL BE SET 1'-3" INTO CONCRETE BEAM SEAT.
5. FOR END CROSSFRAME DETAILS NOT SHOWN, SEE STANDARD DRAWINGS EXJ-2-81 AND SD-1-69.
6. EXISTING ANCHOR BOLTS SHALL BE CUT SO THAT BOLT REMAINS 2" ABOVE EXIST. ABUTMENT SEAT. IF THE EXISTING ANCHOR BOLT DOES NOT HAVE SUFFICIENT CROSS-SECTIONAL AREA TO WELD PROPERLY, REMOVE CONCRETE TO A DEPTH TO OBTAIN SUITABLE MATERIAL WITH SUFFICIENT CROSS-SECTIONAL AREA TO WELD PROPERLY. THE COST OF REMOVING AND REPLACING THE CONCRETE SHALL BE INCLUDED IN THE UNIT PRICE BID FOR ITEM 516 REFURBISH BEARING DEVISE, AS PER PLAN.

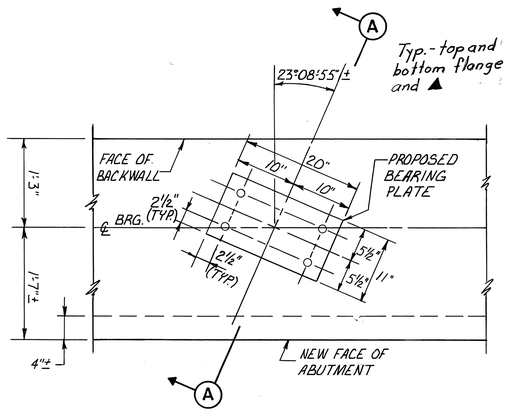

TYPICAL BEARING PLATE PLAN

FOR NEW B-125 (MODIFIED) BEARINGS ONLY.

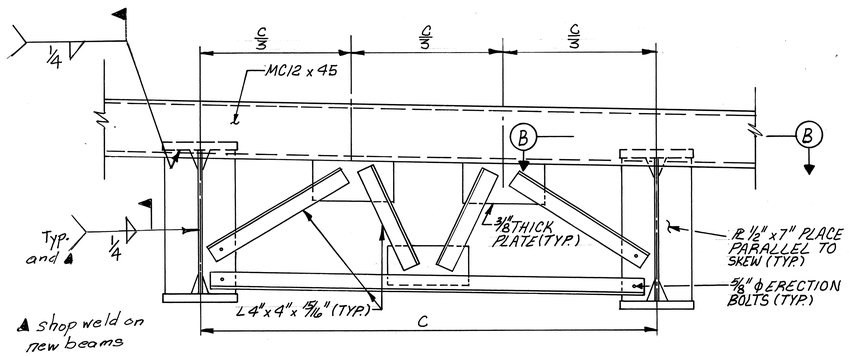

END CROSSFRAME DETAILS

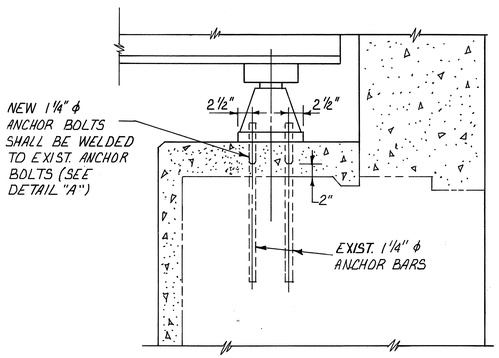

SECTION A-A

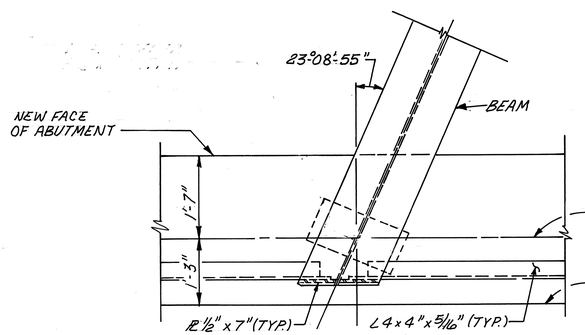

SECTION B-B

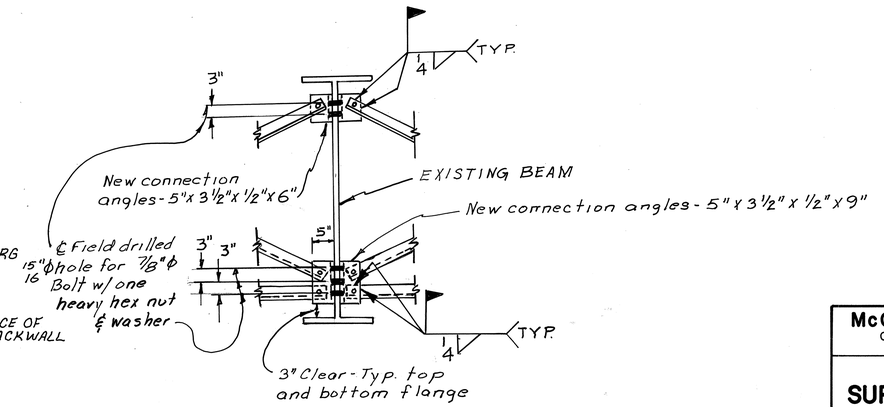

CROSSFRAME CONNECTIONS - EXISTING BEAMS

McCOY ASSOCIATES INC. 23/31
CONSULTING ENGINEERS
AKRON, OHIO

SUPERSTRUCTURE DETAILS

BRIDGE NO. SUM 76-1296
AKRON EAST EXPRESSWAY
OVER MARTHA AVENUE
SUMMIT COUNTY STA. 610+81.52
611+54.83

DESIGNED	DRAWN	TRACED	CHECKED	REVIEWED	DATE	REVISED
TAB	PNA		MSC	MSC	10/89	

FHWA REGION	STATE	PROJECT	
5	OHIO		

1103
1214

SUMMIT COUNTY
SUM 76-11.57

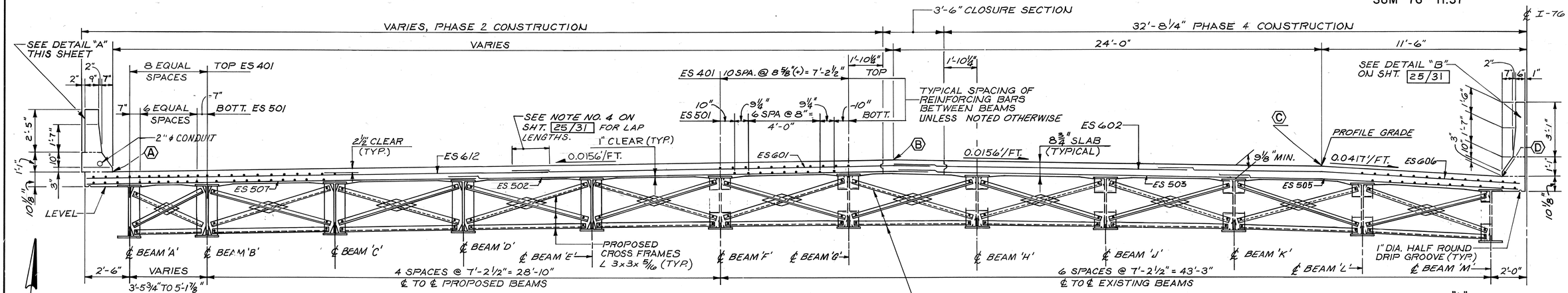

TRANSVERSE SECTION
WEST BOUND LANE STRUCTURE

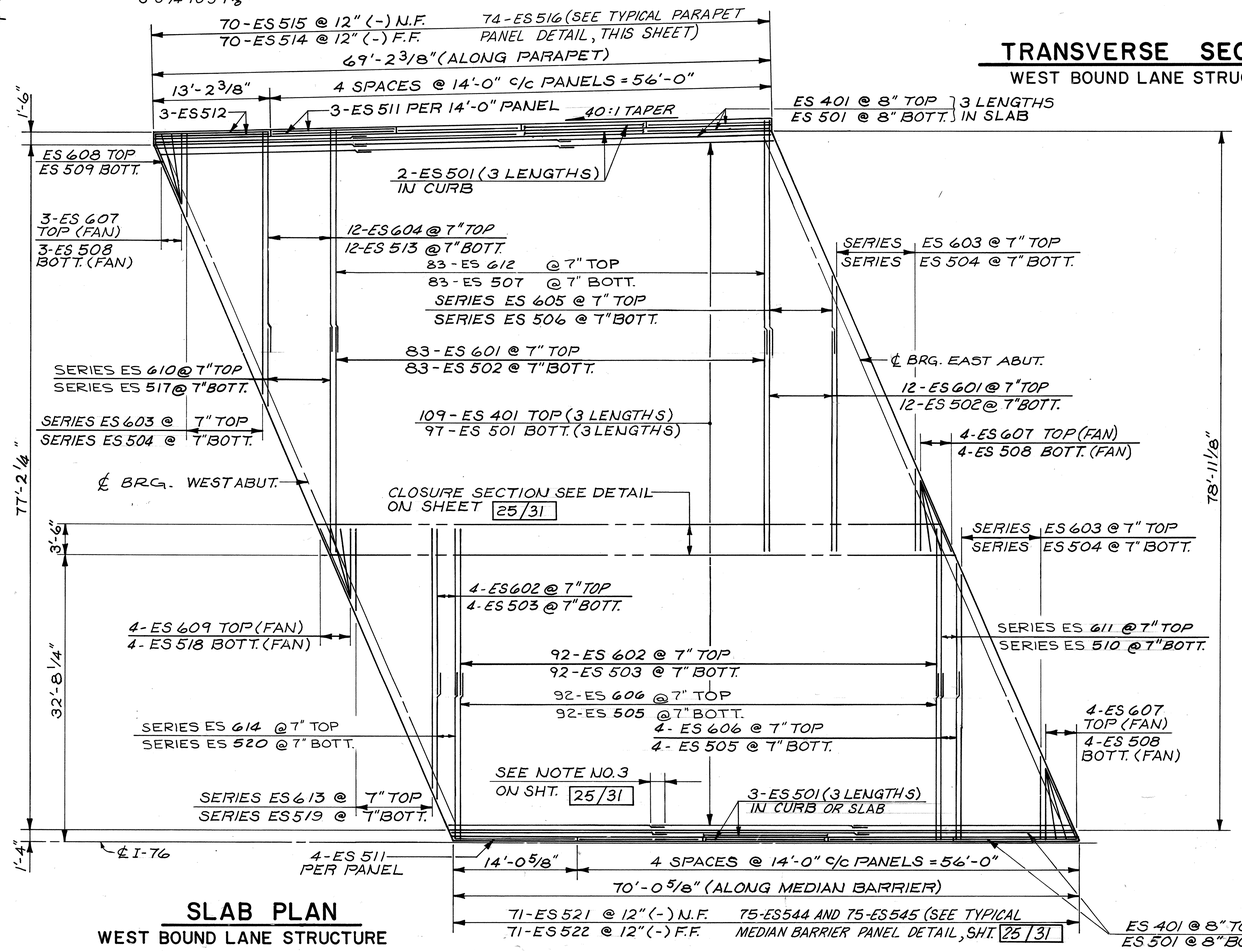

SLAB PLAN
WEST BOUND LANE STRUCTURE

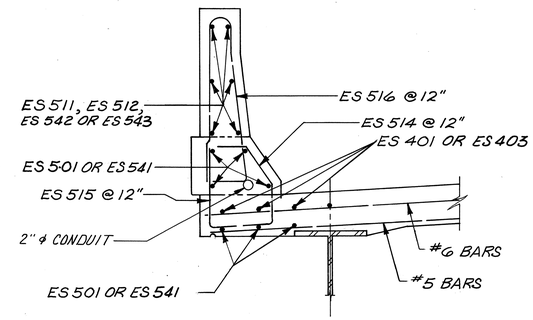

DETAIL "A"
SEE TYPICAL PARAPET PANEL DETAIL THIS SHEET. FOR ADDITIONAL REINFORCING DETAILS SEE SHEET 25/31 .

TABLE OF SCREED ELEVATIONS				
LOCATION	Ⓐ	Ⓑ	Ⓒ	Ⓓ
℄ BRG. WEST ABUT.	1033.59	1034.09	1033.61	1033.16
1/4 PT.	1033.45	1033.97	1033.51	1033.04
1/2 PT.	1033.30	1033.84	1033.37	1032.92
3/4 PT.	1033.13	1033.69	1033.23	1032.77
℄ BRG. EAST ABUT.	1032.97	1033.52	1033.07	1032.62

THE ELEVATIONS SHOWN ARE ON TOP OF PORTLAND CEMENT CONCRETE AND ARE THOSE WHICH ARE REQUIRED BEFORE THE CONCRETE IS PLACED. PROPER ALLOWANCE HAS BEEN MADE FOR DEAD LOAD DEFLECTIONS CAUSED BY THE WEIGHT OF CONCRETE DECK SLAB.

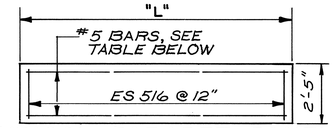

TYPICAL PARAPET PANEL

NO. OF PARAPET PANELS	LENGTH "L"	BAR MARK	NO. OF ES 516 BARS PER PANEL
4	14'-0"	ES 511	15
1	13'-2 3/8"	ES 512	14
5	12'-0"	ES 542	13
1	12'-6 3/4"	ES 543	13

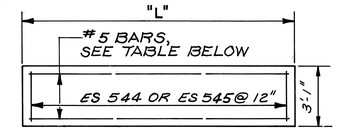

TYPICAL MEDIAN BARRIER PANEL

NO. OF MEDIAN PANELS	LENGTH "L"	BAR MARK	NO. OF ES 544 OR ES 545 BARS PER PANEL
8	14'-0"	ES 511	15
2	14'-0 5/8"	ES 511	15

NOTES
(1) FOR NOTES SEE SHEET 25/31

McCOY ASSOCIATES INC. 24/31
CONSULTING ENGINEERS
AKRON, OHIO

TRANSVERSE SECTION & SLAB PLAN (WESTBOUND)

BRIDGE NO. SUM 76-1296
AKRON EAST EXPRESSWAY
OVER MARTHA AVENUE
SUMMIT COUNTY STA. 610+81.52
611+54.83

DESIGNED	DRAWN	TRACED	CHECKED	REVIEWED	DATE	REVISED
RPL	JJM		TAB	MSC	2-29-88	

FHWA REGION	STATE	PROJECT	
5	OHIO		

1104
1214

SUMMIT COUNTY
SUM 76-11.57

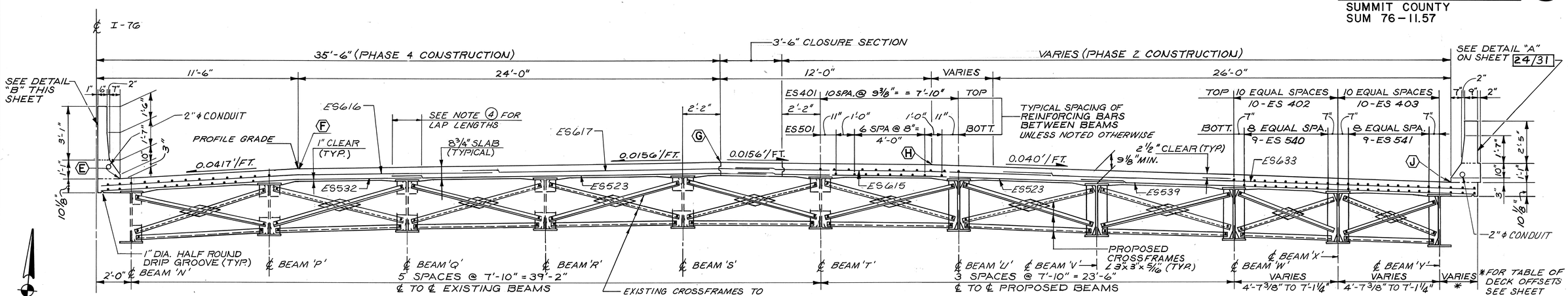

TRANSVERSE SECTION
EAST BOUND LANE STRUCTURE

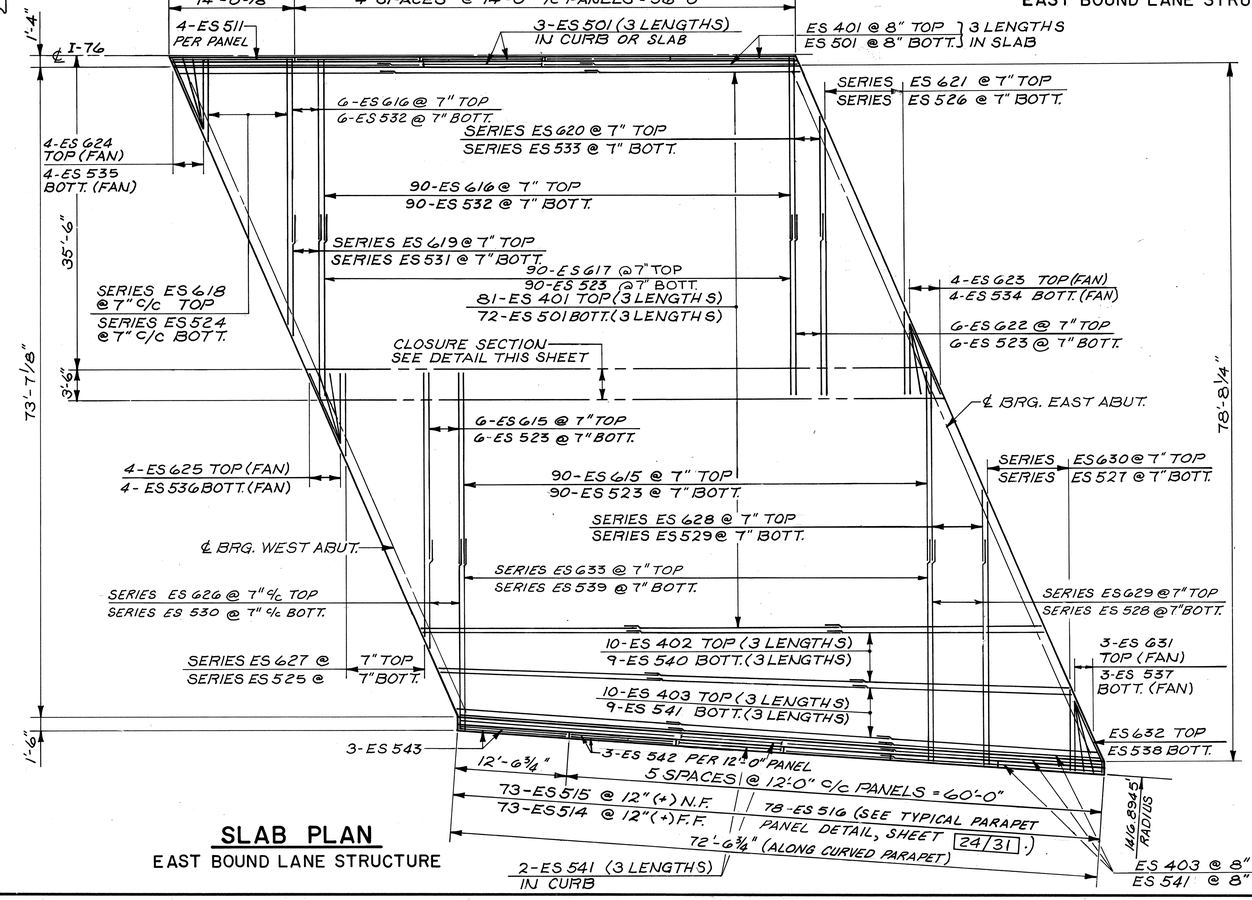

SLAB PLAN
EAST BOUND LANE STRUCTURE

DETAIL "B"
SEE TYPICAL MEDIAN BARRIER PANEL DETAIL ON SHEET 24/31

CLOSURE SECTION DETAIL

TABLE OF SCREED ELEVATIONS					
LOCATION	Ⓔ	Ⓕ	Ⓖ	Ⓗ	Ⓙ
℄ BRG. WEST ABUT	1033.15	1033.53	1033.82	1033.59	1032.39
1/4 POINT	1033.03	1033.42	1033.72	1033.49	1032.25
1/2 POINT	1032.91	1033.30	1033.60	1033.38	1032.10
3/4 POINT	1032.76	1033.16	1033.47	1033.24	1031.92
℄ BRG EAST ABUT	1032.61	1033.00	1033.31	1033.09	1031.69

THE ELEVATIONS SHOWN ARE ON TOP OF PORTLAND CEMENT CONCRETE AND ARE THOSE WHICH ARE REQUIRED BEFORE THE CONCRETE IS PLACED. PROPER ALLOWANCE HAS BEEN MADE FOR DEAD LOAD DEFLECTIONS CAUSED BY THE WEIGHT OF CONCRETE DECK SLAB.

NOTES

1. A HAUNCH WIDTH OF 9" SHALL BE USED FOR COMPUTING QUANTITY OF CONCRETE HOWEVER, THE HAUNCH WIDTH MAY VARY BETWEEN 6" AND 12".
2. FOR ADDITIONAL DETAILS, REFERENCE SHALL BE MADE TO SHEET 24/31.
3. FOR LONGITUDINAL REINFORCING MIN. BAR LAPS ARE AS FOLLOWS:
   NO. 4 = 1'-0"
   NO. 5 = 1'-4"
   UNLESS OTHERWISE SHOWN
4. FOR TRANSVERSE REINFORCING MIN. BAR LAPS ARE AS FOLLOWS:
   NO. 5 = 1'-8"
   NO. 6 = 2'-0"
   UNLESS OTHERWISE SHOWN
5. TRANSVERSE AND LONGITUDINAL REINFORCEMENT SHALL BE FIELD BENT AS REQUIRED. PAYMENT SHALL BE INCLUDED WITH ITEM 509 EPOXY COATED REINFORCING STEEL.
6. FOR CROSSFRAME AND STIFFENER DETAILS SEE SHEET 23/31.
7. FOR ADDITIONAL LIGHTING CONDUIT DETAILS SEE SHEET 700/1214
8. THE DISTANCE SHOWN FROM TOP OF CLASS "S" CONCRETE TO TOP OF STEEL BEAM IS THE DESIGN DIMENSION. THE QUANTITY OF DECK CONCRETE TO BE PAID FOR SHALL BE BASED ON THIS DIMENSION, EVEN THOUGH DEVIATION FROM IT MAY BE NECESSARY BECAUSE THE TOP FLANGE OF THE BEAM MAY NOT HAVE THE EXACT CAMBER OR CONFORMATION REQUIRED TO PLACE IT PARALLEL TO THE FINISHED GRADE.

McCOY ASSOCIATES INC. 25/31
CONSULTING ENGINEERS
AKRON, OHIO

TRANSVERSE SECTION & SLAB PLAN (EASTBOUND)

BRIDGE NO. SUM 76-1296
AKRON EAST EXPRESSWAY
OVER MARTHA AVENUE
SUMMIT COUNTY STA. 610+81.52
611+54.83

DESIGNED	DRAWN	TRACED	CHECKED	REVIEWED	DATE	REVISED
RDL	J.M.		TAB	MSC	2-29-88	

FHWA REGION	STATE	PROJECT	
5	OHIO		

1105
1214

SUMMIT COUNTY
SUM. 76-11.57

CONSTRUCTION PHASING

FOR ADDITIONAL TEMPORARY BARRIER PLAN AND DETAILS SEE SHT. 1164/1214 (TYPICAL EACH PHASE).

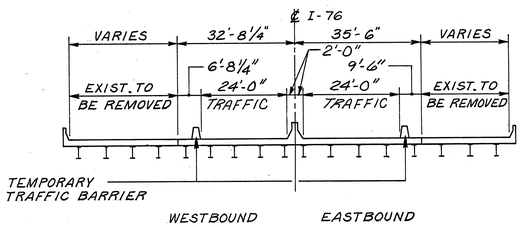

PHASE 2

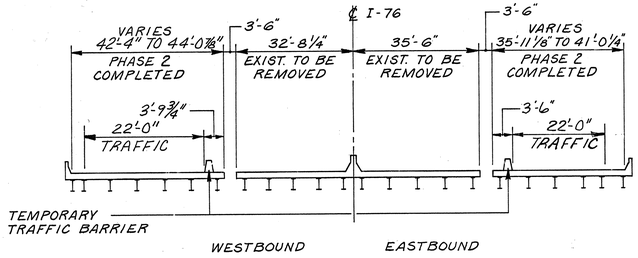

PHASE 4

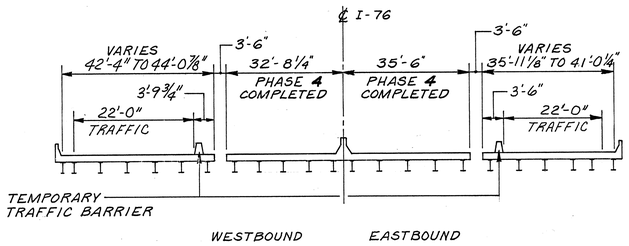

CLOSURE PHASE

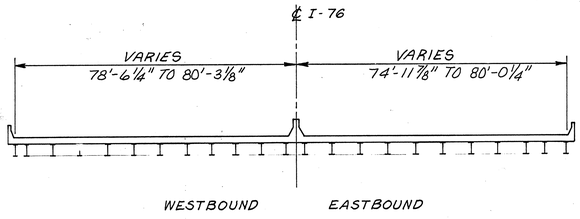

FINISHED STRUCTURE

CONSTRUCTION PHASING

THE REQUIRED ITEMS OF WORK TO BE PERFORMED FOR REMOVAL OF PORTIONS OF EXISTING STRUCTURE AND THE WIDENING AND REHABILITATION CONSTRUCTION SHALL INCLUDE, BUT NOT BE LIMITED TO THE FOLLOWING:

PHASE 2 CONSTRUCTION

A. INSTALL TEMPORARY TRAFFIC BARRIER TO DIVERT TRAFFIC TO THE CENTER OF THE BRIDGE. (SEE MAINTENANCE OF TRAFFIC PLANS)

B. REMOVE PORTIONS OF SLABS & APPROACH SLABS, PORTIONS OF ABUTMENT BACKWALLS, ALL WINGWALLS, THE 4 EXTERIOR STEEL BEAMS, THE INTERMEDIATE AND END CROSSFRAMES ATTACHED TO THEM, BEARINGS AND END DAM ANGLES AS SHOWN ON THE PLANS.

C. DRIVE PILING, CONSTRUCT NEW PORTIONS OF ABUTMENTS, PLACE NEW & REUSED BEAMS, INSTALL NEW END CROSSFRAMES AND INTERMEDIATE CROSSFRAMES, PLACE NEW & REUSED BEARINGS, PLACE EXTERIOR PORTIONS OF DECK SLABS, BACKWALLS, APPROACH SLABS AND REPAIR ABUTMENTS AS SHOWN ON PLANS.

PHASE 4 CONSTRUCTION

D. RELOCATE TEMPORARY TRAFFIC BARRIERS TO DIVERT TRAFFIC. (SEE MAINTENANCE OF TRAFFIC PLANS)

E. REMOVE MEDIAN BARRIERS, REMAINING PORTIONS OF SLABS, APPROACH SLABS, ABUTMENT BACKWALLS, END CROSSFRAMES, INTERMEDIATE CROSSFRAMES, STEEL BEAMS, BEARINGS AND END DAM ANGLES AS SHOWN ON THE PLANS.

F. REPAIR ABUTMENTS AS SHOWN ON THE PLANS, REPLACE BACKWALLS, INSTALL NEW AND REUSED BEARINGS AND REUSED BEAMS, INSTALL NEW END CROSSFRAMES AND INTERMEDIATE CROSS FRAMES, PLACE DECK SLABS (EXCEPT FOR 3' - 6" CLOSURE SECTIONS), MEDIAN BARRIERS AND APPROACH SLABS.

CLOSURE PHASE

G. PLACE 3' - 6" CLOSURE SECTIONS

H. REMOVE TEMPORARY BARRIERS AND INSTALL COMPRESSION SEALS IN ONE CONTINUOUS PIECE AT EACH ABUTMENT.

McCOY ASSOCIATES INC. 26/31
CONSULTING ENGINEERS
AKRON, OHIO

CONSTRUCTION PHASING

BRIDGE NO. SUM. 76-1296
AKRON EAST EXPRESSWAY
OVER MARTHA AVENUE
SUMMIT COUNTY STA. 610+81.52
611+54.83

DESIGNED	DRAWN	TRACED	CHECKED	REVIEWED	DATE	REVISED
TEN	JWD		MSC	MSC	10/89	

REINFORCING SCHEDULE

FHWA REGION	STATE	PROJECT	
5	OHIO		

1106
1214

SUMMIT COUNTY
SUM. 76-11.57

MARK	No. REQ'D.	LENGTH	TYPE	DIMENSIONS A	B	C	D	INCRM.	WEIGHT LBS.
WEST ABUTMENT									
R1001	24	10'-4"	11	1'-6"	8'-6"	3'-2"			1067
R1002	8	20'-11"	4	19'-6"					720
R1003	4	17'-3"	ST.						297
R1004	4	15'-0"	ST.						258
R1005	8	18'-11"	4	17'-6"					651
SERIES	1 SET	8'-0" TO	ST.					1'-9"	581
R1006	OF 9	22'-0"							
R1007	5	17'-6"	ST.						337
SERIES	1 SET	6'-3" TO	ST.					2'-3"	307
R1008	OF 6	17'-6"							
R901	14	18'-0"	5	15'-6"					857
SERIES	1 SET	18'-6"	5	16'-0"				6"	867
R902	OF 12	TO 24'-0"		TO 21'-6"					
SERIES	1 SET	6'-3"	4	5'-0"				2'-5"	401
R903	OF 8	TO 23'-3"		TO 22'-0"					
SERIES	1 SET OF	26'-0"	5	23'-6"				6"	655
R904	7	TO 29'-0"		TO 26'-6"					
SERIES	1 SET OF	3'-3"	4	2'-0"				3'-2"	109
R905	4	TO 12'-9"		TO 11'-6"					
SERIES	1 SET	19'-0"	5	16'-6"				2'-6"	408
R906	OF 5	TO 29'-0"		TO 26'-6"					
SERIES	1 SET	25'-10"	5	23'-4"				5"	645
R907	OF 7	TO 28'-4"		TO 25'-10"					
SERIES	1 SET	7'-0"	4	4'-6"				2'-4½"	415
R908	OF 8	TO 23'-6"		TO 21'-0"					
SERIES	1 SET	9'-3" TO	4	8'-0" TO				1'-9"	497
R909	OF 9	23'-3"		22'-0"					
R910	5	20'-0"	5	17'-6"					340
SERIES	1 SET	7'-6" TO	4	6'-3" TO				2'-3"	268
R911	OF 6	18'-9"		17'-6"					
R801	4	15'-8"	ST.						167
SERIES	1 SET	16'-0" TO	ST.					5½"	651
R802	OF 13	21'-6"							
SERIES	1 SET	6'-0" TO	ST.					2'-3½"	299
R804	OF 8	22'-0"							
SERIES	1 SET	23'-6" TO	ST.					6⅜"	469
R805	OF 7	26'-8"							
R808	9	16'-10"	ST.						405
SERIES	1 SET	21'-1" TO	ST.					5½"	1199
R809	OF 18	28'-10"							
R810	24	4'-0"	ST.						256
R701	13	24'-0"	ST.						638
R702	23	6'-7"	1	2'-6"	4'-3"				309
R703	15	25'-10"	ST.						792
R704	40	11'-4"	2	1'-8"	5'-0"				927
R705	24	7'-4"	1	2'-6"	5'-0"				360
R501	50	7'-1"	1	12"	6'-3"				369
SERIES	2 SETS	25'-4" TO	ST.					5¼"	1022
R502	OF 17	32'-4"							
R503	20	16'-9"	ST.						349
R504	16	16'-0"	ST.						267

MARK	No. REQ'D.	LENGTH	TYPE	DIMENSIONS A	B	C	D	INCRM.	WEIGHT LBS.
R505	34	7'-9"	2	4'-1"	1'-9"				260
R506	30	8'-11"	10	4'-8"	3'-3"	2'-11"			279
R507	17	25'-0"	ST.						443
R508	5	24'-6"	ST.						128
R509	18	3'-10"	16	10"	2'-0"	10"	11"		72
R517	7	21'-6"	ST.						157
R518	8	20'-3"	ST.						169
R519	12	4'-3"	ST.						53
R520	8	15'-9"	ST.						131
SERIES	2 SETS	13'-0" TO			4'-1" TO				
R521	OF 15	22'-8"	20	1'-8"	9'-5"	1'-10"		4⅝"	558
R522	5	10'-5"	2	8"	5'-0"				54
R523	6	7'-10"	3	1'-0"	5'-7"	1'-6"			49
SERIES	2 SETS	29'-0" TO							
R533	OF 9	29'-9"	ST.					1"	551
R535	5	23'-0"	ST.						120
R536	5	8'-5"	2	8"	4'-0"				44
R539	2	6'-8"	15	3'-6"	1'-8"	10"	1'-8"		14
R540	28	5'-1"	15	1'-10"	1'-8"	10"	1'-8"		148
R541	2	5'-10½"	15	2'-8"	1'-8"	10"	1'-8"		12
R543	17	18'-0"	ST.						319
R544	24	25'-10"	ST.						647
R545	20	4'-11"	10	2'-6"	2'-4"	11"			103
R549	7	23'-8"	ST.						173
R550	6	10'-3"	26	2'-6"	5'-6"	1'-2"	1'-6"		64
R552	38	7'-0"	ST.						277
SERIES	4 SETS	4'-6" TO							
R553	OF 3	13'-6"	ST.					4'-6"	113
R554	8	17'-9"	ST.						148
SERIES	2 SETS	10'-9" TO			4'-3"				
R555	OF 16	15'-9"	20	1'-8"	TO 9'-3"	1'-10"		4"	442
SERIES	4 SETS	11'-0" TO							
R556	OF 3	3'-0"	ST.					4'-0"	88
R557	37	11'-3"	3	1'-4"	8'-8"	1'-6"			416
R558	3	19'-0"	ST.						59
SERIES	2 SETS	28'-4" TO	ST.					1'-2"	185
R559	OF 3	30'-8"							
R560	17	14'-0"	ST.						248
R561	22	29'-0"	ST.						665
SERIES	2 SETS	29'-0" TO	ST.					3"	183
R562	OF 3	29'-6"							
				NON-EPOXY TOTAL = 25,531					
EPOXY COATED									
ER803	5	25'-0"	ST.						334
ER806	5	26'-0"	ST.						347
ER807	111	4'-8"	7	1'-5"	1'-5"	1'-5"	1'-5"		1383
ER601	10	5'-6"	7	9"	6"	8"	4'-0"		83
ER510	64	4'-8"	2	11"	2'-0"				311
ER511	35	11'-6"	2	1'-5"	5'-2"				420
ER512	35	7'-8"	2	1'-5"	3'-3"				280
ER513	46	24'-0"	ST.						1151
ER514	80	9'-0"	2	1'-5"	3'-11"				751
ER515	12	15'-2"	ST.						190

MARK	No. REQ'D.	LENGTH	TYPE	DIMENSIONS A	B	C	D	INCRM.	WEIGHT LBS.
ER516	12	19'-3"	ST.						241
ER524	10	16'-0"	ST.						167
ER525	14	3'-3"	ST.						47
ER526	10	6'-8"	34	8"	2'-7"	8"	3'-0"		70
ER527	15	5'-4"	ST.						83
ER528	4	3'-10"	ST.						16
ER529	4	9'-9"	4	3'-10"					20
ER530	4	4'-2½"	8	2'-3"	8"	7"	4"	1'-0"	18
ER531	7	1'-5"	ST.						10
ER532	9	1'-1"	ST.						10
ER537	8	7'-6"	15	4'-4"	1'-8"	10"	1'-8"		
ER538	9	2'-10"	ST.						27
ER542	5	19'-3"	ST.						100
ER546	12	26'-3"	ST.						329
ER547	12	23'-3"	ST.						291
ER548	12	14'-6"	ST.						181
ER551	6	3'-3"	10	1'-4"	10"	1'-10"			20
				EPOXY COATED TOTAL = 6,880					
				WEST ABUTMENT TOTAL = 32,411					

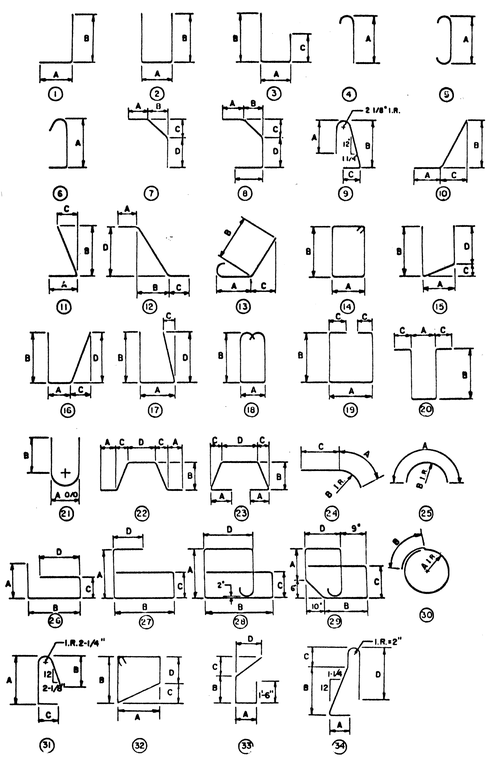

NOTES

SEE NOTE 1 ON SHEET 31/31

McCOY ASSOCIATES, INC. 27/31
CONSULTING ENGINEERS
AKRON, OHIO

REINFORCING SCHEDULE

BRIDGE NO. SUM. 76-1296
AKRON EAST EXPRESSWAY
OVER MARTHA AVENUE
SUMMIT COUNTY STA. 610+81.52
611+54.83

DESIGNED	DRAWN	TRACED	CHECKED	REVIEWED	DATE	REVISED
JMH	DAK		TAB	MGC	2-29-88	

23776

REINFORCING SCHEDULE

FHWA REGION	STATE	PROJECT		
5	OHIO			

1107
1214

SUMMIT COUNTY
SUM. 76-11.57

MARK	No. REQ'D.	LENGTH	TYPE	DIMENSIONS A	B	C	D	INCRM.	WEIGHT LBS.
EAST ABUTMENT									
F1001	24	15'-6"	11	1'-6"	8'-6"	3'-2"			1,601
F1002	8	20'-11"	4	19'-6"					720
F1003	4	17'-3"	ST.						297
F1004	4	15'-0"	ST.						258
F1005	8	18'-11"	4	17'-6"					651
SERIES	1 SET	7'-6" TO	ST.						430
F1006	OF 8	17'-6"							
F1007	5	17'-6"	ST.						377
SERIES	1 SET	8'-0" TO	ST.						274
F1008	OF 5	17'-6"							
F1009	3	8'-0"	ST.						103
SERIES	1 SET	3'-3" TO	4	2'-0" TO				2'-0"	168
F901	OF 6	13'-3"		12'-0"					
F902	9	18'-0"	5	15'-6"					551
SERIES	1 SET	19'-2" TO	5	16'-8" TO				1'-8½"	579
F903	OF 7	29'-6"		27'-0"					
SERIES	1 SET	27'-4" TO	5	24'-10" TO				5½"	384
F904	OF 4	29'-2"		26'-8"					
SERIES	1 SET	5'-9" TO	4	4'-6" TO				1'-4"	608
F905	OF 13	21'-9"		20'-6"					
SERIES	1 SET	19'-2" TO	5	16'-8" TO				5½"	1139
F906	OF 15	25'-6"		23'-0"					
SERIES	1 SET	10'-0" TO	5	7'-6" TO				2'-8"	428
F907	OF 7	26'-0"		23'-6"					
F908	3	8'-3"	4	7'-0"					84
SERIES	1 SET	5'-3" TO	4	4'-0" TO				1'-8½"	306
F909	OF 8	17'-3"		16'-0"					
F910	5	20'-0'	5	17'-6"					340
SERIES	1 SET	8'-9" TO	4	7'-6" TO				3'-1½"	234
F911	OF 5	21'-3"		20'-0"					
F912	3	9'-3"	4	8'-0"					94
F801	6	18'-0"	ST.						288
SERIES	1 SET	20'-8" TO	ST.					7⅛"	1319
F802	OF 19	31'-4"							
SERIES	1 SET	16'-8" TO	ST.					4¾"	961
F804	OF 18	23'-4"							
SERIES	1 SET	7'-0" TO	ST.					2'-6"	271
F805	OF 7	22'-0"							
F808	2	7'-0"	ST.						37
F809	1	16'-0"	ST.						43
F810	24	4'-0"	ST.						256
F701	25	6'-7"	1	2'-6"	4'-3"				336
F702	15	18'-0"	ST.						552
F703	40	11'-4"	2	1'-8"	5'-0"				927
F704	13	24'-0"	ST.						638
F705	23	8'-0"	1	2'-6"	5'-8"				376
F501	92	6'-10"	1	12	6'-0"				656
F502	24	28'-4"	ST.						709
F503	30	16'-0"	ST.						501
F504	15	18'-6"	ST.						289
F506	15	6'-8"	15	1'-10"	2'-6"	6"	2'-6"		104

MARK	No. REQ'D.	LENGTH	TYPE	DIMENSIONS A	B	C	D	INCRM.	WEIGHT LBS.
F508	28	7'-1"	10	1'-9"	3'-6"	4'-1"			207
F509	24	20'-4"	ST.						509
F510	1	7'-6"	15	2'-8"	2'-6"	9"	2'-6"		8
F511	1	8'-6"	15	3'-8"	2'-6"	12"	2'-6"		9
F512	4	9'-0"	15	4'-1"	2'-6"	1'-2"	2'-6"		38
F513	20	4'-7"	16	10"	2'-0"	1'-10"	9"		96
F514	20	6'-0"	ST.						125
F515	5	3'-0"	16	12"	10"	7"	1'-3"		16
F524	3	18'-6"	ST.						58
F525	3	21'-9"	ST.						68
F526	38	11'-0"	3	1'-2"	8'-7"	1'-6"			436
F528	10	8'-5"	2	8"	4'-0"				88
F529	4	4'-9"	4	3'-10"					20
SERIES	4 SETS	4'-6" TO	ST.					4'-5"	113
F536	OF 3	13'-6"							
F537	8	17'-9"	ST.						148
SERIES	2 SETS	18'-4" TO	20	1'-8"	4'-3" TO	1'-10"		4"	695
F538	OF 16	23'-4"			9'-3"				
F539	6	7'-11"	3	1'-2"	5'-6"	1'-6"			50
F540	7	23'-2"	ST.						169
F541	6	4'-9"	ST.						30
F542	17	14'-0"	ST.						248
F543	17	25'-0"	ST.						443
F544	5	24'-0"	ST.						125
F549	3	16'-3"	ST.						51
F550	7	20'-10"	ST.						152
F551	8	19'-6"	ST.						163
F552	18	7'-0"	ST.						131
F553	6	10'-4"	26	2'-6"	5'-7"	1'-2"	1'-6"		65
F554	18	4'-0"	10	2'-0"	12"	1'-9"			75
F555	4	27'-0"	ST.						113
F556	4	29'-4"	ST.						122
SERIES	2 SETS	20'-6" TO	ST.					4⅞"	842
F557	OF 17	27'-0"							
F558	2	30'-0"	ST.						63
F559	8	2'-10"	ST.						24
SERIES	2 SETS	18'-8½"	20	1'-8"	4'-5½"	1'-10"		4½"	619
F560	OF 14	TO 23'-8"			TO 9'-5"				
SERIES	4 SETS	3'-8" TO	ST.						96
F561	OF 3	11'-8"							
NON EPOXY TOTAL = 24,104									

MARK	No. REQ'D.	LENGTH	TYPE	DIMENSIONS A	B	C	D	INCRM.	WEIGHT LBS.
EPOXY COATED									
EF803	5	20'-0"	ST.						267
EF806	5	25'-0"	ST.						334
EF807	116	4'-8"	7	1'-5"	1'-5"	1'-5"	1'-5"		1,445
EF601	10	3'-11"	7	9"	6"	8"	2'-5"		59
EF505	89	8'-2"	2	1'-5"	3'-9"				758
EF507	31	7'-3"	2	4'-0"	1'-9"				234
EF516	5	29'-3"	ST.						153
EF517	10	21'-8"	ST.						226
EF518	120	7'-1"	2	11"	2'-9"				887
EF519	31	11'-2"	2	1'-5"	5'-0"				361
EF520	12	29'-4"	ST.						367
EF521	12	19'-1"	ST.						239
EF522	29	19'-6"	ST.						590
EF523	31	7'-6"	2	1'-5"	3'-2"				242
EF527	9	3'-3"	ST.						31
EF530	4	3'-7"	8	2'-3"	8"	7"			15
EF531	7	1'-5"	ST.						10
EF532	8	1'-1"	ST.						9
EF533	10	6'-8"	34	7½"	2'-7"	8"	3'-0"		70
EF534	4	3'-10"	ST.						16
EF535	10	5'-6"	ST.						57
EF545	12	25'-3"	ST.						316
EF546	12	23'-2"	ST.						290
EF547	17	23'-3"	ST.						412
EF548	5	18'-0"	ST.						94
EPOXY COATED TOTAL = 7,482									
EAST ABUTMENT TOTAL = 31,586									

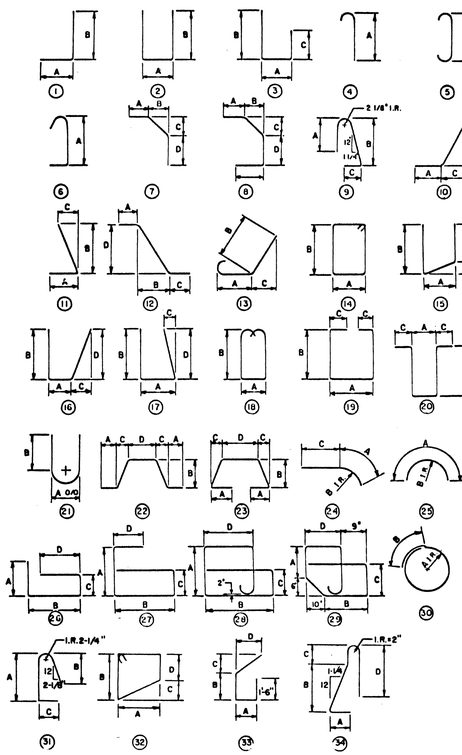

NOTES

SEE SHEET 1 ON SHEET 31/31

McCOY ASSOCIATES, INC.
CONSULTING ENGINEERS
AKRON, OHIO

28/31

REINFORCING SCHEDULE

BRIDGE NO. SUM. 76-1296
AKRON EAST EXPRESSWAY
OVER MARTHA AVENUE
SUMMIT COUNTY STA. 610+81.52
611+54.83

DESIGNED	DRAWN	TRACED	CHECKED	REVIEWED	DATE	REVISED
TAB	BMR		JMH	MSC	2-29-88	

REINFORCING SCHEDULE

FHWA REGION	STATE	PROJECT	
5	OHIO		

1108 / 1214

SUMMIT COUNTY
SUM. 76-11.57

MARK	No. REQ'D.	LENGTH	TYPE	DIMENSIONS A	B	C	D	INCRM.	WEIGHT LBS.
S.W. WINGWALL (NON-EPOXY COATED BARS)									
RW1101	20	13'-11"	11	1'-0"	13'-1"	9"			1,479
RW901	8	19'-6"	ST						530
RW902	4	20'-0"	ST						272
RW906	22	4'-0"	ST						299
RW701	15	5'-4"	11	1'-0"	4'-6"	3"			164
RW702	15	8'-6"	ST						261
RW703	15	10'-6"	ST						322
RW501	8	22'-0"	ST						184
RW502	8	4'-6"	ST						38
RW503	5	12'-6"	1	10'-2"	2'-6"				65
RW504	5	10'-6"	ST						55
RW505	10	27'-6"	1	25'-2"	2'-6"				287
RW506	10	25'-6"	ST						266
RW507	13	6'-0"	ST						81
RW508	12	14'-6"	ST						181
RW509	12	11'-6"	ST						144
RW510	14	7'-0"	33	1'-0"	1'-2"	2'-10"	2'-2"		102
RW511	10	15'-0"	ST						156
RW512	15	8'-6"	ST						133
RW513	12	11'-8"	5	10'-6"					146
RW514	19	10'-10"	10	2'-0"	8'-0"	4'-0"			215
RW515	19	9'-10"	1	2'-0"	8'-0"				195
RW516	12	7'-2"	5	6'-0"					90
RW517	7	12'-0"	ST						88
RW518	8	11'-0"	ST						92
RW519	4	14'-6"	ST						60
RW520	24	8'-6"	ST						273
SERIES	2 SETS	2'-10"TO	ST					4"	20
RW521	OF 3	3'-6"							
RW522	2	6'-0"	10	1'-6"	2'-0"	4'-0"			13
RW523	7	4'-0"	ST						29
RW524	7	8'-0"	ST						58
RW529	13	5'-10"	1	1'-0"	5'-0"				79
		TOTAL NON-EPOXY COATED BARS =							6,136
(EPOXY COATED BARS)									
ERW601	19	5'-5"	7	9"	6"	8"	4'-0"		155
ERW501	19	3'-3"	ST.						64
ERW502	10	25'-2"	ST.						262
ERW503	20	6'-8"	34	7½"	2'-7"	8"	3'-0"		139
SERIES	1 SET	3'-3"TO	4	2'-5"TO				1½"	30
ERW504	OF 8	3'-10"		3'-3"					
ERW505	6	14'-2"	ST.						89
ERW506	2	14'-2"	35	10'-5"	2'-4"	1'-5"			30
ERW507	4	4'-4"	ST.						18
ERW508	8	3'-7"	7	8"	6"	8½"	2'-1"		30
SERIES	1 SET	4'-4"TO	ST.					1½"	40
ERW509	OF 8	5'-2"							
		TOTAL EPOXY COATED BARS =							857

MARK	No. REQ'D.	LENGTH	TYPE	DIMENSIONS A	B	C	D	INCRM.	WEIGHT LBS.
N.W. WINGWALL (NON-EPOXY COATED BARS)									
RW1101	20	13'-11"	11	1'-0"	13'-1"	9"			1,479
RW901	8	19'-6"	ST						530
RW903	4	22'-0"	ST						299
RW904	15	7'-9"	11	1'-0"	7'-0"	5"			395
RW905	15	12'-8"	ST						646
RW906	22	4'-0"	ST						299
RW703	15	10'-6"	ST						322
RW503	5	12'-6"	1	10'-2"	2'-6"				65
RW504	5	10'-6"	ST						55
RW505	12	27'-6"	1	25'-2"	2'-6				344
RW506	12	25'-6"	ST						319
RW508	12	14'-6"	ST						181
RW509	12	11'-6"	ST						144
RW510	15	7'-0"	33	1'-0"	1'-2"	2'-10"	2'-2"		110
RW513	15	11'-8"	5	10'-6"					183
RW514	21	10'-10"	10	2'-0"	8'-0"	4'-0"			237
RW515	21	9'-10"	1	2'-0"	8'-0"				215
RW522	2	6'-0"	10	1'-6"	2'-0"	4'-0"			13
RW523	9	4'-0"	ST						38
RW525	8	24'-0"	ST						200
RW526	8	6'-4"	ST						53
RW527	10	17'-6"	ST						183
RW528	15	7'-0"	ST						110
RW530	17	6'-0"	1	1'-0"	5'-2"				106
RW531	26	10'-9"	ST						292
RW532	17	7'-6"	ST						133
RW533	10	15'-0"	ST						156
RW534	6	18'-0"	ST						113
RW535	17	8'-8"	5	7'-6"					154
RW536	9	16'-0"	ST						150
RW537	9	12'-6"	ST						117
SERIES	2 SETS	2'-10"TO	ST					7"	21
RW538	OF 3	4'-0"							
		TOTAL NON-EPOXY COATED BARS =							7,662
(EPOXY COATED BARS)									
ERW601	34	5'-5"	7	9"	6"	8"	4'-0"		227
ERW501	34	3'-3"	ST						115
ERW502	10	25'-2"	ST						262
ERW503	34	6'-8"	34	7½"	2'-7"	8"	3'-0"		236
ERW508	10	18'-2"	ST						189
		TOTAL EPOXY COATED BARS =							1,079

MARK	No. REQ'D.	LENGTH	TYPE	DIMENSIONS A	B	C	D	INCRM.	WEIGHT LBS.

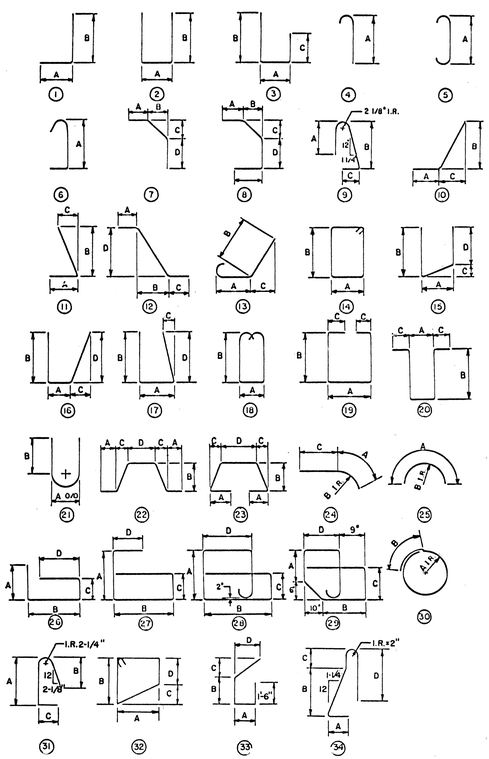

NOTES

SEE SHEET (1) ON SHEET 31/31

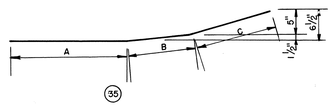

McCOY ASSOCIATES, INC. 29/31
CONSULTING ENGINEERS
AKRON, OHIO

REINFORCING SCHEDULE

BRIDGE NO. SUM. 76-12.96
AKRON EAST EXPRESSWAY
OVER MARTHA AVENUE
SUMMIT COUNTY STA. 610+81.52
STA. 611+54.83

DESIGNED	DRAWN	TRACED	CHECKED	REVIEWED	DATE	REVISED
JBH	PNA		MSC	JBH	10/2/89	

REINFORCING SCHEDULE

FHWA REGION	STATE	PROJECT	
5	OHIO		

1109
1214

SUMMIT COUNTY
SUM. 76-11.57

MARK	No. REQ'D.	LENGTH	TYPE	DIMENSIONS A	B	C	D	INCRM.	WEIGHT LBS.
S.E. WINGWALL									
NON-EPOXY COATED BARS									
FW1101	20	13'-11"	11	1'-0"	13'-1"	9"			1,479
FW901	8	19'-6"	ST						530
FW902	4	19'-0"	ST						258
FW906	22	4'-0"	ST						299
FW701	15	5'-4"	11	1'-0"	4'-6"	1'-3"			164
FW702	15	8'-6"	ST						261
FW703	15	10'-6"	ST						322
FW501	8	20'-8"	ST						172
FW502	8	5'-3"	ST						44
FW503	5	12'-6"	1	10'-2"	2'-6"				65
FW504	5	10'-6"	ST						55
FW505	10	27'-6"	1	25'-2"	2'-6"				287
FW506	10	25'-6"	ST						266
FW507	13	6'-0"	ST						81
FW508	12	14'-6"	ST						181
FW509	12	11'-6"	ST						144
FW510	14	7'-0"	33	1'-0"	1'-2"	2'-10"	2'-2"		102
FW511	10	13'-6"	ST						141
FW512	15	7'-0"	ST						110
FW513	15	11'-8"	5	10'-6"					183
FW514	19	10'-10"	10	2'-0"	8'-0"	4'-0"			215
FW515	19	9'-10"	1	2'-0"	8'-0"				195
FW516	13	7'-2"	5	6'-0"					97
FW517	7	12'-0"	ST						88
FW518	16	11'-0"	ST						184
FW519	4	14'-0"	ST						58
FW620	24	6'-9"	ST						169
SERIES	2 SETS	2'-10"TO	ST					4"	20
FW621	OF 3	3'-6"							
FW522	2	6'-0"	10	1'-6"	2'-0"	4'-0"			13
FW523	7	4'-0"	ST						29
FW524	7	8'-0"	ST						58
FW529	12	5'-10"	1	1'-0"	5'-0"				73
SIGN SUPPORT BARS (SEE THIS SHEET)									112
TOTAL NON-EPOXY COATED BARS =									6,455
EPOXY COATED BARS									
EFW601	32	5'-5"	7	9"	6"	8"	4'-0"		260
EFW501	32	3'-3"	ST						108
EFW502	10	25'-2"	ST						262
EFW503	32	6'-8"	34	7½"	2'-7"	8"	3'-0"		223
EFW504	10	14'-2"	ST						148
SIGN SUPPORT BARS (SEE THIS SHEET)									442
TOTAL EPOXY COATED BARS =									1,443

MARK	No. REQ'D.	LENGTH	TYPE	DIMENSIONS A	B	C	D	INCRM.	WEIGHT LBS.
N.E. WINGWALL									
NON-EPOXY COATED BARS									
FW1101	20	13'-11"	11	1'-0"	13'-1"	9"			1,479
FW901	8	19'-6"	ST						580
FW903	4	21'-6"	ST						292
FW904	15	7'-9"	11	1'-0"	7'-0"	5"			395
FW905	15	12'-8"	ST						646
FW906	22	4'-0"	ST						299
FW703	15	10'-6"	ST						322
FW503	5	12'-6"	1	10'-2"	2'-6"				65
FW504	5	10'-6"	ST						55
FW505	11	27'-6"	1	25'-2"	2'-6"				316
FW506	11	25'-6"	ST						293
FW508	12	14'-6"	ST						181
FW509	12	11'-6"	ST						144
FW510	15	7'-0"	33	1'-0"	1'-2"	2'-10"	2'-2"		110
FW513	13	11'-8"	5	10'-6"					158
FW514	21	10'-10"	10	2'-0"	8'-0"	4'-0"			237
FW515	21	9'-10"	1	2'-0"	8'-0"				215
FW522	2	6'-0"	10	1'-6"	2'-0"	4'-0"			13
FW523	9	4'-0"	ST						38
FW525	9	23'-0"	ST						216
FW526	8	6'-0"	ST						50
FW527	11	16'-0"	ST						184
FW528	15	5'-10"	ST						91
FW530	8	6'-0"	1	1'-0"	5'-2"				50
FW531	14	9'-6"	ST						139
FW532	9	7'-6"	ST						70
FW533	8	7'-2"	ST						60
FW534	6	10'-2"	ST						64
FW535	9	8'-8"	5	7'-6"					81
FW536	9	8'-0"	ST						75
FW537	9	4'-6"	ST						42
SERIES	2 SETS	2'-10"TO	ST					7"	21
FW538	OF 3	4'-0"							
TOTAL NON-EPOXY COATED BARS =									6,931
EPOXY COATED BARS									
EFW601	29	5'-5"	7	9"	6"	8"	4'-0"		236
EFW501	29	3'-3"	ST						98
EFW502	10	25'-2"	ST						262
EFW503	29	6'-8"	34	7½"	2'-7"	8"	3'-0"		202
EFW508	10	10'-2"	ST						106
TOTAL EPOXY COATED BARS =									904

MARK	No. REQ'D.	LENGTH	TYPE	DIMENSIONS A	B	C	D	INCRM.	WEIGHT LBS.
S.E. WINGWALL (SIGNS SUPPORT)									
NON-EPOXY COATED BARS									
FW 704	3	15'-10"	35	2'-5"	2'-8"	7'-3"	10"		97
FW 530	2	7'-3"	ST.						15
						SUB-TOTAL =			112
EPOXY COATED BARS									
EFW 701	10	10'-5"	10	5'-9"	3'-5"	3'-5"			213
EFW 602	4	15'-6"	35	2'-5"	2'-8"	7'-3	8"		93
EFW 505	10	3'-7"	2	2'-8"	7"				37
EFW 506	1	9'-0"	ST.						3
EFW 507	1	11'-4"	ST.						12
EFW 508	10	7'-6"	ST.						78
						SUB-TOTAL			442

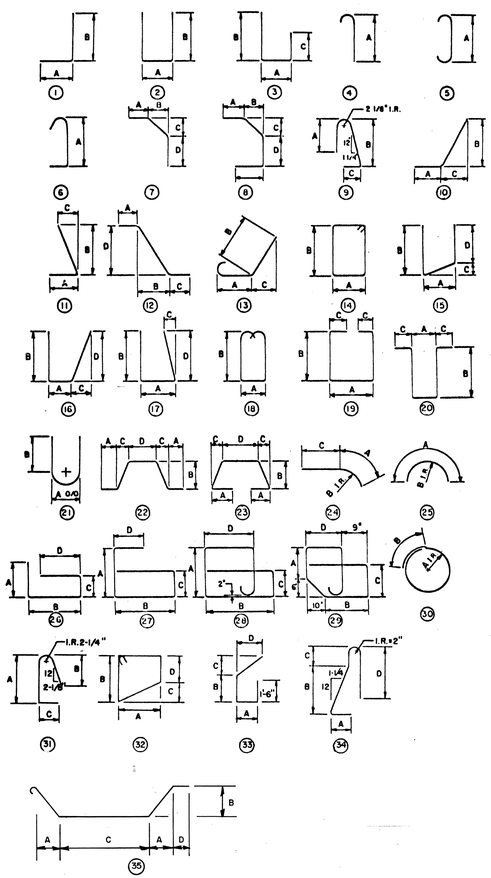

NOTES

SEE NOTE (1) ON SHEET 31/31

McCOY ASSOCIATES, INC. 30/31
CONSULTING ENGINEERS
AKRON, OHIO

REINFORCING SCHEDULE

BRIDGE NO. SUMMIT 76-12.96
AKRON EAST EXPRESSWAY
OVER MARTHA AVENUE
SUMMIT COUNTY STA. 610+81.52
611+54.83

DESIGNED	DRAWN	TRACED	CHECKED	REVIEWED	DATE	REVISED
JBH	PNA		MSC	JBH	10/2/89	

REINFORCING SCHEDULE

FHWA REGION	STATE	PROJECT	
5	OHIO		

1110
12.14

SUMMIT COUNTY
SUM 76-11.57

MARK	No. REQ'D.	LENGTH	TYPE	DIMENSIONS A	B	C	D	INCRM.	WEIGHT LBS.
SUPERSTRUCTURE									
WESTBOUND (EPOXY COATED)									
ES 601	95	23'-8"	ST.						3,377
ES 602	96	16'-5"	ST.						2,367
SERIES	3 SETS	8'-8" TO							
ES 603	OF 17	30'-6"	ST.					1'-4 3/8"	1,500
ES 604	12	25'-4"	ST.						457
SERIES	1 SET	10'-3" TO							
ES 605	OF 12	26'-6"	ST.					1'-5 3/4"	331
ES 606	96	20'-9"	ST.						2,992
ES 607	11	7'-4"	ST.						121
ES 608	1	9'-5"	10	1'-4"	7'-6"	3'-3"			14
ES 609	4	6'-8"	ST.						40
SERIES	1 SET	9'-1" TO							
ES 610	OF 12	23'-8"	ST.					1'-3 15/16"	295
SERIES	1 SET	13'-2" TO							
ES 611	OF 4	16'-5"	ST.					1'-1"	89
ES 612	83	26'-6"	ST.						3,304
SERIES	1 SET	8'-0" TO							
ES 613	OF 17	29'-10"	ST.					1'-4 3/8"	483
SERIES	1 SET	17'-0" TO							
ES 614	OF 4	20'-9"	ST.					1'-3"	113
ES 501	336	24'-2"	ST.						8,469
ES 502	95	26'-11"	ST.						2,667
ES 503	96	19'-8"	ST.						1,969
SERIES	3 SETS	8'-8" TO							
ES 504	OF 17	30'-6"	ST.					1'-4 3/8"	1,042
ES 505	96	17'-0"	ST.						1,702
SERIES	1 SET	6'-6" TO							
ES 506	OF 12	22'-9"	ST.					1'-5 3/4"	183
ES 507	83	22'-9"	ST.						1,969
ES 508	11	7'-4"	ST.						84
ES 509	1	7'-10"	10	1'-4"	6'-0"	2'-7"			8
SERIES	1 SET	16'-8" TO							
ES 510	OF 4	19'-8"	ST.					1'-0"	76
ES 511	44	13'-8"	ST.						627
ES 512	6	12'-10"	ST.						80
ES 513	12	21'-6"	ST.						269
ES 514	70	2'-7"	8	9"	6"	8"	9"		189
ES 515	70	2'-3"	1	10"	1'-6"				164
ES 516	74	6'-8"	34	8"	2'-7"	8"	3'-0"		515
SERIES	1 SET	12'-4" TO							
ES 517	OF 12	26'-11"	ST.					1'-3 15/16"	246
ES 518	4	6'-8"	ST.						28
SERIES	1 SET	8'-0" TO							
ES 519	OF 17	29'-10"	ST.					1'-4 3/8"	335
SERIES	1 SET	13'-3" TO							
ES 520	OF 4	17'-0"	ST.					1'-3"	63
ES 521	71	2'-5"	1	1'-0"	1'-6"				179
ES 522	71	2'-2"	8	4"	6"	8"	9"		160
ES 544	75	4'-6"	4	3'-10"					352
ES 545	75	4'-0"	ST.						313

MARK	No. REQ'D.	LENGTH	TYPE	DIMENSIONS A	B	C	D	INCRM.	WEIGHT LBS.
ES 401	342	23'-11"	ST.						5,465
TOTAL								=	42,637
EASTBOUND (EPOXY COATED)									
ES 615	96	21'-3"	ST.						3,064
ES 616	96	22'-9"	ST.						3,280
ES 617	90	17'-8"	ST.						2,389
SERIES	1 SET	8'-10" TO							
ES 618	OF 17	30'-9"	ST.					1'-4 7/16"	505
SERIES	1 SET	11'-5" TO							
ES 619	OF 6	17'-8"	ST.					1'-3"	131
SERIES	1 SET	15'-10" TO							
ES 620	OF 6	22'-9"	ST.					1'-4 5/8"	174
SERIES	1 SET	8'-4" TO							
ES 621	OF 17	30'-2"	ST.					1'-4 3/8"	492
ES 622	6	17'-8"	ST.						159
ES 623	4	7'-0"	ST.						42
ES 624	4	7'-6"	ST.						45
ES 625	4	7'-5"	ST.						45
SERIES	1 SET	16'-4" TO							
ES 626	OF 6	24'-4"	ST.					1'-7 3/16"	183
SERIES	1 SET	8'-9" TO							
ES 627	OF 17	30'-7"	ST.					1'-4 3/8"	502
SERIES	1 SET	4'-10" TO							
ES 628	OF 11	17'-8"	ST.					1'-3 7/16"	186
SERIES	1 SET	27'-7" TO							
ES 629	OF 11	28'-1"	ST.					5/8"	460
SERIES	1 SET	8'-5" TO							
ES 630	OF 17	29'-4"	ST.					1'-3 11/16"	482
ES 631	3	7'-1"	ST.						32
ES 632	1	7'-7"	10	1'-4"	5'-9"	2'-6"			11
SERIES	1 SET	24'-4" TO							
ES 633	OF 90	27'-7"	ST.					7/16"	3,509
ES 501	240	24'-2"	ST.						6,049
ES 511	20	13'-8"	ST.						285
ES 514	73	2'-7"	8	9"	6"	8"	9"		197
ES 515	73	2'- "	1		1'-6"				171
ES 516	78	6'-8"	34	8"	2'-7"	8"	3'-0"		542
ES 521	71	2'-5"	1	1'-0"	1'-6"				179
ES 522	71	2'-2"	8	4"	6"	8"	9"		160
ES 523	192	21'-3"	ST.						4,255

MARK	No. REQ'D.	LENGTH	TYPE	DIMENSIONS A	B	C	D	INCRM.	WEIGHT LBS.
SERIES	1 SET	8'-10" TO							
ES 524	OF 17	30'-9"	ST.					1'-4 7/16"	351
SERIES	1 SET	8'-6" TO							
ES 525	OF 17	30'-5"	ST.					1'-4 7/16"	345
SERIES	1 SET	8'-2" TO							
ES 526	OF 17	30'-0"	ST.					1'-4 3/8"	338
SERIES	1 SET	8'-5" TO							
ES 527	OF 17	29'-4"	ST.					1'-3 11/16"	335
SERIES	1 SET	23'-6" TO							
ES 528	OF 11	24'-0"	ST.					5/8"	272
SERIES	1 SET	8'-4" TO							
ES 529	OF 11	21'-3"	ST.					1'-3 1/2"	170
SERIES	1 SET	12'-3" TO							
ES 530	OF 6	20'-3"	ST.					1'-7 3/16"	102
SERIES	1 SET	15'-4" TO							
ES 531	OF 6	21'-3"	ST.					1'-2 3/16"	114
ES 532	96	18'-7"	ST.						1,861
SERIES	1 SET	11'-9" TO							
ES 533	OF 6	18'-7"	ST.					1'-4 3/8"	95
ES 534	4	6'-10"	ST.						29
ES 535	4	7'-6"	ST.						31
ES 536	4	7'-3"	ST.						30
ES 537	3	7'-1"	ST.						22
ES 538	1	7'-7"	10	1'-4"	5'-9"	2'-6"			8
SERIES	1 SET	20'-3" TO							
ES 539	OF 90	23'-6"	ST.					7/16"	2053
ES 540	27	24'-6"	ST.						690
ES 541	48	25'-0"	ST.						1,252
ES 542	30	11'-8"	ST.						365
ES 543	6	12'-2"	ST.						76
ES 544	75	4'-6"	4	3'-10"					352
ES 545	75	4'-0"	ST.						313
ES 401	249	23'-11"	ST.						3,979
ES 402	30	24'-4"	ST.						488
ES 403	39	24'-10"	ST.						647
TOTAL								=	41,847
GRAND TOTAL								=	84,484

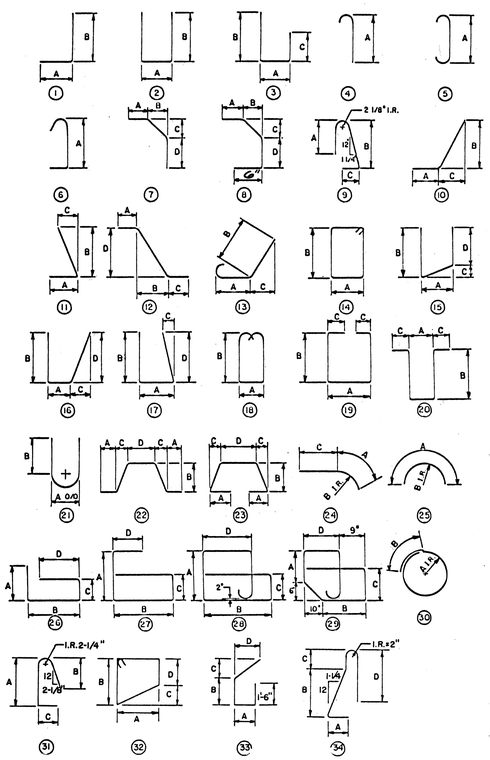

NOTES

1. REINFORCING STEEL SAMPLES REFER TO CMS SECTION 106.03, 700, 709.01 THROUGH 709.05 AND 709.08. SUFFICIENT ADDITIONAL REINFORCING STEEL SHALL BE PROVIDED FOR SAMPLING. RANDOM SAMPLES SHALL BE REPLACED IN THE STRUCTURES BY THE ADDITIONAL STEEL, SPLICED IN ACCORDANCE WITH 509.08.

McCOY ASSOCIATES, INC. 31/31
CONSULTING ENGINEERS
AKRON, OHIO

REINFORCING SCHEDULE

BRIDGE NO. SUM 76-1296
AKRON EAST EXPRESSWAY
OVER MARTHA AVENUE
SUMMIT COUNTY STA. 610+81.52
611+54.83

DESIGNED	DRAWN	TRACED	CHECKED	REVIEWED	DATE	REVISED
MSC	DAK		DAK	MSC	10/89	

23216

F.H.W.A. REG.	STATE	PROJECT	
5	OHIO		

1111
1214

SUMMIT COUNTY
SUM 76-11.57

~~FOR SOIL BORING LOCATIONS & LOGS SEE SHEET NO.S _____ THRU _____~~

EARTHWORK LIMITS SHOWN ARE APPROXIMATE. ACTUAL LIMITS SHALL CONFORM TO PLAN CROSS-SECTIONS. SEE SHEET NO.'S 427 THRU 447

CURVE DATA

RAMP E-10

CURVE Nº 1	CURVE Nº 2
Δ = 15° 04' 49"	Δ = 12° 20' 33"
Dc = 4° 00' 00"	Dc = 3° 00' 00"
R = 1432.39'	R = 1909.86'
Lc = 377.01'	Lc = 411.42'
T = 189.60'	T = 206.51'
CH = 375.92'	CH = 410.62'

RAMP E-16

CURVE Nº1
Δ = 27° 33'-55"
Dc = 7° 30' 00"
R = 763.94'
Lc = 367.54'
T = 187.40'
CH = 364.00'

TRAFFIC

RAMP E-10	298 ADTT, YR. 2009
RAMP E-16	208 ADTT, YR. 2009

PROPOSED STUCTURE

TYPE: COMPOSITE REINFORCED CONCRETE DECK WITH WELDED STEEL PLATE GIRDERS AND REINFORCED CONCRETE COUNTERFORTED ABUTMENTS.
SKEW: WEST ABUTMENT = 65°00'00" L.F. TO ℄ E-10
EAST ABUTMENT = 72°09'23" L.F. TO ℄ E-10
SPAN: AVERAGE LENGTH = 94'
ROADWAY: 28' TOE/TOE DEFLECTION PARAPETS.
LOADING: HS 20-44 (CASE II) AND ALTERNATE MILITARY LOADING.
WEARING SURFACE: 1½" MONOLITHIC CONCRETE
APPROACH SLABS: 30' LONG (AS-1-81) MODIFIED.
ALIGNMENT: TANGENT AND CURVE
SUPERELEVATION: VARIES
SLOPE PROTECTION: NONE

McCOY ASSOCIATES INC.
CONSULTING ENGINEERS
AKRON, OHIO

1 / 17

SITE PLAN

BRIDGE Nº SUM 76-1303
RAMP E-10 OVER RAMP E-16
SUMMIT COUNTY STA. 14+37.14
STA. 15+40.87

DESIGNED	DRAWN	TRACED	CHECKED	REVIEWED	DATE	REVISED
TAB	J.D.P.		RPL	MSC	12-21-87	

FHWA REGION	STATE	PROJECT	
5	OHIO		

1112
12.14

SUMMIT COUNTY
SUM 76-11.57

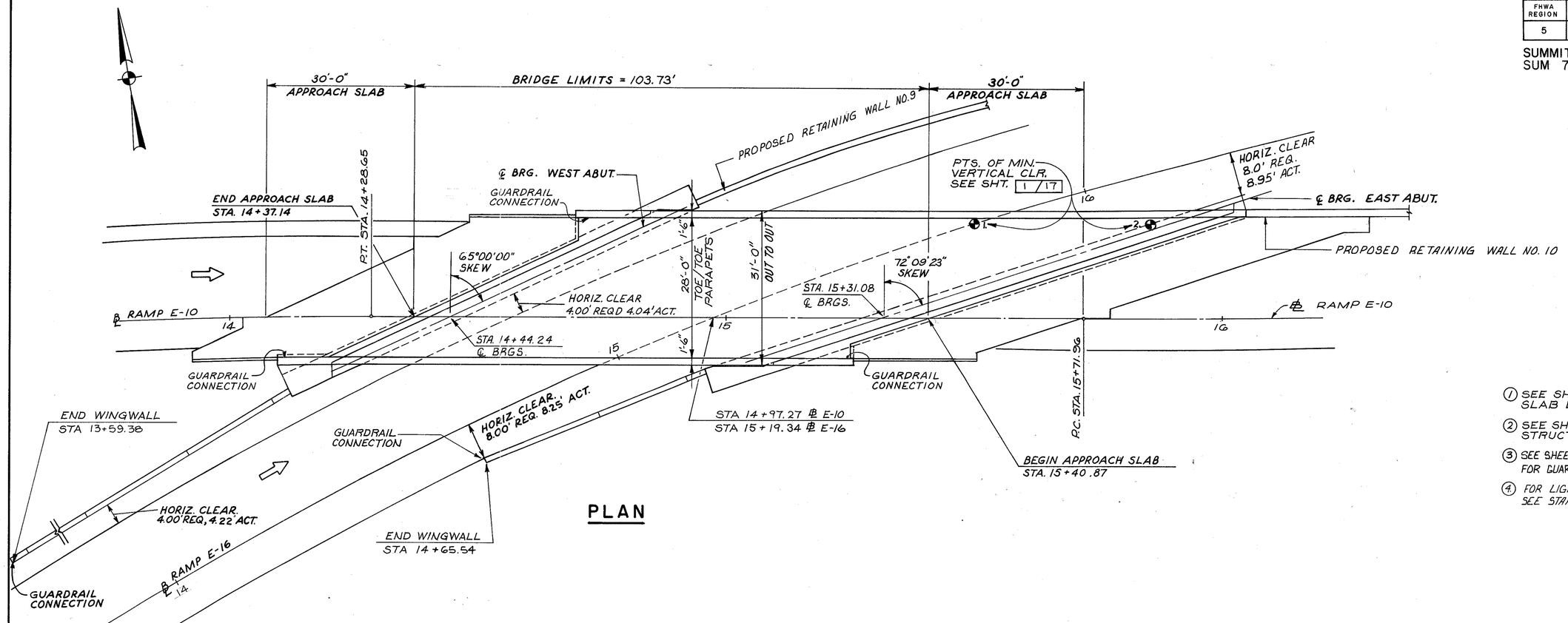

PLAN

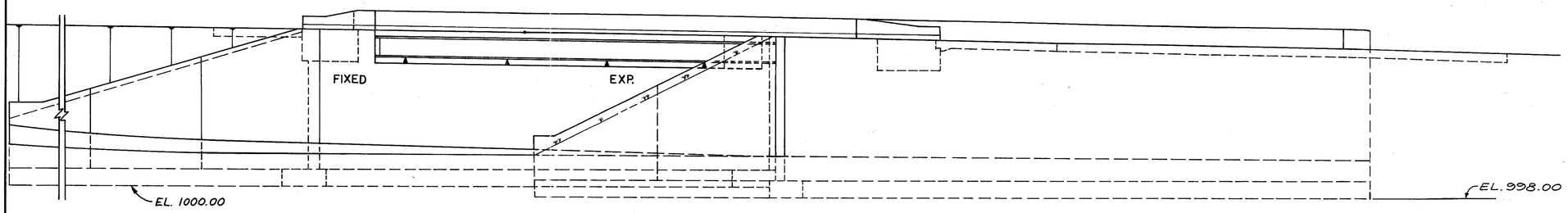

ELEVATION

NOTES

1. SEE SHEET NO. 17A/17 FOR APPROACH SLAB DETAILS.
2. SEE SHEET NO. 2A/17 FOR STRUCTURAL GENERAL NOTES.
3. SEE SHEET NO. 6A/17 6B/17 AND 9A/17 FOR GUARDRAIL CONNECTION DETAILS.
4. FOR LIGHTING CONDUIT EXPANSION FITTING SEE STANDARD DRAWING HL-30.31.

McCOY ASSOCIATES INC. 2/17
CONSULTING ENGINEERS
AKRON, OHIO

GENERAL PLAN & ELEVATION

BRIDGE NO. SUM 76-1303
RAMP E-10 OVER RAMP E-16
SUMMIT COUNTY STA. 14+37.14
STA. 15+40.87

DESIGNED	DRAWN	TRACED	CHECKED	REVIEWED	DATE	REVISED
TAB	J.D.P.		RPL	MSC	12-21-87	

22376

STRUCTURAL GENERAL NOTES

FHWA REGION	STATE	PROJECT	
5	OHIO		

1113
12.14

SUMMIT COUNTY
SUM. 76-11.57

REFERENCE

SHALL BE MADE TO STANDARD DRAWINGS:

AS-1-81 DATED 11-27-81
EXJ-4-87 DATED 01-05-89
SD-1-69 DATED 06-12-69

AND TO SUPPLEMENTAL SPECIFICATIONS:

836 DATED 11-12-85

DESIGN SPECIFICATIONS: THIS STRUCTURE CONFORMS TO THE "STANDARD SPECIFICATIONS FOR HIGHWAY BRIDGES" ADOPTED BY THE AMERICAN ASSOCIATION OF STATE HIGHWAY AND TRANSPORTATION OFFICIALS, 1983 ALONG WITH THE 1984, 1985, AND 1986 INTERIMS AND THE OHIO "SUPPLEMENT" TO THESE SPECIFICATIONS.

DESIGN DATA:

DESIGN LOADING - HS 20-44 (CASE II) AND ALTERNATE MILITARY LOADING

CONCRETE CLASS S - COMPRESSIVE STRENGTH 4500 PSI

CONCRETE CLASS C - COMPRESSIVE STRENGTH 4000 PSI

REINFORCING STEEL - ASTM A615, A616, OR A617 - GRADE 60, MINIMUM YIELD STRENGTH 60,000 PSI

STRUCTURAL STEEL - ASTM A572, UNIT STRENGTH 50,000 PSI

DECK PROTECTION METHOD:

EPOXY COATED REINFORCING STEEL, BOTH MATS.

CONCRETE PROTECTION: PARAPETS

MONOLITHIC WEARING SURFACE: IS ASSUMED, FOR DESIGN PURPOSES, TO BE 1" THICK.

ITEM SPECIAL - SEALING OF CONCRETE SURFACES SPECIFIED CONCRETE SURFACES SHALL BE SEALED USING MATERIALS SPECIFIED IN THE PROPOSAL. SEE SHEET NO. 3/17 FOR DETAIL OF AREAS TO BE SEALED AND SEALER TYPE TO BE USED. SEE THE PROPOSAL FOR SURFACE PREPARATION REQUIREMENTS, APPLICATION, RATES, MATERIAL REQUIREMENTS, APPLICATION PROCEDURES AND MEASUREMENT AND PAYMENT. THE COLOR SPECIFICATION OF THE EPOXY SEALER SHALL BE IN ACCORDANCE WITH THE FEDERAL STANDARD 595A AND THE COLOR OF THE EPOXY SEALER SHALL BE NO. 13522

ABUTMENT CONSTRUCTION CONSTRAINTS: THE SEQUENCE OF CONSTRUCTION AT THE PROPOSED ABUTMENT SHALL BE AS FOLLOWS:

1. EXCAVATION FOR THE RAMP E-16 AS SHOWN, ITEM 203 ROADWAY EXCAVATION. SEE SHEET NO. 427.
2. EXCAVATION FOR THE REAR AND FORWARD ABUTMENT.
3. PRIOR TO CONSTRUCTING THE ABUTMENT BACKWALLS, THE EMBANKMENT LOCATED BEHIND THE ABUTMENTS SHALL BE PLACED UP TO THE LEVEL OF THE SUBGRADE WITH A 1:1 SLOPE FROM THE BRIDGE SEAT. PAYMENT FOR ALL REQUIRED BACKFILL, SHALL BE INCLUDED IN THE PRICE BID FOR ITEM 503, UNCLASSIFIED EXCAVATION, AS PER PLAN.

ITEM 503, UNCLASSIFIED EXCAVATION, AS PER PLAN: THE RESULTS OF THE BORINGS INDICATE THAT SILTY CLAY MATERIAL MAY BE PRESENT AT THE PROPOSED ABUTMENT FOOTING BEARING ELEVATION. IF SILTY CLAY MATERIAL IS FOUND, THE MATERIAL LOCATED BELOW THE PROPOSED ABUTMENT FOOTINGS SHALL BE REMOVED FOR A DEPTH OF TWO (2) FEET BELOW FOOTING ELEVATION AND REPLACED WITH COMPACTED 703 COARSE AGGREGATE SIZE #56 (AASHTO M 43). THE LIMITS OF REMOVAL AND PLACEMENT WITH THE 703 COARSE AGGREGATE SIZE #56 SHALL BE ONE (1) FOOT WIDER THAN THE PLAN FOOTING DIMENSIONS. PAYMENT FOR EXCAVATION AND PLACEMENT OF THE 703 COARSE AGGREGATE SIZE #56 SHALL BE INCLUDED IN THE CONTRACT PRICE PER CUBIC YARD FOR THE ITEM 503, UNCLASSIFIED EXCAVATION, AS PER PLAN.

SETTLEMENT MONITORING: THE CONTRACTOR SHALL FURNISH AND INSTALL A TOTAL OF TWO SETTLEMENT HUBS IN THE PROPOSED ABUTMENT FOOTINGS. ONE HUB SHALL BE INSTALLED IN THE CONCRETE AT THE TOE OF EACH FOOTING NEAR THE CENTER LINE OF ROADWAY, AND TRANSFERED TO A PERMANENTLY ACCESSIBLE POINT ON EACH ABUTMENT WALL PRIOR TO ERECTING THE STRUCTURAL STEEL. THE CONTRACTOR SHALL PROVIDE THE ELEVATIONS OF THE HUBS AS NECESSARY TO COMPLETE THE CHART BELOW. ADDITIONAL READINGS SHALL BE TAKEN AT SIX MONTH INTERVALS WHEN MORE THAN SIX MONTHS ELAPSES BETWEEN SPECIFIED READINGS.
PROVIDE THE ELEVATION OF THE HUB AT THE FOUR FOLLOWING SPECIFIED TIMES AND AT OTHER TIMES WHICH ARE APPROPRIATE FOR MONITORING THE MOVEMENT OF THE FOOTINGS:

1. AT THE COMPLETION OF THE FOOTING.
2. JUST PRIOR TO ERECTION OF THE STRUCTURAL STEEL.
3. AFTER COMPLETION OF THE CONCRETE DECK.
4. JUST PRIOR TO FINALIZING THE PROJECT.

		TIME 1	TIME 2	TIME 3	TIME 4
REAR ABUTMENT	DATE				
	ELEVATION				
FORWARD ABUTMENT	DATE				
	ELEVATION				

THE PROJECT ENGINEER SHOULD SEND A COMPLETED COPY OF THIS CHART TO THE BUREAU OF BRIDGES, ATTENTION: FOUNDATION ENGINEER. MATERIALS, INSTALLATION AND MEASUREMENTS OF THESE SETTLEMENT HUBS SHALL BE CONSIDERED INCIDENTAL TO THE CONSTRUCTION OF THE ABUTMENTS.

ITEM 518 - POROUS BACKFILL with filter fabric

TO ENSURE THAT FINE SOIL PARTICLES INCLUDED WITHIN THE EMBANKMENT DO NOT MIGRATE INTO AND THROUGH THE VOIDS OF THE POROUS BACKFILL MATERIAL, FILTER FABRIC, 712.09 TYPE A, SHALL BE PLACED BETWEEN THE 518 POROUS BACKFILL MATERIAL AND THE 203 EMBANKMENT MATERIAL TO THE LIMITS AS SHOWN IN THE PLANS. PAYMENT FOR THE FILTER FABRIC SHALL BE INCLUDED IN THE UNIT PRICE BID PER CUBIC YARD FOR THE ITEM 518 POROUS BACKFILL w/ filter fabric WHICH SHALL INCLUDE ALL LABOR, MATERIALS, EQUIPMENT AND INCIDENTALS NECESSARY TO COMPLETE THE ABOVE WORK.

ABUTMENT WALL TEXTURE: ABUTMENTS AND WINGWALLS SHALL BE TEXTURED BY USING FORM LINERS ATTACHED TO FORMWORK PRIOR TO PLACING CONCRETE, AREAS TO RECEIVE TEXTURED CONCRETE SURFACE SHALL INCLUDE THE FULL LENGTH OF EXPOSED ABUTMENT BREAST WALLS AND WINGWALLS FROM FINISHED GRADE/PAVEMENT UPWARD.

TEXTURED SURFACE SHALL CONSIST OF A 3/4" DEEP FRACTURED FIN TEXTURE. ACCEPTABLE PRODUCTS INCLUDE:

SYMONS CORPORATION
7603 OLD ROCKSIDE RD.
INDEPENDENCE, OH 44131
(216) 524-5240
PATTERN NO. P/C 30449

GREENSTREAK
3400 TREE COURT IND. BLVD.
ST. LOUIS, MO 63122
(800) 325-9504
PATTERN NO. 373

FITZGERALD CONSTRUCTION SALES
17376-A NEWHOPE AVENUE
FOUNTAIN VALLEY, CA 92708
(800) 227-2755
PATTERN NO. 16950

OR AN APPROVED ALTERNATE. THE CONTRACTOR SHALL SUBMIT A SAMPLE OF THE FINISHED CONCRETE TEXTURED SURFACE FOR APPROVAL.

PAYMENT FOR ALL MATERIALS AND LABOR REQUIRED FOR THE TEXTURED SURFACES SHALL BE INCLUDED WITH ITEM 511 - CLASS C CONCRETE, ABUTMENT WALL.

ITEM SPECIAL - PAINTING OF NEW STEEL, SYSTEM IZEU
ALL OF THE REQUIREMENTS CONTAINED IN THE "PAINTING OF NEW STEEL, SYSTEM IZEU" PROPOSAL NOTE SHALL APPLY.

THE COLOR OF URETHANE FINISH COAT SHALL BE "PARK BROWN" FEDERAL SPECIFICATION NUMBER 595A 10080. THE COLOR OF EPOXY INTERMEDIATE COAT SHALL BE "TAN" FEDERAL SPECIFICATION NUMBER 595A10219. AN ACTUAL SAMPLE OF THE PAINT PROPOSED FOR USE SHALL BE SUBMITTED BY THE CONTRACTOR FOR APPROVAL.

FOUNDATION BEARING PRESSURE: ABUTMENT FOOTINGS, AS DESIGNED, PRODUCE A MAXIMUM BEARING PRESSURE OF 2.91 TONS PER SQ. FT.

McCOY ASSOCIATES, INC.
CONSULTING ENGINEERS
AKRON, OHIO

2A/17

STRUCTURAL GENERAL NOTES

BRIDGE NO. SUM. 76-1303
RAMP E-10 OVER RAMP E-16
SUMMIT COUNTY STA. 14+37.14
STA. 15+40.87

DESIGNED	DRAWN	TRACED	CHECKED	REVIEWED	DATE	REVISED
TEN	PWA		JBH	JBH	10-23-89	

E20891

QUANTITIES
CALC. BY: TAB DATE: 10/87
CHKD. BY: RPL DATE: 10/87

FHWA REGION	STATE	PROJECT	
5	OHIO		

SUMMIT COUNTY
SUM 76-11.57

1114
12.14

ESTIMATED QUANTITIES

ITEM	TOTAL	UNIT	DESCRIPTION	SUPER.	ABUT'S.	W.WALL	GENERAL	ITEM EXT.
503	LUMP		COFFERDAMS, CRIBS AND SHEETING				LUMP	11100
503	3100	C.Y.	UNCLASSIFIED EXCAVATION (AS PER PLAN)		2400	700		21101
509	128,657	L.B.	REINFORCING STEEL, GRADE 60		99,049	29608		15400
509	38,919	L.B.	EPOXY COATED REINFORCING STEEL, GRADE 60	24,045	14,874			15800
511	127	C.Y.	CLASS "C" CONCRETE, Retaining Wall or Wingwall			127		46000
511	696	C.Y.	CLASS "C" CONCRETE, ABUTMENT ABOVE FOOTING, AS PER PLAN		696			45101
511	637	C.Y.	CLASS "C" CONCRETE, FOOTING		440	197		46500
511	1	C.Y.	CLASS "C" CONCRETE, ABUTMENT KEY JOINTS, AS PER PLAN		1			45501
511	5	C.Y.	CLASS "S" CONCRETE, ABUTMENT		5			34450
511	123	C.Y.	CLASS "S" CONCRETE, SUPERSTRUCTURE, AS PER PLAN	123				31503
513	87,700	LB.	STRUCTURAL STEEL, A572 (AISC CERTIFICATION CATEGORY III)	87,700				13500
513	717	EA.	WELDED STUD SHEAR CONNECTORS	717				20000
516	4	EA.	LAMINATED ELASTOMERIC BEARINGS (16"x 9½"x 1⅝" ELASTOMERIC PAD	4				44000
			WITH 24"x 10½"x 1⅝" STEEL LOAD PLATE)					
516	4	EA.	LAMINATED ELASTOMERIC BEARINGS (16"x12"x 4" ELASTOMERIC PAD WITH	4				44300
			17"x 13"x 1⅝" STEEL LOAD PLATE)					
516	162	S.F.	1" PREFORMED EXPANSION JOINT FILLER		75	87		13600
516	166	L.F.	STRUCTURAL EXPANSION JOINTS INCLUDING ELASTOMERIC STRIP SEALS, 4"	166				11210
516	360	L.F.	PVC WATERSTOP, 6"		246	114		30500
518	392	C.Y.	POROUS BACKFILL WITH FILTER FABRIC		280	112		21200
518	144	L.F.	6" PERFORATED, HELICAL C.S.P., , 707.01		144			41100
518	32	L.F.	6" NON-PERFORATED, HELICAL C.S.P., 707.01, including Specials		32			41200
SPECIAL	929	S.Y.	SEALING OF CONCRETE SURFACES (EPOXY) (SEE PROPOSAL NOTE) ▲	281	648			51267502
SPECIAL	87,700	LB.	PAINTING OF NEW STEEL, SYSTEM IZEU (SEE PROPOSAL NOTE) ▲	87,700				51400610
511	123	C.Y.	Class S concrete, superstructure, using shrinkage compensating					33404
			cement (See proposal note) ⋈					
511	LUMP		Class S concrete, using shrinkage compensating cement,	Lump				33410
			for pre-placement testing (See proposal note) ⋈					

▲ SEE GENERAL NOTES FOR ADDITIONAL DETAILS

⋈ These two items shall constitute one alternate bid to class S concrete, superstructure, as per plan

ITEM 511 - CLASS S CONCRETE, SUPERSTRUCTURE, AS PER PLAN -
Curing shall be by method (a) - water curing

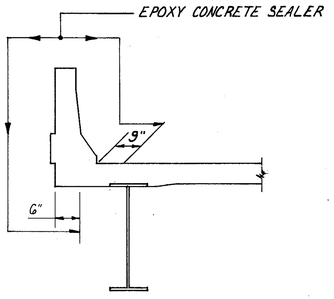

SUPERSTRUCTURE

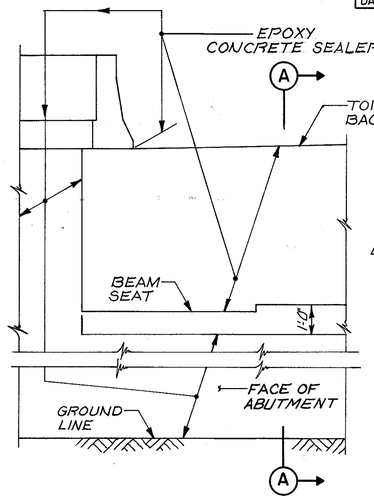

ABUTMENTS

CONCRETE SEALER SHALL BE APPLIED TO ALL EXPOSED SURFACES

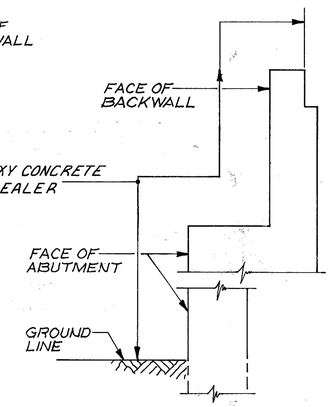

SECTION A-A

LIMITS OF CONCRETE SEALER

THE CONCRETE SEALER SHALL BE APPLIED AS DESCRIBED IN THE PROPOSAL NOTE UNDER "SEALING OF CONCRETE SURFACES."

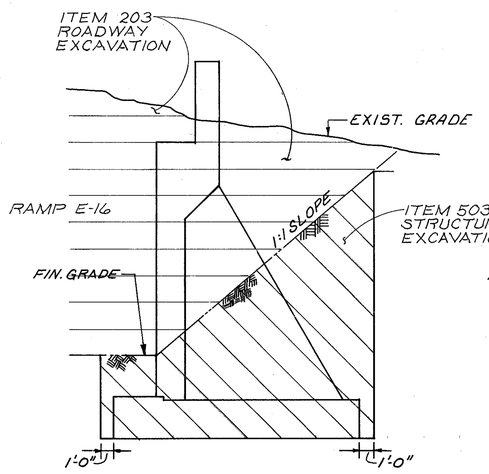

SECTION THRU ABUTMENT

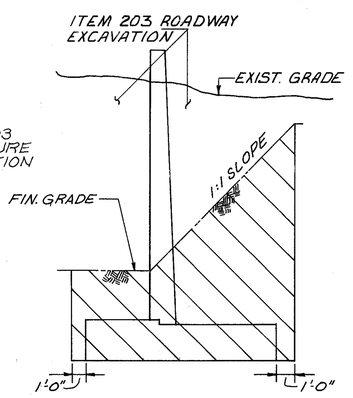

SECTION THRU WINGWALL

LIMITS OF UNCLASSIFIED EXCAVATION

NOTES

(1) FOR ADDITIONAL NOTES SEE STRUCTURAL GENERAL NOTES SHEET NO. 24/17.

McCOY ASSOCIATES INC. 3/17
CONSULTING ENGINEERS
AKRON, OHIO

ESTIMATED QUANTITIES

BRIDGE NO. SUM 76-1303
RAMP E-10 OVER RAMP E-16
SUMMIT COUNTY STA. 14+37.14
STA. 15+40.87

DESIGNED	DRAWN	TRACED	CHECKED	REVIEWED	DATE	REVISED
TAB	DAK		RPL	MSC	12-21-87	

12276

FHWA REGION	STATE	PROJECT	
5	OHIO		

1115
12.14

SUMMIT COUNTY
SUM 76-11.57

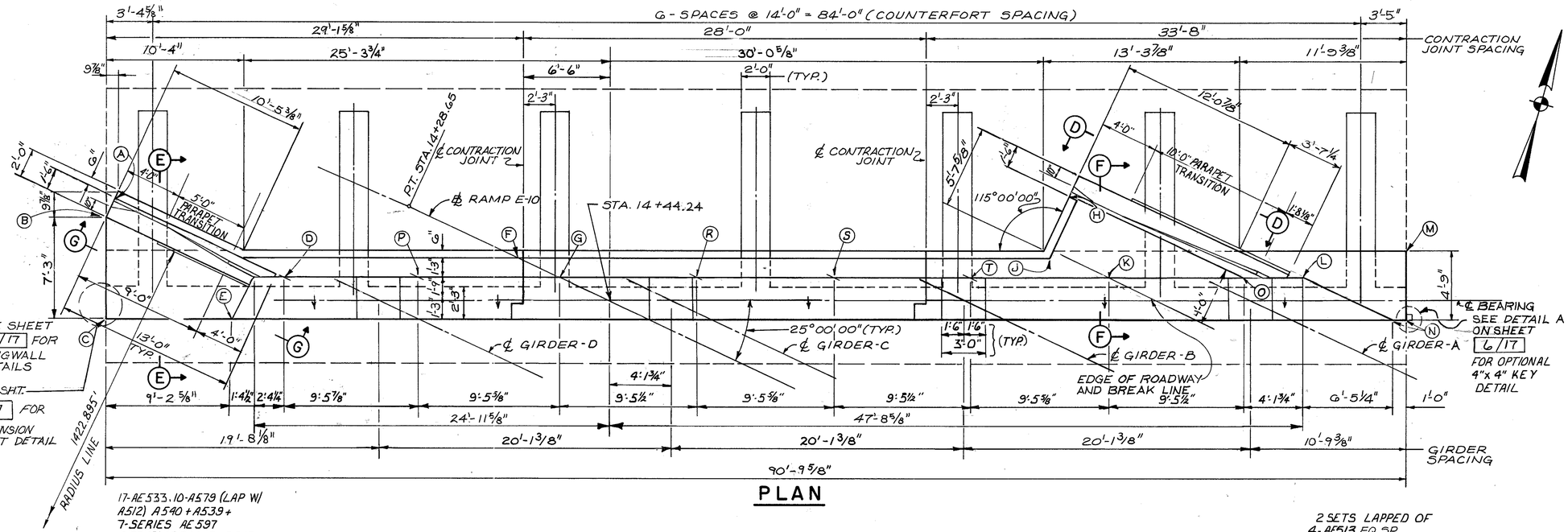

PLAN

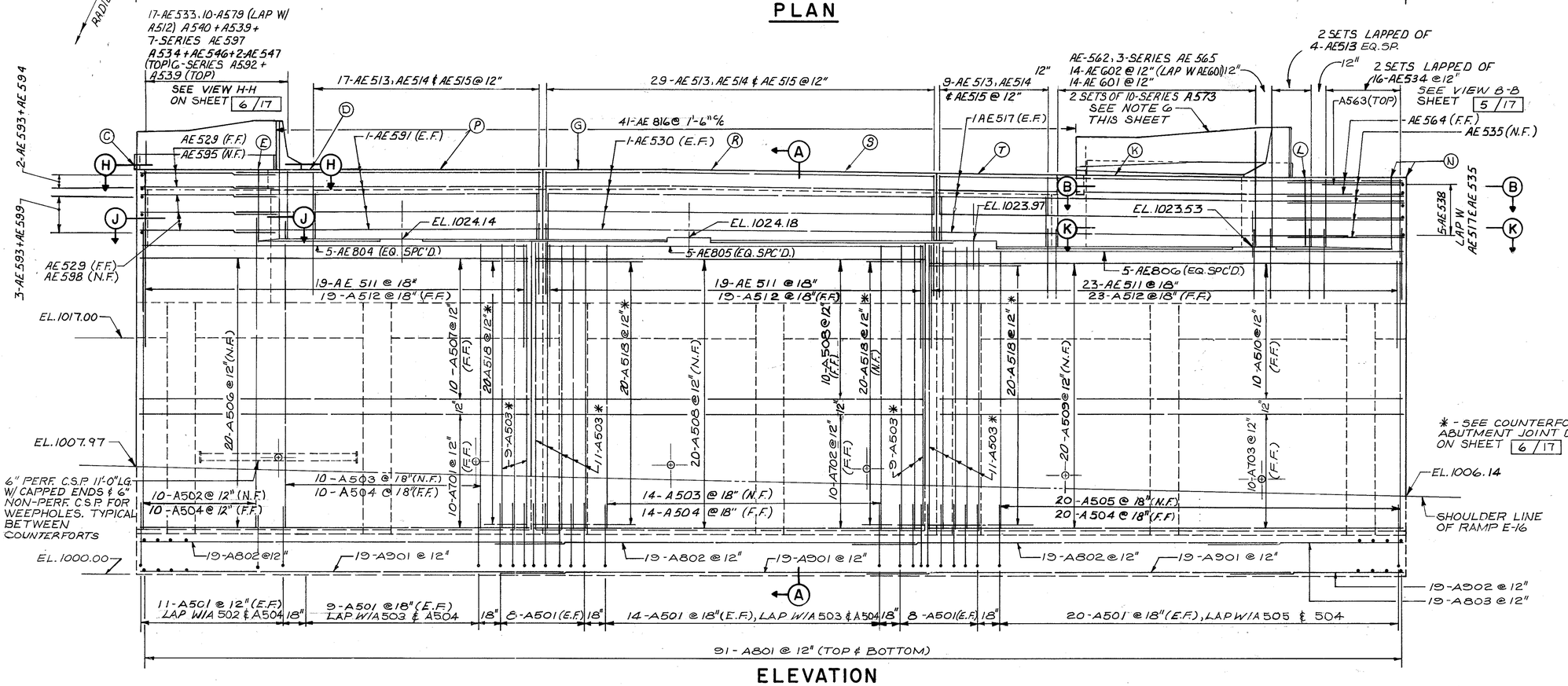

ELEVATION

NOTES

1. MIN. BAR LAPS ARE AS FOLLOWS:
   #5 = 1'-8" #8 = 4'-9"
   #6 = 2'-10" #9 = 4'-3"
2. ABBREVIATIONS USED ARE:
   NF - NEAR FACE
   FF - FAR FACE
   EF - EACH FACE
   PEJF - PREFORMED EXPANSION JOINT FILLER
3. POROUS BACKFILL, 2 FT. THICK, FULL LENGTH OF ABUTMENT AND WINGWALLS, SHALL EXTEND UP TO THE PLANE OF THE SUBGRADE WITHIN THE ROADWAY AREA EXTENDED LATERALLY TO THE WING WALLS OR TO THE EMBANKMENT SIDE SLOPES OR AS OTHERWISE SHOWN.
4. BRIDGE SEAT REINFORCING: REINFORCING STEEL IN VICINITY OF THE BRIDGE SEAT SHALL BE ACCURATELY PLACED TO AVOID INTERFERENCE WITH THE DRILLING OF ANCHOR BARS
5. BACKWALL CONCRETE: IN ADDITION TO THE PROVISIONS OF 511.08, BACKWALL CONCRETE ABOVE THE CONSTRUCTION JOINT AT THE APPROACH SLAB SEAT SHALL NOT BE PLACED UNTIL AFTER THE DECK CONCRETE HAS BEEN PLACED.
6. FOR ADDITIONAL DETAILS SEE SHEETS 5/17 & 6/17
7. THE CONCRETE FOR THE PARAPET SHALL BE INCLUDED IN ITEM 511 CLASS "S" CONCRETE, ABUTMENT FOR PAYMENT. TYPICAL FOR BOTH ABUTMENTS.
8. PROVIDE TEXTURED CONCRETE SURFACE WITH VERTICAL RUSTICATIONS (TYP.)

ELEVATION TABLE	
◯	ELEVATION
A	1029.32
B	1029.32
C	1029.13
D	1029.14
E	1029.17
F	1029.27
G	1029.23
H	1028.75
J	1028.90
K	1028.82
L	1028.38
M	1028.24
N	1028.22
O	1028.46
P	1029.18
R	1029.17
S	1029.08
T	1028.96

McCOY ASSOCIATES INC. 4/17
CONSULTING ENGINEERS
AKRON, OHIO

WEST ABUTMENT DETAILS

BRIDGE NO. SUM 76-1303
RAMP E-10 OVER RAMP E-16
SUMMIT COUNTY STA. 14+37.14
STA. 15+40.87

DESIGNED	DRAWN	TRACED	CHECKED	REVIEWED	DATE	REVISED
TAB	J.D.P.		RPL	MSC	12-21-87	

FHWA REGION	STATE	PROJECT	
5	OHIO		

1116
12.14

SUMMIT COUNTY
SUM 76-11.57

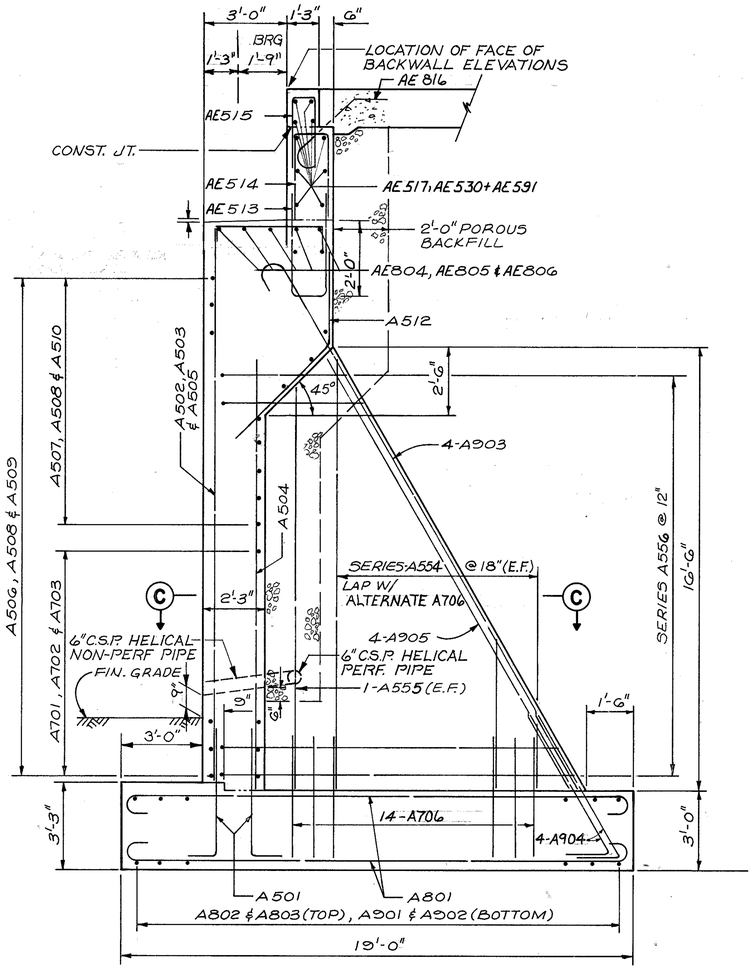

SECTION A-A

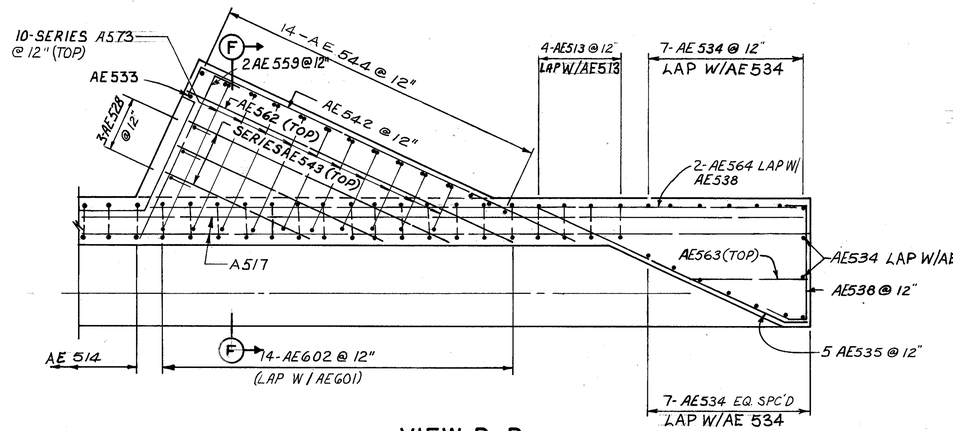

VIEW B-B

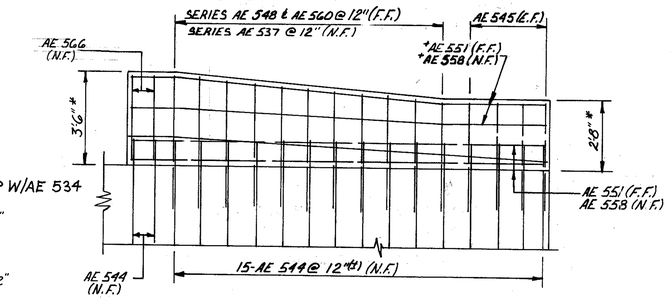

*FIELD BEND FOR TAPER

SEE SHEET NO. GB FOR ADDITIONAL PARAPET DETAILS AND SECTIONS.

VIEW D-D

* SEE NOTE NO. 7 ON SHEET 4/17

FOR PARAPET REINFORCING SEE VIEW G-G THIS SHEET

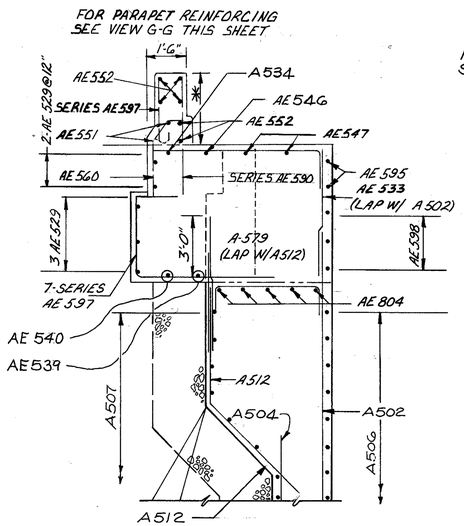

SECTION E-E

FOR PARAPET REINFORCING SEE VIEW D-D THIS SHEET

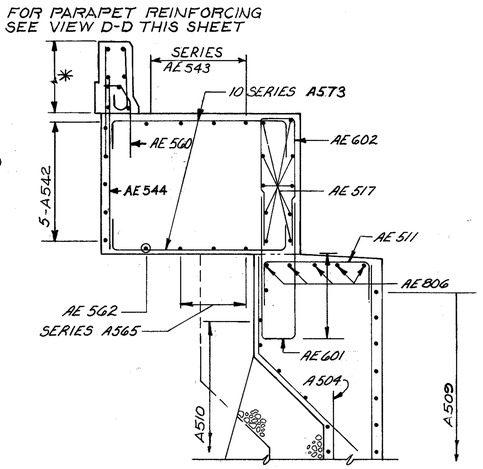

SECTION F-F

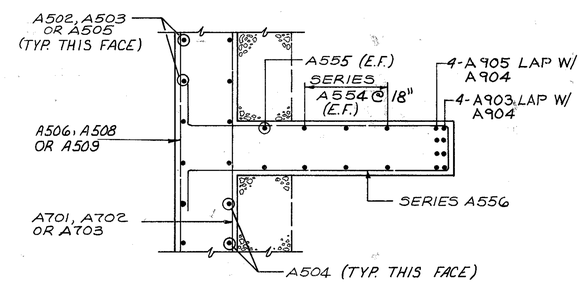

SECTION C-C

NOTES

1. FOR ADDITIONAL NOTES SEE SHEET 4/17.
2. FOR ADDITIONAL DETAILS SEE SHEET 6/17.

SEE SHEET 4/17 FOR LOCATION OF VIEWS B-B, D-D, G-G, AND SECTIONS A-A AND E-E

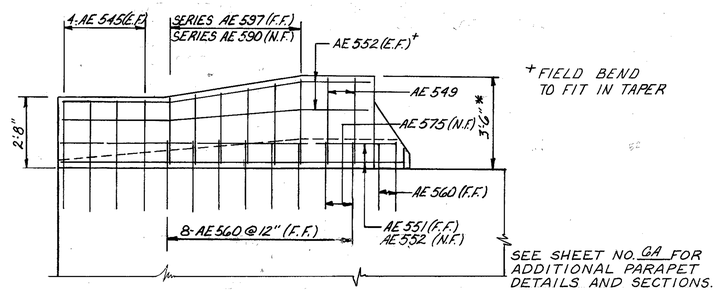

*FIELD BEND TO FIT IN TAPER

SEE SHEET NO. GA FOR ADDITIONAL PARAPET DETAILS AND SECTIONS.

VIEW G-G

McCOY ASSOCIATES INC. 5/17
CONSULTING ENGINEERS
AKRON, OHIO

WEST ABUTMENT DETAILS

BRIDGE NO. SUM 76-1303
RAMP E-10 OVER RAMP E-16
SUMMIT COUNTY STA. 14+37.14
STA. 15+40.87

DESIGNED	DRAWN	TRACED	CHECKED	REVIEWED	DATE	REVISED
T.A.B.	J.D.P.		RPL	MSC	12-21-87	

22276

FHWA REGION	STATE	PROJECT	
5	OHIO		

1117
12.14

SUMMIT COUNTY
SUM 76 11.57

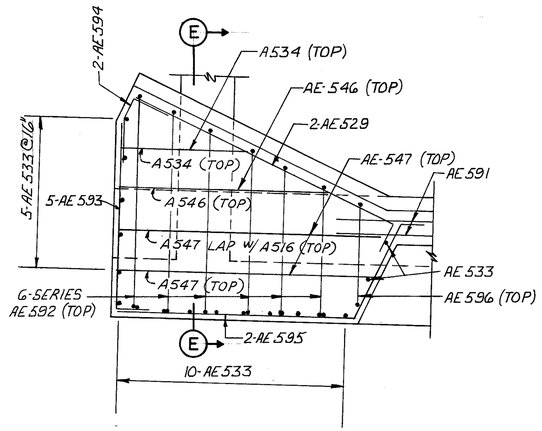

VIEW H-H

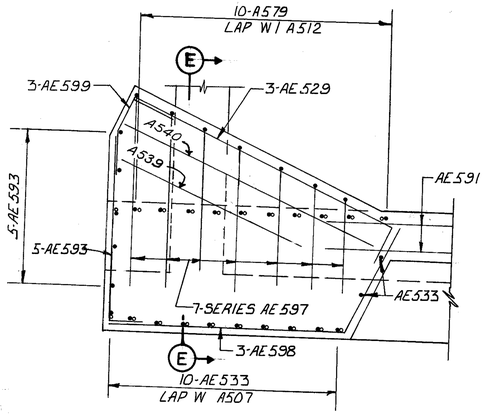

SECTION J-J

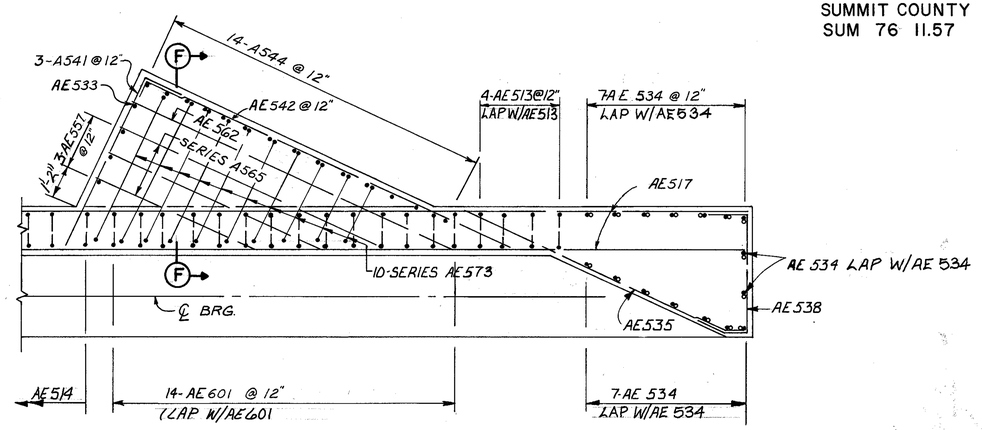

SECTION K-K

NOTES

1. FOR ADDITIONAL NOTES SEE SHEET 4/17
2. FOR ADDITIONAL DETAILS SEE SHEET 5/17
3. FOR SECTIONS E-E + F-F SEE SHEET 5/17
4. FOR LOCATION OF VIEW H-H AND SECTIONS J-J AND K-K, SEE SHEET 4/17

NOTE-A
6" P.V.C. WATERSTOP FROM TOP OF FOOTING TO BOTTOM OF APPROACH SLAB

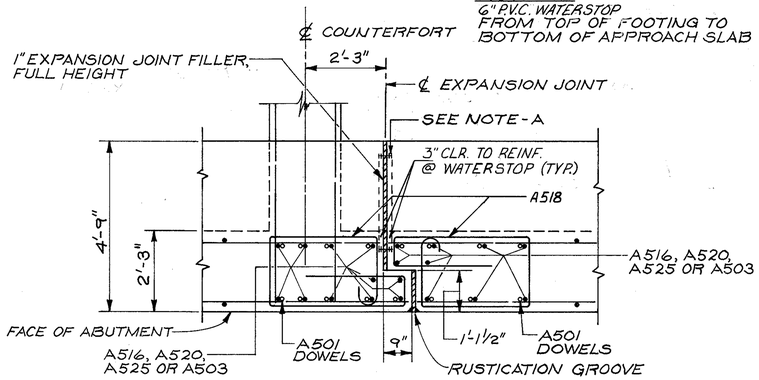

SECTION BELOW SEAT
COUNTERFORTED ABUTMENT
EXPANSION JOINT DETAIL

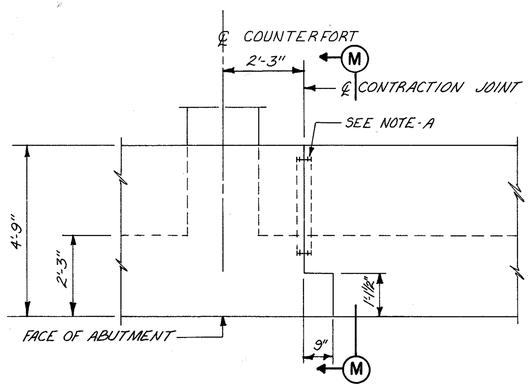

(FOR REINFORCING SEE EXPANSION JOINT DETAIL)

SECTION BELOW SEAT
COUNTERFORTED ABUTMENT
CONTRACTION JOINT DETAIL

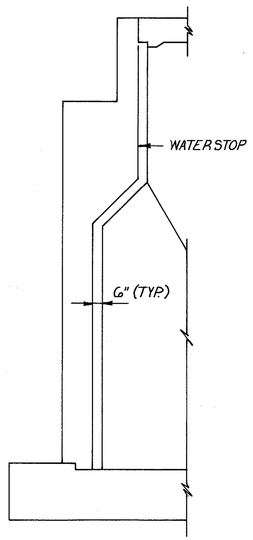

SECTION M-M

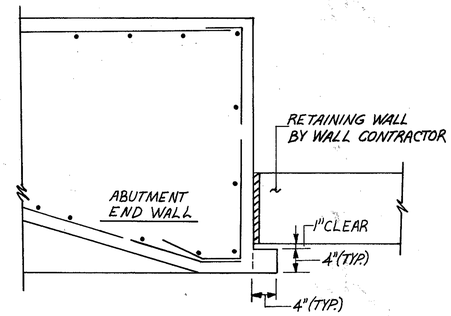

DETAIL A

KEY TO BE PROVIDED IF REQUIRED BY PROPRIETARY WALL MANUFACTURER.
4"x 4" KEY FROM TOP OF FOOTING TO TOP OF WALL.

McCOY ASSOCIATES INC.
CONSULTING ENGINEERS
AKRON, OHIO

6/17

WEST ABUTMENT DETAILS

BRIDGE NO. SUM 76-1303
RAMP E-10 OVER RAMP E-16
SUMMIT COUNTY STA. 14+37.14
STA. 15+40.87

DESIGNED	DRAWN	TRACED	CHECKED	REVIEWED	DATE	REVISED
TAB	J.D.P.		RFL	MSC	12-21-87	

12276

FHWA REGION	STATE	PROJECT	
5	OHIO		

1118
1214

SUMMIT COUNTY
SUM 76-11.57

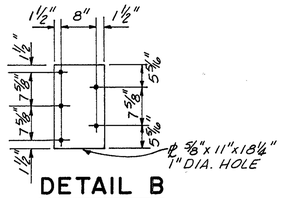

DETAIL B

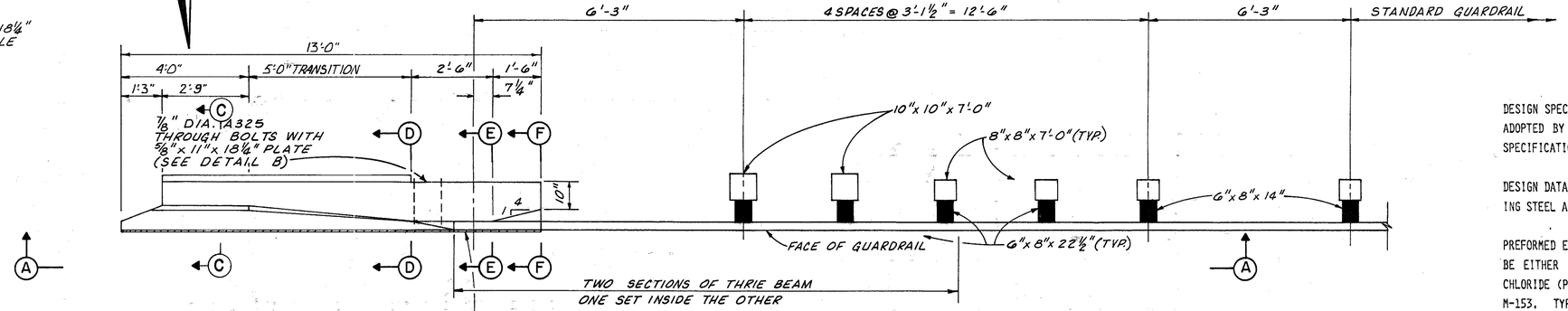

PART PLAN OF SOUTH PARAPET AT WEST ABUTMENT

NOTE: THE THRIE BEAM TERMINAL CONNECTOR SHALL FIT UNDER THE STANDARD GUARDRAIL SECTION AT THE APPROACH END. ALL LAPS SHALL BE IN THE DIRECTION OF TRAFFIC.

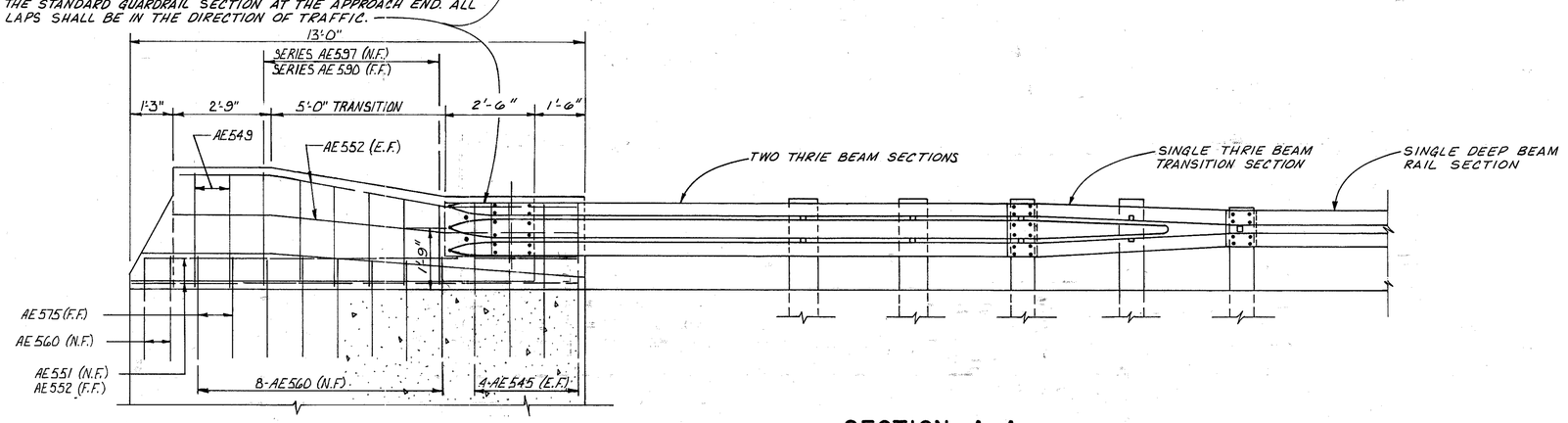

SECTION A-A

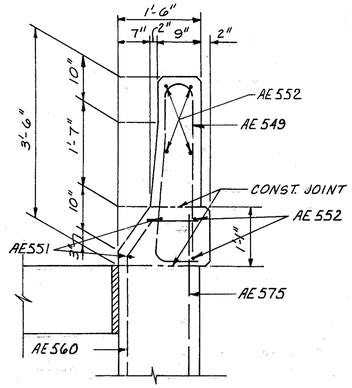

SECTION C-C

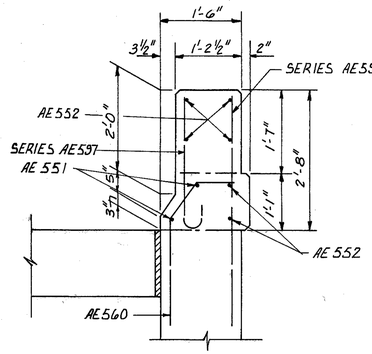

SECTION D-D

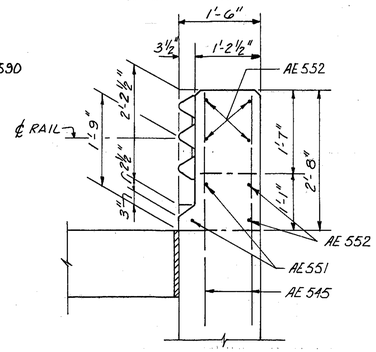

SECTION E-E

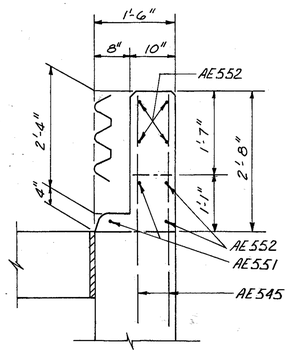

SECTION F-F

GENERAL NOTES

DESIGN SPECIFICATIONS: "STANDARD SPECIFICATIONS FOR HIGHWAY BRIDGES" ADOPTED BY AASHTO 1989, INCLUDING THE OHIO "SUPPLEMENT" TO THESE SPECIFICATIONS.

DESIGN DATA: CONCRETE CLASS S f'c=4500 P.S.I, fc=1500 P.S.I, REINFORCING STEEL ASTM A615, A616 OR A617 GRADE 60 fs=24,000 P.S.I.

PREFORMED EXPANSION JOINT FILLER IN THE PARAPET DEFLECTION JOINTS MAY BE EITHER 1/4" GRAY SPONGE RUBBER OR 1/4" GRAY CELLULAR POLYVINYL CHLORIDE (PVC) SPONGE. SPONGE RUBBER FILLER SHALL CONFORM TO AASHTO M-153, TYPE I, DENSITY OF PVC SPONGE NOT BE LESS THAN 20 LBS. PER CU. FT.

DEFLECTION JOINTS SHALL BE SPACED AT 16'-0" CENTERS, MAX., EXCEPT THAT FOR CONTINUOUS STRUCTURES THE PANELS SHALL BE FURTHER SUBDIVIDED IN THE NEGATIVE MOMENT REGION (OVER THE PIERS) INTO LENGTHS OF NOT LESS THAN 5'-0" NOR MORE THAN 7'-6", REINFORCING BARS SHALL NOT EXTEND THROUGH DEFLECTION JOINTS.

CONCRETE PARAPETS ABOVE UPPER CONSTRUCTION JOINT SHALL BE PLACED IN ALTERNATE SECTIONS BY THE USE OF BULKHEADS, CLOSING SECTIONS SHALL BE PLACED AFTER REMOVAL OF BULKHEADS AND AFTER PLACEMENT OF EXPANSION JOINT FILLER. EXPOSED EDGES OF THE FILLER SHALL BE FLUSH WITH THE SURFACE OF CONCRETE AND SHALL BE FREE OF MORTAR.

PAYMENT: ADDITIONAL GUARDRAIL COST IN EXCESS OF NORMAL GUARDRAIL COST, SUCH AS: TERMINAL CONNECTOR, STEEL PLATE, BOLTS, NUTS, PLATE WASHERS AND OTHER HARDWARE SHALL BE INCLUDED WITH BRIDGE TERMINAL ASSEMBLY FOR PAYMENT, QUANTITIES OF CONCRETE AND REINFORCING STEEL FOR PARAPET ARE INCLUDED WITH THEIR APPROPRIATE ITEM UNDER EITHER ABUTMENTS OR SUPERSTRUCTURE FOR PAYMENT.

POSTS SHALL BE SQUARE-SAWED PRESSURE TREATED WOOD AS PER 710.14. POSTS SHALL BE FABRICATED WITH SQUARE ENDS. BOLT HOLES SHALL BE BORED AND TOPS OF POSTS TRIMMED. IF REQUIRED, AFTER POSTS ARE SET, POSTS MAY BE SET IN DRILLED HOLES OR DRIVEN TO GRADE. STEEL POSTS AND BLOCKOUTS MAY BE FURNISHED AS AN ALTERNATE, PROVIDED THAT THE STRENGTH EQUALS OR EXCEEDS THE STRENGTH OF WOOD POSTS AND BLOCKOUTS.

McCOY ASSOCIATES, INC.
CONSULTING ENGINEERS
AKRON, OHIO

GA / 17

BRIDGE RAILING DEFLECTOR PARAPET TYPE

BRIDGE NO. SUM 76-1303
RAMP E-10 OVER RAMP E-16
SUMMIT COUNTY STA. 14+37.14
STA. 15+40.87

DESIGNED	DRAWN	TRACED	CHECKED	REVIEWED	DATE	REVISED
GCK	DAK		JGC	JBH	8-15-90	

526091

FHWA REGION	STATE	PROJECT	
5	OHIO		

1119
12.14

SUMMIT COUNTY
SUM. 76-11.57

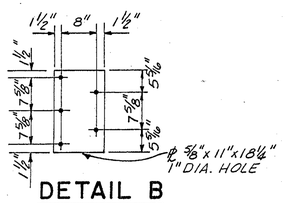

DETAIL B

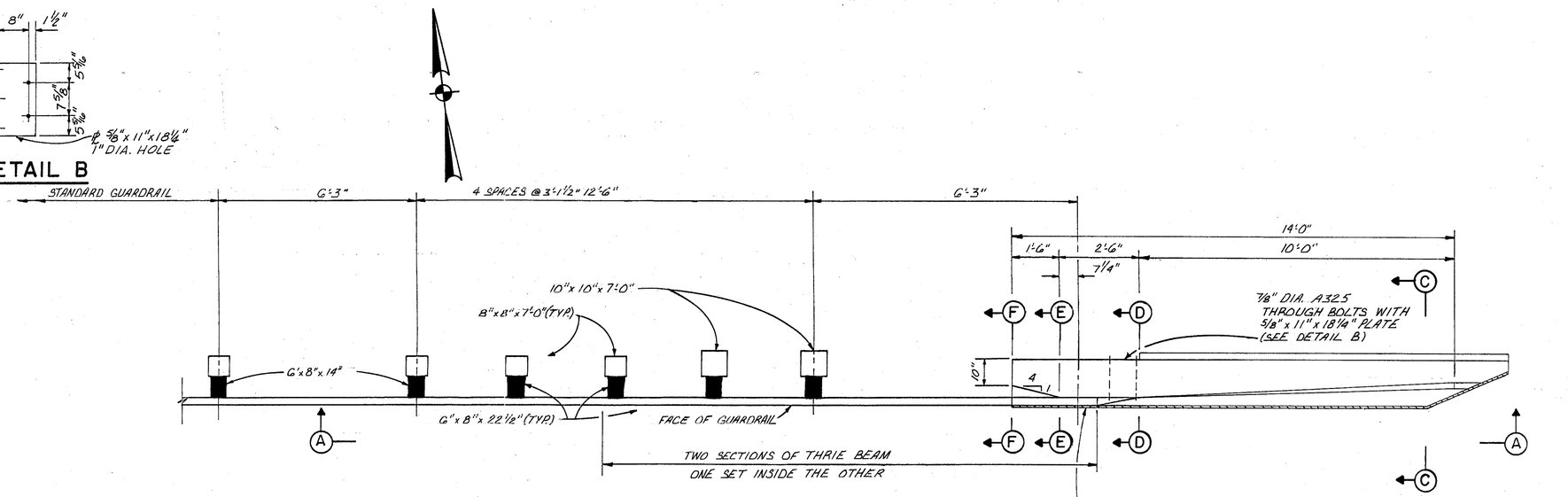

PART PLAN OF NORTH PARAPET AT WEST ABUTMENT

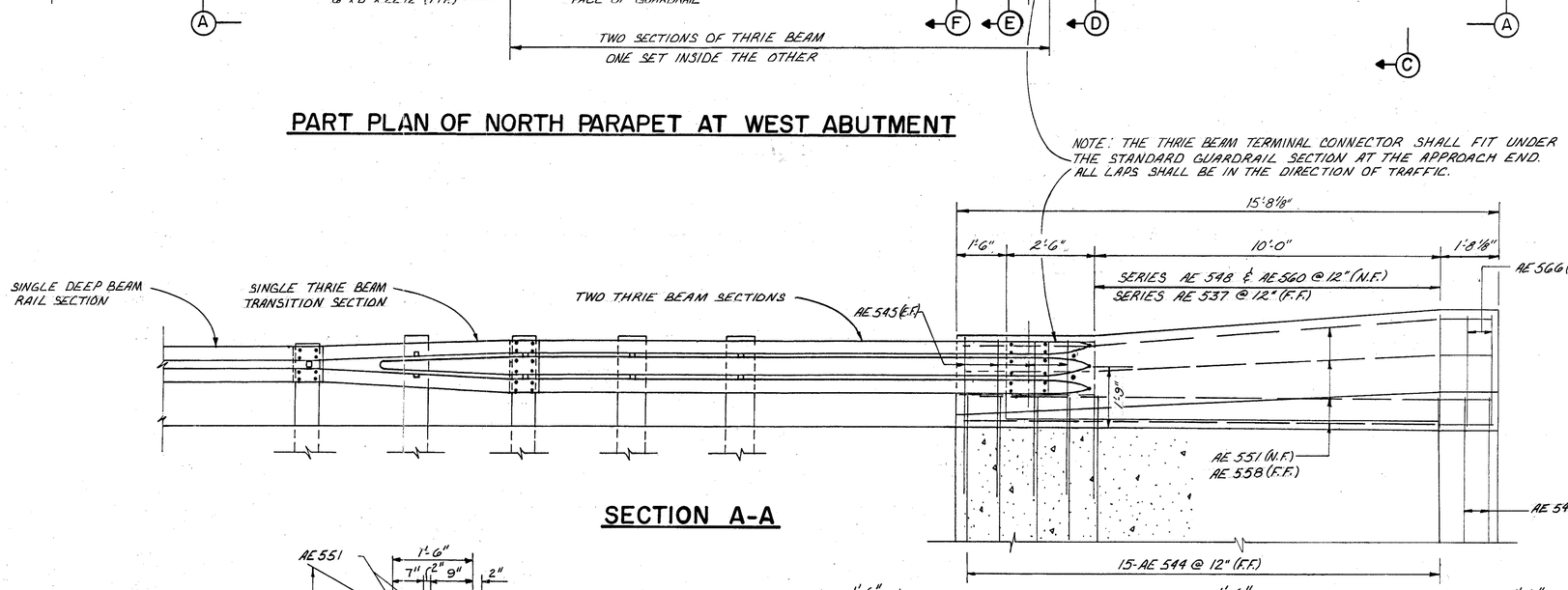

SECTION A-A

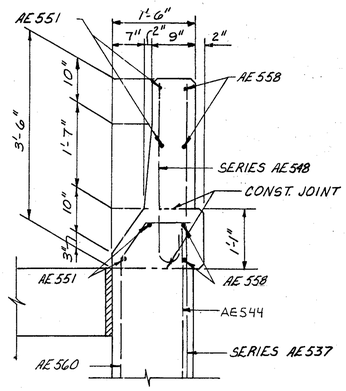

SECTION C-C

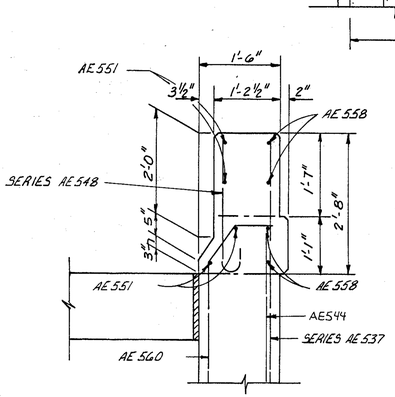

SECTION D-D

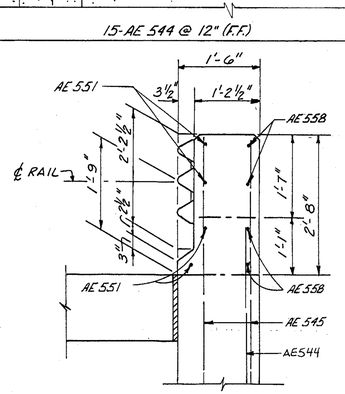

SECTION E-E

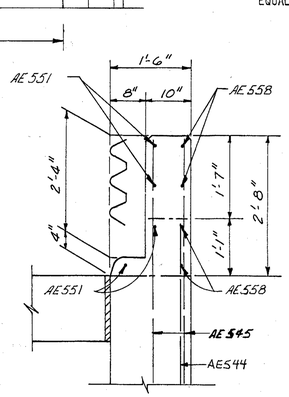

SECTION F-F

GENERAL NOTES

DESIGN SPECIFICATIONS: "STANDARD SPECIFICATIONS FOR HIGHWAY BRIDGES" ADOPTED BY AASHTO 1989, INCLUDING THE OHIO "SUPPLEMENT" TO THESE SPECIFICATIONS.

DESIGN DATA: CONCRETE CLASS S f'c=4500 P.S.I. fc=1500 P.S.I. REINFORCING STEEL ASTM A615, A616 OR A617 GRADE 60 fs=24,000 P.S.I.

PREFORMED EXPANSION JOINT FILLER IN THE PARAPET DEFLECTION JOINTS MAY BE EITHER 1/4" GRAY SPONGE RUBBER OR 1/4" GRAY CELLULAR POLYVINYL CHLORIDE (PVC) SPONGE. SPONGE RUBBER FILLER SHALL CONFORM TO AASHTO M-153, TYPE I. DENSITY OF PVC SPONGE NOT BE LESS THAN 20 LBS. PER CU. FT.

DEFLECTION JOINTS SHALL BE SPACED AT 16'-0" CENTERS, MAX., EXCEPT THAT FOR CONTINUOUS STRUCTURES THE PANELS SHALL BE FURTHER SUBDIVIDED IN THE NEGATIVE MOMENT REGION (OVER THE PIERS) INTO LENGTHS OF NOT LESS THAN 5'-0" NOR MORE THAN 7'-6". REINFORCING BARS SHALL NOT EXTEND THROUGH DEFLECTION JOINTS.

CONCRETE PARAPETS ABOVE UPPER CONSTRUCTION JOINT SHALL BE PLACED IN ALTERNATE SECTIONS BY THE USE OF BULKHEADS, CLOSING SECTIONS SHALL BE PLACED AFTER REMOVAL OF BULKHEADS AND AFTER PLACEMENT OF EXPANSION JOINT FILLER. EXPOSED EDGES OF THE FILLER SHALL BE FLUSH WITH THE SURFACE OF CONCRETE AND SHALL BE FREE OF MORTAR.

PAYMENT: ADDITIONAL GUARDRAIL COST IN EXCESS OF NORMAL GUARDRAIL COST, SUCH AS: TERMINAL CONNECTOR, STEEL PLATE, BOLTS, NUTS, PLATE WASHERS AND OTHER HARDWARE SHALL BE INCLUDED WITH BRIDGE TERMINAL ASSEMBLY FOR PAYMENT. QUANTITIES OF CONCRETE AND REINFORCING STEEL FOR PARAPET ARE INCLUDED WITH THEIR APPROPRIATE ITEM UNDER EITHER ABUTMENTS OR SUPERSTRUCTURE FOR PAYMENT.

POSTS SHALL BE SQUARE-SAWED PRESSURE TREATED WOOD AS PER 710.14. POSTS SHALL BE FABRICATED WITH SQUARE ENDS. BOLT HOLES SHALL BE BORED AND TOPS OF POSTS TRIMMED. IF REQUIRED, AFTER POSTS ARE SET, POSTS MAY BE SET IN DRILLED HOLES OR DRIVEN TO GRADE. STEEL POSTS AND BLOCKOUTS MAY BE FURNISHED AS AN ALTERNATE, PROVIDED THAT THE STRENGTH EQUALS OR EXCEEDS THE STRENGTH OF WOOD POSTS AND BLOCKOUTS.

McCOY ASSOCIATES, INC.
CONSULTING ENGINEERS
AKRON, OHIO

GB 17

BRIDGE RAILING DEFLECTOR PARAPET TYPE

BRIDGE NO. SUM 76-1303
RAMP E-10 OVER RAMP E-16
SUMMIT COUNTY STA. 14+37.14
STA. 15+40.87

DESIGNED	DRAWN	TRACED	CHECKED	REVIEWED	DATE	REVISED
GCK	DAK		JGC	JBH	8-15-90	

320651

FHWA REGION	STATE	PROJECT	
5	OHIO		

1120
12.14

SUMMIT COUNTY
SUM 76 11.57

NOTES

1. FOR ADDITIONAL DETAILS AND SECTIONS SEE SHEETS 8/17 & 9/17
2. FOR ADDITIONAL NOTES SEE SHEET 4/17
3. PROVIDE TEXTURED CONCRETE SURFACE WITH VERTICAL RUSTICATIONS (SEE STRUCTURAL GENERAL NOTES)

** SEE NOTE NO.7 ON SHEET 4/17

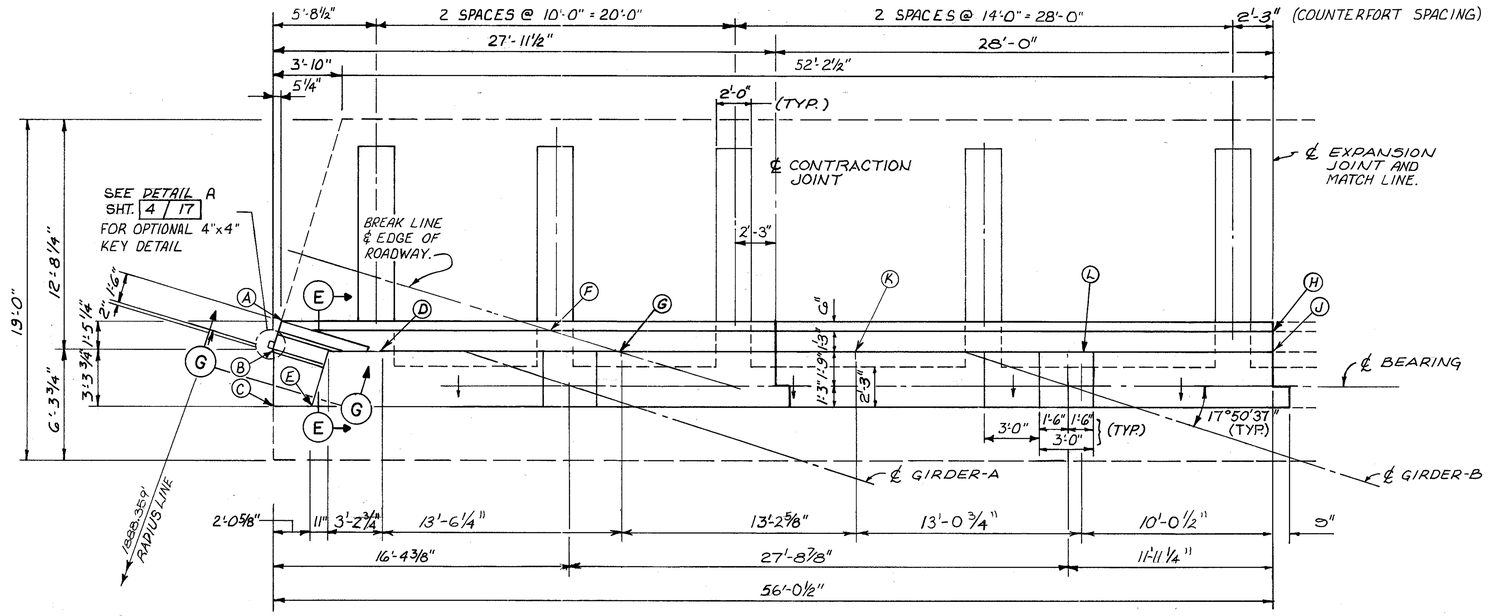

HALF PLAN

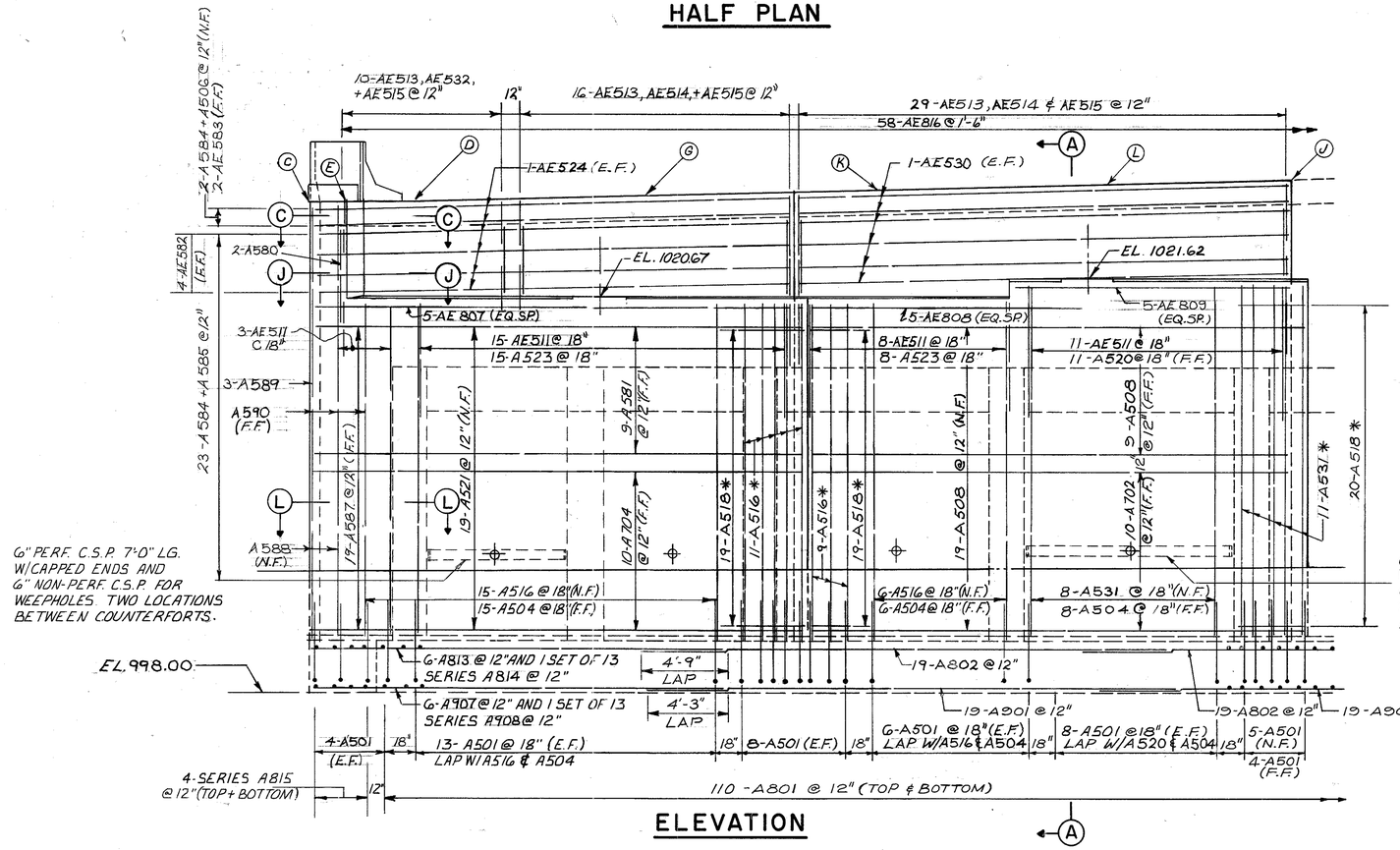

ELEVATION

*-SEE COUNTERFORTED ABUTMENT JOINT DETAILS SHEET 6/17.

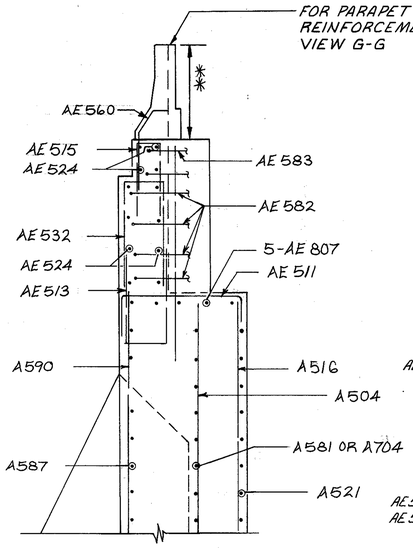

SECTION E-E

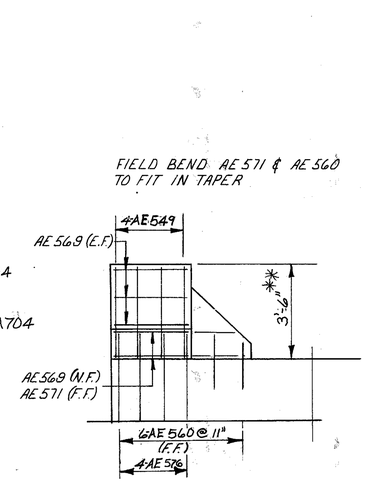

VIEW G-G

ELEVATION TABLE	
◯	ELEVATION
A	1025.31
B	1025.31
C	1025.33
D	1025.48
E	1025.39
F	1025.90
G	1026.02
H	1027.13
J	1027.12
K	1026.46
L	1026.85

McCOY ASSOCIATES INC. 7/17
CONSULTING ENGINEERS
AKRON, OHIO

EAST ABUTMENT DETAILS

BRIDGE NO. SUM 76-1303
RAMP E-10 OVER RAMP E-16
SUMMIT COUNTY STA. 14+37.14
STA. 15+40.87

DESIGNED	DRAWN	TRACED	CHECKED	REVIEWED	DATE	REVISED
TAB	J.D.P.		RPL	MSC	12-21-87	

12276

FHWA REGION	STATE	PROJECT	
5	OHIO		

112.1
12.14

SUMMIT COUNTY
SUM 76-11.57

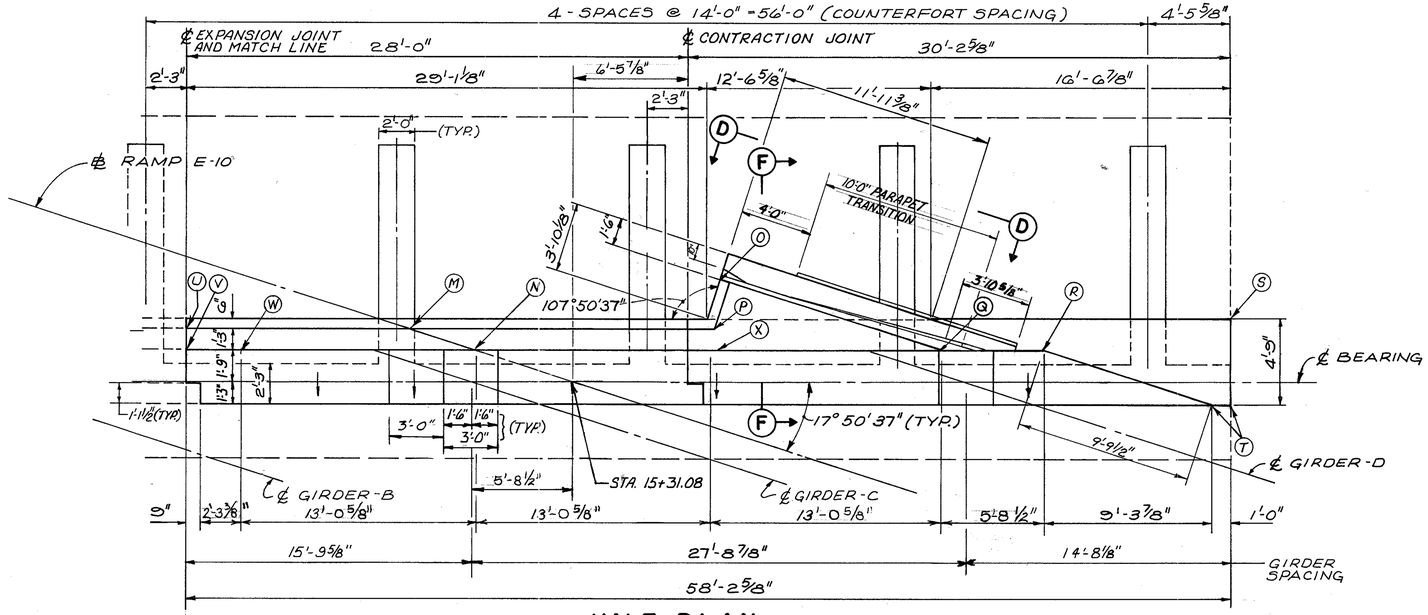

HALF PLAN

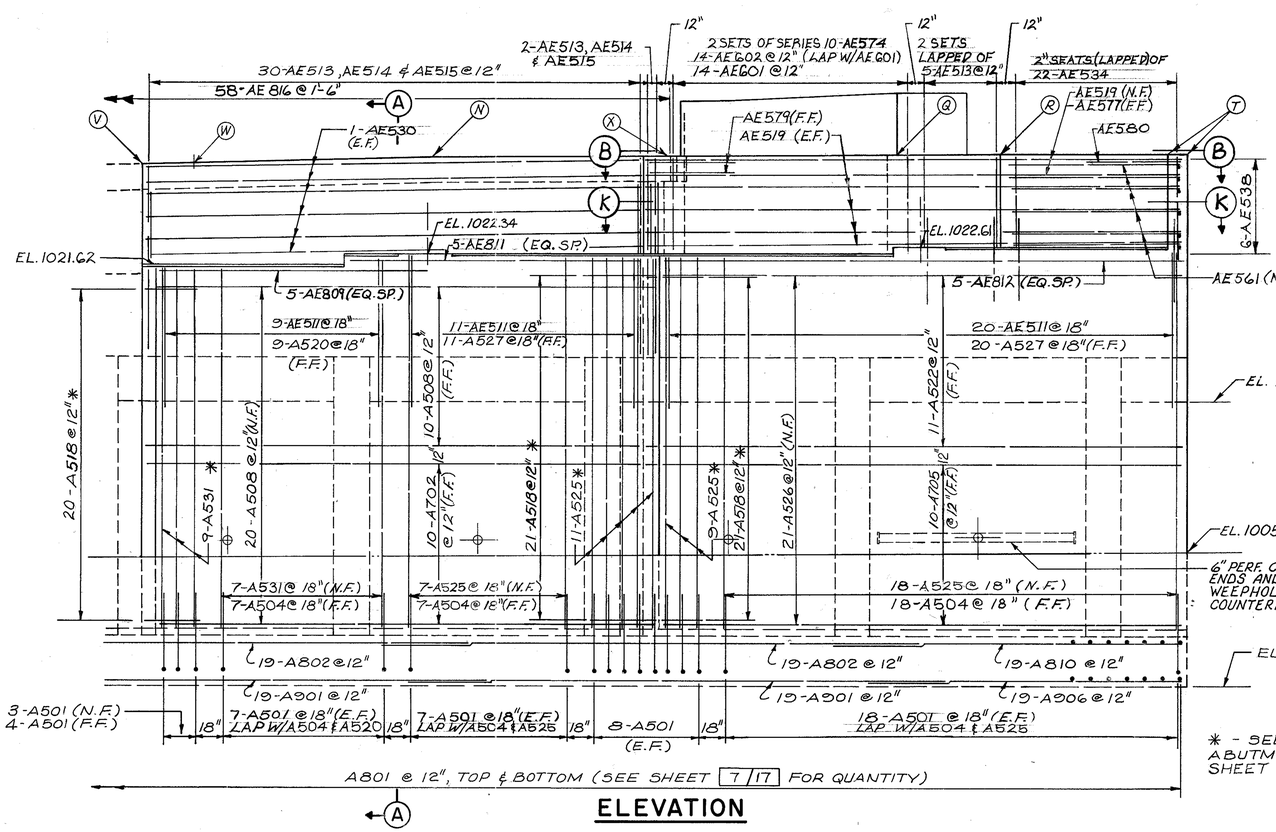

ELEVATION

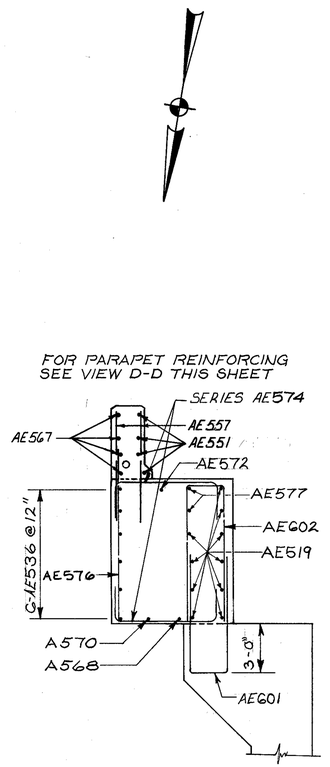

SEE VIEW B-B ON SHEET 9/17

SECTION F-F

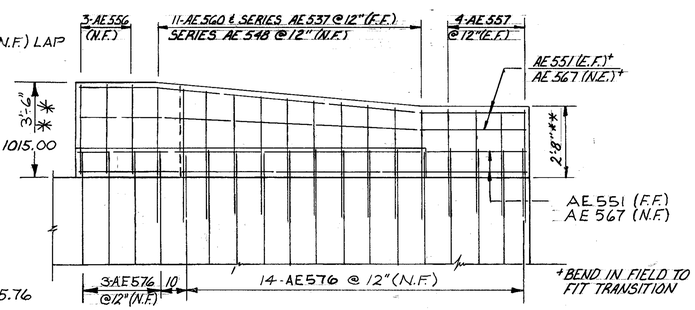

VIEW D-D

ELEVATION TABLE			
○	ELEVATION	○	ELEVATION
M	1027.43	S	
N	1027.57	T	1027.97
O	1027.43	U	1027.13
P	1027.55	V	1027.12
Q	1027.68	W	1027.20
R	1027.79	X	1027.60

NOTES

1. FOR ADDITIONAL NOTES SEE SHEET 4/17
2. FOR ADDITIONAL DETAILS SEE SHEET 7/17 AND 9/17
3. PROVIDE VERTICAL RUSTICATIONS WITH TEXTURED CONCRETE SURFACE (TYP.)
4. FOR ADDITIONAL PARAPET DETAILS AND SECTIONS SEE SHEET NO. 9A
5. FOR SECTIONS A-A + K-K AND VIEW B-B SEE SHEET 9/17

**SEE NOTE NO. 7 ON SHEET 4/17

McCOY ASSOCIATES INC. 8/17
CONSULTING ENGINEERS
AKRON, OHIO

EAST ABUTMENT DETAILS

BRIDGE NO. SUM 76-1303
RAMP E-10 OVER RAMP E-16
SUMMIT COUNTY STA. 14+37.14
STA. 15+40 87

DESIGNED	DRAWN	TRACED	CHECKED	REVIEWED	DATE	REVISED
TAB	J.D.P.		RPL	MSC	12-21-87	

23276

FHWA REGION	STATE	PROJECT	
5	OHIO		

1122
12.14

SUMMIT COUNTY
SUM 76-11.57

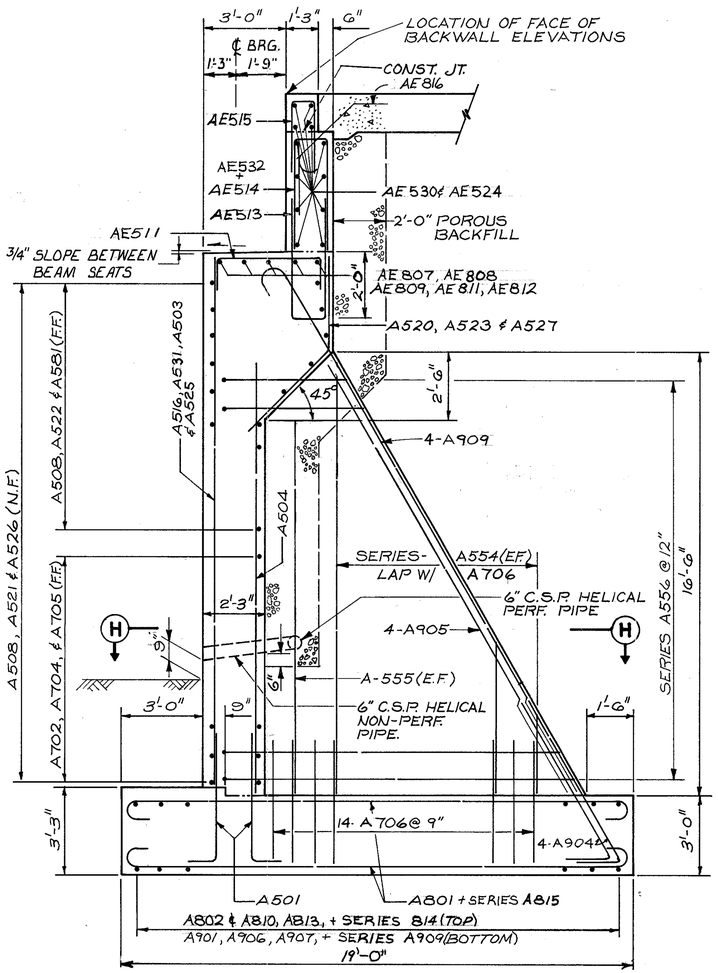

SECTION A-A

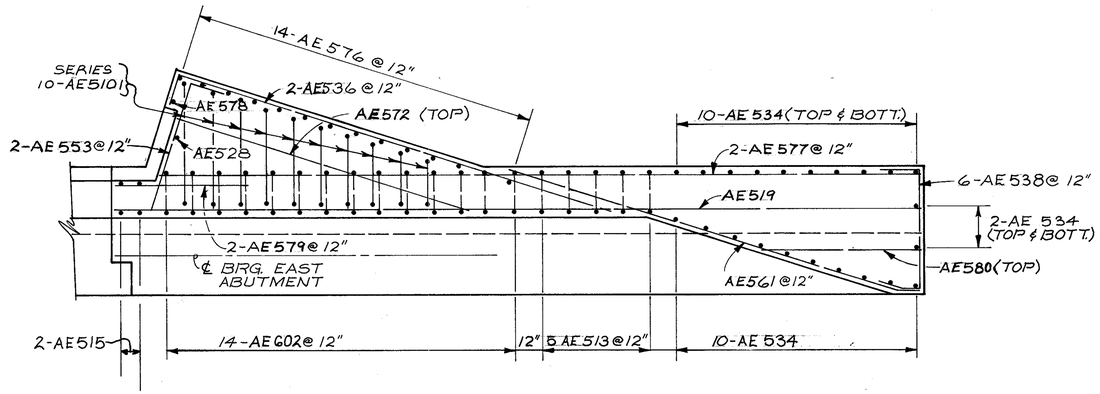

VIEW B-B

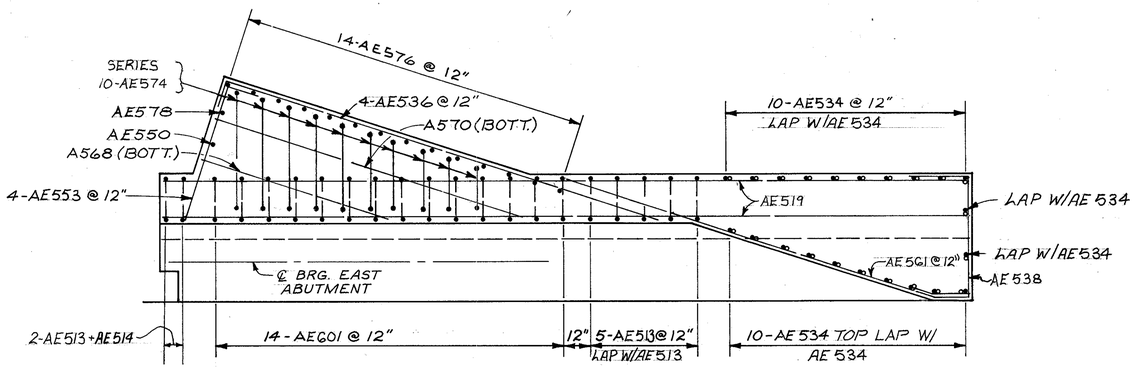

SECTION K-K

NOTES

1. FOR ADDITIONAL NOTES SEE SHEET 4/17
2. FOR ADDITIONAL DETAILS SEE SHEETS 7/17 & 8/17
3. FOR LOCATION OF SECTION K-K AND VIEW B-B SEE SHT. 8/17
4. FOR LOCATION OF SECTIONS L-L, J-J, & C-C SEE SHT. 7/17

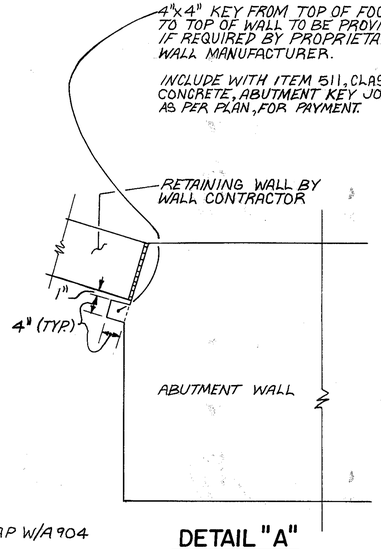

DETAIL "A"

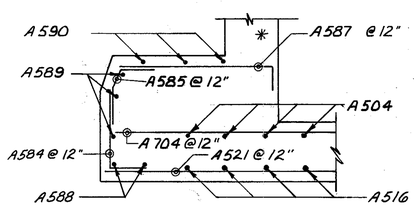

SECTION L-L

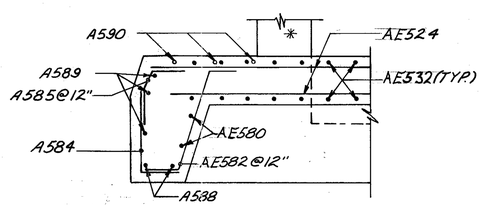

SECTION J-J

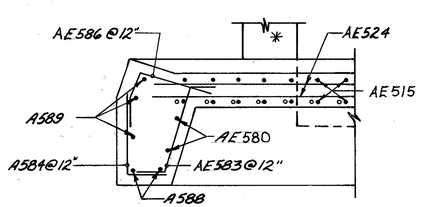

SECTION C-C

*COUNTERFORT REINF. OMITTED FOR CLARITY

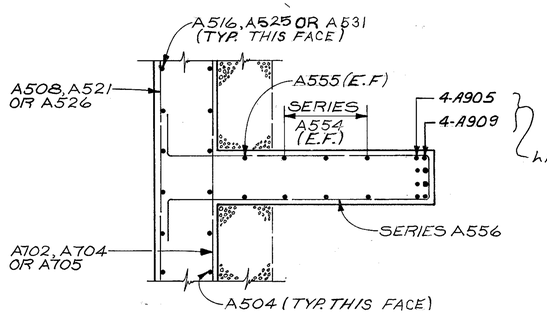

SECTION H-H

McCOY ASSOCIATES INC. 9/17
CONSULTING ENGINEERS
AKRON, OHIO

EAST ABUTMENT DETAILS

BRIDGE NO. SUM 76-1303
RAMP E-10 OVER RAMP E-16
SUMMIT COUNTY STA. 14+37.14
STA. 15+40.87

DESIGNED	DRAWN	TRACED	CHECKED	REVIEWED	DATE	REVISED
TAB	J.D.P.		RPL	MSC	12-21-87	

FHWA REGION	STATE	PROJECT	
5	OHIO		

112.3
12.14

SUMMIT COUNTY
SUM 76-11.57

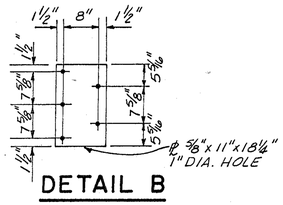

DETAIL B

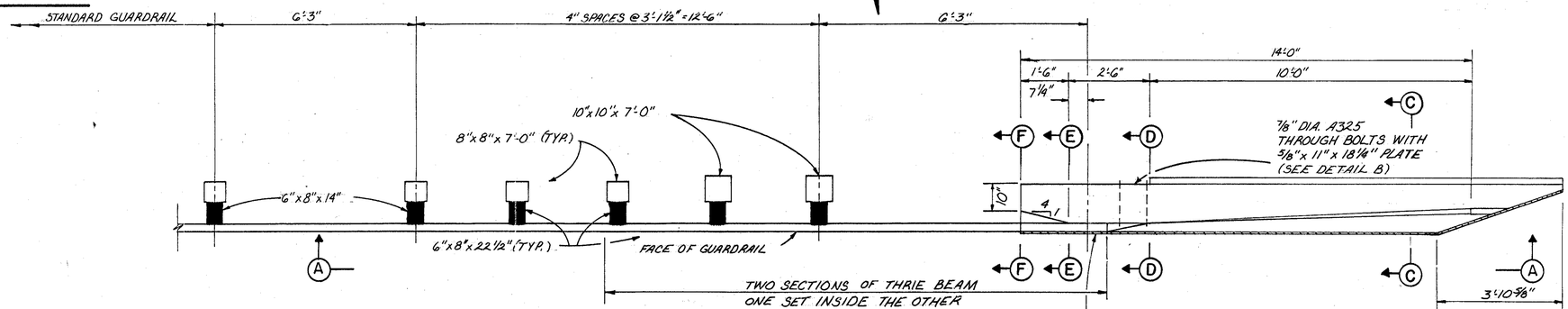

PART PLAN OF SOUTH PARAPET AT EAST ABUTMENT

NOTE: THE THRIE BEAM TERMINAL CONNECTOR SHALL FIT UNDER THE STANDARD GUARDRAIL SECTION AT THE APPROACH END. ALL LAPS SHALL BE IN THE DIRECTION OF TRAFFIC.

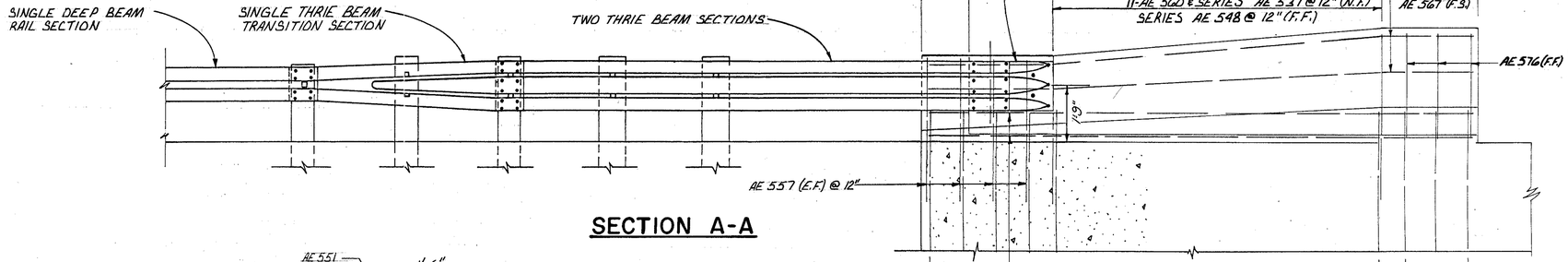

SECTION A-A

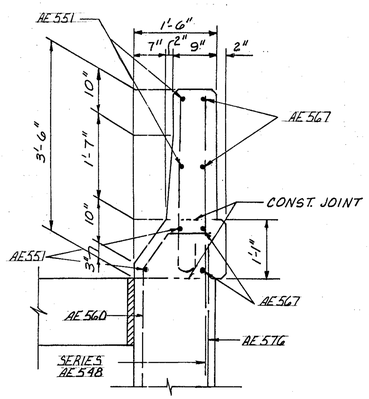

SECTION C-C

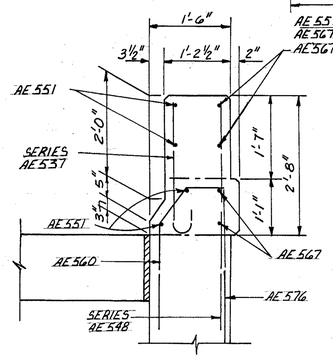

SECTION D-D

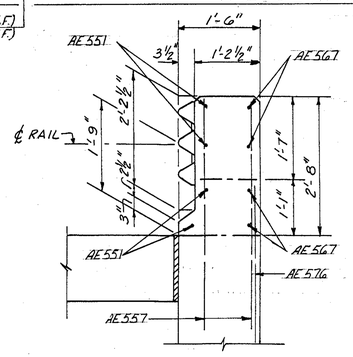

SECTION E-E

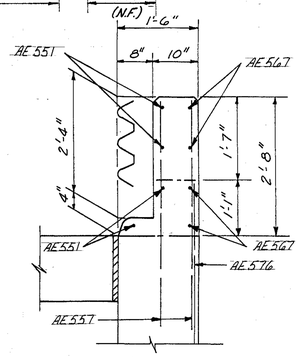

SECTION F-F

GENERAL NOTES

DESIGN SPECIFICATIONS: "STANDARD SPECIFICATIONS FOR HIGHWAY BRIDGES" ADOPTED BY AASHTO 1989, INCLUDING THE OHIO "SUPPLEMENT" TO THESE SPECIFICATIONS.

DESIGN DATA: CONCRETE CLASS S f'c=4500 P.S.I, fc=1500 P.S.I. REINFORCING STEEL ASTM A615, A616 OR A617 GRADE 60 fs=24,000 P.S.I.

PREFORMED EXPANSION JOINT FILLER IN THE PARAPET DEFLECTION JOINTS MAY BE EITHER 1/4" GRAY SPONGE RUBBER OR 1/4" GRAY CELLULAR POLYVINYL CHLORIDE (PVC) SPONGE. SPONGE RUBBER FILLER SHALL CONFORM TO AASHTO M-153, TYPE I. DENSITY OF PVC SPONGE NOT BE LESS THAN 20 LBS. PER CU. FT.

DEFLECTION JOINTS SHALL BE SPACED AT 16'-0" CENTERS, MAX., EXCEPT THAT FOR CONTINUOUS STRUCTURES THE PANELS SHALL BE FURTHER SUBDIVIDED IN THE NEGATIVE MOMENT REGION (OVER THE PIERS) INTO LENGTHS OF NOT LESS THAN 5'-0" NOR MORE THAN 7'-6". REINFORCING BARS SHALL NOT EXTEND THROUGH DEFLECTION JOINTS.

CONCRETE PARAPETS ABOVE UPPER CONSTRUCTION JOINT SHALL BE PLACED IN ALTERNATE SECTIONS BY THE USE OF BULKHEADS. CLOSING SECTIONS SHALL BE PLACED AFTER REMOVAL OF BULKHEADS AND AFTER PLACEMENT OF EXPANSION JOINT FILLER. EXPOSED EDGES OF THE FILLER SHALL BE FLUSH WITH THE SURFACE OF CONCRETE AND SHALL BE FREE OF MORTAR.

PAYMENT: ADDITIONAL GUARDRAIL COST IN EXCESS OF NORMAL GUARDRAIL COST, SUCH AS: TERMINAL CONNECTOR, STEEL PLATE, BOLTS, NUTS, PLATE WASHERS AND OTHER HARDWARE SHALL BE INCLUDED WITH BRIDGE TERMINAL ASSEMBLY FOR PAYMENT. QUANTITIES OF CONCRETE AND REINFORCING STEEL FOR PARAPET ARE INCLUDED WITH THEIR APPROPRIATE ITEM UNDER EITHER ABUTMENTS OR SUPERSTRUCTURE FOR PAYMENT.

POSTS SHALL BE SQUARE-SAWED PRESSURE TREATED WOOD AS PER 710.14. POSTS SHALL BE FABRICATED WITH SQUARE ENDS. BOLT HOLES SHALL BE BORED AND TOPS OF POSTS TRIMMED. IF REQUIRED, AFTER POSTS ARE SET, POSTS MAY BE SET IN DRILLED HOLES OR DRIVEN TO GRADE. STEEL POSTS AND BLOCKOUTS MAY BE FURNISHED AS AN ALTERNATE, PROVIDED THAT THE STRENGTH EQUALS OR EXCEEDS THE STRENGTH OF WOOD POSTS AND BLOCKOUTS.

McCOY ASSOCIATES, INC.
CONSULTING ENGINEERS
AKRON, OHIO

3A | 17

BRIDGE RAILING DEFLECTOR PARAPET TYPE

BRIDGE NO. SUM 76-1303
RAMP E-10 OVER RAMP E-16
SUMMIT COUNTY STA. 14+37.14
STA. 15+40.87

DESIGNED	DRAWN	TRACED	CHECKED	REVIEWED	DATE	REVISED
GCK	DAK		JGC	JBH	8-15-90	

320691

FHWA REGION	STATE	PROJECT	
5	OHIO		

1124
12.14

SUMMIT COUNTY
SUM 76-11.57

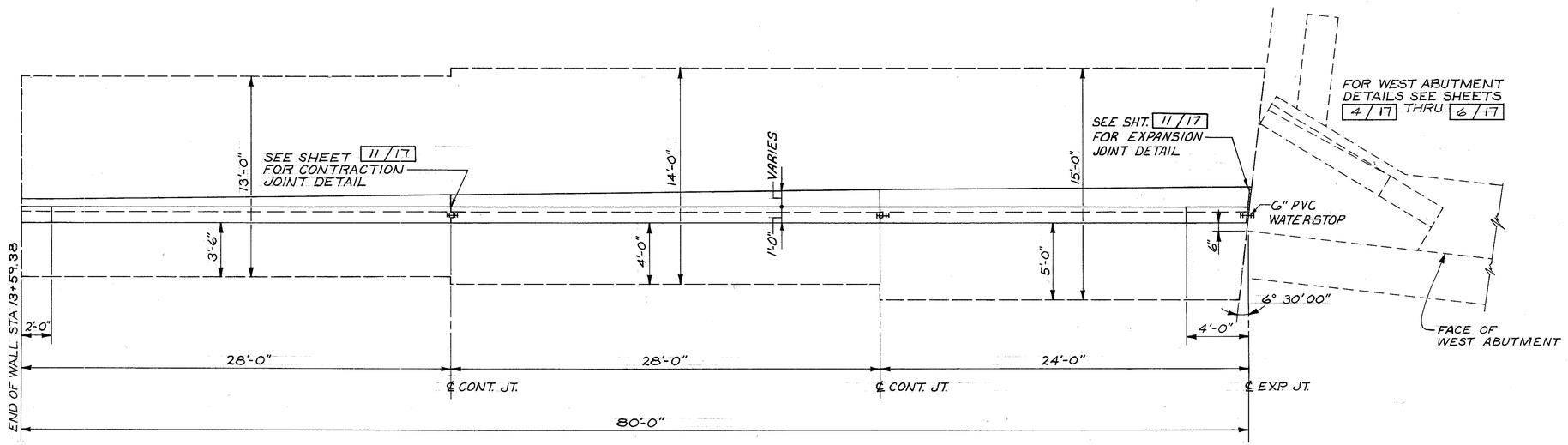

PLAN—SOUTHWEST WINGWALL

NOTES

1. PROVIDE TEXTURED CONCRETE SURFACE WITH VERTICAL RUSTICATIONS (SEE STRUCTURAL GENERAL NOTES)
2. FOR SECTIONS SEE SHT. 11/17

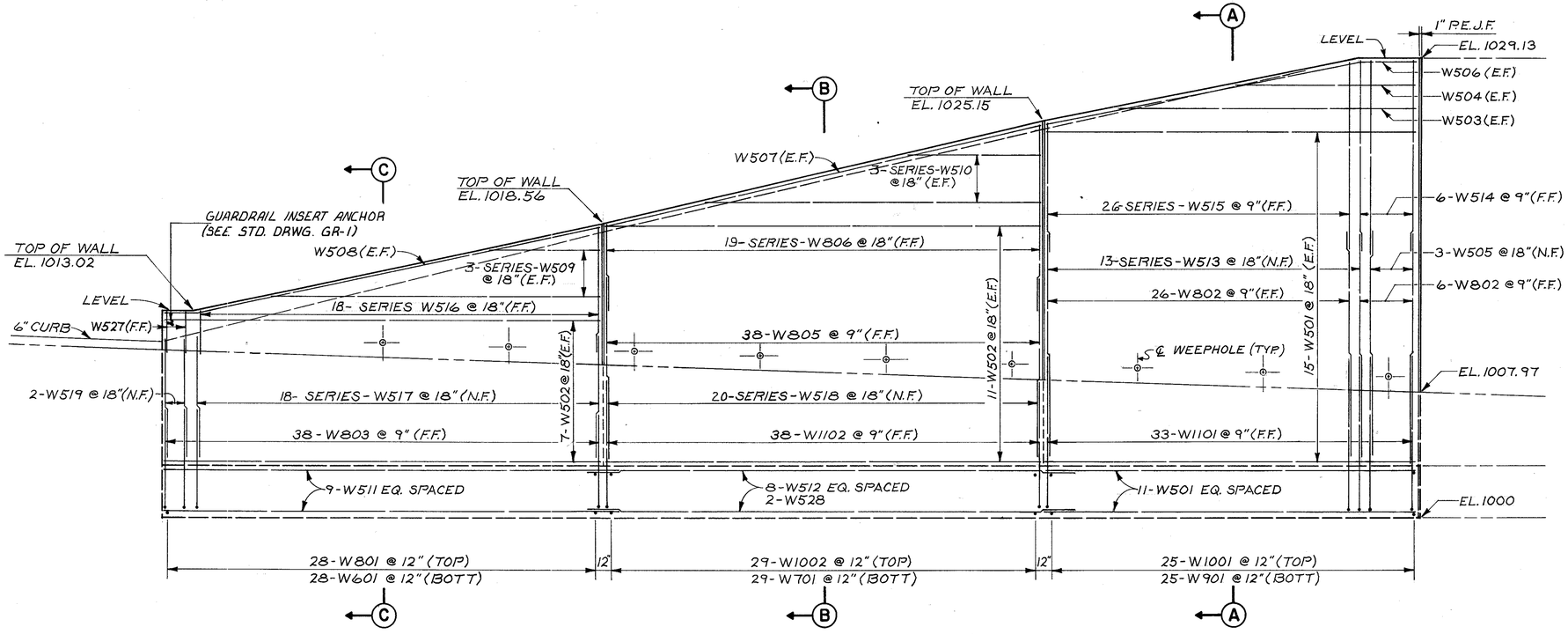

ELEVATION SOUTHWEST WINGWALL

McCOY ASSOCIATES INC. 10/17
CONSULTING ENGINEERS
AKRON, OHIO

SOUTHWEST WINGWALL DETAILS

BRIDGE NO. SUM 76-1303
RAMP E-10 OVER RAMP E-16
SUMMIT COUNTY STA. 14+37.14
STA. 15+40.87

DESIGNED	DRAWN	TRACED	CHECKED	REVIEWED	DATE	REVISED
TAB	JM		RPL	MSC	12-21-87	

FHWA REGION	STATE	PROJECT	
5	OHIO		

112.5
12.14

SUMMIT COUNTY
SUM 76-11.57

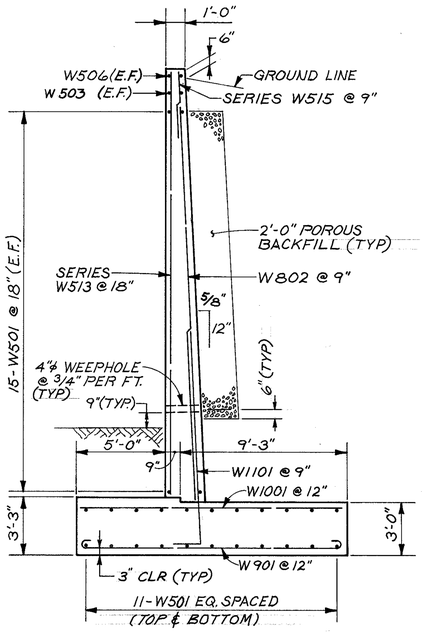

SECTION A-A

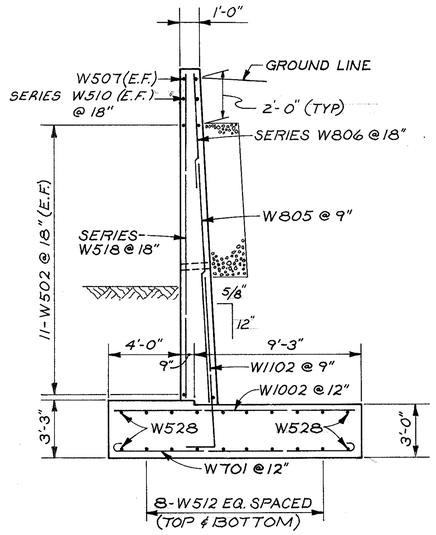

SECTION B-B

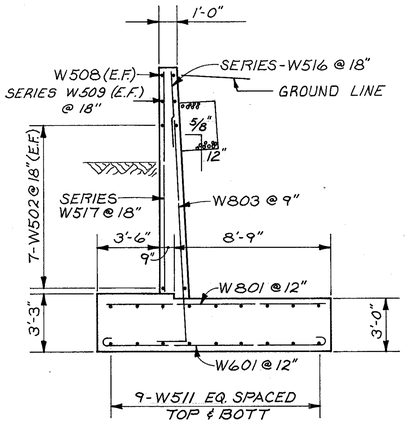

SECTION C-C

NOTES

SEE NOTES 1,2,3,&8 ON SHEET 4/17

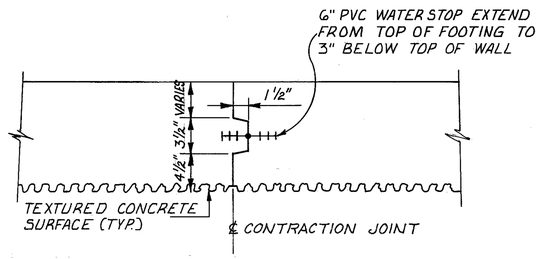

CONTRACTION JOINT DETAIL

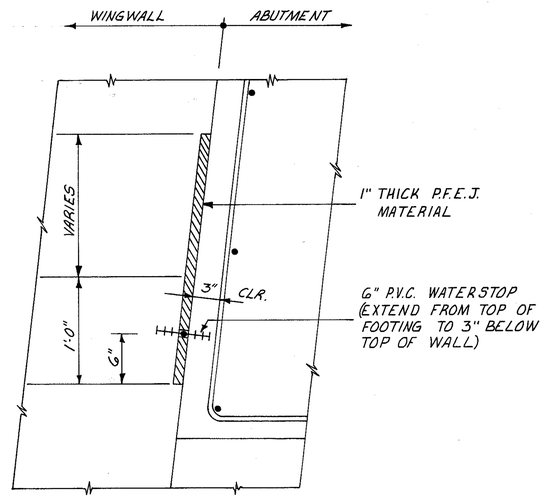

WINGWALL EXPANSION JOINT DETAIL

McCOY ASSOCIATES INC. CONSULTING ENGINEERS AKRON, OHIO	11/17

SOUTHWEST WINGWALL DETAILS

BRIDGE NO. SUM 76-1303
RAMP E-10 OVER RAMP E-16
SUMMIT COUNTY STA. 14+37.14
STA. 15+40.87

DESIGNED	DRAWN	TRACED	CHECKED	REVIEWED	DATE	REVISED
TAB	JM		RPL	MSC	12-21-87	

23276

FHWA REGION	STATE	PROJECT	
5	OHIO		

1126
1214

SUMMIT COUNTY
SUM 76-11.57

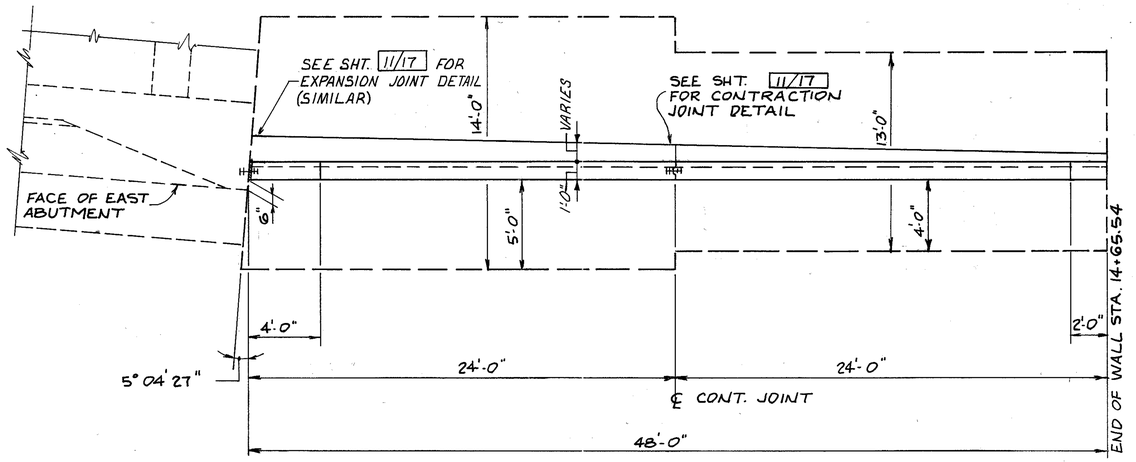

PLAN—SOUTHEAST WINGWALL

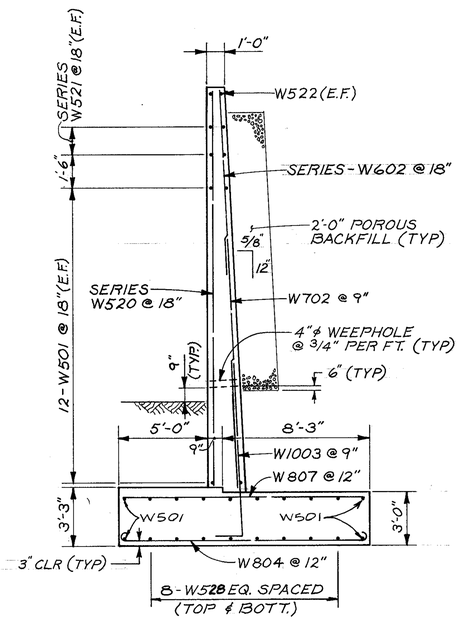

SECTION D-D

NOTES

1. PROVIDE TEXTURED CONCRETE SURFACE WITH VERTICAL RUSTICATIONS (SEE STRUCTURAL GENERAL NOTES)
2. SEE NOTES 1,2,3 & 8 ON SHEET 4/17

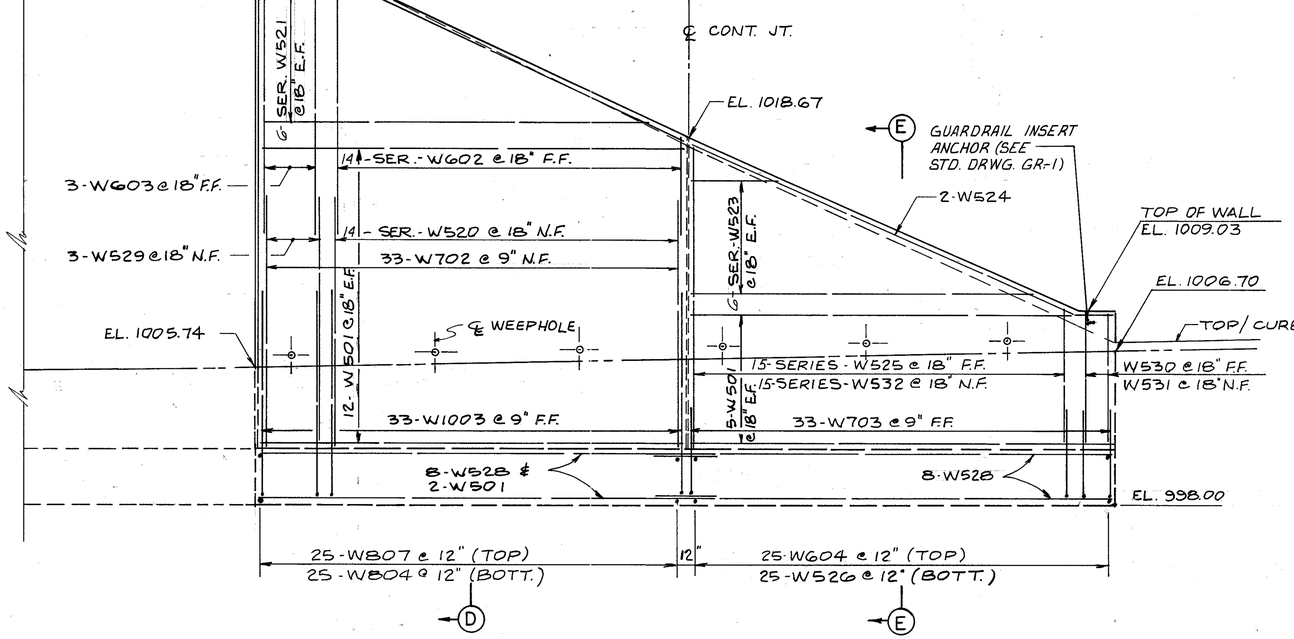

ELEVATION SOUTHEAST WINGWALL

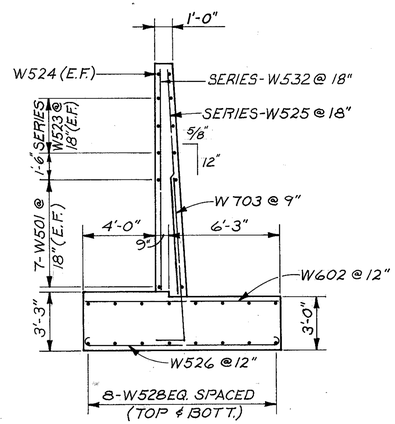

SECTION E-E

McCOY ASSOCIATES INC. 12/17
CONSULTING ENGINEERS
AKRON, OHIO

SOUTHEAST WINGWALL DETAILS

BRIDGE NO. SUM 76-1303
RAMP E-10 OVER RAMP E-16
SUMMIT COUNTY STA. 14+37.14
STA. 15+40.87

DESIGNED	DRAWN	TRACED	CHECKED	REVIEWED	DATE	REVISED
TAB	J.M.		RPL	MSC	12-21-87	

FHWA REGION	STATE	PROJECT	
5	OHIO		

1127
1214

SUMMIT COUNTY
SUM 76-11.57

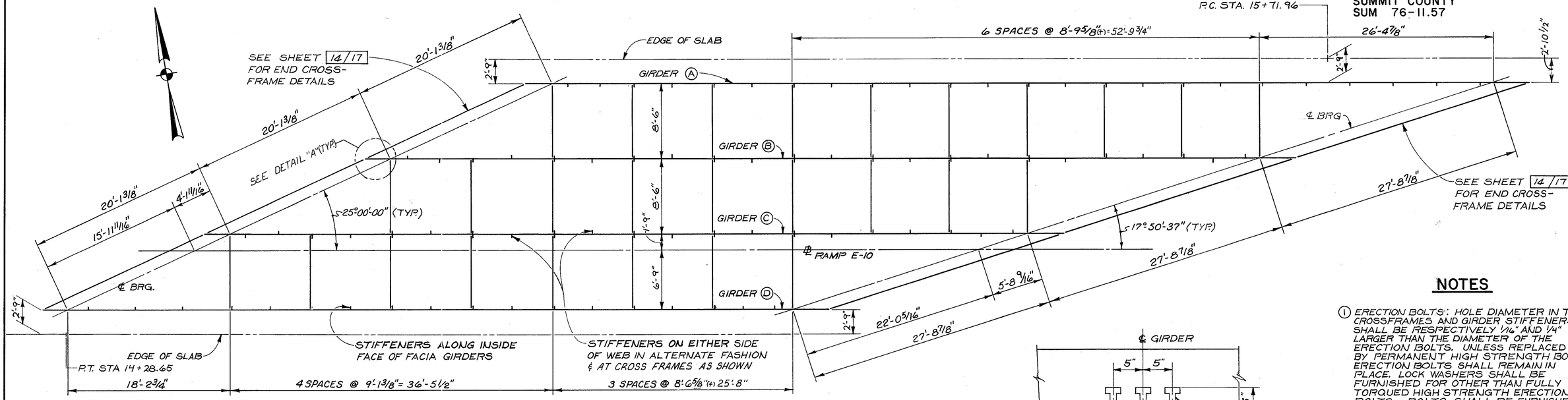

FRAMING PLAN

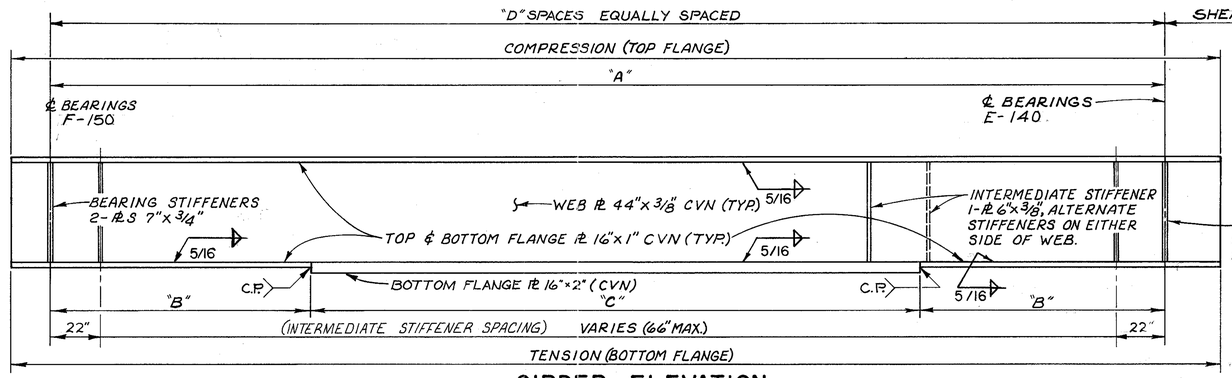

GIRDER ELEVATION

C.P. = COMPLETE PENETRATION BUTT WELD

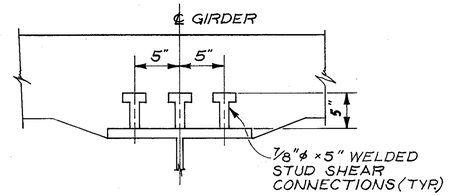

TYPICAL STUD SPACING

NOTES

1. ERECTION BOLTS: HOLE DIAMETER IN THE CROSSFRAMES AND GIRDER STIFFENERS SHALL BE RESPECTIVELY 1/16" AND 1/4" LARGER THAN THE DIAMETER OF THE ERECTION BOLTS. UNLESS REPLACED BY PERMANENT HIGH STRENGTH BOLTS, ERECTION BOLTS SHALL REMAIN IN PLACE. LOCK WASHERS SHALL BE FURNISHED FOR OTHER THAN FULLY TORQUED HIGH STRENGTH ERECTION BOLTS. BOLTS SHALL BE FURNISHED AS PART OF 513.

   IN LIEU OF ERECTION BOLTS AND AT THE OPTION OF THE CONTRACTOR, ALTERNATIVE MEANS OF TEMPORARY BRACING MAY BE USED SUBJECT TO THE APPROVAL OF THE DIRECTOR (501.06)

2. WELDED ATTACHMENT OF SUPPORTS FOR CONCRETE DECK FINISHING MACHINE MAY BE MADE TO AREAS OF THE FASCIA STRINGER FLANGES DESIGNATED "COMPRESSION". ATTACHMENTS SHALL NOT BE MADE TO AREAS DESIGNATED "TENSION." FILLET WELDS TO COMPRESSION FLANGES SHALL BE NOT CLOSER THAN 1" FROM EDGE OF FLANGE, BE NOT MORE THAN 2" LONG, AND BE NOT SMALLER THAN THE MINIMUM SIZE REQUIRED BY AASHTO.

3. ALTERNATE INTERMEDIATE STIFFENERS SHALL BE EQUALLY SPACED BETWEEN CROSSFRAME STIFFENERS AND BEARING STIFFENERS IN ACCORDANCE WITH THE MAXIMUM STIFFENER SPACING SHOWN ON THE GIRDER ELEVATION.

4. FOR BEARING DETAILS SEE SHT. 14A/17

5. WHERE A SHAPE OR PLATE IS DESIGNATED (CVN) THE MATERIAL SHALL MEET SPECIFIED MINIMUM NOTCH TOUGHNESS REQUIREMENTS AS SPECIFIED IN 711.01 OF CMS.

6. FOR ADDITIONAL NOTES SEE SHT. 14/17

GIRDER DIMENSION TABLE				
GIRDERS	DIMENSIONS			
	A	B	C	D
A	104'-10 1/2"	17'-0"	70'-10 1/2"	54 SPA'S
B	96'-8 3/8"	17'-0"	62'-8 3/8"	66 SPA'S
C	88'-6 1/4"	19'-0"	50'-6 1/4"	60 SPA'S
D	80'-4 1/8"	27'-0"	26'-4 1/8"	55 SPA'S

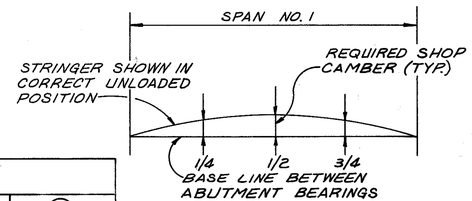

LAYOUT DIAGRAM

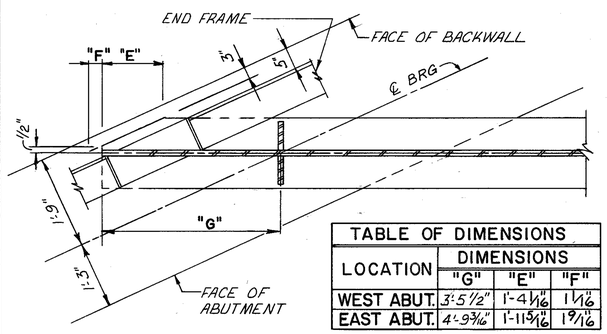

TABLE OF DIMENSIONS			
LOCATION	DIMENSIONS		
	"G"	"E"	"F"
WEST ABUT.	3'-5 1/2"	1'-4 1/16"	1 1/16"
EAST ABUT.	4'-9 3/16"	1'-11 5/16"	1 9/16"

DETAIL A

DEFLECTION AND CAMBER													
GIRDERS	(A)			(B)			(C)			(D)		
POINTS	1/4	1/2	3/4	1/4	1/2	3/4	1/4	1/2	3/4	1/4	1/2	3/4
DEFLECTION DUE TO WEIGHT OF STEEL	5/8"	7/8"	5/8"	1/2"	3/4"	1/2"	5/16"	1/2"	5/16"	1/4"	5/16"	1/4"
DEFLECTION DUE TO REMAINING DEAD LOAD	2 1/2"	3 1/2"	2 1/2"	2 5/16"	3 3/16"	2 5/16"	1 5/16"	2 1/16"	1 5/16"	1"	1 3/8"	1"
ADJUSTMENT REQUIRED FOR VERTICAL CURVE	-5/8"	-13/16"	-3/4"	-3/4"	-13/16"	-5/8"	-5/8"	-3/4"	-5/8"	-1/2"	-5/8"	-5/8"
REQUIRED SHOP CAMBER	2 1/2"	3 1/2"	2 1/2"	2 1/16"	3 1/8"	2 3/16"	1"	1 13/16"	1"	3/4"	1 1/16"	3/4"

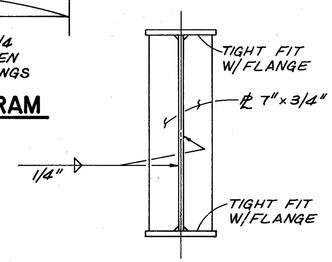

BEARING STIFFENER DETAIL

McCOY ASSOCIATES INC.
CONSULTING ENGINEERS
AKRON, OHIO

13/17

FRAMING PLAN

BRIDGE NO. SUM 76-1303
RAMP E-10 OVER RAMP E-16
SUMMIT COUNTY STA. 14+37.14
STA. 15+40.87

DESIGNED	DRAWN	TRACED	CHECKED	REVIEWED	DATE	REVISED
RPL	B.M.R.		TAB	MSC	12-21-87	

FHWA REGION	STATE	PROJECT	
5	OHIO		

1128
1214

SUMMIT COUNTY
SUM 76-11.57

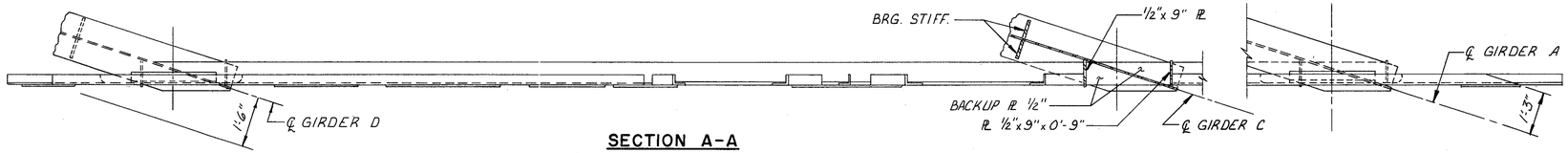

SECTION A-A

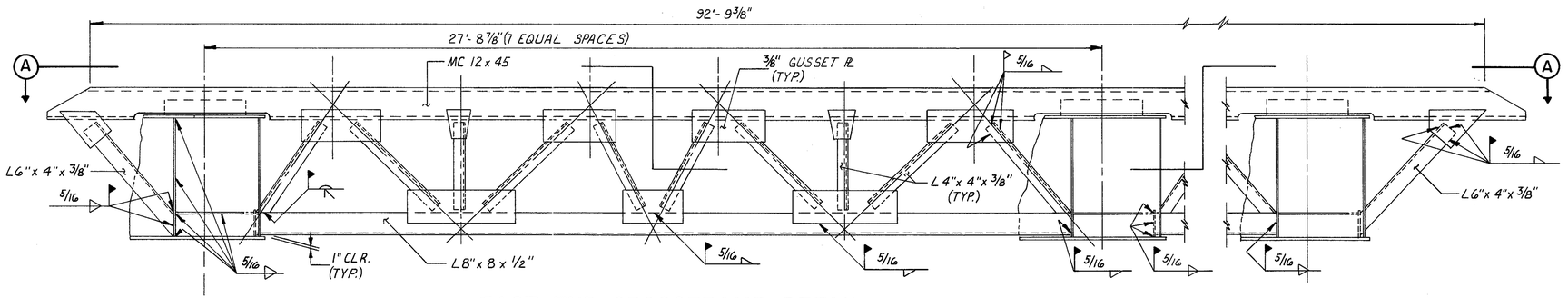

EAST END CROSSFRAME DETAIL

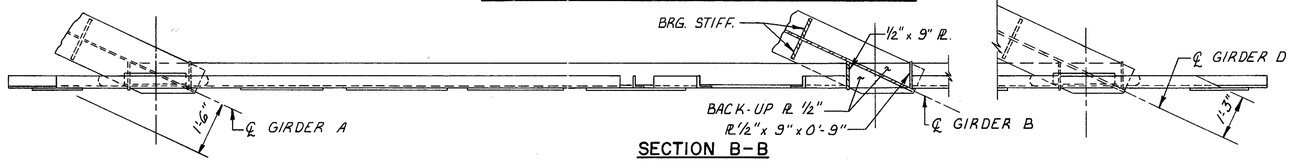

SECTION B-B

NOTES

1. GRINDING OF SHOP WELDS: FLANGE BUTT WELDS SHALL BE GROUND FLUSH IN TENSION AREAS ONLY. EXCEPT FOR WEB OF FACIA GIRDERS, WEB WELDS SHALL BE GROUND FLUSH FROM NEUTRAL AXIS OF THE WEB TO THE FLANGE WHICH IS IN TENSION. WEBS OF FACIA GIRDERS SHALL BE GROUND FLUSH FOR THEIR FULL DEPTH. GRINDING SHALL BE DONE IN DIRECTION OF STRESS.
2. SEE STD. DWG. EXJ-4-87 FOR ADDITIONAL EXPANSION JOINT DETAILS AND NOTES.
3. FOR ADDITIONAL NOTES AND DETAILS SEE SHEET 13 / 17 .
4. THE GLAND SIZE FOR THE ELASTOMERIC STRIP SEALS IS 4½ DIMENSION "A", JOINT OPENING, SHALL BE 2".

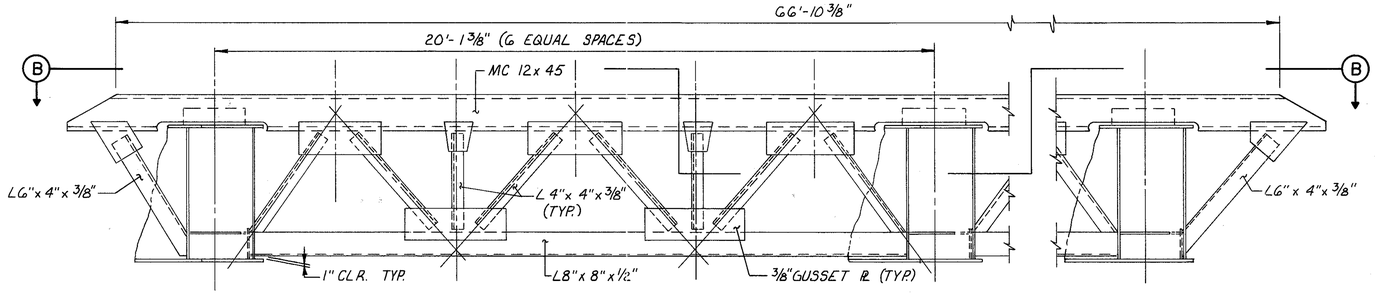

WEST END CROSSFRAME DETAIL

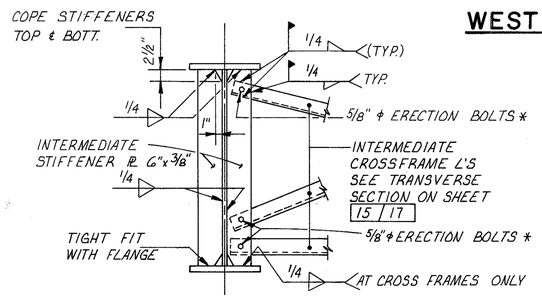

INTERMEDIATE CROSSFRAME AND STIFFENER PL'S

* SEE NOTE (2) ON SHEET 13 / 17

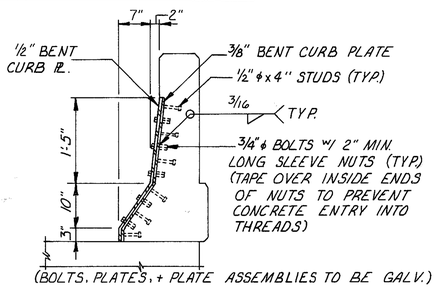

SECTION D-D

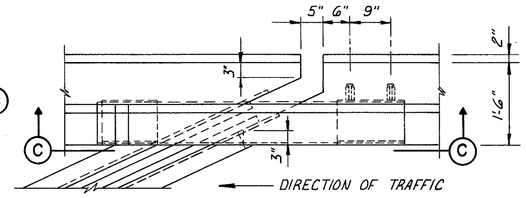

EXPANSION JOINT DETAIL

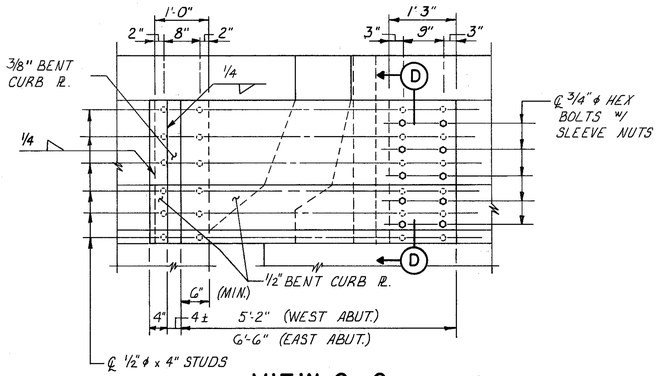

VIEW C-C

McCOY ASSOCIATES, INC. 14 / 17
CONSULTING ENGINEERS
AKRON, OHIO

FRAMING DETAILS

BRIDGE NO. SUM 76-1303
RAMP E-10 OVER RAMP E-16
SUMMIT COUNTY STA. 14+37.14
STA. 15+40.87

DESIGNED	DRAWN	TRACED	CHECKED	REVIEWED	DATE	REVISED
T.A.B. T.E.N.	T.E.N.	J.W.D	JBH	JBH	8/9/89	

220891

FHWA REGION	STATE	PROJECT	
5	OHIO		

11.29
12.14

SUMMIT COUNTY
SUM 76-11.57

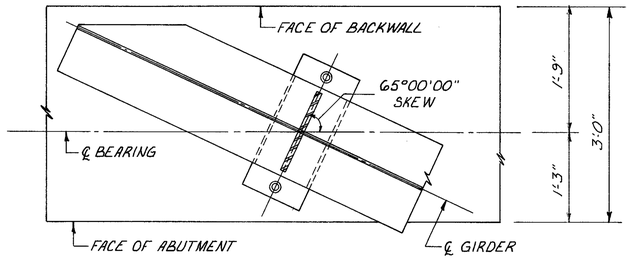

FIXED BEARING PLAN
(TYP. ALL GIRDERS – WEST ABUTMENT)

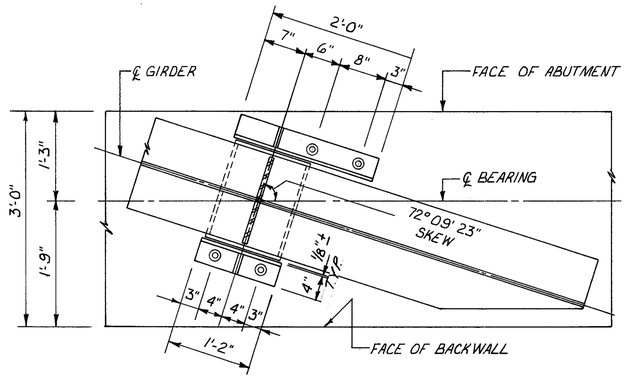

EXPANSION BEARING SIDE RETAINER PLAN
(TYP. ALL GIRDERS – EAST ABUTMENT)

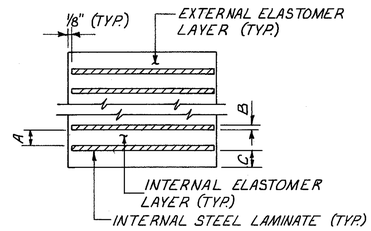

DETAIL-D
NO SCALE

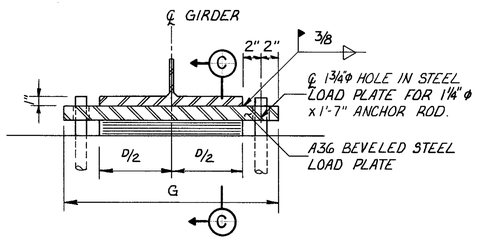

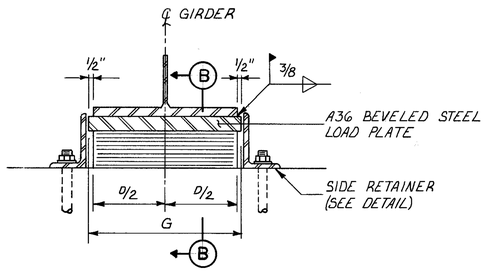

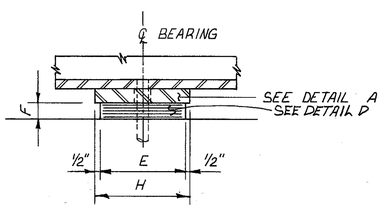

SECTION C-C
FIXED BEARING

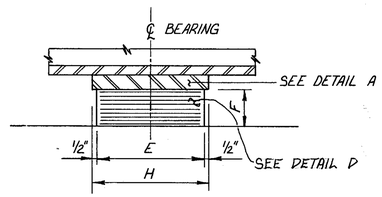

SECTION B-B
EXPANSION BEARING

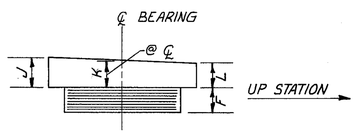

DETAIL-A
NO SCALE

BEARINGS (50 DUROMETER HARDNESS)		
	FIXED	EXPANSION
BEARING DESIGNATION	F-150	E-140
INTERNAL LAYER A	0.231"	0.354"
NO. REQUIRED	4	8
STEEL LAMINATE B	0.0747"	0.0747"
NO. REQUIRED	5	9
EXTERAL LAYER C	0.165"	0.250"
NO. REQUIRED	2	2
BEARING WIDTH D	16"	16"
LENGTH E	9½"	12"
THICKNESS F	1 5/8"	4"
LOAD PLATE WIDTH G	24"	17"
LENGTH H	10½"	13"

BEVELED LOAD PLATE THICKNESS						
	FIXED BEARING			EXPANSION BRG.		
GIRDER	J	K	L	J	K	L
A,B	1 ¾"	1 5/8"	1 ½"	1 13/16"	1 5/8"	1 ½"
C,D	1 ¾"	1 5/8"	1 9/16"	1 ¾"	1 5/8"	1 ½"

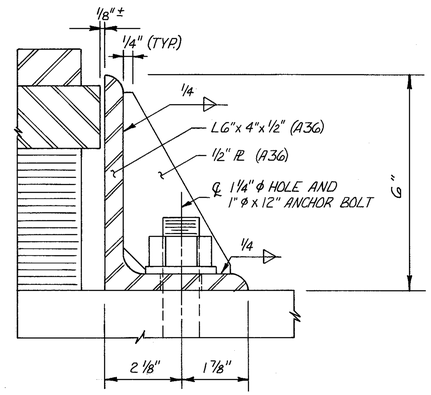

SIDE RETAINER DETAIL
(TYP. ALL EXPANSION BEARINGS)

NOTES

(1) BEARING ANCHOR BOLTS AND RODS:
ANCHOR BOLTS AND RODS ARE TO BE GALVANIZED ACCORDING TO 711.02. INSTALL PER 510. INCLUDE DOWEL HOLES, ANCHOR BOLTS, AND ANCHOR RODS WITH ITEM 516 FOR PAYMENT. AT THE OPTION OF THE CONTRACTOR, THE ANCHOR BOLTS AND RODS (OR FORMED HOLES), LOCATED AND SUPPORTED BY TEMPLATES, MAY BE CAST-IN-PLACE.

(2) TOLERANCES FOR BEARINGS:
INDIVIDUAL ELASTOMER LAYER THICKNESS: ±20% OF DESIGN VALUE (NOT TO EXCEED ± ⅛")
PLAN DIMENSIONS -0, + ¼"
DESIGN THICKNESS > 1¼" -0, + ¼"
EDGE COVER OF EMBEDDED LAMINATES -0, + ⅛"

(3) LOAD PLATE:
THE STEEL LOAD PLATE SHALL BE BONDED BY VULCANIZATION TO THE ELASTOMER DURING THE MOLDING PROCESS. WELDING OF THE LOAD PLATE TO THE SUPERSTRUCTURE SHALL BE CONTROLLED SO THAT THE PLATE TEMPERATURE AT THE ELASTOMER BONDED SURFACE SHALL NOT EXCEED 400°F AS DETERMINED BY THE USE OF PYROMETRIC STICKS OR OTHER TEMPERATURE MONITORING DEVICES.

(4) BEARING REPOSITIONING:
IF DECK CONCRETE IS PLACED AT AN AMBIENT TEMPERATURE HIGHER THAN 80°F OR LOWER THAN 40°F, AND THE BEARING SHEAR DEFLECTION EXCEEDS ONE-SIXTH OF THE BEARING HEIGHT AT 60°F ±10°F. THE BEAMS OR GIRDERS SHALL BE RAISED TO ALLOW THE BEARINGS TO RETURN TO THEIR UNDEFORMED SHAPE AT 60°F ±10°F.

(5) BASIS OF PAYMENT:
THE UNIT BID PRICE SHALL INCLUDE ALL MATERIALS, LABOR AND INCIDENTALS NECESSARY TO FURNISH AND INSTALL LAMINATED ELASTOMERIC BEARINGS EITHER FIXED OR EXPASION. PAYMENT WILL BE MADE AT THE CONTRACT PRICE FOR ITEM-516 EACH, LAMINATED ELASTOMERIC BEARINGS (16"x 9½" x 1 5/8" ELASTOMERIC PAD WITH 24"x 10½" x 1 5/8" STEEL LOAD PLATE) OR LAMINATED ELASTOMERIC BEARINGS (16"x 12" x 4" ELASTOMERIC PAD WITH 17"x 13" x 1 5/8" STEEL LOAD PLATE).

McCOY ASSOCIATES, INC.
CONSULTING ENGINEERS
AKRON, OHIO

14A 17

BEARING DETAILS

BRIDGE Nº SUM 76-1303
RAMP E-10 OVER RAMP E-16
SUMMIT COUNTY STA. 14+37.14
STA. 15+40.87

DESIGNED	DRAWN	TRACED	CHECKED	REVIEWED	DATE	REVISED
T.E.N.	T.E.N.	J.W.D	JBH	JBH	8/9/89	

225691

FHWA REGION	STATE	PROJECT	
5	OHIO		

1130
12.14

SUMMIT COUNTY
SUM 76-11.57

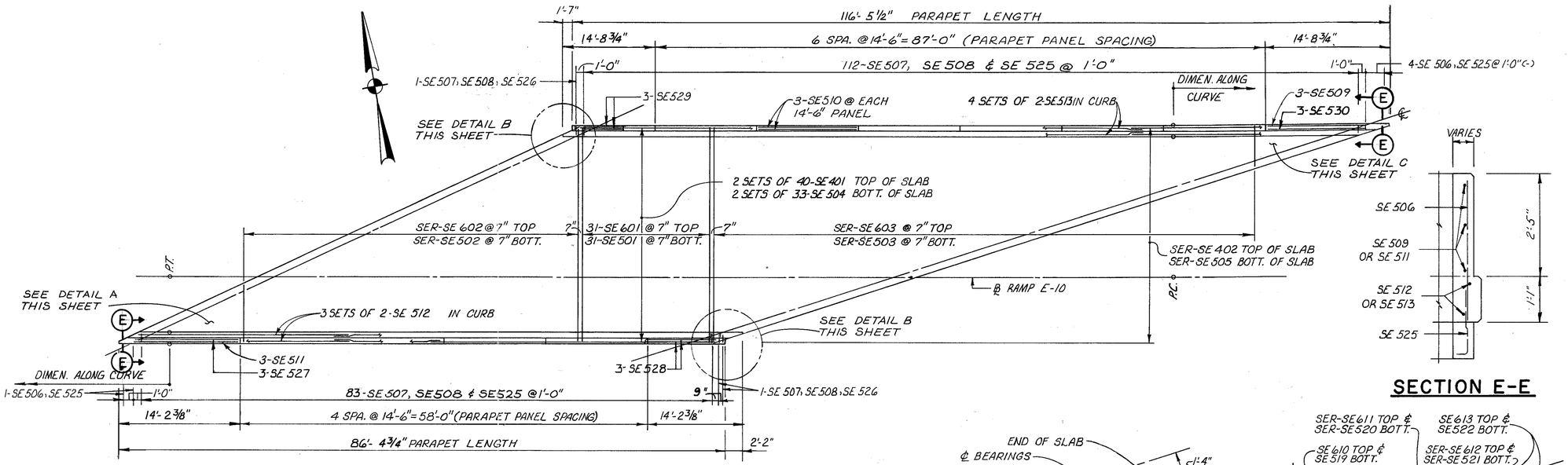

SECTION E-E

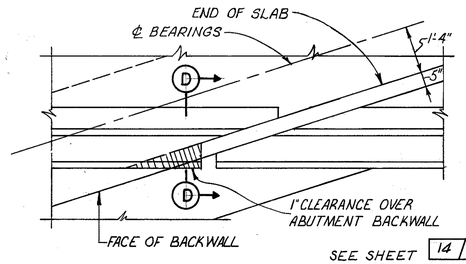

SEE SHEET 14 / 17 FOR EXPANSION JOINT DETAILS

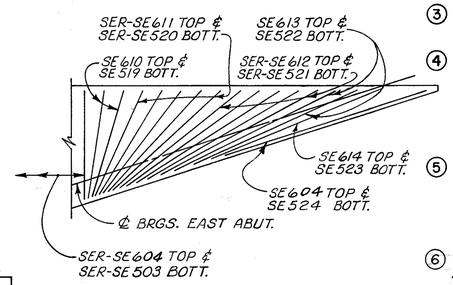

NOTES

1. THIS IS THE DESIGN DIMENSION. THE QUANTITY OF DECK CONCRETE TO BE PAID FOR SHALL BE BASED UPON THIS DIMENSION, EVEN THOUGH DEVIATION FROM IT MAY BE NECESSARY BECAUSE THE TOP FLANGE OF THE GIRDER MAY NOT HAVE THE EXACT CAMBER OR CONFORMATION REQUIRED TO PLACE IT PARALLEL TO THE FINISHED GRADE. DEDUCTION SHALL BE MADE FOR VOLUME OF ENCASED STEEL PLATES AS PER 511.18.
2. A HAUNCH WIDTH OF 9" SHALL BE USED FOR COMPUTING QUANTITY OF CONCRETE. HOWEVER, THE HAUNCH WIDTH MAY VARY BETWEEN 6" AND 12" (PROVIDED THAT THE SLOPE SHALL BE NOT MORE THAN 1:4 FOR A HAUNCH LESS THAN 9" WIDTH.
3. INTERMEDIATE CROSSFRAME ANGLES SHALL CONSIST OF ∠ 3½ x 3½ x 5/16.
4. THESE ELEVATIONS ARE THOSE WHICH ARE REQUIRED BEFORE CONCRETE IS PLACED. PROPER ALLOWANCE HAS BEEN MADE FOR DEAD LOAD DEFLECTIONS CAUSED BY THE WEIGHT OF CONCRETE.
5. TRANSVERSE REINFORCEMENT SHALL BE FIELD BENT AS REQUIRED AND PAYMENT SHALL BE INCLUDED WITH ITEM 509, EPOXY COATED REINFORCING STEEL.
6. FOR ADDITIONAL PARAPET SECTIONS AND DETAILS SEE SHEET NO. 1120.

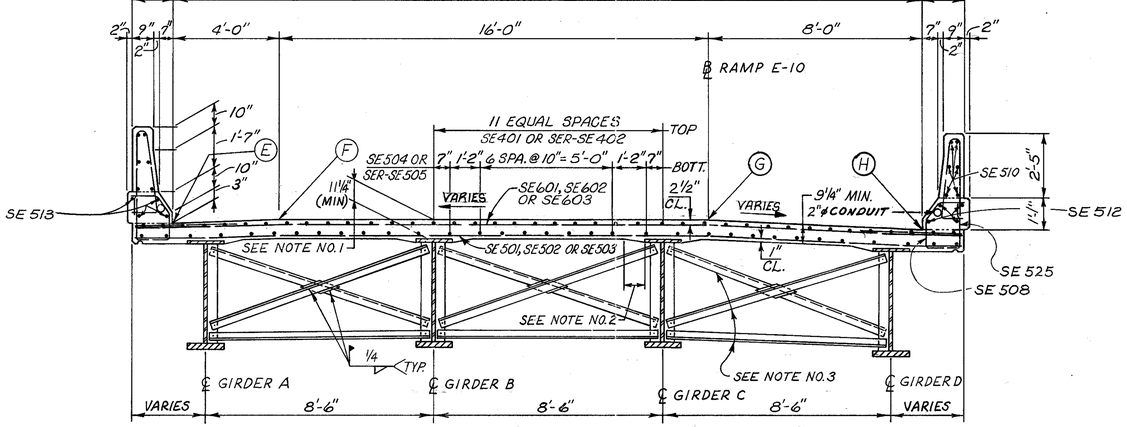

TRANSVERSE SECTION

DETAIL B

SOUTH EAST CORNER SHOWN
NORTH WEST CORNER SIMILAR

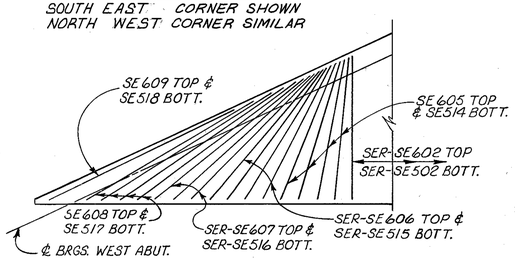

DETAIL C

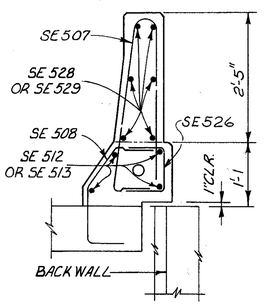

SECTION D-D

(CURB PLATE NOT SHOWN)

DETAIL A

DECK SCREED ELEVATIONS *
SEE TRANSVERSE SECTION AND NOTE NO. 4

LOCATION	E	F	G	H
℄ BRGS. W. ABUT.	1028.39	1028.74	1029.18	1029.09
0.2 PT.	1027.71	1028.10	1028.79	1028.79
0.4 PT.	1027.10	1027.52	1028.46	1028.52
0.6 PT.	1026.55	1027.01	1028.15	1028.25
0.8 PT.	1026.06	1026.56	1027.87	1028.00
℄ BRGS. E. ABUT.	1025.63	1026.17	1027.62	1027.77

* THE ELEVATIONS GIVEN ARE TO THE TOP OF DECK SLAB
G = PROFILE GRADE ELEVATION

McCOY ASSOCIATES INC. 15 / 17
CONSULTING ENGINEERS
AKRON, OHIO

SLAB PLAN & SECTION

BRIDGE NO. SUM 76-1303
RAMP E-10 OVER RAMP E-16
SUMMIT COUNTY
STA. 14+37.14
STA. 15+40.87

DESIGNED	DRAWN	TRACED	CHECKED	REVIEWED	DATE	REVISED
RPL	BMR		TAB	MSC	12-21-87	

12276

REINFORCING SCHEDULE- WEST ABUTMENT

FHWA REGION	STATE	PROJECT	
5	OHIO		

1131 12.14

SUMMIT COUNTY
SUM. 76-11.57

MARK	No. REQ'D	LENGTH	TYPE	PHASE 1	PHASE 2			DIMENSIONS A	B	C	D	INCRM.	WEIGHT LBS.
				NON-EPOXY COATED BARS									
A901	57	30'-0"	ST										5,814
A902	19	13'-6"	ST										872
A903	28	24'-5"	3					23'-2"					2,324
A904	56	8'-6"	8					1'-6"	6'-4"	3'-9"			1,618
A905	28	18'-9"	ST										1,785
A801	182	20'-4"	4					18'-6"					9,881
A802	57	30'-0"	ST										4,566
A803	19	15'-6"	ST										786
A701	10	28'-9"	ST										588
A702	10	27'-8"	ST										566
A703	10	33'-4"	ST										681
A706	98	11'-4"	2					1'-8"	5'-0"				2,270
A501	140	5'-10"	1					1'-0"	5'-0"				851
A502	10	22'-6"	ST										235
A503	64	20'-5"	ST										1,363
A504	54	16'-0"	ST										901
A505	20	20'-0"	ST										417
A506	20	28'-0"	ST										584
A507	10	28'-9"	ST										300
A508	30	27'-8"	ST										866
A509	20	34'-1"	ST										711
A510	10	33'-4"	ST										348
A512	61	8'-10"	7					3'-10"	3'-7"	3'-7"			562
A518	80	14'-1"	11					1'-11"	3'-9"	9½"	3'-0"		1,175
A539	1	7'-0"	ST										7
A540	1	10'-9"	ST										11
SERIES	14 SETS	2'-6" TO	ST									2'-8⅜"	810
A554	OF 6	16'-0"											
A555	14	15'-0"	ST										219
SERIES	7 SETS OF	12'-2" TO	10					1'-8"	4'-6" TO	1'-10"		6'-3¾"	2,463
A556	16	30'-0"							13'-10"				
SERIES	2 SETS	3'-4" TO	2					1'-9" TO	1'-0"			6"	120
A573	OF 10	8'-0"							6'-3"				
A579	10	5'-0"	ST										52
SERIES	1 SET OF	8'-6" TO	13					3'-3"	3'-6" TO	2'-0"		6"	60
A597	7	9'-6"							6'-6"				
								TOTAL NON-EPOXY COATED BARS =					43,812

MARK	No. REQ'D	LENGTH	TYPE	DIMENSIONS A	B	C	D	INCRM.	WEIGHT LBS.
		EPOXY COATED BARS							
AE 804	5	28'-0"	ST						374
AE 805	5	27'-8"	ST						369
AE 806	5	33'-4"	ST						445
AE 816	41	4'-3"	15	2'-10"	1'-0"	1'-0"			465
AE 601	14	12'-7"	2	1'-5"	5'-6"				256
AE 602	14	11'-2"	2	1'-5"	5'-0"				235
AE 511	61	8'-2"	2	4'-5"	2'-0"				520
AE 513	63	10'-2"	2	1'-5"	4'-6"				668
AE 514	55	8'-0"	2	1'-5"	3'-5"				459
AE 515	55	6'-2"	2	11"	2'-9"				354
AE 517	10	33'-0"	ST						344
AE 528	3	5'-3"	1	2'-8"	2'-8"				16
AE 529	2	12'-2"	1	1'-6"	10'-10"				20
AE 530	10	27'-8"	ST						289
AE 533	18	4'-8"	ST						88
AE 534	33	4'-6"	ST						155
AE 535	5	10'-8"	7	8"	4'-3"	9'-0"			56
SERIES	1 SET OF	4'-4" TO	ST					1⅛"	55
AE 537	11	5'-3"				8"			
AE 538	5	7'-4"	14	4'-5"	8	11"	5½"		38
AE 541	3	9'-5"	1	1'-6"	8'-0"				29
AE 542	5	16'-1"	1	1'-2"	15'-0"				84
SERIES	1 SET OF	5'-11" TO	ST					2'-4½"	26
AE 543	3	10'-8"							
AE 544	17	6'-8"	ST						118
AE 545	16	4'-4"	ST						72
AE 546	1	7'-9"	ST						8
AE 547	2	9'-6"	ST						20
SERIES	1 SET OF	3'-0" TO	6	2'-5" TO				1"	39
AE 548	11	3'-10"		3'-3"					
AE 549	2	6'-9"	6	3'-0"	3'-3"	7½"			14
AE 551	6	12'-8"	ST						79
AE 552	6	11'-0"	ST						69
AE 557	3	4'-5"	1	1'-6"	3'-0"				14
AE 558	4	15'-4"	ST						64
AE 559	2	8'-5"	1	1'-6"	7'-0"				18
AE 560	21	3'-7"	5	8"	6"	8½"	2'-1"		78
AE 562	2	13'-3"	ST						28
AE 563	1	4'-2"	ST						4
AE 564	2	24'-2"	ST						50
AE 566	2	3'-2"	ST						7
AE 575	2	2'-8"	ST						6
AE 591	10	21'-0"	ST						219
SERIES	1 SET OF	6'-0" TO	2	4'-9"	1'-6"			7½"	47
AE 592	6	9'-1"		7'-10"					
AE 593	5	8'-4"	1	1'-6"	7'-0"				43
AE 594	2	4'-1"	9	1'-3"	1'-6"	1'-4"	8"		9
AE 595	2	12'-11"	7	8'-10"	3'-8"	1'-10"			27
AE 596	1	6'-6"	2	3'-9"	1'-6"				7
AE 598	3	13'-6"	7	8'-10"	4'-3"	2'-0"			42
AE 599	3	4'-7"	9	1'-9"	1'-6"	1'-4"	8"		14
SERIES	1 SET	4'-4" TO	ST					2"	30
AE 590	OF 6	5'-3"							
SERIES	1 SET	3'-0" TO	3	2'-5" TO					21
AE 597	OF 6	3'-10"		3'-3"					
				TOTAL EPOXY-COATED BARS =					6,492

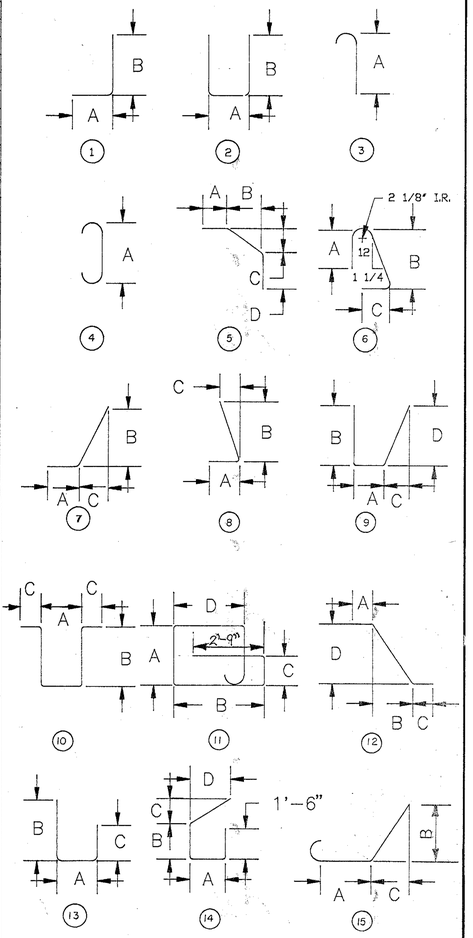

SEE SHEET 17/17 FOR NOTES.

McCOY ASSOCIATES, INC. 16/17
CONSULTING ENGINEERS
AKRON, OHIO

REINFORCING SCHEDULE

BRIDGE NO. SUM - 76 - 1303
RAMP E-10 OVER RAMP E-16
SUMMIT COUNTY STA.14+37.14
STA.15+40.87

DESIGNED	DRAWN	TRACED	CHECKED	REVIEWED	DATE	REVISED
TEN	PNA		JBH	JBH	8-4-89	

REINFORCING SCHEDULE - EAST ABUTMENT

FHWA REGION	STATE	PROJECT	
5	OHIO		

1132 / 12.14

SUMMIT COUNT
SUM. 76-11.57

MARK	No. REQ'D	LENGTH	TYPE	PHASE 1	PHASE 2			DIMENSIONS A	B	C	D	INCRM.	WEIGHT LBS.
NON-EPOXY COATED BARS													
A901	57	30'-0"	ST										5,814
A904	72	8'-6"	8					1'-6"	6'-4"	3'-9"			2,081
A905	36	18'-9"	ST										2,295
A906	19	17'-6"	ST										1,131
A907	6	23'-3"	ST										474
SERIES	1 SET OF	19'-6" TO	ST									3½"	939
A908	13	23'-0"											
A909	36	22'-10"	3					22'-2"					2,795
A801	220	20'-4"	4					18'-6"					11,943
A802	57	30'-0"	ST										4,566
A810	19	19'-6"	ST										989
A813	6	23'-3"	ST										372
SERIES	1 SET OF	19'-6" TO	ST									3½"	738
A814	13	23'-0"											
SERIES	2 SETS OF	8'-7" TO	4					6'-9" TO				3'-3"	287
A815	4	18'-4"						16'-6"					
A702	20	27'-8"	ST										1,131
A704	10	27'-7"	ST										564
A705	10	29'-10"	ST										610
A706	126	11'-4"	2					1'-8"	5'-0"				2,919
A501	174	5'-10"	1					1'-0"	5'-0"				1,059
A504	61	16'-0"	ST										1,018
A508	58	27'-8"	ST										1,674
A516	41	19'-2"	ST										820
A518	120	14'-1"	11					1'-11"	3'-9"	9½"	3'-0"		1,763
A520	20	8'-10"	7					3'-10"	3'-7"	3'-7"			184
A521	19	28'-4"	ST										561
A522	11	29'-10"	ST										342
A523	23	7'-10"	7					2'-10"	3'-7"	3'-7"			188
A525	45	20'-10"	ST										978
A526	21	29'-1"	ST										637
A527	31	9'-6"	7					4'-6"	3'-7"	3'-7"			307
A531	35	20'-1"	ST										733
SERIES	18 SETS OF	2'-6" TO	ST									2'-8 3/8"	1,042
A554	6	16'-0"											
A555	18	15'-0"	ST										282
SERIES	9 SETS OF	12'-2" TO	10					1'-8"	4'-6 TO	1'-10"		1'-2 1/4"	3,167
A556	16	30'-0"							13'-0"				
A568	1	7'-4"	ST										8
A570	1	12'-3"	ST										13
A581	9	27'-7"	ST										259
A584	25	4'-7"	1					1'-8"	3'-1"				120
A585	23	4'-4"	5					1'-6"	0'-5"	1'-3"	1'-6"		104
A587	19	6'-9"	1					1'-0"	5'-11"				134
A588	2	23'-10"	ST										50
A589	3	24'-1"	ST										75
A590	3	22'-10"	ST										71
TOTAL NON-EPOXY COATED BARS												=	55,237

MARK	No. REQ'D	LENGTH	TYPE	PHASE 1	PHASE 2			DIMENSIONS A	B	C	D	INCRM.	WEIGHT LBS.
EPOXY COATED BARS													
AE 807	5	27'-6"	ST										367
AE 808	5	17'-0"	ST										227
AE 809	10	16'-0"	ST										427
AE 811	5	16'-4"	ST										218
AE 812	5	29'-2"	ST										389
AE 816	58	4'-3"	15					2'-10"	1'-0"	1'-0"			658
AE 601	14	12'-2"	2					1'-5"	5'-6"				256
AE 602	14	11'-2"	2					1'-5"	5'-0"				235
AE 511	77	8'-2"	2					4'-5"	2'-0"				656
AE 513	97	10'-2"	2					1'-5"	4'-6"				1,029
AE 514	77	8'-0"	2					1'-5"	3'-5"				642
AE 515	87	6'-2"	2					11"	2'-9"				560
AE 519	10	29'-10"	ST										311
AE 524	12	27'-2"	ST										340
AE 528	1	5'-3"	1					2'-8"	2'-8"				5
AE 530	24	27'-8"	ST										617
AE 532	10	7'-6"	2					1'-5"	3'-2"				78
AE 534	44	4'-6"	ST										207
AE 536	6	17'-1"	2					1'-2"	16'-0"				107
SERIES	1 SET	3'-0" TO	3					2'-5" TO				1"	39
AE 537	OF 11	3'-10"						3'-3"					
AE 538	6	7'-4"	14					4'-5"	8"	11"	5½"		46
AE 545	14	2'-9"	ST										40
SERIES	1 SET	4'-4" TO	ST									1⅛"	55
AE 548	OF 11	5'-3"											
AE 549	4	6'-9"	6					3'-0"	3'-3"	7½"			28
AE 550	1	3'-4"	ST										3
AE 551	5	12'-8"	ST										66
AE 553	6	6'-4"	1					1'-6"	5'-0"				40
AE 556	3	3'-2"	ST										10
AE 557	8	4'-4"	ST										36
AE 560	11	3'-7"	5					8"	6"	8½"	2'-1"		41
AE 561	6	15'-4"	7					8"	4'-5"	14'-0"			96
AE 566	4	3'-2"	ST										13
AE 567	5	16'-6"	ST										86
AE 569	8	2'-7"	ST										22
AE 571	2	4'-9"	ST										10
AE 572	1	11'-6"	ST										12
AE 576	17	6'-8"	ST										118
AE 577	2	28'-2"	ST										59
AE 578	1	4'-9"	ST										5
AE 579	2	5'-0"	ST										10
AE 580	3	6'-0"	ST										19
AE 582	4	7'-5"	12					1'-6"	1'-2"	1'-6"	4'-3"		31
AE 583	2	6'-11"	12					1'-6"	1'-0"	1'-6"	3'-9"		14
AE 586	2	6'-0"	9					1'-0"	3'-6"	1'-6"	7"		13
SERIES	2 SETS OF	4'-6" TO	2					2'-9" TO	1'-0"			6"	141
AE 574	10	9'-0"						7'-3"					
TOTAL EPOXY COATED BARS													8,382

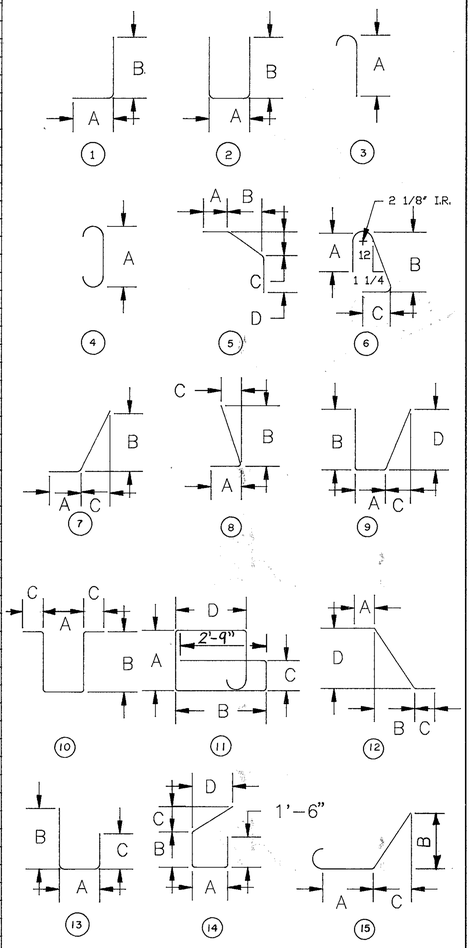

SEE SHEET 17/17 FOR NOTES.

McCOY ASSOCIATES, INC. 16A/17
CONSULTING ENGINEERS
AKRON, OHIO

REINFORCING SCHEDULE

BRIDGE NO. SUM-76-1303
RAMP E-10 OVER RAMP E-16
SUMMIT COUNTRY STA. 14+37.14
STA. 15+40.87

DESIGNED	DRAWN	TRACED	CHECKED	REVIEWED	DATE	REVISED
TEN	PNA		JBH	JBH	8-4-89	

REINFORCING SCHEDULE

FHWA REGION	STATE	PROJECT	
5	OHIO		

1133 / 12.14

SUMMIT COUNTY
SUM 76-11.57

NOTES

(1) THE PREFIX "E" DENOTES BARS TO BE EPOXY COATED.

(2) SEE SHEETS 16/17 AND 16A/17 FOR BENDING DIAGRAMS.

MARK	No. REQ'D.	LENGTH	TYPE	DIMENSIONS A	B	C	D	INCRM.	WEIGHT LBS.
SUPERSTRUCTURE									
SE601	31	30'-8"	ST						1428
SERIES	ISERIES	8'-3" TO	ST						2381
SE602	OF 82	30'-5"							
SERIES	ISERIES	6'-0" TO	ST						3563
SE603	OF 130	30'-6"							
SE604	1	7'-10"	ST						12
SE605	4	8'-0"	ST						48
SERIES	ISERIES	8'-3" TO	ST						52
SE606	OF 4	9'-1"							
SERIES	ISERIES	9'-8" TO	ST						45
SE607	OF 3	10'-5"							
SE608	4	11'-0"	ST						66
SE609	1	10'-0"	ST						15
SE610	1	6'-0"	ST						9
SERIES	ISERIES	6'-5" TO	ST						55
SE611	OF 5	8'-2"							
SERIES	ISERIES	8'-6" TO	ST						69
SE612	OF 5	9'-10"	ST						
SE613	2	9'-11"	ST						30
SE614	1	9'-0"	ST						14
SE501	31	30'-8"	ST						992
SERIES	ISERIES	8'-3" TO	ST						1661
SE502	OF 82	30'-5"							
SERIES	ISERIES	6'-0" TO	ST						2469
SE503	OF 130	30'-5"	ST						
SE504	66	38'-10"							2673
SERIES	ISERIES	8'-11" TO	ST						782
SE505	OF 33	36'-6"							
SE506	5	2'-3"	ST						12
SE507	198	7'-1"	4	3'-1¼"	3'-4¼"	7½"			1463
SE508	198	3'-3"	3	9"	6"	8½"	1'-1"		671
SE509	3	14'-1"	ST						44
SE510	60	14'-2"	ST						887
SE511	3	13'-7"	ST						43
SE512	12	29'-9"	ST						372
SE513	16	30'-2"	ST						503
SE514	1	9'-0"	ST						9
SERIES	ISERIES	8'-3" TO	ST						36
SE515	OF 4	9'-1"							
SERIES	ISERIES	9'-8" TO	ST						31
SE516	OF 3	10'-5"							
SE517	4	11'-0"	ST						46
SE518	1	10'-0"	ST						10
SE519	1	6'-0"	ST						6
SERIES	ISERIES	6'-5" TO	ST						8
SE520	OF 5	8'-2"							
SERIES	ISERIES	8'-6" TO	ST						48
SE521	OF 5	9'-10"							
SE522	2	9'-11"	ST						21
SE523	1	9'-0"	ST						9
SE524	1	7'-10"	ST						8
SE525	201	2'-6"	1	10"	1'-9½"				524
SE526	3	1'-11"	2	8"	9"				6
SE527	3	12'-5"	ST						39
SE528	6	11'-9"	ST						74
SE529	6	12'-2"	ST						76
SE530	3	12'-3"							38

MARK	No. REQ'D.	LENGTH	TYPE	DIMENSIONS A	B	C	D	INCRM.	WEIGHT LBS.
SE 401	80	38'-10"							2075
SERIES	ISERIES	9'-1" TO	ST.						622
SE 402	OF 40	37'-6"							
				TOTAL EPOXY COATED =					24045
SOUTHWEST WINGWALL									
W1101	33	13'-9"	8	2'-0"	12'-1"	7½"			2411
W1102	38	11'-8"	8	2'-0"	9'-11"	6⅛"			2356
W1001	25	14'-8"	ST						1578
W1002	29	13'-8"	ST						1706
W901	25	17'-2"	4	14'-8"					1459
W801	28	12'-8"	ST						947
W802	32	21'-9"	ST						1858
W803	38	13'-5"	8	1'-4"	12'-3"	7⅝"			1362
W805	38	13'-7"	ST						1378
SERIES	ISERIES	5'-1"	ST						425
W806	OF 19	TO 11'-8"							
W701	29	15'-4"	4	13'-8"					909
W601	28	14'-0"	4	12'-8"					589
W501	52	23'-8"	ST						1284
W502	36	27'-8"	ST						1039
W503	2	18'-6"	ST						39
W504	2	11'-0"	ST						23
W505	3	25'-8"	ST						80
W506	2	23'-10"	7	3'-8"	19'-10"	4'-0"			50
W507	2	28'-5"	ST						59
W508	2	28'-6"	7	2'-0"	5'-6"	26'-0"			59
SERIES	2 SERIES	6'-6"	ST						86
W509	OF 3	TO 21'-0"							
SERIES	2 SERIES	7'-8"	ST						90
W510	OF 3	TO 21'-0"							
W511	18	29'-0"	ST						544
W512	16	31'-0"	ST						517
SERIES	ISERIES	21'-8"	ST						344
W513	OF 14	TO 25'-6"							
W514	6	6'-6"	ST						41
SERIES	ISERIES	2'-6"	ST						122
W515	OF 26	TO 6'-6"							
SERIES	ISERIES	2'-7"	ST						101
W516	OF 18	TO 8'-2"							
SERIES	ISERIES	9'-7"	ST						232
W517	OF 18	TO 15'-1"							

MARK	No. REQ'D.	LENGTH	TYPE	DIMENSIONS A	B	C	D	INCRM.	WEIGHT LBS.
SERIES	ISERIES	15'-2"	ST						
W518	OF 20	TO 21'-8"							384
W519	2	9'-6"	ST						20
W527	4	2'-6"	ST						10
W528	4	30'-0"	ST						125
						TOTAL NON EPOXY			22227
SOUTHEAST WINGWALL									
W1003	33	11'-4"	8	1'-10"	9'-10"	6⅛"			1609
W804	25	15'-6"	4	13'-8"					1035
W807	25	13'-8"	ST						
W702	33	13'-9"	ST						927
W703	33	10'-7"	8	1'-6"	9'-3"	5⅞"			714
SERIES	ISERIES	6'-6"	ST						234
W602	OF 14	TO 15'-9"							
W603	3	15'-10"	ST						71
W604	25	10'-8"	ST						401
W501	38	23'-8"	ST						938
SERIES	ISERIES	17'-2"	ST						318
W520	OF 14	TO 26'-4"							
SERIES	2 SERIES	5'-6"	ST						172
W521	OF 6	TO 22'-0"							
W522	2	25'-4"	7	3'-8"	19'-10"	9'-3"			53
SERIES	2 SERIES	4'-6"	ST						162
W523	OF 6	TO 21'-4"							
W524	2	25'-8"	7	2'-0"	21'-8"	9'-8"			54
SERIES	ISERIES	7'-6"	ST						192
W525	OF 15	TO 17'-0"							
W526	25	11'-10"	4	10'-8"					308
W528	32	25'-0"	ST						
W529	3	26'-6"	ST						
W530	2	7'-9"	ST						
W531	2	7'-6"	ST						
SERIES	ISERIES	7'-7"	ST						193
W532	OF 15	TO 17'-1"							
					TOTAL NON EPOXY				7381
					TOTAL THIS SHEET NON EPOXY				29608
					TOTAL THIS SHEET EPOXY				24045

McCOY ASSOCIATES, INC. 17/17
CONSULTING ENGINEERS
AKRON, OHIO

REINFORCING SCHEDULE

BRIDGE NO. SUM 76-1303
RAMP E-10 OVER RAMP E-16
SUMMIT COUNTY STA. 14+37.14
STA. 15+40.87

DESIGNED	DRAWN	TRACED	CHECKED	REVIEWED	DATE	REVISED
TAB	JM		RPL	MSC	12-21-87	

33276

FHWA REGION	STATE	PROJECT	
5	OHIO		

1134
12.14

SUMMIT COUNTY
SUM 76-11.57

NOTES

1. FOR ADDITIONAL DETAILS, REINFORCING, AND NOTES SEE STANDARD DRAWINGS AS-1-81, SHEETS 1 THRU 3.

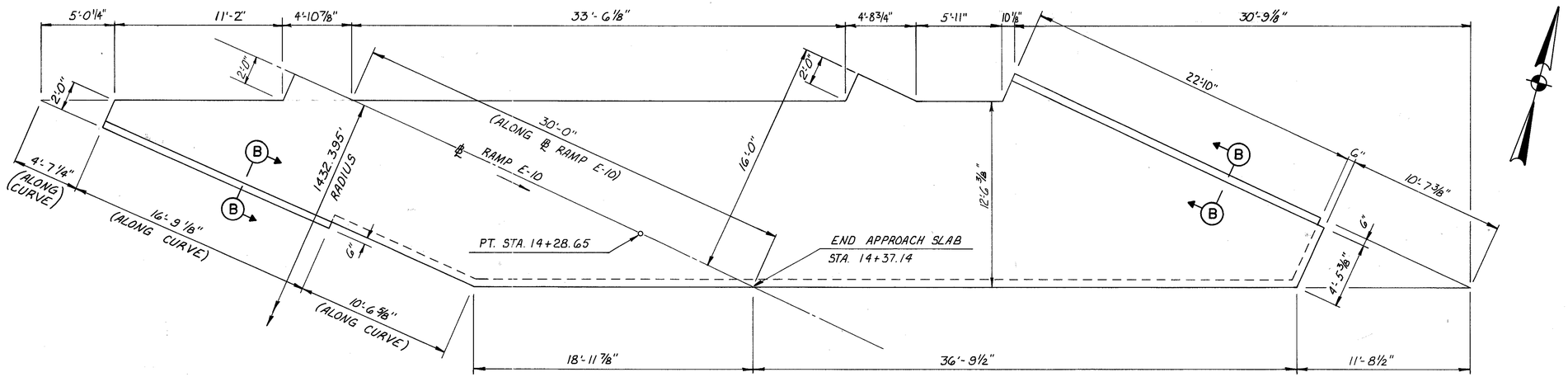

WEST APPROACH SLAB

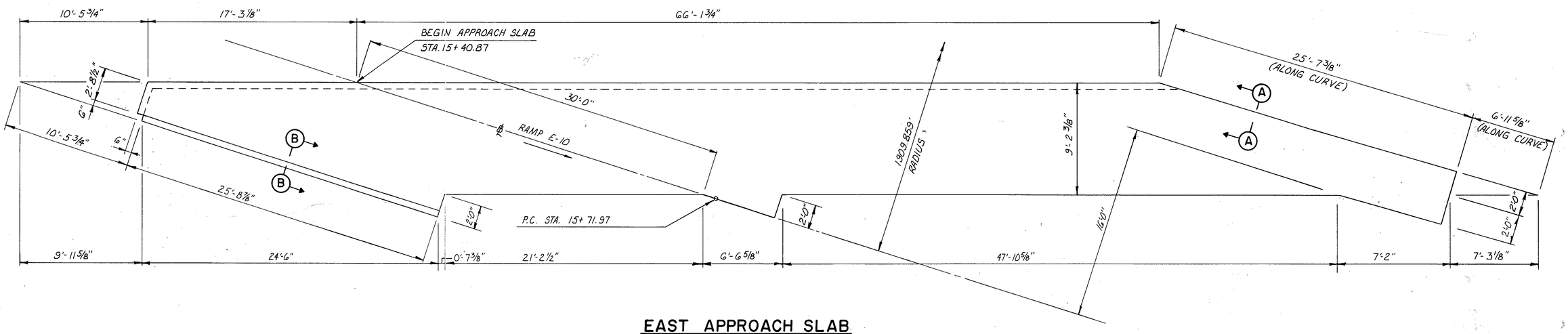

EAST APPROACH SLAB

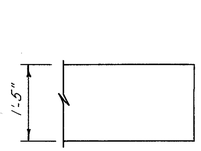

SECTION A-A

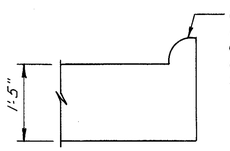

SECTION B-B

CURB TYPE 2-A TO BE INCLUDED WITH ITEM 611, REINFORCED CONCRETE APPROACH SLABS (TYP.)

McCOY ASSOCIATES, INC.
CONSULTING ENGINEERS
AKRON, OHIO

17A/17

APPROACH SLAB DETAILS

BRIDGE Nº SUM 76-1303
RAMP E-10 OVER RAMP E-16
SUMMIT COUNTY STA. 14+37.14
STA. 15+40.87

DESIGNED	DRAWN	TRACED	CHECKED	REVIEWED	DATE	REVISED
T.A.B. T.E.N.	T.E.N.	J.W.D.	J.B.H.	J.B.H.	10-1989	

020891

F.H.W.A. REG.	STATE	PROJECT	
5	OHIO		

1135
1214

SUMMIT COUNTY
SUM 76-11.57

CURVE DATA

CURVE Nº 1	CURVE Nº 2
Δ = 6°-47'-01"	Δ = 3° 15' 21"
Dc = 1°-00'-00"	Dc = 0° 28' 50"
R = 5,729.580'	R = 11,920.871'
T = 339.577'	T = 338.793'
L = 678.361'	L = 677.404'

EXISTING STRUCTURE

TYPE: SIMPLE SPAN STEEL ROLLED BEAM WITH CONCRETE DECK AND SUBSTRUCTURE.
SKEW: VARIES.
SPAN: 53'-3"± ℄ TO ℄ BEARINGS.
ROADWAY: VARIES (45'-7⅞" LT. ℄ 43'-6¾" RT. @ ℄)
LOADING: CF 2000.
WEARING SURFACE: 5¼" ASPHALT CONCRETE.
APPROACH SLAB: 20'-0".
ALIGNMENT: TANGENT, CURVE LEFT.
SUPERELEVATION: VARIES.
SLOPE PROTECTION: NONE.

PROPOSED STRUCTURE

TYPE: SIMPLE SPAN REINFORCED CONCRETE DECK WITH STEEL ROLLED BEAMS AND REINFORCED CONCRETE COUNTERFORTED ABUTMENTS.
SKEW: VARIES
SPAN: 53'-3"± ℄ TO ℄ BEARINGS
ROADWAY: VARIES (72'-2" LT. ℄ 72'-0 ¼" RT @ ℄)
LOADING: HS 20-44 (CASE I) AND ALTERNATE MILITARY LOADING,
WEARING SURFACE: 1" MONOLITHIC WEARING SURFACE
APPROACH SLAB: 25'-0" (AS-1-81)
ALIGNMENT: TANGENT, CURVE LT.
SUPERELEVATION: VARIES
SLOPE PROTECTION: NONE

TRAFFIC DATA

WEST BOUND: 1229 ADTT YR. 2000
EAST BOUND: 1057 ADTT YR. 2000

EARTHWORK LIMITS SHOWN ARE APPROXIMATE. ACTUAL SLOPES SHALL CONFORM TO PLAN CROSS-SECTIONS. SEE SHEET NO.S 302 THRU 364.

~~FOR SOIL BORING LOCATION AND LOGS SEE SHEET NO.S ____ THRU ____.~~

TEMPORARY BENCHMARK:
TOP LETTER "R" IN CORY OF FIRE HYDRANT S.E. CORNER OF INTERSECTION OF ENGLEWOOD AND SEIBERLING.
EL. = 1007.82

McCOY ASSOCIATES INC.
CONSULTING ENGINEERS
AKRON, OHIO

1/23

SITE PLAN

BRIDGE NO. SUM 76-1332
AKRON EAST EXPRESSWAY
OVER SEIBERLING STREET
SUMMIT COUNTY STA. 629+47.21
630+05.59

DESIGNED	DRAWN	TRACED	CHECKED	REVIEWED	DATE	REVISED
TAB	B.M.R.		J.M.H.	MSC	3-29-88	

PROFILE ALONG I-76

PROFILE-SEIBERLING STREET
EXISTING & PROFILE GRADE
PROPOSED PROFILE GRADE
EXIST. PROFILE GRADE
VERTICAL CLEARANCE
EXISTING = (REQ.) 15.09'
PROPOSED = 15.68'
400' V.C.
+2.18 %
-2.29 %
25' APPROACH SLAB
BRIDGE LIMITS = 58.38
25' APPROACH SLAB
FIXED
EXP
P.V.C. STA. 627+80
P.V.I. EL= 1028.20
P.V.T. STA. 631+50
628+00
629+00
630+00
631+00
632+00

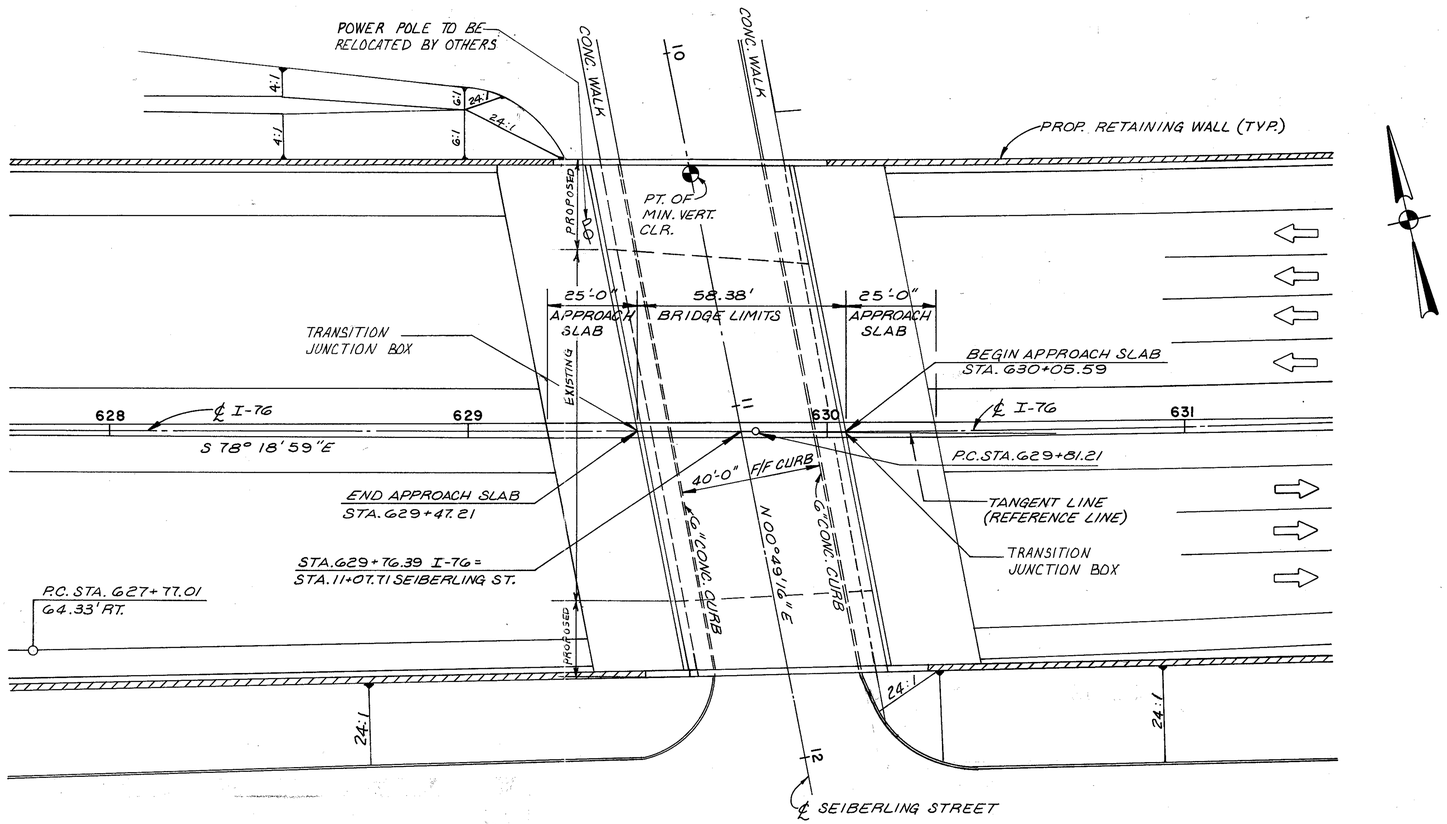

PLAN

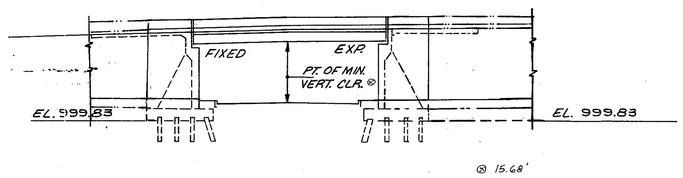

ELEVATION

FHWA REGION	STATE	PROJECT	
5	OHIO		

1130
12.14

SUMMIT COUNTY
SUM 76-11.57

NOTES:

1. FOR GENERAL NOTES, SEE SHEET 2B/23 AND 2C/23.
2. FOR TRANSITION JUNCTION BOX DETAILS, SEE SHEET NO. 704.

McCOY ASSOCIATES INC. 2/23
CONSULTING ENGINEERS
AKRON, OHIO

GENERAL PLAN & ELEVATION

BRIDGE NO. SUM 76-1332
AKRON EAST EXPRESSWAY
OVER SEIBERLING STREET

DESIGNED	DRAWN	TRACED	CHECKED	REVIEWED	DATE	REVISED
TAB	DAK		JMH	MSC	3-29-88	

FHWA REGION	STATE	PROJECT	
5	OHIO		

1137 / 1214

SUMMIT COUNTY
SUM 76-11.57

CONSTRUCTION PHASING

FOR ADDITIONAL TEMPORARY BARRIER PLAN AND DETAILS SEE SHT. NO. 1164 (TYPICAL EACH PHASE)

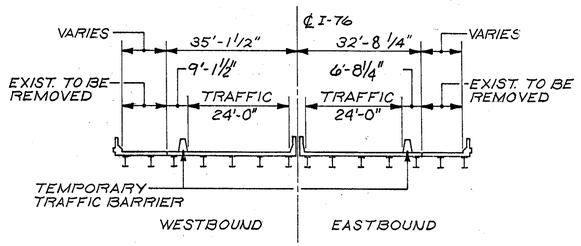

PHASE 2

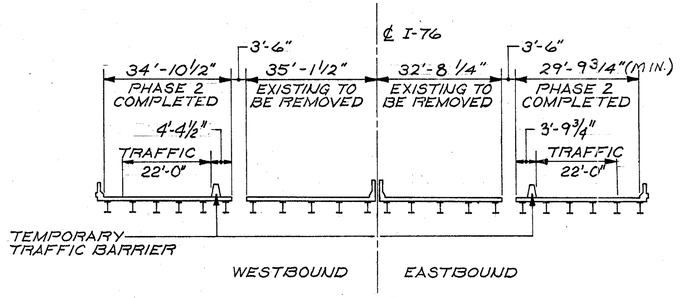

PHASE 4

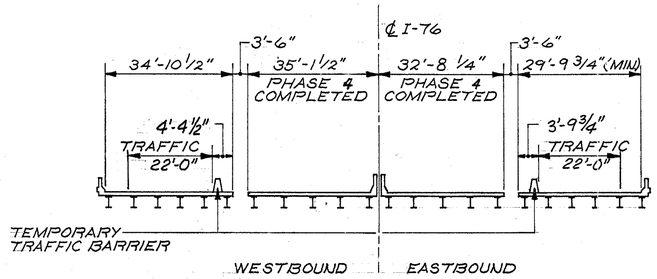

CLOSURE PHASE

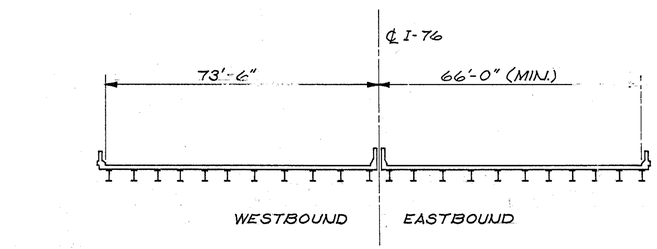

FINISHED STRUCTURE

THE REQUIRED ITEMS OF WORK TO BE PERFORMED FOR REMOVAL OF PORTIONS OF EXISTING STRUCTURE AND THE WIDENING AND REHABILITATION CONSTRUCTION SHALL INCLUDE, BUT NOT BE LIMITED TO THE FOLLOWING:

PHASE 2 CONSTRUCTION

A. INSTALL TEMPORARY TRAFFIC BARRIER TO DIVERT TRAFFIC TO THE CENTER OF THE BRIDGE. (SEE MAINTENANCE OF TRAFFIC PLANS)

B. REMOVE PORTIONS OF SLABS & APPROACH SLABS, PORTIONS OF ABUTMENT BACKWALLS, ALL WINGWALLS, THE 4 EXTERIOR STEEL BEAMS, THE INTERMEDIATE AND END CROSSFRAMES ATTACHED TO THEM, BEARINGS AND END DAM ANGLES AS SHOWN ON THE PLANS. (SEE SHEETS 4 / 23 THRU 8 / 23

C. DRIVE PILING, CONSTRUCT NEW PORTIONS OF ABUTMENTS, PLACE NEW & REUSED BEAMS, INSTALL NEW END CROSSFRAMES AND INTERMEDIATE CROSSFRAMES, PLACE NEW & REUSED BEARINGS, PLACE EXTERIOR PORTIONS OF DECK SLABS, BACKWALLS, APPROACH SLABS AND REPAIR ABUTMENTS AS SHOWN ON PLANS.

PHASE 4 CONSTRUCTION

D. RELOCATE TEMPORARY TRAFFIC BARRIERS TO DIVERT TRAFFIC. (SEE MAINTENANCE OF TRAFFIC PLANS)

E. REMOVE MEDIAN BARRIERS, REMAINING PORTIONS OF SLABS, APPROACH SLABS, ABUTMENT BACKWALLS, END CROSSFRAMES, INTERMEDIATE CROSSFRAMES, STEEL BEAMS AND END DAM ANGLES AS SHOWN ON THE PLANS. (SEE SHEETS 4 / 23 THRU 8 / 23

F. REPAIR ABUTMENTS AS SHOWN ON THE PLANS, REPLACE BACKWALLS, INSTALL REUSED BEARINGS AND BEAMS, INSTALL NEW END CROSSFRAMES AND INTERMEDIATE CROSS FRAMES, PLACE DECK SLABS (EXCEPT FOR 3' - 6" CLOSURE SECTIONS), MEDIAN BARRIERS AND APPROACH SLABS.

CLOSURE PHASE

G. PLACE 3' - 6" CLOSURE SECTIONS

H. REMOVE TEMPORARY BARRIERS AND INSTALL COMPRESSION SEALS IN ONE CONTINUOUS PIECE AT EACH ABUTMENT.

NOTE: FOR ADDITIONAL MAINTENANCE OF TRAFFIC NOTES SEE SHEETS 21 / 1214 THRU 88 / 1214

McCOY ASSOCIATES INC. 2A / 23
CONSULTING ENGINEERS
AKRON, OHIO

CONSTRUCTION PHASING

BRIDGE NO. SUM 76-1332
AKRON EAST EXPRESSWAY
OVER SEIBERLING STREET

DESIGNED	DRAWN	TRACED	CHECKED	REVIEWED	DATE	REVISED
TEH	TEH	JWD	JBH	JBH	7-18-89	

FHWA REGION	STATE	PROJECT	
5	OHIO		

(1138 12/14)

SUMMIT COUNTY
SUM.76-11.57

STRUCTURAL GENERAL NOTES

REFERENCE
SHALL BE MADE TO STANDARD DRAWINGS:

AS-1-81	DATED	11-27-81
EXJ-2-81	REVISED	04-02-84
RB-1-55	REVISED	02-02-59
SD-1-69	DATED	06-12-69

AND TO SUPPLEMENTAL SPECIFICATIONS:

836	DATED	11-12-85
849	DATED	12-24-85
949	DATED	08-26-86

DESIGN SPECIFICATIONS: THIS STRUCTURE CONFORMS TO THE "STANDARD SPECIFICATIONS FOR HIGHWAY BRIDGES" ADOPTED BY THE AMERICAN ASSOCIATION OF STATE HIGHWAY AND TRANSPORTATION OFFICIALS, 1983 ALONG WITH THE 1984, 1985, AND 1986 INTERIMS AND THE OHIO "SUPPLEMENT" TO THESE SPECIFICATIONS.

DESIGN DATA:

DESIGN LOADING	-	HS 20-44 (CASE I) AND ALTERNATE MILITARY LOADING
CONCRETE CLASS S	-	COMPRESSIVE STRENGTH 4500 PSI
CONCRETE CLASS C	-	COMPRESSIVE STRENGTH 4000 PSI
REINFORCING STEEL	-	ASTM A615, A616, OR A617 - GRADE 60, MINIMUM YIELD STRENGTH 60,000 PSI
STRUCTURAL STEEL EXISTING	-	ASTM A7, UNIT STRESS 18,000 PSI
STRUCTURAL STEEL PROPOSED	-	ASTM A36, UNIT STRESS 20,000 PSI

DECK PROTECTION METHOD:

EPOXY COATED REINFORCING STEEL, BOTH MATS.

CONCRETE PROTECTION: PARAPETS

MONOLITHIC WEARING SURFACE: IS ASSUMED, FOR DESIGN PURPOSES, TO BE 1" THICK.

EXISTING STRUCTURE VERIFICATION: DETAILS AND DIMENSIONS SHOWN ON THESE PLANS PERTAINING TO THE EXISTING STRUCTURE HAVE BEEN OBTAINED FROM PLANS OF THE EXISTING STRUCTURE AND/OR FROM FIELD OBSERVATIONS AND MEASUREMENTS. CONSEQUENTLY, THEY ARE INDICATIVE OF THE EXISTING STRUCTURE AND THE PROPOSED WORK BUT THEY SHALL BE CONSIDERED TENTATIVE AND APPROXIMATE. THE CONTRACTOR IS REFERRED TO CMS SECTIONS 102.05, 105.02, AND 513.02. PLANS OF THE EXISTING STRUCTURE ARE AVAILABLE FOR REVIEW AT THE OHIO DEPARTMENT OF TRANSPORTATION, DISTRICT FOUR OFFICES, 705 OAKWOOD STREET, RAVENNA, OHIO 44266.

CONTRACT BID PRICES SHALL BE BASED UPON A RECOGNITION OF THE UNCERTAINTIES DESCRIBED ABOVE AND UPON A PREBID EXAMINATION OF THE EXISTING STRUCTURE BY THE CONTRACTOR. HOWEVER, ALL PROJECT WORK SHALL BE BASED UPON ACTUAL DETAILS AND DIMENSIONS WHICH HAVE BEEN VERIFIED BY THE CONTRACTOR IN THE FIELD.

REPLACEMENT OF EXISTING REINFORCING STEEL: ANY EXISTING REINFORCING BARS WHICH ARE TO BE INCORPORATED INTO THE NEW WORK AND WHICH ARE MADE UNUSABLE BY THE CONTRACTOR'S CONCRETE REMOVAL OPERATIONS SHALL BE REPLACED WITH NEW STEEL AT HIS COST. ANY EXISTING REINFORCING BARS DEEMED BY THE ENGINEER TO BE UNUSABLE BECAUSE OF CORROSION SHALL BE REPLACED WITH NEW STEEL. AN ALLOWANCE OF 1000 POUNDS IS INCLUDED IN ITEM 509, REINFORCING STEEL, GRADE 60 AND 1000 POUNDS ITEM 509, EPOXY COATED REINFORCING STEEL, GRADE 60 FOR THIS PURPOSE.

ITEM 202 - PORTIONS OF STRUCTURES REMOVED
REMOVAL OF PORTIONS OF EXISTING STRUCTURE AS SHOWN ON THE CONTRACT DRAWINGS SHALL CONFORM IN ALL RESPECTS TO ITEM 202 OF THE STATE OF OHIO DEPARTMENT OF TRANSPORTATION CONSTRUCTION AND MATERIALS SPECIFICATIONS.

THE CONTRACTOR SHALL PREPARE DETAILED PROCEDURES AND PLANS FOR REMOVAL OF PORTIONS OF THE EXISTING STRUCTURE INCLUDING METHODS OF PROTECTING EXISTING OR RELOCATED UTILITIES AND PROTECTING THE PEDESTRIAN AND THE VEHICULAR TRAFFIC WITHIN THE LIMITS OF THE PROJECT. SUCH PLANS SHALL INCLUDE INFORMATION AS TO EQUIPMENT AND MATERIALS TO BE USED, PERSONNEL, SUPERVISION, THE HOURS OF OPERATION AND DURATION OF THE JOB.

THE REQUIRED ITEMS TO BE REMOVED UNDER THIS ITEM SHALL INCLUDE BUT NOT BE LIMITED TO THE FOLLOWING:

ASPHALT WEARING SURFACE, CONCRETE SUPERSTRUCTURE, ABUTMENT BACKWALLS, CROSSFRAMES, EXPANSION JOINTS AND WINGWALLS TO THE LIMITS SHOWN ON THE DRAWINGS. CARE SHALL BE TAKEN DURING REMOVAL OF CROSS-FRAMES TO PREVENT DAMAGE TO THE BEAMS.

THESE PLANS SHALL BE APPROVED BY THE ENGINEER BEFORE COMMENCING ANY DEMOLITION OPERATION. THE REVIEW AND APPROVAL BY THE ENGINEER SHALL NOT RELIEVE THE CONTRACTOR OF HIS FULL RESPONSIBILITY FOR SAFE DEMOLITION OPERATIONS. THE CONTRACTOR SHALL BE AND SHALL REMAIN RESPONSIBLE FOR A SAFE DEMOLITION OPERATION.

PILE DESIGN LOADS
THE DESIGN LOAD FOR THE ABUTMENT PILES IS 44 TONS PER PILE.

MAINTENANCE OF TRAFFIC
REFER TO SHEETS NUMBERED 21 THRU 88 OF THE MAINTENANCE OF TRAFFIC PLANS.

UTILITY LINES
ALL EXPENSE INVOLVED IN RELOCATING THE AFFECTED UTILITY LINES SHALL BE BORNE BY THE OWNER. THE CONTRACTOR AND OWNERS ARE REQUESTED TO COOPERATE BY ARRANGING THEIR WORK IN SUCH A MANNER THAT INCONVENIENCE TO EITHER WILL BE HELD TO A MINIMUM.

CUTTING OR BENDING OF REINFORCING BARS ANY CUTTING OR BENDING OF REINFORCING BARS NECESSARY TO ACCOMMODATE THE UTILITY OPENINGS OR ANY OTHER ESSENTIAL ELEMENT OF WORK RELATED TO THE PROJECT, SHALL BE INCLUDED IN THE PRICE BID PER POUND FOR "ITEM 509 - REINFORCING STEEL-GRADE 60," AND/OR "ITEM 509 - EPOXY COATED REINFORCING STEEL, GRADE 60," UNLESS OTHERWISE NOTED.

ITEM SPECIAL - SEALING OF CONCRETE SURFACES: SPECIFIED CONCRETE SURFACES SHALL BE SEALED USING MATERIALS SPECIFIED IN THE PROPOSAL. SEE SHEET NO. 3/23 FOR DETAIL OF AREAS TO BE SEALED AND SEALER TYPE TO BE USED. SEE THE PROPOSAL FOR SURFACE PREPARATION REQUIREMENTS, APPLICATION, RATES, MATERIAL REQUIREMENTS, APPLICATION PROCEDURES AND MEASUREMENT AND PAYMENT. THE COLOR SPECIFICATION OF THE EPOXY SEALER SHALL BE IN ACCORDANCE WITH THE FEDERAL STANDARD 595A AND THE COLOR OF THE EPOXY SEALER SHALL BE NO. 13522.

ITEM 202 - REMOVAL FOR REUSE OF EXISTING STEEL BEAMS AND BEARINGS
AFTER THE EXISTING CONCRETE DECK AND THE BEAM CROSS-FRAMES HAVE BEEN REMOVED, THE CONTRACTOR SHALL REMOVE THE EXISTING BEAMS AND BEARINGS.

THE BEAMS SHALL BE STORED FOR RE-USE. THE STORAGE SITE FOR THE REMOVED BEAMS SHALL BE APPROVED BY THE ENGINEER BEFORE THE BEAMS ARE REMOVED.

SOLE PLATES SHALL BE REMOVED WHERE REQUIRED, THE CONTRACTOR SHALL EXERCISE CAUTION TO PREVENT DAMAGE TO THE BEAM AND SOLE PLATE. AFTER REMOVAL OF SOLE PLATES AND CROSS-FRAMES, THE BEAMS SHALL BE GROUND SMOOTH PRIOR TO ATTACHING NEW CROSS-FRAMES AND/OR REUSED SOLE PLATES.

PAYMENT WILL BE MADE AT THE CONTRACT LUMP SUM PRICE BID FOR "ITEM 202 - REMOVAL FOR REUSE OF EXISTING STEEL BEAMS AND BEARINGS" AND SHALL INCLUDE ALL LABOR, MATERIAL, EQUIPMENT AND INCIDENTALS NECESSARY TO COMPLETE THE WORK AS DESCRIBED HEREIN.

ITEM 513 - ERECTION OF EXISTING STRUCTURAL STEEL

WORK SHALL INCLUDE:
PLACING OR EXTENDING ANCHOR BOLTS AT FIXED BEARINGS, PLACING EXISTING BEARINGS ON NEW ABUTMENTS PEDESTALS, AND ERECTING THE EXISTING BEAMS.

PAYMENT SHALL BE MADE AT THE LUMP SUM PRICE BID AND SHALL INCLUDE ALL LABOR, MATERIAL, EQUIPMENT AND INCIDENTALS REQUIRED TO COMPLETE THE WORK DESCRIBED HEREIN.

ITEM 510 - DOWEL HOLES

THIS ITEM SHALL BE PERFORMED AS INDICATED ON THE PLANS OR AS DIRECTED BY THE ENGINEER AND SHALL BE USED TO REPLACE THE DETERIORATED BARS WHICH WERE TO REMAIN, OR PLACING NEW DOWEL BARS WHERE A NEW CONCRETE SECTION IS BEING ATTACHED TO THE REMAINING PORTIONS OF EXISTING CONCRETE. AN ALLOWANCE OF 100 DOWEL HOLES IS INCLUDED IN THE ESTIMATED QUANTITY OF ITEM 510 IN REPLACING DETERIORATED BARS.

THE DOWEL BARS ARE TO BE PAID FOR UNDER "ITEM 509 - REINFORCING STEEL, GRADE 60" AND THE DOWEL HOLES ARE TO BE PAID FOR UNDER "ITEM 510 - DOWEL HOLES".

ITEM 507 - 12" DIAMETER CAST-IN-PLACE REINFORCED CONCRETE PILES AS PER PLAN

PILE WALL THICKNESS

THE RESPONSIBILITY OF CHOOSING AND PROVIDING A SATISFACTORY PILE WALL THICKNESS FOR THIS PROJECT SHALL BE BORNE BY THE CONTRACTOR EXCEPT THAT THE PILE WALL THICKNESS SHALL NOT BE LESS THAN 0.220 INCHES. IF A PILE WALL THICKNESS GREATER THAN 0.220 INCHES IS NECESSARY TO RESIST THE PILE INSTALLATION DRIVING STRESS, THE CONTRACTOR SHALL MAKE THIS DETERMINATION AND SHALL FURNISH A PILE WITH AN ACCEPTABLE WALL THICKNESS. MONOTUBE PILES ARE NOT REQUIRED TO COMPLY WITH THE ABOVE SPECIFIED MINIMUM PILE WALL THICKNESS. IF MONOTUBE PILES ARE USED, THE CONTRACTOR IS RESPONSIBLE FOR PROVIDING A MONOTUBE PILE WITH A WALL THICKNESS THAT WILL CONFORM TO ALL APPLICABLE REQUIREMENTS OF 507. THE CONTRACTOR MAY FURNISH A PILE WITH A WALL THICKNESS OF LESS THAN 0.220 INCHES (SUCH AS A MANDREL DRIVEN PILE) PROVIDED THAT REINFORCING STEEL IS FURNISHED FOR THE TOP PORTION OF EACH PILE AS FOLLOWS: THE REINFORCING STEEL SHALL BE 30 FEET IN LENGTH AND SHALL CONSIST OF A CAGE CONSTRUCTED WITH FOUR NUMBER SIX BARS TIED WITH A NUMBER TWO SPIRAL HAVING A SIX INCH PITCH AND THREE CLOSURE TURNS AT EACH END OF THE CAGE, THE CLEARANCE SHALL BE TWO INCHES.

McCOY ASSOCIATES, INC.
CONSULTING ENGINEERS
AKRON, OHIO

28/23

STRUCTURAL GENERAL NOTES

BRIDGE NO. SUM. 76-1332
AKRON EAST EXPRESSWAY
OVER SEIBERLING STREET

DESIGNED	DRAWN	TRACED	CHECKED	REVIEWED	DATE	REVISED
JBH	PNA		M.A.M.	JBH	10-12-89	

050891

FHWA REGION	STATE	PROJECT	
5	OHIO		

1139
12/14

SUMMIT COUNTY
SUM.76-11.57

STRUCTURAL GENERAL NOTES

PILE HAMMER

THE PILE HAMMER USED TO INSTALL THE CAST-IN-PLACE REINFORCED CONCRETE PILES SHALL HAVE A STATE'S ENERGY RATING OF NOT LESS THAN 18,000 FOOT-POUNDS. THIS REQUIREMENT DOES NOT RELIEVE THE CONTRACTOR FROM 108.05 WHICH STATES THAT THE CONTRACTOR IS TO PROVIDE SUFFICIENT EQUIPMENT FOR PROSECUTING THE REQUIRED WORK. REFER TO "ODOT'S MANUAL OF PROCEDURES FOR STRUCTURES" TO OBTAIN THE STATE'S ENERGY RATING.

ITEM 518 POROUS BACKFILL, with filter fabric

TO ENSURE THAT ANY FINE SOIL PARTICLES INCLUDED WITHIN THE EMBANKMENT DO NOT MIGRATE INTO AND THROUGH THE VOIDS OF THE POROUS BACKFILL MATERIAL, FILTER FABRIC, 712.09 TYPE A, SHALL BE PLACED BETWEEN THE 518 POROUS BACKFILL MATERIAL AND THE 203 EMBANKMENT MATERIAL TO THE LIMITS AS SHOWN IN THE PLANS. PAYMENT FOR THE FILTER FABRIC SHALL BE INCLUDED IN THE UNIT PRICE BID PER CUBIC YARD FOR THE ITEM 518 POROUS BACKFILL w/filter fabric WHICH SHALL INCLUDE ALL LABOR, MATERIALS, EQUIPMENT AND INCIDENTALS NECESSARY TO COMPLETE THE ABOVE WORK.

ABUTMENT WALL TEXTURE

ABUTMENTS AND WINGWALLS SHALL BE TEXTURED BY USING FORM LINERS ATTACHED TO FORMWORK PRIOR TO PLACING CONCRETE. AREAS TO RECEIVE TEXTURED CONCRETE SURFACE SHALL INCLUDE THE FULL LENGTH OF EXPOSED ABUTMENT BREAST WALLS AND WINGWALLS FROM FINISHED GRADE OR PAVEMENT TO THE TOP OF THE WALL.

TEXTURED SURFACE SHALL CONSIST OF A 3/4" DEEP FRACTURED FIN TEXTURE. ACCEPTABLE PRODUCTS INCLUDE:

SYMONS CORPORATION
7603 OLD ROCKSIDE RD.
INDEPENDENCE, OH 44131
(216) 524-5240
PATTERN NO. P/C 30449

GREENSTREAK
3400 TREE COURT IND. BLVD.
ST. LOUIS, MO 63122
(800) 325-9504
PATTERN NO. 373

FITZGERALD CONSTRUCTION SALES
17376-A NEWHOPE AVENUE
FOUNTAIN VALLEY, CA 92708
(800) 227-2755
PATTERN NO. 16950

OR AN APPROVED ALTERNATE. THE CONTRACTOR SHALL SUBMIT A SAMPLE OF THE FINISHED CONCRETE TEXTURED SURFACE FOR APPROVAL.

PAYMENT FOR ALL MATERIALS AND LABOR REQUIRED FOR THE TEXTURED SURFACES SHALL BE INCLUDED WITH ITEM 511 - CLASS C CONCRETE, ABUTMENT WALL.

ITEM 516 - STRUCTURAL EXPANSION JOINTS INCLUDING ELASTOMERIC COMPRESSION SEALS

STEEL SHALL BE PAINTED AS SPECIFIED FOR ITEM SPECIAL - FIELD PAINTING OF NEW STEEL, SYSTEM OZEU WITH THE EXCEPTION THAT THE PRIME COAT SHALL BE FIELD APPLIED.

ITEM SPECIAL - FIELD PAINTING OF EXISTING STEEL, SYSTEM OZEU

ALL OF THE REQUIREMENTS CONTAINED IN THE "FIELD PAINTING OF EXISTING STEEL, SYSTEM OZEU" PROPOSAL NOTE SHALL APPLY.

THE COLOR OF URETHANE FINISH COAT SHALL BE "DARK BROWN" FEDERAL SPECIFICATION NUMBER 595A 10080. THE COLOR OF EPOXY INTERMEDIATE COAT SHALL BE "TAN" FEDERAL SPECIFICATIONS NUMBER 595A10219. AN ACTUAL SAMPLE OF THE PAINT PROPOSED FOR USE SHALL BE SUBMITTED BY THE CONTRACTOR FOR APPROVAL.

ITEM SPECIAL - PAINTING OF NEW STEEL, SYSTEM IZEU

ALL OF THE REQUIREMENTS CONTAINED IN THE "PAINTING OF NEW STEEL, SYSTEM IZEU" PROPOSAL NOTE SHALL APPLY.

THE COLOR OF URETHANE FINISH COAT SHALL BE "DARK BROWN" FEDERAL SPECIFICATION NUMBER 595A 10080. THE COLOR OF EPOXY INTERMEDIATE COAT SHALL BE "TAN" FEDERAL SPECIFICATION NUMBER 595A10219. AN ACTUAL SAMPLE OF THE PAINT PROPOSED FOR USE SHALL BE SUBMITTED BY THE CONTRACTOR FOR APPROVAL.

ITEM 516 - BEARING DEVICE, MISC.

WHEN EXISTING BEARINGS DESIGNATED FOR REUSE ARE DETERMINED TO BE UNSALVAGEABLE BY THE ENGINEER, THEY SHALL BE REPLACED BY NEW BEARINGS AS FOLLOWS WHEN DIRECTED BY THE ENGINEER:

WEST ABUTMENT USE NEW B-75 OR B-100 BEARINGS
EAST ABUTMENT USE NEW R-75 OR R-100 BEARINGS

SEE SHEET 17/23 FOR FRAMING PLAN & DETAILS.

PAYMENT FOR ALL MATERIALS AND LABOR TO FURNISH AND INSTALL THE NEW BEARINGS SHALL BE INCLUDED IN ITEM 516- BEARING DEVICE, MISC. AN ESTIMATED QUANTITY OF 20 EACH HAS BEEN INCLUDED IN THE ESTIMATED QUANTITIES FOR THIS PURPOSE.

ITEM 516, REFURBISH BEARING DEVICES, AS PER PLAN

THIS ITEM INCLUDES THE RESETTING OF EXISTING STEEL BEARINGS THAT HAVE BEEN DESIGNATED FOR REUSE AND RELOCATION ON SHEET 17/23. THIS ITEM SHALL ALSO INCLUDE THE COST OF REMOVAL AND REPLACING CONCRETE REMOVED TO OBTAIN SUFFICIENT CROSS-SECTIONAL AREA OF THE EXISTING ANCHOR BOLT TO WELD PROPERLY, SEE EXISTING ANCHOR BOLT DETAIL ON SHEET 8/23.

ITEM 614 - MAINTAINING TRAFFIC

THE ELASTOMERIC STRIP SEALS AT THE ABUTMENTS SHALL BE INSTALLED IN ONE CONTINUOUS PIECE FOR EASTBOUND LANES AND ONE CONTINUOUS PIECE FOR WESTBOUND LANES. PRIOR TO OPENING PHASE 2 CONSTRUCTION TO TRAFFIC, THE CONTRACTOR SHALL INSTALL TEMPORARY SEALS IN THE PORTION TO BE OPENED TO TRAFFIC.

AT THE CONCLUSION OF PHASE 4 CONSTRUCTION AND PLACEMENT OF THE CLOSURE SECTION, THE TEMPORARY SEAL SHALL BE REMOVED AND FULL WIDTH SEALS SHALL BE INSTALLED. THE CONTRACTOR SHALL BE PERMITTED TO SET-UP THE NECESSARY LANE CLOSURES ON A DAY AND AT A TIME APPROVED BY THE ENGINEER TO FACILITATE INSTALLATION OF THE FULL WIDTH SEALS. ALL NECESSARY TRAFFIC CONTROL TO ACCOMPLISH THIS WORK AND COSTS OF THE TEMPORARY SEAL INCLUDING INSTALLATION, REMOVAL AND DISPOSAL SHALL BE INCIDENTAL TO ITEM 614, MAINTAINING TRAFFIC.

ITEM 511 - CLASS C CONCRETE, ABUTMENTS, AS PER PLAN

ALL LOOSE AND DISINTEGRATED OR UNSOUND CONCRETE SHALL BE REMOVED TO A MINIMUM DEPTH OF 4 INCHES (3 INCHES ON TOP HORIZONTAL SURFACES) FROM AREAS TO BE REPAIRED AS SPECIFIED UNDER CMS ITEM 519.03. THE AREAS TO BE PATCHED SHALL BE PREPARED AND WELDED STEEL WIRE FABRIC AND HOOK BOLTS WITH EXPANSION ANCHORS SHALL BE INSTALLED AS SPECIFIED UNDER CMS ITEMS 519.02, 519.04 AND 519.05. CLASS "C" CONCRETE SHALL THEN BE PLACED, INCLUDING AREAS TO BE PATCHED AND AN ADDITIONAL 4 INCHES OF NEW CONCRETE OVER THE ENTIRE FACE OF THE ABUTMENTS. REMOVAL OF EXISTING CONCRETE, PREPARATION OF SURFACES TO BE PATCHED, INSTALLATION OF WELDED STEEL WIRE FABRIC AND HOOK BOLTS WITH EXPANSION ANCHORS AND PLACEMENT OF NEW CLASS "C" CONCRETE SHALL BE PAID UNDER THIS ITEM.

THE QUANTITY SHALL BE THE TOTAL AREA IN SQUARE FEET OF ALL ABUTMENT SURFACES RECEIVING NEW CLASS C CONCRETE REGARDLESS OF THICKNESS.

ALL INSPECTION TOOLS, EQUIPMENT, MATERIALS AND INCIDENTALS NECESSARY FOR THE ENGINEER TO SOUND 100% OF THE CONCRETE ABUTMENTS, WINGWALLS AND BEAM SEATS SHALL BE SUPPLIED BY THE CONTRACTOR AT THE REQUEST OF THE ENGINEER. PAYMENT SHALL BE INCIDENTAL TO ITEM 511 CLASS "C" CONCRETE, ABUTMENTS, AS PER PLAN.

ITEM 519, Patching Concrete Structure, As Per Plan

AT THE LOCATIONS WHERE LOOSE, DISINTEGRATED OR UN-SOUND CONCRETE EXTENDS BEYOND THE LIMITS NOTED IN ITEM 511 - CLASS C CONCRETE, ABUTMENTS (AS PER PLAN) THE CONTRACTOR SHALL REMOVE THE CONCRETE TO EXPOSE A SOUND CONCRETE SURFACE, PREPARE THE SURFACE AND PLACE NEW CLASS "C" CONCRETE. ALL OF THESE ITEMS OF WORK AND REPAIR SHALL BE AS DESCRIBED IN THE NOTE TITLED ITEM 511 - CLASS "C" CONCRETE, ABUTMENTS (AS PER PLAN). PAYMENT FOR THIS WORK SHALL BE MEASURED ON A SQUARE FOOT BASIS AND SHALL INCLUDE ONLY THOSE AREAS WHERE THE DEPTH OF PATCHING EXCEEDS THE LIMITS NOTED IN ITEM 511 - CLASS "C" CONCRETE, ABUTMENTS (AS PER PLAN) THE PAYMENT SHALL INCLUDE ALL NECESSARY LABOR, EQUIPMENT, MATERIALS AND INCIDENTALS NECESSARY TO PERFORM THE REQUIRED WORK. SINCE ALL QUANTITIES OF PATCHING SHOWN ON THE PLANS ARE ONLY ESTIMATES, ACTUAL PATCHING QUANTITIES WILL BE DETERMINED THROUGH FIELD INSPECTION AND SOUNDING.

THE CONTRACTOR IS RESPONSIBLE FOR COORDINATING STRUCTURE PATCHING OF THE ABUTMENT SEATS WITH THE JACKING AND REFURBISHING/REPLACEMENT OF BOLSTERS, ROCKERS AND BEARING DEVICES AND THE PATCHING REQUIRED UNDER THE BEARING DEVICES.

McCOY ASSOCIATES INC.
CONSULTING ENGINEERS
AKRON, OHIO

20/23

STRUCTURAL GENERAL NOTES

BRIDGE NO. SUM. 76-1332
AKRON EAST EXPRESSWAY
OVER SEIBERLING STREET

DESIGNED	DRAWN	TRACED	CHECKED	REVIEWED	DATE	REVISED
JBH	PNA		M.A.M.	JBH	10-12-89	

ESTIMATED QUANTITIES

ITEM	TOTAL	UNIT	DESCRIPTION	SUPER.	ABUT'S	W.WALL	GENERAL	ITEM EXT.
202	LUMP		PORTIONS OF STRUCTURES REMOVED				L.S.	11200
202	LUMP		REMOVAL FOR RE-USE OF EXISTING STEEL BEAMS AND BEARINGS	L.S.				98000
503	864	C.Y.	UNCLASSIFIED EXCAVATION		864			21100
503	LUMP		COFFERDAMS, CRIBS AND SHEETING				L.S.	11100
505	LUMP		PILE DRIVING EQUIPMENT MOBILIZATION				L.S.	11100
507	4940	L.F.	12"ø CAST-IN-PLACE REINFORCED CONCRETE PILES, AS PER PLAN		4940			22201
509	52,743	LB.	REINFORCING STEEL, GRADE 60		51,743		1000	13400
509	69,311	LB.	EPOXY COATED REINFORCING STEEL, GRADE 60	53,323	14,988		1000	15800
510	244	EA.	DOWEL HOLES		144		100	11100
511	235	C.Y.	CLASS C CONCRETE, FOOTINGS		235			46500
511	90	C.Y.	CLASS C CONCRETE, ABUTMENTS, AS PER PLAN		90			45501
511	374	C.Y.	CLASS C CONCRETE, ABUTMENTS		374			45700
511	1	CY	CLASS C CONCRETE ABUTMENT KEY JOINTS, AS PER PLAN		1			71100
511	250	C.Y.	CLASS S CONCRETE, SUPERSTRUCTURE, AS PER PLAN	250				31503
512	16	S.Y.	TYPE B WATERPROOFING		16			44400
513	102,100	LB.	STRUCTURAL STEEL (AISC CATEGORY I), AS PER PLAN	102,100				11101
513	6	E.A.	TRIMMING OF BEAM ENDS	6				21000
513	LUMP		ERECTION OF EXISTING STRUCTURAL STEEL	L.S.				16600
516	293	L.F.	STRUCTURAL EXPANSION JOINTS INCLUDING	293				10500
			ELASTOMERIC COMPRESSION SEALS					
516	26	S.F.	1" PREFORMED EXPANSION JOINT FILLER		26			13600
516	20	EA.	BEARING DEVICE, MISC.	20				46300
516	44	Ea.	Refurbish Bearing Device, As Per Plan	44				45305
518	258	C.Y.	POROUS BACKFILL WITH FILTER FABRIC		258			21200
518	124	L.F.	8" PERFORATED C.S.P., 707.01		124			42200
518	28	L.F.	8" NON-PERFORATED C.S.P. INCLUDING SPECIALS, 707.01		28			42300
511	250	C.Y.	Class S concrete, Superstructure, using shrinkage	250				33404
			compensating cement (See proposal note) ✠					
511	Lump		Class S concrete, using shrinkage compensating cement					33410
			for pre-placement testing (See proposal note) ✠					
SPECIAL	1,149	S.Y.	SEALING OF CONCRETE SURFACES (EPOXY) (SEE PROPOSAL NOTE) ▲	261	888			51267502
SPECIAL	102,100	L.B.	PAINTING OF NEW STEEL, SYSTEM IZEU*▲	102,100				5140061O
SPECIAL	8300	S.F.	Surface Preparation EXISTING STEEL,	8300				5140050
			SYSTEM OZEU*▲					
SPECIAL	8300	S.F.	FIELD PAINTING OF EXISTING STEEL, PRIME COAT,	8300				5140056
			SYSTEM OZEU*▲					
SPECIAL	8300	S.F.	FIELD PAINTING OF EXISTING STEEL, INTERMEDIATE	8300				5140060
			COAT, SYSTEM OZEU*▲					
SPECIAL	8300	S.F.	FIELD PAINTING OF EXISTING STEEL, FINISH COAT,	8300				5140066
			SYSTEM OZEU*▲					
519	680	S.F.	PATCHING Concrete Structure		680			11100

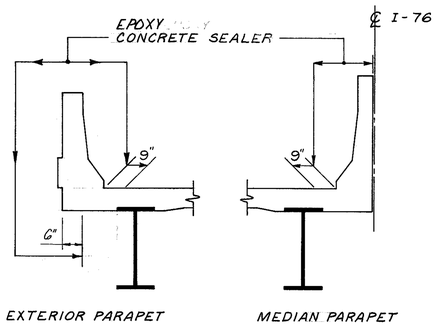

SUPERSTRUCTURE

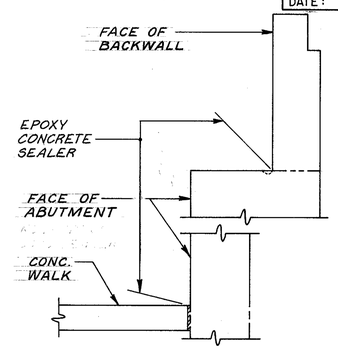

SECTION THRU EXIST. AND PROPOSED ABUTMENTS

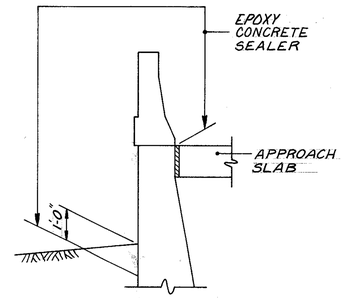

SECTION THRU ENDWALLS

LIMITS OF CONCRETE SEALER

THE CONCRETE SEALER SHALL BE APPLIED AS DESCRIBED IN THE PROPOSAL NOTE UNDER "SEALING OF CONCRETE SURFACES."

✠ SEE PROPOSAL NOTE

▲ SEE GENERAL NOTES FOR ADDITIONAL DETAILS

ITEM 511 - Class S concrete, superstructure, as per plan - Curing shall be by method (a) water curing

✠ These two items shall constitute one alternate bid to class S concrete, Super structure, as per plan

NOTES

(1) FOR STRUCTURAL NOTES SEE SHT. 28/23 AND 20/23

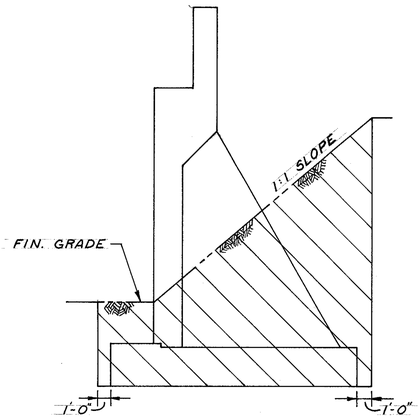

SECTION THRU ABUTMENT

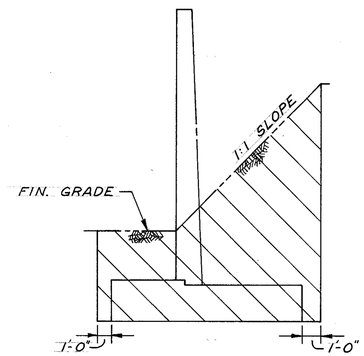

SECTION THRU ENDWALL

LIMITS OF UNCLASSIFIED EXCAVATION

SEE SHT NO.S 4/23 & 5/23 FOR LIMITS OF UNCLASSIFIED EXCAVATION FOR EXISTING ABUTMENTS

QUANTITIES	
CALC. BY: TAB	DATE: 3/88
CHKD. BY: JMH	DATE: 3/88

FHWA REGION	STATE	PROJECT	
5	OHIO		

1140
1214

SUMMIT COUNTY
SUM 76-11.57

McCOY ASSOCIATES INC. 3/23
CONSULTING ENGINEERS
AKRON, OHIO

ESTIMATED QUANTITIES

BRIDGE NO. SUM 76-1332
AKRON EAST EXPRESSWAY
OVER SEIBERLING STREET

DESIGNED	DRAWN	TRACED	CHECKED	REVIEWED	DATE	REVISED
TAB	GT		JMH	MSC	3-29-88	

FHWA REGION	STATE	PROJECT	
5	OHIO		

(1141) (1214)

SUMMIT COUNTY
SUM 76-11.57

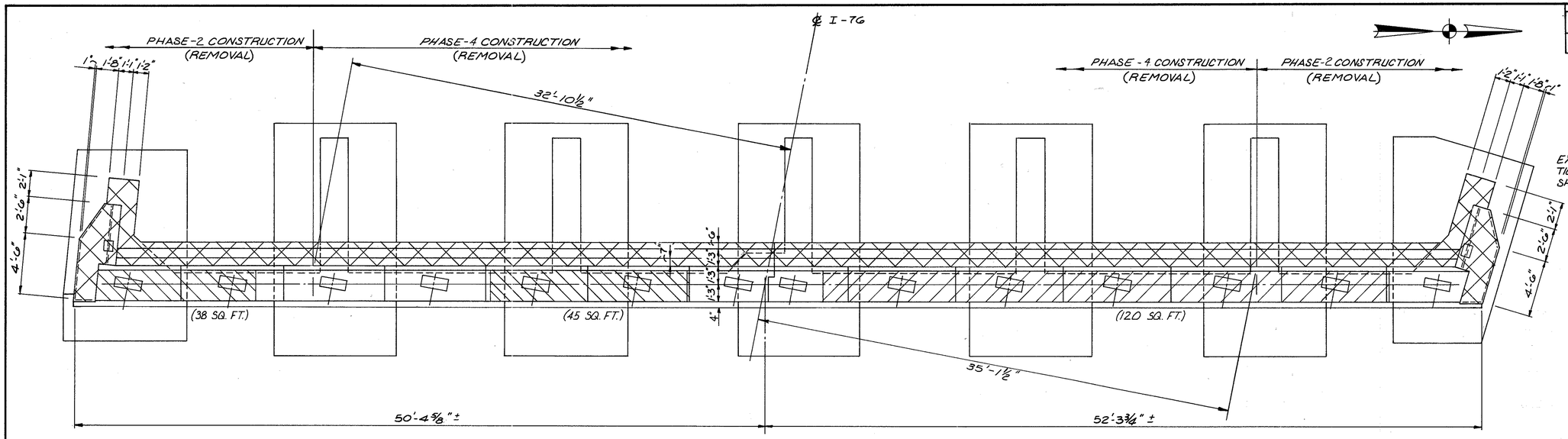

PLAN

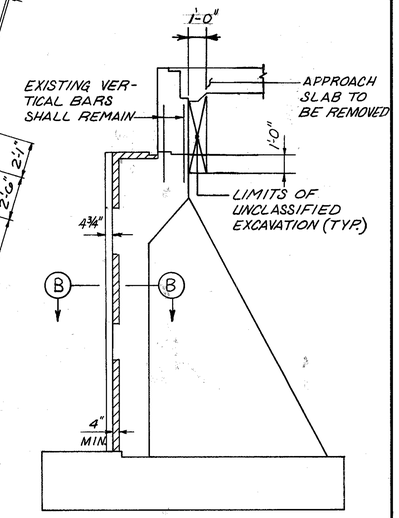

SECTION A-A

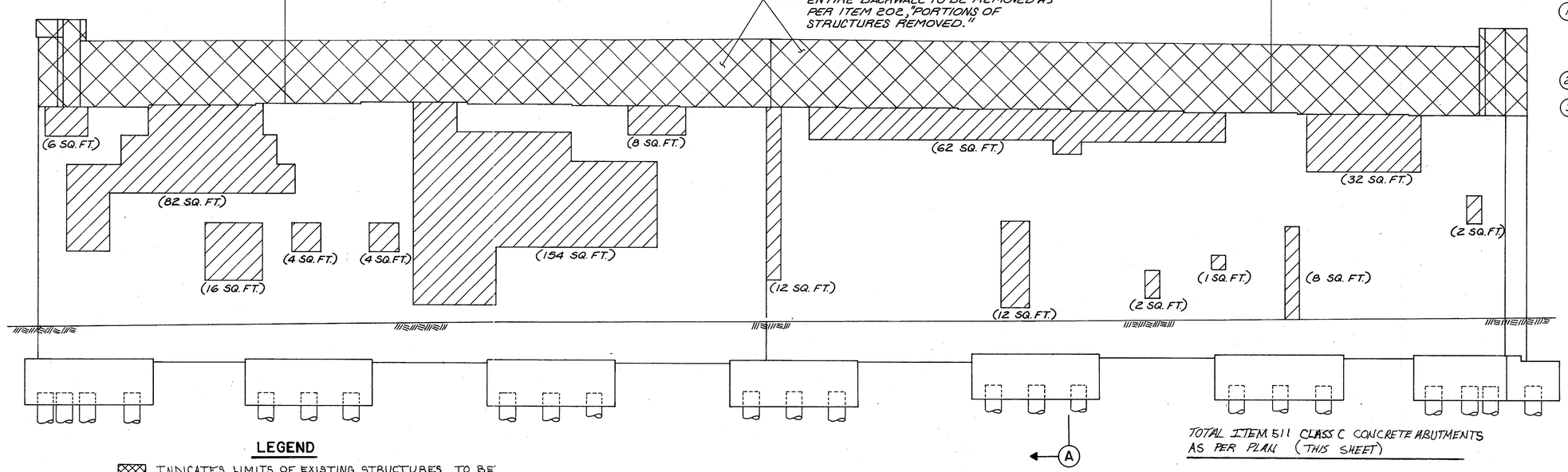

ELEVATION

LEGEND

- INDICATES LIMITS OF EXISTING STRUCTURES TO BE TOTALLY REMOVED, AS PER ITEM 202.
- INDICATES AREA REQUIRING REMOVAL OF UNSOUND CONCRETE AND PREPARATION PER CMS ITEM 519. WHEN DEPTH OF REPAIR EQUALS 4" (3" HORIZONTAL SURFACES). ALL WORK WILL BE INCLUDED IN ITEM 511, CLASS C CONCRETE, ABUTMENTS, AS PER PLAN FOR PAYMENT. WHEN DEPTH EXCEEDS 4" (3" HORIZONTAL SURFACES), PAYMENT SHALL BE MADE UNDER ITEM SPECIAL, STRUCTURE PATCHING. THE AREAS SHOWN ARE APPROXIMATE.

NEW CONCRETE OVER ABUTMENT = 1880 S.F.

ESTIMATED AREA OF REPAIR OF WEST ABUTMENT WALL = 405 SQ. FT.
ESTIMATED AREA OF REPAIR OF BEAM SEAT = 203 SQ. FT.
TOTAL = 608 SQ. FT.

ESTIMATED AREA TO BE PAID FOR UNDER ITEM 519 , STRUCTURE PATCHING = 300 SQ. FT. ⊕
⊕ INCLUDES ALL BEAM SEAT REPAIRS

TOTAL ITEM 511 CLASS C CONCRETE ABUTMENTS AS PER PLAN (THIS SHEET)

NOTES

1. SEE ITEM 511 CLASS C-CONCRETE, ABUTMENT, AS PER PLAN AND ITEM SPECIAL STRUCTURE PATCHING NOTES ON SHEET 2C / 23 FOR DESCRIPTION OF WORK.
2. FOR ADDITIONAL NOTES SEE SHEET 5 / 23
3. FOR SECTION B-B SEE SHEET 5 / 23

McCOY ASSOCIATES INC. 4 / 23
CONSULTING ENGINEERS
AKRON, OHIO

DEMOLITION AND REPAIRS WEST ABUTMENT

BRIDGE Nº. SUM. 76-1332
AKRON EAST EXPRESSWAY
OVER SEIBERLING STREET

DESIGNED	DRAWN	TRACED	CHECKED	REVIEWED	DATE	REVISED
TAB	DAK		JMH	MSC	3-29-88	

73775

FHWA REGION	STATE	PROJECT	
5	OHIO		

1142
12.14

SUMMIT COUNTY
SUM 76-11.57

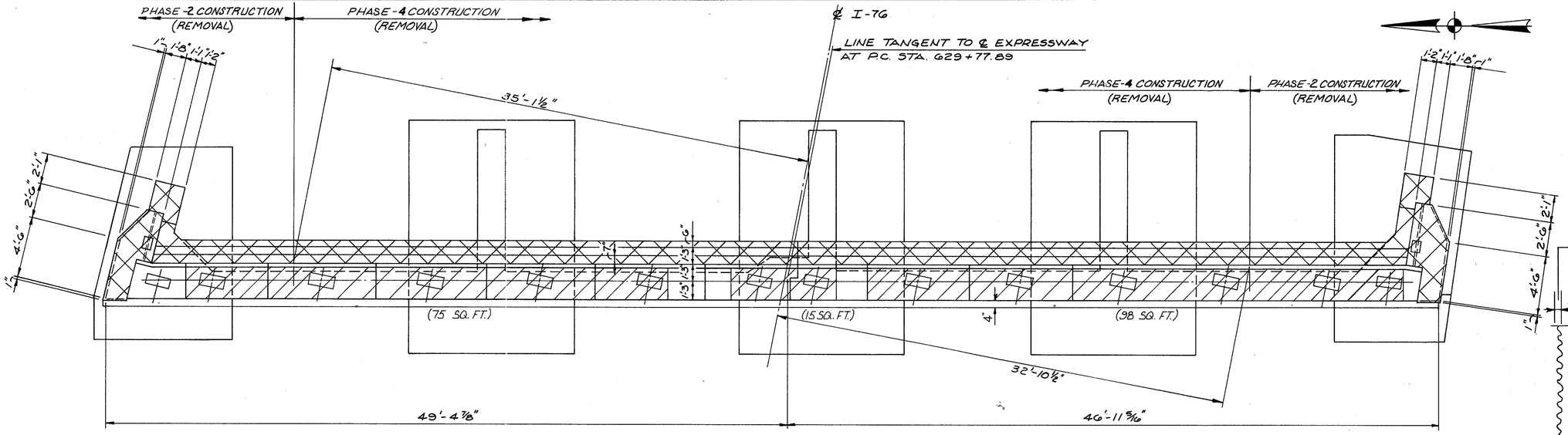

PLAN

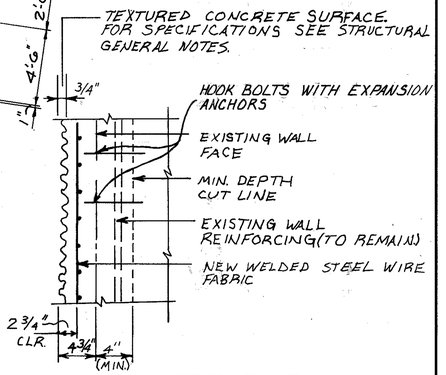

SECTION B-B

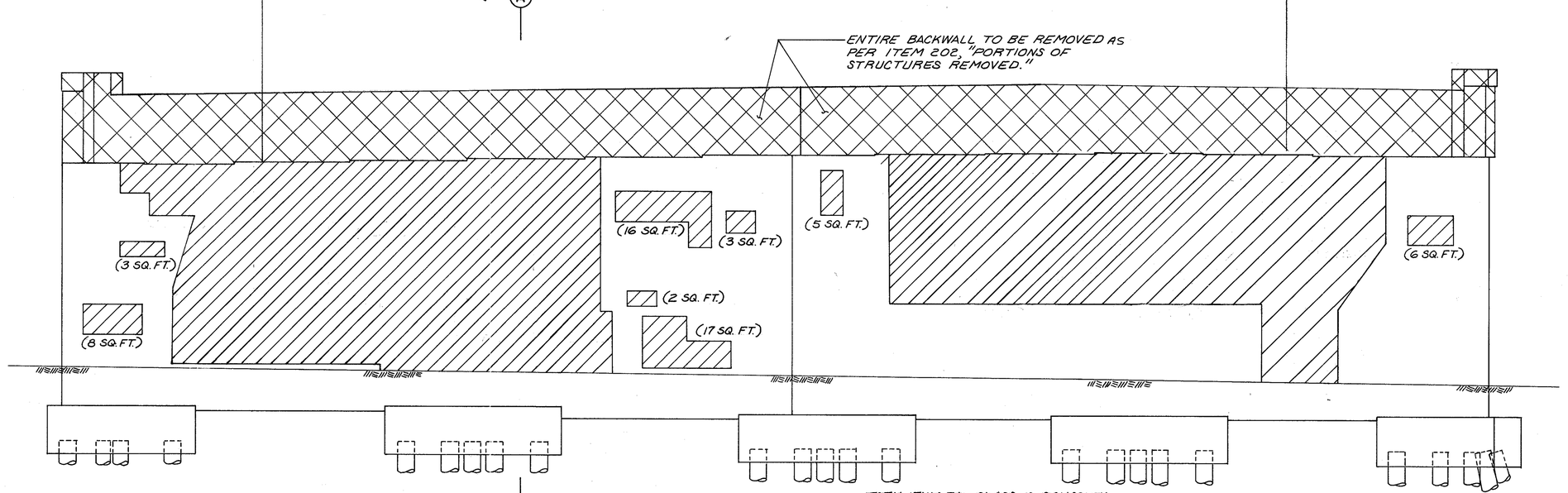

ELEVATION

ESTIMATED AREA OF REPAIR FOR EAST ABUTMENT WALL = 926 SQ. FT.
ESTIMATED AREA OF REPAIR FOR BEAM SEAT = 188 SQ. FT.
TOTAL = 1,114 SQ. FT.

ESTIMATED AREA TO BE PAID FOR UNDER ITEM 519 . STRUCTURE PATCHING = 380 SQ. FT. ⊕
⊕(INCLUDES ALL BEAM SEAT REPAIRS)

TOTAL ITEM 511-CLASS C CONCRETE ABUTMENT, AS PER PLAN (THIS SHEET)

NEW CONCRETE OVER ABUTMENT FACE = 1747 S.F.

LEGEND

- INDICATES LIMITS OF EXISTING STRUCTURES TO BE TOTALLY REMOVED, AS PER ITEM 202.
- INDICATES AREA REQUIRING REMOVAL OF UNSOUND CONCRETE AND PREPARATION PER CMS ITEM 519. WHEN DEPTH OF REPAIR EQUALS 4" (3" HORIZONTAL SURFACES) ALL WORK WILL BE INCLUDED IN ITEM 511, CLASS C CONCRETE, ABUTMENTS, AS PER PLAN FOR PAYMENT. WHEN DEPTH EXCEEDS 4" (3" HORIZONTAL SURFACE), PAYMENT SHALL BE MADE UNDER ITEM SPECIAL, STRUCTURE PATCHING. THE AREAS SHOWN ARE APPROXIMATE.

NOTES

1. CARE SHALL BE TAKEN IN REMOVING EXISTING CONCRETE TO AVOID DAMAGING EXISTING REINFORCING. WHERE EXISTING BARS ARE DETERIORATED OR DAMAGED, NEW DOWELS OF THE SAME SIZE AND 60 DIA. LONGER THAN THE SECTION BEING REPLACED SHALL BE PROVIDED. EMBED DOWELS 30 DIA., AS DIRECTED BY THE ENGINEER INTO EXISTING CONCRETE WITH NON-SHRINK GROUT. PAYMENT FOR REMOVAL OF EXISTING CONCRETE SHALL BE INCLUDED WITH ITEM 202-PORTIONS OF STRUCTURE REMOVED. PAYMENT FOR REPLACING DETERIORATED BARS SHALL BE INCLUDED WITH ITEM 509 EPOXY COATED REINFORCING STEEL AND ITEM 510-DOWEL HOLES.
2. FOR ADDITIONAL NOTES SEE SHT. 4/23
3. FOR SECTION A-A SEE SHEET 4/23

McCOY ASSOCIATES INC. 5/23
CONSULTING ENGINEERS
AKRON, OHIO

DEMOLITION AND REPAIRS EAST ABUTMENT

BRIDGE No. SUM. 76-1332
AKRON EAST EXPRESSWAY
OVER SEIBERLING STREET

DESIGNED	DRAWN	TRACED	CHECKED	REVIEWED	DATE	REVISED
TAB	DAK		JMH	MSC	3-29-88	

12276

FHWA REGION	STATE	PROJECT	
5	OHIO		

(1143/1214)

SUMMIT COUNTY
SUM 76-11.57

NOTES

(1) SEE SHEETS 4/23 & 5/23 FOR NOTES.

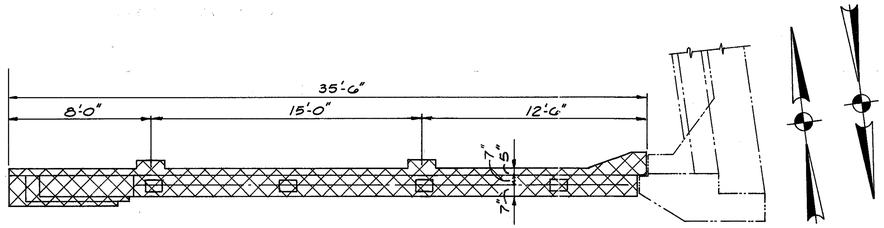

SOUTH PLAN

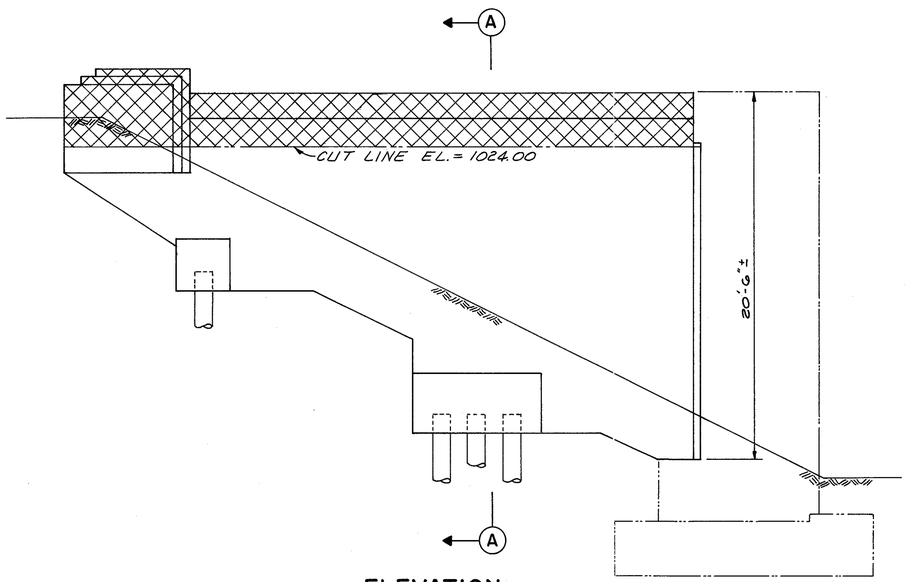

ELEVATION

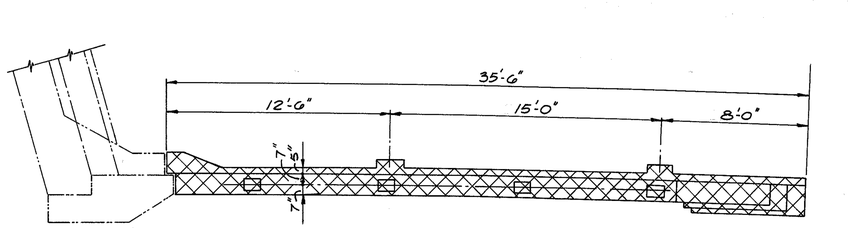

NORTH PLAN

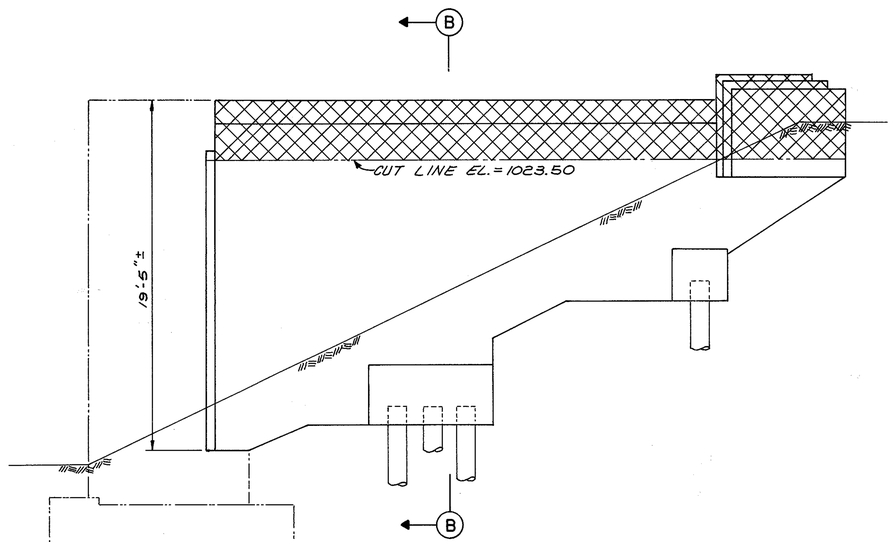

ELEVATION

LEGEND

INDICATES LIMITS OF EXISTING STRUCTURES TO BE TOTALLY REMOVED, AS PER ITEM 202.

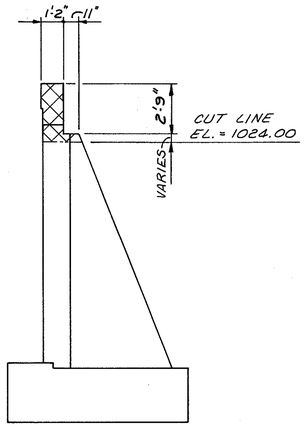

SECTION A-A

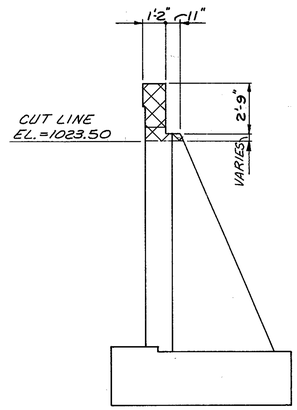

SECTION B-B

McCOY ASSOCIATES INC. 6/23
CONSULTING ENGINEERS
AKRON, OHIO

DEMOLITION
WEST ABUTMENT WINGWALLS

BRIDGE Nº. SUM. 76-1332
AKRON EAST EXPRESSWAY
OVER SEIBERLING STREET

DESIGNED	DRAWN	TRACED	CHECKED	REVIEWED	DATE	REVISED
TAB	DAK		JMH	MSC	3-29-88	

73776

FHWA REGION	STATE	PROJECT	
5	OHIO		

1144
1214

SUMMIT COUNTY
SUM 76-11.57

NOTES

(1) SEE SHEETS 4/23 & 5/23 FOR NOTES

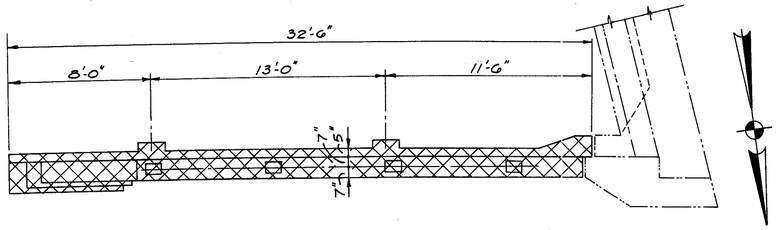

SOUTH PLAN

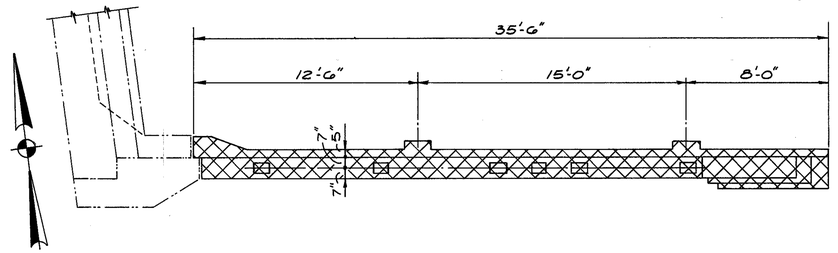

NORTH PLAN

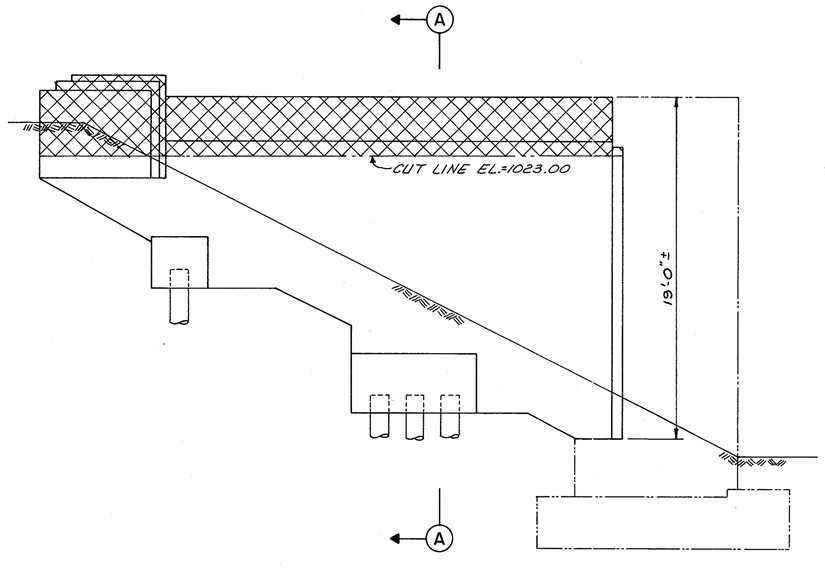

ELEVATION

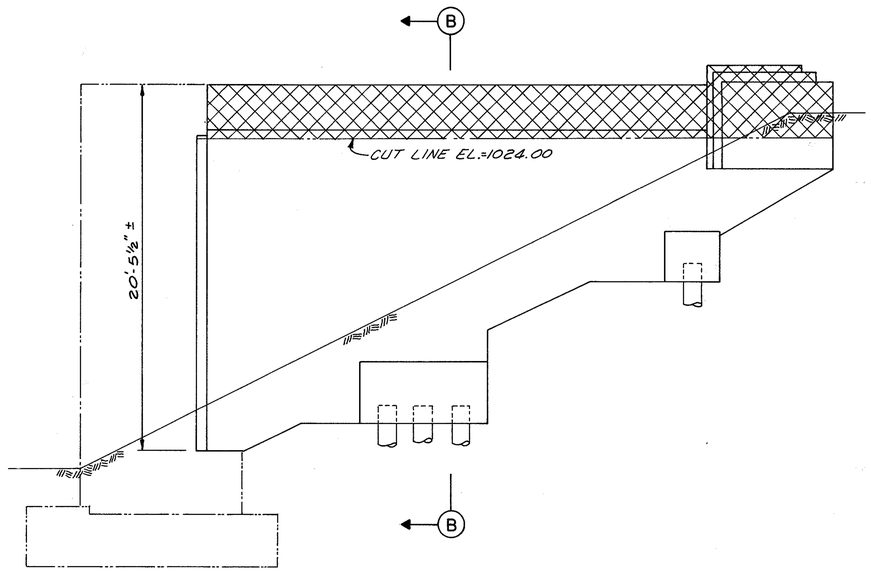

ELEVATION

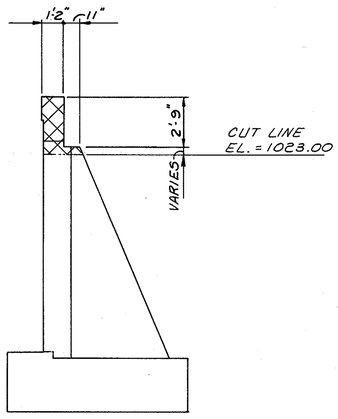

SECTION A-A

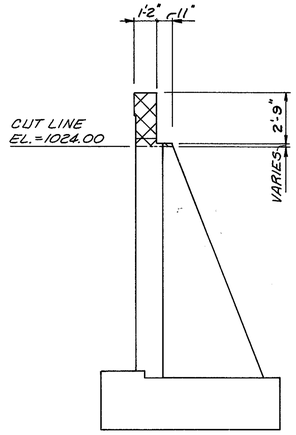

SECTION B-B

LEGEND

▨ INDICATES LIMITS OF EXISTING STRUCTURES TO BE TOTALLY REMOVED, AS PER ITEM 202.

McCOY ASSOCIATES INC. 7/23
CONSULTING ENGINEERS
AKRON, OHIO

DEMOLITION
EAST ABUTMENT WINGWALLS

BRIDGE Nº. SUM. 76-1332
AKRON EAST EXPRESSWAY
OVER SEIBERLING STREET

DESIGNED	DRAWN	TRACED	CHECKED	REVIEWED	DATE	REVISED
TAB	DAK		JMH	MSC	3-29-88	

72276

FHWA REGION	STATE	PROJECT	
5	OHIO		

1145
1214

SUMMIT COUNTY
SUM 76-11.57

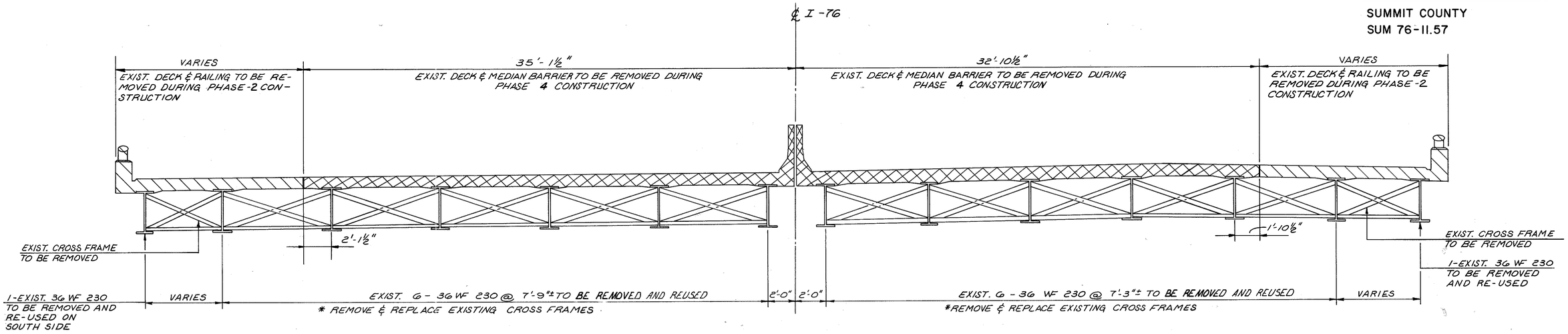

WEST BOUND

EAST BOUND

EXISTING TRANSVERSE SECTION

*PAYMENT FOR REPLACEMENT OF EXISTING CROSS FRAMES SHALL BE INCLUDED WITH ITEM 513 STRUCTURAL STEEL (AISC CATEGORY I)

LEGEND

INDICATES LIMITS OF EXISTING SUPERSTRUCTURE CONCRETE TO BE TOTALLY REMOVED DURING PHASE **2**, AS PER ITEM 202.

INDICATES LIMITS OF EXISTING SUPERSTRUCTURE CONCRETE TO BE TOTALLY REMOVED DURING PHASE **4**, AS PER ITEM 202.

EXISTING ANCHOR BOLT DETAIL

NOTES

1. ALL EXISTING ANCHOR BOLTS OR RODS FOR THE EXISTING BEARINGS THAT ARE NOT BEING RE-USED FOR THE NEW CONSTRUCTION SHALL BE CUT DOWN TO AVOID INTERFERENCE WITH NEW BEARINGS.
2. EXISTING ANCHOR BOLTS SHALL BE CUT SO THAT BOLT REMAINS 2" ABOVE EXIST. ABUTMENT SEAT. IF THE EXISTING ANCHOR BOLT DOES NOT HAVE SUFFICIENT CROSS-SECTIONAL AREA TO WELD PROPERLY, REMOVE CONCRETE TO A DEPTH TO OBTAIN SUITABLE MATERIAL WITH SUFFICIENT CROSS-SECTIONAL AREA TO WELD PROPERLY. THE COST OF REMOVING AND REPLACING THE CONCRETE SHALL BE INCLUDED IN THE UNIT PRICE BID FOR ITEM 516 REFORBISH BEARING DEVISE, AS PER PLAN.

NOTES

1. THE FOLLOWING ARE THE APPROXIMATE QUANTITIES FOR SOME OF THE MAJOR ITEMS OF REMOVAL:

ITEM		APPROXIMATE QUANTITY
A) SUPERSTRUCTURE CONCRETE	=	130 C.Y.
B) ASPHALT	=	100 C.Y.
C) RAILING	=	217 L.F.
D) STRUCTURAL STEEL (CROSS-FRAMES)	=	10,000 LBS.
D) SUBSTRUCTURE CONCRETE (ABUTMENTS & WINGWALLS)	=	100 C.Y.

THE ABOVE REMOVAL QUANTITIES HAVE BEEN ARRIVED AT USING THE EXISTING STRUCTURE PLANS AND HAVE BEEN GIVEN FOR INFORMATION ONLY AND ARE NOT TO BE USED FOR ANY OTHER PURPOSE. IT IS THE CONTRACTOR'S RESPONSIBILITY TO ARRIVE AT THE REMOVAL QUANTITIES TO BE USED TO BASE HIS BID PRICE FOR ITEM 202 PORTIONS OF STRUCTURE REMOVED.

2. ALL EXISTING BEARINGS SHALL BE REMOVED FOR RE-USE AND SHALL BE INCLUDED FOR PAYMENT WITH ITEM 202 REMOVAL FOR RE-USE OF EXISTING STEEL BEAMS AND BEARINGS.

McCOY ASSOCIATES INC. 8/23
CONSULTING ENGINEERS
AKRON, OHIO

STRUCTURAL REMOVAL & REPAIR DETAILS

BRIDGE NO. SUM 76-1332
AKRON EAST EXPRESSWAY
OVER SEIBERLING STREET

DESIGNED	DRAWN	TRACED	CHECKED	REVIEWED	DATE	REVISED
TAB	DAK		JMH	MJC	3-29-88	

FHWA REGION	STATE	PROJECT	
5	OHIO		

1146
1214

SUMMIT COUNTY
SUM 76-11.57

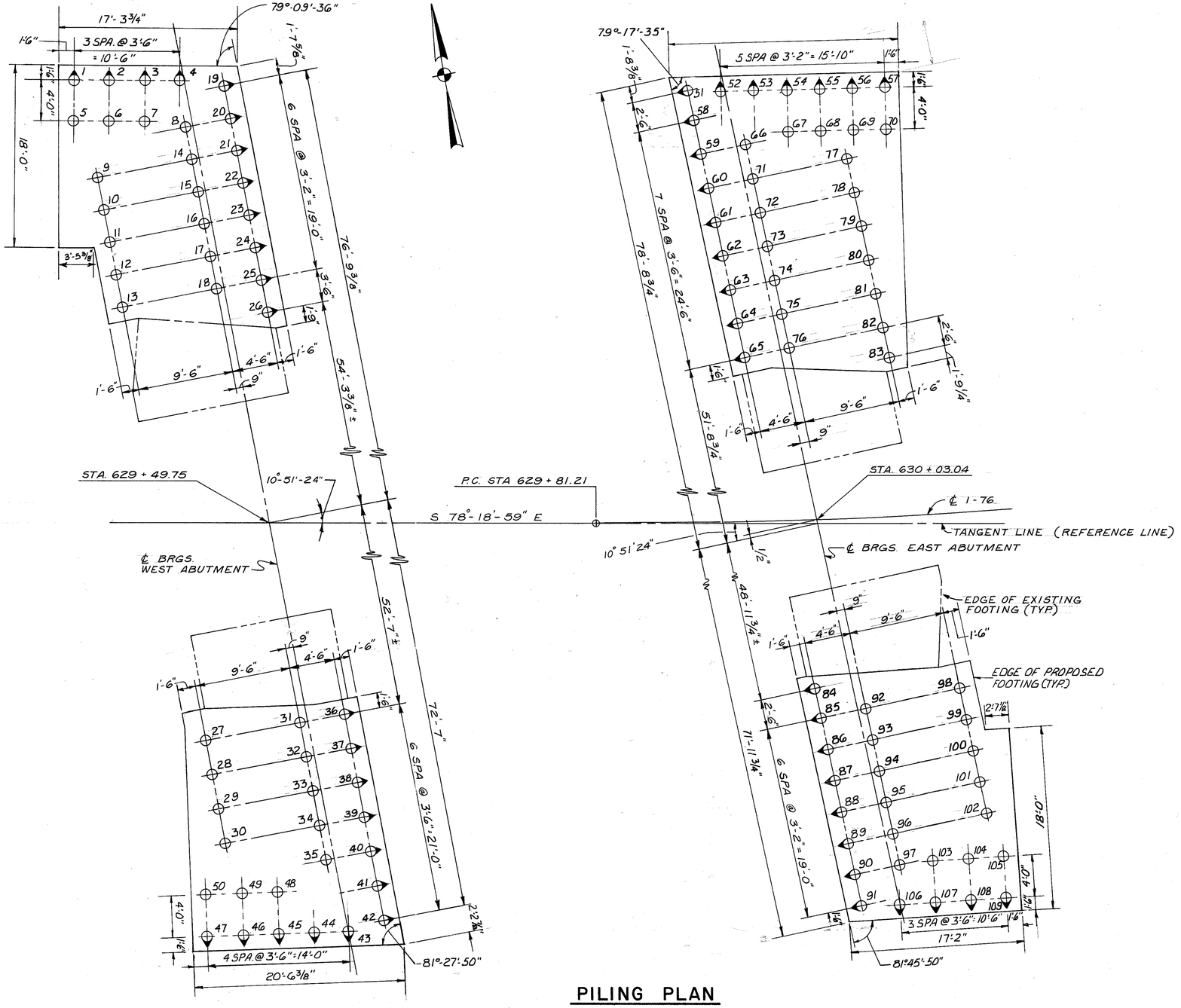

PILING PLAN

PROPOSED PILE STATION & OFFSET		
PILE NO.	STATION	OFFSET
19	629 + 38.99	76.11' LT.
42	629 + 67.09	70.58' RT.
51	629 + 84.59	76.61' LT.
91	630 + 12.26	70.01' RT.

PILE TABLE

SUBSTRUCTURE UNIT	PILE NO.	PILE TYPE	CUTOFF ELEV.	ESTIMATED LENGTH
NORTHWEST ABUTMENT	5-18	SEE NOTE NO. 1	1001.83	40.00 L.F.
	1-4, 19-26		1001.83	41.00 L.F.
SOUTHWEST ABUTMENT	27-35, 48-50		1000.83	50.00 L.F.
	36-47		1000.83	52.00 L.F.
NORTHEAST ABUTMENT	51-65		1001.83	41.00 L.F.
	66-83		1001.83	40.00 L.F.
SOUTHEAST ABUTMENT	84-91		1000.83	52.00 L.F.
	92-105		1000.83	50.00 L.F.
	106-109		1000.83	52.00 L.F.

NOTES

1. ALL PILES SHALL BE 12" Ø CAST-IN-PLACE REINFORCED CONCRETE PILES.
2. PILES SHOWN ⚲ SHALL BE BATTERED 1:4 IN THE DIRECTION INDICATED.
3. PILES SHALL BE DRIVEN TO A MIN. BEARING CAPACITY OF 44 TONS PER PILE.
4. ALL PILES SHOWN ARE PART OF PHASE I CONSTRUCTION.
5. FOR FOOTING REINFORCEMENT DETAILS, SEE SHEET 16 / 23

McCOY ASSOCIATES INC. 9 / 23
CONSULTING ENGINEERS
AKRON, OHIO

PILING PLAN

BRIDGE NO. SUM 76-1332
AKRON EAST EXPRESSWAY
OVER SEIBERLING STREET

DESIGNED	DRAWN	TRACED	CHECKED	REVIEWED	DATE	REVISED
TAB	GT		RGS	MSC	3-29-88	

FHWA REGION	STATE	PROJECT	
5	OHIO		

1147
1214

SUMMIT COUNTY
SUM 76-11.57

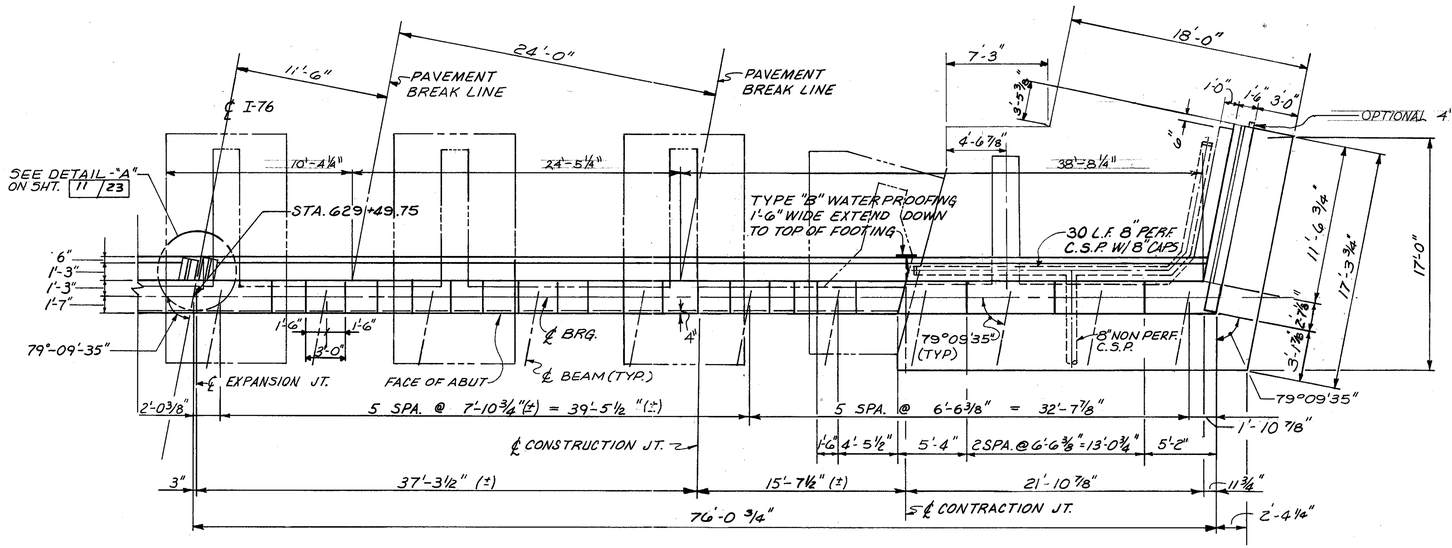

HALF PLAN

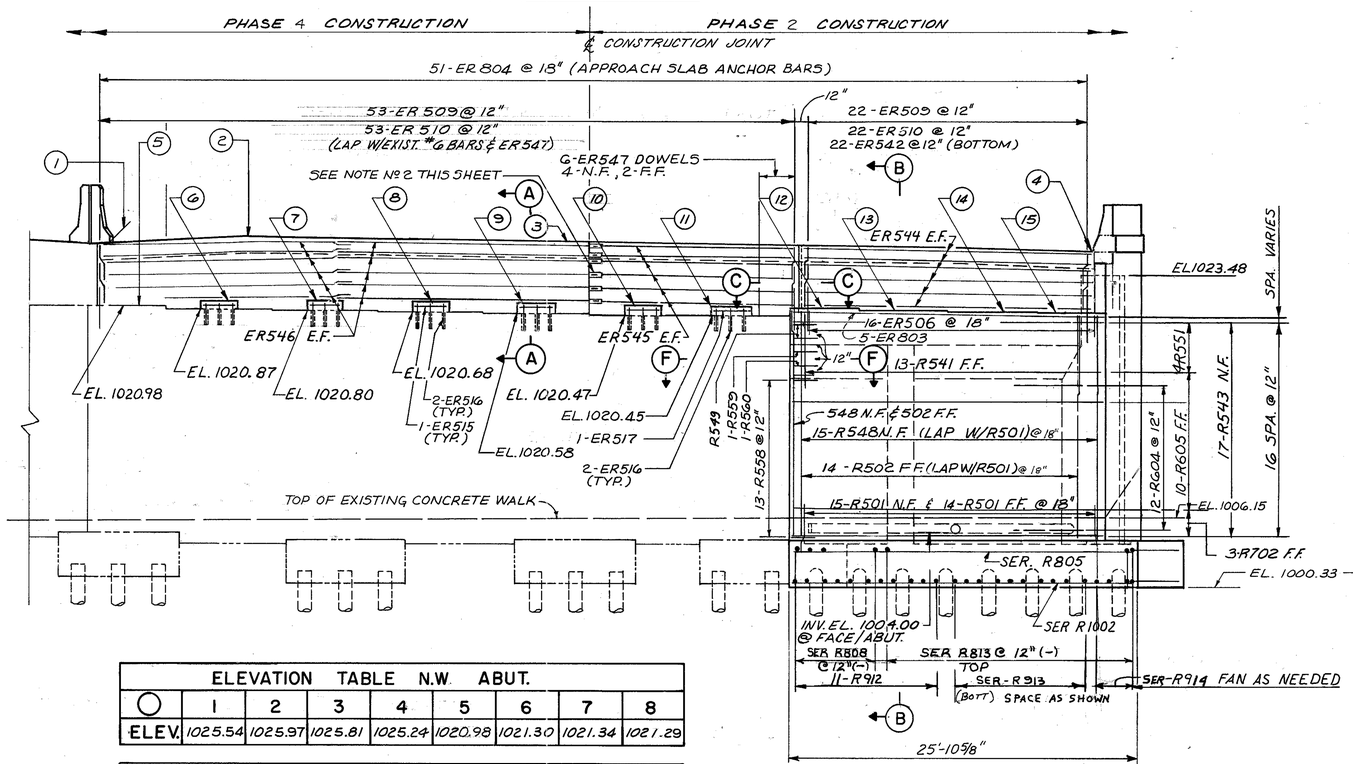

ELEVATION TABLE N.W. ABUT.								
○	1	2	3	4	5	6	7	8
ELEV.	1025.54	1025.97	1025.81	1025.24	1020.98	1021.30	1021.34	1021.29

ELEVATION TABLE N.W. ABUT.								
○	9	10	11	12	13	14	15	
ELEV.	1021.24	1021.14	1021.22	1021.12	1021.03	1020.93	1020.83	

ELEVATION

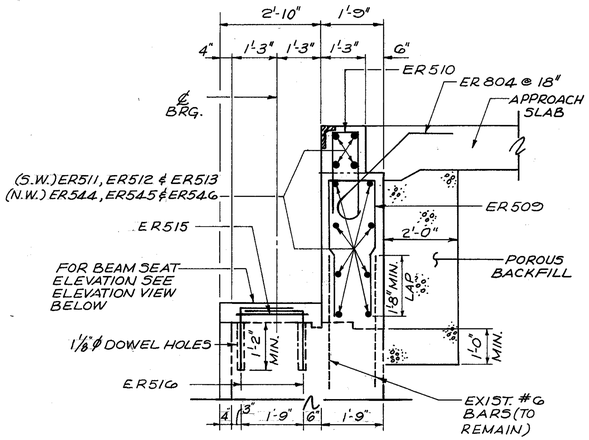

SECTION A-A

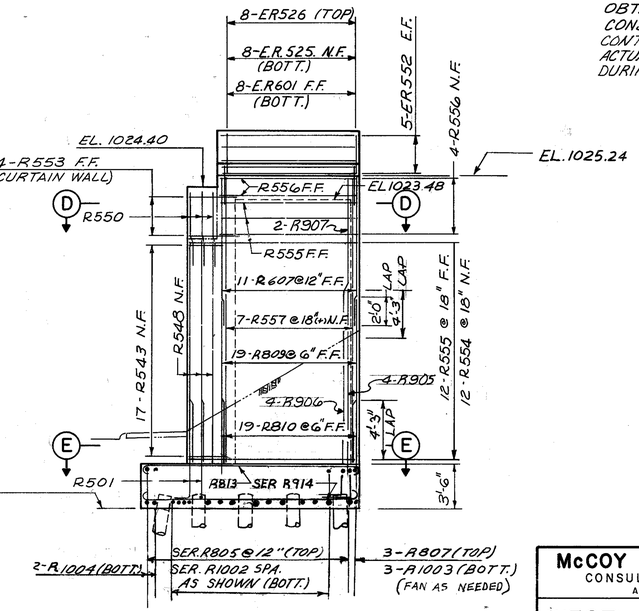

END ELEVATION

NOTES

1. ALL EXPOSED FACES OF THE ABUTMENT, EXCEPT BACKWALLS SHALL HAVE TEXTURED CONCRETE SURFACE. SEE STRUCTURAL GENERAL NOTES FOR TEXTURED CONCRETE REQUIREMENTS.
2. MECHANICAL SPLICES SHALL DEVELOP 125% BAR STRENGTH AND SHALL BE INCLUDED WITH ITEM 509, EPOXY COATED REINFORCING STEEL, (GRADE 60) FOR PAYMENT.
3. FOR ADDITIONAL DETAILS SEE SHEET 12/23.
4. ABBREVIATIONS:
   N.F. = NEAR FACE
   F.F. = FAR FACE
   E.F. = EACH FACE
   P.E.J.F. = PREFORMED EXPANSION JOINT FILLER
5. FOR ADDITIONAL PILING DETAILS SEE SHT. 9/23
6. ALL ELEVATIONS SHOWN ON THE EXISTING BEAM SEAT ARE TO BE CONSIDERED APPROXIMATE. ELEVATIONS WERE OBTAINED FROM THE ORIGINAL CONSTRUCTION PLANS. THE CONTRACTOR SHALL ESTABLISH THE ACTUAL ELEVATIONS IN THE FIELD DURING CONSTRUCTION.

McCOY ASSOCIATES INC. 10/23
CONSULTING ENGINEERS
AKRON, OHIO

WEST ABUTMENT DETAILS

BRIDGE NO. SUM 76-1332
AKRON EAST EXPRESSWAY
OVER SEIBERLING STREET

DESIGNED	DRAWN	TRACED	CHECKED	REVIEWED	DATE	REVISED
JBH	J.D.P.		TAB	MSC	3-29-88	

FHWA REGION	STATE	PROJECT	
5	OHIO		

1148
1214

SUMMIT COUNTY
SUM 76-11.57

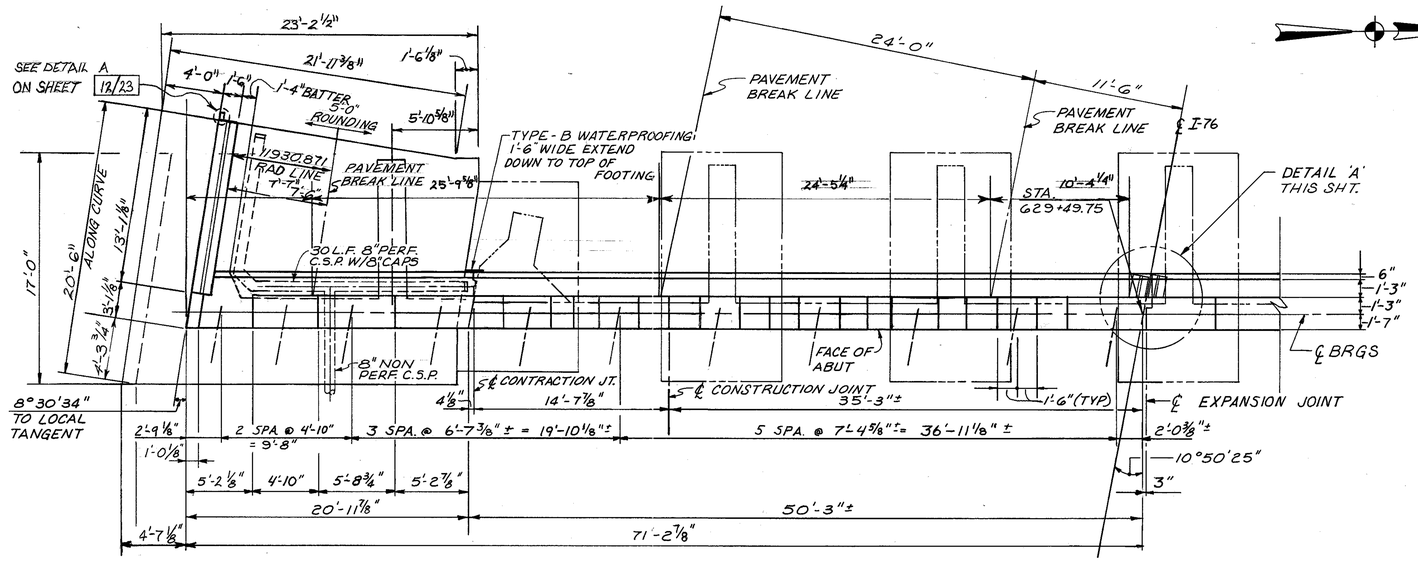

HALF PLAN

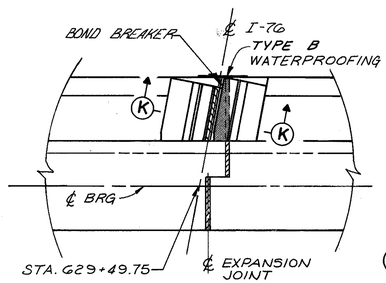

DETAIL A

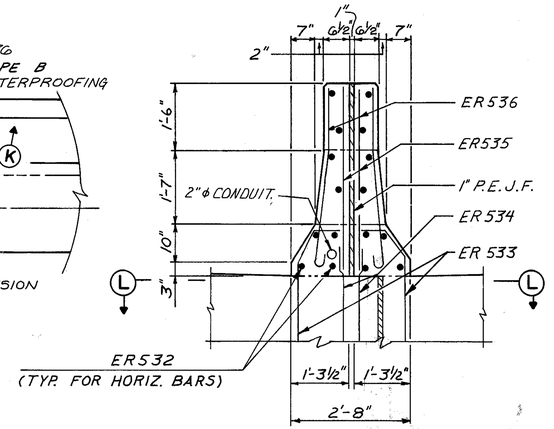

SECTION K-K

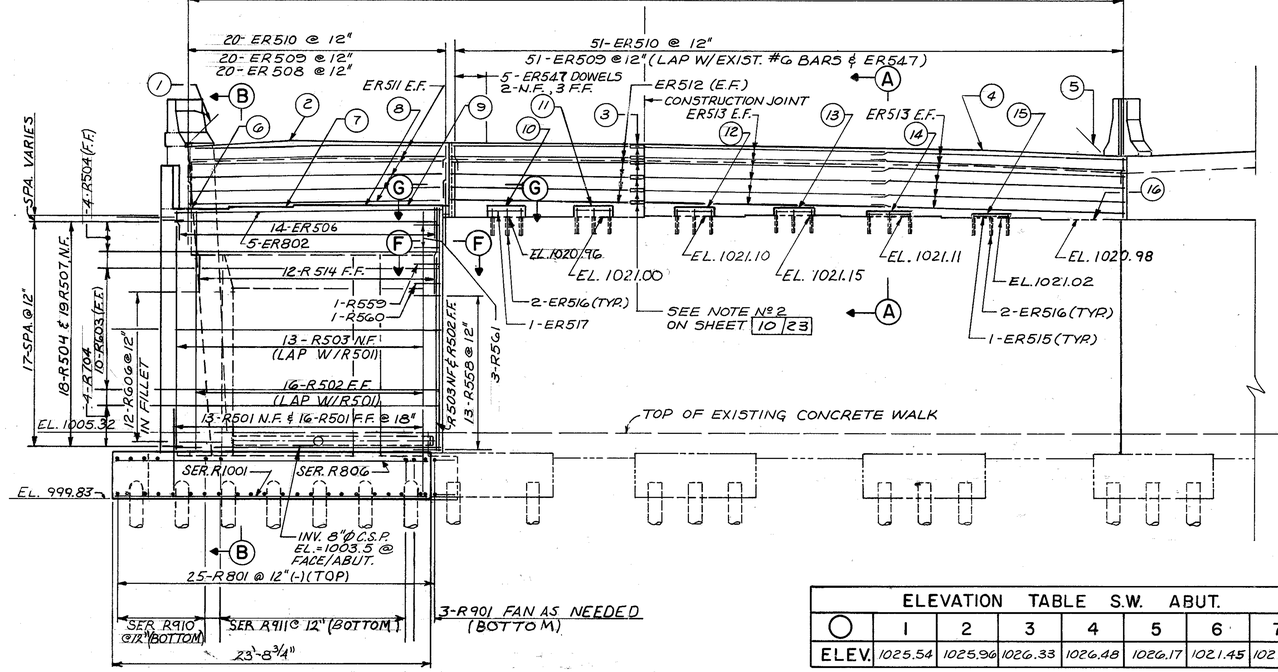

ELEVATION

ELEVATION TABLE S.W. ABUT.								
○	1	2	3	4	5	6	7	8
ELEV.	1025.54	1025.96	1026.33	1026.48	1026.17	1021.45	1021.64	1022.05

ELEVATION TABLE S.W. ABUT.								
○	9	10	11	12	13	14	15	16
ELEV.	1022.25	1022.25	1021.76	1021.67	1021.56	1021.45	1021.28	1020.98

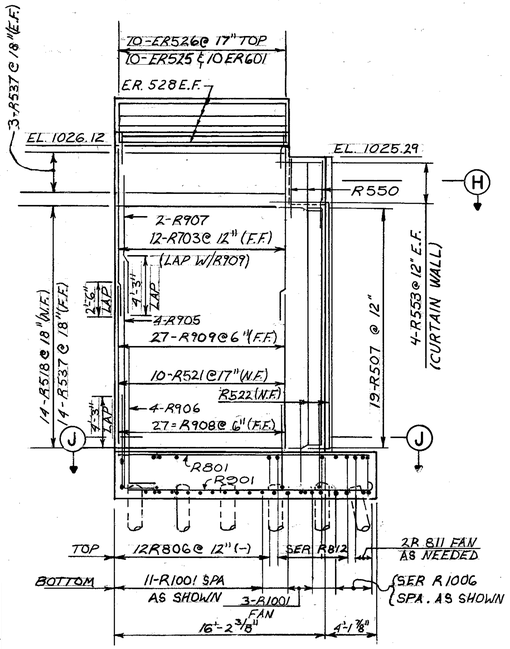

END ELEVATION

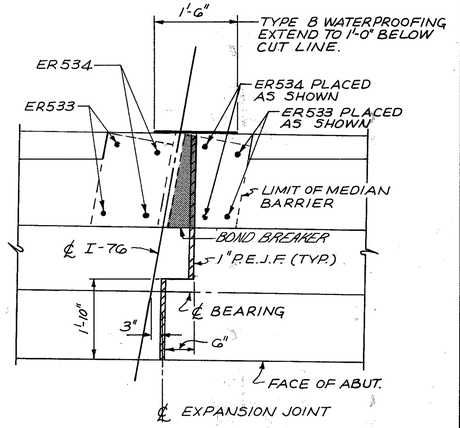

SECTION L-L

NOTE:
FOR NOTES AND ADDITIONAL DETAILS SEE SHEETS 10/23 & 12/23.

McCOY ASSOCIATES INC. 11/23
CONSULTING ENGINEERS
AKRON, OHIO

WEST ABUTMENT DETAILS

BRIDGE NO. SUM 76-1332
AKRON EAST EXPRESSWAY
OVER SEIBERLING STREET

DESIGNED	DRAWN	TRACED	CHECKED	REVIEWED	DATE	REVISED
JBH	J.O.P.		TAB	MSC	3-29-88	

FHWA REGION	STATE	PROJECT	
5	OHIO		

SUMMIT COUNTY
SUM 76-11.57

1143
1214

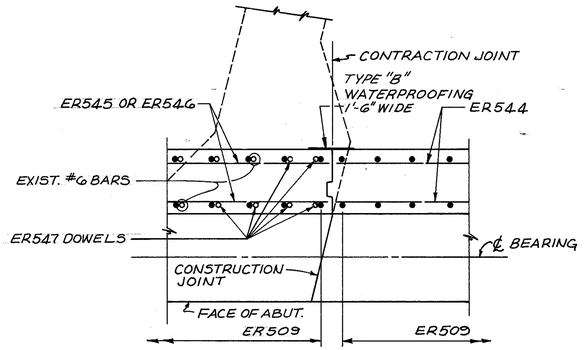

SECTION C-C

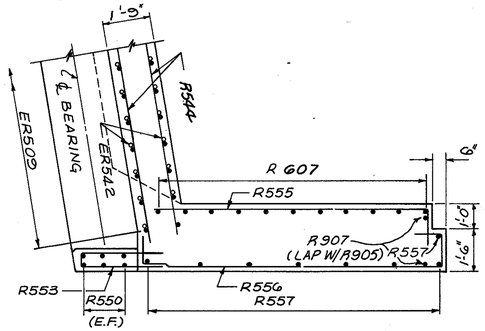

SECTION D-D

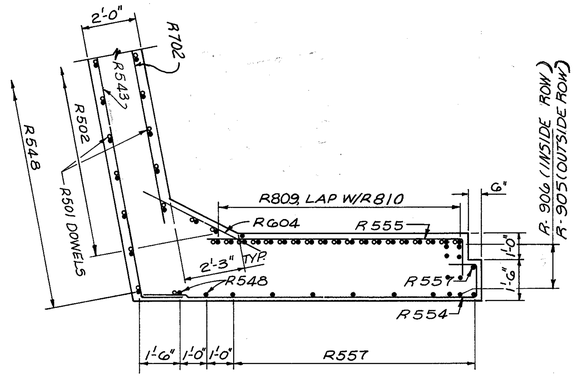

SECTION E-E

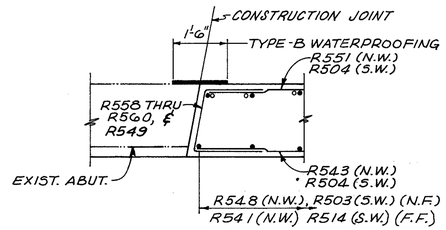

SECTION F-F

N.W. SHOWN, S.W. OPPOSITE

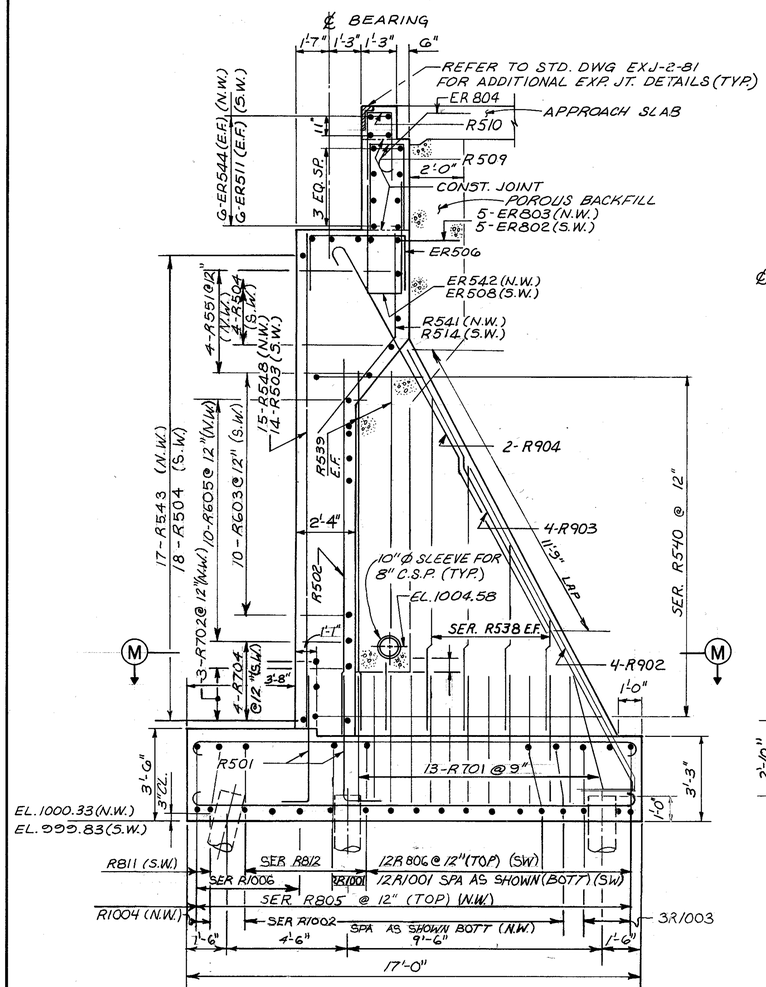

SECTION B-B

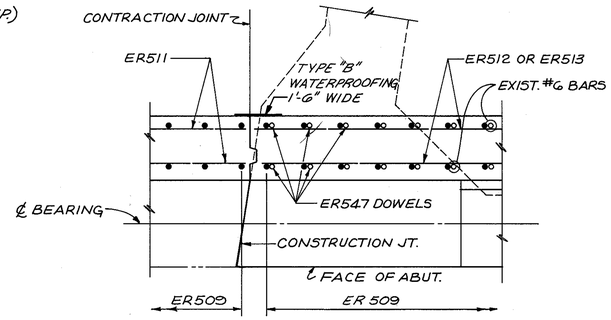

SECTION G-G

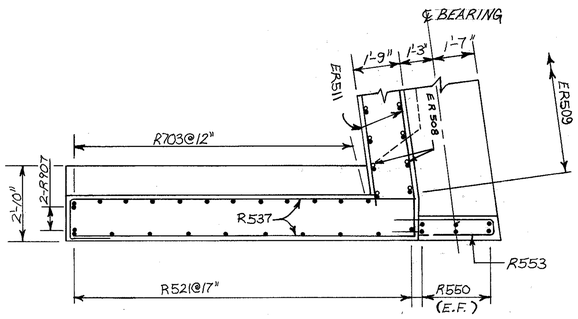

SECTION H-H

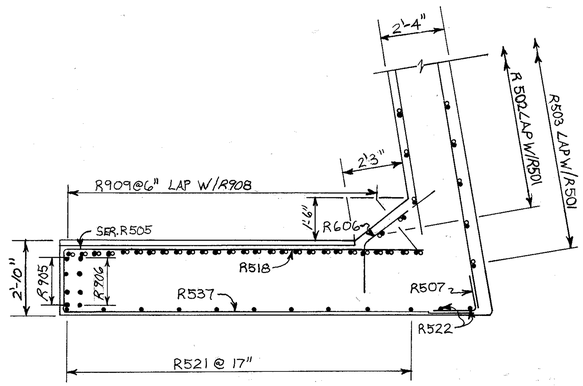

SECTION J-J

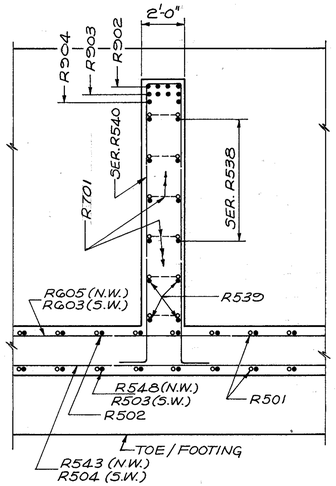

SECTION M-M

NOTES

1. FOR ADDITIONAL NOTES SEE SHEET 10/23

KEY TO BE PROVIDED IF REQUIRED BY PROPRIETARY WALL MANUFACTURER.
4"x4" KEY FROM TOP OF FOOTING TO TOP OF WALL (TYP.)

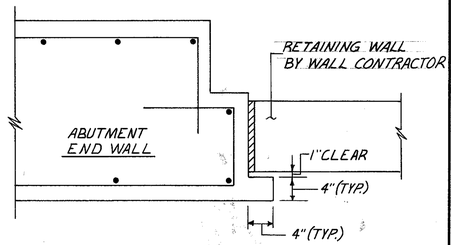

DETAIL A

McCOY ASSOCIATES INC. 12/23
CONSULTING ENGINEERS
AKRON, OHIO

WEST ABUTMENT DETAILS

BRIDGE NO. SUM 76-1332
AKRON EAST EXPRESSWAY
OVER SEIBERLING STREET

DESIGNED	DRAWN	TRACED	CHECKED	REVIEWED	DATE	REVISED
TAB	J.D.P.		JBH	MSC	3-29-88	

FHWA REGION	STATE	PROJECT	
5	OHIO		

115C
12/14

SUMMIT COUNTY
SUM 76-11.57

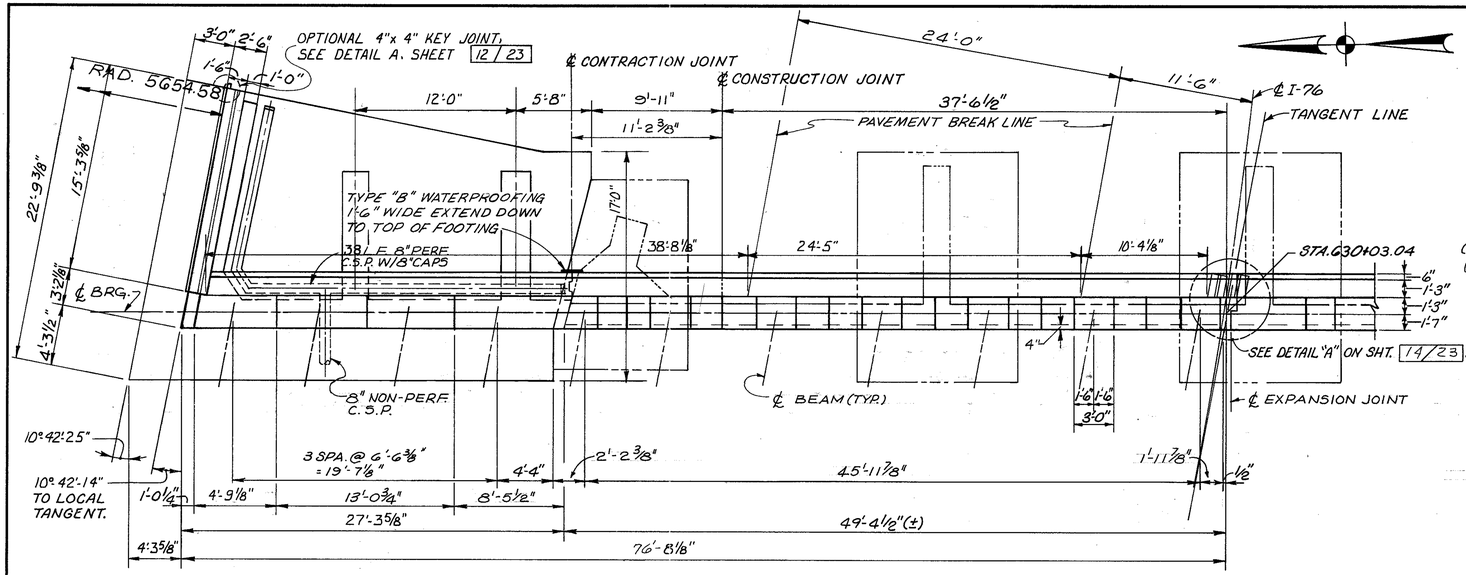

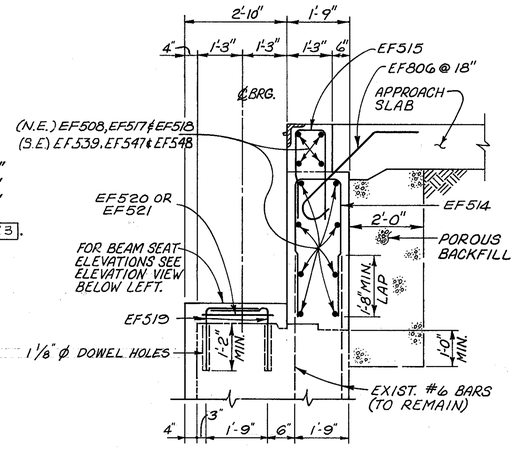

SECTION A-A

NOTES

1. ALL EXPOSED FACES OF THE ABUTMENTS, EXCEPT BACKWALLS SHALL HAVE A TEXTURED CONCRETE SURFACE. SEE STRUCTURAL GENERAL NOTES FOR TEXTURED CONCRETE REQUIREMENTS.
2. MECHANICAL SPLICES SHALL DEVELOP 125% BAR STRENGTH AND SHALL BE INCLUDED WITH ITEM 824, EPOXY COATED REINFORCING STEEL, (GRADE-60) FOR PAYMENT.
3. FOR ADDITIONAL DETAILS SEE SHEET 15/23.
4. ABBREVIATIONS:
   N.F. = NEAR FACE
   F.F. = FAR FACE
   E.F. = EACH FACE
   P.E.J.F. = PREFORMED EXPANSION JOINT FILLER

HALF PLAN

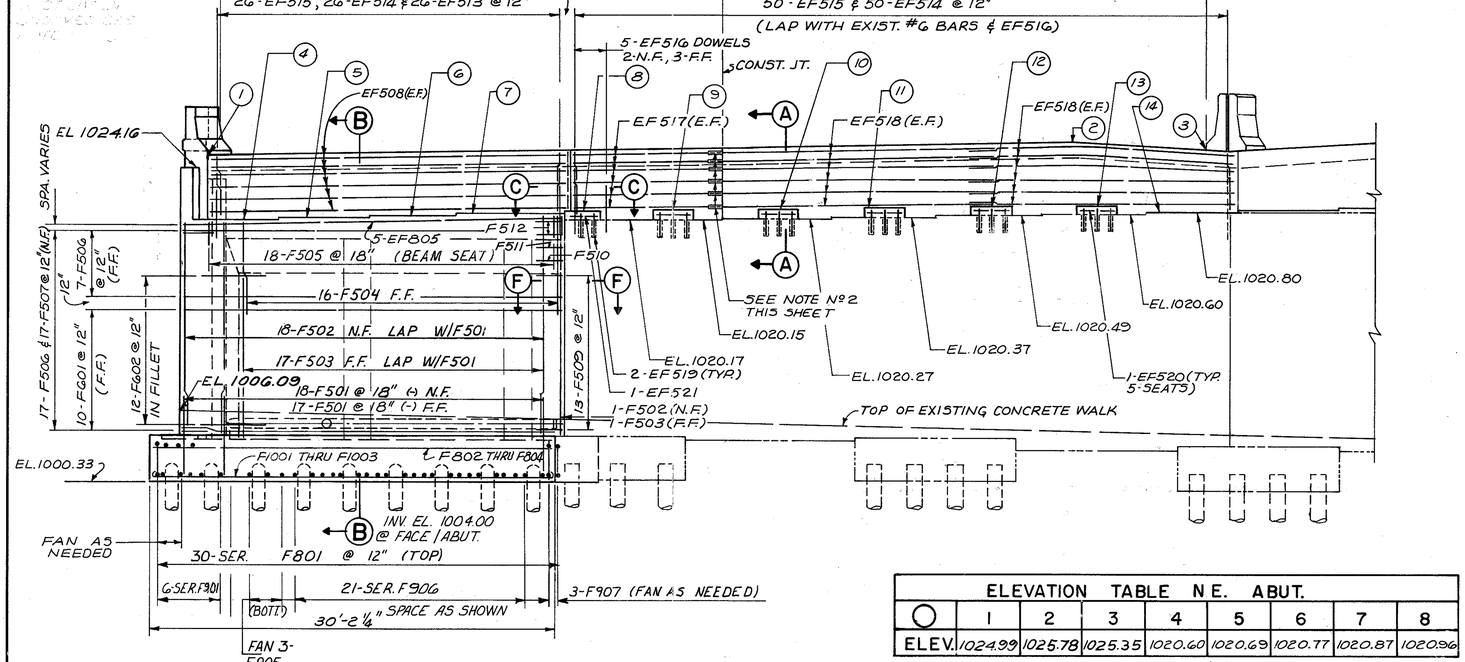

ELEVATION

ELEVATION TABLE N.E. ABUT.								
○	1	2	3	4	5	6	7	8
ELEV.	1024.99	1025.78	1025.35	1020.60	1020.69	1020.77	1020.87	1020.96

ELEVATION TABLE N.E. ABUT.								
○	9	10	11	12	13	14		
ELEV	1020.86	1020.97	1021.05	1021.13	1021.13	1020.80		

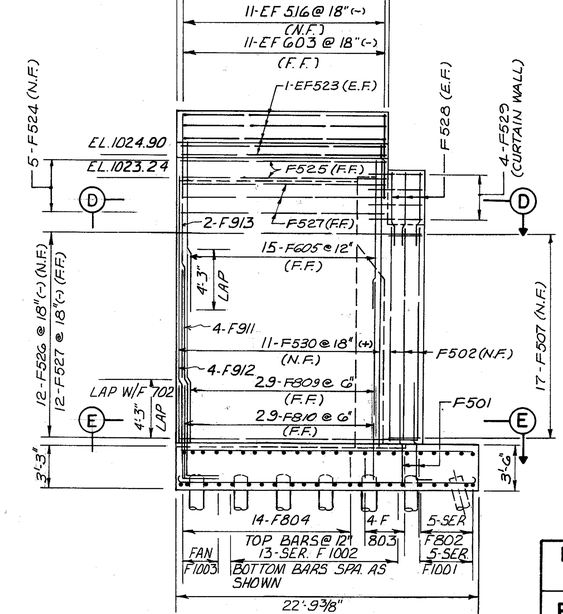

END ELEVATION

McCOY ASSOCIATES INC. 13/23
CONSULTING ENGINEERS
AKRON, OHIO

EAST ABUTMENT DETAILS

BRIDGE NO. SUM 76-1332
AKRON EAST EXPRESSWAY
OVER SEIBERLING STREET

DESIGNED	DRAWN	TRACED	CHECKED	REVIEWED	DATE	REVISED
JBH	J.D.P.		TAB	MSC	3-29-88	

FHWA REGION	STATE	PROJECT	
5	OHIO		

1151
1214

SUMMIT COUNTY
SUM 76-11.57

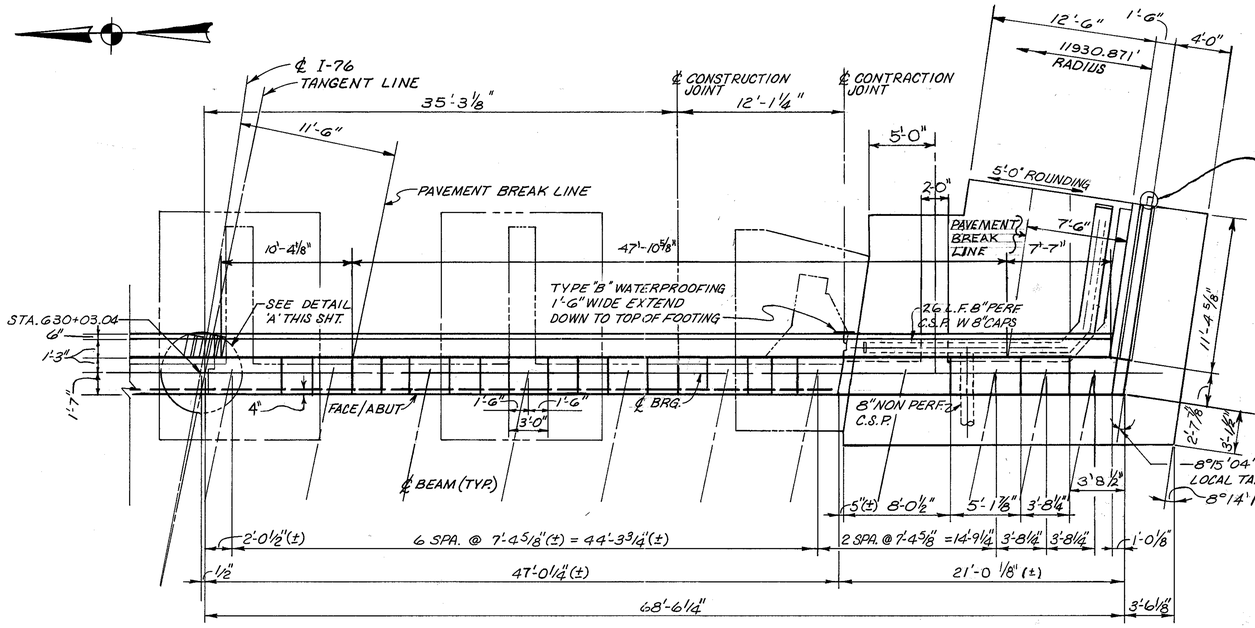

HALF PLAN

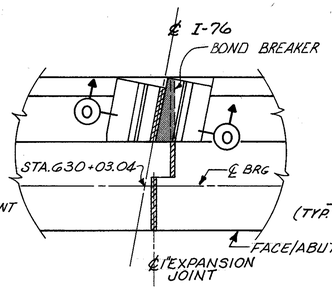

DETAIL A

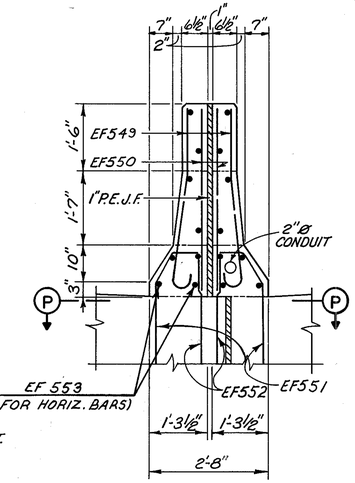

SECTION O-O

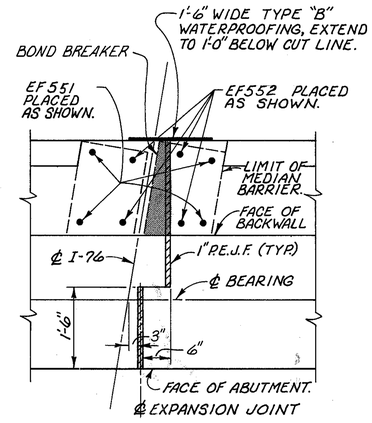

SECTION P-P

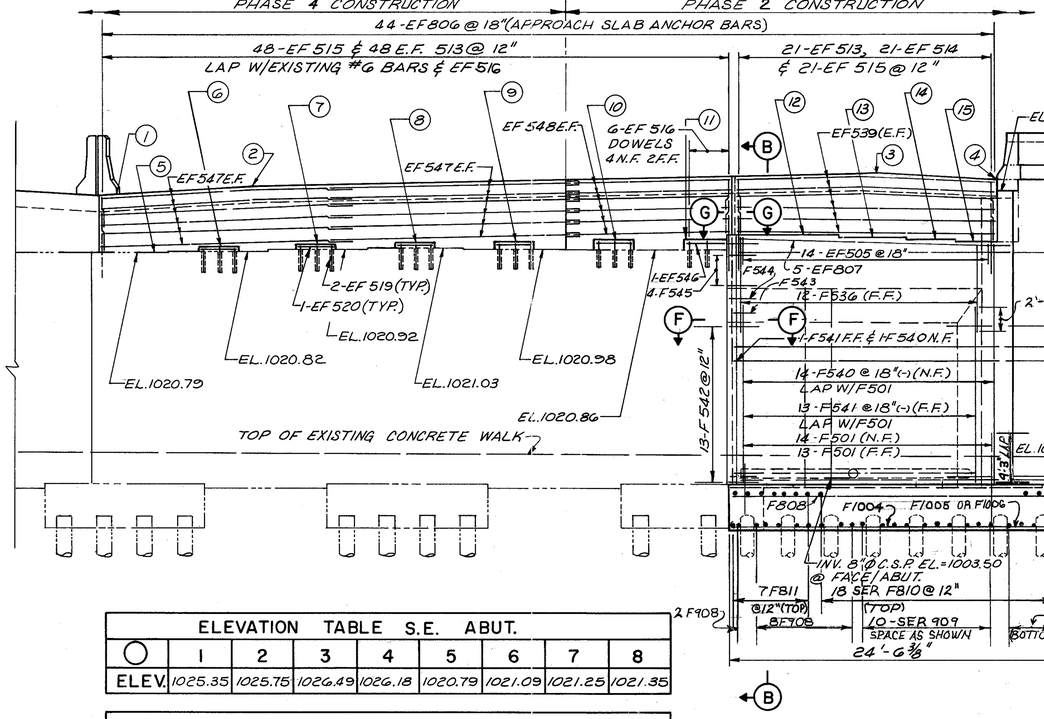

ELEVATION

ELEVATION TABLE S.E. ABUT.								
○	1	2	3	4	5	6	7	8
ELEV.	1025.35	1025.75	1026.49	1026.18	1020.79	1021.09	1021.25	1021.35

ELEVATION TABLE S.E. ABUT.								
○	9	10	11	12	13	14	15	
ELEV.	1021.46	1021.57	1022.10	1022.20	1022.07	1021.73	1021.57	

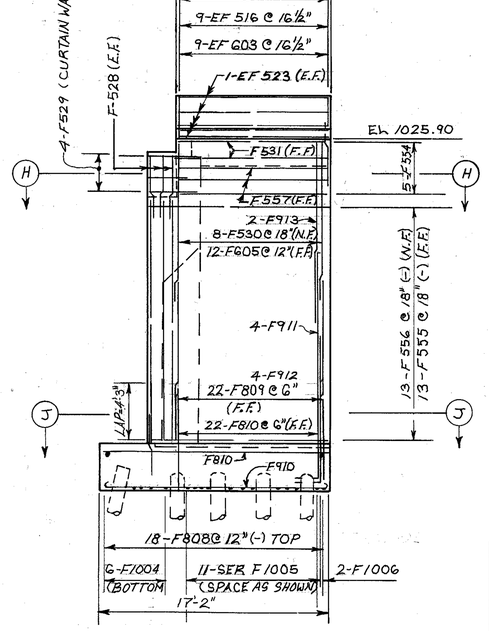

END ELEVATION

NOTES

1. FOR SECTIONS B-B, F-F, G-G, H-H, & J-J, SEE SHEET 15/23
2. FOR NOTES, SEE SHEET 13/23

McCOY ASSOCIATES INC. 14/23
CONSULTING ENGINEERS
AKRON, OHIO

EAST ABUTMENT DETAILS

BRIDGE NO. SUM 76-1332
AKRON EAST EXPRESSWAY
OVER SEIBERLING STREET

DESIGNED	DRAWN	TRACED	CHECKED	REVIEWED	DATE	REVISED
TAB	BMR		JBH	MSC	3-29-88	

FHWA REGION	STATE	PROJECT	
5	OHIO		

1152
1214

SUMMIT COUNTY
SUM 76 - 11.57

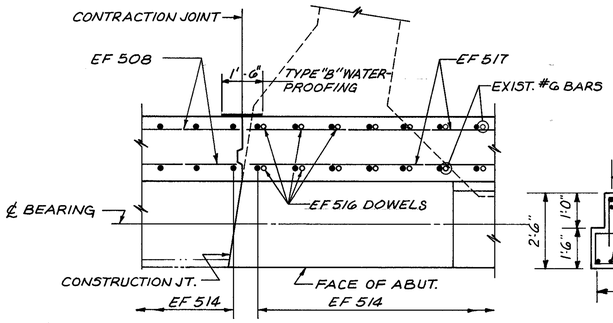

SECTION C-C

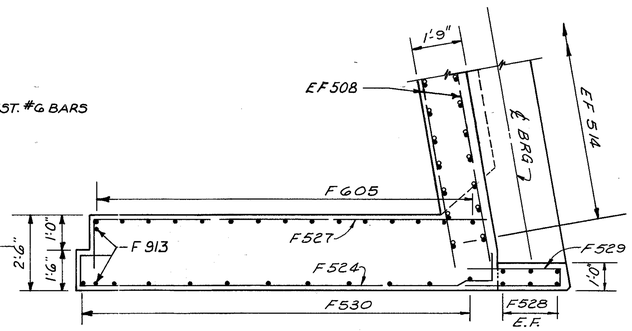

SECTION D-D

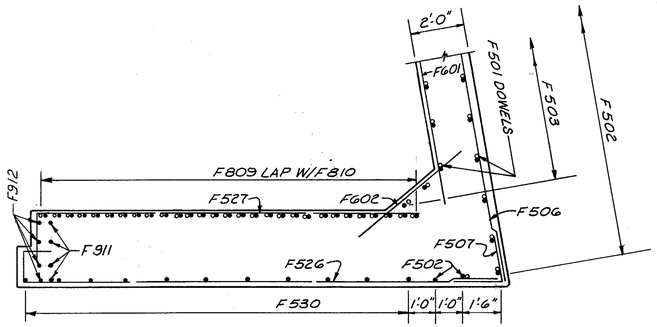

SECTION E-E

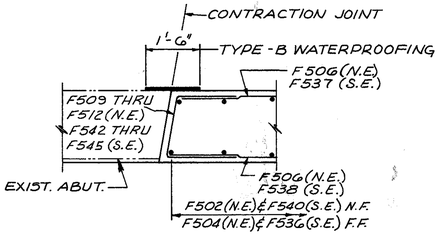

SECTION F-F

N. E. SHOWN , S. E. OPPOSITE

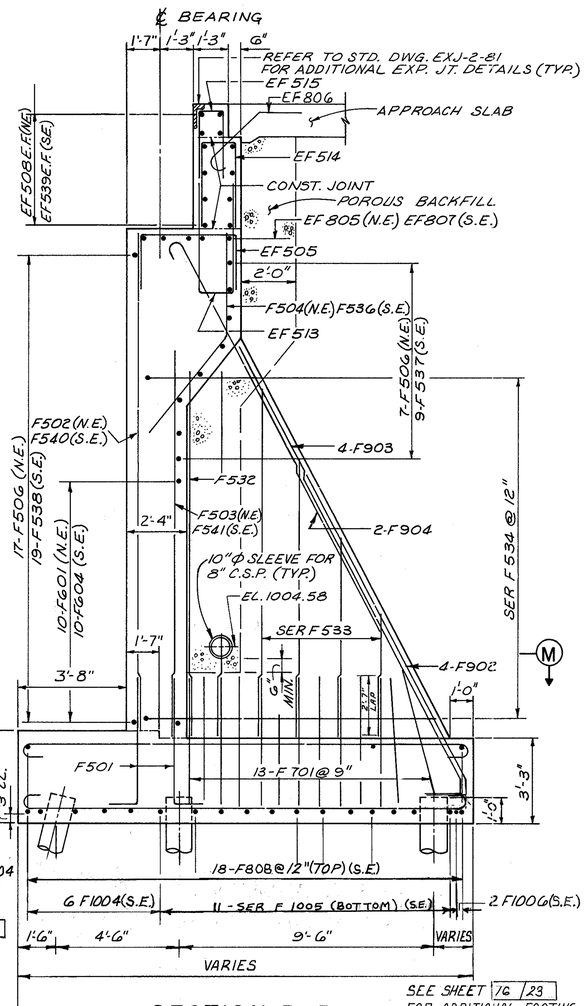

SECTION B-B

SEE SHEET 16/23 FOR ADDITIONAL FOOTING DETAILS

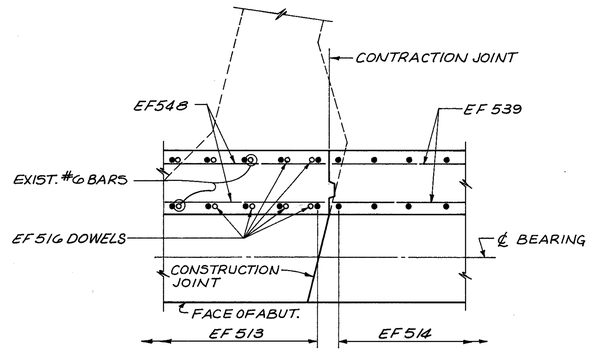

SECTION G-G

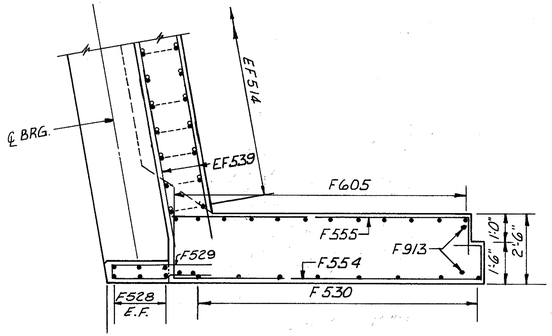

SECTION H-H

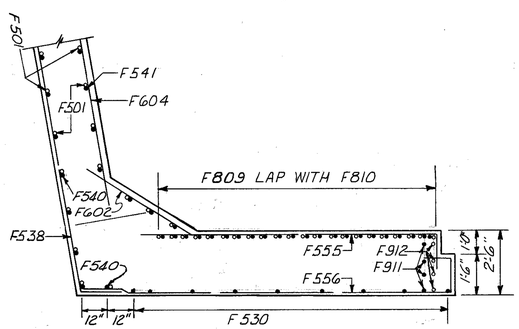

SECTION J-J

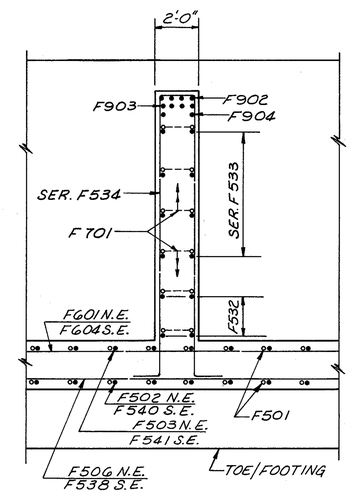

SECTION M-M

NOTES

1. FOR ADDITIONAL NOTES SEE SHEET 10/23

McCOY ASSOCIATES INC. 15/23
CONSULTING ENGINEERS
AKRON, OHIO

EAST ABUTMENT DETAILS

BRIDGE NO. SUM 76 - 1332
AKRON EAST EXPRESSWAY
OVER SEIBERLING STREET

DESIGNED	DRAWN	TRACED	CHECKED	REVIEWED	DATE	REVISED
TAB	J.D.P. D.A.K.		JMH	MSC	3-29-88	

FHWA REGION	STATE	PROJECT	
5	OHIO		

1153 / 1214

Sum-76-11.57

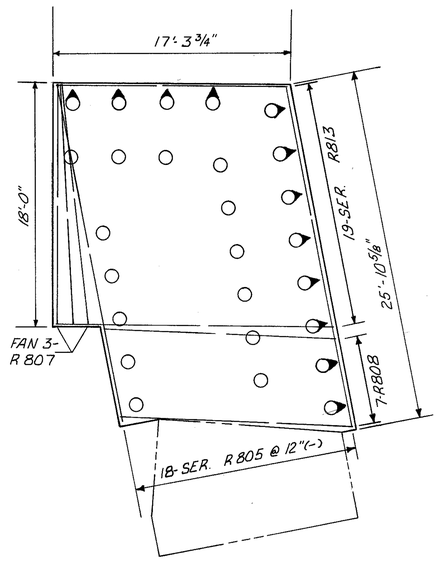

REINFORCING IN TOP

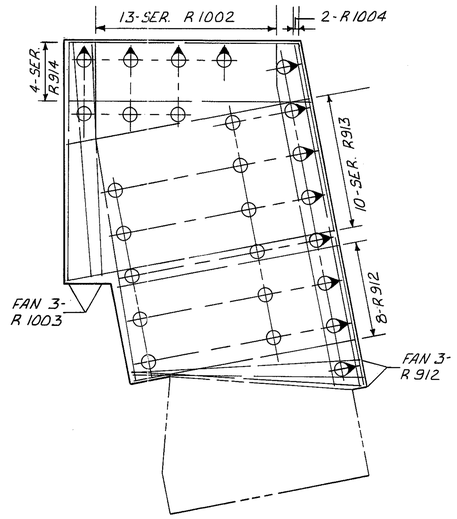

REINFORCING IN BOTTOM

NORTHWEST FOOTING

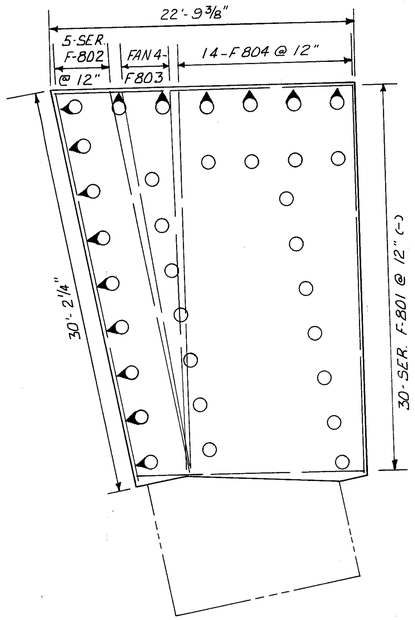

REINFORCING IN TOP

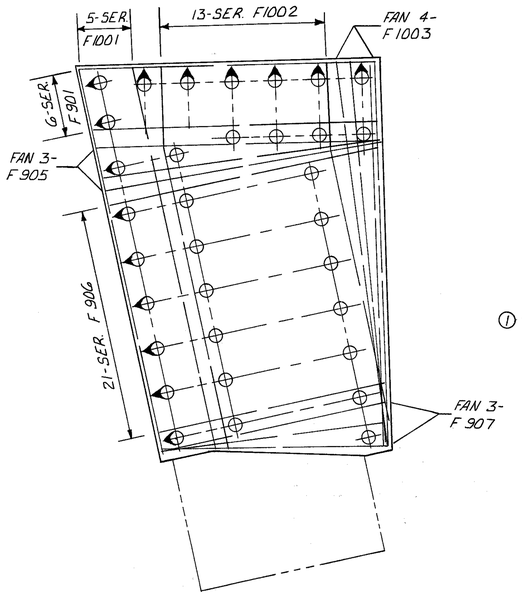

REINFORCING IN BOTTOM

NORTHEAST FOOTING

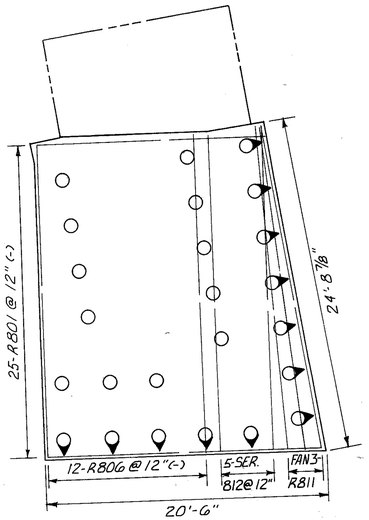

REINFORCING IN TOP

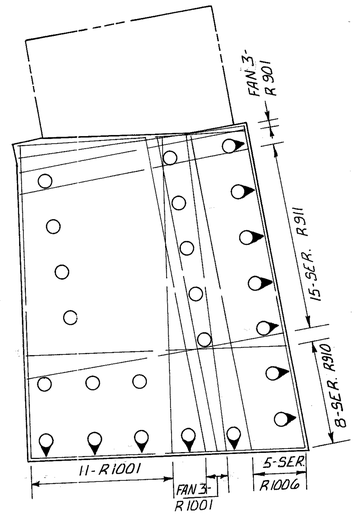

REINFORCING IN BOTTOM

SOUTHWEST FOOTING

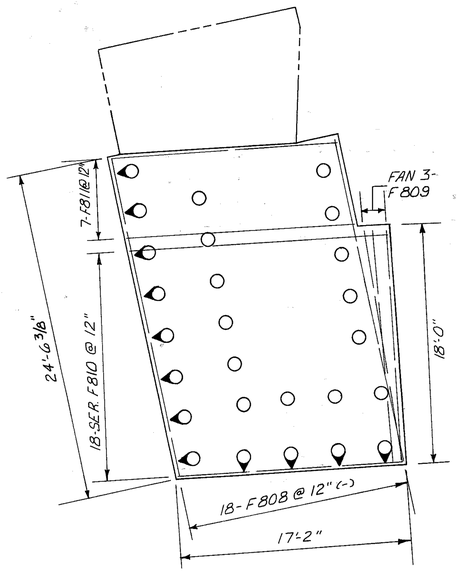

REINFORCING IN TOP

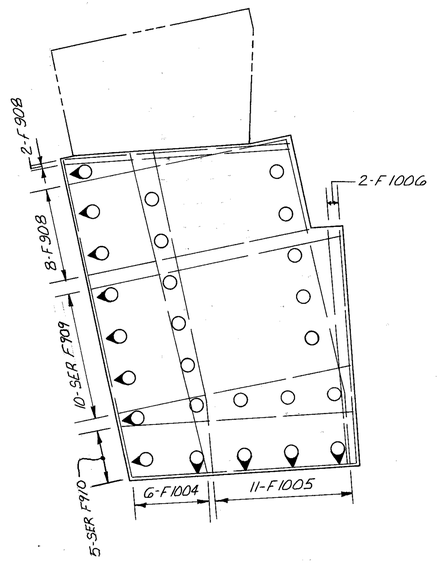

REINFORCING IN BOTTOM

SOUTHEAST FOOTING

NOTES

① FOR ADDITIONAL DIMENSIONS AND DETAILS SEE SHEETS 9/23, 10/23, 11/23, 13/23 AND 14/23

McCOY ASSOCIATES, INC. 16/23
CONSULTING ENGINEERS
AKRON, OHIO

ABUTMENT FOOTING REINFORCEMENT

BRIDGE NO. SUM 76-1332
AKRON EAST EXPRESSWAY
OVER SEIBERLING STREET

DESIGNED	DRAWN	TRACED	CHECKED	REVIEWED	DATE	REVISED
TAB	J.W.D.		JBH	JBH	7-18-89	

FHWA REGION	STATE	PROJECT	
5	OHIO		

1154
12/14

SUMMIT COUNTY
SUM 76-11.57

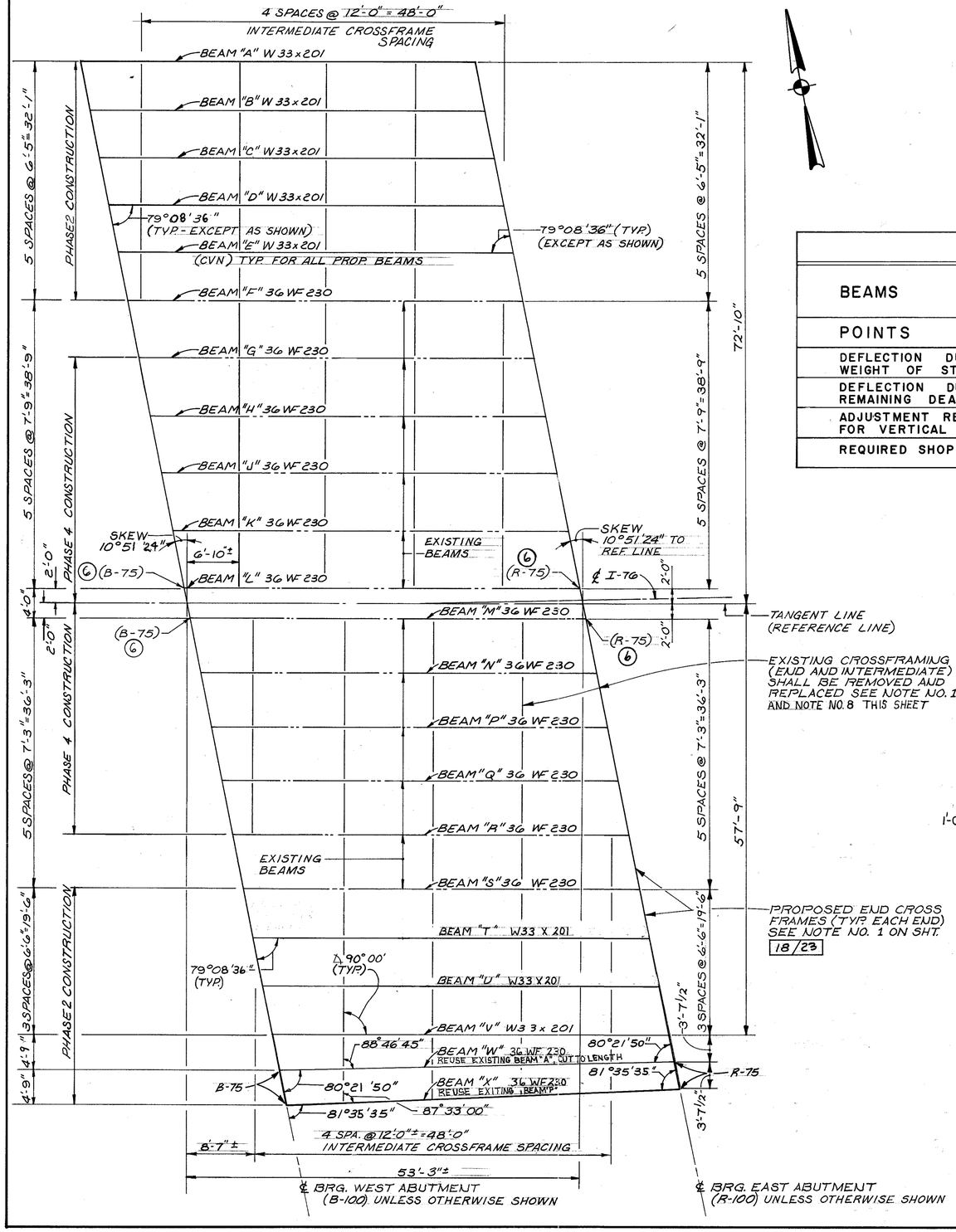

DEFLECTION AND CAMBER (SEE LAYOUT DIAGRAM BELOW)

BEAMS	Ⓐ			Ⓑ			Ⓒ			Ⓓ			Ⓔ			Ⓣ			Ⓤ			Ⓥ		
POINTS	1/4	1/2	3/4	1/4	1/2	3/4	1/4	1/2	3/4	1/4	1/2	3/4	1/4	1/2	3/4	1/4	1/2	3/4	1/4	1/2	3/4	1/4	1/2	3/4
DEFLECTION DUE TO WEIGHT OF STEEL	1/16"	1/8"	1/16"	1/16"	1/8"	1/16"	1/16"	1/8"	1/16"	1/16"	1/8"	1/16"	1/16"	1/8"	1/16"	1/16"	1/8"	1/16"	1/16"	1/8"	1/16"	1/16"	1/8"	1/16"
DEFLECTION DUE TO REMAINING DEAD LOAD	1/4"	3/8"	1/4"	5/16"	7/16"	5/16"	5/16"	7/16"	5/16"	5/16"	7/16"	5/16"	5/16"	7/16"	5/16"	5/16"	7/16"	5/16"	5/16"	7/16"	5/16"	5/16"	7/16"	5/16"
ADJUSTMENT REQUIRED FOR VERTICAL CURVE	3/8"	1/2"	3/8"	3/8"	9/16"	3/8"	3/8"	1/2"	3/8"	3/8"	1/2"	3/8"	3/8"	9/16"	3/8"	3/8"	1/2"	3/8"	3/8"	1/2"	3/8"	3/8"	1/2"	3/8"
REQUIRED SHOP CAMBER	11/16"	1"	11/16"	3/4"	1 1/8"	3/4"	3/4"	1 1/16"	3/4"	3/4"	1 1/16"	3/4"	3/4"	1 1/8"	3/4"	3/4"	1 1/16"	3/4"	3/4"	1 1/16"	3/4"	3/4"	1 1/16"	3/4"

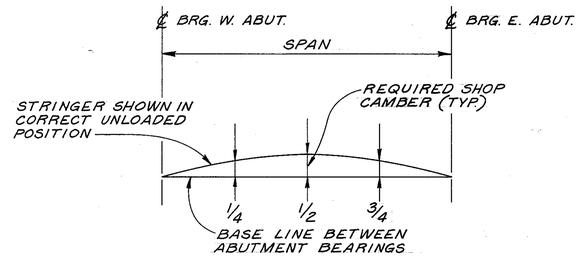

LAYOUT DIAGRAM

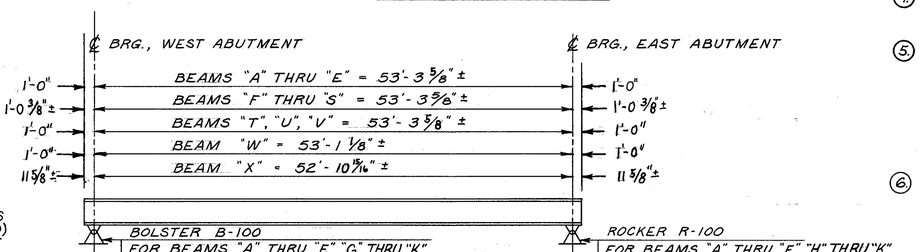

BEAM ELEVATIONS

NOTE: IF EXISTING ROCKERS OR BOLSTERS ARE DEEMED UNSALVAGABLE BY THE ENGINEER, THEY SHALL BE REPLACED AND PAID FOR UNDER ITEM 516 BEARING DEVICE, MISC. SEE THE NOTE ON SHEET 20/23 FOR DESCRIPITION OF WORK.

NOTES

1. PAYMENT FOR THE REPLACEMENT OF EXISTING CROSS-FRAMES SHALL BE INCLUDED WITH ITEM 513, STRUCTURAL STEEL (AISC CATEGORY I)
2. FOR PROP. BEAMS THE ROCKERS AND BOLSTERS SHALL BE AS PER STANDARD DWG. (RB-1-55)
3. WHERE A SHAPE OR PLATE IS DESIGNATED (CVN) THE MATERIAL SHALL MEET SPECIFIED MINIMUM NOTCH TOUGHNESS REQUIREMENTS AS SPECIFIED IN 711.01 OF CMS.
4. FOR INTERMEDIATE CROSSFRAME DETAILS REFER TO SHTS 18/23 19/23 AND 20/23
5. WELDED ATTACHMENT OF SUPPORTS FOR CONCRETE DECK FINISHING MACHINE MAY BE MADE TO THE TOP FLANGE OF THE FASCIA STRINGER. FILLET WELDS SHALL BE NOT CLOSER THAN 1" FROM EDGE OF FLANGE, BE NOT MORE THAN 2" LONG, AND BE NOT SMALLER THAN THE MINIMUM SIZE REQUIRED BY AASHTO.
6. PROVIDE 13/16" STEEL SHIM @ THESE BEARINGS. INCLUDED WITH STRUCTURAL STEEL FOR PAYMENT. SEE SHEET 18/23 FOR DETAILS.
7. FOR ADDITIONAL NOTES SEE SHEET 18/23
8. PAYMENT FOR REMOVAL OF EXISTING CROSSFRAMES SHALL BE INCLUDED WITH ITEM 202, PORTIONS OF STRUCTURES REMOVED FOR PAYMENT.

McCOY ASSOCIATES INC. 17/23
CONSULTING ENGINEERS
AKRON, OHIO

FRAMING PLAN & DETAILS

BRIDGE NO. SUM 76-1332
AKRON EAST EXPRESSWAY
OVER SEIBERLING STREET

DESIGNED	DRAWN	TRACED	CHECKED	REVIEWED	DATE	REVISED
RPL	DAK		TAB	MSC	3-29-88	

FHWA REGION	STATE	PROJECT	
5	OHIO		

1155
12.14

SUMMIT COUNTY
SUM 76-11.57

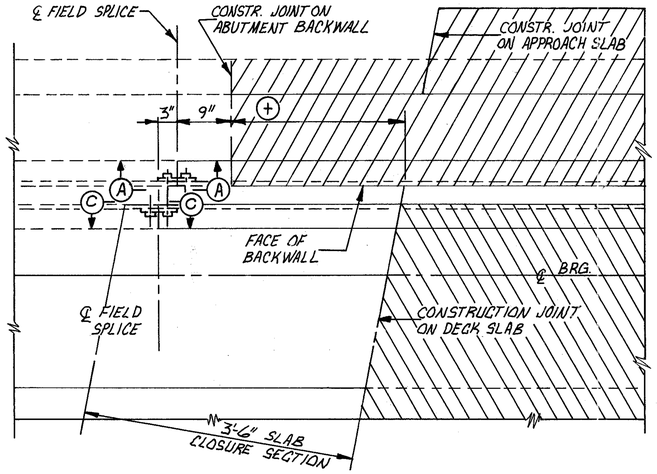

EXPANSION JOINT SPLICING DETAIL

FOR ADDITIONAL DETAILS SEE STD. DWG. EXJ-2-81

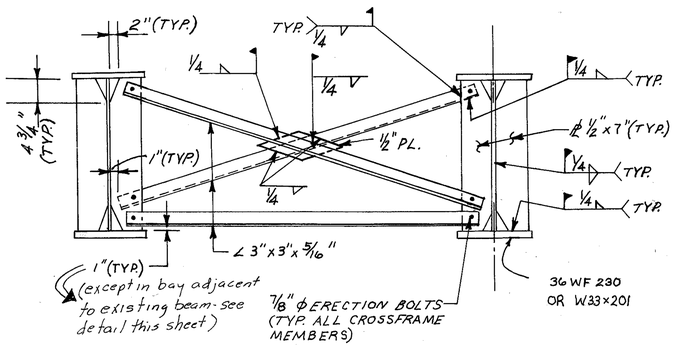

CROSSFRAME AND STIFFENER DETAILS - NEW BEAMS

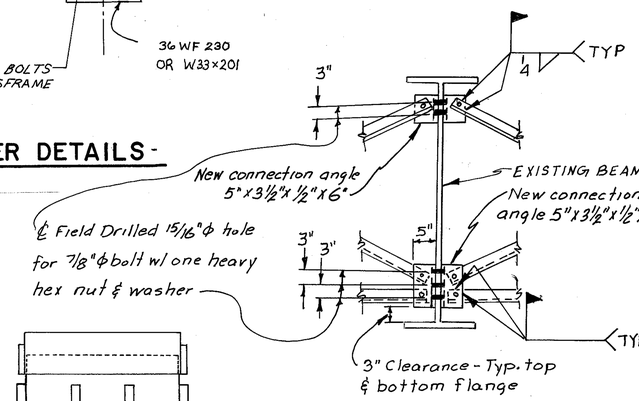

CROSSFRAME CONNECTIONS - EXISTING BEAMS

NOTES

1. REFERENCE SHALL BE MADE TO STD. DWG. EXJ-2-81 AND SD-1-69 FOR DETAILS OF END CROSSFRAMES AND EXPANSION JOINTS. Seal size shall be 4" in lieu of the 5" size shown in the std. dwg.
2. INSTALLATION OF SEAL: DURING INSTALLATION OF THE SUPPORT/ARMOR FOR THE SUPERSTRUCTURE SIDE OF THE EXPANSION JOINT SEAL, THE SEATING OF BEAMS ON BEARINGS SHALL BE CAREFULLY OBSERVED TO ASSURE THAT POSITIVE BEARING IS MAINTAINED. PROPER VERTICAL FIT OF THE SUPPORT/ARMOR ON THE BEAMS SHALL BE ACHIEVED BY POSITIONING OF THE BEVEL FILL PLATES RATHER THAN BY CLAMPING FORCE.
3. PAYMENT FOR TRIMMING EXISTING BEAM "A" SHALL BE PAID FOR UNDER ITEM 513 TRIMMING OF BEAM END. AN ADDITIONAL QUANTITY OF 5 EACH HAS BEEN INCLUDED IN ITEM 513 TRIMMING OF BEAM END TO BE USED AS DIRECTED BY THE ENGINEER.
4. DIMENSION "A" SHALL BE EQUAL TO 3" PLUS OR MINUS ADJUSTMENT DTA AS PER STD DWG. EXJ-2-81.
5. FOR END CROSSFRAME DETAILS NOT SHOWN, SEE STANDARD DRAWINGS EXJ-2-81 AND SD-1-69.

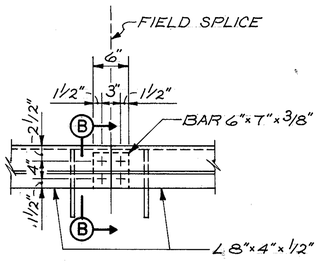

SECTION A-A

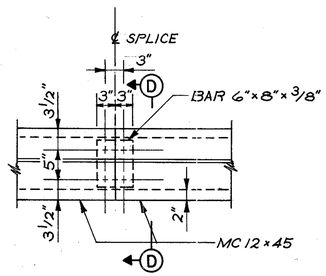

SECTION C-C

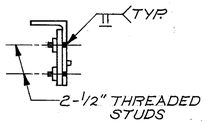

SECTION B-B

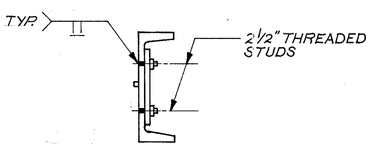

SECTION D-D

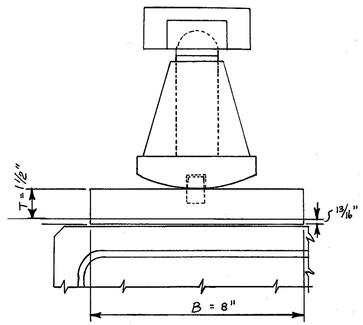

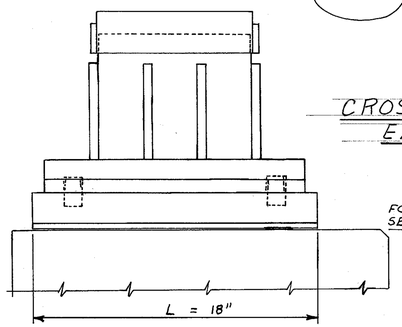

SHIM PLATE DETAIL (BEAMS "L" & "M")

ROCKER SHOWN, BOLSTER SIMILAR

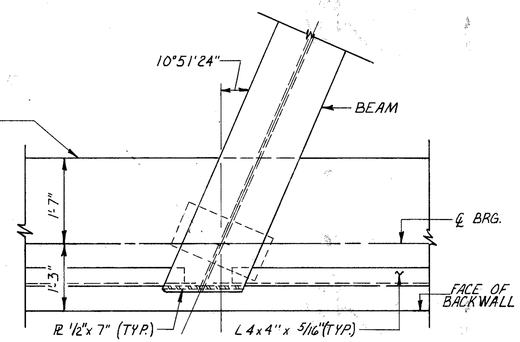

SECTION E-E

⊕ 2'-0 3/8" N.W. ABUTMENT
1'-6 3/8" S.W. ABUTMENT
1'-6 5/8" N.E. ABUTMENT
2'-0" S.E. ABUTMENT

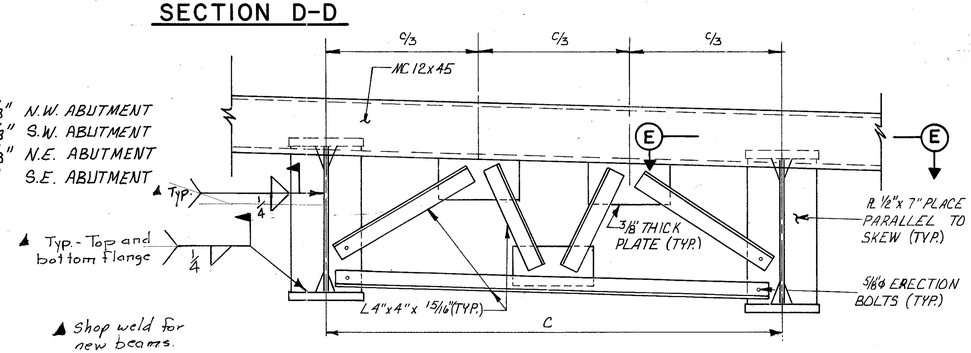

END CROSSFRAME DETAILS

McCOY ASSOCIATES INC. 18/23
CONSULTING ENGINEERS
AKRON, OHIO

SUPERSTRUCTURE DETAILS

BRIDGE NO. SUM 76 1332
AKRON EAST EXPRESSWAY
OVER SEIBERLING STREET

DESIGNED	DRAWN	TRACED	CHECKED	REVIEWED	DATE	REVISED
TAB	JM		JMH	MSC	3-29-88	

FHWA REGION	STATE	PROJECT	
5	OHIO		

1156
1214

SUMMIT COUNTY
SUM 76-11.57

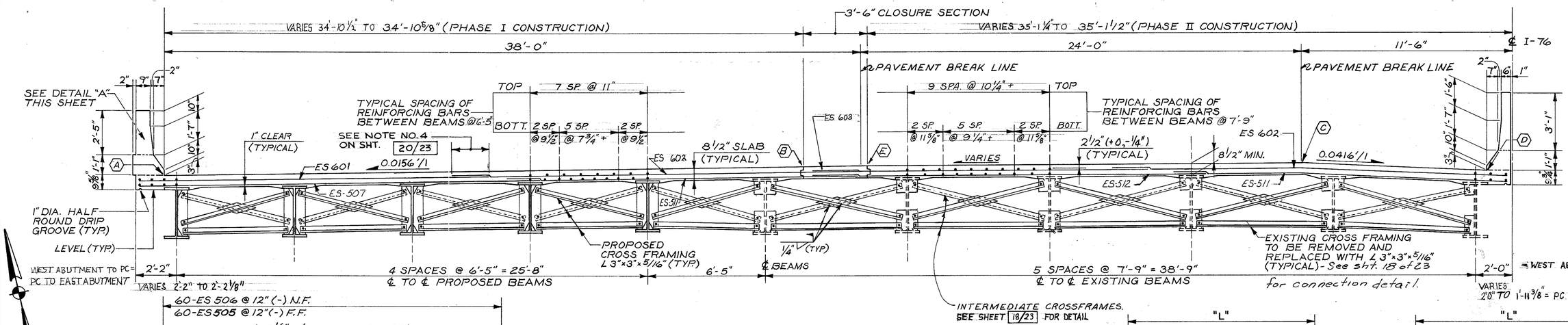

TRANSVERSE SECTION
WEST BOUND LANE STRUCTURE

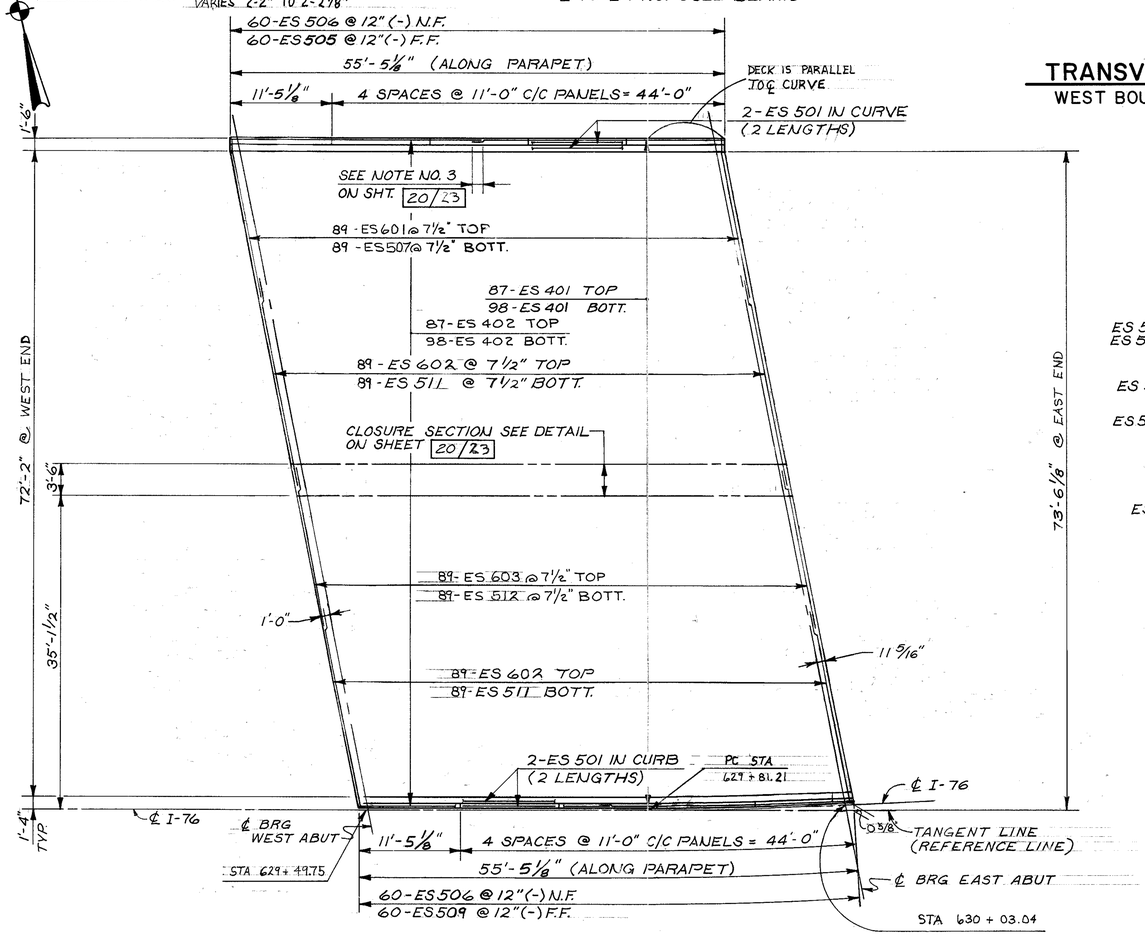

SLAB PLAN
WEST BOUND LANE STRUCTURE

DETAIL "A"
SEE TYPICAL PARAPET PANEL DETAIL THIS SHEET.

FOR CONCRETE SEALER LIMITS SEE SHT. 3/23.

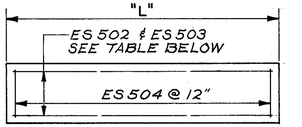

TYPICAL PARAPET PANEL

NO. OF PARAPET PANELS	LENGTH "L"	BAR MARK	NO. OF ES BARS PER PANEL
8	11'-0"	ES502	6
1	11'-5⅛"	ES503	6
8	11'-0"	ES504	12
1	11'-5⅛"	ES504	12
1	10'-11⅜"	ES502	6
1	10'-11⅜"	ES504	12

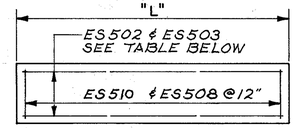

TYPICAL MEDIAN BARRIER PANEL

NO. OF MEDIAN PANELS	LENGTH "L"	BAR MARK	NO. OF ES BARS PER PANEL
8	11'-0"	ES502	4
2	11'-5⅛"	ES503	4
8	11'-0"	ES510	12
2	11'-5⅛"	ES510	12
8	11'-0"	ES508	12
2	11'-5⅛"	ES508	12

NOTES
(L) FOR NOTES SEE SHEET 20/23

TABLE OF SCREED ELEVATIONS

LOCATION	Ⓐ	Ⓑ	Ⓒ	Ⓓ	Ⓔ
℄ BRG W. ABUT	1025.23	1025.81	1025.96	1025.54	1025.76
¼ PT.	1025.22	1025.80	1025.97	1025.55	1025.75
½ PT.	1025.18	1025.74	1025.95	1025.52	1025.69
¾ PT.	1025.10	1025.65	1025.88	1025.46	1025.61
℄ BRG E. ABUT	1025.00	1025.54	1025.79	1025.36	1025.49

THE ELEVATIONS SHOWN ARE ON TOP OF PORTLAND CEMENT CONCRETE AND ARE THOSE WHICH ARE REQUIRED BEFORE THE CONCRETE IS PLACED. PROPER ALLOWANCE HAS BEEN MADE FOR DEAD LOAD DEFLECTIONS CAUSED BY THE WEIGHT OF THE CONCRETE.

McCOY ASSOCIATES INC. 19/23
CONSULTING ENGINEERS
AKRON, OHIO

TRANSVERSE SECTION & SLAB PLAN - W.B.

BRIDGE NO. SUM 76-1332
AKRON EAST EXPRESSWAY
OVER SEIBERLING STREET

DESIGNED	DRAWN	TRACED	CHECKED	REVIEWED	DATE	REVISED
RGS	JM		TAB	MSC	3-29-88	

FHWA REGION	STATE	PROJECT	
5	OHIO		

1157
12/14

SUMMIT COUNTY
SUM 76-11.57

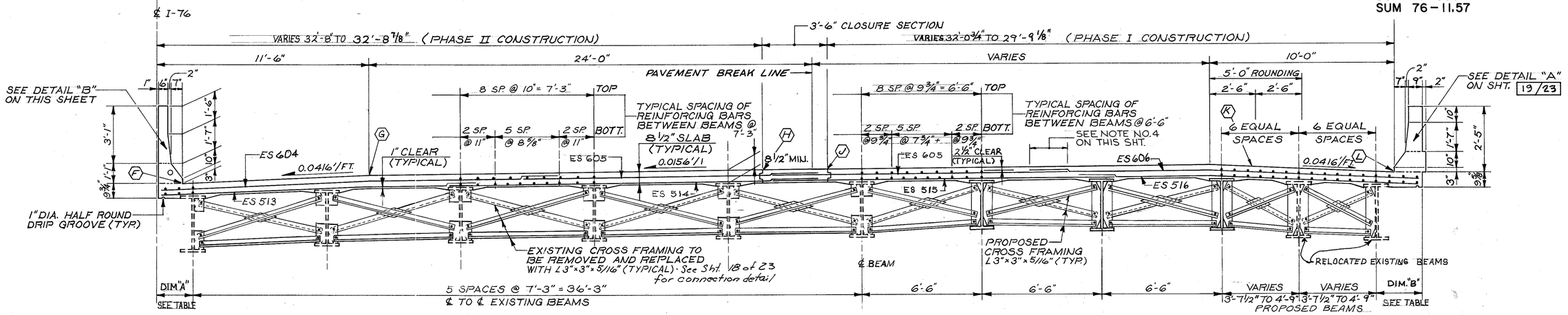

TRANSVERSE SECTION
EAST BOUND LANE STRUCTURE

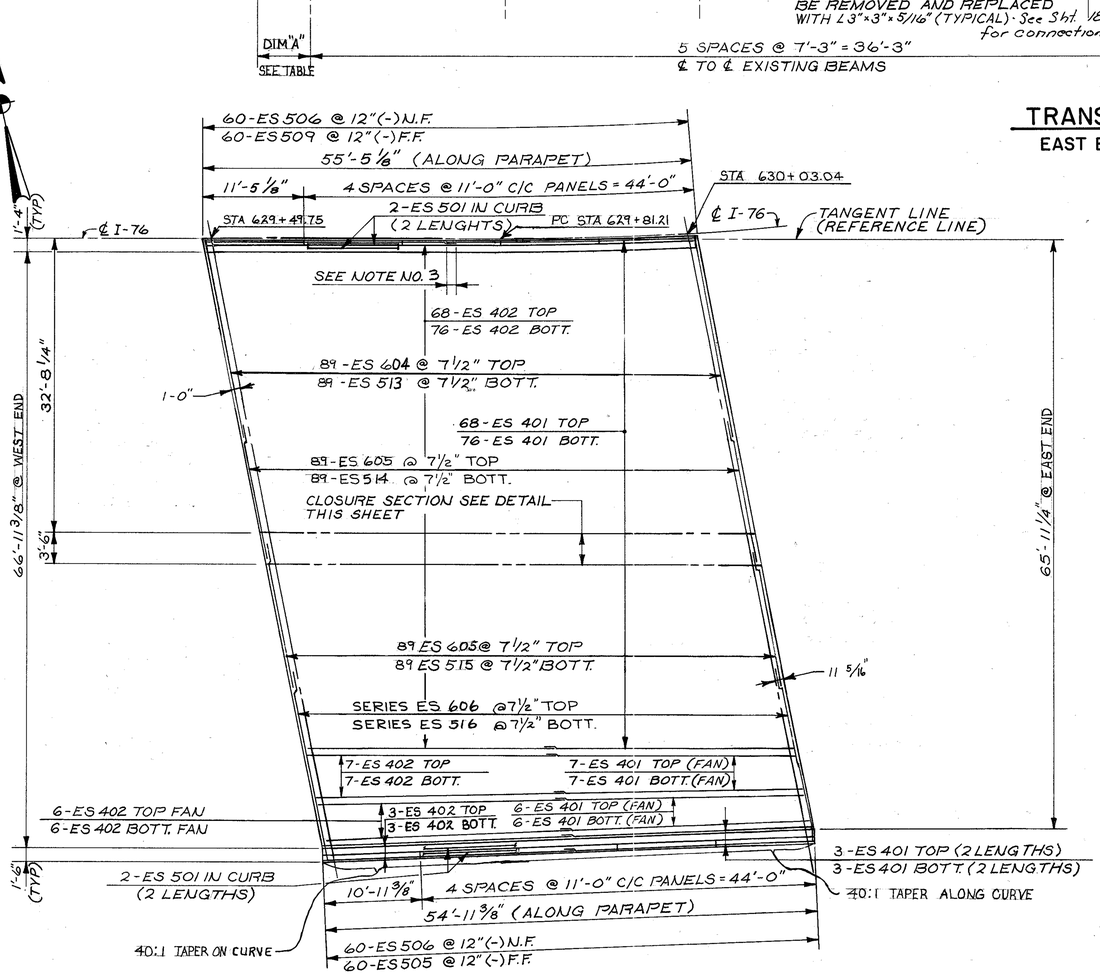

SLAB PLAN
EAST BOUND LANE STRUCTURE

TABLE OF SLAB OFF SETS (℄ BEAM TO EDGE OF SLAB)					
LOCATION / DESCRIPTION	℄ BRG. WEST ABUT.	1/4 POINT	1/2 POINT	3/4 POINT	℄ BRG. EAST ABUT.
DIM "A"	2'-0"	2'-0"	2'-0"	2'-0 1/4"	2'-0 5/8"
DIM "B"	2'-6"	2'-6 1/4"	2'-6 5/8"	2'-6 1/4"	2'-6"

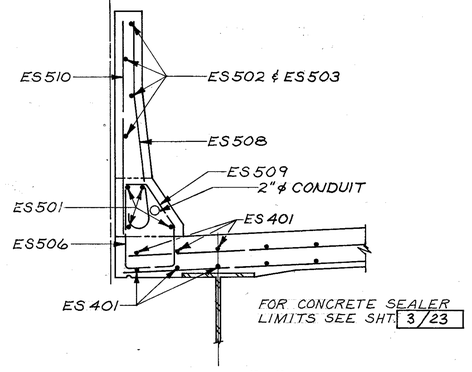

DETAIL "B"
SEE TYPICAL MEDIAN BARRIER DETAIL ON SHEET 19/23

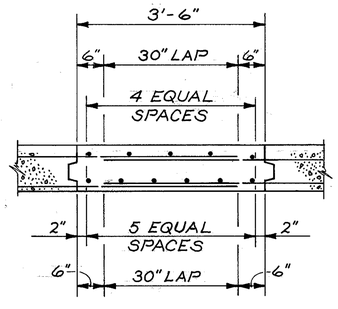

CLOSURE SECTION DETAIL

NOTES

1. A HAUNCH WIDTH OF 9" SHALL BE USED FOR COMPUTING QUANTITY OF CONCRETE HOWEVER, THE HAUNCH WIDTH MAY VARY BETWEEN 6" AND 12"
2. FOR ADDITIONAL DETAILS, REFERENCE SHALL BE MADE TO SHEET NO. 19/23
3. FOR LONGITUDINAL REINFORCING MIN. BAR LAPS ARE AS FOLLOWS:
   NO. 4 = 1'-0"
   NO. 5 = 1'-4"
   UNLESS OTHERWISE SHOWN
4. FOR TRANSVERSE REINFORCING: MIN. BAR LAPS ARE AS FOLLOWS.
   NO. 5 = 1'-8"
   NO. 6 = 2'-0"
   UNLESS OTHERWISE SHOWN
5. TRANSVERSE AND LONGITUDINAL REINFORCEMENT SHALL BE FIELD BENT AS REQUIRED. PAYMENT SHALL BE INCLUDED WITH ITEM 509, REINFORCING STEEL.
6. FOR ADDITIONAL LIGHTING CONDUIT SEE SHEET 700
7. THE DISTANCE SHOWN FROM TOP OF CLASS "S" CONCRETE TO TOP OF STEEL BEAM IS THE DESIGN DIMENSION. THE QUANTITY OF DECK CONCRETE TO BE PAID FOR SHALL BE BASED ON THIS DIMENSION, EVEN THOUGH DEVIATION FROM IT MAY BE NECESSARY BECAUSE THE TOP FLANGE OF THE BEAM MAY NOT HAVE THE EXACT CAMBER OR CONFIRMATION REQUIRED TO PLACE IT PARALLEL TO THE FINISHED GRADE.

TABLE OF SCREED ELEVATIONS						
LOCATION	(F)	(G)	(H)	(J)	(K)	(L)
℄ BRG W ABUT	1025.54	1025.96	1026.29	1026.34	1026.48	1026.18
1/4 PT	1025.55	1025.96	1026.28	1026.33	1026.54	1026.22
1/2 PT.	1025.52	1025.93	1026.25	1026.29	1026.55	1026.24
3/4 PT.	1025.45	1025.86	1026.17	1026.23	1026.53	1026.21
℄ BRG E. ABUT	1025.36	1025.76	1026.07	1026.13	1026.49	1026.18

THE ELEVATIONS SHOWN ARE ON TOP OF PORTLAND CEMENT CONCRETE AND ARE THOSE WHICH ARE REQUIRED BEFORE THE CONCRETE IS PLACED. PROPER ALLOWANCE HAS BEEN MADE FOR DEAD LOAD DEFLECTIONS CAUSED BY THE WEIGHT OF THE CONCRETE.

McCOY ASSOCIATES INC.
CONSULTING ENGINEERS
AKRON, OHIO

20/23

TRANSVERSE SECTION & SLAB PLAN - E.B.

BRIDGE NO. SUM 76-1332
AKRON EAST EXPRESSWAY
OVER SEIBERLING STREET

DESIGNED	DRAWN	TRACED	CHECKED	REVIEWED	DATE	REVISED
RGS	JM		TAB	MSC	3-29-88	

REINFORCING SCHEDULE

FHWA REGION	STATE	PROJECT	
5	OHIO		

1158
1214

SUMMIT COUNTY
SUM 76-11.57

MARK	No. REQ'D.	LENGTH	TYPE	DIMENSIONS A	B	C	D	INCRM.	WEIGHT LBS.
WEST ABUTMENT									
R 1001	14	23'-6"	ST.						1,416
SERIES	1 SET	25'-8" TO		18'-0" TO	1'-6" TO	7'-6" TO			
R 1002	OF 14	25'-6"	10	21'-0"	0'-6"	4'-6"		1/8"	1,541
R 1003	3	17'-6"	ST.						226
R 1004	2	25'-6"	ST.						219
SERIES	1 SET	23'-10" TO							
R 1006	OF 4	24'-4"	ST.					2"	415
R 901	3	20'-0"	5	17'-6"					204
R 902	8	15'-7"	16	8"	1'-6"	12'-0"	6'-3"		424
R 903	8	20'-7"	16	6"	1'-6"	16'-9"	8'-5"		560
R 904	4	17'-0"	4	15'-9"					231
R 905	8	18'-8"	1	2'-0"	17'-0"				508
R 906	8	12'-8"	1	2'-0"	11'-0"				345
R 907	4	10'-6"	ST.						143
R 908	27	8'-6"	11	1'-7"	7'-3"				780
R 909	27	12'-6"	ST.						1,148
SERIES	1 SET	21'-10" TO		19'-4" TO					
R 910	OF 8	23'-0"	5	20'-6"				2"	610
SERIES	1 SET	20'-0"		17'-6" TO					
R 911	OF 15	21'-9"	5	19'-3"				1½"	1,065
R 912	11	19'-0"	5	16'-6"					711
SERIES	1 SET	20'-6" TO		18'-0" TO					
R 913	OF 10	22'-6"	5	20'-0"				2 5/8"	731
SERIES	1 SET	19'-6" TO		17'-0" TO					
R 914	OF 4	20'-6"	5	18'-0"				4"	272
SERIES	1 SET	18'-6" TO	5	16'-8" TO					
R 801	OF 25	21'-10"		20'-0"				1 5/8"	1346
SERIES	1 SET	17'-0" TO							
R 805	OF 19	20'-6"	ST.					2 3/8"	951
R 806	12	21'-6"	ST.						689
R 807	3	17'-6"	ST.						140
R 808	7	18'-10"	5	17'-0"					352
R 809	19	12'-0"	ST.						609
R 810	19	5'-10"	1	1'-0"	5'-0"				296
R 811	2	23'-4"	ST.						125
SERIES	1 SET	21'-6" TO							
R 812	OF 5	23'-4"	ST.					5½"	299
SERIES	1 SET	18'-10" TO		17'-0" TO					
R 813	OF 19	22'-4"	5	20'-6"				1"	1044
R 701	13	11'-4"	2	1'-8"	5'-0"				301
R 702	3	19'-3"	ST.						118
R 703	13	13'-0"	ST.						345
R 704	4	18'-0"	ST.						147

MARK	No. REQ'D.	LENGTH	TYPE	DIMENSIONS A	B	C	D	INCRM.	WEIGHT LBS.
R 603	10	18'-0"	ST.						270
R 604	12	6'-0"	ST.						108
R 605	10	19'-3"	ST.						289
R 606	12	5'-6"	10	3'-8"	1'-1"	1'-8"			99
R 607	11	10'-0"	ST.						165
R 501	75	6'-10"	1	1'-0"	6'-0"				535
R 502	31	14'-0"	ST.						453
R 503	14	18'-0"	ST.						263
R 504	26	20'-5"	ST.						554
SERIES	1 SET	4'-1" TO	2	1'-4" TO	1'-6"			7/8"	83
R 505	OF 17	5'-3"		2'-6"					
R 507	19	3'-2"	11	1'-8"	1'-8"	4"			63
R 514	12	8'-0"	10	3'-8"	3'-0"	3'-4"			100
R 518	14	15'-10"	ST.						231
R 521	10	22'-5"	ST.						234
R 522	2	17'-11"	ST.						37
R 537	20	12'-8"	ST.						264
SERIES	4 SETS	4'-6" TO							
R 538	OF 4	12'-9"	ST.					33"	144
R 539	8	13'-6"	ST.						113
SERIES	2 SETS	11'-2" TO			4'-0" TO				
R 540	OF 15	24'-8"	20	1'-8"	10'-9"	1'-0"		5 3/4"	561
R 541	13	6'-9"	10	2'-4"	3'-0"	3'-4"			92
R 543	17	24'-4"	10	23'-0"	1'-6"	3"			431
R 548	18	16'-8"	ST.						313
R 549	11	10'-0"	ST.						115
R 550	12	4'-0"	ST.						50
R 551	4	23'-0"	ST.						96
R 553	8	7'-8"	2	8"	3'-7"				64
R 554	12	15'-8"	3	1'-2"	13'-9"	1'-0"			196
R 555	15	13'-2"	1	1'-4"	12'-0"				206
R 556	6	14'-5"	26	1'-2"	11'-2"	1'-2"	1'-0"		90
R 557	8	21'-0"	ST.						175
R 558	26	5'-4"	15	1'-8"	2'-2"	6"	1'-8"		145
R 559	2	7'-4"	15	3'-4"	2'-6"	10"	1'-8"		15
R 560	2	6'-3"	15	2'-5"	2'-4"	8"	1'-8"		13
							TOTAL =		24,878
EPOXY COATED									
ER 802	5	19'-6"	ST.						260
ER 803	5	23'-0"	ST.						307
ER 804	98	5'-4"	13	2'-7"	1'-5"	1'-0"			1,396
ER 601	18	3'-11"	7	9"	6"	8"	2'-5"		106
ER 506	30	7'-8"	2	3'-11"	2'-0"				240
ER 508	20	8'-4"	2	1'-5"	3'-7"				174
ER 509	146	7'-0"	2	1'-5"	2'-11"				1,066
ER 510	146	6'-6"	2	11"	2'-11"				990
ER 511	12	20'-4"	ST.						254
ER 512	12	14'-2"	ST.						177
ER 513	24	18'-6"	ST.						463
ER 515	10	8'-6"	14	2'-0"	2'-6"				89
ER 516	84	3'-2"	1	1'-6"	1'-9"				277
ER 517	2	14'-4"	32	2'-0"	5'-8"	6"	5'-2"		30

MARK	No. REQ'D.	LENGTH	TYPE	DIMENSIONS A	B	C	D	INCRM.	WEIGHT LBS.
ER 525	18	2'-9"	ST.						52
ER 526	18	6'-8"	34	8"	2'-7"	8"	3'-0"		125
ER 528	10	12'-8"	ST.						132
ER 532	16	1'-2"	ST.						19
ER 533	4	3'-1"	7	6"	5"	8"	2'-0"		13
ER 534	4	2'-5"	ST.						10
ER 535	4	3'-10"	ST.						16
ER 536	4	4'-5"	4"	3'-10"					18
ER 542	22	7'-2"	2	1'-5"	3'-0"				164
ER 544	12	21'-6"	ST.						269
ER 545	12	15'-5"	ST.						193
ER 546	24	19'-8"	ST.						492
ER 547	11	3'-6"	ST.						40
ER 552	10	10'-4"	ST.						108
				EPOXY COATED TOTAL =					1,480
				WEST ABUTMENT TOTAL =					32,358

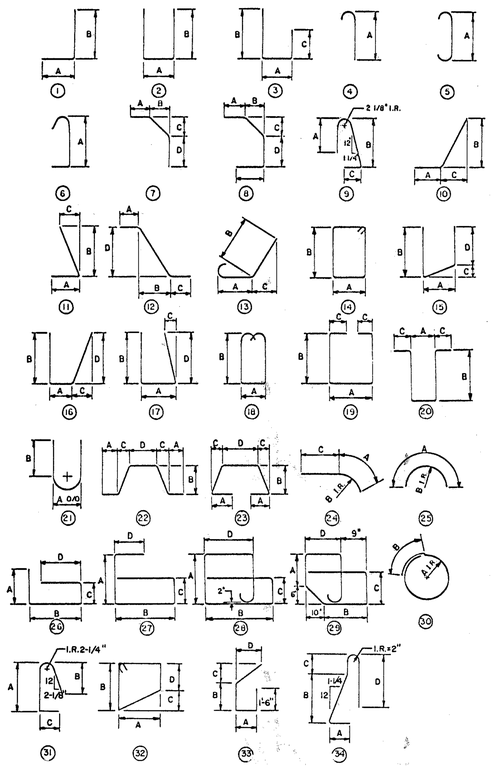

NOTES:

(1) REINFORCING STEEL SAMPLES REFER TO CMS SECTIONS 106.03, 700, 709.01 THROUGH 709.05 AND 709.08. SUFFICIENT ADDITIONAL REINFORCING STEEL SHALL BE PROVIDED FOR SAMPLING. RANDOM SAMPLES SHALL BE REPLACED IN THE STRUCTURES BY THE ADDITIONAL STEEL, SPLICED IN ACCORDANCE WITH 509.08.

McCOY ASSOCIATES, INC. 21/23
CONSULTING ENGINEERS
AKRON, OHIO

REINFORCING SCHEDULE

BRIDGE NO. SUM 76-1332
AKRON-EAST EXPRESSWAY
OVER SEIBERLING STREET

DESIGNED	DRAWN	TRACED	CHECKED	REVIEWED	DATE	REVISED
JBH	J.W.D.		MAM	JBH	7-1889	

73776

REINFORCING SCHEDULE

FHWA REGION	STATE	PROJECT	
5	OHIO		

11.59 / 12.14

SUMMIT COUNTY
SUM 76-11.57

MARK	No. REQ'D.	LENGTH	TYPE	DIMENSIONS A	B	C	D	INCRM.	WEIGHT - LBS.
EAST ABUTMENT									
SERIES	1 SET	29'-0" TO							
F 1001	OF 5	29'-8"	ST.					2"	631
SERIES	1 SET	27'-1" TO		21'-0" TO	1'-0"	6'-0"			
F 1002	OF 13	29'-1"	10	23'-0"				2"	1,571
F 1003	4	28'-10"	ST.						496
F 1004	6	24'-2"	ST.						624
F 1005	11	24'-4"	10	19'-4"	8"	5'-0"			1,152
F 1006	2	17'-6"	ST.						151
SERIES	1 SET	23'-10" TO		21'-4" TO					
F 901	OF 6	24'-6"	5	22'-0"				1½"	493
F 902	12	15'-7"	16	8"	1'-6"	12'-0"	6'-3"		636
F 903	12	20'-7"	16	6"	1'-6"	16'-9"	8'-5"		840
F 904	6	17'-0"	4	15'-9"					347
F 905	3	23'-4"	5	20'-10"					238
SERIES	1 SET	20'-0" TO		17'-6" TO					
F 906	OF 21	23'-4"	5	20'-10"				2"	1,547
F 907	3	19'-6"	5	17'-0"					199
F 908	10	19'-0"	5	16'-6"					646
SERIES	1 SET	20'-0" TO		17'-6" TO					
F 909	OF 10	22'-0"	5	19'-6"				2 5/8"	714
SERIES	1 SET	19'-2" TO		16'-8" TO					
F 910	OF 5	19'-10"	5	17'-4"				2"	332
F 911	8	18'-8"	1	2'-0"	17'-0"				508
F 912	8	12'-8"	1	2'-0"	11'-0"				345
F 913	4	12'-0"	ST.						163
SERIES	1 SET	16'-8" TO							
F 801	OF 30	22'-4"	ST.					2 3/8"	1,562
SERIES	1 SET	28'-8" TO							
F 802	OF 5	29'-8"	ST.					3"	389
F 803	4	28'-0"	ST.						299
F 804	14	28'-2"	ST.						1053
F 808	18	24'-0"	ST.						1,153
F 809	51	12'-0"	ST.						1,634
F 810	51	5'-10"	ST.						794
F 701	39	11'-4"	2	1'-8"	5'-0"				903

MARK	No. REQ'D.	LENGTH	TYPE	DIMENSIONS A	B	C	D	INCRM.	WEIGHT LBS.
F 601	10	26'-9"	ST.						402
F 602	24	5'-0"	ST.						180
F 604	10	17'-6"	ST.						263
F 605	27	11'-0"	ST.						446
F 501	62	6'-10"	1	1'-0"	6'-0"				442
F 502	19	16'-7"	ST.						329
F 503	18	12'-0"	ST.						225
F 504	16	6'-5"	10	2'-1"	3'-0"	3'-4"			107
F 506	24	26'-9"	ST.						670
F 507	17	3'-0"	11	1'-6"	1'-8"	4"			53
F 509	13	5'-8"	15	2'-0"	2'-2"	6"	1'-8"		77
F 510	1	7'-1"	15	3'-2"	2'-5"	9"	1'-8"		7
F 511	1	8'-1"	15	4'-0"	2'-7"	11"	1'-8"		8
F 512	2	8'-5"	15	4'-3"	2'-8"	12"	1'-8"		18
F 524	5	17'-11"	26	1'-2"	15'-0"	1½"	1'-0"		93
F 525	2	14'-6"	ST.						30
F 526	12	19'-5"	3"	1'-2"	17'-6"	1'-0"			243
F 527	15	15'-8"	1	1'-4"	14'-6"				245
F 528	12	5'-3"	ST.						66
F 529	8	7'-9"	2	8"	3'-8"				65
F 530	19	20'-10"	ST.						413
F 531	2	10'-6"	ST.						22
F 532	12	13'-6"	ST.						169
SERIES	6 SETS	4'-6" TO							
F 533	OF 4	12'-9	ST.					2'-9"	216
SERIES	3 SETS	11'-2" TO			4'-0" TO				
F 534	OF 15	24'-8"	20	1'-8"	10'-9"	1'-0"		11½"	841
F 536	12	8'-0"	10	3'-8"	3'-4"	3'-0"			100
F 537	9	21'-0"	ST.						197
F 538	19	22'-5"	10	21'-0"	1'-6"	2"			444
F 540	15	18'-0"	ST.						282
F 541	14	13'-6"	ST.						197
F 542	13	5'-4"	15	2'-0"	1'-11"	3"	1'-8"		72
F 543	1	5'-8"	15	3'-2"	2'-1"	5"	1'-8"		6
F 544	1	6'-7"	15	4'-0"	2'-2"	6"	1'-8"		7
F 545	4	6'-10"	15	4'-3"	2'-2"	6"	1'-8"		29
F 554	5	13'-2"	26	2'-0"	9'-4"	1'-2"	1'-0"		69
F 555	16	12'-2"	1	1'-4"	11'-0"				203
F 556	13	15'-5"	3	1'-2"	13'-6"	1'-0"			209
								TOTAL =	26,865
EPOXY COATED									
EF 805	5	26'-9"	ST.						357
EF 806	94	5'-4"	13	2'-7"	1'-5"	1'-0"			1,339
EF 807	5	20'-0"	ST.						267

MARK	No. REQ'D.	LENGTH	TYPE	DIMENSIONS A	B	C	D	INCRM.	WEIGHT LBS.
EF 603	20	3'-11"	7	9"	6"	8"	2'-5"		118
EF 505	32	8'-0"	2	4'-3"	2'-0"				267
EF 508	12	26'-0"	ST.						325
EF 513	95	7'-6"	2	1'-5"	3'-2"				743
EF 514	97	7'-0"	2	1'-5"	2'-11"				708
EF 515	145	6'-4"	2	11"	2'-10"				958
EF 516	31	3'-9"	ST.						121
EF 517	12	10'-11"	ST.						137
EF 518	24	19'-10"	ST.						496
EF 519	68	3'-0"	1	1'-6"	1'-8"				213
EF 520	10	8'-6"	14	2'-0"	2'-6"				89
EF 521	1	9'-0"	32	2'-0"	3'-0"	6"	2'-6"		9
EF 522	20	6'-8"	34	8"	2'-7"	8"	3'-0"		139
EF 523	10	14'-11"	ST.						156
EF 535	10	11'-0"	ST.						115
EF 539	12	20'-6"	ST.						257
EF 546	1	8'-6"	32	2'-0"	2'-8"	3"	2'-5"		9
EF 547	24	18'-6"	ST.						463
EF 548	12	11'-9"	ST.						147
EF 549	4	4'-5"	4	3'-10"					18
EF 550	4	3'-10"	ST.						16
EF 551	4	3'-0"	7	6"	5"	8"	2'-0"		12
EF 552	4	2'-5"	ST.						10
EF 553	16	1'-2"	ST.						19
				EPOXY COATED TOTAL =					7,508
				EAST ABUTMENT TOTAL =					34,373

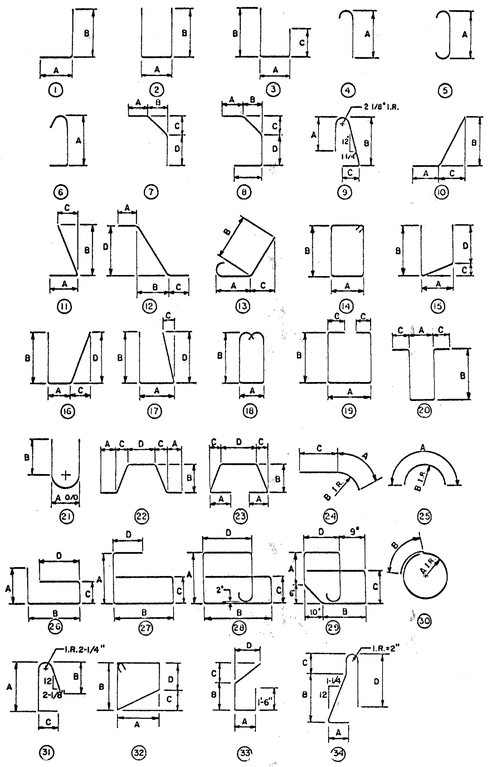

NOTES

SEE NOTE 1 ON SHEET 21/23

McCOY ASSOCIATES, INC. 22/23
CONSULTING ENGINEERS
AKRON, OHIO

REINFORCING SCHEDULE

BRIDGE NO. SUM 76-1332
AKRON EAST EXPRESSWAY
OVER SEIBERLING STREET

DESIGNED	DRAWN	TRACED	CHECKED	REVIEWED	DATE	REVISED
JBH	J.W.D.		MAM	JBH	7-10-89	

73178

REINFORCING SCHEDULE

FHWA REGION	STATE	PROJECT	
5	OHIO		

1160
1214

SUMMIT COUNTY
SUM 76-11.57

MARK	No. REQ'D.	LENGTH	TYPE	DIMENSIONS A	B	C	D	INCRM.	WEIGHT LBS.

MARK	No. REQ'D.	LENGTH	TYPE	DIMENSIONS A	B	C	D	INCRM.	WEIGHT LBS.

MARK	No. REQ'D.	LENGTH	TYPE	DIMENSIONS A	B	C	D	INCRM.	WEIGHT LBS.
SUPERSTRUCTURE									
			EPOXY COATED						
ES 601	89	18'-6"	ST.						2,473
ES 602	89	22'-0"	ST.						2,941
ES 603	178	18'-0"	ST.						4,812
ES 604	89	21'-10"	ST.						2,919
ES 605	178	16'-3"	ST.						4,345
SERIES	1 SET	20'-2" TO							
ES 606	OF 89	22'-5"	ST.					3/8"	2,846
ES 501	32	28'-2"	ST.						940
ES 502	86	10'-8"	ST.						957
ES 503	14	11'-0"	ST.						161
ES 504	120	6'-8"	34	8"	2'-7"	8"	3'-0"		834
ES 505	120	4'-0"	8	9"	6"	8"	9"		501
ES 506	240	2'-3"	1	10"	1'-6"				563
ES 507	89	22'-0"	ST.						2042
ES 508	120	3'-4"	4	2'-9"					417
ES 509	120	2'-6"	8	4"	7"	10"	7"		313
ES 510	120	3'-11"	ST.						490
ES 511	178	18'-6"	ST.						3,435
ES 512	89	20'-6"	ST.						1,903
ES 513	89	17'-8"	ST.						1,640
ES 514	89	20'-2"	ST.						1,872
ES 515	89	18'-8"	ST.						1,733
SERIES	1 SET	17'-0" TO							
ES 516	OF 89	19'-3"	ST.					5/16"	1,682
ES 401	361	30'-0"	ST.						7,234
ES 402	361	26'-0"	ST.						6,270
	NON	EPOXY	COATED	=	0				
		EPOXY	COATED	=	53,323				

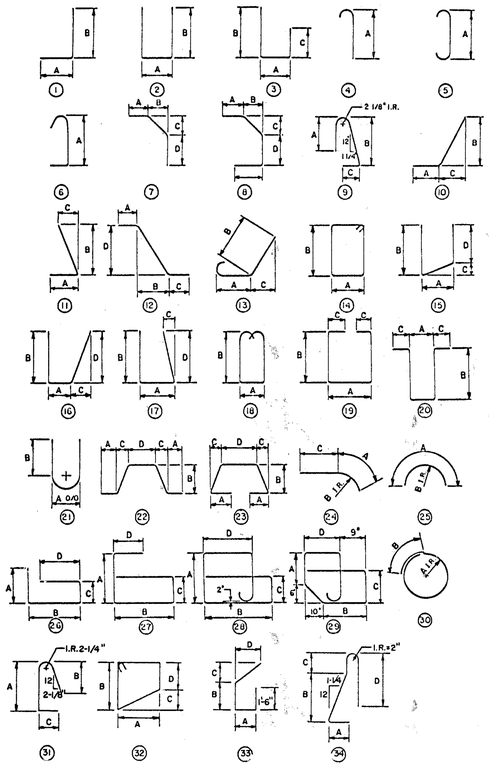

NOTES:

SEE NOTE 1 ON SHEET 21/23

McCOY ASSOCIATES, INC. 23/23
CONSULTING ENGINEERS
AKRON, OHIO

REINFORCING SCHEDULE

BRIDGE NO. SUM 76-1332
AKRON EAST EXPRESSWAY
OVER SEIBERLING STREET

DESIGNED	DRAWN	TRACED	CHECKED	REVIEWED	DATE	REVISED
JBH	J.W.D.		MAM	JBH	7-18-89	

FHWA REGION	STATE	PROJECT	
5	OHIO		

1161
1214

SUM-76-11.57

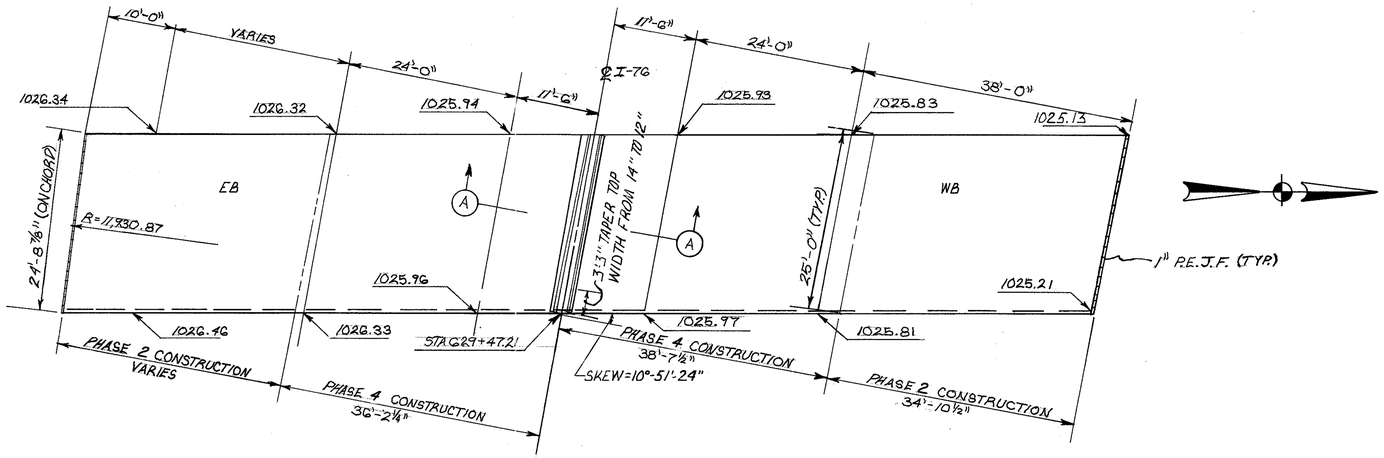

REAR ABUTMENT

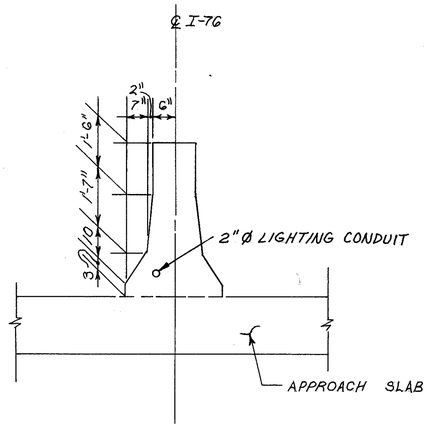

SECTION A-A

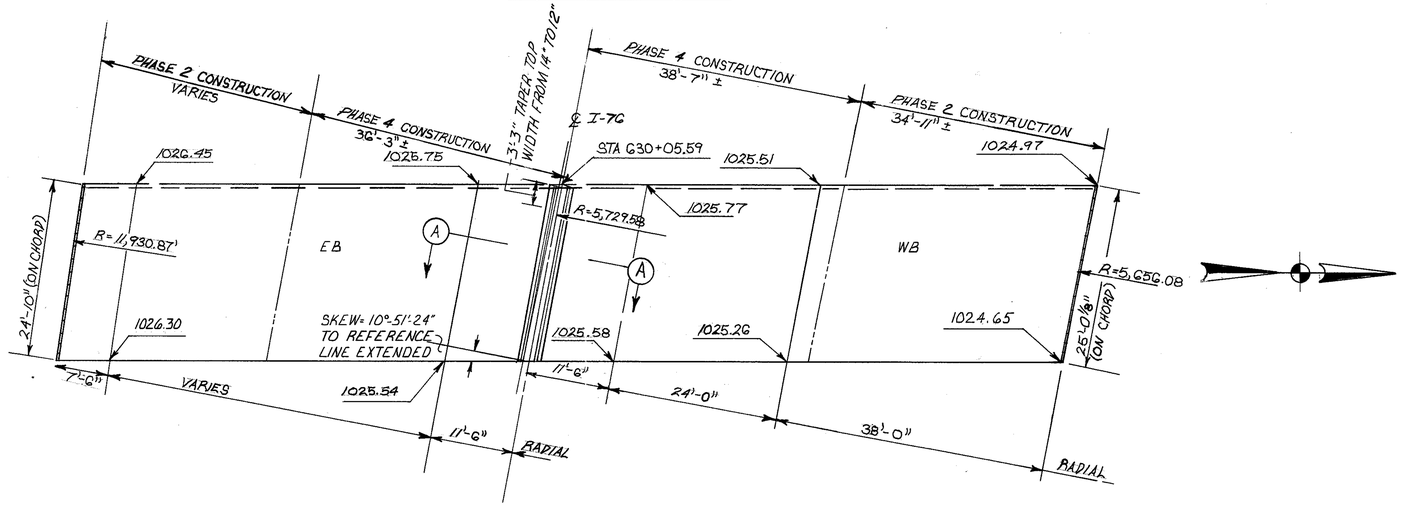

FORWARD ABUTMENT

NOTES

1. FOR ADDITION DETAILS, REINFORCING, AND NOTES SEE STANDARD DRAWINGS AS-1-81, SHEETS 1-3 AND MC-9
2. MEDIAN BARRIER SHALL BE INCLUDED WITH ITEM G22, CONCRETE BARRIER FOR PAYMENT
3. APPROACH SLAB STEEL SHALL BE SPLICED USING APPROVED MECHANICAL CONNECTORS.

McCOY ASSOCIATES, INC.
CONSULTING ENGINEERS
AKRON, OHIO

23A/23

APPROACH SLAB DETAILS

BRIDGE NO. SUM-76-1332
AKRON EAST EXPRESSWAY
OVER SEIBERLING STREET

DESIGNED	DRAWN	TRACED	CHECKED	REVIEWED	DATE	REVISED
JBH	JBH	PNA	MAM	JBH	7-18-88	

320891

FHWA REGION	STATE	PROJECT	
5	OHIO		

1162
12.14

SUMMIT COUNTY
SUM 76-11.57

NOTES

1. FOR ADDITIONAL NOTES SEE SHT. 3/3

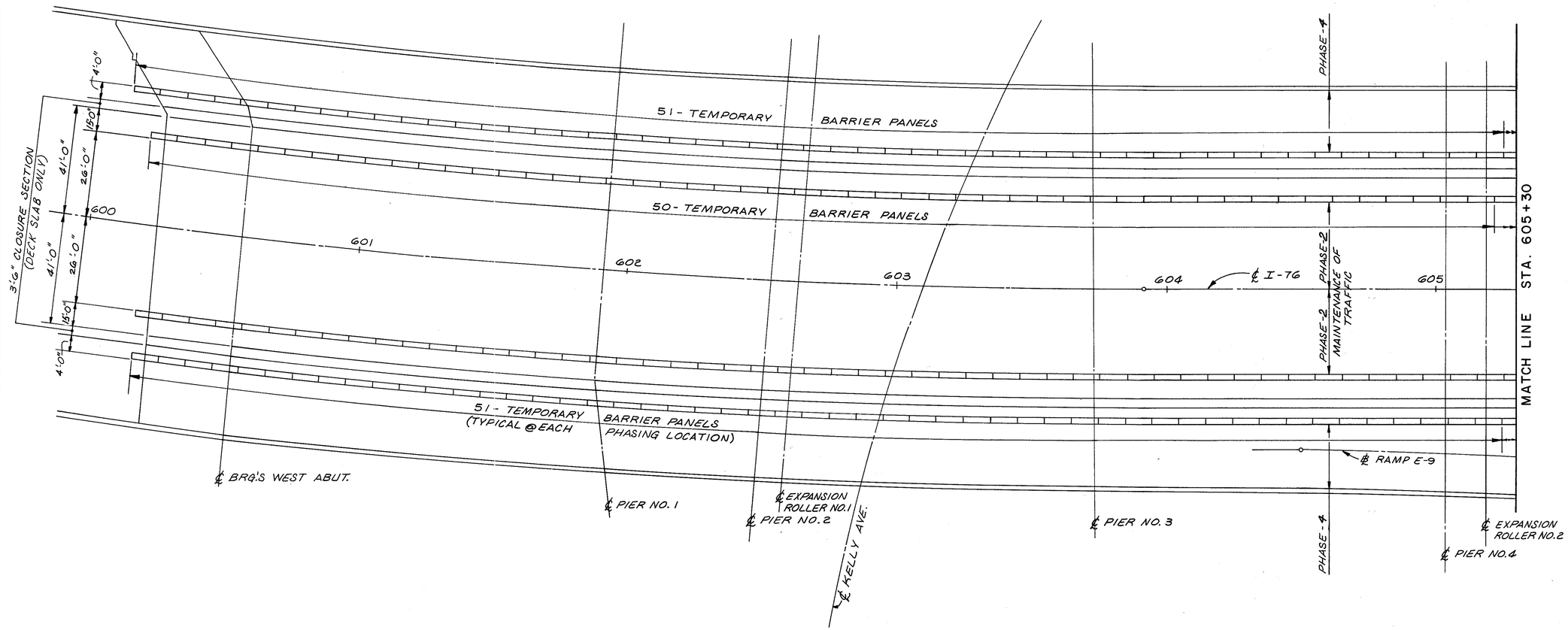

PLAN - SUM 76-12.77

I-76 OVER KELLY AVENUE

McCOY ASSOCIATES INC. 1/3
CONSULTING ENGINEERS
AKRON, OHIO

TEMPORARY BARRIER PLAN & DETAILS

AKRON EAST EXPRESSWAY
BRIDGE NO. SUM 76-12.77
BRIDGE NO. SUM 76-12.96
BRIDGE NO. SUM 76-13.32

DESIGNED	DRAWN	TRACED	CHECKED	REVIEWED	DATE	REVISED
TAB	DAK		JBH	JBH	3-30-89	

FHWA REGION	STATE	PROJECT	
5	OHIO		

1163
12.14

SUMMIT COUNTY
SUM 76-11.57

NOTES

1. FOR ADDITIONAL NOTES SEE SHT. 3 / 3

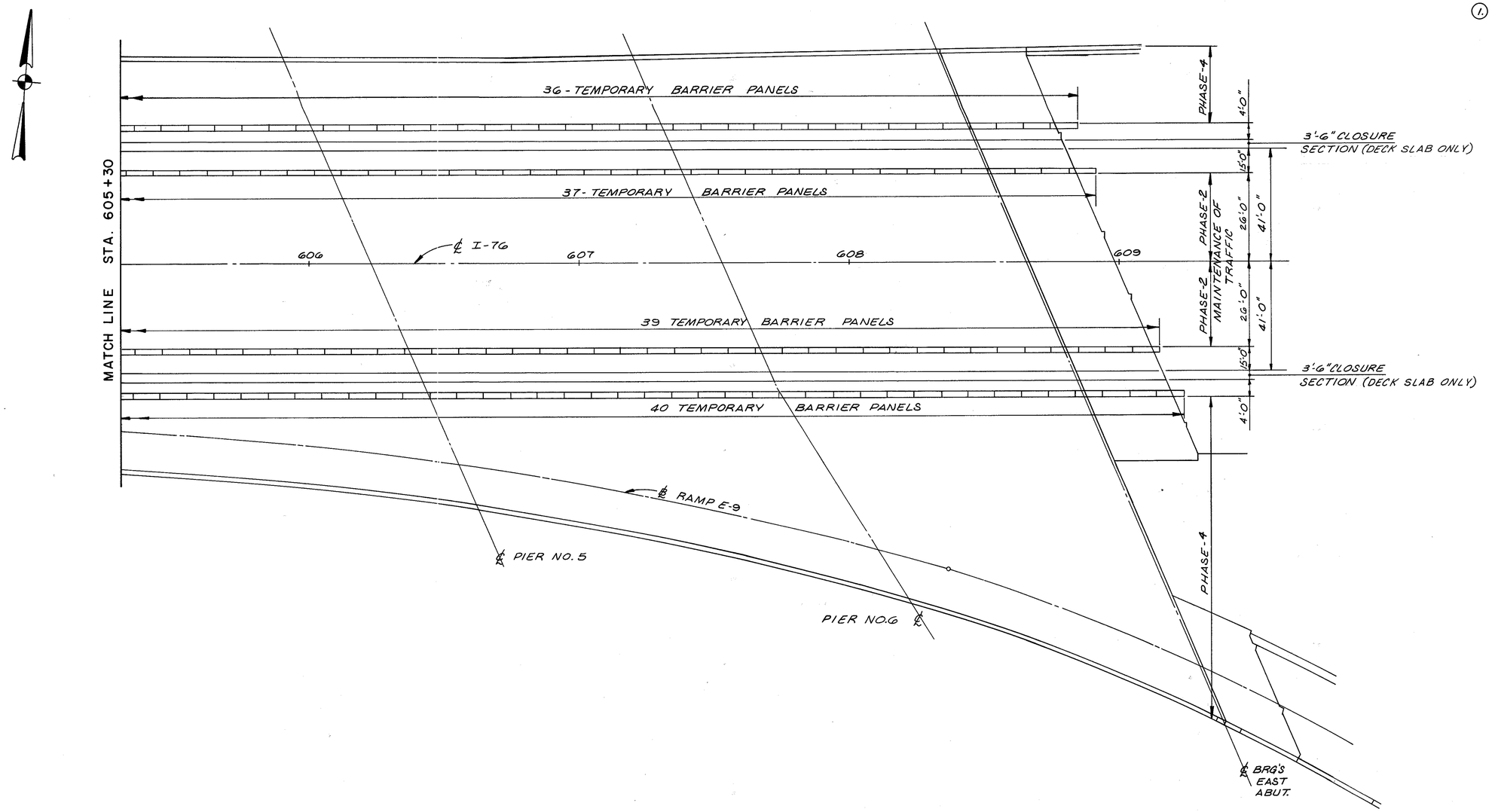

PLAN - SUM 76-12.77

I-76 OVER KELLY AVENUE

McCOY ASSOCIATES INC. 2 / 3
CONSULTING ENGINEERS
AKRON, OHIO

TEMPORARY BARRIER PLAN & DETAILS

AKRON EAST EXPRESSWAY
BRIDGE NO. SUM 76-12.77
BRIDGE NO. SUM 76-12.96
BRIDGE NO. SUM 76-13.32

DESIGNED	DRAWN	TRACED	CHECKED	REVIEWED	DATE	REVISED
TAB	DAK		JBH	JBH	3-30-89	

FHWA REGION	STATE	PROJECT	
5	OHIO		

1164
1214

SUMMIT COUNTY
SUM 76-11.57

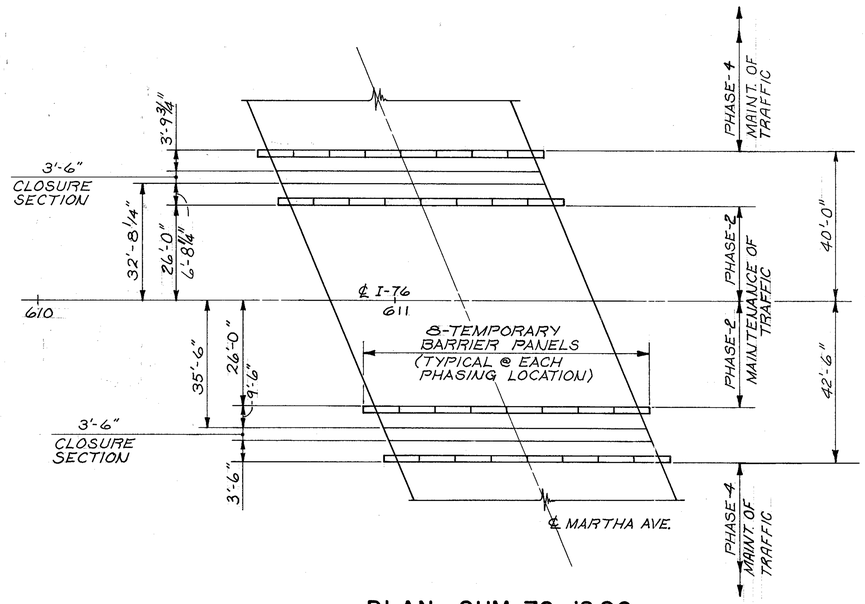

PLAN-SUM 76-12.96
I-76 OVER MARTHA AVENUE

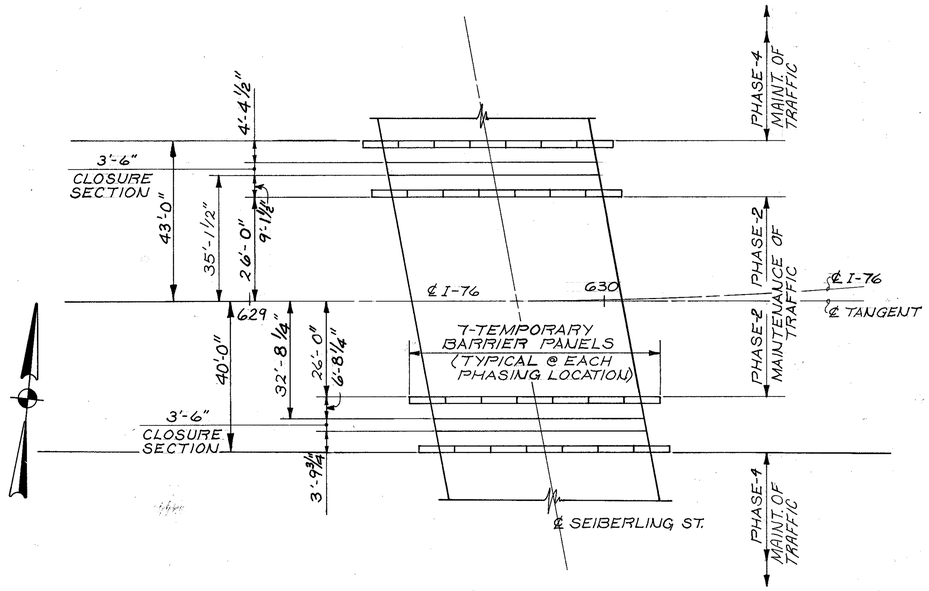

PLAN-SUM 76-13.32
I-76 OVER SEIBERLING STREET

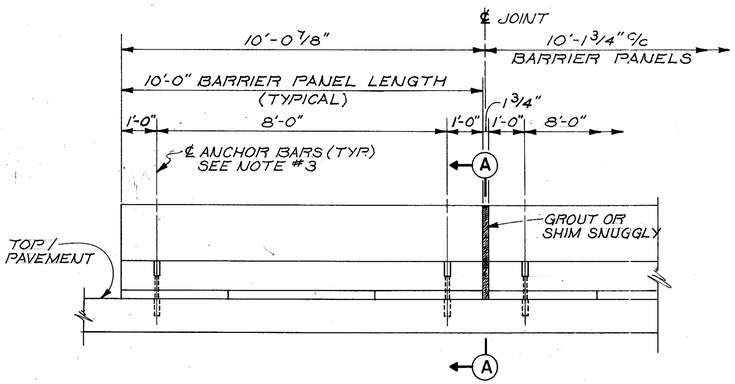

TEMPORARY BARRIER ELEVATION
VIEW FROM TRAFFIC SIDE

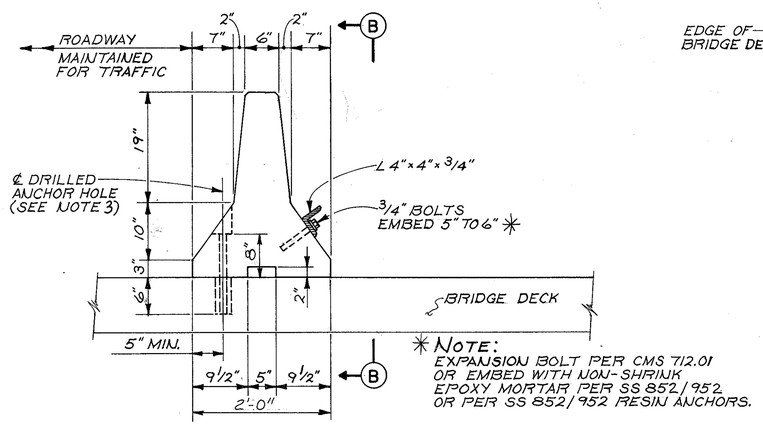

SECTION A-A

✳ NOTE:
EXPANSION BOLT PER CMS 712.01 OR EMBED WITH NON-SHRINK EPOXY MORTAR PER SS 852/952 OR PER SS 852/952 RESIN ANCHORS.

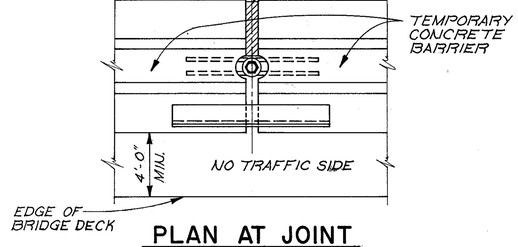

PLAN AT JOINT

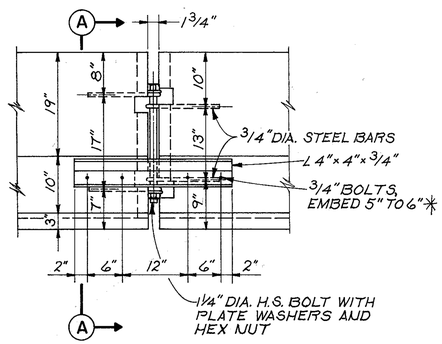

ELEVATION B-B

NOTES

1. ITEM 622, TEMPORARY CONCRETE BARRIER, MODIFIED, IS CARRIED IN THE ROADWAY QUANTITIES.
2. FOR ADDITIONAL DETAILS NOT SHOWN REFER TO STD. DWG. MC-9A.
3. IN ORDER TO ANCHOR THE MODIFIED (EXISTING) BARRIER TO THE BRIDGE DECK, 1¼" MIN. DIAMETER HOLES MUST BE DRILLED THROUGH THE BARRIER TOE AT THE LOCATION SHOWN IN SECTION "A-A". GREAT CARE MUST BE USED IN DRILLING AND INSTALLING THE BARRIER SEGMENTS AS ANY DAMAGE TO THEM WILL BE CONSIDERED CAUSE FOR THEIR REJECTION.

   ALL ANCHORS SHALL BE 1" DIAMETER, HIGH STRENGTH, THRU BOLTS OR APPROVED RESIN ANCHORS. WHEN RESIN ANCHORS ARE USED, THEY MUST BE EMBEDDED A MINIMUM OF 6" INTO FIRM CONCRETE.
4. JOINT CONNECTION NOTES:
   A. BARRIERS SHOULD INITIALLY BE PLACED CLOSE TOGETHER SO THAT BOLTS CAN BE EASILY INSERTED THROUGH HINGE BAR LOOPS.

   B. BARRIER JOINTS MUST BE FULLY OPEN BEFORE NUT IS TIGHTENED ONTO BOLT AND OPENING IS EITHER GROUTED OR SHIMMED.
5. AFTER REMOVAL OF TEMPORARY BARRIER LOCATED ON THE NEW CONCRETE BRIDGE DECK, ANCHOR BARS SHALL BE CUT IN SUCH A MANNER SO THAT ½" DEPTH OF NON-SHRINK GROUT CAN BE FILLED IN HOLE.
6. SEE SHTS. 1/3 & 2/3 FOR PLAN OF SUM 76-12.77, I-76 OVER KELLY AVE.

McCOY ASSOCIATES INC. 3/3
CONSULTING ENGINEERS
AKRON, OHIO

TEMPORARY BARRIER PLAN & DETAILS

AKRON EAST EXPRESSWAY
BRIDGE NO. SUM 76-1277
BRIDGE NO. SUM 76-1296
BRIDGE NO. SUM 76-1332

DESIGNED	DRAWN	TRACED	CHECKED	REVIEWED	DATE	REVISED
TAB	JM		J.D.P.	MBC	2-29-88	

THIS IMPROVEMENT HAS BEEN DECLARED A LIMITED ACCESS HIGHWAY FROM STA. 548+98.7810 STA. 742+70.00 BY ACTION OF THE DIRECTOR OF TRANSPORTATION AND RECORDED IN VOLUME NUMBER 41 PAGE 935 , OF THE DIRECTORS JOURNAL PURSUANT TO LAW.

CENTERLINE SURVEY PLAT

SUM-76-11.57

CITY OF AKRON, SUMMIT COUNTY

ORIGINAL COVENTRY TOWNSHIP

T2N, R11W, TRACT 8, O.L. 4

CALC. BY BJB DATE 3/90	SUM-76-11.57	OHIO
CHKD. BY DSB DATE 3/90	FED. PROJECT IR-76-2(44)19	F.H.W.A. REGION 5

1165 12/4

1 / 49

SUMMIT COUNTY
LIMITED ACCESS
RIGHT OF WAY PLANS

MONUMENT ASSEMBLIES TO BE SET	
STATION	LOCATION
P.O.T. 553+43.40	64' RT. ℄
P.C. 558+15.65	61' RT. ℄
P.T. 569+16.09	52' RT. ℄
TOTAL THIS SHEET 3	
TOTAL MONUMENT ASSEMBLIES TO BE SET 12	

℄ I-76 CURVE NO. 1

CURVE DATA

DELTA	22° 0' 32" RT.
DC	2° 0' 0"
R	2864.79'
LC	1100.44'
T	557.09'
CH	1093.69'
EX(C)	53.66'

STATIONING

MAIN PI STA.	563+72.74
PC STA.	558+15.65
PT STA.	569+16.09

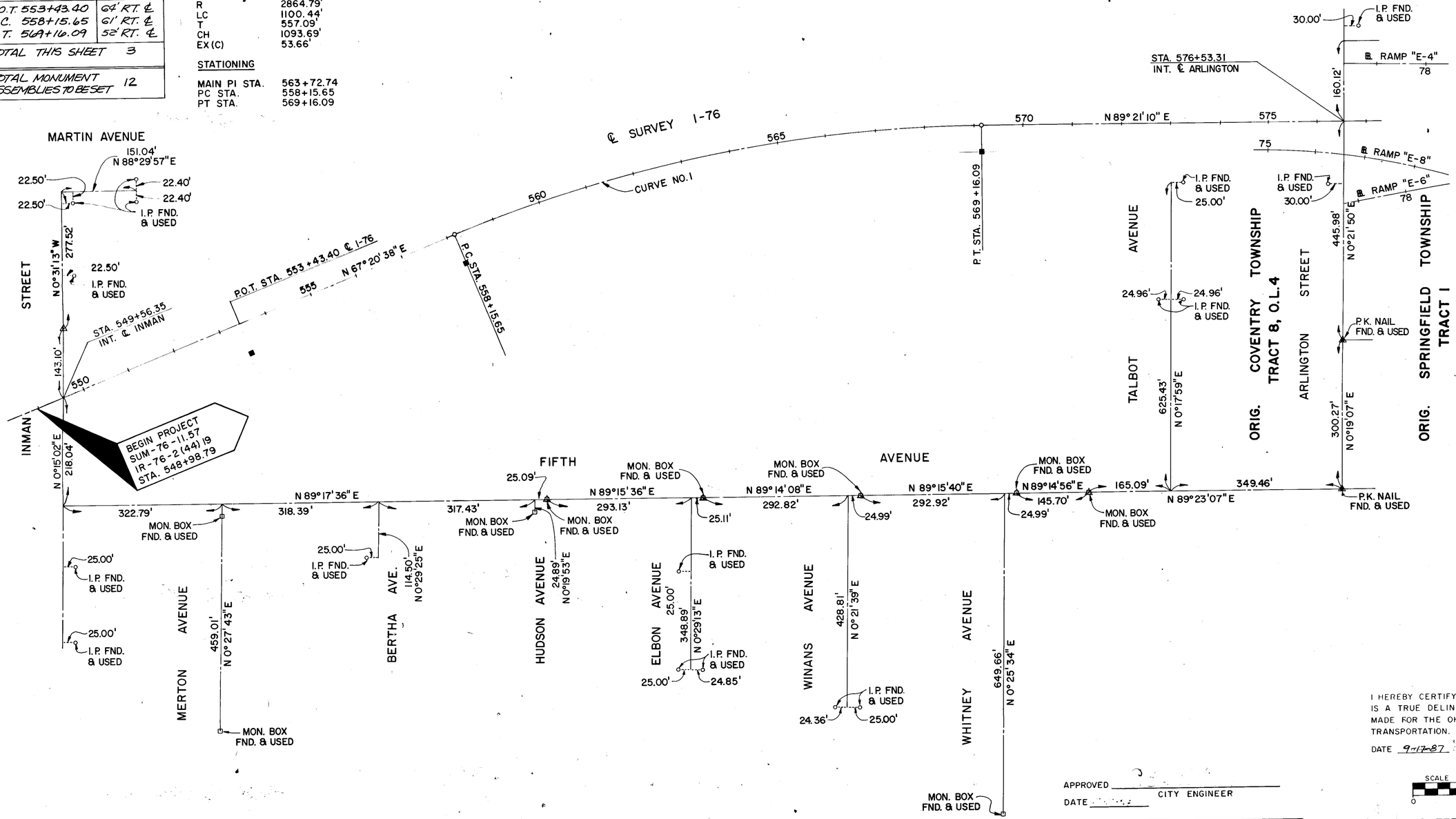

RECORDERS OFFICE

STATE OF OHIO RICHARD E. ROCKWELL 5480 REGISTERED SURVEYOR

SURVEYORS SEAL

I HEREBY CERTIFY THAT THIS PLAT IS A TRUE DELINEATION OF A SURVEY MADE FOR THE OHIO DEPARTMENT OF TRANSPORTATION.

DATE 9-17-87 Richard E. Rockwell REGISTERED SURVEYOR

APPROVED _____ CITY ENGINEER

DATE _____

CERTIFICATE OF APPROVAL

SIGNED BY: _____

DATE: _____ DISTRICT DEPUTY DIRECTOR

SCALE IN FEET 0 100 200 300

SHEET 1 OF 4

CENTERLINE SURVEY PLAT

THIS IMPROVEMENT HAS BEEN DECLARED A LIMITED ACCESS HIGHWAY FROM STA. 548+96.78 TO STA. 742+70.00 BY ACTION OF THE DIRECTOR OF TRANSPORTATION AND RECORDED IN VOLUME NUMBER 41 PAGE 935, OF THE DIRECTORS JOURNAL PURSUANT TO LAW.

MONUMENT ASSEMBLIES TO BE SET	
STATION	LOCATION
P.C. 578+84.95	52' RT. ℄
P.T. 587+19.08	79' RT. ℄
P.C. 593+20.12	69.5' RT. ℄
P.O.C. 599+00.00	69.5' RT. ℄
TOTAL THIS SHEET 4	

CENTERLINE SURVEY PLAT

SUM-76-11.57

CITY OF AKRON, SUMMIT COUNTY
ORIGINAL SPRINGFIELD TOWNSHIP
TIN, R 10 W, TRACT 1

CALC. BY B4B DATE 3/90	SUM-76-11.57	OHIO
CHKD. BY DSB DATE 3/90	FED. PROJECT IR-76-2(44)19	F.H.W.A. REGION 5

1166 / 1214

SUMMIT COUNTY
LIMITED ACCESS
RIGHT OF WAY PLANS

2 / 49

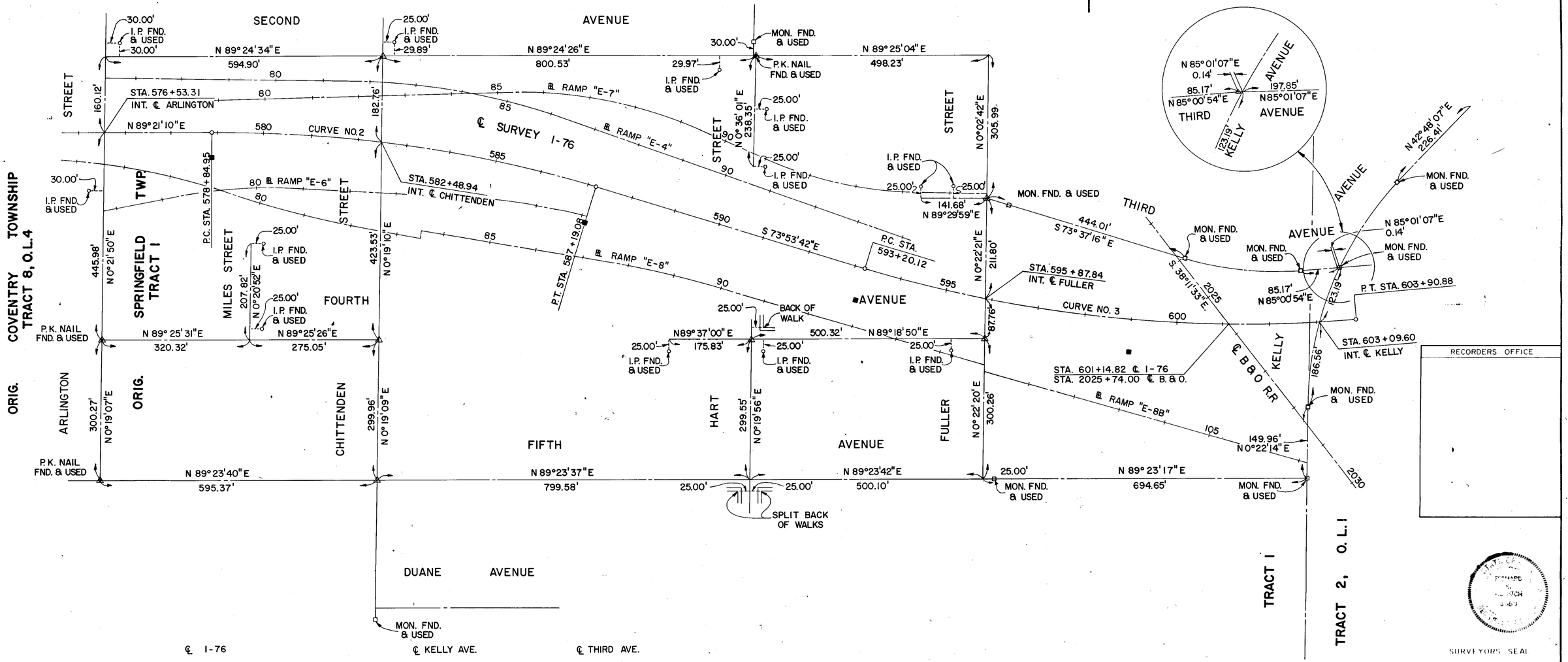

℄ I-76 CURVE NO. 2		CURVE NO. 3		℄ KELLY AVE.		℄ THIRD AVE.	
CURVE DATA		CURVE DATA		CURVE DATA		CURVE DATA	
DELTA	16° 45' 08" RT.	DELTA	21° 08' 51" LT.	DELTA	42° 25' 53" RT.	DELTA	21° 21' 51" LT.
DC	2° 00' 30"	DC	1° 58' 30"	DC	7° 59' 51"	DC	8° 30' 06"
R	2852.90'	R	2901.05'	R	716.43'	R	673.94'
LC	834.14'	LC	1070.76'	LC	530.56'	LC	251.30'
T	420.06'	T	541.54'	T	278.11'	T	127.12'
CH	831.17'	CH	1064.69'	CH	518.52'	CH	249.84'
EX(C)	30.76'	EX(C)	50.11'	EX(C)	52.09'	EX(C)	11.89'
STATIONING		STATIONING					
MAIN PI STA.	583+05.01	MAIN PI STA.	598+61.66				
PC STA.	578+84.95	PC STA.	593+20.12				
PT STA.	587+19.08	PT STA.	603+90.88				

RECORDERS OFFICE

SURVEYORS SEAL

I HEREBY CERTIFY THAT THIS PLAT IS A TRUE DELINEATION OF A SURVEY MADE FOR THE OHIO DEPARTMENT OF TRANSPORTATION.

Richard E. Rockwell

DATE 9-17-87 REGISTERED SURVEYOR

APPROVED _____ CITY ENGINEER

DATE _____

CERTIFICATE OF APPROVAL
SIGNED BY: _____
DATE: _____ DISTRICT DEPUTY DIRECTOR

SCALE IN FEET
0 100 200 300

SHEET 2 OF 4

CENTERLINE SURVEY PLAT

THIS IMPROVEMENT HAS BEEN DECLARED A LIMITED ACCESS HIGHWAY FROM STA. 548+98.78 TO STA. 742+70.00 BY ACTION OF THE DIRECTOR OF TRANSPORTATION AND RECORDED IN VOLUME NUMBER 41 PAGE 935, OF THE DIRECTORS JOURNAL PURSUANT TO LAW.

MONUMENT ASSEMBLIES TO BE SET	
STATION	LOCATION
P.O.T. 610+00.00	69.5' RT. ℄
P.C. 615+54.92	57.5' RT. ℄
P.T. 623+87.75	81' RT. ℄
P.O.T. 628+00.00	69' RT. ℄
TOTAL THIS SHEET	4

CENTERLINE SURVEY PLAT

SUM-76-11.57

CITY OF AKRON, SUMMIT COUNTY
ORIGINAL SPRINGFIELD TOWNSHIP
T IN, R 10 W, TRACT 2, O.L.1

CALC. BY. AHB DATE 3/90	SUM-76-11.57	OHIO	1167 / 1214
CHKD. BY. DSB DATE 3/90	FED. PROJECT IR-76-2(44)19	F.H.W.A. REGION 5	

SUMMIT COUNTY
LIMITED ACCESS
RIGHT OF WAY PLANS

3 / 49

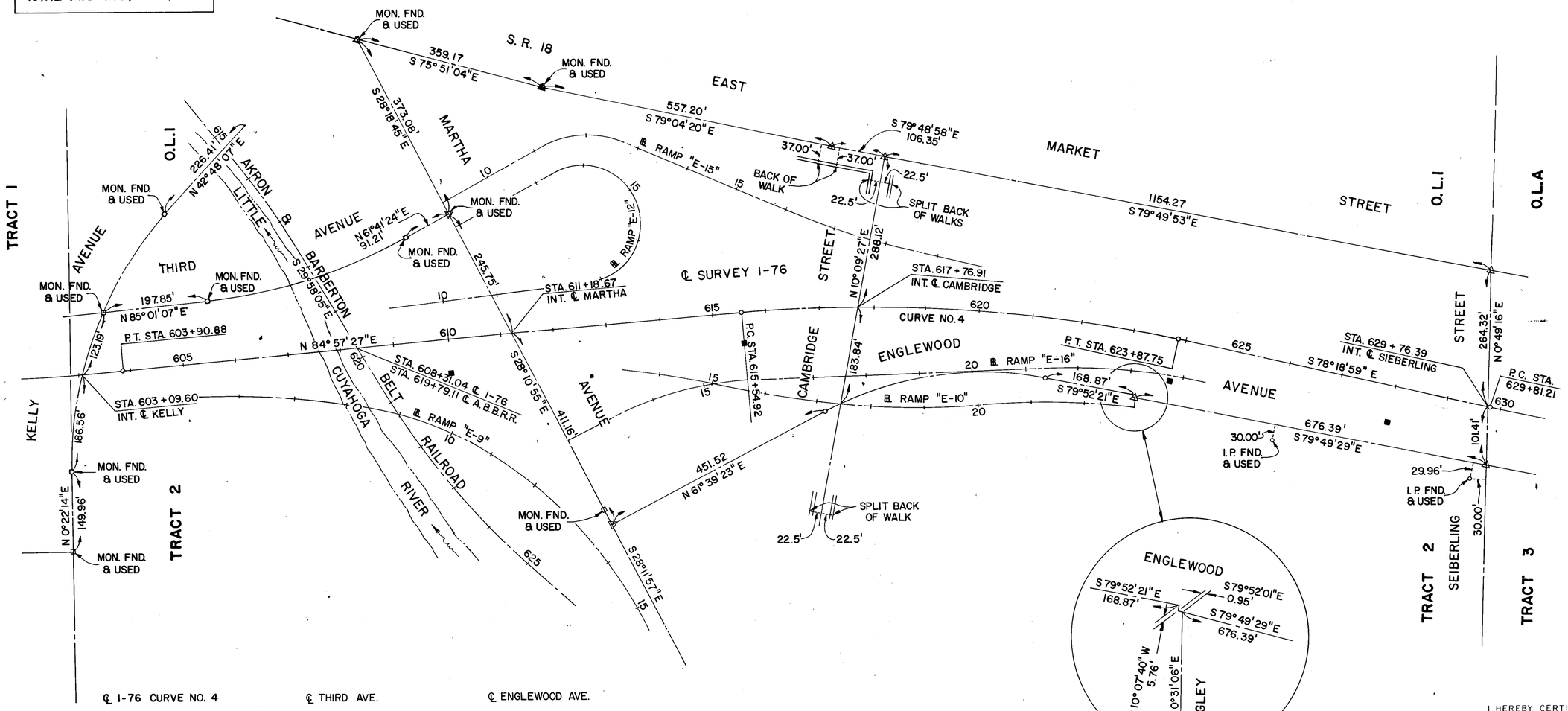

RECORDERS OFFICE

STATE OF OHIO
RICHARD E. ROKICH
5680
REGISTERED SURVEYOR

SURVEYORS SEAL

I HEREBY CERTIFY THAT THIS PLAT IS A TRUE DELINEATION OF A SURVEY MADE FOR THE OHIO DEPARTMENT OF TRANSPORTATION.

DATE 9-17-87 Richard E. Rokich REGISTERED SURVEYOR

SCALE IN FEET
0 100 200 300

SHEET 3 OF 4

CENTERLINE SURVEY PLAT

℄ I-76 CURVE NO. 4

CURVE DATA

DELTA	16° 43' 34" RT.
DC	2° 00' 30"
R	2852.90'
LC	832.84'
T	419.40'
CH	829.88'
EX (C)	30.66'

STATIONING

MAIN PI STA.	619+74.32
PC STA.	615+54.92
PT STA.	623+87.75

℄ THIRD AVE.

CURVE DATA

DELTA	23° 19' 43" LT.
DC	5° 59' 57"
R	955.08'
LC	388.87'
T	197.17'
CH	386.19'
EX(C)	20.14'

℄ ENGLEWOOD AVE.

CURVE DATA

DELTA	38° 28' 15" RT.
DC	8° 59' 38"
R	637.05'
LC	427.75'
T	222.29'
CH	419.76'
EX(C)	37.67'

APPROVED _____ CITY ENGINEER

DATE _____

CERTIFICATE OF APPROVAL
SIGNED BY: _____
DATE: _____ DISTRICT DEPUTY DIRECTOR

THIS IMPROVEMENT HAS BEEN DECLARED A LIMITED ACCESS HIGHWAY FROM STA. 548+98.78 TO STA. 742+70.00 BY ACTION OF THE DIRECTOR OF TRANSPORTATION AND RECORDED IN VOLUME NUMBER 41 PAGE 935 OF THE DIRECTORS JOURNAL PURSUANT TO LAW.

MONUMENT ASSEMBLIES TO BE SET	
STATION	LOCATION
P.O.C. 631+00.00	59' RT. ℄
TOTAL THIS SHEET 1	

CENTERLINE SURVEY PLAT

SUM-76-11.57

CITY OF AKRON, SUMMIT COUNTY
ORIGINAL SPRINGFIELD TOWNSHIP
T1N, R10W, TRACT 3, O.L.1

CALC. BY BHB DATE 3/90	SUM-76-11.57	OHIO
CHKD. BY DSB DATE 3/90	FED. PROJECT IR-76-2(44)19	F.H.W.A. REGION 5

1168 / 1214

SUMMIT COUNTY
LIMITED ACCESS
RIGHT OF WAY PLANS

4 / 49

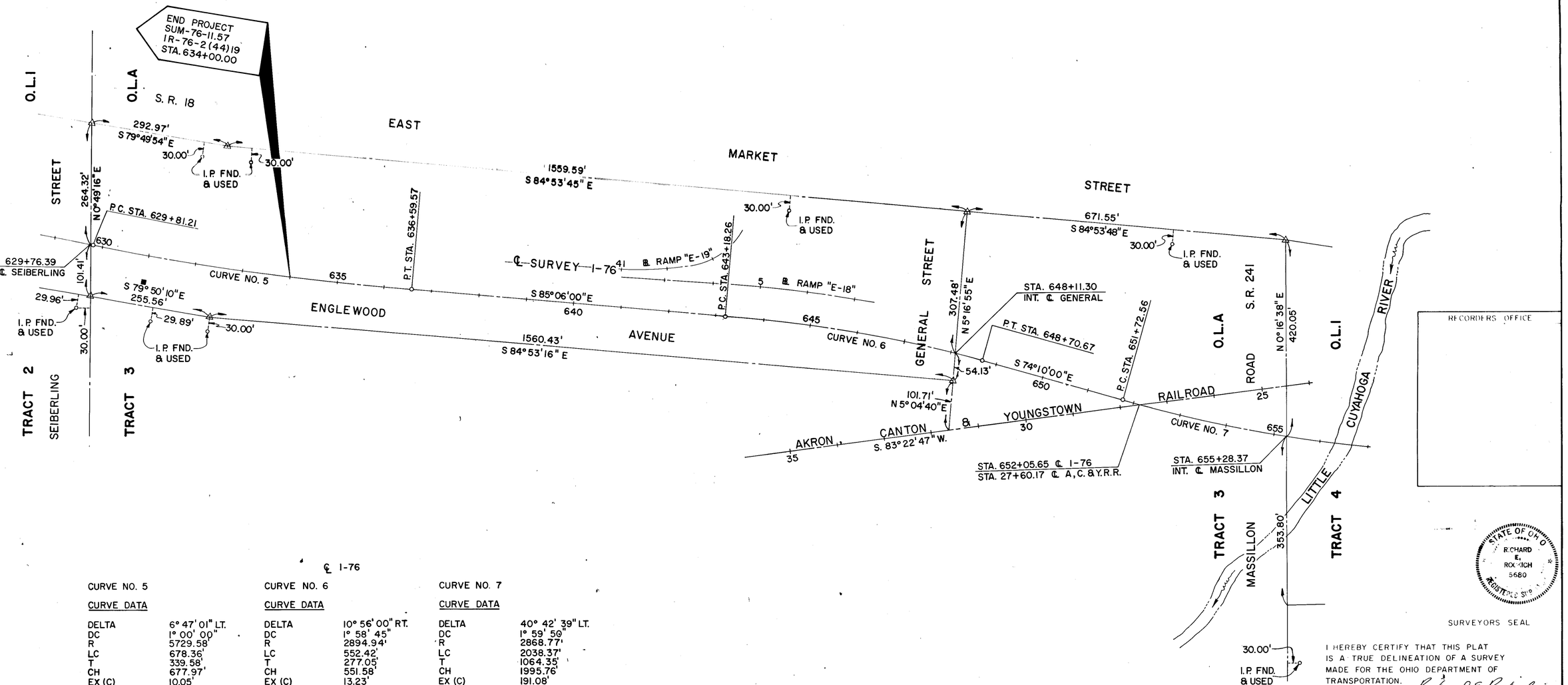

RECORDERS OFFICE

STATE OF OHIO
RICHARD E. ROCKICH
5680
REGISTERED SURVEYOR

SURVEYORS SEAL

I HEREBY CERTIFY THAT THIS PLAT IS A TRUE DELINEATION OF A SURVEY MADE FOR THE OHIO DEPARTMENT OF TRANSPORTATION.

Richard E. Rockich

DATE 9-17-87 REGISTERED SURVEYOR

℄ I-76

CURVE NO. 5		CURVE NO. 6		CURVE NO. 7	
CURVE DATA		CURVE DATA		CURVE DATA	
DELTA	6° 47' 01" LT.	DELTA	10° 56' 00" RT.	DELTA	40° 42' 39" LT.
DC	1° 00' 00"	DC	1° 58' 45"	DC	1° 59' 50"
R	5729.58'	R	2894.94'	R	2868.77'
LC	678.36'	LC	552.42'	LC	2038.37'
T	339.58'	T	277.05'	T	1064.35'
CH	677.97'	CH	551.58'	CH	1995.76'
EX (C)	10.05'	EX (C)	13.23'	EX (C)	191.08'
STATIONING		STATIONING		STATIONING	
MAIN PI STA.	633+20.79	MAIN PI STA.	645+95.30	MAIN PI STA.	662+36.91
PC STA.	629+81.21	PC STA.	643+18.25	PC STA.	651+72.56
PT STA.	636+59.57	PT STA.	648+70.67	PT STA.	672+10.93

APPROVED _____ CITY ENGINEER

DATE _____

CERTIFICATE OF APPROVAL
SIGNED BY: _____
DATE: _____ DISTRICT DEPUTY DIRECTOR

SCALE IN FEET
0 100 200 300

SHEET 4 OF 4

CENTERLINE SURVEY PLAT

AA B.Pv 71942R

CALC. BY. DATE	SUMMIT COUNTY	OHIO
CHKD. BY. DATE	SUM-76-11.57 RIGHT OF WAY PLANS	F.H.W.A. REGION 5

1169 / 1214

5 / 49

PROPERTY MAP

SUM-76-11.57

GRAPHIC SCALE
0 40 80 120

CITY OF AKRON, SUMMIT COUNTY
ORIGINAL COVENTRY TOWNSHIP, T2N, R11W
TRACT 8, O.L. 4

AFFECTED UTILITIES	
OHIO BELL TELEPHONE CO. 50 WEST BOWERY ST. AKRON, OHIO 44308	EAST OHIO GAS CO. 2100 EASTWOOD AVE. AKRON, OHIO 44305
OHIO EDISON CO. 76 SOUTH MAIN ST. AKRON, OHIO 44308	AKRON CITY WATER DEPT. 63 SOUTH HIGH ST. AKRON, OHIO 44308
AKRON CITY SEWER DEPT. 166 SOUTH HIGH ST. AKRON, OHIO 44308	WARNER AMEX CABLE COMMUNICATION INC. 1210 BROWNSTONE AVE. AKRON, OHIO 44310

(1) ARCHBISHOP HOBAN HIGH SCHOOL

BEGIN ACQUISITION
SUM-76-11.57
IR-76-2(44)19
STA. 558+70.05

(1/T)

℄ EXIST. LA

℄ I-76 SURVEY & CONSTRUCTION

EXIST. LA

PARKING

HOBAN HIGH SCHOOL

EVERGREENS

MATCH LINE STA. 570+50 SEE SHEET 6 OF 49

(1/WL)

INTERSTATE ROUTE 76

DETAIL OF HOBAN HIGH SCHOOL PROPERTY

SCALE IN FEET
0 200 400

PROPERTY MAP

NAME	REVISION	DATE

PROPERTY MAP

SUM-76-11.57

CALC. BY. DATE	SUMMIT COUNTY SUM-76-11.57 RIGHT OF WAY PLANS	OHIO F.H.W.A. REGION 5	1170 1214
CHKD. BY. DATE			6 49

GRAPHIC SCALE 40 80 120

MATCH LINE STA. 571+50 SEE SHEET 5 OF 49

MATCH LINE STA. 582+48.94 SEE SHEET 7 OF 49

EXIST. R/W — AVENUE — EXIST. R/W — STINE ALLOT. PB 7 P.70 — WATTS ALLOT. PB. 7P.5 — EXIST. R/W — STREET — TRACT 8 O.L. 4 — TWP TRACT 1 — EXIST. R/W — SECOND AVENUE

MARTIN AVENUE — EXIST. R/W — EXIST. LA R/W — 539.9152' EXIST. LA R/W

RAMP "E-4" — RAMP "E-7" — P.C. STA. 578+83

℄ I-76 — COVENTRY TWP — SPRINGFIELD

RAMP "E-8" — RAMP "E-6" — EXIST. LA

TALBOT — EXIST. R/W — EXIST. R/W — INGLESIDE ALLOT. P.B. 7 P.44 — EXIST. R/W — ARLINGTON — ORIGINAL — ORIGINAL — 6 P.2 — P.B. — C.S. HART ALLOT. — EXIST. R/W — MILES STREET — EXIST. R/W — EXIST. LA

FOURTH AVENUE

CITY OF AKRON, SUMMIT COUNTY
ORIGINAL COVENTRY TOWNSHIP, T2N, R11W
TRACT 8, O.L. 4

CITY OF AKRON, SUMMIT COUNTY
ORIGINAL SPRINGFIELD TOWNSHIP, T1N, R10W
TRACT 1

(1)	ARCHBISHOP HOBAN HIGH SCHOOL
(2)	JERRY WAYNE KODISH
(3)	GEORGIA A. BELL
(3A)	DARTMOOR CORPORATION
(3B)	RUTH & JAMES SIX
(3C)	DENNIS B. LAIDIG
(4)	HARRY KODISH
(4A)	FILADELFIO & ELIZABETH NARZISI
(5)	ROBERT & JUDITH ASHLEY
(5A)	HARRY KODISH
(5B)	ANDREW JESSIE LOMAN
(5C)	HAROLD G. UNDERWOOD
(6)	HARRY KODISH
(7)	JAMES R. WALKER
(8)	PAUL & MARY KLINE
(8A)	ELMER J. STARKS, JR.

PROPERTY MAP

OSB NAME	REV. L/A ON TALBOT AVE REVISION	4/2/90 DATE

PROPERTY MAP

CALC. BY. ____ DATE ____
CHKD. BY. J DATE ____

SUMMIT COUNTY
SUM-76-11.57
RIGHT OF WAY PLANS

OHIO
F.H.W.A. REGION 5

1171/1214

7/49

SUM-76-11.57

GRAPHIC SCALE 0 40 80 120

CITY OF AKRON, SUMMIT COUNTY
ORIGINAL SPRINGFIELD TOWNSHIP, T 1 N, R 10 W
TRACT 1.

MATCH LINE STA. 582+48.94 SEE SHEET 6 OF 49

MATCH LINE STA. 595+87.84 SEE SHEET 8 OF 49

SECOND AVENUE

THIRD AVENUE

FOURTH AVENUE

CHITTENDEN STREET

HART STREET

FULLER STREET

RAMP "E-7"

RAMP "E-4"

RAMP "E-6"

RAMP "E-8"

RAMP "E-3"

EXIST. LA R/W

EXIST. LA

LA

℄ I-76 SURVEY & CONSTRUCTION

P.T. STA. 587+15

P.C. STA. 593+25

VACATED FOURTH AVE (253-1983)

THIS PARCEL PREVIOUSLY ACQUIRED

9 EDDIE O. HEWINS

10 HEIRS OF CHARLES HEWINS
ELAINE MAE THOMAS

11

12 DONALD R. MOYERS & JACQUELINE MOYERS
ANNA EATON, ET AL

13

14 AKRON BOARD OF EDUCATION

15 A. E. HARDESTY

16 J. COPELAND

17 C.P. & C.C. HARDESTY
R. H. SMITH

18

19 DALLIS WORTHY

20 BEAUFORD & POLA JEFFRIES

21 GEORGE H. SMITH

22 G. PETERSON

23 R. NEIMAN

24 ZION TEMPLE APOSTOLIC CHURCH

25 GENE ECKRICH

27 BETTY G. JOHNSON

28 G. S. G. DEVELOPMENT COMPANY

29 B. & B. ASSOCIATES INCORPORATED
BETTY CALHOUN

30

37A JESSIE L. & STELLA M. WILKINS

38A JOSEPH & JENNIE CHURCH

31 A. E. GEER

32 W. THOMAS

33 JOHN BOY BROWN

34 GILBERT & ARLINE STORY

35 JOHNNIE & CARRIE MAE BROWN
B. R. JAMES

36

37 U.R.W. OF AMERICA HOME ASSOC.
B. R. JAMES

39 ROBERT W. BLAKEMORE

40 L. HAMRIC

41 L. & E. McCLENDON

42 P. & J. MONDL

43 DONALD DAY

44 E. & J. ANGEL

45 D.E. & P. CONEY

46 JOHNNIE BROWN

47 W. PRESTON & J. SOJOURNER

47A HART ST. CHURCH OF GOD

48 GEORGE HAMMETT

49 J. L. CLARK

50 M. R. KELLER

51 W. CLARK, JR.

52 J.L. & A.C. SMITH

53 R.L. & A.B. GRANDISON

54 W. A. BANKS

54A R.L. MATLEY

PROPERTY MAP

NAME	REVISION	DATE
DSB	REV. L/A ON N. HART ST.	4/4/90

CALC. BY. DATE	SUMMIT COUNTY	OHIO
CHKD. BY. DATE	SUM-76-11.57 RIGHT OF WAY PLANS	F.H.W.A. REGION 5

1172 / 1214

8 / 49

PROPERTY MAP

SUM-76-11.57

GRAPHIC SCALE
0 40 80 120

CITY OF AKRON, SUMMIT COUNTY
ORIGINAL SPRINGFIELD TOWNSHIP, T 1 N, R 10 W
TRACT 1

CONS. PROP. GOODYEAR T. & R. CO.
P.B. 60 P. 31
PARCEL F BLK. 1

CONS. PROP. GOODYEAR T. & R. CO. P.B. 60 P.31
PARCEL A, BLK. 6

MATCH LINE STA. 595+87.84 SEE SHEET 7 OF 49

MATCH LINE STA. 606+00 SEE SHEETS 9 & 10 OF 49

VACATED THIRD AVE.

THIRD AVENUE

BALTIMORE & OHIO RAILROAD

EXIST. R/W

EXIST. LA

LA R/W

I-76

EXIST. RAMP E-8

RAMP "E-88"

FULLER STREET

FIFTH AVENUE

KELLY AVENUE

RAILROAD

S. HART ALLOT

P.B. 6 P.2

(55) GOODYEAR TIRE & RUBBER COMPANY

(56) HELEN B. WOZNIAK

(57) NED & BONNIE TRAYLOR

(58) MAE MAULDIN

(59) LUCILLE PREISTER

(60) LEE O. MILBRY, SR.

(60A) CITY OF AKRON

(61) GOODYEAR TIRE & RUBBER COMPANY

(62) CITY OF AKRON

(63) MILAN P. KRONENTHAL

(64) BALTIMORE & OHIO RAILROAD

(65) GOODYEAR TIRE & RUBBER COMPANY

(66) GOODYEAR TIRE & RUBBER COMPANY

~~(61A) IRENE MANNING~~

~~(62A) EULA BELLE MINSON~~

(63A) RUTH A. SANDERSEN & LUELLA T. PAINE

PROPERTY MAP

NAME	REVISION	DATE
DSB	DELETE G1A & G2A	4/4/90
DSB	CHANGED G3A/L TO G3A/D	4/12/90
DSB	REV L/A @ 5TH AND KELLY	4/12/90

PROPERTY MAP

SUM-76-11.57

GRAPHIC SCALE
0 40 80 120

CITY OF AKRON, SUMMIT COUNTY
ORIGINAL SPRINGFIELD TOWNSHIP, T 1N, R 10W
TRACT 2, O.L. 1

CALC. BY. — DATE —	SUMMIT COUNTY SUM-76-11.57 RIGHT OF WAY PLANS	OHIO
CHKD. BY. — DATE —		F.H.W.A. REGION 5

1173 / 1214

9 / 49

68	GOODYEAR TIRE & RUBBER COMPANY	72	ARLENE M. HUBER
68A	GOODYEAR TIRE & RUBBER COMPANY	73	THOMAS J. HUBER
70	GOODYEAR TIRE & RUBBER COMPANY	74	M. & B. TARAS
70A	MARSH FAMILY TRUST	75	DARTMOOR CORPORATION
71	ROBERT NEMER & EARL FEENEY	78	PETER J. KEFALOS, ET AL
		79	ANTHONY BRANDT
		80	MICHAEL G. SIBBIO

KELLY AVENUE
EXIST. R/W
MARTHA AVENUE
EXIST. R/W
EAST MARKET STREET
EXIST. R/W
LA R/W
EXIST. R/W
EXIST. R/W
EXIST. RAMP E-12
EXIST. RAMP E-13
EXIST. RAMP E-10
RAMP "E-15"
RAMP "E-12"
LITTLE CUYAHOGA RIVER
A.B.B. R.R.
THIRD AVENUE
EXIST. R/W
EXIST. R/W
L-A R/W
EXIST. LA
EXIST. LA
EXIST. LA
EXIST. LA
PAVED PARKING
P.C. STA. 615+54.
℄ I-76 SURVEY & CONSTRUCTION
MATCH LINE STA. 606+00 SEE SHEET 8 OF 49
MATCH LINE ℄ I-76 SEE SHEET 10 OF 49
MATCH LINE STA. 617+76.91 SEE SHEET 11 OF 49

PROPERTY MAP

NAME	REVISION	DATE

PROPERTY MAP

SUM-76-11.57

GRAPHIC SCALE
0 40 80 120

CITY OF AKRON, SUMMIT COUNTY
ORIGINAL SPRINGFIELD TOWNSHIP, T 1N, R 10W
TRACT 2, O.L. 1

CALC. BY. DATE	SUMMIT COUNTY	OHIO
CHKD. BY. DATE	SUM-76-11.57 RIGHT OF WAY PLANS	F.H.W.A. REGION 5

1174 / 12/4

10 / 49

MATCH LINE ℄ I-76 SEE SHEET 9 OF 49

℄ I-76 SURVEY & CONSTRUCTION

607 608 609 610 611 612 613 614 615 616 617

MATCH LINE STA. 606+00 SEE SHEET 8 OF 49

MATCH LINE STA. 617+76.91 SEE SHEET 11 OF 49

EXIST. LA

66 R

67 R

LITTLE CUYAHOGA RIVER

A.B.&B. R.R.

RAMP "E-9"

EXIST. LA R/W

EXIST. R/W

RAMP "E-16"

RAMP "E-10"

21.93'

67.76'

130' R

25'

127'

137'

77 WL

EXIST. LA

LA R/W

76 WL

JOHNS AVENUE

EXIST. R/W

ENGLEWOOD AVENUE

92.96'

35'

85'

84'

R=35.83'

CAMBRIDGE STREET

R/W

64.30'

MARTHA AVENUE

EXIST. LA

88.91'

105' R

103.08'

69 WL

LA

CONS. PROP. GOODYEAR T. & R. CO. P.B. 60 P. 31
PARCEL A, BLK. 6

(66) GOODYEAR TIRE & RUBBER COMPANY

(67) AKRON BARBERTON BELT RAILROAD

(69) GOODYEAR TIRE & RUBBER COMPANY

(76) GOODYEAR TIRE & RUBBER COMPANY

(77) G.W. & J.E. OLIVER

PROPERTY MAP

NAME	REVISION	DATE

PROPERTY MAP

SUM-76-11.57

CALC. BY. DATE	SUMMIT COUNTY	OHIO
CHKD. BY. DATE	SUM-76-11.57 RIGHT OF WAY PLANS	F.H.W.A. REGION 5

1175 / 1214

11 / 49

GRAPHIC SCALE 0 40 80 120

CITY OF AKRON, SUMMIT COUNTY
ORIGINAL SPRINGFIELD TOWNSHIP, T 1 N, R 10 W
TRACT 2, O.L. 1

EAST MARKET STREET

EXIST. R/W

EXIST. RAMP E-10

SEE SHEETS 9 & 10 OF 49

MATCH LINE STA. 617+76.91

RAMP "E-15"

RAMP "E-16"

RAMP "E-10"

EXIST. RAMP E-15

EXIST. LA

EXIST. L A R/W

L A R/W

R/W

STREET

LEAGUE PARK ALLOT. P.B. 20 P. 36

ENGLEWOOD ALLOT. P.B. 8 P. 14

TRACT 2 O.L. 1

SEE SHEET 12 OF 49

MATCH LINE STA. 629+91.21

SEIBERLING STREET

CAMBRIDGE STREET

DETROIT STREET

WIGLEY STREET

ENGLEWOOD AVENUE

℄ I-76 SURVEY & CONSTRUCTION

P.I. STA. 623+87

146.64'
146.64'
36.66'
36.66'
73.70'
40.67'
43.84'
69.58'
132.50'
80.87'
97.98'
156.56'
165.83'
183.90'
50.85'
224.75'
374.75'
400.70'
85'
105'
143'
100'
110'
250'

(81) A. SALEM

(82) R. J. NORRIS & K. L. BURKHART

(83) K.G. BRYSON

(84) R.F. & L.J. DiPAOLO

(85) P. POST

(86) M. I. BOYLES

(87) S. A. LINGER

(85A) ROSE SLONSKY

(88) K.P. HILLEGASS

(89) S. & C.A. SMITH

(90) E.A. & A. PAL

(91) M.T. & N.A. HEAD

(92) P.G. JOHNSON

(93) C.R. & C.R. ANDERSON

(94) D. H. ZENNER

(96) ROMITO BROS. ELECTRIC CONSTRUCTION CO.

(97) HARWICK CHEMICAL CORPORATION

(98) DONALD E. ZENNER

PROPERTY MAP

NAME	REVISION	DATE
BHB	Revised Pc's. 85, 88, 94. 96 & 97 to add WD's.	9/27/90
DSB	REV'L/A BTW. DETROIT & WIGLEY	4/4/90

CALC. BY. DATE	SUMMIT COUNTY	OHIO
CHKD. BY. DATE	SUM-76-11.57 RIGHT OF WAY PLANS	F.H.W.A. REGION 5

1176 / 12.14

12 / 49

PROPERTY MAP

SUM-76-11.57

GRAPHIC SCALE
0 40 80 120

CITY OF AKRON, SUMMIT COUNTY
ORIGINAL SPRINGFIELD TOWNSHIP, T 1 N, R 10 W
TRACT 3, O.L.A

(99) EAST MARKET STREET UNITED CHURCH OF CHRIST
(100) DAVID B. WILT
(101) MORRIS & BERTHA TARAS
(102) METROMEDIA, INCORPORATED
(103) H. G. KRONENTHAL

EAST MARKET STREET
EXIST R/W
226.34'
25.53'
14.45'
210'
50'
150'
7'
90'
360'
152.10'
150'
123'
198'
224.65'
S R/W
EXIST. LA
SEIBERLING & MILLER ALLOT. P.B. 8 P. 19
VACATED SIDNEY ST. 973-66
P.C. STA. 629+81.
P.T. STA. 634+51.
℄ I-76 SURVEY & CONSTRUCTION
EXIST. LA R/W
LA R/W
ENGLEWOOD AVENUE
EXIST. R/W
71.40'
43.3'
100'
VACATED SIDNEY ST. 582-48
FACTORY
MATCH LINE · STA. 629+91.21 SEE SHEET II OF 49
MATCH LINE STA. 641+50.00 SEE SHEET 13 OF 49
TRACT 3 O.L.A

(99 WL) (99 S) (99 WD) (100 T) (100 S) (101 WD) (101 S) (102 T) (103 T) (100 WD)

END PROJECT
SUM-76-11.57
IR-76-2(44)19
STA. 634+00.00

END ACQUISITION
SUM-76-11.57
IR-76-2(44)19
STA 635+33.43

PROPERTY MAP

NAME	REVISION	DATE

CALC. BY. DATE	SUMMIT COUNTY	OHIO
CHKD. BY. DATE	SUM-76-11.57	F.H.W.A. REGION 5
	RIGHT OF WAY PLANS	

1177
1214

13
49

PROPERTY MAP

SUM-76-11.57

GRAPHIC SCALE
0 40 80 120

CITY OF AKRON, SUMMIT COUNTY
ORIGINAL SPRINGFIELD TOWNSHIP, T 1N, R 10W
TRACT 3, O.L. A

MATCH LINE STA. 641+ 50.00 SEE SHEET 12 OF 49

EAST MARKET STREET

EXIST. R/W

EXIST. LA

RAMP "E-19"

RAMP "E-18"

VACATED HOLMES ST. 131-60

EXIST. R/W 284.34'

23 24 25 26 29 30 31 32 33 34

642 643 644 645 646 647 648 649 650 651

℄ I-76 SURVEY & CONSTRUCTION

℄ STA. 643+20.36

EXIST. LA R/W

LA R/W

ENGLEWOOD AVENUE

EXIST. R/W

PAVED PARKING LOT

EXIST. LA R/W

GENERAL STREET

EXIST. R/W

36 37 38 39 40 51 50 49 48 47

EXIST. LA

R/W

BT STA. 648+65.84

EXIST. LA R/W

EXIST. R/W

YOUNGSTOWN RAILROAD

AKRON CANTON

PARKING

FACTORY

PAVED PARKING LOT

NAME	REVISION	DATE

PROPERTY MAP

AA B/P# 719428

INDEX MAP
SUM-76-11.57

CALC. BY. DATE	SUM - 76 - 11.57	OHIO	1178 / 12/4
CHKD. BY. DATE	FED. PROJECT IR-76-2(44)19	F.H.W.A. REGION 5	14 / 49

SUMMIT COUNTY
RIGHT OF WAY PLANS

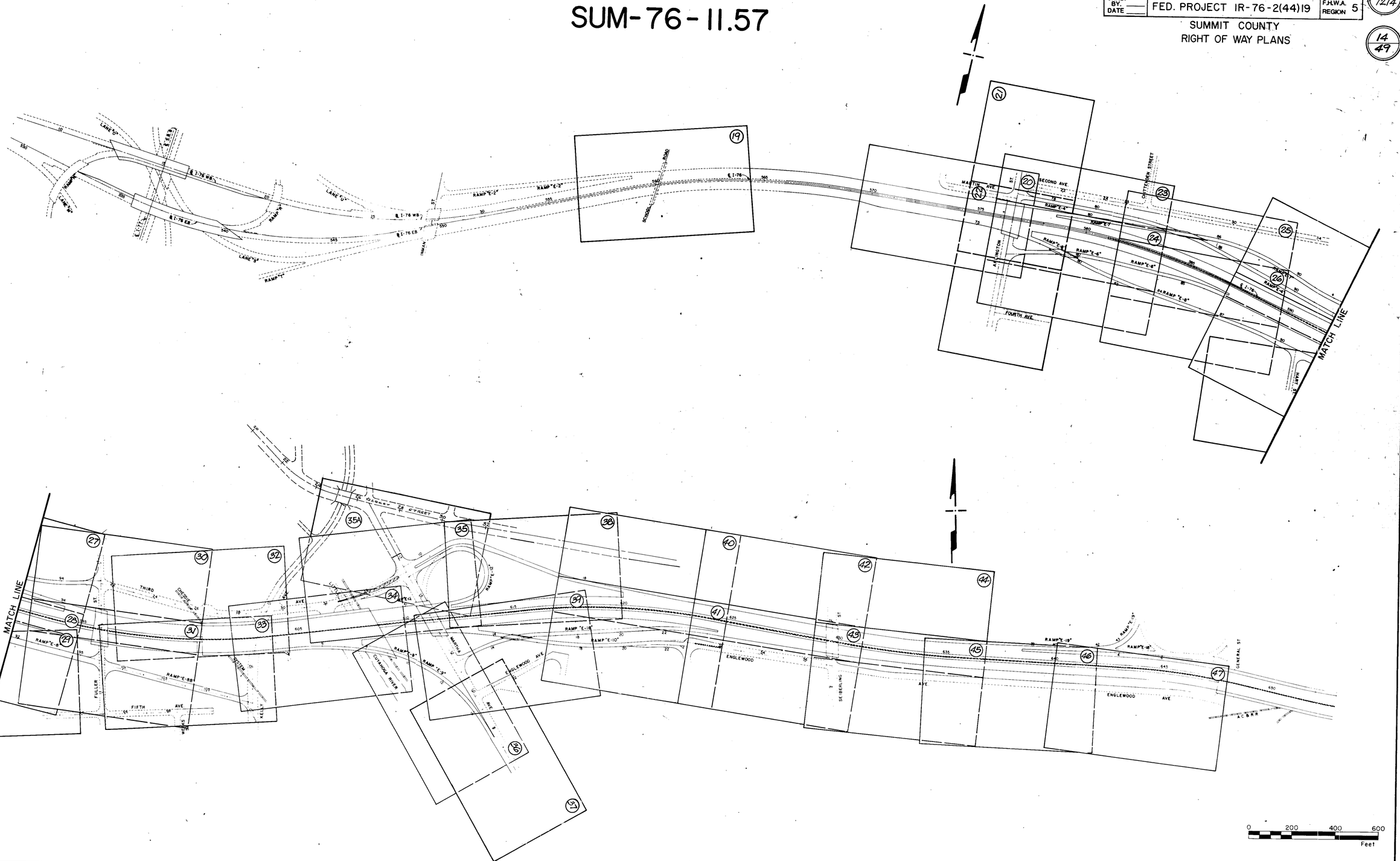

TOTAL NUMBER OF OWNERSHIPS 120
TOTAL TAKES 83
OWNERSHIPS W/STRUC 66
OWNERSHIPS W/"P" ITEMS 0

SUMMARY OF ADDITIONAL RIGHT OF WAY

CALC BY		SUM-76-11.57	OHIO
DATE			F.H.W.A. REGION 5
CHKD. BY			
DATE			
FEDERAL PROJECT	IR-76-2(44)19	STATE PROJECT	

1179/1214

15/49

SUMMIT COUNTY
RIGHT OF WAY PLANS

PARCEL Nº	OWNER	OWNER RECORD BOOK	OWNER RECORD PAGE	RECORD AREA	TOTAL PRO	TO BE ACQUIRED GROSS TAKE	TO BE ACQUIRED PRO IN TAKE	TO BE ACQUIRED NET TAKE LAND	TO BE ACQUIRED NET TAKE BLDG	NET RESIDUE LEFT	NET RESIDUE RIGHT	SHEET Nº	TYPE FUNDS	REMARKS & PERSONALTY	AS ACQUIRED BOOK	AS ACQUIRED PAGE
1 WL	ARCHBISHOP HOBAN HIGH SCHOOL, INCORPORATED	3409	121	1,472,712	0	2,874	0	2,874	NO	884,848	584,990	20				
1 T						32,797	0	32,797				19		RECONSTRUCT SCHOOL DRIVE & WALK		
2 WL	JERRY WAYNE KODISH	7135	886	3,500	0	3,500	0	3,500	YES	0	0	20		TOTAL TAKE		
3 WD	GEORGIA A. BELL	6980	81	7,000	0	350	0	350	NO	0	6,650	20,22				
3 T						716	0	716				20,22		CONTRACTORS WORK AREA		
3A WD	DARTMOOR CORPORATION, A DELAWARE CORPORATION	4747	371	23,997	0	493	0	493	NO	23,504	0	21				
3B WD	RUTH SIX & JAMES A. SIX	4877	647	7,000	0	350	0	350	NO	0	6,650	22				
3B T						750	0	750				22		CONTRACTORS WORK AREA		
3C WD	DENNIS B. LAIDIG	6324	899	28,000	0	541	0	541	NO	0	27,459	22				
3C T		7255	390			1,750	0	1,750				22		CONTRACTORS WORK AREA		
4 WL	HARRY KODISH	5739	324	7,777	0	7,777	0	7,777	NO	0	0	23		TOTAL TAKE		
4A WD	FILADELFIO NARZISI & ELIZABETH NARZISI	6587	336	40,093	0	.453	0	453	NO	39,640	0	21				
5 WL	ROBERT V. ASHLEY & JUDITH A. ASHLEY	5112	187	7,007	0	7,007	0	7,007	YES	0	0	22,24		TOTAL TAKE		
5A WD	HARRY KODISH	5680	771	7,007	0	238	0	238	NO	0	6,769	22				
5A T						887	0	887				22		GRADING & RECONSTRUCT DRIVE		
5B WD	ANDREW JESSIE LOMAN	2631	469	7,007	0	150	0	150	NO	0	6,857	22				
5B T						350	0	350				22		GRADING & RECONSTRUCT DRIVE & WALK		
5C WD	HAROLD G. UNDERWOOD	6584	746	7,007	0	50	0	50	NO	0	6,957	22				
5C T						200	0	200				22		GRADING & RECONSTRUCT DRIVE		
6 WL	HARRY KODISH	5739	324	2,979	0	2,979	0	2,979	YES	0	0	24		TOTAL TAKE		
7 WL	JAMES R. WALKER	5737	464	3,278	0	3,278	0	3,278	YES	0	0	24	IR	TOTAL TAKE		
8 WL	PAUL E. KLINE, SR. & MARY ALICE KLINE	3631	160	3,681	0	3,681	0	3,681	NO	0	0	24		TOTAL TAKE		
8A 3	ELMER JOHNSON STARKS, JR.	6196	888	4,058	0	820	0	820	YES	0	4,058	24		SEWER EASEMENT		
9 WL	EDDIE O. HEWINS	5732	711	6,003	0	6,003	0	6,003	YES	0	0	26		TOTAL TAKE		
10 WL	HEIRS OF CHARLES HEWINS	3496	290	8,166	0	8,166	0	8,166	YES	0	0	26		TOTAL TAKE, FOR ESTATE SEE 7423/433 & 7423/435		
		6594	339													
11 WL	ELAINE MAE THOMAS	6242	890	4,041	0	4,041	0	4,041	YES	0	0	26		TOTAL TAKE		
12 WL	DONALD R. MOYERS & JACQUELINE A. MOYERS	6020	607	4,699	0	4,699	0	4,699	YES	0	0	26		TOTAL TAKE		
		6924	1													
13 WL	ANNA EATON, CHARLOTTE MARKIJON, JOHN LONG, MARTHA RANKIN,	5342	383	3,375	0	3,375	0	3,375	NO	0	Q	26		TOTAL TAKE		
	JOSEPH F. HUBER, EARL LEE HUBER & SALLY HUBER WHITE	6437	849													
14 WL	AKRON BOARD OF EDUCATION	SEE REMARKS		255,000	0	19,026	0	19,026	NO	0	235,974	26,28		5611/222, 6797/261, 6849/183, 6845/155, 6850/898, 6854/72, 6870/33, 6913/483, 6931/685, 6982/171 & 7033/95		
15 WL	ALTA E. HARDESTY	6850	845	2,682	0	2,682	0	2,682	YES	0	0	25		TOTAL TAKE		
16 WL	JOHNNY COPELAND AKA JOHNNY W. COPELAND	6785	710, 712	2,898	0	2,898	0	2,898	YES	0	0	25		TOTAL TAKE		
17 WL	CARL P. HARDESTY & CARL C. HARDESTY	6929	78	3,199	0	3,199	0	3,199	YES	0	0	25		TOTAL TAKE		
18 WL	W. H. MARKS	O.R. 310	932	5,424	0	5,424	0	5,424	NO	0	0	25		TOTAL TAKE		
19 WL	TERRY WORTHEY, DALLAS WORTHY POWER OF ATTORNEY	7508	910	6,134	0	6,134	0	6,134	YES	0	0	25		TOTAL TAKE, O.R. 140/387 POWER OF ATTORNEY		
20 WL	BEAUFORD JEFFRIES & POLA JEFFRIES	6336	572	6,299	0	6,299	0	6,299	NO	0	0	25		TOTAL TAKE, SEE ALSO 6021/654 & 5346/47		
21 WL	W. H. MARKS	O.R. 131	920	6,299	0	6,299	0	6,299	NO	0	0	25		TOTAL TAKE		
22 WL	GERALDINE PETERSON	7030	797	3,149	0	3,149	0	3,149	YES	0	0	25		TOTAL TAKE, SEE ALSO 5256/290		
23 WL	ROBERT NEIMAN	6923	325, 331	3,149	0	3,149	0	3,149	NO	0	0	27		TOTAL TAKE		

NAME	REVISION	DATE
DSB	REV. TOTAL OWNERSHIPS	4/4/90

SUMMARY OF ADDITIONAL RIGHT OF WAY

CALC. BY ____ DATE ____	SUM-76-11.57	OHIO
CHKD BY ____ DATE ____		F.H.W.A. REGION 5
FEDERAL PROJECT	IR-76-2(44)19	STATE PROJECT

SUMMIT COUNTY
RIGHT OF WAY PLANS

1180/1214

16/49

PARCEL Nº	OWNER	OWNER RECORD BOOK	OWNER RECORD PAGE	RECORD AREA	TOTAL PRO	TO BE ACQUIRED GROSS TAKE	TO BE ACQUIRED PRO. IN TAKE	TO BE ACQUIRED NET TAKE LAND	TO BE ACQUIRED NET TAKE BLDG	NET RESIDUE LEFT	NET RESIDUE RIGHT	SHEET Nº	TYPE FUNDS	REMARKS & PERSONALTY	AS ACQUIRED BOOK	AS ACQUIRED PAGE
24 WL	ZION TEMPLE APOSTOLIC CHURCH	5739	492	9,448	0	9,448	0	9,448	NO	0	0	27		TOTAL TAKE		
25 WL	GENE ECKRICH	6927	325	3,149	0	3,149	0	3,149	NO	0	0	27		TOTAL TAKE		
26	NOT USED															
27 WL	BETTY G. JOHNSON	6371	496	7,498	0	7,498	0	7,498	NO	0	0	27		TOTAL TAKE		
28 WL	G. S. G. DEVELOPMENT COMPANY, AN OHIO PARTNERSHIP	6570	525	4,398	0	4,398	0	4,398	YES	0	0	28		TOTAL TAKE		
29 WL	B. & B. ASSOCIATES, INCORPORATED, AN OHIO CORPORATION	5985	28	4,398	0	4,398	0	4,398	YES	0	0	28		TOTAL TAKE		
30 WL	LEROY CALHOUN, ALAN CALHOUN, GREGORY CALHOUN, SANDRA CALHOUN	7590	460	3,770	0	3,770	0	3,770	YES	0	0	28		TOTAL TAKE		
	& CLARENCE CALHOUN															
31 WL	ALAN E. GEER	6601	257	6,283	0	6,283	0	6,283	YES	0	0	28		TOTAL TAKE		
32 WL	WEST THOMAS	7238	294	4,708	0	4,708	0	4,708	YES	0	0	28		TOTAL TAKE		
33 WL	JOHN BOY BROWN	6448	541	3,188	0	3,188	0	3,188	YES	0	0	28		TOTAL TAKE		
34 WL	GILBERT STORY & ARLINE STORY	4404	341	2,812	0	2,812	0	2,812	YES	0	0	28		TOTAL TAKE		
35 WL	JOHNNIE BROWN & CARRIE MAE BROWN	4783	306	3,233	0	3,233	0	3,233	YES	0	0	28		TOTAL TAKE		
36 WL	BRIAN R. JAMES	6995	656	2,315	0	2,315	0	2,315	YES	0	0	28		TOTAL TAKE		
37 WL	UNITED RUBBER WORKERS OF AMERICA HOME ASSOCIATION	6204	61	5,039	0	5,039	0	5,039	NO	0	0	28		TOTAL TAKE		
37A WL	JESSIE L. WILKINS & STELLA M. WILKINS	4868	47	4,267	0	4,267	0	4,267	NO	0	0	27,30		TOTAL TAKE		
38 WL	BRIAN R. JAMES	6995	658	4,142	0	4,142	0	4,142	YES	0	0	30		TOTAL TAKE		
38A WL	JOSEPH CHURCH & JENNIE E. CHURCH	4267	558	4,142	0	4,142	0	4,142	NO	0	0	30		TOTAL TAKE		
39 WL	ROBERT W. BLAKEMORE	6367	159	2,111	0	2,111	0	2,111	NO	0	0	30		TOTAL TAKE		
40 WL	LUCY J. HAMRIC AKA LUCY HAMRIC	6083	166	1,969	0	1,969	0	1,969	YES	0	0	30		TOTAL TAKE, SEE ALSO 4155/624		
41 WL	LEROY McCLENDON & EMMA McCLENDON	5697	107	6,430	0	6,430	0	6,430	YES	0	0	30		TOTAL TAKE		
42 WL	PETER J. MONDL & JUANITA E. MONDL	6569	862	6,288	0	6,288	0	6,288	YES	0	0	28,29		TOTAL TAKE, SEE ALSO 5615/246		
43 WL	DONALD LEE DAY, PAMELA JONES LAND CONTRACT HOLDER	6582	250	3,770	0	3,770	0	3,770	YES	0	0	28,29		TOTAL TAKE		
44 WL	ETHEL F. ANGEL & JOHN P. ANGEL	7557	610	3,769	0	3,769	0	3,769	YES	0	0	28,29		TOTAL TAKE		
44A WL	RUTH L. KACHENAK	O.R. 29	897	3,555	0	3,555	0	3,555	YES	0	0	28,29		TOTAL TAKE		
45 WL	DOUGLAS EUGENE CONEY & PEARLENE CONEY	3771	309	5,022	0	5,022	0	5,022	YES	0	0	28,29		TOTAL TAKE		
45A WL	FRIENDSHIP BAPTIST CHURCH, AN OHIO CORPORATION, FEE HOLDER;	5776	630	2,099	0	2,099	0	2,099	YES	0	0	29		TOTAL TAKE, LAND CONTRACT VOL. OR 68,		
	HOUSE OF GOD, LAND CONTRACT HOLDER													PAGE 627		
46 WL	JOHNNIE BROWN	6793	832	4,237	0	4,237	0	4,237	NO	0	0	29		TOTAL TAKE		
46A LA	ORANGE ROGERS & CLAIRE ROGERS	3065	551	3,141	0	0	0	0	NO	0	3,141	29		LOSS OF ACCESS		
47 WL	WILLIAM H. PRESTON & JEANETTE SOJOUNER	7423	381	5,620	0	5,620	0	5,620	YES	0	0	28,29		TOTAL TAKE		
47A WL	CHARLES F. TRAVIS & ESTHER TRAVIS	5419	125	8,632	0	8,632	0	8,632	YES	0	0	29		TOTAL TAKE		
48 WL	GEORGE HAMMETT, JR.	5696	217	6,246	0	6,246	0	6,246	YES	0	0	28,29		TOTAL TAKE		
49 WL	JIMMIE LEE CLARK AKA JIMMY LEE CLARK	5770	194	6,248	0	6,248	0	6,248	YES	0	0	28		TOTAL TAKE, SEE ALSO 5266/659		
50 WL	MAE R. KELLER	6411	352	6,250	0	6,250	0	6,250	YES	0	0	31		TOTAL TAKE, SEE ALSO 5803/422		
51 WL	WILFORD CLARK, JR., MARY ALICE RICKS, NETTIE J. HENDERSON, THEOTIS	6706	838	4,167	0	4,167	0	4,167	YES	0	0	31		TOTAL TAKE		
	CLARK, DAVID C. CLARK, ALBERT L. CLARK & GEORGE R. CLARK	6527	66													
52 WL	JOHN L. SMITH & ANNIE L. SMITH	5773	22	4,167	0	4,167	0	4,167	YES	0	0	31		TOTAL TAKE		
53 WL	ROBERT L. GRANDISON & ANNIE BELL GRANDISON	4560	368	4,169	0	4,169	0	4,169	YES	0	0	31		TOTAL TAKE		
54 WL	WILLIE A. BANKS, SR.	6181	36	10,760	0	10,760	0	10,760	YES	0	0	31		TOTAL TAKE, SEE 5571/446, 7290/729-731		
54A WL	PATRICIA DAVIS	O.R. 11	603	1,752	0	1,752	0	1,752	YES	0	0	31		TOTAL TAKE		
55 WL	GOODYEAR TIRE & RUBBER COMPANY	6758	238	17,504	0	17,504	0	17,504	NO	0	0	30		TOTAL TAKE		
56 WL	HELEN B. WOZNIAK	5663	843	12,498	0	563	0	563	YES	0	11,935	31				
56 T						833	0	833				31		BUILDING REMOVAL		
57 WL	NED L. TRAYLOR & BONNIE TRAYLOR	5656	74	4,166	0	726	0	726	NO	0	3,440	31,33				
58 WL	MAE MAULDIN	4392	567, 568	4,167	0	1,022	0	1,022	NO	0	3,145	33				
59 WL	LUCILLE PREISTER	5418	334	4,166	0	1,318	0	1,318	NO	0	2,848	33				

1R

NAME	REVISION	DATE

SUMMARY OF ADDITIONAL RIGHT OF WAY

CALC BY / DATE		SUM-76-11.57	OHIO
CHKD BY / DATE			F.H.W.A. REGION 5
FEDERAL PROJECT	IR-76-2(44)19	STATE PROJECT	

SUMMIT COUNTY
RIGHT OF WAY PLANS

1181/1214

17/49

PARCEL Nº	OWNER	OWNER RECORD BOOK	OWNER RECORD PAGE	RECORD AREA	TOTAL PRO	TO BE ACQUIRED GROSS TAKE	TO BE ACQUIRED PRO IN TAKE	TO BE ACQUIRED NET TAKE LAND	TO BE ACQUIRED NET TAKE BLDG	NET RESIDUE LEFT	NET RESIDUE RIGHT	SHEET Nº	TYPE FUNDS	REMARKS & PERSONALTY	AS ACQUIRED BOOK	AS ACQUIRED PAGE
60 WL	LEE O. MILBRY, JR.	6125	452	6,250	0	2,725	0	2,725	NO	0	3,525	33				
60A WL	CITY OF AKRON, A MUNICIPAL CORPORATION	5865	227	4,147	0	4,147	0	4,147	NO	0	0	33		TOTAL TAKE		
61 WL	GOODYEAR TIRE & RUBBER COMPANY, AN OHIO CORPORATION	5491	482	12,498	0	12,498	0	12,498	NO	0	0	33		TOTAL TAKE		
62 WL	CITY OF AKRON, A MUNICIPAL CORPORATION	442	132,133	10,360	186	10,360	186	10,174	NO	0	0	33		TOTAL TAKE		
63 WD	MILAN P. KRONENTHAL	3312	242	3,195	0	55	0	55	NO	0	3,140	33				
64	BALTIMORE & OHIO RAILROAD	—	—	—	0	1,313	0	1,313	NO	—	—	32,48		HIGHWAY EASEMENT		
64-1						322	0	322				33,48		HIGHWAY EASEMENT		
64 R						3,144	0	3,144				32,48		AERIAL EASEMENT		
64 R-1						3,049	0	3,049				33,48		AERIAL EASEMENT		
64 SL						932	0	932				32,48		SLOPE EASEMENT		
64 T						541	0	541				33,48		CONTRACTORS WORK AREA		
65 WD	GOODYEAR TIRE & RUBBER COMPANY, AN OHIO CORPORATION	SEE REMARKS		13,303	0	531	0	531	NO	0	802	32		RECORDED AS BLOCK 1, PARCEL F OF		
65 WD-1						158	0	158				33		GOODYEAR CONSOLIDATED PROPERTIES		
65 WD-2						377	0	377				32		PLAT BOOK 60, PAGE 36.		
65 WD-3						377	0	377				33				
65 R						7,403	0	7,403				32		AERIAL EASEMENT		
65 R-1						2,261	0	2,261				33		AERIAL EASEMENT		
66 WD	GOODYEAR TIRE & RUBBER COMPANY, AN OHIO CORPORATION	SEE REMARKS		1,647,782	0	117	0	117	NO	1,148	1,599,292	34		RECORDED AS BLOCK 6, PARCEL A OF		
66 WD-1						539	0	539				34		GOODYEAR CONSOLIDATED PROPERTIES,		
66 WD-2						458	0	458				34		PLAT BOOK 60, PAGE 42		
66 WD-3						445	0	445				34				
66 WD-4						481	0	481				34				
66 WD-5						690	0	690				34				
66 WD-6						257	0	257				34	IR			
66 WD-7						652	0	652				34				
66						42	0	42				34				
66 R						15,058	0	15,058				34		AERIAL EASEMENT		
66 R-1						28,645	0	28,645				34		AERIAL EASEMENT		
66 A	GOODYEAR TIRE & RUBBER COMPANY, AN OHIO CORPORATION	SEE REMARKS		26,363	0	47	0	47	NO	26,316	0	32		BLOCK 6, PARCEL A, PLAT BOOK 60, PAGE 42		
67	AKRON BARBERTON BELT RAILROAD	628	144	—	0	674	0	674	NO	—	—	34,36,49		HIGHWAY EASEMENT		
67 R						2,199	0	2,199				34,49		AERIAL EASEMENT		
67 R-1						5,677	0	5,677				36,49		AERIAL EASEMENT		
67 S						671	0	671				36,49		SEWER EASEMENT		
68 WL	GOODYEAR TIRE & RUBBER COMPANY, AN OHIO CORPORATION	6309 6374	894 292	11,654	0	11,654	0	11,654	NO	0	0	34		TOTAL TAKE		
68A WD	GOODYEAR TIRE & RUBBER COMPANY, AN OHIO CORPORATION	5986	10	66,485	0	387	0	387	NO	66,098	0	35				
68A U						3,558	0	3,558				35,35A		UTILITY EASEMENT		
69 WL	GOODYEAR TIRE & RUBBER COMPANY, AN OHIO CORPORATION	6085 5661	471 669	36,166	0	16,579	0	16,579	NO	0	19,587	36,37				
70 WL	GOODYEAR TIRE & RUBBER COMPANY, AN OHIO CORPORATION	6568	437	4,719	0	4,719	0	4,719	NO	0	0	35		TOTAL TAKE		
70A WL	MARSH FAMILY TRUST	6508	279	5,412	0	298	0	298	NO	5,114	0	35				
71 WL	ROBERT G. NEMER & EARL H. FEENEY	6312	355	5,720	0	48	0	48	NO	5,672	0	35				
72 WL	ARLENE M. HUBER	6436	92	5,706	0	595	0	595	YES	5,111	0	35				
72 T						1,001	0	1,001				35		BUILDING REMOVAL		
73 WL	THOMAS J. HUBER	6847	428	5,773	0	1,813	0	1,813	NO	3,960	0	35				
74 WL	MORRIS TARAS & BERTHA TARAS	5269	209	13,369	0	13,369	0	13,369	YES	0	0	35,38		TOTAL TAKE		
75 WL	DARTMOOR CORPORATION, A DELAWARE CORPORATION	4738	387	14,168	0	14,168	0	14,168	YES	0	0	38		TOTAL TAKE		
76 WL	GOODYEAR TIRE & RUBBER COMPANY, AN OHIO CORPORATION	SEE REMARKS		30,906	0	30,906	0	30,906	NO	0	0	39		TOTAL TAKE; 5617/804, 5650/273, 6027/362, 366,		
														6033/715, 6506/808 & 6512/414		
77WL	JEANE E. OLIVER	7461	775	3,200	0	3,200	0	3,200	YES	0	0	39		TOTAL TAKE		
78 WL	PETER J. KEFALOS, GEORGE J. KEFALOS	6569	167	5,717	0	5,717	0	5,717	YES	0	0	38		TOTAL TAKE., SEE ALSO 7324/537 & 4984/233,234		

NAME	REVISION	DATE
DSB	CHG'D. 63WL TO 63WD	4/2/90

SUMMARY OF ADDITIONAL RIGHT OF WAY

CALC. BY. DATE	SUM-76-11.57	OHIO
CHKD. BY. DATE		F.H.W.A. REGION 5
FEDERAL PROJECT	IR-76-2(44)19	STATE PROJECT

SUMMIT COUNTY
RIGHT OF WAY PLANS

1182
12/14

18
49

PARCEL Nº	OWNER	OWNER RECORD BOOK	OWNER RECORD PAGE	RECORD AREA	TOTAL PRO	TO BE ACQUIRED GROSS TAKE	PRO. IN TAKE	NET TAKE LAND	NET TAKE BLDG	NET RESIDUE LEFT	NET RESIDUE RIGHT	SHEET Nº	TYPE FUNDS	REMARKS & PERSONALTY	AS ACQUIRED BOOK	AS ACQUIRED PAGE
79 WL	ANTHONY BRANDT	6912	149	16,463	0	16,463	0	16,463	YES	0	0	38		TOTAL TAKE		
80 WL	RONALD G. ANDERSON	O.R.41	140	10,010	0	10,010	0	10,010	YES	0	0	38		TOTAL TAKE		
81 WL	PAUL SALEM	7456	188	13,644	0	13,644	0	13,644	YES	0	0	40		TOTAL TAKE		
82 WL	RONALD J. NORRIS & KENNETH L. BURKHART	6202	132	3,850	0	3,850	0	3,850	YES	0	0	40		TOTAL TAKE		
83 WL	KATHERINE BRYSON & DOYLE W. BRYSON	5378	899	3,412	0	3,412	0	3,412	YES	0	0	40		TOTAL TAKE, SEE ALSO 7325/640		
84 WL	ROGER F. DI PAOLO & LINDA DI PAOLO	6525	515	3,412	0	3,412	0	3,412	YES	0	0	40		TOTAL TAKE		
85 WL	PORTER POST	3641	280	3,804	0	2,718	0	2,718	YES	0	0	41		TOTAL TAKE		
85A T	ROSE SLONSKY	6565	282	3,800	0	144	0	144	NO	0	3,800	41		RECONSTRUCT DRIVE		
86 WL	ALI MATTER AKA ALI MATAR	O.R. 288	969	3,510	0	3,510	0	3,510	YES	0	0	41		TOTAL TAKE		
87 WL	SHIRLEY ANN LINGER	7108	535	3,850	0	3,850	0	3,850	YES	0	0	41		TOTAL TAKE		
88 WL	KENNETH P. HILLEGAS, TRUSTEE	5494	866	3,850	0	1,569	0	1,569	YES	0	0	41		TOTAL TAKE, SEE ALSO 5078/541		
89 WL	SIDNEY SMITH & CLARA A. SMITH, DOLORES JOAN BERISH AKA	5082	191	10,557	0	10,557	0	10,557	YES	0	0	40		TOTAL TAKE, LAND CONTRACT 6647/394		
	JOAN BERISH, LAND CONTRACT HOLDER	5743	233													
90 WL	ELIZABETH A. PAL & ANDY PAL	7034	367	5,808	0	5,808	0	5,808	YES	0	0	40		TOTAL TAKE, SEE ALSO 6671/449		
91 WL	MARVIN T. HEAD & NEDRA A. HEAD	6440	670	9,778	0	9,778	0	9,778	YES	0	0	40		TOTAL TAKE, SEE ALSO 6416/222		
92 WL	PEARL G. JOHNSON	5073	359	3,429	0	3,429	0	3,429	YES	0	0	41		TOTAL TAKE, SEE ALSO 8182/527		
93 WL	BETTY JEAN HAMMOND	7449	358	3,429	0	3,429	0	3,429	YES	0	0	41	IR	TOTAL TAKE		
94 WL	DONALD H. ZENNER	7088	299	6,945	0	6,841	0	6,841	YES	0	0	41		TOTAL TAKE		
95	NOT USED															
96 WL	ROMITO BROTHERS ELECTRIC CONSTRUCTION COMPANY	5885	477	3,429	0	1,302	0	1,302	YES	0	0	41		TOTAL TAKE		
97 WL	HARWICK CHEMICAL CORPORATION, AN OHIO CORPORATION	7509	929	7,378	0	1,527	0	1,527	NO	0	0	41		TOTAL TAKE		
98 WD	DONALD H. ZENNER	6602	74	33,233	0	479	0	479	NO	0	32,754	41				
99 WL	EAST MARKET STREET UNITED CHURCH OF CHRIST	3384	188	35,648	0	1	0	1	NO	34,349	0	44				
99 WD		4519	32			1,298	0	1,298				44				
99 S						1,284	0	1,284				44		SEWER EASEMENT		
100 WD	DAVID B. WILT	6191	429	6,995	0	290	0	290	YES	6,705	0	44				
100 S						398	0	398				44		SEWER EASEMENT		
100 T						1920	0	1920				44		BUILDING REMOVAL		
101 WD	MORRIS TARAS & BERTHA TARAS	3788	419	31,176	0	134	0	134	NO	31,042	0	44				
101 S		3971	338			1,549	0	1,549				44		SEWER EASEMENT		
		4909	322													
		5080	26													
		6122	197													
102 T	METROMEDIA INCORPORATED, A DELAWARE CORPORATION	5861	402	324	0	96	0	96	NO	324	0	44		GRADING		
103 T	H. G. KRONENTHAL	3483	486	7,500	0	400	0	400	NO	7,500	0	44		GRADING		
*85 WD	PORTER POST	3641	280	3,804	0	1,086	0	1,086	YES	0	0	41		TOTAL TAKE		
*88 WD	KENNETH P. HILLEGAS, TRUSTEE	5494	866	3,850	0	2,281	0	2,281	YES	0	0	41		TOTAL TAKE		
*94 WD	DONALD H. ZENNER	7088	299	6,945	0	104	0	104	YES	0	0	41		TOTAL TAKE		
*96 WD	ROMITO BROTHERS ELECTRIC CONSTRUCTION COMPANY	5885	477	3,429	0	2,127	0	2,127	YES	0	0	41		TOTAL TAKE		
*97 WD	HARWICK CHEMICAL CORPORATION, AN OHIO CORPORATION	7509	929	7,378	0	5,851	0	5,851	NO	0	0	41		TOTAL TAKE		
*63A PR	RUTH A. SANDERSON & LUELLA T. PAINE	6760	674	3,750	0	0	0	0	NO	0	3,750	33		LOSS OF VEHICULAR ACCESS		
*65 T	GOODYEAR TIRE & RUBBER COMPANY, AN OHIO CORPORATION			13,303	0	22,165	0	22,165	NO	0	802	32,33		CONTRACTORS WORK AREA		
*66 T	GOODYEAR TIRE & RUBBER COMPANY, AN OHIO CORPORATION			1,647,782	0	91,970	0	91,970	YES	1,148	1,599,292	34		CONTRACTORS WORK AREA		

* DENOTES PARCEL OUT OF NUMERICAL ORDER

NAME	REVISION	DATE
BHB	Revised Pcl's. 85, 88, 94, 96 & 97 to add WD's.	9/27/90
DSB	DEL. PARCELS 63A-PR & 63A-PR	4/4/90

AA 8, Pg 71442R

CITY OF AKRON, SUMMIT COUNTY
ORIGINAL COVENTRY TOWNSHIP, T2N, R11W
TRACT 8, O.L. 4

CALC. BY. DATE	SUM-76-11.57	OHIO	1183 / 1214
CHKD. BY. DATE	FED. PROJECT IR-76-2(44)19	F.H.W.A. REGION 5	

SUMMIT COUNTY
LIMITED ACCESS
RIGHT OF WAY PLANS

19 / 49

BEGIN ACQUISITION
SUM-76-11.57
IR-76-2(44)19
STA. 558+69.60

N 22°39'22"W 25.00'

558+69.60 / 146.25' LT.

N 55°03'19"E 254.31'

561+00.00 / 215.00' LT.

N 67°29'07"E 162.99'

562+50.00 / 235.00' LT.

S 35°46'32"E 43.13'

562+65.00 / 195.00' LT.

S 41°25'11"W 187.16'

561+16.28 / 91.78' LT.

S 77°28'21"W 257.00'

558+70.05 / 121.25' LT.

Const. Limits

Brush & Small Trees To Be Removed

Brush & Small Trees

Const. Limits

SCHOOL ROAD

Conc. Walk

STEPS

EXIST. LA

Const. Limits

OVERHEAD SIGN

℄ I-76 SURVEY & CONSTRUCTION

CURVE NO. 1

559 560 561 562 563

Const. Limits

C.L. Fence

Guard Rail

EXIST. LA

Const. Limits

PARCEL NO.	OWNER	NET TAKE	RESIDUE LEFT	RESIDUE RIGHT
1T	ARCHBISHOP HOBAN HIGH SCH.	32,797	884848	884990

SCALE IN FEET
0 20 40 60

FUNDS	IR

NAME	REVISION	DATE

CALC. BY.		SUM-76-11.57	OHIO
DATE		FED. PROJECT IR-76-2(44)19	F.H.W.A. REGION 5
CHKD. BY.			
DATE			

1184/1214

20/49

SUMMIT COUNTY
LIMITED ACCESS
RIGHT OF WAY PLANS

FOR DETAIL SEE SHEET 21

EXIST. LA — Const. Limits — EXIST. RAMP E-3 — 15" STM. — C.B. — HYD. — W.V. — 6"W — 25' — MH. — 18" Maple — 20" Maple — 24" Maple — WALK — EXIST. R/W — 12" STM. — 15" STM. — 12" STM. — 25' — 25' — 15" STM. — 12" STM. — 12" STM. — C.B. — M.H. — MARTIN AVE. — 8" COMB. — 18" Maple — 2-Sty. Fr. #1059 — 4" Elm — 34" Maple — 2-Sty. Fr. #1063 — 2-Sty. Fr. #1063 — Conc — 2-Sty. Fr. #1073 — Asphalt — 2-Sty. Fr. #1077 — 25' — 25' — 6"W — EXIST. R/W — Const. Limits — Existing Wall — EXIST. LA R/W — PROPOSED RETAINING WALL — 6" Tree — 6" Tree — 6" Tree — 8" Tree — 6" Tree — BERM — 12" STM. — C.B. — 12" STM. — 30' — 6"W — 20" COMB. — 12" STM. — M.H. — 12" STM. — 18" Elm — Const. Limits — 24" COMB. — BERM — BERM — ℄ I-76 SURVEY & CONSTRUCTION — N 89° 21' 10" E — 571 — 572 — 573 — 574 — 575 — 576 — N 0° 21' 50" E 53.31 SEE SHEET 23 & 24 OF 49 — MATCH LINE STA 576+53.31 — ARLINGTON ST. — 20" COMB. — STONE WALL — 30' — M.H. — 3-Ever Green — 8 Maple — 3-Ever Green — 569+81.87 / 83.01' LT. — EXIST. LA — N 89° 21' 17" E — N 77° 08' 18" W — 155.00' — 1 WL — 571+36.87 / 87.01' LT. — 3C Maple — 571+36.67 / 95.10' RT. — 140.00'(C) — N 89° 23' 07" E — 140'(D) — 572+76.67 / 95.18' RT. — 572+76.34 / 115.18' RT. — 6"-10" Elms Sparce — Gravel — 573+26.34 / 116.00' RT. — 573+26.25 / 121.00' RT. — 25.04' — 25' — 25' — Const. Limits — 2 WL — 64 — 140'(D) — S 89° 23' 07" W — 140.00'(C) — Asphalt — LA — 158.78' — N 0° 17' 59" E 37.09' — 25.00' — 571+36.26 / 120.10' RT. — 572+76.26 / 120.18' RT. — 50'(D) — 2-Sty. Frame #338 — 2-Sty. Frame — 65 — EXIST. R/W — N 0° 17' 59" E 5.00' — S 89° 42' 01" E 50.00' — N 0° 17' 59" E 5.00' — EXIST. R/W — 12" Maple — 15" Maple — 22" Maple — INGLESIDE — N 0° 17' 59" E — TALBOT — N 89° 23' 07" E — 294.92' — EXIST. LA — Gravel — 15' — Frame Garage — 2-Sty. Frame — 2-Sty. Blk. #340 — 3 T — 50'(D) — 21 — 5 — 22 — 6 — ALLOTMENT — R.B. 7 P. 4 — Ever Green — 8 Maple — 30' — 3-6' Ash — FOR DETAIL SEE SHEET 22

SCALE IN FEET
0 20 40 60

PARCEL NO.	OWNER	NET TAKE	RESIDUE LEFT	RESIDUE RIGHT
1WL	ARCHBISHOP HOBAN HIGH SCH.	2874	884,848	584,990
2WL	JERRY W. KODISH	3,500	0	0
3WD	GEORGIA A. BELL	.350	0	6650
3T		716		

CITY OF AKRON, SUMMIT COUNTY
ORIGINAL COVENTRY TOWNSHIP, T2N, R11W
TRACT 8, O.L.4

FUNDS	IR

NAME	REVISION	DATE
DSB	REV L/A ON TALBOT AVE	

AA. B. Pg 71442R

CITY OF AKRON, SUMMIT COUNTY
ORIGINAL COVENTRY TOWNSHIP, T2N, R11W
TRACT 8, O.L.4

CALC. BY. DATE	SUM-76-11.57	OHIO
CHKD. BY. DATE	FED. PROJECT IR-76-2(44)19	F.H.W.A. REGION 5

1185 / 1214

21 / 49

SUMMIT COUNTY
LIMITED ACCESS
RIGHT OF WAY PLANS

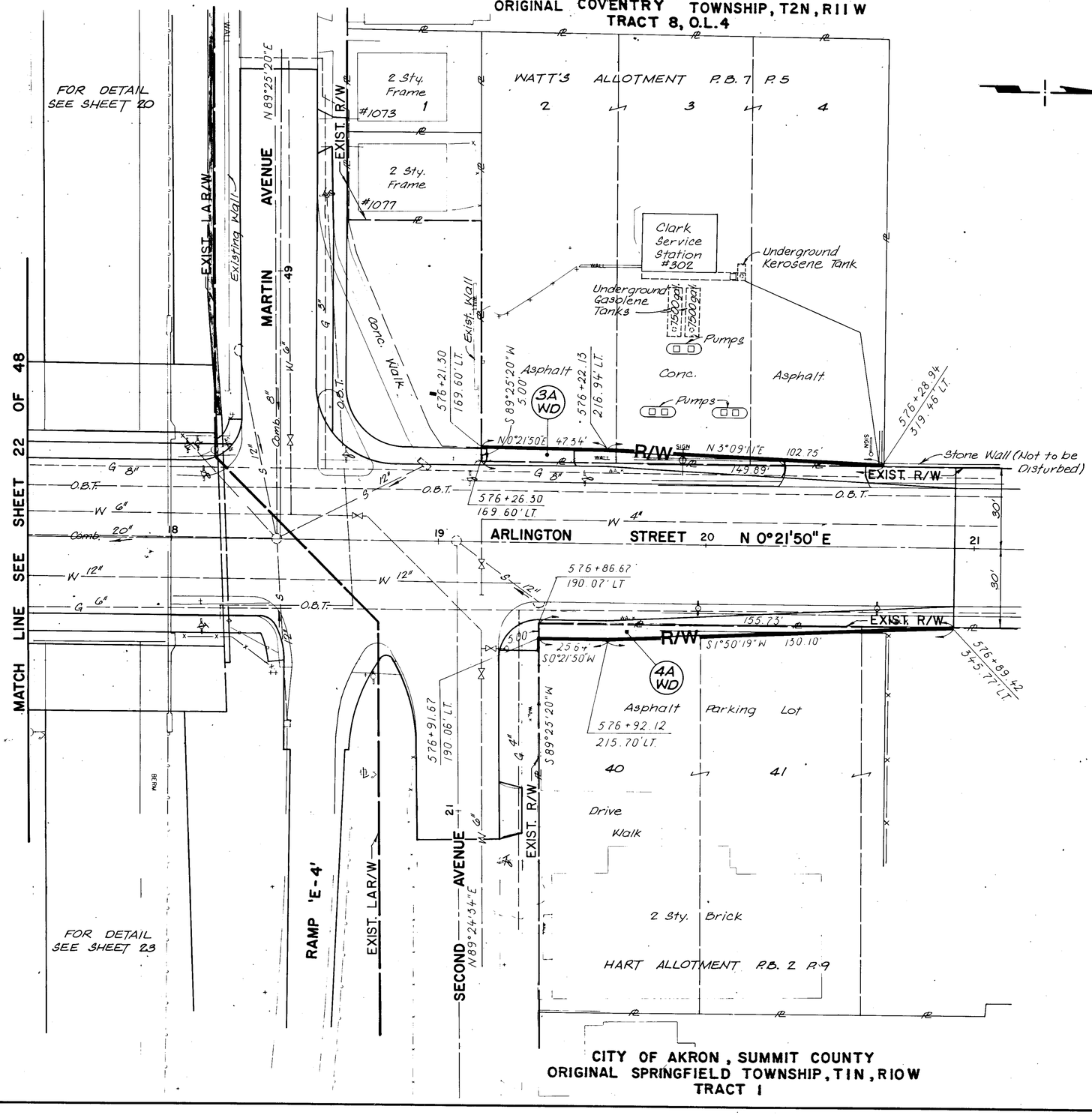

PARCEL NO.	OWNER	NET TAKE	RESIDUE LEFT	RESIDUE RIGHT
3AWD	DARTMOOR CORPORATION	493	23,504	0
4AWD	F. & E. NARZISI	453	39,640	0

SCALE IN FEET
0 20 40 60

FUNDS	IR

NAME	REVISION	DATE

CITY OF AKRON, SUMMIT COUNTY
ORIGINAL SPRINGFIELD TOWNSHIP, T1N, R10W
TRACT 1

ARLINGTON STREET

AA B/Pe 71942R

CITY OF AKRON, SUMMIT COUNTY
ORIGINAL COVENTRY TOWNSHIP, T2N, R11W
TRACT 8, O.L.4

CALC. BY. DATE	SUM-76-11.57	OHIO
CHKD. BY. DATE	FED. PROJECT IR-76-2(44)19	F.H.W.A. REGION 5

1186 / 1214

22 / 49

SUMMIT COUNTY
LIMITED ACCESS
RIGHT OF WAY PLANS

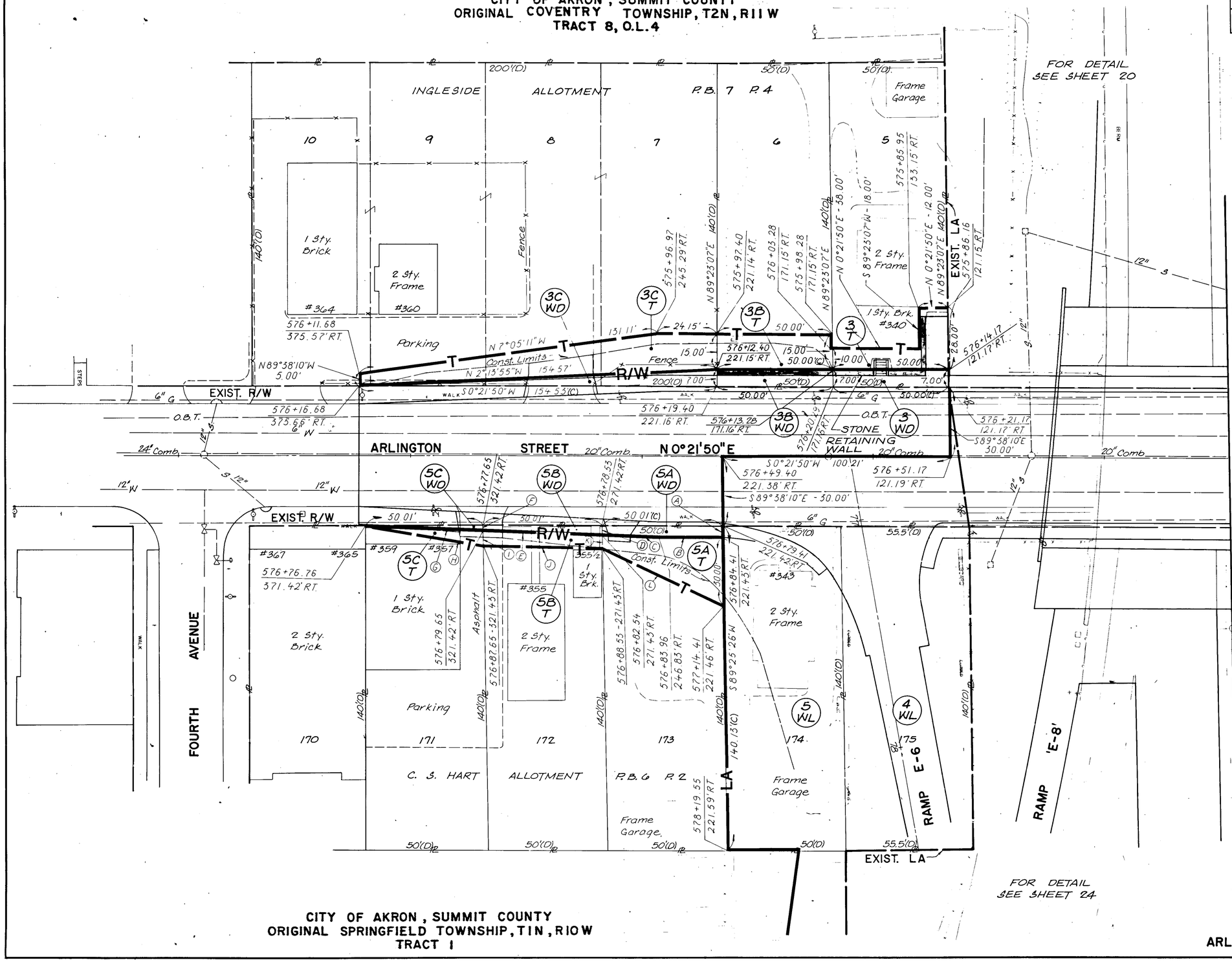

Right of Way Line Data

(A)	N 89°25'26"E	- 5.00'
(B)	S 0°21'50" W	- 25.40'
(C)	S 2°39'31"W	- 24.64'
(D)	S 89°25'26"W	- 4.01'
(E)	S 2°39'31"W	- 50.08'
(F)	S 89°25'26"W	- 2.01'
(G)	S 2°39'31"W	- 50.08'
(H)	N 11°38'04"E	- 51.16'
(I)	N 89°25'26"E	- 7.99'
(J)	N 0°21'50" E	- 50.01
(K)	S 89°25'26"W	- 5.99'
(L)	S 26°44'00"W	- 56.27'

PARCEL NO.	OWNER	NET TAKE	RESIDUE LEFT	RESIDUE RIGHT
3WD	GEORGIA A. BELL	350	0	6650
3T		716		
3BWD	R. & J. A. SIX	350	0	6650
3BT		750		
3CWD	D. B. & C. B. LAIDIG	541	0	27,459
3CT		1750		
5AWD	HARRY KODISH	238	0	6769
5AT		887		
5BWD	ANDREW JESSIE LOMAN	150	0	6857
5BT		350		
5CWD	H. G. UNDERWOOD	50	0	6957
5CT		200		

SCALE IN FEET
0 20 40 60

FUNDS	IR

DSB	EXTEND RET. WALL PARCEL 3B WD	4/2/90
NAME	REVISION	DATE

CITY OF AKRON, SUMMIT COUNTY
ORIGINAL SPRINGFIELD TOWNSHIP, T1N, R10W
TRACT 1

ARLINGTON STREET

CITY OF AKRON, SUMMIT COUNTY
ORIGINAL SPRINGFIELD TOWNSHIP, T 1N, R 10 W
TRACT 1

CALC. BY. DATE	SUM-76-11.57	OHIO
CHKD. BY. DATE	FED. PROJECT IR-76-2(44)19	F.H.W.A. REGION 5

1187 / 1214

23 / 49

SUMMIT COUNTY
LIMITED ACCESS
RIGHT OF WAY PLANS

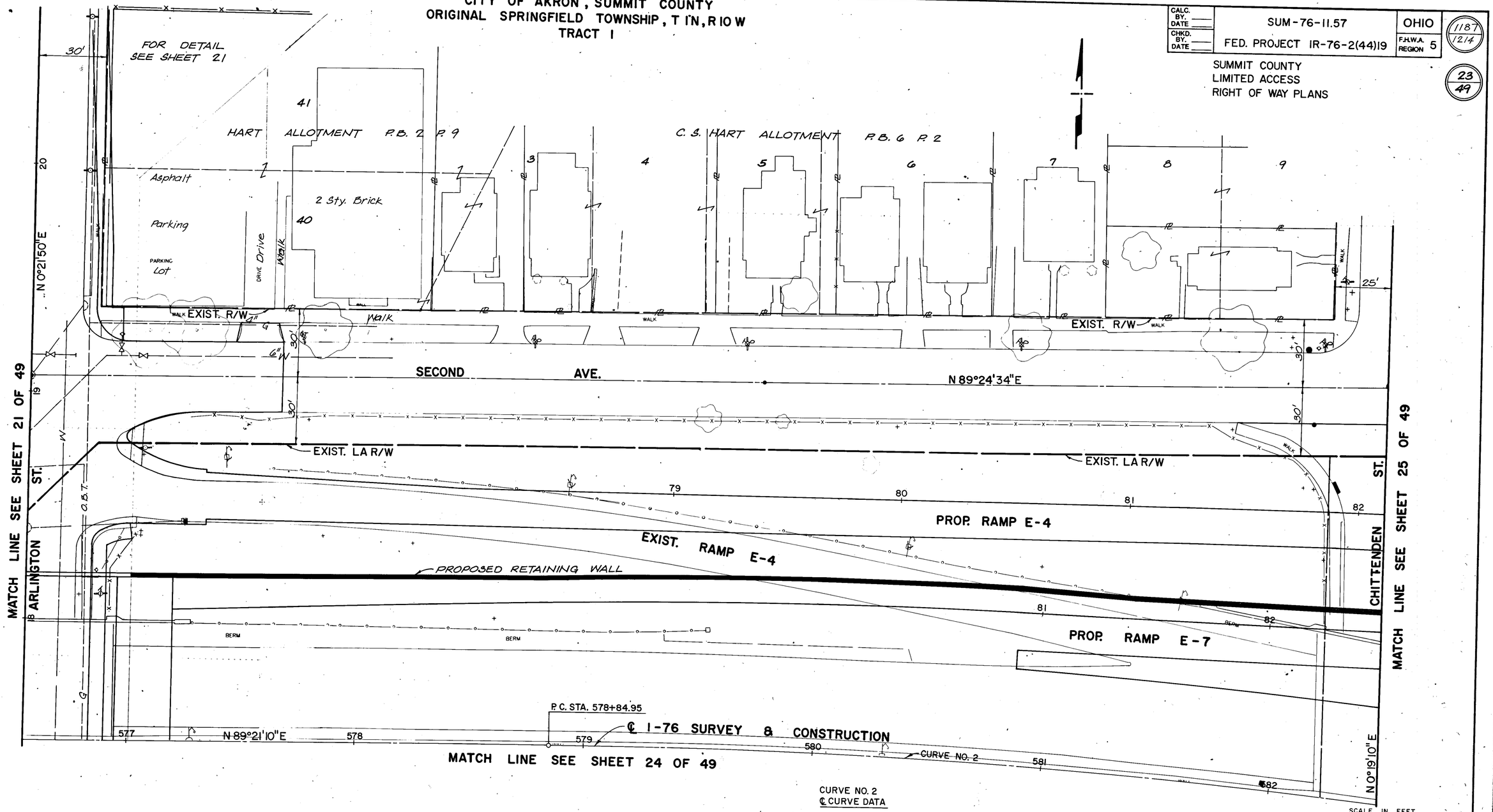

CURVE NO. 2
℄ CURVE DATA

DELTA	16°45'08" RT.
Dc	2° 0' 30"
R	2852.90'
Lc	834.14'
T	420.06'
CH	831.17'
EX(C)	30.76'

STATIONING

MAIN PI STA.	583+05.01
PC STA.	578+84.95
PT STA.	587+19.08

SCALE IN FEET
0 20 40 60

FUNDS	IR

NAME	REVISION	DATE

AA B/Pn 71942R

CALC. BY. DATE	SUM-76-11.57	OHIO
CHKD. BY. DATE	FED. PROJECT IR-76-2(44)19	F.H.W.A. REGION 5

1188 12/14

24 49

SUMMIT COUNTY
LIMITED ACCESS
RIGHT OF WAY PLANS

℄ I-76 SURVEY & CONSTRUCTION

P.C. STA. 578+84.95

CURVE NO. 2

N 89°21' 10" E

MATCH LINE STA 576+53.31 SEE SHEET 20 OF 48

MATCH LINE STA 582+48.94 SEE SHEET 26 OF 40

ARLINGTON ST. EXIST. R/W

CHITTENDEN ST.

MILES ST.

EXIST R/W

EXIST. LA

PROP. RAMP E-5

PROP. RAMP E-6

PROP. RAMP E-8

BERM

PAVED PARKING

Gravel

Frame Garage

Stucco Garage

Block Garage

2-Sty Frame #343

2-Sty Frame #274

1½ Sty Frame #274

2-Sty Frame #276

2-Sty Frame #276½

2-Sty Frame #275

1-Sty Frame

Frame Garage

Const. Limits 576+79.41 221.42' RT.

Const. Limits 578+19.55 221.59' RT.

Const. Limits 581+26.55 229.69' RT.

C.B. 576+81.27 115.92' RT. 140.12'(C)

C.B. 578+21.39 116.05' RT.

C.B. 578+20.42 171.60' RT. 125.11'(C)

C.B. 581+28.03 249.65' RT.

576+80.25 171.42' RT.

578+85.16 190.72' RT.

579+49.40 171.07' RT.

579+49.56 200.13' RT.

580+03.42 203.27' RT.

580+03.81 218.27' RT.

581+08.11 197.56' RT.

581+24.85 206.42' RT.

579+49.68 221.18' RT.

580+37.48 235.25' RT.

580+04.30 236.67' RT.

578+20.09 190.63' RT.

578+84.97 200.74' RT.

4 WL

5 WL

6 WL

7 WL

8 WL

8A 3

PARCEL NO.	OWNER	NET TAKE	RESIDUE LEFT	RESIDUE RIGHT
4WL	HARRY KODISH	7,777	0	0
5WL	ROBERT V. & JUDITH A. ASHLEY	7007	0	0
6WL	HARRY KODISH	2979	0	0
7WL	JAMES R. WALKER	3,278	0	0
8WL	P.E., SR. & M.A. KLINE	3,681	0	0
8A 3	ELMER J. STARKS, JR.	820	0	4058

CURVE NO.2
℄ CURVE DATA

DELTA	16° 45' 08" RT.
DC	2° 0' 30"
R	2852.90'
LC	834.14'
T	420.06'
CH	831.17'
EX(C)	30.76'

STATIONING

MAIN PI STA.	583+05.01
PC STA.	578+84.95
PT STA.	587+19.08

CITY OF AKRON, SUMMIT COUNTY
ORIGINAL SPRINGFIELD TOWNSHIP, T1N, R10W
TRACT 1

SCALE IN FEET
0 20 40 60

FUNDS	IR

NAME	REVISION	DATE

CITY OF AKRON, SUMMIT COUNTY
ORIGINAL SPRINGFIELD TOWNSHIP, T1N, R10W
TRACT 1

CALC. BY.		SUM-76-11.57	OHIO
CHKD. BY.		FED. PROJECT IR-76-2(44)19	F.H.W.A. REGION 5

1189 / 1214

SUMMIT COUNTY
LIMITED ACCESS
RIGHT OF WAY PLANS

25 / 49

MATCH LINE SEE SHEET 23 OF 49

MATCH LINE SEE SHEET 27 OF 49

MATCH LINE STA. 588+00 SEE SHEET 26 OF 49

CHITTENDEN ST.

SECOND AVE. N 89° 24' 26" E

EXIST. R/W

EXIST. LA R/W

EXIST. LA

PROP. RAMP E-7

PROP. RAMP E-4

C.S. HART ALLOTMENT P.B. 6 P. 2

Ⓒ I-76 SURVEY & CONSTRUCTION

CURVE NO. 2

P.T. STA. 587+19.08

S 73° 53' 42" E

PARCEL NO.	OWNER	NET TAKE	RESIDUE LEFT	RESIDUE RIGHT
15WL	A. E. HARDESTY	2682	0	0
16WL	J. & C. COPELAND	2898	0	0
17WL	C.P. & C.C. HARDESTY	3199	0	0
18WL	W. H. MARKS	5424	0	0
19WL	TERRY WORTHY	6134	0	0
20WL	BEAUFORD & POLA JEFFRIES	6299	0	0
21WL	W. H. MARKS	6299	0	0
22WL	G. PETERSON	3149	0	0

CURVE NO. 2
Ⓒ CURVE DATA

DELTA	16° 45' 08" RT.
DC	2° 0' 30"
R	2852.90'
LC	834.14'
T	420.06'
CH	831.17'
EX(C)	30.76'

STATIONING

MAIN PI STA.	583+05.01
PC STA.	578+84.95
PT STA.	587+19.08

SCALE IN FEET
0 20 40 60

FUNDS	IR

NAME	REVISION	DATE

AA B.Pr. 71/42R

CALC. BY. DATE	SUM-76-11.57	OHIO
CHKD. BY. DATE	FED. PROJECT IR-76-2(44)19	F.H.W.A. REGION 5

1190 / 1214

26 / 49

SUMMIT COUNTY
LIMITED ACCESS
RIGHT OF WAY PLANS

MATCH LINE STA 582+48.94 SEE SHEET 24 OF 49

MATCH LINE STA 588+00 SEE SHEET 28 OF 49

MATCH LINE ℄ I-76 SEE SHEET 25 OF 49

℄ I-76 SURVEY & CONSTRUCTION

CURVE NO. 2

P.T. STA. 587+19.08

S 73°53'42" E

EXIST. LA R/W

EXIST. R/W

THIRD AVE.

S 86°18'15" E 33.38'(C)

583+44.35 136.70' RT.

584+13.20 125.27' RT.

584+47.86 121.43' RT.

S 83°27'41" E 40.23'(C) 41'(D)

S 81°06'45" E 30.33'(C) 31'(D)

584+85.06 118.37' RT.

585+21.32 116.(C) RT.

583+06.70 142.23' RT.

N 30°16'06" E 22.27'(D) 22.45'(C)

N 89°24'10" E 36.16'(C) 36.16'(D) 66.67'(C) 33.33'(D) 33.34'(D) 33.4'(D)

EXIST. RAMP E-6

PROP. RAMP E-8

SERVICE RD.

EXIST. LA

#1154 2-Sty. Frame

#1156 2-Sty. Frame Conc.

#1158 2-Sty. Frame Asphalt

#1160 2-Sty. Frame

#1166 2-Sty. Frame Conc.

Dirt

120.00'(C) Conc.

110.00'(C) 110'(D)

115.00'(C) 115'(D)

105.00'(C) 105'(D)

582+24.63 161.55' RT.

122.50'(C) 122.5'(D)

N 0°15'10" E

S 0°15'10" W

C. G. HART ALLOTMENT PB. 6 PG. 2

9 WL — 252

10 WL — 251

11 WL — 250

12 WL — 249

13 WL — 248

14 WL — 262

Frame Garage

Shed

Bush

Frame Car.

Const. Limits

583+09.33 225.71' RT.

50.00'(C) 50'(D)

S 89°24'02" W

583+63.70 251.81' RT.

584+35.65 245.52' RT.

585+45.76 224.27' RT.

30" Maple

16" Maple

40.00'(C) 40'(D) 12" Maple

30.00'(C) 30'(D)

585+13.98 230.67' RT.

600'(D) 24" Maple

150.00'(C)

N 89°24'02" E

GUARD RAIL

CONC. WALL & FENCE

586+29.67 204.82' RT.

298.83'(C)

5-6" Trees

16" Maple

5-10" Trees

1-10" Maple

EXIST. LA

N 89°47'48" E

8-4" Trees

3-12" Elm

1-8" Maple

10" Maple

8" Beech

8" Maple

12" STM.

M.H.

8" SAN.

6" W

12" STM.

18" STM. 16" W

HYD.

W.V.

M.H.

BERM

WALK

CURB

CURBED

LINE UNDEFD

2" Maples

584+71.36 239.39' RT.

N 79°15'20" W 50.85'

585+26.8+ / 238.55' T.

N 86°01'14" W 50.10'

585+80.78 230.69' RT.

CONC. WALK

2" MAPLES

VACATED ORD. NO. 252-1985

02.54'

N 76°54'31" W

586+92.28 228.46' RT.

Const. Limits 261

151.26' N 79°23'13" W

Asphalt Parking

Light Post

AKRON BOARD OF EDUCATION

ROBINSON ELEM. SCHOOL

Conc. Walk

Conc. Ramp

25'

16" W

2" Maple 2" Crab Apple

Shrubs

CHITTENDEN ST.

EXIST. R/W

CURVE NO. 2
℄ CURVE DATA

DELTA	16° 45' 08" RT.
DC	2° 0' 30"
R	2852.90'
LC	834.14'
T	420.06'
CH	831.17'
EX(C)	30.76'

STATIONING

MAIN PI STA.	583+05.01
PC STA.	578+84.95
PT STA.	587+19.08

PARCEL NO.	OWNER	NET TAKE	RESIDUE LEFT	RESIDUE RIGHT
9WL	EDDIE O. HEWINS	6003	0	0
10WL	HEIRS OF CHARLES HEWINS	8166	0	0
11WL	ELAINE MAE THOMAS	4041	0	0
12WL	D. R. & J. A. MOYERS	4699	0	0
13WL	ANNA EATON, ET AL	3375	0	0
14WL	AKRON BD. OF EDUCATION	19,026	0	235974

SCALE IN FEET
0 20 40 60

FUNDS	IR

NAME	REVISION	DATE

FOURTH AVE. VACATED ORD. NO. 253-1985

CITY OF AKRON, SUMMIT COUNTY
ORIGINAL SPRINGFIELD TOWNSHIP, T1N, R10W
TRACT I

CITY OF AKRON, SUMMIT COUNTY
ORIGINAL SPRINGFIELD TOWNSHIP, T1N, R10W
TRACT 1

CALC. BY. DATE		SUM-76-11.57	OHIO
CHKD. BY. DATE		FED. PROJECT IR-76-2(44)19	F.H.W.A. REGION 5

11/91 12/14

27/49

SUMMIT COUNTY
LIMITED ACCESS
RIGHT OF WAY PLANS

PARCEL NO.	OWNER	NET TAKE	RESIDUE LEFT	RESIDUE RIGHT
22WL	G. PETERSON	3149	0	0
23WL	R. NEIMAN	3149	0	0
24WL	ZION TEMPLE APOSTOLIC CHURCH	9448	0	0
25WL	GENE ECKRICH	3149	0	0
27WL	BETTY G. JOHNSON	7498	0	0
37WL	U.R.W. HOME ASSOCIATION	5039	0	0
37AWL	JESSIE L. & STELLA M. WILKINS	4267	0	0

(0 WL) INDICATES PARCEL PREVIOUSLY ACQUIRED

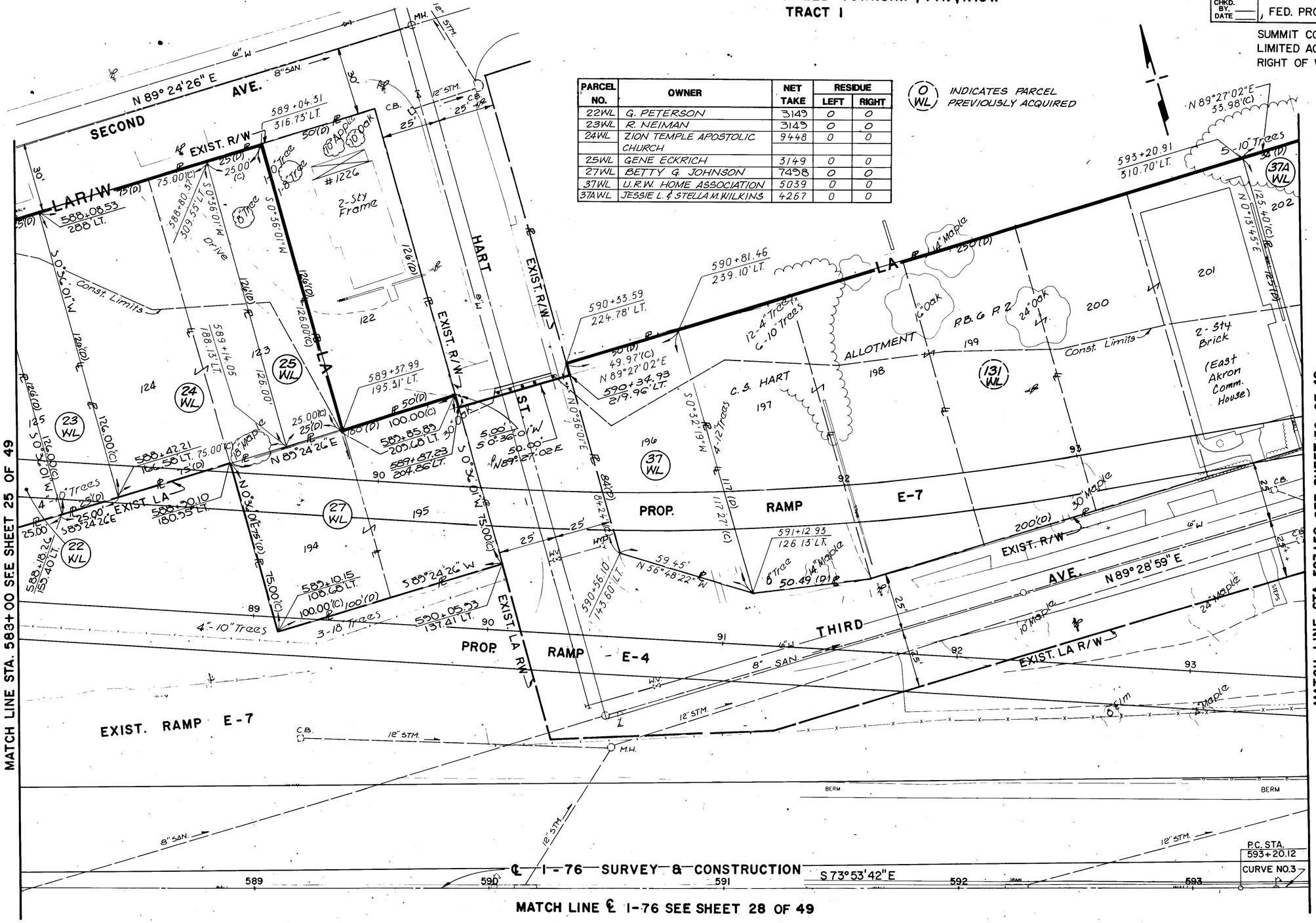

MATCH LINE STA. 583+00 SEE SHEET 25 OF 49

MATCH LINE STA 593+50 SEE SHEET 30 OF 49

MATCH LINE ℄ I-76 SEE SHEET 28 OF 49

CURVE NO. 3
℄ CURVE DATA

DELTA	21° 08' 51" LT.
DC	1° 58' 30"
R	2901.05'
LC	1070.76'
T	541.54'
CH	1064.69'
EX(C)	50.11'

STATIONING

MAIN PI STA.	598+61.66
PC STA.	593+20.12
PT STA.	603+90.88

SCALE IN FEET
0 20 40 60

FUNDS	IR

NAME	REVISION	DATE
DSB	REV L/A ON HART ST.	4/4/90

AA B/Pe 71942R

CALC. BY. DATE	SUM-76-11.57	OHIO	1192
CHKD. BY. DATE	FED. PROJECT IR-76-2(44)19	F.H.W.A. REGION 5	1214

28
49

SUMMIT COUNTY
LIMITED ACCESS
RIGHT OF WAY PLANS

MATCH LINE ℄ I-76 SEE SHEET 27 OF 49

MATH LINE STA. 588+00 SEE SHEET 26 OF 49

MATCH LINE STA. 593+50 SEE SHEET 31 OF 49

℄ I-76 SURVEY & CONSTRUCTION

CURVE NO. 3
P.C. STA. 593+20.12

CURVE NO. 3
℄ CURVE DATA

DELTA	21° 08' 51" LT.
DC	1° 58' 30"
R	2901.05'
LC	1070.76'
T	541.54'
CH	1064.69'
EX(C)	50.11'

STATIONING

MAIN P.I STA.	598+61.66
PC STA.	593+20.12
PT STA.	603+90.88

EXIST. RAMP E-6

EXIST. LA

PROP. RAMP E-3

EXIST. R/W

HART AVE.

FOURTH AVE.

ALLOTMENT

C. S. HART

SOCCER GOAL

Const. Limits

VACATED ORD. 253-1985

SEE SHEET 29 OF 49

PARCEL NO.	OWNER	NET TAKE	RESIDUE LEFT	RESIDUE RIGHT
42WL	PETER & JUANITA MONDL	6288	0	0
43WL	DONALD L. DAY	3770	0	0
44WL	ETHEL & JOHN ANGEL	3769	0	0
45WL	D.E. & P. CONEY	5022	0	0
46WL	JOHNNIE BROWN	4237	0	0
47WL	W. PRESTON & T. SOJOURNER	5620	0	0
48WL	GEORGE HAMMETT, JR.	6246	0	0
49WL	JIMMIE LEE CLARK	6248	0	0

PARCEL NO.	OWNER	NET TAKE	RESIDUE LEFT	RESIDUE RIGHT
14WL	AKRON BD. OF EDUCATION	19,026	0	235,974
28WL	G.S.G. DEVELOPMENT CO.	4938	0	0
29WL	B. & B. ASSOCIATES, INC.	4938	0	0
30WL	LEROY CALHOUN, ET AL	3770	0	0
31WL	A.E. GEER	6283	0	0
32WL	W. THOMAS	4708	0	0
33WL	JOHN BOY BROWN	3144	0	0
34WL	GILBERT & ARLINE STORY	2812	0	0
35WL	JOHN & CARRIE MAE BROWN	3233	0	0
36WL	B. R. JAMES	2315	0	0

CITY OF AKRON, SUMMIT COUNTY
ORIGINAL SPRINGFIELD TOWNSHIP, T1N, R10W
TRACT 1

SCALE IN FEET
0 20 40 60

FUNDS	IR

NAME	REVISION	DATE

CITY OF AKRON, SUMMIT COUNTY
ORIGINAL SPRINGFIELD TOWNSHIP, T1N, R10W
TRACT 1

CALC. BY. DATE	SUM-76-11.57	OHIO
CHK'D. BY. DATE	FED. PROJECT IR-76-2(44)19	F.H.W.A. REGION 5

1193
1214

29
49

SUMMIT COUNTY
LIMITED ACCESS
RIGHT OF WAY PLANS

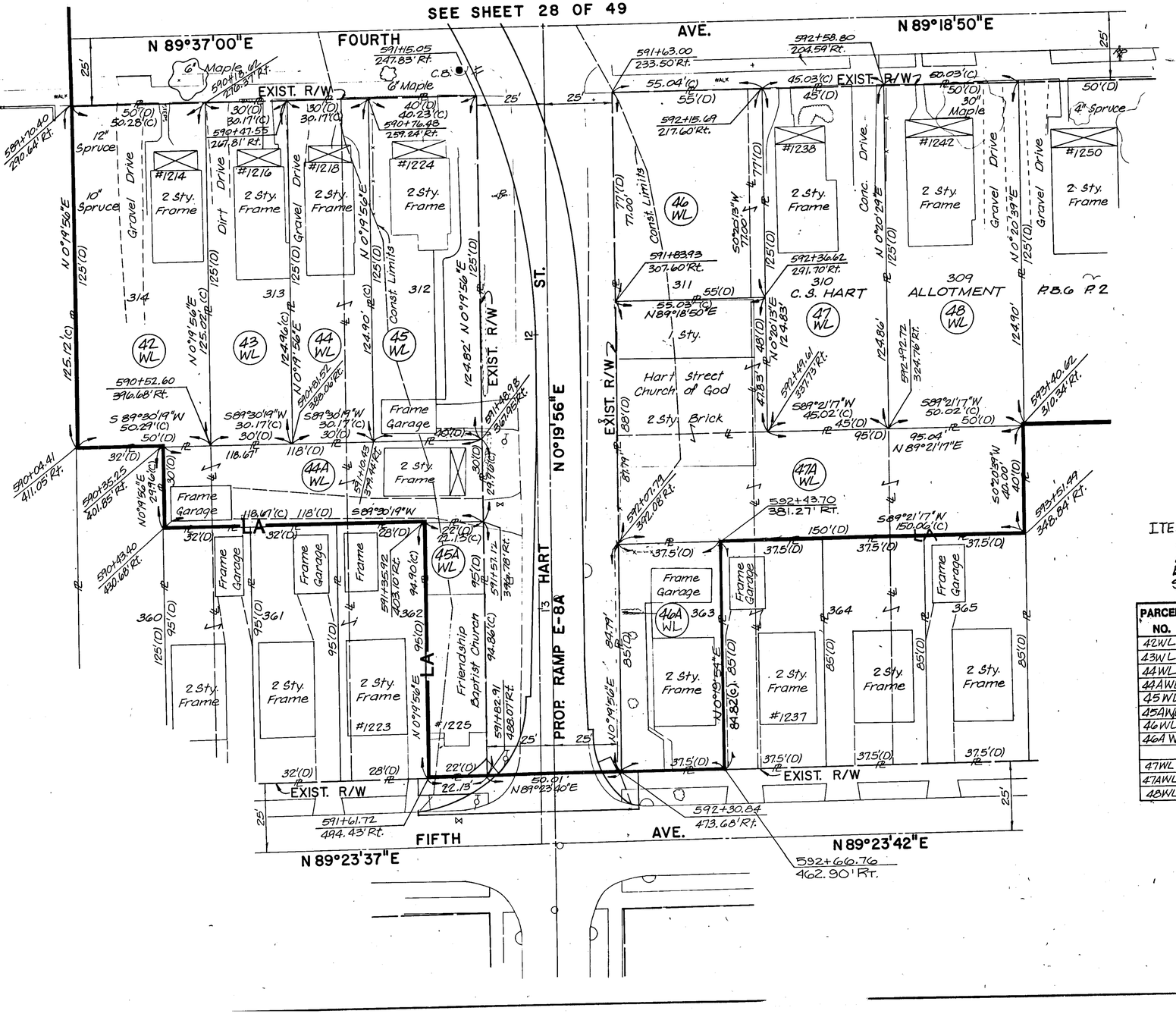

ITEM 202 BUILDING DEMOLISHED - PARCEL 46AWL
ONE 2-STORY FRAMED STRUCTURE AND FRAMED GARAGE -- LUMP SUM HAS BEEN CARRIED FORWARD TO THE GENERAL SUMMARY.

PARCEL NO.	OWNER	NET TAKE	RESIDUE LEFT	RESIDUE RIGHT
42WL	PETER & JUANITA MONDL	6288	0	0
43WL	DONALD L. DAY	3770	0	0
44WL	ETHEL & JOHN ANGEL	3769	0	0
44AWL	RUTH L. KACHENAK	3555	0	0
45WL	D.E. & P. CONEY	5022	0	0
45AWL	FRIENDSHIP BAPTIST CHURCH	2099	0	0
46WL	JOHNNIE BROWN	4237	0	0
46A WL	" CLAIRE ROGERS	3180	0	0
47WL	W. PRESTON & J. SOJOURNER	5620	0	0
47AWL	C. F. & E. TRAVIS	8632	0	0
48WL	GEORGE HAMMETT, JR.	6246	0	0

SCALE IN FEET
0 20 40 60

FUNDS	IR

NAME	REVISION	DATE
	ADD 46A WL, DEL 46ALA	6-1-92
	REV. 46 ALA,	7-1-91

REVISED 8-18-92

AA B.P# 71142R

CITY OF AKRON, SUMMIT COUNTY
ORIGINAL SPRINGFIELD TOWNSHIP, T1N, R10W
TRACT 1

CALC. BY. DATE	SUM-76-11.57	OHIO
CHKD. BY. DATE	FED. PROJECT IR-76-2(44)19	F.H.W.A. REGION 5

1194
1214

30
49

SUMMIT COUNTY
LIMITED ACCESS
RIGHT OF WAY PLANS

PARCEL NO.	OWNER	NET TAKE	RESIDUE LEFT	RESIDUE RIGHT
37AWL	JESSIE L. & STELLA M. WILKINS	42.67	0	0
38AWL	JOSEPH & JENNIE E. CHURCH	4142	0	0
38WL	BRIAN R. JAMES	4142	0	0
39WL	ROBERT W. BLAKEMORE	2111	0	0
40WL	LUCY HAMRIC	1969	0	0
41WL	L. & E. McCLENDON	6430	0	0
55WL	GOODYEAR TIRE & RUBBER CO.	17,504	0	0

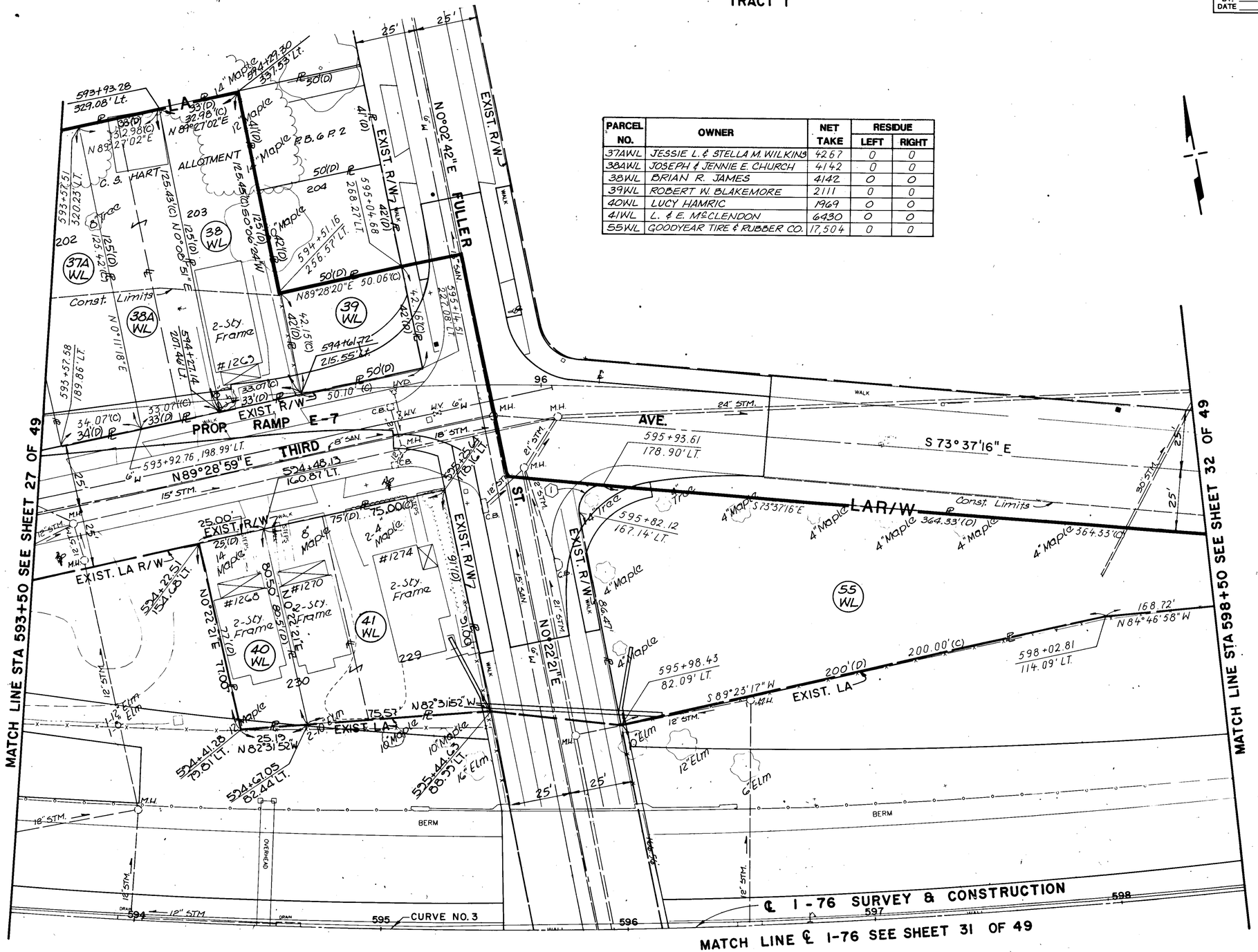

CURVE NO. 3
℄ CURVE DATA

DELTA	21°08'51" LT.
DC	1° 58' 30"
R	2901.05'
LC	1070.76'
T	541.54'
CH	1064.69'
EX(C)	50.11'

STATIONING

MAIN PI STA.	598+61.66
PC STA.	593+20.12
PT STA.	603+90.88

R/W CURVE (1)
R = 10.00'
A = 18.50'
CH = 15.97'
BRG. = N 53°22'35" E

SCALE IN FEET
0 20 40 60

FUNDS	IR

NAME	REVISION	DATE

CALC. BY. DATE	SUM-76-11.57	OHIO
CHKD. BY. DATE	FED. PROJECT IR-76-2(44)19	F.H.W.A. REGION 5

1195 / 1214

31 / 49

SUMMIT COUNTY
LIMITED ACCESS
RIGHT OF WAY PLANS

MATCH LINE ℄ I-76 SEE SHEET 30 OF 49

℄ I-76 SURVEY & CONSTRUCTION

MATCH LINE STA 593+50 SEE SHEET 28 OF 49

MATCH LINE STA 598+50 SEE SHEET 33 OF 49

FOURTH AVE.

FIFTH AVE.

FULLER ST.

EXIST. RAMP E-8

PROP. RAMP E-8B

EXIST. L.A R/W 7

EXIST. R/W 7

CURVE NO. 3
℄ CURVE DATA

DELTA	21° 08'51" LT.
DC	1° 58' 30"
R	2901.05'
LC	1070.76'
T	541.54'
CH	1064.69'
EX(C)	50.11'

STATIONING

MAIN PI STA.	598+61.66
PC STA.	593+20.12
PT STA.	603+90.88

PARCEL NO.	OWNER	NET TAKE	RESIDUE LEFT	RESIDUE RIGHT
50WL	M. R. KELLER	6250	0	0
51WL	W. CLARK, JR., ET AL	4167	0	0
52WL	J. L. & A. L. SMITH	4167	0	0
53WL	R. L. & A. B. GRANDISON	4165	0	0
54WL	W. A. & M. L. BANKS	10,760	0	0
54AWL	PATRICIA DAVIS	7752	0	11,935
56WL	H. B. WOZNIAK	563	0	
56T		833	0	3440
57WL	NED L. & BONNIE TRAYLOR	726		

SCALE IN FEET
0 20 40 60

FUNDS	IR

NAME	REVISION	DATE

CITY OF AKRON, SUMMIT COUNTY
ORIGINAL SPRINGFIELD TOWNSHIP, T1N, R10W
TRACT I

AA B/Pn 71942R

CITY OF AKRON, SUMMIT COUNTY
ORIGINAL SPRINGFIELD TOWNSHIP, T1N, R10W
TRACT 1

CALC. BY. DATE	SUM-76-11.57	OHIO
CHKD. BY. DATE	FED. PROJECT IR-76-2(44)19	F.H.W.A. REGION 5

SUMMIT COUNTY
LIMITED ACCESS
RIGHT OF WAY PLANS

OVERLAP TABLE					
PARCEL NO.	WO	R	T	HI-WAY	B.L.
64	—	811	—	—	—
64R	—	—	—	811	252
64SL	—	252	—	—	—
65WD	—	95	531	—	—
65WD2	—	60	377	—	—
65R	155	—	7403	—	—
65T	908	7,403	—	—	—

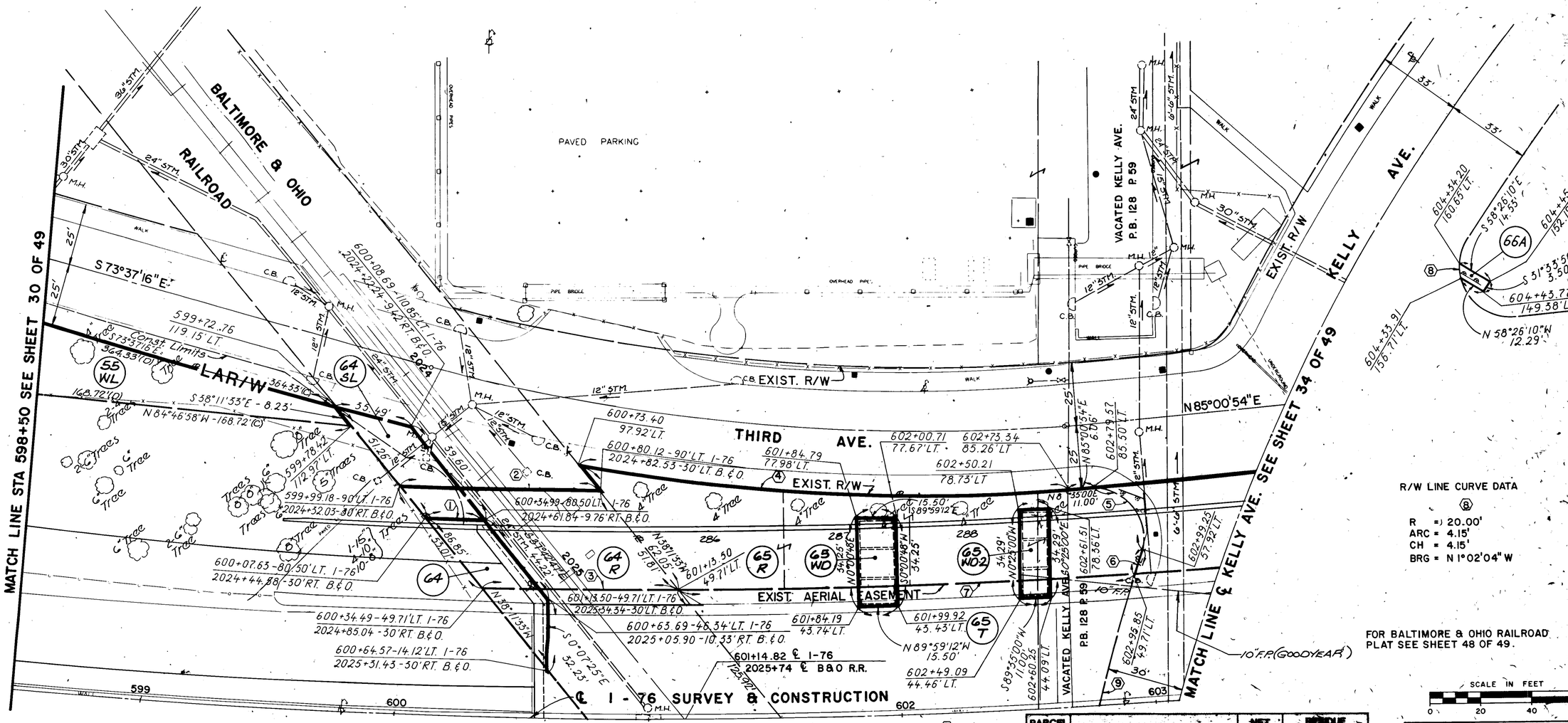

R/W LINE CURVE DATA ⑧
R = 20.00'
ARC = 4.15'
CH = 4.15'
BRG = N 1°02'04" W

Property Line Curve Data

①	②	③	④	⑤	⑥	⑦	⑨
R = 2820.55'	R = 2811.05'	R = 2851.34'	R = 698.94'	R = 20.00'	R = 746.43'	R = 2851.34'	R = 746.43'
ARC = 26.60'	ARC = 78.43'	ARC = 77.66'	ARC = 194.62'	ARC = 39.88'	ARC = 8.86'	ARC = 179.22'	ARC = 154.26'
CH = 26.60'	CH = 78.42'	CH = 77.66'	CH = 193.99'	CH = 33.59'	CH = 8.86'	CH = 179.19'	CH = 153.99'
BRG. = S 87°44'37" E	BRG. = S 88°06'20" E	BRG. = N 88°46'57" W	BRG = S 87°00'30" E	BRG. = S 37°51'57" E	BRG. = S 18°54'54" W	BRG. = S 88°38'06" W	BRG = S 13°20'02" W

PARCEL NO.	OWNER	NET TAKE	RESIDUE LEFT	RESIDUE RIGHT
55WL	GOODYEAR TIRE & RUBBER CO.	17,504	0	0
64R	BALTIMORE & OHIO RAILROAD	3,144	—	—
64		1,313		
64SL		932		
65R	GOODYEAR TIRE & RUBBER CO.	7,403	0	802
65WD		531		1
65WD2		377		
65T		22,165		
66A	GOODYEAR TIRE & RUBBER CO.	247	20,316	0

SCALE IN FEET
0 20 40 80

FUNDS	IR

NO.	NAME	REVISION
1		
2		
3		
4		
5		
6		
7		
8		
9		
10		
11		
12		
13		
14		
15		
16		
17		
18		
19		
20		
21		
22		
23		
24		
25		
26		
27		
28		
29		
30		
31		
32		
33		
34		
35		
36		
37		
38		
39		
40		
41		
42		
43		
44		
45		
46		
47		
48		
49		
50		
51		
52		
53		
54		
55		
56		
57		
58		
59		
60		
61		
62		
63		
64		
65		
66		
67		
68		
69		
70		
71		
72		
73		
74		
75		
76		
77		
78		
79		
80		
81		
82		
83		
84		
85		
86		
87		
88		
89		
90		
91		
92		
93		
94		
95		
96		
97		
98		
99		
100		

LOS ADD 10' FIRE PROTECT EASEMENT

AA B/Pn 71942R

CALC. BY. DATE	SUM-76-11.57	OHIO
CHKD. BY. DATE	FED. PROJECT IR-76-2(44)19	F.H.W.A. REGION 5

1197 12.14

33 49

SUMMIT COUNTY
LIMITED ACCESS
RIGHT OF WAY PLANS

MATCH LINE ℄ I-76 SEE SHEET 32 OF 49

℄ I-76 SURVEY & CONSTRUCTION

599 600 601 602 603

601+14.82 ℄ I-76
2025+74 ℄ B&O R.R.

601+90.79 - 49.71'RT. I-76
2026+60.26 -30'LT. B.℄O.

601+16.09 - 49.71'RT. I-76
2026+13.66 -30'RT. B.℄O.

601+47.13 - 90'RT. I-76
2026+64.98 -30'RT. B.℄O.

CURVE NO.3 602

601+84.52
41.04'RT.

601+96.99
39.02'RT.

602+46.31
43.79'RT.

602+64.63
49.71'RT.

602+55.98
78.42'RT.

602+37.44
46.16'RT.

602+00.60
62.98'RT. 290

602+28.29
78.06'RT.

602+56.66
90'RT.

602+46.52
19.44'RT.

602+45.20
227.41'RT.

602+39.83
366.00'RT.

602+20.24
2027+10.59 -30'LT. B.℄O.

602+13.32
180.80'RT.

601+62.95
180.45'RT.

600+68.84
182.20'RT.

600+70.54
307.19'RT.

601+61.15
305.44'RT.

602+42.11
306.52'RT.

601+66.58
305.93'RT.

600+66.58
323.93'RT.

599+74.81
187.22'RT.

599+84.66
186.55'RT.

599+96.86
192.84'RT.

599+65.78
192.09'RT.

599+28.00
190.93'RT.

598+87.88
223.24'RT.

598+99.33
228.86'RT.

599+30.65
234.84'RT.

599+80.33
312.08'RT.

599+77.74
252.15'RT.

600+11.35'
224.95'RT.

600+14.15
309.89'RT.

N 89°23'17"E 33.33'

N 89°23'17"E 50.00'(C)

N 89°23'17"E 10.50'

N 89°23'17"E 100.00'(C) 100' (D)

N 89°23'17"E 53.46'

N 89°23'17"E 106.00'

N 89°23'17"E 89.5'(D) 85.50'(C)

N 89°23'17"E 38.50'

N 89°23'17"E

N 0°22'14"E 125.00'(C) 125'(D)

N 0°22'14"E 85.00'

N 0°22'14"E 30.00'

N 0°22'14"E 73.15'

N 0°36'43"W C.B. 38.50'

N 9°59'12"W 24.24'

N 80°00'48"E 13.00'

N 36°21'35"W 51.32'

N 36°21'35"W

S 80°00'48"W 13.00'

S 66°45'46"E 39.11'

S 53°57'18"E 47.87'

N 67°41'04"W 33.90'

N 75°37'02"W 34.35'

N 25°37'02"W 34.36'

N 89°23'17"E 33.33'

N 11°00' N 89°35'00"E

N 0°23'00"W 34.29'

S 0°23'00"E 34.29'

S 0°22'14"W 30.00'

S 0°22'14"W

S 0°22'14"W 125.00'(C) 125'(D)

S 0°22'14"W 125.00'(C)

S 0°22'14"W 125.00'(C)

S 0°22'14"W 125.00'(C

AA B/P# 71942R

CALC. BY. DATE	
CHKD. BY. DATE	

SUM-76-11.57

FED. PROJECT IR-76-2(44)19

OHIO — F.H.W.A. REGION 5

1198 / 1214

34 / 49

SUMMIT COUNTY
LIMITED ACCESS
RIGHT OF WAY PLANS

EXIST. R/W — THIRD AVE. — N 85°01'07" E

PROP. AERIAL EASEMENT LINE

EXIST. AERIAL EASEMENT

℄ I-76 SURVEY & CONSTRUCTION

MATCH LINE ℄ KELLY AVE. SEE SHEET 32 & 33 OF 49

MATCH LINE SEE SHEET 35 OF 49

MATCH LINE SEE SHEET 36 OF 49

AKRON, BARBERTON BELT RAILROAD PLAT SEE SHEET 49 OF 49

OWNED BY GOODYEAR

LITTLE CUYAHOGA RIVER

EXIST. 20' SEWER EASEMENT

INTERCEPTOR

EXIST. R/W

PROP. C.B.

PARCEL NO.	OWNER	NET TAKE	RESIDUE LEFT	RESIDUE RIGHT	OVERLAP WD	OVERLAP R	OVERLAP T
66R	GOODYEAR TIRE & RUBBER CO.	15,058	1,148	1,599,292	1,017	—	15,058
66R-1		28,645			1,956	—	28,645
66T		91,970			2,900	43,673	—
66WD		117			—	117	117
66WD-1		539			—	456	539
66WD-2		458			—	320	458
66WD-3		445			—	374	445
66WD-4		481			—	376	481
66WD-5		690			—	579	690
66WD-6		257			—	204	257
66WD-7		652			—	547	652
66		42			—	—	—
67R	AKRON BARBERTON BELT	2,199			—	—	—
67R-1	R. R.	5,677			—	—	—

① R = 686.43' ARC = 4.67' CH = 4.67' BRG = N22°04'01"E

② R = 20.00' ARC = 21.58' CH = 20.55' BRG = N54°06'17"E

③ R = 686.43' ARC = 30.38' CH = 30.38' BRG = N21°55'05"E

④ R = 2851.34' ARC = 28.02' CH = 28.02' BRG = S85°14'20"W

⑤ R = 2950.76' ARC = 66.48' CH = 66.48' BRG = N85°36'11"E

⑥ R = 625.41' ARC = 134.82' CH = 134.56' BRG = S88°52'01"E

⑦ R = 1354.39' ARC = 68.23' CH = 68.22' BRG = S31°24'40"E

⑧ R = 685.70' ARC = 51.75' CH = 51.74' BRG = N77°09'00"W

⑨ R = 1401.90' ARC = 384.89' CH = 383.68' BRG = N87°10'38"W

⑩ R = 2991.05' ARC = 77.30' CH = 77.29' BRG = S85°41'52"W

⑪ R = 686.43' ARC = 41.48' CH = 41.48' BRG = N10°03'55"E

⑫ R = 625.41' ARC = 65.59' CH = 65.56' BRG = S79°41'14"E

⑬ R = 685.70' ARC = 82.60' CH = 82.55' BRG = N71°32'14"W

⑭ R = 686.43' ARC = 1.79' CH = 1.79' BRG = N 0°26'42"E

⑮ R = 1401.90' ARC = 47.68' CH = 47.68' BRG = S85°55'55"W

⑯ R = 1401.90' ARC = 155.61' CH = 155.53' BRG = N87°07'47"W

⑰ R = 1401.90' ARC = 82.32' CH = 82.30' BRG = N80°59'39"W

SCALE IN FEET
0 20 40 60

FUNDS	IR

NAME	REVISION	DATE
DSB	ADD. FIRE PROTECT. LINE (GOODYEAR)	6/4/90

CITY OF AKRON, SUMMIT COUNTY
ORIGINAL SPRINGFIELD TOWNSHIP, T 1N, R 10W
TRACT 2, O.L.1

AA B/Pn 71942R

CITY OF AKRON, SUMMIT COUNTY - ORIGINAL SPRINGFIELD TOWNSHIP, T1N, R10W, TRACT 2, O.L.1

RIGHT OF WAY CURVE DATA

①		②	
R	= 980.08'	R	= 15.00'
ARC	= 152.63'	ARC	= 23.53'
CH	= 152.47'	CH	= 21.19'
BRG	= N66°09'05"E	BRG	= S73°14'45"E
③		④	
R	= 15.00'	R	= 930.08'
ARC	= 23.62'	ARC	= 17.70'
CH	= 21.25'	CH	= 17.70'
BRG	= S16°47'39"W	BRG	= S62°14'07"W
⑤		⑥	
R	= 139.21'	R	= 33.50'
ARC	= 53.00'	ARC	= 35.91'
CH	= 52.68'	CH	= 34.22'
BRG	= N56°51'24"E	BRG	= N15°14'16"E
⑦		⑧	
R	= 113.50'	R	= 33.50'
ARC	= 25.43'	ARC	= 6.52'
CH	= 25.38'	CH	= 6.50'
BRG	= N21°53'36"W	BRG	= S 8° 54' 00" W

MATCH LINE SEE SHEET 35A OF 49

MARTHA AVE.

S 28°18'45"E

N 28°18'45"W

275.68'

244.32'

EXIST. R/W

609+97.65 358.76' LT.

609+63.08 287.28' LT.

609+70.87 256.50' LT.

609+70.43 262.99' LT.

609+78.73 250.88' LT.

609+58.57 230.90' LT.

609+70.83 231.15' LT.

609+12.10 206.08' LT.

609+09.02

P.T. STA. 25+09.02

609+28.43 212.92' LT.

N 61° 41' 24" E

46.15'

N 61°41'24"E

609+90.58 185.22' LT.

610+10.25 177.35' LT.

THIRD AVE.

EXIST. R/W

LA R/W

608+03.85 112.83' LT.

608+50.88 109.70' LT.

608+61.74 84.44' LT.

609+26.87 87.07' LT.

610+30.01 131.42' LT.

S 61° 41' 24" W

EXIST. LA

112.27'

65.18'

S 82°38'43"W

27.60'

N 28°18'45"W

26.06'

MATCH LINE SEE SHEET 34 OF 49

608+14.83 94.20' LT.

N 29°58'05"W

68A WD

68 WL

68A U

70A WL

71 WL

72 WL

72 T

73 WL

70 WL

74 WL

#1364 Feeney Tire Co. 1-Sty. Brick

1-Sty. Block

2-Sty. Brick

#1372 2½-Sty. Frame

2½-Sty. Frame

Asphalt Parking Lot

610+26.97 351.95' LT.

143'(D) N14°08'56"E

610+25.78 350.49' LT.

3990' S 15°51'04" E

611+13.46 337.37' LT.

611+10.12 327.76' LT.

N 67°22'18"E 50.40'

610+62.63 312.71' LT.

610+39.02 320.93' LT.

S 52°35'54"E 6.44'

16.25'

16.33'

15.00'

S 51°04'E 39.90'

49.82'

Const. Limits

10.18'

611+58.16 342.99' LT.

611+85.45 421.38' LT.

612+02.74 416.36' LT.

S 75°51'04"E 18.31'

154.86' S 79°04'20"E

N 79°04'20"W 142.55'

612+40.32 356.81' LT.

143.00' R

T 143.00'

C N 14°08'56"E

S 50°18'00"W

EXIST. LA

611+38.44 286.32' LT.

S 60°48'55"W 103.05'(D)

610+44.52 245.13' LT.

610+24.89 325.86' LT.

610+00.50 351.20' LT.

610+93.70'(D)

611+00.31 299.59' LT.

100.73'(C)

PROP. RAMP E-12

EXIST. RAMP E-12

123.55' E-15

EXIST. LA

4-12"

6"

18"

17

12

11

N 28°10'55"W 15" SAN.

6" W. (ABD)

12" STM.

18" STM.

30'

30'

Bush

3" Maple

5" Maple

5"

Maples

5"

5"

5"

5"

5"

609 610 611 N 84°57'27"E 612

℄ I-76 SURVEY & CONSTRUCTION

MATCH LINE ℄ I-76 SEE SHEET 36 OF 49

MATCH LINE STA. 613+00 SEE SHEET 38 OF 49

CALC. BY. DATE	SUM-76-11.57	OHIO
CHKD. BY. DATE	FED. PROJECT· IR-76-2(44)19	F.H.W.A. REGION 5

1199 / 1214

35 / 49

SUMMIT COUNTY
LIMITED ACCESS
RIGHT OF WAY PLANS

℄ CURVE DATA
THIRD AVE. ②

DELTA	23° 19' 43" LT.
DC	5° 59' 57"
R	955.08'
LC	388.87'
T	197.17'
CH	386.19'
EX(C)	20.14'

STATIONING

MAIN PI STA.	23+17.31
PC STA.	21+20.14
PT STA.	25+09.02

PARCEL NO.	OWNER	NET TAKE	RESIDUE LEFT.	RESIDUE RIGHT
68WL	GOODYEAR TIRE & RUBBER CO.	11,654	0	0
68AWD	GOODYEAR TIRE & RUBBER CO.	387	66,098	0
70WL	GOODYEAR TIRE & RUBBER CO.	4719	0	0
70AWL	MARSH FAMILY TRUST	298	5114	0
71WL	R.G. NEMER & E.H. FEENEY	48	5672	0
72WL	ARLENE B. HUBER	595	5111	0
72T		1001		
73WL	THOMAS J. HUBER	1813	3960	0
74WL	M. & B. TARAS	13,369	0	0
68A-U	GOODYEAR TIRE & RUBBER CO.	3,558	66,098	0

SCALE IN FEET
0 20 40 60

FUNDS	IR

NAME	REVISION	DATE

AA B.Pe 71142R

CITY OF AKRON, SUMMIT COUNTY - ORIGINAL SPRINGFIELD TOWNSHIP, TIN, R10W, TRACT 2, O.L. 1

CALC. BY. DATE	SUM-76-11.57	OHIO
CHKD. BY. DATE	FED. PROJECT IR-76-2(44)19	F.H.W.A. REGION 5

1200 / 1214

35A / 49

SUMMIT COUNTY
LIMITED ACCESS
RIGHT OF WAY PLANS

EAST MARKET STREET

S. KELLY AVENUE

MARTHA AVENUE

608+03.77
540.47' LT.

608+54.75
522.71' LT.

608+66.55
511.73' LT.

607+84.52
513.84' LT.

608+16.02
490.00' LT.

608+61.96
509.75' LT.

S 75°50'39" E
53.99'

N 57°55'17" W
39.51'

S 61°41'15" W
50.00'

EXIST. R/W

S 28°18'45" E
N 28°18'45" W
244.32'
275.68'

6" W (ABD.)

15" SAN.

12" W

MATCH LINE
SEE SHEET 35 OF 49

68A
U

1

2

RIGHT OF WAY LINE CURVE DATA

①	②
R = 20.00'	R = 749.20'
ARC = 16.59'	ARC = 32.86'
CH = 16.12'	CH = 32.85'
BRG = S 52°04'34" E	BRG = N 30°49'21" E

PARCEL NO.	OWNER	NET TAKE	RESIDUE LEFT	RESIDUE RIGHT
68A-U	GOODYEAR TIRE & RUBBER CO.	3,558	66,098	0

SCALE IN FEET
0 20 40 60

FUNDS	IR

NAME	REVISION	DATE

AA B/Pr 71942R

CALC. BY. DATE	SUM-76-11.57	OHIO
CHKD. BY. DATE	FED. PROJECT IR-76-2(44)19	F.H.W.A. REGION 5

(1201 / 1214)

(36 / 49)

SUMMIT COUNTY
LIMITED ACCESS
RIGHT OF WAY PLANS

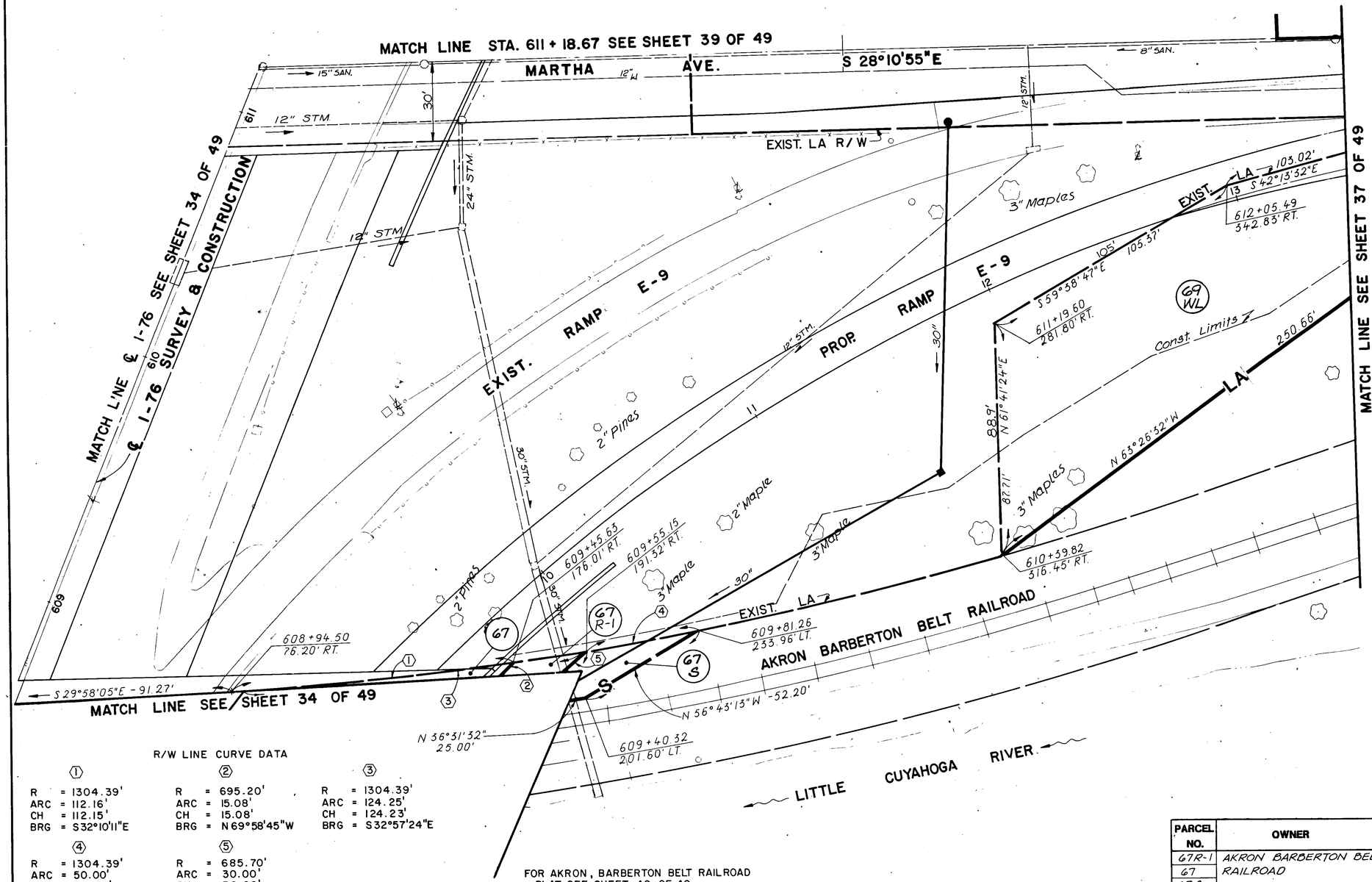

R/W LINE CURVE DATA

①	②	③
R = 1304.39'	R = 695.20'	R = 1304.39'
ARC = 112.16'	ARC = 15.08'	ARC = 124.25'
CH = 112.15'	CH = 15.08'	CH = 124.23'
BRG = S32°10'11"E	BRG = N69°58'45"W	BRG = S32°57'24"E

④	⑤
R = 1304.39'	R = 685.70'
ARC = 50.00'	ARC = 30.00'
CH = 50.00'	CH = 30.00'
BRG = S36°31'32"E	BRG = S73°26'20"E

FOR AKRON, BARBERTON BELT RAILROAD
PLAT SEE SHEET 49 OF 49

PARCEL NO.	OWNER	NET TAKE	RESIDUE LEFT	RESIDUE RIGHT
67R-1	AKRON BARBERTON BELT RAILROAD	5677	—	—
67		674		
67S		671		
69WL	GOODYEAR TIRE & RUBBER	16,579	0	19,586

SCALE IN FEET
0 20 40 60

FUNDS	IR

NAME	REVISION	DATE

CITY OF AKRON, SUMMIT COUNTY
ORIGINAL SPRINGFIELD TOWNSHIP, T1N, R10W
TRACT 2, 0 L I

AA B/Pe 71442R

CITY OF AKRON, SUMMIT COUNTY
ORIGINAL SPRINGFIELD TOWNSHIP, T1N, R10W
TRACT 2,0 L.1

CALC. BY. DATE	SUM-76-11.57	OHIO
CHKD. BY. DATE	FED. PROJECT IR-76-2(44)19	F.H.W.A. REGION 5

1202 / 1214

37 / 48

SUMMIT COUNTY
LIMITED ACCESS
RIGHT OF WAY PLANS

PARCEL NO.	OWNER	NET TAKE	RESIDUE LEFT	RESIDUE RIGHT
69WL	GOODYEAR TIRE & RUBBER CO.	16,579	0	19,586

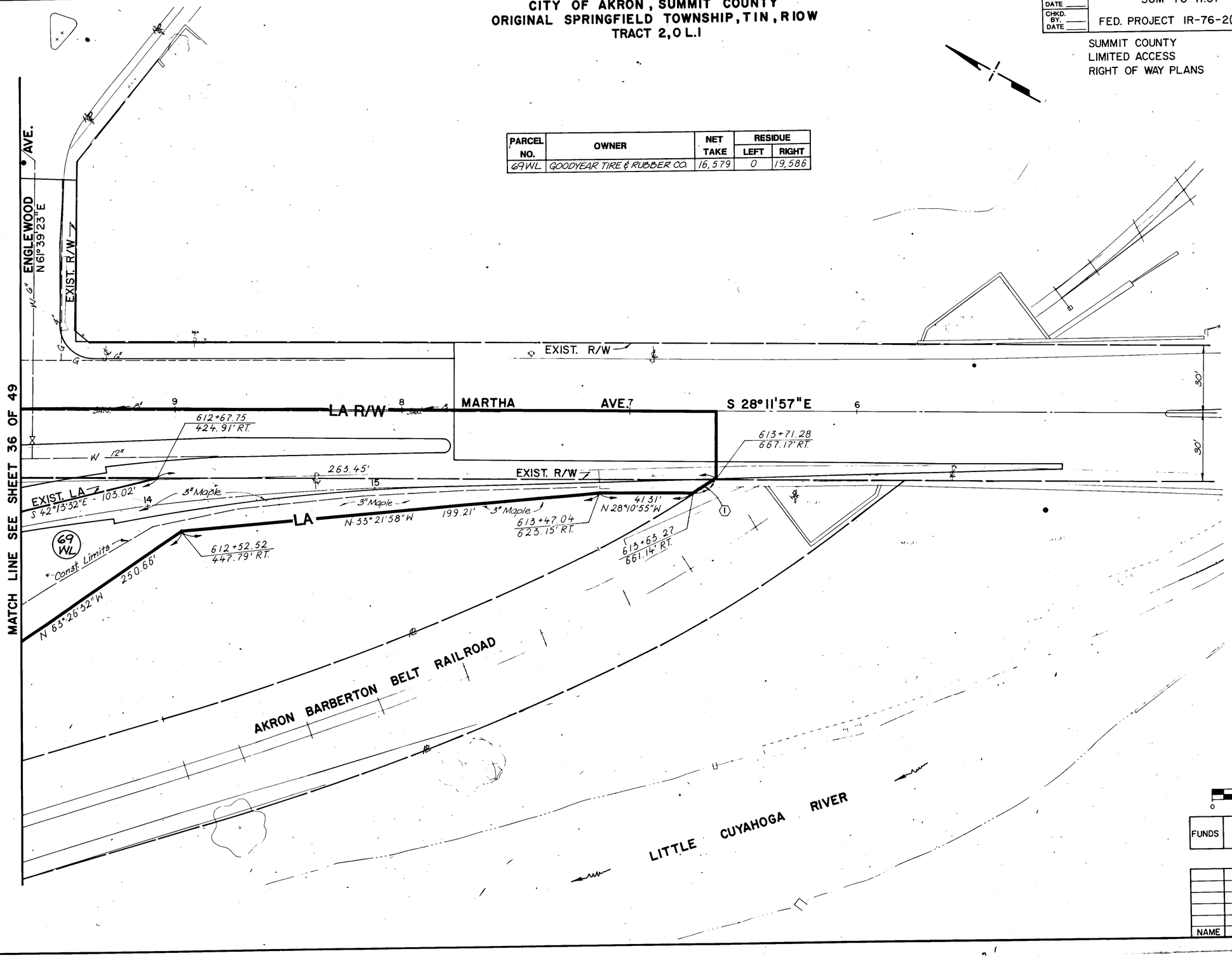

R/W LINE CURVE DATA

(1)
R = 548.69'
ARC = 10.03'
CH = 10.03'
BRG = N 58° 05' 16" W

SCALE IN FEET
0 20 40 60

FUNDS	IR

NAME	REVISION	DATE

CITY OF AKRON, SUMMIT COUNTY
ORIGINAL SPRINGFIELD TOWNSHIP, T1N, R10W
TRACT 2, O.L.1

CALC. BY. DATE		OHIO
CHKD. BY. DATE	SUM-76-11.57 FED. PROJECT IR-76-2(44)19	F.H.W.A. REGION 5

12.03 12.14

38 49

SUMMIT COUNTY
LIMITED ACCESS
RIGHT OF WAY PLANS

74WL	M. & B. TARAS	13,362	0	0
75WL	DARTMOOR CORPORATION	14,168	0	0
78WL	PETER J. KEFALOS ET AL	5717	0	0
79WL	ANTHONY BRANDT	16,473	0	0
80WL	RONALD G. ANDERSON	10,010	0	0

MARKET ST.
EXIST. R/W
157.99'(C) Conc. Curb
S 79°04'20" E
S 79°48'58" E
EXIST. L.A. R/W
EXIST. L.A.
PROP. RAMP E-15
PROP. RAMP E-12
EXIST. RAMP E-12
EXIST. RAMP E-13
EXIST. RAMP E-10
N 10°09'27" E
Shrubs
#1400 Studio East Inc. Beauty & Retail Center 1-Sty. Block
#1404 Clark Gas Station 1-Sty. Brick
Gas Pumps
Quick Strip
East Side Furniture & Gifts. 1-Sty. Block
#1454 2½-Sty. Frame
Mike's Music 1-Sty. Brick
Semi-trailer Storage
Stone Block Bldg
Const. Limits
PARKING
74WL
75WL
78WL
79WL
80WL
N 79°04'20" W 142.55'(D) 142.55'(C)
EXIST. L.A. N 79°04'20" W 12.63'(C)
12.63'(D)
N 27°52'15" W 7.48'(D) 7.22'(C)
100.08'(C) 100'(D) N 79°04'20" W
613+00.00 ℄ 1-76
613+30.09 341.74 Lt.
613+77.44 317.59 Lt.
614+17.62 241.51 Lt.
615+13.84 219.57 Lt.
615+41.27 318.28 Lt.
615+86.66 304.71 Lt.
616+35.25 290.49 Lt.
616+11.30 190.82 Lt.
616+01.57 152.17 Lt.
616+95.02 127.55 Lt.
617+09.15 124.34 Lt.
617+23.97 261.16 Lt.
617+75.05 110.41 Lt.
617+86.61 264.30 Lt.
671+99.66 251.00 Lt.
102.25'(C) S 10°55'40" W 102.25'(D)
103'(D) N 10°55'40" E
103.00'(C)
S 10°55'40" W 103.00'(C)
103'(D) N 10°55'40" E
55.5'(D) 55.50'(C) N 79°04'20" W
143'(D) S 10°09'27" W 143.00'(C)
143'(D) EXIST. R/W
101.06' N 79°04'20" W
N 79°48'58" W 15.10'
EXIST. L.A. N 79°48'58" W 70'(D) 70.00'(C)
S 79°48'58" E 14.11'
100.12'
70.00'(D) 70.00'(C)
MATCH LINE STA. 613+00 SEE SHEET 35 OF 49
MATCH LINE STA. 617+76.91 SEE SHEET 40 OF 49
MATCH LINE ℄ I-76 SEE SHEET 39 OF 49
℄ I-76 SURVEY & CONSTRUCTION
N 84°57'27" E
P.C. STA. 615+54.92
CURVE NO. 4
berm
berm
614
615
616
617

CURVE NO. 4
℄ CURVE DATA

DELTA	16° 43' 34" RT.
DC	2° 0' 30"
R	2852.90'
LC	832.84'
T	419.40'
CH	829.88'
EX(C)	30.66'

STATIONING

MAIN PI STA.	619+74.32
PC STA.	615+54.92
PT STA.	623+87.75

SCALE IN FEET
0 20 40 60

FUNDS	IR

NAME	REVISION	DATE

AA B/Pn 71942R

CALC. BY. DATE	SUM-76-11.57	OHIO
CHKD. BY. DATE	FED. PROJECT IR-76-2(44)19	F.H.W.A. REGION 5

1204
1214

39
49

SUMMIT COUNTY
LIMITED ACCESS
RIGHT OF WAY PLANS

MATCH LINE SEE SHEET 38 OF 49

612 N 84°57'87"E 613 614 615 616 617

℄ I-76 SURVEY & CONSTRUCTION

P.C. STA. 615+54.92

CURVE NO. 4

berm

12"STM.

6" WABD.

12" STM.

16" STM.

S 86°41'41"E 23.45'(C)

613+54.12
92.90' RT.

EXIST. RAMP E-10

S 79°19'53"E 64.63'(C)

N 61°39'23"E

613+30.91
89.50' RT.

3" Pines

21.93'(D)

67.76'(D)

614+16.33
110.41' RT. 3" Pines

130.00'(C) EXIST. LA 130'(D)

612+11.52
140.92' RT.

MARTHA AVE.

MATCH LINE STA. 611+18.67

SEE SHEET 36 OF 49

S 28°10'55"E

PROP. RAMP E-16

2"

216.01'(C)

3" Pines

614+58.20
145.70' RT.

128.00' Conc.

EXIST. LA 128'(D)

PROP. RAMP E-10

24" Dead Tree

#25'(D) 25.00'(C)

#49 2-S'(C) Frame

77 WL

Frame Garage

S 79°19'53"E

615+83.16
180.24' RT.

614+51.25
165.72' RT.

128.00'(C) N 79°19'53"W 128'(D)

25'(D)

31.25'(C) S 11°01'11"W

76 WL

Maples

EXIST. R/W

220.00'

N 28°10'55"W

212.9'(D)

EXIST. R/W

JOHNS AVE.

N 11°01'11"E

6" W

8" SAN.

612+97.92
343.22' RT.

613+56.52
317.99' RT.

S 11°01'11"W

S 61°39'23"W 63.80'

LA R/W

22

21

MATCH LINE SEE SHEET 37 OF 49

10

36" Maple

2-6" Maples

6" Locust

11-6" Locust

14" Locust

3-6" Locust

615+75.94
204.32

EXIST. LA R/W

EXIST. LA R/W

N 61° 39' 23" E

ENGLEWOOD AVE.

LA R/W

23

24

12" STM.

12" STM.

15" STM.

8" SAN.

Bush

Bush

Const. Limits

16" Maple

12 Maple

10" Maple

Picket Fence

Frame Garage

EXIST. R/W

99.95'(D)

35'(D)

36'(D) 24" Maple

CAMBRIDGE ST.

N 10°08'27"E

MATCH LINE STA. 617+76.91 SEE SHEET 41 OF 49

CURVE NO. 4
℄ CURVE DATA

DELTA	16° 43' 34"
DC	2° 0' 30"
R	2852.90'
LC	832.84'
T	419.40'
CH	829.88'
EX(C)	30.66'

STATIONING

MAIN PI STA.	619+74.32
PC STA.	615+54.92
PT STA.	623+87.75

SCALE IN FEET
0 20 40 60

PARCEL NO.	OWNER	NET TAKE	RESIDUE LEFT	RESIDUE RIGHT
76 WL	GOODYEAR TIRE & RUBBER CO.	30,906	0	0
77 WL	JEANE E. OLIVER	3200	0	0

FUNDS	IR

NAME	REVISION	DATE

CITY OF AKRON, SUMMIT COUNTY
ORIGINAL SPRINGFIELD TOWNSHIP, T1N, R10W
TRACT 2, O.L.1

CITY OF AKRON, SUMMIT COUNTY
ORIGINAL SPRINGFIELD TOWNSHIP, T1N, R10W
TRACT 2, O.L.1

CALC. BY.		SUM-76-11.57	OHIO	1205 / 1214
CHKD. BY.		FED. PROJECT IR-76-2(44)19	F.H.W.A. REGION 5	
DATE				

SUMMIT COUNTY
LIMITED ACCESS
RIGHT OF WAY PLANS

40 / 49

EAST MARKET ST. S 79° 49' 53" E

ELM ST.

MATCH LINE STA. 617+76.80 SEE SHEET 38 OF 49

MATCH LINE STA. 624+00 SEE SHEET 42 OF 49

N 10° 09' 27" E

N 10° 21' 08" E ST.

DETROIT

N 0° 31' 06" E

WIGLEY AVE.

EXIST. R/W

EXIST. LA R/W

EXIST. LA

EXIST. RAMP E-15

PROP. RAMP E-15

EXIST. RAMP E-10

Akron Club Of The Deaf 1-Sty. Block #1467

2½ Sty. Frame #1477

2½-Sty. Brick #1481

#1483

Paved Parking

Shrubs

Concrete Drive

Asphalt Drive

R.R. Ties

Concrete

2-Sty. Brick

1-Sty. Brick

#1458 Tall Disco & 1-Sty. Block

#1462 Paul's Restaurant 2-Sty. Block

Asphalt Parking

#1474 Battles Electronic Service 1-Sty. Block

#1476 The Uniform Outlet

#1478 Detroit Cafe Liquor 2-Sty. Brick

#1486 Smith Sign Co. 2-Sty. Brick

1-Sty. Block Addn

Gravel Parking Lot

#1494 #1496 Sunrise Ceramics 2-Sty. Brick

#1500 Mohawk Tire Warehouse 1-Sty. Brick

Semi Trailer Storage

Concrete

#1510 Akron Auto Rustproofing

Gravel

1-Sty Block Garage

2½-Sty Frame #12

Parking

Const. Limits

Berm

8" SAN

12" STM.

18" STM.

48" STM.

30" STM.

15" SAN.

12" SAN.

4" W

12" W

WALK

WALL

81 WL

82 WL

83 WL

84 WL

89 WL

90 WL

91 WL

146.83'(C) S79°49'53"E 146.64'(D)

618+40.48 243.25'Lt.

619+74.87 222.46'Lt.

620+08.74 218.33'Lt.

620+42.69 214.64'Lt.

621+90.71 203.66'Lt. 40.61'(C)

622+43.56 202.97'Lt.

622+45.09 189.21'Lt.

146.62'(C) N 79°49'53"W 146.64'(D)

618+25.94 151.56'Lt.

619+64.19 130.15'Lt.

619+99.02 125.90'Lt.

620+33.31 122.18 LT.

620+72.77 68.22'Lt.

621+44.98 62.92'Lt.

621+52.86 205.68'Lt.

622+63.76 58.26'Lt.

619+32.35 134.51'Lt.

619+24.72 100.24'Lt.

620+30.45 87.32'Lt.

S 79° 49' 53" E 110.00

N 79° 49' 53" W 110.00'(C) 110'(D)

N 10° 21' 08" E 35.00'

S 10° 10' 07" W 143.00'(C)

N 10° 21' 08" E 93.00'(C)

N 10° 21' 08" E 93'(D)

S 10° 16' 28" W 93'(D)

N 10° 18' 48" E 93'(D)

N 79° 49' 53" W 73.70'(D) 74.00'(C)

N 79° 49' 53" W 40.67'(C) 40.67'(D)

N 79° 49' 53" W 80.76'(C) 80.87'(D)

S 10° 10' 07" W 60.79'Lt.

N 0° 31' 06" E 132.39'(C) 132.5'(D)

N 0° 31' 06" E 43.78'(C) 43.84'(D)

P.T. STA. 623+87.75

℄ I-76 SURVEY & CONSTRUCTION

MATCH LINE ℄ I-76 SEE SHEET 41 OF 49

CURVE NO. 4

℄ CURVE DATA	
DELTA	16° 43' 34" RT.
DC	2° 0' 30"
R	2852.90'
LC	832.84'
T	419.40'
CH	829.88'
EX(C)	30.66'
STATIONING	
MAIN PI STA.	619+74.32
PC STA.	615+54.92
PT STA.	623+87.75

R/W CURVE DATA
CURVE 1
ARC = 21.04'
R = 15.00'
CH = 19.35'
BRG = S 39° 39' 22" E

PARCEL NO.	OWNER	NET TAKE	RESIDUE LEFT	RESIDUE RIGHT
81 WL	PAUL SALEM	13,644	0	0
82 WL	R.J. NORRIS & R.L. BURKHART	3850	0	0
83 WL	K. & D. W. BRYSON	3412	0	0
84 WL	ROGER F. & LINDA DIPAOLO	3412	0	0
89 WL	S. & C.A. SMITH	10,557	0	0
90 WL	E. A. & A. PAL	5808	0	0
91 WL	MARVIN & NEDRA HEAD	9778	0	0

SCALE IN FEET
0 20 40 60

FUNDS IR

NAME	REVISION	DATE

AA B/Pg 71942R

CURVE NO. 4
℄ CURVE DATA

DELTA	16° 43' 34" RT.
DC	2° 0' 30"
R	2852.90'
LC	832.84'
T	419.40'
CH	829.88'
EX(C)	30.66'

STATIONING

MAIN PI STA.	619+74.32
PC STA.	615+54.92
PT STA.	623+87.75

PARCEL NO.	OWNER	NET TAKE	RESIDUE LEFT	RESIDUE RIGHT
85WD	PORTER POST	1086	0	0
88WD	KENNETH P. HILLEGASS.	2281	0	0
94WD	D. H. ZENNER	104	0	0
96WD	ROMITO BROS. ELEC. CONST. CO.	2127	0	0

CALC. BY. DATE	SUM-76-11.57	OHIO	1206 12/14
CHKD. BY. DATE	FED. PROJECT IR-76-2(44)19	F.H.W.A. REGION 5	41 49

SUMMIT COUNTY
LIMITED ACCESS
RIGHT OF WAY PLANS

MATCH LINE ℄ I-76 SEE SHEET 40 OF 49

MATCH LINE STA. 617+76.80 SEE SHEET 39 OF 49

MATCH LINE STA. 624+00 SEE SHEET 43 OF 49

℄ I-76 SURVEY & CONSTRUCTION

CURVE NO. 4

P.T. STA. 623+87.75

EXIST. RAMP E-16

PROP. RAMP E-16

PROP. RETAINING WALL

EXIST. LA R/W

LA R/W

ENGLEWOOD AVE.

S 79° 52' 21" E

S 79° 49' 29" E

EXIST. R/W

PROP. RAMP E-10

LA R/W

R/W

EXIST. R/W

CAMBRIDGE ST.

DETROIT ST.

WIGLEY AVE

N 10° 09' 27" E

N 10° 21' 08" E

N 10° 21' 08" W

S 10° 09' 27" W

N 10° 21' 06" W

S 10° 21' 06" E

S 79° 49' 53" E

N 79° 49' 53" W

N 82° 59' 31" W

N 87° 50' 15" W

N 79° 49' 58" W

S 86° 45' 16" W

S 86° 57' 05" W

N 10° 31' 06" E

S 10° 31' 06" W

S 79° 49' 53" E

N 79° 49' 53" W

N 79° 49' 53" W

S 79° 49' 53" E

N 79° 49' 53" W

S 79° 49' 53" E

N 79° 49' 53" W

S 79° 49' 53" E

AA B/P# 71942R

CITY OF AKRON, SUMMIT COUNTY
ORIGINAL SPRINGFIELD TOWNSHIP, T1N, R10W
TRACT 2, O.L.1

CALC. BY. DATE	SUM-76-11.57	OHIO
CHKD. BY. DATE	FED. PROJECT IR-76-2(44)19	F.H.W.A. REGION 5

1207 / 1214

42 / 49

SUMMIT COUNTY
LIMITED ACCESS
RIGHT OF WAY PLANS

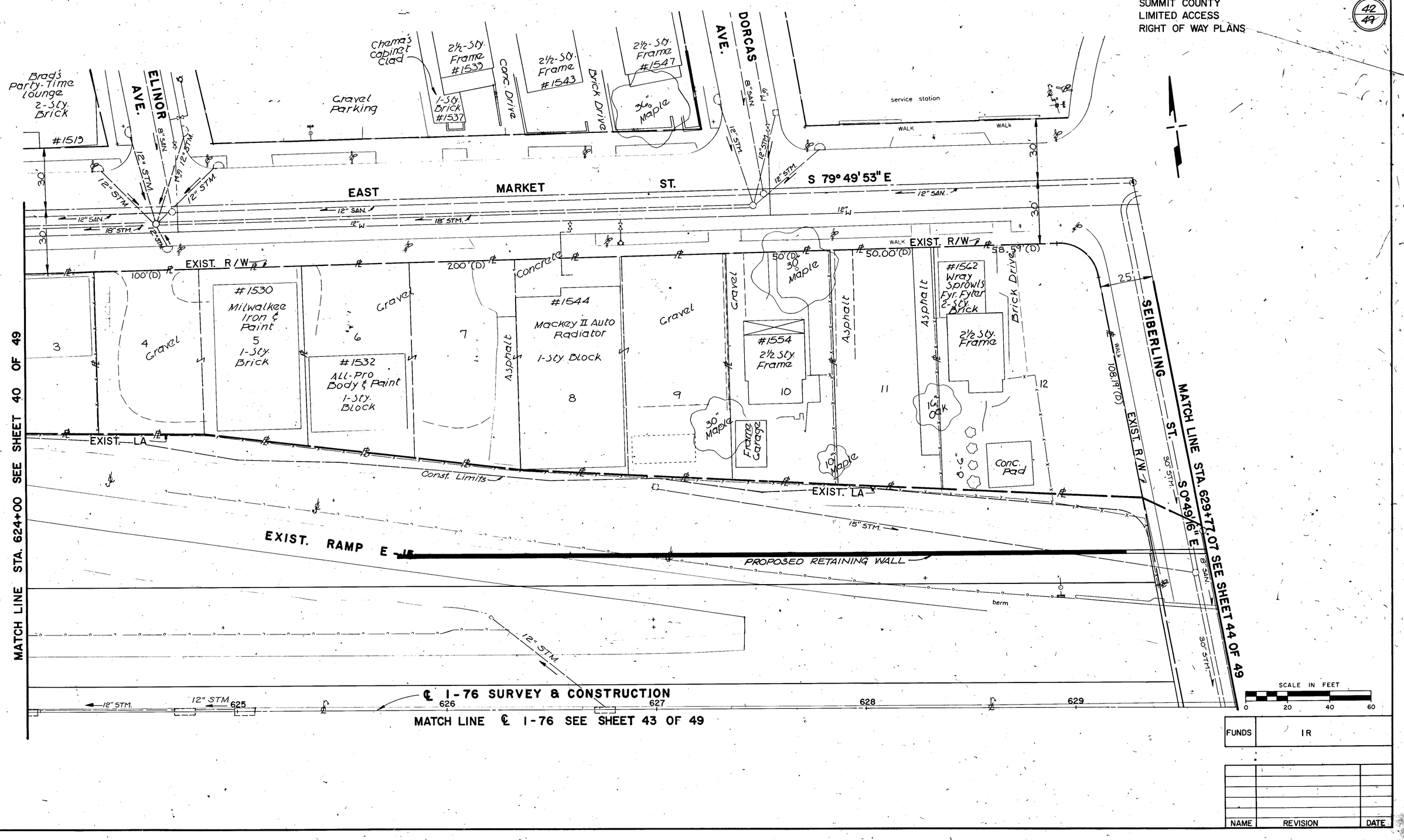

SCALE IN FEET
0 20 40 60

FUNDS	IR

NAME	REVISION	DATE

CALC. BY. DATE	SUM-76-11.57	OHIO
CHKD. BY. DATE	FED. PROJECT IR-76-2(44)19	F.H.W.A. REGION 5

1208
12.14

43
49

SUMMIT COUNTY
LIMITED ACCESS
RIGHT OF WAY PLANS

MATCH LINE STA. 624+00 SEE SHEET 41 OF 49

MATCH LINE ℄ I-76 SEE SHEET 42 OF 49

℄ I-76 SURVEY & CONSTRUCTION

12" STM. 12" STM.

625 626 627 628 629

EXIST. RAMP E-16

PROP. RAMP E-16

berm

PROPOSED RETAINING WALL

EXIST. LA R/W

LA R/W

LA R/W

EXIST. LA R/W

30'

30'

30'

32 33 ENGLEWOOD AVE. S 79°49'29" E 36 37

15" STM.

12" SAN.

12" SAN.

12" STM.

EXIST. R/W

250'(D)

374.75'(D)

EXIST. R/W

WALK

#1474

1½-Sty. Brick Face Block

2-Sty. Brick & Frame

1-Sty. Brick

Conc. Pad

140'(D)

Gravel Parking

Asphalt

Concrete Pad

Asphalt

PAVED PARKING

Asphalt

PAVED PARKING

WALL

WALL

26 27 28 29 30 31 32 33 34 35 36

224.75'(D)

MATCH LINE STA. 629+77.07 SEE SHEET 45 OF 49

S 0°49'16" E

8" SAN.

15" STM.

12" STM.

24" STM.

SEIBERLING ST.

EXIST. R/W

30'

36

WALL

24" STM.

SCALE IN FEET

0 20 40 60

FUNDS	IR

NAME	REVISION	DATE

CITY OF AKRON, SUMMIT COUNTY
ORIGINAL SPRINGFIELD TOWNSHIP, T1N, R10W
TRACT 2, O.L.1

CITY OF AKRON, SUMMIT COUNTY
ORIGINAL SPRINGFIELD TOWNSHIP, T1N, R10W
TRACT 3, O.L.A

CALC. BY. DATE	SUM-76-11.57	OHIO	1209 / 1214
CHKD. BY. DATE	FED. PROJECT IR-76-2(44)19	F.H.W.A. REGION 5	

SUMMIT COUNTY
LIMITED ACCESS
RIGHT OF WAY PLANS

44 / 49

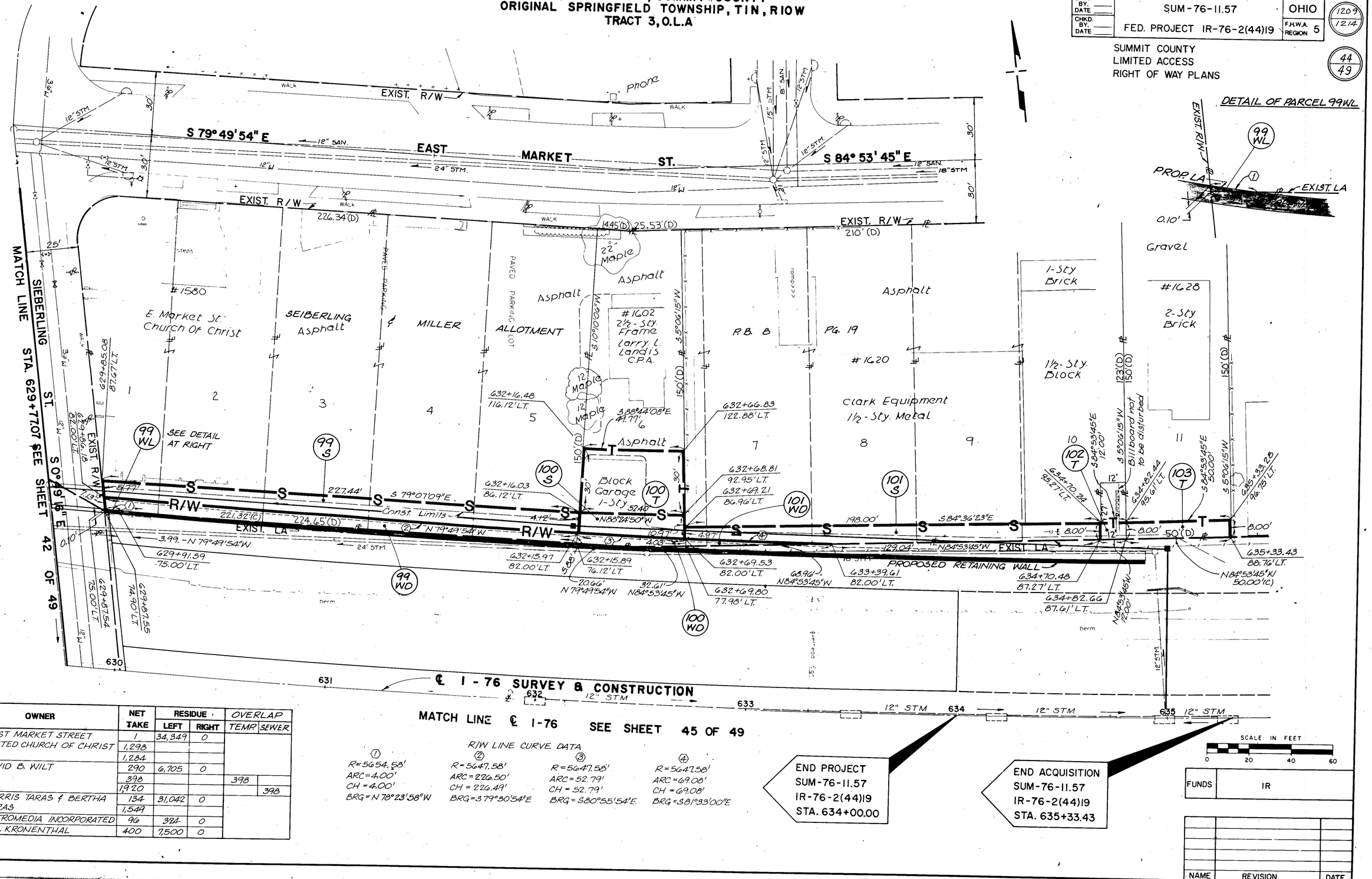

PARCEL NO.	OWNER	NET TAKE	RESIDUE LEFT	RESIDUE RIGHT	OVERLAP TEMP.	OVERLAP SEWER
99WL	EAST MARKET STREET	1	34,349	0		
99WD	UNITED CHURCH OF CHRIST	1,298				
99S		1,284				
100WD	DAVID B. WILT	290	6,705	0		
100S		398			398	
100T		1,920				398
101WD	MORRIS TARAS & BERTHA	134	31,042	0		
101S	TARAS	1,549				
102T	METROMEDIA INCORPORATED	96	324	0		
103T	H.G. KRONENTHAL	400	7,500	0		

R/W LINE CURVE DATA

①	②	③	④
R=5654.58'	R=5647.58'	R=5647.58'	R=5647.58'
ARC=4.00'	ARC=226.50'	ARC=52.79'	ARC=69.08'
CH=4.00'	CH=226.49'	CH=52.79'	CH=69.08'
BRG=N 78°23'58" W	BRG=S 79°30'54" E	BRG=S 80°55'54" E	BRG=S 81°33'00" E

SCALE IN FEET
0 20 40 60

FUNDS	IR

NAME	REVISION	DATE

CALC. BY. DATE	SUM-76-11.57	OHIO
CHKD. BY. DATE	FED. PROJECT IR-76-2(44)19	F.H.W.A. REGION 5

1210 / 1214

45 / 49

SUMMIT COUNTY
LIMITED ACCESS
RIGHT OF WAY PLANS

MATCH LINE ℄ I-76 SEE SHEET 44 OF 49

℄ I-76 SURVEY & CONSTRUCTION

MATCH LINE STA. 629+77.07 SEE SHEET 43 OF 49

MATCH LINE STA. 635+50 SEE SHEET 46 OF 49

S 0° 49' 16" E

S 79° 50' 11" E

S 84° 53' 16" E

ENGLEWOOD AVE.

℄ RELOCATED ENGLEWOOD AVENUE

SEIBERLING ST.

PROPOSED RETAINING WALL

EXIST. LA R/W

LA R/W

12" STM.

24" STM.

10" SAN.

8" SAN

WALK

berm

Asphalt
PAVED PARKING LOT

Maples

Clump 4"-6"

630 631 632 633 634 635

38 39 40 41 42

86 87 88 89 90 91 92 93 94 95

71.40'(D) 50'(D) 50'(D) 43.3'(D) 198'(D)

150'(D)

152.1'(D)

#1560
J.R.B. CO.

2-Sty. Block & Metal

1½-Sty. Brick

SCALE IN FEET
0 20 40 60

FUNDS	IR

NAME	REVISION	DATE

CITY OF AKRON, SUMMIT COUNTY
ORIGINAL SPRINGFIELD TOWNSHIP, T1N, R10W
TRACT 3, O.L.A

AA B/Pk 71942R

CALC. BY. DATE	SUM-76-11.57	OHIO
CHKD. BY. DATE	FED. PROJECT IR-76-2(44)19	F.H.W.A. REGION 5

12.11 / 12.14

46 / 49

SUMMIT COUNTY
LIMITED ACCESS
RIGHT OF WAY PLANS

MATCH LINE STA. 635+50 SEE SHEET 45 OF 49

MATCH LINE STA. 641+50 SEE SHEET 47 OF 49

12" STM. 636 637 638 639 640 641

℄ I-76 SURVEY & CONSTRUCTION

8" SAN. 6" W.L. (ABD.) 18" STM.

EXIST. LA R/W

berm

EXIST. RAMP E-17

EXIST. LA R/W

12" STM.

LA R/W 10" W.L.

LA R/W

12" STM.

ENGLEWOOD AVE.

S 84° 53' 16" E

℄ RELOCATED ENGLEWOOD AVENUE

43 44 45 46 47 48

24" STM. 10" SAN. 18" STM. 8" SAN. 18" STM. 8" STM. 8" SAN.

30'

EXIST. R/W

WALK

EXIST. R/W

WALK

2-Sty. Brick

#1624 Akron Standard

Akron Standard 2-Sty. Brick Office Area

1½-Sty. Brick Factory Area

96 97 98 99 100 101 102 103 104 105 106

VACATED SIDNEY ST. ORD. 582-48

6" W.L. (ABD.)

AKRON, BARBERTON BELT RAILROAD

SCALE IN FEET
0 20 40 60

FUNDS	IR

NAME	REVISION	DATE

CITY OF AKRON, SUMMIT COUNTY
ORIGINAL SPRINGFIELD TOWNSHIP, T1N, R10W
TRACT 3; O.L.A

AA B/Pe 71942R

CALC. BY. DATE	SUM-76-11.57	OHIO
CHKD. BY. DATE	FED. PROJECT IR-76-2(44)19	F.H.W.A. REGION 5

12/12
12/14

47
49

SUMMIT COUNTY
LIMITED ACCESS
RIGHT OF WAY PLANS

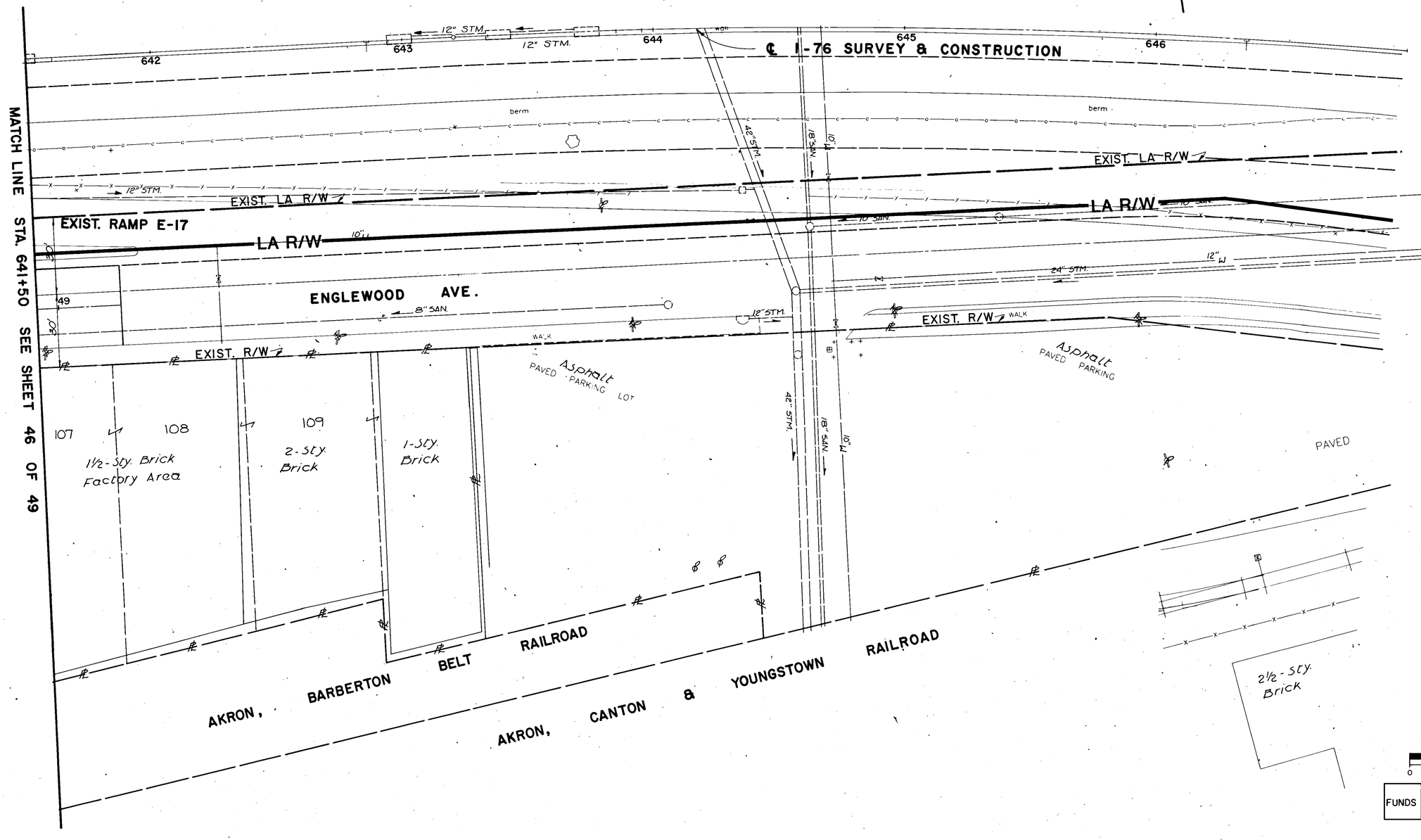

SCALE IN FEET
0 20 40 60

FUNDS	IR

NAME	REVISION	DATE

CITY OF AKRON, SUMMIT COUNTY
ORIGINAL SPRINGFIELD TOWNSHIP, T1N, R10W
TRACT 3, O.L.A

CITY OF AKRON, SUMMIT COUNTY, ORIGINAL SPRINGFIELD TOWNSHIP, T IN, R IOW, TRACT I

CALC. BY. DATE	SUM-76-11.57	OHIO
CHKD. BY. DATE	FED. PROJECT IR-76-2(44)19	F.H.W.A. REGION 5

1213
1214

48
49

SUMMIT COUNTY
LIMITED ACCESS
RIGHT OF WAY PLANS

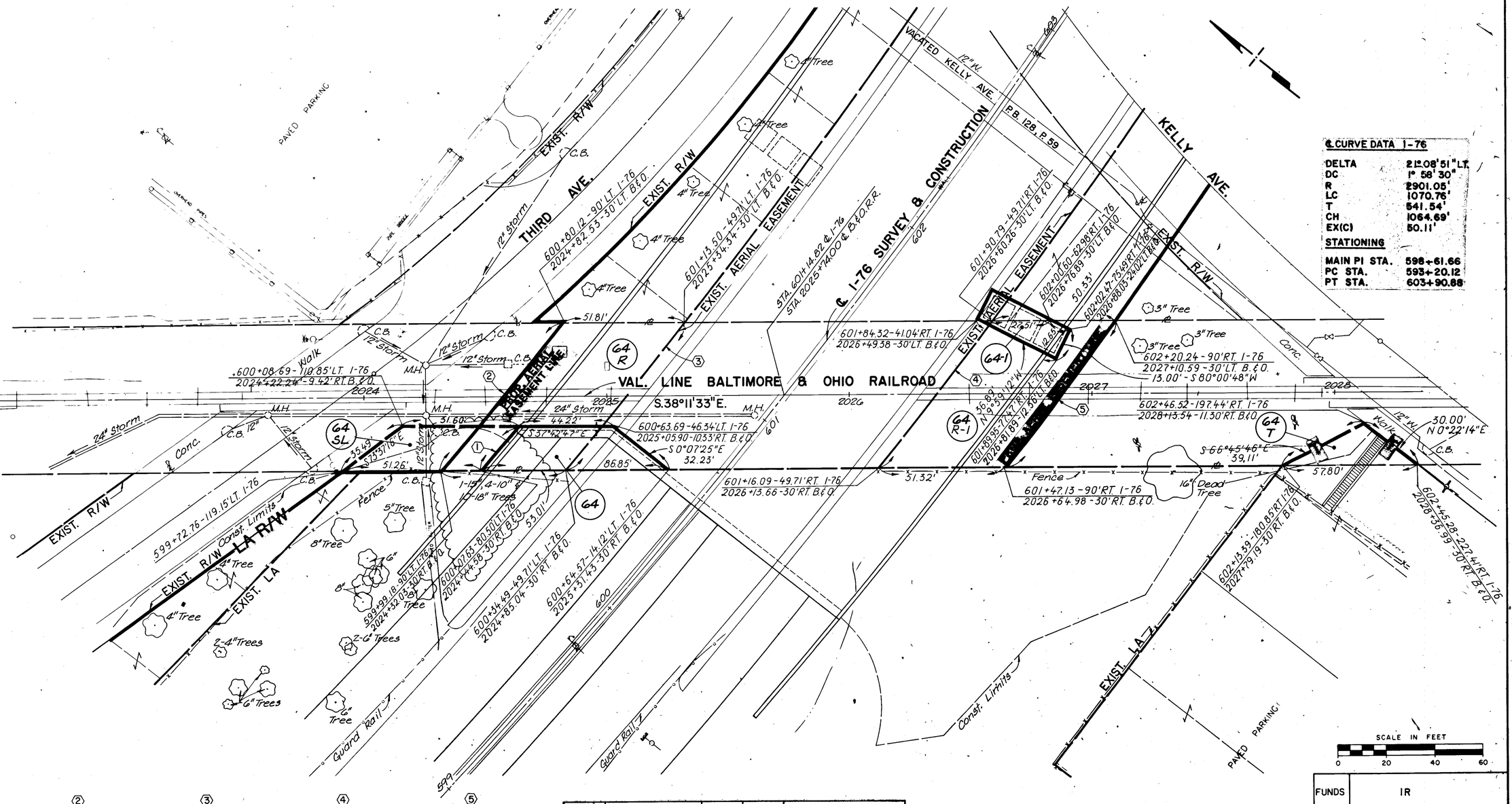

℄ CURVE DATA I-76

DELTA	21° 08' 51" LT.
DC	1° 58' 30"
R	2901.05'
LC	1070.76'
T	541.54'
CH	1064.69'
EX(C)	50.11'

STATIONING

MAIN PI STA.	598+61.66
PC STA.	593+20.12
PT STA.	603+90.88

SCALE IN FEET
0 20 40 60

FUNDS	IR

NAME	REVISION	DATE

① R = 2820.55' ARC = 26.60' CH = 26.60' BRG = S 87°44'37" E

② R = 2811.05' ARC = 78.43' CH = 78.42' BRG = S 88°06'20" E

③ R = 2851.34' ARC = 77.66' CH = 77.66' BRG = N 88°46'57" W

④ R = 2950.76' ARC = 75.98' CH = 75.97' BRG = N 89°38'43" E

⑤ R = 2991.05' ARC = 75.37' CH = 75.37' BRG = S 89°02'58" W

PARCEL NO.	EASEMENT REQUIRED	TOTAL AREA	P.R.O.	AREA OF OVERLAP		
				HIWAY	AERIAL	SLOPE
64R	AERIAL	3144	0	811	—	252
64	HIGHWAY	1313	0	—	811	—
64-1	HIGHWAY	322	0	—	296	—
64SL	SLOPE	932	0	—	252	—
64T	TEMPORARY	541	0	—	—	—
64R-1	AERIAL	3049	0	296	—	—

VALUATION MAP NO. V-120.1 / 20

BALTIMORE & OHIO RAILROAD PLAT

CITY OF AKRON, SUMMIT COUNTY, ORIGINAL SPRINGFIELD TOWNSHIP, T1N, R10W, TRACT 2, O.L.1

CALC. BY. DATE	SUM-76-11.57	OHIO
CHK'D. BY. DATE	FED. PROJECT IR-76-2(44)19	F.H.W.A. REGION 5

1214 / 1214

49 / 49

SUMMIT COUNTY
LIMITED ACCESS
RIGHT OF WAY PLANS

R/W LINE CURVE DATA

① R = 625.41' ARC = 65.59' CH = 65.56' BRG = S 79°41'14" E

② R = 1304.39' ARC = 124.28' CH = 124.23' BRG = S 32°57'24"E

③ R = 685.70' ARC = 82.60' CH = 82.55' BRG = N 71°32'14" W

④ R = 1354.39' ARC = 68.23' CH = 68.22' BRG = N 31°24'40"W

⑤ R = 1304.39' ARC = 112.16' CH = 112.17' BRG = S 32°10'11"E

⑥ R = 695.20' ARC = 15.08' CH = 15.08' BRG = N 69°58'45"W

⑦ R = 685.70' ARC = 30.00' CH = 30.00' BRG = S 73°2C'20"E

⑧ R = 1304.39' ARC = 50.00' CH = 50.00' BRG = S 36°31'32"E

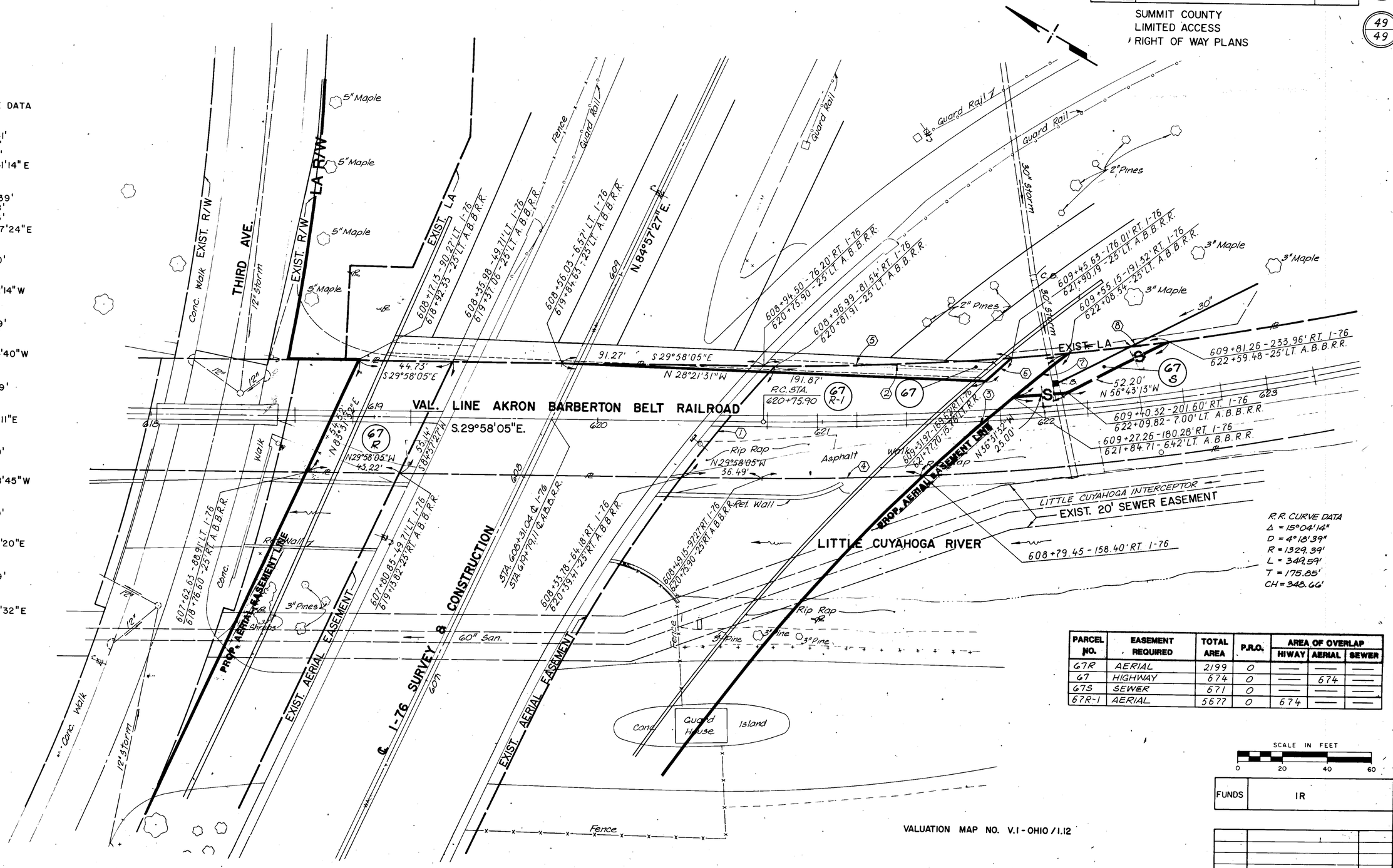

PARCEL NO.	EASEMENT REQUIRED	TOTAL AREA	P.R.O.	AREA OF OVERLAP		
				HIWAY	AERIAL	SEWER
67R	AERIAL	2199	0	—	—	—
67	HIGHWAY	674	0	—	674	—
67S	SEWER	671	0	—	—	—
67R-1	AERIAL	5677	0	674	—	—

SCALE IN FEET
0 20 40 60

FUNDS	IR

VALUATION MAP NO. V.1 - OHIO / 1.12

AKRON BARBERTON BELT RAILROAD PLAT

NAME	REVISION	DATE

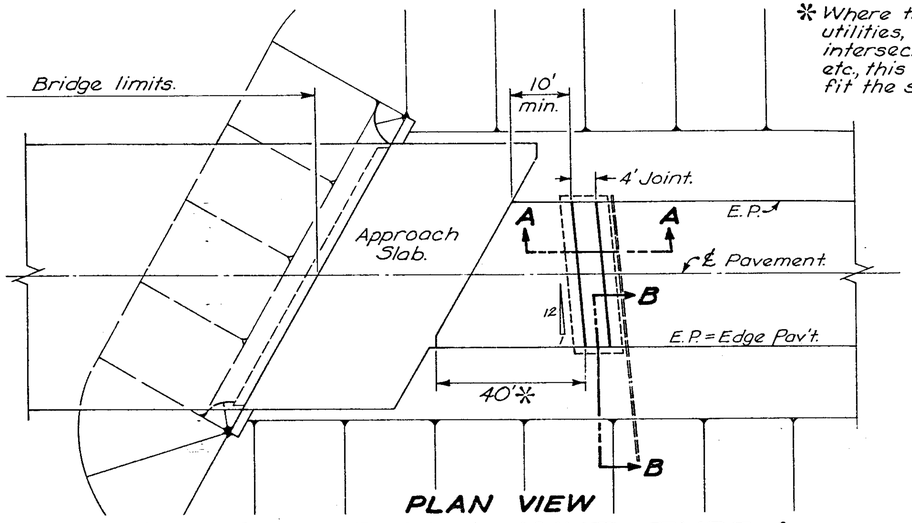

PLAN VIEW

PRESSURE RELIEF JOINT - TYPE A

* Where there are conflicts such as utilities, drainage structures, intersections, excessive bridge skew, etc., this dimension may be varied to fit the situation.

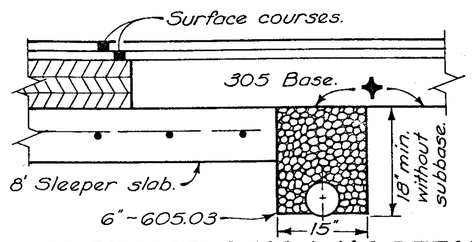

ALTERNATE PAVEMENT DETAIL
For details not shown, see Section A-A.

REINFORCING STEEL LIST 5/8" ϕ

Mark	Shape	No.	Length	Bending Diagram
R501	St.	8	S-6"	1'-7" 9" 1'-7"
R502	St.	⊛S	7'-6"	
R503	Bt.	⊛S-2	4'-3"	9" R 503

⊛ S = Length of sleeper slab (in feet).

R501 bars may be furnished in segments with a 1'-7" bar lap between segments.

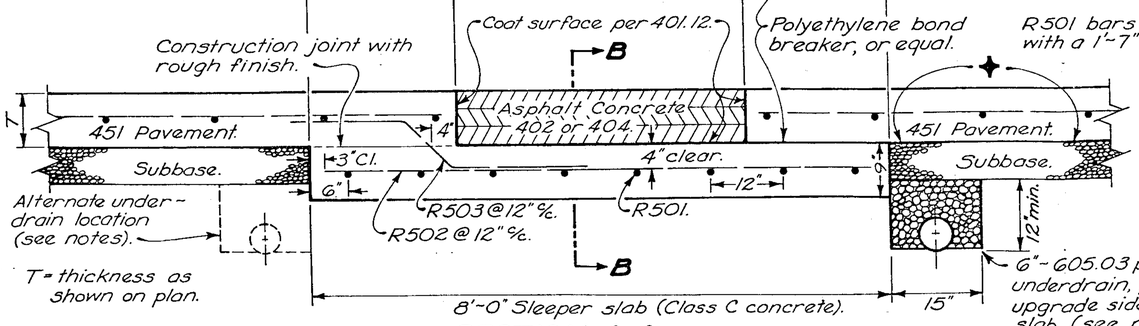

✚ Core shall be taken in the area 0' to 4' from the sleeper slab to be sure the surface of the subbase or subgrade is finished smooth and is flush with or slightly higher than the surface of the sleeper slab.

SECTION A-A

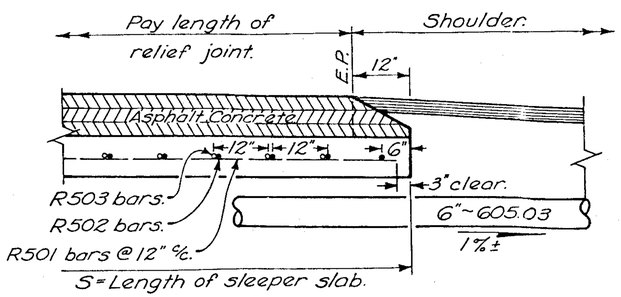

SECTION B-B

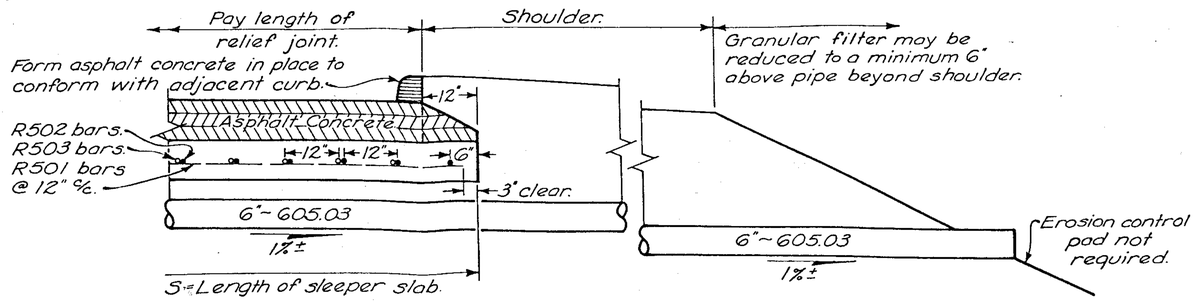

SECTION B-B WITH CURB
(showing an underdrain outlet "through the embankment").

NOTES

ASPHALT CONCRETE, 402 or 404, shall be compacted in three equal courses with compaction equipment as approved by the Engineer. Surface of the asphalt concrete shall be flush to 1/4" above the concrete pavement surface.

BARRICADES shall be provided during construction until the relief joint has been filled with asphalt.

MEASUREMENT of the pressure relief joint for pay purposes shall be along the centerline of the joint, edge to edge of pavement or back to back of curbs. Payment shall be per linear foot for Item Special, Pressure relief joint, Type A, which shall include all work and materials necessary to complete the joint, except for the pipe underdrain.

UNDERDRAIN: A perforated metal pipe underdrain, 707.01 Type III or 707.21 Type III shall be placed along the upgrade side of the sleeper slab. It shall extend from edge to edge of the sleeper slab and shall be outletted as shown on the plan, either to a longitudinal underdrain, a catch basin, or through the embankment or ditch inslope. These drains shall be paid for per linear foot of 605 6" Shallow pipe underdrains, 707.01 Type III or 707.21 Type III.

EXPANSION JOINTS normally required in the bridge approach pavement per 451.08(c) will not be required.

BUREAU OF LOCATION AND DESIGN
OHIO DEPARTMENT OF TRANSPORTATION

PRESSURE RELIEF JOINT TYPE A

DATE 1-3-75 1-30-84

STANDARD CONSTRUCTION DRAWING BP-10

APPROVED _____ ENGR. L. & D.

THIS IMPROVEMENT HAS BEEN DECLARED A LIMITED ACCESS HIGHWAY FROM STA. 548+98.7810 STA. 742+70.00 BY ACTION OF THE DIRECTOR OF TRANSPORTATION AND RECORDED IN VOLUME NUMBER 41 PAGE 935 , OF THE DIRECTORS JOURNAL PURSUANT TO LAW.

CENTERLINE SURVEY PLAT

SUM-76-11.57

CITY OF AKRON, SUMMIT COUNTY

ORIGINAL COVENTRY TOWNSHIP

T2N, R11W, TRACT 8, O.L. 4

CALC. BY BJB DATE 3/90	SUM-76-11.57	OHIO
CHKD. BY DSB DATE 3/90	FED. PROJECT IR-76-2(44)19	F.H.W.A. REGION 5

1165 12/4

1 / 49

SUMMIT COUNTY
LIMITED ACCESS
RIGHT OF WAY PLANS

MONUMENT ASSEMBLIES TO BE SET	
STATION	LOCATION
P.O.T. 553+43.40	64' RT. ℄
P.C. 558+15.65	61' RT. ℄
P.T. 569+16.09	52' RT. ℄
TOTAL THIS SHEET 3	
TOTAL MONUMENT ASSEMBLIES TO BE SET 12	

℄ I-76 CURVE NO. 1

CURVE DATA

DELTA	22° 0' 32" RT.
DC	2° 0' 0"
R	2864.79'
LC	1100.44'
T	557.09'
CH	1093.69'
EX(C)	53.66'

STATIONING

MAIN PI STA.	563+72.74
PC STA.	558+15.65
PT STA.	569+16.09

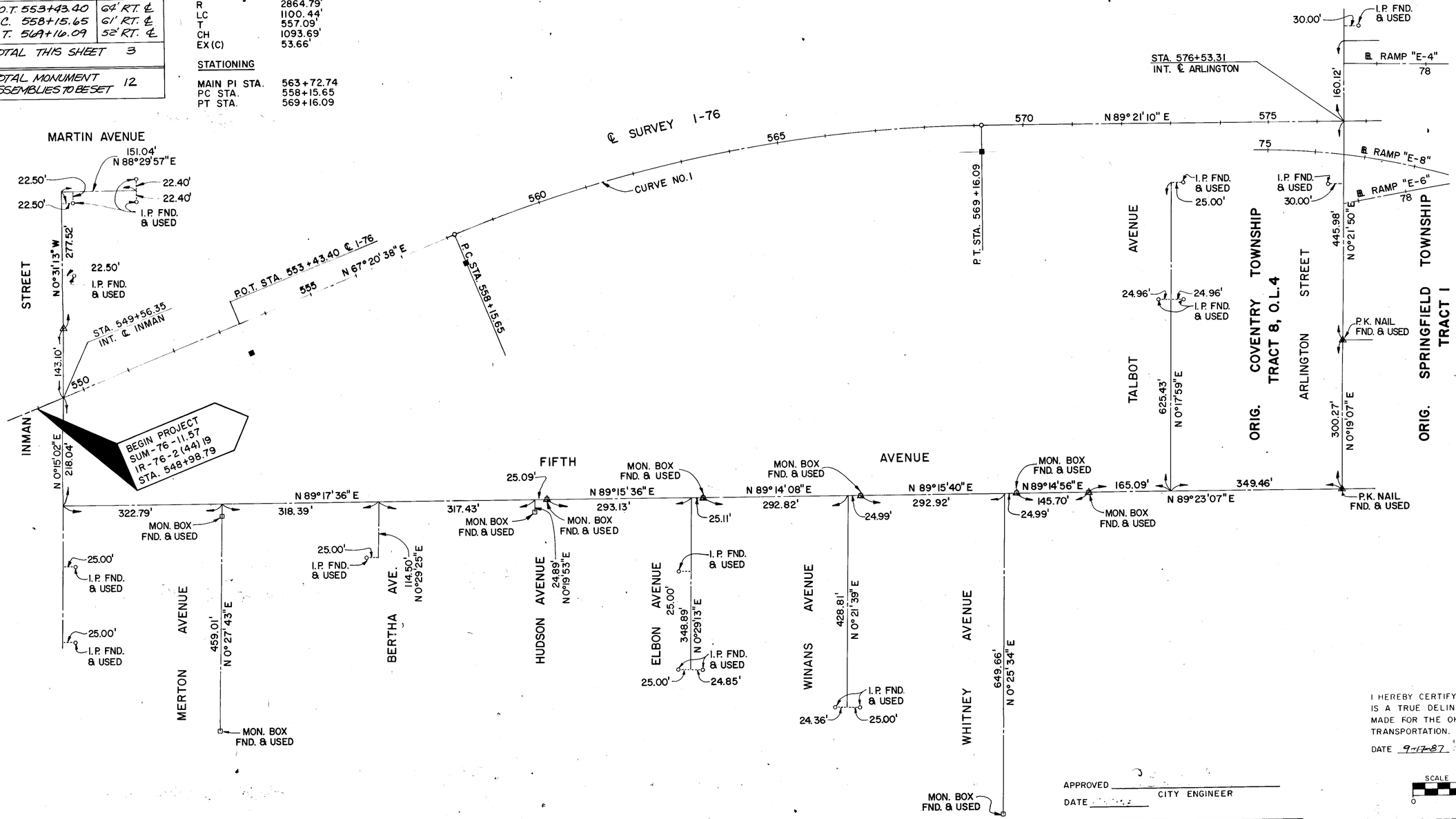

RECORDERS OFFICE

STATE OF OHIO RICHARD E. ROCKWELL 5480 REGISTERED SURVEYOR

SURVEYORS SEAL

I HEREBY CERTIFY THAT THIS PLAT IS A TRUE DELINEATION OF A SURVEY MADE FOR THE OHIO DEPARTMENT OF TRANSPORTATION.

DATE 9-17-87 Richard E. Rockwell REGISTERED SURVEYOR

APPROVED _____ CITY ENGINEER

DATE _____

CERTIFICATE OF APPROVAL

SIGNED BY: _____

DATE: _____ DISTRICT DEPUTY DIRECTOR

SCALE IN FEET 0 100 200 300

SHEET 1 OF 4

CENTERLINE SURVEY PLAT

THIS IMPROVEMENT HAS BEEN DECLARED A LIMITED ACCESS HIGHWAY FROM STA. 548+96.78 TO STA. 742+70.00 BY ACTION OF THE DIRECTOR OF TRANSPORTATION AND RECORDED IN VOLUME NUMBER 41 PAGE 935, OF THE DIRECTORS JOURNAL PURSUANT TO LAW.

MONUMENT ASSEMBLIES TO BE SET	
STATION	LOCATION
P.C. 578+84.95	52' RT. ℄
P.T. 587+19.08	79' RT. ℄
P.C. 593+20.12	69.5' RT. ℄
P.O.C. 599+00.00	69.5' RT. ℄
TOTAL THIS SHEET 4	

CENTERLINE SURVEY PLAT

SUM-76-11.57

CITY OF AKRON, SUMMIT COUNTY
ORIGINAL SPRINGFIELD TOWNSHIP
TIN, R 10 W, TRACT 1

CALC. BY B4B DATE 3/90	SUM-76-11.57	OHIO
CHKD. BY DSB DATE 3/90	FED. PROJECT IR-76-2(44)19	F.H.W.A. REGION 5

1166 / 1214

SUMMIT COUNTY
LIMITED ACCESS
RIGHT OF WAY PLANS

2 / 49

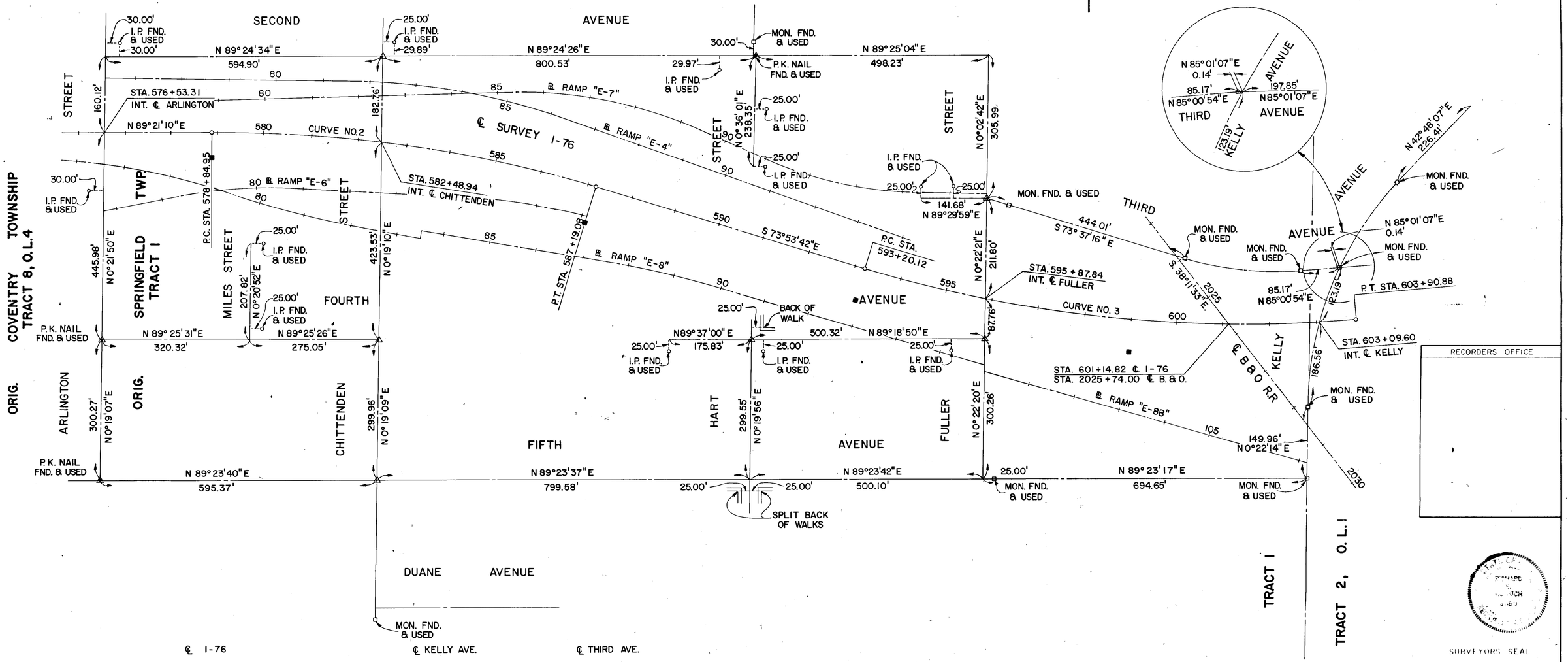

℄ I-76 CURVE NO. 2		CURVE NO. 3		℄ KELLY AVE.		℄ THIRD AVE.	
CURVE DATA		CURVE DATA		CURVE DATA		CURVE DATA	
DELTA	16° 45' 08" RT.	DELTA	21° 08' 51" LT.	DELTA	42° 25' 53" RT.	DELTA	21° 21' 51" LT.
DC	2° 00' 30"	DC	1° 58' 30"	DC	7° 59' 51"	DC	8° 30' 06"
R	2852.90'	R	2901.05'	R	716.43'	R	673.94'
LC	834.14'	LC	1070.76'	LC	530.56'	LC	251.30'
T	420.06'	T	541.54'	T	278.11'	T	127.12'
CH	831.17'	CH	1064.69'	CH	518.52'	CH	249.84'
EX(C)	30.76'	EX(C)	50.11'	EX(C)	52.09'	EX(C)	11.89'
STATIONING		STATIONING					
MAIN PI STA.	583+05.01	MAIN PI STA.	598+61.66				
PC STA.	578+84.95	PC STA.	593+20.12				
PT STA.	587+19.08	PT STA.	603+90.88				

RECORDERS OFFICE

SURVEYORS SEAL

I HEREBY CERTIFY THAT THIS PLAT IS A TRUE DELINEATION OF A SURVEY MADE FOR THE OHIO DEPARTMENT OF TRANSPORTATION.

Richard E. Rockwell

DATE 9-17-87 REGISTERED SURVEYOR

APPROVED _____ CITY ENGINEER

DATE _____

CERTIFICATE OF APPROVAL
SIGNED BY: _____
DATE: _____ DISTRICT DEPUTY DIRECTOR

SCALE IN FEET
0 100 200 300

SHEET 2 OF 4

CENTERLINE SURVEY PLAT

THIS IMPROVEMENT HAS BEEN DECLARED A LIMITED ACCESS HIGHWAY FROM STA. 548+98.78 TO STA. 742+70.00 BY ACTION OF THE DIRECTOR OF TRANSPORTATION AND RECORDED IN VOLUME NUMBER 41 PAGE 935, OF THE DIRECTORS JOURNAL PURSUANT TO LAW.

MONUMENT ASSEMBLIES TO BE SET	
STATION	LOCATION
P.O.T. 610+00.00	69.5' RT. ℄
P.C. 615+54.92	57.5' RT. ℄
P.T. 623+87.75	81' RT. ℄
P.O.T. 628+00.00	69' RT. ℄
TOTAL THIS SHEET	4

CENTERLINE SURVEY PLAT

SUM-76-11.57

CITY OF AKRON, SUMMIT COUNTY
ORIGINAL SPRINGFIELD TOWNSHIP
T IN, R 10 W, TRACT 2, O.L.1

CALC. BY. AHB DATE 3/90	SUM-76-11.57	OHIO	1167 / 1214
CHKD. BY. DSB DATE 3/90	FED. PROJECT IR-76-2(44)19	F.H.W.A. REGION 5	

SUMMIT COUNTY
LIMITED ACCESS
RIGHT OF WAY PLANS

3 / 49

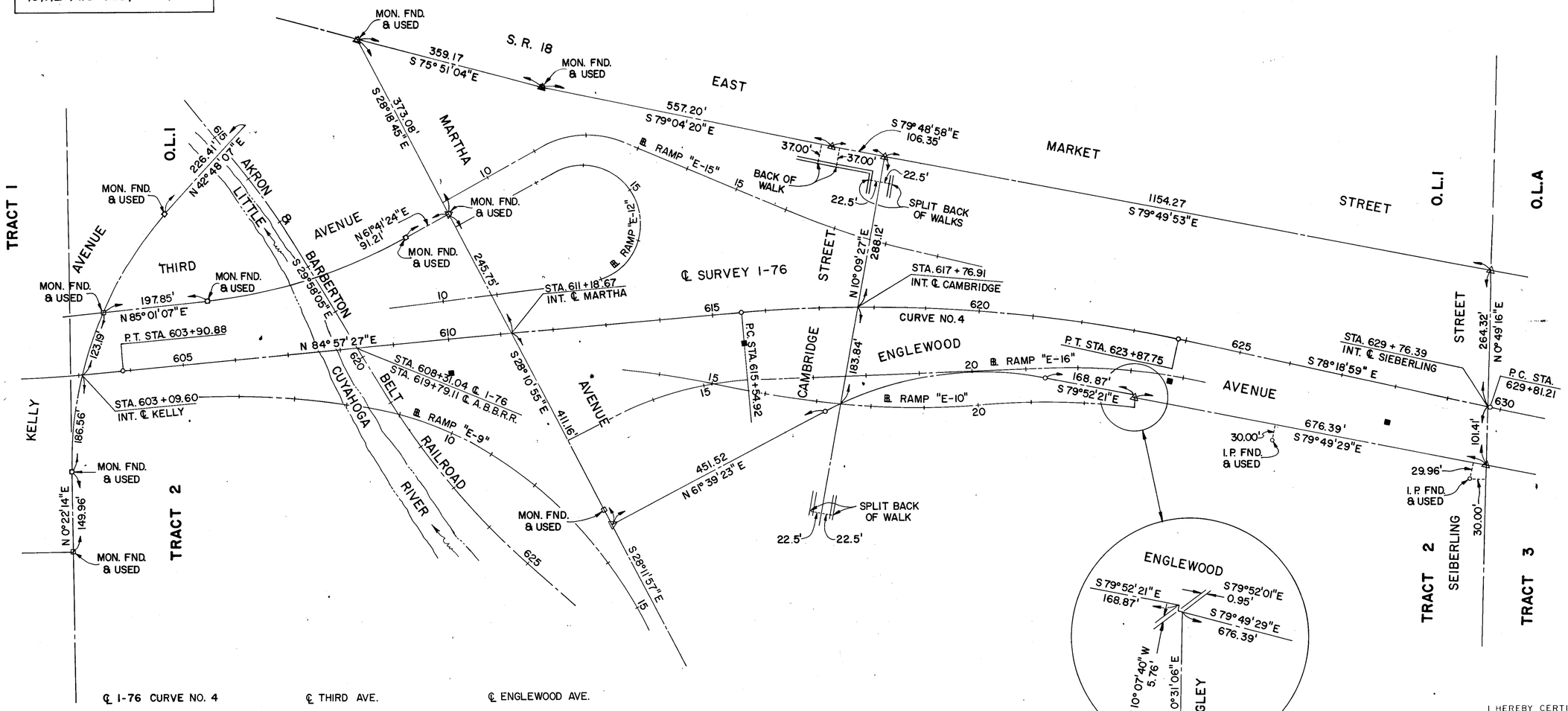

RECORDERS OFFICE

STATE OF OHIO
RICHARD E. ROKICH
5680
REGISTERED SURVEYOR

SURVEYORS SEAL

I HEREBY CERTIFY THAT THIS PLAT IS A TRUE DELINEATION OF A SURVEY MADE FOR THE OHIO DEPARTMENT OF TRANSPORTATION.

DATE 9-17-87 Richard E. Rokich REGISTERED SURVEYOR

SCALE IN FEET
0 100 200 300

SHEET 3 OF 4

CENTERLINE SURVEY PLAT

℄ I-76 CURVE NO. 4

CURVE DATA

DELTA	16° 43' 34" RT.
DC	2° 00' 30"
R	2852.90'
LC	832.84'
T	419.40'
CH	829.88'
EX (C)	30.66'

STATIONING

MAIN PI STA.	619+74.32
PC STA.	615+54.92
PT STA.	623+87.75

℄ THIRD AVE.

CURVE DATA

DELTA	23° 19' 43" LT.
DC	5° 59' 57"
R	955.08'
LC	388.87'
T	197.17'
CH	386.19'
EX(C)	20.14'

℄ ENGLEWOOD AVE.

CURVE DATA

DELTA	38° 28' 15" RT.
DC	8° 59' 38"
R	637.05'
LC	427.75'
T	222.29'
CH	419.76'
EX(C)	37.67'

APPROVED _____ CITY ENGINEER

DATE _____

CERTIFICATE OF APPROVAL
SIGNED BY: _____
DATE: _____ DISTRICT DEPUTY DIRECTOR

THIS IMPROVEMENT HAS BEEN DECLARED A LIMITED ACCESS HIGHWAY FROM STA. 548+98.78 TO STA. 742+70.00 BY ACTION OF THE DIRECTOR OF TRANSPORTATION AND RECORDED IN VOLUME NUMBER 41 PAGE 935 OF THE DIRECTORS JOURNAL PURSUANT TO LAW.

MONUMENT ASSEMBLIES TO BE SET	
STATION	LOCATION
P.O.C. 631+00.00	59' RT. ℄
TOTAL THIS SHEET 1	

CENTERLINE SURVEY PLAT

SUM-76-11.57

CITY OF AKRON, SUMMIT COUNTY
ORIGINAL SPRINGFIELD TOWNSHIP
T1N, R10W, TRACT 3, O.L.1

CALC. BY BHB DATE 3/90	SUM-76-11.57	OHIO
CHKD. BY DSB DATE 3/90	FED. PROJECT IR-76-2(44)19	F.H.W.A. REGION 5

1168 / 1214

SUMMIT COUNTY
LIMITED ACCESS
RIGHT OF WAY PLANS

4 / 49

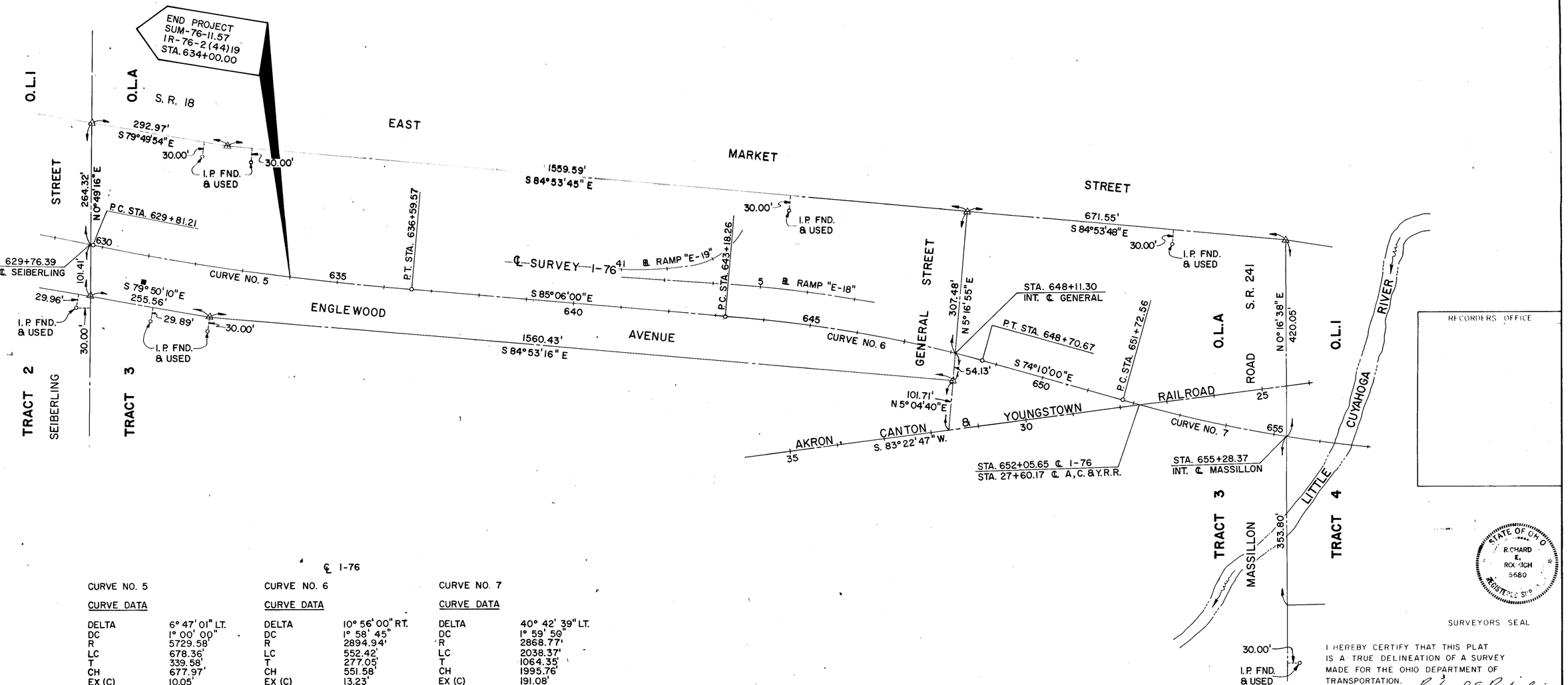

RECORDERS OFFICE

STATE OF OHIO
RICHARD E. ROCKICH
5680
REGISTERED SURVEYOR

SURVEYORS SEAL

I HEREBY CERTIFY THAT THIS PLAT IS A TRUE DELINEATION OF A SURVEY MADE FOR THE OHIO DEPARTMENT OF TRANSPORTATION.

Richard E. Rockich

DATE 9-17-87 REGISTERED SURVEYOR

℄ I-76

CURVE NO. 5		CURVE NO. 6		CURVE NO. 7	
CURVE DATA		CURVE DATA		CURVE DATA	
DELTA	6° 47' 01" LT.	DELTA	10° 56' 00" RT.	DELTA	40° 42' 39" LT.
DC	1° 00' 00"	DC	1° 58' 45"	DC	1° 59' 50"
R	5729.58'	R	2894.94'	R	2868.77'
LC	678.36'	LC	552.42'	LC	2038.37'
T	339.58'	T	277.05'	T	1064.35'
CH	677.97'	CH	551.58'	CH	1995.76'
EX (C)	10.05'	EX (C)	13.23'	EX (C)	191.08'
STATIONING		STATIONING		STATIONING	
MAIN PI STA.	633+20.79	MAIN PI STA.	645+95.30	MAIN PI STA.	662+36.91
PC STA.	629+81.21	PC STA.	643+18.25	PC STA.	651+72.56
PT STA.	636+59.57	PT STA.	648+70.67	PT STA.	672+10.93

APPROVED _____ CITY ENGINEER

DATE _____

CERTIFICATE OF APPROVAL
SIGNED BY: _____
DATE: _____ DISTRICT DEPUTY DIRECTOR

SCALE IN FEET
0 100 200 300

SHEET 4 OF 4

CENTERLINE SURVEY PLAT

AA B.Pv 71942R

CALC. BY. DATE	SUMMIT COUNTY	OHIO
CHKD. BY. DATE	SUM-76-11.57 RIGHT OF WAY PLANS	F.H.W.A. REGION 5

1169 / 1214

5 / 49

PROPERTY MAP

SUM-76-11.57

GRAPHIC SCALE
0 40 80 120

CITY OF AKRON, SUMMIT COUNTY
ORIGINAL COVENTRY TOWNSHIP, T2N, R11W
TRACT 8, O.L. 4

AFFECTED UTILITIES	
OHIO BELL TELEPHONE CO. 50 WEST BOWERY ST. AKRON, OHIO 44308	EAST OHIO GAS CO. 2100 EASTWOOD AVE. AKRON, OHIO 44305
OHIO EDISON CO. 76 SOUTH MAIN ST. AKRON, OHIO 44308	AKRON CITY WATER DEPT. 63 SOUTH HIGH ST. AKRON, OHIO 44308
AKRON CITY SEWER DEPT. 166 SOUTH HIGH ST. AKRON, OHIO 44308	WARNER AMEX CABLE COMMUNICATION INC. 1210 BROWNSTONE AVE. AKRON, OHIO 44310

(1) ARCHBISHOP HOBAN HIGH SCHOOL

BEGIN ACQUISITION
SUM-76-11.57
IR-76-2(44)19
STA. 558+70.05

(1/T)

℄ EXIST. LA

℄ I-76 SURVEY & CONSTRUCTION

EXIST. LA

PARKING

HOBAN HIGH SCHOOL

EVERGREENS

MATCH LINE STA. 570+50 SEE SHEET 6 OF 49

(1/WL)

INTERSTATE ROUTE 76

DETAIL OF HOBAN HIGH SCHOOL PROPERTY

SCALE IN FEET
0 200 400

PROPERTY MAP

NAME	REVISION	DATE

PROPERTY MAP

SUM-76-11.57

CALC. BY. DATE	SUMMIT COUNTY SUM-76-11.57 RIGHT OF WAY PLANS	OHIO F.H.W.A. REGION 5	1170 1214
CHKD. BY. DATE			6 49

GRAPHIC SCALE 40 80 120

MATCH LINE STA. 571+50 SEE SHEET 5 OF 49

MATCH LINE STA. 582+48.94 SEE SHEET 7 OF 49

EXIST. R/W — AVENUE — EXIST. R/W — STINE ALLOT. PB 7 P.70 — WATTS ALLOT. PB. 7P.5 — EXIST. R/W — STREET — TRACT 8 O.L. 4 — TWP TRACT 1 — EXIST. R/W — SECOND AVENUE

MARTIN AVENUE — EXIST. R/W — EXIST. LA R/W — 539.9152' EXIST. LA R/W

RAMP "E-4" — RAMP "E-7" — P.C. STA. 578+83

℄ I-76 — COVENTRY TWP — SPRINGFIELD

RAMP "E-8" — RAMP "E-6" — EXIST. LA

TALBOT — EXIST. R/W — EXIST. R/W — INGLESIDE ALLOT. P.B. 7 P.44 — EXIST. R/W — ARLINGTON — ORIGINAL — ORIGINAL — 6 P.2 — P.B. — C.S. HART ALLOT. — EXIST. R/W — MILES STREET — EXIST. R/W — EXIST. LA

FOURTH AVENUE

CITY OF AKRON, SUMMIT COUNTY
ORIGINAL COVENTRY TOWNSHIP, T2N, R11W
TRACT 8, O.L. 4

CITY OF AKRON, SUMMIT COUNTY
ORIGINAL SPRINGFIELD TOWNSHIP, T1N, R10W
TRACT 1

(1)	ARCHBISHOP HOBAN HIGH SCHOOL
(2)	JERRY WAYNE KODISH
(3)	GEORGIA A. BELL
(3A)	DARTMOOR CORPORATION
(3B)	RUTH & JAMES SIX
(3C)	DENNIS B. LAIDIG
(4)	HARRY KODISH
(4A)	FILADELFIO & ELIZABETH NARZISI
(5)	ROBERT & JUDITH ASHLEY
(5A)	HARRY KODISH
(5B)	ANDREW JESSIE LOMAN
(5C)	HAROLD G. UNDERWOOD
(6)	HARRY KODISH
(7)	JAMES R. WALKER
(8)	PAUL & MARY KLINE
(8A)	ELMER J. STARKS, JR.

PROPERTY MAP

OSB NAME	REV. L/A ON TALBOT AVE REVISION	4/2/90 DATE

PROPERTY MAP

CALC. BY. ____ DATE ____
CHKD. BY. J DATE ____

SUMMIT COUNTY
SUM-76-11.57
RIGHT OF WAY PLANS

OHIO
F.H.W.A. REGION 5

1171/1214

7/49

SUM-76-11.57

GRAPHIC SCALE 0 40 80 120

CITY OF AKRON, SUMMIT COUNTY
ORIGINAL SPRINGFIELD TOWNSHIP, T 1 N, R 10 W
TRACT 1.

MATCH LINE STA. 582+48.94 SEE SHEET 6 OF 49

MATCH LINE STA. 595+87.84 SEE SHEET 8 OF 49

SECOND AVENUE

THIRD AVENUE

FOURTH AVENUE

CHITTENDEN STREET

HART STREET

FULLER STREET

RAMP "E-7"

RAMP "E-4"

RAMP "E-6"

RAMP "E-8"

RAMP "E-3"

EXIST. LA R/W

EXIST. LA

LA

℄ I-76 SURVEY & CONSTRUCTION

P.T. STA. 587+15

P.C. STA. 593+25

VACATED FOURTH AVE (253-1983)

THIS PARCEL PREVIOUSLY ACQUIRED

9 EDDIE O. HEWINS

10 HEIRS OF CHARLES HEWINS
ELAINE MAE THOMAS

11

12 DONALD R. MOYERS & JACQUELINE MOYERS
ANNA EATON, ET AL

13

14 AKRON BOARD OF EDUCATION

15 A. E. HARDESTY

16 J. COPELAND

17 C.P. & C.C. HARDESTY
R. H. SMITH

18

19 DALLIS WORTHY

20 BEAUFORD & POLA JEFFRIES

21 GEORGE H. SMITH

22 G. PETERSON

23 R. NEIMAN

24 ZION TEMPLE APOSTOLIC CHURCH

25 GENE ECKRICH

27 BETTY G. JOHNSON

28 G. S. G. DEVELOPMENT COMPANY

29 B. & B. ASSOCIATES INCORPORATED
BETTY CALHOUN

30

37A JESSIE L. & STELLA M. WILKINS

38A JOSEPH & JENNIE CHURCH

31 A. E. GEER

32 W. THOMAS

33 JOHN BOY BROWN

34 GILBERT & ARLINE STORY

35 JOHNNIE & CARRIE MAE BROWN
B. R. JAMES

36

37 U.R.W. OF AMERICA HOME ASSOC.
B. R. JAMES

39 ROBERT W. BLAKEMORE

40 L. HAMRIC

41 L. & E. McCLENDON

42 P. & J. MONDL

43 DONALD DAY

44 E. & J. ANGEL

45 D.E. & P. CONEY

46 JOHNNIE BROWN

47 W. PRESTON & J. SOJOURNER

47A HART ST. CHURCH OF GOD

48 GEORGE HAMMETT

49 J. L. CLARK

50 M. R. KELLER

51 W. CLARK, JR.

52 J.L. & A.C. SMITH

53 R.L. & A.B. GRANDISON

54 W. A. BANKS

54A R.L. MATLEY

PROPERTY MAP

NAME	REVISION	DATE
DSB	REV. L/A ON N. HART ST.	4/4/90

CALC. BY. DATE	SUMMIT COUNTY	OHIO
CHKD. BY. DATE	SUM-76-11.57 RIGHT OF WAY PLANS	F.H.W.A. REGION 5

1172 / 1214

8 / 49

PROPERTY MAP

SUM-76-11.57

GRAPHIC SCALE
0 40 80 120

CITY OF AKRON, SUMMIT COUNTY
ORIGINAL SPRINGFIELD TOWNSHIP, T 1 N, R 10 W
TRACT 1

CONS. PROP. GOODYEAR T. & R. CO.
P.B. 60 P. 31
PARCEL F BLK. 1

CONS. PROP. GOODYEAR T. & R. CO. P.B. 60 P.31
PARCEL A, BLK. 6

MATCH LINE STA. 595+87.84 SEE SHEET 7 OF 49

MATCH LINE STA. 606+00 SEE SHEETS 9 & 10 OF 49

VACATED THIRD AVE.

THIRD AVENUE

BALTIMORE & OHIO RAILROAD

EXIST. R/W

EXIST. LA

LA R/W

I-76

EXIST. RAMP E-8

RAMP "E-88"

FULLER STREET

FIFTH AVENUE

KELLY AVENUE

RAILROAD

S. HART ALLOT

P.B. 6 P.2

(55) GOODYEAR TIRE & RUBBER COMPANY

(56) HELEN B. WOZNIAK

(57) NED & BONNIE TRAYLOR

(58) MAE MAULDIN

(59) LUCILLE PREISTER

(60) LEE O. MILBRY, SR.

(60A) CITY OF AKRON

(61) GOODYEAR TIRE & RUBBER COMPANY

(62) CITY OF AKRON

(63) MILAN P. KRONENTHAL

(64) BALTIMORE & OHIO RAILROAD

(65) GOODYEAR TIRE & RUBBER COMPANY

(66) GOODYEAR TIRE & RUBBER COMPANY

~~(61A) IRENE MANNING~~

~~(62A) EULA BELLE MINSON~~

(63A) RUTH A. SANDERSEN & LUELLA T. PAINE

PROPERTY MAP

NAME	REVISION	DATE
DSB	DELETE G1A & G2A	4/4/90
DSB	CHANGED G3A/L TO G3A/D	4/12/90
DSB	REV L/A @ 5TH AND KELLY	4/12/90

PROPERTY MAP

SUM-76-11.57

GRAPHIC SCALE
0 40 80 120

CITY OF AKRON, SUMMIT COUNTY
ORIGINAL SPRINGFIELD TOWNSHIP, T 1N, R 10W
TRACT 2, O.L. 1

CALC. BY. — DATE —	SUMMIT COUNTY SUM-76-11.57 RIGHT OF WAY PLANS	OHIO
CHKD. BY. — DATE —		F.H.W.A. REGION 5

1173 / 1214

9 / 49

68	GOODYEAR TIRE & RUBBER COMPANY	72	ARLENE M. HUBER
68A	GOODYEAR TIRE & RUBBER COMPANY	73	THOMAS J. HUBER
70	GOODYEAR TIRE & RUBBER COMPANY	74	M. & B. TARAS
70A	MARSH FAMILY TRUST	75	DARTMOOR CORPORATION
71	ROBERT NEMER & EARL FEENEY	78	PETER J. KEFALOS, ET AL
		79	ANTHONY BRANDT
		80	MICHAEL G. SIBBIO

KELLY AVENUE
EXIST. R/W
MARTHA AVENUE
EXIST. R/W
EAST MARKET STREET
EXIST. R/W
LA R/W
EXIST. R/W
EXIST. R/W
EXIST. RAMP E-12
EXIST. RAMP E-13
EXIST. RAMP E-10
RAMP "E-15"
RAMP "E-12"
LITTLE CUYAHOGA RIVER
A.B.B. R.R.
THIRD AVENUE
EXIST. R/W
EXIST. R/W
L-A R/W
EXIST. LA
EXIST. LA
EXIST. LA
EXIST. LA
PAVED PARKING
P.C. STA. 615+54.
℄ I-76 SURVEY & CONSTRUCTION
MATCH LINE STA. 606+00 SEE SHEET 8 OF 49
MATCH LINE ℄ I-76 SEE SHEET 10 OF 49
MATCH LINE STA. 617+76.91 SEE SHEET 11 OF 49

PROPERTY MAP

NAME	REVISION	DATE

PROPERTY MAP

SUM-76-11.57

GRAPHIC SCALE
0 40 80 120

CITY OF AKRON, SUMMIT COUNTY
ORIGINAL SPRINGFIELD TOWNSHIP, T 1N, R 10W
TRACT 2, O.L. 1

CALC. BY. DATE	SUMMIT COUNTY	OHIO
CHKD. BY. DATE	SUM-76-11.57 RIGHT OF WAY PLANS	F.H.W.A. REGION 5

1174 / 12/4

10 / 49

MATCH LINE ℄ I-76 SEE SHEET 9 OF 49

℄ I-76 SURVEY & CONSTRUCTION

607 608 609 610 611 612 613 614 615 616 617

MATCH LINE STA. 606+00 SEE SHEET 8 OF 49

MATCH LINE STA. 617+76.91 SEE SHEET 11 OF 49

EXIST. LA

66 R

67 R

LITTLE CUYAHOGA RIVER

A.B.&B. R.R.

RAMP "E-9"

EXIST. LA R/W

EXIST. R/W

RAMP "E-16"

RAMP "E-10"

21.93'

67.76'

130' R

25'

127'

137'

77 WL

EXIST. LA

LA R/W

76 WL

JOHNS AVENUE

EXIST. R/W

ENGLEWOOD AVENUE

92.96'

35'

85'

84'

R=35.83'

CAMBRIDGE STREET

R/W

64.30'

MARTHA AVENUE

EXIST. LA

88.91'

105' R

103.08'

69 WL

LA

CONS. PROP. GOODYEAR T. & R. CO. P.B. 60 P. 31
PARCEL A, BLK. 6

(66) GOODYEAR TIRE & RUBBER COMPANY

(67) AKRON BARBERTON BELT RAILROAD

(69) GOODYEAR TIRE & RUBBER COMPANY

(76) GOODYEAR TIRE & RUBBER COMPANY

(77) G.W. & J.E. OLIVER

PROPERTY MAP

NAME	REVISION	DATE

PROPERTY MAP

SUM-76-11.57

CALC. BY. DATE	SUMMIT COUNTY	OHIO
CHKD. BY. DATE	SUM-76-11.57 RIGHT OF WAY PLANS	F.H.W.A. REGION 5

1175 / 1214

11 / 49

GRAPHIC SCALE 0 40 80 120

CITY OF AKRON, SUMMIT COUNTY
ORIGINAL SPRINGFIELD TOWNSHIP, T 1 N, R 10 W
TRACT 2, O.L. 1

EAST MARKET STREET

EXIST. R/W

EXIST. RAMP E-10

SEE SHEETS 9 & 10 OF 49

MATCH LINE STA. 617+76.91

RAMP "E-15"

RAMP "E-16"

RAMP "E-10"

EXIST. RAMP E-15

EXIST. LA

EXIST. L A R/W

L A R/W

R/W

STREET

LEAGUE PARK ALLOT. P.B. 20 P. 36

ENGLEWOOD ALLOT. P.B. 8 P. 14

TRACT 2 O.L. 1

SEE SHEET 12 OF 49

MATCH LINE STA. 629+91.21

SEIBERLING STREET

CAMBRIDGE STREET

DETROIT STREET

WIGLEY STREET

ENGLEWOOD AVENUE

℄ I-76 SURVEY & CONSTRUCTION

P.I. STA. 623+87

146.64'
146.64'
36.66'
36.66'
73.70'
40.67'
43.84'
69.58'
132.50'
80.87'
97.98'
156.56'
165.83'
183.90'
50.85'
224.75'
374.75'
400.70'
85'
105'
143'
100'
110'
250'

(81) A. SALEM

(82) R. J. NORRIS & K. L. BURKHART

(83) K.G. BRYSON

(84) R.F. & L.J. DiPAOLO

(85) P. POST

(86) M. I. BOYLES

(87) S. A. LINGER

(85A) ROSE SLONSKY

(88) K.P. HILLEGASS

(89) S. & C.A. SMITH

(90) E.A. & A. PAL

(91) M.T. & N.A. HEAD

(92) P.G. JOHNSON

(93) C.R. & C.R. ANDERSON

(94) D. H. ZENNER

(96) ROMITO BROS. ELECTRIC CONSTRUCTION CO.

(97) HARWICK CHEMICAL CORPORATION

(98) DONALD E. ZENNER

PROPERTY MAP

NAME	REVISION	DATE
BHB	Revised Pc's. 85, 88, 94. 96 & 97 to add WD's.	9/27/90
DSB	REV'L/A BTW. DETROIT & WIGLEY	4/4/90

CALC. BY. DATE	SUMMIT COUNTY	OHIO
CHKD. BY. DATE	SUM-76-11.57 RIGHT OF WAY PLANS	F.H.W.A. REGION 5

1176 / 12.14

12 / 49

PROPERTY MAP

SUM-76-11.57

GRAPHIC SCALE
0 40 80 120

CITY OF AKRON, SUMMIT COUNTY
ORIGINAL SPRINGFIELD TOWNSHIP, T 1 N, R 10 W
TRACT 3, O.L.A

(99) EAST MARKET STREET UNITED CHURCH OF CHRIST
(100) DAVID B. WILT
(101) MORRIS & BERTHA TARAS
(102) METROMEDIA, INCORPORATED
(103) H. G. KRONENTHAL

EAST MARKET STREET
EXIST R/W
226.34'
25.53'
14.45'
210'
50'
150'
7'
90'
360'
152.10'
150'
123'
198'
224.65'
S R/W
EXIST. LA
SEIBERLING & MILLER ALLOT. P.B. 8 P. 19
VACATED SIDNEY ST. 973-66
P.C. STA. 629+81.
P.T. STA. 634+51.
℄ I-76 SURVEY & CONSTRUCTION
EXIST. LA R/W
LA R/W
ENGLEWOOD AVENUE
EXIST. R/W
71.40'
43.3'
100'
VACATED SIDNEY ST. 582-48
FACTORY
MATCH LINE · STA. 629+91.21 SEE SHEET II OF 49
MATCH LINE STA. 641+50.00 SEE SHEET 13 OF 49
TRACT 3 O.L.A

(99 WL) (99 S) (99 WD) (100 T) (100 S) (101 WD) (101 S) (102 T) (103 T) (100 WD)

END PROJECT
SUM-76-11.57
IR-76-2(44)19
STA. 634+00.00

END ACQUISITION
SUM-76-11.57
IR-76-2(44)19
STA 635+33.43

PROPERTY MAP

NAME	REVISION	DATE

CALC. BY. DATE	SUMMIT COUNTY	OHIO
CHKD. BY. DATE	SUM-76-11.57	F.H.W.A. REGION 5
	RIGHT OF WAY PLANS	

1177
1214

13
49

PROPERTY MAP

SUM-76-11.57

GRAPHIC SCALE
0 40 80 120

CITY OF AKRON, SUMMIT COUNTY
ORIGINAL SPRINGFIELD TOWNSHIP, T 1N, R 10W
TRACT 3, O.L. A

MATCH LINE STA. 641+ 50.00 SEE SHEET 12 OF 49

EAST MARKET STREET

EXIST. R/W

EXIST. LA

RAMP "E-19"

RAMP "E-18"

VACATED HOLMES ST. 131-60

EXIST. R/W 284.34'

23 24 25 26 29 30 31 32 33 34

642 643 644 645 646 647 648 649 650 651

℄ I-76 SURVEY & CONSTRUCTION

℄ STA. 643+20.36

EXIST. LA R/W

LA R/W

ENGLEWOOD AVENUE

EXIST. R/W

PAVED PARKING LOT

EXIST. LA R/W

GENERAL STREET

EXIST. R/W

36 37 38 39 40 51 50 49 48 47

EXIST. LA

R/W

BT STA. 648+65.84

EXIST. LA R/W

EXIST. R/W

YOUNGSTOWN RAILROAD

AKRON CANTON

PARKING

FACTORY

PAVED PARKING LOT

NAME	REVISION	DATE

PROPERTY MAP

AA B/P# 719428

INDEX MAP
SUM-76-11.57

CALC. BY. DATE	SUM - 76 - 11.57	OHIO	1178 / 12/4
CHKD. BY. DATE	FED. PROJECT IR-76-2(44)19	F.H.W.A. REGION 5	14 / 49

SUMMIT COUNTY
RIGHT OF WAY PLANS

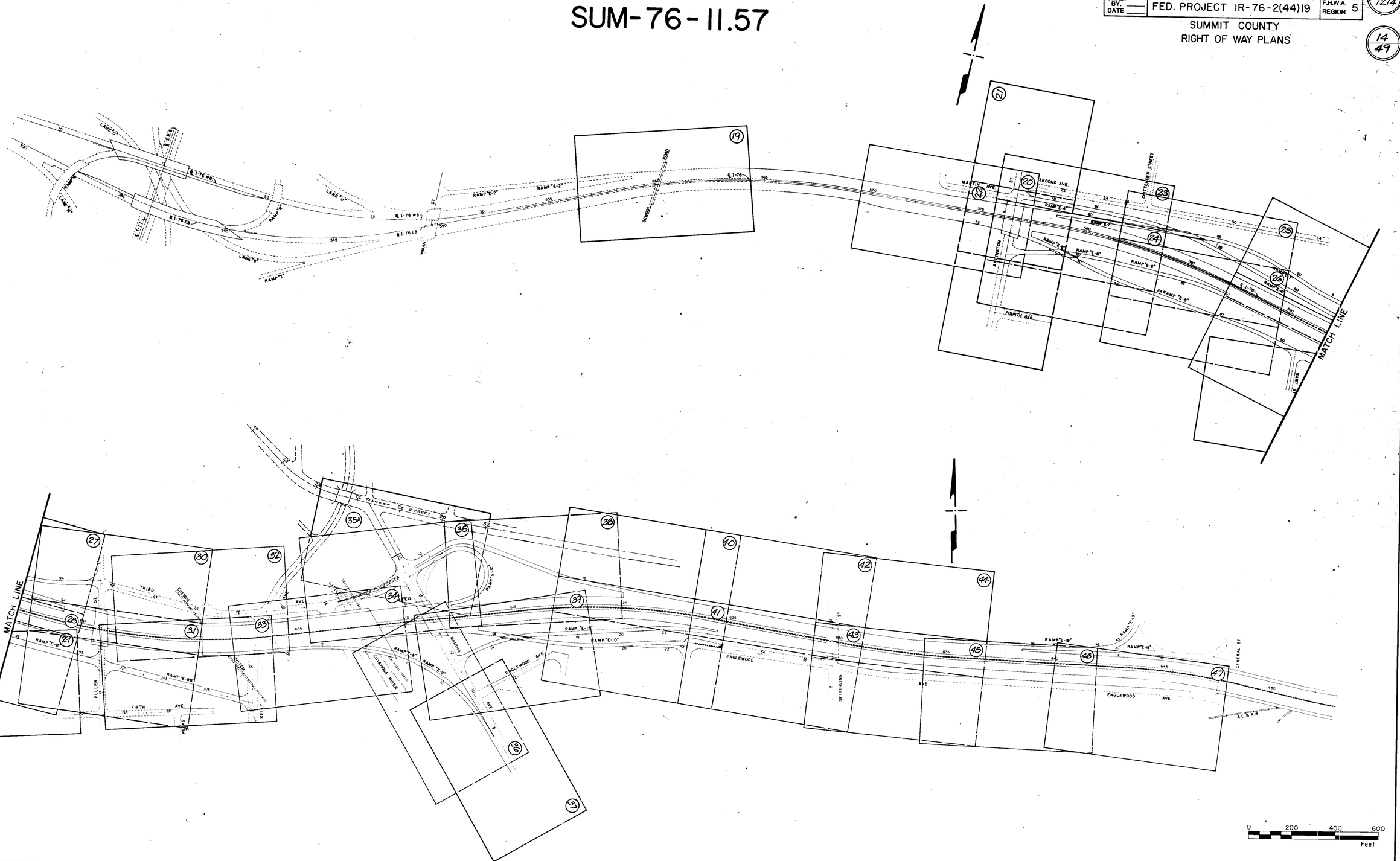

TOTAL NUMBER OF OWNERSHIPS 120
TOTAL TAKES 83
OWNERSHIPS W/STRUC 66
OWNERSHIPS W/"P" ITEMS 0

SUMMARY OF ADDITIONAL RIGHT OF WAY

CALC BY		SUM-76-11.57	OHIO
DATE			F.H.W.A. REGION 5
CHKD. BY			
DATE			
FEDERAL PROJECT	IR-76-2(44)19	STATE PROJECT	

1179/1214

15/49

SUMMIT COUNTY
RIGHT OF WAY PLANS

PARCEL Nº	OWNER	OWNER RECORD BOOK	OWNER RECORD PAGE	RECORD AREA	TOTAL PRO	TO BE ACQUIRED GROSS TAKE	TO BE ACQUIRED PRO IN TAKE	TO BE ACQUIRED NET TAKE LAND	TO BE ACQUIRED NET TAKE BLDG	NET RESIDUE LEFT	NET RESIDUE RIGHT	SHEET Nº	TYPE FUNDS	REMARKS & PERSONALTY	AS ACQUIRED BOOK	AS ACQUIRED PAGE
1 WL	ARCHBISHOP HOBAN HIGH SCHOOL, INCORPORATED	3409	121	1,472,712	0	2,874	0	2,874	NO	884,848	584,990	20				
1 T						32,797	0	32,797				19		RECONSTRUCT SCHOOL DRIVE & WALK		
2 WL	JERRY WAYNE KODISH	7135	886	3,500	0	3,500	0	3,500	YES	0	0	20		TOTAL TAKE		
3 WD	GEORGIA A. BELL	6980	81	7,000	0	350	0	350	NO	0	6,650	20,22				
3 T						716	0	716				20,22		CONTRACTORS WORK AREA		
3A WD	DARTMOOR CORPORATION, A DELAWARE CORPORATION	4747	371	23,997	0	493	0	493	NO	23,504	0	21				
3B WD	RUTH SIX & JAMES A. SIX	4877	647	7,000	0	350	0	350	NO	0	6,650	22				
3B T						750	0	750				22		CONTRACTORS WORK AREA		
3C WD	DENNIS B. LAIDIG	6324	899	28,000	0	541	0	541	NO	0	27,459	22				
3C T		7255	390			1,750	0	1,750				22		CONTRACTORS WORK AREA		
4 WL	HARRY KODISH	5739	324	7,777	0	7,777	0	7,777	NO	0	0	23		TOTAL TAKE		
4A WD	FILADELFIO NARZISI & ELIZABETH NARZISI	6587	336	40,093	0	.453	0	453	NO	39,640	0	21				
5 WL	ROBERT V. ASHLEY & JUDITH A. ASHLEY	5112	187	7,007	0	7,007	0	7,007	YES	0	0	22,24		TOTAL TAKE		
5A WD	HARRY KODISH	5680	771	7,007	0	238	0	238	NO	0	6,769	22				
5A T						887	0	887				22		GRADING & RECONSTRUCT DRIVE		
5B WD	ANDREW JESSIE LOMAN	2631	469	7,007	0	150	0	150	NO	0	6,857	22				
5B T						350	0	350				22		GRADING & RECONSTRUCT DRIVE & WALK		
5C WD	HAROLD G. UNDERWOOD	6584	746	7,007	0	50	0	50	NO	0	6,957	22				
5C T						200	0	200				22		GRADING & RECONSTRUCT DRIVE		
6 WL	HARRY KODISH	5739	324	2,979	0	2,979	0	2,979	YES	0	0	24		TOTAL TAKE		
7 WL	JAMES R. WALKER	5737	464	3,278	0	3,278	0	3,278	YES	0	0	24	IR	TOTAL TAKE		
8 WL	PAUL E. KLINE, SR. & MARY ALICE KLINE	3631	160	3,681	0	3,681	0	3,681	NO	0	0	24		TOTAL TAKE		
8A 3	ELMER JOHNSON STARKS, JR.	6196	888	4,058	0	820	0	820	YES	0	4,058	24		SEWER EASEMENT		
9 WL	EDDIE O. HEWINS	5732	711	6,003	0	6,003	0	6,003	YES	0	0	26		TOTAL TAKE		
10 WL	HEIRS OF CHARLES HEWINS	3496	290	8,166	0	8,166	0	8,166	YES	0	0	26		TOTAL TAKE, FOR ESTATE SEE 7423/433 & 7423/435		
		6594	339													
11 WL	ELAINE MAE THOMAS	6242	890	4,041	0	4,041	0	4,041	YES	0	0	26		TOTAL TAKE		
12 WL	DONALD R. MOYERS & JACQUELINE A. MOYERS	6020	607	4,699	0	4,699	0	4,699	YES	0	0	26		TOTAL TAKE		
		6924	1													
13 WL	ANNA EATON, CHARLOTTE MARKIJON, JOHN LONG, MARTHA RANKIN,	5342	383	3,375	0	3,375	0	3,375	NO	0	Q	26		TOTAL TAKE		
	JOSEPH F. HUBER, EARL LEE HUBER & SALLY HUBER WHITE	6437	849													
14 WL	AKRON BOARD OF EDUCATION	SEE REMARKS		255,000	0	19,026	0	19,026	NO	0	235,974	26,28		5611/222, 6797/261, 6849/183, 6845/155, 6850/898, 6854/72, 6870/33, 6913/483, 6931/685, 6982/171 & 7033/95		
15 WL	ALTA E. HARDESTY	6850	845	2,682	0	2,682	0	2,682	YES	0	0	25		TOTAL TAKE		
16 WL	JOHNNY COPELAND AKA JOHNNY W. COPELAND	6785	710, 712	2,898	0	2,898	0	2,898	YES	0	0	25		TOTAL TAKE		
17 WL	CARL P. HARDESTY & CARL C. HARDESTY	6929	78	3,199	0	3,199	0	3,199	YES	0	0	25		TOTAL TAKE		
18 WL	W. H. MARKS	O.R. 310	932	5,424	0	5,424	0	5,424	NO	0	0	25		TOTAL TAKE		
19 WL	TERRY WORTHEY, DALLAS WORTHY POWER OF ATTORNEY	7508	910	6,134	0	6,134	0	6,134	YES	0	0	25		TOTAL TAKE, O.R. 140/387 POWER OF ATTORNEY		
20 WL	BEAUFORD JEFFRIES & POLA JEFFRIES	6336	572	6,299	0	6,299	0	6,299	NO	0	0	25		TOTAL TAKE, SEE ALSO 6021/654 & 5346/47		
21 WL	W. H. MARKS	O.R. 131	920	6,299	0	6,299	0	6,299	NO	0	0	25		TOTAL TAKE		
22 WL	GERALDINE PETERSON	7030	797	3,149	0	3,149	0	3,149	YES	0	0	25		TOTAL TAKE, SEE ALSO 5256/290		
23 WL	ROBERT NEIMAN	6923	325, 331	3,149	0	3,149	0	3,149	NO	0	0	27		TOTAL TAKE		

NAME	REVISION	DATE
DSB	REV. TOTAL OWNERSHIPS	4/4/90

SUMMARY OF ADDITIONAL RIGHT OF WAY

CALC. BY ____ DATE ____	SUM-76-11.57	OHIO
CHKD BY ____ DATE ____		F.H.W.A. REGION 5
FEDERAL PROJECT	IR-76-2(44)19	STATE PROJECT

SUMMIT COUNTY
RIGHT OF WAY PLANS

1180/1214

16/49

PARCEL Nº	OWNER	OWNER RECORD BOOK	OWNER RECORD PAGE	RECORD AREA	TOTAL PRO	TO BE ACQUIRED GROSS TAKE	TO BE ACQUIRED PRO. IN TAKE	TO BE ACQUIRED NET TAKE LAND	TO BE ACQUIRED NET TAKE BLDG	NET RESIDUE LEFT	NET RESIDUE RIGHT	SHEET Nº	TYPE FUNDS	REMARKS & PERSONALTY	AS ACQUIRED BOOK	AS ACQUIRED PAGE
24 WL	ZION TEMPLE APOSTOLIC CHURCH	5739	492	9,448	0	9,448	0	9,448	NO	0	0	27		TOTAL TAKE		
25 WL	GENE ECKRICH	6927	325	3,149	0	3,149	0	3,149	NO	0	0	27		TOTAL TAKE		
26	NOT USED															
27 WL	BETTY G. JOHNSON	6371	496	7,498	0	7,498	0	7,498	NO	0	0	27		TOTAL TAKE		
28 WL	G. S. G. DEVELOPMENT COMPANY, AN OHIO PARTNERSHIP	6570	525	4,398	0	4,398	0	4,398	YES	0	0	28		TOTAL TAKE		
29 WL	B. & B. ASSOCIATES, INCORPORATED, AN OHIO CORPORATION	5985	28	4,398	0	4,398	0	4,398	YES	0	0	28		TOTAL TAKE		
30 WL	LEROY CALHOUN, ALAN CALHOUN, GREGORY CALHOUN, SANDRA CALHOUN	7590	460	3,770	0	3,770	0	3,770	YES	0	0	28		TOTAL TAKE		
	& CLARENCE CALHOUN															
31 WL	ALAN E. GEER	6601	257	6,283	0	6,283	0	6,283	YES	0	0	28		TOTAL TAKE		
32 WL	WEST THOMAS	7238	294	4,708	0	4,708	0	4,708	YES	0	0	28		TOTAL TAKE		
33 WL	JOHN BOY BROWN	6448	541	3,188	0	3,188	0	3,188	YES	0	0	28		TOTAL TAKE		
34 WL	GILBERT STORY & ARLINE STORY	4404	341	2,812	0	2,812	0	2,812	YES	0	0	28		TOTAL TAKE		
35 WL	JOHNNIE BROWN & CARRIE MAE BROWN	4783	306	3,233	0	3,233	0	3,233	YES	0	0	28		TOTAL TAKE		
36 WL	BRIAN R. JAMES	6995	656	2,315	0	2,315	0	2,315	YES	0	0	28		TOTAL TAKE		
37 WL	UNITED RUBBER WORKERS OF AMERICA HOME ASSOCIATION	6204	61	5,039	0	5,039	0	5,039	NO	0	0	28		TOTAL TAKE		
37A WL	JESSIE L. WILKINS & STELLA M. WILKINS	4868	47	4,267	0	4,267	0	4,267	NO	0	0	27,30		TOTAL TAKE		
38 WL	BRIAN R. JAMES	6995	658	4,142	0	4,142	0	4,142	YES	0	0	30		TOTAL TAKE		
38A WL	JOSEPH CHURCH & JENNIE E. CHURCH	4267	558	4,142	0	4,142	0	4,142	NO	0	0	30		TOTAL TAKE		
39 WL	ROBERT W. BLAKEMORE	6367	159	2,111	0	2,111	0	2,111	NO	0	0	30		TOTAL TAKE		
40 WL	LUCY J. HAMRIC AKA LUCY HAMRIC	6083	166	1,969	0	1,969	0	1,969	YES	0	0	30		TOTAL TAKE, SEE ALSO 4155/624		
41 WL	LEROY McCLENDON & EMMA McCLENDON	5697	107	6,430	0	6,430	0	6,430	YES	0	0	30		TOTAL TAKE		
42 WL	PETER J. MONDL & JUANITA E. MONDL	6569	862	6,288	0	6,288	0	6,288	YES	0	0	28,29		TOTAL TAKE, SEE ALSO 5615/246		
43 WL	DONALD LEE DAY, PAMELA JONES LAND CONTRACT HOLDER	6582	250	3,770	0	3,770	0	3,770	YES	0	0	28,29		TOTAL TAKE		
44 WL	ETHEL F. ANGEL & JOHN P. ANGEL	7557	610	3,769	0	3,769	0	3,769	YES	0	0	28,29		TOTAL TAKE		
44A WL	RUTH L. KACHENAK	O.R. 29	897	3,555	0	3,555	0	3,555	YES	0	0	28,29		TOTAL TAKE		
45 WL	DOUGLAS EUGENE CONEY & PEARLENE CONEY	3771	309	5,022	0	5,022	0	5,022	YES	0	0	28,29		TOTAL TAKE		
45A WL	FRIENDSHIP BAPTIST CHURCH, AN OHIO CORPORATION, FEE HOLDER;	5776	630	2,099	0	2,099	0	2,099	YES	0	0	29		TOTAL TAKE, LAND CONTRACT VOL. OR 68,		
	HOUSE OF GOD, LAND CONTRACT HOLDER													PAGE 627		
46 WL	JOHNNIE BROWN	6793	832	4,237	0	4,237	0	4,237	NO	0	0	29		TOTAL TAKE		
46A LA	ORANGE ROGERS & CLAIRE ROGERS	3065	551	3,141	0	0	0	0	NO	0	3,141	29		LOSS OF ACCESS		
47 WL	WILLIAM H. PRESTON & JEANETTE SOJOUNER	7423	381	5,620	0	5,620	0	5,620	YES	0	0	28,29		TOTAL TAKE		
47A WL	CHARLES F. TRAVIS & ESTHER TRAVIS	5419	125	8,632	0	8,632	0	8,632	YES	0	0	29		TOTAL TAKE		
48 WL	GEORGE HAMMETT, JR.	5696	217	6,246	0	6,246	0	6,246	YES	0	0	28,29		TOTAL TAKE		
49 WL	JIMMIE LEE CLARK AKA JIMMY LEE CLARK	5770	194	6,248	0	6,248	0	6,248	YES	0	0	28		TOTAL TAKE, SEE ALSO 5266/659		
50 WL	MAE R. KELLER	6411	352	6,250	0	6,250	0	6,250	YES	0	0	31		TOTAL TAKE, SEE ALSO 5803/422		
51 WL	WILFORD CLARK, JR., MARY ALICE RICKS, NETTIE J. HENDERSON, THEOTIS	6706	838	4,167	0	4,167	0	4,167	YES	0	0	31		TOTAL TAKE		
	CLARK, DAVID C. CLARK, ALBERT L. CLARK & GEORGE R. CLARK	6527	66													
52 WL	JOHN L. SMITH & ANNIE L. SMITH	5773	22	4,167	0	4,167	0	4,167	YES	0	0	31		TOTAL TAKE		
53 WL	ROBERT L. GRANDISON & ANNIE BELL GRANDISON	4560	368	4,169	0	4,169	0	4,169	YES	0	0	31		TOTAL TAKE		
54 WL	WILLIE A. BANKS, SR.	6181	36	10,760	0	10,760	0	10,760	YES	0	0	31		TOTAL TAKE, SEE 5571/446, 7290/729-731		
54A WL	PATRICIA DAVIS	O.R. 11	603	1,752	0	1,752	0	1,752	YES	0	0	31		TOTAL TAKE		
55 WL	GOODYEAR TIRE & RUBBER COMPANY	6758	238	17,504	0	17,504	0	17,504	NO	0	0	30		TOTAL TAKE		
56 WL	HELEN B. WOZNIAK	5663	843	12,498	0	563	0	563	YES	0	11,935	31				
56 T						833	0	833				31		BUILDING REMOVAL		
57 WL	NED L. TRAYLOR & BONNIE TRAYLOR	5656	74	4,166	0	726	0	726	NO	0	3,440	31,33				
58 WL	MAE MAULDIN	4392	567, 568	4,167	0	1,022	0	1,022	NO	0	3,145	33				
59 WL	LUCILLE PREISTER	5418	334	4,166	0	1,318	0	1,318	NO	0	2,848	33				

1R

NAME	REVISION	DATE

SUMMARY OF ADDITIONAL RIGHT OF WAY

CALC BY / DATE		SUM-76-11.57	OHIO
CHKD BY / DATE			F.H.W.A. REGION 5
FEDERAL PROJECT	IR-76-2(44)19	STATE PROJECT	

SUMMIT COUNTY
RIGHT OF WAY PLANS

1181/1214

17/49

PARCEL Nº	OWNER	OWNER RECORD BOOK	OWNER RECORD PAGE	RECORD AREA	TOTAL PRO	TO BE ACQUIRED GROSS TAKE	TO BE ACQUIRED PRO IN TAKE	TO BE ACQUIRED NET TAKE LAND	TO BE ACQUIRED NET TAKE BLDG	NET RESIDUE LEFT	NET RESIDUE RIGHT	SHEET Nº	TYPE FUNDS	REMARKS & PERSONALTY	AS ACQUIRED BOOK	AS ACQUIRED PAGE
60 WL	LEE O. MILBRY, JR.	6125	452	6,250	0	2,725	0	2,725	NO	0	3,525	33				
60A WL	CITY OF AKRON, A MUNICIPAL CORPORATION	5865	227	4,147	0	4,147	0	4,147	NO	0	0	33		TOTAL TAKE		
61 WL	GOODYEAR TIRE & RUBBER COMPANY, AN OHIO CORPORATION	5491	482	12,498	0	12,498	0	12,498	NO	0	0	33		TOTAL TAKE		
62 WL	CITY OF AKRON, A MUNICIPAL CORPORATION	442	132,133	10,360	186	10,360	186	10,174	NO	0	0	33		TOTAL TAKE		
63 WD	MILAN P. KRONENTHAL	3312	242	3,195	0	55	0	55	NO	0	3,140	33				
64	BALTIMORE & OHIO RAILROAD	—	—	—	0	1,313	0	1,313	NO	—	—	32,48		HIGHWAY EASEMENT		
64-1						322	0	322				33,48		HIGHWAY EASEMENT		
64 R						3,144	0	3,144				32,48		AERIAL EASEMENT		
64 R-1						3,049	0	3,049				33,48		AERIAL EASEMENT		
64 SL						932	0	932				32,48		SLOPE EASEMENT		
64 T						541	0	541				33,48		CONTRACTORS WORK AREA		
65 WD	GOODYEAR TIRE & RUBBER COMPANY, AN OHIO CORPORATION	SEE REMARKS		13,303	0	531	0	531	NO	0	802	32		RECORDED AS BLOCK 1, PARCEL F OF		
65 WD-1						158	0	158				33		GOODYEAR CONSOLIDATED PROPERTIES		
65 WD-2						377	0	377				32		PLAT BOOK 60, PAGE 36.		
65 WD-3						377	0	377				33				
65 R						7,403	0	7,403				32		AERIAL EASEMENT		
65 R-1						2,261	0	2,261				33		AERIAL EASEMENT		
66 WD	GOODYEAR TIRE & RUBBER COMPANY, AN OHIO CORPORATION	SEE REMARKS		1,647,782	0	117	0	117	NO	1,148	1,599,292	34		RECORDED AS BLOCK 6, PARCEL A OF		
66 WD-1						539	0	539				34		GOODYEAR CONSOLIDATED PROPERTIES,		
66 WD-2						458	0	458				34		PLAT BOOK 60, PAGE 42		
66 WD-3						445	0	445				34				
66 WD-4						481	0	481				34				
66 WD-5						690	0	690				34				
66 WD-6						257	0	257				34	IR			
66 WD-7						652	0	652				34				
66						42	0	42				34				
66 R						15,058	0	15,058				34		AERIAL EASEMENT		
66 R-1						28,645	0	28,645				34		AERIAL EASEMENT		
66 A	GOODYEAR TIRE & RUBBER COMPANY, AN OHIO CORPORATION	SEE REMARKS		26,363	0	47	0	47	NO	26,316	0	32		BLOCK 6, PARCEL A, PLAT BOOK 60, PAGE 42		
67	AKRON BARBERTON BELT RAILROAD	628	144	—	0	674	0	674	NO	—	—	34,36,49		HIGHWAY EASEMENT		
67 R						2,199	0	2,199				34,49		AERIAL EASEMENT		
67 R-1						5,677	0	5,677				36,49		AERIAL EASEMENT		
67 S						671	0	671				36,49		SEWER EASEMENT		
68 WL	GOODYEAR TIRE & RUBBER COMPANY, AN OHIO CORPORATION	6309 6374	894 292	11,654	0	11,654	0	11,654	NO	0	0	34		TOTAL TAKE		
68A WD	GOODYEAR TIRE & RUBBER COMPANY, AN OHIO CORPORATION	5986	10	66,485	0	387	0	387	NO	66,098	0	35				
68A U						3,558	0	3,558				35,35A		UTILITY EASEMENT		
69 WL	GOODYEAR TIRE & RUBBER COMPANY, AN OHIO CORPORATION	6085 5661	471 669	36,166	0	16,579	0	16,579	NO	0	19,587	36,37				
70 WL	GOODYEAR TIRE & RUBBER COMPANY, AN OHIO CORPORATION	6568	437	4,719	0	4,719	0	4,719	NO	0	0	35		TOTAL TAKE		
70A WL	MARSH FAMILY TRUST	6508	279	5,412	0	298	0	298	NO	5,114	0	35				
71 WL	ROBERT G. NEMER & EARL H. FEENEY	6312	355	5,720	0	48	0	48	NO	5,672	0	35				
72 WL	ARLENE M. HUBER	6436	92	5,706	0	595	0	595	YES	5,111	0	35				
72 T						1,001	0	1,001				35		BUILDING REMOVAL		
73 WL	THOMAS J. HUBER	6847	428	5,773	0	1,813	0	1,813	NO	3,960	0	35				
74 WL	MORRIS TARAS & BERTHA TARAS	5269	209	13,369	0	13,369	0	13,369	YES	0	0	35,38		TOTAL TAKE		
75 WL	DARTMOOR CORPORATION, A DELAWARE CORPORATION	4738	387	14,168	0	14,168	0	14,168	YES	0	0	38		TOTAL TAKE		
76 WL	GOODYEAR TIRE & RUBBER COMPANY, AN OHIO CORPORATION	SEE REMARKS		30,906	0	30,906	0	30,906	NO	0	0	39		TOTAL TAKE; 5617/804, 5650/273, 6027/362, 366,		
														6033/715, 6506/808 & 6512/414		
77WL	JEANE E. OLIVER	7461	775	3,200	0	3,200	0	3,200	YES	0	0	39		TOTAL TAKE		
78 WL	PETER J. KEFALOS, GEORGE J. KEFALOS	6569	167	5,717	0	5,717	0	5,717	YES	0	0	38		TOTAL TAKE., SEE ALSO 7324/537 & 4984/233,234		

NAME	REVISION	DATE
DSB	CHG'D. 63WL TO 63WD	4/2/90

SUMMARY OF ADDITIONAL RIGHT OF WAY

CALC. BY. DATE	SUM-76-11.57	OHIO
CHKD. BY. DATE		F.H.W.A. REGION 5
FEDERAL PROJECT	IR-76-2(44)19	STATE PROJECT

SUMMIT COUNTY
RIGHT OF WAY PLANS

1182
12/14

18
49

PARCEL Nº	OWNER	OWNER RECORD BOOK	OWNER RECORD PAGE	RECORD AREA	TOTAL PRO	TO BE ACQUIRED GROSS TAKE	PRO. IN TAKE	NET TAKE LAND	NET TAKE BLDG	NET RESIDUE LEFT	NET RESIDUE RIGHT	SHEET Nº	TYPE FUNDS	REMARKS & PERSONALTY	AS ACQUIRED BOOK	AS ACQUIRED PAGE
79 WL	ANTHONY BRANDT	6912	149	16,463	0	16,463	0	16,463	YES	0	0	38		TOTAL TAKE		
80 WL	RONALD G. ANDERSON	O.R.41	140	10,010	0	10,010	0	10,010	YES	0	0	38		TOTAL TAKE		
81 WL	PAUL SALEM	7456	188	13,644	0	13,644	0	13,644	YES	0	0	40		TOTAL TAKE		
82 WL	RONALD J. NORRIS & KENNETH L. BURKHART	6202	132	3,850	0	3,850	0	3,850	YES	0	0	40		TOTAL TAKE		
83 WL	KATHERINE BRYSON & DOYLE W. BRYSON	5378	899	3,412	0	3,412	0	3,412	YES	0	0	40		TOTAL TAKE, SEE ALSO 7325/640		
84 WL	ROGER F. DI PAOLO & LINDA DI PAOLO	6525	515	3,412	0	3,412	0	3,412	YES	0	0	40		TOTAL TAKE		
85 WL	PORTER POST	3641	280	3,804	0	2,718	0	2,718	YES	0	0	41		TOTAL TAKE		
85A T	ROSE SLONSKY	6565	282	3,800	0	144	0	144	NO	0	3,800	41		RECONSTRUCT DRIVE		
86 WL	ALI MATTER AKA ALI MATAR	O.R. 288	969	3,510	0	3,510	0	3,510	YES	0	0	41		TOTAL TAKE		
87 WL	SHIRLEY ANN LINGER	7108	535	3,850	0	3,850	0	3,850	YES	0	0	41		TOTAL TAKE		
88 WL	KENNETH P. HILLEGAS, TRUSTEE	5494	866	3,850	0	1,569	0	1,569	YES	0	0	41		TOTAL TAKE, SEE ALSO 5078/541		
89 WL	SIDNEY SMITH & CLARA A. SMITH, DOLORES JOAN BERISH AKA	5082	191	10,557	0	10,557	0	10,557	YES	0	0	40		TOTAL TAKE, LAND CONTRACT 6647/394		
	JOAN BERISH, LAND CONTRACT HOLDER	5743	233													
90 WL	ELIZABETH A. PAL & ANDY PAL	7034	367	5,808	0	5,808	0	5,808	YES	0	0	40		TOTAL TAKE, SEE ALSO 6671/449		
91 WL	MARVIN T. HEAD & NEDRA A. HEAD	6440	670	9,778	0	9,778	0	9,778	YES	0	0	40		TOTAL TAKE, SEE ALSO 6416/222		
92 WL	PEARL G. JOHNSON	5073	359	3,429	0	3,429	0	3,429	YES	0	0	41		TOTAL TAKE, SEE ALSO 8182/527		
93 WL	BETTY JEAN HAMMOND	7449	358	3,429	0	3,429	0	3,429	YES	0	0	41	IR	TOTAL TAKE		
94 WL	DONALD H. ZENNER	7088	299	6,945	0	6,841	0	6,841	YES	0	0	41		TOTAL TAKE		
95	NOT USED															
96 WL	ROMITO BROTHERS ELECTRIC CONSTRUCTION COMPANY	5885	477	3,429	0	1,302	0	1,302	YES	0	0	41		TOTAL TAKE		
97 WL	HARWICK CHEMICAL CORPORATION, AN OHIO CORPORATION	7509	929	7,378	0	1,527	0	1,527	NO	0	0	41		TOTAL TAKE		
98 WD	DONALD H. ZENNER	6602	74	33,233	0	479	0	479	NO	0	32,754	41				
99 WL	EAST MARKET STREET UNITED CHURCH OF CHRIST	3384	188	35,648	0	1	0	1	NO	34,349	0	44				
99 WD		4519	32			1,298	0	1,298				44				
99 S						1,284	0	1,284				44		SEWER EASEMENT		
100 WD	DAVID B. WILT	6191	429	6,995	0	290	0	290	YES	6,705	0	44				
100 S						398	0	398				44		SEWER EASEMENT		
100 T						1920	0	1920				44		BUILDING REMOVAL		
101 WD	MORRIS TARAS & BERTHA TARAS	3788	419	31,176	0	134	0	134	NO	31,042	0	44				
101 S		3971	338			1,549	0	1,549				44		SEWER EASEMENT		
		4909	322													
		5080	26													
		6122	197													
102 T	METROMEDIA INCORPORATED, A DELAWARE CORPORATION	5861	402	324	0	96	0	96	NO	324	0	44		GRADING		
103 T	H. G. KRONENTHAL	3483	486	7,500	0	400	0	400	NO	7,500	0	44		GRADING		
*85 WD	PORTER POST	3641	280	3,804	0	1,086	0	1,086	YES	0	0	41		TOTAL TAKE		
*88 WD	KENNETH P. HILLEGAS, TRUSTEE	5494	866	3,850	0	2,281	0	2,281	YES	0	0	41		TOTAL TAKE		
*94 WD	DONALD H. ZENNER	7088	299	6,945	0	104	0	104	YES	0	0	41		TOTAL TAKE		
*96 WD	ROMITO BROTHERS ELECTRIC CONSTRUCTION COMPANY	5885	477	3,429	0	2,127	0	2,127	YES	0	0	41		TOTAL TAKE		
*97 WD	HARWICK CHEMICAL CORPORATION, AN OHIO CORPORATION	7509	929	7,378	0	5,851	0	5,851	NO	0	0	41		TOTAL TAKE		
*63A PR	RUTH A. SANDERSON & LUELLA T. PAINE	6760	674	3,750	0	0	0	0	NO	0	3,750	33		LOSS OF VEHICULAR ACCESS		
*65 T	GOODYEAR TIRE & RUBBER COMPANY, AN OHIO CORPORATION			13,303	0	22,165	0	22,165	NO	0	802	32,33		CONTRACTORS WORK AREA		
*66 T	GOODYEAR TIRE & RUBBER COMPANY, AN OHIO CORPORATION			1,647,782	0	91,970	0	91,970	YES	1,148	1,599,292	34		CONTRACTORS WORK AREA		

* DENOTES PARCEL OUT OF NUMERICAL ORDER

NAME	REVISION	DATE
BHB	Revised Pcl's. 85, 88, 94, 96 & 97 to add WD's.	9/27/90
DSB	DEL. PARCELS 63A-PR & 63A-PR	4/4/90

AA 8, Pg 71442R

CITY OF AKRON, SUMMIT COUNTY
ORIGINAL COVENTRY TOWNSHIP, T2N, R11W
TRACT 8, O.L. 4

CALC. BY. DATE	SUM-76-11.57	OHIO	1183 / 1214
CHKD. BY. DATE	FED. PROJECT IR-76-2(44)19	F.H.W.A. REGION 5	

SUMMIT COUNTY
LIMITED ACCESS
RIGHT OF WAY PLANS

19 / 49

BEGIN ACQUISITION
SUM-76-11.57
IR-76-2(44)19
STA. 558+69.60

N 22°39'22"W 25.00'

558+69.60 / 146.25' LT.

N 55°03'19"E 254.31'

561+00.00 / 215.00' LT.

N 67°29'07"E 162.99'

562+50.00 / 235.00' LT.

S 35°46'32"E 43.13'

562+65.00 / 195.00' LT.

S 41°25'11"W 187.16'

561+16.28 / 91.78' LT.

S 77°28'21"W 257.00'

558+70.05 / 121.25' LT.

Const. Limits

Brush & Small Trees To Be Removed

Brush & Small Trees

Const. Limits

SCHOOL ROAD

Conc. Walk

STEPS

EXIST. LA

Const. Limits

OVERHEAD SIGN

℄ I-76 SURVEY & CONSTRUCTION

CURVE NO. 1

559 560 561 562 563

Const. Limits

C.L. Fence

Guard Rail

EXIST. LA

Const. Limits

PARCEL NO.	OWNER	NET TAKE	RESIDUE LEFT	RESIDUE RIGHT
1T	ARCHBISHOP HOBAN HIGH SCH.	32,797	884848	884990

SCALE IN FEET
0 20 40 60

FUNDS	IR

NAME	REVISION	DATE

CALC. BY.		SUM-76-11.57	OHIO
DATE		FED. PROJECT IR-76-2(44)19	F.H.W.A. REGION 5
CHKD. BY.			
DATE			

1184/1214

20/49

SUMMIT COUNTY
LIMITED ACCESS
RIGHT OF WAY PLANS

FOR DETAIL SEE SHEET 21

EXIST. LA — Const. Limits — EXIST. RAMP E-3 — 15" STM. — C.B. — HYD. — W.V. — 6"W — 25' — MH. — 18" Maple — 20" Maple — 24" Maple — WALK — EXIST. R/W — 12" STM. — 15" STM. — 12" STM. — 25' — 25' — 15" STM. — 12" STM. — 12" STM. — C.B. — M.H. — MARTIN AVE. — 8" COMB. — 18" Maple — 2-Sty. Fr. #1059 — 4" Elm — 34" Maple — 2-Sty. Fr. #1063 — 2-Sty. Fr. #1063 — Conc — 2-Sty. Fr. #1073 — Asphalt — 2-Sty. Fr. #1077 — 25' — 25' — 6"W — EXIST. R/W — Const. Limits — Existing Wall — EXIST. LA R/W — PROPOSED RETAINING WALL — 6" Tree — 6" Tree — 6" Tree — 8" Tree — 6" Tree — BERM — 12" STM. — C.B. — 12" STM. — 30' — 6"W — 20" COMB. — 12" STM. — M.H. — 12" STM. — 18" Elm — Const. Limits — 24" COMB. — BERM — BERM — ℄ I-76 SURVEY & CONSTRUCTION — N 89° 21' 10" E — 571 — 572 — 573 — 574 — 575 — 576 — N 0° 21' 50" E 53.31 SEE SHEET 23 & 24 OF 49 — MATCH LINE STA 576+53.31 — ARLINGTON ST. — 20" COMB. — STONE WALL — 30' — M.H. — 3-Ever Green — 8 Maple — 3-Ever Green — 569+81.87 / 83.01' LT. — EXIST. LA — N 89° 21' 17" E — N 77° 08' 18" W — 155.00' — 1 WL — 571+36.87 / 87.01' LT. — 3C Maple — 571+36.67 / 95.10' RT. — 140.00'(C) — N 89° 23' 07" E — 140'(D) — 572+76.67 / 95.18' RT. — 572+76.34 / 115.18' RT. — 6"-10" Elms Sparce — Gravel — 573+26.34 / 116.00' RT. — 573+26.25 / 121.00' RT. — 25.04' — 25' — 25' — Const. Limits — 2 WL — 64 — 140'(D) — S 89° 23' 07" W — 140.00'(C) — Asphalt — LA — 158.78' — N 0° 17' 59" E 37.09' — 25.00' — 571+36.26 / 120.10' RT. — 572+76.26 / 120.18' RT. — 50'(D) — 2-Sty. Frame #338 — 2-Sty. Frame — 65 — EXIST. R/W — N 0° 17' 59" E 5.00' — S 89° 42' 01" E 50.00' — N 0° 17' 59" E 5.00' — EXIST. R/W — 12" Maple — 15" Maple — 22" Maple — INGLESIDE — N 0° 17' 59" E — TALBOT — N 89° 23' 07" E — 294.92' — EXIST. LA — Gravel — 15' — Frame Garage — 2-Sty. Frame — 2-Sty. Blk. #340 — 3 T — 50'(D) — 21 — 5 — 22 — 6 — ALLOTMENT — R.B. 7 P. 4 — Ever Green — 8 Maple — 30' — 3-6' Ash — FOR DETAIL SEE SHEET 22

SCALE IN FEET
0 20 40 60

PARCEL NO.	OWNER	NET TAKE	RESIDUE LEFT	RESIDUE RIGHT
1WL	ARCHBISHOP HOBAN HIGH SCH.	2874	884,848	584,990
2WL	JERRY W. KODISH	3,500	0	0
3WD	GEORGIA A. BELL	.350	0	6650
3T		716		

CITY OF AKRON, SUMMIT COUNTY
ORIGINAL COVENTRY TOWNSHIP, T2N, R11W
TRACT 8, O.L.4

FUNDS	IR

NAME	REVISION	DATE
DSB	REV L/A ON TALBOT AVE	

AA. B. Pg 71442R

CITY OF AKRON, SUMMIT COUNTY
ORIGINAL COVENTRY TOWNSHIP, T2N, R11W
TRACT 8, O.L.4

CALC. BY. DATE	SUM-76-11.57	OHIO
CHKD. BY. DATE	FED. PROJECT IR-76-2(44)19	F.H.W.A. REGION 5

1185 / 1214

21 / 49

SUMMIT COUNTY
LIMITED ACCESS
RIGHT OF WAY PLANS

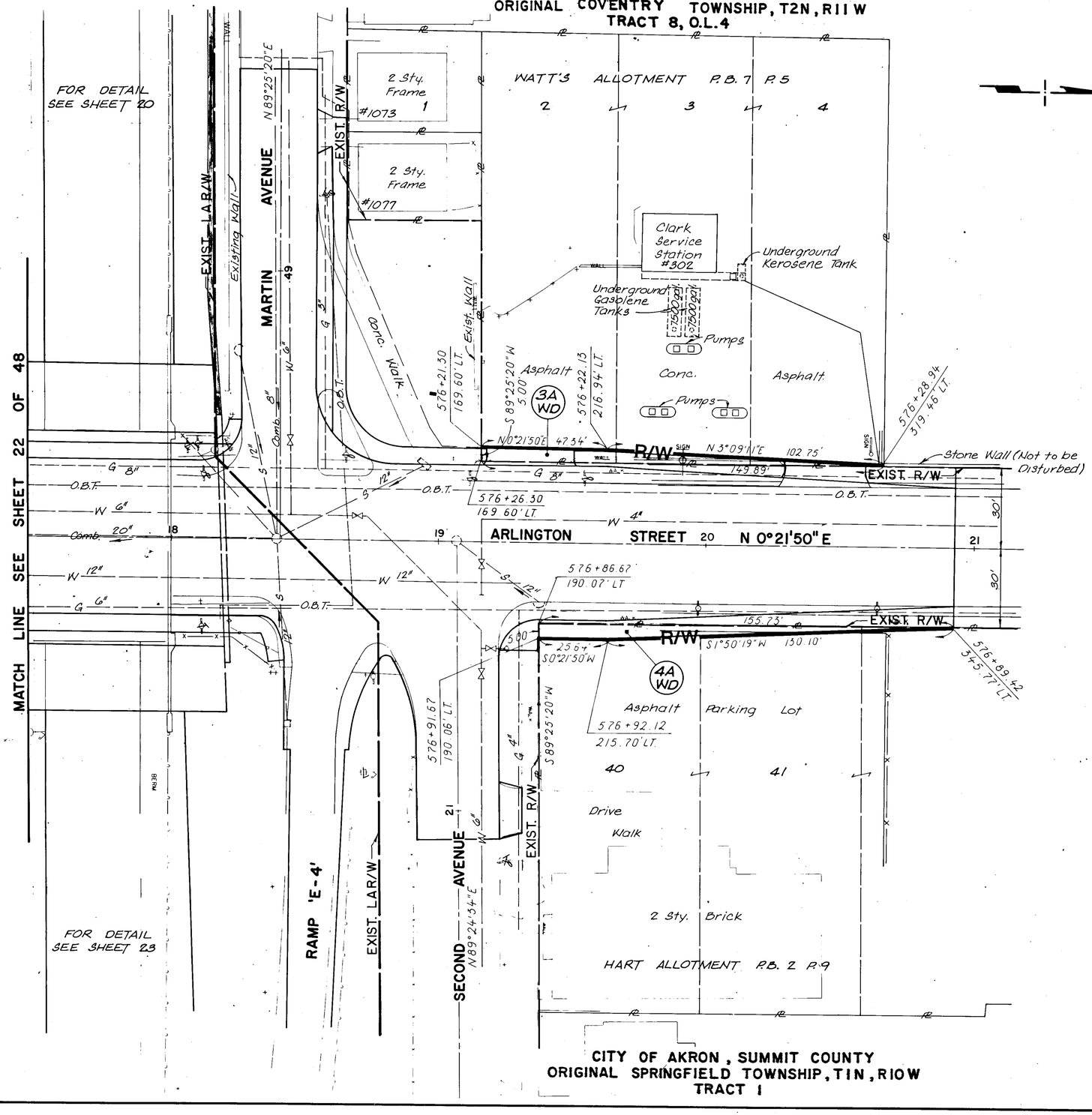

PARCEL NO.	OWNER	NET TAKE	RESIDUE LEFT	RESIDUE RIGHT
3AWD	DARTMOOR CORPORATION	493	23,504	0
4AWD	F. & E. NARZISI	453	39,640	0

SCALE IN FEET
0 20 40 60

FUNDS	IR

NAME	REVISION	DATE

CITY OF AKRON, SUMMIT COUNTY
ORIGINAL SPRINGFIELD TOWNSHIP, T1N, R10W
TRACT 1

ARLINGTON STREET

AA B/Pe 71942R

CITY OF AKRON, SUMMIT COUNTY
ORIGINAL COVENTRY TOWNSHIP, T2N, R11W
TRACT 8, O.L.4

CALC. BY. DATE	SUM-76-11.57	OHIO
CHKD. BY. DATE	FED. PROJECT IR-76-2(44)19	F.H.W.A. REGION 5

1186 / 1214

22 / 49

SUMMIT COUNTY
LIMITED ACCESS
RIGHT OF WAY PLANS

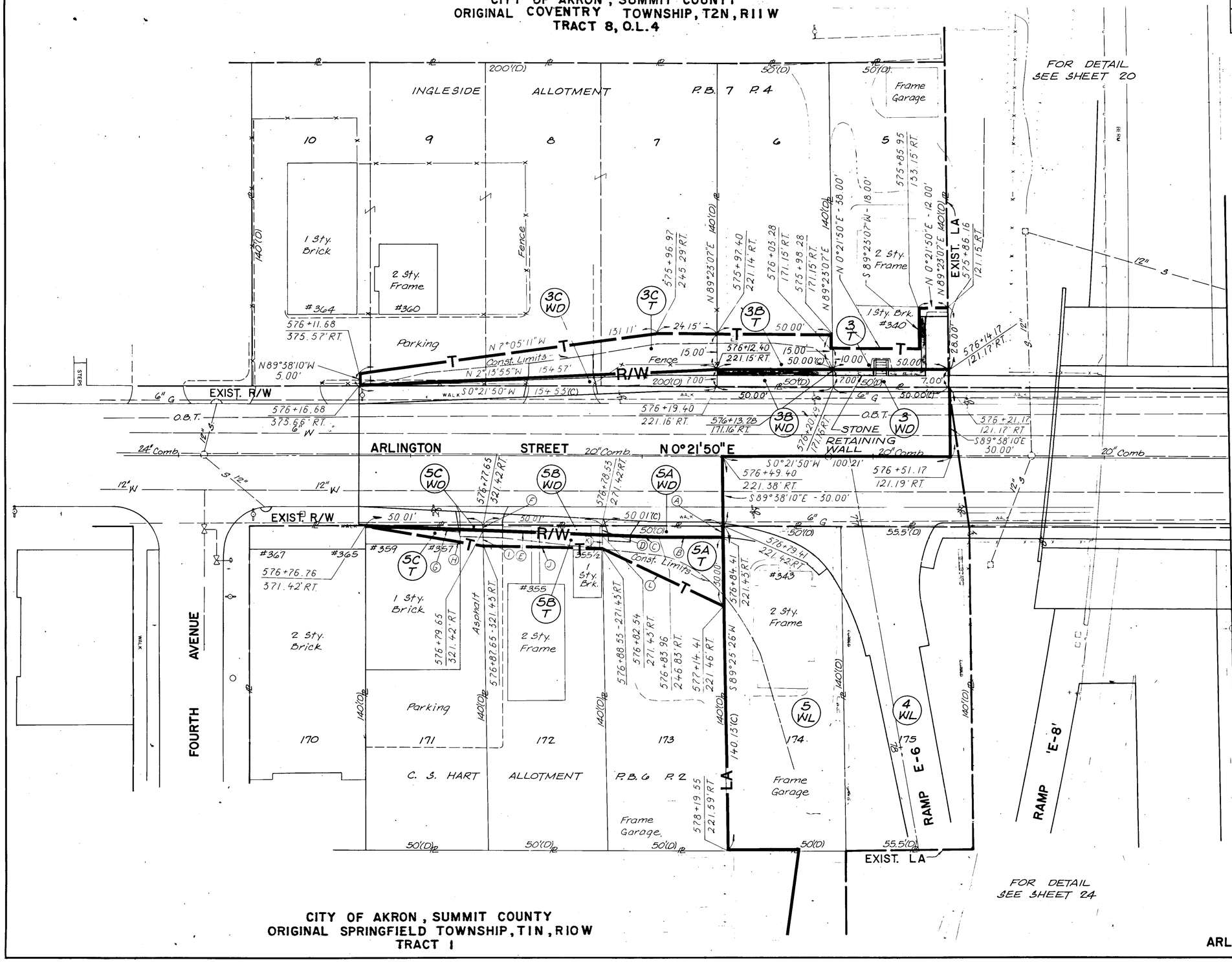

Right of Way Line Data

(A)	N 89°25'26"E	- 5.00'
(B)	S 0°21'50" W	- 25.40'
(C)	S 2°39'31"W	- 24.64'
(D)	S 89°25'26"W	- 4.01'
(E)	S 2°39'31"W	- 50.08'
(F)	S 89°25'26"W	- 2.01'
(G)	S 2°39'31"W	- 50.08'
(H)	N 11°38'04"E	- 51.16'
(I)	N 89°25'26"E	- 7.99'
(J)	N 0°21'50" E	- 50.01
(K)	S 89°25'26"W	- 5.99'
(L)	S 26°44'00"W	- 56.27'

PARCEL NO.	OWNER	NET TAKE	RESIDUE LEFT	RESIDUE RIGHT
3WD	GEORGIA A. BELL	350	0	6650
3T		716		
3BWD	R. & J. A. SIX	350	0	6650
3BT		750		
3CWD	D. B. & C. B. LAIDIG	541	0	27,459
3CT		1750		
5AWD	HARRY KODISH	238	0	6769
5AT		887		
5BWD	ANDREW JESSIE LOMAN	150	0	6857
5BT		350		
5CWD	H. G. UNDERWOOD	50	0	6957
5CT		200		

SCALE IN FEET
0 20 40 60

FUNDS	IR

DSB	EXTEND RET. WALL PARCEL 3B WD	4/2/90
NAME	REVISION	DATE

CITY OF AKRON, SUMMIT COUNTY
ORIGINAL SPRINGFIELD TOWNSHIP, T1N, R10W
TRACT 1

ARLINGTON STREET

CITY OF AKRON, SUMMIT COUNTY
ORIGINAL SPRINGFIELD TOWNSHIP, T 1N, R 10 W
TRACT 1

CALC. BY. DATE	SUM-76-11.57	OHIO
CHKD. BY. DATE	FED. PROJECT IR-76-2(44)19	F.H.W.A. REGION 5

1187 / 1214

23 / 49

SUMMIT COUNTY
LIMITED ACCESS
RIGHT OF WAY PLANS

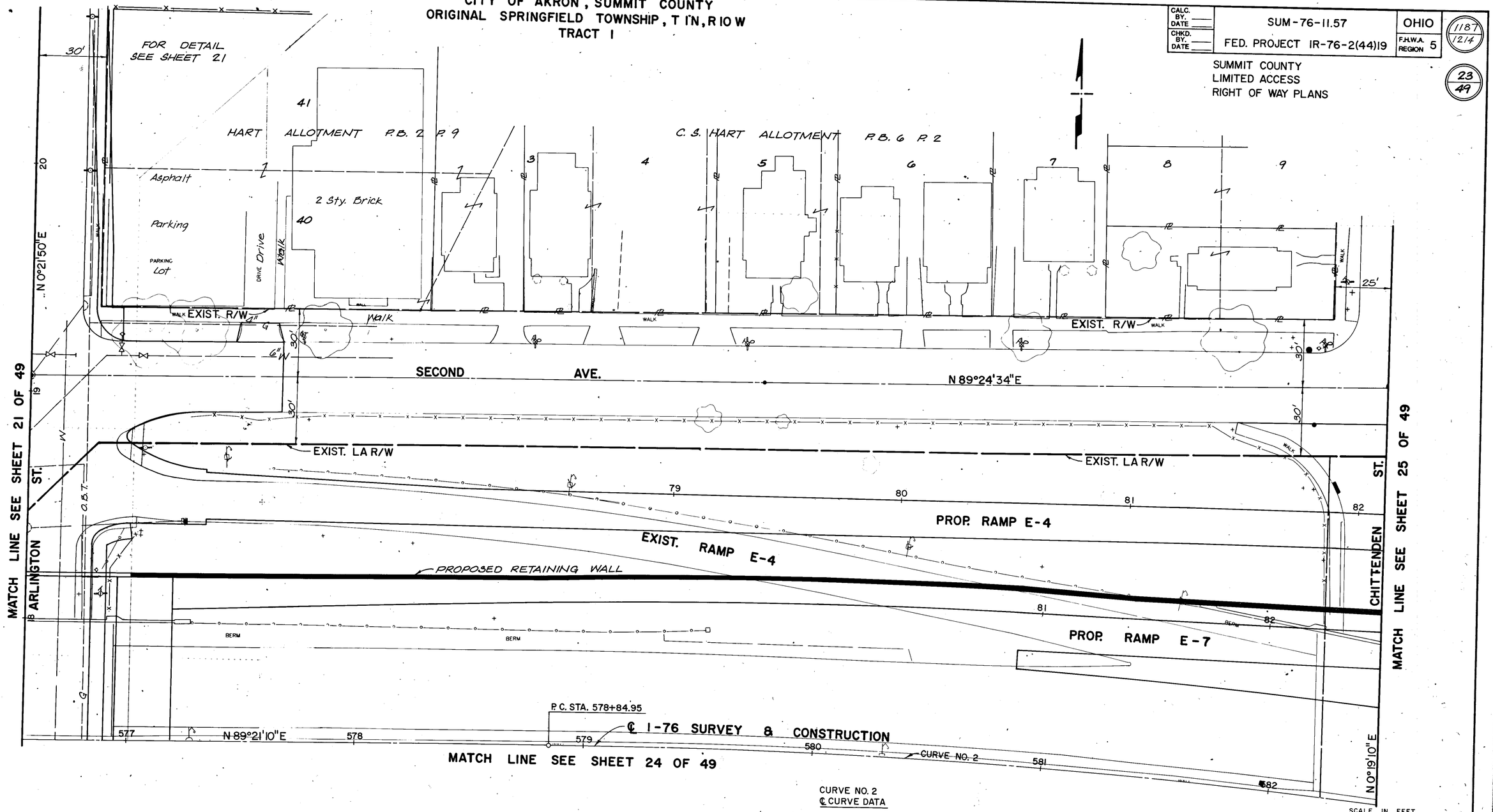

CURVE NO. 2
℄ CURVE DATA

DELTA	16°45'08" RT.
Dc	2° 0' 30"
R	2852.90'
Lc	834.14'
T	420.06'
CH	831.17'
EX(C)	30.76'

STATIONING

MAIN PI STA.	583+05.01
PC STA.	578+84.95
PT STA.	587+19.08

SCALE IN FEET
0 20 40 60

FUNDS	IR

NAME	REVISION	DATE

AA B/Pn 71942R

CALC. BY. DATE	SUM-76-11.57	OHIO
CHKD. BY. DATE	FED. PROJECT IR-76-2(44)19	F.H.W.A. REGION 5

1188 12/14

24 49

SUMMIT COUNTY
LIMITED ACCESS
RIGHT OF WAY PLANS

℄ I-76 SURVEY & CONSTRUCTION

P.C. STA. 578+84.95

CURVE NO. 2

N 89°21' 10" E

MATCH LINE STA 576+53.31 SEE SHEET 20 OF 48

MATCH LINE STA 582+48.94 SEE SHEET 26 OF 40

ARLINGTON ST. EXIST. R/W

CHITTENDEN ST.

MILES ST.

EXIST R/W

EXIST. LA

PROP. RAMP E-5

PROP. RAMP E-6

PROP. RAMP E-8

BERM

PAVED PARKING

Gravel

Frame Garage

Stucco Garage

Block Garage

2-Sty Frame #343

2-Sty Frame #274

1½ Sty Frame #274

2-Sty Frame #276

2-Sty Frame #276½

2-Sty Frame #275

1-Sty Frame

Frame Garage

Const. Limits 576+79.41 221.42' RT.

Const. Limits 578+19.55 221.59' RT.

Const. Limits 581+26.55 229.69' RT.

C.B. 576+81.27 115.92' RT. 140.12'(C)

C.B. 578+21.39 116.05' RT.

C.B. 578+20.42 171.60' RT. 125.11'(C)

C.B. 581+28.03 249.65' RT.

576+80.25 171.42' RT.

578+85.16 190.72' RT.

579+49.40 171.07' RT.

579+49.56 200.13' RT.

580+03.42 203.27' RT.

580+03.81 218.27' RT.

581+08.11 197.56' RT.

581+24.85 206.42' RT.

579+49.68 221.18' RT.

580+37.48 235.25' RT.

580+04.30 236.67' RT.

578+20.09 190.63' RT.

578+84.97 200.74' RT.

4 WL

5 WL

6 WL

7 WL

8 WL

8A 3

PARCEL NO.	OWNER	NET TAKE	RESIDUE LEFT	RESIDUE RIGHT
4WL	HARRY KODISH	7,777	0	0
5WL	ROBERT V. & JUDITH A. ASHLEY	7007	0	0
6WL	HARRY KODISH	2979	0	0
7WL	JAMES R. WALKER	3,278	0	0
8WL	P.E., SR. & M.A. KLINE	3,681	0	0
8A 3	ELMER J. STARKS, JR.	820	0	4058

CURVE NO.2
℄ CURVE DATA

DELTA	16° 45' 08" RT.
DC	2° 0' 30"
R	2852.90'
LC	834.14'
T	420.06'
CH	831.17'
EX(C)	30.76'

STATIONING

MAIN PI STA.	583+05.01
PC STA.	578+84.95
PT STA.	587+19.08

CITY OF AKRON, SUMMIT COUNTY
ORIGINAL SPRINGFIELD TOWNSHIP, T1N, R10W
TRACT 1

SCALE IN FEET
0 20 40 60

FUNDS	IR

NAME	REVISION	DATE

CITY OF AKRON, SUMMIT COUNTY
ORIGINAL SPRINGFIELD TOWNSHIP, T1N, R10W
TRACT 1

CALC. BY.		SUM-76-11.57	OHIO
CHKD. BY.		FED. PROJECT IR-76-2(44)19	F.H.W.A. REGION 5

1189 / 1214

SUMMIT COUNTY
LIMITED ACCESS
RIGHT OF WAY PLANS

25 / 49

MATCH LINE SEE SHEET 23 OF 49

MATCH LINE SEE SHEET 27 OF 49

MATCH LINE STA. 588+00 SEE SHEET 26 OF 49

CHITTENDEN ST.

SECOND AVE. N 89° 24' 26" E

EXIST. R/W

EXIST. LA R/W

EXIST. LA

PROP. RAMP E-7

PROP. RAMP E-4

C.S. HART ALLOTMENT P.B. 6 P. 2

Ⓒ I-76 SURVEY & CONSTRUCTION

CURVE NO. 2

P.T. STA. 587+19.08

S 73° 53' 42" E

PARCEL NO.	OWNER	NET TAKE	RESIDUE LEFT	RESIDUE RIGHT
15WL	A. E. HARDESTY	2682	0	0
16WL	J. & C. COPELAND	2898	0	0
17WL	C.P. & C.C. HARDESTY	3199	0	0
18WL	W. H. MARKS	5424	0	0
19WL	TERRY WORTHY	6134	0	0
20WL	BEAUFORD & POLA JEFFRIES	6299	0	0
21WL	W. H. MARKS	6299	0	0
22WL	G. PETERSON	3149	0	0

CURVE NO. 2
Ⓒ CURVE DATA

DELTA	16° 45' 08" RT.
DC	2° 0' 30"
R	2852.90'
LC	834.14'
T	420.06'
CH	831.17'
EX(C)	30.76'

STATIONING

MAIN PI STA.	583+05.01
PC STA.	578+84.95
PT STA.	587+19.08

SCALE IN FEET
0 20 40 60

FUNDS	IR

NAME	REVISION	DATE

AA B.Pr. 71/42R

CALC. BY. DATE	SUM-76-11.57	OHIO
CHKD. BY. DATE	FED. PROJECT IR-76-2(44)19	F.H.W.A. REGION 5

1190 / 1214

26 / 49

SUMMIT COUNTY
LIMITED ACCESS
RIGHT OF WAY PLANS

MATCH LINE STA 582+48.94 SEE SHEET 24 OF 49

MATCH LINE STA 588+00 SEE SHEET 28 OF 49

MATCH LINE ℄ I-76 SEE SHEET 25 OF 49

℄ I-76 SURVEY & CONSTRUCTION

CURVE NO. 2

P.T. STA. 587+19.08

S 73°53'42" E

EXIST. LA R/W

EXIST. R/W

THIRD AVE.

S 86°18'15" E 33.38'(C)

583+44.35 136.70' RT.

584+13.20 125.27' RT.

584+47.86 121.43' RT.

S 83°27'41" E 40.23'(C) 41'(D)

S 81°06'45" E 30.33'(C) 31'(D)

584+85.06 118.37' RT.

585+21.32 116.(C) RT.

583+06.70 142.23' RT.

N 30°16'06" E 22.27'(D) 22.45'(C)

N 89°24'10" E 36.16'(C) 36.16'(D) 66.67'(C) 33.33'(D) 33.34'(D) 33.4'(D)

EXIST. RAMP E-6

PROP. RAMP E-8

SERVICE RD.

EXIST. LA

#1154 2-Sty. Frame

#1156 2-Sty. Frame Conc.

#1158 2-Sty. Frame Asphalt

#1160 2-Sty. Frame

#1166 2-Sty. Frame Conc.

Dirt

120.00'(C) Conc.

110.00'(C) 110'(D)

115.00'(C) 115'(D)

105.00'(C) 105'(D)

582+24.63 161.55' RT.

122.50'(C) 122.5'(D)

N 0°15'10" E

S 0°15'10" W

C. G. HART ALLOTMENT PB. 6 PG. 2

9 WL — 252

10 WL — 251

11 WL — 250

12 WL — 249

13 WL — 248

14 WL — 262

Frame Garage

Shed

Bush

Frame Car.

Const. Limits

583+09.33 225.71' RT.

50.00'(C) 50'(D)

S 89°24'02" W

583+63.70 251.81' RT.

584+35.65 245.52' RT.

585+45.76 224.27' RT.

30" Maple

16" Maple

40.00'(C) 40'(D) 12" Maple

30.00'(C) 30'(D)

585+13.98 230.67' RT.

600'(D) 24" Maple

150.00'(C)

N 89°24'02" E

GUARD RAIL

CONC. WALL & FENCE

586+29.67 204.82' RT.

298.83'(C)

5-6" Trees

16" Maple

5-10" Trees

1-10" Maple

EXIST. LA

N 89°47'48" E

8-4" Trees

3-12" Elm

1-8" Maple

10" Maple

8" Beech

8" Maple

12" STM.

M.H.

8" SAN.

6" W

12" STM.

18" STM. 16" W

HYD.

W.V.

M.H.

BERM

WALK

CURB

CURBED

LINE UNDEFD

2" Maples

584+71.36 239.39' RT.

N 79°15'20" W 50.85'

585+26.8+ / 238.55' T.

N 86°01'14" W 50.10'

585+80.78 230.69' RT.

CONC. WALK

2" MAPLES

VACATED ORD. NO. 252-1985

02.54'

N 76°54'31" W

586+92.28 228.46' RT.

Const. Limits 261

151.26' N 79°23'13" W

Asphalt Parking

Light Post

AKRON BOARD OF EDUCATION

ROBINSON ELEM. SCHOOL

Conc. Walk

Conc. Ramp

25'

16" W

2" Maple 2" Crab Apple

Shrubs

CHITTENDEN ST.

EXIST. R/W

CURVE NO. 2
℄ CURVE DATA

DELTA	16° 45' 08" RT.
DC	2° 0' 30"
R	2852.90'
LC	834.14'
T	420.06'
CH	831.17'
EX(C)	30.76'

STATIONING

MAIN PI STA.	583+05.01
PC STA.	578+84.95
PT STA.	587+19.08

PARCEL NO.	OWNER	NET TAKE	RESIDUE LEFT	RESIDUE RIGHT
9WL	EDDIE O. HEWINS	6003	0	0
10WL	HEIRS OF CHARLES HEWINS	8166	0	0
11WL	ELAINE MAE THOMAS	4041	0	0
12WL	D. R. & J. A. MOYERS	4699	0	0
13WL	ANNA EATON, ET AL	3375	0	0
14WL	AKRON BD. OF EDUCATION	19,026	0	235974

SCALE IN FEET
0 20 40 60

FUNDS	IR

NAME	REVISION	DATE

FOURTH AVE. VACATED ORD. NO. 253-1985

CITY OF AKRON, SUMMIT COUNTY
ORIGINAL SPRINGFIELD TOWNSHIP, T1N, R10W
TRACT I

CITY OF AKRON, SUMMIT COUNTY
ORIGINAL SPRINGFIELD TOWNSHIP, T1N, R10W
TRACT 1

CALC. BY. DATE		SUM-76-11.57	OHIO
CHKD. BY. DATE		FED. PROJECT IR-76-2(44)19	F.H.W.A. REGION 5

11/91 12/14

27/49

SUMMIT COUNTY
LIMITED ACCESS
RIGHT OF WAY PLANS

PARCEL NO.	OWNER	NET TAKE	RESIDUE LEFT	RESIDUE RIGHT
22WL	G. PETERSON	3149	0	0
23WL	R. NEIMAN	3149	0	0
24WL	ZION TEMPLE APOSTOLIC CHURCH	9448	0	0
25WL	GENE ECKRICH	3149	0	0
27WL	BETTY G. JOHNSON	7498	0	0
37WL	U.R.W. HOME ASSOCIATION	5039	0	0
37AWL	JESSIE L. & STELLA M. WILKINS	4267	0	0

(0 WL) INDICATES PARCEL PREVIOUSLY ACQUIRED

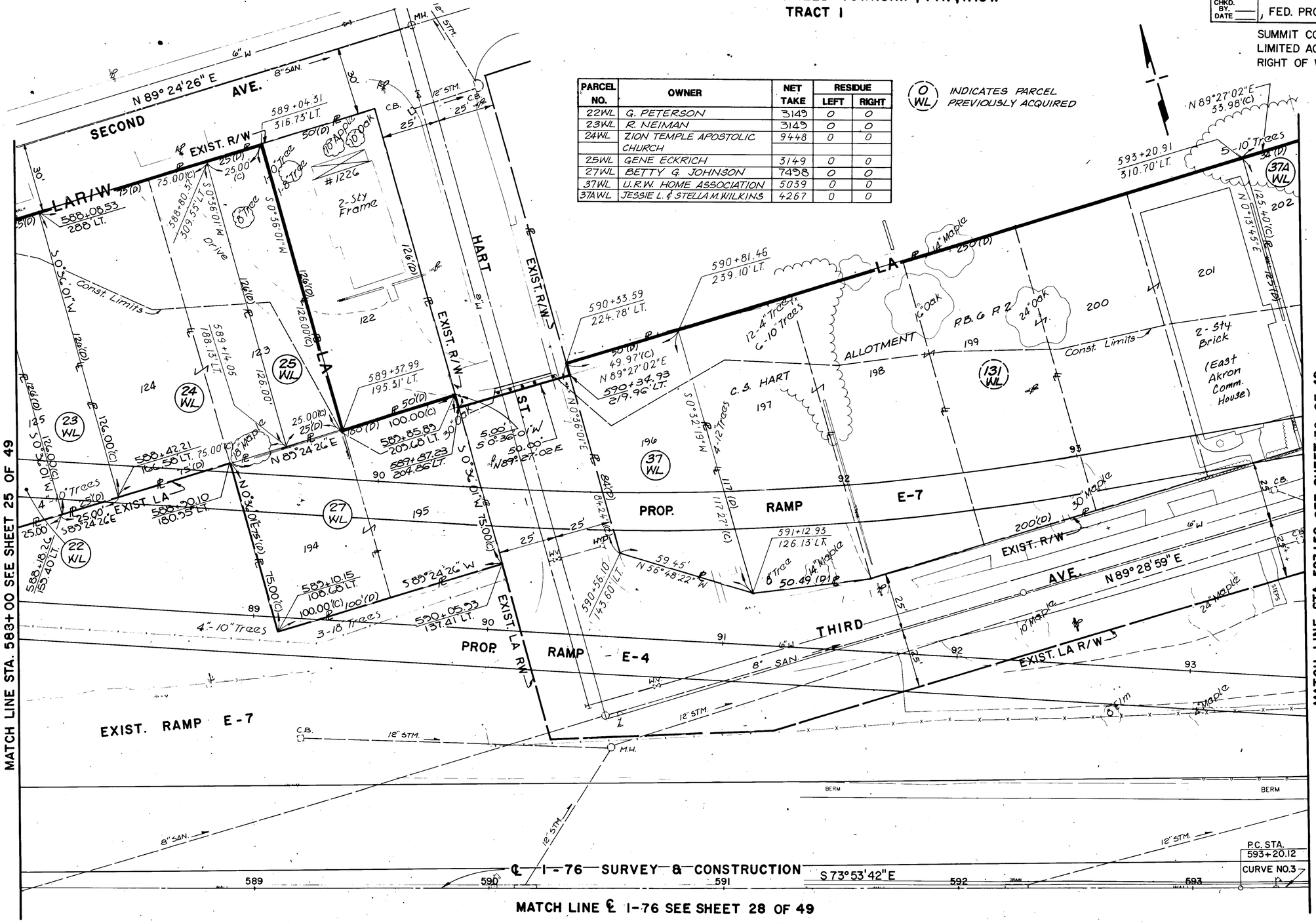

MATCH LINE STA. 583+00 SEE SHEET 25 OF 49

MATCH LINE STA 593+50 SEE SHEET 30 OF 49

MATCH LINE ℄ I-76 SEE SHEET 28 OF 49

CURVE NO. 3
℄ CURVE DATA

DELTA	21° 08' 51" LT.
DC	1° 58' 30"
R	2901.05'
LC	1070.76'
T	541.54'
CH	1064.69'
EX(C)	50.11'

STATIONING

MAIN PI STA.	598+61.66
PC STA.	593+20.12
PT STA.	603+90.88

SCALE IN FEET
0 20 40 60

FUNDS	IR

NAME	REVISION	DATE
DSB	REV L/A ON HART ST.	4/4/90

AA B/Pe 71942R

CALC. BY. DATE	SUM-76-11.57	OHIO	1192
CHKD. BY. DATE	FED. PROJECT IR-76-2(44)19	F.H.W.A. REGION 5	1214

28
49

SUMMIT COUNTY
LIMITED ACCESS
RIGHT OF WAY PLANS

MATCH LINE ℄ I-76 SEE SHEET 27 OF 49

MATH LINE STA. 588+00 SEE SHEET 26 OF 49

MATCH LINE STA. 593+50 SEE SHEET 31 OF 49

℄ I-76 SURVEY & CONSTRUCTION

CURVE NO. 3
P.C. STA. 593+20.12

CURVE NO. 3
℄ CURVE DATA

DELTA	21° 08' 51" LT.
DC	1° 58' 30"
R	2901.05'
LC	1070.76'
T	541.54'
CH	1064.69'
EX(C)	50.11'

STATIONING

MAIN P.I STA.	598+61.66
PC STA.	593+20.12
PT STA.	603+90.88

EXIST. RAMP E-6

EXIST. LA

PROP. RAMP E-3

EXIST. R/W

HART AVE.

FOURTH AVE.

ALLOTMENT

C. S. HART

SOCCER GOAL

Const. Limits

VACATED ORD. 253-1985

SEE SHEET 29 OF 49

PARCEL NO.	OWNER	NET TAKE	RESIDUE LEFT	RESIDUE RIGHT
42WL	PETER & JUANITA MONDL	6288	0	0
43WL	DONALD L. DAY	3770	0	0
44WL	ETHEL & JOHN ANGEL	3769	0	0
45WL	D.E. & P. CONEY	5022	0	0
46WL	JOHNNIE BROWN	4237	0	0
47WL	W. PRESTON & T. SOJOURNER	5620	0	0
48WL	GEORGE HAMMETT, JR.	6246	0	0
49WL	JIMMIE LEE CLARK	6248	0	0

PARCEL NO.	OWNER	NET TAKE	RESIDUE LEFT	RESIDUE RIGHT
14WL	AKRON BD. OF EDUCATION	19,026	0	235,974
28WL	G.S.G. DEVELOPMENT CO.	4938	0	0
29WL	B. & B. ASSOCIATES, INC.	4938	0	0
30WL	LEROY CALHOUN, ET AL	3770	0	0
31WL	A.E. GEER	6283	0	0
32WL	W. THOMAS	4708	0	0
33WL	JOHN BOY BROWN	3144	0	0
34WL	GILBERT & ARLINE STORY	2812	0	0
35WL	JOHN & CARRIE MAE BROWN	3233	0	0
36WL	B. R. JAMES	2315	0	0

CITY OF AKRON, SUMMIT COUNTY
ORIGINAL SPRINGFIELD TOWNSHIP, T1N, R10W
TRACT 1

SCALE IN FEET
0 20 40 60

FUNDS	IR

NAME	REVISION	DATE

CITY OF AKRON, SUMMIT COUNTY
ORIGINAL SPRINGFIELD TOWNSHIP, T1N, R10W
TRACT 1

CALC. BY. DATE	SUM-76-11.57	OHIO
CHK'D. BY. DATE	FED. PROJECT IR-76-2(44)19	F.H.W.A. REGION 5

1193
1214

29
49

SUMMIT COUNTY
LIMITED ACCESS
RIGHT OF WAY PLANS

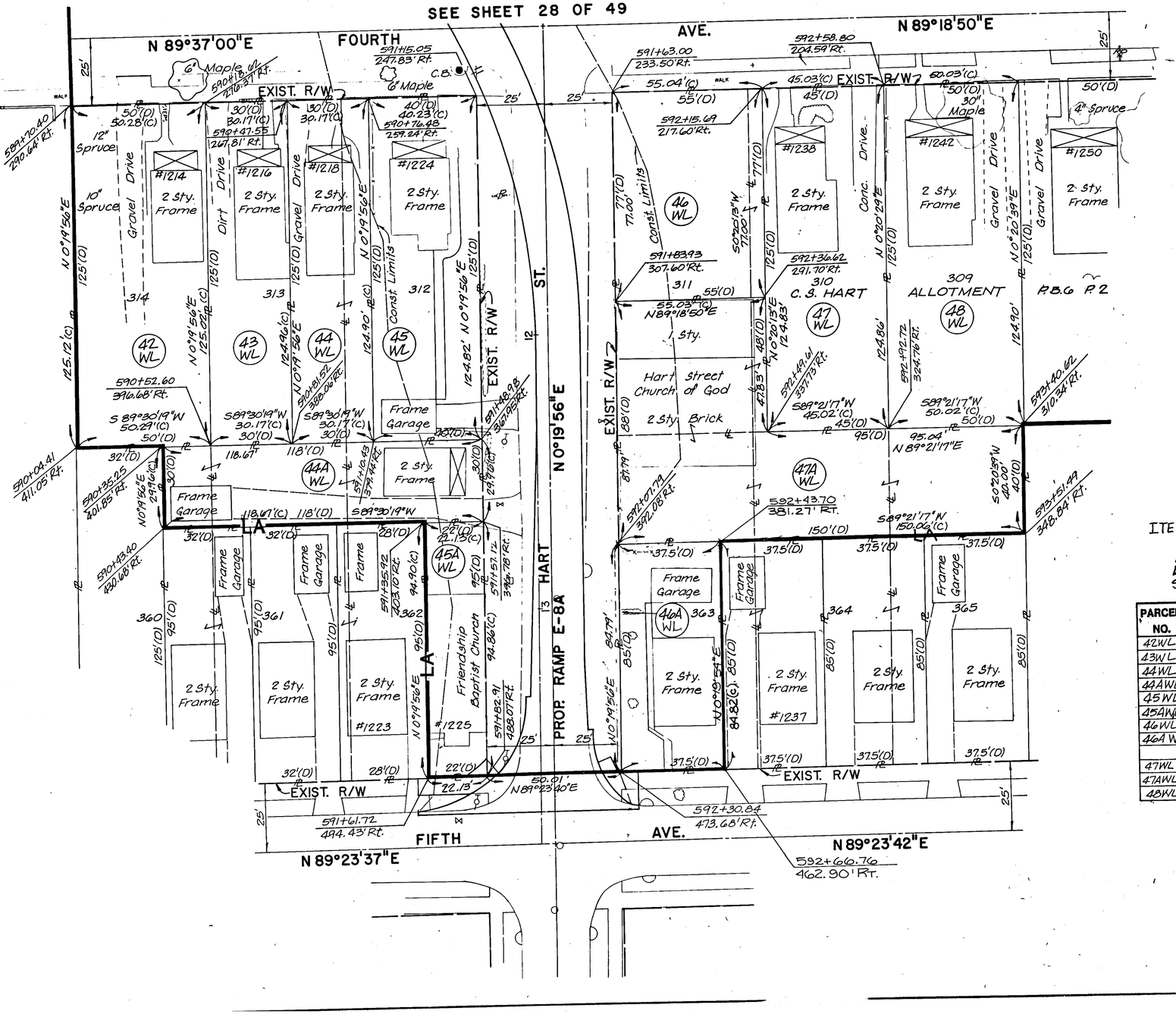

ITEM 202 BUILDING DEMOLISHED - PARCEL 46AWL
ONE 2-STORY FRAMED STRUCTURE AND FRAMED GARAGE -- LUMP SUM HAS BEEN CARRIED FORWARD TO THE GENERAL SUMMARY.

PARCEL NO.	OWNER	NET TAKE	RESIDUE LEFT	RESIDUE RIGHT
42WL	PETER & JUANITA MONDL	6288	0	0
43WL	DONALD L. DAY	3770	0	0
44WL	ETHEL & JOHN ANGEL	3769	0	0
44AWL	RUTH L. KACHENAK	3555	0	0
45WL	D.E. & P. CONEY	5022	0	0
45AWL	FRIENDSHIP BAPTIST CHURCH	2099	0	0
46WL	JOHNNIE BROWN	4237	0	0
46A WL	" CLAIRE ROGERS	3180	0	0
47WL	W. PRESTON & J. SOJOURNER	5620	0	0
47AWL	C. F. & E. TRAVIS	8632	0	0
48WL	GEORGE HAMMETT, JR.	6246	0	0

SCALE IN FEET
0 20 40 60

FUNDS	IR

NAME	REVISION	DATE
	ADD 46A WL, DEL 46ALA	6-1-92
	REV. 46 ALA,	7-1-91

REVISED 8-18-92

AA B.P# 71142R

CITY OF AKRON, SUMMIT COUNTY
ORIGINAL SPRINGFIELD TOWNSHIP, T1N, R10W
TRACT 1

CALC. BY. DATE	SUM-76-11.57	OHIO
CHKD. BY. DATE	FED. PROJECT IR-76-2(44)19	F.H.W.A. REGION 5

1194
1214

30
49

SUMMIT COUNTY
LIMITED ACCESS
RIGHT OF WAY PLANS

PARCEL NO.	OWNER	NET TAKE	RESIDUE LEFT	RESIDUE RIGHT
37AWL	JESSIE L. & STELLA M. WILKINS	42.67	0	0
38AWL	JOSEPH & JENNIE E. CHURCH	4142	0	0
38WL	BRIAN R. JAMES	4142	0	0
39WL	ROBERT W. BLAKEMORE	2111	0	0
40WL	LUCY HAMRIC	1969	0	0
41WL	L. & E. McCLENDON	6430	0	0
55WL	GOODYEAR TIRE & RUBBER CO.	17,504	0	0

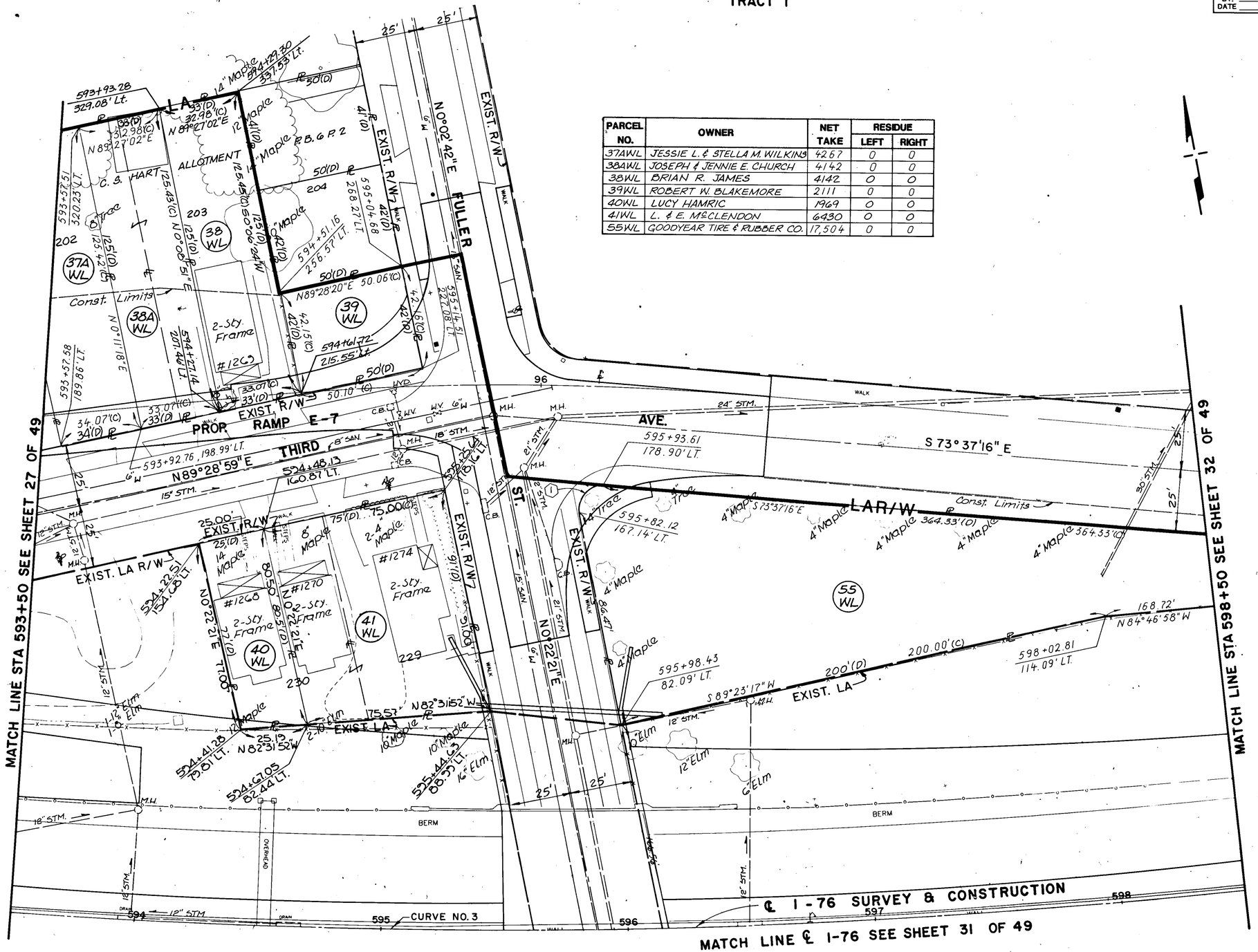

CURVE NO. 3
℄ CURVE DATA

DELTA	21°08'51" LT.
DC	1° 58' 30"
R	2901.05'
LC	1070.76'
T	541.54'
CH	1064.69'
EX(C)	50.11'

STATIONING

MAIN PI STA.	598+61.66
PC STA.	593+20.12
PT STA.	603+90.88

R/W CURVE (1)
R = 10.00'
A = 18.50'
CH = 15.97'
BRG. = N 53°22'35" E

SCALE IN FEET
0 20 40 60

FUNDS	IR

NAME	REVISION	DATE

CALC. BY. DATE	SUM-76-11.57	OHIO
CHKD. BY. DATE	FED. PROJECT IR-76-2(44)19	F.H.W.A. REGION 5

1195 / 1214

31 / 49

SUMMIT COUNTY
LIMITED ACCESS
RIGHT OF WAY PLANS

MATCH LINE ℄ I-76 SEE SHEET 30 OF 49

℄ I-76 SURVEY & CONSTRUCTION

MATCH LINE STA 593+50 SEE SHEET 28 OF 49

MATCH LINE STA 598+50 SEE SHEET 33 OF 49

FOURTH AVE.

FIFTH AVE.

FULLER ST.

EXIST. RAMP E-8

PROP. RAMP E-8B

EXIST. L.A R/W 7

EXIST. R/W 7

CURVE NO. 3
℄ CURVE DATA

DELTA	21° 08'51" LT.
DC	1° 58' 30"
R	2901.05'
LC	1070.76'
T	541.54'
CH	1064.69'
EX(C)	50.11'

STATIONING

MAIN PI STA.	598+61.66
PC STA.	593+20.12
PT STA.	603+90.88

PARCEL NO.	OWNER	NET TAKE	RESIDUE LEFT	RESIDUE RIGHT
50WL	M. R. KELLER	6250	0	0
51WL	W. CLARK, JR., ET AL	4167	0	0
52WL	J. L. & A. L. SMITH	4167	0	0
53WL	R. L. & A. B. GRANDISON	4165	0	0
54WL	W. A. & M. L. BANKS	10,760	0	0
54AWL	PATRICIA DAVIS	7752	0	11,935
56WL	H. B. WOZNIAK	563	0	
56T		833	0	3440
57WL	NED L. & BONNIE TRAYLOR	726		

SCALE IN FEET
0 20 40 60

FUNDS	IR

NAME	REVISION	DATE

CITY OF AKRON, SUMMIT COUNTY
ORIGINAL SPRINGFIELD TOWNSHIP, T1N, R10W
TRACT I

AA B/Pn 71942R

CITY OF AKRON, SUMMIT COUNTY
ORIGINAL SPRINGFIELD TOWNSHIP, T1N, R10W
TRACT 1

CALC. BY. DATE	SUM-76-11.57	OHIO
CHKD. BY. DATE	FED. PROJECT IR-76-2(44)19	F.H.W.A. REGION 5

SUMMIT COUNTY
LIMITED ACCESS
RIGHT OF WAY PLANS

OVERLAP TABLE					
PARCEL NO.	WO	R	T	HI-WAY	B.L.
64	—	811	—	—	—
64R	—	—	—	811	252
64SL	—	252	—	—	—
65WD	—	95	531	—	—
65WD2	—	60	377	—	—
65R	155	—	7403	—	—
65T	908	7,403	—	—	—

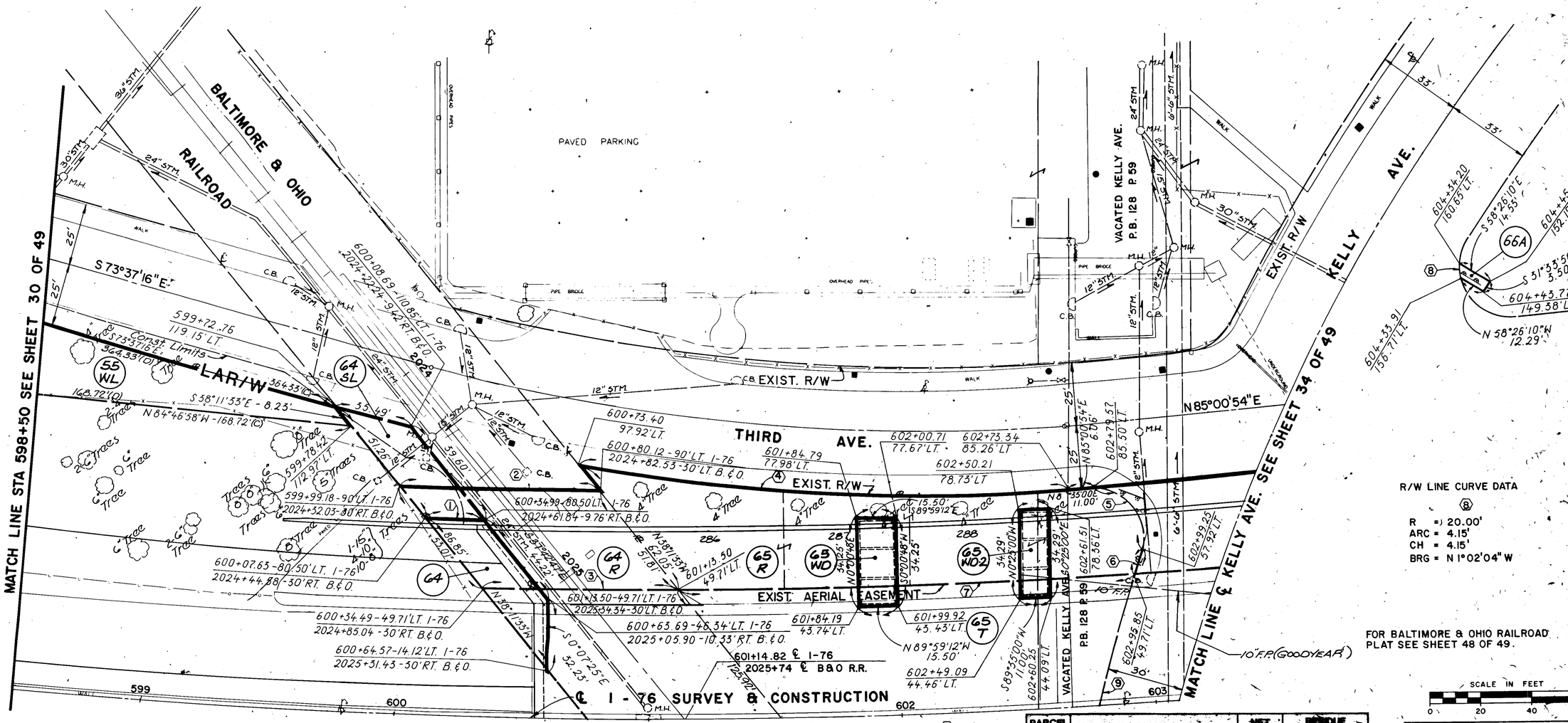

R/W LINE CURVE DATA ⑧
R = 20.00'
ARC = 4.15'
CH = 4.15'
BRG = N 1°02'04" W

Property Line Curve Data

①	②	③	④	⑤	⑥	⑦	⑨
R = 2820.55'	R = 2811.05'	R = 2851.34'	R = 698.94'	R = 20.00'	R = 746.43'	R = 2851.34'	R = 746.43'
ARC = 26.60'	ARC = 78.43'	ARC = 77.66'	ARC = 194.62'	ARC = 39.88'	ARC = 8.86'	ARC = 179.22'	ARC = 154.26'
CH = 26.60'	CH = 78.42'	CH = 77.66'	CH = 193.99'	CH = 33.59'	CH = 8.86'	CH = 179.19'	CH = 153.99'
BRG. = S 87°44'37" E	BRG. = S 88°06'20" E	BRG. = N 88°46'57" W	BRG = S 87°00'30" E	BRG. = S 37°51'57" E	BRG. = S 18°54'54" W	BRG. = S 88°38'06" W	BRG = S 13°20'02" W

PARCEL NO.	OWNER	NET TAKE	RESIDUE LEFT	RESIDUE RIGHT
55WL	GOODYEAR TIRE & RUBBER CO.	17,504	0	0
64R	BALTIMORE & OHIO RAILROAD	3,144	—	—
64		1,313		
64SL		932		
65R	GOODYEAR TIRE & RUBBER CO.	7,403	0	802
65WD		531		1
65WD2		377		
65T		22,165		
66A	GOODYEAR TIRE & RUBBER CO.	247	20,316	0

SCALE IN FEET
0 20 40 80

FUNDS	IR

NO.	NAME	REVISION
1		
2		
3		
4		
5		
6		
7		
8		
9		
10		
11		
12		
13		
14		
15		
16		
17		
18		
19		
20		
21		
22		
23		
24		
25		
26		
27		
28		
29		
30		
31		
32		
33		
34		
35		
36		
37		
38		
39		
40		
41		
42		
43		
44		
45		
46		
47		
48		
49		
50		
51		
52		
53		
54		
55		
56		
57		
58		
59		
60		
61		
62		
63		
64		
65		
66		
67		
68		
69		
70		
71		
72		
73		
74		
75		
76		
77		
78		
79		
80		
81		
82		
83		
84		
85		
86		
87		
88		
89		
90		
91		
92		
93		
94		
95		
96		
97		
98		
99		
100		

LOS ADD 10' FIRE PROTECT EASEMENT

AA B/Pn 71942R

CALC. BY. DATE	SUM-76-11.57	OHIO
CHKD. BY. DATE	FED. PROJECT IR-76-2(44)19	F.H.W.A. REGION 5

1197 12.14

33 49

SUMMIT COUNTY
LIMITED ACCESS
RIGHT OF WAY PLANS

MATCH LINE ℄ I-76 SEE SHEET 32 OF 49

℄ I-76 SURVEY & CONSTRUCTION

599 600 601 602 603

601+14.82 ℄ I-76
2025+74 ℄ B&O R.R.

601+90.79 - 49.71'RT. I-76
2026+60.26 -30'LT. B.℄O.

601+16.09 - 49.71'RT. I-76
2026+13.66 -30'RT. B.℄O.

601+47.13 - 90'RT. I-76
2026+64.98 -30'RT. B.℄O.

CURVE NO.3 602

601+84.52
41.04'RT.

601+96.99
39.02'RT.

602+46.31
43.79'RT.

602+64.63
49.71'RT.

602+55.98
78.42'RT.

602+37.44
46.16'RT.

602+00.60
62.98'RT. 290

602+28.29
78.06'RT.

602+56.66
90'RT.

602+46.52
19.44'RT.

602+45.20
227.41'RT.

602+39.83
366.00'RT.

602+20.24
2027+10.59 -30'LT. B.℄O.

602+13.32
180.80'RT.

601+62.95
180.45'RT.

600+68.84
182.20'RT.

600+70.54
307.19'RT.

601+61.15
305.44'RT.

602+42.11
306.52'RT.

601+66.58
305.93'RT.

600+66.58
323.93'RT.

599+74.81
187.22'RT.

599+84.66
186.55'RT.

599+96.86
192.84'RT.

599+65.78
192.09'RT.

599+28.00
190.93'RT.

598+87.88
223.24'RT.

598+99.33
228.86'RT.

599+30.65
234.84'RT.

599+80.33
312.08'RT.

599+77.74
252.15'RT.

600+11.35'
224.95'RT.

600+14.15
309.89'RT.

N 89°23'17"E 33.33'

N 89°23'17"E 50.00'(C)

N 89°23'17"E 10.50'

N 89°23'17"E 100.00'(C) 100' (D)

N 89°23'17"E 53.46'

N 89°23'17"E 106.00'

N 89°23'17"E 89.5'(D) 85.50'(C)

N 89°23'17"E 38.50'

N 89°23'17"E

N 0°22'14"E 125.00'(C) 125'(D)

N 0°22'14"E 85.00'

N 0°22'14"E 30.00'

N 0°22'14"E 73.15'

N 0°36'43"W C.B. 38.50'

N 9°59'12"W 24.24'

N 80°00'48"E 13.00'

N 36°21'35"W 51.32'

N 36°21'35"W

S 80°00'48"W 13.00'

S 66°45'46"E 39.11'

S 53°57'18"E 47.87'

N 67°41'04"W 33.90'

N 75°37'02"W 34.35'

N 25°37'02"W 34.36'

N 89°23'17"E 33.33'

N 11°00' N 89°35'00"E

N 0°23'00"W 34.29'

S 0°23'00"E 34.29'

S 0°22'14"W 30.00'

S 0°22'14"W

S 0°22'14"W 125.00'(C) 125'(D)

S 0°22'14"W 125.00'(C)

S 0°22'14"W 125.00'(C)

S 0°22'14"W 125.00'(C

AA B/P# 71942R

CALC. BY. DATE	
CHKD. BY. DATE	

SUM-76-11.57

FED. PROJECT IR-76-2(44)19

OHIO — F.H.W.A. REGION 5

1198 / 1214

34 / 49

SUMMIT COUNTY
LIMITED ACCESS
RIGHT OF WAY PLANS

EXIST. R/W — THIRD AVE. — N 85°01'07" E

PROP. AERIAL EASEMENT LINE

EXIST. AERIAL EASEMENT

℄ I-76 SURVEY & CONSTRUCTION

MATCH LINE ℄ KELLY AVE. SEE SHEET 32 & 33 OF 49

MATCH LINE SEE SHEET 35 OF 49

MATCH LINE SEE SHEET 36 OF 49

AKRON, BARBERTON BELT RAILROAD PLAT SEE SHEET 49 OF 49

OWNED BY GOODYEAR

LITTLE CUYAHOGA RIVER

EXIST. 20' SEWER EASEMENT

INTERCEPTOR

EXIST. R/W

PROP. C.B.

PARCEL NO.	OWNER	NET TAKE	RESIDUE LEFT	RESIDUE RIGHT	OVERLAP WD	OVERLAP R	OVERLAP T
66R	GOODYEAR TIRE & RUBBER CO.	15,058	1,148	1,599,292	1,017	—	15,058
66R-1		28,645			1,956	—	28,645
66T		91,970			2,900	43,673	—
66WD		117			—	117	117
66WD-1		539			—	456	539
66WD-2		458			—	320	458
66WD-3		445			—	374	445
66WD-4		481			—	376	481
66WD-5		690			—	579	690
66WD-6		257			—	204	257
66WD-7		652			—	547	652
66		42			—	—	—
67R	AKRON BARBERTON BELT	2,199			—	—	—
67R-1	R. R.	5,677			—	—	—

① R = 686.43' ARC = 4.67' CH = 4.67' BRG = N22°04'01"E

② R = 20.00' ARC = 21.58' CH = 20.55' BRG = N54°06'17"E

③ R = 686.43' ARC = 30.38' CH = 30.38' BRG = N21°55'05"E

④ R = 2851.34' ARC = 28.02' CH = 28.02' BRG = S85°14'20"W

⑤ R = 2950.76' ARC = 66.48' CH = 66.48' BRG = N85°36'11"E

⑥ R = 625.41' ARC = 134.82' CH = 134.56' BRG = S88°52'01"E

⑦ R = 1354.39' ARC = 68.23' CH = 68.22' BRG = S31°24'40"E

⑧ R = 685.70' ARC = 51.75' CH = 51.74' BRG = N77°09'00"W

⑨ R = 1401.90' ARC = 384.89' CH = 383.68' BRG = N87°10'38"W

⑩ R = 2991.05' ARC = 77.30' CH = 77.29' BRG = S85°41'52"W

⑪ R = 686.43' ARC = 41.48' CH = 41.48' BRG = N10°03'55"E

⑫ R = 625.41' ARC = 65.59' CH = 65.56' BRG = S79°41'14"E

⑬ R = 685.70' ARC = 82.60' CH = 82.55' BRG = N71°32'14"W

⑭ R = 686.43' ARC = 1.79' CH = 1.79' BRG = N 0°26'42"E

⑮ R = 1401.90' ARC = 47.68' CH = 47.68' BRG = S85°55'55"W

⑯ R = 1401.90' ARC = 155.61' CH = 155.53' BRG = N87°07'47"W

⑰ R = 1401.90' ARC = 82.32' CH = 82.30' BRG = N80°59'39"W

SCALE IN FEET
0 20 40 60

FUNDS	IR

NAME	REVISION	DATE
DSB	ADD. FIRE PROTECT. LINE (GOODYEAR)	6/4/90

CITY OF AKRON, SUMMIT COUNTY
ORIGINAL SPRINGFIELD TOWNSHIP, T 1N, R 10W
TRACT 2, O.L.1

AA B/Pn 71942R

CITY OF AKRON, SUMMIT COUNTY - ORIGINAL SPRINGFIELD TOWNSHIP, T1N, R10W, TRACT 2, O.L.1

RIGHT OF WAY CURVE DATA

①		②	
R	= 980.08'	R	= 15.00'
ARC	= 152.63'	ARC	= 23.53'
CH	= 152.47'	CH	= 21.19'
BRG	= N66°09'05"E	BRG	= S73°14'45"E
③		④	
R	= 15.00'	R	= 930.08'
ARC	= 23.62'	ARC	= 17.70'
CH	= 21.25'	CH	= 17.70'
BRG	= S16°47'39"W	BRG	= S62°14'07"W
⑤		⑥	
R	= 139.21'	R	= 33.50'
ARC	= 53.00'	ARC	= 35.91'
CH	= 52.68'	CH	= 34.22'
BRG	= N56°51'24"E	BRG	= N15°14'16"E
⑦		⑧	
R	= 113.50'	R	= 33.50'
ARC	= 25.43'	ARC	= 6.52'
CH	= 25.38'	CH	= 6.50'
BRG	= N21°53'36"W	BRG	= S 8° 54' 00" W

MATCH LINE SEE SHEET 35A OF 49

MARTHA AVE.

S 28°18'45"E

N 28°18'45"W

275.68'

244.32'

EXIST. R/W

609+97.65 358.76' LT.

609+63.08 287.28' LT.

609+70.87 256.50' LT.

609+70.43 262.99' LT.

609+78.73 250.88' LT.

609+58.57 230.90' LT.

609+70.83 231.15' LT.

609+12.10 206.08' LT.

609+09.02

P.T. STA. 25+09.02

609+28.43 212.92' LT.

N 61° 41' 24" E

46.15'

N 61°41'24"E

609+90.58 185.22' LT.

610+10.25 177.35' LT.

THIRD AVE.

EXIST. R/W

LA R/W

608+03.85 112.83' LT.

608+50.88 109.70' LT.

608+61.74 84.44' LT.

609+26.87 87.07' LT.

610+30.01 131.42' LT.

S 61° 41' 24" W

EXIST. LA

112.27'

65.18'

S 82°38'43"W

27.60'

N 28°18'45"W

26.06'

MATCH LINE SEE SHEET 34 OF 49

608+14.83 94.20' LT.

N 29°58'05"W

68A WD

68 WL

68A U

70A WL

71 WL

72 WL

72 T

73 WL

70 WL

74 WL

#1364 Feeney Tire Co. 1-Sty. Brick

1-Sty. Block

2-Sty. Brick

#1372 2½-Sty. Frame

2½-Sty. Frame

Asphalt Parking Lot

610+26.97 351.95' LT.

143'(D) N14°08'56"E

610+25.78 350.49' LT.

3990' S 15°51'04" E

611+13.46 337.37' LT.

611+10.12 327.76' LT.

N 67°22'18"E 50.40'

610+62.63 312.71' LT.

610+39.02 320.93' LT.

S 52°35'54"E 6.44'

16.25'

16.33'

15.00'

S 51°04'E 39.90'

49.82'

Const. Limits

10.18'

611+58.16 342.99' LT.

611+85.45 421.38' LT.

612+02.74 416.36' LT.

S 75°51'04"E 18.31'

154.86' S 79°04'20"E

N 79°04'20"W 142.55'

612+40.32 356.81' LT.

143.00' R

T 143.00'

C N 14°08'56"E

S 50°18'00"W

EXIST. LA

611+38.44 286.32' LT.

S 60°48'55"W 103.05'(D)

610+44.52 245.13' LT.

610+24.89 325.86' LT.

610+00.50 351.20' LT.

610+93.70'(D)

611+00.31 299.59' LT.

100.73'(C)

PROP. RAMP E-12

EXIST. RAMP E-12

123.55' E-15

EXIST. LA

4-12"

6"

18"

17

12

11

N 28°10'55"W 15" SAN.

6" W. (ABD)

12" STM.

18" STM.

30'

30'

Bush

3" Maple

5" Maple

5"

Maples

5"

5"

5"

5"

5"

609 610 611 N 84°57'27"E 612

℄ I-76 SURVEY & CONSTRUCTION

MATCH LINE ℄ I-76 SEE SHEET 36 OF 49

MATCH LINE STA. 613+00 SEE SHEET 38 OF 49

CALC. BY. DATE	SUM-76-11.57	OHIO
CHKD. BY. DATE	FED. PROJECT· IR-76-2(44)19	F.H.W.A. REGION 5

1199 / 1214

35 / 49

SUMMIT COUNTY
LIMITED ACCESS
RIGHT OF WAY PLANS

℄ CURVE DATA
THIRD AVE. ②

DELTA	23° 19' 43" LT.
DC	5° 59' 57"
R	955.08'
LC	388.87'
T	197.17'
CH	386.19'
EX(C)	20.14'

STATIONING

MAIN PI STA.	23+17.31
PC STA.	21+20.14
PT STA.	25+09.02

PARCEL NO.	OWNER	NET TAKE	RESIDUE LEFT.	RESIDUE RIGHT
68WL	GOODYEAR TIRE & RUBBER CO.	11,654	0	0
68AWD	GOODYEAR TIRE & RUBBER CO.	387	66,098	0
70WL	GOODYEAR TIRE & RUBBER CO.	4719	0	0
70AWL	MARSH FAMILY TRUST	298	5114	0
71WL	R.G. NEMER & E.H. FEENEY	48	5672	0
72WL	ARLENE B. HUBER	595	5111	0
72T		1001		
73WL	THOMAS J. HUBER	1813	3960	0
74WL	M. & B. TARAS	13,369	0	0
68A-U	GOODYEAR TIRE & RUBBER CO.	3,558	66,098	0

SCALE IN FEET
0 20 40 60

FUNDS	IR

NAME	REVISION	DATE

AA B.Pe 71142R

CITY OF AKRON, SUMMIT COUNTY - ORIGINAL SPRINGFIELD TOWNSHIP, TIN, R10W, TRACT 2, O.L. 1

CALC. BY. DATE	SUM-76-11.57	OHIO
CHKD. BY. DATE	FED. PROJECT IR-76-2(44)19	F.H.W.A. REGION 5

1200 / 1214

35A / 49

SUMMIT COUNTY
LIMITED ACCESS
RIGHT OF WAY PLANS

EAST MARKET STREET

S. KELLY AVENUE

MARTHA AVENUE

608+03.77
540.47' LT.

608+54.75
522.71' LT.

608+66.55
511.73' LT.

607+84.52
513.84' LT.

608+16.02
490.00' LT.

608+61.96
509.75' LT.

S 75°50'39" E
53.99'

N 57°55'17" W
39.51'

S 61°41'15" W
50.00'

EXIST. R/W

S 28°18'45" E
N 28°18'45" W
244.32'
275.68'

6" W (ABD.)

15" SAN.

12" W

MATCH LINE
SEE SHEET 35 OF 49

68A
U

1

2

RIGHT OF WAY LINE CURVE DATA

①	②
R = 20.00'	R = 749.20'
ARC = 16.59'	ARC = 32.86'
CH = 16.12'	CH = 32.85'
BRG = S 52°04'34" E	BRG = N 30°49'21" E

PARCEL NO.	OWNER	NET TAKE	RESIDUE LEFT	RESIDUE RIGHT
68A-U	GOODYEAR TIRE & RUBBER CO.	3,558	66,098	0

SCALE IN FEET
0 20 40 60

FUNDS	IR

NAME	REVISION	DATE

AA B/Pr 71942R

CALC. BY. DATE	SUM-76-11.57	OHIO
CHKD. BY. DATE	FED. PROJECT IR-76-2(44)19	F.H.W.A. REGION 5

(1201 / 1214)

(36 / 49)

SUMMIT COUNTY
LIMITED ACCESS
RIGHT OF WAY PLANS

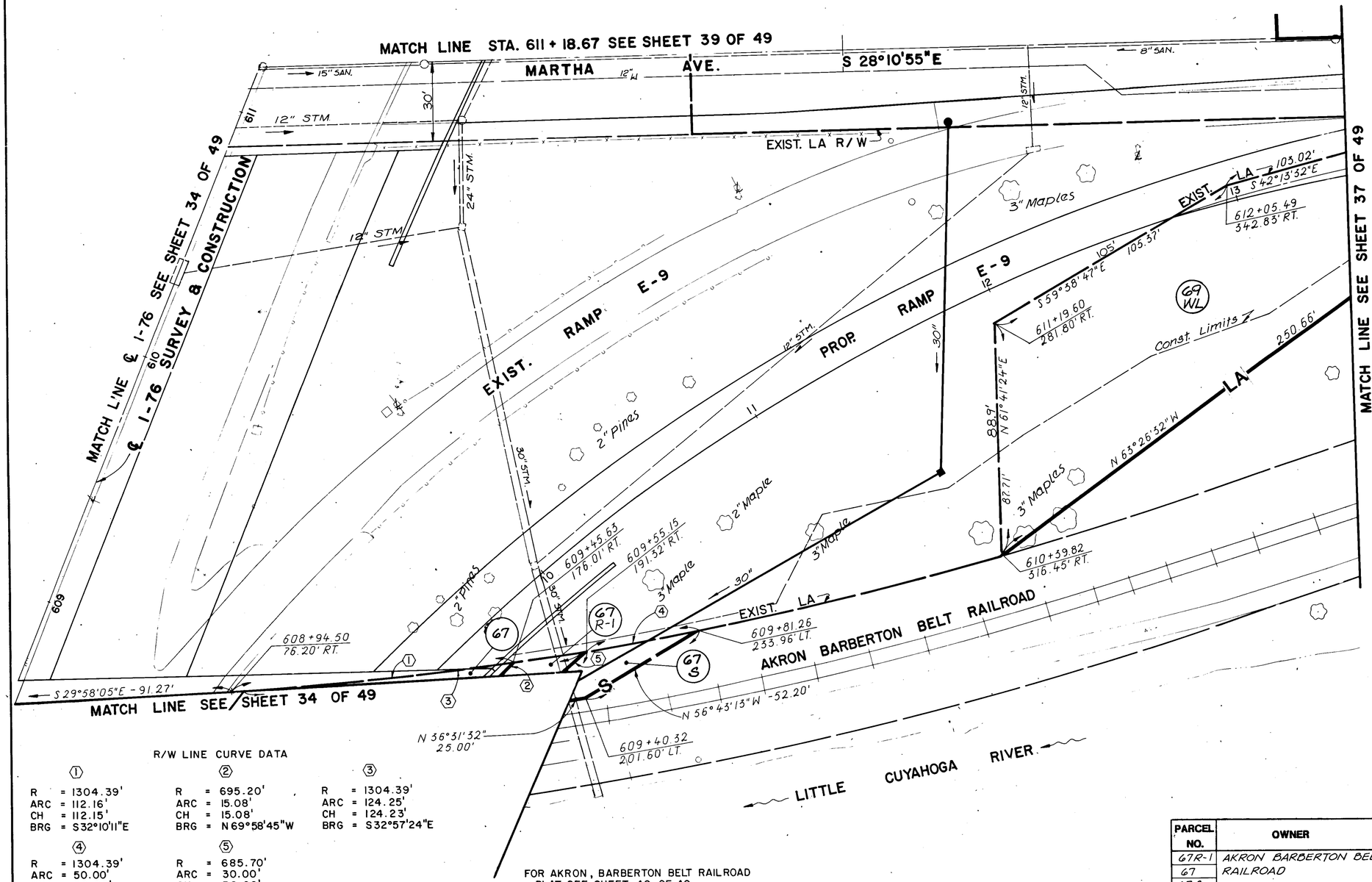

R/W LINE CURVE DATA

①	②	③
R = 1304.39'	R = 695.20'	R = 1304.39'
ARC = 112.16'	ARC = 15.08'	ARC = 124.25'
CH = 112.15'	CH = 15.08'	CH = 124.23'
BRG = S32°10'11"E	BRG = N69°58'45"W	BRG = S32°57'24"E

④	⑤
R = 1304.39'	R = 685.70'
ARC = 50.00'	ARC = 30.00'
CH = 50.00'	CH = 30.00'
BRG = S36°31'32"E	BRG = S73°26'20"E

FOR AKRON, BARBERTON BELT RAILROAD
PLAT SEE SHEET 49 OF 49

PARCEL NO.	OWNER	NET TAKE	RESIDUE LEFT	RESIDUE RIGHT
67R-1	AKRON BARBERTON BELT RAILROAD	5677	—	—
67		674		
67S		671		
69WL	GOODYEAR TIRE & RUBBER	16,579	0	19,586

SCALE IN FEET
0 20 40 60

FUNDS	IR

NAME	REVISION	DATE

CITY OF AKRON, SUMMIT COUNTY
ORIGINAL SPRINGFIELD TOWNSHIP, T1N, R10W
TRACT 2, 0 L I

AA B/Pe 71442R

CITY OF AKRON, SUMMIT COUNTY
ORIGINAL SPRINGFIELD TOWNSHIP, T1N, R10W
TRACT 2,0 L.1

CALC. BY. DATE	SUM-76-11.57	OHIO
CHKD. BY. DATE	FED. PROJECT IR-76-2(44)19	F.H.W.A. REGION 5

1202 / 1214

37 / 48

SUMMIT COUNTY
LIMITED ACCESS
RIGHT OF WAY PLANS

PARCEL NO.	OWNER	NET TAKE	RESIDUE LEFT	RESIDUE RIGHT
69WL	GOODYEAR TIRE & RUBBER CO.	16,579	0	19,586

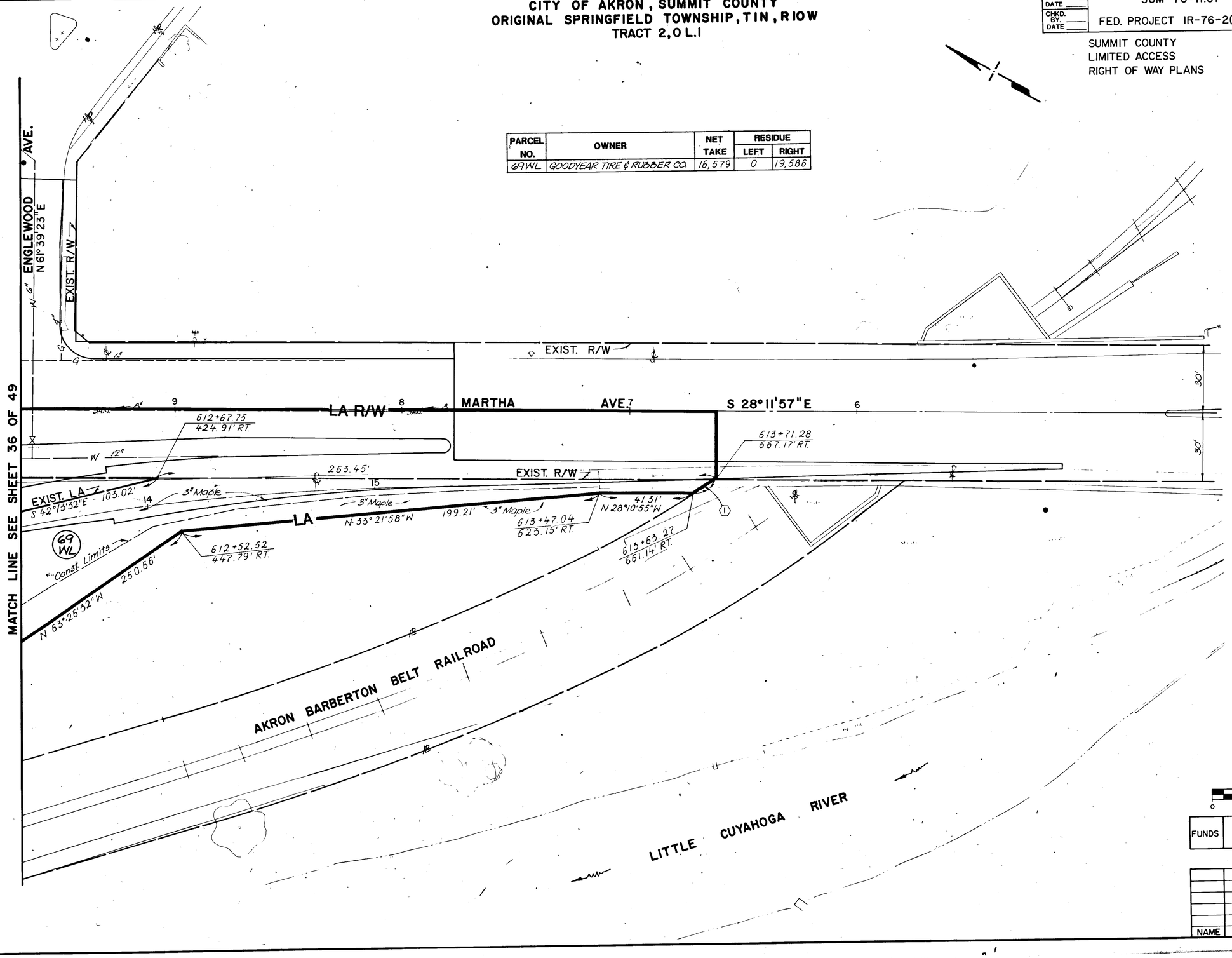

R/W LINE CURVE DATA

(1)
R = 548.69'
ARC = 10.03'
CH = 10.03'
BRG = N 58° 05' 16" W

SCALE IN FEET
0 20 40 60

FUNDS	IR

NAME	REVISION	DATE

CITY OF AKRON, SUMMIT COUNTY
ORIGINAL SPRINGFIELD TOWNSHIP, T1N, R10W
TRACT 2, O.L.1

CALC. BY. DATE		OHIO
CHKD. BY. DATE	SUM-76-11.57 FED. PROJECT IR-76-2(44)19	F.H.W.A. REGION 5

12.03 12.14

38 49

SUMMIT COUNTY
LIMITED ACCESS
RIGHT OF WAY PLANS

74WL	M. & B. TARAS	13,362	0	0
75WL	DARTMOOR CORPORATION	14,168	0	0
78WL	PETER J. KEFALOS ET AL	5717	0	0
79WL	ANTHONY BRANDT	16,473	0	0
80WL	RONALD G. ANDERSON	10,010	0	0

MARKET ST.
EXIST. R/W
157.99'(C) Conc. Curb
S 79°04'20" E
S 79°48'58" E
EXIST. L.A. R/W
EXIST. L.A.
PROP. RAMP E-15
PROP. RAMP E-12
EXIST. RAMP E-12
EXIST. RAMP E-13
EXIST. RAMP E-10
N 10°09'27" E
Shrubs
#1400 Studio East Inc. Beauty & Retail Center 1-Sty. Block
#1404 Clark Gas Station 1-Sty. Brick
Gas Pumps
Quick Strip
East Side Furniture & Gifts. 1-Sty. Block
#1454 2½-Sty. Frame
Mike's Music 1-Sty. Brick
Semi-trailer Storage
Stone Block Bldg
Const. Limits
PARKING
74WL
75WL
78WL
79WL
80WL
N 79°04'20" W 142.55'(D) 142.55'(C)
EXIST. L.A. N 79°04'20" W 12.63'(C)
12.63'(D)
N 27°52'15" W 7.48'(D) 7.22'(C)
100.08'(C) 100'(D) N 79°04'20" W
613+00.00 ℄ 1-76
613+30.09 341.74 Lt.
613+77.44 317.59 Lt.
614+17.62 241.51 Lt.
615+13.84 219.57 Lt.
615+41.27 318.28 Lt.
615+86.66 304.71 Lt.
616+35.25 290.49 Lt.
616+11.30 190.82 Lt.
616+01.57 152.17 Lt.
616+95.02 127.55 Lt.
617+09.15 124.34 Lt.
617+23.97 261.16 Lt.
617+75.05 110.41 Lt.
617+86.61 264.30 Lt.
671+99.66 251.00 Lt.
102.25'(C) S 10°55'40" W 102.25'(D)
103'(D) N 10°55'40" E
103.00'(C)
S 10°55'40" W 103.00'(C)
103'(D) N 10°55'40" E
55.5'(D) 55.50'(C) N 79°04'20" W
143'(D) S 10°09'27" W 143.00'(C)
143'(D) EXIST. R/W
101.06' N 79°04'20" W
N 79°48'58" W 15.10'
EXIST. L.A. N 79°48'58" W 70'(D) 70.00'(C)
S 79°48'58" E 14.11'
100.12'
70.00'(D) 70.00'(C)
MATCH LINE STA. 613+00 SEE SHEET 35 OF 49
MATCH LINE STA. 617+76.91 SEE SHEET 40 OF 49
MATCH LINE ℄ I-76 SEE SHEET 39 OF 49
℄ I-76 SURVEY & CONSTRUCTION
N 84°57'27" E
P.C. STA. 615+54.92
CURVE NO. 4
berm
berm
614
615
616
617

CURVE NO. 4
℄ CURVE DATA

DELTA	16° 43' 34" RT.
DC	2° 0' 30"
R	2852.90'
LC	832.84'
T	419.40'
CH	829.88'
EX(C)	30.66'

STATIONING

MAIN PI STA.	619+74.32
PC STA.	615+54.92
PT STA.	623+87.75

SCALE IN FEET
0 20 40 60

FUNDS	IR

NAME	REVISION	DATE

AA B/Pn 71942R

CALC. BY. DATE	SUM-76-11.57	OHIO
CHKD. BY. DATE	FED. PROJECT IR-76-2(44)19	F.H.W.A. REGION 5

1204
1214

39
49

SUMMIT COUNTY
LIMITED ACCESS
RIGHT OF WAY PLANS

MATCH LINE SEE SHEET 38 OF 49

612 N 84°57'87"E 613 614 615 616 617

℄ I-76 SURVEY & CONSTRUCTION

P.C. STA. 615+54.92

CURVE NO. 4

berm

12"STM.

6" WABD.

12" STM.

16" STM.

S 86°41'41"E 23.45'(C)

613+54.12
92.90' RT.

EXIST. RAMP E-10

S 79°19'53"E 64.63'(C)

N 61°39'23"E

613+30.91
89.50' RT.

3" Pines

21.93'(D)

67.76'(D)

614+16.33
110.41' RT. 3" Pines

130.00'(C) EXIST. LA 130'(D)

612+11.52
140.92' RT.

MARTHA AVE.

MATCH LINE STA. 611+18.67

SEE SHEET 36 OF 49

S 28°10'55"E

PROP. RAMP E-16

2"

216.01'(C)

3" Pines

614+58.20
145.70' RT.

128.00' Conc.

EXIST. LA 128'(D)

PROP. RAMP E-10

24" Dead Tree

#25'(D) 25.00'(C)

#49 2-S'(C) Frame

77 WL

Frame Garage

S 79°19'53"E

615+83.16
180.24' RT.

614+51.25
165.72' RT.

128.00'(C) N 79°19'53"W 128'(D)

25'(D)

31.25'(C) S 11°01'11"W

76 WL

Maples

EXIST. R/W

220.00'

N 28°10'55"W

212.9'(D)

EXIST. R/W

JOHNS AVE.

N 11°01'11"E

6" W

8" SAN.

612+97.92
343.22' RT.

613+56.52
317.99' RT.

S 11°01'11"W

S 61°39'23"W 63.80'

LA R/W

22

21

MATCH LINE SEE SHEET 37 OF 49

10

36" Maple

2-6" Maples

6" Locust

11-6" Locust

14" Locust

3-6" Locust

615+75.94
204.32

EXIST. LA R/W

EXIST. LA R/W

N 61° 39' 23" E

ENGLEWOOD AVE.

LA R/W

23

24

12" STM.

12" STM.

15" STM.

8" SAN.

Bush

Bush

Const. Limits

16" Maple

12 Maple

10" Maple

Picket Fence

Frame Garage

EXIST. R/W

99.95'(D)

35'(D)

36'(D) 24" Maple

CAMBRIDGE ST.

N 10°08'27"E

MATCH LINE STA. 617+76.91 SEE SHEET 41 OF 49

CURVE NO. 4
℄ CURVE DATA

DELTA	16° 43' 34"
DC	2° 0' 30"
R	2852.90'
LC	832.84'
T	419.40'
CH	829.88'
EX(C)	30.66'

STATIONING

MAIN PI STA.	619+74.32
PC STA.	615+54.92
PT STA.	623+87.75

SCALE IN FEET
0 20 40 60

PARCEL NO.	OWNER	NET TAKE	RESIDUE LEFT	RESIDUE RIGHT
76 WL	GOODYEAR TIRE & RUBBER CO.	30,906	0	0
77 WL	JEANE E. OLIVER	3200	0	0

FUNDS	IR

NAME	REVISION	DATE

CITY OF AKRON, SUMMIT COUNTY
ORIGINAL SPRINGFIELD TOWNSHIP, T1N, R10W
TRACT 2, O.L.1

CITY OF AKRON, SUMMIT COUNTY
ORIGINAL SPRINGFIELD TOWNSHIP, T1N, R10W
TRACT 2, O.L.1

CALC. BY.		SUM-76-11.57	OHIO	1205 / 1214
CHKD. BY.		FED. PROJECT IR-76-2(44)19	F.H.W.A. REGION 5	
DATE				

SUMMIT COUNTY
LIMITED ACCESS
RIGHT OF WAY PLANS

40 / 49

EAST MARKET ST. S 79° 49' 53" E

ELM ST.

MATCH LINE STA. 617+76.80 SEE SHEET 38 OF 49

MATCH LINE STA. 624+00 SEE SHEET 42 OF 49

N 10° 09' 27" E

N 10° 21' 08" E ST.

DETROIT

N 0° 31' 06" E

WIGLEY AVE.

EXIST. R/W

EXIST. LA R/W

EXIST. LA

EXIST. RAMP E-15

PROP. RAMP E-15

EXIST. RAMP E-10

Akron Club Of The Deaf 1-Sty. Block #1467

2½ Sty. Frame #1477

2½-Sty. Brick #1481

#1483

Paved Parking

Shrubs

Concrete Drive

Asphalt Drive

R.R. Ties

Concrete

2-Sty. Brick

1-Sty. Brick

#1458 Tall Disco & 1-Sty. Block

#1462 Paul's Restaurant 2-Sty. Block

Asphalt Parking

#1474 Battles Electronic Service 1-Sty. Block

#1476 The Uniform Outlet

#1478 Detroit Cafe Liquor 2-Sty. Brick

#1486 Smith Sign Co. 2-Sty. Brick

1-Sty. Block Addn

Gravel Parking Lot

#1494 #1496 Sunrise Ceramics 2-Sty. Brick

#1500 Mohawk Tire Warehouse 1-Sty. Brick

Semi Trailer Storage

Concrete

#1510 Akron Auto Rustproofing

Gravel

1-Sty Block Garage

2½-Sty Frame #12

Parking

Const. Limits

Berm

8" SAN

12" STM.

18" STM.

48" STM.

30" STM.

15" SAN.

12" SAN.

4" W

12" W

WALK

WALL

81 WL

82 WL

83 WL

84 WL

89 WL

90 WL

91 WL

146.83'(C) S79°49'53"E 146.64'(D)

618+40.48 243.25'Lt.

619+74.87 222.46'Lt.

620+08.74 218.33'Lt.

620+42.69 214.64'Lt.

621+90.71 203.66'Lt. 40.61'(C)

622+43.56 202.97'Lt.

622+45.09 189.21'Lt.

146.62'(C) N 79°49'53"W 146.64'(D)

618+25.94 151.56'Lt.

619+64.19 130.15'Lt.

619+99.02 125.90'Lt.

620+33.31 122.18 LT.

620+72.77 68.22'Lt.

621+44.98 62.92'Lt.

621+52.86 205.68'Lt.

622+63.76 58.26'Lt.

619+32.35 134.51'Lt.

619+24.72 100.24'Lt.

620+30.45 87.32'Lt.

S 79° 49' 53" E 110.00

N 79° 49' 53" W 110.00'(C) 110'(D)

N 10° 21' 08" E 35.00'

S 10° 10' 07" W 143.00'(C)

N 10° 21' 08" E 93.00'(C)

N 10° 21' 08" E 93'(D)

S 10° 16' 28" W 93'(D)

N 10° 18' 48" E 93'(D)

N 79° 49' 53" W 73.70'(D) 74.00'(C)

N 79° 49' 53" W 40.67'(C) 40.67'(D)

N 79° 49' 53" W 80.76'(C) 80.87'(D)

S 10° 10' 07" W 60.79'Lt.

N 0° 31' 06" E 132.39'(C) 132.5'(D)

N 0° 31' 06" E 43.78'(C) 43.84'(D)

P.T. STA. 623+87.75

℄ I-76 SURVEY & CONSTRUCTION

MATCH LINE ℄ I-76 SEE SHEET 41 OF 49

CURVE NO. 4

℄ CURVE DATA	
DELTA	16° 43' 34" RT.
DC	2° 0' 30"
R	2852.90'
LC	832.84'
T	419.40'
CH	829.88'
EX(C)	30.66'
STATIONING	
MAIN PI STA.	619+74.32
PC STA.	615+54.92
PT STA.	623+87.75

R/W CURVE DATA
CURVE 1
ARC = 21.04'
R = 15.00'
CH = 19.35'
BRG = S 39° 39' 22" E

PARCEL NO.	OWNER	NET TAKE	RESIDUE LEFT	RESIDUE RIGHT
81 WL	PAUL SALEM	13,644	0	0
82 WL	R.J. NORRIS & R.L. BURKHART	3850	0	0
83 WL	K. & D. W. BRYSON	3412	0	0
84 WL	ROGER F. & LINDA DIPAOLO	3412	0	0
89 WL	S. & C.A. SMITH	10,557	0	0
90 WL	E. A. & A. PAL	5808	0	0
91 WL	MARVIN & NEDRA HEAD	9778	0	0

SCALE IN FEET
0 20 40 60

FUNDS IR

NAME	REVISION	DATE

AA B/Pg 71942R

CURVE NO. 4
℄ CURVE DATA

DELTA	16° 43' 34" RT.
DC	2° 0' 30"
R	2852.90'
LC	832.84'
T	419.40'
CH	829.88'
EX(C)	30.66'

STATIONING

MAIN PI STA.	619+74.32
PC STA.	615+54.92
PT STA.	623+87.75

PARCEL NO.	OWNER	NET TAKE	RESIDUE LEFT	RESIDUE RIGHT
85WD	PORTER POST	1086	0	0
88WD	KENNETH P. HILLEGASS.	2281	0	0
94WD	D. H. ZENNER	104	0	0
96WD	ROMITO BROS. ELEC. CONST. CO.	2127	0	0

CALC. BY. DATE	SUM-76-11.57	OHIO	1206 12/14
CHKD. BY. DATE	FED. PROJECT IR-76-2(44)19	F.H.W.A. REGION 5	41 49

SUMMIT COUNTY
LIMITED ACCESS
RIGHT OF WAY PLANS

MATCH LINE ℄ I-76 SEE SHEET 40 OF 49

MATCH LINE STA. 617+76.80 SEE SHEET 39 OF 49

MATCH LINE STA. 624+00 SEE SHEET 43 OF 49

℄ I-76 SURVEY & CONSTRUCTION

CURVE NO. 4

P.T. STA. 623+87.75

EXIST. RAMP E-16

PROP. RAMP E-16

PROP. RETAINING WALL

EXIST. LA R/W

LA R/W

ENGLEWOOD AVE.

S 79° 52' 21" E

S 79° 49' 29" E

EXIST. R/W

PROP. RAMP E-10

LA R/W

R/W

EXIST. R/W

CAMBRIDGE ST.

DETROIT ST.

WIGLEY AVE

N 10° 09' 27" E

N 10° 21' 08" E

N 10° 21' 08" W

S 10° 09' 27" W

N 10° 21' 06" W

S 10° 21' 06" E

S 79° 49' 53" E

N 79° 49' 53" W

N 82° 59' 31" W

N 87° 50' 15" W

N 79° 49' 58" W

S 86° 45' 16" W

S 86° 57' 05" W

N 10° 31' 06" E

S 10° 31' 06" W

S 79° 49' 53" E

N 79° 49' 53" W

N 79° 49' 53" W

S 79° 49' 53" E

N 79° 49' 53" W

S 79° 49' 53" E

N 79° 49' 53" W

S 79° 49' 53" E

AA B/P# 71942R

CITY OF AKRON, SUMMIT COUNTY
ORIGINAL SPRINGFIELD TOWNSHIP, T1N, R10W
TRACT 2, O.L.1

CALC. BY. DATE	SUM-76-11.57	OHIO
CHKD. BY. DATE	FED. PROJECT IR-76-2(44)19	F.H.W.A. REGION 5

1207 / 1214

42 / 49

SUMMIT COUNTY
LIMITED ACCESS
RIGHT OF WAY PLANS

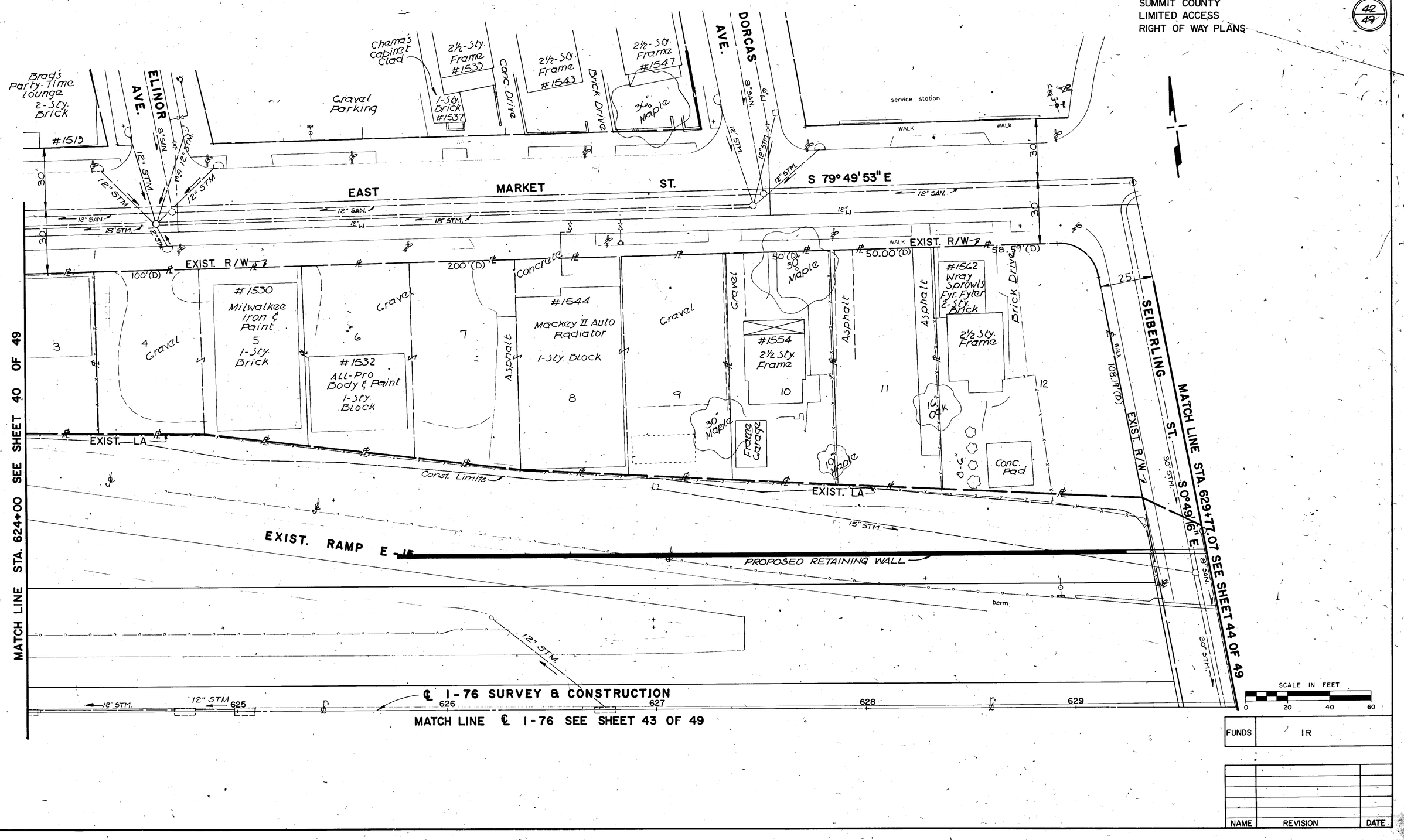

SCALE IN FEET
0 20 40 60

FUNDS	IR

NAME	REVISION	DATE

CALC. BY. DATE	SUM-76-11.57	OHIO
CHKD. BY. DATE	FED. PROJECT IR-76-2(44)19	F.H.W.A. REGION 5

1208
12.14

43
49

SUMMIT COUNTY
LIMITED ACCESS
RIGHT OF WAY PLANS

MATCH LINE STA. 624+00 SEE SHEET 41 OF 49

MATCH LINE ℄ I-76 SEE SHEET 42 OF 49

℄ I-76 SURVEY & CONSTRUCTION

12" STM. 12" STM.

625 626 627 628 629

EXIST. RAMP E-16

PROP. RAMP E-16

berm

PROPOSED RETAINING WALL

EXIST. LA R/W

LA R/W

LA R/W

EXIST. LA R/W

30'

30'

30'

32 33 ENGLEWOOD AVE. S 79°49'29" E 36 37

15" STM.

12" SAN.

12" SAN.

12" STM.

EXIST. R/W

250'(D)

374.75'(D)

EXIST. R/W

WALK

#1474

1½-Sty. Brick Face Block

2-Sty. Brick & Frame

1-Sty. Brick

Conc. Pad

140'(D)

Gravel Parking

Asphalt

Concrete Pad

Asphalt

PAVED PARKING

Asphalt

PAVED PARKING

WALL

WALL

26 27 28 29 30 31 32 33 34 35 36

224.75'(D)

MATCH LINE STA. 629+77.07 SEE SHEET 45 OF 49

S 0°49'16" E

8" SAN.

15" STM.

12" STM.

24" STM.

SEIBERLING ST.

EXIST. R/W

30'

36

WALL

24" STM.

SCALE IN FEET

0 20 40 60

FUNDS	IR

NAME	REVISION	DATE

CITY OF AKRON, SUMMIT COUNTY
ORIGINAL SPRINGFIELD TOWNSHIP, T1N, R10W
TRACT 2, O.L.1

CITY OF AKRON, SUMMIT COUNTY
ORIGINAL SPRINGFIELD TOWNSHIP, T1N, R10W
TRACT 3, O.L.A

CALC. BY. DATE	SUM-76-11.57	OHIO	1209 / 1214
CHKD. BY. DATE	FED. PROJECT IR-76-2(44)19	F.H.W.A. REGION 5	

SUMMIT COUNTY
LIMITED ACCESS
RIGHT OF WAY PLANS

44 / 49

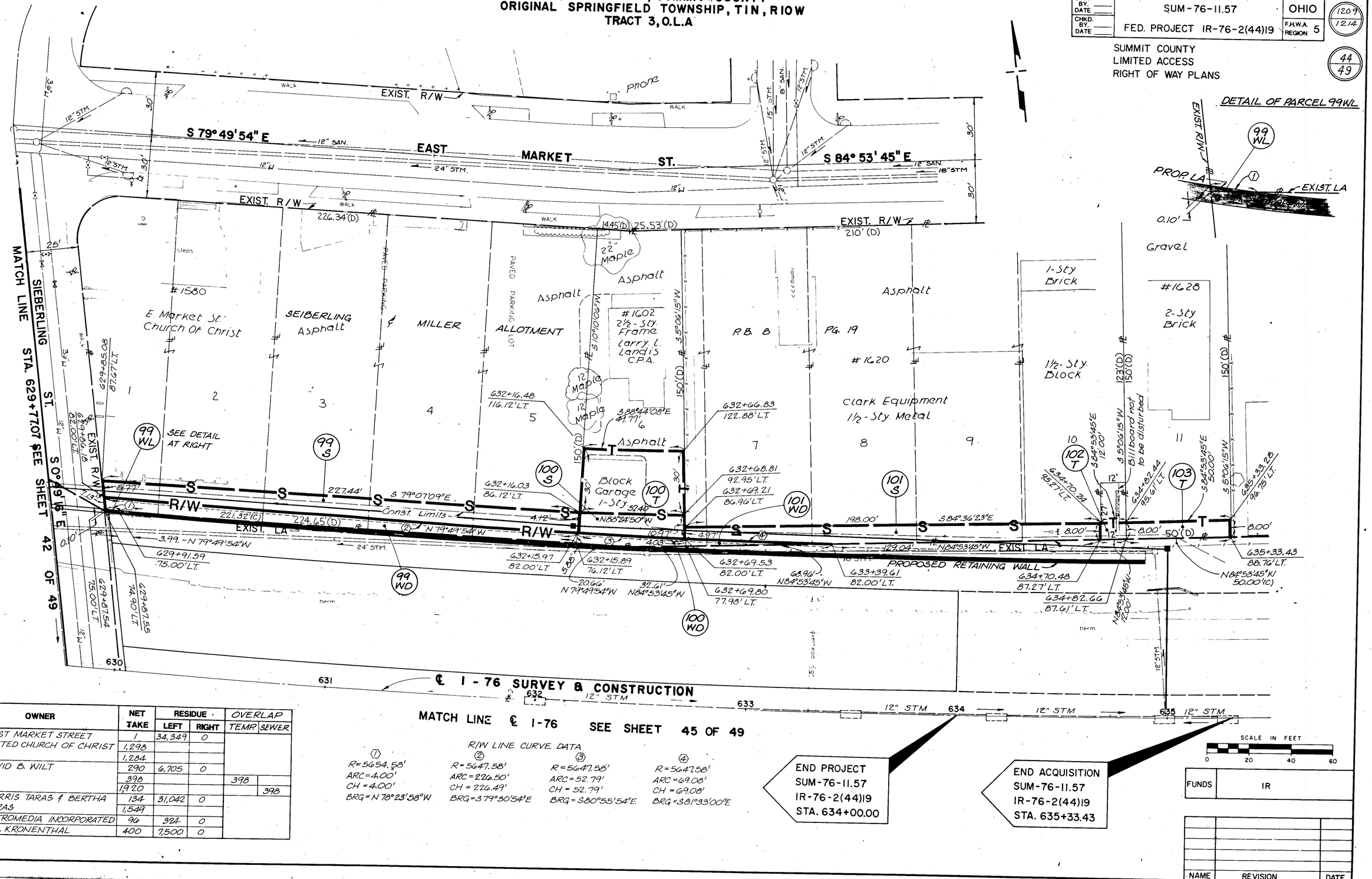

PARCEL NO.	OWNER	NET TAKE	RESIDUE LEFT	RESIDUE RIGHT	OVERLAP TEMP.	OVERLAP SEWER
99WL	EAST MARKET STREET	1	34,349	0		
99WD	UNITED CHURCH OF CHRIST	1,298				
99S		1,284				
100WD	DAVID B. WILT	290	6,705	0		
100S		398			398	
100T		1,920				398
101WD	MORRIS TARAS & BERTHA	134	31,042	0		
101S	TARAS	1,549				
102T	METROMEDIA INCORPORATED	96	324	0		
103T	H.G. KRONENTHAL	400	7,500	0		

R/W LINE CURVE DATA

①	②	③	④
R=5654.58'	R=5647.58'	R=5647.58'	R=5647.58'
ARC=4.00'	ARC=226.50'	ARC=52.79'	ARC=69.08'
CH=4.00'	CH=226.49'	CH=52.79'	CH=69.08'
BRG=N 78°23'58" W	BRG=S 79°30'54" E	BRG=S 80°55'54" E	BRG=S 81°33'00" E

SCALE IN FEET
0 20 40 60

FUNDS	IR

NAME	REVISION	DATE

CALC. BY. DATE	SUM-76-11.57	OHIO
CHKD. BY. DATE	FED. PROJECT IR-76-2(44)19	F.H.W.A. REGION 5

1210 / 1214

45 / 49

SUMMIT COUNTY
LIMITED ACCESS
RIGHT OF WAY PLANS

MATCH LINE ℄ I-76 SEE SHEET 44 OF 49

℄ I-76 SURVEY & CONSTRUCTION

MATCH LINE STA. 629+77.07 SEE SHEET 43 OF 49

MATCH LINE STA. 635+50 SEE SHEET 46 OF 49

S 0° 49' 16" E

S 79° 50' 11" E

S 84° 53' 16" E

ENGLEWOOD AVE.

℄ RELOCATED ENGLEWOOD AVENUE

SEIBERLING ST.

PROPOSED RETAINING WALL

EXIST. LA R/W

LA R/W

12" STM.

24" STM.

10" SAN.

8" SAN

WALK

berm

Asphalt
PAVED PARKING LOT

Maples

Clump 4"-6"

630 631 632 633 634 635

38 39 40 41 42

86 87 88 89 90 91 92 93 94 95

71.40'(D) 50'(D) 50'(D) 43.3'(D) 198'(D)

150'(D)

152.1'(D)

#1560
J.R.B. CO.

2-Sty. Block & Metal

1½-Sty. Brick

SCALE IN FEET
0 20 40 60

FUNDS	IR

NAME	REVISION	DATE

CITY OF AKRON, SUMMIT COUNTY
ORIGINAL SPRINGFIELD TOWNSHIP, T1N, R10W
TRACT 3, O.L.A

AA B/Pk 71942R

CALC. BY. DATE	SUM-76-11.57	OHIO
CHKD. BY. DATE	FED. PROJECT IR-76-2(44)19	F.H.W.A. REGION 5

12.11 / 12.14

46 / 49

SUMMIT COUNTY
LIMITED ACCESS
RIGHT OF WAY PLANS

MATCH LINE STA. 635+50 SEE SHEET 45 OF 49

MATCH LINE STA. 641+50 SEE SHEET 47 OF 49

12" STM. 636 637 638 639 640 641

℄ I-76 SURVEY & CONSTRUCTION

8" SAN. 6" W.L. (ABD.) 18" STM.

EXIST. LA R/W

berm

EXIST. RAMP E-17

EXIST. LA R/W

12" STM.

LA R/W 10" W.L.

LA R/W

12" STM.

ENGLEWOOD AVE.

S 84° 53' 16" E

℄ RELOCATED ENGLEWOOD AVENUE

43 44 45 46 47 48

24" STM. 10" SAN. 18" STM. 8" SAN. 18" STM. 8" STM. 8" SAN.

30'

EXIST. R/W

WALK

EXIST. R/W

WALK

2-Sty. Brick

#1624 Akron Standard

Akron Standard 2-Sty. Brick Office Area

1½-Sty. Brick Factory Area

96 97 98 99 100 101 102 103 104 105 106

VACATED SIDNEY ST. ORD. 582-48

6" W.L. (ABD.)

AKRON, BARBERTON BELT RAILROAD

SCALE IN FEET
0 20 40 60

FUNDS	IR

NAME	REVISION	DATE

CITY OF AKRON, SUMMIT COUNTY
ORIGINAL SPRINGFIELD TOWNSHIP, T1N, R10W
TRACT 3; O.L.A

AA B/Pe 71942R

CALC. BY. DATE	SUM-76-11.57	OHIO
CHKD. BY. DATE	FED. PROJECT IR-76-2(44)19	F.H.W.A. REGION 5

12/12
12/14

47
49

SUMMIT COUNTY
LIMITED ACCESS
RIGHT OF WAY PLANS

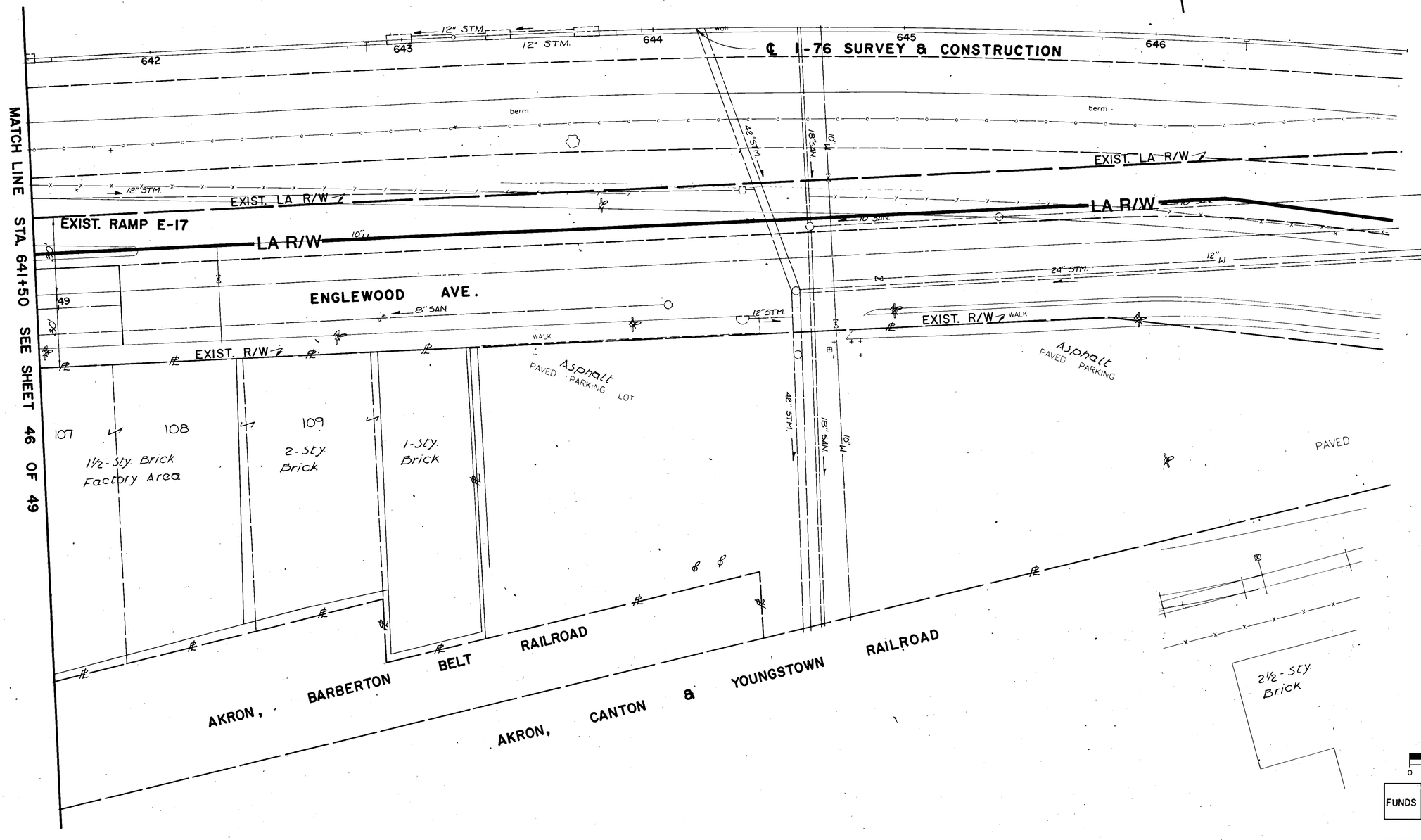

SCALE IN FEET
0 20 40 60

FUNDS	IR

NAME	REVISION	DATE

CITY OF AKRON, SUMMIT COUNTY
ORIGINAL SPRINGFIELD TOWNSHIP, T1N, R10W
TRACT 3, O.L.A

CITY OF AKRON, SUMMIT COUNTY, ORIGINAL SPRINGFIELD TOWNSHIP, T IN, R IOW, TRACT I

CALC. BY. DATE	SUM-76-11.57	OHIO
CHKD. BY. DATE	FED. PROJECT IR-76-2(44)19	F.H.W.A. REGION 5

1213
1214

48
49

SUMMIT COUNTY
LIMITED ACCESS
RIGHT OF WAY PLANS

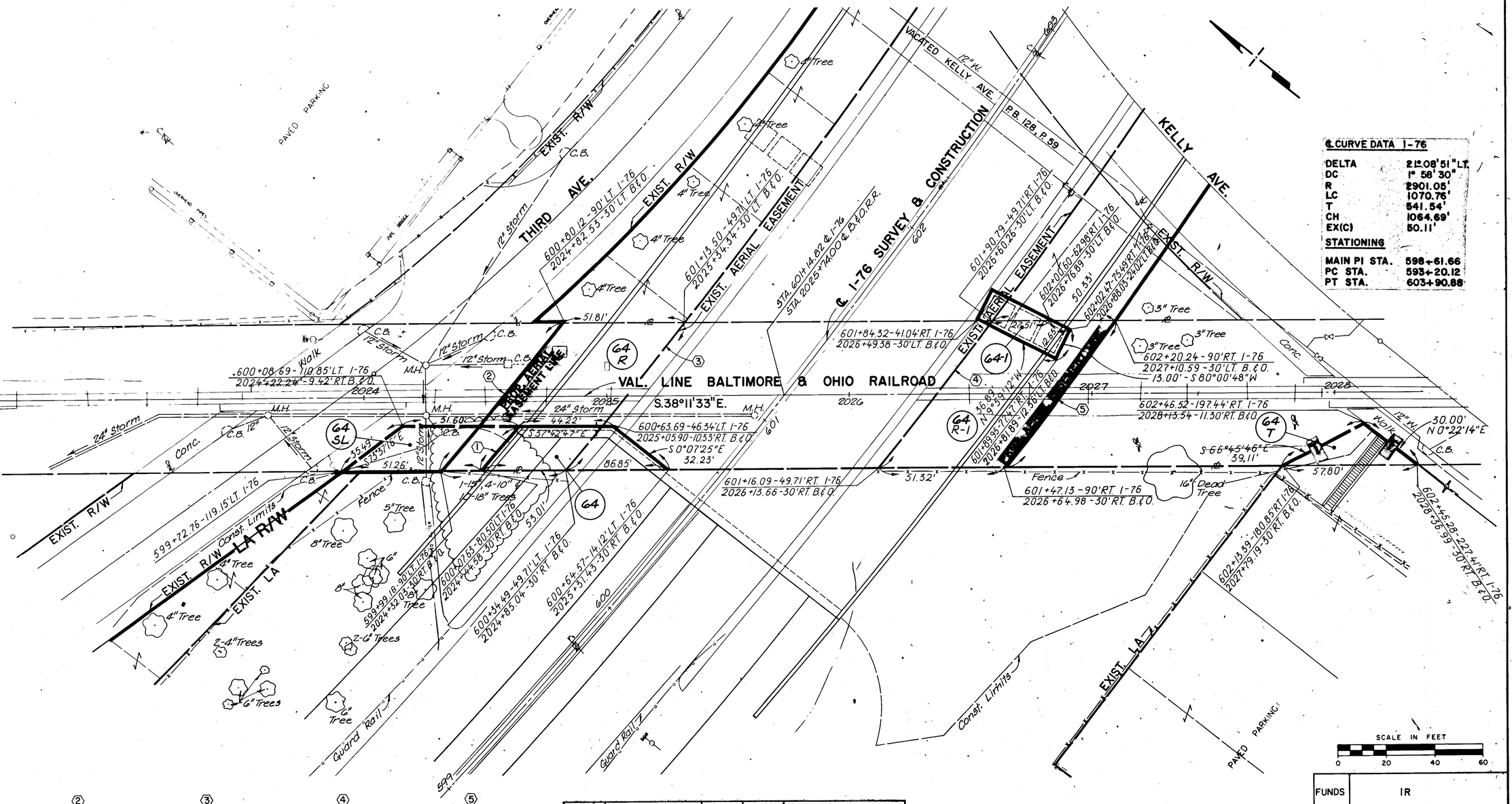

℄ CURVE DATA I-76

DELTA	21° 08' 51" LT.
DC	1° 58' 30"
R	2901.05'
LC	1070.76'
T	541.54'
CH	1064.69'
EX(C)	50.11'

STATIONING

MAIN PI STA.	598+61.66
PC STA.	593+20.12
PT STA.	603+90.88

SCALE IN FEET
0 20 40 60

FUNDS	IR

NAME	REVISION	DATE

① R = 2820.55' ARC = 26.60' CH = 26.60' BRG = S 87°44'37" E

② R = 2811.05' ARC = 78.43' CH = 78.42' BRG = S 88°06'20" E

③ R = 2851.34' ARC = 77.66' CH = 77.66' BRG = N 88°46'57" W

④ R = 2950.76' ARC = 75.98' CH = 75.97' BRG = N 89°38'43" E

⑤ R = 2991.05' ARC = 75.37' CH = 75.37' BRG = S 89°02'58" W

PARCEL NO.	EASEMENT REQUIRED	TOTAL AREA	P.R.O.	AREA OF OVERLAP		
				HIWAY	AERIAL	SLOPE
64R	AERIAL	3144	0	811	—	252
64	HIGHWAY	1313	0	—	811	—
64-1	HIGHWAY	322	0	—	296	—
64SL	SLOPE	932	0	—	252	—
64T	TEMPORARY	541	0	—	—	—
64R-1	AERIAL	3049	0	296	—	—

VALUATION MAP NO. V-120.1 / 20

BALTIMORE & OHIO RAILROAD PLAT

CITY OF AKRON, SUMMIT COUNTY, ORIGINAL SPRINGFIELD TOWNSHIP, T1N, R10W, TRACT 2, O.L.1

CALC. BY. DATE	SUM-76-11.57	OHIO
CHK'D. BY. DATE	FED. PROJECT IR-76-2(44)19	F.H.W.A. REGION 5

1214 / 1214

49 / 49

SUMMIT COUNTY
LIMITED ACCESS
RIGHT OF WAY PLANS

R/W LINE CURVE DATA

① R = 625.41' ARC = 65.59' CH = 65.56' BRG = S 79°41'14" E

② R = 1304.39' ARC = 124.28' CH = 124.23' BRG = S 32°57'24"E

③ R = 685.70' ARC = 82.60' CH = 82.55' BRG = N 71°32'14" W

④ R = 1354.39' ARC = 68.23' CH = 68.22' BRG = N 31°24'40"W

⑤ R = 1304.39' ARC = 112.16' CH = 112.17' BRG = S 32°10'11"E

⑥ R = 695.20' ARC = 15.08' CH = 15.08' BRG = N 69°58'45"W

⑦ R = 685.70' ARC = 30.00' CH = 30.00' BRG = S 73°2C'20"E

⑧ R = 1304.39' ARC = 50.00' CH = 50.00' BRG = S 36°31'32"E

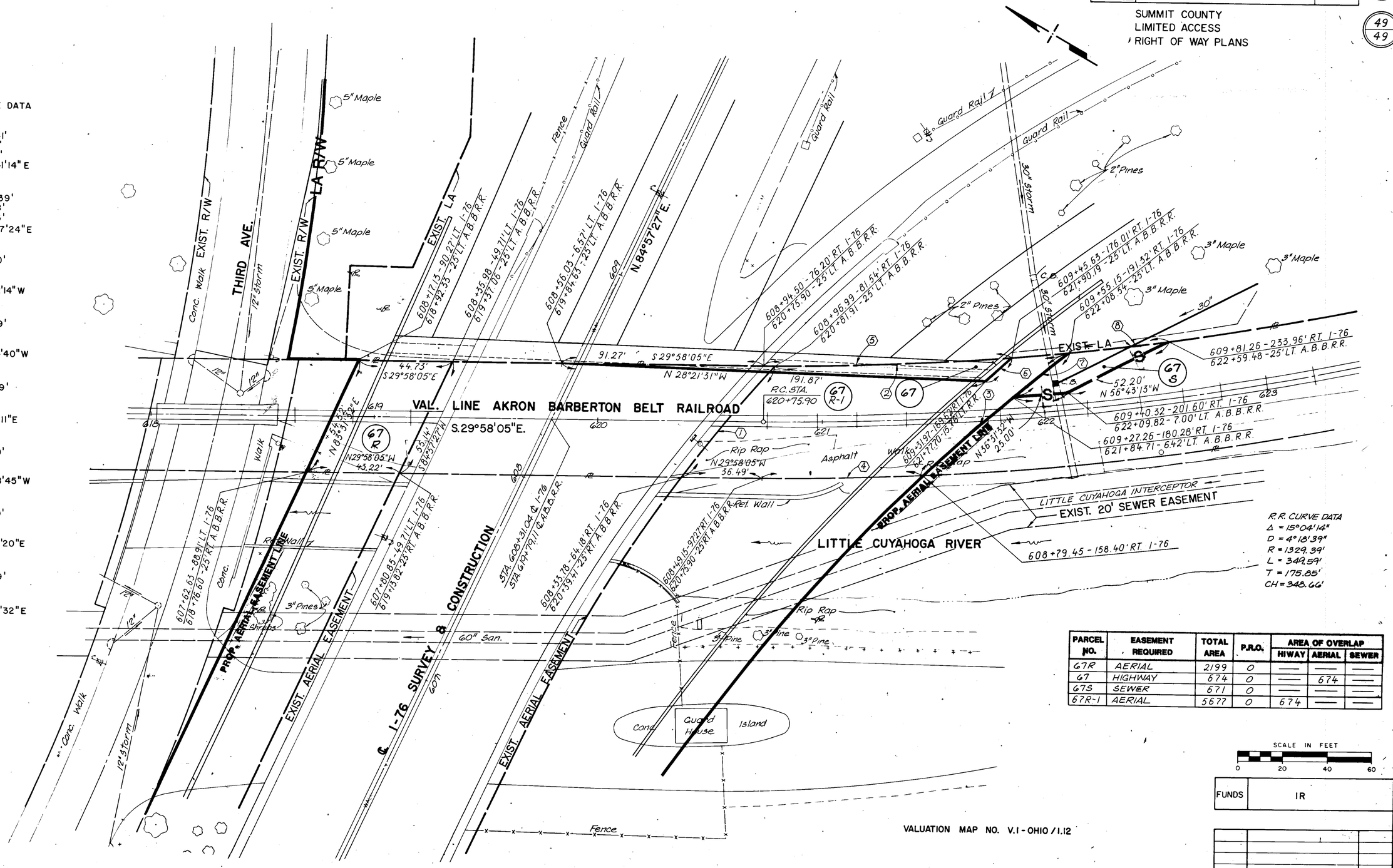

PARCEL NO.	EASEMENT REQUIRED	TOTAL AREA	P.R.O.	AREA OF OVERLAP		
				HIWAY	AERIAL	SEWER
67R	AERIAL	2199	0	—	—	—
67	HIGHWAY	674	0	—	674	—
67S	SEWER	671	0	—	—	—
67R-1	AERIAL	5677	0	674	—	—

SCALE IN FEET
0 20 40 60

FUNDS	IR

VALUATION MAP NO. V.1 - OHIO / 1.12

AKRON BARBERTON BELT RAILROAD PLAT

NAME	REVISION	DATE

SUM-76-11.57
IM-76-2(44)19

FHWA REGION	STATE	PROJECT

1/104

SOIL PROFILE 1/13

SUBSURFACE INVESTIGATION
SUM-76-11.57
AKRON EAST EXPRESSWAY (I.R. 76)
AKRON, OHIO

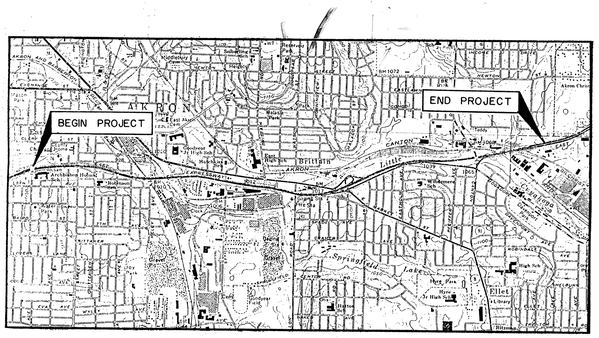

LOCATION MAP

LEGEND

DESCRIPTION	T.R.B. CLASS	OHIO CLASS	% AGG.	% C. SAND	% F. SAND	% SILT	% CLAY	LIQUID LIMIT	PLASTICITY INDEX	WATER CONTENT	SAMPLES TESTED
GRAVEL	A-1-a(0)	A-1-a	57	19	10	*	14	--	--	8	4
GRAVEL AND/OR STONE FRAGS. WITH SAND	A-1-b(0)	A-1-b	28	35	22	10	5	--	--	10	11
FINE SAND	A-3( )	A-3									
COARSE & FINE SAND	----	A-3a	26	16	33	16	9	--	--	10	8
GRAVEL OR STONE FRAGS. WITH SAND AND SILT	A-2-4(0)	A-2-4	39	16	13	*	32	--	--	10	1
GRAVEL WITH SAND, SILT AND CLAY	A-2-6(0)	A-2-6	18	15	32	*	35	--	--	9	1
SANDY SILT	A-4(5)	A-4a	15	10	18	33	24	23	6	12	24
SILT	A-4(8)	A-4b	2	2	15	51	30	24	5	23	4
SILT AND CLAY	A-6( )	A-6a									
SILTY CLAY	A-6( )	A-6b									
ELASTIC CLAY	A-7-5(9)	A-7-5	9	25	11	*	55	61	18	59	1
CLAY	A-7-6( )	A-7-6									

FINE-TEXTURED PEAT
SEDIMENTARY PEAT
RANDOM FILL
UNDERCLAY
COAL
WEATHERED SHALE
WEATHERED SANDSTONE
WEATHERED SILTSTONE
MUDSTONE
SHALE
SANDSTONE
SILTSTONE
LIMESTONE
VARIOUS OTHER MATERIAL
SOD AND/OR TOPSOIL
BERM MATERIAL
PAVEMENT

VISUAL CLASSIFICATION

AUGER BORING-PLAN VIEW
DRIVE SAMPLE AND/OR CORE BORING-PLAN VIEW
ELECTRICAL RESISTIVITY PROBE PLAN VIEW
CONE PENETRATION TEST
SEISMIC SURVEY LINE
% SILT & CLAY; NO HYDROMETER DONE
WATER CONTENT NEARLY EQUAL TO OR GREATER THAN LIQUID LIMIT
INDICATES A NON PLASTIC MATERIAL WITH A HIGH WATER CONTENT

FREE WATER
STATIC WATER LEVEL
NUMBER OF BLOWS FOR "STANDARD PENETRATION" TEST X, Y, & Z = NUMBER OF BLOWS FOR 1st, 2nd, & 3rd 6" RESPECTIVELY
B INDICATES BROKEN ROCK INTERVAL
ELECTRICAL RESISTIVITY PROBE PROFILE
INTERVAL OF RELATIVELY HIGH MOISTURE
T TR TOP OF ROCK
NOTE: FIGURES BESIDE BORINGS INDICATE WATER CONTENT IN PERCENT E.G. 15

INTRODUCTION

THIS REPORT CONSISTS OF THE SOILS INVESTIGATION FOR A 4.4 MILE SECTION OF THE EXISTING AKRON EAST EXPRESSWAY (I.R. 76) BETWEEN S.R. 8 AND GILCHRIST ROAD. IN ADDITION TO THIS REPORT, SEPARATE REPORTS FOR STRUCTURES HAVE BEEN SUBMITTED UNDER OTHER COVERS.

GEOLOGY

THE PROJECT SITE LIES ON THE GLACIATED, HILLY, DEEPLY DISSECTED ALLEGHENY PLATEAU PHYSIOGRAPHIC PROVINCE. RELIEF ALONG THE LENGTH OF THE ROADWAY IS APPROXIMATELY 106 FEET. ELEVATION RANGES FROM A LOW POINT OF 1005.75 AT TEST LOCATION B-25 TO A HIGH OF 1112.06 AT TEST LOCATION B-1.

THE PROJECT AREA WAS GLACIATED BY THE WISCONSIN ICE SHEET, LEAVING A VARIABLE BUT THIN DRIFT, NOT AVERAGING MORE THAN 25 FEET IN THICKNESS. THERE ARE TWO (2) DISTINCT TYPES OF GLACIAL DEPOSITS PRESENT AT THE SITE. THEY ARE THE MOGADORE TILL, WHICH IS A COARSE SANDY TILL WITH MINOR AMOUNTS OF CLAY, AND KAME AND KAME TERRACE DEPOSITS WHICH CONSIST PRIMARILY OF GRAVEL AND SAND MATERIAL. IT SHOULD BE NOTED THAT PORTIONS OF THE AREA ALONG THE LENGTH OF THE ROADWAY ARE "MADE LAND" WHICH ARE AREAS WHERE THE ORIGINAL SURFACE HAS BEEN COMPLETELY MODIFIED BY MAN.

BEDROCK AT THE PROJECT SITE CONSISTS OF THE PENNSYLVANIAN AGED SHARON CONGLOMERATE OF THE POTTSVILLE FORMATION IN THE HIGHLANDS, AND THE LOWER PORTIONS ARE UNDERLAIN BY SHALES AND SANDSTONES OF THE LOGAN FORMATION WHICH IS MISSISSIPPIAN IN AGE. BASED UPON INFORMATION OBTAINED FROM THE OHIO GEOLOGIC SURVEY, THE BEDROCK SURFACE IS EXPECTED TO BE AT AN APPROXIMATE ELEVATION OF 1,000 NEAR THE WEST END OF THE PROJECT SITE AND APPROXIMATELY 1,050 NEAR THE EAST END OF THE PROJECT.

EXPLORATION

THE SUBSURFACE INVESTIGATION FOR THIS PROJECT WAS CONDUCTED BETWEEN JULY AND AUGUST, 1987. A TOTAL OF 56 ROADWAY BORINGS WERE ADVANCED WITH CME-45c TRACK MOUNTED, CME-750 ALL TERRAIN, AND CME-75 TRUCK MOUNTED DRILLING RIGS USING CONVENTIONAL 2.25 AND 3.25 INCH I.D. HOLLOW STEM AUGERS.

TEST BORING INFORMATION FOR BRIDGES AND RETAINING WALLS HAS BEEN SUBMITTED UNDER SEPARATE COVERS.

INVESTIGATIONAL FINDINGS

MATERIALS ENCOUNTERED AT THE PROJECT SITE WERE PREDOMINATELY COMPRISED OF SANDY SILTS (A-4A) AND SAND AND GRAVEL (A-1-A, A-1-B AND A-3A). OTHER SOIL UNITS ENCOUNTERED ON A MUCH MORE LIMITED BASIS WERE SILTS (A-4B), ELASTIC CLAY (A-7-B), AND GRAVEL WITH SAND, SILT, AND CLAY (A-2-6).

FOR SPECIFIC CONDITIONS AT VARIOUS DEPTHS, REFER TO THE INDIVIDUAL TEST BORING LOGS WHICH FORM A PART OF THIS REPORT.

NOTE - ALL AVAILABLE SOIL AND BEDROCK INFORMATION WHICH CAN BE CONVENIENTLY SHOWN ON THE STRUCTURE FOUNDATION INVESTIGATION SHEETS HAS BEEN SO REPORTED. ADDITIONAL SUBSURFACE INVESTIGATIONS MAY HAVE BEEN MADE TO STUDY SOME SPECIAL ASPECT OF THE PROJECT. COPIES OF THIS DATA, IF ANY, MAY BE INSPECTED IN THE DISTRICT DEPUTY DIRECTOR'S OFFICE, THE BUREAU OF TESTS AT 1600 WEST BROAD STREET, THE PAVEMENT AND SOILS SECTION OF THE BUREAU OF LOCATION AND DESIGN OR IN THE BRIDGE BUREAU AT 25 SOUTH FRONT STREET.

SUBSURFACE INVESTIGATION
SUM-76-11.57
AKRON EAST EXPRESSWAY (I.R. 76)
AKRON, OHIO

R & R International, Inc.
GEOTECHNICAL ENGINEERS - GEOLOGISTS
3675 COPLEY ROAD
AKRON, OH 44321
216-666-2200

10478

SUM-76-11.57

FHWA REGION	STATE	PROJECT

2/104

SOIL PROFILE

2/13

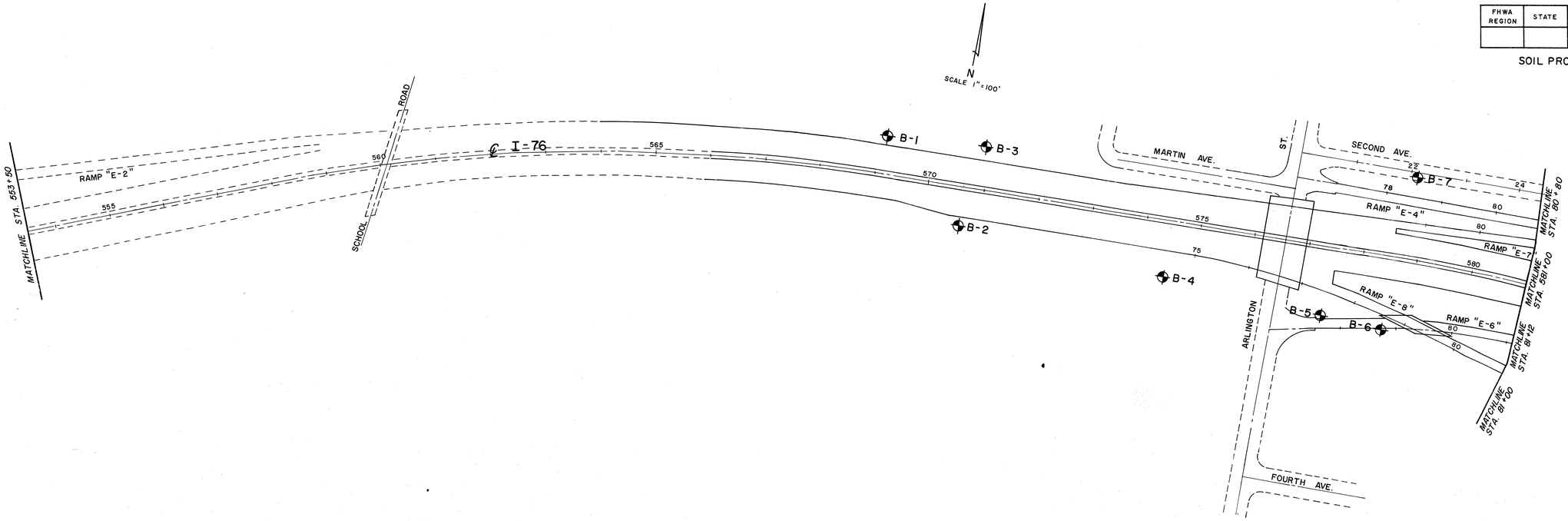

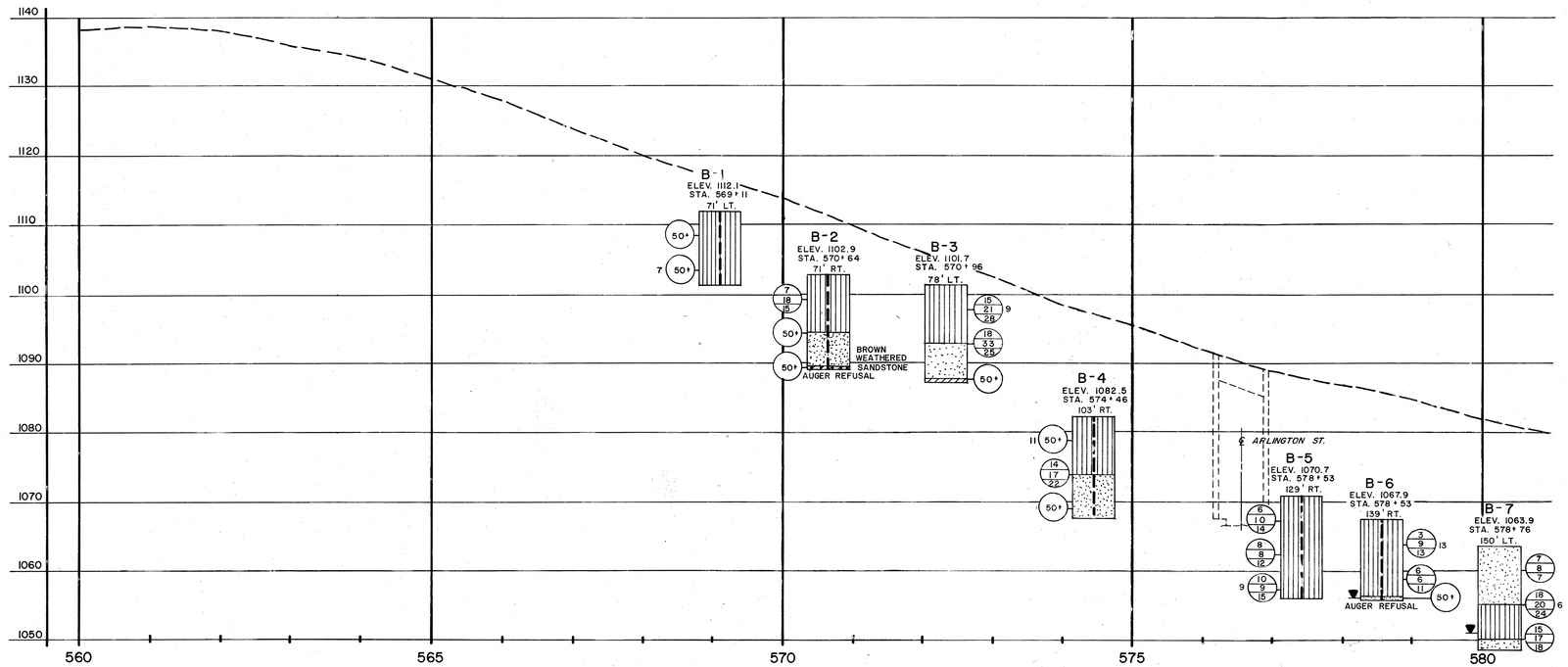

SUBSURFACE INVESTIGATION
SUM-76-11.57
AKRON EAST EXPRESSWAY (I.R. 76)
AKRON, OHIO

R & R International, Inc.
GEOTECHNICAL ENGINEERS-GEOLOGISTS
3675 COPLEY ROAD
AKRON, OH 44321
216-666-2200

56478

SUM-76-11.57

FHWA REGION	STATE	PROJECT

3/104

SOIL PROFILE

3/13

N
SCALE 1" = 100'

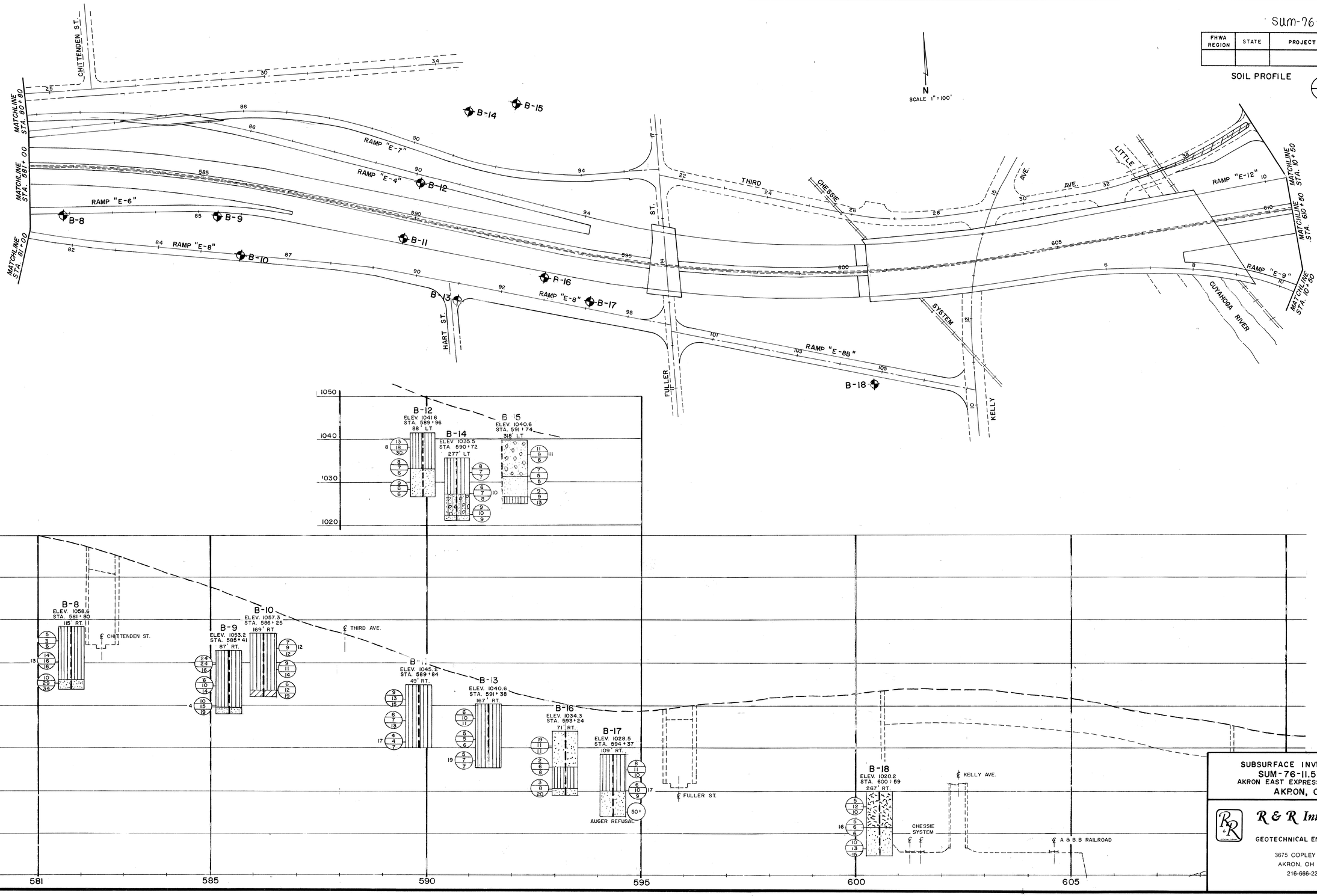

SUBSURFACE INVESTIGATION
SUM-76-11.57
AKRON EAST EXPRESSWAY (I.R. 76)
AKRON, OHIO

R & R International, Inc.
GEOTECHNICAL ENGINEERS-GEOLOGISTS
3675 COPLEY ROAD
AKRON, OH 44321
216-666-2200

SUM-76-11.57

FHWA REGION	STATE	PROJECT

4 / 104

SOIL PROFILE

4 / 13

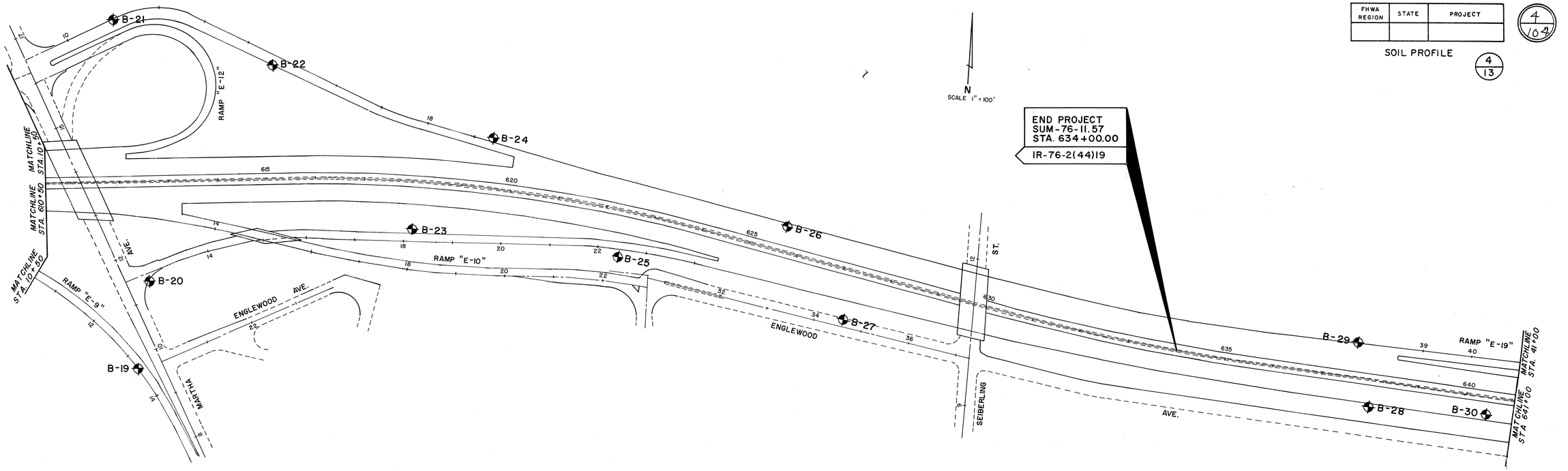

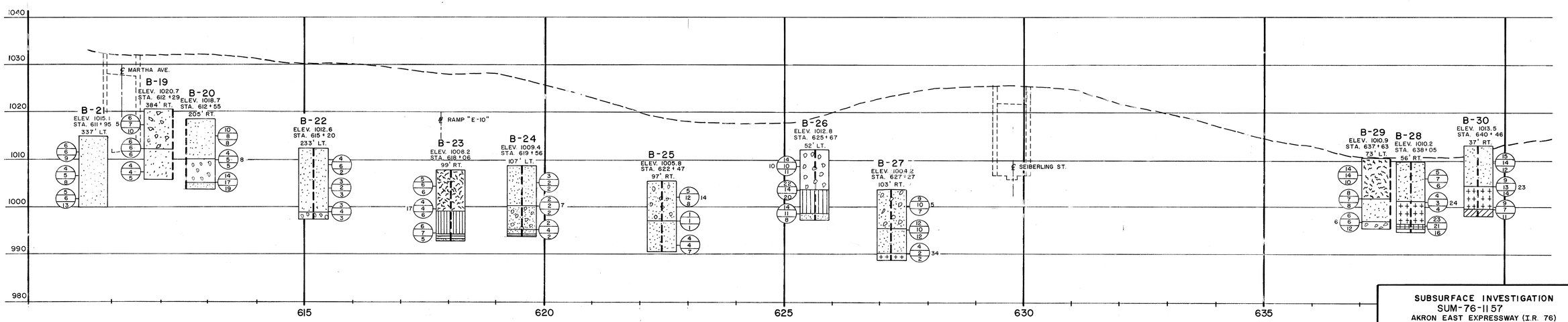

SUBSURFACE INVESTIGATION
SUM-76-11 57
AKRON EAST EXPRESSWAY (I.R. 76)
AKRON, OHIO

R & R International, Inc.
GEOTECHNICAL ENGINEERS - GEOLOGISTS
3675 COPLEY ROAD
AKRON, OH 44321
216-666-2200

66478

Sum-76-11.57

FHWA REGION	STATE	PROJECT

5 / 104

SOIL PROFILE

5 / 13

LOG OF BORING

Date Started 7-30-87 Sampler Type Split Spoon Dia. 2.0 Water Elev. ---

Date Completed 7-30-87 Casing: Length -- Dia. ---

Boring No. B-1 Station & Offset Sta. 569 + 12 71' LT. Surface Elev. 1112.1

ELEV.	DEPTH	STD. PEN. (N)	REC. Ft.	LOSS Ft.	DESCRIPTION	SAMPLE NO.	SAMPLE TYPE	PHYSICAL CHARACTERISTICS % AGG.	% C. SAND	% F. SAND	% SILT	% CLAY	L.L.	P.L.	P.I.	W.C.	SHTL CLASS.
1112.1	0																
	5	50/0.3	0.1		Hard, brown SANDY SILT, trace rock fragments, moist.	1	SS										
1103.6	10	50/0.3	0.3		Hard, brown and gray SANDY SILT, trace gravel and organics, moist.	2	SS	4.9	7.6	9.4	*	78.1	--	--	--	7.6	A-4a
1101.6					TERMINATION DEPTH 10.5 FEET												

* SILT AND CLAY COMBINED

LOG OF BORING

Date Started 7-3-87 Sampler Type Split Spoon Dia. 2.0 Water Elev. ---

Date Completed 7-3-87 Casing: Length -- Dia. ---

Boring No. B-2 Station & Offset Sta. 570 + 64 71' RT. Surface Elev. 1102.9

ELEV.	DEPTH	STD. PEN. (N)	REC. Ft.	LOSS Ft.	DESCRIPTION	SAMPLE NO.	SAMPLE TYPE	PHYSICAL CHARACTERISTICS % AGG.	% C. SAND	% F. SAND	% SILT	% CLAY	L.L.	P.L.	P.I.	W.C.	SHTL CLASS.
1102.9	0																
	5	7-18-15	1.5		Very stiff, brown SANDY SILT, dry.	1	SS										
1094.4	10	21-52/0.4	0.5		Very dense, brown SILTY SAND, trace rock fragments, dry.	2	SS										
1089.4		50/0.1	0.0		Brown SANDSTONE, extremely altered.	3	SS										
1089.3	15				TERMINATION DEPTH 13.6 FEET												

LOG OF BORING

Date Started 7-30-87 Sampler Type Split Spoon Dia. 2.0 Water Elev. ---

Date Completed 7-30-87 Casing: Length -- Dia. ---

Boring No. B-3 Station & Offset Sta. 570 + 95 78' LT. Surface Elev. 1101.7

ELEV.	DEPTH	STD. PEN. (N)	REC. Ft.	LOSS Ft.	DESCRIPTION	SAMPLE NO.	SAMPLE TYPE	PHYSICAL CHARACTERISTICS % AGG.	% C. SAND	% F. SAND	% SILT	% CLAY	L.L.	P.L.	P.I.	W.C.	SHTL CLASS.
1101.7	0																
	5	15-21-28	1.2		Hard, brown SANDY SILT, some gravel, trace rock fragments, moist.	1	SS	36.7	8.0	12.2	*	43.1	--	--	--	8.7	A-4a
1093.2	10	18-33-25	1.5		Very dense, tan SAND, little silt, trace rock fragments, moist.	2	SS										
1088.2		50/0.4	0.4		Hard, gray SILT AND CLAY, trace rock fragments, damp.	3	SS										
1087.7	15				TERMINATION DEPTH 14.0 FEET												

* SILT AND CLAY COMBINED

SUBSURFACE INVESTIGATION
SUM-76-11.57
AKRON EAST EXPRESSWAY (I.R. 76)
AKRON, OHIO

R & R International, Inc.
GEOTECHNICAL ENGINEERS - GEOLOGISTS
3675 COPLEY ROAD
AKRON, OH 44321
216-666-2200

SUM-76-11.57

FHWA REGION	STATE	PROJECT

6/104

SOIL PROFILE

6/13

LOG OF BORING

Date Started 7-29-87 Sampler Type Split Spoon Dia. 2.0 Water Elev. ---

Date Completed 7-29-87 Casing: Length -- Dia. ---

Boring No. B-4 Station & Offset Sta. 574 + 46 103' RT. Surface Elev. 1082.5

ELEV.	DEPTH	STD. PEN. (N)	REC. Ft.	LOSS Ft.	DESCRIPTION	SAMPLE NO.	SAMPLE TYPE	PHYSICAL CHARACTERISTICS % AGG.	% C. SAND	% F. SAND	% SILT	% CLAY	L.L.	P.L.	P.I.	W.C.	SHTL CLASS.
1082.5	0																
	5	18-22-50/0.3	1.0		Hard, brown SANDY SILT, trace gravel, moist.	1	SS	6.4	9.2	21.2	*	63.2	--	--	--	10.6	A-4a
1074.0		14-17-22	0.0			2	SS										
	10				Dense to very dense, brown SILTY SAND, trace gravel, moist.												
		50/0.4	0.4			3	SS										
1067.5	15				TERMINATION DEPTH 15.0 FEET												

* SILT AND CLAY COMBINED

LOG OF BORING

Date Started 7-29-87 Sampler Type Split Spoon Dia. 2.0 Water Elev. 1056.4

Date Completed 7-29-87 Casing: Length -- Dia. ---

Boring No. B-6 Station & Offset Sta. 578 + 53 139' RT. Surface Elev. 1067.9

ELEV.	DEPTH	STD. PEN. (N)	REC. Ft.	LOSS Ft.	DESCRIPTION	SAMPLE NO.	SAMPLE TYPE	PHYSICAL CHARACTERISTICS % AGG.	% C. SAND	% F. SAND	% SILT	% CLAY	L.L.	P.L.	P.I.	W.C.	SHTL CLASS.
1167.9	0																
	5	3-9-13	1.1		Very stiff, brown SANDY SILT, trace gravel, moist.	1	SS	9.6	6.3	17.9	*	66.2	--	--	--	12.9	A-4a
		6-6-11	0.4			2	SS										
	10																
1056.9		50/0.1	0.1		Very dense, brown SAND, moist. AUGER REFUSAL AT 11.6 FEET.	3	SS										
1056.3					TERMINATION DEPTH 11.6 FEET												

* SILT AND CLAY COMBINED

LOG OF BORING

Date Started 7-29-87 Sampler Type Split Spoon Dia. 2.0 Water Elev. ---

Date Completed 7-29-87 Casing: Length -- Dia. ---

Boring No. B-5 Station & Offset Sta. 577 + 40 129' RT. Surface Elev. 1070.7

ELEV.	DEPTH	STD. PEN. (N)	REC. Ft.	LOSS Ft.	DESCRIPTION	SAMPLE NO.	SAMPLE TYPE	PHYSICAL CHARACTERISTICS % AGG.	% C. SAND	% F. SAND	% SILT	% CLAY	L.L.	P.L.	P.I.	W.C.	SHTL CLASS.
1070.7	0																
	5	6-10-14	1.4		Very stiff, brown SANDY SILT, trace gravel and organics, moist.	1	SS										
1062.2		8-8-12	1.5			2	SS										
	10				Very stiff, brown SANDY SILT, some gravel, moist.												
		10-9-15	1.4			3	SS	22.8	17.0	22.4	*	37.8	--	--	--	9.0	A-4a
1055.7	15				TERMINATION DEPTH 15.0 FEET												

* SILT AND CLAY COMBINED

SUBSURFACE INVESTIGATION
SUM-76-11.57
AKRON EAST EXPRESSWAY (I.R. 76)
AKRON, OHIO

R & R International, Inc.
GEOTECHNICAL ENGINEERS-GEOLOGISTS
3675 COPLEY ROAD
AKRON, OH 44321
216-666-2200

55478

SUM-76-11.57

FHWA REGION	STATE	PROJECT

SOIL PROFILE

7/104

7/13

LOG OF BORING

Date Started 7-30-87 Sampler Type Split Spoon Dia. 2.0 Water Elev. 1051.4

Date Completed 7-30-87 Casing: Length -- Dia. ---

Boring No. B-7 Station & Offset Sta. 578 + 76 150' LT. Surface Elev. 1063.9

ELEV.	DEPTH	STD. PEN. (N)	REC. Ft.	LOSS Ft.	DESCRIPTION	SAMPLE NO.	SAMPLE TYPE	% AGG.	% C. SAND	% F. SAND	% SILT	% CLAY	L.L.	P.L.	P.I.	W.C.	SHTL CLASS.
1063.9	0																
	5	7-8-7	1.3		Medium dense, brown SILTY SAND, trace gravel, moist.	1	SS										
1055.4	10	18-20-24	1.2		Hard, brown SANDY SILT, trace gravel, moist.	2	SS	12.6	8.7	22.0	*	56.7	--	--	--	5.8	A-4a
1050.4		15-17-18	1.0		Dense, brown SILTY SAND, trace gravel and rock fragments, moist.	3	SS										
1048.9	15				TERMINATION DEPTH 15.0 FEET						*	SILT AND CLAY COMBINED					

LOG OF BORING

Date Started 7-29-87 Sampler Type Split Spoon Dia. 2.0 Water Elev. ---

Date Completed 7-29-87 Casing: Length -- Dia. ---

Boring No. B-8 Station & Offset Sta. 581 + 80 115' RT. Surface Elev. 1058.6

ELEV.	DEPTH	STD. PEN. (N)	REC. Ft.	LOSS Ft.	DESCRIPTION	SAMPLE NO.	SAMPLE TYPE	% AGG.	% C. SAND	% F. SAND	% SILT	% CLAY	L.L.	P.L.	P.I.	W.C.	SHTL CLASS.
1058.6	0																
	5	5-3-6	1.0			1	SS										
	10	14-16-16	1.5		Stiff to hard, brown and gray SANDY SILT, trace gravel, moist.	2	SS	9.9	9.6	20.9	*	59.6	21.8	15.7	6.1	12.9	A-4a
1045.1		10-29-34	1.3		Very dense, brown SILTY SAND, trace gravel, moist.	3	SS										
1044.1					Very dense, brown SAND, little silt, trace gravel and rock fragments, moist.												
1043.6	15				TERMINATION DEPTH 15.0 FEET						*	SILT AND CLAY COMBINED					

LOG OF BORING

Date Started 7-29-87 Sampler Type Split Spoon Dia. 2.0 Water Elev. ---

Date Completed 7-29-87 Casing: Length -- Dia. ---

Boring No. B-9 Station & Offset Sta. 585 + 42 87' RT. Surface Elev. 1053.2

ELEV.	DEPTH	STD. PEN. (N)	REC. Ft.	LOSS Ft.	DESCRIPTION	SAMPLE NO.	SAMPLE TYPE	% AGG.	% C. SAND	% F. SAND	% SILT	% CLAY	L.L.	P.L.	P.I.	W.C.	SHTL CLASS.
1053.2	0																
	5	24-24-16	1.5		Hard, brown SANDY SILT, trace gravel, moist.	1	SS										
1044.7	10	6-10-14	1.5		Very stiff, brown and gray SANDY SILT, trace gravel, trace clay, moist.	2	SS										
1039.7		10-15-19			Dense, brown SAND, little silt, some gravel, moist.	3	SS	32.7	14.7	38.4	*	14.2	--	--	--	4.3	A-3a
1038.2	15				TERMINATION DEPTH 15.0 FEET						*	SILT AND CLAY COMBINED					

SUBSURFACE INVESTIGATION
SUM-76-11.57
AKRON EAST EXPRESSWAY (I.R. 76)
AKRON, OHIO

R & R International, Inc.
GEOTECHNICAL ENGINEERS-GEOLOGISTS
3675 COPLEY ROAD
AKRON, OH 44321
216-666-2200

56478

Sum-76-11.57

FHWA REGION	STATE	PROJECT

8/104

SOIL PROFILE

8/13

LOG OF BORING

Date Started 7-30-87 Sampler Type Split Spoon Dia. 2.0 Water Elev. ---

Date Completed 7-30-87 Casing: Length -- Dia. ---

Boring No. B-10 Station & Offset Sta. 586 + 25 169' RT. Surface Elev. 1057.3

ELEV.	DEPTH	STD. PEN. (N)	REC. Ft.	LOSS Ft.	DESCRIPTION	SAMPLE NO.	SAMPLE TYPE	PHYSICAL CHARACTERISTICS % AGG.	% C. SAND	% F. SAND	% SILT	% CLAY	L.L.	P.L.	P.I.	W.C.	SHTL CLASS.
1057.3	0																
	5	7-9-12	1.1		Very stiff, brown and gray SANDY SILT, trace gravel, moist.	1	SS	7.6	10.2	23.0	*	59.2	--	--	--	12.2	A-4a
1048.8	10	9-11-14	0.9		Very stiff, brown and gray SANDY SILT, trace gravel and organics, moist.	2	SS										
1043.8		6-12-19	1.5		Hard, brown and gray SILT AND CLAY, moist.	3	SS										
1042.3	15				TERMINATION DEPTH 15.0 FEET						*	SILT AND CLAY COMBINED					

LOG OF BORING

Date Started 7-30-87 Sampler Type Split Spoon Dia. 2.0 Water Elev. ---

Date Completed 7-30-87 Casing: Length -- Dia. ---

Boring No. B-11 Station & Offset Sta. 589 + 84 49' RT. Surface Elev. 1045.1

ELEV.	DEPTH	STD. PEN. (N)	REC. Ft.	LOSS Ft.	DESCRIPTION	SAMPLE NO.	SAMPLE TYPE	PHYSICAL CHARACTERISTICS % AGG.	% C. SAND	% F. SAND	% SILT	% CLAY	L.L.	P.L.	P.I.	W.C.	SHTL CLASS.
1045.1	0																
	5	9-13-15	1.3		Very stiff, brown and gray mottled SANDY SILT, trace gravel, moist.	1	SS										
1036.6	10	6-7-13	1.5		Very stiff, brown SANDY SILT, trace gravel, moist.	2	SS										
1031.6		4-4-7	1.1		Stiff, brown SANDY SILT, little gravel, moist.	3	SS	23.6	13.8	15.9	*	46.7	--	--	--	17.3	A-4a
1030.1	15				TERMINATION DEPTH 15.0 FEET						*	SILT AND CLAY COMBINED					

LOG OF BORING

Date Started 7-29-87 Sampler Type Split Spoon Dia. 2.0 Water Elev. ---

Date Completed 7-29-87 Casing: Length -- Dia. ---

Boring No. B-12 Station & Offset Sta. 589 + 96 89' LT. Surface Elev. 1041.6

ELEV.	DEPTH	STD. PEN. (N)	REC. Ft.	LOSS Ft.	DESCRIPTION	SAMPLE NO.	SAMPLE TYPE	PHYSICAL CHARACTERISTICS % AGG.	% C. SAND	% F. SAND	% SILT	% CLAY	L.L.	P.L.	P.I.	W.C.	SHTL CLASS.
1041.6	0																
	5	13-18-30	1.2		Hard, brown SANDY SILT, little gravel, moist.	1	SS	24.4	11.5	18.1	*	46.0	--	--	--	7.9	A-4a
1033.1	10	8-7-6	1.4		Medium dense, brown SILTY SAND, little gravel and rock fragments, moist.	2	SS										
1028.1		9-6-6	1.3		Medium dense, brown SILTY SAND, trace gravel and rock fragments, moist.	3	SS										
1026.6	15				TERMINATION DEPTH 15.0 FEET						*	SILT AND CLAY COMBINED					

SUBSURFACE INVESTIGATION
SUM-76-11.57
AKRON EAST EXPRESSWAY (I.R. 76)
AKRON, OHIO

R & R International, Inc.
GEOTECHNICAL ENGINEERS - GEOLOGISTS
3675 COPLEY ROAD
AKRON, OH 44321
216-666-2200

6A2B

Sum-76-11.57

FHWA REGION	STATE	PROJECT

9/164

SOIL PROFILE

9/13

LOG OF BORING

Date Started 7-30-87 Sampler Type Split Spoon Dia. 2.0 Water Elev. ---

Date Completed 7-30-87 Casing: Length -- Dia. ---

Boring No. B-12A Station & Offset --- Surface Elev. 1041±

ELEV.	DEPTH	STD. PEN. (N)	REC. Ft.	LOSS Ft.	DESCRIPTION	SAMPLE NO.	SAMPLE TYPE	PHYSICAL CHARACTERISTICS % AGG.	% C.SAND	% F.SAND	% SILT	% CLAY	L.L.	P.L.	P.I.	W.C.	SHTL CLASS.
1041.0	0																
	5	5-5-4	0.3		Loose, brown SAND, little silt, trace rock fragments, moist.	1	SS										
1032.5	10	5-6-7	1.1		Medium dense, brown SAND, little silt, little gravel, trace rock fragments, moist.	2	SS										
1027.5		12-32-50	1.3		Very dense, brown GRAVEL with sand, silt and clay, moist.	3	SS	18.3	15.5	30.9	*	35.3	--	--	--	9.3	A-2-6
1026.0	15				TERMINATION DEPTH 15.0 FEET												
											*	SILT AND CLAY COMBINED					

LOG OF BORING

Date Started 7-30-87 Sampler Type Split Spoon Dia. 2.0 Water Elev. ---

Date Completed 7-30-87 Casing: Length -- Dia. ---

Boring No. B-13 Station & Offset Sta. 591 + 38 167' RT. Surface Elev. 1040.6

ELEV.	DEPTH	STD. PEN. (N)	REC. Ft.	LOSS Ft.	DESCRIPTION	SAMPLE NO.	SAMPLE TYPE	PHYSICAL CHARACTERISTICS % AGG.	% C.SAND	% F.SAND	% SILT	% CLAY	L.L.	P.L.	P.I.	W.C.	SHTL CLASS.
1040.6	0																
	5	6-10-11	1.4		Very stiff to stiff, brown SANDY SILT, trace to little gravel, moist.	1	SS										
	10	5-5-6	1.5			2	SS										
		5-7-7	1.3			3	SS	15.5	5.3	17.1	*	62.1	--	--	--	18.6	A-4a
1025.6	15				TERMINATION DEPTH 15.0 FEET												
											*	SILT AND CLAY COMBINED					

LOG OF BORING

Date Started 7-29-87 Sampler Type Split Spoon Dia. 2.0 Water Elev. 1020.5

Date Completed 7-29-87 Casing: Length -- Dia. ---

Boring No. B-14 Station & Offset Sta. 590 + 72 277' LT. Surface Elev. 1035.5

ELEV.	DEPTH	STD. PEN. (N)	REC. Ft.	LOSS Ft.	DESCRIPTION	SAMPLE NO.	SAMPLE TYPE	PHYSICAL CHARACTERISTICS % AGG.	% C.SAND	% F.SAND	% SILT	% CLAY	L.L.	P.L.	P.I.	W.C.	SHTL CLASS.
1035.5	0																
	5	8-7-7	1.2		Stiff, brown and gray SANDY SILT, trace gravel and rock fragments, moist.	1	SS										
1027.0	10	6-7-8	1.4		Medium dense, brown GRAVEL with sand and silt, moist.	2	SS	39.2	15.9	13.0	*	31.9	--	--	--	9.6	A-2-4
1022.0		9-10-9	1.2		Medium dense, brown SAND, some silt, trace gravel and rock fragments, moist.	3	SS										
1020.5	15				TERMINATION DEPTH 15.0 FEET												
											*	SILT AND CLAY COMBINED					

SUBSURFACE INVESTIGATION
SUM-76-11.57
AKRON EAST EXPRESSWAY (I.R. 76)
AKRON, OHIO

R & R International, Inc.
GEOTECHNICAL ENGINEERS - GEOLOGISTS
3675 COPLEY ROAD
AKRON, OH 44321
216-666-2200

SUM-76-11.57

FHWA REGION	STATE	PROJECT

10/104

SOIL PROFILE

10/13

LOG OF BORING

Date Started 7-30-87 Sampler Type Split Spoon Dia. 2.0 Water Elev. 1025.7

Date Completed 7-30-87 Casing: Length -- Dia. ---

Boring No. B-15 Station & Offset Sta. 591 + 74 318' LT. Surface Elev. 1040.7

ELEV.	DEPTH	STD. PEN. (N)	REC. Ft.	LOSS Ft.	DESCRIPTION	SAMPLE NO.	SAMPLE TYPE	PHYSICAL CHARACTERISTICS % AGG.	% C. SAND	% F. SAND	% SILT	% CLAY	L.L.	P.L.	P.I.	W.C.	SHTL CLASS.
1040.7	0																
	5	11-9-6	1.0		Medium dense, brown GRAVEL AND STONE FRAGMENTS with sand, some silt, moist.	1	SS	16.7	41.1	17.2	*	25.0	--	--	--	11.1	A-1-b
1032.2	10	7-5-5	1.0		Medium dense, brown and gray SILTY SAND, trace gravel, trace clay and rock fragments, moist.	2	SS										
1027.2	15	9-9-13	1.0		Very stiff, brown SANDY SILT, trace gravel and rock fragments, moist.	3	SS										
1025.7					TERMINATION DEPTH 15.0 FEET												

* SILT AND CLAY COMBINED

LOG OF BORING

Date Started 8-4-87 Sampler Type Split Spoon Dia. 2.0 Water Elev. ---

Date Completed 8-4-87 Casing: Length -- Dia. ---

Boring No. B-16 Station & Offset Sta. 593 + 24 71' RT. Surface Elev. 1034.3

ELEV.	DEPTH	STD. PEN. (N)	REC. Ft.	LOSS Ft.	DESCRIPTION	SAMPLE NO.	SAMPLE TYPE	PHYSICAL CHARACTERISTICS % AGG.	% C. SAND	% F. SAND	% SILT	% CLAY	L.L.	P.L.	P.I.	W.C.	SHTL CLASS.
1034.3	0																
	5	19-11-11	1.0		Medium dense, brown SAND, little silt, little gravel, dry.	1	SS										
1025.8	10	2-6-8	1.5		Stiff, brown SANDY SILT, trace gravel, moist.	2	SS										
1020.8		3-8-20	1.5		Medium dense, brown and gray SILTY SAND, trace rock fragments, moist.	3	SS										
1019.5					Medium dense, brown SAND, trace rock fragments, moist.												
1019.3	15				TERMINATION DEPTH 15.0 FEET												

* SILT AND CLAY COMBINED

LOG OF BORING

Date Started 7-30-87 Sampler Type Split Spoon Dia. 2.0 Water Elev. ---

Date Completed 7-30-87 Casing: Length -- Dia. ---

Boring No. B-17 Station & Offset Sta. 594 + 37 109' RT. Surface Elev. 1028.5

ELEV.	DEPTH	STD. PEN. (N)	REC. Ft.	LOSS Ft.	DESCRIPTION	SAMPLE NO.	SAMPLE TYPE	PHYSICAL CHARACTERISTICS % AGG.	% C. SAND	% F. SAND	% SILT	% CLAY	L.L.	P.L.	P.I.	W.C.	SHTL CLASS.
1028.5	0																
	5	8-11-10	1.2		Very stiff, brown and gray SANDY SILT, trace gravel, moist.	1	SS										
1020.0	10	6-10-9	1.4		Medium dense, brown and gray SAND, some silt, little gravel, trace rock fragments, moist.	2	SS	26.3	18.3	28.5	*	26.9	--	--	--	16.5	A-3a
1015.0		31-50/0.4	0.9		Very dense, brown SAND, little silt, trace gravel and rock fragments. AUGER REFUSAL AT 14.4 FEET.	3	SS										
1014.1	15				TERMINATION DEPTH 14.4 FEET												

* SILT AND CLAY COMBINED

SUBSURFACE INVESTIGATION
SUM-76-11.57
AKRON EAST EXPRESSWAY (I.R. 76)
AKRON, OHIO

R & R International, Inc.
GEOTECHNICAL ENGINEERS-GEOLOGISTS
3655 COPLEY ROAD
AKRON, OH 44321
216-666-2200

Sum-76-11.57

FHWA REGION	STATE	PROJECT

SOIL PROFILE

11/104

11/13

LOG OF BORING

Date Started 8-3-87 Sampler Type Split Spoon Dia. 2.0 Water Elev. ---

Date Completed 8-3-87 Casing: Length -- Dia. ---

Boring No. B-18 Station & Offset Sta. 600 + 59 267' RT. Surface Elev. 1020.2

ELEV.	DEPTH	STD. PEN. (N)	REC. Ft.	LOSS Ft.	DESCRIPTION	SAMPLE NO.	SAMPLE TYPE	PHYSICAL CHARACTERISTICS % AGG.	% C. SAND	% F. SAND	% SILT	% CLAY	L.L.	P.L.	P.I.	W.C.	SHTL CLASS.
1020.2	0																
		5-12-10	1.0		Medium dense, brown SILTY SAND, trace gravel, rock fragments and cinders, moist. (Fill)	1	SS										
	5																
1011.7		5-6-6	1.5			2	SS	19.6	12.5	54.2	*	13.7	--	--	--	16.1	A-3a
	10				Medium dense, brown SAND, little silt, moist.												
1006.7		10-13-15			Medium dense, brown SAND, some silt, trace gravel and rock fragments, moist.	3	SS										
1005.2	15				TERMINATION DEPTH 15.0 FEET												

* SILT AND CLAY COMBINED

LOG OF BORING

Date Started 8-2-87 Sampler Type Split Spoon Dia. 2.0 Water Elev. ---

Date Completed 8-2-87 Casing: Length -- Dia. ---

Boring No. B-20 Station & Offset Sta. 612 + 55 205' RT. Surface Elev. 1018.7

ELEV.	DEPTH	STD. PEN. (N)	REC. Ft.	LOSS Ft.	DESCRIPTION	SAMPLE NO.	SAMPLE TYPE	PHYSICAL CHARACTERISTICS % AGG.	% C. SAND	% F. SAND	% SILT	% CLAY	L.L.	P.L.	P.I.	W.C.	SHTL CLASS.
1018.7	0																
		10-8-8	1.4		Medium dense, brown SILTY SAND, trace gravel and rock fragments, moist.	1	SS										
	5																
1010.2		4-5-5	1.3			2	SS	61.0	23.3	9.5	*	6.2	--	--	--	7.8	A-1-a
	10				Loose to medium dense, brown GRAVEL, some sand, trace silt, moist.												
1005.2		14-17-19	1.0		Dense, brown SAND, little silt, trace gravel and rock fragments, moist.	3	SS										
1003.7	15				TERMINATION DEPTH 15.0 FEET												

* SILT AND CLAY COMBINED

LOG OF BORING

Date Started 8-2-87 Sampler Type Split Spoon Dia. 2.0 Water Elev. ---

Date Completed 8-2-87 Casing: Length -- Dia. ---

Boring No. B-19 Station & Offset Sta. 612 + 29 384' RT. Surface Elev. 1020.7

ELEV.	DEPTH	STD. PEN. (N)	REC. Ft.	LOSS Ft.	DESCRIPTION	SAMPLE NO.	SAMPLE TYPE	PHYSICAL CHARACTERISTICS % AGG.	% C. SAND	% F. SAND	% SILT	% CLAY	L.L.	P.L.	P.I.	W.C.	SHTL CLASS.
1020.7	0																
		6-7-10	1.5		Medium dense, brown GRAVEL with sand, trace silt, moist.	1	SS	6.2	43.6	45.2	*	5.0	--	--	--	5.1	A-1-b
	5																
1012.2		6-6-6	1.5			2	SS										
	10				Medium dense to loose, brown SAND, trace silt, trace gravel, moist.												
		4-4-5	1.1			3	SS										
1005.7	15				TERMINATION DEPTH 15.0 FEET												

* SILT AND CLAY COMBINED

LOG OF BORING

Date Started 8-4-87 Sampler Type Split Spoon Dia. 2.0 Water Elev. ---

Date Completed 8-4-87 Casing: Length -- Dia. ---

Boring No. B-21 Station & Offset Sta. 611 + 95 337' LT. Surface Elev. 1015.1

ELEV.	DEPTH	STD. PEN. (N)	REC. Ft.	LOSS Ft.	DESCRIPTION	SAMPLE NO.	SAMPLE TYPE	PHYSICAL CHARACTERISTICS % AGG.	% C. SAND	% F. SAND	% SILT	% CLAY	L.L.	P.L.	P.I.	W.C.	SHTL CLASS.
1015.1	0																
		6-6-9	1.5			1	SS										
	5				Medium dense, brown SAND, trace silt, trace gravel, dry.												
		4-5-8	1.5			2	SS										
	10																
1001.6		5-6-13	1.5		Medium dense, brown SAND, little gravel, trace silt and rock fragments, moist.	3	SS										
1000.1	15				TERMINATION DEPTH 15.0 FEET												

SUBSURFACE INVESTIGATION
SUM-76-11.57
AKRON EAST EXPRESSWAY (I.R. 76)
AKRON, OHIO

R & R International, Inc.
GEOTECHNICAL ENGINEERS - GEOLOGISTS
867 COPLEY ROAD
AKRON, OH 44321
216-666-2200

SUM-76-11,57

FHWA REGION	STATE	PROJECT

SOIL PROFILE

12/104

12/13

LOG OF BORING

Date Started 8-3-87 Sampler Type Split Spoon Dia. 2.0 Water Elev. ---

Date Completed 8-3-87 Casing: Length -- Dia. ---

Boring No. B-22 Station & Offset Sta. 615 + 20 233' LT. Surface Elev. 1012.6

ELEV.	DEPTH	STD. PEN. (N)	REC. Ft.	LOSS Ft.	DESCRIPTION	SAMPLE NO.	SAMPLE TYPE	PHYSICAL CHARACTERISTICS % AGG.	% C. SAND	% F. SAND	% SILT	% CLAY	L.L.	P.L.	P.I.	W.C.	SHTL CLASS.
1012.6	0																
	5	4-6-2	0.5			1	SS										
					Loose, brown SAND, some silt, trace to little gravel, moist.												
	10	3-2-3	1.0			2	SS										
999.1		3-4-3	1.5		Loose, brown GRAVEL, little silt, little sand, moist.	3	SS	13.5	65.3	15.6	*	5.6	--	--	--	8.2	A-1-a
997.6	15				TERMINATION DEPTH 15.0 FEET												

* SILT AND CLAY COMBINED

LOG OF BORING

Date Started 8-3-87 Sampler Type Split Spoon Dia. 2.0 Water Elev. ---

Date Completed 8-3-87 Casing: Length -- Dia. ---

Boring No. B-24 Station & Offset Sta. 619 + 56 107' LT. Surface Elev. 1009.4

ELEV.	DEPTH	STD. PEN. (N)	REC. Ft.	LOSS Ft.	DESCRIPTION	SAMPLE NO.	SAMPLE TYPE	PHYSICAL CHARACTERISTICS % AGG.	% C. SAND	% F. SAND	% SILT	% CLAY	L.L.	P.L.	P.I.	W.C.	SHTL CLASS.
1009.4	0																
	5	3-2-2	1.0		Loose, brown SILTY SAND, trace gravel, moist.	1	SS										
1000.9		2-2-2	1.0			2	SS	24.3	29.7	30.6	*	15.4	--	--	--	7.1	A-1-b
	10				Loose, brown GRAVEL with sand, little silt, moist.												
995.9		2-4-2	1.5		Loose, brown SILTY SAND, trace gravel, moist.	3	SS										
994.9					Medium stiff, gray SILTY CLAY, damp.												
994.4	15				TERMINATION DEPTH 15.0 FEET												

* SILT AND CLAY COMBINED

LOG OF BORING

Date Started 8-3-87 Sampler Type Split Spoon Dia. 2.0 Water Elev. ---

Date Completed 8-3-87 Casing: Length -- Dia. ---

Boring No. B-23 Station & Offset Sta. 618 + 06 99' RT. Surface Elev. 1008.2

ELEV.	DEPTH	STD. PEN. (N)	REC. Ft.	LOSS Ft.	DESCRIPTION	SAMPLE NO.	SAMPLE TYPE	PHYSICAL CHARACTERISTICS % AGG.	% C. SAND	% F. SAND	% SILT	% CLAY	L.L.	P.L.	P.I.	W.C.	SHTL CLASS.
1008.2	0																
	5	5-6-6	1.5		Stiff, brown and gray SANDY SILT, trace gravel, brick fragments and cinders, moist. (Fill)	1	SS										
999.7		4-4-6	1.5			2	SS	17.2	5.6	7.3	*	69.9	26.0	18.1	7.9	16.6	A-4a
	10				Stiff, gray SANDY SILT, little gravel, damp.												
994.7		6-7-5	1.5		Stiff, gray SILTY CLAY, damp.	3	SS										
993.7					Medium dense, brown and gray SAND, some gravel, trace silt, moist.												
993.2	15				TERMINATION DEPTH 15.0 FEET												

* SILT AND CLAY COMBINED

LOG OF BORING

Date Started 8-3-87 Sampler Type Split Spoon Dia. 2.0 Water Elev. ---

Date Completed 8-3-87 Casing: Length -- Dia. ---

Boring No. B-25 Station & Offset Sta. 622 + 47 97' RT. Surface Elev. 1005.8

ELEV.	DEPTH	STD. PEN. (N)	REC. Ft.	LOSS Ft.	DESCRIPTION	SAMPLE NO.	SAMPLE TYPE	PHYSICAL CHARACTERISTICS % AGG.	% C. SAND	% F. SAND	% SILT	% CLAY	L.L.	P.L.	P.I.	W.C.	SHTL CLASS.
1005.8	0																
	5	5-12-8	1.5		Medium dense, brown GRAVEL with sand, little silt, moist.	1	SS	22.9	32.8	28.2	*	16.1	--	--	--	13.9	A-1-b
997.3		1-1-1	0.5			2	SS										
	10				Very loose, brown SAND, little gravel, little silt, moist.												
992.3		4-4-7	1.5		Medium dense, brown SAND, some silt, moist.	3	SS										
990.8	15				TERMINATION DEPTH 15.0 FEET												

* SILT AND CLAY COMBINED

SUBSURFACE INVESTIGATION
SUM-76-11.57
AKRON EAST EXPRESSWAY (I.R. 76)
AKRON, OHIO

R & R International, Inc.
GEOTECHNICAL ENGINEERS - GEOLOGISTS
3675 COPLEY ROAD
AKRON, OH 44321
216-666-2200

SUM-76-11.57

FHWA REGION	STATE	PROJECT

13/104

SOIL PROFILE

13/13

LOG OF BORING

Date Started 8-2-87 Sampler Type Split Spoon Dia. 2.0 Water Elev. ---

Date Completed 8-2-87 Casing: Length -- Dia. ---

Boring No. B-26 Station & Offset Sta. 625 + 67 52' LT. Surface Elev. 1012.8

ELEV.	DEPTH	STD. PEN. (N)	REC. Ft.	LOSS Ft.	DESCRIPTION	SAMPLE NO.	SAMPLE TYPE	PHYSICAL CHARACTERISTICS % AGG.	% C. SAND	% F. SAND	% SILT	% CLAY	L.L.	P.L.	P.I.	W.C.	SHTL CLASS.
1012.8	0																
	5	14-10-11	1.0		Medium dense, brown GRAVEL, some sand, trace to little silt, moist.	1	SS	64.5	14.2	10.5	*	10.8	--	--	--	10.3	A-1-a
1004.3		22-14-20	0.3			2	SS										
	10				Hard, brown SANDY SILT, trace gravel, moist.												
999.3		14-11-8	1.3		Medium dense, brown SILTY SAND, trace gravel, moist.	3	SS										
997.8	15				TERMINATION DEPTH 15.0 FEET												

* SILT AND CLAY COMBINED

LOG OF BORING

Date Started 8-2-87 Sampler Type Split Spoon Dia. 2.0 Water Elev. ---

Date Completed 8-2-87 Casing: Length -- Dia. ---

Boring No. B-28 Station & Offset Sta. 638 + 05 56' RT. Surface Elev. 1010.2

ELEV.	DEPTH	STD. PEN. (N)	REC. Ft.	LOSS Ft.	DESCRIPTION	SAMPLE NO.	SAMPLE TYPE	PHYSICAL CHARACTERISTICS % AGG.	% C. SAND	% F. SAND	% SILT	% CLAY	L.L.	P.L.	P.I.	W.C.	SHTL CLASS.
1010.2	0																
	5	5-7-6	1.2		Medium dense, brown SAND, some silt, trace gravel, moist.	1	SS										
1001.7		4-3-4	1.5			2	SS	0.2	0.9	6.6	*	92.3	--	--	--	23.9	A-4b
	10				Medium stiff, brown SILT, some clay, trace sand, moist.												
996.7		23-21-16	1.5		Hard, gray CLAY, trace silt, trace gravel, moist.	3	SS										
995.7					Dense, brown SAND, trace silt, moist.												
995.2	15				TERMINATION DEPTH 15.0 FEET												

* SILT AND CLAY COMBINED

LOG OF BORING

Date Started 8-2-87 Sampler Type Split Spoon Dia. 2.0 Water Elev. ---

Date Completed 8-2-87 Casing: Length -- Dia. ---

Boring No. B-27 Station & Offset Sta. 627 + 27 103' RT. Surface Elev. 1004.2

ELEV.	DEPTH	STD. PEN. (N)	REC. Ft.	LOSS Ft.	DESCRIPTION	SAMPLE NO.	SAMPLE TYPE	PHYSICAL CHARACTERISTICS % AGG.	% C. SAND	% F. SAND	% SILT	% CLAY	L.L.	P.L.	P.I.	W.C.	SHTL CLASS.
1004.2	0																
	5	9-10-7	1.0		Medium dense, brown GRAVEL with sand, little silt, moist.	1	SS	47.2	20.3	17.7	*	14.8	--	--	--	5.3	A-1-b
996.0		12-10-12	1.3			2	SS										
	10				Medium dense, brown SAND, little silt, trace gravel, moist.												
990.7		4-2-2	1.5		Medium stiff, brown SILT, little sand, moist.	3	SS	0.0	0.5	19.1	*	80.4	22.8	17.8	5.0	33.7	A-4b
989.2	15				TERMINATION DEPTH 15.0 FEET												

* SILT AND CLAY COMBINED

LOG OF BORING

Date Started 8-2-87 Sampler Type Split Spoon Dia. 2.0 Water Elev. ---

Date Completed 8-2-87 Casing: Length -- Dia. ---

Boring No. B-29 Station & Offset Sta. 637 + 63 73' LT. Surface Elev. 1010.9

ELEV.	DEPTH	STD. PEN. (N)	REC. Ft.	LOSS Ft.	DESCRIPTION	SAMPLE NO.	SAMPLE TYPE	PHYSICAL CHARACTERISTICS % AGG.	% C. SAND	% F. SAND	% SILT	% CLAY	L.L.	P.L.	P.I.	W.C.	SHTL CLASS.
1010.9	0																
	5	14-14-10	1.0		Medium dense, brown SILTY SAND, trace gravel, rock fragments and cinders, moist. (Fill)	1	SS										
1002.4		8-7-8	1.1			2	SS										
	10				Medium dense, brown SAND, trace silt, trace gravel, moist.												
997.4		6-6-12	1.2		Medium dense, brown GRAVEL, some sand, trace silt, moist.	3	SS	59.6	19.8	11.5	*	9.1	--	--	--	5.6	A-1-a
995.9	15				TERMINATION DEPTH 15.0 FEET												

* SILT AND CLAY COMBINED

SUBSURFACE INVESTIGATION
SUM-76-11.57
AKRON EAST EXPRESSWAY (I.R. 76)
AKRON, OHIO

R & R International, Inc.
GEOTECHNICAL ENGINEERS - GEOLOGISTS
3675 COPLEY ROAD
AKRON, OH 44321
216-666-2200

10/78

SUM-76-11.57

FHWA REGION	STATE	PROJECT

14/104

STRUCTURE SUBSURFACE INVESTIGATION

1/3

GEOLOGY OF THE SITE

THE PROJECT SITE LIES ON THE GLACIATED, HILLY, DEEPLY DISSECTED ALLEGHENY PLATEAU PHYSIOGRAPHIC PROVINCE. RELIEF ALONG THE LENGTH OF THE WALL IS APPROXIMATELY 25 FEET.

THE PROJECT AREA WAS GLACIATED BY THE WISCONSIN ICE SHEET, LEAVING A VARIABLE BUT THIN DRIFT, NOT AVERAGING MORE THAN 25 FEET IN THICKNESS. THERE ARE TWO (2) DISTINCT TYPES OF GLACIAL DEPOSITS PRESENT AT THE SITE. THEY ARE THE MOGADORE TILL, WHICH IS A COARSE SANDY TILL WITH MINOR AMOUNTS OF CLAY, AND KAME AND KAME TERRACE DEPOSITS WHICH CONSIST PRIMARILY OF GRAVEL AND SAND MATERIAL. IT SHOULD BE NOTED THAT PORTIONS OF THE AREA ALONG THE LENGTH OF THE ROADWAY ARE "MADE LAND" WHICH ARE AREAS WHERE THE ORIGINAL SURFACE HAS BEEN COMPLETELY MODIFIED BY MAN.

BEDROCK AT THE PROJECT SITE CONSISTS OF THE PENNSYLVANIAN AGED SHARON CONGLOMERATE OF THE POTTSVILLE FORMATION IN THE HIGHLANDS, AND THE LOWER PORTIONS ARE UNDERLAIN BY SHALES AND SANDSTONES OF THE LOGAN FORMATION WHICH IS MISSISSIPPIAN IN AGE.

EXPLORATION

THE EXPLORATION CONSISTED OF ADVANCING A TOTAL OF THREE (3) DRIVE SAMPLE-CORE BORINGS WITH A CME-55 TRUCK MOUNTED DRILLING RIG USING CONVENTIONAL 3.25 INCH I.D. HOLLOW STEM AUGERS, PERFORMED DURING FEBRUARY, 1988.

INVESTIGATIONAL FINDINGS

THE BORINGS DISCLOSED INTERVALS OF SANDY SILT (A-4a) AND SAND WITH GRAVEL (A-3a) WHICH EXTENDED TO APPROXIMATE ELEVATIONS RANGING FROM 1061 TO 1077. THIS MATERIAL IS UNDERLAIN BY MODERATELY TO HIGHLY ALTERED TAN SANDSTONE. EACH OF THE TEST BORINGS WERE TERMINATED IN THE SANDSTONE BEDROCK.

FOR SPECIFIC CONDITIONS AT VARIOUS DEPTHS, REFER TO THE INDIVIDUAL TEST BORING LOGS WHICH FORM A PART OF THIS REPORT.

LEGEND

- AUGER BORING LOCATION - PLAN VIEW
- PRESS AND/OR DRIVE SAMPLE AND/OR CORE BORING LOCATION - PLAN VIEW
- TR — TOP OF ROCK
- CAPPED PILE
- FOOTING
- FOOTING ON PILE
- HORIZONTAL BAR ON BORING LOG INDICATES THE DEPTH THE SAMPLE WAS TAKEN
- X/Y/Z — FIGURES BESIDE THE BORING LOG IN PROFILE INDICATE THE NUMBER OF BLOWS FOR STANDARD PENETRATION TEST
  - X = NO. OF BLOWS FOR FIRST 6"
  - Y = NO. OF BLOWS FOR SECOND 6"
  - Z = NO. OF BLOWS FOR THIRD 6"
- W — INDICATES FREE WATER ELEVATION
- INDICATES STATIC WATER ELEVATION

SYMBOLS OF ROCK TYPES

- COAL
- WEATHERED MUDSTONE
- MUDSTONE
- WEATHERED SHALE
- SHALE
- CLAYSTONE
- SILTSTONE
- WEATHERED SANDSTONE
- SANDSTONE
- LEACHED DOLOMITE
- DOLOMITE
- LEACHED LIMESTONE
- LIMESTONE
- BOULDERS or COBBLES

GENERAL INFORMATION

Drive sample / Press sample / Core borings

Drive sample borings are made by means of a mechanically-powered rotary-type drilling machine, employing a 2" O.D., 1-3/8" I.D. split spoon sampler, at 2.5 and/or 5-foot depth intervals, driven by means of a 140 lb. drop hammer with a free fall of 30". The number of blows required to drive the sampler 18" is considered the standard penetration test.

Drive/press borings are made by means of a mechanically-powered rotary-type drilling machine, employing a 2" O.D., 1-3/8" I.D. split spoon sampler, and 3" O.D. thin wall press sampler. The press sampler is advanced by continuous uniform pressure, applied by the drilling machine.

Core borings are made by means of a mechanically-powered rotary-type drilling machine, employing a NXM core barrel with industrial diamond cutting head.

The boring log sheets display a graphic plot of the information obtained including depth and elevation of the sample, type of sample, the standard penetration test readings in three 6-inch increments, depth and elevation of press samples, field number assigned to sample, sample description - based on laboratory tests utilizing the Casagrande AC classification system - and gradation, plasticity and moisture determinations. Results of strength and consolidation testing, if performed on undisturbed samples, will appear graphically on separate enclosures. Rock samples are displayed on the log sheets including depth and elevation of the sample, amount of recovery and a visual classification based on type, color, degree of hardness, grain-size, deterioration, bedding, acid reaction and other qualifying factors.

At depths where materials are bouldery or gravelly to the extent that the sampler can not be utilized, a wash sample is procured and visually classified, in order to determine the general characteristics of the material. These samples are not considered sufficiently representative to warrant laboratory testing.

PARTICLE SIZE DEFINITIONS

12"	3"	2.0mm		0.42mm		0.074mm	0.005mm
Boulders	Cobbles	Gravel	Coarse Sand		Fine Sand	Silt	Clay
		No. 10 sieve		No. 40 sieve		No. 200 sieve	

NOTE - ALL AVAILABLE SOIL AND BEDROCK INFORMATION WHICH CAN BE CONVENIENTLY SHOWN ON THE STRUCTURE FOUNDATION INVESTIGATION SHEETS HAS BEEN SO REPORTED. ADDITIONAL SUBSURFACE INVESTIGATIONS MAY HAVE BEEN MADE TO STUDY SOME SPECIAL ASPECT OF THE PROJECT. COPIES OF THIS DATA, IF ANY, MAY BE INSPECTED IN THE DISTRICT DEPUTY DIRECTORS OFFICE, THE BUREAU OF TESTS AT 1600 WEST BROAD STREET, THE PAVEMENT AND SOILS SECTION OF THE BUREAU OF LOCATION AND DESIGN OR IN THE BRIDGE BUREAU AT 25 SOUTH FRONT STREET.

SUBSURFACE INVESTIGATION
SUM-76-11.57
AKRON EAST EXPRESSWAY-RETAINING WALL NO. 1
AKRON, OHIO

R & R International, Inc.
GEOTECHNICAL ENGINEERS-GEOLOGISTS
AKRON, OHIO 44321

Sum-76-11.57

FHWA REGION	STATE	PROJECT

15/104

2/3

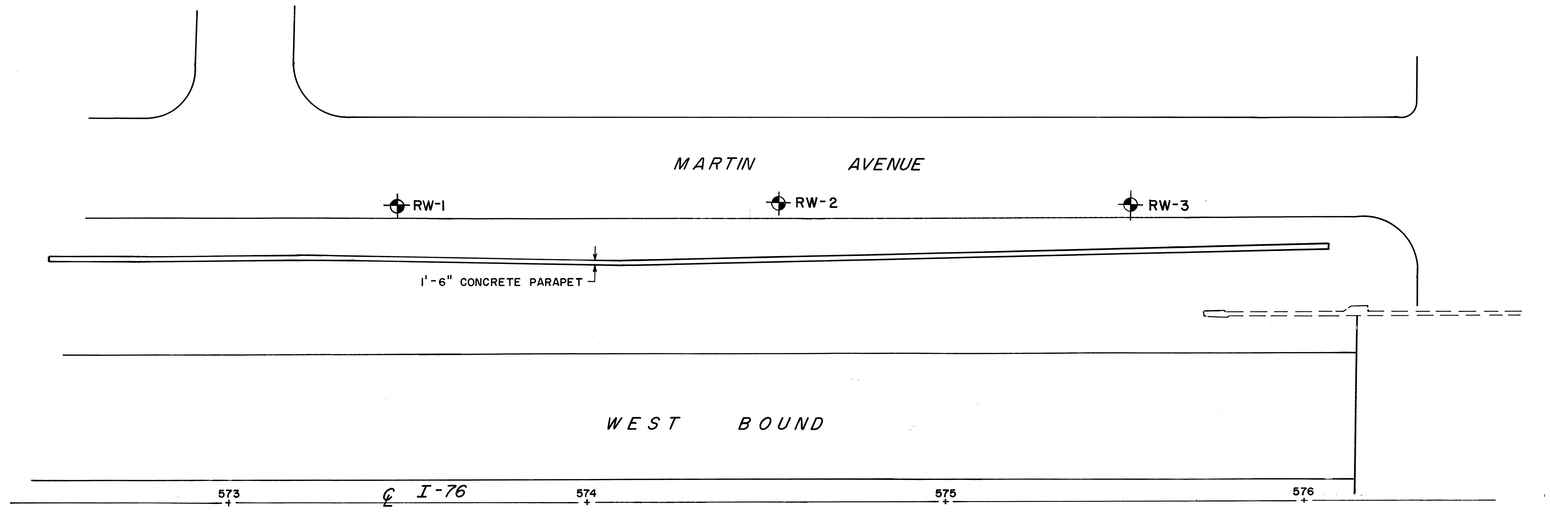

GENERAL PLAN

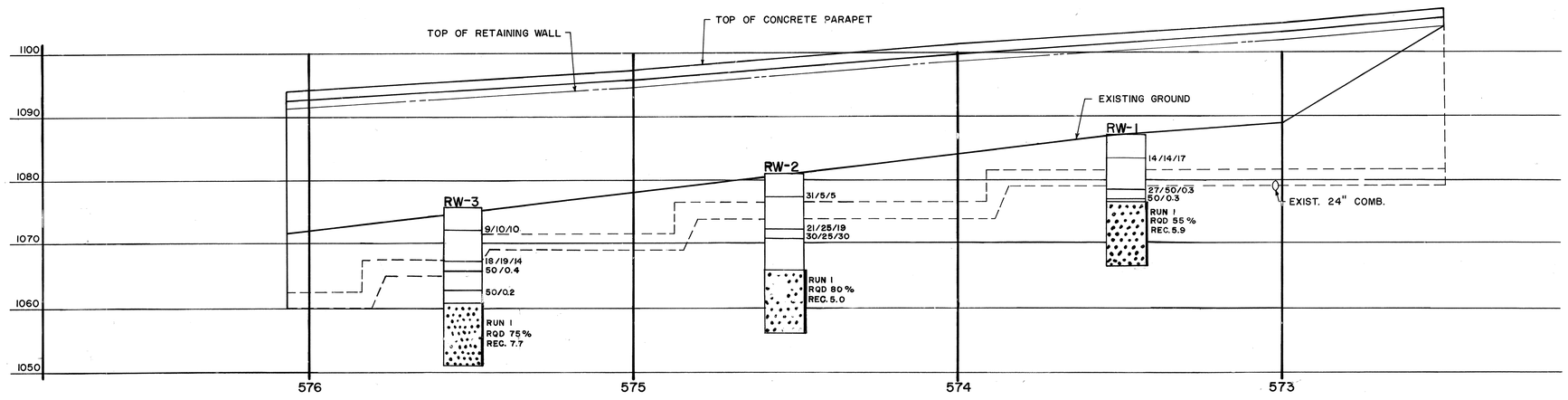

VIEW A-A
ELEVATION

SUBSURFACE INVESTIGATION
SUM-76-11.57
AKRON EAST EXPRESSWAY-RETAINING WALL NO. 1
AKRON, OHIO

R & R International, Inc.
GEOTECHNICAL ENGINEERS-GEOLOGISTS
3675 COPLEY ROAD
AKRON, OH 44321
216-666-2200

6/4/78

Sum-76-11.57

FHWA REGION	STATE	PROJECT

16/104

3/3

LOG OF BORING

Date Started 2-23-88 Sampler Type Split Spoon Dia. 2.0 Water Elev. 669.4
Date Completed 2-23-88 Casing: Length -- Dia. ---
Boring No. RW-1 Station & Offset Sta. 574 + 64 84' LT. Surface Elev. 1087.2

ELEV.	DEPTH	STD. PEN. (N)	REC. Ft.	LOSS Ft.	DESCRIPTION	SAMPLE NO.	SAMPLE TYPE	% AGG.	% C. SAND	% F. SAND	% SILT	% CLAY	L.L.	P.L.	P.I.	W.C.	SHTL CLASS.
1087.2	0																
1086.9					ASPHALT												
1086.5					BRICK												
1085.2					ROADBASE FILL												
		14-14-17	1.5			1	SS	41.4	9.2	11.5	*	37.9	--	--	--	3.5	A-4a
	5				Hard, brown SANDY SILT, some to little gravel, moist.												
		27-50/0.3	0.8			2	SS	23.2	10.4	19.3	*	47.1	--	--	--	10.5	A-4a
1076.9	10	50/0.3	0.3		AUGER REFUSAL AT 10.3 FEET.	3	SS										
		RQD	5.9	4.1		Run	NXW										
		55%				1											
	15				Tan SANDSTONE, highly to moderately altered, medium grained, firm.												
1066.9	20				TERMINATION DEPTH 20.3 FEET												

* SILT AND CLAY COMBINED

LOG OF BORING

Date Started 2-23-88 Sampler Type Split Spoon Dia. 2.0 Water Elev. 669.4
Date Completed 2-23-88 Casing: Length -- Dia. ---
Boring No. RW-2 Station & Offset Sta. 575 + 70 84' LT. Surface Elev. 1081.2

ELEV.	DEPTH	STD. PEN. (N)	REC. Ft.	LOSS Ft.	DESCRIPTION	SAMPLE NO.	SAMPLE TYPE	% AGG.	% C. SAND	% F. SAND	% SILT	% CLAY	L.L.	P.L.	P.I.	W.C.	SHTL CLASS.
1081.2	0																
1080.9					ASPHALT												
1080.5					BRICK												
1079.2					ROADBASE FILL												
		31-5-5	1.5			1	SS										
	5				Stiff to hard, brown SANDY SILT, some gravel, moist.												
		21-25-19	1.5			2	SS	21.7	7.7	35.1	*	35.5	--	--	--	13.7	A-4a
1071.7	10	30-25-30	1.5			3	SS	28.2	8.1	44.1	*	19.6	--	--	--	10.2	A-3a
					Very dense, light brown SAND, some gravel, little silt, moist.												
					AUGER REFUSAL AT 15.0 FEET.												
1066.2	15	RQD	5.0	5.0		Run	NXW										
		80%				1											
	20				Tan SANDSTONE, unaltered, medium grained, hard.												
1056.2	25				TERMINATION DEPTH 25.0 FEET												

* SILT AND CLAY COMBINED

LOG OF BORING

Date Started 2-23-88 Sampler Type Split Spoon Dia. 2.0 Water Elev. ---
Date Completed 2-23-88 Casing: Length -- Dia. ---
Boring No. RW-3 Station & Offset Sta. 576 + 68 83' LT. Surface Elev. 1075.9

ELEV.	DEPTH	STD. PEN. (N)	REC. Ft.	LOSS Ft.	DESCRIPTION	SAMPLE NO.	SAMPLE TYPE	% AGG.	% C. SAND	% F. SAND	% SILT	% CLAY	L.L.	P.L.	P.I.	W.C.	SHTL CLASS.
1075.9	0																
1075.3					ASPHALT												
1074.9					BRICK												
1074.3					ROADBASE FILL												
		9-10-10	1.5			1	SS	16.6	10.3	23.0	*	50.1	--	--	--	12.6	A-4a
	5				Very stiff to hard, brown SANDY SILT, little gravel, moist.												
		18-19-14	1.5			2	SS										
1066.4	10	50/0.4	0.4			3	SS										
					Very dense, light brown SAND, some gravel, little silt, moist.												
		50/0.2	0.2			4	SS										
					AUGER REFUSAL AT 15.0 FEET.												
1060.9	15	RQD	7.7	2.3		Run	NXW										
		75%				1											
	20				Tan SANDSTONE, moderately altered, medium grained, hard.												
1050.9	25				TERMINATION DEPTH 25.0 FEET												

* SILT AND CLAY COMBINED

SUBSURFACE INVESTIGATION
SUM-76-11.57
AKRON EAST EXPRESSWAY-RETAINING WALL NO. 1
AKRON, OHIO

R & R International, Inc.
GEOTECHNICAL ENGINEERS-GEOLOGISTS
3675 COPLEY ROAD
AKRON, OH 44321
216-666-2200

10478

Sum-76-11.57

FHWA REGION	STATE	PROJECT

17/104

STRUCTURE SURFACE INVESTIGATION

1/5

GEOLOGY OF THE SITE

THE PROJECT SITE LIES ON THE GLACIATED, HILLY, DEEPLY DISSECTED ALLEGHENY PLATEAU PHYSIOGRAPHIC PROVINCE. RELIEF ALONG THE LENGTH OF THE WALL IS APPROXIMATELY 25 FEET.

THE PROJECT AREA WAS GLACIATED BY THE WISCONSIN ICE SHEET, LEAVING A VARIABLE BUT THIN DRIFT, NOT AVERAGING MORE THAN 25 FEET IN THICKNESS. THERE ARE TWO (2) DISTINCT TYPES OF GLACIAL DEPOSITS PRESENT AT THE SITE. THEY ARE THE MOGADORE TILL, WHICH IS A COARSE SANDY TILL WITH MINOR AMOUNTS OF CLAY, AND KAME AND KAME TERRACE DEPOSITS WHICH CONSIST PRIMARILY OF GRAVEL AND SAND MATERIAL. IT SHOULD BE NOTED THAT PORTIONS OF THE AREA ALONG THE LENGTH OF THE ROADWAY ARE "MADE LAND" WHICH ARE AREAS WHERE THE ORIGINAL SURFACE HAS BEEN COMPLETELY MODIFIED BY MAN.

BEDROCK AT THE PROJECT SITE CONSISTS OF THE PENNSYLVANIAN AGED SHARON CONGLOMERATE OF THE POTTSVILLE FORMATION IN THE HIGHLANDS, AND THE LOWER PORTIONS ARE UNDERLAIN BY SHALES AND SANDSTONES OF THE LOGAN FORMATION WHICH IS MISSISSIPPIAN IN AGE.

EXPLORATION

THE EXPLORATION CONSISTED OF ADVANCING A TOTAL OF SIX (6) DRIVE SAMPLE-CORE BORINGS WITH A CME-55 TRUCK MOUNTED DRILLING RIG USING CONVENTIONAL 3.25 INCH I.D. HOLLOW STEM AUGERS PERFORMED DURING JANUARY AND FEBRUARY, 1988.

INVESTIGATIONAL FINDINGS

THE BORINGS DISCLOSED "STIFF" TO "HARD," BROWN SANDY SILT (A-4A) WITH LIMITED LAYERS OF SAND AND GRAVEL (A-1-B, A-2-4, AND A-3A) EXTENDING TO ELEVATIONS RANGING FROM 1034 TO 1054. AT THESE ELEVATIONS, EXTREMELY TO MODERATELY ALTERED SANDSTONE WAS ENCOUNTERED. WHERE ROCK CORE SAMPLES WERE SECURED, THE ROCK QUALITY DESIGNATION (RQD) VALUES RANGE FROM 0 TO 35 PERCENT AND MAY BE TERMED AS "POOR."

FOR SPECIFIC CONDITIONS AT VARIOUS DEPTHS, REFER TO THE INDIVIDUAL TEST BORING LOGS WHICH FORM A PART OF THESE PLANS.

LEGEND

- AUGER BORING LOCATION - PLAN VIEW
- PRESS AND/OR DRIVE SAMPLE AND/OR CORE BORING LOCATION - PLAN VIEW
- TR — TOP OF ROCK
- CAPPED PILE
- FOOTING
- FOOTING ON PILE
- HORIZONTAL BAR ON BORING LOG INDICATES THE DEPTH THE SAMPLE WAS TAKEN
- X/Y/Z — FIGURES BESIDE THE BORING LOG IN PROFILE INDICATE THE NUMBER OF BLOWS FOR STANDARD PENETRATION TEST
  - X = NO. OF BLOWS FOR FIRST 6"
  - Y = NO. OF BLOWS FOR SECOND 6"
  - Z = NO. OF BLOWS FOR THIRD 6"
- W —— INDICATES FREE WATER ELEVATION
- INDICATES STATIC WATER ELEVATION

SYMBOLS OF ROCK TYPES

- COAL
- WEATHERED MUDSTONE
- MUDSTONE
- WEATHERED SHALE
- SHALE
- CLAYSTONE
- SILTSTONE
- WEATHERED SANDSTONE
- SANDSTONE
- LEACHED DOLOMITE
- DOLOMITE
- LEACHED LIMESTONE
- LIMESTONE
- BOULDERS or COBBLES

GENERAL INFORMATION

Drive sample / Press sample / Core borings

Drive sample borings are made by means of a mechanically-powered rotary-type drilling machine, employing a 2" O.D., 1-3/8" I.D. split spoon sampler, at 2.5 and/or 5-foot depth intervals, driven by means of a 140 lb. drop hammer with a free fall of 30". The number of blows required to drive the sampler 18" is considered the standard penetration test.

Drive/press borings are made by means of a mechanically-powered rotary-type drilling machine, employing a 2" O.D., 1-3/8" I.D. split spoon sampler, and 3" O.D. thin wall press sampler. The press sampler is advanced by continuous uniform pressure, applied by the drilling machine.

Core borings are made by means of a mechanically-powered rotary-type drilling machine, employing a NXM core barrel with industrial diamond cutting head.

The boring log sheets display a graphic plot of the information obtained including depth and elevation of the sample, type of sample, the standard penetration test readings in three 6-inch increments, depth and elevation of press samples, field number assigned to sample, sample description - based on laboratory tests utilizing the Casagrande AC classification system - and gradation, plasticity and moisture determinations. Results of strength and consolidation testing, if performed on undisturbed samples, will appear graphically on separate enclosures. Rock samples are displayed on the log sheets including depth and elevation of the sample, amount of recovery and a visual classification based on type, color, degree of hardness, grain size, deterioration, bedding, acid reaction and other qualifying factors.

At depths where materials are bouldery or gravelly to the extent that the sampler can not be utilized, a wash sample is procured and visually classified, in order to determine the general characteristics of the material. These samples are not considered sufficiently representative to warrant laboratory testing.

PARTICLE SIZE DEFINITIONS

12"	3"	2.0mm		0.42mm		0.074mm	0.005mm	
Boulders	Cobbles	Gravel	Coarse Sand		Fine Sand		Silt	Clay
		No. 10 sieve		No. 40 sieve		No. 200 sieve		

NOTE - ALL AVAILABLE SOIL AND BEDROCK INFORMATION WHICH CAN BE CONVENIENTLY SHOWN ON THE STRUCTURE FOUNDATION INVESTIGATION SHEETS HAS BEEN SO REPORTED. ADDITIONAL SUBSURFACE INVESTIGATIONS MAY HAVE BEEN MADE TO STUDY SOME SPECIAL ASPECT OF THE PROJECT. COPIES OF THIS DATA, IF ANY, MAY BE INSPECTED IN THE DISTRICT DEPUTY DIRECTORS OFFICE, THE BUREAU OF TESTS AT 1600 WEST BROAD STREET, THE PAVEMENT AND SOILS SECTION OF THE BUREAU OF LOCATION AND DESIGN OR IN THE BRIDGE BUREAU AT 25 SOUTH FRONT STREET.

SUBSURFACE INVESTIGATION
SUM-76-11.57
AKRON EAST EXPRESSWAY-RETAINING WALL NO. 2
AKRON, OHIO

R & R International, Inc.
GEOTECHNICAL ENGINEERS-GEOLOGISTS
AKRON, OHIO 44321

Sum-76-11.57

FHWA REGION	STATE	PROJECT

18/104

2/5

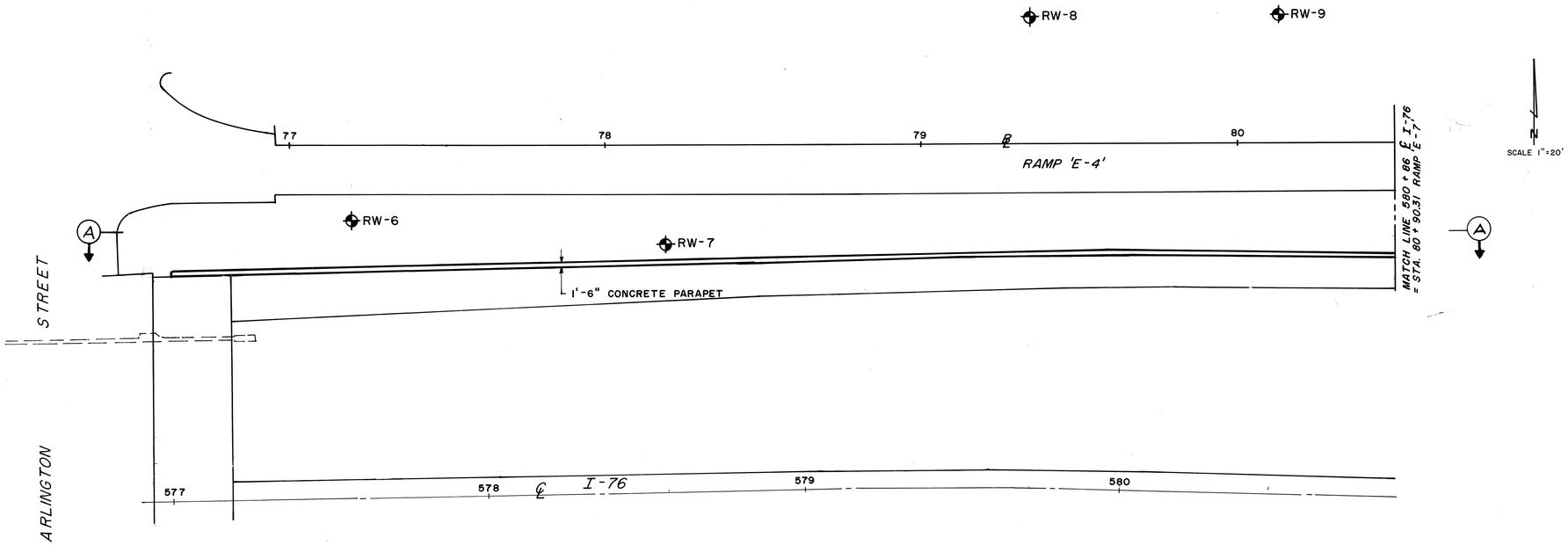

GENERAL PLAN

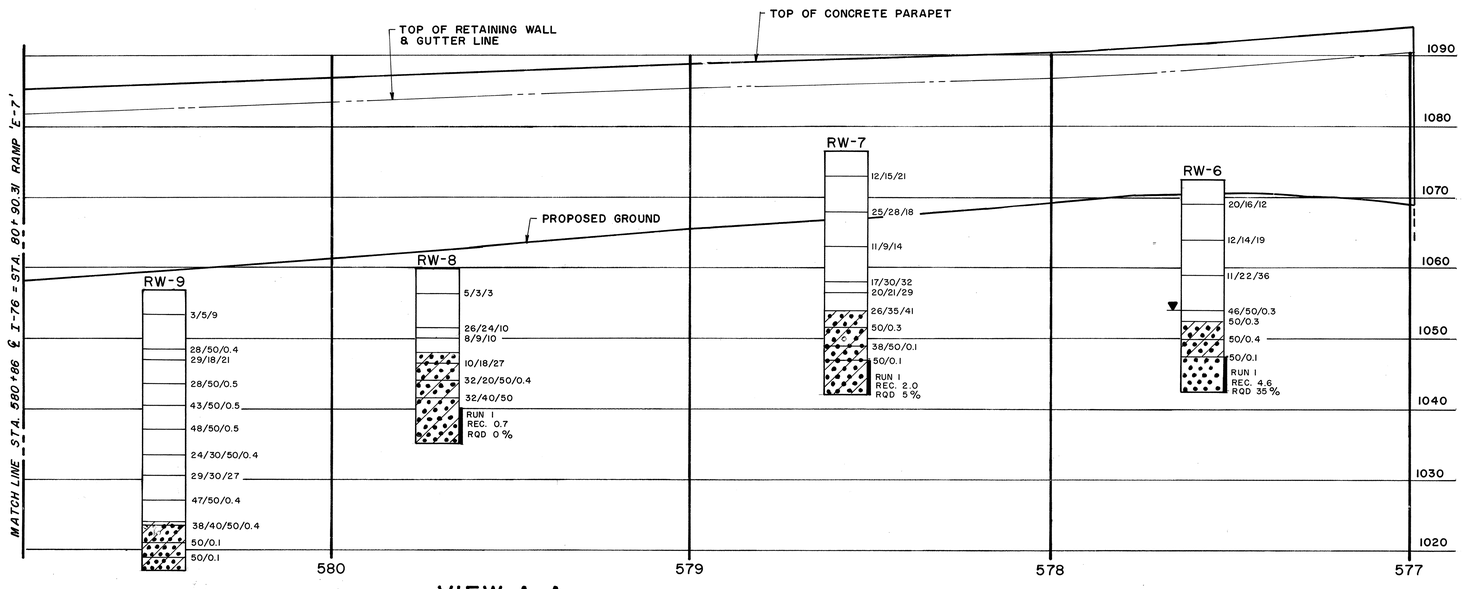

VIEW A-A ELEVATION

SUBSURFACE INVESTIGATION
SUM-76-11.57
AKRON EAST EXPRESSWAY-RETAINING WALL NO. 2
AKRON, OHIO

R & R International, Inc.
GEOTECHNICAL ENGINEERS-GEOLOGISTS
3675 COPLEY ROAD
AKRON, OH 44321
216-666-2200

56478

SUM-76-11.57

FHWA REGION	STATE	PROJECT

19
104

3
5

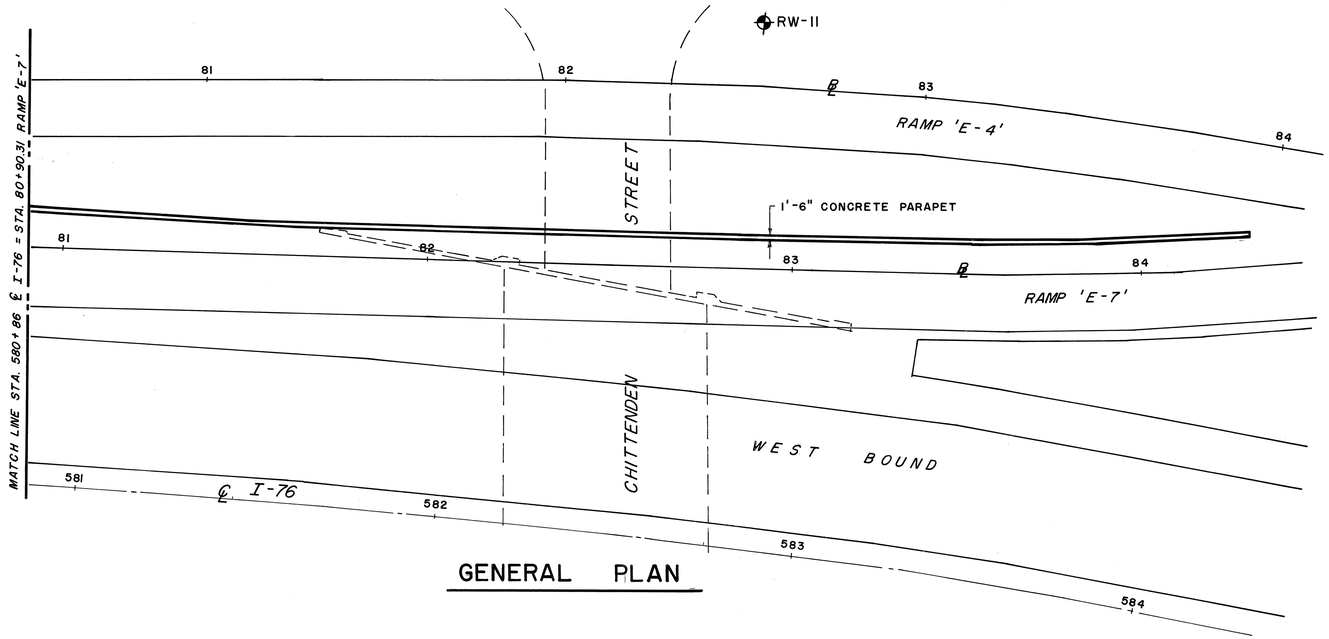

GENERAL PLAN

N

SCALE 1"=20'

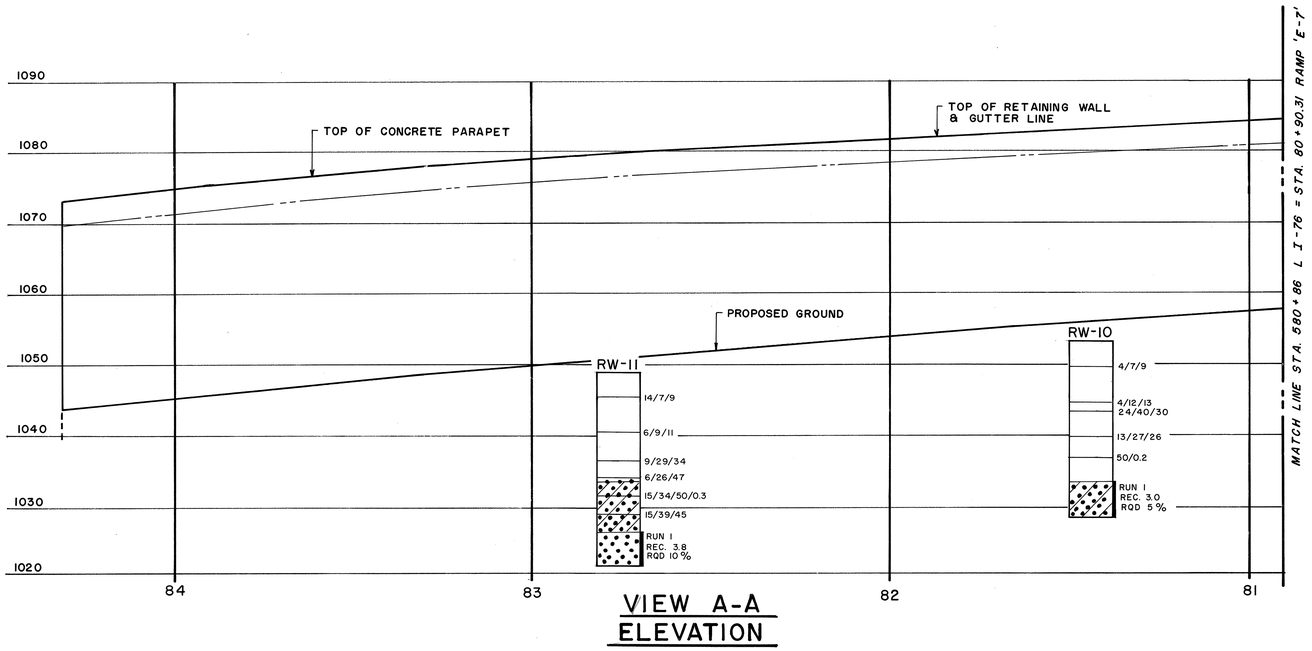

VIEW A-A
ELEVATION

SUBSURFACE INVESTIGATION
SUM-76-11.57
AKRON EAST EXPRESSWAY-RETAINING WALL NO. 2
AKRON, OHIO

R & R International, Inc.
GEOTECHNICAL ENGINEERS-GEOLOGISTS
3675 COPLEY ROAD
AKRON, OH 44321
216-666-2200

5647B

Sum-76-11.57

FHWA REGION	STATE	PROJECT

20/104

4/5

LOG OF BORING

Date Started 1-24-88 Sampler Type Split Spoon Dia. 2.0 Water Elev. 1042.2
Date Completed 1-24-88 Casing: Length -- Dia. ---
Boring No. RW-6 Station & Offset Sta. 577 + 58 89' LT. Surface Elev. 1072.2

ELEV.	DEPTH	STD. PEN. (N)	REC. Ft.	LOSS Ft.	DESCRIPTION	SAMPLE NO.	SAMPLE TYPE	% AGG.	% C. SAND	% F. SAND	% SILT	% CLAY	L.L.	P.L.	P.I.	W.C.	SHTL CLASS.
1072.2	0																
1071.2					TOPSOIL												
		20-16-12	0.8			1	SS										
	5																
		12-14-19	1.4			2	SS	7.7	8.7	20.3	*	63.3	20.9	14.7	6.2	13.1	A-4a
	10				Very stiff to hard, brown SANDY SILT, trace gravel, moist.												
		11-22-36	1.5			3	SS										
	15																
		46-50/0.3	0.7			4	SS	7.5	8.6	34.7	*	49.2	--	--	--	11.5	A-4a
1052.2	20	50/0.3	0.3			5	SS										
		50/0.4	0.4		Extremely altered, brown SANDSTONE, friable to firm.	6	SS										
1047.2	25	50/0.1	0.1		AUGER REFUSAL	7	SS										
		RQD 35%	4.6	0.4	Tan SANDSTONE, moderately altered, firm to hard, gray shale interbeds.	Run 1	NXW										
1042.2	30				TERMINATION DEPTH 30.0 FEET												

* SILT AND CLAY COMBINED

LOG OF BORING

Date Started 1-29-88 Sampler Type Split Spoon Dia. 2.0 Water Elev. ---
Date Completed 1-29-88 Casing: Length -- Dia. ---
Boring No. RW-7 Station & Offset Sta. 578 + 57 80' LT. Surface Elev. 1076.7

ELEV.	DEPTH	STD. PEN. (N)	REC. Ft.	LOSS Ft.	DESCRIPTION	SAMPLE NO.	SAMPLE TYPE	% AGG.	% C. SAND	% F. SAND	% SILT	% CLAY	L.L.	P.L.	P.I.	W.C.	SHTL CLASS.
1076.7	0																
1075.9					ROADBASE MATERIAL												
		12-15-21	1.4			1	SS										
	5																
		25-28-18	1.3			2	SS										
	10				Very stiff to hard, brown SANDY SILT, little gravel, damp.												
		11-9-14	1.4			3	SS	18.1	12.3	20.2	*	49.4	29.9	20.9	9.0	21.7	A-4a
	15																
		17-30-32	1.3			4	SS										
	20	20-21-29	1.2			5	SS										
1054.2		26-35-41	1.1			6	SS	44.6	9.4	16.1	19.4	10.5	--	--	--	9.5	A-2-4
	25	50/0.3	0.1		Extremely altered, brown SANDSTONE, friable to firm.	7	SS										
		38-50/0.3	0.1			8	SS	33.4	4.3	35.7	*	26.6	--	--	--	11.4	A-2-4
1047.2		50/0.1	0.0		AUGER REFUSAL	9	SS										
	30	RQD 5%	2.0	3.0	Tan SANDSTONE, highly altered, friable to firm.	Run 1	NXW										
1042.2	35				TERMINATION DEPTH 34.5 FEET												

* SILT AND CLAY COMBINED

LOG OF BORING

Date Started 2-22-88 Sampler Type Split Spoon Dia. 2.0 Water Elev. ---
Date Completed 2-22-88 Casing: Length -- Dia. ---
Boring No. RW-8 Station & Offset Sta. 579 + 71 152' LT. Surface Elev. 1060.3

ELEV.	DEPTH	STD. PEN. (N)	REC. Ft.	LOSS Ft.	DESCRIPTION	SAMPLE NO.	SAMPLE TYPE	% AGG.	% C. SAND	% F. SAND	% SILT	% CLAY	L.L.	P.L.	P.I.	W.C.	SHTL CLASS.
1060.3	0																
1059.8					ASPHALT												
1059.5					BRICK												
1058.8					ROADBASE MATERIAL												
		5-3-3	0.8		Medium stiff, brown SANDY SILT, little gravel, damp.	1	SS	14.6	15.6	21.1	*	48.7	--	--	--	17.9	A-4a
1054.3	5																
		26-24-10	1.5		Medium dense to dense, brown SAND, trace gravel, moist.	2	SS										
	10	8-9-10	1.5			3	SS	14.0	6.5	44.2	*	35.3	--	--	--	15.5	A-3a
1048.3																	
		10-18-27	1.5			4	SS										
	15	32-20-50/0.4	1.4		Extremely altered, brown SANDSTONE, friable.	5	SS										
		32-40-50	1.5			6	SS	47.8	3.9	19.9	*	28.4	--	--	--	13.0	A-2-4
1040.3	20																
		RQD 0%	0.7	4.3	Tan SANDSTONE, extremely to highly altered, friable.	Run 1	NXW										
1035.3	25				TERMINATION DEPTH 25.0 FEET												

* SILT AND CLAY COMBINED

SUBSURFACE INVESTIGATION
SUM-76-11.57
AKRON EAST EXPRESSWAY-RETAINING WALL NO. 2
AKRON, OHIO

R & R International, Inc.
GEOTECHNICAL ENGINEERS-GEOLOGISTS
3675 COPLEY ROAD
AKRON, OH 44321
216-666-2200

Sum-76-11.57

FHWA REGION	STATE	PROJECT

21/104

5/5

LOG OF BORING

Date Started 2-18-88 Sampler Type Split Spoon Dia. 2.0 Water Elev. ---

Date Completed 2-18-88 Casing: Length -- Dia. ---

Boring No. RW-9 Station & Offset Sta. 580 + 47 154' LT. Surface Elev. 1057.4

ELEV.	DEPTH	STD. PEN. (N)	REC. Ft.	LOSS Ft.	DESCRIPTION	SAMPLE NO.	SAMPLE TYPE	PHYSICAL CHARACTERISTICS % AGG.	% C.SAND	% F.SAND	% SILT	% CLAY	L.L.	P.L.	P.I.	W.C.	SHTL CLASS.
1057.4	0																
1057.1					ASPHALT												
1056.9					BRICKS												
1055.8					ROADBASE MATERIAL												
		3-5-9	1.5			1	SS										
	5				Stiff to hard, brown SANDY SILT, little gravel and sandstone fragments, damp.												
		28-50/0.4	0.5			2	SS										
	10	29-18-21	1.5			3	SS	34.4	12.8	15.1	*	37.7	--	--	--	11.9	A-4a
1043.9		28-50/0.5	1.0			4	SS	35.3	6.3	23.7	*	34.7	--	--	--	11.0	A-2-4
	15																
		43-50/0.5	1.0		Very dense, brown GRAVEL, sandstone fragments, some silt, moist.	5	SS										
	20	48-50/0.5	1.0			6	SS										
1035.4																	
		24-30-50/0.4	1.4		Hard, gray SILT, little sand, dry.	7	SS										
	25																
		29-30-27	1.5			8	SS										
1028.4																	
	30	47-50-0.4	0.9		Hard, gray and brown SANDY SILT, little gravel, damp.	9	SS	28.7	20.7	11.7	*	38.9	--	--	--	9.7	A-4a
1024.4		38-40-50/0.4	0.9			10	SS										
	35																
		50/0.1	0.1		Extremely altered, brown SANDSTONE, friable.	11	SS										
		50/0.1	0.1			12	SS	40.9	15.2	27.9	*	16.0	--	--	--	11.9	A-1-b
1017.4	40				TERMINATION DEPTH 40.0 FEET												

* SILT AND CLAY COMBINED

LOG OF BORING

Date Started 2-18-88 Sampler Type Split Spoon Dia. 2.0 Water Elev. ---

Date Completed 2-18-88 Casing: Length -- Dia. ---

Boring No. RW-10 Station & Offset Sta. 581 + 44 161' LT. Surface Elev. 1053.6

ELEV.	DEPTH	STD. PEN. (N)	REC. Ft.	LOSS Ft.	DESCRIPTION	SAMPLE NO.	SAMPLE TYPE	PHYSICAL CHARACTERISTICS % AGG.	% C.SAND	% F.SAND	% SILT	% CLAY	L.L.	P.L.	P.I.	W.C.	SHTL CLASS.
1053.6	0																
1053.1					ASPHALT												
1052.1					ROADBASE MATERIAL												
		4-7-9	0.8			1	SS										
	5				Medium dense to very dense, brown SANDSTONE FRAGMENTS, some sand, little silt, moist.												
		4-12-13	1.5			2	SS										
	10	24-40-30	1.5			3	SS	37.0	4.6	33.1	*	25.3	--	--	--	12.3	A-2-4
1041.6																	
		13-27-26	1.5			4	SS										
	15				Hard, brown SANDY SILT, little gravel and sandstone fragments, moist.												
		50/0.2	0.2			5	SS	38.6	7.9	16.2	*	37.3	--	--	--	16.4	A-4a
1033.6	20																
		ROD 5%	3.0	2.0	Gray SANDSTONE, highly altered, friable to firm, clay interbeds.	Run 1	NXW										
1028.6	25				TERMINATION DEPTH 25.0 FEET												

* SILT AND CLAY COMBINED

LOG OF BORING

Date Started 2-3-88 Sampler Type Split Spoon Dia. 2.0 Water Elev. ---

Date Completed 2-3-88 Casing: Length -- Dia. ---

Boring No. RW-11 Station & Offset Sta. 582 + 76 149' LT. Surface Elev. 1049.3

ELEV.	DEPTH	STD. PEN. (N)	REC. Ft.	LOSS Ft.	DESCRIPTION	SAMPLE NO.	SAMPLE TYPE	PHYSICAL CHARACTERISTICS % AGG.	% C.SAND	% F.SAND	% SILT	% CLAY	L.L.	P.L.	P.I.	W.C.	SHTL CLASS.
1049.3	0																
		14-7-9	1.5		Stiff to very stiff, brown and gray SANDY SILT, trace to little gravel, sandstone fragments, damp.	1	SS										
	5																
		6-9-11	1.5			2	SS	15.2	11.1	22.2	*	51.5	--	--	--	16.4	A-4a
1039.8	10				Hard, brown SANDY SILT, trace gravel, damp.												
		9-29-34	1.5			3	SS	12.6	13.7	28.3	*	45.4	--	--	--	11.5	A-4a
1035.8					Very dense, gray and brown SAND, trace silt, trace gravel, moist.												
1033.8	15	6-26-47	1.5			4	SS										
		15-34-50/0.3	1.5		Extremely altered, brown SANDSTONE, friable.	5	SS										
	20	15-39-45	1.5			6	SS										
1026.8					AUGER REFUSAL												
	25	ROD 10%	3.8	1.2	Gray SANDSTONE, moderatley altered, firm.	Run 1	NXW										
1021.8					TERMINATION DEPTH 27.5 FEET												

* SILT AND CLAY COMBINED

SUBSURFACE INVESTIGATION
SUM-76-11.57
AKRON EAST EXPRESSWAY - RETAINING WALL NO. 2
AKRON, OHIO

R & R International, Inc.
GEOTECHNICAL ENGINEERS - GEOLOGISTS
3675 COPLEY ROAD
AKRON, OH 44321
216-666-2200

Sum-76-11.57

FHWA REGION	STATE	PROJECT

22/104

STRUCTURE SUBSURFACE INVESTIGATION

1/3

GEOLOGY OF THE SITE

THE PROJECT SITE LIES ON THE GLACIATED, HILLY, DEEPLY DISSECTED ALLEGHENY PLATEAU PHYSIOGRAPHIC PROVINCE. RELIEF ALONG THE LENGTH OF THE WALL IS APPROXIMATELY 25 FEET.

THE PROJECT AREA WAS GLACIATED BY THE WISCONSIN ICE SHEET, LEAVING A VARIABLE BUT THIN DRIFT, NOT AVERAGING MORE THAN 25 FEET IN THICKNESS. THERE ARE TWO (2) DISTINCT TYPES OF GLACIAL DEPOSITS PRESENT AT THE SITE. THEY ARE THE MOGADORE TILL, WHICH IS A COARSE SANDY TILL WITH MINOR AMOUNTS OF CLAY, AND KAME AND KAME TERRACE DEPOSITS WHICH CONSIST PRIMARILY OF GRAVEL AND SAND MATERIAL. IT SHOULD BE NOTED THAT PORTIONS OF THE AREA ALONG THE LENGTH OF THE ROADWAY ARE "MADE LAND" WHICH ARE AREAS WHERE THE ORIGINAL SURFACE HAS BEEN COMPLETELY MODIFIED BY MAN.

BEDROCK AT THE PROJECT SITE CONSISTS OF THE PENNSYLVANIAN AGED SHARON CONGLOMERATE OF THE POTTSVILLE FORMATION IN THE HIGHLANDS, AND THE LOWER PORTIONS ARE UNDERLAIN BY SHALES AND SANDSTONES OF THE LOGAN FORMATION WHICH IS MISSISSIPPIAN IN AGE.

EXPLORATION

THE EXPLORATION PROGRAM CONSISTED OF ADVANCING THREE (3) DRIVE SAMPLE BORINGS DESIGNATED AS RW-4, B-5, AND B-6 WITH A CME-75 TRUCK MOUNTED DRILLING RIG USING 3.25 INCH I.D. HOLLOW STEM AUGERS. TEST BORINGS B-5 AND B-6 WERE ADVANCED DURING JULY, 1987 WHILE TEST BORING RW-4 WAS ADVANCED DURING JANUARY, 1988.

INVESTIGATIONAL FINDINGS

AT TEST LOCATION RW-4, A LAYER OF SAND AND GRAVEL (A-2-4) IS PRESENT FROM GROUND SURFACE TO A DEPTH OF 6.0 FEET. AT TEST LOCATIONS B-5 AND B-6 AND UNDERLYING THE A-2-4 MATERIAL IS A LAYER OF MEDIUM STIFF TO VERY STIFF SANDY SILT (A-4A). THIS SOIL UNIT EXTENDS TO THE BORING TERMINATION ELEVATION AT TEST LOCATIONS RW-4 AND B-5 WHILE AT TEST LOCATION B-6, A LAYER OF VERY DENSE SAND IS PRESENT AT A DEPTH OF 11.0 FEET.

FOR SPECIFIC CONDITIONS AT VARIOUS DEPTHS, REFER TO THE INDIVIDUAL TEST BORING LOGS WHICH FORM A PART OF THESE PLANS.

LEGEND

- AUGER BORING LOCATION - PLAN VIEW
- PRESS AND/OR DRIVE SAMPLE AND/OR CORE BORING LOCATION - PLAN VIEW
- TR — TOP OF ROCK
- CAPPED PILE
- FOOTING
- FOOTING ON PILE
- HORIZONTAL BAR ON BORING LOG INDICATES THE DEPTH THE SAMPLE WAS TAKEN
- X/Y/Z — FIGURES BESIDE THE BORING LOG IN PROFILE INDICATE THE NUMBER OF BLOWS FOR STANDARD PENETRATION TEST
  - X = NO. OF BLOWS FOR FIRST 6"
  - Y = NO. OF BLOWS FOR SECOND 6"
  - Z = NO. OF BLOWS FOR THIRD 6"
- W — INDICATES FREE WATER ELEVATION
- INDICATES STATIC WATER ELEVATION

SYMBOLS OF ROCK TYPES

- COAL
- WEATHERED MUDSTONE
- MUDSTONE
- WEATHERED SHALE
- SHALE
- CLAYSTONE
- SILTSTONE
- WEATHERED SANDSTONE
- SANDSTONE
- LEACHED DOLOMITE
- DOLOMITE
- LEACHED LIMESTONE
- LIMESTONE
- BOULDERS or COBBLES

GENERAL INFORMATION

Drive sample / Press sample / Core borings

Drive sample borings are made by means of a mechanically-powered rotary-type drilling machine, employing a 2" O.D., 1-3/8" I.D. split spoon sampler, at 2.5 and/or 5-foot depth intervals, driven by means of a 140 lb. drop hammer with a free fall of 30". The number of blows required to drive the sampler 18" is considered the standard penetration test.

Drive/press borings are made by means of a mechanically-powered rotary-type drilling machine, employing a 2" O.D., 1-3/8" I.D. split spoon sampler, and 3" O.D. thin wall press sampler. The press sampler is advanced by continuous uniform pressure, applied by the drilling machine.

Core borings are made by means of a mechanically-powered rotary-type drilling machine, employing a NXM core barrel with industrial diamond cutting head.

The boring log sheets display a graphic plot of the information obtained including depth and elevation of the sample, type of sample, the standard penetration test readings in three 6-inch increments, depth and elevation of press samples, field number assigned to sample, sample description - based on laboratory tests utilizing the Casagrande AC classification system - and gradation, plasticity and moisture determinations. Results of strength and consolidation testing, if performed on undisturbed samples, will appear graphically on separate enclosures. Rock samples are displayed on the log sheets including depth and elevation of the sample, amount of recovery and a visual classification based on type, color, degree of hardness, grain size, deterioration, bedding, acid reaction and other qualifying factors.

At depths where materials are bouldery or gravelly to the extent that the sampler can not be utilized, a wash sample is procured and visually classified, in order to determine the general characteristics of the material. These samples are not considered sufficiently representative to warrant laboratory testing.

PARTICLE SIZE DEFINITIONS

Boulders	Cobbles	Gravel	Coarse Sand	Fine Sand	Silt	Clay
12"	3"	2.0mm	0.42mm	0.074mm	0.005mm	
		No. 10 sieve	No. 40 sieve	No. 200 sieve		

NOTE - ALL AVAILABLE SOIL AND BEDROCK INFORMATION WHICH CAN BE CONVENIENTLY SHOWN ON THE STRUCTURE FOUNDATION INVESTIGATION SHEETS HAS BEEN SO REPORTED. ADDITIONAL SUBSURFACE INVESTIGATIONS MAY HAVE BEEN MADE TO STUDY SOME SPECIAL ASPECT OF THE PROJECT. COPIES OF THIS DATA, IF ANY, MAY BE INSPECTED IN THE DISTRICT DEPUTY DIRECTOR'S OFFICE, THE BUREAU OF TESTS AT 1600 WEST BROAD STREET, THE PAVEMENT AND SOILS SECTION OF THE BUREAU OF LOCATION AND DESIGN OR IN THE BRIDGE BUREAU AT 25 SOUTH FRONT STREET.

SUBSURFACE INVESTIGATION
SUM-76-11.57
AKRON EAST EXPRESSWAY - RETAINING WALL NO. 3
AKRON, OHIO

R & R International, Inc.
GEOTECHNICAL ENGINEERS - GEOLOGISTS
AKRON, OHIO 44321

SUM-76-11.57

FHWA REGION	STATE	PROJECT

23/104

2/3

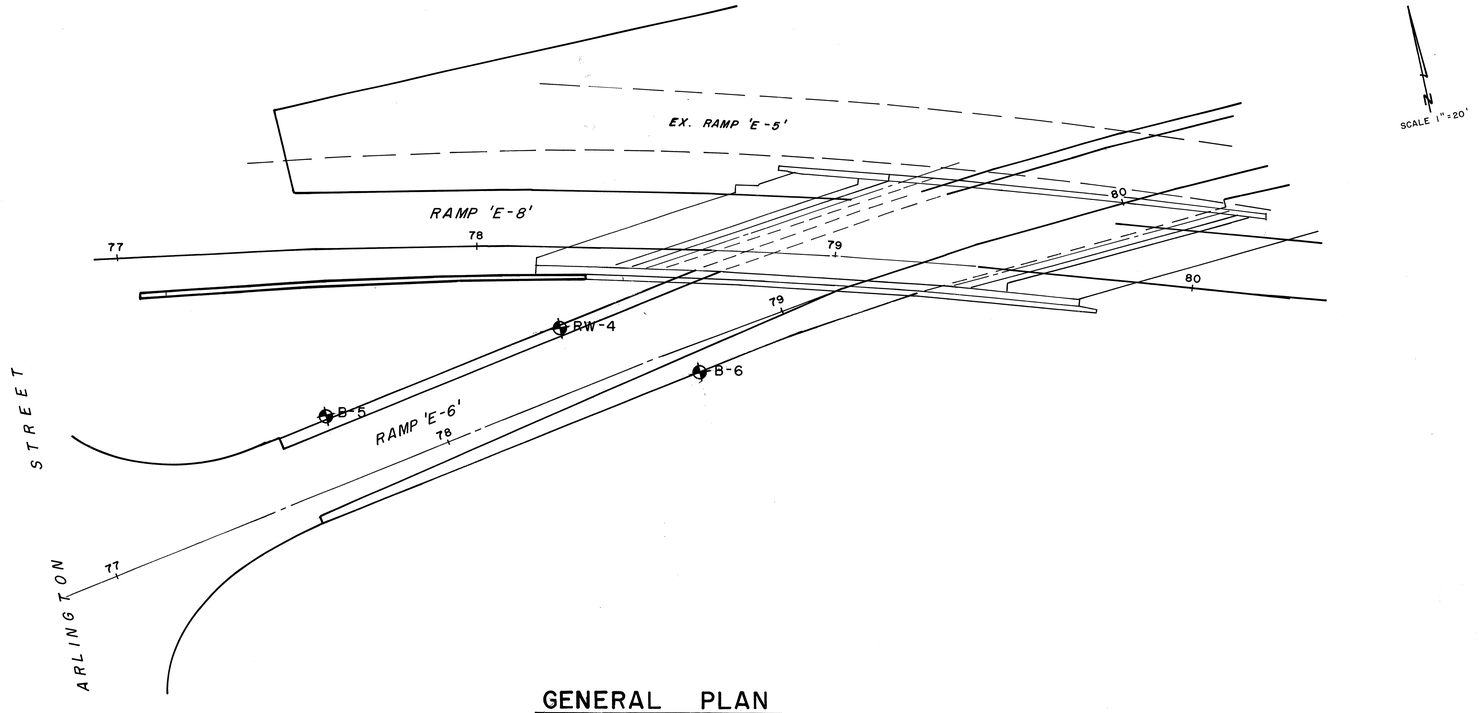

GENERAL PLAN

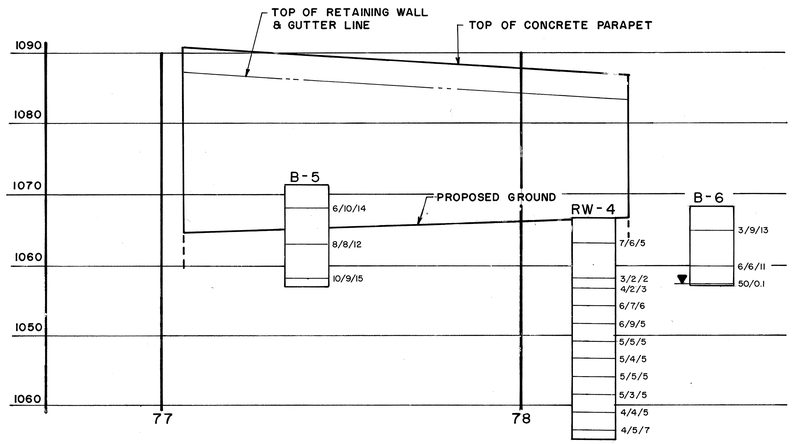

VIEW A-A
ELEVATION

SUBSURFACE INVESTIGATION
SUM-76-11.57
AKRON EAST EXPRESSWAY-RETAINING WALL NO. 3
AKRON, OHIO

R & R International, Inc.
GEOTECHNICAL ENGINEERS-GEOLOGISTS
3675 COPLEY ROAD
AKRON, OH 44321
216-666-2200

64678

Sum-76-11.57

FHWA REGION	STATE	PROJECT

24/104

3/3

LOG OF BORING

Date Started 1-28-88 Sampler Type Split Spoon Dia. 2.0 Water Elev. ---

Date Completed 1-28-88 Casing: Length -- Dia. ---

Boring No. RW-4 Station & Offset Sta. 578 + 20 117' RT Surface Elev. 1066.7

ELEV.	DEPTH	STD. PEN. (N)	REC. Ft.	LOSS Ft.	DESCRIPTION	SAMPLE NO.	SAMPLE TYPE	PHYSICAL CHARACTERISTICS % AGG.	% C. SAND	% F. SAND	% SILT	% CLAY	L.L.	P.L.	P.I.	W.C.	SHTL CLASS.
1066.7	0																
		7-6-5	1.5		Medium dense, brown SAND AND GRAVEL, little silt, moist.	1	SS										
1060.7	5																
		3-2-2	1.5			2	SS	0.4	2.3	44.3	*	53.0	19.9	17.9	2.0	16.4	A-4a
	10	4-2-3	1.5			3	SS										
		6-7-6	1.5			4	SS	2.3	7.9	36.5	*	53.3	--	--	--	14.8	A-4a
	15	6-9-5	1.5			5	SS										
		5-5-5	1.5		Medium stiff to stiff, brown SANDY SILT, little clay, trace gravel, moist.	6	SS										
	20	5-4-5	1.5			7	SS	0.1	2.6	24.9	*	72.4	24.9	16.8	8.1	19.3	A-4a
		5-5-5	1.5			8	SS	0.1	0.9	21.3	*	77.7	--	--	--	18.7	A-4a
	25	5-3-5	1.5			9	SS	0.2	0.4	14.4	*	85.0	23.9	16.5	7.4	15.7	A-4a
		4-4-5	1.5			10	SS	0.0	3.0	22.1	*	74.9	--	--	--	20.1	A-4a
	30	4-5-7	1.5			11	SS										
1035.2					TERMINATION DEPTH 31.5 FEET												

* SILT AND CLAY COMBINED

LOG OF BORING

Date Started 7-29-87 Sampler Type Split Spoon Dia. 2.0 Water Elev. ---

Date Completed 7-29-87 Casing: Length -- Dia. ---

Boring No. B-5 Station & Offset Sta. 577 + 40 129' RT. Surface Elev. 1070.7

ELEV.	DEPTH	STD. PEN. (N)	REC. Ft.	LOSS Ft.	DESCRIPTION	SAMPLE NO.	SAMPLE TYPE	PHYSICAL CHARACTERISTICS % AGG.	% C. SAND	% F. SAND	% SILT	% CLAY	L.L.	P.L.	P.I.	W.C.	SHTL CLASS.
1070.7	0																
		6-10-14	1.4		Very stiff, brown SANDY SILT, trace gravel and organics, moist.	1	SS										
	5																
1062.2		8-8-12	1.5			2	SS										
	10				Very stiff, brown SANDY SILT, some gravel, moist.												
		10-9-15	1.4			3	SS	22.8	17.0	22.4	*	37.8	--	--	--	9.0	A-4a
1055.7	15				TERMINATION DEPTH 15.0 FEET												

* SILT AND CLAY COMBINED

LOG OF BORING

Date Started 7-29-87 Sampler Type Split Spoon Dia. 2.0 Water Elev. 1056.4

Date Completed 7-29-87 Casing: Length -- Dia. ---

Boring No. B-6 Station & Offset Sta. 578 + 53 139' RT. Surface Elev. 1067.9

ELEV.	DEPTH	STD. PEN. (N)	REC. Ft.	LOSS Ft.	DESCRIPTION	SAMPLE NO.	SAMPLE TYPE	PHYSICAL CHARACTERISTICS % AGG.	% C. SAND	% F. SAND	% SILT	% CLAY	L.L.	P.L.	P.I.	W.C.	SHTL CLASS.
1067.9	0																
		3-9-13	1.1		Very stiff, brown SANDY SILT, trace gravel, moist.	1	SS	9.6	6.3	17.9	*	66.2	--	--	--	12.9	A-4a
	5																
		6-6-11	0.4			2	SS										
	10																
1056.9		50/0.1	0.1		Very dense, brown SAND, moist. AUGER REFUSAL AT 11.6 FEET.	3	SS										
1056.3					TERMINATION DEPTH 11.6 FEET												

* SILT AND CLAY COMBINED

SUBSURFACE INVESTIGATION
SUM-76-11.57
AKRON EAST EXPRESSWAY-RETAINING WALL NO. 3
AKRON, OHIO

R & R International, Inc.
GEOTECHNICAL ENGINEERS-GEOLOGISTS
3675 COPLEY ROAD
AKRON, OH 44321
216-666-2200

5678

SUM-76-11.57

FHWA REGION	STATE	PROJECT

25/104

STRUCTURE SURFACE INVESTIGATION

1/3

GEOLOGY OF THE SITE

THE PROJECT SITE LIES ON THE GLACIATED, HILLY, DEEPLY DISSECTED ALLEGHENY PLATEAU PHYSIOGRAPHIC PROVINCE. RELIEF ALONG THE LENGTH OF THE WALL IS APPROXIMATELY 15 FEET.

THE PROJECT AREA WAS GLACIATED BY THE WISCONSIN ICE SHEET, LEAVING A VARIABLE BUT THIN DRIFT, NOT AVERAGING MORE THAN 25 FEET IN THICKNESS. THERE ARE TWO (2) DISTINCT TYPES OF GLACIAL DEPOSITS PRESENT AT THE SITE. THEY ARE THE MOGADORE TILL, WHICH IS A COARSE SANDY TILL WITH MINOR AMOUNTS OF CLAY, AND KAME AND KAME TERRACE DEPOSITS WHICH CONSIST PRIMARILY OF GRAVEL AND SAND MATERIAL. IT SHOULD BE NOTED THAT PORTIONS OF THE AREA ALONG THE LENGTH OF THE ROADWAY ARE "MADE LAND" WHICH ARE AREAS WHERE THE ORIGINAL SURFACE HAS BEEN COMPLETELY MODIFIED BY MAN.

BEDROCK AT THE PROJECT SITE CONSISTS OF THE PENNSYLVANIAN AGED SHARON CONGLOMERATE OF THE POTTSVILLE FORMATION IN THE HIGHLANDS, AND THE LOWER PORTIONS ARE UNDERLAIN BY SHALES AND SANDSTONES OF THE LOGAN FORMATION WHICH IS MISSISSIPPIAN IN AGE.

EXPLORATION

THE EXPLORATION CONSISTED OF ADVANCING A TOTAL OF ONE (1) DRIVE SAMPLE BORING WITH A CME-45c TRACK MOUNTED DRILLING RIG USING CONVENTIONAL 3.25 INCH I.D. HOLLOW STEM AUGERS, PERFORMED DURING JANUARY, 1988. IN ADDITION, A TEST BORING LOG FOR A ROADWAY BORING ADVANCED DURING JULY, 1987 IS INCLUDED AS PART OF THIS REPORT.

INVESTIGATIONAL FINDINGS

THE BORINGS DISCLOSED INTERVALS OF SANDY SILT (A-4a), AND GRAVEL WITH SAND (A-1-b AND A-2-4). BOTH TEST BORINGS WERE TERMINATED IN THIS MATERIAL. THE DEEPEST TEST BORING (RR-5) WAS TERMINATED AT A DEPTH OF 48.9 FEET BELOW THE EXISTING GROUND SURFACE (ELEVATION 1023±).

FOR SPECIFIC CONDITIONS AT VARIOUS DEPTHS, REFER TO THE INDIVIDUAL TEST BORING LOGS WHICH FORM A PART OF THIS REPORT.

LEGEND

- AUGER BORING LOCATION - PLAN VIEW
- PRESS AND/OR DRIVE SAMPLE AND/OR CORE BORING LOCATION - PLAN VIEW
- TR — TOP OF ROCK
- CAPPED PILE
- FOOTING
- FOOTING ON PILE
- HORIZONTAL BAR ON BORING LOG INDICATES THE DEPTH THE SAMPLE WAS TAKEN
- X/Y/Z — FIGURES BESIDE THE BORING LOG IN PROFILE INDICATE THE NUMBER OF BLOWS FOR STANDARD PENETRATION TEST
  - X = NO. OF BLOWS FOR FIRST 6"
  - Y = NO. OF BLOWS FOR SECOND 6"
  - Z = NO. OF BLOWS FOR THIRD 6"
- W — INDICATES FREE WATER ELEVATION
- INDICATES STATIC WATER ELEVATION

SYMBOLS OF ROCK TYPES

- COAL
- WEATHERED MUDSTONE
- MUDSTONE
- WEATHERED SHALE
- SHALE
- CLAYSTONE
- SILTSTONE
- WEATHERED SANDSTONE
- SANDSTONE
- LEACHED DOLOMITE
- DOLOMITE
- LEACHED LIMESTONE
- LIMESTONE
- BOULDERS or COBBLES

GENERAL INFORMATION

Drive sample / Press sample / Core borings

Drive sample borings are made by means of a mechanically-powered rotary-type drilling machine, employing a 2" O.D., 1-3/8" I.D. split spoon sampler, at 2.5 and/or 5-foot depth intervals, driven by means of a 140 lb. drop hammer with a free fall of 30". The number of blows required to drive the sampler 18" is considered the standard penetration test.

Drive/press borings are made by means of a mechanically-powered rotary-type drilling machine, employing a 2" O.D., 1-3/8" I.D. split spoon sampler, and 3" O.D. thin wall press sampler. The press sampler is advanced by continuous uniform pressure, applied by the drilling machine.

Core borings are made by means of a mechanically-powered rotary-type drilling machine, employing a NXM core barrel with industrial diamond cutting head.

The boring log sheets display a graphic plot of the information obtained including depth and elevation of the sample, type of sample, the standard penetration test readings in three 6-inch increments, depth and elevation of press samples, field number assigned to sample, sample description - based on laboratory tests utilizing the Casagrande AC classification system - and gradation, plasticity and moisture determinations. Results of strength and consolidation testing, if performed on undisturbed samples, will appear graphically on separate enclosures. Rock samples are displayed on the log sheets including depth and elevation of the sample, amount of recovery and a visual classification based on type, color, degree of hardness, grain size, deterioration, bedding, acid reaction and other qualifying factors.

At depths where materials are bouldery or gravelly to the extent that the sampler can not be utilized, a wash sample is procured and visually classified, in order to determine the general characteristics of the material. These samples are not considered sufficiently representative to warrant laboratory testing.

PARTICLE SIZE DEFINITIONS

12"	3"	2.0mm		0.42mm		0.074mm	0.005mm
Boulders	Cobbles	Gravel	Coarse Sand		Fine Sand	Silt	Clay
			No. 10 sieve		No. 40 sieve	No. 200 sieve	

NOTE - ALL AVAILABLE SOIL AND BEDROCK INFORMATION WHICH CAN BE CONVENIENTLY SHOWN ON THE STRUCTURE FOUNDATION INVESTIGATION SHEETS HAS BEEN SO REPORTED. ADDITIONAL SUBSURFACE INVESTIGATIONS MAY HAVE BEEN MADE TO STUDY SOME SPECIAL ASPECT OF THE PROJECT. COPIES OF THIS DATA, IF ANY, MAY BE INSPECTED IN THE DISTRICT DEPUTY DIRECTORS OFFICE, THE BUREAU OF TESTS AT 1600 WEST BROAD STREET, THE PAVEMENT AND SOILS SECTION OF THE BUREAU OF LOCATION AND DESIGN OR IN THE BRIDGE BUREAU AT 25 SOUTH FRONT STREET.

SUBSURFACE INVESTIGATION
SUM-76-11.57
AKRON EAST EXPRESSWAY-RETAINING WALL NO. 4
AKRON, OHIO

R & R International, Inc.
GEOTECHNICAL ENGINEERS-GEOLOGISTS
AKRON, OHIO 44321

SUM-76-11.57

FHWA REGION	STATE	PROJECT

26/104

2/3

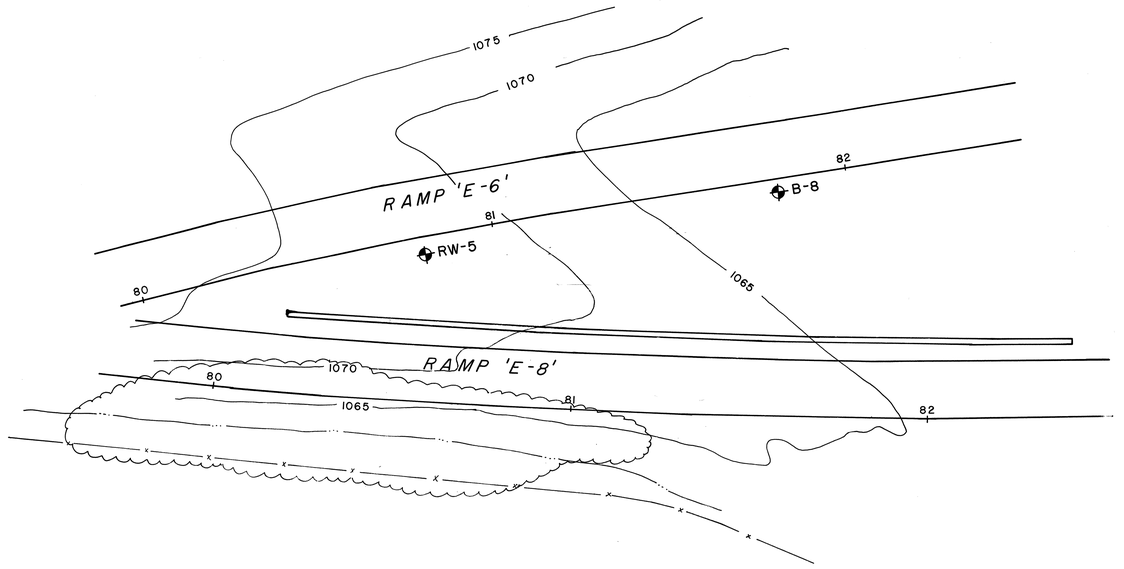

GENERAL PLAN

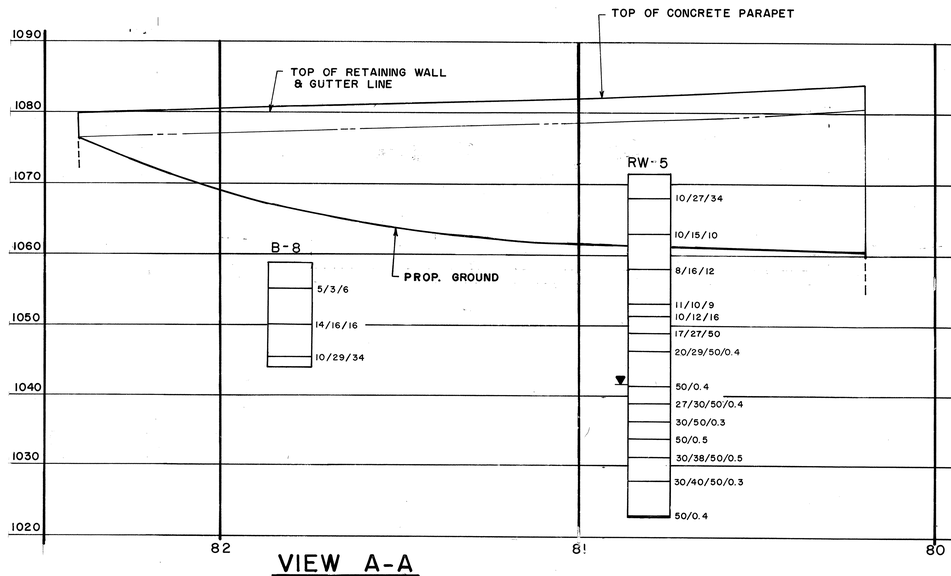

VIEW A-A
ELEVATION

SUBSURFACE INVESTIGATION
SUM-76-11.57
AKRON EAST EXPRESSWAY-RETAINING WALL NO. 4
AKRON, OHIO

R & R International, Inc.
GEOTECHNICAL ENGINEERS-GEOLOGISTS
3675 COPLEY ROAD
AKRON, OH 44321
216-666-2200

564.78

Sum-76-11.57

FHWA REGION	STATE	PROJECT

27/104

3/3

LOG OF BORING

Date Started 1-28-88 Sampler Type Split Spoon Dia. 2.0 Water Elev. ---

Date Completed 1-29-88 Casing: Length -- Dia. ---

Boring No. RW-5 Station & Offset Sta. 580 + 74 114' RT. Surface Elev. 1071.6

ELEV.	DEPTH	STD. PEN. (N)	REC. Ft.	LOSS Ft.	DESCRIPTION	SAMPLE NO.	SAMPLE TYPE	PHYSICAL CHARACTERISTICS % AGG.	% C. SAND	% F. SAND	% SILT	% CLAY	L.L.	P.L.	P.I.	W.C.	SHTL CLASS.
1071.6	0																
1070.6					TOPSOIL												
		10-27-34	1.5		Very dense, brown SAND, little silt, trace gravel, moist.	1	SS										
1063.1	5	10-15-10	1.0			2	SS	40.8	31.9	17.2	*	10.1	--	--	--	8.4	A-1-b
	10	8-16-12	1.5		Medium dense, brown GRAVEL with sand, moist.	3	SS										
1053.1	15	11-10-9	1.5			4	SS	4.3	7.0	20.4	*	68.3	--	--	--	4.7	A-4a
	20	10-12-16	1.0			5	SS										
		17-27-50	1.5			6	SS	14.5	11.4	26.0	*	48.1	19.1	14.0	5.1	11.6	A-4a
	25	20-29-50/ 0.4	1.4			7	SS										
					Very stiff to hard, brown and gray SANDY SILT, some gravel, trace stone fragments, moist.												
	30	50/0.4	0.4			8	SS										
		27-30-50/ 0.4	1.3			9	SS										
	35	30-50/0.3	0.5			10	SS	28.3	10.8	16.6	*	44.3	--	--	--	8.4	A-4a
		50/0.5	0.5			11	SS										
1031.6	40					12	SS	36.2	22.1	10.0	*	31.7	--	--	--	15.3	A-2-4
		30-40-50/	1.3		Very dense, gray STONE FRAGMENTS with sand and silt, moist.	13	SS										
	45																
1022.7		50/0.4	0.4			14	SS				*	SILT AND CLAY COMBINED					
					TERMINATION DEPTH 48.9 FEET.												

LOG OF BORING

Date Started 7-29-87 Sampler Type Split Spoon Dia. 2.0 Water Elev. ---

Date Completed 7-29-87 Casing: Length -- Dia. ---

Boring No. B-8 Station & Offset Sta. 581 + 80 115' RT. Surface Elev. 1058.6

ELEV.	DEPTH	STD. PEN. (N)	REC. Ft.	LOSS Ft.	DESCRIPTION	SAMPLE NO.	SAMPLE TYPE	PHYSICAL CHARACTERISTICS % AGG.	% C. SAND	% F. SAND	% SILT	% CLAY	L.L.	P.L.	P.I.	W.C.	SHTL CLASS.
1058.6	0																
		5-3-6	1.0			1	SS										
	5				Stiff to hard, brown and gray SANDY SILT, trace gravel, moist.												
		14-16-16	1.5			2	SS	9.9	9.6	20.9	*	59.6	21.8	15.7	6.1	12.9	A-4a
	10																
1045.1		10-29-34	1.3		Very dense, brown SILTY SAND, trace gravel, moist.	3	SS										
1044.1																	
1043.6	15				Very dense, brown SAND, little silt, trace gravel and rock fragments, moist.												
					TERMINATION DEPTH 15.0 FEET												
											*	SILT AND CLAY COMBINED					

SUBSURFACE INVESTIGATION
SUM-76-11.57
AKRON EAST EXPRESSWAY-RETAINING WALL NO. 4
AKRON, OHIO

R & R International, Inc.
GEOTECHNICAL ENGINEERS-GEOLOGISTS
3675 COPLEY ROAD
AKRON, OH 44321
216-666-2200

56478

SUM-76-11.57

FHWA REGION	STATE	PROJECT

28/104

STRUCTURE SUBSURFACE INVESTIGATION

1/3

GEOLOGY OF THE SITE

THE PROJECT SITE LIES ON THE GLACIATED, HILLY, DEEPLY DISSECTED ALLEGHENY PLATEAU PHYSIOGRAPHIC PROVINCE. RELIEF ALONG THE LENGTH OF THE WALL IS APPROXIMATELY 25 FEET.

THE PROJECT AREA WAS GLACIATED BY THE WISCONSIN ICE SHEET, LEAVING A VARIABLE BUT THIN DRIFT, NOT AVERAGING MORE THAN 25 FEET IN THICKNESS. THERE ARE TWO (2) DISTINCT TYPES OF GLACIAL DEPOSITS PRESENT AT THE SITE. THEY ARE THE MOGADORE TILL, WHICH IS A COARSE SANDY TILL WITH MINOR AMOUNTS OF CLAY, AND KAME AND KAME TERRACE DEPOSITS WHICH CONSIST PRIMARILY OF GRAVEL AND SAND MATERIAL. IT SHOULD BE NOTED THAT PORTIONS OF THE AREA ALONG THE LENGTH OF THE ROADWAY ARE "MADE LAND" WHICH ARE AREAS WHERE THE ORIGINAL SURFACE HAS BEEN COMPLETELY MODIFIED BY MAN.

BEDROCK AT THE PROJECT SITE CONSISTS OF THE PENNSYLVANIAN AGED SHARON CONGLOMERATE OF THE POTTSVILLE FORMATION IN THE HIGHLANDS, AND THE LOWER PORTIONS ARE UNDERLAIN BY SHALES AND SANDSTONES OF THE LOGAN FORMATION WHICH IS MISSISSIPPIAN IN AGE.

EXPLORATION

THE EXPLORATION CONSISTED OF ADVANCING A TOTAL OF TWO (2) DRIVE SAMPLE-CORE BORINGS WITH A CME-45c TRACK MOUNTED DRILLING RIG USING CONVENTIONAL 3.25 INCH HOLLOW STEM AUGERS, PERFORMED DURING FEBRUARY, 1988.

INVESTIGATIONAL FINDINGS

THE BORINGS DISCLOSED LAYERS OF STIFF TO HARD, BROWN SANDY SILT (A-4a) WITH LAYERS OF MEDIUM DENSE TO VERY DENSE, BROWN SAND AND GRAVEL (A-1-a). THESE SOIL LAYERS WERE FOUND TO EXTEND TO ELEVATIONS RANGING FROM APPROXIMATELY 1015 TO 1021. AT TEST LOCATION RW-16, SANDSTONE BEDROCK WAS ENCOUNTERED AND A CORE SAMPLE WAS OBTAINED. THE SANDSTONE IS HIGHLY TO MODERATELY ALTERED AND HAS A ROCK QUALITY DESIGNATION (RQD) VALUE OF 40 PERCENT.

FOR SPECIFIC CONDITIONS AT VARIOUS DEPTHS, REFER TO THE INDIVIDUAL TEST BORING LOGS WHICH FORM A PART OF THESE PLANS.

LEGEND

- AUGER BORING LOCATION - PLAN VIEW
- PRESS AND/OR DRIVE SAMPLE AND/OR CORE BORING LOCATION - PLAN VIEW
- TR — TOP OF ROCK
- CAPPED PILE
- FOOTING
- FOOTING ON PILE
- HORIZONTAL BAR ON BORING LOG INDICATES THE DEPTH THE SAMPLE WAS TAKEN
- X/Y/Z — FIGURES BESIDE THE BORING LOG IN PROFILE INDICATE THE NUMBER OF BLOWS FOR STANDARD PENETRATION TEST
  - X = NO. OF BLOWS FOR FIRST 6"
  - Y = NO. OF BLOWS FOR SECOND 6"
  - Z = NO. OF BLOWS FOR THIRD 6"
- W — INDICATES FREE WATER ELEVATION
- INDICATES STATIC WATER ELEVATION

SYMBOLS OF ROCK TYPES

- COAL
- WEATHERED MUDSTONE
- MUDSTONE
- WEATHERED SHALE
- SHALE
- CLAYSTONE
- SILTSTONE
- WEATHERED SANDSTONE
- SANDSTONE
- LEACHED DOLOMITE
- DOLOMITE
- LEACHED LIMESTONE
- LIMESTONE
- BOULDERS or COBBLES

GENERAL INFORMATION

Drive sample / Press sample / Core borings

Drive sample borings are made by means of a mechanically-powered rotary-type drilling machine employing a 2" O.D., 1-3/8" I.D. split spoon sampler, at 2.5 and/or 5-foot depth interva by means of a 140 lb. drop hammer with a free fall of 30". The number of blows required drive the sampler 18" is considered the standard penetration test.

Drive/press borings are made by means of a mechanically-powered rotary-type drilling mach employing a 2" O.D., 1-3/8" I.D. split spoon sampler, and 3" O.D. thin wall press sampler. The press sampler is advanced by continuous uniform pressure, applied by the drilling machine.

Core borings are made by means of a mechanically-powered rotary-type drilling machine, employing a NXM core barrel with industrial diamond cutting head.

The boring log sheets display a graphic plot of the information obtained including depth and elevation of the sample, type of sample, the standard penetration test readings in three 6-inch increments, depth and elevation of press samples, field number assigned to sample, sample description - based on laboratory tests utilizing the Casagrande AC classification system - and gradation, plasticity and moisture determinations. Results of strength and consolidation testing, if performed on undisturbed samples, will appear graphically on separate enclosures. Rock samples are displayed on the log sheets including depth and elevation of the sample, amount of recovery and a visual classification based on type, color, degree of hardness, grain size, deterioration, bedding, acid reaction and other qualifying factors.

At depths where materials are bouldery or gravelly to the extent that the sampler can not be utilized, a wash sample is procured and visually classified, in order to determine the general characteristics of the material. These samples are not considered sufficiently representative to warrant laboratory testing.

PARTICLE SIZE DEFINITIONS

12"	3"	2.0mm		0.42mm	0.074mm	0.005mm
Boulders	Cobbles	Gravel	Coarse Sand	Fine Sand	Silt	Clay
		No. 10 sieve		No. 40 sieve	No. 200 sieve	

NOTE - ALL AVAILABLE SOIL AND BEDROCK INFORMATION WHICH CAN BE CONVENIENTLY SHOWN ON THE STRUCTURE FOUNDATION INVESTIGATION SHEETS HAS BEEN SO REPORTED. ADDITIONAL SUBSURFACE INVESTIGATIONS MAY HAVE BEEN MADE TO STUDY SOME SPECIAL ASPECT OF THE PROJECT. COPIES OF THIS DATA, IF ANY, MAY BE INSPECTED IN THE DISTRICT DEPUTY DIRECTOR'S OFFICE, THE BUREAU OF TESTS AT 1600 WEST BROAD STREET, THE PAVEMENT AND SOILS SECTION OF THE BUREAU OF LOCATION AND DESIGN OR IN THE BRIDGE BUREAU AT 25 SOUTH FRONT STREET.

SUBSURFACE INVESTIGATION
SUM-76-11.57
AKRON EAST EXPRESSWAY-RETAINING WALL NO 5
AKRON, OHIO

R & R International, Inc.
GEOTECHNICAL ENGINEERS-GEOLOGISTS
AKRON, OHIO 44321

SUM-76-11.57

FHWA REGION	STATE	PROJECT

29/104

2/3

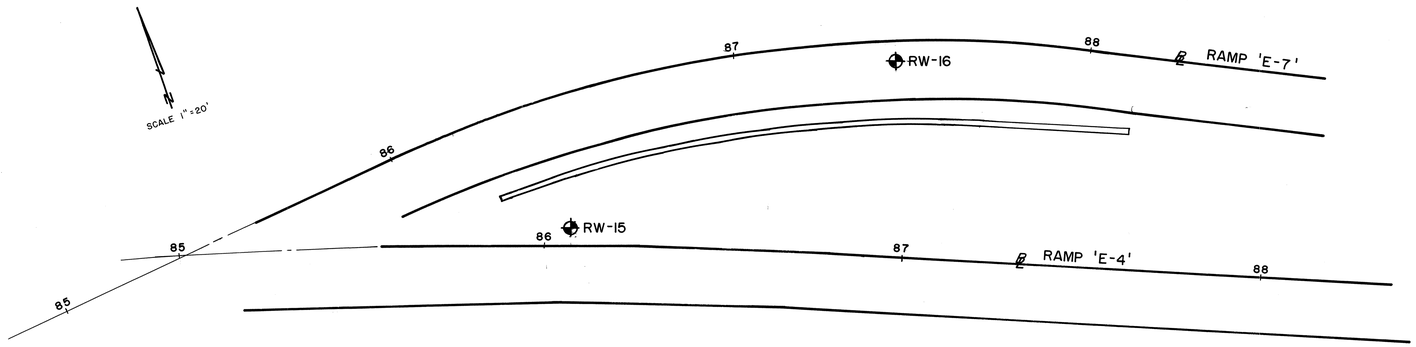

GENERAL PLAN

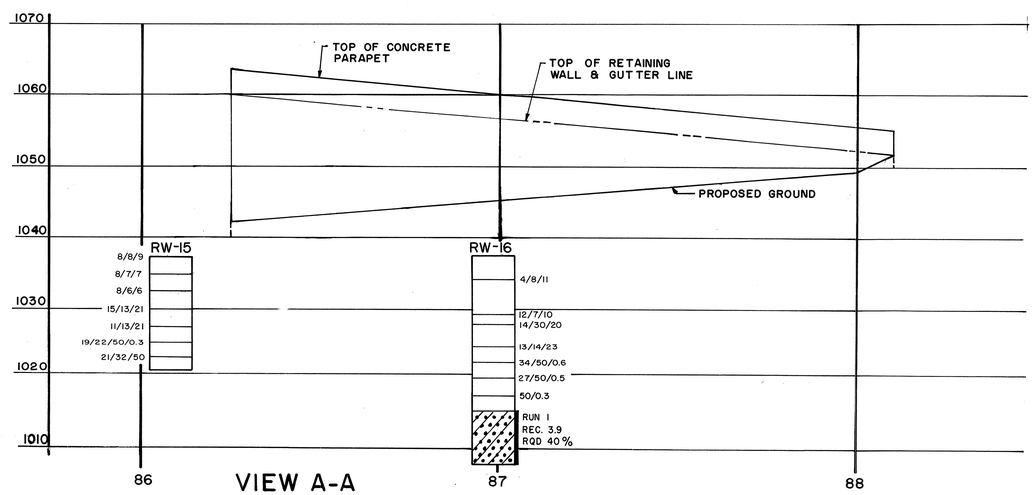

VIEW A-A
ELEVATION

SUBSURFACE INVESTIGATION
SUM-76-11.57
AKRON EAST EXPRESSWAY-RETAINING WALL NO. 5
AKRON, OHIO

R & R International, Inc.
GEOTECHNICAL ENGINEERS-GEOLOGISTS
3675 COPLEY ROAD
AKRON, OH 44321
216-666-2200

56478

SUM-76-11.57

FHWA REGION	STATE	PROJECT

30/104

3/3

LOG OF BORING

Date Started 2-23-88 Sampler Type Split Spoon Dia. 2.0 Water Elev. ---

Date Completed 2-23-88 Casing: Length -- Dia. ---

Boring No. RW-15 Station & Offset Sta. 586 + 08 140' LT. Surface Elev. 1037.7

ELEV.	DEPTH	STD. PEN. (N)	REC. Ft.	LOSS Ft.	DESCRIPTION	SAMPLE NO.	SAMPLE TYPE	PHYSICAL CHARACTERISTICS % AGG.	% C. SAND	% F. SAND	% SILT	% CLAY	L.L.	P.L.	P.I.	W.C.	SHTL CLASS.
1037.7	0																
1037.2		8-8-9	1.5		TOPSOIL	1	SS										
		8-7-7	1.5		Stiff, brown and black mottled SANDY SILT, little gravel, trace cinders and brick fragments, moist (Fill).	2	SS										
	5	8-6-6	1.5			3	SS										
1030.7		15-13-21	1.5			4	SS	26.5	4.3	6.6	*	62.6	--	--	--	15.7	A-4a
	10	11-13-21	1.5			5	SS	23.4	13.0	13.5	*	50.1	--	--	--	12.0	A-4a
		19-22-50/0.3	1.0		Hard, brown SANDY SILT, some gravel, moist.	6	SS	35.5	11.5	13.5	*	39.5	--	--	--	3.3	A-4a
	15	21-32-50	1.5			7	SS										
1020.7					TERMINATION DEPTH 17.0 FEET												

* SILT AND CLAY COMBINED

LOG OF BORING

Date Started 2-18-88 Sampler Type Split Spoon Dia. 2.0 Water Elev. ---

Date Completed 2-18-88 Casing: Length -- Dia. ---

Boring No. RW-16 Station & Offset Sta. 587 + 02 184' LT. Surface Elev. 1037.6

ELEV.	DEPTH	STD. PEN. (N)	REC. Ft.	LOSS Ft.	DESCRIPTION	SAMPLE NO.	SAMPLE TYPE	PHYSICAL CHARACTERISTICS % AGG.	% C. SAND	% F. SAND	% SILT	% CLAY	L.L.	P.L.	P.I.	W.C.	SHTL CLASS.
1037.6	0																
1034.2					TOPSOIL												
		4-8-11	1.5		Very stiff, brown SANDY SILT, trace gravel, moist.	1	SS	7.8	13.7	38.0	*	40.5	--	--	--	16.0	A-4a
	5																
1029.6		12-7-10	1.5			2	SS	71.9	9.7	8.4	*	10.0	--	--	--	9.3	A-1-a
	10	14-30-20	1.5		Medium dense to very dense, brown SAND AND GRAVEL, trace silt, moist.	3	SS										
1024.6		13-14-23	1.5			4	SS	19.6	9.0	29.2	*	42.2	--	--	--	11.9	A-4a
	15				Hard, brown SANDY SILT, trace to little gravel, moist.												
1021.1		34-50/0.6	1.0			5	SS										
		27-50/0.5	0.9		Very dense, brown SAND AND GRAVEL, little silt, moist.	6	SS										
	20	50/0.3	0.3			7	SS										
1014.6					AUGER REFUSAL AT 23.0 FEET.												
	25	RQD 40%	3.9	3.1	Tan SANDSTONE, highly to moderately altered, medium grained, massive, firm to hard.	Run 1	NXW										
1007.6	30				TERMINATION DEPTH 30.0 FEET												

* SILT AND CLAY COMBINED

SUBSURFACE INVESTIGATION
SUM-76-11.57
AKRON EAST EXPRESSWAY-RETAINING WALL NO. 5
AKRON, OHIO

R & R International, Inc.
GEOTECHNICAL ENGINEERS-GEOLOGISTS
3675 COPLEY ROAD
AKRON, OH 44321
216-666-2200

56478

Sum-76-11.57

FHWA REGION	STATE	PROJECT

31/104

STRUCTURE SURFACE INVESTIGATION

1/4

GEOLOGY OF THE SITE

THE PROJECT SITE LIES ON THE GLACIATED, HILLY, DEEPLY DISSECTED ALLEGHENY PLATEAU PHYSIOGRAPHIC PROVINCE. RELIEF ALONG THE LENGTH OF THE WALL IS APPROXIMATELY 25 FEET.

THE PROJECT AREA WAS GLACIATED BY THE WISCONSIN ICE SHEET, LEAVING A VARIABLE BUT THIN DRIFT, NOT AVERAGING MORE THAN 25 FEET IN THICKNESS. THERE ARE TWO (2) DISTINCT TYPES OF GLACIAL DEPOSITS PRESENT AT THE SITE. THEY ARE THE MOGADORE TILL, WHICH IS A COARSE SANDY TILL WITH MINOR AMOUNTS OF CLAY, AND KAME AND KAME TERRACE DEPOSITS WHICH CONSIST PRIMARILY OF GRAVEL AND SAND MATERIAL. IT SHOULD BE NOTED THAT PORTIONS OF THE AREA ALONG THE LENGTH OF THE ROADWAY ARE "MADE LAND" WHICH ARE AREAS WHERE THE ORIGINAL SURFACE HAS BEEN COMPLETELY MODIFIED BY MAN.

BEDROCK AT THE PROJECT SITE CONSISTS OF THE PENNSYLVANIAN AGED SHARON CONGLOMERATE OF THE POTTSVILLE FORMATION IN THE HIGHLANDS, AND THE LOWER PORTIONS ARE UNDERLAIN BY SHALES AND SANDSTONES OF THE LOGAN FORMATION WHICH IS MISSISSIPPIAN IN AGE.

EXPLORATION

THE EXPLORATION CONSISTED OF ADVANCING A TOTAL OF THREE (3) DRIVE SAMPLE-CORE BORINGS WITH A CME-55 TRUCK MOUNTED DRILLING RIG USING CONVENTIONAL 3.25 INCH I.D. HOLLOW STEM AUGERS, PERFORMED DURING FEBRUARY AND MARCH, 1988.

INVESTIGATIONAL FINDINGS

THE BORINGS DISCLOSED ALTERNATING LAYERS OF SANDY SILT (A-4A) AND SAND AND GRAVEL (A-1-A, A-1-B, AND A-2-4). THE SOIL UNITS EXTENDED TO THE TERMINATION ELEVATION OF EACH TEST BORING WHICH RANGED FROM APPROXIMATELY 931 TO 977. THE NON-COHESIVE SOILS HAVE A RELATIVE COMPACTNESS RANGING FROM "LOOSE" TO "VERY DENSE." THE COHESIVE SOILS WERE FOUND TO BE RELATIVELY LIMITED IN EXTENT AND HAVE A RELATIVE CONSISTENCY RANGING FROM "MEDIUM STIFF" TO "HARD."

FOR SPECIFIC CONDITIONS AT VARIOUS DEPTHS, REFER TO THE INDIVIDUAL TEST BORING LOGS WHICH FORM A PART OF THESE PLANS.

LEGEND

- AUGER BORING LOCATION - PLAN VIEW
- PRESS AND/OR DRIVE SAMPLE AND/OR CORE BORING LOCATION - PLAN VIEW
- TR — TOP OF ROCK
- CAPPED PILE
- FOOTING
- FOOTING ON PILE
- HORIZONTAL BAR ON BORING LOG INDICATES THE DEPTH THE SAMPLE WAS TAKEN
- X/Y/Z — FIGURES BESIDE THE BORING LOG IN PROFILE INDICATE THE NUMBER OF BLOWS FOR STANDARD PENETRATION TEST
  - X = NO. OF BLOWS FOR FIRST 6"
  - Y = NO. OF BLOWS FOR SECOND 6"
  - Z = NO. OF BLOWS FOR THIRD 6"
- W — INDICATES FREE WATER ELEVATION
- INDICATES STATIC WATER ELEVATION

SYMBOLS OF ROCK TYPES

- COAL
- WEATHERED MUDSTONE
- MUDSTONE
- WEATHERED SHALE
- SHALE
- CLAYSTONE
- SILTSTONE
- WEATHERED SANDSTONE
- SANDSTONE
- LEACHED DOLOMITE
- DOLOMITE
- LEACHED LIMESTONE
- LIMESTONE
- BOULDERS or COBBLES

GENERAL INFORMATION

Drive sample / Press sample / Core borings

Drive sample borings are made by means of a mechanically-powered rotary-type drilling machine, employing a 2" O.D., 1-3/8" I.D. split spoon sampler, at 2.5 and/or 5-foot depth intervals, driven by means of a 140 lb. drop hammer with a free fall of 30". The number of blows required to drive the sampler 18" is considered the standard penetration test.

Drive/press borings are made by means of a mechanically-powered rotary-type drilling machine, employing a 2" O.D., 1-3/8" I.D. split spoon sampler, and 3" O.D. thin wall press sampler. The press sampler is advanced by continuous uniform pressure, applied by the drilling machine.

Core borings are made by means of a mechanically-powered rotary-type drilling machine, employing a NXM core barrel with industrial diamond cutting head.

The boring log sheets display a graphic plot of the information obtained including depth and elevation of the sample, type of sample, the standard penetration test readings in three 6-inch increments, depth and elevation of press samples, field number assigned to sample, sample description - based on laboratory tests utilizing the Casagrande AC classification system - and gradation, plasticity and moisture determinations. Results of strength and consolidation testing, if performed on undisturbed samples, will appear graphically on separate enclosures. Rock samples are displayed on the log sheets including depth and elevation of the sample, amount of recovery and a visual classification based on type, color, degree of hardness, grain size, deterioration, bedding, acid reaction and other qualifying factors.

At depths where materials are bouldery or gravelly to the extent that the sampler can not be utilized, a wash sample is procured and visually classified, in order to determine the general characteristics of the material. These samples are not considered sufficiently representative to warrant laboratory testing.

PARTICLE SIZE DEFINITIONS

Boulders	Cobbles	Gravel	Coarse Sand	Fine Sand	Silt	Clay
12"	3"	2.0mm	0.42mm	0.074mm	0.005mm	
		No. 10 sieve	No. 40 sieve	No. 200 sieve		

NOTE - ALL AVAILABLE SOIL AND BEDROCK INFORMATION WHICH CAN BE CONVENIENTLY SHOWN ON THE STRUCTURE FOUNDATION INVESTIGATION SHEETS HAS BEEN SO REPORTED. ADDITIONAL SUBSURFACE INVESTIGATIONS MAY HAVE BEEN MADE TO STUDY SOME SPECIAL ASPECT OF THE PROJECT. COPIES OF THIS DATA, IF ANY, MAY BE INSPECTED IN THE DISTRICT DEPUTY DIRECTORS OFFICE, THE BUREAU OF TESTS AT 1600 WEST BROAD STREET, THE PAVEMENT AND SOILS SECTION OF THE BUREAU OF LOCATION AND DESIGN OR IN THE BRIDGE BUREAU AT 25 SOUTH FRONT STREET.

SUBSURFACE INVESTIGATION
SUM-76-11.57
AKRON EAST EXPRESSWAY-RETAINING WALL NO. 9
AKRON, OHIO

R & R International, Inc.
GEOTECHNICAL ENGINEERS-GEOLOGISTS
AKRON, OHIO 44321

Sum-76-11.57

FHWA REGION	STATE	PROJECT

32/104

2/4

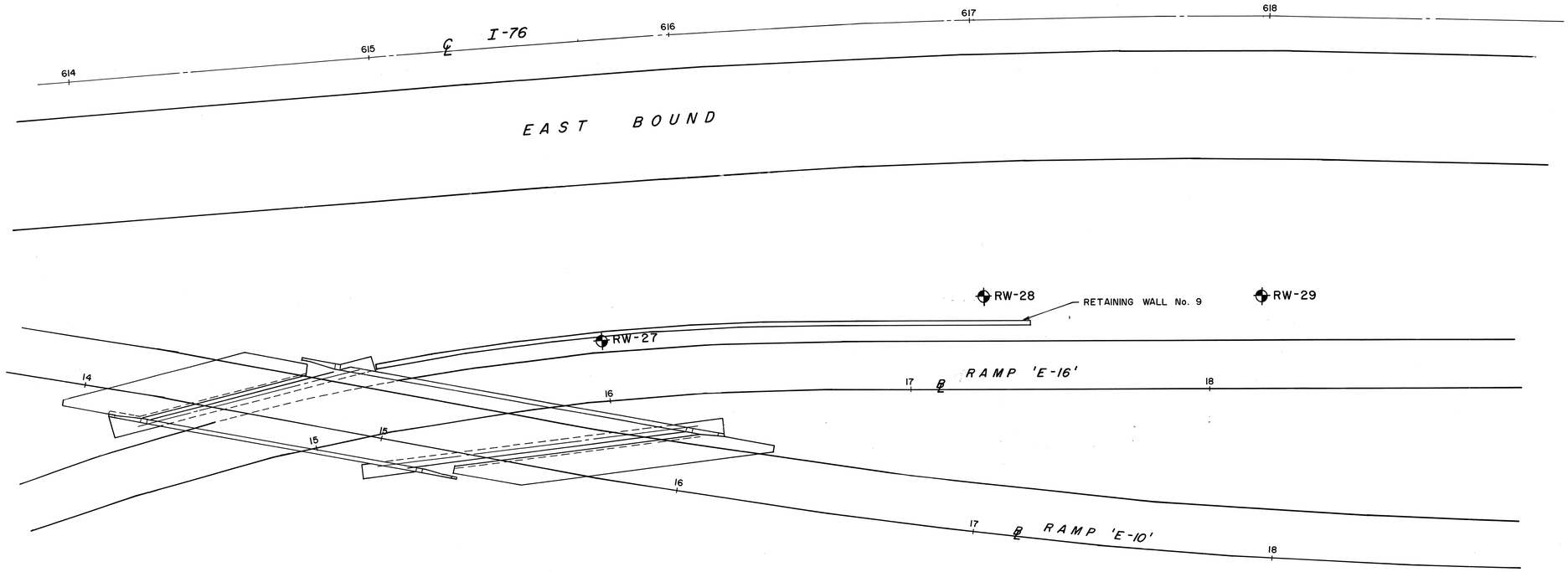

GENERAL PLAN

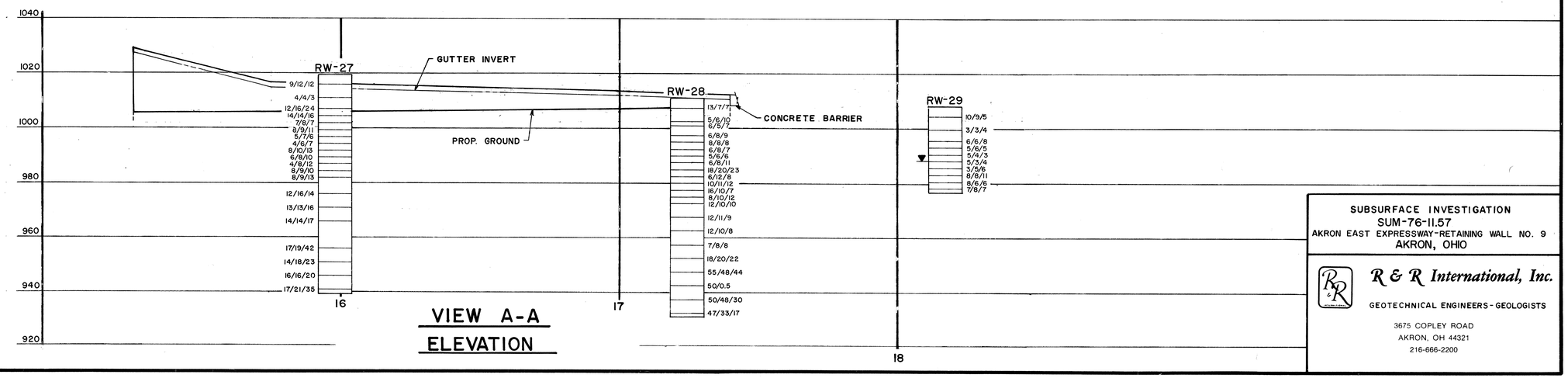

VIEW A-A
ELEVATION

SUBSURFACE INVESTIGATION
SUM-76-11.57
AKRON EAST EXPRESSWAY-RETAINING WALL NO. 9
AKRON, OHIO

R & R International, Inc.
GEOTECHNICAL ENGINEERS - GEOLOGISTS
3675 COPLEY ROAD
AKRON, OH 44321
216-666-2200

56478

Sum-76-11.57

FHWA REGION	STATE	PROJECT

33
104

3
4

LOG OF BORING

Date Started 3-3-88 Sampler Type Split Spoon Dia. 2.0 Water Elev. ---

Date Completed 3-3-88 Casing: Length -- Dia. ---

Boring No. RW-27 Station & Offset Sta. 615 + 70 101' RT. Surface Elev. 1019.5

ELEV.	DEPTH	STD. PEN. (N)	REC. Ft.	LOSS Ft.	DESCRIPTION	SAMPLE NO.	SAMPLE TYPE	% AGG.	% C. SAND	% F. SAND	% SILT	% CLAY	L.L.	P.L.	P.I.	W.C.	SHTL CLASS.
1019.5	0																
		9-12-12	1.0			1	SS										
	5																
		4-4-3	1.0		Loose to dense, brown GRAVEL and sand, trace sandstone fragments, trace silt, dry to moist.	2	SS										
	10																
		12-16-24	1.0			3	SS	58.2	21.3	11.5	*	9.0	--	--	--	4.2	A-1-a
	15	14-14-16	1.0			4	SS	51.2	23.3	16.1	*	9.4	--	--	--	5.3	A-1-a
		7-8-7	1.5			5	SS										
1001.7																	
	20	8-9-11	1.5		Medium dense, brown SILTY SAND, trace gravel, moist.	6	SS										
997.0		5-7-6	1.5			7	SS	11.0	12.6	13.3	*	63.1	22.7	17.5	5.2	13.9	A-4a
	25	4-6-7	1.0			8	SS										
		8-10-13	1.5		Stiff to very stiff, brown SANDY SILT, trace gravel, damp to moist.	9	SS	16.8	22.1	20.2	*	40.9	20.7	13.7	7.0	10.7	A-4a
	30	6-8-10	1.5			10	SS										
		4-8-12	1.5			11	SS										
985.8																	
	35	8-9-10	1.5			12	SS										
		8-9-13	1.5		Medium dense to dense, brown and gray GRAVEL and sand, moist to wet.	13	SS	63.5	25.5	8.6	*	2.4	--	--	--	11.5	A-1-a
	40																
976.0		12-16-14	1.5			14	SS										
	45				NOTE: Hydrostatic conditions from 43.5 feet to termination depth.												
		13-13-16	1.5		Medium dense to dense, brown GRAVEL and sand, trace silt, moist.	15	SS										
	50																
966.0		14-14-17	1.5			16	SS										
	55																
	60				Medium dense to dense, brown SAND and gravel, dry to moist.												
		17-19-42	1.5			17	SS										
	65																
		14-18-23	1.5			18	SS										
	70																

LOG OF BORING

Date Started 3-3-88 Sampler Type Split Spoon Dia. 2.0 Water Elev. ---

Date Completed 3-3-88 Casing: Length -- Dia. ---

Boring No. RW-27 (Cont.) Station & Offset Sta. 615 + 70 101' RT. Surface Elev. 1019.5

ELEV.	DEPTH	STD. PEN. (N)	REC. Ft.	LOSS Ft.	DESCRIPTION	SAMPLE NO.	SAMPLE TYPE	% AGG.	% C. SAND	% F. SAND	% SILT	% CLAY	L.L.	P.L.	P.I.	W.C.	SHTL CLASS.
949.5	0																
	75	16-16-20	1.5		SAME AS ABOVE	19	SS										
941.0		17-21-35	1.5			20	SS										
939.5	80				Hard, gray SILT, some sand, damp to moist.												
					TERMINATION DEPTH 80.0 FEET												

* SILT AND CLAY COMBINED

SUBSURFACE INVESTIGATION
SUM-76-11.57
AKRON EAST EXPRESSWAY-RETAINING WALL NO. 9
AKRON, OHIO

R & R International, Inc.
GEOTECHNICAL ENGINEERS - GEOLOGISTS
3675 COPLEY ROAD
AKRON, OH 44321
216-666-2200

5678

Sum-76-11.57

LOG OF BORING

Date Started 2-24-88 Sampler Type Split Spoon Dia. 2.0 Water Elev. ---
Date Completed 2-24-88 Casing: Length -- Dia. ---
Boring No. RW-28 Station & Offset Sta. 617 + 01 93' RT. Surface Elev. 1011.4

ELEV.	DEPTH	STD. PEN. (N)	REC. Ft.	LOSS Ft.	DESCRIPTION	SAMPLE NO.	SAMPLE TYPE	PHYSICAL CHARACTERISTICS % AGG.	% C. SAND	% F. SAND	% SILT	% CLAY	L.L.	P.L.	P.I.	W.C.	SHTL CLASS.
1011.4	0																
					ROADBASE MATERIAL												
1009.4		13-7-7	1.5		Medium dense, brown SAND, little silt, trace gravel, moist to wet.	1	SS										
	5																
1005.4																	
		5-6-10	1.5		Very stiff, brown SANDY SILT, moist.	2	SS	0.2	2.8	13.4	*	83.6	24.7	16.1	8.6	21.2	A-4a
1001.5	10	6-5-7	1.5		Medium dense, gray GRAVEL, some sand, moist.	3	SS	38.3	25.4	27.6	*	8.7	--	--	--	11.1	A-1-b
1000.9																	
		6-8-9	1.5		Medium dense, brown and gray SILTY SAND, trace gravel, moist to wet.	4	SS										
996.9	15																
		8-8-8	1.5			5	SS										
		6-8-7	1.5		Medium dense, brown GRAVEL and sand, moist.	6	SS	45.9	19.2	26.0	*	8.9	--	--	--	8.7	A-1-b
	20																
990.4		5-6-6	1.5			7	SS										
		6-8-11	1.5			8	SS										
	25																
		18-20-23	1.5			9	SS										
		6-12-8	1.5		Medium dense to dense, gray GRAVEL, some sand, moist.	10	SS										
	30																
		10-11-12	1.5			11	SS										
		16-10-7	1.5			12	SS										
975.9	35	8-10-12	1.5			13	SS										
		12-10-10	1.5			14	SS										
	40																
		12-11-9	1.5		Medium dense, gray GRAVEL with sand, trace silt, moist.	15	SS										
	45																
		12-10-8	1.5			16	SS	11.9	56.0	28.2	*	3.9	--	--	--	15.1	A-1-b
	50																
959.4		7-8-9	1.5			17	SS										
	55				Very stiff to hard, gray SANDY SILT, moist.												
952.4		18-20-22	1.5			18	SS										
	60				Hard, gray SANDY SILT, trace gravel, moist.												
947.4		55-48-44	1.5			19	SS										
	65				Very dense, brown SAND, little silt, moist.												
		50/0.4	0.4			20	SS										
	70																

LOG OF BORING

Date Started 2-24-88 Sampler Type Split Spoon Dia. 2.0 Water Elev. ---
Date Completed 2-24-88 Casing: Length -- Dia. ---
Boring No. RW-28 (Cont.) Station & Offset Sta. 617 + 01 93' RT. Surface Elev. 1011.4

ELEV.	DEPTH	STD. PEN. (N)	REC. Ft.	LOSS Ft.	DESCRIPTION	SAMPLE NO.	SAMPLE TYPE	PHYSICAL CHARACTERISTICS % AGG.	% C. SAND	% F. SAND	% SILT	% CLAY	L.L.	P.L.	P.I.	W.C.	SHTL CLASS.
941.4	0																
	75	50-48-30	1.5		SAME AS ABOVE	21	SS										
932.9		47-33-17	1.5		Hard, brown SANDY CLAY, trace gravel, moist	22	SS										
932.4																	
931.4	80				Very dense, brown SAND, little silt, wet.												
					TERMINATION DEPTH 80.0 FEET												

* SILT AND CLAY COMBINED

LOG OF BORING

Date Started 3-3-88 Sampler Type Split Spoon Dia. 2.0 Water Elev. 988.1
Date Completed 3-3-88 Casing: Length -- Dia. ---
Boring No. RW-29 Station & Offset Sta. 617 + 97 94' RT. Surface Elev. 1008.1

ELEV.	DEPTH	STD. PEN. (N)	REC. Ft.	LOSS Ft.	DESCRIPTION	SAMPLE NO.	SAMPLE TYPE	PHYSICAL CHARACTERISTICS % AGG.	% C. SAND	% F. SAND	% SILT	% CLAY	L.L.	P.L.	P.I.	W.C.	SHTL CLASS.
1008.1	0																
		10-9-5	1.5		Loose to medium dense, brown GRAVEL and sand, trace silt, moist.	1	SS	29.7	25.3	26.2	*	18.8	--	--	--	10.0	A-1-b
	5																
		3-3-4	1.5			2	SS										
998.6	10				Loose to medium dense, gray and brown SILTY SAND and gravel, trace rock fragments, moist.												
		6-6-8	1.5			3	SS										
994.6	15	5-6-5	1.2			4	SS	42.2	20.4	19.0	*	18.4	--	--	--	10.5	A-1-b
		5-4-3	1.5			5	SS										
	20	5-3-4	1.5			6	SS										
		3-5-6	1.5		Loose to medium dense, gray GRAVEL and sand, trace silt, moist to saturated.	7	SS										
	25	8-8-11	1.5			8	SS	43.3	31.7	18.2	*	6.8	--	--	--	9.3	A-1-b
		8-6-6	1.5			9	SS										
	30	7-8-7	1.5			10	SS	45.5	23.7	27.4	*	3.4	--	--	--	12.3	A-1-b
976.6					TERMINATION DEPTH 31.5 FEET												

* SILT AND CLAY COMBINED

FHWA REGION	STATE	PROJECT

34/104

4/4

SUBSURFACE INVESTIGATION
SUM-76-11.57
AKRON EAST EXPRESSWAY-RETAINING WALL NO. 9
AKRON, OHIO

R & R International, Inc.
GEOTECHNICAL ENGINEERS-GEOLOGISTS
3675 COPLEY ROAD
AKRON, OH 44321
216-666-2200

SUM-76-11.57

FHWA REGION	STATE	PROJECT

35
104

STRUCTURE SURFACE INVESTIGATION

1
4

GEOLOGY OF THE SITE

THE PROJECT SITE LIES ON THE GLACIATED, HILLY, DEEPLY DISSECTED ALLEGHENY PLATEAU PHYSIOGRAPHIC PROVINCE. RELIEF ALONG THE LENGTH OF THE WALL IS APPROXIMATELY 25 FEET.

THE PROJECT AREA WAS GLACIATED BY THE WISCONSIN ICE SHEET, LEAVING A VARIABLE BUT THIN DRIFT, NOT AVERAGING MORE THAN 25 FEET IN THICKNESS. THERE ARE TWO (2) DISTINCT TYPES OF GLACIAL DEPOSITS PRESENT AT THE SITE. THEY ARE THE MOGADORE TILL, WHICH IS A COARSE SANDY TILL WITH MINOR AMOUNTS OF CLAY, AND KAME AND KAME TERRACE DEPOSITS WHICH CONSIST PRIMARILY OF GRAVEL AND SAND MATERIAL. IT SHOULD BE NOTED THAT PORTIONS OF THE AREA ALONG THE LENGTH OF THE ROADWAY ARE "MADE LAND" WHICH ARE AREAS WHERE THE ORIGINAL SURFACE HAS BEEN COMPLETELY MODIFIED BY MAN.

BEDROCK AT THE PROJECT SITE CONSISTS OF THE PENNSYLVANIAN AGED SHARON CONGLOMERATE OF THE POTTSVILLE FORMATION IN THE HIGHLANDS, AND THE LOWER PORTIONS ARE UNDERLAIN BY SHALES AND SANDSTONES OF THE LOGAN FORMATION WHICH IS MISSISSIPPIAN IN AGE.

EXPLORATION

THE EXPLORATION PROGRAM CONSISTED OF ADVANCING A TOTAL OF TWO (2) DRIVE SAMPLE BORINGS WITH A CME-55 TRUCK MOUNTED DRILLING RIG USING CONVENTIONAL 3.25 INCH I.D. HOLLOW STEM AUGERS PERFORMED DURING FEBRUARY AND MARCH, 1988.

INVESTIGATIONAL FINDINGS

THE TEST BORINGS DISCLOSED ALTERNATING LAYERS OF STIFF TO HARD SANDY SILT (A-4A) AND LOOSE TO DENSE SAND AND GRAVEL (A-1-A, A-1-B, AND A-3A). THESE SOIL UNITS EXTENDED TO THE BORING TERMINATION ELEVATION OF 967 AT TEST LOCATION RW-30 AND 928 AT TEST LOCATION RW-31. THE SAND AND GRAVEL DEPOSITS ARE MOST PREDOMINATE WITH THE SANDY SILT LAYERS BEING RELATIVELY LIMITED IN EXTENT.

FOR SPECIFIC CONDITIONS AT VARIOUS DEPTHS, REFER TO THE INDIVIDUAL TEST BORING LOGS WHICH FORM A PART OF THESE PLANS.

LEGEND

- AUGER BORING LOCATION - PLAN VIEW
- PRESS AND/OR DRIVE SAMPLE AND/OR CORE BORING LOCATION - PLAN VIEW
- TR — TOP OF ROCK
- CAPPED PILE
- FOOTING
- FOOTING ON PILE
- HORIZONTAL BAR ON BORING LOG INDICATES THE DEPTH THE SAMPLE WAS TAKEN
- X/Y/Z — FIGURES BESIDE THE BORING LOG IN PROFILE INDICATE THE NUMBER OF BLOWS FOR STANDARD PENETRATION TEST
  - X = NO. OF BLOWS FOR FIRST 6"
  - Y = NO. OF BLOWS FOR SECOND 6"
  - Z = NO. OF BLOWS FOR THIRD 6"
- W — INDICATES FREE WATER ELEVATION
- INDICATES STATIC WATER ELEVATION

SYMBOLS OF ROCK TYPES

- COAL
- WEATHERED MUDSTONE
- MUDSTONE
- WEATHERED SHALE
- SHALE
- CLAYSTONE
- SILTSTONE
- WEATHERED SANDSTONE
- SANDSTONE
- LEACHED DOLOMITE
- DOLOMITE
- LEACHED LIMESTONE
- LIMESTONE
- BOULDERS or COBBLES

GENERAL INFORMATION

Drive sample / Press sample / Core borings

Drive sample borings are made by means of a mechanically-powered rotary-type drilling machine, employing a 2" O.D., 1-3/8" I.D. split spoon sampler, at 2.5 and/or 5-foot depth intervals, driven by means of a 140 lb. drop hammer with a free fall of 30". The number of blows required to drive the sampler 18" is considered the standard penetration test.

Drive/press borings are made by means of a mechanically-powered rotary-type drilling machine, employing a 2" O.D., 1-3/8" I.D. split spoon sampler, and 3" O.D. thin wall press sampler. The press sampler is advanced by continuous uniform pressure, applied by the drilling machine.

Core borings are made by means of a mechanically-powered rotary-type drilling machine, employing a NXM core barrel with industrial diamond cutting head.

The boring log sheets display a graphic plot of the information obtained including depth and elevation of the sample, type of sample, the standard penetration test readings in three 6-inch increments, depth and elevation of press samples, field number assigned to sample, sample description - based on laboratory tests utilizing the Casagrande AC classification system - and gradation, plasticity and moisture determinations. Results of strength and consolidation testing, if performed on undisturbed samples, will appear graphically on separate enclosures. Rock samples are displayed on the log sheets including depth and elevation of the sample, amount of recovery and a visual classification based on type, color, degree of hardness, grain size, deterioration, bedding, acid reaction and other qualifying factors.

At depths where materials are bouldery or gravelly to the extent that the sampler can not be utilized, a wash sample is procured and visually classified, in order to determine the general characteristics of the material, These samples are not considered sufficiently representative to warrant laboratory testing.

PARTICLE SIZE DEFINITIONS

12"	3"	2.0mm		0.42mm		0.074mm	0.005mm
Boulders	Cobbles	Gravel	Coarse Sand		Fine Sand	Silt	Clay
		No. 10 sieve		No. 40 sieve		No. 200 sieve	

NOTE - ALL AVAILABLE SOIL AND BEDROCK INFORMATION WHICH CAN BE CONVENIENTLY SHOWN ON THE STRUCTURE FOUNDATION INVESTIGATION SHEETS HAS BEEN SO REPORTED. ADDITIONAL SUBSURFACE INVESTIGATIONS MAY HAVE BEEN MADE TO STUDY SOME SPECIAL ASPECT OF THE PROJECT. COPIES OF THIS DATA, IF ANY, MAY BE INSPECTED IN THE DISTRICT DEPUTY DIRECTORS OFFICE, THE BUREAU OF TESTS AT 1600 WEST BROAD STREET, THE PAVEMENT AND SOILS SECTION OF THE BUREAU OF LOCATION AND DESIGN OR IN THE BRIDGE BUREAU AT 25 SOUTH FRONT STREET.

SUBSURFACE INVESTIGATION
SUM-76-11.57
AKRON EAST EXPRESSWAY-RETAINING WALL NO. 10
AKRON, OHIO

R & R International, Inc.
GEOTECHNICAL ENGINEERS-GEOLOGISTS
AKRON, OHIO 44321

SUM-76-11.57

FHWA REGION	STATE	PROJECT

36/104

2/4

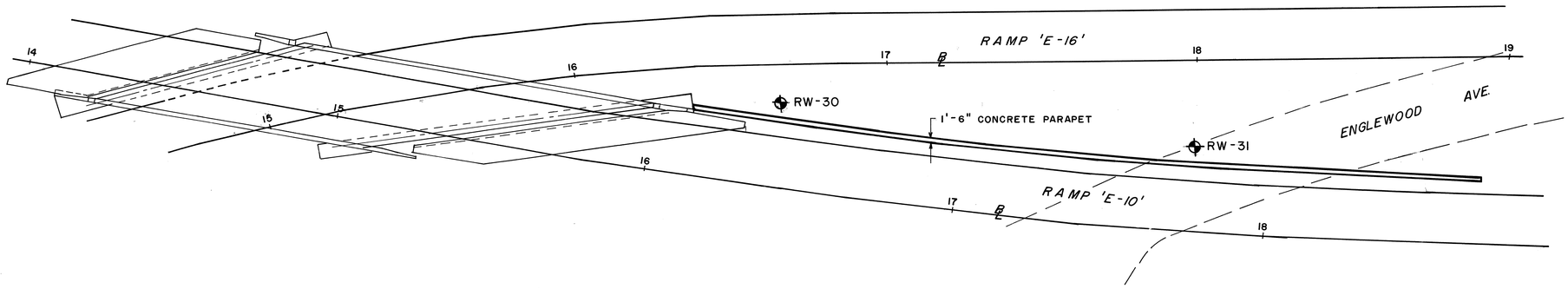

GENERAL PLAN

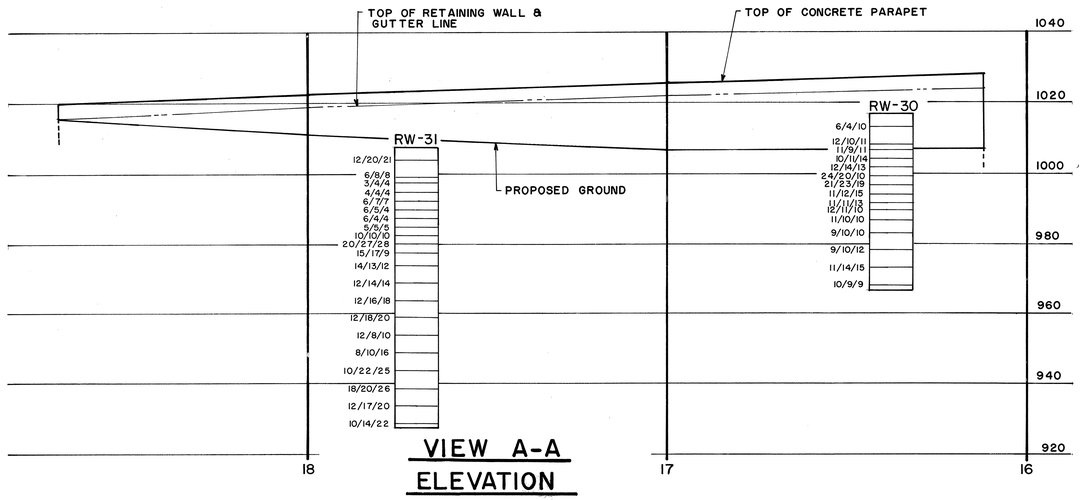

VIEW A-A ELEVATION

SUBSURFACE INVESTIGATION
SUM-76-11.57
AKRON EAST EXPRESSWAY-RETAINING WALL NO. 10
AKRON, OHIO

R & R International, Inc.
GEOTECHNICAL ENGINEERS-GEOLOGISTS
3675 COPLEY ROAD
AKRON, OH 44321
216-666-2200

45419

SUM-76-11.57

FHWA REGION	STATE	PROJECT

37/104

3/4

LOG OF BORING

Date Started 3-11-88 Sampler Type Split Spoon Dia. 2.0 Water Elev. ---

Date Completed 3-11-88 Casing: Length -- Dia. ---

Boring No. RW-30 Station & Offset Sta. 616 + 38 135' RT Surface Elev. 1016.8

ELEV.	DEPTH	STD. PEN. (N)	REC. Ft.	LOSS Ft.	DESCRIPTION	SAMPLE NO.	SAMPLE TYPE	PHYSICAL CHARACTERISTICS % AGG.	% C. SAND	% F. SAND	% SILT	% CLAY	L.L.	P.L.	P.I.	W.C.	SHTL CLASS.
1016.8	0																
		6-4-10	1.5			1	SS										
	5				Medium dense, brown SAND, little gravel, little silt, moist.												
		12-10-11	1.5			2	SS	18.8	20.5	30.1	*	30.6	--	--	--	10.7	A-3a
1006.2	10	11-9-11	1.5			3	SS										
		10-11-14	1.5			4	SS										
	15	12-14-13	1.5			5	SS	36.7	33.3	19.1	*	10.9	--	--	--	0.7	A-1-b
		24-20-10	1.5			6	SS										
	20	21-23-19	1.5			7	SS	62.5	13.4	15.4	*	8.7	--	--	--	0.6	A-1-a
		11-12-15	1.5		Medium dense, brown SAND AND GRAVEL, trace silt, dry to moist.	8	SS										
	25	11-11-13	1.5			9	SS	25.1	38.4	29.2	*	7.3	--	--	--	6.0	A-1-b
		12-11-10	1.5			10	SS										
	30	11-10-10	1.5			11	SS										
983.8		9-10-10	1.5			12	SS										
	35																
		9-10-12	1.5		Very stiff, gray SANDY SILT, little to trace gravel, moist.	13	SS										
	40																
		11-14-15	1.5			14	SS	14.4	14.0	16.2	*	55.4	--	--	--	8.5	A-4a
	45																
970.8																	
		10-9-9	1.5		Medium dense, gray SAND AND GRAVEL, little silt, wet.	15	SS										
966.8	50				TERMINATION DEPTH 50.0 FEET												

* SILT AND CLAY COMBINED

SUBSURFACE INVESTIGATION
SUM-76-11.57
AKRON EAST EXPRESSWAY-RETAINING WALL NO. 10
AKRON, OHIO

R & R International, Inc.
GEOTECHNICAL ENGINEERS-GEOLOGISTS
3675 COPLEY ROAD
AKRON, OH 44321
216-666-2200

5678

Sum-76-11.57

FHWA REGION	STATE	PROJECT

38/104

4/4

LOG OF BORING

Date Started 2-24-88 Sampler Type Split Spoon Dia. 2.0 Water Elev. ---

Date Completed 2-24-88 Casing: Length -- Dia. ---

Boring No. RW-31 Station & Offset Sta. 617 + 70 154' RT Surface Elev. 1007.7

ELEV.	DEPTH	STD. PEN. (N)	REC. Ft.	LOSS Ft.	DESCRIPTION	SAMPLE NO.	SAMPLE TYPE	% AGG.	% C. SAND	% F. SAND	% SILT	% CLAY	L.L.	P.L.	P.I.	W.C.	SHTL CLASS.
1007.7	0																
1007.3					TOPSOIL												
		12-20-21	1.0		Dense to medium dense, brown SAND AND GRAVEL, trace silt, dry.	1	SS	25.2	30.1	34.6	*	10.1	--	--	--	5.1	A-1-b
	5																
		6-8-8	1.5			2	SS										
998.7																	
	10	3-4-4	1.0		Stiff, gray SANDY SILT, some gravel, moist.	3	SS	32.6	21.4	7.9	*	38.1	--	--	--	13.1	A-4a
		4-4-4	1.5			4	SS										
994.8																	
	15	6-7-7	1.5			5	SS										
		6-5-4	1.5		Loose, gray SAND, trace gravel, trace silt, dry.	6	SS	8.2	40.8	41.2	*	9.8	--	--	--	6.3	A-3
987.7	20	6-4-4	1.0			7	SS										
		5-5-5	1.5			8	SS	25.1	38.7	33.8	*	2.4	--	--	--	12.4	A-1-b
	25	5-10-10	1.5			9	SS										
		20-27-28	1.5			10	SS										
	30	15-17-9	1.5			11	SS	9.1	54.6	30.3	*	6.0	--	--	--	12.0	A-1-b
		14-13-12	1.5			12	SS										
	35																
		12-14-14	1.5		Medium dense to dense, gray SAND AND GRAVEL, trace silt, moist to wet.	13	SS	37.0	44.6	13.2	*	5.2	--	--	--	10.1	A-1-b
	40																
		12-16-18	1.5			14	SS										
	45																
		12-18-20	1.5			15	SS										
	50																
		12-8-10	1.5			16	SS										
	55																
949.7		8-10-16	1.5			17	SS	20.3	7.9	9.2	*	62.6	--	--	--	14.0	A-4a
	60				Very stiff to hard, gray SANDY SILT, little gravel, moist.												
943.7		10-22-25	1.5			18	SS										
	65				Dense, grayish brown SAND AND GRAVEL, trace silt, wet.												
		18-20-26	1.5			19	SS										
	70																

LOG OF BORING

Date Started 2-24-88 Sampler Type Split Spoon Dia. 2.0 Water Elev. ---

Date Completed 2-24-88 Casing: Length -- Dia. ---

Boring No. RW-31 (Cont.) Station & Offset Sta. 617 + 70 154' RT Surface Elev. 1007.7

ELEV.	DEPTH	STD. PEN. (N)	REC. Ft.	LOSS Ft.	DESCRIPTION	SAMPLE NO.	SAMPLE TYPE	% AGG.	% C. SAND	% F. SAND	% SILT	% CLAY	L.L.	P.L.	P.I.	W.C.	SHTL CLASS.
937.7	0																
		12-17-20	1.5		SAME AS ABOVE	20	SS	34.8	20.9	36.1	*	8.2	--	--	--	11.6	A-1-b
	75																
		10-14-22	1.5			21	SS										
927.7	80				TERMINATION DEPTH 80.0 FEET												

* SILT AND CLAY COMBINED

SUBSURFACE INVESTIGATION
SUM-76-11.57
AKRON EAST EXPRESSWAY-RETAINING WALL NO 10
AKRON, OHIO

R & R International, Inc.
GEOTECHNICAL ENGINEERS - GEOLOGISTS
3675 COPLEY ROAD
AKRON, OH 44321
216-666-2200

Sum-76-11.57

FHWA REGION	STATE	PROJECT

39/104

STRUCTURE SURFACE INVESTIGATION

1/4

GEOLOGY OF THE SITE

THE PROJECT SITE LIES ON THE GLACIATED, HILLY, DEEPLY DISSECTED ALLEGHENY PLATEAU PHYSIOGRAPHIC PROVINCE. RELIEF ALONG THE LENGTH OF THE WALL IS APPROXIMATELY 25 FEET.

THE PROJECT AREA WAS GLACIATED BY THE WISCONSIN ICE SHEET, LEAVING A VARIABLE BUT THIN DRIFT, NOT AVERAGING MORE THAN 25 FEET IN THICKNESS. THERE ARE TWO (2) DISTINCT TYPES OF GLACIAL DEPOSITS PRESENT AT THE SITE. THEY ARE THE MOGADORE TILL, WHICH IS A COARSE SANDY TILL WITH MINOR AMOUNTS OF CLAY, AND KAME AND KAME TERRACE DEPOSITS WHICH CONSIST PRIMARILY OF GRAVEL AND SAND MATERIAL. IT SHOULD BE NOTED THAT PORTIONS OF THE AREA ALONG THE LENGTH OF THE ROADWAY ARE "MADE LAND" WHICH ARE AREAS WHERE THE ORIGINAL SURFACE HAS BEEN COMPLETELY MODIFIED BY MAN.

BEDROCK AT THE PROJECT SITE CONSISTS OF THE PENNSYLVANIAN AGED SHARON CONGLOMERATE OF THE POTTSVILLE FORMATION IN THE HIGHLANDS, AND THE LOWER PORTIONS ARE UNDERLAIN BY SHALES AND SANDSTONES OF THE LOGAN FORMATION WHICH IS MISSISSIPPIAN IN AGE.

EXPLORATION

THE EXPLORATION PROGRAM CONSISTED OF ADVANCING A TOTAL OF THREE (3) DRIVE SAMPLE BORINGS WITH A CME-75 TRUCK MOUNTED DRILLING RIG USING CONVENTIONAL 3.25 INCH I.D. HOLLOW STEM AUGERS, PERFORMED DURING MARCH, 1988.

INVESTIGATIONAL FINDINGS

THE BORINGS DISCLOSED ALTERNATING LAYERS OF "SOFT" TO "VERY STIFF," SANDY SILT (A-4a) AND "LOOSE" TO "DENSE," SAND AND GRAVEL DEPOSITS (A-1-a, A-1-b, A-3, A-3a AND A-2-4). THESE SOILS EXTENDED TO THE TERMINATION ELEVATION OF EACH BORING WHICH RANGED FROM 969 TO 989. HYDROSTATIC CONDITIONS ARE PRESENT AT TEST LOCATIONS RW-40 AND RW-41 AT AN APPROXIMATE DEPTH OF 28 FEET BELOW THE EXISTING GROUND SURFACE.

FOR SPECIFIC CONDITIONS AT VARIOUS DEPTHS, REFER TO THE INDIVIDUAL TEST BORING LOGS WHICH FORM A PART OF THESE PLANS.

LEGEND

- AUGER BORING LOCATION - PLAN VIEW
- PRESS AND/OR DRIVE SAMPLE AND/OR CORE BORING LOCATION - PLAN VIEW
- TR — TOP OF ROCK
- CAPPED PILE
- FOOTING
- FOOTING ON PILE
- HORIZONTAL BAR ON BORING LOG INDICATES THE DEPTH THE SAMPLE WAS TAKEN
- X/Y/Z — FIGURES BESIDE THE BORING LOG IN PROFILE INDICATE THE NUMBER OF BLOWS FOR STANDARD PENETRATION TEST
  - X = NO. OF BLOWS FOR FIRST 6"
  - Y = NO. OF BLOWS FOR SECOND 6"
  - Z = NO. OF BLOWS FOR THIRD 6"
- W —— INDICATES FREE WATER ELEVATION
- INDICATES STATIC WATER ELEVATION

SYMBOLS OF ROCK TYPES

- COAL
- WEATHERED MUDSTONE
- MUDSTONE
- WEATHERED SHALE
- SHALE
- CLAYSTONE
- SILTSTONE
- WEATHERED SANDSTONE
- SANDSTONE
- LEACHED DOLOMITE
- DOLOMITE
- LEACHED LIMESTONE
- LIMESTONE
- BOULDERS or COBBLES

GENERAL INFORMATION

Drive sample / Press sample / Core borings

Drive sample borings are made by means of a mechanically-powered rotary-type drilling machine, employing a 2" O.D., 1-3/8" I.D. split spoon sampler, at 2.5 and/or 5-foot depth intervals, driven by means of a 140 lb. drop hammer with a free fall of 30". The number of blows required to drive the sampler 18" is considered the standard penetration test.

Drive/press borings are made by means of a mechanically-powered rotary-type drilling machine, employing a 2" O.D., 1-3/8" I.D. split spoon sampler, and 3" O.D. thin wall press sampler. The press sampler is advanced by continuous uniform pressure, applied by the drilling machine.

Core borings are made by means of a mechanically-powered rotary-type drilling machine, employing a NXM core barrel with industrial diamond cutting head.

The boring log sheets display a graphic plot of the information obtained including depth and elevation of the sample, type of sample, the standard penetration test readings in three 6-inch increments, depth and elevation of press samples, field number assigned to sample, sample description - based on laboratory tests utilizing the Casagrande AC classification system - and gradation, plasticity and moisture determinations. Results of strength and consolidation testing, if performed on undisturbed samples, will appear graphically on separate enclosures. Rock samples are displayed on the log sheets including depth and elevation of the sample, amount of recovery and a visual classification based on type, color, degree of hardness, grain size, deterioration, bedding, acid reaction and other qualifying factors.

At depths where materials are bouldery or gravelly to the extent that the sampler can not be utilized, a wash sample is procured and visually classified, in order to determine the general characteristics of the material. These samples are not considered sufficiently representative to warrant laboratory testing.

PARTICLE SIZE DEFINITIONS

12"	3"	2.0mm		0.42mm		0.074mm	0.005mm	
Boulders	Cobbles	Gravel	Coarse Sand		Fine Sand		Silt	Clay
		No. 10 sieve		No. 40 sieve		No. 200 sieve		

NOTE - ALL AVAILABLE SOIL AND BEDROCK INFORMATION WHICH CAN BE CONVENIENTLY SHOWN ON THE STRUCTURE FOUNDATION INVESTIGATION SHEETS HAS BEEN SO REPORTED. ADDITIONAL SUBSURFACE INVESTIGATIONS MAY HAVE BEEN MADE TO STUDY SOME SPECIAL ASPECT OF THE PROJECT. COPIES OF THIS DATA, IF ANY, MAY BE INSPECTED IN THE DISTRICT DEPUTY DIRECTORS OFFICE, THE BUREAU OF TESTS AT 1600 WEST BROAD STREET, THE PAVEMENT AND SOILS SECTION OF THE BUREAU OF LOCATION AND DESIGN OR IN THE BRIDGE BUREAU AT 25 SOUTH FRONT STREET.

SUBSURFACE INVESTIGATION
SUM-76-11.57
AKRON EAST EXPRESSWAY-RETAINING WALL NO. 11
AKRON, OHIO

R & R International, Inc.
GEOTECHNICAL ENGINEERS - GEOLOGISTS
AKRON, OHIO 44321

SUM-76-11.57

FHWA REGION	STATE	PROJECT

40/104

2/4

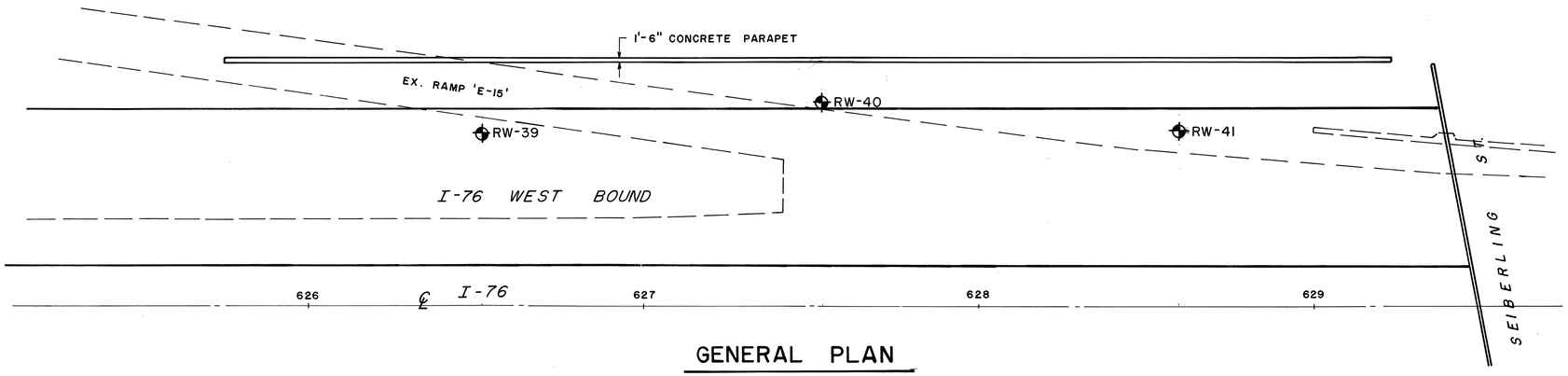

GENERAL PLAN

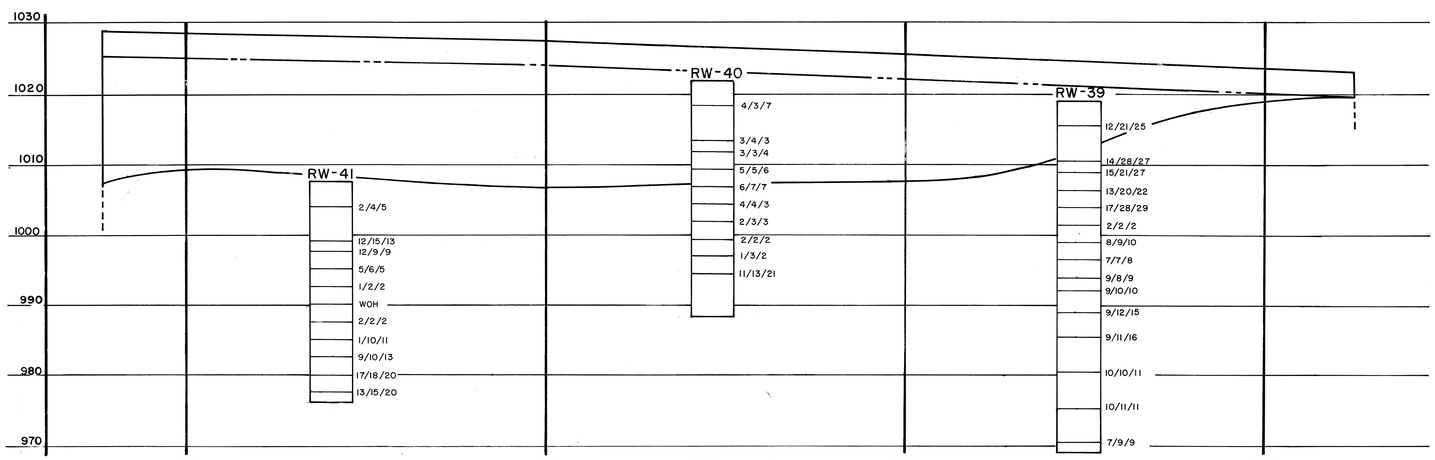

VIEW A-A
ELEVATION

SUBSURFACE INVESTIGATION
SUM-76-1157
AKRON EAST EXPRESSWAY-RETAINING WALL NO. 11
AKRON, OHIO

R & R International, Inc.
GEOTECHNICAL ENGINEERS-GEOLOGISTS
3675 COPLEY ROAD
AKRON, OH 44321
216-666-2200

56478

SUM-76-11.57

FHWA REGION	STATE	PROJECT

41/104

3/4

LOG OF BORING

Date Started 3-11-88 Sampler Type Split Spoon Dia. 2.0 Water Elev. ---

Date Completed 3-11-88 Casing: Length -- Dia. ---

Boring No. RW-39 Station & Offset Sta. 626 + 52 52' LT. Surface Elev. 1019.1

ELEV.	DEPTH	STD. PEN. (N)	REC. Ft.	LOSS Ft.	DESCRIPTION	SAMPLE NO.	SAMPLE TYPE	PHYSICAL CHARACTERISTICS % AGG.	% C.SAND	% F.SAND	% SILT	% CLAY	L.L.	P.L.	P.I.	W.C.	SHTL CLASS.
1019.1	0																
		12-21-25	1.0		Dense, brown GRAVEL with sand and silt, little rock fragments, moist.	1	SS	29.4	17.3	19.1	*	34.2	--	--	--	12.4	A-2-4
	5																
		14-28-27	1.0			2	SS										
1009.1	10	15-21-27	1.5			3	SS	34.0	26.0	26.0	*	14.0	--	--	--	10.1	A-1-b
		13-20-22	1.5		Dense, brown GRAVEL with sand, little rock fragments, moist.	4	SS										
1004.1	15	17-28-29	1.0			5	SS	40.5	16.6	16.8	*	26.1	21.4	19.1	2.3	12.2	A-2-4
		2-2-2	1.5			6	SS	30.0	25.2	29.0	*	15.8	--	--	--	10.3	A-1-b
	20	8-9-10	1.5			7	SS										
		7-7-8	1.5			8	SS										
	25	9-8-9	1.0		Very dense to dense, brown GRAVEL with sand and silt, little rock fragments, moist.	9	SS										
		9-10-10	1.5			10	SS	33.2	26.5	20.1	*	20.2	--	--	--	12.4	A-1-b
	30	9-12-15	1.0			11	SS										
985.6		9-11-16	1.0			12	SS	34.6	21.6	20.2	*	23.6	--	--	--	11.1	A-1-b
	35																
		10-10-11	1.0			13	SS										
	40				Medium dense, brown GRAVEL with sand, little rock fragments, little silt, moist.												
		10-11-11	1.0			14	SS										
	45																
970.6		7-9-9	1.5		Medium dense, brown SAND, little gravel and silt, moist.	15	SS	24.1	24.5	23.5	*	27.9	--	--	--	14.5	A-3a
969.1	50				TERMINATION DEPTH 50.0 FEET												

* SILT AND CLAY COMBINED

LOG OF BORING

Date Started 3-4-88 Sampler Type Split Spoon Dia. 2.0 Water Elev. ---

Date Completed 3-4-88 Casing: Length -- Dia. ---

Boring No. RW-40 Station & Offset Sta. 627 + 54 62' LT. Surface Elev. 1022.7

ELEV.	DEPTH	STD. PEN. (N)	REC. Ft.	LOSS Ft.	DESCRIPTION	SAMPLE NO.	SAMPLE TYPE	PHYSICAL CHARACTERISTICS % AGG.	% C.SAND	% F.SAND	% SILT	% CLAY	L.L.	P.L.	P.I.	W.C.	SHTL CLASS.
1022.7	0																
		4-3-7	0.9		Medium dense, brown SAND, little silt, moist.	1	SS	1.4	35.7	54.9	*	8.0	--	--	--	7.7	A-3
	5																
1015.2		3-4-3	1.5			2	SS										
	10	3-3-4	1.4			3	SS										
		5-5-6	1.4		Loose to medium dense, brown GRAVEL, little sand, trace silt, moist.	4	SS	55.5	20.9	16.0	*	7.6	--	--	--	5.8	A-1-a
	15	6-7-7	1.5			5	SS										
1006.6		4-4-3	1.4		Loose, brown and gray SAND, little gravel, trace silt, damp to wet.	6	SS	22.3	25.6	39.0	*	13.1	--	--	--	15.1	A-3a
	20	2-3-3	1.5			7	SS										
1001.5		2-2-2	1.5			8	SS										
	25	1-3-2	1.5			9	SS	0.7	16.9	30.3	*	52.1	--	--	--	29.3	A-4a
		11-13-21	1.5		Medium stiff to hard, gray SANDY SILT, trace clay, moist. NOTE: Running sand at 28.5 feet to 33.5 feet.	10	SS										
	30																
989.2					TERMINATION DEPTH 33.5 FEET												
	35																

* SILT AND CLAY COMBINED

SUBSURFACE INVESTIGATION
SUM-76-11.57
AKRON EAST EXPRESSWAY-RETAINING WALL NO. 11
AKRON, OHIO

R & R International, Inc.
GEOTECHNICAL ENGINEERS-GEOLOGISTS
3675 COPLEY ROAD
AKRON, OH 44321
216-666-2200

Sum-76-11.57

FHWA REGION	STATE	PROJECT

42/104

4/4

LOG OF BORING

Date Started 3-4-88 Sampler Type Split Spoon Dia. 2.0 Water Elev. ---

Date Completed 3-4-88 Casing: Length -- Dia. ---

Boring No. RW-41 Station & Offset Sta. 628 + 60 53' LT. Surface Elev. 1007.9

ELEV.	DEPTH	STD. PEN. (N)	REC. Ft.	LOSS Ft.	DESCRIPTION	SAMPLE NO.	SAMPLE TYPE	PHYSICAL CHARACTERISTICS % AGG.	% C. SAND	% F. SAND	% SILT	% CLAY	L.L.	P.L.	P.I.	W.C.	SHTL CLASS.
1007.9	0																
	5	2-4-5	0.8		Loose, brown SAND, little silt, trace gravel, moist.	1	SS										
999.4		12-15-13	1.2		Medium dense, brown GRAVEL, little sand and silt, moist.	2	SS	58.4	23.8	8.5	*	9.3	--	--	--	4.8	A-1-a
997.9	10	12-9-9	1.1			3	SS	26.1	21.6	10.1	*	42.2	--	--	--	5.2	A-4a
994.3		5-6-5	1.1		Very stiff, brown SANDY SILT, some gravel, trace clay, moist.	4	SS										
992.9	15	1-2-2	1.5		Medium dense, brown SAND, little silt, moist.	5	SS	0.0	1.0	12.7	*	86.3	26.1	19.7	6.4	30.7	A-4a
		W.O.H.	1.5			6	SS	0.6	3.1	7.1	*	89.2	--	--	--	32.4	A-4a
	20	2-2-2	1.5		Soft to very stiff, gray SANDY SILT, little clay, moist.	7	SS										
984.9		1-10-11	1.5			8	SS										
	25	9-10-13	1.5			9	SS	47.4	30.8	17.0	*	4.8	--	--	--	10.5	A-1-b
		17-18-20	1.5		Medium dense to dense, gray to brown GRAVEL with sand and silt, wet.	10	SS										
	30	13-15-20	1.5		NOTE: Running sand at 27.5 feet to 31.5 feet.	11	SS	20.6	42.4	22.4	*	14.6	--	--	--	14.2	A-1-b
976.4					TERMINATION DEPTH 31.5 FEET												

* SILT AND CLAY COMBINED

SUBSURFACE INVESTIGATION
SUM-76-1157
AKRON EAST EXPRESSWAY-RETAINING WALL NO. II
AKRON, OHIO

R & R International, Inc.
GEOTECHNICAL ENGINEERS-GEOLOGISTS
3675 COPLEY ROAD
AKRON, OH 44321
216-666-2200

Sum-76-11.57

FHWA REGION	STATE	PROJECT

43/104

STRUCTURE SURFACE INVESTIGATION

1/6

GEOLOGY OF THE SITE

THE PROJECT SITE LIES ON THE GLACIATED, HILLY, DEEPLY DISSECTED ALLEGHENY PLATEAU PHYSIOGRAPHIC PROVINCE. RELIEF ALONG THE LENGTH OF THE WALL IS APPROXIMATELY 25 FEET.

THE PROJECT AREA WAS GLACIATED BY THE WISCONSIN ICE SHEET, LEAVING A VARIABLE BUT THIN DRIFT, NOT AVERAGING MORE THAN 25 FEET IN THICKNESS. THERE ARE TWO (2) DISTINCT TYPES OF GLACIAL DEPOSITS PRESENT AT THE SITE. THEY ARE THE MOGADORE TILL, WHICH IS A COARSE SANDY TILL WITH MINOR AMOUNTS OF CLAY, AND KAME AND KAME TERRACE DEPOSITS WHICH CONSIST PRIMARILY OF GRAVEL AND SAND MATERIAL. IT SHOULD BE NOTED THAT PORTIONS OF THE AREA ALONG THE LENGTH OF THE ROADWAY ARE "MADE LAND" WHICH ARE AREAS WHERE THE ORIGINAL SURFACE HAS BEEN COMPLETELY MODIFIED BY MAN.

BEDROCK AT THE PROJECT SITE CONSISTS OF THE PENNSYLVANIAN AGED SHARON CONGLOMERATE OF THE POTTSVILLE FORMATION IN THE HIGHLANDS, AND THE LOWER PORTIONS ARE UNDERLAIN BY SHALES AND SANDSTONES OF THE LOGAN FORMATION WHICH IS MISSISSIPPIAN IN AGE.

EXPLORATION

THE SUBSURFACE EXPLORATION PROGRAM FOR THIS PROJECT INCLUDED ADVANCING A TOTAL OF FOUR (4) DRIVE SAMPLE BORINGS MADE BY MEANS OF A CME-75 TRUCK MOUNTED DRILLING RIG USING CONVENTIONAL 3.25 INCH I.D. HOLLOW STEM AUGERS, PERFORMED DURING FEBRUARY, 1987 AND MARCH, 1988.

INVESTIGATIONAL FINDINGS

THE TEST BORINGS DISCLOSED ALTERNATING LAYERS OF LOOSE TO MEDIUM DENSE SAND AND GRAVEL (A-1-a, A-1-b, A-3, AND A-3a) AND MEDIUM STIFF TO HARD SANDY SILT (A-4a) EXTENDING TO THE TERMINATION DEPTH OF EACH TEST BORING. THE DEEPEST OF THE BORINGS WAS ADVANCED TO AN APPROXIMATE ELEVATION OF 926. BEDROCK WAS NOT ENCOUNTERED AT ANY OF THE FOUR (4) TEST LOCATIONS WITHIN THE EXPLORED DEPTHS.

FOR SPECIFIC CONDITIONS AT VARIOUS DEPTHS, REFER TO THE INDIVIDUAL TEST BORING LOGS WHICH FORM A PART OF THESE PLANS.

LEGEND

- AUGER BORING LOCATION - PLAN VIEW
- PRESS AND/OR DRIVE SAMPLE AND/OR CORE BORING LOCATION - PLAN VIEW
- TR — TOP OF ROCK
- CAPPED PILE
- FOOTING
- FOOTING ON PILE
- HORIZONTAL BAR ON BORING LOG INDICATES THE DEPTH THE SAMPLE WAS TAKEN
- X/Y/Z — FIGURES BESIDE THE BORING LOG IN PROFILE INDICATE THE NUMBER OF BLOWS FOR STANDARD PENETRATION TEST
  - X = NO. OF BLOWS FOR FIRST 6"
  - Y = NO. OF BLOWS FOR SECOND 6"
  - Z = NO. OF BLOWS FOR THIRD 6"
- W — INDICATES FREE WATER ELEVATION
- INDICATES STATIC WATER ELEVATION

SYMBOLS OF ROCK TYPES

- COAL
- WEATHERED MUDSTONE
- MUDSTONE
- WEATHERED SHALE
- SHALE
- CLAYSTONE
- SILTSTONE
- WEATHERED SANDSTONE
- SANDSTONE
- LEACHED DOLOMITE
- DOLOMITE
- LEACHED LIMESTONE
- LIMESTONE
- BOULDERS or COBBLES

GENERAL INFORMATION

Drive sample / Press sample / Core borings

Drive sample borings are made by means of a mechanically-powered rotary-type drilling machine, employing a 2" O.D., 1-3/8" I.D. split spoon sampler, at 2.5 and/or 5-foot depth intervals, driven by means of a 140 lb. drop hammer with a free fall of 30". The number of blows required to drive the sampler 18" is considered the standard penetration test.

Drive/press borings are made by means of a mechanically-powered rotary-type drilling machine, employing a 2" O.D., 1-3/8" I.D. split spoon sampler, and 3" O.D. thin wall press sampler. The press sampler is advanced by continuous uniform pressure, applied by the drilling machine.

Core borings are made by means of a mechanically-powered rotary-type drilling machine, employing a NXM core barrel with industrial diamond cutting head.

The boring log sheets display a graphic plot of the information obtained including depth and elevation of the sample, type of sample, the standard penetration test readings in three 6-inch increments, depth and elevation of press samples, field number assigned to sample, sample description - based on laboratory tests utilizing the Casagrande AC classification system - and gradation, plasticity and moisture determinations. Results of strength and consolidation testing, if performed on undisturbed samples, will appear graphically on separate enclosures. Rock samples are displayed on the log sheets including depth and elevation of the sample, amount of recovery and a visual classification based on type, color, degree of hardness, grain size, deterioration, bedding, acid reaction and other qualifying factors.

At depths where materials are bouldery or gravelly to the extent that the sampler can not be utilized, a wash sample is procured and visually classified, in order to determine the general characteristics of the material. These samples are not considered sufficiently representative to warrant laboratory testing.

PARTICLE SIZE DEFINITIONS

12"	3"	2.0mm		0.42mm		0.074mm	0.005mm
Boulders	Cobbles	Gravel	Coarse Sand		Fine Sand	Silt	Clay
		No. 10 sieve		No. 40 sieve		No. 200 sieve	

NOTE - ALL AVAILABLE SOIL AND BEDROCK INFORMATION WHICH CAN BE CONVENIENTLY SHOWN ON THE STRUCTURE FOUNDATION INVESTIGATION SHEETS HAS BEEN SO REPORTED. ADDITIONAL SUBSURFACE INVESTIGATIONS MAY HAVE BEEN MADE TO STUDY SOME SPECIAL ASPECT OF THE PROJECT. COPIES OF THIS DATA, IF ANY, MAY BE INSPECTED IN THE DISTRICT DEPUTY DIRECTORS OFFICE, THE BUREAU OF TESTS AT 1600 WEST BROAD STREET, THE PAVEMENT AND SOILS SECTION OF THE BUREAU OF LOCATION AND DESIGN OR IN THE BRIDGE BUREAU AT 25 SOUTH FRONT STREET.

SUBSURFACE INVESTIGATION
SUM-76-11.57
AKRON EAST EXPRESSWAY-RETAINING WALL NO. 12
AKRON, OHIO

R & R International, Inc.
GEOTECHNICAL ENGINEERS-GEOLOGISTS
AKRON, OHIO 44321

Sum-76-11.57

FHWA REGION	STATE	PROJECT

44/104

2/6

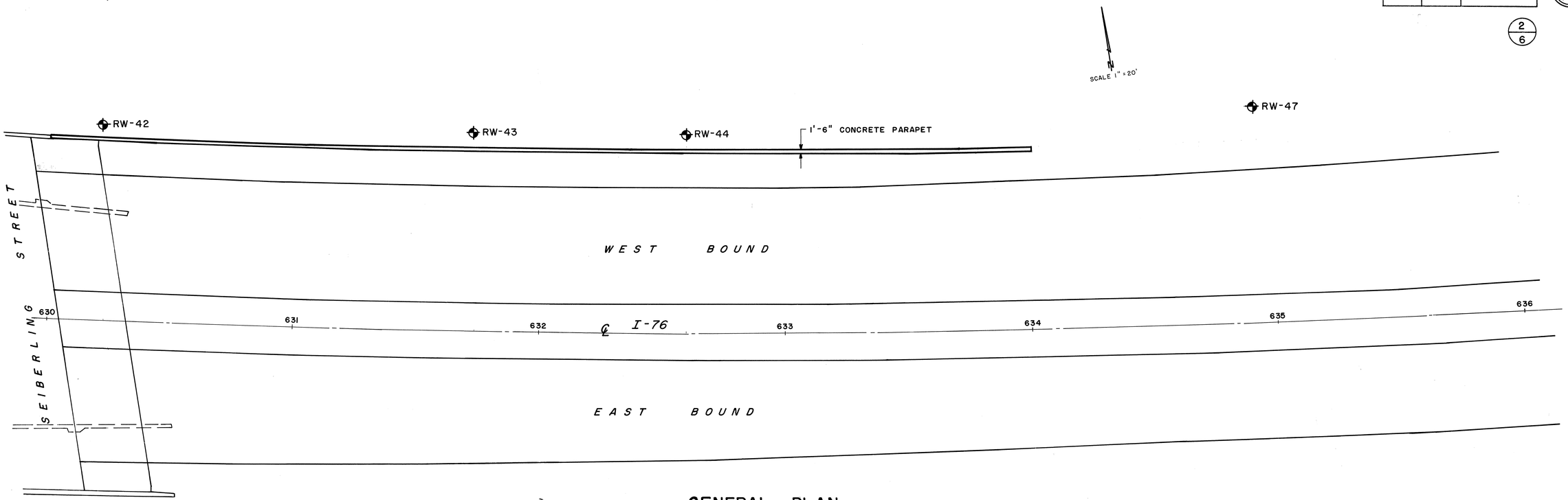

GENERAL PLAN

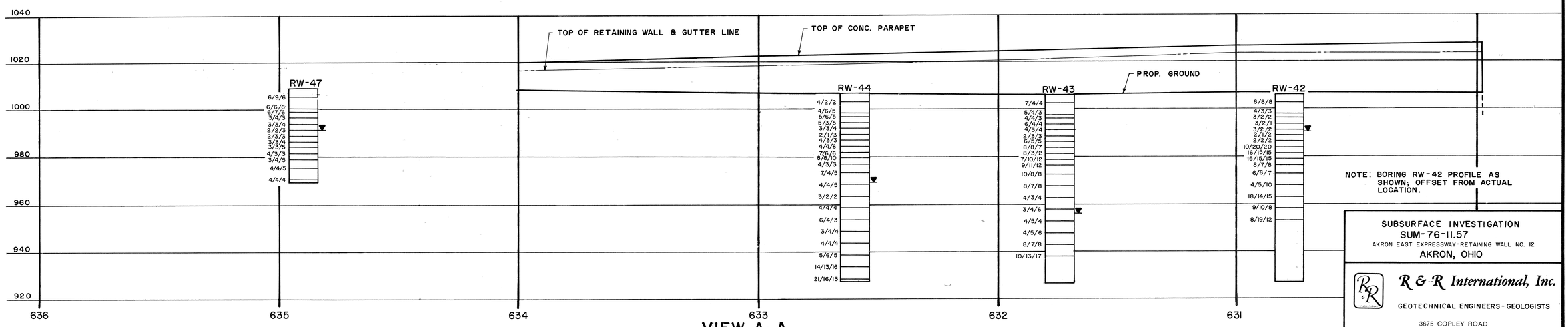

VIEW A-A
ELEVATION

NOTE: BORING RW-42 PROFILE AS SHOWN; OFFSET FROM ACTUAL LOCATION.

SUBSURFACE INVESTIGATION
SUM-76-11.57
AKRON EAST EXPRESSWAY-RETAINING WALL NO. 12
AKRON, OHIO

R & R International, Inc.
GEOTECHNICAL ENGINEERS-GEOLOGISTS
3675 COPLEY ROAD
AKRON, OH 44321
216-666-2200

66478

Sum-76-11.57

FHWA REGION	STATE	PROJECT

45/104

3/6

LOG OF BORING

Date Started 2-2-87 Sampler Type Split Spoon Dia. 2.0 Water Elev. 991.4

Date Completed 2-2-87 Casing: Length -- Dia. ---

Boring No. RW-42 Station & Offset Sta. 630 + 23 81' LT. Surface Elev. 1006.9

ELEV.	DEPTH	STD. PEN. (N)	REC. Ft.	LOSS Ft.	DESCRIPTION	SAMPLE NO.	SAMPLE TYPE	PHYSICAL CHARACTERISTICS % AGG.	% C. SAND	% F. SAND	% SILT	% CLAY	L.L.	P.L.	P.I.	W.C.	SHTL CLASS.
1006.9	0																
		6-8-8	0.9		Medium dense, brown SAND, some gravel, little silt, trace clay, moist.	1	SS										
998.4	5	4-3-3	1.2			2	SS	2.8	14.1	8.5	*	74.6	--	--	--	20.9	A-4a
	10	3-2-2	0.4			3	SS										
		3-2-1	1.5			4	SS	0.1	2.4	12.3	*	85.2	--	--	--	15.1	A-4a
	15	3-2-2	1.3		Medium stiff to hard, gray SANDY SILT, little clay, moist to wet.	5	SS										
		2-1-2	1.5			6	SS	0.5	4.2	16.3	*	79.0	--	--	--	17.5	A-4a
	20	2-2-2	1.4			7	SS										
983.9		10-20-20	1.5			8	SS	54.9	18.8	17.7	*	8.6	--	--	--	4.2	A-1-a
	25	16-15-15	1.4			9	SS										
		13-15-16	1.2		Medium dense, brown GRAVEL, some sand, trace silt, wet.	10	SS										
	30	15-15-15	1.5			11	SS										
973.4		8-7-8	1.3			12	SS	13.6	55.9	24.1	*	6.4	--	--	--	1.2	A-1-b
	35	6-6-7	1.5			13	SS										
	40	4-5-10	1.5			14	SS										
	45	18-14-15	1.5		Medium dense to dense, brown GRAVEL with sand, wet.	15	SS	28.7	39.5	23.6	*	8.2	--	--	--	0.3	A-1-b
	50	9-10-8	0.0		NOTE: Running sands encountered at 60.0' to termination depth.	16	SS										
	55																
	60	8-19-12	1.5			17	SS	21.3	61.1	14.1	*	3.5	--	--	--	5.5	A-1-b
	65																
	70																

LOG OF BORING

Date Started 2-2-87 Sampler Type Split Spoon Dia. 2.0 Water Elev. 991.4

Date Completed 2-2-87 Casing: Length -- Dia. ---

Boring No. RW-42 (Cont.) Station & Offset Sta. 630 + 23 81' LT. Surface Elev. 1006.9

ELEV.	DEPTH	STD. PEN. (N)	REC. Ft.	LOSS Ft.	DESCRIPTION	SAMPLE NO.	SAMPLE TYPE	PHYSICAL CHARACTERISTICS % AGG.	% C. SAND	% F. SAND	% SILT	% CLAY	L.L.	P.L.	P.I.	W.C.	SHTL CLASS.
936.9	0																
	75				SAME AS ABOVE												
926.9	80				TERMINATION DEPTH 80.0 FEET												

* SILT AND CLAY COMBINED

SUBSURFACE INVESTIGATION
SUM-76-11.57
AKRON EAST EXPRESSWAY-RETAINING WALL NO. 12
AKRON, OHIO

R & R International, Inc.
GEOTECHNICAL ENGINEERS-GEOLOGISTS
3675 COPLEY ROAD
AKRON, OH 44321
216-666-2200

66478

Sum-76-11.57

FHWA REGION	STATE	PROJECT

46/104

4/6

LOG OF BORING

Date Started 2-2-87 Sampler Type Split Spoon Dia. 2.0 Water Elev. 955.2

Date Completed 2-2-87 Casing: Length -- Dia. ---

Boring No. RW-43 Station & Offset Sta. 631 + 74 82' LT. Surface Elev. 1006.1

ELEV.	DEPTH	STD. PEN. (N)	REC. Ft.	LOSS Ft.	DESCRIPTION	SAMPLE NO.	SAMPLE TYPE	PHYSICAL CHARACTERISTICS % AGG.	% C. SAND	% F. SAND	% SILT	% CLAY	L.L.	P.L.	P.I.	W.C.	SHTL CLASS.
1006.1	0																
		7-4-4	1.1		Loose, brown GRAVEL, some sand, trace silt, moist to wet.	1	SS										
	5																
		5-4-3	0.7			2	SS	55.5	26.0	11.8	*	6.7	--	--	--	1.4	A-1-a
	10	4-4-3	0.8			3	SS	46.3	34.2	14.6	*	4.9	--	--	--	4.3	A-1-b
993.6		6-4-4	1.2			4	SS										
	15	4-3-4	1.4		Loose, brown SAND, little silt, trace gravel, wet to saturated.	5	SS										
		2-3-3	1.0			6	SS										
	20	6-5-5	1.2			7	SS	27.9	31.5	33.1	*	7.5	--	--	--	6.9	A-1-b
985.2		8-8-7	1.4			8	SS										
	25	8-3-2	1.3		Medium dense, brown and gray GRAVEL with sand, trace silt, saturated.	9	SS										
		7-10-12	1.0			10	SS										
976.1	30	9-11-12	1.2			11	SS	1.4	47.9	46.6	*	4.1	--	--	--	11.7	A-3
		10-8-8	1.1			12	SS										
	35				Medium dense, gray SAND, trace silt, saturated.												
		8-7-8	1.0			13	SS										
	40																
962.6		4-3-4	1.3			14	SS	0.1	2.4	17.7	*	79.8	--	--	--	18.0	A-4a
	45																
		3-4-6	1.4			15	SS										
	50																
		4-5-4	1.0		Medium stiff to hard, gray SANDY SILT, little gravel, saturated.	16	SS										
	55				NOTE: Running sands encountered at 70.0' to termination depth.												
		4-5-6	1.3			17	SS	1.2	4.4	15.2	*	79.2	--	--	--	16.0	A-4a
	60																
		8-7-8	1.0			18	SS	14.6	10.3	8.8	*	66.3	--	--	--	11.6	A-4a
	65																
		10-13-17	1.0			19	SS										
	70																

LOG OF BORING

Date Started 2-2-87 Sampler Type Split Spoon Dia. 2.0 Water Elev. 955.2

Date Completed 2-2-87 Casing: Length -- Dia. ---

Boring No. RW-43 (Cont.) Station & Offset Sta. 631 + 74 82' LT. Surface Elev. 1006.9

ELEV.	DEPTH	STD. PEN. (N)	REC. Ft.	LOSS Ft.	DESCRIPTION	SAMPLE NO.	SAMPLE TYPE	PHYSICAL CHARACTERISTICS % AGG.	% C. SAND	% F. SAND	% SILT	% CLAY	L.L.	P.L.	P.I.	W.C.	SHTL CLASS.
936.1	0																
	75				SAME AS ABOVE												
926.1	80				TERMINATION DEPTH 80.0 FEET												

* SILT AND CLAY COMBINED

SUBSURFACE INVESTIGATION
SUM-76-11.57
AKRON EAST EXPRESSWAY-RETAINING WALL NO. 12
AKRON, OHIO

R & R International, Inc.
GEOTECHNICAL ENGINEERS-GEOLOGISTS
3675 COPLEY ROAD
AKRON, OH 44321
216-666-2200

DATA

Sum-76-11.57

FHWA REGION	STATE	PROJECT

47/104

5/6

LOG OF BORING

Date Started 2-4-87 Sampler Type Split Spoon Dia. 2.0 Water Elev. 969.2

Date Completed 2-4-87 Casing: Length -- Dia. ---

Boring No. RW-44 Station & Offset Sta. 632 + 60 87' LT. Surface Elev. 1006.8

ELEV.	DEPTH	STD. PEN. (N)	REC. Ft.	LOSS Ft.	DESCRIPTION	SAMPLE NO.	SAMPLE TYPE	PHYSICAL CHARACTERISTICS % AGG.	% C. SAND	% F. SAND	% SILT	% CLAY	L.L.	P.L.	P.I.	W.C.	SHTL CLASS.
1006.8	0																
		4-4-2	1.0			1	SS										
	5																
		4-6-5	1.4		Loose, brown SAND, some gravel, little silt, moist.	2	SS										
	10	5-6-5	1.0			3	SS										
		5-3-5	1.2			4	SS										
	15	3-3-4	1.3			5	SS										
990.3		2-1-3	1.4			6	SS										
	20	4-3-3	1.3			7	SS										
		4-4-6	1.0		Loose to medium dense, brown GRAVEL with sand, little silt, moist to saturated.	8	SS										
	25	7-6-6	0.7			9	SS										
		8-8-10	1.0			10	SS										
	30	4-3-3	1.2			11	SS										
975.4		7-4-5	1.3			12	SS										
	35																
		4-4-5	1.1		Loose, brown SAND, little gravel, little silt, saturated.	13	SS										
	40																
		3-2-2	1.2			14	SS										
961.8	45																
		4-4-4	1.0			15	SS										
	50																
		6-4-3	1.3			16	SS										
	55																
		3-4-4	1.2		Stiff, gray SANDY SILT, little to trace gravel, trace clay, saturated. NOTE: Sand seam at 59.2' to 59.3'.	17	SS										
	60																
		4-4-4	1.4			18	SS										
	65																
938.3		5-6-5	1.3			19	SS										
	70																

LOG OF BORING

Date Started 2-4-87 Sampler Type Split Spoon Dia. 2.0 Water Elev. 969.2

Date Completed 2-4-87 Casing: Length -- Dia. ---

Boring No. RW-44 (Cont.) Station & Offset Sta. 632 + 60 87' LT. Surface Elev. 1006.8

ELEV.	DEPTH	STD. PEN. (N)	REC. Ft.	LOSS Ft.	DESCRIPTION	SAMPLE NO.	SAMPLE TYPE	PHYSICAL CHARACTERISTICS % AGG.	% C. SAND	% F. SAND	% SILT	% CLAY	L.L.	P.L.	P.I.	W.C.	SHTL CLASS.
936.8	0																
	75	14-13-16	0.0		Stiff to very stiff, gray SILT AND CLAY, some sand, saturated. NOTE: Sand seam at 69.2' to 69.4'.	20	SS										
928.3		21-16-13	1.0		Medium dense, gray SAND, little silt, saturated.	21	SS										
926.8	80				TERMINATION DEPTH 80.0 FEET												

SUBSURFACE INVESTIGATION
SUM-76-11.57
AKRON EAST EXPRESSWAY-RETAINING WALL NO. 12
AKRON, OHIO

R & R International, Inc.
GEOTECHNICAL ENGINEERS-GEOLOGISTS
3675 COPLEY ROAD
AKRON, OH 44321
216-666-2200

76418

Sum-76-11.57

FHWA REGION	STATE	PROJECT

48/104

6/6

LOG OF BORING

Date Started 3-14-88 Sampler Type Split Spoon Dia. 2.0 Water Elev. 991.2

Date Completed 3-14-88 Casing: Length -- Dia. ---

Boring No. RW-47 Station & Offset Sta. 634 + 90 89' LT. Surface Elev. 1009.2

ELEV.	DEPTH	STD. PEN. (N)	REC. Ft.	LOSS Ft.	DESCRIPTION	SAMPLE NO.	SAMPLE TYPE	PHYSICAL CHARACTERISTICS % AGG.	% C. SAND	% F. SAND	% SILT	% CLAY	L.L.	P.L.	P.I.	W.C.	SHTL CLASS.
1109.2	0																
		6-9-6	1.5			1	SS										
	5				Medium dense, brown SAND, some gravel, little silt, moist.												
		6-6-6	1.5			2	SS										
999.2	10	6-7-6	1.5			3	SS	20.3	48.3	21.3	*	10.1	--	--	--	1.2	A-1-b
		3-4-3	1.5			4	SS										
	15	3-3-4	1.5			5	SS										
		2-2-3	1.5			6	SS										
	20	2-3-3	1.5			7	SS										
		3-3-4	1.5			8	SS										
	25	3-3-5	1.5		Medium dense to loose, brown GRAVEL, some sand, trace silt, moist to wet.	9	SS	33.7	35.8	20.8	*	9.7	--	--	--	2.7	A-1-b
		4-3-3	1.5			10	SS										
	30	3-4-5	1.5			11	SS	24.8	37.7	26.5	*	11.0	--	--	--	12.2	A-1-b
		4-4-5	1.5			12	SS										
	35																
970.7		4-4-4	1.5		Loose, brown SAND, some gravel, little silt, wet.	13	SS	25.6	26.8	19.0	*	28.6	--	--	--	6.9	A-3a
969.2	40				TERMINATION DEPTH 40.0 FEET												

* SILT AND CLAY COMBINED

SUBSURFACE INVESTIGATION
SUM-76-11.57
AKRON EAST EXPRESSWAY-RETAINING WALL NO. 12
AKRON, OHIO

R & R International, Inc.
GEOTECHNICAL ENGINEERS-GEOLOGISTS
3675 COPLEY ROAD
AKRON, OH 44321
216-666-2200

6478

Sum-76-11.57

FHWA REGION	STATE	PROJECT

49/104

STRUCTURE SUBSURFACE INVESTIGATION

1/7

GEOLOGY OF THE SITE

THE PROJECT SITE LIES ON THE GLACIATED, HILLY, DEEPLY DISSECTED ALLEGHENY PLATEAU PHYSIOGRAPHIC PROVINCE. RELIEF ALONG THE LENGTH OF THE WALL IS APPROXIMATELY 25 FEET.

THE PROJECT AREA WAS GLACIATED BY THE WISCONSIN ICE SHEET, LEAVING A VARIABLE BUT THIN DRIFT, NOT AVERAGING MORE THAN 25 FEET IN THICKNESS. THERE ARE TWO (2) DISTINCT TYPES OF GLACIAL DEPOSITS PRESENT AT THE SITE. THEY ARE THE MOGADORE TILL, WHICH IS A COARSE SANDY TILL WITH MINOR AMOUNTS OF CLAY, AND KAME AND KAME TERRACE DEPOSITS WHICH CONSIST PRIMARILY OF GRAVEL AND SAND MATERIAL. IT SHOULD BE NOTED THAT PORTIONS OF THE AREA ALONG THE LENGTH OF THE ROADWAY ARE "MADE LAND" WHICH ARE AREAS WHERE THE ORIGINAL SURFACE HAS BEEN COMPLETELY MODIFIED BY MAN.

BEDROCK AT THE PROJECT SITE CONSISTS OF THE PENNSYLVANIAN AGED SHARON CONGLOMERATE OF THE POTTSVILLE FORMATION IN THE HIGHLANDS, AND THE LOWER PORTIONS ARE UNDERLAIN BY SHALES AND SANDSTONES OF THE LOGAN FORMATION WHICH IS MISSISSIPPIAN IN AGE.

EXPLORATION

THE EXPLORATION PROGRAM CONSISTED OF ADVANCING A TOTAL OF SEVEN (7) DRIVE SAMPLE BORINGS WITH A CME-55 TRUCK MOUNTED DRILLING RIG USING A CONVENTIONAL 3.25 INCH I.D. HOLLOW STEM AUGERS, PERFORMED DURING MARCH, 1988.

INVESTIGATIONAL FINDINGS

THE TEST BORINGS DISCLOSED ALTERNATING LAYERS OF SANDY SILT (A-4A) AND SAND AND GRAVEL (A-1-A, A-1-B, AND A-3A). THE SAND AND GRAVEL DEPOSITS ARE MOST PREDOMINATE AND HAVE A RELATIVE COMPACTNESS RANGING FROM "LOOSE" TO "DENSE," BUT IN MOST CASES IS "MEDIUM DENSE."

FOR SPECIFIC CONDITIONS AT VARIOUS DEPTHS, REFER TO THE INDIVIDUAL TEST BORING LOGS WHICH FORM A PART OF THIS REPORT.

LEGEND

- AUGER BORING LOCATION - PLAN VIEW
- PRESS AND/OR DRIVE SAMPLE AND/OR CORE BORING LOCATION - PLAN VIEW
- TR — TOP OF ROCK
- CAPPED PILE
- FOOTING
- FOOTING ON PILE
- HORIZONTAL BAR ON BORING LOG INDICATES THE DEPTH THE SAMPLE WAS TAKEN
- X/Y/Z — FIGURES BESIDE THE BORING LOG IN PROFILE INDICATE THE NUMBER OF BLOWS FOR STANDARD PENETRATION TEST
  - X = NO. OF BLOWS FOR FIRST 6"
  - Y = NO. OF BLOWS FOR SECOND 6"
  - Z = NO. OF BLOWS FOR THIRD 6"
- W — INDICATES FREE WATER ELEVATION
- INDICATES STATIC WATER ELEVATION

SYMBOLS OF ROCK TYPES

- COAL
- WEATHERED MUDSTONE
- MUDSTONE
- WEATHERED SHALE
- SHALE
- CLAYSTONE
- SILTSTONE
- WEATHERED SANDSTONE
- SANDSTONE
- LEACHED DOLOMITE
- DOLOMITE
- LEACHED LIMESTONE
- LIMESTONE
- BOULDERS or COBBLES

GENERAL INFORMATION

Drive sample / Press sample / Core borings

Drive sample borings are made by means of a mechanically-powered rotary-type drilling machine, employing a 2" O.D., 1-3/8" I.D. split spoon sampler, at 2.5 and/or 5-foot depth intervals, driven by means of a 140 lb. drop hammer with a free fall of 30". The number of blows required to drive the sampler 18" is considered the standard penetration test.

Drive/press borings are made by means of a mechanically-powered rotary-type drilling machine, employing a 2" O.D., 1-3/8" I.D. split spoon sampler, and 3" O.D. thin wall press sampler. The press sampler is advanced by continuous uniform pressure, applied by the drilling machine.

Core borings are made by means of a mechanically-powered rotary-type drilling machine, employing a NXM core barrel with industrial diamond cutting head.

The boring log sheets display a graphic plot of the information obtained including depth and elevation of the sample, type of sample, the standard penetration test readings in three 6-inch increments, depth and elevation of press samples, field number assigned to sample, sample description - based on laboratory tests utilizing the Casagrande AC classification system - and gradation, plasticity and moisture determinations. Results of strength and consolidation testing, if performed on undisturbed samples, will appear graphically on separate enclosures. Rock samples are displayed on the log sheets including depth and elevation of the sample, amount of recovery and a visual classification based on type, color, degree of hardness, grain size, deterioration, bedding, acid reaction and other qualifying factors.

At depths where materials are bouldery or gravelly to the extent that the sampler can not be utilized, a wash sample is procured and visually classified, in order to determine the general characteristics of the material. These samples are not considered sufficiently representative to warrant laboratory testing.

PARTICLE SIZE DEFINITIONS

12"	3"	2.0mm		0.42mm	0.074mm	0.005mm
Boulders	Cobbles	Gravel	Coarse Sand	Fine Sand	Silt	Clay
		No. 10 sieve		No. 40 sieve	No. 200 sieve	

NOTE - ALL AVAILABLE SOIL AND BEDROCK INFORMATION WHICH CAN BE CONVENIENTLY SHOWN ON THE STRUCTURE FOUNDATION INVESTIGATION SHEETS HAS BEEN SO REPORTED. ADDITIONAL SUBSURFACE INVESTIGATIONS MAY HAVE BEEN MADE TO STUDY SOME SPECIAL ASPECT OF THE PROJECT. COPIES OF THIS DATA, IF ANY, MAY BE INSPECTED IN THE DISTRICT DEPUTY DIRECTOR'S OFFICE, THE BUREAU OF TESTS AT 1600 WEST BROAD STREET, THE PAVEMENT AND SOILS SECTION OF THE BUREAU OF LOCATION AND DESIGN OR IN THE BRIDGE BUREAU AT 25 SOUTH FRONT STREET.

SUBSURFACE INVESTIGATION
SUM-76-11.57
AKRON EAST EXPRESSWAY-RETAINING WALL NO. 13
AKRON, OHIO

R & R International, Inc.
GEOTECHNICAL ENGINEERS-GEOLOGISTS
AKRON, OHIO 44321

SUM-76-11.57

FHWA REGION	STATE	PROJECT

50/104

2/7

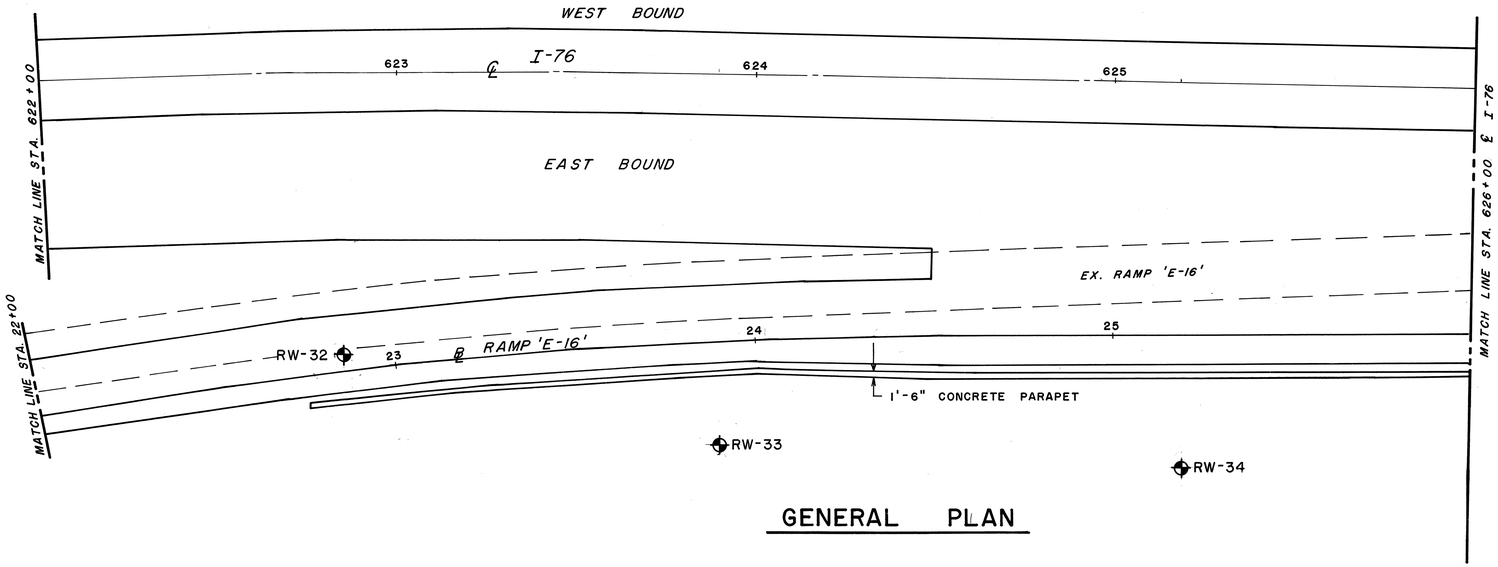

GENERAL PLAN

N

SCALE 1" = 20'

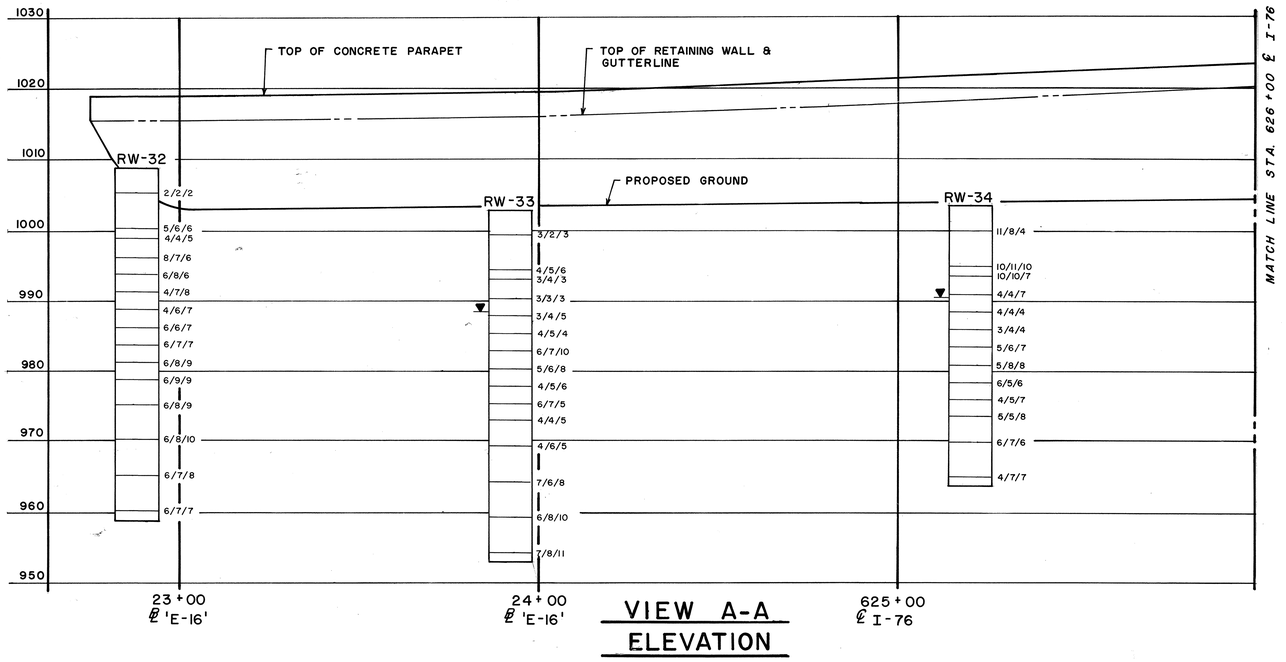

VIEW A-A ELEVATION

SUBSURFACE INVESTIGATION
SUM-76-11.57
AKRON EAST EXPRESSWAY-RETAINING WALL NO. 13
AKRON, OHIO

R & R International, Inc.
GEOTECHNICAL ENGINEERS-GEOLOGISTS
3675 COPLEY ROAD
AKRON, OH 44321
216-666-2200

64478

Sum-76-11.57

FHWA REGION	STATE	PROJECT

51/104

3/7

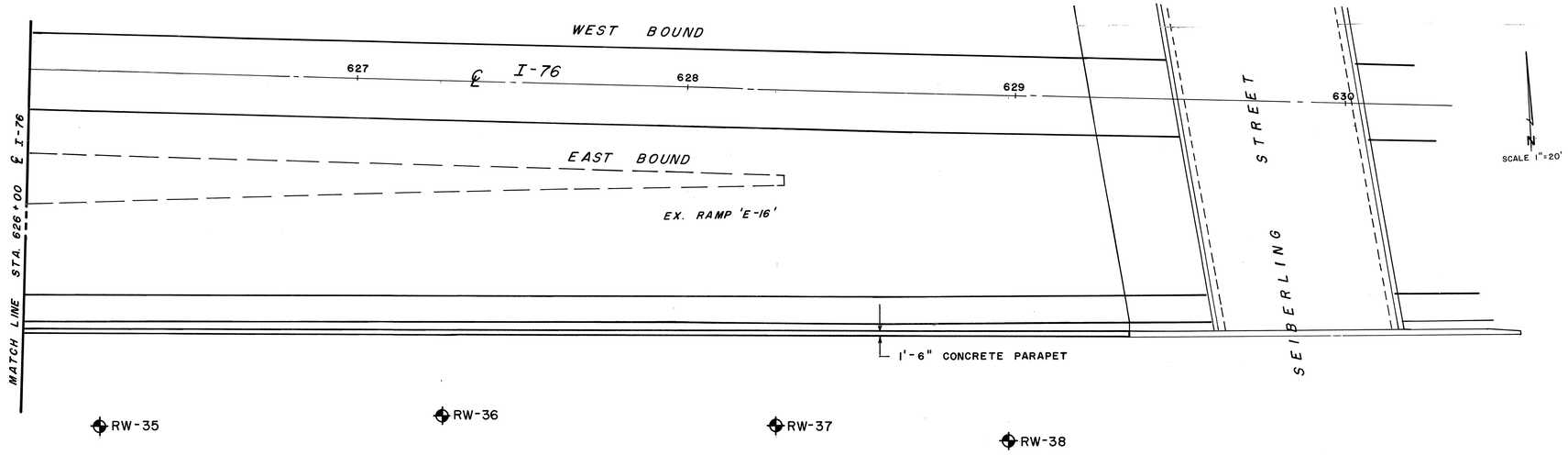

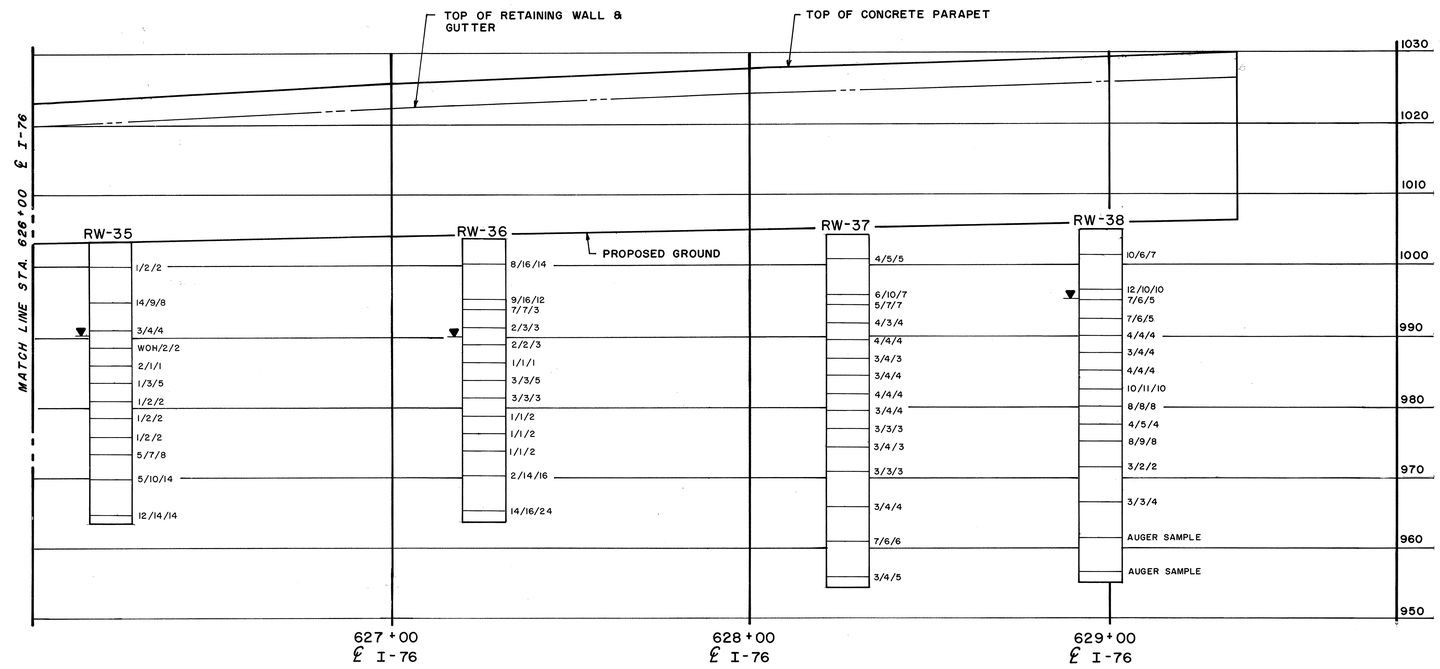

SUBSURFACE INVESTIGATION
SUM-76-11.57
AKRON EAST EXPRESSWAY-RETAINING WALL NO. 13
AKRON, OHIO

R & R International, Inc.
GEOTECHNICAL ENGINEERS-GEOLOGISTS
3675 COPLEY ROAD
AKRON, OH 44321
216-666-2200

56478

SUM-76-11.57

FHWA REGION	STATE	PROJECT

52
104

4
7

LOG OF BORING

Date Started 3-9-88 Sampler Type Split Spoon Dia. 2.0 Water Elev. ---

Date Completed 3-9-88 Casing: Length -- Dia. ---

Boring No. RW-32 Station & Offset Sta. 622 + 85 80' RT. Surface Elev. 1009.3

ELEV.	DEPTH	STD. PEN. (N)	REC. Ft.	LOSS Ft.	DESCRIPTION	SAMPLE NO.	SAMPLE TYPE	PHYSICAL CHARACTERISTICS % AGG.	% C. SAND	% F. SAND	% SILT	% CLAY	L.L.	P.L.	P.I.	W.C.	SHTL CLASS.
1009.3	0																
1009.0					ASPHALT												
1008.8					BRICKS												
		2-2-2	1.5		Soft, gray SANDY SILT, some clay, some roots, moist.	1	SS										
1004.4	5																
		5-6-6	1.5			2	SS										
	10	4-4-5	1.5			3	SS										
		8-7-6	1.5		Loose to medium dense, brown SAND AND GRAVEL, wet.	4	SS										
	15	6-8-6	1.5			5	SS										
		4-7-8	1.5			6	SS										
991.3																	
990.3					Medium dense, brown SAND, some silt, wet.												
	20	4-6-7	1.5			7	SS										
		6-6-7	1.5		Medium dense, brown SAND AND GRAVEL, wet.	8	SS										
	25	6-7-7	1.5			9	SS										
		6-8-9	1.5			10	SS										
981.3																	
	30	6-9-9	1.5			11	SS										
		6-8-9	1.5			12	SS										
	35																
		6-8-10	1.5		Medium dense, gray SAND, trace silt, wet.	13	SS										
	40																
		6-7-8	1.5			14	SS										
	45																
		6-7-7	1.5			15	SS										
959.3	50																
					TERMINATION DEPTH 50.0 FEET												

LOG OF BORING

Date Started 3-9-88 Sampler Type Split Spoon Dia. 2.0 Water Elev. 988.4

Date Completed 3-9-88 Casing: Length -- Dia. ---

Boring No. RW-33 Station & Offset Sta. 623 + 90 115' RT. Surface Elev. 1002.9

ELEV.	DEPTH	STD. PEN. (N)	REC. Ft.	LOSS Ft.	DESCRIPTION	SAMPLE NO.	SAMPLE TYPE	PHYSICAL CHARACTERISTICS % AGG.	% C. SAND	% F. SAND	% SILT	% CLAY	L.L.	P.L.	P.I.	W.C.	SHTL CLASS.
1002.9	0																
1002.7					ASPHALT												
1002.4					BRICK												
1002.0					CONCRETE												
999.9					Loose, brown SAND, moist.												
998.9		3-2-3	1.5		Soft, black MUCK, trace organics, moist.	1	SS										
	5				Soft, brown PEAT, trace organics, moist.												
996.9					Soft, black MUCK, moist.												
994.9		4-5-6	1.5		Medium dense, brown SAND, moist.	2	SS	12.3	22.7	48.7	*	16.3	--	--	--	7.7	A-3a
992.9	10	3-4-3	1.5			3	SS										
		3-3-3	1.5			4	SS	36.0	21.4	23.4	*	19.2	--	--	--	17.8	A-1-b
	15	3-4-5	1.5		Loose, brown GRAVEL, some sand, wet.	5	SS										
		4-5-4	1.5			6	SS										
982.9	20	6-7-10	1.5		Medium dense, gray SAND, some silt, wet.	7	SS	20.5	25.8	29.6	*	24.1	--	--	--	15.7	A-3a
980.9		5-6-8	1.5			8	SS										
	25	4-5-6	1.5		Medium dense, brown SAND, wet.	9	SS	4.4	31.6	47.3	*	16.7	--	--	--	18.9	A-3a
976.9																	
		6-7-5	1.5			10	SS										
	30	4-4-5	1.5			11	SS										
		4-6-5	1.5			12	SS	10.7	49.4	33.9	*	6.0	--	--	--	15.6	A-1-b
	35				Medium dense, gray GRAVEL, some sand, wet.												
		7-6-8	1.5			13	SS										
	40																
		6-8-10	1.5			14	SS										
956.9	45																
		7-8-11	1.5		Medium dense, gray SAND, wet.	15	SS	0.2	35.9	57.4	*	6.5	--	--	--	22.3	A-3
952.9	50																
					TERMINATION DEPTH 50.0 FEET												

* SILT AND CLAY COMBINED

SUBSURFACE INVESTIGATION
SUM-76-11.57
AKRON EAST EXPRESSWAY-RETAINING WALL NO. 13
AKRON, OHIO

R & R International, Inc.
GEOTECHNICAL ENGINEERS-GEOLOGISTS
3675 COPLEY ROAD
AKRON, OH 44321
216-666-2200

56478

Sum-76-11.57

FHWA REGION	STATE	PROJECT

53/104

5/7

LOG OF BORING

Date Started 3-7-88 Sampler Type Split Spoon Dia. 2.0 Water Elev. 990.5
Date Completed 3-7-88 Casing: Length -- Dia. ---
Boring No. RW-34 Station & Offset Sta. 625 + 18 109' RT. Surface Elev. 1003.5

ELEV.	DEPTH	STD. PEN. (N)	REC. Ft.	LOSS Ft.	DESCRIPTION	SAMPLE NO.	SAMPLE TYPE	PHYSICAL CHARACTERISTICS % AGG.	% C. SAND	% F. SAND	% SILT	% CLAY	L.L.	P.L.	P.I.	W.C.	SHTL CLASS.
1003.5	0																
1003.1					ASPHALT												
1002.8					BRICK												
1001.6					ASPHALT												
		11-8-4	1.5		Stiff, brown CLAY, some sand, little gravel, moist.	1	SS										
998.9	5				Soft to medium stiff, black CLAY, some organics (peat), moist.												
997.5																	
		10-11-10	1.2			2	SS	16.9	18.7	13.5	*	50.9	--	--	--	5.9	A-4a
	10	10-10-7	1.3		Very stiff, brown SANDY SILT, damp.	3	SS										
		4-4-7	1.5			4	SS	8.2	26.1	46.2	*	19.5	--	--	--	16.8	A-3a
990.5																	
	15	4-4-4	1.5			5	SS	7.7	20.2	52.0	*	20.1	--	--	--	19.3	A-3a
					Medium dense to loose, brown SAND, trace gravel, saturated.												
		3-4-4	1.5			6	SS										
983.5	20	5-6-7	1.5			7	SS										
		5-8-8	1.5			8	SS	43.6	34.2	16.3	*	5.9	--	--	--	11.3	A-1-b
	25	6-5-6	1.5			9	SS										
					Medium dense, brown GRAVEL, some sand, saturated.												
		4-5-7	1.5			10	SS										
	30	5-5-8	1.5			11	SS	10.4	57.3	26.2	*	6.1	--	--	--	16.7	A-1-b
970.0		6-7-6	1.5			12	SS										
	35				Medium dense, gray SAND, some sandstone fragments, little gravel, saturated.												
		4-7-7	1.5			13	SS	3.1	27.2	65.3	*	4.4	--	--	--	18.4	A-3
963.5	40				TERMINATION DEPTH 40.0 FEET												

* SILT AND CLAY COMBINED

LOG OF BORING

Date Started 3-9-88 Sampler Type Split Spoon Dia. 2.0 Water Elev. 990.3
Date Completed 3-9-88 Casing: Length -- Dia. ---
Boring No. RW-35 Station & Offset Sta. 626 + 21 109' RT. Surface Elev. 1003.8

ELEV.	DEPTH	STD. PEN. (N)	REC. Ft.	LOSS Ft.	DESCRIPTION	SAMPLE NO.	SAMPLE TYPE	PHYSICAL CHARACTERISTICS % AGG.	% C. SAND	% F. SAND	% SILT	% CLAY	L.L.	P.L.	P.I.	W.C.	SHTL CLASS.
1003.8	0																
		1-2-2	0.2			1	SS										
	5																
					Loose to medium dense, brown SAND, some gravel, moist.												
		14-9-8	1.2			2	SS										
	10																
		3-4-4	1.4			3	SS										
989.8																	
	15	WOH-2-2	1.5			4	SS										
		2-1-1	1.5		Soft to medium stiff, gray SANDY SILT, moist to wet.	5	SS										
	20	1-3-5	1.5			6	SS										
981.8		1-2-2	1.3			7	SS										
	25	1-2-2	1.5			8	SS										
					Soft to medium stiff, gray CLAYEY SILT, moist.												
		1-2-2	1.5			9	SS										
973.3	30	5-7-8	1.0			10	SS										
		5-10-14	1.1			11	SS										
	35				Medium dense, brown to gray SAND AND GRAVEL, wet.												
		12-14-14	1.5			12	SS										
963.8	40				TERMINATION DEPTH 40.0 FEET												

SUBSURFACE INVESTIGATION
SUM-76-11.57
AKRON EAST EXPRESSWAY-RETAINING WALL NO. 13
AKRON, OHIO

R & R International, Inc.
GEOTECHNICAL ENGINEERS-GEOLOGISTS
3675 COPLEY ROAD
AKRON, OH 44321
216-666-2200

Sum-76-11.57

FHWA REGION	STATE	PROJECT

54/104

6/7

LOG OF BORING

Date Started 3-9-88 Sampler Type Split Spoon Dia. 2.0 Water Elev. 990.2
Date Completed 3-9-88 Casing: Length -- Dia. ---
Boring No. RW-36 Station & Offset Sta. 627 + 25 103' RT. Surface Elev. 1004.2

ELEV.	DEPTH	STD. PEN. (N)	REC. Ft.	LOSS Ft.	DESCRIPTION	SAMPLE NO.	SAMPLE TYPE	PHYSICAL CHARACTERISTICS % AGG.	% C. SAND	% F. SAND	% SILT	% CLAY	L.L.	P.L.	P.I.	W.C.	SHTL CLASS.
1004.2	0																
		8-16-14	0.6		Medium dense, brown GRAVEL, some sand, wet.	1	SS										
	5																
		9-16-12	1.2			2	SS	38.5	30.2	16.5	*	14.8	--	--	--	6.7	A-1-b
994.2	10	7-7-3	1.3			3	SS	23.9	30.3	9.0	*	36.8	--	--	--	5.2	A-4a
		2-3-3	1.5		Medium stiff, brown SANDY SILT, moist.	4	SS										
988.2	15	2-2-3	1.5			5	SS	0.1	0.2	40.3	*	59.4	--	--	--	26.7	A-4a
		1-1-1	1.5			6	SS										
	20	3-3-5	1.5			7	SS	0.3	2.3	53.1	*	44.3	--	--	--	25.0	A-4a
		3-3-3	1.5			8	SS										
	25	1-1-2	1.5		Stiff to soft, gray SANDY SILT, wet.	9	SS	0.2	1.6	7.1	*	91.1	--	--	--	30.8	A-4a
		1-1-2	1.5			10	SS										
	30	1-1-2	1.5			11	SS										
969.7		2-14-16	1.2			12	SS	20.4	14.5	33.8	*	31.3	--	--	--	14.5	A-3a
	35				Dense, gray GRAVEL, some sand, wet.												
		14-16-24	1.5			13	SS										
964.2	40				TERMINATION DEPTH 40.0 FEET												

* SILT AND CLAY COMBINED

LOG OF BORING

Date Started 3-10-88 Sampler Type Split Spoon Dia. 2.0 Water Elev. ---
Date Completed 3-10-88 Casing: Length -- Dia. ---
Boring No. RW-37 Station & Offset Sta. 628 + 27 103' RT. Surface Elev. 1004.5

ELEV.	DEPTH	STD. PEN. (N)	REC. Ft.	LOSS Ft.	DESCRIPTION	SAMPLE NO.	SAMPLE TYPE	PHYSICAL CHARACTERISTICS % AGG.	% C. SAND	% F. SAND	% SILT	% CLAY	L.L.	P.L.	P.I.	W.C.	SHTL CLASS.
1004.5	0																
1004.2					ASPHALT												
1003.7					BRICK												
1003.5					CONCRETE												
		4-5-5	1.5			1	SS										
	5				Medium dense, brown GRAVEL, some sand, moist.												
		6-10-7	1.5			2	SS	17.6	37.4	36.7	*	8.3	--	--	--	6.5	A-1-b
994.0	10	5-7-7	1.5			3	SS										
		4-3-4	1.5			4	SS										
	15	4-4-4	1.5			5	SS										
		3-4-3	1.5			6	SS	0.3	7.3	82.7	*	9.7	--	--	--	20.0	A-3
	20	3-4-4	1.5		Loose, brown SAND, trace gravel, moist.	7	SS										
		4-4-4	1.5			8	SS										
	25	3-4-4	1.5			9	SS										
		3-3-3	1.5			10	SS										
975.5	30	3-4-3	1.5			11	SS	0.9	3.2	42.3	*	53.6	--	--	--	21.8	A-4a
		3-3-3	1.5		Medium stiff, gray SANDY SILT, trace gravel, wet.	12	SS										
967.0	35	3-4-4	1.5			13	SS										
	40				Medium stiff, gray CLAYEY SILT, some sand, wet.												
959.8		7-6-6	1.5			14	SS										
	45				Medium dense to loose, gray GRAVEL, some sand, wet.												
		3-4-5	1.5			15	SS	1.8	57.6	35.4	*	5.2	--	--	--	18.1	A-1-b
954.5	50				TERMINATION DEPTH 50.0 FEET												

* SILT AND CLAY COMBINED

SUBSURFACE INVESTIGATION
SUM-76-11.57
AKRON EAST EXPRESSWAY-RETAINING WALL NO. 13
AKRON, OHIO

R & R International, Inc.
GEOTECHNICAL ENGINEERS - GEOLOGISTS
3675 COPLEY ROAD
AKRON, OH 44321
216-666-2200

14478

Sum-76-11.57

FHWA REGION	STATE	PROJECT

55
104

7
7

LOG OF BORING

Date Started 3-10-88 Sampler Type Split Spoon Dia. 2.0 Water Elev. 995.0

Date Completed 3-10-88 Casing: Length -- Dia. ---

Boring No. RW-38 Station & Offset Sta. 628 + 98 106' RT. Surface Elev. 1005.0

ELEV.	DEPTH	STD. PEN. (N)	REC. Ft.	LOSS Ft.	DESCRIPTION	SAMPLE NO.	SAMPLE TYPE	PHYSICAL CHARACTERISTICS % AGG.	% C.SAND	% F.SAND	% SILT	% CLAY	L.L.	P.L.	P.I.	W.C.	SHTL CLASS.
1005.0	0																
1004.7					ASPHALT												
1004.3					BRICK												
1002.3					Medium dense, brown SAND and wood fill, moist.												
		10-6-7	1.5		Medium dense, brown GRAVEL, little sand, moist.	1	SS	60.1	23.7	8.2	*	8.0	--	--	--	6.4	A-1-a
	5																
999.0																	
		12-10-10	1.5		Medium dense, brown SAND, some gravel, moist.	2	SS										
995.0	10	7-6-5	1.5			3	SS	44.1	25.2	21.0	*	9.7	--	--	--	7.9	A-1-b
		7-6-5	1.5			4	SS										
	15	4-4-4	1.5		Medium dense to loose, brown GRAVEL, some sand, wet.	5	SS										
		3-4-4	1.5			6	SS	22.7	52.1	19.1	*	6.1	--	--	--	14.9	A-1-b
	20	4-4-4	1.5			7	SS										
982.5		10-11-10	1.5		Medium dense, brown SAND, little gravel, wet.	8	SS	6.9	25.8	35.9	*	31.4	--	--	--	16.1	A-3a
980.5																	
980.0	25	8-8-8	1.5		Medium dense, gray SAND, some silt, some clay, wet.	9	SS										
		4-5-4	1.5			10	SS										
					Loose to medium dense, gray SAND, wet.												
	30	8-9-8	1.5			11	SS	4.3	42.7	50.8	*	2.2	--	--	--	16.7	A-3
971.5		3-2-2	1.5			12	SS	0.0	0.8	14.1	*	85.1	24.5	20.3	4.2	27.7	A-4a
	35																
		3-3-4	1.5			13	SS										
	40				Soft to medium stiff, gray SANDY SILT, trace gravel, wet.												
						14	AS										
	45																
						15	AS	0.1	1.2	22.9	*	75.8	20.7	18.0	2.7	22.1	A-4a
955.0	50				TERMINATION DEPTH 50.0 FEET												

* SILT AND CLAY COMBINED

SUBSURFACE INVESTIGATION
SUM-76-11.57
AKRON EAST EXPRESSWAY-RETAINING WALL NO. 13
AKRON, OHIO

R & R International, Inc.
GEOTECHNICAL ENGINEERS-GEOLOGISTS
3675 COPLEY ROAD
AKRON, OH 44321
216-665-2200

56478

SUM-76-11.57

FHWA REGION	STATE	PROJECT

56/104

SOIL PROFILE 1/4

GEOLOGY OF THE SITE

THE PROJECT SITE LIES ON THE GLACIATED, ROLLING AND DISSECTED ALLEGHENY PLATEAU PHYSIOGRAPHIC PROVINCE AT AN APPROXIMATE ELEVATION OF 1005. THE LITTLE CUYAHOGA RIVER LIES TOWARD THE SOUTH.

THE WISCONSIN ICE SHEET PASSED OVER THE AREA LEAVING VARIABLE DEPOSITS OF GLACIAL TILL GENERALLY RANGING FROM 75 TO 150 FEET IN THICKNESS. IT IS EXPECTED THAT ALLUVIAL DEPOSITS LIE IN THE VICINITY OF THE SITE. THESE DEPOSITS ARE COMPOSED MAINLY OF SILT, SILTY SAND AND GRAVEL.

THE OHIO GEOLOGICAL SURVEY INDICATES THAT BEDROCK STANDS AT AN APPROXIMATE ELEVATION OF 850. AT THIS ELEVATION IT IS EXPECTED THAT BEDROCK IS COMPRISED OF PENNSYLVANIAN AGE SANDSTONE OF THE POTTSVILLE FORMATION.

EXPLORATION

THE SUBSURFACE EXPLORATION PROGRAM FOR THIS PROJECT INCLUDED ADVANCING A TOTAL OF THREE (3) DRIVE SAMPLE BORINGS WITH A SIMCO 4000 ALL TERRAIN DRILLING RIG USING CONVENTIONAL 2.25 INCH I.D. HOLLOW STEM AUGERS, PERFORMED DURING MARCH, 1991. THE TEST BORINGS WERE ADVANCED FOR FOUNDATION DESIGN PURPOSES.

INVESTIGATIONAL FINDINGS

TEST BORING RW-121 AND RW-122 WERE BOTH ADVANCED THROUGH A LAYER OF TOPSOIL WHICH IS 0.8 FEET IN THICKNESS. AT TEST BORING LOCATION RW-123, TOPSOIL WAS NOT ENCOUNTERED. THE TEST BORINGS DISCLOSED ALTERNATING LAYERS OF SAND, SAND AND GRAVEL, SANDY SILT, SILT AND SILTY CLAY. THE RELATIVE CONSISTENCY OF THE COHESIVE SOILS WAS FOUND TO RANGE FROM "MEDIUM STIFF" TO "VERY STIFF", BUT WAS PREDOMINANTLY "VERY STIFF". THE RELATIVE DENSITY OF THE NON COHESIVE SOILS ENCOUNTERED WAS FOUND TO RANGE FROM "LOOSE" TO "VERY DENSE", BUT WAS PREDOMINANTLY "MEDIUM DENSE". BEDROCK WAS NOT ENCOUNTERED AT ANY OF THE TEST LOCATIONS WITHIN THE EXPLORED DEPTHS.

FOR SPECIFIC CONDITIONS AT VARIOUS DEPTHS, REFER TO THE INDIVIDUAL TEST BORING LOGS WHICH FORM A PART OF THESE PLANS.

LEGEND

- AUGER BORING LOCATION - PLAN VIEW
- PRESS AND/OR DRIVE SAMPLE AND/OR CORE BORING LOCATION - PLAN VIEW
- TR — TOP OF ROCK
- CAPPED PILE
- FOOTING
- FOOTING ON PILE
- HORIZONTAL BAR ON BORING LOG INDICATES THE DEPTH THE SAMPLE WAS TAKEN
- X/Y/Z — FIGURES BESIDE THE BORING LOG IN PROFILE INDICATE THE NUMBER OF BLOWS FOR STANDARD PENETRATION TEST
  - X = NO. OF BLOWS FOR FIRST 6"
  - Y = NO. OF BLOWS FOR SECOND 6"
  - Z = NO. OF BLOWS FOR THIRD 6"
- W — INDICATES FREE WATER ELEVATION
- INDICATES STATIC WATER ELEVATION

SYMBOLS OF ROCK TYPES

- COAL
- WEATHERED MUDSTONE
- MUDSTONE
- WEATHERED SHALE
- SHALE
- CLAYSTONE
- SILTSTONE
- WEATHERED SANDSTONE
- SANDSTONE
- LEACHED DOLOMITE
- DOLOMITE
- LEACHED LIMESTONE
- LIMESTONE
- BOULDERS or COBBLES

GENERAL INFORMATION

Drive sample / Press sample / Core borings

Drive sample borings are made by means of a mechanically-powered rotary-type drilling machine, employing a 2" O.D., 1-3/8" I.D. split spoon sampler, at 2.5 and/or 5-foot depth intervals, driven by means of a 140 lb. drop hammer with a free fall of 30". The number of blows required to drive the sampler 18" is considered the standard penetration test.

Drive/press borings are made by means of a mechanically-powered rotary-type drilling machine, employing a 2" O.D., 1-3/8" I.D. split spoon sampler, and 3" O.D. thin wall press sampler. The press sampler is advanced by continuous uniform pressure, applied by the drilling machine.

Core borings are made by means of a mechanically-powered rotary-type drilling machine, employing a NXM core barrel with industrial diamond cutting head.

The boring log sheets display a graphic plot of the information obtained including depth and elevation of the sample, type of sample, the standard penetration test readings in three 6-inch increments, depth and elevation of press samples, field number assigned to sample, sample description - based on laboratory tests utilizing the Casagrande AC classification system - and gradation, plasticity and moisture determinations. Results of strength and consolidation testing, if performed on undisturbed samples, will appear graphically on separate enclosures. Rock samples are displayed on the log sheets including depth and elevation of the sample, amount of recovery and a visual classification based on type, color, degree of hardness, grain size, deterioration, bedding, acid reaction and other qualifying factors.

At depths where materials are bouldery or gravelly to the extent that the sampler can not be utilized, a wash sample is procured and visually classified, in order to determine the general characteristics of the material. These samples are not considered sufficiently representative to warrant laboratory testing.

PARTICLE SIZE DEFINITIONS

12"	3"	2.0mm		0.42mm		0.074mm	0.005mm
Boulders	Cobbles	Gravel	Coarse Sand		Fine Sand	Silt	Clay
			No. 10 sieve		No. 40 sieve	No. 200 sieve	

NOTE - ALL AVAILABLE SOIL AND BEDROCK INFORMATION WHICH CAN BE CONVENIENTLY SHOWN ON THE STRUCTURE FOUNDATION INVESTIGATION SHEETS HAS BEEN SO REPORTED. ADDITIONAL SUBSURFACE INVESTIGATIONS MAY HAVE BEEN MADE TO STUDY SOME SPECIAL ASPECT OF THE PROJECT. COPIES OF THIS DATA, IF ANY, MAY BE INSPECTED IN THE DISTRICT DEPUTY DIRECTOR'S OFFICE, THE BUREAU OF TESTS AT 1600 WEST BROAD STREET, THE PAVEMENT AND SOILS SECTION OF THE BUREAU OF LOCATION AND DESIGN OR IN THE BRIDGE BUREAU AT 25 SOUTH FRONT STREET.

STRUCTURE FOUNDATION INVESTIGATION
AKRON EAST EXPRESSWAY
RETAINING WALL 13
AKPON, OHIO

R&R INTERNATIONAL INC.
Geotechnical Engineers • Geologists
1234 S. CLEVELAND-MASSILLON ROAD
P.O. BOX 4363
AKRON, OH 44321

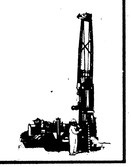

CHECKED BY	REVIEWED	DATE
J.H.	G.M.R.	4.21.91

Sum-76-11.57

FHWA REGION	STATE	PROJECT

57
104

2
4

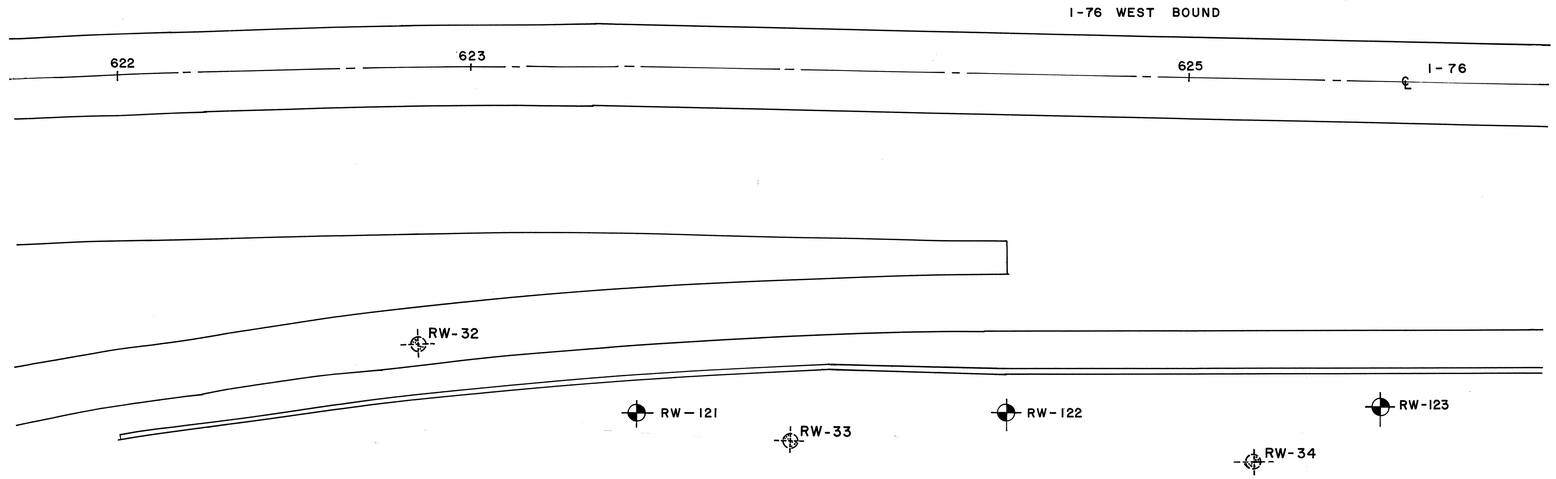

SCALE: HORIZ. 1"= 20'
VERT. 1"= 10'

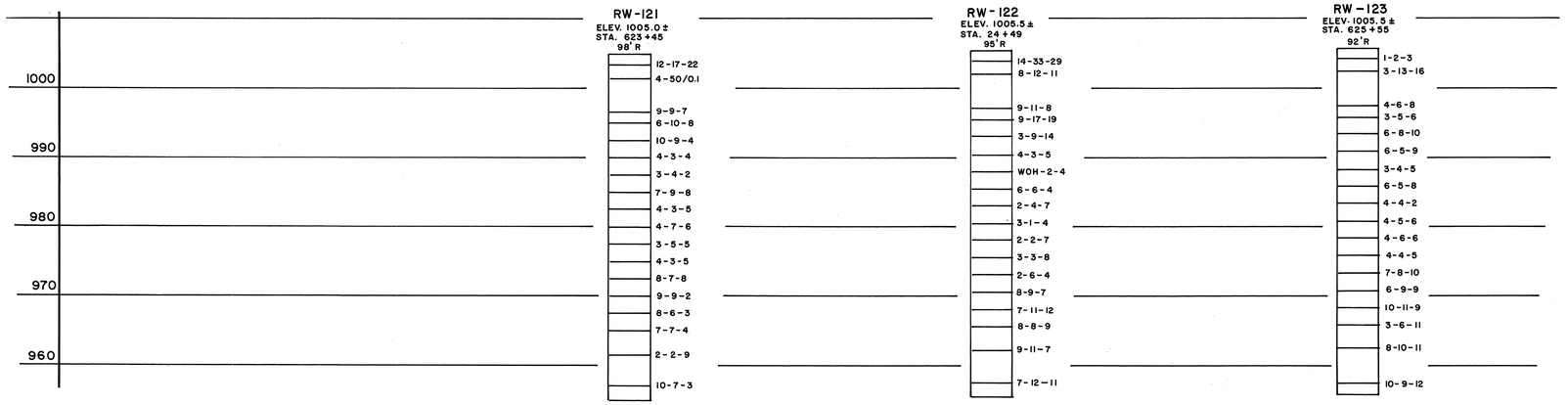

STRUCTURE FOUNDATION INVESTIGATION
AKRON EAST EXPRESSWAY
RETAINING WALL 13
AKRON, OHIO

R&R INTERNATIONAL, INC.
Geotechnical Engineers • Geologists
1234 S. CLEVELAND-MASSILLON ROAD
P.O. BOX 4383
AKRON, OH 44321

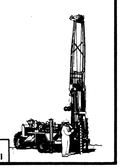

DRAWN BY	CHECKED BY	REVIEWED	DATE
V.K.	J.H.	G.M.R.	9.18.91

542385

SUM-76-11.57

FHWA REGION	STATE	PROJECT

58
104

3
4

LOG OF BORING

Date Started 3-12-91 Sampler Type SS Dia. 2.00 inch. Water Elev. 991.0
Date Completed 3-12-91 Casing: length -- Dia. 3.25 inch.
Boring No. RW-121 Station & Offset STA 623+45 98'RT. Surface Elev. 1005.0±

ELEV.	DEPTH	STD.PEN. (N)	REC. Ft.	LOSS Ft.	DESCRIPTION	SAMPLE NO.	SAMPLE TYPE	PHYSICAL CHARACTERITICS % AGG.	COAR. SAND	FINE SAND	SILT	CLAY	L.L.	P.L.	P.I.	W.C. %	SHTL CLASS.
1005.0	0																
1004.2	0.8	12-17-22	1.5		TOPSOIL	1	SS										
					Dense, brown SAND, little gravel, moist.												
1001.5	3.5	4-50/0.4	0.5			2	SS										
					Very dense to dense, gray SAND AND GRAVEL, little silt, moist.												
		9-9-7	0.5			3	SS										
995.0	10.0	6-10-8	0.5			4	SS										
					Very stiff, gray SANDY SILT, little gravel, moist.												
992.5	12.5	10-9-4	1.0			5	SS										
		4-3-4	1.0			6	SS										
					Loose to medium dense, brown and gray SAND, little												
		3-4-2	1.5		to some gravel, saturated to wet.	7	SS										
		7-9-8	1.5			8	SS										
982.5	22.5	4-3-5	1.0			9	SS										
					Stiff, gray SILT, some sand, wet.												
980.0	25.0	4-7-6	1.0			10	SS										
		3-5-5	1.0			11	SS										
					Medium dense to loose, brown SAND AND GRAVEL, wet.												
		4-3-5	1.5			12	SS										
972.5	32.5	8-7-8	1.0			13	SS										
		9-9-2	1.5			14	SS										
		8-6-3	1.0			15	SS										
		7-7-4	1.5		Medium dense, brown SAND, trace gravel, trace silt,	16	SS										
					wet to moist.												
		2-2-9	0.5			17	SS										
		10-7-3	1.5			18	SS										
955.0	50.0				TERMINATION DEPTH 50.0 FEET												

(hvj. 011028-RW121-2)

LOG OF BORING

Date Started 3-13-91 Sampler Type SS Dia. 2.00 inch. Water Elev. 992.5
Date Completed 3-13-91 Casing: length -- Dia. 3.25 inch.
Boring No. RW-122 Station & Offset STA 624+49 95'RT. Surface Elev. 1005.5+

ELEV.	DEPTH	STD.PEN. (N)	REC. Ft.	LOSS Ft.	DESCRIPTION	SAMPLE NO.	SAMPLE TYPE	PHYSICAL CHARACTERITICS % AGG.	COAR. SAND	FINE SAND	SILT	CLAY	L.L.	P.L.	P.I.	W.C. %	SHTL CLASS.
1005.5	0																
1004.7	0.8	14-33-29	1.0		TOPSOIL	1	SS										
		8-12-11	0.5			2	SS										
		9-8-11	1.0			3	SS										
		9-17-19	0.5			4	SS										
		3-9-14	0.5			5	SS										
		4-3-5	1.5			6	SS										
		WOH-2-4	1.5			7	SS										
		6-6-4	1.5		Very dense to loose, brown to gray SAND, some to trace gravel, moist to saturated.	8	SS										
		2-4-7	1.5			9	SS										
		3-1-4	1.5			10	SS										
		2-2-7	1.5			11	SS										
		3-3-8	1.5			12	SS										
		2-6-4	1.5			13	SS										
		8-9-7	1.0			14	SS										
		7-11-12	1.0			15	SS										
965.5	40.0	8-8-9	1.0			16	SS										
					Very stiff, gray SILT, little sand, wet.												
962.0	43.5	9-11-7	1.5			17	SS										
					Medium dense, brown and gray SAND, little gravel, saturated.												
		7-12-11	1.0			18	SS										
955.5	50.0				TERMINATION DEPTH 50.0 FEET												

(hvj. 011028-RW122-2)

STRUCTURE FOUNDATION INVESTIGATION
AKRON EAST EXPRESSWAY
RETAINING WALL 13
AKRON, OHIO

R&R INTERNATIONAL INC.
Geotechnical Engineers • Geologists
1234 S. CLEVELAND-MASSILLON ROAD
P.O. BOX 4383
AKRON, OH 44321

TYPED BY	CHECKED BY	REVIEWED	DATE
J.X.	J.H.	G.M.R.	4.[illegible].91

442598

SUM-76-11.57

FHWA REGION	STATE	PROJECT

59/104

4/4

LOG OF BORING

Date Started 3-15-91 | Sampler Type SS | Dia. 2.00 inch. | Water Elev. 990.5

Date Completed 3-15-91 | Casing: length -- | Dia. 3.25 inch.

Boring No. RW-123 | Station & Offset STA 625+55 92'RT. | Surface Elev. 1005.5+

ELEV.	DEPTH	STD.PEN. (N)	REC. Ft.	LOSS Ft.	DESCRIPTION	SAMPLE NO.	SAMPLE TYPE	PHYSICAL CHARACTERITICS % AGG.	COAR. SAND	FINE SAND	SILT	CLAY	L.L.	P.L.	P.I.	W.C. %	SHTL CLASS.
1005.5	0																
		1-2-3	1.0			1	SS										
		3-13-16	1.0			2	SS										
					Medium stiff to very stiff, brown SILTY CLAY, trace sand, moist.												
		4-6-8	1.5			3	SS										
		3-5-6	1.5			4	SS										
993.0	12.5	6-8-10	0.5			5	SS										
		6-5-9	1.5			6	SS										
		3-4-5	0.5			7	SS										
					Medium dense to loose, brown SAND AND GRAVEL, trace silt, moist to saturated.												
		6-5-8	1.5			8	SS										
		4-4-2	1.0			9	SS										
		4-5-6	1.5			10	SS										
		4-6-6	1.0			11	SS										
975.5	30.0	4-4-5	1.0			12	SS										
		7-8-10	1.5		Stiff to very stiff, gray SILT, little sand, wet.	13	SS										
970.5	35.0	6-9-9	1.5			14	SS										
					Medium dense, brown SAND AND GRAVEL, wet.												
968.0	37.5	10-11-9	1.5			15	SS										
		3-6-11	1.5			16	SS										
		8-10-11	1.5		Medium dense, brown and gray SAND, some gravel, wet.	17	SS										
		10-9-12	1.5			18	SS										
955.5	50.0				TERMINATION DEPTH 50.0 FEET												

(Proj. 011028-RW123-2)

STRUCTURE FOUNDATION INVESTIGATION
AKRON EAST EXPRESSWAY
RETAINING WALL 13
AKRON, OHIO

R&R INTERNATIONAL, INC.
Geotechnical Engineers • Geologists
1234 S. CLEVELAND-MASSILLON ROAD
P.O. BOX 4383
AKRON, OH 44321

TYPED BY	CHECKED BY	REVIEWED	DATE
J.X.	J.H.	G.M.R.	4.19.91

LA2288

SUM-76-11.57

FHWA REGION	STATE	PROJECT

60
104

STRUCTURE SURFACE INVESTIGATION

1
5

GEOLOGY OF THE SITE

THE PROJECT SITE LIES ON THE GLACIATED, HILLY, DEEPLY DISSECTED ALLEGHENY PLATEAU PHYSIOGRAPHIC PROVINCE. RELIEF ALONG THE LENGTH OF THE WALL IS APPROXIMATELY 25 FEET.

THE PROJECT AREA WAS GLACIATED BY THE WISCONSIN ICE SHEET, LEAVING A VARIABLE BUT THIN DRIFT, NOT AVERAGING MORE THAN 25 FEET IN THICKNESS. THERE ARE TWO (2) DISTINCT TYPES OF GLACIAL DEPOSITS PRESENT AT THE SITE. THEY ARE THE MOGADORE TILL, WHICH IS A COARSE SANDY TILL WITH MINOR AMOUNTS OF CLAY, AND KAME AND KAME TERRACE DEPOSITS WHICH CONSIST PRIMARILY OF GRAVEL AND SAND MATERIAL. IT SHOULD BE NOTED THAT PORTIONS OF THE AREA ALONG THE LENGTH OF THE ROADWAY ARE "MADE LAND" WHICH ARE AREAS WHERE THE ORIGINAL SURFACE HAS BEEN COMPLETELY MODIFIED BY MAN.

BEDROCK AT THE PROJECT SITE CONSISTS OF THE PENNSYLVANIAN AGED SHARON CONGLOMERATE OF THE POTTSVILLE FORMATION IN THE HIGHLANDS, AND THE LOWER PORTIONS ARE UNDERLAIN BY SHALES AND SANDSTONES OF THE LOGAN FORMATION WHICH IS MISSISSIPPIAN IN AGE.

EXPLORATION

THE SUBSURFACE EXPLORATION PROGRAM CONSISTED OF ADVANCING FOUR (4) DRIVE SAMPLE BORINGS WITH A CME-55 TRUCK MOUNTED DRILLING RIG USING CONVENTIONAL 3.25 INCH I.D. HOLLOW STEM AUGERS, PERFORMED DURING AUGUST, 1987 (B-28) AND AUGUST, 1988 (RW-102, RW-103, AND RW-104).

INVESTIGATIONAL FINDINGS

THE TEST BORINGS DISCLOSED LAYERS OF LOOSE TO DENSE SAND AND GRAVEL DEPOSITS, CLASSIFIED AS A-1-a, A-1-b, A-3, AND A-3a. THESE SOIL GROUPS EXTENDED TO THE TERMINATION ELEVATION OF THE BORINGS WHICH RANGES FROM 995 TO 956. IN ADDITION TO THE SAND AND GRAVEL DEPOSITS, A RELATIVELY THIN LAYER OF SILT AND CLAY WAS ENCOUNTERED AT TEST LOCATION B-28.

FOR SPECIFIC CONDITIONS AT VARIOUS DEPTHS, REFER TO THE INDIVIDUAL TEST BORING LOGS WHICH FORM A PART OF THESE PLAN SHEETS.

LEGEND

- AUGER BORING LOCATION - PLAN VIEW
- PRESS AND/OR DRIVE SAMPLE AND/OR CORE BORING LOCATION - PLAN VIEW
- TR — TOP OF ROCK
- CAPPED PILE
- FOOTING
- FOOTING ON PILE
- HORIZONTAL BAR ON BORING LOG INDICATES THE DEPTH THE SAMPLE WAS TAKEN
- X/Y/Z — FIGURES BESIDE THE BORING LOG IN PROFILE INDICATE THE NUMBER OF BLOWS FOR STANDARD PENETRATION TEST
  - X = NO. OF BLOWS FOR FIRST 6"
  - Y = NO. OF BLOWS FOR SECOND 6"
  - Z = NO. OF BLOWS FOR THIRD 6"
- W — INDICATES FREE WATER ELEVATION
- INDICATES STATIC WATER ELEVATION

SYMBOLS OF ROCK TYPES

- COAL
- WEATHERED MUDSTONE
- MUDSTONE
- WEATHERED SHALE
- SHALE
- CLAYSTONE
- SILTSTONE
- WEATHERED SANDSTONE
- SANDSTONE
- LEACHED DOLOMITE
- DOLOMITE
- LEACHED LIMESTONE
- LIMESTONE
- BOULDERS or COBBLES

GENERAL INFORMATION

Drive sample / Press sample / Core borings

Drive sample borings are made by means of a mechanically-powered rotary-type drilling machine, employing a 2" O.D., 1-3/8" I.D. split spoon sampler, at 2.5 and/or 5-foot depth intervals, driven by means of a 140 lb. drop hammer with a free fall of 30". The number of blows required to drive the sampler 18" is considered the standard penetration test.

Drive/press borings are made by means of a mechanically-powered rotary-type drilling machine, employing a 2" O.D., 1-3/8" I.D. split spoon sampler, and 3" O.D. thin wall press sampler. The press sampler is advanced by continuous uniform pressure, applied by the drilling machine.

Core borings are made by means of a mechanically-powered rotary-type drilling machine, employing a NXM core barrel with industrial diamond cutting head.

The boring log sheets display a graphic plot of the information obtained including depth and elevation of the sample, type of sample, the standard penetration test readings in three 6-inch increments, depth and elevation of press samples, field number assigned to sample, sample description - based on laboratory tests utilizing the Casagrande AC classification system - and gradation, plasticity and moisture determinations. Results of strength and consolidation testing, if performed on undisturbed samples, will appear graphically on separate enclosures. Rock samples are displayed on the log sheets including depth and elevation of the sample, amount of recovery and a visual classification based on type, color, degree of hardness, grain size, deterioration, bedding, acid reaction and other qualifying factors.

At depths where materials are bouldery or gravelly to the extent that the sampler can not be utilized, a wash sample is procured and visually classified, in order to determine the general characteristics of the material. These samples are not considered sufficiently representative to warrant laboratory testing.

PARTICLE SIZE DEFINITIONS

Boulders	Cobbles	Gravel	Coarse Sand	Fine Sand	Silt	Clay
	12"	3"	2.0mm (No. 10 sieve)	0.42mm (No. 40 sieve)	0.074mm (No. 200 sieve)	0.005mm

NOTE - ALL AVAILABLE SOIL AND BEDROCK INFORMATION WHICH CAN BE CONVENIENTLY SHOWN ON THE STRUCTURE FOUNDATION INVESTIGATION SHEETS HAS BEEN SO REPORTED. ADDITIONAL SUBSURFACE INVESTIGATIONS MAY HAVE BEEN MADE TO STUDY SOME SPECIAL ASPECT OF THE PROJECT. COPIES OF THIS DATA, IF ANY, MAY BE INSPECTED IN THE DISTRICT DEPUTY DIRECTOR'S OFFICE, THE BUREAU OF TESTS AT 1600 WEST BROAD STREET, THE PAVEMENT AND SOILS SECTION OF THE BUREAU OF LOCATION AND DESIGN OR IN THE BRIDGE BUREAU AT 25 SOUTH FRONT STREET.

SUBSURFACE INVESTIGATION
SUM-76-11.57
AKRON EAST EXPRESSWAY-RETAINING WALL NO. 14
AKRON, OHIO

R & R International, Inc.
GEOTECHNICAL ENGINEERS-GEOLOGISTS
AKRON, OHIO 44321

SUM-76-11.57

FHWA REGION	STATE	PROJECT

61/104

2/5

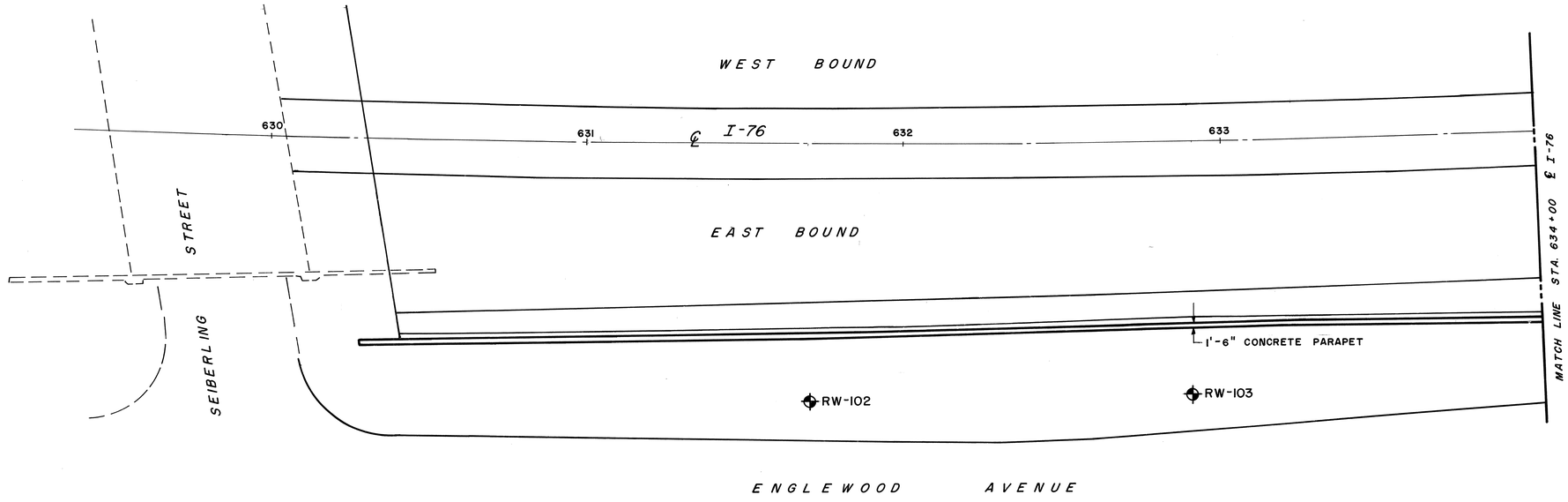

GENERAL PLAN

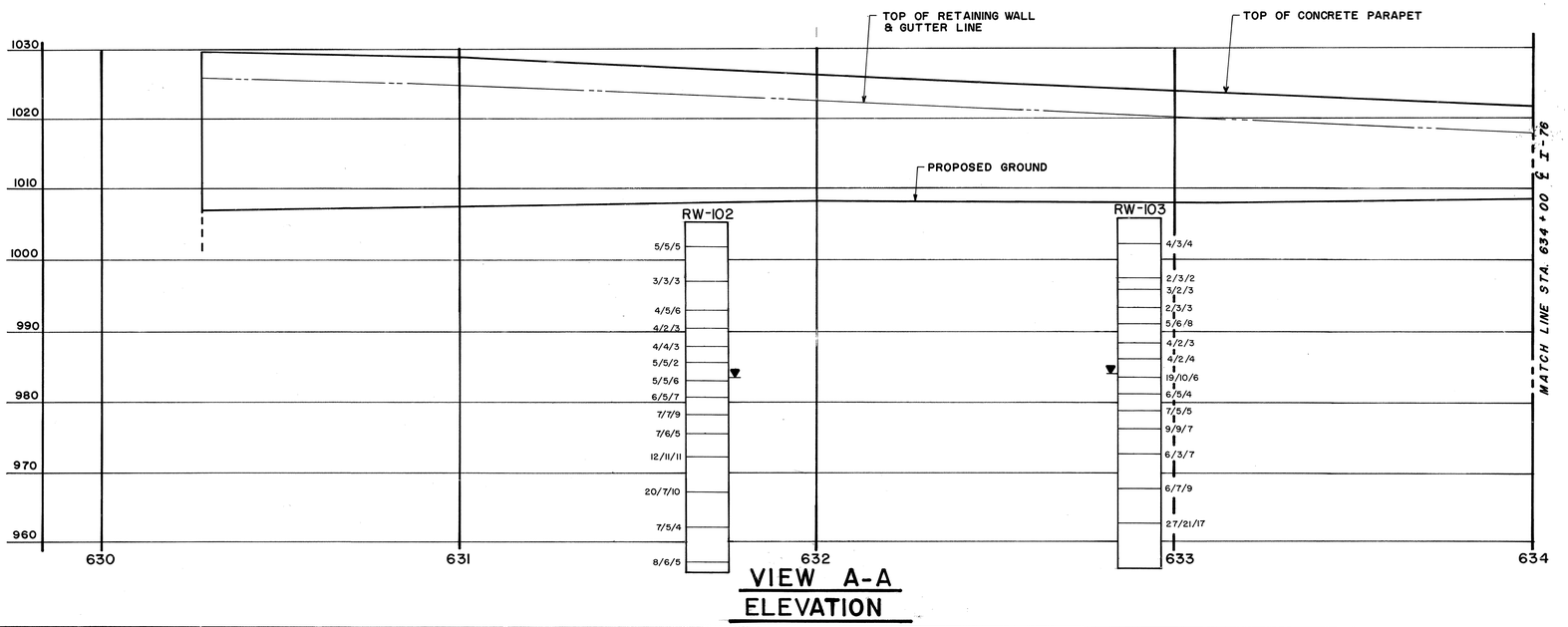

VIEW A-A ELEVATION

SUBSURFACE INVESTIGATION
SUM-76-11.57
AKRON EAST EXPRESSWAY-RETAINING WALL NO. 14
AKRON, OHIO

R & R International, Inc.
GEOTECHNICAL ENGINEERS-GEOLOGISTS
3675 COPLEY ROAD
AKRON, OH 44321
216-666-2200

56478

SUM-76-11.57

FHWA REGION	STATE	PROJECT

62/104

3/5

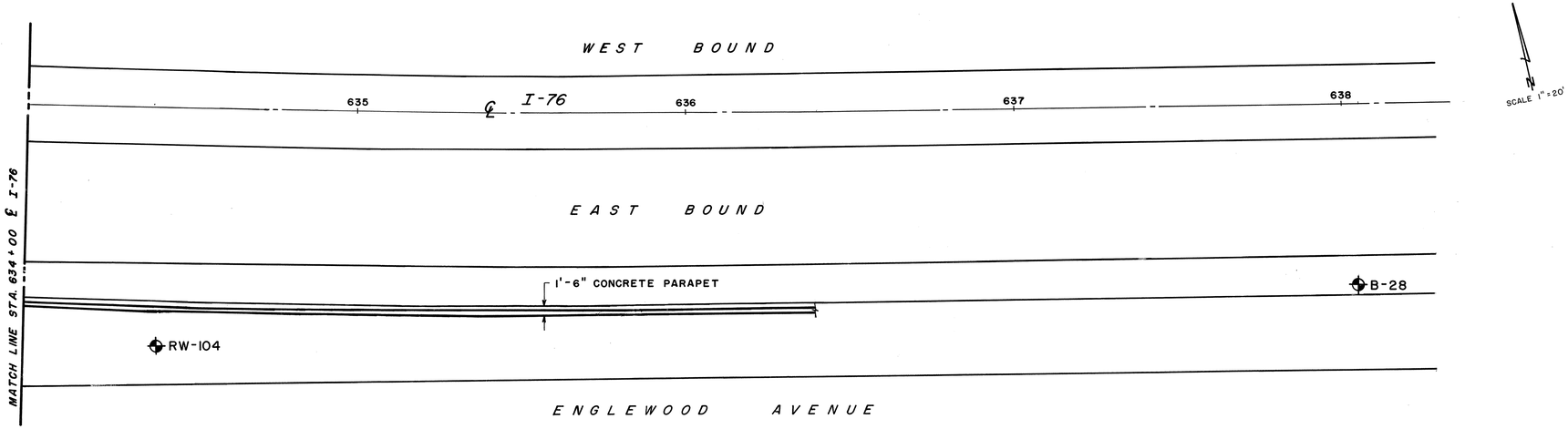

GENERAL PLAN

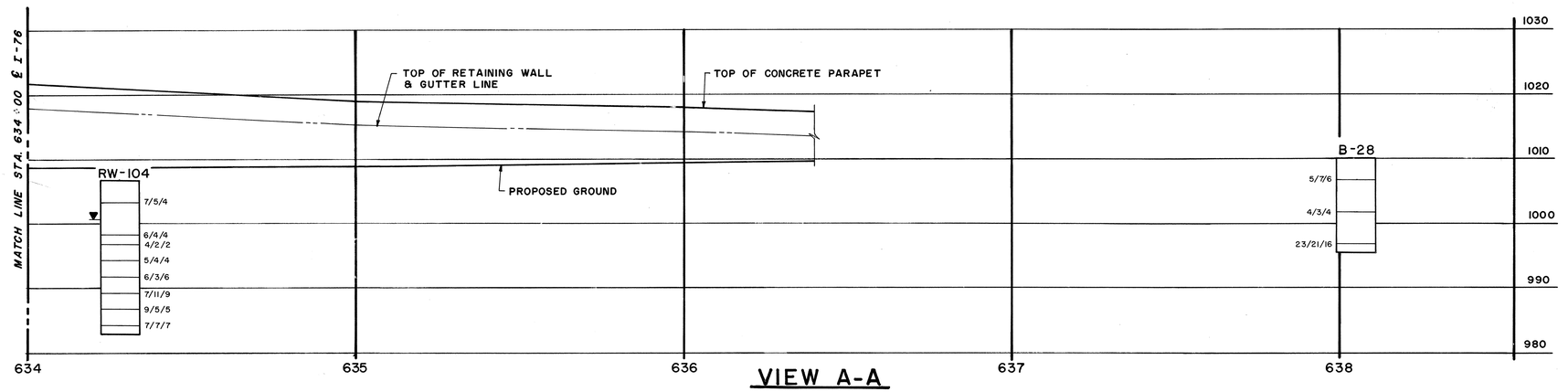

VIEW A-A ELEVATION

SUBSURFACE INVESTIGATION
SUM-76-11.57
AKRON EAST EXPRESSWAY-RETAINING WALL NO. 14
AKRON, OHIO

R & R International, Inc.
GEOTECHNICAL ENGINEERS-GEOLOGISTS
3675 COPLEY ROAD
AKRON, OH 44321
216-666-2200

56428

SUM-76-11.57

FHWA REGION	STATE	PROJECT

63
104

4
5

LOG OF BORING

Date Started 8-22-88 Sampler Type Split Spoon Dia. 2.0 Water Elev. 983.5

Date Completed 8-22-88 Casing: Length -- Dia. ---

Boring No. RW-102 Station & Offset Sta. 631 + 70 83' RT Surface Elev. 1005.5

ELEV.	DEPTH	STD. PEN. (N)	REC. Ft.	LOSS Ft.	DESCRIPTION	SAMPLE NO.	SAMPLE TYPE	PHYSICAL CHARACTERISTICS % AGG.	% C.SAND	% F.SAND	% SILT	% CLAY	L.L.	P.L.	P.I.	W.C.	SHTL CLASS.
1005.5	0				ROADBASE MATERIAL												
1004.3		5-5-5	1.0		Medium dense, brown GRAVEL, little sand, trace silt, moist.	1	SS	66.1	14.8	8.7	*	10.4	--	--	--	10.6	A-1-a
	5																
998.5		3-3-3	1.0			2	SS										
	10				Loose to medium dense, brown SAND, trace silt, trace gravel, moist.												
		4-5-6	1.0			3	SS	0.2	26.8	61.5	*	11.5	--	--	--	6.5	A-3a
991.0																	
	15	4-2-3	1.5			4	SS	34.0	42.7	19.4	*	3.9	--	--	--	16.6	A-1-b
		4-4-3	1.5		Loose, brown SAND AND GRAVEL, trace silt, moist.	5	SS										
	20	5-5-2	1.5			6	SS										
983.5		5-5-6	1.5		Medium dense, brown SAND, trace silt, trace gravel, moist.	7	SS	0.9	26.0	69.0	*	4.1	--	--	--	19.1	A-3
981.5																	
	25	6-5-7	1.5			8	SS										
		7-7-9	1.5			9	SS										
	30	7-6-5	1.5			10	SS	17.3	44.3	34.5	*	3.9	--	--	--	16.8	A-1-b
		12-11-11	1.5			11	SS										
	35				Medium dense, brown SAND AND GRAVEL, trace silt, moist to wet.												
		20-7-10	1.5			12	SS										
	40																
		20-7-10	1.5			13	SS										
	45																
		8-6-5	1.5			14	SS	25.1	60.4	13.1	*	1.4	--	--	--	26.6	A-1-b
955.5	50				TERMINATION DEPTH 50.0 FEET												

* SILT AND CLAY COMBINED

LOG OF BORING

Date Started 8-22-88 Sampler Type Split Spoon Dia. 2.0 Water Elev. 984.1

Date Completed 8-22-88 Casing: Length -- Dia. ---

Boring No. RW-103 Station & Offset Sta. 632 + 91 81' RT Surface Elev. 1006.1

ELEV.	DEPTH	STD. PEN. (N)	REC. Ft.	LOSS Ft.	DESCRIPTION	SAMPLE NO.	SAMPLE TYPE	PHYSICAL CHARACTERISTICS % AGG.	% C.SAND	% F.SAND	% SILT	% CLAY	L.L.	P.L.	P.I.	W.C.	SHTL CLASS.
1006.1	0				ROADBASE MATERIAL												
1004.9		4-3-4	1.0			1	SS										
	5																
		2-3-2	1.0			2	SS	48.9	36.8	8.3	*	6.0	--	--	--	23.8	A-1-b
	10	3-2-3	1.0			3	SS	55.4	32.3	7.3	*	5.0	--	--	--	5.7	A-1-a
		2-3-3	1.5		Loose, brown SAND AND GRAVEL, trace silt, moist to wet.	4	SS										
	15	5-6-8	1.5			5	SS										
		4-2-3	1.0			6	SS	66.2	13.0	9.7	*	11.1	--	--	--	12.9	A-1-a
	20	4-2-4	0.3			7	SS										
984.1		19-10-6	1.5		Medium dense, brown SAND AND GRAVEL, some silt, wet.	8	SS	35.3	14.0	16.2	*	34.5	--	--	--	12.0	A-2-4
981.1	25	6-5-4	1.5			9	SS										
		7-5-5	1.5			10	SS										
	30	9-9-7	1.0			11	SS	0.1	48.2	49.7	*	2.0	--	--	--	14.5	A-3
		6-3-7	1.5			12	SS										
	35				Medium dense to dense, brown SAND, trace silt, trace to little gravel, wet.												
		6-7-9	1.5			13	SS										
	40																
		27-21-17	1.5			14	SS	23.1	25.2	40.9	*	10.8	--	--	--	19.3	A-3a
	45				NOTE: Hydrostatic conditions encountered at approximately 43.0 feet.												
956.1	50				TERMINATION DEPTH 50.0 FEET												

* SILT AND CLAY COMBINED

SUBSURFACE INVESTIGATION
SUM-76-11.57
AKRON EAST EXPRESSWAY-RETAINING WALL NO. 14
AKRON, OHIO

R & R International, Inc.
GEOTECHNICAL ENGINEERS · GEOLOGISTS

SUM-76-11.57

FHWA REGION	STATE	PROJECT

64/104

5/5

LOG OF BORING

Date Started 8-23-88 Sampler Type Split Spoon Dia. 2.0 Water Elev. 989.8

Date Completed 8-23-88 Casing: Length -- Dia. ---

Boring No. RW-104 Station & Offset Sta. 634 + 28 74' RT Surface Elev. 1006.8

ELEV.	DEPTH	STD. PEN. (N)	REC. Ft.	LOSS Ft.	DESCRIPTION	SAMPLE NO.	SAMPLE TYPE	PHYSICAL CHARACTERISTICS % AGG.	% C. SAND	% F. SAND	% SILT	% CLAY	L.L.	P.L.	P.I.	W.C.	SHTL CLASS.
1006.8	0																
1006.6					ASPHALT												
1006.3					BRICK												
1005.6					CONCRETE												
		7-5-4	0.4			1	SS										
	5																
		6-4-4	1.3		Loose, brown SAND AND GRAVEL, trace	2	SS	42.7	19.9	27.8	*	9.6	--	--	--	9.1	A-1-b
	10	4-2-2	1.3		to little silt, moist.	3	SS	50.1	36.1	8.1	*	5.7	--	--	--	29.0	A-1-a
		5-4-4	1.1			4	SS										
	15	6-3-6	1.2			5	SS	33.1	31.6	13.7	*	21.6	--	--	--	13.0	A-1-b
		7-11-9	1.1			6	SS										
988.8																	
	20	9-5-5	1.3		Medium dense, brown SAND AND GRAVEL,	7	SS	25.3	35.0	27.6	*	12.1	--	--	--	13.6	A-1-b
		7-7-7	1.3		trace silt, moist.	8	SS	19.6	34.8	34.2	*	11.4	--	--	--	14.6	A-1-b
982.8																	
	25				TERMINATION DEPTH 24.0 FEET												

* SILT AND CLAY COMBINED

LOG OF BORING

Date Started 8-2-87 Sampler Type Split Spoon Dia. 2.0 Water Elev. ---

Date Completed 8-2-87 Casing: Length -- Dia. ---

Boring No. B-28 Station & Offset Sta. 638 + 05 56' RT. Surface Elev. 1010.2

ELEV.	DEPTH	STD. PEN. (N)	REC. Ft.	LOSS Ft.	DESCRIPTION	SAMPLE NO.	SAMPLE TYPE	PHYSICAL CHARACTERISTICS % AGG.	% C. SAND	% F. SAND	% SILT	% CLAY	L.L.	P.L.	P.I.	W.C.	SHTL CLASS.
1010.2	0																
		5-7-6	1.2		Medium dense, brown SAND, some silt,	1	SS										
	5				trace gravel, moist.												
1001.7		4-3-4	1.5			2	SS	0.2	0.9	6.6	*	92.3	--	--	--	23.9	A-4b
	10				Medium stiff, brown SILT, some clay, trace sand, moist.												
996.7		23-21-16	1.5			3	SS										
995.7					Hard, gray CLAY, trace silt, trace gravel, moist.												
995.2	15				Dense, brown SAND, trace silt, moist.												
					TERMINATION DEPTH 15.0 FEET												

* SILT AND CLAY COMBINED

SUBSURFACE INVESTIGATION
SUM-76-11.57
AKRON EAST EXPRESSWAY-RETAINING WALL NO. 14
AKRON, OHIO

R & R International, Inc.
GEOTECHNICAL ENGINEERS · GEOLOGISTS

5478

SOIL INVESTIGATION

F.H.W.A. REGION	STATE	PROJECT
5	OHIO	

65/104

SUMMIT COUNTY
SUM-76-11.57

1/4

1. Introduction

It is proposed to widen the existing I-76 bridge over Arlington Street in Akron, Ohio. The results and recommendations from a geotechnical exploration program for the bridge are presented in this report. Soil and bedrock were identified by a field exploration program and selected samples were tested in the laboratory. Field and laboratory test results were interpreted, resulting in recommendations for foundation design.

2. Geology and Observations of the Project Site

The site is located in a glaciated area of the Allegheny Plateau. Glacial deposits are quite variable in composition and thickness in this area. The soils in the project area appear to be part of a terrace and outwash deposits. Based upon published information, the bedrock deposits in the east Akron area are of Pennsylvanian age and consist predominantly sandstone, shale, limestone and coal. The bedrock encountered at the site is part of the base of the Sharon Conglomerate of Pennsylvanian age.

The existing I-76 bridge is elevated over Arlington Street. This portion of I-76 is constructed as an embankment and is generally higher in elevation than the original ground level. The existing bridge is single span supported on abutment walls. Review of construction drawings for the bridge dated August, 1954 indicates that the abutment wall foundations are bearing in rock at elevations which range from 1062.0 to 1053.5 feet. The wing walls are stepped upward maintaining frost depth protection beneath them. The structural loads beneath the walls are transmitted down to bedrock by piles.

Ground surface elevations at the soil boring locations were estimated to be near elevation 1071. The surface elevation of the bridge deck and embankment is near 1092 feet.

3. Exploration

Subsurface conditions were studied by an exploration program consisting of 8 borings during the period of April 7th through the 8th, 1986. Approximate test locations are shown on the Boring Location Plan.

The boring depths ranged from 13.7 to 29.5 feet. All of the borings were advanced by means of a truck/trailer mounted, mechanical rotary type drill rig with soil augers. The borings were terminated in bedrock. Half of the borings were cored using an NX size, double-tube barrel with a diamond bit. Surface elevations at the boring locations were estimated from existing prints of the project area provided to us by John David Jones and Associates.

The borings were drilled in accordance with standard ASTM and ODOT specifications. A two inch O.D. split-spoon sampler was driven to obtain samples at specified intervals. The number of blows of a 140 lb. hammer dropping 30 inches was recorded for each of three, six inch penetration intervals at each sample location.

Due to shallow bedrock, fill soils, and hard natural soils, three inch O.D. thin-wall Shelby tube samples were not obtained.

Groundwater depths were observed and recorded upon encounter and at the completion of each boring. Due to the introduction of water in the coring process, no groundwater measurements were made after rock was cored. Borings in the roadway were backfilled at the completion of field testing.

The results of the field exploration program are presented on the boring logs.

4. Laboratory Testing

Samples were delivered to the laboratory, where they were examined and classified by a geotechnical engineer following ODOT specifications. As a result of sample sizes, some of the similar samples of soil were combined for laboratory tests. Soil and bedrock samples were then tested according to the following schedule:

TEST	SAMPLES
Water Content	A total of 13 split-spoon samples from selected locations
Grain size analysis	Composite samples from selected borings were tested.
Uniaxial Compression of Rock Cores	A total of 8 samples were tested representing a range of rock quality.

Water content and grain size analysis tests are indicators of soil consistency, strength, and compressibility. Uniaxial compression tests on rock cores provide an estimate of the degree of the rock's cementation and resistance to penetration during construction. The laboratory test results are presented on the appropriate boring log.

5. Exploration Findings

The subsurface profile at each boring location is presented on the boring logs. A generalized subsurface profile for the project site consists of fill overlying deposits of sand and silt followed by decomposed bedrock and sound bedrock.

Fill was encountered at most of the boring locations with the exception of B-28. Its composition varied considerably with no distinct pattern to its deposition. It appears however, that the majority of fill may be backfill for utilities. The thickness of the fill deposits ranged from 1 to 5 feet with an average of depth of 2-1/2 feet. The fill consisted of pavement sections, topsoil, sands, clays, and cinders.

Deposits of sandy silt and fine grained sand having varying amounts of gravel were encountered beneath the fill. The relative density of the soils ranged from very loose to medium dense. The overall thickness of these stratum ranged from 3-1/2 to 10 feet with an average of 6-1/2 feet.

Decomposed bedrock was encountered at a depth of 8 to 12 feet. The average thickness of this zone was approximately 6 feet. The soil consisted of medium dense to very dense, brown fine grained sand having varying amounts of silt and gravel/rock fragments.

Sandstone bedrock was encountered at depths which ranged from 11-1/2 to 18 feet. The upper zones of the bedrock exhibited varying stages of weathering and soundness. Generally the sandstone quality improves with depth. Some seams of clay and shale were noted in the core samples.

Ground water was encountered in borings B-28 at 17-1/2 feet, B-29 at 4 feet, B-30 at 14-1/2 feet, B-34 at 34 feet and B-35 at 13 feet. Coring water was lost in B-33 at a depth of approximately 22-1/2 feet.

Subsurface conditions at other times and locations on the site may differ from those found at the test locations. If different conditions are encountered during construction, it is necessary that the project geotechnical engineer be contacted so that design recommendations may be reviewed.

6. Proposed Project

From information provided by the project engineer, we understand that it is proposed to widen the existing Arlington Street bridge on both its north and south sides. This will involve constructing new abutments to support additional the bridge spans. We understand that it appears as if the existing abutment foundations are bearing slightly into the decomposed rock surface at elevations between 1058 and 1062 feet. Maximum toe pressures are less than 10,000 psf.

The above information is an important part of our engineering interpretation of the site studied. If this understanding is not correct or if project conditions change, the project geotechnical engineer must review this report relative to the recommendations presented.

7. Engineering Interpretation

The subsurface data obtained has been interpreted relative to the proposed construction. Several foundation alternatives have been considered for this project. The alternative considered most viable based upon the subsurface conditions encountered takes advantage of the relatively shallow depth to bedrock.

The foundation alternative selected would support the proposed abutment foundations on the decomposed rock using conventional spread footings. The allowable bearing capacity for foundations bearing on the decomposed rock is variable depending on their location at the site. Calculated safe allowable bearing capacities ranged from 6 to 30 ksf. Because of this variability, the foundation base at the abutments should be explored at the time of construction to determine if the excavation has been made to a sufficient depth for the final recommended bearing capacity. The following table is a summary of bearing and bedrock elevations:

BEARING & BEDROCK SUMMARY

BORING LOCATION	EXISTING BEARING ELEVATION	TOP OF ROCK DECOMPOSED ELEVATION	TOP OF ROCK SOUND ELEVATION
28	1058	1063	1060
29	"	1063	1057
30	1055	1060	1055
31	"	1060	1053
32	1053	1059	1056
33	"	1063	1053
34	1060	1064	1055
35	"	1063	1058

IT APPEARS THAT THE FOUNDATIONS FOR THE BRIDGE ABUTMENTS ARE FOUNDED ON THE SOUNDER SANDSTONE BEDROCK.

Excavations made to sounder rock may require temporary shoring to help limit the excavation size and provide for safety of personnel.

SOIL INVESTIGATION

F.H.W.A. REGION	STATE	PROJECT
5	OHIO	

66
104

SUMMIT COUNTY
SUM-76-11.57

2
4

8. Recommendations

A. Spread Foundations

Spread footings can be used to support the abutment and wing walls. Footings should bear on or in very dense decomposed sandstone. Foundations should be proportioned for a net allowable bearing pressure of 6 ksf when bearing in the decomposed rock and up to 30 ksf when bearing on the surface of sound bedrock.

For the purpose of lateral resistance to sliding, a friction coefficient of 0.33 may be used at the interface of the foundation and decomposed bedrock. If a key way is required to help resist lateral loads, it should be designed using a lateral resistance of 3 ksf.

All foundations should bear at least 3.5 feet below final grade for frost protection. Footings should be excavated to a level bearing surface. Bearing surfaces should be cleaned of mud and loose cuttings, and should be protected against water accumulation from rainfall, surface drainage, or excavation sidewall seepage. Bearing surfaces should be protected from freezing if there is a delay in placing concrete during cold weather. All bearing surfaces should be observed by the geotechnical engineer or a soils technician before concrete placement.

B. Abutment and Retaining Walls

Retaining walls should be backfilled with clean, free-draining, coarse grained granular material. Drainage should be provided behind to wall so that hydrostatic pressures do not build up. Backfill should be spread in maximum 10 inch loose thickness lifts and compacted to 98% of Standard Proctor maximum dry density. Care should be taken when selecting the size of compaction equipment used so that retaining and abutment walls are not over-stressed during fill placement.

Because new retaining and abutment walls are being added onto existing structures, it is recommended that a higher than normal equivalent fluid pressure be assumed in the design. Walls should be designed for an equivalent fluid density of 50 pcf, assuming drained, granular backfill. Walls subjected to traffic surcharge may be designed by increasing the height of the wall, for computational purposes, by 2 ft.

C. Construction Observation and Testing

A soils technician working under the direct supervision of the project geotechnical engineer should be present during spread foundation construction, to verify compliance with the recommendations contained in this report.

The technician's duties would include, but not be limited to:

1. Identifying proper quality bearing materials.
2. Observing the foundation bearing surface and bearing depth, and verifying that excess water, mud, and loose soil has been removed.
3. Checking the placement of reinforcement.
4. Testing and sampling concrete for compliance with the project specifications.

D. Remarks

The recommendations and observations contained in this report are our opinions based upon data which are assumed to be representative of the site studied. Variations in soils may occur below or between the locations tested. These opinions were arrived at in accordance with currently accepted engineering practices at this time and location.

SOIL INVESTIGATION

F.H.W.A. REGION	STATE	PROJECT
5	OHIO	

67/104

SUMMIT COUNTY
SUM-76-11.57

3/4

LOG OF BORING

Date Started 4-8-86 Sampler: Type SS Dia. 2"OD Water Elev. ---
Date Completed 4-8-86 Casing: Length HSA Dia. 3¼"ID

Project Identification: SUM 76-1231
ARLINGTON STREET BRIDGE
PROPOSED WIDENING

Boring No. 28 Station & Offset SEE PRINT Surface Elev. 1071±

Elev.	Depth	Std. Pen. (N)	Description	Field No.	Lab. Nos. So.	Physical Characteristics: % Agg.	% C.S.	% F.S.	% Silt	% Clay	L.L.	Pl.	W.C.	SHTL Class
1071±	0													
	2		Medium dense, brown sandy SILT with a trace of gravel.											
	4	14		1	*	10	9	25	26	30	24	5	13	A-4a
	6	12		2	**	7	8	26	29	30	24	5	17	A-4a
	8													
	10	15	Medium dense, brown fine grained SAND with some silt and a little gravel/sandstone fragments (Decomposed SANDSTONE)	3	***	14	7	57	7	15		NP		A-3
	12													
	14	70/ 0.5'	Soft to hard, brown fined SANDSTONE.	4										
	16													
	18	100/ 0.2'		5										
	20													
	22		Boring stopped at 19.2 ft.											
	24		Water encountered at 17½ ft.											
	26		No water on completion.											
	28		* Composite sample B-28, B-29, B-30, B-32 & B-34											
	30		** Composite sample B-28, B-30 & B-35											
	32		*** Composite sample B-28, B-29, B-31 & B-35											
	34													
	36													

LOG OF BORING

Date Started 4-8-86 Sampler: Type SS Dia. 2"OD Water Elev. ---
Date Completed 4-8-86 Casing: Length HSA Dia. 3¼"ID

Project Identification: SUM 76-1231
ARLINGTON STREET BRIDGE
PROPOSED WIDENING

Boring No. 29 Station & Offset SEE PRINT Surface Elev. 1071±

Elev.	Depth	Std. Pen. (N)	Description	Field No.	Lab. Nos. So.	Physical Characteristics: % Agg.	% C.S.	% F.S.	% Silt	% Clay	L.L.	Pl.	W.C.	SHTL Class
1071±	0		FILL, TOPSOIL and SAND.											
	2													
	4	6	Very loose, brown sandy SILT with a trace of gravel	1	*	10	9	25	26	30	24	5	13	A-4a
	6	3	Very loose, brown silty SAND with a little gravel.	2										
	8													
	10	72	Very dense, brown fine grained SAND with some silt and a little gravel/sandstone fragment. (Decomposed SANDSTONE)	3	**	14	7	57	7	15		NP		A-3
	12													
	14	100/ 0.5'		4										
	16		Soft to hard, brown and gray, fine grained SANDSTONE well cemented. Weathered and broken in upper 3 feet. Brown stains in joints. Seams of soft gray SHALE in lower 5 feet of core.			CORED FROM 14.0 to 24.0 ft. RECOVERED 80%.								
	18	NX		5	5A	UNIAXIAL COMPRESSIVE STRENGTH, 3750 PSI.								
	20													
	22				5B	UNIAXIAL COMPRESSIVE STRENGTH, 5470 PSI.								
	24													
	26		Boring stopped at 24.0 ft.											
	28		Water encountered at 4 ft.											
	30		No water on completion.											
	32		* Composite sample B-28, B-29, B-30 & B-34.											
	34		** Composite sample B-28, B-29, B-31 & B-35.											
	36													

LOG OF BORING

Date Started 4-7-86 Sampler: Type SS Dia. 2"OD Water Elev. ---
Date Completed 4-7-86 Casing: Length HSA Dia. 3¼"ID

Project Identification: SUM 76-1231
ARLINGTON STREET BRIDGE
PROPOSED WIDENING

Boring No. 30 Station & Offset SEE PRINT Surface Elev. 1071±

Elev.	Depth	Std. Pen. (N)	Description	Field No.	Lab. Nos. So.	Physical Characteristics: % Agg.	% C.S.	% F.S.	% Silt	% Clay	L.L.	Pl.	W.C.	SHTL Class
1071±	0		FILL, TOPSOIL and black SAND.											
	2													
	4	9	Loose, brown sandy SILT with a trace of gravel.	1	*	10	9	25	26	30	24	5	17	A-4a
	6	12	Medium dense, brown sandy SILT with a trace of gravel.	2	**	7	8	26	29	30	24	5	17	A-4a
	8													
	10	16		3	***	11	11	34	17	27	22	5	12	A-4a
	12													
	14	55	Very dense, brown fine grained SAND with some silt and a little gravel/rock frag. (Decomposed SANDSTONE)	4										A-3
	16													
	18		Soft to hard, brown SANDSTONE.	5										
	20	100/ 0.5'												
	22		Boring stopped at 19.0 ft.											
	24		Water encountered at 14½ ft.											
	26		No water on completion.											
	28		* Composite sample B-28, 29, 30, 32 & 34.											
	30		** Composite sample B-28, 30 & 35.											
	32		***Composite sample B-31, 30 & 32.											
	34													
	36													

LOG OF BORING

Date Started 4-7-86 Sampler: Type SS Dia. 2"OD Water Elev. ---
Date Completed 4-7-86 Casing: Length HSA Dia. 3¼"ID

Project Identification: SUM 76-1231
ARLINGTON STREET BRIDGE

Boring No. 31 Station & Offset SEE PRINT Surface Elev. 1071±

Elev.	Depth	Std. Pen. (N)	Description	Field No.	Lab. Nos. So.	Physical Characteristics: % Agg.	% C.S.	% F.S.	% Silt	% Clay	L.L.	Pl.	W.C.	SHTL Class
1071±	0		ASPHALT (o.25') over CONCRETE (0.7').											
	2		FILL, A mixture of SAND, Concrete and Brick.											
	4	16		1									13	
	6		Medium dense, brown sandy SILT with a little gravel.											
	8													
	10	21		2	*	11	11	34	17	27	22	5	13	A-4a
	12													
	14	26	Medium dense, brown fine grained silty SAND with a little gravel/rock fragments. (Decomposed SANDSTONE)	3										A-3
	16													
	18													
	20	100/ 0.5'	Firm, rusty brown SANDSTONE.	4										
	22		Hard, gray fine grained SANDSTONE, closely jointed, thinly bedded. Brown clay seam at 20.0 to 20.1 ft. Thin shale interbeds between 21 and 29 ft.		5A	UNIAXIAL COMPRESSIVE STRENGTH, 2900 PSI. CORED FROM 19.5 to 29.5 ft. RECOVERED 100%.								
	24	NX		5										
	26				5B	UNIAXIAL COMPRESSIVE STRENGTH, 5900 PSI.								
	28													
	30		Boring stopped at 29.5 ft.											
	32		No water encountered.											
	34		* Composite sample B-31, 30 & 32.											
	36													

SOIL INVESTIGATION

F.H.W.A. REGION	STATE	PROJECT
5	OHIO	

68/104

SUMMIT COUNTY
SUM-76-11.57

4/4

LOG OF BORING

Date Started 4-7-86 Sampler: Type SS Dia. 2"OD Water Elev. ---
Date Completed 4-7-86 Casing: Length HSA Dia. 3¼"ID
Project Identification: SUM 76-1231 ARLINGTON STREET BRIDGE PROPOSED WIDENING
Boring No. 32 Station & Offset SEE PRINT Surface Elev. 1071±

Elev.	Depth	Std. Pen. (N)	Description	Field No.	Lab. Nos. So.	% Agg.	% C.S.	% F.S.	% Silt	% Clay	L.L.	Pl.	W.C.	SHTL Class
1071±	0		FILL, A mix ture of TOPSOIL and SAND with brick.											
	2													
	4	7	Loose to medium dense, brown sandy SILT with a trace of gravel.	1	*	10	9	25	26	30	24	5	13	A-4a
	6	18		2										
	8		Medium dense, brown sandy SILT with a little gravel.											
	10	12		3	**	11	11	34	17	27	22	5	15	A-4a
	12													
	14	127	Very dense, brown fine grained SAND some silt and a little gravel/rock fragments. (Decomposed SANDSTONE)	4										A-3
	16		Firm to hard, brown fine grained SANDSTONE.											
	18	100/ 0.2'		5										
	20		Boring stopped at 18.7 ft.											
	22		No water encountered.											
	24		* Composite sample B-32, 29, 30 & 28.											
	26		** Composite sample B-32, 31 & 30.											
	28													
	30													
	32													
	34													
	36													

LOG OF BORING

Date Started 4-7-86 Sampler: Type SS Dia. 2"OD Water Elev. ---
Date Completed 4-7-86 Casing: Length HSA Dia. 3¼"ID
Project Identification: SUM 76-1231 ARLINGTON STREET BRIDGE PROPOSED WIDENING
Boring No. 33 Station & Offset SEE PRINT Surface Elev. 1071±

Elev.	Depth	Std. Pen. (N)	Description	Field No.	Lab. Nos. So.	% Agg.	% C.S.	% F.S.	% Silt	% Clay	L.L.	Pl.	W.C.	SHTL Class
1071±	0		FILL, Topsoil over mixed SAND, gravel, clay, brick and concrete.											
	2			1										
	4	7												
	6	17	Medium dense, brown sandy SILT with a little gravel.	2										A-4a
	8													
	10	100/ 0.3'	Very dense, brown fine grained SAND with silt and a little gravel/rock fragments. (Decomposed SANDSTONE)	3								NP		A-3
	12													
	14	100		4										
	16													
	18	100/ 0.2'		5										
	20		Soft to hard, gray and brown fine grained SANDSTONE, closely jointed, broken from 19 25 ft. Cross beeded at 26 feet.		6A	UNIAXIAL COMPRESSIVE STRENGTH, 6550 PSI.								
	22													
	24	NX		6	7A	UNIAXIAL COMPRESSIVE STRENGTH 6060 PSI. CORED FROM 19.0 to 29.0 ft. RECOVERED 100%.								
	26													
	28													
	30		Boring stopped at 29.0 ft.											
	32		No water encountered prior to coring.											
	34		Lost coring water at 22½'.											
	36													

LOG OF BORING

Date Started 4-8-86 Sampler: Type SS Dia. 2"OD Water Elev. ---
Date Completed 4-8-86 Casing: Length HSA Dia. 3¼"ID
Project Identification: SUM 76-1231 ARLINGTON STREET BRIDGE PROPOSED WIDENING
Boring No. 34 Station & Offset SEE PRINT Surface Elev. 1071±

Elev.	Depth	Std. Pen. (N)	Description	Field No.	Lab. Nos. So.	% Agg.	% C.S.	% F.S.	% Silt	% Clay	L.L.	Pl.	W.C.	SHTL Class
1071±	0		ASPHALT (0.3') over CONCRETE (0.8')											
	2		Brown SAND											
	4	9	Loose, brown sandy SILT with a trace of gravel.	1	*	10	9	25	26	30	24	5	15	A-4a
	6	7		2							21	4	16	A-4a
	8		Very dense to medium dense, brown fine grained SAND with a little silt and gravel. (Decomposed SANDSTONE)											
	10	64		3										A-3
	12													
	14													
	16	20		4										
	18		Firm to hard, gray and brown fine grained SANDSTONE, thinly bedded, moderately jointed. Soft gray shale seams noted at 19.0 to 19.2 ft and 27.9 to 28.0 feet.											
	20													
	22				5A	UNIAXIAL COMPRESSIVE STRENGTH, 7370 PSI. CORED FROM 18.5 to 28.0 ft. RECOVERED 95%.								
	24	NX		5										
	26				5B	UNIAXIAL COMPRESSIVE STRENGTH, 8590 PSI.								
	28													
	30		Boring stopped at 28.0 ft. Water encountered at 5½ ft. No water prior to coring.											
	32													
	34		* Composite sample B-28, 29, 30, 32 & 34.											
	36													

LOG OF BORING

Date Started 4-7-86 Sampler: Type SS Dia. 2"OD Water Elev. ---
Date Completed 4-7-86 Casing: Length HSA Dia. 3¼"ID
Project Identification: SUM 76-1231 ARLINGTON STREET BRIDGE PROPOSED WIDENING
Boring No. 35 Station & Offset SEE PRINT Surface Elev. 1071±

Elev.	Depth	Std. Pen. (N)	Description	Field No.	Lab. Nos. So.	% Agg.	% C.S.	% F.S.	% Silt	% Clay	L.L.	Pl.	W.C.	SHTL Class
1071±	0		ASPHALT (0.8') over CONCRETE (0.8') over loose brown fine grained SAND FILL.											
	2		VOID											
	4	5	FILL, SAND and brick.	1										
	6	6	Loose, brown sandy SILT with a trace of gravel.	2	*	7	8	26	29	30	24	5	15	A-4a
	8													
	10	23	Medium dense, brown fine grained SAND with a trace of silt and clay and a little gravel/ rock fragments. (Decomposed SANDSTONE)	3								NP		A-3
	12													
	14	100/ 0.2'	Hard, brown SANDSTONE.	4										
	16													
	18		Boring stopped at 13.7 ft.											
	20		Water encountered at 13 ft.											
	22		No water on completion.											
	24		* Composite sample B-28, 30 & 31.											
	26													
	28													
	30													
	32													
	34													
	36													

STRUCTURE FOUNDATION INVESTIGATION

F.H.W.A. REG.	STATE	PROJECT	
5	OHIO		

69
104

SUMMIT COUNTY
SUM-76-11.57

1/5

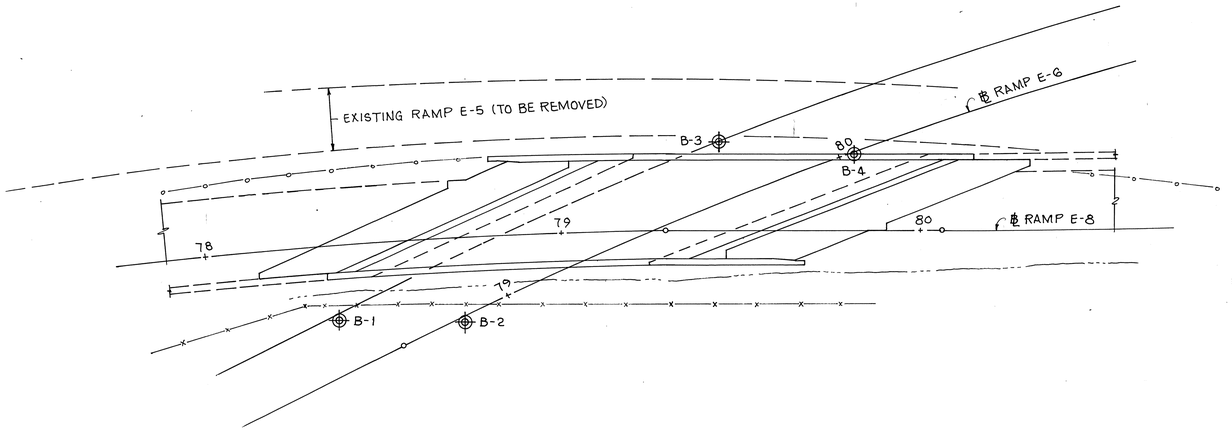

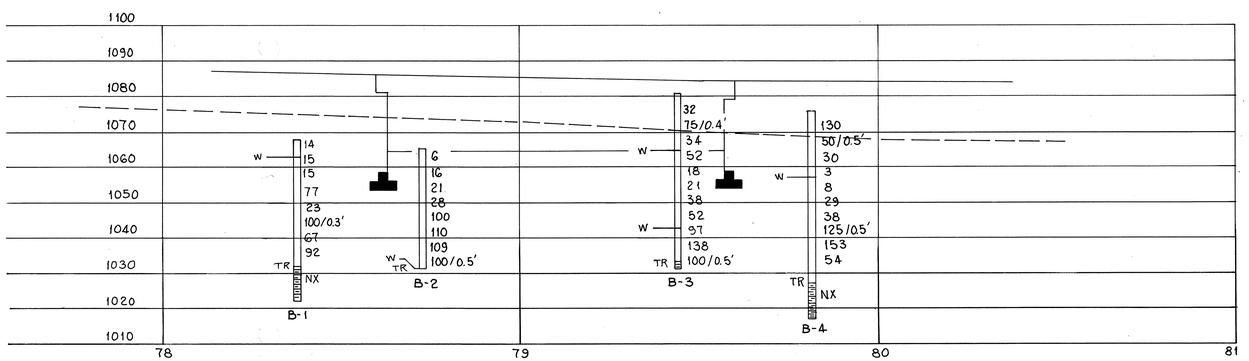

LEGEND

- AUGER BORING LOCATION - PLAN VIEW
- DRIVE SAMPLE AND/OR CORE BORING LOCATION - PLAN VIEW
- TR TOP OF ROCK
- CAPPED PILE FOOTING
- SPREAD FOOTING
- PILE FOOTING
- DRILLED SHAFT

FIGURES BESIDE THE BORING LOG INDICATE THE BLOW COUNT (N) OF THE STANDARD PENETRATION TEST

W—— INDICATES FREE WATER ELEVATION

JOHN DAVID JONES & ASSOC., INC.
2145 FRONT STREET
CUYAHOGA FALLS, OHIO 44221
ENGINEERS ARCHITECTS PLANNERS

STRUCTURE FOUNDATION INVESTIGATION

BRIDGE NO. SUM-76-1235
RAMP E-8 OVER RAMP E-6

SUMMIT COUNTY STA. 78+63.75
TO STA. 79+58.98

PLAN AND PROFILE

DRAWN BY	CHECKED BY	REVIEWED BY	DATE
JRS	JRO	PAK	6-2-87

STRUCTURE FOUNDATION INVESTIGATION

F.H.W.A. REG.	STATE	PROJECT	
5	OHIO		

70/104

SUMMIT COUNTY
SUM-76-11.57

2/5

1. Introduction

It is proposed to relocate I-76 Ramp E. 8 south while constructing Ramp E.6 in Akron, Ohio. Ramp E.8 will be constructed over Ramp E.6 resulting in a new bridge with concrete abutments. The results and recommendations from a geotechnical exploration program for the bridge are presented in this report. Soil and bedrock were identified by a field exploration program and selected samples were tested in the laboratory. Field and laboratory test results were interpreted, resulting in recommendations for foundation design.

2. Geology and Observations of the Project Site

The site is located in a glaciated area of the Allegheny Plateau. Glacial deposits are quite variable in composition and thickness in this area. The soils in the project area appear to be part of a ground moraine. Based upon published information, the bedrock deposits in the east Akron area are of Pennsylvanian age and consist predominantly sandstone, shale, limestone and coal. The bedrock encountered at the site is part of the base of the Sharon Conglomerate of Pennsylvanian age.

The portion of I-76 in the area of existing ramp E.8 is constructed as an embankment and is generally higher in elevation than the original ground level. Ramp E.8 exits the elevated portion of I-76 and ramps down to Chittenden Street. The existing ramp is constructed on compacted fill.

3. Exploration

Subsurface conditions were studied by an exploration program consisting of 4 borings during the period of February 6th through the 11th, 1987. Approximate test locations are shown on the Boring Location Plan.

The boring depths ranged from 34 to 58-1/2 feet. All of the borings were advanced by means of a truck mounted, mechanical rotary type drill rig with soil augers. The borings were terminated in bedrock. Two of the borings were cored using an NX size, double-tube barrel with a diamond bit.

Ground surface elevations at the soil boring locations were determined by differential leveling methods by others and given to us by John David Jones and Associates. The boring ground surface elevations are presented on the attached boring logs.

The borings were drilled in accordance with standard ASTM and ODOT specifications. A two inch O.D. split-spoon sampler was driven to obtain samples at specified intervals. The number of blows of a 140 lb. hammer dropping 30 inches was recorded for each of three, six inch penetration intervals at each sample location.

Due to bedrock, fill soils, and hard natural soils, three inch O.D. thin-wall Shelby tube samples were not obtained.

Groundwater depths were observed and recorded upon encounter and at the completion of each boring. Due to the introduction of water in the coring process, no groundwater measurements were made after rock was cored. All boring were backfilled at the completion of field testing prohibiting long term observations of ground water levels.

The results of the field exploration program are presented on the boring logs.

4. Laboratory Testing

Samples were delivered to the laboratory, where they were examined and classified by a geotechnical engineer following ODOT specifications. As a result of sample sizes, some of the similar samples of soil were combined for laboratory tests. Soil and bedrock samples were then tested according to the following schedule:

TEST	SAMPLES
Water Content	A total of 17 split-spoon samples from selected locations
Grain size analysis	Composite samples from selected borings were tested.
Uniaxial Compression of Rock Cores	A total of 4 samples were tested representing a range of rock quality.

Water content and grain size analysis tests are indicators of soil consistency, strength, and compressibility. Uniaxial compression tests on rock cores provide an estimate of the degree of the rock's cementation and resistance to penetration during construction. The laboratory test results are presented on the appropriate boring log.

5. Exploration Findings

The subsurface profile at each boring location is presented on the boring logs. A generalized subsurface profile for the project site consists of fill overlying glacial till deposits of silt, followed by sand, weathered bedrock, and finally, sound bedrock.

Fill was encountered at all of the boring locations. Its composition and depth varied between boring locations. The fill encountered in borings B-1 and 2 was relatively shallow, 6 to 4 feet respectively, and appears to be the result of backfilling old basements or previous construction. The fill encountered in borings B-3 and 4 is the result of construction the existing ramp from I-76 down to Chittenden Street. The depth of fill in this area ranged from approximately 20 to 22 feet. It consisted predominantly of crushed sandstone mixed with clayey silt. The relative density of the fill at B-3 and 4 was compact.

Glacial till was encountered beneath the fill at all boring locations and consisted of very stiff to hard, sandy, clayey and gravely silt. Cobble and boulder size rock was encountered through the soil mass in this area. The till was encountered at elevations which ranged from 1062 At B-1 to 1056 at B-4 and extended to elevations which ranged from 1032 at B-2 to 1049 at B-4.

Dense to very dense silty sand deposits were encountered beneath the glacial till and over bedrock. These deposits appear to be decomposed sandstone and shale. Cobble and boulder size pieces of sounder rock were detected in the soil mass of the deposits.

Sandstone bedrock was encountered at depths which ranged from approximately 33-1/2 feet at B-1 to 48-1/2 feet at B-4. These depth correspond to elevations of 1034 to 1027 respectively. The upper zone of bedrock exhibited varying degrees of weathering and soundness. Generally the sandstone quality improves with depth. Some seams of clay and shale were noted in the core samples.

Ground water was encountered in borings B-1 at 5 feet, B-2 at 33-1/2 feet, B-3 at 8 feet, and B-4 at 18-1/2 feet.

Subsurface conditions at other times and locations on the site may differ from those found at the test locations. If different conditions are encountered during construction, it is necessary that the project geotechnical engineer be contacted so that design recommendations may be reviewed.

6. Proposed Project

From information provided by the project engineer, we understand that it is proposed to reconstruct Ramp E.8 over a new ramp E.6. This will involve constructing two abutments to support a bridge span. We understand that bridge abutment foundations will be constructed near elevation 1058.

The above information is an important part of our engineering interpretation of the site studied. If this understanding is not correct or if project conditions change, the project geotechnical engineer must review this report relative to the recommendations presented.

7. Engineering Interpretation

The subsurface data obtained has been interpreted relative to the proposed construction. Several foundation alternatives have been considered for this project. It is our opinion that two of the alternatives considered are most viable based upon the subsurface conditions encountered. One alternative takes advantage of the shallower glacial till deposits while the other utilizes the higher bearing capacity of the bedrock.

The first foundation alternative would be to support the proposed abutment foundations on very stiff to hard glacial till consisting of silt with varying amounts of clay, sand, gravel, cobbles and boulders. The proposed bearing elevation of the abutment foundations is approximately 1058. The anticipated elevation of competent glacial till is between 1053 and 1058. Additional excavation to elevation 1053 would be required at locations B-1, 2 and 4. The allowable bearing capacity for foundations bearing in the glacial till would be 6,000 psf.

The second alternative for supporting the proposed abutment foundations is to use straight shaft drilled piers. The piers could utilize the higher bearing capacity of the more competent sandstone encountered at greater depth. Calculated allowable bearing capacitie for the bedrock was 50 ksf. Drilled piers could also be designed to resist lateral loads associated with abutments by utilizing higher resistance capacities of the hard glacial till, and decomposed and sound bedrock. The major advantages of using drilled piers are:

a. The utilization of higher bearing and lateral resistance capacities of the bedrock.

b. Sidewall shear between the bedrock and pier concrete could be utilized resulting in smaller diameter piers in confined construction areas.

c. Excavations through existing overburden will be smaller than for conventional foundations. The result is the potential for lower cost using this method than for spread footing construction. A more detailed cost analysis should be made to verify this.

The disadvantages of using this method are as follows:

a. There could be difficulty of advancing drilled shafts through the cobble and boulder size rock encountered in the glacial till, decomposed sandstone and poor quality broken sandstone to reach intact rock. Soft clay or shale seams may also exist in the bedrock requiring that probe holes be drilled in the bottom of the piers.

b. There exists a potential for ground water seepage into the drilled pier shafts during construction. The contractor should be aware of this and be equipped to handle groundwater if encountered.

8. Recommendations

Recommendations will be presented for foundation construction using each of the alternatives discussed. All foundations should bear at least 3.5 feet below final grade for frost protection.

A. Spread Foundations

Spread footings can be used to support the abutment and wing walls. Footings should bear on or in very stiff to hard glacial till. Foundations should be proportioned for a net allowable bearing pressure of 6 ksf when bearing at elevation 1053. For the purpose of lateral resistance to sliding, a friction coefficient of 0.33 may be used at the interface of the foundation and very stiff to hard glacial till. If a key way is required to help resist lateral loads, it should be designed using a lateral resistance of 3 ksf.

Footings should be excavated to a level bearing surface. Bearing surfaces should be cleaned of mud and loose cuttings, and should be protected against water accumulation from rainfall, surface drainage, or excavation sidewall seepage. Bearing surfaces should be protected from freezing if there is a delay in placing concrete during cold weather. All bearing surfaces should be observed by the geotechnical engineer or a soils technician before concrete placement.

B. Drilled Pier Foundations

All straight-shaft drilled pier foundations should be drilled to bear on hard intact sandstone. Piers should be proportioned for a maximum end bearing pressure of 50 ksf. Development of side wall shear on the pier may be calculated using 40 psi if socket lengths equal to or greater than the shaft diameter are used. The lateral load resistance for the shafts may be computed using 15 ksf in the sounder bedrock, 3 ksf in the very stiff to hard glacial till, and 4 ksf in the dense decomposed sandstone.

C. Abutment and Retaining Walls

Retaining walls should be backfilled with clean, free-draining, coarse grained granular material. Drainage should be provided behind to wall so that hydrostatic pressures do not build up. Backfill should be spread in maximum 10 inch loose thickness lifts and compacted to 98% of Standard Proctor maximum dry density. Care should be taken when selecting the size of compaction equipment used so that retaining and abutment walls are not over stressed during fill placement.

Walls should be designed for an equivalent fluid density of 50 pcf, assuming drained, granular backfill. Walls subjected to traffic surcharge may be designed by increasing the height of the wall, for computational purposes, by 2 ft.

D. Construction Observation and Testing

A soils technician working under the direct supervision of the project geotechnical engineer should be present during spread foundation construction, to verify compliance with the recommendations contained in this report.

The technician's duties would include, but not be limited to:

1. Identifying proper quality bearing materials.
2. Observing the foundation bearing surface and bearing depth, and verifying that excess water, mud, and loose soil has been removed.
3. Checking the placement of reinforcement.
4. Testing and sampling concrete for compliance with the project specifications.

Drilled piers should be constructed using full-time geotechnical observation and testing services. The engineer/geologist's duties would include, but not be limited to:

1. Identifying proper quality bearing materials.
2. Recording diameters and depths of installed piers.
3. Verifying that bearing surfaces are adequately cleaned of water, mud, and excess loose cuttings.
4. Verifying that concrete is properly placed and temporary casing, if required, is properly withdrawn.
5. Sampling plastic concrete to verify that it attains design strength.

E. Remarks

The recommendations and observations contained in this report are professioal estimates based upon data which are assumed to be representative of the site studied. Variations in soils may occur below or between the locations tested. These recommendations were arrived at in accordance with currently accepted engineering practices at this time and location.

9. Signatures

John E. Dingeldein, P.E.
Project Engineer

Joseph W. Petraus, P.E.
Reviewing Engineer

STRUCTURE FOUNDATION INVESTIGATION

F.H.W.A. REG.	STATE	PROJECT	
5	OHIO		

72/104

SUMMIT COUNTY
SUM-76-11.57

4/5

LOG OF BORING

Date Started 11 FEB 87 Sampler: Type SS Dia. 2"OD Water Elev. SEE NOTE
Date Completed 11 FEB 87 Casing: Length HSA Dia. 3¼"ID

Project Identification: RAMP P.E. 8 OVER P.E. 6
I-76 SUMMIT COUNTY

Boring No. 1 Station & Offset SEE PRINT Surface Elev. 1068.4

Elev.	Depth	Std. Pen. (N)	Rec. ft.	Loss ft.	Description	Field No.	Lab Nos. So	Physical Characteristics % Agg	% C.S	% F.S	% Silt	% Clay	L.L.	P.I.	W.C.	SHTL Class
1068	0				FILL; mixture of cinders, sand, gravel, topsoil and sandstone fragments.											
	2															
	4	14				1										
	6	15			Stiff, brown, sandy clayey SILT with a little gravel.	2									15	
	8															
	10	15				3	*	12	10	23	31	24	23	4.8	13	A-4a
	12															
	14	77				4									14	
	16															
	18				Very stiff to hard, gray, gravelly SILT with a little sand and clay. Cobble and boulder size rock detected.											
	20	23				5									10	
	22															
	24	100/0.3'				6										A-4a
	26															
	28															
	30	67				7									11	
	32															
	34	92				8										
	36				CONTINUED ON NEXT PAGE											

LOG OF BORING

Date Started 10 FEB 87 Sampler: Type SS Dia. 2"OD Water Elev. SEE NOTE
Date Completed 10 FEB 87 Casing: Length HSA Dia. 3¼" ID

Project Identification: RAMP P.E. 8 OVER P.E. 6
I-76 SUMMIT COUNTY

Boring No. 2 Station & Offset SEE PRINT Surface Elev. 1065.2

Elev.	Depth	Std. Pen. (N)	Rec. ft.	Loss ft.	Description	Field No.	Lab Nos. So	Physical Characteristics % Agg	% C.S	% F.S	% Silt	% Clay	L.L.	P.I.	W.C.	SHTL Class
1065	0				FILL; 5" gravel over a mixture of and and silt											
	2															
	4	6				1										
	6	16			Very stiff to hard, brown, sandy SILT with a little clay and gravel.	2									15	
	8						*	12	10	26	32	20	21	3.3		A-4a
	10	21				3									15	
	12															
	14															
	16	28				4									13	
	18															
	20	100				5									9	
	22															
	24															
	26	110			Hard, gray, gravelly SILT with a little sand and clay.	6										
	28						*	30	8	11	32	19	25	4.6		A-4a
	30	109				7									10	
	32	100/0.5'														
1032	34				Gray SANDSTONE	8										
	36				END OF BORING *COMPOSIT SAMPLE ENCOUNTERED WATER AT 33½ FT.											

LOG OF BORING

Date Started 11 FEB 87 Sampler: Type SS Dia. 2"OD Water Elev. SEE NOTE
Date Completed 11 FEB 87 Casing: Length HSA Dia. 3¼"ID

Project Identification: RAMP P.E. 8 OVER P.E. 6
I-76 SUMMIT COUNTY

Boring No. 1 Station & Offset SEE PRINT Surface Elev. 1068.4

Elev.	Depth	Std. Pen. (N)	Description	Field No.	Lab Nos. So	Physical Characteristics % Agg	% C.S	% F.S	% Silt	% Clay	L.L.	P.I.	W.C.	SHTL Class
	30		CONTINUED FROM PREVIOUS PAGE											
	32		Very stiff to hard, gray, gravelly SILT with a little sand and clay. Cobble and boulder size rock detected.											A-4a
	34	92		8										
1034	36													
	38	NX	Firm to hard, gray SANDSTONE, fine grained well cemented, soft dark gray shale seams at 35½, 36½, 37½ and 39 ft.	9	9A	CORED FROM 35.5 to 45.5 ft. RECOVERED 80% UNIAXIAL COMPRESSIVE STRENGTH, 5060 PSI.								
1028	40													
	42		Firm to hard, brown SANDSTONE & CONGLOMERATE, fine to coarse grained, slightly weathered, well cemented.		9B	UNIAXIAL COMPRESSIVE STRENGTH, 5610 PSI.								
	44													
	46		END OF BORING WATER ENCOUNTERED AT 5 FT. PRIOR TO CORING. * COMPOSITE SAMPLE.											

STRUCTURE FOUNDATION INVESTIGATION

F.H.W.A. REG.	STATE	PROJECT	
5	OHIO		

SUMMIT COUNTY
SUM-76-11.57

73/104

5/5

LOG OF BORING

Date Started 6 FEB 87 Sampler: Type SS Dia. 2"OD Water Elev. SEE NOTE
Date Completed 6 FEB 87 Casing: Length HSA Dia. 3¼"ID

Project Identification: RAMP P.E. 8 OVER P.E.6 I-76 SUMMIT COUNTY

Boring No. 3 Station & Offset SEE PRINT Surface Elev. 1080.7

Elev.	Depth	Std. Pen. (N)	Rec. ft.	Loss ft.	Description	Field No.	Lab. Nos.	% Agg.	% C.S.	% F.S.	% Silt	% Clay	L.L.	P.I.	W.C.	SHTL Class
1081	0				FILL; 2" Asphalt over 7" Concrete followed by brown and gray clayey silt mixed with broken sandstone.											
	2															
	4	32				1										
	6															
	8	75/0.4'				2										
	10	34				3										
	12															
	14															
	16	52				4										
	18															
	20	18				5										
	22				Very stiff to hard, brown, sandy SILT with some clay and a trace of gravel.											
	24															
	26	21				6									15	
	28						*	7	9	26	33	25	22	5.6		A-4a
	30	38				7									13	
	32															
	34				Very dense, brown and gray, silty SAND with rock fragments. (Possibly decomposed sandstone)											
	36	52			CONTINUED ON NEXT PAGE *COMPOSIT SAMPLE	8										

LOG OF BORING

Date Started 6 FEB 87 Sampler: Type SS Dia. 2"OD Water Elev. SEE NOTE
Date Completed 6 FEB 87 Casing: Length HSA Dia. 3¼"ID

Project Identification: RAMP P.E. 8 OVER P.E. 6 I-76 SUMMIT COUNTY

Boring No. 4 Station & Offset SEE PRINT Surface Elev. 1076.1

Elev.	Depth	Std. Pen. (N)	Rec. ft.	Loss ft.	Description	Field No.	Lab. Nos.	% Agg.	% C.S.	% F.S.	% Silt	% Clay	L.L.	P.I.	W.C.	SHTL Class
1076	0				FILL; 4" Asphalt over 1½ ft of cinders and gravel followed by broken sandstone and clayey silt.											
	2															
	4	130				1										
	6	50/0.5'				2										
	8															
	10	30				3										
	12															
	14															
	16	3				4										
	18															
	20	8			Very loose, brown SAND with silt	5										
	22															
	24				Very stiff, brown, sandy SILT with some clay and a trace of gravel.											
	26	29				6									12	
	28															
	30	38			Dense to very dense, brown and gray, silty SAND with rock fragments (Possibly decomposed sandstone)	7									14	
	32															
	34															
	36	125/0.5'			CONTINUED ON NEXT PAGE	8									14	

LOG OF BORING

Date Started 6 FEB 87 Sampler: Type SS Dia. 2"OD Water Elev. SEE NOTE
Date Completed 6 FEB 87 Casing: Length HSA Dia. 3¼"ID

Project Identification: RAMP P.E. 8 OVER P.E. 6 I-76 SUMMIT COUNTY

Boring No. 3 Station & Offset SEE PRINT Surface Elev. 1080.7

Elev.	Depth	Std. Pen. (N)	Description	Field No	Lab. Nos. So.	% Agg.	% C.S.	% F.S.	% Silt	% Clay	L.L.	Pl.	W.C.	SHTL Class
1051	30		CONTINUED FROM FIRST PAGE											
	32													
	34		Very dense, brown and gray, silty SAND with rock fragments. (Possibly decomposed sandstone)											
	36	52		8										
	38													
	40	97		9										
	42													
	44													
	46	138		10										
1033	48		Soft, gray SHALE											
1031	50	100/0.5'	Gray SANDSTONE	11										
			END OF BORING											
			ENCOUNTERED WATER AT 16 AND 38 FT.											
			WATER ON COMPLETION OF DRILLING AT 38 FT.											

LOG OF BORING

Date Started 6 FEB 87 Sampler: Type SS Dia. 2"OD Water Elev. SEE NOTE
Date Completed 6 FEB 87 Casing: Length HSA Dia. 3¼"ID

Project Identification: RAMP P.E. 8 OVER P.E. 6 I-76 SUMMIT COUNTY

Boring No. 4 Station & Offset SEE PRINT Surface Elev. 1076.1

Elev.	Depth	Std. Pen. (N)	Description	Field No.	Lab. Nos. So.	% Agg.	% C.S.	% F.S.	% Silt	% Clay	L.L.	Pl.	W.C.	SHTL Class
	28		CONTINUED FROM FIRST PAGE											
	30	38	Dense to very dense, brown and gray, silty SAND with rock fragments. (Possibly decomposed sandstone)	7									14	
	32													
	34													
	36	125/0.5'		8									14	
	38		Very dense, brown and gray silty SAND with rock fragments and seams of gray weathered shale. (Possibly decomposed sandstone)											
	40	153		9										
	42													
	44													
	46	54		10										
1027	48		Hard, gray SANDSTONE, fine grained, well cemented.											
	50		Firm to hard, brown SANDSTONE & CONGLOMERATE fine to coarse grained, moderately to well cemented with occaisional seams of gray shale.		11A									UNIAXIAL COMPRESSIVE STRENGTH 8940 PSI
	52													CORED FROM 48.5 to 58.5 FT.
	54	NX		11										RECOVERED 90%
	56				11B									UNIAXIAL COMPRESSIVE STRENGTH 6060 PSI
	58													
	60		END OF BORING											
			WATER ENCOUNTERED PRIOR TO CORING AT 18½ FT.											

STRUCTURE FOUNDATION INVESTIGATION

F.H.W.A. REG.	STATE	PROJECT	
5	OHIO		

74/104

SUMMIT COUNTY
SUM-76-11.57

1/5

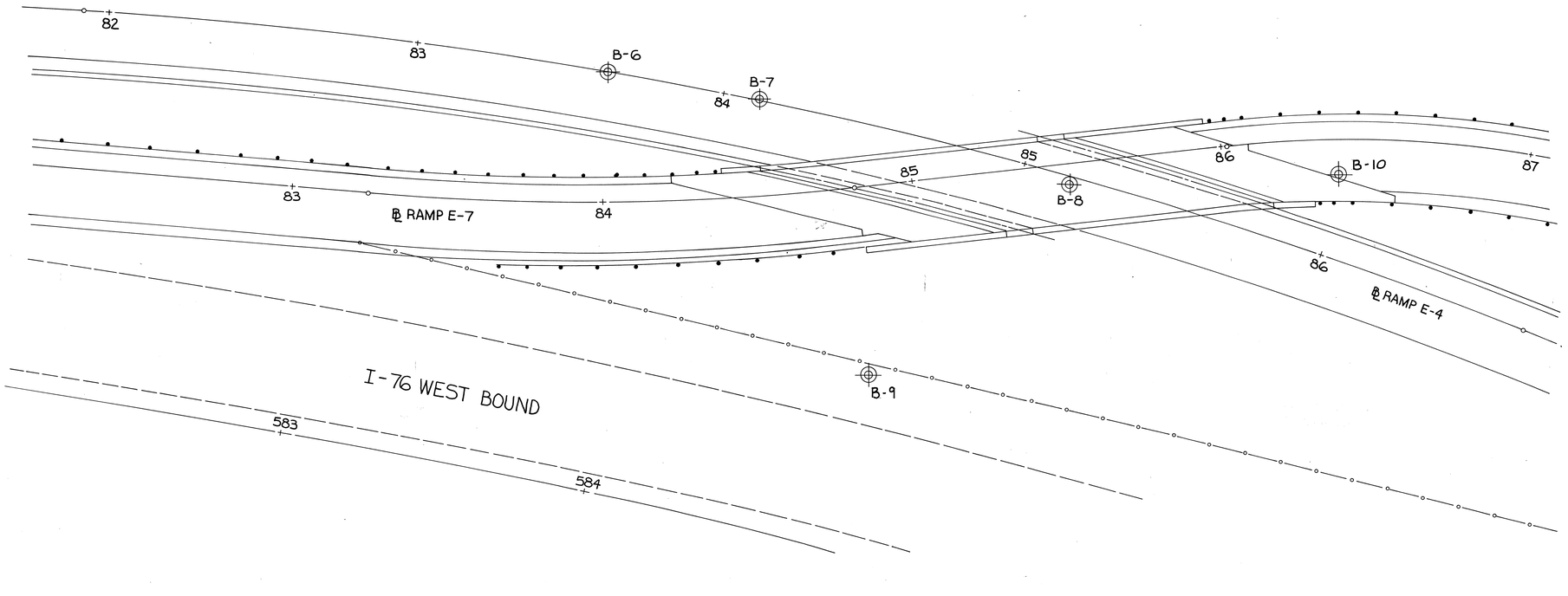

N

LEGEND

- AUGER BORING LOCATION - PLAN VIEW
- DRIVE SAMPLE AND/OR CORE BORING LOCATION - PLAN VIEW
- TR — TOP OF ROCK
- CAPPED PILE FOOTING
- SPREAD FOOTING
- PILE FOOTING
- DRILLED SHAFT

FIGURES BESIDE THE BORING LOG INDICATE THE BLOW COUNT (N) OF THE STANDARD PENETRATION TEST

W—— INDICATES FREE WATER ELEVATION

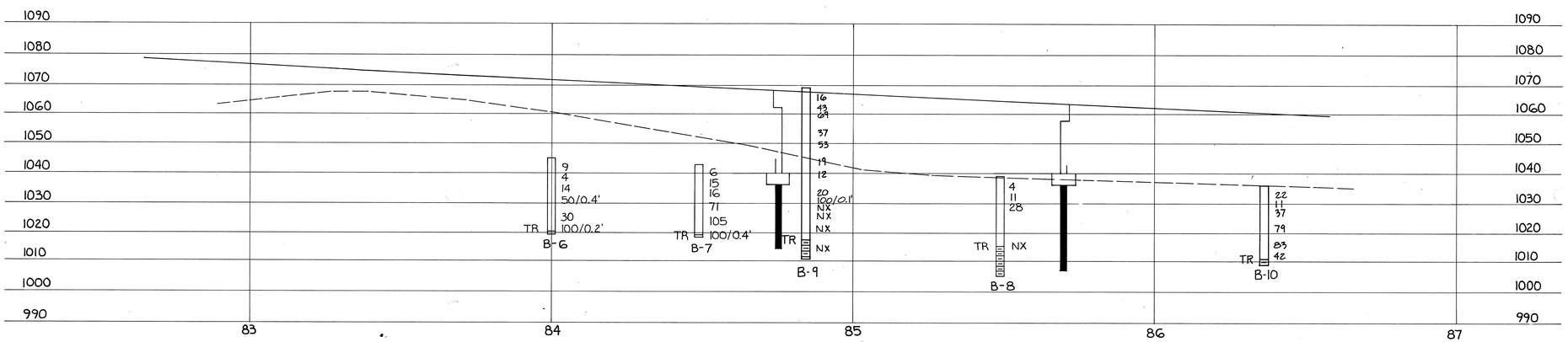

JOHN DAVID JONES & ASSOC., INC.
3145 FRONT STREET
CUYAHOGA FALLS, OHIO 44221
ENGINEERS ARCHITECTS PLANNERS

STRUCTURE FOUNDATION INVESTIGATION

BRIDGE NO. SUM-76-1244
RAMP E-7 OVER RAMP E-4
SUMMIT COUNTY STA. 84+71.60 TO STA. 85+72.60

PLAN AND PROFILE

DRAWN BY	CHECKED BY	REVIEWED BY	DATE
J.P.M.	J.R.S.	PAK	11-9-87

STRUCTURE FOUNDATION INVESTIGATION

FHWA REGION	STATE	PROJECT	
5	OHIO		

SUMMIT COUNTY
SUM - 76 - 11.57

75/104

2/5

1. Introduction

It is proposed to construct two new I-76 ramps E.7 and E.4 in Akron, Ohio. Ramp E.7 will be constructed over Ramp E.4 resulting in a new bridge with concrete abutments. The results and recommendations from a geotechnical exploration program for the bridge are presented in this report. Soil and bedrock were identified by a field exploration program and selected samples were tested in the laboratory. Field and laboratory test results were interpreted, resulting in recommendations for foundation design.

2. Geology and Observations of the Project Site

The site is located in a glaciated area of the Allegheny Plateau. Glacial deposits are quite variable in composition and thickness in this area. The soils in the project area appear to be part of a ground moraine. Based upon published information, the bedrock deposits in the east Akron area are of Pennsylvanian age and consist predominantly sandstone, shale, limestone and coal. The bedrock encountered at the site is part of the base of the Sharon Conglomerate of Pennsylvanian age.

The portion of I-76 in the area of of the proposed ramps is constructed as an embankment and is generally higher in elevation than the original ground level. Ramp E.7 will enter the expressway off Third Street. Ramp E.4 will exit the expressway and ultimately connect with Arlington Street.

3. Exploration

Subsurface conditions were studied by an exploration program consisting of 4 borings during the period of February 5th through the 10th, 1987. Approximate test locations are shown on the Boring Location Plan.

The boring depths ranged from 24 to 33-1/2 feet. All of the borings were advanced by means of a truck mounted, mechanical rotary type drill rig with soil augers. The borings were terminated in bedrock. Two of the borings were cored using an NX size, double-tube barrel with a diamond bit.

Ground surface elevations at the soil boring locations were determined by differential leveling methods by others and given to us by John David Jones and Associates. The boring ground surface elevations are presented on the attached boring logs.

The borings were drilled in accordance with standard ASTM and ODOT specifications. A two inch O.D. split-spoon sampler was driven to obtain samples at specified intervals. The number of blows of a 140 lb. hammer dropping 30 inches was recorded for each of three, six inch penetration intervals at each sample location.

Due to bedrock, fill soils, and hard natural soils, three inch O.D. thin-wall Shelby tube samples were not obtained.

Groundwater depths were observed and recorded upon encounter and at the completion of each boring. Due to the introduction of water in the coring process, no groundwater measurements were made after rock was cored. All boring were backfilled at the completion of field testing prohibiting long term observations of ground water levels.

The results of the field exploration program are presented on the boring logs.

4. Laboratory Testing

Samples were delivered to the laboratory, where they were examined and classified by a geotechnical engineer following ODOT specifications. As a result of sample sizes, some of the similar samples of soil were combined for laboratory tests. Soil and bedrock samples were then tested according to the following schedule:

TEST	SAMPLES
Water Content	A total of 12 split-spoon samples from selected locations
Grain size analysis	Composite samples from selected borings were tested.
Uniaxial Compression of Rock Cores	A total of 4 samples were tested representing a range of rock quality.

Water content and grain size analysis tests are indicators of soil consistency, strength, and compressibility. Uniaxial compression tests on rock cores provide an estimate of the degree of the rock's cementation and resistance to penetration during construction. The laboratory test results are presented on the appropriate boring log.

5. Exploration Findings

The subsurface profile at each boring location is presented on the boring logs. A generalized subsurface profile for the project site consists of fill overlying glacial till deposits over bedrock.

Fill was encountered at all of the boring locations. Its composition and depth varied across the site. The fill in borings B-6, 7, and 8 varied in depth from 4 to 9 feet and appears to be backfill in old basements. The fill consisted of cinders, sand, brick, clay and topsoil. The fill noted in boring B-5 to a depth of 8 feet appears to be the result of construction the I-76 bridge over Chittenden Street.

Glacial till was encountered beneath the fill at all boring locations and consisted of medium dense to very dense sand having varying amounts of gravel, silt, clay. A second layer of till was encountered over bedrock. This soil consisted of very stiff sandy silt with varying amounts of clay, and gravel. Cobble and boulder size pieces of rock were detected in the soil mass of the deposits.

Sandstone bedrock was encountered at depths which ranged from approximately 22 to 24. These depth correspond to elevations of 1016 to 1027. The upper zone of bedrock exhibited varying degrees of weathering and soundness. Generally the sandstone quality improves with depth. Some seams of clay and shale were noted in the core samples.

Ground water was not encountered in any of the borings prior to coring or backfill.

Subsurface conditions at other times and locations on the site may differ from those found at the test locations. If different conditions are encountered during construction, it is necessary that the project geotechnical engineer be contacted so that design recommendations may be reviewed.

6. Proposed Project

From information provided by the project engineer, we understand that it is proposed to construct Ramp E.7 over ramp E.4. This will involve constructing two abutments to support a bridge span. Due to the skewed alignment of the bridge abutments the retaining walls will be relatively long. It is proposed to construct the east abutment foundation near elevation 1035. The west abutment foundation will be stepped to follow the ground contour and will range in elevation from 1045 at the west end to 1039 at the east end.

The above information is an important part of our engineering interpretation of the site studied. If this understanding is not correct or if project conditions change, the project geotechnical engineer must review this report relative to the recommendations presented.

7. Engineering Interpretation

The subsurface data obtained has been interpreted relative to the proposed construction. Several foundation alternatives have been considered for this project. It is our opinion that two of the alternatives considered are most viable based upon the subsurface conditions encountered. One alternative takes advantage of the shallower glacial till deposits while the other utilizes the higher bearing capacity of the bedrock.

The first foundation alternative would be to support the proposed abutment foundations on medium dense silty sand and/or very stiff sandy silt. These deposits have varying amounts of clay, gravel, cobbles and boulders. The proposed bearing elevation of the abutment foundations range from 1035 to 1045. The competent bearing soils, where the allowable bearing capacity would be 6,000 psf, are encountered at approximately the following elevations:

LOCATION	ELEVATION
B-5	1041
B-6	1032
B-7	1031
B-8	1031

The second alternative for supporting the proposed abutment foundations is to use straight shaft drilled piers. The piers could utilize the higher bearing capacity of the more competent sandstone encountered at greater depth. Calculated allowable bearing capacities ranged from 30 to 60 ksf. Drilled piers could also be designed to resist lateral loads associated with abutments by utilizing higher resistance capacities of the hard glacial till, and bedrock. The major advantages of using drilled piers are:

a. The utilization of higher bearing and lateral resistance capacities of the bedrock.

b. Sidewall shear between the bedrock and pier concrete could be utilized resulting in smaller diameter piers in confined construction areas.

c. Excavations through existing overburden will be smaller than for conventional foundations. The result is the potential for lower cost using this method than for spread footing construction. A more detailed cost analysis should be made to verify this.

The disadvantages of using this method are as follows:

a. There could be difficulty of advancing drilled shafts through the cobble and boulder size rock encountered in the glacial till, decomposed sandstone and poor quality broken sandstone to reach intact rock. Soft clay or shale seams may also exist in the bedrock requiring that probe holes be drilled in the bottom of the piers.

b. There exists a potential for ground water seepage into the drilled pier shafts during construction. The contractor should be aware of this and be equipped to handle groundwater if encountered.

8. Recommendations

Recommendations will be presented for foundations constructed using each of the alternatives discussed. All foundations should bear at least 3.5 feet below final grade for frost protection.

A. Spread Foundations

Spread footings can be used to support the abutment and wing walls. Footings should bear on or in very dense, gray silty sand and/or very stiff, gray sandy silt till. Foundations should be proportioned for a net allowable bearing pressure of 6 ksf when bearing at the elevations listed above. For lateral resistance to sliding, a friction coefficient of 0.33 may be used at the interface of the foundation and very stiff to hard glacial till. If a key way is required to help resist lateral loads, it should be designed using a lateral resistance of 3 ksf.

Footings should be excavated to a level bearing surface. Bearing surfaces should be cleaned of mud and loose cuttings, and should be protected against water accumulation from rainfall, surface drainage, or excavation sidewall seepage. Bearing surfaces should be protected from freezing if there is a delay in placing concrete during cold weather. All bearing surfaces should be observed by the geotechnical engineer or a soils technician before concrete placement.

B. Drilled Pier Foundations

All straight-shaft drilled pier foundations should be drilled to bear on hard intact sandstone. Piers should be proportioned for an allowable bearing capacity of 50 ksf. Development of side wall shear on the pier may be calculated using 40 psi if socket lengths equal to or greater than the shaft diameter are used. The lateral load resistance for the shafts may be computed using 15 ksf in the sounder bedrock, 3 ksf in the very stiff or medium dense glacial till.

C. Abutment and Retaining Walls

Retaining walls should be backfilled with clean, free-draining, coarse grained granular material. Drainage should be provided behind to wall so that hydrostatic pressures do not build up. Backfill should be spread in maximum 10 inch loose thickness lifts and compacted to 98% of Standard Proctor maximum dry density. Care should be taken when selecting the size of compaction equipment used so that retaining and abutment walls are not over stressed during fill placement.

STRUCTURE FOUNDATION INVESTIGATION

FHWA REGION	STATE	PROJECT	
5	OHIO		

SUMMIT COUNTY
SUM - 76 - 11.57

76
104

3
5

Walls should be designed for an equivalent fluid density of 40 pcf, assuming drained, granular backfill. Walls subjected to traffic surcharge may be designed by increasing the height of the wall, for computational purposes, by 2 ft.

D. Construction Observation and Testing

A soils technician working under the direct supervision of the project geotechnical engineer should be present during spread foundation construction, to verify compliance with the recommendations contained in this report.

The technician's duties would include, but not be limited to:

1. Identifying proper quality bearing materials.
2. Observing the foundation bearing surface and bearing depth, and verifying that excess water, mud, and loose soil has been removed.
3. Checking the placement of reinforcement.
4. Testing and sampling concrete for compliance with the project specifications.

Drilled piers should be constructed using full-time geotechnical observation and testing services. The engineer/geologist's duties would include, but not be limited to:

1. Identifying proper quality bearing materials.
2. Recording diameters and depths of installed piers.
3. Verifying that bearing surfaces are adequately cleaned of water, mud, and excess loose cuttings.
4. Verifying that concrete is properly placed and temporary casing, if required, is properly withdrawn.
5. Sampling plastic concrete to verify that it attains design strength.

E. Remarks

The recommendations and observations contained in this report are professional estimates based upon data which are assumed to be representative of the site studied. Variations in soils may occur below or between the locations tested. These recommendations were arrived at in accordance with currently accepted engineering practices at this time and location.

9. Signatures

John E. Dingeldein, P.E.
Project Engineer

Joseph W. Petraus, P.E.
Reviewing Engineer

STRUCTURE FOUNDATION INVESTIGATION

FHWA REGION	STATE	PROJECT	
5	OHIO		

SUMMIT COUNTY
SUM - 76 - 11.57

77/104

4/5

LOG OF BORING

Date Started 10 FEB 87 Sampler:Type SS Dia 2"OD Water Elev. SEE NOTE
Date Completed 10 FEB 87 Casing:Length HSA Dia. 3½"ID

Project Identification: RAMP E.7 OVER E.4 I-76 SUMMIT COUNTY

Boring No. 6 Station & Offset SEE PRINT Surface Elev. 1044.7

Elev.	Depth	S/d.Pen. (N)	Rec. ft.	Loss ft.	Description	Field No.	Lab Nos.	% Agg.	% C.S.	% F.S.	% Silt	% Clay	L.L.	P.I.	W.C.	SHTL Class
1045	0				FILL; mixture of cinders, sand, brick and topsoil											
	2															
	4	9				1										
	6	4				2									17	
	8				Medium dense to dense, brown gravelly SAND with a little silt and clay.											
	10	14				3									12	
	12						*	27	13	29	18	13	19	1.8		A-2-4
	14	50/ 0.4'				4									11	
	16															
	18				Very stiff, gray sandy SILT with some clay and a little gravel.											
	20	30				5									10	
	22						*	15	6	28	23	28	25	5.5		A-4a
1020½	24	100/ 0.2'			Gray SANDSTONE	6									12	
	26				END OF BORING											
	28				NO WATER ENCOUNTERED WHILE DRILLING.											
	30															
	32															
	34															
	36															

LOG OF BORING

Date Started 10 FEB 87 Sampler:Type SS Dia 2"OD Water Elev. SEE NOTE
Date Completed 10 FEB 87 Casing:Length HSA Dia. 3½"ID

Project Identification: RAMP P.7 OVER P.4 I-76 SUMMIT COUNTY

Boring No. 7 Station & Offset SEE PRINT Surface Elev. 1043.1

Elev.	Depth	S/d.Pen. (N)	Rec. ft.	Loss ft.	Description	Field No.	Lab Nos.	% Agg.	% C.S.	% F.S.	% Silt	% Clay	L.L.	P.I.	W.C.	SHTL Class
1043	0				FILL; mixture of cinders, sand, silt, brick, and topsoil.											
	2															
	4	6				1										
	6	15				2										
	8															
	10	16			Medium stiff, brown gravelly SAND with a little silt and clay.	3										A-4-2
	12															
11	14	71			Very stiff gray sandy SILT with rock fragments and a little clay. Occaisional cobbles and/or boulders detected.	4										A-4a
	16															
	18															
	20	105				5										
	22															
1019	24	100/ 0.4'			Gray SANDSTONE	6										
	26				END OF BORING											
	28				NO WATER ENCOUNTERED WHILE DRILLING.											
	30															
	32															
	34															
	36															

LOG OF BORING

Date Started 5 FEB 87 Sampler:Type SS Dia 2"OD Water Elev. SEE NOTE
Date Completed 5 FEB 87 Casing:Length HSA Dia. 3½"ID

Project Identification: RAMP E.&7 OVER E.4 I-76 SUMMIT COUNTY

Boring No. 8 Station & Offset SEE PRINT Surface Elev. 1038.8

Elev.	Depth	S/d.Pen. (N)	Rec. ft.	Loss ft.	Description	Field No.	Lab Nos.	% Agg.	% C.S.	% F.S.	% Silt	% Clay	L.L.	P.I.	W.C.	SHTL Class
1039	0				FILL; mixture of sandy clay with some gravel.											
	2															
	4	4				1										
	6	11			Medium dense, brown gravelly SAND with some silt and a little clay.	2									20	
	8															
	10	28				3									12	
	12															
12	14				Very stiff, gray, sandy SILT with rock fragments and a little clay. Cobbles and boulders detected while coring.											A-4a
	16															
	18	NX				4										
	20															
	22															
1016	24															
	26				Firm to hard, red and tan SANDSTONE, fine grained, slightly weathered, well cemented, gray clay seam and carbonaceous partings at 27 and 31 feet respectively.		5A									
	28	NX				5										
	30						5B									
	32															
	34				END OF BORING											
	36				NO WATER ENCOUNTERED PRIOR TO CORING.											

5A: UNIAXIAL COMPRESSIVE STRENGTH 5150 PSI
CORED FROM 23.5 TO 33.5 FT. RECOVERED 90%

5B: UNIAXIAL COMPRESSIVE STRENGTH 6360 PSI

CORED FROM 13.5 TO 23.5 FT. RECOVERED 30%.

STRUCTURE FOUNDATION INVESTIGATION

FHWA REGION	STATE	PROJECT	
5	OHIO		

SUMMIT COUNTY
SUM-76-11.57

78/104

5/5

LOG OF BORING

Date Started 22 OCT 87 Sampler Type SS 2" O.D. Water Elev. Immediate 38-1/2'
Date Completed 23 OCT 87 After ___ Hours ___

Project Identification: RAMP E.7 OVER E.4 I-76 SUMMIT COUNTY

Boring No. 9 Station & Offset SEE PRINT Surface Elev. 1069

Elev.	Depth	STD (N)	Description	Field No.	Lab. Nos.	% Agg.	% C.S.	% F.S.	% Silt	% Clay	L.L.	P.I.	W.C.	SHTL Class.
1069	0		ASPHALT (0.5')											
	2		FILL, brown, sandy, silty CLAY.											
	4	16		1										
	6	43	FILL, brown and reddish brown fine grained SAND with sandstone fragments.	2										
	8													
	10	69		3										
	12													
	14	37		4										
	16													
	18													
	20	53		5										
	22													
	24													
	26	19		6										
	28		FILL, brown sandy SILT with trace of clay											
	30	12	FILL, black CINDERS	7										
	32													
	34		Very stiff, brown sandy SILT with rock fragments and a trace of clay.											
	36	20		8										

LOG OF BORING

Date Started 23 OCT 87 Sampler Type SS 2" O.D. Water Elev. Immediate SEE NOTE
Date Completed 23 OCT 87 After ___ Hours ___

Project Identification: RAMP E.7 OVER E.4 I-76 SUMMIT COUNTY

Boring No. 10 Station & Offset SEE PRINT Surface Elev. 1036

Elev.	Depth	STD (N)	Description	Field No.	Lab. Nos.	% Agg.	% C.S.	% F.S.	% Silt	% Clay	L.L.	P.I.	W.C.	SHTL Class.
1036	0		FILL, topsoil and cinders.											
	2													
	4	22	Very stiff to stiff, brown sandy SILT with gravel.	1										
	6	11		2										
	8		Medium dense, brown silty SAND to sandy SILT. Wet at 8-1/2 feet.											
	10	37		3										
	12		Dense to very dense sandy SILT with gravel. Cobbles and boulders encountered while drilling.											
	14	79		4										
	16													
	18													
	20	83		5										
	22													
	24	42		6										
1010	26		Hard SANDSTONE.											
	28		END OF BORING											
	30		WET SEAM AT 8-1/2 FEET.											
	32		BORING DRY ON COMPLETION.											
	34													
	36													

2/2

Boring No. 9 Station & Offset SEE PRINT Surface Elev. 1069 Project: RAMP E.7 OVER E.4

Elev.	Depth	STD (N)	Description	Field No.	Lab. Nos.	% Agg.	% C.S.	% F.S.	% Silt	% Clay	L.L.	P.I.	W.C.	SHTL Class
	38	100/0.1'	Very stiff to hard, brown and gray, sandy SILT with rock fragments and a little clay.	9										
	40	NX	Cobbles and boulders encountered.	10		CORED FROM 39.0 to 41.0 FT. RECOVERED 100%.								
	42													
	44	NX		11		CORED FROM 41.0 to 44.5 FT. RECOVERED 60%.								
	46		Hard, gray sandy SILT with rock fragments. (TILL)											
	48	NX		12		CORED FROM 45.5 to 5I.5 FT. RECOVERED 80%.								
1018	50													
	52		Hard, gray to tan SANDSTONE, fine grained, slightly weathered, well cemented.											
	54	NX		13		CORED FROM 51.5 to 58.0 FT. RECOVERED 100%.								
	56													
	58													
	60		END OF BORING AT 58.0 ft.											
	62		Water encountered at 38-1/2 feet prior to coring.											
	64													
	66													
	68													
	70													
	72													
	74													
	76													
	78													
	80													

STRUCTURE FOUNDATION INVESTIGATION

F.H.W.A. REG.	STATE	PROJECT	
5	OHIO		

79/104

SUMMIT COUNTY
SUM-76-11.57

1/5

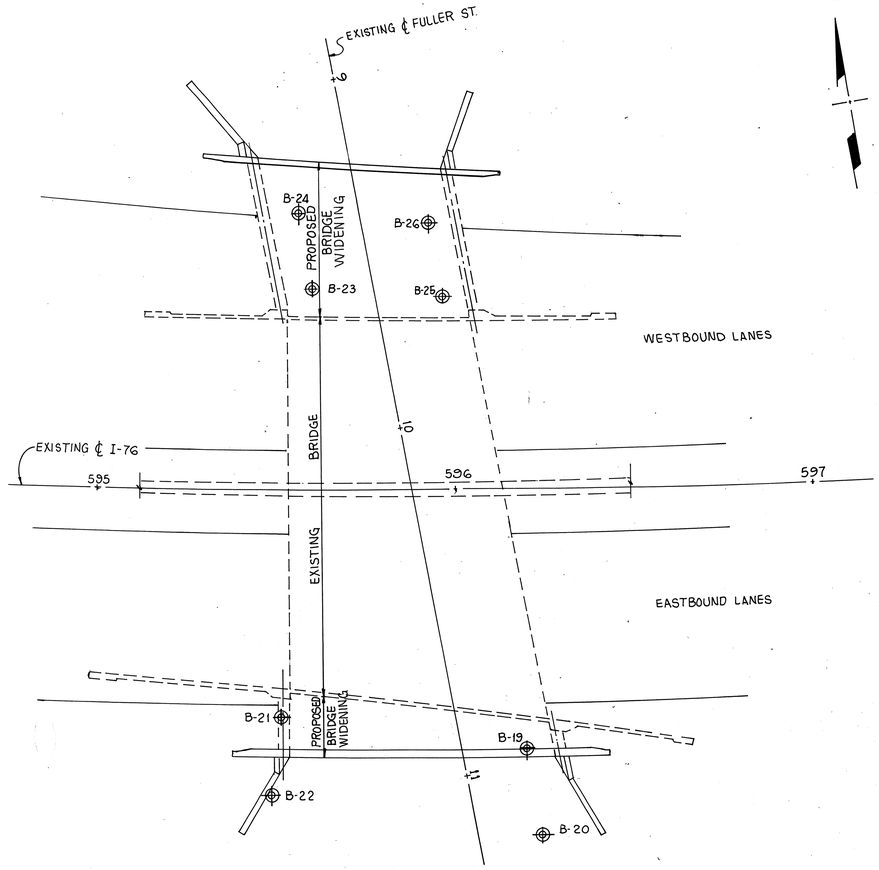

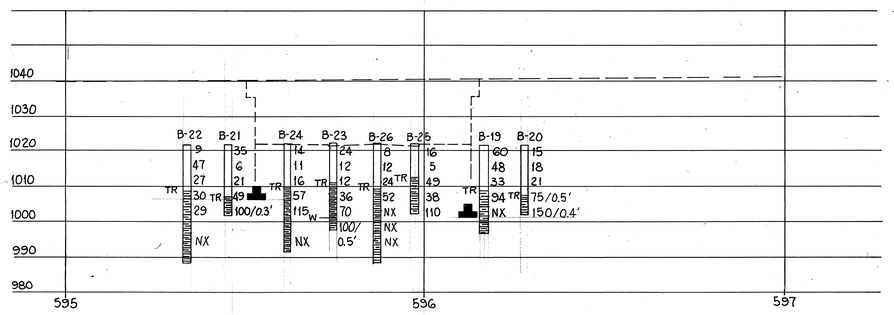

LEGEND

- ⊕ AUGER BORING LOCATION - PLAN VIEW
- ⊕ DRIVE SAMPLE AND/OR CORE BORING LOCATION - PLAN VIEW
- TR TOP OF ROCK
- CAPPED PILE FOOTING
- SPREAD FOOTING
- PILE FOOTING
- DRILLED SHAFT

FIGURES BESIDE THE BORING LOG INDICATE THE BLOW COUNT (N) OF THE STANDARD PENETRATION TEST

W—— INDICATES FREE WATER ELEVATION

JOHN DAVID JONES & ASSOC., INC.
2162 FRONT STREET
CUYAHOGA FALLS, OHIO 44221
ENGINEERS ARCHITECTS PLANNERS

STRUCTURE FOUNDATION INVESTIGATION
BRIDGE NO. SUM-76-12.67
OVER FULLER STREET

PLAN AND PROFILE

DRAWN BY	CHECKED BY	REVIEWED BY	DATE
JRS	JRO	PAK	4-24-87

STRUCTURE FOUNDATION INVESTIGATION

STRUCTURE FOUNDATION INVESTIGATION

F.H.W.A. REGION	STATE	PROJECT
5	OHIO	

80/104

SUMMIT COUNTY
SUM-76-11.57

2/5

1. Introduction

It is proposed to widen the existing I-76 bridge over Fuller Street in Akron, Ohio. The results and recommendations from a geotechnical exploration program for the bridge are presented in this report. Soil and bedrock were identified by a field exploration program and selected samples were tested in the laboratory. Field and laboratory test results were interpreted, resulting in recommendations for foundation design.

2. Geology and Observations of the Project Site

The site is located in a glaciated area of the Allegheny Plateau. Glacial deposits are quite variable in composition and thickness in this area. The soils in the project area appear to be part of a terrace and outwash deposits. Based upon published information, the bedrock deposits in the east Akron area are of Pennsylvanian age and consist predominantly sandstone,shale, limestone and coal. The bedrock encountered at the site is part of the base of the Sharon Conglomerate of Pennsylvanian age.

The existing I-76 bridge is elevated over Fuller Street. This portion of I-76 is constructed as an embankment and is generally higher in elevation than the original ground level. The existing bridge is single span supported on abutment walls. Review of construction drawings for the bridge dated September, 1954 indicates that the abutment wall foundations are bearing in rock at elevations which range from 1001.5 to 1008.6 feet. The wing walls are stepped upward while maintaining frost depth protection beneath them. Structural loads from the walls are transmitted down to bedrock by piles.

Ground surface elevations at the soil boring locations were estimated to be approximately 1022 feet. The surface elevation of the bridge deck and embankment is near 1040 feet.

3. Exploration

Subsurface conditions were studied by an exploration program consisting of 8 borings during the period of March 23 rd through April 4 th, 1986. Approximate test locations are shown on the Boring Location Plan.

The boring depths ranged from 18.9 to 33.5 feet. All of the borings were advanced by means of a truck/trailer mounted, mechanical rotary type drill rig with soil augers. The borings were terminated in bedrock. Half of the borings were cored using an NX size, double-tube barrel with a diamond bit. Surface elevations at the boring locations were estimated from existing prints of the project area provided to us by John David Jones and Associates.

The borings were drilled in accordance with standard ASTM and ODOT specifications. A two inch O.D. split-spoon sampler was driven to obtain samples at specified intervals. The number of blows of a 140 lb. hammer dropping 30 inches was recorded for each of three, six inch penetration intervals at each sample location.

Due to shallow bedrock, fill soils, and hard natural soils, three inch O.D. thin-wall Shelby tube samples were not obtained.

Groundwater depths were observed and recorded upon encounter and at the completion of each boring. Due to the introduction of water in the coring process, no groundwater measurements were made after rock was cored. Borings in the roadway were backfilled at the completion of field testing.

The results of the field exploration program are presented on the boring logs.

4. Laboratory Testing

Samples were delivered to the laboratory, where they were examined and classified by a geotechnical engineer following ODOT specifications. As a result of sample sizes, some of the similar samples of soil were combined for laboratory tests. Soil and bedrock samples were then tested according to the following schedule:

TEST	SAMPLES
Water Content	A total of 10 split-spoon samples from selected locations
Grain size analysis	Composite samples from selected borings were tested.
Uniaxial Compression of Rock Cores	A total of 6 samples were tested representing a range of rock quality.

Water content and grainsize analysis tests are indicators of soil consistency, strength, and compressibility. Uniaxial compression tests on rock cores provide an estimate of the degree of the rock's cementation and resistance to penetration during construction. The laboratory test results are presented on the appropriate boring log.

5. Exploration Findings

The subsurface profile at each boring location is presented on the boring logs. A generalized subsurface profile for the project site consists of fill overlying deposits of sand and silt followed by decomposed bedrock and sound bedrock.

Fill was encountered at all of the boring locations. Its composition varied considerably with no distinct pattern to its deposition, however, the majority of the fill appears to be backfill for utilities. The thickness of the fill deposits ranged from 1 to 8 feet with an average of 4 feet. The fill consisted of pavement sections, sands, clays, and cinders.

Deposits of fine grained sand and silty sand having varying amounts of gravel were encountered beneath the fill. The relative density of the soils ranged from loose to very dense. The overall thickness of these strata varied from 4-1/2 to 12 feet with an average of 8-1/2 feet.

Decomposed bedrock was encountered at a depth of 9 to 13-1/2 feet. The average thickness of this zone was approximately 6. The soil consisted of medium dense to very dense, brown fine grained sand having varying amounts of silt and gravel/rock fragments.

Sandstone bedrock was encountered at depths which ranged from 17 to 23-1/2 feet. The upper zones of the bedrock exhibited varying stages of weathering and soundness. Generally the sandstone quality improves with depth. Some seams of clay and shale were noted in the core samples.

Ground water was encountered in borings B-22 at 18 feet and B-23 at 17-1/2 feet.

Subsurface conditions at other times and locations on the site may differ from those found at the test locations. If different conditions are encountered during construction, it is necessary that the project geotechnical engineer be contacted so that design recommendations may be reviewed.

6. Proposed Project

From information provided by the project engineer, we understand that it is proposed to widen the existing Fuller Street bridge on both its north and south sides. This will involve constructing new abutments to support the additional bridge spans. We understand that it appears as if the existing abutment foundations are bearing slightly into the decomposed rock surface at elevations between 1008 and 1011 feet. Maximum toe pressures are less than 10,000 psf.

The above information is an important part of our engineering interpretation of the site studied. If this understanding is not correct or if project conditions change, the project geotechnical engineer must review this report relative to the recommendations presented.

7. Engineering Interpretation

The subsurface data obtained has been interpreted relative to the proposed construction. Several foundation alternatives have been considered for this project. The alternative considered most viable based upon the subsurface conditions encountered takes advantage of the relatively shallow depth to bedrock.

The foundation alternative would be to support the proposed abutment foundations on the decomposed rock using conventional spread footings. The allowable bearing capacity for foundations bearing on the decomposed rock is variable depending on their location at the site. Calculated safe allowable bearing capacities ranged from 6 to 30 ksf. Because of this variability, the foundation base at the abutments should be explored at the time of construction to determine if the excavation has been made to sufficient depth for the final design bearing capacity. The following table is a summary of bearing and bedrock elevations:

BEARING & BEDROCK SUMMARY

BORING LOCATION	EXISTING BEARING ELEVATION	TOP OF ROCK DECOMPOSED ELEVATION	TOP OF ROCK SOUND ELEVATION
23	1006	1009	1005
24	"	1009	1004
21	1009	1009	1004 *
22	"	1008	1002
25	1003	1013	1003
26	"	1010	1001
19	1009	1010	1005
20	"	1009	**

* DECOMPOSED ROCK IN THIS AREA MAY HAVE HARD ZONES OR MORE DRAMATIC CHANGES IN THE BEDROCK PROFILE.

** THE DECOMPOSED SANDSTONE IN THIS AREA IS VERY DENSE AND MAY INCLUDE ZONES OF HARDER ROCK.

IT APPEARS THAT THE FOUNDATIONS OF THE ABUTMENTS ARE BEARING PREDOMINANTLY IN SOUNDER SANDSTONE BEDROCK.

Excavations made to sounder rock may require temporary shoring to help limit the excavation size and provide for safety of personnel.

STRUCTURE FOUNDATION INVESTIGATION

F.H.W.A. REGION	STATE	PROJECT
5	OHIO	

81/104

SUMMIT COUNTY
SUM-76-11.57

3/5

8. Recommendations

A. Spread Foundations

Spread footings can be used to support the abutment and wing walls. Footings should bear on or in very dense decomposed sandstone. Foundations should be proportioned for a net allowable bearing pressure of 10 ksf when bearing at approximately the same depths as the existing structure. Foundation bearing in the deeper sound bedrock may be proportion for a net allowable bearing pressure up to 30 ksf.

For the purpose of lateral resistance to sliding, a friction coefficient of 0.33 may be used at the interface between the foundation and decomposed bedrock. If a key way is required to help resist lateral loads, it should be designed using a lateral resistance of 5 ksf.

All footings should bear at least 3.5 feet below exterior grade for protection againt frost damage. Footings should be excavated to a level bearing surface. Bearing surfaces should be cleaned of mud and loose cuttings, and should be protected against water accumulation from rainfall, surface drainage, or excavation sidewall seepage. Bearing surfaces should be protected from freezing if there is a delay in placing concrete during cold weather. All bearing surfaces should be observed by the geotechnical engineer or a soils technician before concrete placement.

B. Abutment and Retaining Walls

Retaining walls should be backfilled with clean, free-draining, coarse grained granular material. Drainage should be provided behind to wall so that hydrostatic pressures do not build up. Backfill should be spread in maximum 10 inch loose thickness lifts and compacted to 98% of Standard Proctor maximum dry density. Care should be taken when selecting the size of compaction equipment used so that retaining and abutment walls are not over-stressed during fill placement.

Because new retaining and abutment walls are being added onto existing structures, it is recommended that higher than normal equivalent fluid pressure be assumed in the design. Walls should be designed for an equivalent fluid density of 50 pcf, assuming drained, granular backfill. Walls subjected to traffic surcharge may be designed by increasing the height of the wall, for computational purposes, by 2 ft.

C. Construction Observation and Testing

A soils technician working under the direct supervision of the project geotechnical engineer should be present during spread foundation construction, to verify compliance with the recommendations contained in this report.

The technician's duties would include, but not be limited to:

1. Identifying proper quality bearing materials.
2. Observing the foundation bearing surface and bearing depth, and verifying that excess water, mud, and loose soil has been removed.
3. Checking the placement of reinforcement.
4. Testing and sampling concrete for compliance with the project specifications.

D. Remarks

The recommendations and observations contained in this report are our opinions based upon data which are assumed to be representative of the site studied. Variations in soils may occur below or between the locations tested. These opinions were arrived at in accordance with currently accepted engineering practices at this time and location.

REPORT ADDENDUM

FULLER STREET

During the process of making recommendations for structurally supporting the proposed bridge abutments, consideration was given to using driven steel H or pipe piles. Although these types of piles are feasible for this project there are several potential draw backs to using them:

1. Cobbles and boulder size rock were often encountered in the dense glacial till and/or weathered bedrock found in the project area. These materials could cause lateral pile displacements or damage to the piles.

2. The relatively shallow depth of bedrock in the project areas could cause potential problems seating the piles into sound bedrock without rebounding.

3. Lateral displacement of the piles would be possible due to the relative stiffness of the soil and decomposed rock encountered above sound bedrock. Predrilling for the piles might be required to keep piles groups from moving laterally or from becoming unsetted.

4. It would be difficult at some locations to determine if the piles are seated in sound bedrock or stopped by a large boulder or unweathered zone in the rock. Driven pile lengths could be erratic due to early refusal on obstructions.

5. The sound sandstone bedrock often has weathered seams of shale and clay interbedded with it. Without the use of probe holes it would be difficult to determine if the piles are terminated in sound bedrock or if long term creep problems existed due to the underlying soft seams.

9. Signatures

John E. Dingeldein, P.E.
Project Engineer

Joseph W. Petraus, P.E.
Reviewing Engineer

STRUCTURE FOUNDATION INVESTIGATION

F.H.W.A. REGION	STATE	PROJECT
5	OHIO	

82/104

SUMMIT COUNTY
SUM-76-11.57

4/5

LOG OF BORING

Date Started 3-25-86 Sampler: Type SS Dia. 2"OD Water Elev. ---
Date Completed 3-25-86 Casing: Length HSA Dia. 3¼"ID

Project Identification: SUM 1267
FULLER STREET BRIDGE
PROPOSED WIDENING

Boring No. 19 Station & Offset SEE PRINT Surface Elev. 1022±

Elev.	Depth	Std. Pen. (N)	Description	Field No.	Lab. Nos. So.	% Agg.	% C.S.	% F.S.	% Silt	% Clay	L.L.	Pl.	W.C.	SHTL Class
1022±	0		CONCRETE (0.8')											
	2	60	Verydense, brown, SAND with some gravel, a little clay and trace of silt.	1	*	22	19	33	8	18	23	4	14	A-3a
	4													
	6	48	Dense, brown fine grained SAND with a little silt and trace of clay and gravel.	2	**	6	11	72	11	7		NP	23	A-3a
	8													
	10	33		3										
	12													
	14	94	Verydense, brown fine grained SAND with a little gravel and trace of silt and clay. (Decomposed SANDSTONE)	4	***	18	7	67	2	6		NP		A-3
	16													
	18		Hard gray SANDSTONE with brown staining, scattered quartz pebbles, fine to medium grained, broken in upper 3 ft., closely jointed. 45° joint noted at 21 ft., clayey seam noted at 20 ft.		5A	UNIAXIAL COMPRESSIVE STRENGTH, 2160 PSI.								
	20	NX		5		CORED FROM 15.0 to 25.0 ft. RECOVERED 83%.								
	22													
	24				5B	UNIAXIAL COMPRESSIVE STRENGTH, 2940 PSI								
	26		Boring stopped at 25.0 ft.											
	28		No water encountered prior to coring.											
	30													
	32		* Composite sample, B-19, B-20 & B-25.											
	34		** Composite sample, B-19 & B-20.											
	36		*** Composite sample, B-19, B-20 & B-21.											

LOG OF BORING

Date Started 3-23-86 Sampler: Type SS Dia. 2"OD Water Elev. ---
Date Completed 3-23-86 Casing: Length HSA Dia. 3¼"ID

Project Identification: SUM 1267
FULLER STREET BRIDGE
PROPOSED WIDENING

Boring No. 20 Station & Offset SEE PRINT Surface Elev. 1022±

Elev.	Depth	Std. Pen. (N)	Description	Field No.	Lab. Nos. So.	% Agg.	% C.S.	% F.S.	% Silt	% Clay	L.L.	Pl.	W.C.	SHTL Class
1022±	0		CONCRETE (0.8') over BASE COURSE (0.7')											
	2	15	Medium dense, brown SAND with some gravel, a little clay and trace of silt.	1	*	22	19	33	8	18	23	4	24	A-3a
	4													
	6	18	Medium dense, brown fine grained SAND with a little silt and trace of clay and gravel.	2	**	6	11	72	11	7		NP		A-3a
	8													
	10	21	Very stiff, brown sandy SILT with clay.	3	***	6	7	26	37	24	21	4	20	A-4a
	12													
	14	75/ 0.5'	Very dense, brown, fine grained SAND with a a little gravel and trace of silt and clay. (Decomposed SANDSTONE)	4	****	18	7	67	2	6		NP		A-3
	16													
	18	150/ 0.4'		5										
	20		Boring stopped at 18.9 ft.											
	22		No water encountered.											
	24													
	26		* Composite sample, B-19, B-20 & B-25.											
	28		** Composite sample, B-19 & B-20.											
	30		****Composite sample, B-19, B-20 & B-21											
	32		*** Composite sample, B-22, B-20 & B-25											
	34													
	36													

LOG OF BORING

Date Started 3-23-86 Sampler: Type SS Dia. 2"OD Water Elev. ---
Date Completed 3-23-86 Casing: Length HSA Dia. 3¼"ID

Project Identification: SUM 1267
FULLER STREET BRIDGE
PROPOSED WIDENING

Boring No. 21 Station & Offset SEE PRINT Surface Elev. 1022±

Elev.	Depth	Std. Pen. (N)	Description	Field No.	Lab. Nos. So.	% Agg.	% C.S.	% F.S.	% Silt	% Clay	L.L.	Pl.	W.C.	SHTL Class
1022±	0		FILL, mostly silty CLAY mixed with gravel, sand, boulders and topsoil.											
	2	35		1									12	
	4													
	6	6		2									13	
	8													
	10	21	Dense to very dense, brown silty SAND with a little gravel and sandstone fragments. Boulder size pieces encountered.	3									13	
	12													
	14	49	Dense to very dense, brown fine grained SAND with a little gravel and trace of silt and clay. (Decomposed SANDSTONE)	4	*	18	7	67	2	6		NP		A-3
	16													
	18	100/ 0.3'												
	20			5										
	22		Boring stopped at 19.8 ft.											
	24		No water encountered.											
	26		* Composite sample B-19, B-20 & B-21.											
	28													
	30													
	32													
	34													
	36													

LOG OF BORING

Date Started 3-23-86 Sampler: Type SS Dia. 2"OD Water Elev. ---
Date Completed 3-23-86 Casing: Length HSA Dia. 3¼"ID

Project Identification: SUM 1276
FULLER STREET BRIDGE
PROPOSED WIDENING

Boring No. 22 Station & Offset SEE PRINT Surface Elev. 1022±

Elev.	Depth	Std. Pen. (N)	Description	Field No.	Lab. Nos. So.	% Agg.	% C.S.	% F.S.	% Silt	% Clay	L.L.	Pl.	W.C.	SHTL Class
1022±	0		ASPHALT (0.25') over CONCRETE (0.7')											
	2	9	FILL, mostly silty CLAY mixed with sand, gravel and boulder size pieces.	1										
	4													
	6	47	Medium dense, brown sandy SILT with a trace of gravel.	2	*	6	7	26	37	24	21	4		A-4a
	8													
	10	27		3									15	
	12													
	14	30	Dense, brown fine grained SAND with a little gravel and trace of silt and clay. (Decomposed SANDSTONE)	4									24	A-3
	16													
	18													
	20	29		5										
	22		Hard, gray SANDSTONE with brown staining, scattered quartz pebbles, fine to medium grained, well cemented.											
	24				6A	UNIAXIAL COMPRESSIVE STRENGTH, 4980 PSI.								
	26													
	28	NX		6		CORED FROM 23.5 to 33.5 ft. RECOVERED 100%.								
	30				6B	UNIAXIAL COMPRESSIVE STRENGTH, 6150 PSI.								
	32		* Composite sample B-20, B-22 & B-25.											
	34		Boring stopped at 33.5 ft. Water encountered at 18 ft prior to coring.											
	36													

STRUCTURE FOUNDATION INVESTIGATION

F.H.W.A. REGION	STATE	PROJECT
5	OHIO	

83/104

SUMMIT COUNTY
SUM-76-11.57

5/5

LOG OF BORING

Date Started 4-4-86 Sampler: Type SS Dia. 2"OD Water Elev. 1001±
Date Completed 4-4-86 Casing: Length HSA Dia. 3¼"OD

Project Identification: SUM 1276
FULLER STREET BRIDGE
PROPOSED WIDENING

Boring No. 23 Station & Offset SEE PRINT Surface Elev. 1022±

Elev.	Depth	Std. Pen. (N)	Description	Field No.	Lab. Nos. So.	Physical Characteristics: % Agg.	% C.S.	% F.S.	% Silt	% Clay	L.L.	Pl.	W.C.	SHTL Class
1022±	0													
	2		FILL, A mixture of black coarse SAND, CINDERS and gravel.											
	4	24		1										
	6	12	Medium dense, brown fine grained SAND with a little silt.	2										A-1b
	8													
	10	12	Medium dense, brown sandy SILT with a trace of gravel.	3										A-4a
	12		Medium dense to very dense, brown, fine grained sand with a little gravel and sandstone fragments.											
	14													
	16	36	(Decomposed SANDSTONE)	4										A-3
	18													
	20	70	Very soft to hard, brown fine grained SANDSTONE.	5										
	22													
	24	100/0.5'		6										
	26		Boring stopped at 24.0 ft.											
	28		Water encountered at 17½ ft.											
	30		Water on completion at 21 ft.											
	32													
	34													
	36													

LOG OF BORING

Date Started 4-4-86 Sampler: Type SS Dia. 2"OD Water Elev. ---
Date Completed 4-4-86 Casing: Length HSA Dia. 3¼"ID

Project Identification: SUM 1276
FULLER STREET BRIDGE
PROPOSED WIDENING

Boring No. 24 Station & Offset SEE PRINT Surface Elev. 1022±

Elev.	Depth	Std. Pen. (N)	Description	Field No.	Lab. Nos. So.	Physical Characteristics: % Agg.	% C.S.	% F.S.	% Silt	% Clay	L.L.	Pl.	W.C.	SHTL Class
1022±	0													
	2		FILL, A mixture of black and brown SAND, CINDERS and GRAVEL.											
	4	14		1										
	6	11	Medium dense, brown, fine grained SAND with a little silt.	2										A-1b
	8													
	10	16	Medium dense, brown sandy SILT.	3										
	12													A-3
	14		Medium dense to very dense, brown, fine grained SAND with a little gravel and sandstone fragments.											
	16	57	(Decomposed SANDSTONE)	4										
	18													
	20	115	Hard weathered brown SANDSTONE, fine to medium grained, closely jointed, broken with cross bedding. Soft brown clayey seam at 21'.											
	22													
	24		Note: The term "hard" describes the condition of the pieces of core recovered. The percentage of core recovery indicates that a major portion of this deposit is very soft and/or decomposed.											
	26	NX		5										CORED FROM 20.0 to 30.0 ft. RECOVERED 55%. Core pieces to short to test.
	28													
	30													
	32		Boring stopped at 30.0 ft.											
	34		No water encountered prior to coring.											
	36													

LOG OF BORING

Date Started 3-25-86 Sampler: Type SS Dia. 2"OD Water Elev. ---
Date Completed 3-25-86 Casing: Length HSA Dia. 3¼"ID

Project Identification: SUM 1276
FULLER STREET BRIDGE
PROPOSED WIDENING

Boring No. 25 Station & Offset SEE PRINT Surface Elev. 1022±

Elev.	Depth	Std. Pen. (N)	Description	Field No.	Lab. Nos. So.	Physical Characteristics: % Agg.	% C.S.	% F.S.	% Silt	% Clay	L.L.	Pl.	W.C.	SHTL Class
1022±	0		CONCRETE (0.8')											
	2		FILL, brown silty SAND with a little gravel.											
	4	16		1										
	6	5	Loose, brown sandy SILT with a trace of gravel.	2	*	6	7	26	37	24	21	4		A-4a
	8													
	10	49	Dense to very dense, brown, fine grained SAND with a little gravel and sandstone fragments.	3										
	12		(Decomposed SANDSTONE)											
	14													
	16	38		4										A-3
	18													
	20	110		5										
	22													
	24		Boring stopped at 19.5 ft.											
	26		No water encountered.											
	28													
	30		* Composite sample B-20, B-22 & B-25.											
	32													
	34													
	36													

LOG OF BORING

Date Started 3-25-86 Sampler: Type SS Dia. 2"OD Water Elev. ---
Date Completed 3-25-86 Casing: Length HSA Dia. 3¼"ID

Project Identification: SUM 1276
FULLER STREET BRIDGE
PROPOSED WIDENING

Boring No. 26 Station & Offset SEE PRINT Surface Elev. 1022±

Elev.	Depth	Std. Pen. (N)	Description	Field No.	Lab. Nos. So.	Physical Characteristics: % Agg.	% C.S.	% F.S.	% Silt	% Clay	L.L.	Pl.	W.C.	SHTL Class
1022±	0		CONCRETE (0.8')											
	2		FILL, brown silty SAND with a little gravel.											
	4	8		1										
	6	12	Medium dense, brown fine to medium grained SAND with a little gravel.	2										A-3
	8													
	10	24	Medium dense, brown fine grained SAND with gravel and sandstone fragments.	3										A-3a
	12													
	14		Very dense, brown fine grained SAND with a little gravel and sandstone fragments.											A-3
	16	52	(Decomposed SANDSTONE)(Boulder size pieces at 18½ to 23 ft.)	4										
	18													
	20	NX		5										CORED FROM 18.5 to 23.5 ft. RECOVERED 24%.
	22													
	24													
	26	NX	Hard, gray SANDSTONE with brown staining and scattered quartz pebbles, fine grained, well cemented.	6	6A									CORED FROM 23.5 to 28.5 ft. RECOVERED 76%. UNIAXIAL COMPRESSIVE STRENGTH, 4580 PSI.
	28													
	30													
	32	NX		7	7A									CORED FROM 28.5 to 33.5 ft. RECOVERED 100%. UNIAXIAL COMPRESSIVE STRENGTH, 6100 PSI.
	34		Boring stopped at 33.5 ft. No water encountered prior to coring.											
	36													

SUM-76-11.57

FHWA REGION	STATE	PROJECT

84/104

STRUCTURE SUBSURFACE INVESTIGATION

1/10

GEOLOGY OF THE SITE

THE STRUCTURE SITE IS LOCATED ON THE GLACIATED, HILLY, DEEPLY DISSECTED ALLEGHENY PLATEAU PHYSIOGRAPHIC PROVINCE. THIS AREA WAS GLACIATED BY THE WISCONSIN ICE SHEET WITH DRIFT VARIABLE BUT THIN, GENERALLY AVERAGING LESS THAN 25 FEET. IN THIS AREA, THE GEOLOGY MAY HAVE BEEN ALTERED SOMEWHAT BY THE PLACEMENT OF FILL MATERIAL DURING EXPRESSWAY CONSTRUCTION. GLACIAL DEPOSITS UNDERLYING THE FILL GENERALLY CONSIST OF KAME DEPOSITS COMPOSED OF SANDS AND GRAVELS UNDERLAIN BY GLACIAL TILL WHICH IS COMPOSED OF PRIMARILY SILTS AND CLAYS.

THE SITE IS LOCATED NEAR THE CONTACT OF THE MISSISSIPPIAN ROCKS WITH THOSE OF PENNSYLVANIAN AGE. THE HIGHLANDS ARE UNDERLAIN BY SHARON CONGLOMERATE AND LOWER PORTIONS BY SANDSTONES OF THE LOGAN FORMATION.

EXPLORATION

THE EXPLORATION FOR THIS PROJECT CONSISTED OF ADVANCING A TOTAL OF 11 DRIVE SAMPLE-CORE BORINGS WITH CME-75 TRUCK MOUNTED AND CME-45c TRACK MOUNTED DRILLING RIGS USING CONVENTIONAL 3.25 INCH I.D. HOLLOW STEM AUGERS. THE EXPLORATION WAS PERFORMED BETWEEN MARCH AND MAY, 1987.

INVESTIGATIONAL FINDINGS

THE BORINGS DISCLOSED ALTERNATING LAYERS OF GRAVEL, CLASSIFIED AS A-1-a, A-1-b, SAND AND GRAVELLY SAND, CLASSIFIED AS A-3a AND A-2-4 RESPECTIVELY, AND SANDY SILT, CLASSIFIED AS A-4a. SANDSTONE BEDROCK WAS UNCOUNTERED AT ALL TEST LOCATIONS EXCEPT B-9 AT ELEVATIONS RANGING FROM 916 TO 982. FOR SPECIFIC CONDITIONS AT VARIOUS DEPTHS, REFER TO THE INDIVIDUAL TEST BORING LOGS WHICH FORM A PART OF THIS REPORT.

LEGEND

- AUGER BORING LOCATION - PLAN VIEW
- PRESS AND/OR DRIVE SAMPLE AND/OR CORE BORING LOCATION - PLAN VIEW
- TR — TOP OF ROCK
- CAPPED PILE
- FOOTING
- FOOTING ON PILE
- HORIZONTAL BAR ON BORING LOG INDICATES THE DEPTH THE SAMPLE WAS TAKEN
- X/Y/Z — FIGURES BESIDE THE BORING LOG IN PROFILE INDICATE THE NUMBER OF BLOWS FOR STANDARD PENETRATION TEST
  - X = NO. OF BLOWS FOR FIRST 6"
  - Y = NO. OF BLOWS FOR SECOND 6"
  - Z = NO. OF BLOWS FOR THIRD 6"
- W —— INDICATES FREE WATER ELEVATION
- ▼ —— INDICATES STATIC WATER ELEVATION

SYMBOLS OF ROCK TYPES

- COAL
- WEATHERED MUDSTONE
- MUDSTONE
- WEATHERED SHALE
- SHALE
- CLAYSTONE
- SILTSTONE
- WEATHERED SANDSTONE
- SANDSTONE
- LEACHED DOLOMITE
- DOLOMITE
- LEACHED LIMESTONE
- LIMESTONE
- BOULDERS or COBBLES

GENERAL INFORMATION

Drive sample / Press sample / Core borings

Drive sample borings are made by means of a mechanically-powered rotary-type drilling machine, employing a 2" O.D., 1-3/8" I.D. split spoon sampler, at 2.5 and/or 5-foot depth intervals, driven by means of a 140 lb. drop hammer with a free fall of 30". The number of blows required to drive the sampler 18" is considered the standard penetration test.

Drive/press borings are made by means of a mechanically-powered rotary-type drilling machine employing a 2" O.D., 1-3/8" I.D. split spoon sampler, and 3" O.D. thin wall press sampler. The press sampler is advanced by continuous uniform pressure, applied by the drilling machine.

Core borings are made by means of a mechanically-powered rotary-type drilling machine, employing a NXM core barrel with industrial diamond cutting head.

The boring log sheets display a graphic plot of the information obtained including depth and elevation of the sample, type of sample, the standard penetration test readings in three 6-inch increments, depth and elevation of press samples, field number assigned to sample, sample description - based on laboratory tests utilizing the Casagrande AC classification system - and gradation, plasticity and moisture determinations. Results of strength and consolidation testing, if performed on undisturbed samples, will appear graphically on separate enclosures. Rock samples are displayed on the log sheets including depth and elevation of the sample, amount of recovery and a visual classification based on type, color, degree of hardness, grain size, deterioration, bedding, acid reaction and other qualifying factors.

At depths where materials are bouldery or gravelly to the extent that the sampler can not be utilized, a wash sample is procured and visually classified, in order to determine the general characteristics of the material. These samples are not considered sufficiently representative to warrant laboratory testing.

PARTICLE SIZE DEFINITIONS

12"	3"	2.0mm		0.42mm		0.074mm	0.005mm
Boulders	Cobbles	Gravel	Coarse Sand		Fine Sand	Silt	Clay
		No. 10 sieve		No. 40 sieve		No. 200 sieve	

NOTE - ALL AVAILABLE SOIL AND BEDROCK INFORMATION WHICH CAN BE CONVENIENTLY SHOWN ON THE STRUCTURE FOUNDATION INVESTIGATION SHEETS HAS BEEN SO REPORTED. ADDITIONAL SUBSURFACE INVESTIGATIONS MAY HAVE BEEN MADE TO STUDY SOME SPECIAL ASPECT OF THE PROJECT. COPIES OF THIS DATA, IF ANY, MAY BE INSPECTED IN THE DISTRICT DEPUTY DIRECTOR'S OFFICE, THE BUREAU OF TESTS AT 1600 WEST BROAD STREET, THE PAVEMENT AND SOILS SECTION OF THE BUREAU OF LOCATION AND DESIGN OR IN THE BRIDGE BUREAU AT 25 SOUTH FRONT STREET.

SUBSURFACE INVESTIGATION
SUM-76-12.77
WEST VIADUCT OVER KELLY AVE.
SUMMIT COUNTY, OHIO

R & R International, Inc.
GEOTECHNICAL ENGINEERS-GEOLOGISTS
AKRON, OHIO 44321

SUM-76-11.57

FHWA REGION	STATE	PROJECT

85/104

2/10

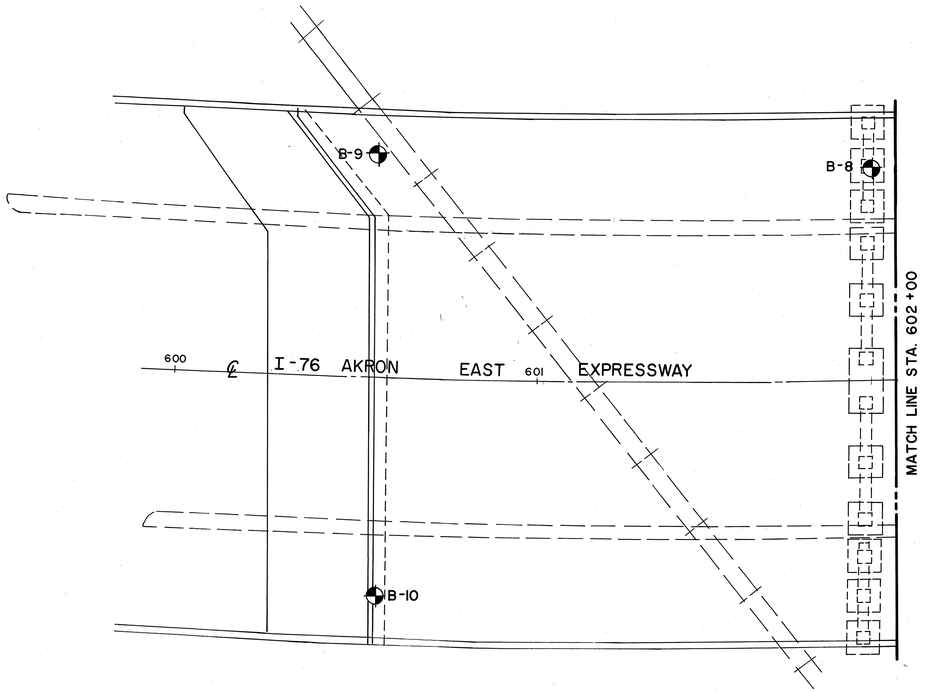

N
SCALE 1" = 20'

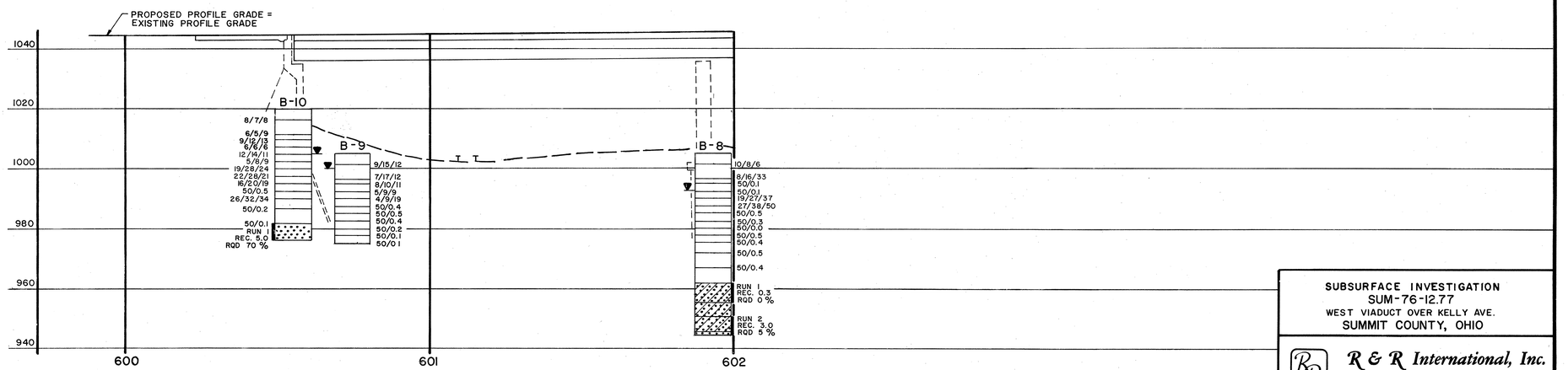

SUBSURFACE INVESTIGATION
SUM-76-12.77
WEST VIADUCT OVER KELLY AVE.
SUMMIT COUNTY, OHIO

R & R International, Inc.
GEOTECHNICAL ENGINEERS-GEOLOGISTS
3675 COPLEY ROAD
AKRON, OH 44321
216-666-2200

SUM-76-11.57

FHWA REGION	STATE	PROJECT

86/104

3/10

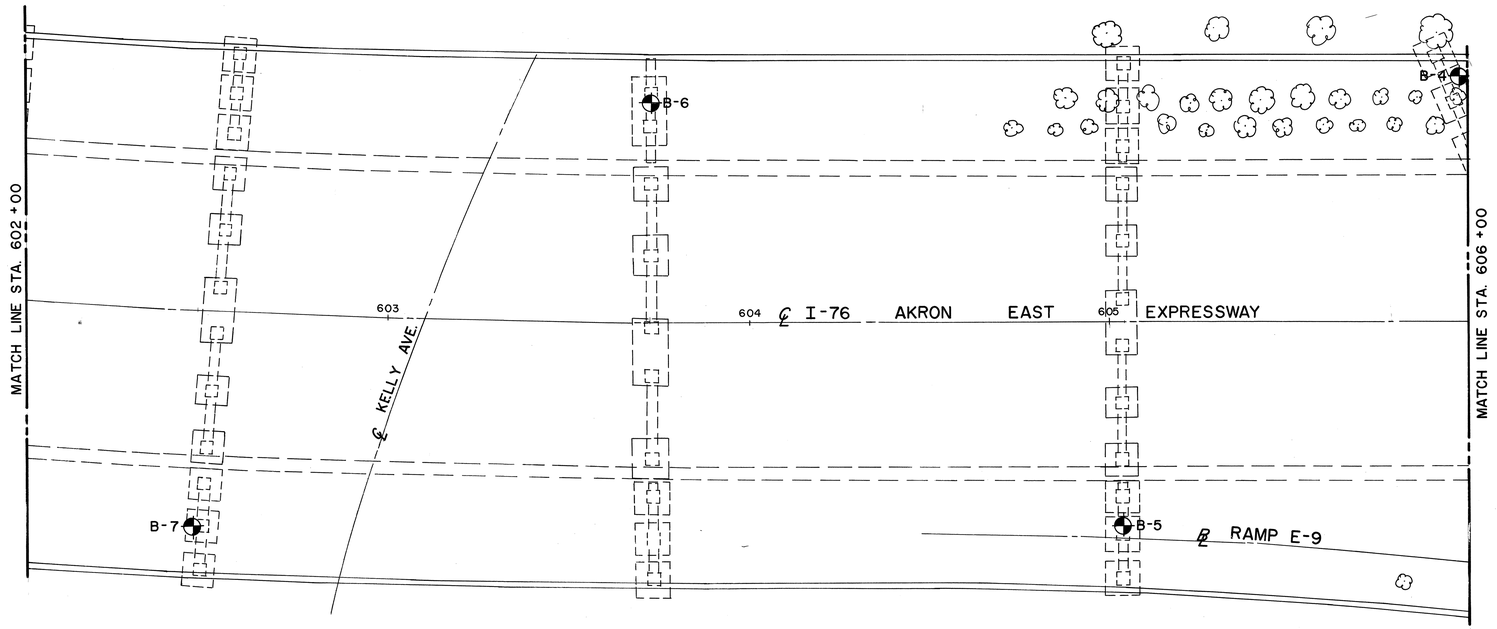

N
SCALE 1" = 20'

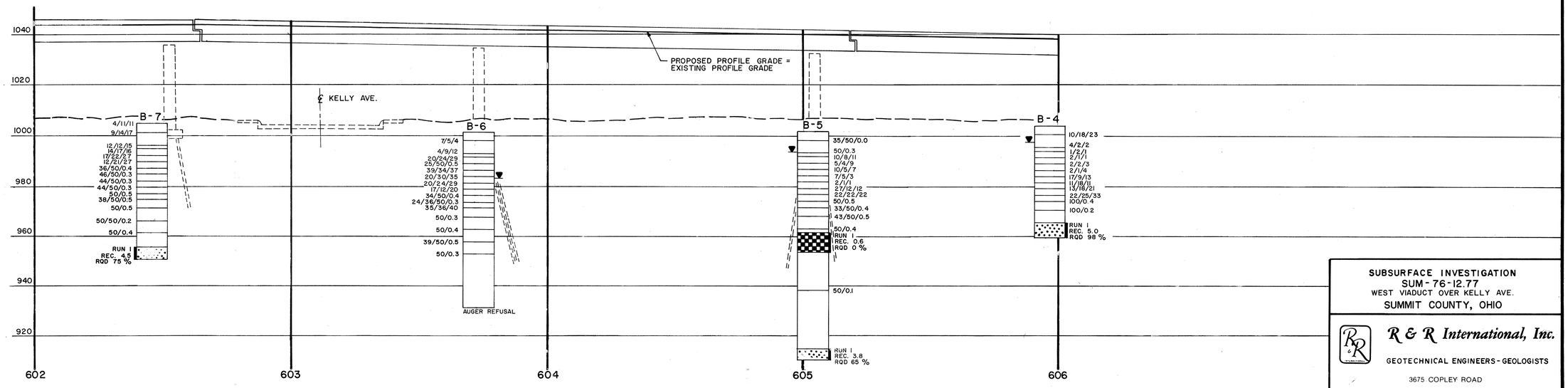

SUBSURFACE INVESTIGATION
SUM-76-12.77
WEST VIADUCT OVER KELLY AVE.
SUMMIT COUNTY, OHIO

R & R International, Inc.
GEOTECHNICAL ENGINEERS-GEOLOGISTS
3675 COPLEY ROAD
AKRON, OH 44321
216-666-2200

56478

SUM-76-11.57

FHWA REGION	STATE	PROJECT

87/104

4/10

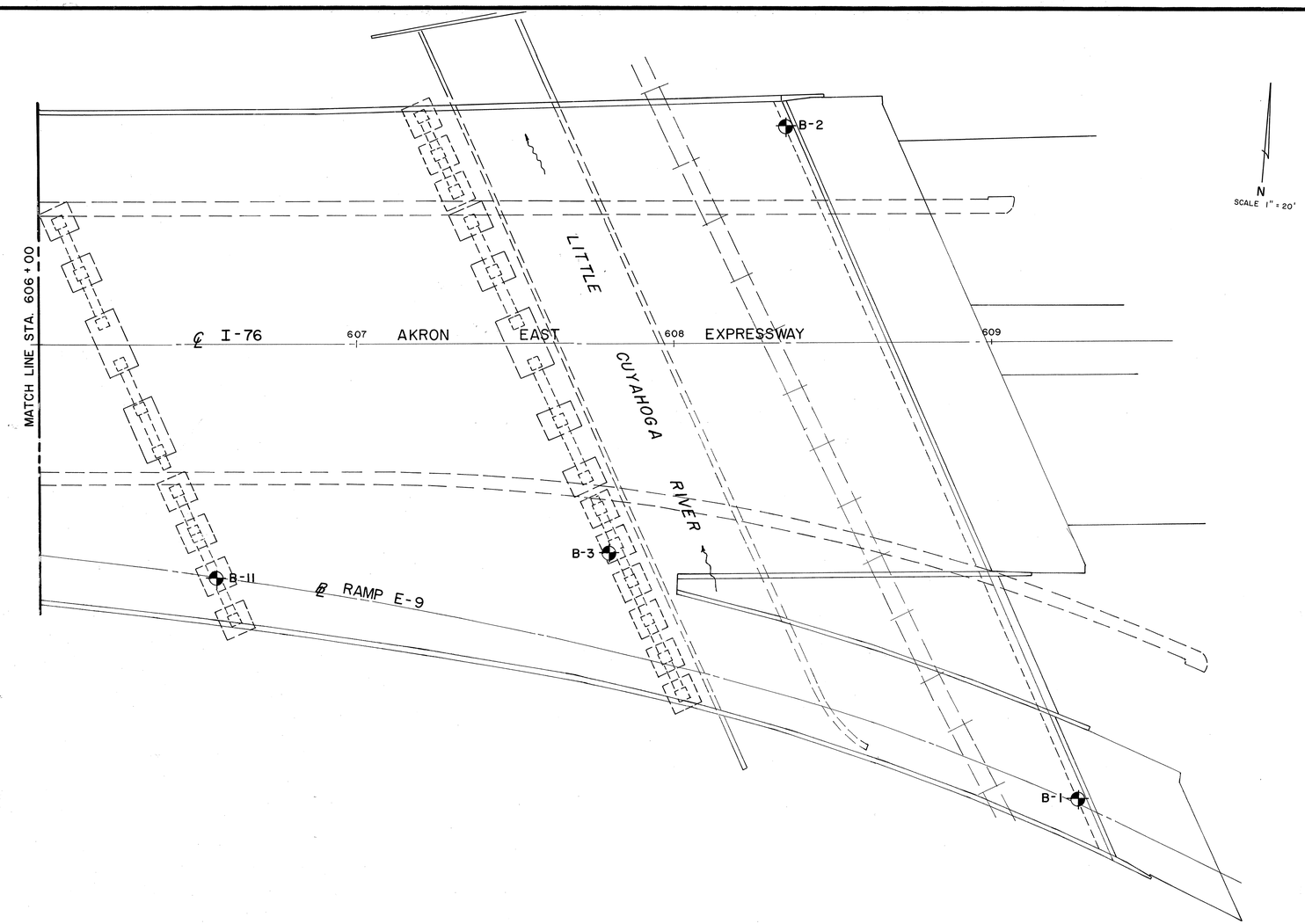

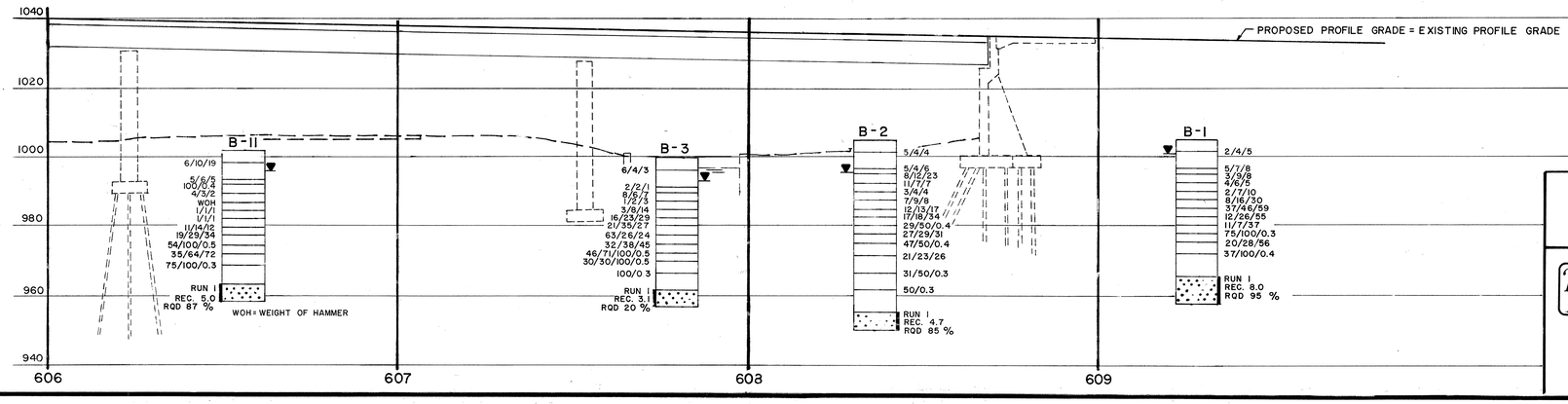

SUBSURFACE INVESTIGATION
SUM-76-12.77
WEST VIADUCT OVER KELLY AVE.
SUMMIT COUNTY, OHIO

R & R International, Inc.
GEOTECHNICAL ENGINEERS-GEOLOGISTS
3675 COPLEY ROAD
AKRON, OH 44321
216-666-2200

56478

SUM-76-11.57

FHWA REGION	STATE	PROJECT

88/104

SOIL PROFILE

5/10

LOG OF BORING

Date Started 3-11-87 Sampler Type Split Spoon Dia. 2.0 Water Elev. 1001.0

Date Completed 3-11-87 Casing: Length -- Dia. ---

Boring No. B-1 Station & Offset Sta. 609 + 24 147' RT. Surface Elev. 1005±

ELEV.	DEPTH	STD. PEN. (N)	REC. Ft.	LOSS Ft.	DESCRIPTION	SAMPLE NO.	SAMPLE TYPE	PHYSICAL CHARACTERISTICS % AGG.	% C. SAND	% F. SAND	% SILT	% CLAY	L.L.	P.L.	P.I.	W.C.	SHTL CLASS.
1005.0	0																
		2-4-5	0.8			1	SS										
	5				Stiff, brown SANDY SILT, little clay and gravel, moist.												
		5-7-8	1.5			2	SS	12.7	3.8	20.8	48.3	14.4	--	--	--	15.1	A-4a
	10	3-9-8	1.0			3	SS	53.4	22.5	10.5	*	13.6	--	--	--	13.1	A-1-a
994.0					Medium dense, gray STONE FRAGMENTS, some sand, trace silt, moist.												
992.5		4-6-5	1.0		Medium dense, gray SILTY SAND, little gravel, trace clay, wet.	4	SS										
990.0	15	2-7-10	1.2		Medium dense, gray CLAYEY SAND, trace gravel, wet.	5	SS										
987.5		8-16-30	1.5		Hard, gray SANDY SILT, little gravel, moist.	6	SS	18.8	11.2	34.2	*	35.8	11.8	9.3	2.5	9.7	A-4a
985.0	20	37-46-59	1.4		Very dense, white SILTY SAND, moist.	7	SS										
982.5		12-26-55	1.5		Very dense, gray GRAVEL AND STONE FRAGMENTS with sand and silt, moist.	8	SS	26.6	10.2	30.1	22.8	10.3	--	--	--	9.8	A-2-4
979.0	25	11-7-37	1.5			9	SS										
		75-100/0.3	1.5			10	SS										
	30	20-28-56	1.5		Hard, gray SANDY SILT, little stone fragments, moist.	11	SS										
971.0		37-100/0.4	1.5			12	SS										
	35				Very dense, brown SILTY SAND, wet.												
965.0	40	RQD 95%	8.0	--	Brown SANDSTONE, unaltered, fine grained, well cemented, hard.	Run 1	NXW										
961.5					Brown SANDSTONE, unaltered, medium grained, well cemented, hard.												
957.0	45				TERMINATION DEPTH 48.0 FEET												
	50																

* SILT AND CLAY COMBINED

LOG OF BORING

Date Started 3-17-87 Sampler Type Split Spoon Dia. 2.0 Water Elev. 995.2

Date Completed 3-17-87 Casing: Length -- Dia. ---

Boring No. B-2 Station & Offset Sta. 608 + 36 69' LT. Surface Elev. 1005±

ELEV.	DEPTH	STD. PEN. (N)	REC. Ft.	LOSS Ft.	DESCRIPTION	SAMPLE NO.	SAMPLE TYPE	PHYSICAL CHARACTERISTICS % AGG.	% C. SAND	% F. SAND	% SILT	% CLAY	L.L.	P.L.	P.I.	W.C.	SHTL CLASS.
1005.0	0																
		5-4-4	0.5			1	SS										
	5				Stiff, brown SANDY SILT, little gravel and stone fragments, moist.												
		5-4-6	1.2			2	SS										
995.0	10	8-12-23	1.5			3	SS	57.9	17.7	12.0	*	12.4	--	--	--	9.9	A-1-a
992.5		11-7-7	1.4		Dense, brown GRAVEL, some sand, trace silt, moist.	4	SS	47.3	15.4	18.8	12.8	5.7	--	--	--	9.1	A-1-b
990.0	15	3-4-4	1.2		Medium dense, brown GRAVEL with sand, little silt, moist.	5	SS										
		7-9-8	1.4		Loose to medium dense, brown SILTY SAND, little gravel, wet to moist.	6	SS										
985.0	20	12-13-17	1.0			7	SS	36.9	8.1	25.4	*	29.6	--	--	--	7.8	A-2-4
982.5		17-18-34	1.5		Dense, gray GRAVEL with sand and silt, moist.	8	SS										
	25	29-50/0.4	0.7			9	SS										
		27-29-31	1.2			10	SS	11.8	11.9	40.9	23.1	12.3	--	--	--	8.0	A-3a
	30	47-50/0.4	0.9			11	SS										
		21-23-26	1.2			12	SS	9.5	20.9	45.9	*	23.7	--	--	--	10.6	A-3a
	35				Very dense, gray SAND, some silt, trace to little gravel, moist.												
		31-50/0.3	1.3			13	SS										
	40																
		50/0.3	0.0			14	SS										
955.0	45																
	50	RQD 85%	4.7	0.3	Tan SANDSTONE, slightly altered, fine grained, well cemented, firm.	Run 1	NXW										
950.0	55				TERMINATION DEPTH 55.0 FEET												

* SILT AND CLAY COMBINED

SUBSURFACE INVESTIGATION
SUM-76-12.77
WEST VIADUCT OVER KELLY AVE.
SUMMIT COUNTY, OHIO

R & R International, Inc.
GEOTECHNICAL ENGINEERS-GEOLOGISTS
3675 COPLEY ROAD
AKRON, OH 44321
216-666-2200

5478

SUM-76-11.57

FHWA REGION	STATE	PROJECT

89/104

6/10

LOG OF BORING

Date Started 3-9-87 Sampler Type Split Spoon Dia. 2.0 Water Elev. 993.2

Date Completed 3-9-87 Casing: Length -- Dia. ---

Boring No. B-3 Station & Offset Sta. 607 + 80 67' RT. Surface Elev. 1000±

ELEV.	DEPTH	STD. PEN. (N)	REC. Ft.	LOSS Ft.	DESCRIPTION	SAMPLE NO.	SAMPLE TYPE	PHYSICAL CHARACTERISTICS % AGG.	% C. SAND	% F. SAND	% SILT	% CLAY	L.L.	P.L.	P.I.	W.C.	SHTL CLASS.
1000.0	0																
		6-4-3	1.2		Medium stiff to soft, brown SANDY SILT, little gravel, moist.	1	SS										
	5																
		2-2-1	0.2			2	SS										
999.0	10	8-6-7	1.0			3	SS	32.8	16.6	21.5	*	29.1	--	--	--	N.T.	A-2-4
987.5		1-2-3	1.4		Medium dense, black GRAVEL with sand and silt, moist.	4	SS										
	15	3-8-14	1.3		Medium stiff to very stiff, black ORGANIC SILT, little sand and rock fragments, moist.	5	SS										
982.5		16-23-29	1.3		Very dense, brown SILTY SAND, trace gravel, moist.	6	SS										
980.0	20	21-35-27	1.2		Very dense, brown GRAVEL AND STONE FRAGMENTS with sand and silt, moist.	7	SS	25.5	13.0	34.9	17.3	9.3	--	--	--	9.3	A-2-4
977.5		63-26-24	0.7			8	SS										
	25	32-38-45	1.2			9	SS	13.7	15.1	43.2	*	28.0	--	--	--	8.5	A-3a
		46-71-100/0.5	1.4			10	SS										
	30	31-30-100/0.5	1.2		Very dense, brown SAND with rock fragments, moist.	11	SS	12.9	26.4	42.1	*	18.6	--	--	--	10.3	A-3a
		100/0.3	0.3			12	SS										
	35																
961.8					Tan SANDSTONE, moderately altered, fine grained, well cemented, hard.	Run 1	NXW										
960.3		ROD 20%	3.1	1.9													
	40				Brown SANDSTONE, moderately altered, conglomerate, well cemented, hard.												
956.8					TERMINATION DEPTH 43.2 FEET												
	45																

* SILT AND CLAY COMBINED
N.T. = NOT TESTED

LOG OF BORING

Date Started 3-9-87 Sampler Type Split Spoon Dia. 2.0 Water Elev. 997.5

Date Completed 3-9-87 Casing: Length -- Dia. ---

Boring No. B-4 Station & Offset Sta. 605 + 98 69' LT. Surface Elev. 1004±

ELEV.	DEPTH	STD. PEN. (N)	REC. Ft.	LOSS Ft.	DESCRIPTION	SAMPLE NO.	SAMPLE TYPE	PHYSICAL CHARACTERISTICS % AGG.	% C. SAND	% F. SAND	% SILT	% CLAY	L.L.	P.L.	P.I.	W.C.	SHTL CLASS.
1004.0	0																
		10-18-23	1.5			1	SS	28.4	21.7	25.9	14.8	9.2	--	--	--	11.3	A-1-b
	5				Dense to very loose, brown GRAVEL AND STONE FRAGMENTS with sand, moist.												
		4-2-2	0.2			2	SS										
	10	1-2-1	0.0			3	SS										
991.5		2-1-1	1.5			4	SS										
	15	2-1-1	1.5			5	SS										
		2-2-3	1.5		Soft to medium stiff, black ORGANIC SILT, trace sand, moist.	6	SS										
983.0	20	2-1-4	1.5			7	SS	31.2	27.8	31.0	*	10.0	--	--	--	41.3	A-1-b
		17-9-13	0.0		Loose to medium dense, brown GRAVEL AND STONE FRAGMENTS with sand, moist to wet.	8	SS										
979.0	25	11-18-11	1.4			9	SS	30.3	13.5	32.3	*	23.9	--	--	--	13.1	A-2-4
976.5		13-18-21	1.5		Medium dense, brown STONE FRAGMENTS with sand and silt, trace clay, moist.	10	SS										
	30	22-25-33	1.5			11	SS	21.8	12.1	39.3	15.3	11.5	--	--	--	8.4	A-3a
		100/0.4	0.4		Dense to very dense, brown SAND, some gravel, little silt, trace clay and sandstone fragments, wet to saturated.	12	SS										
	35																
964.5		100/0.2	0.2			13	SS										
	40	ROD 98%	5.0	0.0		Run 1	NXW										
959.5					Tan SANDSTONE, unaltered, fine grained, well cemented, hard, 0.1 feet clay interbed at 40.5 feet.												
	45				TERMINATION DEPTH 44.5 FEET												

* SILT AND CLAY COMBINED

SUBSURFACE INVESTIGATION
SUM-76-12.77
WEST VIADUCT OVER KELLY AVE.
SUMMIT COUNTY, OHIO

R & R International, Inc.
GEOTECHNICAL ENGINEERS-GEOLOGISTS

SUM-76-11.57

FHWA REGION	STATE	PROJECT

90/104

7/10

LOG OF BORING

Date Started 3-12-87 Sampler Type Split Spoon Dia. 2.0 Water Elev. 994.0

Date Completed 3-12-87 Casing: Length -- Dia. ---

Boring No. B-5 Station & Offset Sta. 605 + 4 58' RT. Surface Elev. 1002±

ELEV.	DEPTH	STD. PEN. (N)	REC. Ft.	LOSS Ft.	DESCRIPTION	SAMPLE NO.	SAMPLE TYPE	PHYSICAL CHARACTERISTICS % AGG.	% C. SAND	% F. SAND	% SILT	% CLAY	L.L.	P.L.	P.I.	W.C.	SHTL CLASS.
1002.0	0																
	5	35-50/0.0	0.5			1	SS										
		50/0.3	0.1		Very dense to medium dense, black SAND,	2	SS										
	10	10-8-11	1.3		some silt, little gravel and slag	3	SS										
		5-4-9	1.0		fragments, little organics, trace iron staining, moist to saturated (fill).	4	SS										
	15	10-5-7	1.0			5	SS										
		7-5-3	1.2			6	SS										
	20	2-1-1	1.5			7	SS	1.9	6.7	42.9	*	48.5	--	--	--	32.0	A-4a
981.0																	
		27-12-12	1.5		Soft, gray SANDY SILT, little clay, wet.	8	SS	48.7	7.8	12.6	25.7	5.2	--	--	--	17.9	A-2-4
978.5																	
	25	22-22-28	1.5		Medium dense, brown and gray STONE FRAGMENTS with sand and silt, moist.	9	SS										
976.0																	
		50/0.5	0.4		Dense, gray GRAVEL AND STONE FRAGMENTS with sand and silt, moist.	10	SS	20.5	18.1	27.4	*	34.0	13.6	9.9	3.7	9.2	A-2-4
972.0	30	33-50/0.4	0.9			11	SS										
		43-50/0.5	0.9		Very dense, gray SAND with sandstone fragments, moist.	12	SS										
	35																
		50/0.4	0.3			13	SS										
962.0	40	RQD 0%	0.6	7.4		Run 1	NXW										
	45				COBBLES AND BOULDERS, glacial erratics (granite, chert, shale).												
949.0	50																
	55																
	60				Dense, gray SAND, little gravel, trace silt, moist.												
		50/0.1	0.0			14	SS										
	65																
	70																

LOG OF BORING

Date Started 3-12-87 Sampler Type Split Spoon Dia. 2.0 Water Elev. 994.0

Date Completed 3-12-87 Casing: Length -- Dia. ---

Boring No. B-5 (Cont.) Station & Offset Sta. 605 + 4 58' RT. Surface Elev. 1002±

ELEV.	DEPTH	STD. PEN. (N)	REC. Ft.	LOSS Ft.	DESCRIPTION	SAMPLE NO.	SAMPLE TYPE	PHYSICAL CHARACTERISTICS % AGG.	% C. SAND	% F. SAND	% SILT	% CLAY	L.L.	P.L.	P.I.	W.C.	SHTL CLASS.
932.0	0																
	75				SAME AS ABOVE												
	80																
	85																
916.0		RQD 65%	3.8	1.2		Run 2	NXW										
	90				Tan SANDSTONE, slightly altered, fine grained, well cemented, hard.												
911.0					TERMINATION DEPTH 91.0 FEET												

* SILT AND CLAY COMBINED

SUBSURFACE INVESTIGATION
SUM-76-12.77
WEST VIADUCT OVER KELLY AVE.
SUMMIT COUNTY, OHIO

R & R International, Inc.
GEOTECHNICAL ENGINEERS · GEOLOGISTS

56478

SUM-76-11.57

FHWA REGION	STATE	PROJECT

91/104

8/10

LOG OF BORING

Date Started 3-18-87 Sampler Type Split Spoon Dia. 2.0 Water Elev. 984.0

Date Completed 3-18-87 Casing: Length -- Dia. ---

Boring No. B-6 Station & Offset Sta. 603 + 73 62' LT. Surface Elev. 1002±

ELEV.	DEPTH	STD. PEN. (N)	REC. Ft.	LOSS Ft.	DESCRIPTION	SAMPLE NO.	SAMPLE TYPE	PHYSICAL CHARACTERISTICS % AGG.	% C. SAND	% F. SAND	% SILT	% CLAY	L.L.	P.L.	P.I.	W.C.	SHTL CLASS.
1002.0	0																
		7-5-4	1.0			1	SS										
	5																
		4-9-12	1.4		Stiff to hard, brown SANDY SILT, little stone fragments, moist.	2	SS										
	10	20-24-29	1.5			3	SS										
		25-50/0.5	1.0			4	SS	18.2	9.2	32.3	*	40.3	--	--	--	9.4	A-4a
	15	39-34-37	1.1			5	SS										
984.5		20-30-35	1.5			6	SS										
	20	20-24-29	1.4		Very dense to dense, gray SILTY SAND, little sandstone fragments, moist.	7	SS										
		17-12-20	1.5			8	SS										
977.0	25	34-50/0.4	1.1			9	SS	10.5	9.5	44.1	*	35.9	--	--	--	7.1	A-4a
974.5		24-36-50/0.3	1.2		Very dense, gray SANDY SILT, trace gravel, moist.	10	SS										
	30	35-36-40	1.5			11	SS										
		50/0.3	0.3			12	SS										
	35				Very dense, gray SILTY SAND, little gravel, moist.												
		50/0.4	0.4			13	SS										
	40																
958.5		39-50/0.5	1.0			14	SS										
	45				Very dense, gray SAND AND GRAVEL, trace silt, wet to saturated.												
		50/0.3	0.3			15	SS										
952.0	50																
	55				Due to heaving sands, split spoon sampling was discontinued. Augered to top of rock.												
	60																
	65																
932.0	70				Auger Refusal at 70.0 Feet.												

TERMINATION DEPTH 70.0 FEET

* SILT AND CLAY COMBINED

LOG OF BORING

Date Started 3-16-87 Sampler Type Split Spoon Dia. 2.0 Water Elev. ---

Date Completed 3-16-87 Casing: Length -- Dia. ---

Boring No. B-7 Station & Offset Sta. 602 + 48 61' RT. Surface Elev. 1005±

ELEV.	DEPTH	STD. PEN. (N)	REC. Ft.	LOSS Ft.	DESCRIPTION	SAMPLE NO.	SAMPLE TYPE	PHYSICAL CHARACTERISTICS % AGG.	% C. SAND	% F. SAND	% SILT	% CLAY	L.L.	P.L.	P.I.	W.C.	SHTL CLASS.
1005.0	0																
		4-11-11	1.2			1	SS										
		9-14-17	1.1			2	SS										
	5				Very stiff, brown SANDY SILT, little gravel and stone fragments, moist.												
		12-12-15	1.5			3	SS	14.4	12.2	26.8	*	46.6	16.0	11.7	4.3	9.0	A-4a
995.0	10	14-17-16	1.4			4	SS										
		17-22-27	1.3			5	SS										
	15	12-21-27	1.4		Dense to very dense, gray SAND, some silt, little sandstone fragments, moist.	6	SS	12.7	10.9	43.6	23.3	9.5	--	--	--	9.0	A-3a
		36-50/0.4	0.9			7	SS										
	20	46-50/0.3	0.6			8	SS										
982.5		44-50/0.3	0.7			9	SS										
	25	44-50/0.3	0.4			10	SS	9.6	10.3	44.1	*	36.0	--	--	--	10.7	A-4a
		50/0.5	0.4		Hard, gray SANDY SILT, little sandstone fragments, moist.	11	SS										
975.0	30	38-50/0.5	1.0			12	SS	68.9	13.4	9.8	*	7.9	--	--	--	9.3	A-1-a
974.0					Very dense, gray GRAVEL AND STONE FRAGMENTS, little sand, trace silt, moist.												
		50/0.5	0.3			13	SS										
	35																
		50-50/0.2	0.3			14	SS										
	40				Very dense, gray SAND, some sandstone fragments and gravel, little silt, moist.												
		50/0.4	0.3			15	SS										
	45																
956.0		RQD 75%	4.5	0.5		Run 1	NXW										
	50				Tan SANDSTONE, moderately altered, fine grained, well cemented, firm.												
951.0																	
	55				TERMINATION DEPTH 54.0 FEET												

* SILT AND CLAY COMBINED

SUBSURFACE INVESTIGATION
SUM-76-12.77
WEST VIADUCT OVER KELLY AVE.
SUMMIT COUNTY, OHIO

R & R International, Inc.
GEOTECHNICAL ENGINEERS-GEOLOGISTS
3675 COPLEY ROAD
AKRON, OH 44321
216-666-2200

SAMPLE

SUM-76-11.57

FHWA REGION	STATE	PROJECT

92/104

9/10

LOG OF BORING

Date Started 3-17-87 Sampler Type Split Spoon Dia. 2.0 Water Elev. 993.0

Date Completed 3-17-87 Casing: Length -- Dia. ---

Boring No. B-8 Station & Offset Sta. 601 + 93 60' LT. Surface Elev. 1005±

ELEV.	DEPTH	STD. PEN. (N)	REC. Ft.	LOSS Ft.	DESCRIPTION	SAMPLE NO.	SAMPLE TYPE	PHYSICAL CHARACTERISTICS % AGG.	% C. SAND	% F. SAND	% SILT	% CLAY	L.L.	P.L.	P.I.	W.C.	SHTL CLASS.
1005.0	0																
		10-8-6	1.0		Medium dense, brown GRAVEL with sand, trace silt, moist.	1	SS	28.9	22.1	40.0	*	9.0	--	--	--	8.2	A-1-a
	5																
996.0		8-16-33	1.5			2	SS										
	10	50/0.1	0.1			3	SS										
					Hard, gray SANDY SILT, little to trace gravel, moist.												
		50/0.1	0.1			4	SS										
990.0	15	19-27-37	1.5			5	SS	14.7	10.6	41.7	22.8	10.2	--	--	--	8.7	A-3a
					Very dense, gray SAND, some silt, little gravel, moist.												
987.5		27-38-50	1.5			6	SS										
	20	50/0.5	0.5			7	SS										
					Hard, gray SANDY SILT, little to trace gravel, moist.												
		50/0.3	0.0			8	SS										
	25	50/0.0	0.0			9	SS										
977.5		50/0.5	0.5			10	SS	22.9	17.6	26.6	*	32.9	12.9	9.2	3.7	8.5	A-2-4
					Very dense, gray GRAVEL with sand and silt, moist.												
975.0	30	50/0.4	0.4			11	SS										
		50/0.5	0.5			12	SS										
	35				Hard, gray SANDY SILT, little gravel and sandstone fragments, wet to moist.												
		50/0.4	0.4			13	SS										
	40																
961.5		RQD 0%	0.3	6.2		Run 1	NXW										
	45																
	50				Tan SANDSTONE, extremely altered, fine grained, poorly cemented, friable.												
	55	RQD 5%	3.0	3.0		Run 2	NXW										
945.0	60				Tan SANDSTONE, moderately altered, fine grained, well cemented, firm.												
944.0					TERMINATION DEPTH 61.0 FEET												

* SILT AND CLAY COMBINED

LOG OF BORING

Date Started 5-22-87 Sampler Type Split Spoon Dia. 2.0 Water Elev. 1000.0

Date Completed 5-22-87 Casing: Length -- Dia. ---

Boring No. B-9 Station & Offset Sta. 600 + 57 62' RT.± Surface Elev. 1005±

ELEV.	DEPTH	STD. PEN. (N)	REC. Ft.	LOSS Ft.	DESCRIPTION	SAMPLE NO.	SAMPLE TYPE	PHYSICAL CHARACTERISTICS % AGG.	% C. SAND	% F. SAND	% SILT	% CLAY	L.L.	P.L.	P.I.	W.C.	SHTL CLASS.
1005.0	0																
		9-15-12	1.0		Medium dense, brown GRAVEL AND STONE FRAGMENTS with sand and silt, wet.	1	SS										
	5																
996.5		7-17-12	1.3			2	SS										
	10	8-10-11	1.5			3	SS										
		5-9-9	1.5		Very stiff, gray SANDY SILT, some sandstone fragments, little clay, moist.	4	SS	26.8	11.8	25.5	*	35.9	--	--	--	9.6	A-4a
	15	4-9-19	1.5			5	SS										
987.5		50/0.4	0.4			6	SS	66.8	13.1	14.6	*	5.5	--	--	--	8.8	A-1-a
					Very dense, gray GRAVEL, wet.												
985.0	20	50/0.5	0.5			7	SS										
		50/0.4	0.4			8	SS										
	25	50/0.2	0.2		Very dense, brown SILTY SAND, trace sandstone fragments, moist.	9	SS										
		50/0.1	0.1			10	SS										
975.0	30	50/0.1	0.1		TERMINATION DEPTH 30.0 FEET	11	SS										

* SILT AND CLAY COMBINED

SUBSURFACE INVESTIGATION
SUM-76-12.77
WEST VIADUCT OVER KELLY AVE.
SUMMIT COUNTY, OHIO

R & R International, Inc.
GEOTECHNICAL ENGINEERS-GEOLOGISTS
3675 COPLEY ROAD
AKRON, OH 44321
216-666-2200

56478

SUM-76-11.57

FHWA REGION	STATE	PROJECT

93/104

10/10

LOG OF BORING

Date Started 3-23-87 Sampler Type Split Spoon Dia. 2.0 Water Elev. 1005.1

Date Completed 3-23-87 Casing: Length -- Dia. ---

Boring No. B-10 Station & Offset Sta. 600 + 56 62' RT. Surface Elev. 1020±

ELEV.	DEPTH	STD. PEN. (N)	REC. Ft.	LOSS Ft.	DESCRIPTION	SAMPLE NO.	SAMPLE TYPE	PHYSICAL CHARACTERISTICS % AGG.	% C. SAND	% F. SAND	% SILT	% CLAY	L.L.	P.L.	P.I.	W.C.	SHTL CLASS.
1020.0	0																
		8-7-8	1.2			1	SS										
	5				Medium dense, brown GRAVEL with sand and silt, moist.												
		6-5-9	1.0			2	SS										
	10	9-12-13	1.3			3	SS	35.6	12.1	27.9	*	24.4	--	--	--	10.4	A-2-4
1008.5		6-6-6	1.4		Stiff to very stiff, brown and gray SANDY SILT, little gravel, moist.	4	SS										
1004.5	15	12-14-11	1.3		Medium dense, gray GRAVEL with sand, trace silt, wet.	5	SS										
1002.5		5-8-9	1.1			6	SS										
	20	19-28-24	1.0		Very stiff to hard, brown SANDY SILT, little gravel, moist.	7	SS	15.2	12.0	16.9	*	55.9	--	--	--	11.5	A-4a
		22-28-21	1.3			8	SS										
995.0	25	16-20-19	1.3			9	SS										
		50/0.5	0.4			10	SS										
	30	26-32-34	1.0		Dense, gray to brown SAND, some silt, trace gravel, moist to wet.	11	SS	4.4	15.8	54.4	*	25.4	--	--	--	11.4	A-3a
		50/0.2	0.2			12	SS										
	35																
981.5		50/0.1	0.0			13	SS										
		RQD	5.0	1.0		Run	NXW										
	40	70%			Brown SANDSTONE, moderately altered, medium grained, well cemented, conglomerate, hard.	1											
975.5	45				TERMINATION DEPTH 44.5 FEET												

* SILT AND CLAY COMBINED

LOG OF BORING

Date Started 3-10-87 Sampler Type Split Spoon Dia. 2.0 Water Elev. 996.0

Date Completed 3-10-87 Casing: Length -- Dia. ---

Boring No. B-11 Station & Offset Sta. 606 + 55 75' RT. Surface Elev. 1002±

ELEV.	DEPTH	STD. PEN. (N)	REC. Ft.	LOSS Ft.	DESCRIPTION	SAMPLE NO.	SAMPLE TYPE	PHYSICAL CHARACTERISTICS % AGG.	% C. SAND	% F. SAND	% SILT	% CLAY	L.L.	P.L.	P.I.	W.C.	SHTL CLASS.
1002.0	0																
		6-10-19	1.5			1	SS										
	5				Very stiff to soft, brown to black SANDY SILT, little brick fragments and slag, trace organics, moist (fill).												
		5-6-5	0.8			2	SS	15.1	17.6	30.3	21.5	15.5	--	--	--	10.3	A-4a
	10	100/0.4	0.3			3	SS										
		4-3-2	0.5			4	SS										
987.0	15	W.O.H.	1.5			5	SS										
		1-1-1	1.5			6	SS										
	20	1-1-1	1.5		Soft, black ORGANIC SILT, moist.	7	SS										
979.5		11-14-12	1.5			8	SS	4.1	14.7	66.5	13.4	1.3	--	--	--	48.9	A-3a
	25	19-29-34	1.5			9	SS										
		54-100/0.5	1.5			10	SS										
	30	35-64-72	1.5		Medium dense to very dense, brown SAND, little silt, trace sandstone fragments, moist to wet.	11	SS	10.2	17.7	48.8	*	23.3	--	--	--	10.4	A-3a
		75-100/0.3	0.8			12	SS										
	35																
963.0		RQD	5.0	0.0		Run	NXW										
	40	87%			Tan SANDSTONE, slightly altered, fine grained, well cemented, hard.	1											
958.0	45				TERMINATION DEPTH 44.0 FEET												

* SILT AND CLAY COMBINED

SUBSURFACE INVESTIGATION
SUM-76-12.77
WEST VIADUCT OVER KELLY AVE.
SUMMIT COUNTY, OHIO

R & R International, Inc.
GEOTECHNICAL ENGINEERS · GEOLOGISTS

56478

SUM-76-11.57

FHWA REGION	STATE	PROJECT

94/104

STRUCTURE SUBSURFACE INVESTIGATION

1/3

GEOLOGY OF THE SITE

THE STRUCTURE SITE IS LOCATED ON THE GLACIATED, HILLY, DEEPLY DISSECTED ALLEGHENY PLATEAU PHYSIOGRAPHIC PROVINCE. THIS AREA WAS GLACIATED BY THE WISCONSIN ICE SHEET WITH DRIFT VARIABLE BUT THIN, GENERALLY AVERAGING LESS THAN 25 FEET. IN THIS AREA, THE GEOLOGY MAY HAVE BEEN ALTERED SOMEWHAT BY THE PLACEMENT OF FILL MATERIAL DURING EXPRESSWAY CONSTRUCTION. GLACIAL DEPOSITS UNDERLYING THE FILL GENERALLY CONSIST OF KAME DEPOSITS COMPOSED OF SANDS AND GRAVELS UNDERLAIN BY GLACIAL TILL WHICH IS COMPOSED OF PRIMARILY SILTS AND CLAYS.

THE SITE IS LOCATED NEAR THE CONTACT OF THE MISSISSIPPIAN ROCKS WITH THOSE OF PENNSYLVANIAN AGE. THE HIGHLANDS ARE UNDERLAIN BY SHARON CONGLOMERATE AND LOWER PORTIONS BY SANDSTONES OF THE LOGAN FORMATION.

EXPLORATION

THE EXPLORATION CONSISTED OF TWO (2) DRIVE SAMPLE-CORE BORINGS, MADE BY MEANS OF CME-75 TRUCK MOUNTED DRILLING RIG USING 3 1/4 INCH I.D. HOLLOW STEM AUGERS, PERFORMED DURING OCTOBER, 1986.

INVESTIGATIONAL FINDINGS

THE TEST BORINGS DISCLOSED A LAYER OF SAND AND GRAVEL FILL MATERIAL UNDERLAIN BY ALTERNATING LAYERS OF SAND AND GRAVEL, SAND, AND SANDY SILT. SANDSTONE WAS ENCOUNTERED AT BOTH TEST LOCATIONS AT AN APPROXIMATE ELEVATION OF 955. FOR SPECIFIC CONDITIONS AT VARIOUS DEPTHS, REFER TO THE INDIVIDUAL TEST BORING LOGS WHICH FORM A PART OF THIS REPORT.

LEGEND

- AUGER BORING LOCATION - PLAN VIEW
- PRESS AND/OR DRIVE SAMPLE AND/OR CORE BORING LOCATION - PLAN VIEW
- TR — TOP OF ROCK
- CAPPED PILE
- FOOTING
- FOOTING ON PILE
- HORIZONTAL BAR ON BORING LOG INDICATES THE DEPTH THE SAMPLE WAS TAKEN
- X/Y/Z — FIGURES BESIDE THE BORING LOG IN PROFILE INDICATE THE NUMBER OF BLOWS FOR STANDARD PENETRATION TEST
  - X = NO. OF BLOWS FOR FIRST 6"
  - Y = NO. OF BLOWS FOR SECOND 6"
  - Z = NO. OF BLOWS FOR THIRD 6"
- W — INDICATES FREE WATER ELEVATION
- INDICATES STATIC WATER ELEVATION

SYMBOLS OF ROCK TYPES

- COAL
- WEATHERED MUDSTONE
- MUDSTONE
- WEATHERED SHALE
- SHALE
- CLAYSTONE
- SILTSTONE
- WEATHERED SANDSTONE
- SANDSTONE
- LEACHED DOLOMITE
- DOLOMITE
- LEACHED LIMESTONE
- LIMESTONE
- BOULDERS or COBBLES

GENERAL INFORMATION

Drive sample / Press sample / Core borings

Drive sample borings are made by means of a mechanically-powered rotary-type drilling machine, employing a 2" O.D., 1-3/8" I.D. split spoon sampler, at 2.5 and/or 5-foot depth intervals, driven by means of a 140 lb. drop hammer with a free fall of 30". The number of blows required to drive the sampler 18" is considered the standard penetration test.

Drive/press borings are made by means of a mechanically-powered rotary-type drilling machine, employing a 2" O.D., 1-3/8" I.D. split spoon sampler, and 3" O.D. thin wall press sampler. The press sampler is advanced by continuous uniform pressure, applied by the drilling machine.

Core borings are made by means of a mechanically-powered rotary-type drilling machine, employing a NXM core barrel with industrial diamond cutting head.

The boring log sheets display a graphic plot of the information obtained including depth and elevation of the sample, type of sample, the standard penetration test readings in three 6-inch increments, depth and elevation of press samples, field number assigned to sample, sample description - based on laboratory tests utilizing the Casagrande AC classification system - and gradation, plasticity and moisture determinations. Results of strength and consolidation testing, if performed on undisturbed samples, will appear graphically on separate enclosures. Rock samples are displayed on the log sheets including depth and elevation of the sample, amount of recovery and a visual classification based on type, color, degree of hardness, grain size, deterioration, bedding, acid reaction and other qualifying factors.

At depths where materials are bouldery or gravelly to the extent that the sampler can not be utilized, a wash sample is procured and visually classified, in order to determine the general characteristics of the material. These samples are not considered sufficiently representative to warrant laboratory testing.

PARTICLE SIZE DEFINITIONS

Boulders	Cobbles	Gravel	Coarse Sand	Fine Sand	Silt	Clay
12"	3"	2.0mm (No. 10 sieve)	0.42mm (No. 40 sieve)		0.074mm (No. 200 sieve)	0.005mm

NOTE - ALL AVAILABLE SOIL AND BEDROCK INFORMATION WHICH CAN BE CONVENIENTLY SHOWN ON THE STRUCTURE FOUNDATION INVESTIGATION SHEETS HAS BEEN SO REPORTED. ADDITIONAL SUBSURFACE INVESTIGATIONS MAY HAVE BEEN MADE TO STUDY SOME SPECIAL ASPECT OF THE PROJECT. COPIES OF THIS DATA, IF ANY, MAY BE INSPECTED IN THE DISTRICT DEPUTY DIRECTOR'S OFFICE, THE BUREAU OF TESTS AT 1600 WEST BROAD STREET, THE PAVEMENT AND SOILS SECTION OF THE BUREAU OF LOCATION AND DESIGN OR IN THE BRIDGE BUREAU AT 25 SOUTH FRONT STREET.

SUBSURFACE INVESTIGATION
SUM-76-1296
OVER MARTHA AVENUE
SUMMIT COUNTY, OHIO

R & R International, Inc.
GEOTECHNICAL ENGINEERS - GEOLOGISTS
AKRON, OHIO 44321

SUM-76-11.57

FHWA REGION	STATE	PROJECT

95/104

2/3

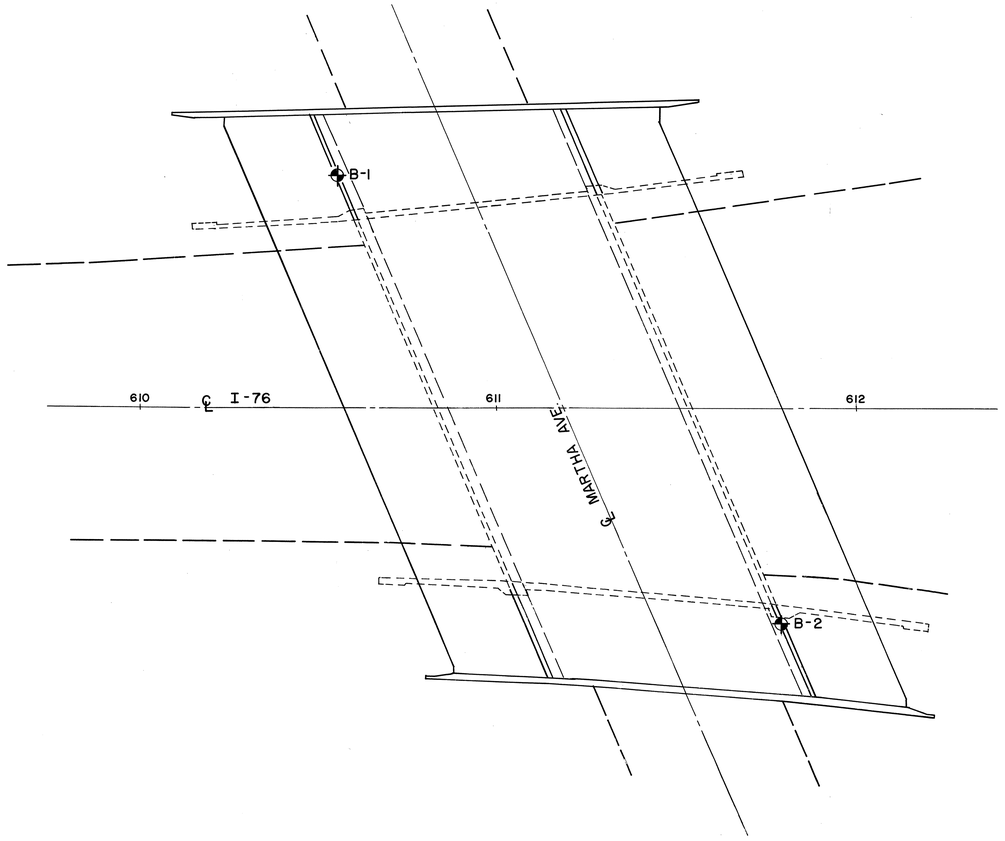

N
SCALE 1"=20'

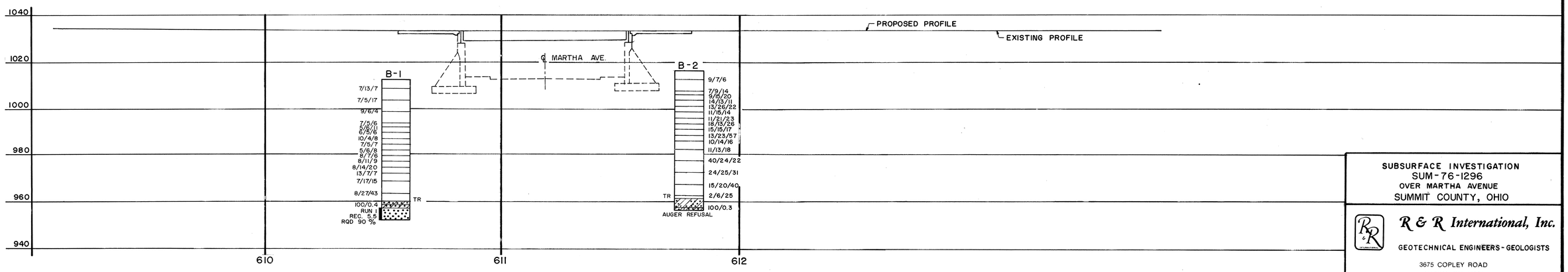

SUBSURFACE INVESTIGATION
SUM-76-1296
OVER MARTHA AVENUE
SUMMIT COUNTY, OHIO

R & R International, Inc.
GEOTECHNICAL ENGINEERS-GEOLOGISTS
3675 COPLEY ROAD
AKRON, OH 44321
216-666-2200

55478

SUM-76-11.57

FHWA REGION	STATE	PROJECT

96/104

3/3

LOG OF BORING

Date Started 10-28-86 Sampler Type Split Spoon Dia. 2.0 Water Elev. ---

Date Completed 10-29-86 Casing: Length -- Dia. ---

Boring No. B-1 Station & Offset Sta. 610 + 57 66' LT. Surface Elev. 1012.6

ELEV.	DEPTH	STD. PEN. (N)	REC. Ft.	LOSS Ft.	DESCRIPTION	SAMPLE NO.	SAMPLE TYPE	PHYSICAL CHARACTERISTICS % AGG.	% C. SAND	% F. SAND	% SILT	% CLAY	L.L.	P.L.	P.I.	W.C.	SHTL CLASS.
1012.6	0																
1012.1					TOPSOIL												
		7-13-7	1.4			1	SS										
	5																
		7-5-17	0.6		Medium dense, brown SAND AND GRAVEL, trace silt, trace brick fragments, moist (Fill).	2	SS										
	10																
		9-6-4	1.3			3	SS	23.8	33.2	38.8	*	4.2	--	--	--	8.1	A-1-b
998.1	15																
					Medium dense, brown SAND, some gravel, trace silt, moist (Fill).												
		7-5-6	1.5			4	SS	28.7	16.5	50.5	*	4.3	--	--	--	6.3	A-3
	20	5-6-11	1.5			5	SS	59.8	24.7	10.3	*	5.2	--	--	--	5.4	A-1-a
992.1																	
		6-5-6	1.2		Medium dense, brown SAND AND GRAVEL, trace silt, trace brick fragments, moist (Fill).	6	SS										
988.6																	
	25	10-4-8	1.5			7	SS	18.1	30.3	46.7	*	4.9	--	--	--	17.0	A-3
		7-5-7	1.5			8	SS	22.8	29.2	38.7	*	9.3	--	--	--	16.9	A-1-b
	30	5-6-8	1.5			9	SS	3.6	34.6	57.9	*	3.9	--	--	--	19.4	A-3
		8-7-6	1.5		Medium dense, brown SAND AND GRAVEL, trace silt, moist.	10	SS	29.1	47.4	19.9	*	3.6	--	--	--	13.4	A-1-b
	35	8-11-9	1.5			11	SS	56.8	30.8	12.1	*	0.3	--	--	--	11.9	A-1-a
		8-14-20	1.5			12	SS										
973.1	40	13-7-7	1.5			13	SS	8.3	38.8	47.0	*	5.9	--	--	--	19.4	A-3
		7-17-15	0.8		Medium dense, brown SAND, trace gravel, trace to little silt, moist.	14	SS	6.1	21.5	57.8	*	14.6	--	--	--	21.4	A-3a
	45																
		8-27-43	1.5			15	SS										
963.1	50				Hard, gray SANDY SILT, trace gravel, moist.												
960.6																	
		100/0.4	0.0		Tan SANDSTONE, highly altered, friable.	16	SS										
957.6	55	RQD 90%	5.5	--	AUGER REFUSAL AT 55.0 FEET	Run 1	NXM										
					Tan SANDSTONE, unaltered, hard, medium grained, massive, Sharon Conglomerate interbed 58.5' - 59.0'.												
952.1	60				TERMINATION DEPTH 60.5 FEET												

* SILT AND CLAY COMBINED

LOG OF BORING

Date Started 10-28-86 Sampler Type Split Spoon Dia. 2.0 Water Elev. ---

Date Completed 10-29-86 Casing: Length -- Dia. ---

Boring No. B-2 Station & Offset Sta. 611 + 77 81' RT. Surface Elev. 1015.9

ELEV.	DEPTH	STD. PEN. (N)	REC. Ft.	LOSS Ft.	DESCRIPTION	SAMPLE NO.	SAMPLE TYPE	PHYSICAL CHARACTERISTICS % AGG.	% C. SAND	% F. SAND	% SILT	% CLAY	L.L.	P.L.	P.I.	W.C.	SHTL CLASS.
1015.9	0																
1015.4					TOPSOIL												
		9-7-6	0.8			1	SS										
	5																
		7-9-14	0.8			2	SS	34.1	37.3	24.9	*	3.7	--	--	--	4.3	A-1-b
	10	9-15-20	0.9		Medium dense to dense, brown SAND AND GRAVEL, trace silt, moist (Fill).	3	SS										
		14-13-11	1.0			4	SS	38.1	41.2	16.0	*	4.7	--	--	--	3.8	A-1-b
	15	13-26-22	1.2			5	SS	20.8	42.6	29.9	*	6.7	--	--	--	3.8	A-1-b
		11-15-14	0.8			6	SS	24.7	34.2	33.8	*	7.3	--	--	--	4.6	A-1-b
995.4	20	11-21-23	1.1			7	SS										
		18-13-26	1.3			8	SS	8.3	11.6	33.6	*	46.5	--	--	--	16.8	A-4a
	25	15-15-17	0.9		Hard, brown SANDY SILT, trace gravel, moist.	9	SS	7.3	6.6	12.8	*	73.3	22.4	15.5	6.9	14.4	A-4a
		13-23-57	1.5			10	SS										
985.9	30	10-14-16	1.3			11	SS	46.1	35.8	15.0	*	3.1	--	--	--	12.7	A-1-b
		11-13-18	1.2			12	SS	46.8	30.5	16.9	*	5.8	--	--	--	11.3	A-1-b
	35				Dense, brown SAND AND GRAVEL, trace silt, moist.												
		40-24-22	1.5			13	SS										
973.9	40																
		24-25-31	1.5			14	SS	9.9	11.8	29.4	*	48.9	22.0	13.2	8.8	10.4	A-4a
	45																
		15-20-40	0.8		Hard, gray SANDY SILT, trace gravel, moist.	15	SS										
	50																
		2-6-25	0.6			16	SS	1.5	16.9	42.2	*	39.4	--	--	--	13.9	A-4a
961.4	55				Tan SANDSTONE, highly altered, friable.												
		100/0.3	0.3		AUGER REFUSAL AT 60.0 FEET	17	SS										
955.9	60				TERMINATION DEPTH 60.0 FEET												

* SILT AND CLAY COMBINED

SUBSURFACE INVESTIGATION
SUM-76-1296
OVER MARTHA AVENUE
SUMMIT COUNTY, OHIO

R & R International, Inc.
GEOTECHNICAL ENGINEERS · GEOLOGISTS

56478

SUM-76-11.57

FHWA REGION	STATE	PROJECT

97/104

STRUCTURE SUBSURFACE INVESTIGATION

1/4

GEOLOGY OF THE SITE

THE STRUCTURE SITE IS LOCATED ON THE GLACIATED, HILLY, DEEPLY DISSECTED ALLEGHENY PLATEAU PHYSIOGRAPHIC PROVINCE. THIS AREA WAS GLACIATED BY THE WISCONSIN ICE SHEET WITH DRIFT VARIABLE BUT THIN, GENERALLY AVERAGING LESS THAN 25 FEET. IN THIS AREA, THE GEOLOGY MAY HAVE BEEN ALTERED SOMEWHAT BY THE PLACEMENT OF FILL MATERIAL DURING EXPRESSWAY CONSTRUCTION. GLACIAL DEPOSITS UNDERLYING THE FILL GENERALLY CONSIST OF KAME DEPOSITS COMPOSED OF SANDS AND GRAVELS UNDERLAIN BY GLACIAL TILL WHICH IS COMPOSED OF PRIMARILY SILTS AND CLAYS.

THE SITE IS LOCATED NEAR THE CONTACT OF THE MISSISSIPPIAN ROCKS WITH THOSE OF PENNSYLVANIAN AGE. THE HIGHLANDS ARE UNDERLAIN BY SHARON CONGLOMERATE AND LOWER PORTIONS BY SANDSTONES OF THE LOGAN FORMATION.

EXPLORATION

THE EXPLORATION CONSISTED OF TWO DRIVE SAMPLE-CORE BORINGS MADE BY MEANS OF A CME-55 TRUCK MOUNTED DRILLING RIG USING CONVENTIONAL 3.25 INCH I.D. HOLLOW STEM AUGERS AND A NX SIZE CORE BARREL. THE TEST BORINGS WERE PERFORMED DURING AUGUST, 1986.

INVESTIGATIONAL FINDINGS

THE TEST BORINGS DISCLOSED A LAYER OF SAND AND GRAVEL FILL MATERIAL, CLASSIFIED AS A-1-A AND A-1-B, UNDERLAIN BY ALTERNATING LAYERS OF NATURALLY OCCURRING CLAYEY SILT, SILTY SAND, AND SAND AND GRAVEL, CLASSIFIED AS A-6A, A-4A, AND A-1-A OR A-1-B, RESPECTFULLY. THE SOIL DEPOSITS ARE UNDERLAIN BY A THIN LAYER OF FINE GRAINED SANDSTONE UNDERLAIN BY COARSE GRAINED SANDSTONE BELONGING TO THE SHARON CONGLOMERATE FORMATION.

LEGEND

- AUGER BORING LOCATION - PLAN VIEW
- PRESS AND/OR DRIVE SAMPLE AND/OR CORE BORING LOCATION - PLAN VIEW
- TR — TOP OF ROCK
- CAPPED PILE
- FOOTING
- FOOTING ON PILE
- HORIZONTAL BAR ON BORING LOG INDICATES THE DEPTH THE SAMPLE WAS TAKEN
- X/Y/Z — FIGURES BESIDE THE BORING LOG IN PROFILE INDICATE THE NUMBER OF BLOWS FOR STANDARD PENETRATION TEST
  - X = NO. OF BLOWS FOR FIRST 6"
  - Y = NO. OF BLOWS FOR SECOND 6"
  - Z = NO. OF BLOWS FOR THIRD 6"
- W — INDICATES FREE WATER ELEVATION
- INDICATES STATIC WATER ELEVATION

SYMBOLS OF ROCK TYPES

- COAL
- WEATHERED MUDSTONE
- MUDSTONE
- WEATHERED SHALE
- SHALE
- CLAYSTONE
- SILTSTONE
- WEATHERED SANDSTONE
- SANDSTONE
- LEACHED DOLOMITE
- DOLOMITE
- LEACHED LIMESTONE
- LIMESTONE
- BOULDERS or COBBLES

GENERAL INFORMATION

Drive sample / Press sample / Core borings

Drive sample borings are made by means of a mechanically-powered rotary-type drilling machine, employing a 2" O.D., 1-3/8" I.D. split spoon sampler, at 2.5 and/or 5-foot depth intervals, driven by means of a 140 lb. drop hammer with a free fall of 30". The number of blows required to drive the sampler 18" is considered the standard penetration test.

Drive/press borings are made by means of a mechanically-powered rotary-type drilling machine, employing a 2" O.D., 1-3/8" I.D. split spoon sampler, and 3" O.D. thin wall press sampler. The press sampler is advanced by continuous uniform pressure, applied by the drilling machine.

Core borings are made by means of a mechanically-powered rotary-type drilling machine, employing a NXM core barrel with industrial diamond cutting head.

The boring log sheets display a graphic plot of the information obtained including depth and elevation of the sample, type of sample, the standard penetration test readings in three 6-inch increments, depth and elevation of press samples, field number assigned to sample, sample description - based on laboratory tests utilizing the Casagrande AC classification system - and gradation, plasticity and moisture determinations. Results of strength and consolidation testing, if performed on undisturbed samples, will appear graphically on separate enclosures. Rock samples are displayed on the log sheets including depth and elevation of the sample, amount of recovery and a visual classification based on type, color, degree of hardness, grain size, deterioration, bedding, acid reaction and other qualifying factors.

At depths where materials are bouldery or gravelly to the extent that the sampler can not be utilized, a wash sample is procured and visually classified, in order to determine the general characteristics of the material. These samples are not considered sufficiently representative to warrant laboratory testing.

PARTICLE SIZE DEFINITIONS

12"	3"	2.0mm		0.42mm	0.074mm	0.005mm	
Boulders	Cobbles	Gravel	Coarse Sand		Fine Sand	Silt	Clay
		No. 10 sieve		No. 40 sieve	No. 200 sieve		

NOTE - ALL AVAILABLE SOIL AND BEDROCK INFORMATION WHICH CAN BE CONVENIENTLY SHOWN ON THE STRUCTURE FOUNDATION INVESTIGATION SHEETS HAS BEEN SO REPORTED. ADDITIONAL SUBSURFACE INVESTIGATIONS MAY HAVE BEEN MADE TO STUDY SOME SPECIAL ASPECT OF THE PROJECT. COPIES OF THIS DATA, IF ANY, MAY BE INSPECTED IN THE DISTRICT DEPUTY DIRECTOR'S OFFICE, THE BUREAU OF TESTS AT 1600 WEST BROAD STREET, THE PAVEMENT AND SOILS SECTION OF THE BUREAU OF LOCATION AND DESIGN OR IN THE BRIDGE BUREAU AT 25 SOUTH FRONT STREET.

SUBSURFACE INVESTIGATION
SUM-76-13.03
RAMP E-10 BRIDGE
SUMMIT COUNTY, OHIO

R & R International, Inc.
GEOTECHNICAL ENGINEERS-GEOLOGISTS
AKRON, OHIO 44321

SUM-76-11.57

FHWA REGION	STATE	PROJECT

98/104

2/4

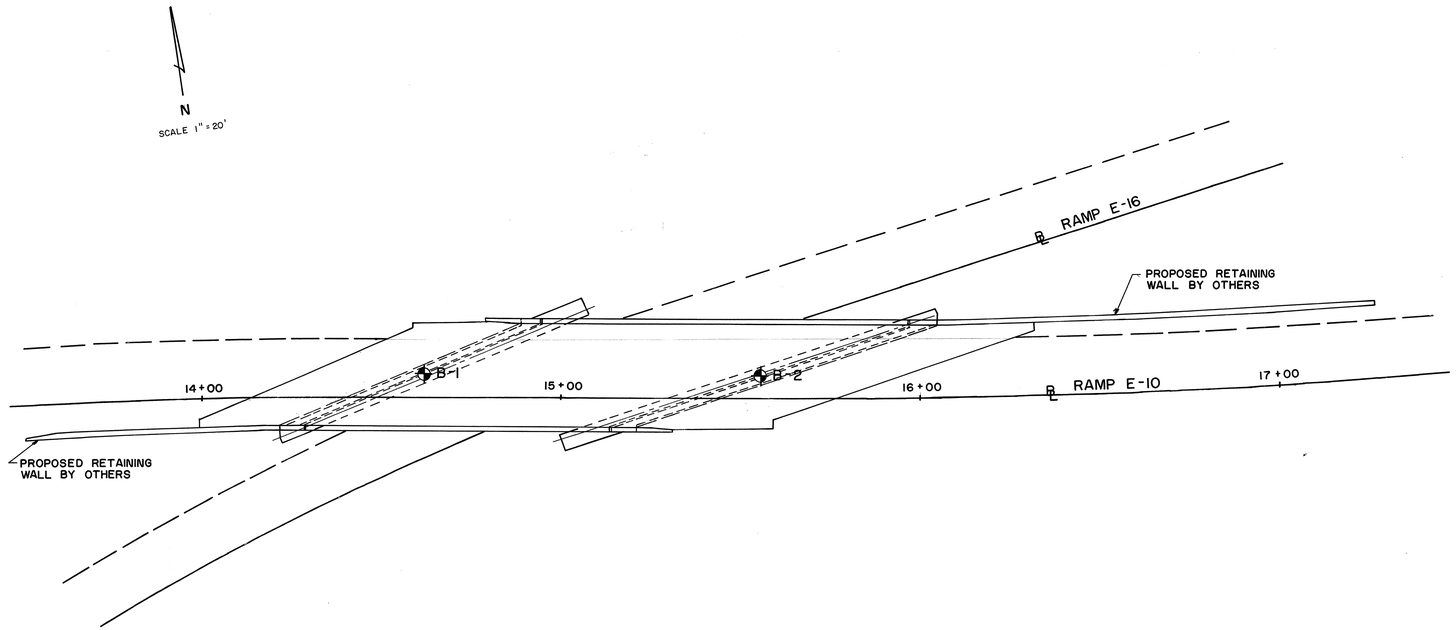

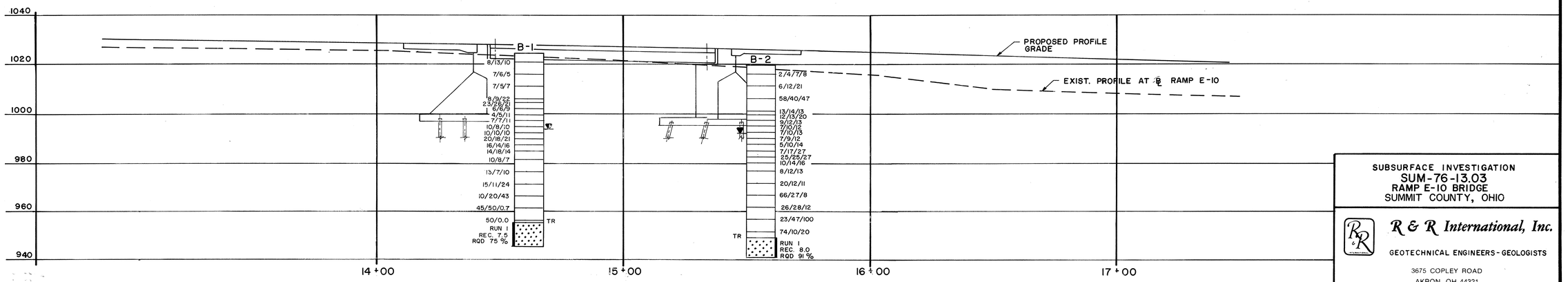

SUBSURFACE INVESTIGATION
SUM-76-13.03
RAMP E-10 BRIDGE
SUMMIT COUNTY, OHIO

R & R International, Inc.
GEOTECHNICAL ENGINEERS-GEOLOGISTS
3675 COPLEY ROAD
AKRON, OH 44321
216-666-2200

564/78

SUM-76-11.57

FHWA REGION	STATE	PROJECT

99/104

3/4

LOG OF BORING

Date Started 8-25-86 Sampler Type Split Spoon Dia. 2.0 Water Elev. 994.4

Date Completed 8-25-86 Casing: Length -- Dia. ---

Boring No. B-1 Station & Offset Sta. 14 + 62 7' LT. Surface Elev. 1025.4

ELEV.	DEPTH	STD. PEN. (N)	REC. Ft.	LOSS Ft.	DESCRIPTION	SAMPLE NO.	SAMPLE TYPE	PHYSICAL CHARACTERISTICS % AGG.	% C.SAND	% F.SAND	% SILT	% CLAY	L.L.	P.L.	P.I.	W.C.	SHTL CLASS.
1025.4	0																
1024.8					TOPSOIL												
		8-13-10	1.2			1	SS										
	5																
		7-6-5	1.2			2	SS										
	10																
		7-5-7	1.2		Medium dense to dense, brown SAND AND GRAVEL, little silt, moist (Fill).	3	SS	63.7	13.4	12.5	*	10.4	--	--	--	5.7	A-1-a
	15																
		8-9-22	1.3			4	SS										
	20	23-26-21	1.2			5	SS										
		6-6-9	1.2			6	SS										
	25	4-5-11	1.2			7	SS	49.8	27.0	15.4	*	7.8	--	--	--	7.8	A-1-b
		7-7-11	1.2			8	SS										
997.4					Very stiff, brown to gray CLAYEY SILT, some gravel, moist.												
995.4	30	10-8-10	1.2			9	SS										
		10-10-10	1.4		Medium dense, brown SILTY SAND, trace gravel, moist.	10	SS	2.8	0.8	5.6	*	90.8	36.1	23.5	12.6	28.7	A-6a
991.9																	
990.4	35	20-18-21	1.4		Very stiff, gray CLAYEY SILT, moist.	11											
		16-14-16	1.5			12	SS	36.4	25.4	30.6	*	7.6	--	--	--	10.1	A-1-b
	40	14-18-14	1.5			13	SS										
		10-8-7	1.5			14	SS	39.2	25.0	25.4	*	10.4	--	--	--	9.5	A-1-b
	45				Dense to medium dense, brown SAND AND GRAVEL, trace silt, moist.												
		13-7-10	1.5			15	SS										
	50																
		15-11-24	1.5			16	SS										
970.6																	
	55				Hard, gray CLAYEY SILT, little gravel, moist.												
966.9		10-20-43	1.2			17	SS	13.0	28.5	12.5	*	46.0	16.4	12.8	3.6	10.0	A-4a
	60																
		45-50/0.7	0.7		Hard, gray to brown SANDY SILT, little gravel, moist.	18	SS										
	65																
		50/0.0	0.0			19	SS										
955.9		ROD 75%	7.5	2.5		Run 1	NXM										
	70																

LOG OF BORING

Date Started 8-25-86 Sampler Type Split Spoon Dia. 2.0 Water Elev. 994.4

Date Completed 8-25-86 Casing: Length -- Dia. ---

Boring No. B-1 (Cont.) Station & Offset Sta. 14 + 62 7' LT. Surface Elev. 1025.4

ELEV.	DEPTH	STD. PEN. (N)	REC. Ft.	LOSS Ft.	DESCRIPTION	SAMPLE NO.	SAMPLE TYPE	PHYSICAL CHARACTERISTICS % AGG.	% C.SAND	% F.SAND	% SILT	% CLAY	L.L.	P.L.	P.I.	W.C.	SHTL CLASS.
955.4	0																
953.4					Tan SANDSTONE, unaltered, fine grained, hard, massive.												
	75				Brown SANDSTONE, unaltered, fine to very coarse grained, hard, massive (Sharon Conglomerate).												
945.9	80				TERMINATION DEPTH 79.5 FEET												

* SILT AND CLAY COMBINED

SUBSURFACE INVESTIGATION
SUM-76-13.03
RAMP E-10 BRIDGE
SUMMIT COUNTY, OHIO

R & R International, Inc.
GEOTECHNICAL ENGINEERS - GEOLOGISTS

SUM-76-11.57

FHWA REGION	STATE	PROJECT

100
104

4
4

LOG OF BORING

Date Started 8-21-86 Sampler Type Split Spoon Dia. 2.0 Water Elev. 992.1

Date Completed 8-21-86 Casing: Length -- Dia. ---

Boring No. B-2 Station & Offset Sta. 15 + 54 7' LT. Surface Elev. 1020.1

ELEV.	DEPTH	STD. PEN. (N)	REC. Ft.	LOSS Ft.	DESCRIPTION	SAMPLE NO.	SAMPLE TYPE	PHYSICAL CHARACTERISTICS % AGG.	% C. SAND	% F. SAND	% SILT	% CLAY	L.L.	P.L.	P.I.	W.C.	SHTL CLASS.
1020.1	0																
1019.6					TOPSOIL												
		2-4-7-8	1.3			1	SS										
	5																
		6-12-21	1.4			2	SS	51.0	27.7	13.2	*	8.1	--	--	--	4.3	A-1-a
	10				Medium dense to very dense, brown SAND AND GRAVEL, little sandstone fragments, trace silt, moist (Fill).												
		58-40-47	1.5			3	SS										
	15																
		13-14-13	1.5			4	SS	0.1	45.0	51.0	*	3.9	--	--	--	4.1	A-3
	20	12-13-20	1.0			5	SS										
997.6		9-12-13	1.5			6	SS										
	25	7-10-12	1.5			7	SS	4.4	4.8	5.8	*	85.0	28.5	18.5	10.0	20.5	A-4a
		7-10-13	1.5		Very stiff, gray CLAYEY SILT, trace sand, moist.	8	SS										
990.1	30	7-9-12	1.5			9	SS	22.4	30.7	18.8	*	28.1	--	--	--	10.4	A-3a
		5-10-14	1.5			10	SS										
	35	7-17-27	1.5		Medium dense to very dense, brown SILTY SAND, some gravel, moist.	11	SS										
		25-25-27	0.9			12	SS										
980.1	40	10-14-16	1.5			13	SS	20.1	11.3	24.0	*	44.6	--	--	--	13.5	A-4a
976.6		8-12-13	1.5		Hard, gray SILT AND CLAY, some sand, little gravel, moist.	14	SS										
	45																
		20-12-11	1.5			15	SS										
	50																
		66-27-8	1.2		Medium dense to dense SAND AND GRAVEL, little silt, moist to wet.	16	SS										
	55																
		26-28-12	1.5			17	SS	36.9	25.4	18.5	*	19.2	--	--	--	11.6	A-1-b
	60																
956.6		23-47-100	1.5			18	SS	13.7	8.4	10.1	*	67.8	22.6	15.9	6.7	12.0	A-4a
	65																
		74-10-20	1.5		Hard, gray SILT AND CLAY, little sand, trace gravel, moist to wet.	19	SS										
950.6	70																

LOG OF BORING

Date Started 8-21-86 Sampler Type Split Spoon Dia 2.0 Water Elev. 992.1

Date Completed 8-21-86 Casing: Length -- Dia ---

Boring No. B-2 (Cont.) Station & Offset Sta. 15 + 54 7' LT. Surface Elev. 1020.1

ELEV.	DEPTH	STD. PEN. (N)	REC. Ft.	LOSS Ft.	DESCRIPTION	SAMPLE NO.	SAMPLE TYPE	PHYSICAL CHARACTERISTICS % AGG.	% C. SAND	% F. SAND	% SILT	% CLAY	L.L.	P.L.	P.I.	W.C.	SHTL CLASS.
950.1	0																
949.1		ROD 91%	8.0		Dense, brown SILTY SAND, trace sandstone fragments, moist.	Run 1	NXM										
	75				Brown SANDSTONE, unaltered, fine to coarse grained, with cobbles, hard, massive (Sharon Conglomerate).												
941.1	80				TERMINATION DEPTH 79.0 FEET												

* SILT AND CLAY COMBINED

SUBSURFACE INVESTIGATION
SUM-76-13.03
RAMP E-10 BRIDGE
SUMMIT COUNTY, OHIO

R & R International, Inc.
GEOTECHNICAL ENGINEERS - GEOLOGISTS
3675 COPLEY ROAD
AKRON, OH 44321
216-666-2200

6/4/8

SUM-76-11.57

FHWA REGION	STATE	PROJECT

101
104

STRUCTURE SUBSURFACE INVESTIGATION

1
4

GEOLOGY OF THE SITE

THE STRUCTURE SITE IS LOCATED ON THE GLACIATED, HILLY, DEEPLY DISSECTED ALLEGHENY PLATEAU PHYSIOGRAPHIC PROVINCE. THIS AREA WAS GLACIATED BY THE WISCONSIN ICE SHEET WITH DRIFT VARIABLE BUT THIN, GENERALLY AVERAGING LESS THAN 25 FEET. IN THIS AREA, THE GEOLOGY MAY HAVE BEEN ALTERED SOMEWHAT BY THE PLACEMENT OF FILL MATERIAL DURING EXPRESSWAY CONSTRUCTION. GLACIAL DEPOSITS UNDERLYING THE FILL GENERALLY CONSIST OF KAME DEPOSITS COMPOSED OF SANDS AND GRAVELS UNDERLAIN BY GLACIAL TILL WHICH IS COMPOSED OF PRIMARILY SILTS AND CLAYS.

THE SITE IS LOCATED NEAR THE CONTACT OF THE MISSISSIPPIAN ROCKS WITH THOSE OF PENNSYLVANIAN AGE. THE HIGHLANDS ARE UNDERLAIN BY SHARON CONGLOMERATE AND LOWER PORTIONS BY SANDSTONES OF THE LOGAN FORMATION.

EXPLORATION

THE EXPLORATION CONSISTED OF TWO (2) DRIVE SAMPLE-CORE BORINGS, MADE BY MEANS OF CME-75 TRUCK MOUNTED DRILLING RIG USING 3 1/4 INCH I.D. HOLLOW STEM AUGERS, PERFORMED DURING OCTOBER, 1986.

INVESTIGATIONAL FINDINGS

THE TEST BORINGS DISCLOSED A THIN LAYER OF TOPSOIL UNDERLAIN BY A LAYER OF FILL MATERIAL COMPOSED OF SAND AND GRAVEL WITH MINOR QUANTITIES OF SILT. THE FILL MATERIAL IS UNDERLAIN BY A LAYER OF MEDIUM STIFF, GRAY SILT, CLASSIFIED AS A-4B, FOLLOWED BY A LAYER OF SAND AND GRAVEL DEPOSITS, CLASSIFIED AS A-1-A, A-1-B, AND A-3A. FOR SPECIFIC CONDITIONS AT VARIOUS DEPTHS, REFER TO THE INDIVIDUAL TEST BORING LOGS WHICH FORM A PART OF THIS REPORT.

LEGEND

- AUGER BORING LOCATION - PLAN VIEW
- PRESS AND/OR DRIVE SAMPLE AND/OR CORE BORING LOCATION - PLAN VIEW
- TR — TOP OF ROCK
- CAPPED PILE
- FOOTING
- FOOTING ON PILE
- HORIZONTAL BAR ON BORING LOG INDICATES THE DEPTH THE SAMPLE WAS TAKEN
- X/Y/Z — FIGURES BESIDE THE BORING LOG IN PROFILE INDICATE THE NUMBER OF BLOWS FOR STANDARD PENETRATION TEST
  - X = NO. OF BLOWS FOR FIRST 6"
  - Y = NO. OF BLOWS FOR SECOND 6"
  - Z = NO. OF BLOWS FOR THIRD 6"
- W — INDICATES FREE WATER ELEVATION
- INDICATES STATIC WATER ELEVATION

SYMBOLS OF ROCK TYPES

- COAL
- WEATHERED MUDSTONE
- MUDSTONE
- WEATHERED SHALE
- SHALE
- CLAYSTONE
- SILTSTONE
- WEATHERED SANDSTONE
- SANDSTONE
- LEACHED DOLOMITE
- DOLOMITE
- LEACHED LIMESTONE
- LIMESTONE
- BOULDERS or COBBLES

GENERAL INFORMATION

Drive sample / Press sample / Core borings

Drive sample borings are made by means of a mechanically-powered rotary-type drilling machine, employing a 2" O.D., 1-3/8" I.D. split spoon sampler, at 2.5 and/or 5-foot depth intervals, driven by means of a 140 lb. drop hammer with a free fall of 30". The number of blows required to drive the sampler 18" is considered the standard penetration test.

Drive/press borings are made by means of a mechanically-powered rotary-type drilling machine, employing a 2" O.D., 1-3/8" I.D. split spoon sampler, and 3" O.D. thin wall press sampler. The press sampler is advanced by continuous uniform pressure, applied by the drilling machine.

Core borings are made by means of a mechanically-powered rotary-type drilling machine, employing a NXM core barrel with industrial diamond cutting head.

The boring log sheets display a graphic plot of the information obtained including depth and elevation of the sample, type of sample, the standard penetration test readings in three 6-inch increments, depth and elevation of press samples, field number assigned to sample, sample description - based on laboratory tests utilizing the Casagrande AC classification system - and gradation, plasticity and moisture determinations. Results of strength and consolidation testing, if performed on undisturbed samples, will appear graphically on separate enclosures. Rock samples are displayed on the log sheets including depth and elevation of the sample, amount of recovery and a visual classification based on type, color, degree of hardness, grain size, deterioration, bedding, acid reaction and other qualifying factors.

At depths where materials are bouldery or gravelly to the extent that the sampler can not be utilized, a wash sample is procured and visually classified, in order to determine the general characteristics of the material. These samples are not considered sufficiently representative to warrant laboratory testing.

PARTICLE SIZE DEFINITIONS

12"	3"	2.0mm		0.42mm	0.074mm	0.005mm
Boulders	Cobbles	Gravel	Coarse Sand	Fine Sand	Silt	Clay
		No. 10 sieve		No. 40 sieve	No. 200 sieve	

NOTE - ALL AVAILABLE SOIL AND BEDROCK INFORMATION WHICH CAN BE CONVENIENTLY SHOWN ON THE STRUCTURE FOUNDATION INVESTIGATION SHEETS HAS BEEN SO REPORTED. ADDITIONAL SUBSURFACE INVESTIGATIONS MAY HAVE BEEN MADE TO STUDY SOME SPECIAL ASPECT OF THE PROJECT. COPIES OF THIS DATA, IF ANY, MAY BE INSPECTED IN THE DISTRICT DEPUTY DIRECTOR'S OFFICE, THE BUREAU OF TESTS AT 1600 WEST BROAD STREET, THE PAVEMENT AND SOILS SECTION OF THE BUREAU OF LOCATION AND DESIGN OR IN THE BRIDGE BUREAU AT 25 SOUTH FRONT STREET.

SUBSURFACE INVESTIGATION
SUM-76-1332
OVER SEIBERLING STREET
SUMMIT COUNTY, OHIO

R & R International, Inc.
GEOTECHNICAL ENGINEERS-GEOLOGISTS
AKRON, OHIO 44321

SUM-76-11.57

FHWA REGION	STATE	PROJECT

102
104

2
4

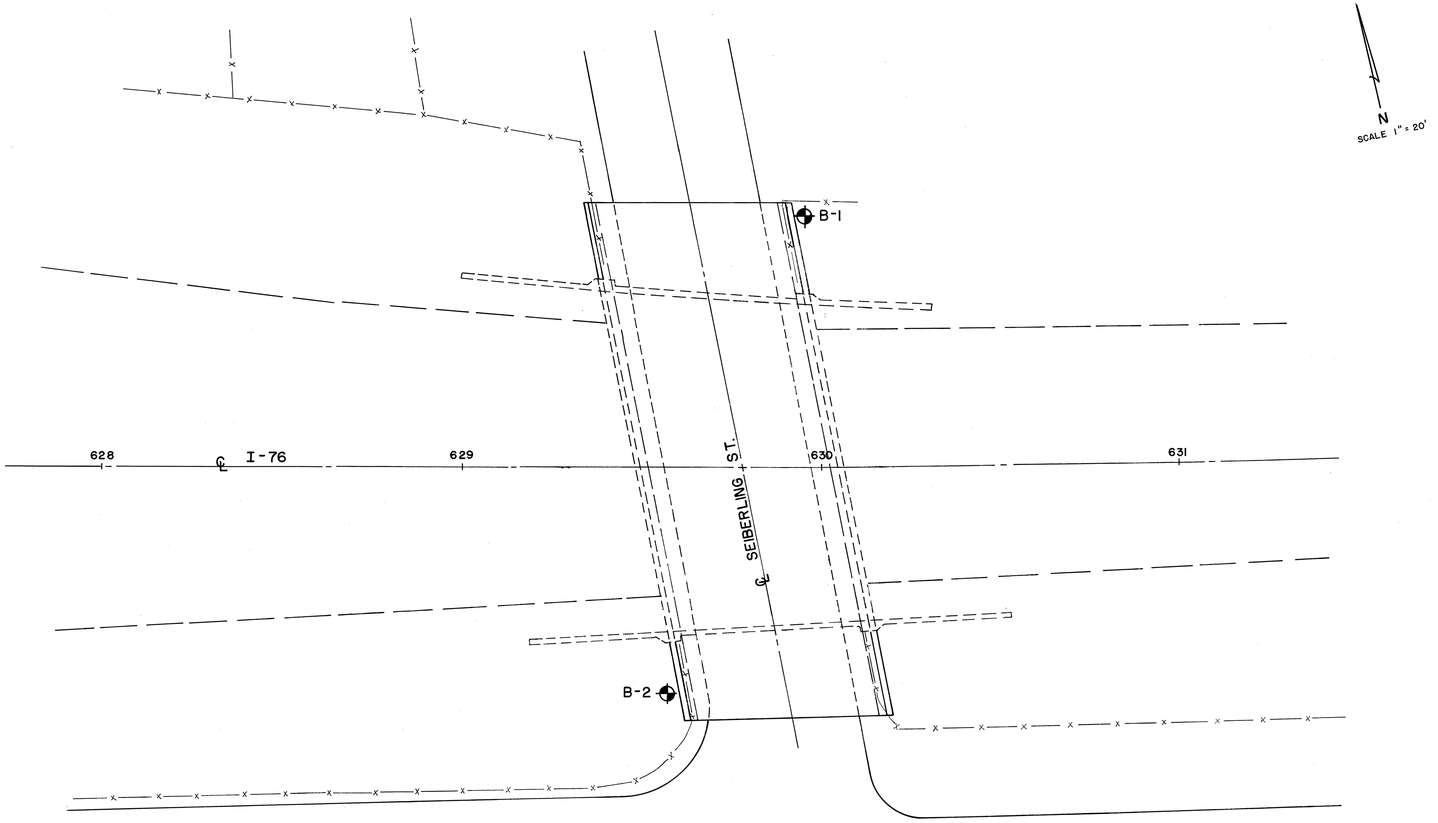

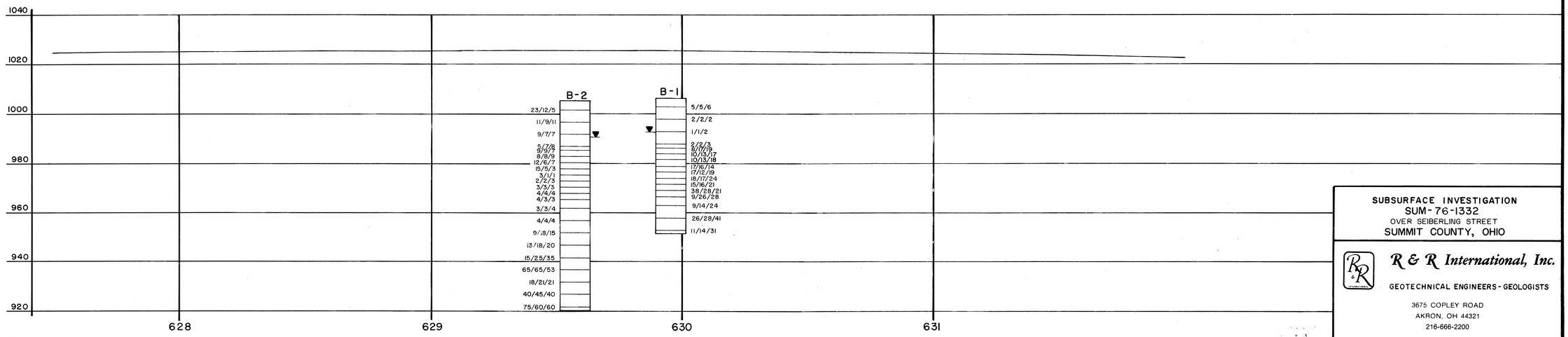

SUBSURFACE INVESTIGATION
SUM-76-1332
OVER SEIBERLING STREET
SUMMIT COUNTY, OHIO

R & R International, Inc.
GEOTECHNICAL ENGINEERS-GEOLOGISTS
3675 COPLEY ROAD
AKRON, OH 44321
216-666-2200

56478

SUM-76-11.57

FHWA REGION	STATE	PROJECT

103
104

3
4

LOG OF BORING

Date Started 10-31-86 Sampler Type Split Spoon Dia. 2.0 Water Elev. 993.4

Date Completed 10-31-86 Casing: Length -- Dia. ---

Boring No. B-1 Station & Offset Sta. 629 + 96 71' LT. Surface Elev. 1007.4

ELEV.	DEPTH	STD. PEN. (N)	REC. Ft.	LOSS Ft.	DESCRIPTION	SAMPLE NO.	SAMPLE TYPE	% AGG.	% C. SAND	% F. SAND	% SILT	% CLAY	L.L.	P.L.	P.I.	W.C.	SHTL CLASS.
1007.4	0																
1006.9					TOPSOIL												
		5-5-6	0.8		Medium dense to loose, brown SAND AND GRAVEL, trace silt, moist (Fill).	1	SS	40.3	34.7	15.7	*	9.3	--	--	--	11.3	A-1-b
	5																
		2-2-2	1.4			2	SS										
997.9	10																
		1-1-2	1.5		Soft to medium stiff, gray SILT, some clay, trace sand, moist.	3	SS										
	15																
		2-2-3	1.5			4	SS	0.1	0.2	5.2	*	94.5	24.7	17.7	7.0	26.6	A-4b
986.9	20	8-17-19	1.5			5	SS	40.0	20.4	29.3	*	10.3	--	--	--	9.3	A-1-b
		10-13-17	1.5			6	SS										
	25	10-13-18	1.5			7	SS	23.5	44.3	27.6	4.3	0.3	--	--	--	15.3	A-1-b
		17-16-14	1.5			8	SS										
	30	17-12-19	1.5			9	SS	22.3	48.3	25.8	*	3.6	--	--	--	14.9	A-1-b
		18-17-24	1.5		Dense, gray SAND AND GRAVEL, trace silt, moist to wet.	10	SS										
	35	15-16-21	1.5			11	SS	57.8	20.9	13.1	*	8.2	--	--	--	9.8	A-1-a
		38-28-21	1.5			12	SS	1.4	58.7	34.0	5.6	0.3	--	--	--	15.9	A-1-b
	40	9-26-28	1.5			13	SS										
966.4																	
965.4					Hard, gray SILT, trace sand, moist.												
		9-14-24	1.5			14	SS										
	45																
		26-28-41	0.0		Dense, gray SAND AND GRAVEL, trace silt, moist to wet.	15	SS										
	50																
		11-14-31	1.5		NOTE: At 48.5 feet, sample drive pushed cobble.	16	SS	4.3	69.3	23.2	*	3.2	--	--	--	18.1	A-1-b
952.4	55																
					TERMINATION DEPTH 55.0 FEET												

* SILT AND CLAY COMBINED

SUBSURFACE INVESTIGATION
SUM-76-1332
OVER SEIBERLING STREET
SUMMIT COUNTY, OHIO

R & R International, Inc.
GEOTECHNICAL ENGINEERS-GEOLOGISTS

SUM-76-11.57

FHWA REGION	STATE	PROJECT

104
104

4
4

LOG OF BORING

Date Started 10-30-86 Sampler Type Split Spoon Dia. 2.0 Water Elev. 990.6

Date Completed 10-30-86 Casing: Length -- Dia. ---

Boring No. B-2 Station & Offset Sta. 629 + 55 63' RT. Surface Elev. 1005.9

ELEV.	DEPTH	STD. PEN. (N)	REC. Ft.	LOSS Ft.	DESCRIPTION	SAMPLE NO.	SAMPLE TYPE	PHYSICAL CHARACTERISTICS % AGG.	% C.SAND	% F.SAND	% SILT	% CLAY	L.L.	P.L.	P.I.	W.C.	SHTL CLASS.
1005.9	0																
1005.4					TOPSOIL												
		23-12-5	1.5			1	SS										
	5				Medium dense, brown SAND, little silt, trace gravel, moist (Fill).												
		11-9-11	1.3			2	SS	4.2	21.7	56.1	*	18.0	--	--	--	13.7	A-3a
	10																
		9-7-7	0.9			3	SS										
990.9	15																
		5-7-8	0.7			4	SS	56.0	21.9	14.5	*	7.6	--	--	--	11.1	A-1-a
	20	9-9-7	0.9		Medium dense, brown SAND AND GRAVEL, trace silt, moist (Fill).	5	SS	57.9	20.0	12.1	8.5	1.5	--	--	--	12.1	A-1-a
		8-8-9	1.2			6	SS	18.7	21.5	37.9	*	21.9	--	--	--	19.1	A-3a
	25	12-6-7	1.5			7	SS										
979.9		15-5-3	1.5			8	SS	1.7	3.7	23.6	50.4	20.6	--	--	--	27.8	A-4b
	30	3-1-1	1.0			9	SS	0.2	1.0	11.4	*	87.4	26.3	18.5	7.8	30.9	A-4b
		2-2-3	1.4			10	SS										
	35	3-3-3	1.4			11	SS	0.1	1.5	5.8	*	92.6	26.2	19.5	6.7	29.4	A-4b
		4-4-4	1.5			12	SS										
		4-3-3	1.5		Medium stiff, gray SILT, some clay, trace sand, wet.	13	SS										
	40																
		3-3-4	1.5			14	SS										
	45																
		4-4-4	1.5			15	SS	0.1	0.2	8.0	65.1	26.6	--	--	--	25.1	A-4b
	50																
952.9		9-18-15	1.5			16	SS										
	55																
		13-18-20	1.5			17	SS	10.2	39.6	41.8	*	8.4	--	--	--	14.9	A-1-b
	60				Dense to very dense, brown SAND AND GRAVEL, trace silt, wet.												
		15-25-35	1.5			18	SS										
	65																
		65-65-53	1.5			19	SS										
	70																

LOG OF BORING

Date Started 10-30-86 Sampler Type Split Spoon Dia. 2.0 Water Elev. 990.6

Date Completed 10-30-86 Casing: Length -- Dia. ---

Boring No. B-2 (Cont.) Station & Offset Sta. 629 + 55 63' RT. Surface Elev. 1005.9

ELEV.	DEPTH	STD. PEN. (N)	REC. Ft.	LOSS Ft.	DESCRIPTION	SAMPLE NO.	SAMPLE TYPE	PHYSICAL CHARACTERISTICS % AGG.	% C.SAND	% F.SAND	% SILT	% CLAY	L.L.	P.L.	P.I.	W.C.	SHTL CLASS.
935.9	0																
					SAME AS ABOVE												
931.4	75	18-21-21	0.9			20	SS										
		40-45-40	1.5		Very dense, brown SAND, trace gravel, trace silt, wet.	21	SS	0.7	22.9	69.2	*	7.2	--	--	--	17.2	A-3
	80																
		75-60-60	0.1			22	SS										
920.9	85				TERMINATION DEPTH 85.0 FEET												
					NOTE: Hole caved to 37.5 feet upon completion.												

* SILT AND CLAY COMBINED

SUBSURFACE INVESTIGATION
SUM-76-1332
OVER SEIBERLING STREET
SUMMIT COUNTY, OHIO

R & R International, Inc.
GEOTECHNICAL ENGINEERS - GEOLOGISTS
3675 COPLEY ROAD
AKRON, OH 44321
216-666-2200