CALC. BY. DATE	SUM-8-1.73/1.95 F-BHF-54(18)	OHIO F.H.W.A. REGION 5	1 / 204
CHKD. BY. DATE			

DESIGN DESIGNATION

Current A.D.T. (1984)	=70,800
Design Year A.D.T. (2004)	=124,000
D.H.V.	=12,400
D	= 50 %
T	= 5 %
V	= 60 m.p.h.

STATE OF OHIO
DEPARTMENT OF TRANSPORTATION
SUM-8-1.73/1.95
NORTH EXPRESSWAY VIADUCT / PERKINS STREET BRIDGE
CITY OF AKRON
SUMMIT COUNTY

F-BHF-54(18)

CONVENTIONAL SIGNS

Township Line
Section Line
Corporation Line
Fence Line (existing) —x—x—x— (proposed) —x—x—x—
Center Line 234 235
Trees , Stumps , (to be removed)
Utility Poles: Telephone , Power , Light

Limited Access (only) ——LA——
Right of Way (only) ——RW——
Limited Access & Right of Way ——LA & RW——
Existing Right of Way ——RW——
Property Line ——℄—— (in existing fence) —x—℄—x—
Railroad or
Guardrail (existing) (proposed)

INDEX OF SHEETS

	SHEET NO.		SHEET NO.
TITLE	1	PERKINS STREET CROSS SECTIONS	48-50
SCHEMATIC AND GEOMETRIC LAYOUT	2	NORTH EXPRESSWAY CROSS SECTIONS	51-60
CROSS SECTION LAYOUT	3	RAMP I CROSS SECTIONS	61-63
TYPICAL SECTIONS	4-6	RAMP J CROSS SECTIONS	64-67
GENERAL NOTES	7-9	ADOLPH AVENUE CROSS SECTIONS	68-70
MAINTENANCE OF TRAFFIC	10-24	GOOD STREET CROSS SECTIONS	71
QUANTITY CALCULATIONS	25-28	WATER MAIN SPECIFICATIONS	72-76
GENERAL SUMMARY	29-30	WATER MAIN PLAN AND PROFILE	77
QUANTITY SUBSUMMARY	31	WATER MAIN PROFILE AND DETAILS	78
ROADWAY PLANS AND PROFILES	32-37	TRAFFIC CONTROL	79-91
DRAINAGE SUBSUMMARY	34	LIGHTING PLANS	92-102
PAVEMENT DETAILS	38-42	STRUCTURES OVER 20' SPAN	103,105A - 203A
SEWER PROFILES	43-45	RIGHT-OF-WAY PLANS	203B, 203C & 204
ROADWAY DETAILS	46-47		

LINE DATA

	F FUNDS	BHF FUNDS
BEGIN PROJECT	STA 513+37/STA 540+68.50	STA 524+85.75
END PROJECT	STA 524+85.75/STA 540+93.50	STA 540+68.50
LENGTH OF PROJECT	1,173.75 L.F. OR 0.222 MILES	1,582.75 L.F. OR 0.300 MILE
	Total Project Length = 2756.50 L.F or 0.522 Mile	
ADD FOR WORK		
S.R. 8 - STA 540+93.50 TO STA 591+05	5,011.50 L.F.	
PERKINS STREET - STA 46+82 TO STA 53+00		618 L.F.
LENGTH OF WORK	6,185.25 L.F. OR 1.171 MILES	2,200.75 L.F. OR 0.417 MILES
	Total Work Length = 8386.00 L.F or 1.588 Mile	

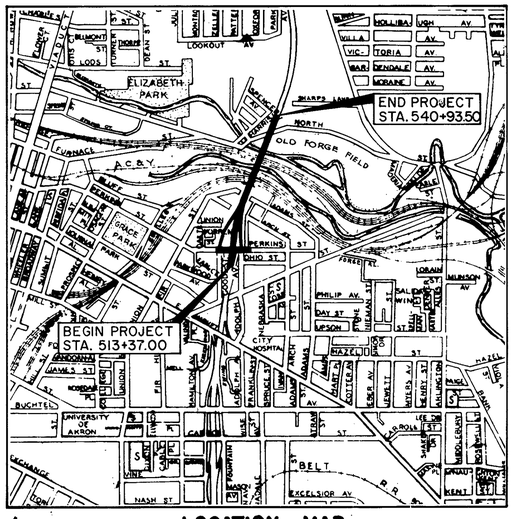

LOCATION MAP
SCALE IN FEET
0 1200 2400

Portion to be improved
Other Roads

SCALES

Plan 0 50'
Profile: Horizontal 0 50', Vertical 0 5
Cross Section: Horizontal 0 5', Vertical 0 2'

SUPPLEMENTAL		SPECIFICATIONS	
814	1-1-69	861	9-9-83
		961	9-9-83
		847	10-17-83
		947	10-17-83
824	10-8-82		
836	11-12-85	921	12-4-72
845	1-13-84		
953	8-21-80		

SUPPLEMENTAL PRINTS OF STANDARD CONSTRUCTION DRAWINGS									GR-4B	2-5-82
BP-1	6-1-65	GR-1	1-11-85	MH-3	12-18-84	TC-41.40	6-18-79	HL-1	12-28-84	HL-19	3-22-77
BP-2	1-11-85	GR-2B	2-5-82	LA-1	6-1-79	TC-41.50	3-26-79	HL-2	7-27-73	MH-1	12-18-84
BP-3	12-6-76	GR-3	1-21-85	MC-11	8-1-78	TC-42.10	8-19-77	HL-3	12-28-84	MH-5	6-12-75
BP-4	1-11-85	GR-4	2-5-82	TC-7.65	3-1-79	TC-42.20	3-26-79	HL-4	1-21-76	CB-3	5-1-79
BP-5	1-11-85	GR-4A	1-30-84	TC-21.10	1-20-84	TC-51.10	1-20-84	HL-5	9-6-73	MC-6	1-30-84
BP-7	12-6-76	GR-5	2-5-82	TC-21.20	1-20-84	TC-61.10	4-5-82	HL-7	1-21-76	TC-51.11	1-20-84
BP-9	12-6-76	GR-6	2-5-82	TC-21.40	3-1-79	TC-71.10	4-9-79	HL-8	1-21-76	AS-1-81	11-27-81
BP-10	1-30-84	HW-1	6-1-65	TC-22.10	3-1-79	TC-72.20	2-26-82	HL-9	3-22-77	BR-1	5-29-79
BP-12	7-7-81	I-2A	12-18-84	TC-22.20	3-1-79	TC-81.20	1-20-84	HL-10	12-28-84	BR-2-82	11-1-82
CB-2-2-B	5-1-79	I-3A & B	4-1-80	TC-31.20	3-1-79	TC-83.10	1-20-84	HL-11	6-1-79	RB-1-55	2-2-59
F-1	11-10-83	MC-4	7-26-76	TC-31.21	3-6-79	TC-83.20	1-20-84	HL-12	12-28-84	TC-52.10	4-3-79
F-3	5-1-76	MC-9	1-30-84	TC-32.10	3-8-79	TC-85.10	1-20-84	HL-15	12-28-84	TC-35.10	8-29-84
BP-11	1-30-84	MC-9A	1-11-85	TC-41.20	3-26-79	TC-85.20	1-20-84	HL-16	12-28-84	TC-52.20	4-3-79

Rev. 12-6-85

LIMITED ACCESS

THIS IMPROVEMENT IS ESPECIALLY DESIGNED FOR THROUGH TRAFFIC AND HAS BEEN DECLARED A LIMITED ACCESS HIGHWAY OR FREEWAY BY ACTION OF THE DIRECTOR IN ACCORDANCE WITH THE PROVISION OF SECTION 5511.02 OF THE REVISED CODE OF OHIO.

1985 SPECIFICATIONS

THE STANDARD SPECIFICATIONS OF THE STATE OF OHIO, DEPARTMENT OF TRANSPORTATION, INCLUDING CHANGES AND SUPPLEMENTAL SPECIFICATIONS LISTED IN THE PROPOSAL SHALL GOVERN THIS IMPROVEMENT.

I HEREBY APPROVE THESE PLANS AND DECLARE THE MAKING OF THIS IMPROVEMENT WILL NOT REQUIRE THE CLOSING OF THE HIGHWAY TO TRAFFIC AND THAT PROVISIONS FOR THE MAINTENANCE AND SAFETY OF TRAFFIC WILL BE AS SET FORTH ON THE PLANS AND ESTIMATES.

APPROVED R. Kappen
DATE 5-7-85 CITY OF AKRON DIRECTOR OF PUBLIC SERVICE

APPROVED J. Watson
DATE 5-7-85 CITY ENGINEER

APPROVED J. Beckett
DATE 5-7-85 CITY OF AKRON DESIGN DIVISION MANAGER

APPROVED Pawan K. Khurana
DATE 5-7-85 CITY OF AKRON CONSTRUCTION MANAGER

APPROVED Francis V. Fincher
DATE 5-15-85 DISTRICT DEPUTY DIRECTOR OF TRANSPORTATION

APPROVED Walter J. Jestings
DATE 8-28-85 ENGINEER, BUREAU OF BRIDGES AND STRUCTURAL DESIGN

APPROVED Wayne H. Kauble
DATE 11-5-85 CHIEF ENGINEER, PLANNING AND DESIGN

APPROVED Warren J. Smith
DATE 11-5-85 DIRECTOR, DEPARTMENT OF TRANSPORTATION

DEPARTMENT OF TRANSPORTATION
FEDERAL HIGHWAY ADMINISTRATION

APPROVED:

DIVISION ADMINISTRATOR — DATE

UNDERGROUND UTILITIES

2 WORKING DAYS BEFORE YOU DIG
Call ··· 800-362-2764 (Toll Free)
OHIO UTILITIES PROTECTION SERVICE

NON-MEMBERS MUST BE CALLED DIRECTLY

PLANS PREPARED BY

DALTON • DALTON • NEWPORT
ARCHITECTS ENGINEERS PLANNERS
AKRON OHIO CLEVELAND

F.J. Richardson
F. J. RICHARDSON REG. ENGINEER Nº 19531

STATE OF OHIO · FREDERICK J. RICHARDSON · 19531 · REGISTERED PROFESSIONAL ENGINEER

Project: SUM-8-1.73/1.95
Date of Letting ____ 19__, Contract No. ____

CALC. BY. DATE	SUM-8-1.73/1.95	OHIO
CHKD. BY. DATE		F.H.W.A. REGION 5

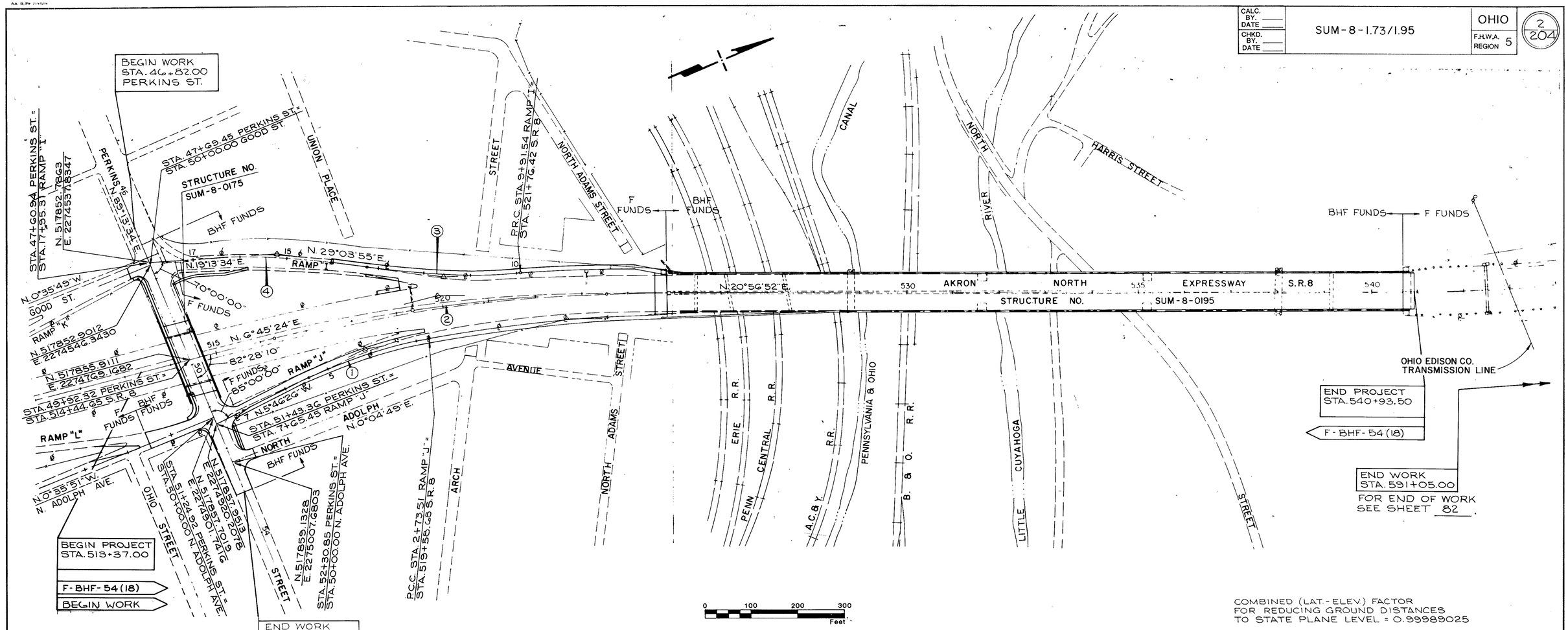

COMBINED (LAT.-ELEV.) FACTOR
FOR REDUCING GROUND DISTANCES
TO STATE PLANE LEVEL = 0.99989025

REF. No.	Δ	Dc	R	T	L	E	CH	P.I. STATION	N. COORDINATE	E. COORDINATE	P.C. STATION	N. COORDINATE	E. COORDINATE	P.T. STATION	N. COORDINATE	E. COORDINATE
1	16°35'45"	6°06'14"	938.67	137.46	272.38	10.01	272.02	4+10.97 RAMP "J"	518212.4516	2274884.3250	2+73.51 RAMP "J"	518347.4368	2274910.2512	5+46.49 RAMP "J"	518075.6850	2274858.1538
2	14°11'28"	1°57'55"	2915.58	362.93	722.14	22.50	720.29	519+93.82 S.R. 8	518401.1128	2274833.7614	516+30.89 S.R. 8	518040.7480	2274791.0669	523+53.03 S.R. 8	518740.0136	2274963.4990
3	11°35'13"	3°30'00"	1637.02	166.09	331.06	8.40	330.49	11+57.63 RAMP "I"	518430.6945	2274805.4619	9+91.54 RAMP "I"	518589.0988	2274855.3407	13+22.60 RAMP "I"	518285.5366	2274724.7833
4	9°50'21"	5°30'00"	1041.74	89.67	178.89	3.85	178.67	15+21.70 RAMP "I"	518111.5326	2274628.0719	14+32.03 RAMP "I"	518189.9016	2274671.6293	16+10.92 RAMP "I"	518026.8731	2274598.5470

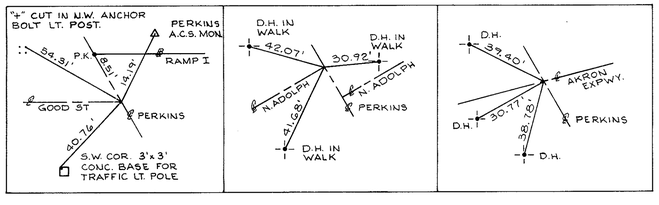

DESIGN DESIGNATION		
	S.R. 8	PERKINS ST.
CURRENT A.D.T. (1984)	70,800	13,200
DESIGN YEAR A.D.T. (2004)	124,000	15,100
D.H.V.	12,400	1,510
D	50%	50%
T	5%	5%
V	60 M.P.H	40 M.P.H.

BENCH MARK: PERKINS (ACS) IS LOCATED IN THE NORTHWEST CORNER OF THE INTERSECTION OF PERKINS STREET AND RAMP I. THE MARK IS A CITY OF AKRON DISK STAMPED "PERKINS" SET IN A 6" SQUARE CONCRETE MONUMENT, 4" BELOW SURFACE WITH A 9" IRON COVER. ELEVATION 1,050.608

BENCH MARK: THIS MARK IS LOCATED AT THE "R" IN COREY ON TOP OF A FIRE HYDRANT LOCATED ON THE SOUTH SIDE OF PERKINS STREET AT THE INTERSECTION OF PERKINS STREET AND ADOLPH AVENUE NORTH. ELEVATION 1,055.015.

BENCH MARK: CITY OF AKRON MARK P-178 LOCATED AT THE OVERPASS OF THE AKRON EXPRESSWAY (S.R. 8) AND THE PENNSYLVANIA RAILROAD, SET IN THE TOP OF THE CONCRETE BASE OF FIRST PIER NORTHEAST OF THE SOUTHWEST ABUTMENT. ELEVATION 999.033

SCHEMATIC & GEOMETRIC LAYOUT

CALC. BY. ____ DATE ____	SUM-8-1.73/1.95	OHIO
CHKD. BY. ____ DATE ____		F.H.W.A. REGION 5

3
204

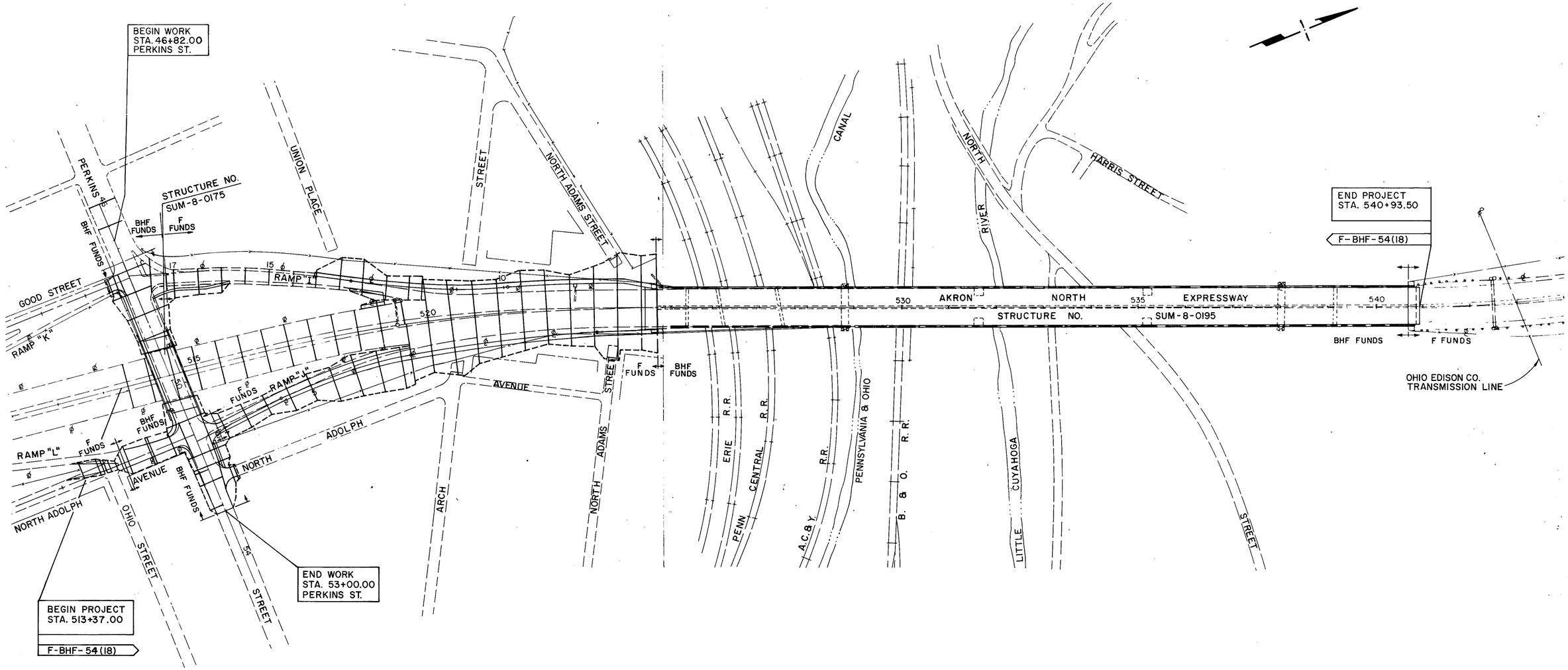

CROSS SECTION LAYOUT

AA B/P# 71942R

CALC. BY. DATE	SUM - 8 - 1.73/1.95	OHIO
CHKD. BY. DATE		F.H.W.A. REGION 5

4/204

TYPICAL SECTIONS

NORTH EXPRESSWAY VIADUCT
PERKINS STREET BRIDGE
RECONSTRUCTION

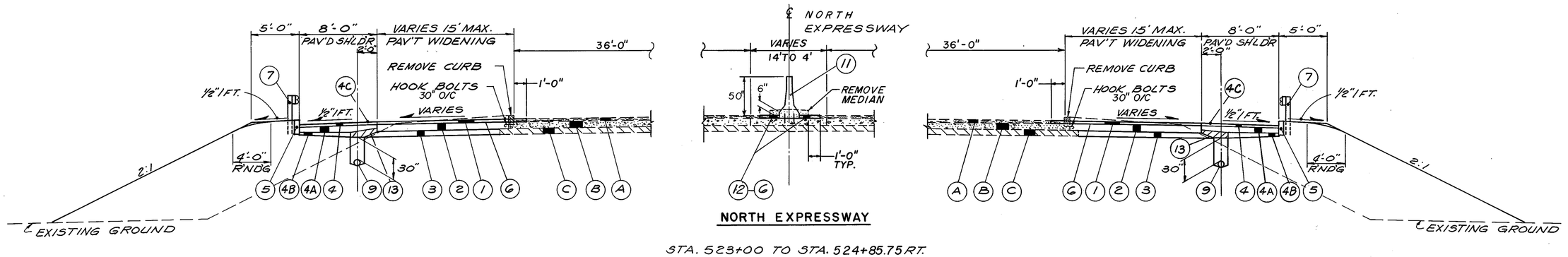

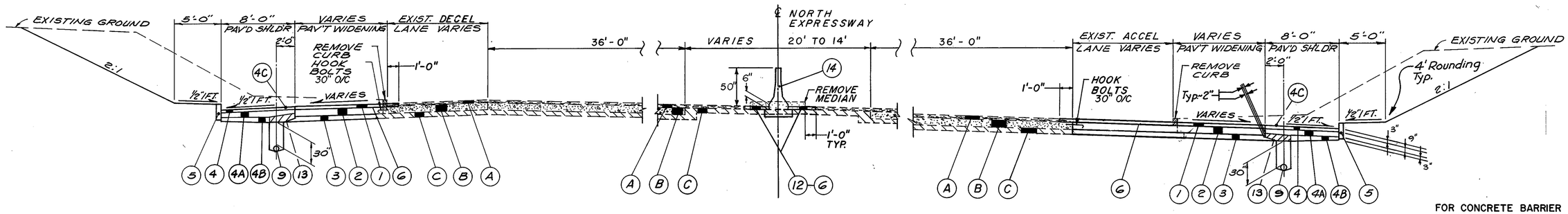

FOR CONCRETE BARRIER DETAILS SEE SHEET 46

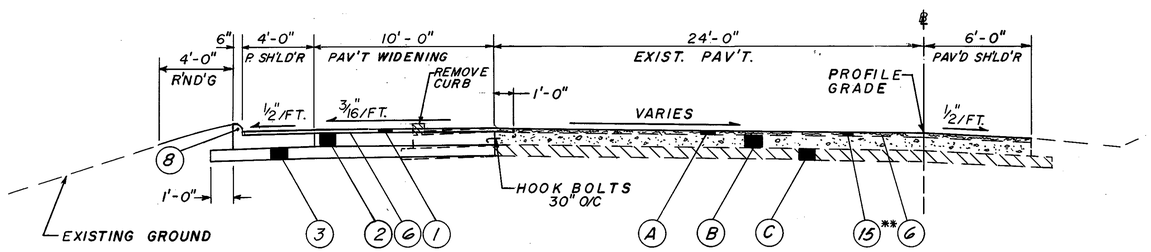

RAMP "I"

STA. 15+88 TO STA. 17+50

** MILL EXISTING WEARING COURSE 1 1/4" AND REPLACE WITH 1 1/4" OF 404 ASPHALT CONCRETE, AC-20

(13) DRAINAGE CONNECTION

1. Install pipe underdrain on outside shoulder where required.
2. Place subbase to outside edge of underdrain or to one foot beyond Item 451 where no underdrain is present. Payment shall be made for all subbase placed in this operation.
3. Construct Item 451.
4. Remove subbase and any contaminated backfill over the drain and replace with No. 8 aggregate as shown.
5. Complete shoulder construction.

LEGEND

(A)	3"	EXISTING ASPHALT
(B)	9"	EXISTING REINFORCED CONCRETE
(C)	6"	EXISTING SUBBASE
(D)	4"	EXISTING SIDEWALK
(1)	404	1 1/4" ASPHALT CONCRETE, AC-20
	402	1 3/4" ASPHALT CONCRETE, AC-20
(2)	451	9" REINFORCED CONCRETE PAVEMENT
(3)	310	6" SUBBASE, TYPE II
(4)	301	3" BITUMINOUS AGGREGATE BASE, AC-20, RT-11 or RT-12
(4A)	304	9" AGGREGATE BASE
(4B)	310	VARIES 3" MINIMUM SUBBASE, TYPE II
(4C)	409	SEAL COAT @ .30 GAL./SY.
	409	COVER AGGREGATE Nº 8 @ .008 CY./SY.
(5)	609	CURB, STANDARD TYPE 6
(6)	407	TACK COAT
(7)	606	GUARDRAIL, TYPE 5
(8)	609	CURB, STANDARD TYPE 2B
(9)	605	6" SHALLOW PIPE UNDERDRAIN
(10)	608	6" CONCRETE WALK
(11)	622	CONCRETE BARRIER TYPE A50 MODIFICATION 1, AS PER PLAN
(12)	402	VARIABLE DEPTH ASPHALT CONCRETE, AC-20
(13)		SPECIAL DRAINAGE CONNECTION, Nº 8 AGGREGATE
(14)	622	CONCRETE BARRIER TYPE A50 MODIFICATION 2, AS PER PLAN
(15)	404	1 1/4" ASPHALT CONCRETE, AC-20
(16)	660	SODDING

TYPICAL SECTIONS

TYPICAL SECTIONS

CALC. BY. DATE	SUM - 8 - 1.73 / 1.95	OHIO	5 / 204
CHKD. BY. DATE		F.H.W.A. REGION 5	

NORTH EXPRESSWAY VIADUCT

PERKINS STREET BRIDGE

RECONSTRUCTION

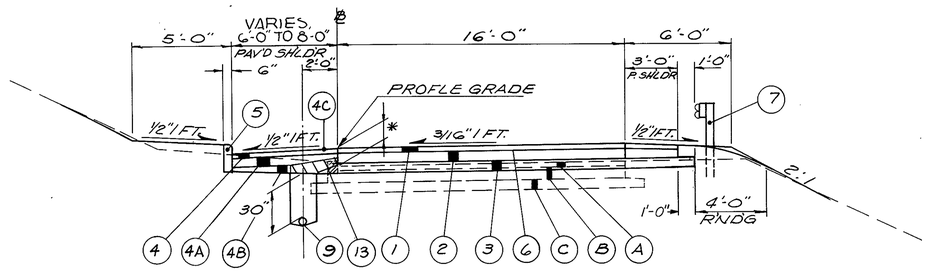

RAMP "J"

STA. 3+24.18 TO STA. 7+65.45
*-GRADE RAISE VARIES FROM 0.25' TO 1.20'

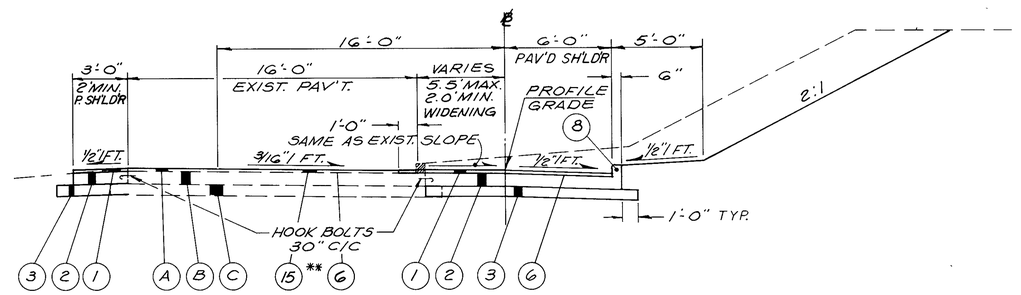

RAMP "I"

STA. 12+58 TO STA. 14+04 (RT.)
STA. 12+75 TO STA. 13+90 (LT.)

** MILL EXISTING WEARING COURSE 1 1/4" AND REPLACE WITH 1 1/4" OF 404 ASPHALT CONCRETE, AC-20

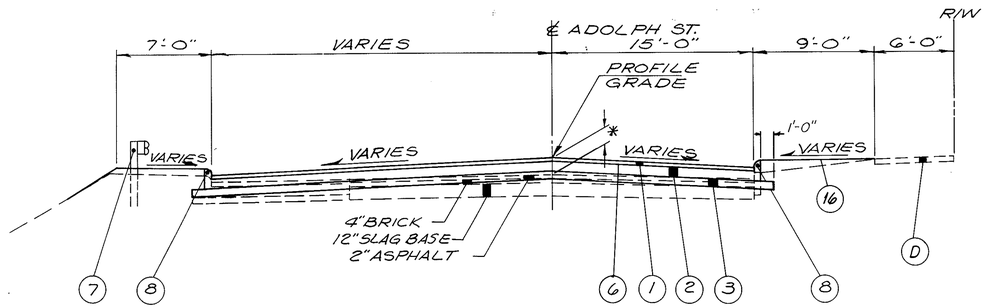

ADOLPH AVE. SOUTH OF PERKINS ST.

STA. 48+50 TO STA. 49+79
*-GRADE RAISE VARIES FROM 0.25' TO 1.22'

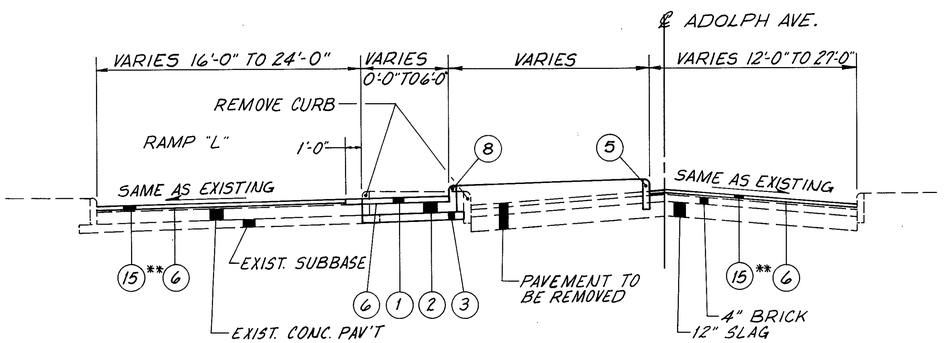

ADOLPH AVE.

STA. 47+21 TO STA. 48+50

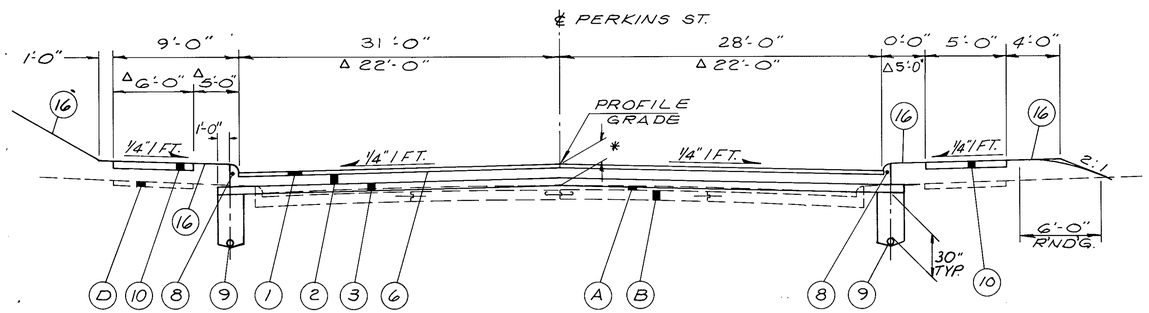

PERKINS ST.

STA. 47+50 TO STA. 51+50
Δ STA. 51+50 TO STA. 53+00
*-GRADE RAISE VARIES FROM 0.25' TO 1.64'

CALC. BY. DATE	SUM. – 8 – 1.73/1.95	OHIO
CHKD. BY. DATE		F.H.W.A. REGION 5

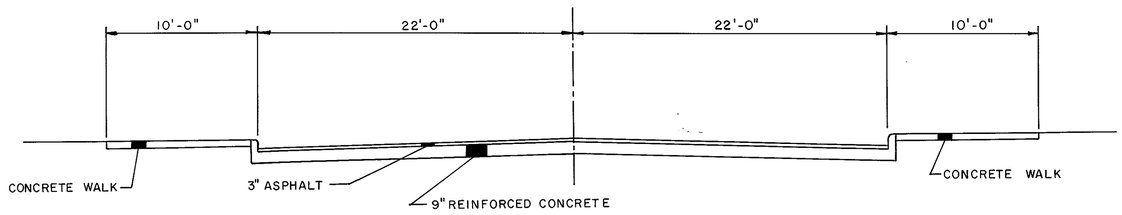

PERKINS ST. – GOOD ST. TO ADOLPH AVE.

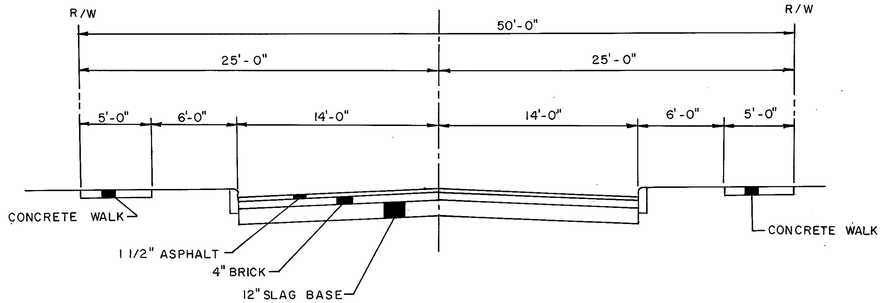

GOOD ST. – S. OF PERKINS ST.

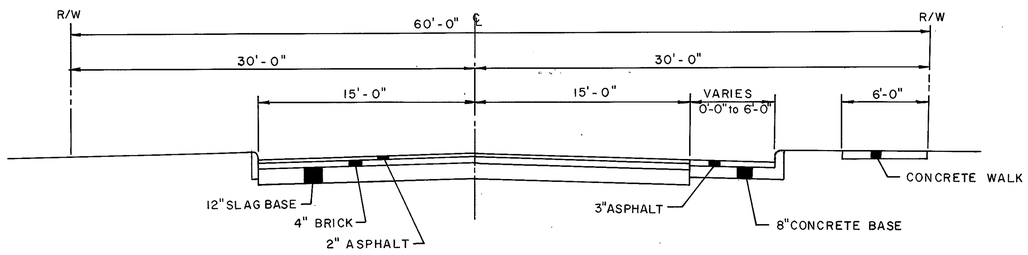

ADOLPH AVE. – S. OF PERKINS ST.

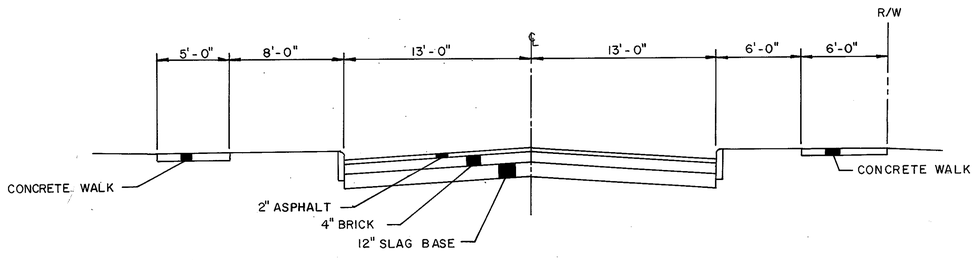

ADOLPH AVE. – N. OF PERKINS ST.

EXISTING TYPICAL SECTIONS

GENERAL NOTES

CALC. BY. TAK DATE 11/83	SUM-8-1.73/1.95	OHIO
CHKD. BY. DSB DATE 11/83		F.H.W.A. REGION 5

7 / 204

FIELD OFFICE

THE CONTRACTOR SHALL PROVIDE A SUITABLE FIELD OFFICE HAVING A MINIMUM OF 800 SQ FT OF FLOOR SPACE. PAYMENT SHALL BE AT THE LUMP SUM PRICE BID FOR ITEM 619, FIELD OFFICE.

ROUNDING OF CORNERS SHOWN ON CROSS SECTIONS

THE ROUNDED CORNERS SHOWN ON THE TYPICAL SECTIONS, APPLY TO ALL CROSS SECTIONS EVEN THOUGH OTHERWISE SHOWN ON THESE PLANS.

CONTINGENCY QUANTITIES

THE CONTRACTOR SHALL NOT ORDER MATERIALS OR PERFORM WORK LISTED IN THE GENERAL SUMMARY FOR ITEMS DESIGNATED BY PLAN NOTE TO BE USED "AS DIRECTED BY THE ENGINEER" UNLESS AUTHORIZED BY THE ENGINEER. THE ACTUAL WORK LOCATIONS AND QUANTITIES USED AT THE ENGINEER'S DISCRETION SHALL BE MADE A MATTER OF RECORD BY INCORPORATION INTO THE FINAL CHANGE ORDER GOVERNING COMPLETION OF THIS PROJECT.

REMOVAL OF TREES OR STUMPS

ALL TREES AND STUMPS SPECIFICALLY MARKED FOR REMOVAL WITHIN THE CONSTRUCTION LIMITS OF THIS PROJECT SHALL BE REMOVED UNDER THE LUMP SUMP PRICE BID FOR ITEM 201, CLEARING AND GRUBBING, EXCEPT THAT THOSE TREES FOR WHICH PROTECTION AND PRESERVATION WORK IS INDICATED ELSEWHERE IN THESE PLANS SHALL NOT BE REMOVED.

THE FOLLOWING IS AN APPROXIMATE ESTIMATE OF THE NUMBER OF TREES AND STUMPS TO BE REMOVED:

SIZES	NO. TREES	NO. STUMPS	TOTAL
18"	1	4	5

THE ABOVE ESTIMATE IS APPROXIMATE AND THE STATE OF OHIO RESERVES THE RIGHT TO ORDER THE REMOVAL OF ADDITIONAL TREES OR STUMPS OUTSIDE OF THE LIMITS OF CONSTRUCTION BUT WITHIN THE RIGHT-OF-WAY AND/OR EASEMENT LINES. PAYMENT FOR THE REMOVAL OF THESE ADDITIONAL TREES OR STUMPS SHALL BE INCLUDED IN THE LUMP SUM PRICE BID FOR ITEM 201, CLEARING AND GRUBBING.

LOCATION OF GUARDRAIL

THE LOCATIONS OF GUARDRAIL RUNS, AS SHOWN IN THESE PLANS, ARE SUBJECT TO ADJUSTMENT PRIOR TO FINAL ACCEPTANCE. THE ENGINEER SHALL BE SATISFIED THAT ALL INSTALLATIONS WILL AFFORD MAXIMUM PROTECTION FOR TRAFFIC.

ITEM 203, PROOF ROLLING

AN ESTIMATED QUANTITY FOR THIS ITEM HAS BEEN PROVIDED IN THE GENERAL SUMMARY FOR USE AS DIRECTED BY THE ENGINEER.

UNDERGROUND UTILITIES

THE LOCATIONS OF THE UNDERGROUND UTILITIES SHOWN ON THE PLANS ARE AS OBTAINED FROM THE OWNERS OF THE UTILITY AS REQUIRED BY SECTION 153.64 ORC.

UTILITY OWNERSHIP

THE FOLLOWING UTILITIES AND OWNERS ARE LOCATED WITHIN THE WORK LIMITS OF THIS PROJECT:

THE EAST OHIO GAS COMPANY, (216) 798-7140 I CASCADE PLAZA, AKRON, OHIO 44308

THE OHIO EDISON COMPANY, (216) 384-5715 III CASCADE PLAZA, AKRON, OHIO 44308

THE OHIO BELL TELEPHONE COMPANY, (216) 384-2596, 2525 STATE ROAD, CUYAHOGA FALLS, OHIO 44223

WARNER CABLE T.V. OF AKRON, (216) 633-9200, 1210 BROWNSTONE AVENUE, AKRON, OHIO 44310

CITY OF AKRON PUBLIC UTILITIES BUREAU, (216) 375-2690, 65 SOUTH HIGH STREET, AKRON, OHIO 44308

CITY OF AKRON SEWER MAINTENANCE, (216) 375, 2666, 1555 HOME AVENUE, AKRON, OHIO 44308

ITEM 659, AGRICULTURAL LIMING, AS PER PLAN

THE LOCATION AND NEED FOR AGRICULTURAL LIMING WILL BE DETERMINED BY LABORATORY TESTS, AFTER ROUGH GRADING OPERATIONS HAVE BEEN PERFORMED. QUANTITIES OF AGRICULTURAL LIMING, AS SHOWN ON THE PLANS, ARE SUFFICIENT FOR THE ENTIRE PROJECT, BUT WILL BE NONPERFORMED FOR THE AREAS WHERE TESTS SHOW THAT THE LIMING IS NOT REQUIRED.

WATERING PERMANENT SEEDED AREAS

THE FOLLOWING ESTIMATED QUANTITIES ARE TO BE USED AS DIRECTED BY THE ENGINEER TO PROMOTE GROWTH AND TO CARE FOR THE PERMANENT SEEDED AREAS, AS PER 659.09:

	BHF FUNDS	F FUNDS
659 WATER	2 M GAL	8 M GAL

TEMPORARY SOIL EROSION AND SEDIMENT CONTROL

THE FOLLOWING ESTIMATED QUANTITIES ARE TO BE USED AS DIRECTED BY THE ENGINEER, FOR TEMPORARY EROSION AND SEDIMENT CONTROL MEASURES:

		BHF FUNDS	F FUNDS
207	TEMPORARY SEEDING AND MULCHING	344 SQ YD	1,466 SQ YD
207	STRAW OR HAY BALES	72 EA	
207	TEMPORARY SLOPE DRAINS		110 LIN FT
207	TEMPORARY BENCHES, DIKES, DAMS, AND SEDIMENT BASINS		550 CU YD
207	FILTER FABRIC FENCE		1,080 LIN FT
601	TYPE C ROCK CHANNEL PROTECTION WITHOUT Filter		4.4 CU YD
659	MOWING	4 M SQ FT	17 M SQ FT
659	COMMERCIAL FERTILIZER	.02 TON	.07 TON
659	REPAIR SEEDING AND MULCHING	86 SQ YD	367 SQ YD
659	WATER	1 M GAL	3 M GAL

SEEDING AND MULCHING AS PER PLAN

QUANTITIES FOR SEEDING ARE CALCULATED FOR THE SOIL AREAS BETWEEN THE WORK LIMITS. OTHER ADJACENT AREAS WHERE BUILDINGS, PAVEMENT ETC. HAVE BEEN REMOVED HAVE ALSO BEEN INCLUDED.

THE FOLLOWING SEED MIXTURE SHALL, IN LIEU OF THE MIXTURES LISTED IN 659.09, BE USED THROUGHOUT THE LIMITS OF THIS PROJECT:

35% KENTUCKY BLUEGRASS
55% CREEPING RED FESCUE
5% RED TOP
5% BIRDSFOOT TREFOIL "EMPIRE"

SODDING

A QUANTITY OF 200 S.Y. OF ITEM 660 SODDING HAS BEEN INCLUDED IN THE GENERAL SUMMARY FOR USE ALONG PERKINS STREET AND ADOLPH AVENUE AS SHOWN ON SHEET NO. 39. THE DISTURBED AREAS BETWEEN THE EXISTING SIDEWALK AND THE PROPOSED CURB SHALL BE SODDED AS WELL AS ANY AREAS DISTURBED BY REMOVAL AND REPLACEMENT OF SIDEWALK. ANY OTHER AREAS SHALL BE SODDED AT THE DIRECTION OF THE ENGINEER.

EROSION CONTROL

ITEMS 601 AND 660 ARE PROVIDED IN THE PLANS FOR EROSION CONTROL. ROCK OF STABLE NATURE WILL NOT BE REMOVED IN ORDER TO PLACE THESE ITEMS, AND TURF OF A STABLE NATURE WILL NOT BE REMOVED IN ORDER TO PLACE 660. THE ENGINEER SHALL CHECK AND NONPERFORM QUANTITIES OR ADJUST LOCATIONS AND QUANTITIES FOR THESE ITEMS WHERE INDICATED BY FIELD CONDITIONS DURING CONSTRUCTION.

GUARDRAIL REPLACEMENT

NO HAZARD SHALL BE LEFT UNPROTECTED EXCEPT FOR THE ACTUAL TIME NECESSARY TO REMOVE, GRADE, AND REINSTALL GUARDRAIL IN A CONTINUOUS OPERATION. THE REMOVAL OF ALL GUARDRAIL SHALL AT ALL TIMES BE AS DIRECTED BY THE ENGINEER. NO GUARDRAIL SHALL BE REMOVED UNTIL THE REPLACEMENT MATERIAL IS ON THE SITE, READY FOR INSTALLATION. FAILURE TO COMPLY WITH THIS REQUIREMENT SHALL BE DEEMED SUFFICIENT CAUSE TO ORDER WORK SUSPENDED ON THIS PROJECT UNTIL SUCH TIME THAT THE ENGINEER IS ASSURED OF SAID COMPLIANCE.

ADDITIONAL SOIL INFORMATION

ALL AVAILABLE SOIL AND BEDROCK INFORMATION WHICH CAN BE CONVENIENTLY SHOWN ON THE SOIL PROFILE AND/OR STRUCTURE FOUNDATION INVESTIGATION SHEETS HAS BEEN SO REPORTED. ADDITIONAL SUBSURFACE INVESTIGATIONS MAY HAVE BEEN MADE TO STUDY SOME SPECIAL ASPECT OF THE PROJECT. COPIES OF THIS DATA, IF ANY, MAY BE INSPECTED IN THE DISTRICT DEPUTY DIRECTOR'S OFFICE, THE BUREAU OF TESTS AT 1600 WEST BROAD STREET, THE PAVEMENT AND SOILS SECTION OF THE BUREAU OF LOCATION AND DESIGN, OR IN THE BRIDGE BUREAU AT 25 SOUTH FRONT STREET.

EXISTING DRIVEWAYS

ALL EXISTING DRIVEWAYS SHALL BE PROVIDED WITH A DROP CURB AS DETAILED ON SHEET NO. 47. ALL LABOR AND MATERIALS REQUIRED TO PROVIDE THE DROP CURB SHALL BE INCLUDED IN THE UNIT PRICE BID FOR ITEM 609 CURB, TYPE 2B.

SALVAGE PAVING BRICKS AND COBBLESTONE

WHERE PAVING BRICKS OR COBBLESTONE ARE ENCOUNTERED DURING EXCAVATION OR PAVEMENT REMOVAL OPERATIONS, THE CONTRACTOR SHALL CAREFULLY REMOVE THE BRICK OR COBBLESTONES AND PROVIDE A SAFE STORAGE SITE. CLEANING, SEPARATION AND STACKING WILL NOT BE REQUIRED. THE CONTRACTOR WILL NOTIFY THE CITY OF AKRON, DIVISION OF HIGHWAY MAINTENANCE (216) 375-2831 AND THE ITEMS WILL BE LOADED AND HAULED FROM THE SITE AT NO COST TO THE CONTRACTOR. THE BRICKS AND COBBLESTONE WILL BECOME THE PROPERTY OF THE CITY OF AKRON. THE COST OF REMOVAL AND STORAGE SHALL BE INCLUDED IN THE UNIT BID PRICE FOR ITEM 202, PAVEMENT REMOVED.

GENERAL NOTES

ITEM 207 FILTER FABRIC FENCE *(For Detail See Sht. 46)*

MATERIALS:

NEW OR USED WOVEN WIRE FENCE FABRIC, STEEL LINE POSTS, AND TIES OF THE TYPE CALLED FOR IN ITEM 607 SHALL BE USED FOR THE SUPPORT FENCE. THESE MATERIALS SHALL BE STRUCTURALLY SOUND TO PROVIDE ADEQUATE SUPPORT FOR THE FILTER FABRIC AND TRAPPED SEDIMENT.

In lieu of the construction methods outlined below pre-fabricated sediment fencing fabric meeting the specified material requirements may be used provided that adequate support of the fabric can be maintained in the judgement of the Engineer.

CONSTRUCTION:

THE SEDIMENT FENCE SHALL BE CONSTRUCTED AS PER THE FOLLOWING SEQUENCE OF DRAWINGS SHOWN ON DETAIL SHEET 46. THE FENCE FABRIC SHALL BE SECURED TO THE FENCE POST WITH A MINIMUM OF 4 TIES PER POST. THE FILTER FABRIC SHALL BE SECURED TO THE FENCE AT MAXIMUM INTERVALS OF 2 1/2 FT. ALONG THE OVERLAP ON THE BACK OF THE FENCE.

MAINTENANCE:

THE FILTER FABRIC SEDIMENT FENCE SHALL, AT THE DIRECTION OF THE ENGINEER, BE SATISFACTORILY MAINTAINED SO AS TO BE KEPT FUNCTIONAL. THIS SHALL INCLUDE REMOVAL OF TRAPPED SEDIMENT AND REQUIRED CLEANING, REPAIR, AND/OR REPLACEMENT OF THE FILTER FABRIC.

PAYMENT:

THE COST OF ALL MATERIALS, CONSTRUCTION, MAINTENANCE, AND REMOVAL REQUIRED SHALL BE PAID FOR UNDER ITEM 207 LIN. FT. FILTER FABRIC FENCE.

CONNECTION TO EXISTING PIPE

WHERE THE PLANS PROVIDE FOR PROPOSED CONDUIT TO BE CONNECTED TO, OR TO CROSS EITHER OVER OR UNDER AN EXISTING SEWER, IT SHALL BE THE RESPONSIBILITY OF THE CONTRACTOR TO LOCATE THE EXISTING PIPE BOTH AS TO LINE AND GRADE BEFORE HE STARTS TO LAY THE PROPOSED CONDUIT.

PAYMENT FOR ALL OPERATIONS DESCRIBED ABOVE SHALL BE INCLUDED IN THE UNIT PRICE BID FOR THE PERTINENT 603 CONDUIT ITEMS.

REVIEW OF DRAINAGE FACILITIES

BEFORE ANY WORK IS STARTED ON THE PROJECT, AND AGAIN BEFORE FINAL ACCEPTANCE BY THE STATE, REPRESENTATIVES OF THE STATE AND THE CONTRACTOR, ALONG WITH LOCAL REPRESENTATIVES, SHALL MAKE AN INSPECTION OF THE EXISTING SEWERS WITHIN THE WORK LIMITS WHICH ARE TO REMAIN IN SERVICE AND WHICH MAY BE AFFECTED BY THE WORK. THE CONDITION OF THE EXISTING CONDUITS AND THEIR APPURTENANCES SHALL BE DETERMINED FROM FIELD OBSERVATIONS. RECORDS OF THE INSPECTIONS SHALL BE KEPT IN WRITING BY THE STATE.

ALL NEW CONDUITS, INLETS, CATCH BASINS, AND MANHOLES CONSTRUCTED AS A PART OF THE PROJECT SHALL BE FREE OF ALL FOREIGN MATTER AND IN A CLEAN CONDITION BEFORE THE PROJECT WILL BE ACCEPTED BY THE STATE.

ALL EXISTING SEWERS INSPECTED INITIALLY BY THE ABOVE-MENTIONED PARTIES SHALL BE MAINTAINED AND LEFT IN A CONDITION REASONABLY COMPARABLE TO THAT DETERMINED BY THE ORIGINAL INSPECTION. ANY CHANGE IN THE CONDITION RESULTING FROM THE CONTRACTOR'S OPERATIONS SHALL BE CORRECTED BY THE CONTRACTOR TO THE SATISFACTION OF THE ENGINEER.

PAYMENT FOR ALL OF THE ABOVE SHALL BE INCLUDED IN THE UNIT PRICE BID FOR THE PERTINENT 603 ITEM.

EROSION CONTROL PADS AND ANIMAL GUARDS

EROSION CONTROL PADS AND ANIMAL GUARDS SHALL BE PROVIDED AT THE OUTLET END OF ALL PIPE UNDERDRAINS AND FARM DRAINS, AS PER STANDARD CONSTRUCTION DRAWING MC-4, EXCEPT WHEN THEY OUTLET INTO A DRAINAGE STRUCTURE.

PAYMENT FOR THE EROSION CONTROL PADS AND THE ANIMAL GUARDS SHALL BE INCLUDED IN THE PRICE BID FOR ITEM 603, 6" CONDUIT, TYPE F.

CONDUIT END TREATMENT

IMMEDIATELY AFTER PLACEMENT OF ANY CONDUITS, THE CONTRACTOR SHALL CONSTRUCT THE END TREATMENTS REQUIRED BY THE PLANS AT BOTH THE OUTLET AND INLET ENDS. THIS SHALL INCLUDE HEADWALLS, CONCRETE RIPRAP, ROCK CHANNEL PROTECTION, SODDING, ETC.

CLEANOUT OF UNDERGROUND SEWER SYSTEMS ~ *Item Special Cleaning Sewer*

CLEANOUT SHALL CONSIST OF REMOVING DIRT AND DEBRIS FROM THE SEWER SYSTEMS AS DEFINED BY THE PROJECT LIMITS SHOWN ON THE PLANS. ONLY THOSE PORTIONS OF THE SYSTEMS DESIGNATED BY THE ENGINEER AFTER A DETAILED EXAMINATION SHALL BE CLEANED OUT.

CLEANOUT OF THE UNDERGROUND SEWER SYSTEMS WILL BE PAID FOR AT THE LUMP SUM PRICE BID FOR ITEM SPECIAL, CLEANING SEWER. THIS PRICE SHALL BE PAYMENT IN FULL FOR ALL MATERIAL, EQUIPMENT AND LABOR NECESSARY TO COMPLETE THE WORK TO THE SATISFACTION OF THE ENGINEER, INCLUDING DISPOSAL OF ALL DEBRIS AND DIRT THAT IS REMOVED FROM THE SEWERS. NO SEPARATE PAYMENT SHALL BE MADE TO THE CONTRACTOR TO COVER ANY COST FOR CLEANING DRAINAGE STRUCTURES SUCH AS CATCH BASINS, INLETS, ETC., WITHIN THE UNDERGROUND SEWER SYSTEMS.

ALL DEBRIS, SAND, GRAVEL, AND OTHER MATERIALS WHICH WOULD SETTLE OUT IN THE SEWER SYSTEM AND WHICH WOULD RESTRICT FLOW SHALL BE REMOVED FROM THE SEWER SEGMENT BEING CLEANED AND HAULED AND DISPOSED OF BY THE CONTRACTOR TO A DISPOSAL SITE DESIGNATED BY THE CITY OF AKRON. FLUSHING OF SAID MATERIALS FROM SEWER SEGMENT TO SEWER SEGMENT SHALL NOT BE PERMITTED. THE CONTRACTOR SHALL BE REQUIRED TO CLEAN AND PROPERLY DISPOSE OF ALL MATERIAL REMOVED FROM THE SEWER SEGMENT WHICH IS SPILLED OR OTHERWISE DEPOSITED UPON THE GROUND. SAID CLEAN-UP SHALL BE DONE WITH DISPATCH AND PROMPTNESS SO AS NOT TO CAUSE UNSIGHTLINESS OR A NUISANCE.

STORM AND SANITARY CONSTRUCTION PROTECTION

WHERE PROPOSED STORM AND SANITARY SEWERS ARE TO BE CONSTRUCTED ADJACENT TO EXISTING PRIVATE OR PUBLIC UNDERGROUND LINES, THE CONTRACTOR SHALL PROVIDE, AT THE DIRECTION OF THE ENGINEER, SUITABLE PROTECTIVE DEVICES SO AS TO PREVENT ANY DAMAGE OR CREATE A SITUATION THAT WOULD CAUSE SUSPENSION OF SERVICES.

CONTRACTION AND EXPANSION JOINTS

ALTHOUGH SPECIFIC LOCATIONS OF CERTAIN EXPANSION AND CONTRACTION JOINTS HAVE BEEN DETAILED ON THIS PLAN, NO WAIVER OF THE SPECIFICATIONS IS INTENDED. PROVISION OF EXPANSION JOINTS AT ALL MAJOR STRUCTURES AND THE MAXIMUM SPACING BETWEEN CONTRACTION JOINTS SHALL, IN ALL CASES, BE IN ACCORDANCE WITH STANDARD CONSTRUCTION DRAWINGS AND THE SPECIFICATIONS.

CONTRACTION JOINTS IN PAVEMENT WIDENING

WHERE NEW CONCRETE PAVEMENT IS PLACED ADJACENT TO EXISTING CONCRETE PAVEMENT, CONTRACTION JOINTS SHALL BE PROVIDED IN THE NEW PAVEMENT SO AS TO FORM A CONTINUOUS JOINT WITH THAT IN THE EXISTING PAVEMENT.

THE MAXIMUM DISTANCE BETWEEN THE JOINTS IN NEW PAVEMENT SHALL BE IN ACCORDANCE WITH STANDARD CONSTRUCTION DRAWING BP-4. IF NECESSARY, ADDITIONAL JOINTS SHALL BE PROVIDED IN NEW PAVEMENT AT APPROXIMATELY EQUAL INTERVALS BETWEEN EXISTING JOINTS THAT EXCEED THE MAXIMUM SPACING.

SURVEY MONUMENTS AND BENCH MARKS

THE CONTRACTOR SHALL NOTIFY THE CITY OF AKRON, BUREAU OF ENGINEERING, SURVEY DIVISION (375-2160) BEFORE DISTURBING OR REMOVING ANY SURVEY MONUMENT OR BENCH MARK IN THE CONSTRUCTION AREA. FAILURE TO DO SO WILL RESULT IN REPLACEMENT AT THE CONTRACTOR'S EXPENSE.

ELEVATION DATUM

ALL ELEVATIONS SHOWN ON THESE PLANS ARE IN FEET ABOVE THE STATE GEODETIC CONTROL DATUM PLANE.

COORDINATES

ALL COORDINATES SHOWN ON THESE PLANS ARE BASED ON THE STATE OF OHIO GEODETIC CONTROL NETWORK.

STREET NAME SIGNS

ALL STREET NAME SIGNS THAT WILL BE DISTURBED BY THE CONSTRUCTION SHALL BE CAREFULLY REMOVED AND STORED BY THE CONTRACTOR FOR SALVAGE BY THE CITY OF AKRON. PAYMENT SHALL BE *as described by 107.12.*

CONCRETE BARRIER ON APPROACH SLABS
Item 611 ~ Reinforced Concrete Approach Slab Modified As Per Plan

CONCRETE BARRIER SHALL BE CONSTRUCTED ON APPROACH SLABS AS DETAILED ON SHEET NO. 184. COST OF THE CONCRETE BARRIER SHALL BE INCLUDED IN THE UNIT PRICE BID FOR ITEM 611, REINFORCED CONCRETE APPROACH SLAB *modified as per plan.*

ITEM 407 - TACK COAT

The tack coat operation shall be as determined as per Spec. 407.05. Plan calculations indicate application rates of 0.1 gal. per square yard of tack coat for estimating purposes only.

GENERAL NOTES

PAVEMENT REMOVAL

THE PAVEMENT DETAILS SHOW SEVERAL AREAS OF PAVEMENT REMOVAL 1' TO 2' FROM THE FACE OF CURB WHERE NEW CURB AND NEW CONCRETE PAVEMENT ARE TO BE CONSTRUCTED ADJACENT TO EXISTING PAVEMENT. THE OLD PAVEMENT SHALL BE NEATLY SAW CUT TO THE FULL DEPTH IN AREAS OF CONCRETE PAVEMENT AND THE ASPHALT COURSE SHALL BE SAW CUT TO FULL DEPTH IN AREAS OF BRICK PAVEMENT. THE BRICK SHALL BE REMOVED IN SUCH A MANNER AS TO CREATE AS NEAT A VERTICAL LINE AS POSSIBLE. THIS WORK SHALL BE CONSIDERED INCIDENTAL TO ITEM 202, PAVEMENT REMOVAL.

DUST CONTROL

TH FOLLOWING ESTIMATED QUANTITIES ARE PROVIDED TO BE USED AS DIRECTED BY THE ENGINER FOR DUST CONTROL ON THIS PROJECT:

ITEM 616 CALCIUM CHLORIDE	10 TONS
ITEM 616 WATER	1,000 M GALS

CURBS ON APPROACH SLABS

THE HEIGHT AND FACE OF CURBS ON APPROACH SLABS SHALL BE TRANSITIONED FROM THE STANDARD SECTION USED ON THE APPROACH PAVEMENT TO THE SECTION USED ON THE BRIDGE CURBING WITHIN THE LIMITS OF THE APPROACH SLAB. THIS SHALL PERTAIN TO THE S.R. 8 APPROACH SLABS ONLY.

FOR CURB TRANSITIONS ON PERKINS STREET APPROACH SLAB, SEE DETAIL SHEET 47 .

GUARDRAIL BEHIND CURBS

WHERE A CURB IS PROVIDED AT THE OUTER EDGE OF THE PAVED SHOULDER, ANY NECESSARY GUARDRAIL SHALL BE POSITIONED SO THAT THE FACE OF THE GUARDRAIL IS LOCATED 0" BACK OF THE FACE OF CURB AND THE TOP OF THE RAIL SHALL BE 27" ABOVE THE GUTTER LINE.

PAVEMENT INTERSECTIONS

THE ELEVATIONS APPEARING ON THE INTERSECTION DETAILS HAVE BEEN DETERMINED FROM FIELD SURVEY AND REFLECT THE CALCULATED ELEVATIONS REQUIRED TO PROVIDE A SMOOTH TRANSITION OF INTERSECTING GRADES.

THE CONTRACTOR, AT THE DIRECTION OF THE ENGINEER, SHALL MAKE MINOR ELEVATION ADJUSTMENTS TO MEET EXISTING FIELD CONDITIONS.

ALL CURB ELEVATIONS SHOWN ARE GUTTER LINE ELEVATIONS.

MANHOLES, CATCH BASINS, AND INLETS REMOVED OR ABANDONED

THE CASTINGS SHALL BE CAREFULLY REMOVED AND STORED WITHIN THE RIGHT OF WAY FOR SALVAGE BY CITY OF AKRON FORCES. ALL CASTINGS ARE TO BE RETURNED TO THE CITY OF AKRON SEWER MAINTENANCE. PAYMENT FOR ALL OF THE ABOVE SHALL BE INCLUDED IN THE UNIT PRICE BID FOR THE PERTINENT 202 ITEM.

CURB RAMPS

CURB RAMPS WILL BE CONSTRUCTED AT THE DIRECTION OF THE ENGINEER. THE CURB RAMP DIMENSIONS, LOCATIONS, AND TYPE MAY BE MODIFIED TO FIT THE LOCATION PER STANDARD DRAWING BP-12. THE FOLLOWING ESTIMATED QUANTITIES HAVE BEEN INCLUDED IN THE GENERAL SUMMARY FOR ITEM 608 CURB RAMP:

LOCATION	TYPE 2 SQ. FT.	TYPE 2 EACH
STA 49+65, 17' RT GOOD STREET		1
STA 49+58, 22' RT ADOLPH AVENUE		1
STA 49+58, 18' LT ADOLPH AVENUE		1
STA 51+54, 34' LT PERKINS STREET		1
STA 51+54, 30' RT PERKINS STREET		1
STA 50+23, 18' LT ADOLPH AVENUE		1
STA 50+23, 18' RT ADOLPH AVENUE	20	--
TOTALS	20	6

MAINTENANCE OF TRAFFIC

CALC. BY. EWK DATE 4/85	SUM-8-1.73/1.95	OHIO	10
CHKD. BY. DSB DATE 4/85		F.H.W.A. REGION 5	204

1. ALL TRAFFIC CONTROL DEVICES SHALL BE FURNISHED BY THE CONTRACTOR AND SHALL BE ERECTED AND MAINTAINED IN COMPLIANCE WITH THE STATE OF OHIO "MANUAL OF UNIFORM TRAFFIC CONTROL DEVICES" CURRENT EDITION, LATEST REVISION.

2. THE CONTRACTOR SHALL BE RESPONSIBLE AT ALL TIMES FOR PROVIDING AND MAINTAINING LIGHTS, SIGNS, AND BARRICADES FOR THE MAINTENANCE OF TRAFFIC AND SAFETY OF HIS WORK AT THE LOCATIONS SHOWN ON THESE PLANS OR AS DIRECTED BY THE ENGINEER.

3. THE CONTRACTOR SHALL GIVE THE CITY OF AKRON, TRAFFIC ENGINEERING DIVISION, A MINIMUM OF FOURTEEN DAYS NOTICE PRIOR TO STARTING WORK.

4. CONTRACTOR SHALL PURSUE THE PROJECT IN SUCH A MANNER AS TO MINIMIZE BOTH THE EXTENT AND DURATION OF THE DISRUPTION OF TRAFFIC.

5. TEMPORARY PAVEMENT MARKINGS WILL BE INSTALLED BY THE CONTRACTOR AS PER THE 614 WORK ZONE PAVEMENT MARKINGS NOTE ON SHEET 12.

   THE CONTRACTOR SHALL, PRIOR TO PLACING TEMPORARY MARKINGS, REMOVE ALL EXISTING CONFLICTING MARKINGS THAT ARE VISIBLE TO THE TRAVELING PUBLIC DURING DAYLIGHT OR NIGHTTIME HOURS. WHEN TEMPORARY MARKINGS ARE NO LONGER NEEDED, ANY CONFLICTING MARKINGS SHALL BE REMOVED BY THE CONTRACTOR BEFORE THE FLOW OF TRAFFIC IS DIVERTED TO THE NEXT PHASE. SEE SHEET 12 FOR FUTHER DETAILS.

6. THE ENDS OF THE TEMPORARY CONCRETE BARRIER MUST HAVE EITHER THE STANDARD 10' TERMINAL SECTION OR ATTENUATION DEVICES. ATTENUATION DEVICES SELECTED MUST FIRST MEET THE APPROVAL OF THE PROJECT ENGINEER BEFORE SUCH DEVICES ARE INSTALLED.

7. TYPE "C" STEADY BURN WARNING LIGHTS SHALL BE INSTALLED AT 100' SPACES ON TOP OF ALL CONCRETE BARRIER THAT PARALLELS THE ROADWAY.

8. THE TYPE "A" FLASHING BARRICADE WARNING LIGHTS SHALL BE MOUNTED ON NOTED SIGNS AT ALL TIMES.

9. TYPE "C" STEADY BURNING BARRICADE WARNING LIGHTS SHALL BE ERECTED ON DRUMS FOR NIGHT LANE CLOSURES. MAXIMUM SPACING SHALL BE 50' CENTER TO CENTER IN ADVANCE OF THE WORK AREA AND AT 100' CENTERS THROUGH THE WORK AREA.

10. THE CITY OF AKRON SHALL BE RESPONSIBLE FOR THE ERECTION, MAINTAINING, AND REMOVAL OF TEMPORARY SIGNS ON SURFACE STREETS ADVISING MOTORISTS OF DETOUR ROUTES. THE CONTRACTOR SHALL CONSULT THE CITY OF AKRON TRAFFIC ENGINEERING DIVISION AS THE HOURS OF THE DAY THAT TRAFFIC ENGINEERING DIVISION CREWS WILL BE AVAILABLE TO PROVIDE THESE SERVICES.

11. THE CONTRACTOR SHALL FURNISH AND ERECT ALL NECESSARY TEMPORARY SIGNS INCLUDING SUPPORTS AND RELATED HARDWARE ACCORDING TO THE OHIO MANUAL OF UNIFORM TRAFFIC CONTROL DEVICES. WHEN NO LONGER NEEDED, THE CONTRACTOR SHALL RESTORE EXISTING SIGNS TO THE ORIGINAL LEGEND AND REMOVE ALL TEMPORARY SIGNS THAT ARE A PART OF THIS WORK.

12. DURING CONSTRUCTION OF THIS PROJECT, SOME MODIFICATIONS OF EXISTING OVERHEAD SIGNS WILL BE REQUIRED. IT SHALL BE THE RESPONSIBILITY OF THE CONTRACTOR TO MAKE NECESSARY MODIFICATIONS AND WHEN NO LONGER NECESSARY, RETURN SIGNS TO ORIGINAL LEGENDS. SEE SHEET 18 FOR ADDITIONAL DETAILS.

13. THE CONTRACTOR SHALL SCHEDULE HIS OPERATIONS SO THAT THE MINIMUM NUMBER OF TRAFFIC LANES AS INDICATED ON THE MAINTENANCE OF TRAFFIC DRAWINGS IS MAINTAINED AT ALL TIMES. NO WORK WILL BE PERMITTED WHICH WILL REDUCE THE NUMBER, EXCEPT AS NOTED ON THE PLANS, OR AS DIRECTED BY THE ENGINEER. SEE SHEET 18 FOR ADDITIONAL DETAILS.

14. A SAFETY NET OR PLATFORM SHALL BE REQUIRED TO PROTECT THE WORKMEN AND TRAVELING PUBLIC DURING THE BRIDGE WIDENING AND RECONSTRUCTION OVER EXISTING STREETS. THE CONTRACTOR SHALL PROVIDE A SAFETY NET OR PLATFORM OF SUITABLE STRENGTH AT THE UNDERSIDE OF THE DECK. THE DESIGN OF THE NET OR PLATFORM SHALL CONFORM WITH OSHA REQUIREMENTS AND THE APPROVAL OF THE ENGINEER AND SHALL REMAIN IN PLACE UNTIL THE WORK HAS BEEN COMPLETED AND ACCEPTED, OR AS DIRECTED BY THE ENGINEER. THE FURNISHING, INSTALLING, MAINTAINING, AND REMOVING OF THE SAFETY NET OR PLATFORM SHALL BE INCLUDED IN THE CONTRACT LUMP SUM PRICE FOR MAINTENANCE OF TRAFFIC, ITEM 614.

15. THE CONTRACTOR SHALL PROVIDE THE SERVICE OF A SPECIAL DUTY LAW ENFORCEMENT OFFICER WITH A PATROL CAR FOR THE EXCLUSIVE PURPOSE OF CONTROLLING THROUGH TRAFFIC. THE LAW ENFORCEMENT OFFICER WITH A PATROL CAR SHALL BE UTILIZED DURING INSTALLATION AND REMOVAL OF TRAFFIC CONTROL DEVICES FOR LANE RESTRICTIONS AND AT MAINTENANCE OF TRAFFIC SIGNING LOCATIONS. THE OFFICER SHALL ALWAYS BE IN A POSITION NEAR THE END OF THE LINE OF STOPPED TRAFFIC TO ASSIST IN CONTROLLING TRAFFIC AND INFORMING DRIVERS AS TO THE NATURE OF THE DELAY. THE CONTRACTOR, WITH THE PROJECT ENGINEER'S APPROVAL, SHALL DETERMINE WHEN AND HOW MANY OFFICERS SHALL BE REQUIRED. TO OBTAIN THE SERVICES OF AKRON CITY OFFICERS, THE CONTRACTOR SHALL CONTACT THE FOLLOWING:

   CITY-COUNTY SAFETY BUILDING, POLICE DIVISION
   217 SOUTH HIGH STREET
   AKRON, OHIO 44308
   375-2503

   PAYMENT SHALL BE AS FOLLOWS:

   ITEM SPECIAL, LAW ENFORCEMENT OFFICER WITH PATROL VEHICLE=300 HRS.

16. NO PRIVATE VEHICLES (BELONGING TO THE CONTRACTOR'S EMPLOYEES AND TO ODOT PERSONNEL PERMANENTLY ASSIGNED TO THE PROJECT) SHALL BE PARKED WITHIN THE ROADWAY TRAVEL PORTION (PAVEMENT AND SHOULDER) OF THE HIGHWAY PROJECT LIMITS. ALL PARKING WILL BE DONE AT AN APPROVED STAGING AREA LOCATED WITHIN THE HIGHWAY L/A. THE CONTRACTOR WILL BE RESPONSIBLE FOR PROVIDING SHUTTLE VEHICLES TO TRANSPORT PERSONNEL FROM THE STAGING AREA TO THE WORK SITE.

   STAGING AREAS FOR THE STORAGE OF EQUIPMENT AND MATERIAL MUST HAVE PRIOR APPROVAL BY THE PROJECT ENGINEER AND THE ENGINEER FOR THE CITY OF AKRON. IF THE STAGING AND STORAGE AREA IS DISTURBED IN ANY MANNER, THE CONTRACTOR SHALL RESTORE THE SITE TO ORIGINAL CONDITION PRIOR TO VACATING THE PROJECT. COST FOR ANY RESTORATION REQUIRED IS INCIDENTIAL AND IS TO BE INCLUDED WITH ITEM 614, MAINTAINING TRAFFIC.

17. THE CONTRACTOR SHALL INSTALL AND SUBSEQUENTLY RESET FOR EACH CONSTRUCTION PHASE ALL TRAFFIC CONTROL DEVICES NECESSARY FOR MAINTAIN TRAFFIC DURING OFF-PEAK TRAFFIC PERIODS.

   INSTALLING AND RESETTING TEMPORARY CONCRETE BARRIER THROUGH THE CROSSOVER AREAS SHALL ONLY BE PERFORMED BETWEEN THE 7:00 P.M. TO 7:00 A.M. TIME PERIOD OR ON WEEKENDS.

   NO MAINTENANCE OF TRAFFIC OPERATIONS ARE TO BE PERFORMED BETWEEN THE HOURS OF 7:00 A.M. TO 9:00 A.M. AND 4:00 P.M. TO 6:00 P.M. WEEKDAYS.

18. SPECIFIC LOCATIONS AND USAGE OF ESTIMATED QUANTITIES SET UP ON THIS PLAN TO BE USED "AS DIRECTED BY THE ENGINEER" SHALL BE MADE A MATTER OF RECORD BY INCORPORATION INTO THE FINAL CHANGE ORDER GOVERNING COMPLETION OF THIS PROJECT. ESTIMATED QUANTITIES OF MATERIALS SHALL NOT BE ORDERED FOR DELIVERY TO THE PROJECT UNLESS AUTHORIZED BY THE ENGINEER.

19. IF THE CONTRACTOR FAILS TO COMPLY WITH THE PROVISIONS FOR TRAFFIC CONTROL AS SET FORTH IN THESE PLANS OR WITH PROVISIONS OF THE MANUAL AND SUCH FAILURE RESULTS IN A CONDITION AT THE WORK SITE WHICH IS UNSAFE FOR TRAFFIC, THE ENGINEER SHALL SUSPEND WORK UNTIL THE CONTRACTOR COMPLIES WITH THE NECESSARY REQUIREMENTS.

   FAILURE TO COMPLY WITH THE ABOVE REQUIREMENTS SHALL BE DEEMED SUFFICIENT CAUSE TO ORDER WORK SUSPENDED ON THIS PROJECT UNTIL SUCH TIME THAT THE ENGINEER OBTAINS COMPLIANCE WITH THESE REQUIREMENTS.

20. <u>TRAFFIC SAFETY COORDINATOR</u>

   THE CONTRACTOR SHALL HAVE A FULL-TIME TRAFFIC SAFETY COORDINATOR ON DUTY WHENEVER ACTIVE CONSTRUCTION WORK IS BEING PERFOMED WITHIN THE LIMITS OF THIS PROJECT. THE TRAFFIC SAFETY COORDINATOR SHALL BE RESPONSIBLE FOR THE CONTRACTOR'S MAINTENANCE OF TRAFFIC OPERATIONS. THE CONTRACTOR SHALL DESIGNATE A QUALIFIED INDIVIDUAL TO THE POSITION, IN WRITING TO THE DISTRICT CONSTRUCTION ENGINEER FOR APPROVAL, PRIOR TO THE PRECONSTRUCTION CONFERENCE. THE APPOINTED TRAFFIC SAFETY COORDINATOR SHALL BE PRESENT AT THE PRECONSTRUCTION CONFERENCE.

   THE RESPONSIBILITIES OF THE TRAFFIC SAFETY COORDINATOR ARE OUTLINED IN THE MAINTENANCE PLAN AND INCLUDES THE FOLLOWING:

   A. UNDERSTAND AND BE FAMILIAR WITH THE REQUIREMENTS OF THE OHIO MANUAL OF UNIFORM TRAFFIC CONTROL DEVICES, CURRENT EDITION, LATEST REVISION, THE TRAFFIC MAINTENANCE PLAN, AND THE TRAFFIC MAINTENANCE AND SAFETY PROVISIONS OF CONSTRUCTION PLANS AND CONTRACT PROPOSAL.

   B. REVIEW AND ANTICIPATE APPROPRIATE TRAFFIC CONTROL DEVICES AND ASSURE THAT SUCH DEVICES ARE DETERMINED TO BE NECESSARY FOR SAFE AND EFFICIENT TRAFFIC MOVEMENT ARE OBTAINED AND ERECTED.

   C. COORDINATE MAINTENANCE OF TRAFFIC OPERATIONS WITH THE PROJECT ENGINEER.

   D. ATTEND PERIODIC MEETINGS WITH THE PROJECT ENGINEER AND CITY OF AKRON TO REVIEW AND RECOMMEND PROCEDURES FOR REVISIONS IN THE MAINTENANCE OF TRAFFIC OPERATIONS.

   E. HOLD TRAFFIC SAFETY MEETINGS WITH THE CONTRACTOR AND SUBCONTRACTOR'S SUPERINTENDENTS AND FOREMEN PRIOR TO AND DURING CONSTRUCTION. (THE PROJECT ENGINEER AND CITY REPRESENTATIVES SHALL BE INVITED TO ATTEND THESE MEETINGS.)

   F. PAYMENT FOR THIS INDIVIDUAL TO BE LUMP SUM BID FOR ITEM SPECIAL, TRAFFIC SAFETY COORDINATOR LUMP SUM.

21. <u>PUBLIC MEDIA</u>

   PRIOR TO CONSTRUCTION, THE CITY, IN COOPERATION WITH THE PROJECT ENGINEER, WILL NOTIFY ALL MAJOR LOCAL MEDIA AND POLICE AND FIRE PROTECTION AGENCIES OF THE PROJECT, INCLUDING THE TYPE OF WORK TO BE PERFORMED, THE HOURS THAT THE HIGHWAY WILL BE FULLY OPENED, TYPE OF TRAFFIC DELAYS THAT CAN BE EXPECTED, ALTERNATE ROUTES THAN CAN BE USED, THE RAMP CLOSURES AND LANE REDUCTIONS IN EFFECT, AND WHOM THE PUBLIC CAN CONTACT FOR FURTHER INFORMATION. DURING CONSTRUCTION, THE TRAFFIC SAFETY COORDINATOR, IN COOPERATION WITH THE CITY, WILL ADVISE LOCAL RADIO STATIONS RELATIVE TO LOCATIONS, TIME AND TYPE OF CONSTRUCTION OPERATIONS AS WELL AS TO LANE CLOSURES AND RECOMMENDED ROUTES. A SEPARATE PHONE WILL BE INSTALLED SPECIFICALLY TO HANDLE INQUIRIES FROM THE PUBLIC AND THE MEDIA. PRETAPED MESSAGES ON THE LATEST HIGHWAY CONDITION MAY BE USED. THE USE OF CB RADIO TO ADVISE ON CURRENT CONDITIONS SHALL BE EMPLOYED EVERY 15 MINUTES FROM 7 A.M. TO 9 A.M. AND 4 P.M. TO 6 P.M. AND EVERY HOUR DURING THE REMAINING WORK HOURS. A CB RADIO SHALL BE PROVIDED IN THE FIELD OFFICE TO ALLOW THE PROJECT PERSONNEL TO MONITOR ALL RADIO MESSAGES. THE CB CHANNEL SHALL BE DESIGNATED AT THE PRECONSTRUCTION MEETING. SPECIAL SIGNS TO NOTIFY MOTORISTS OF CB ADVISORY SHALL BE PROVIDED, ERECTED AND MAINTAINED BY THE CONTRACTOR AT LOCATIONS DETERMINED BY THE PROJECT ENGINEER AND TRAFFIC SAFETY COORDINATOR. COST FOR THIS WORK TO BE INCLUDED WITH ITEM 614, MAINTAINING TRAFFIC. A TYPICAL SIGN IS SHOWN BELOW:

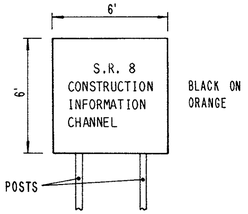

22. PAYMENT FOR THE ABOVE, UNLESS SPECIFIED SEPARATELY, SHALL BE AT THE LUMP SUM PRICE BID FOR ITEM 614, "MAINTAINING TRAFFIC" WHICH SHALL INCLUDE ALL LABOR, EQUIPMENT, MATERIALS, AND INCIDENTALS TO COMPLETE THE ABOVE WORK.

MAINTENANCE OF TRAFFIC
GENERAL NOTES
1 OF 2

Rev. 12-2-85

MAINTENANCE OF TRAFFIC

CALC. BY. EWK DATE 4/85	SUM-8-1.73/1.95	OHIO	11
CHKD. BY. DSB DATE 4/85		F.H.W.A. REGION 5	204

23. WITHIN THE LIMITS OF THIS CONTRACT, THE FOLLOWING MAINTENANCE OF TRAFFIC SEQUENCE SHALL BE CONDUCTED. ANY DEVIATIONS MUST BE APPROVED IN WRITING BY THE DIRECTOR OF TRANSPORTATION. NOTIFICATION OF ANY DEVIATIONS SHALL BE GIVEN TO THE CITY OF AKRON TRAFFIC ENGINEERING DEPARTMENT.

PHASE 1

REMOVE THE EXISTING CENTERLINE BARRIERS BOTH NORTH AND SOUTH OF THE VIADUCT AS SHOWN IN THE PLAN AND CONSTRUCT TEMPORARY CROSSOVERS. MAINTAIN TRAFFIC IN THE TWO OUTSIDE LANES, BOTH NORTHBOUND AND SOUTHBOUND FROM 519+50 TO 545+00.

PHASE 2

TWO-WAY TRAFFIC IS MAINTAINED ON THE EAST SIDE OF THE VIADUCT. SOUTHBOUND TRAFFIC - THE NUMBER OF LANES IS REDUCED FROM THREE TO ONE THEN SHIFTED TO THE EAST SIDE OF THE VIADUCT USING THE CROSSOVER. THROUGH TRAFFIC IS ENCOURAGED TO FOLLOW THE ALTERNATE S.R. 8 SIGNING, TO BE INSTALLED AT HOWE AVENUE AND TALLMADGE AVENUE. WHILE CONSTRUCTION IS BEING PERFORMED ON RAMP "I," THE PERKINS STREET RAMP TRAFFIC IS TO BE DETOURED TO EXIT AT TALLMADGE AVENUE. WHEN THE RAMP CONSTRUCTION IS COMPLETED, THE PERKINS STREET RAMP IS TO BE REOPENED. DURING THE PERIOD WHEN CONCRETE IS BEING POURED FOR THE BRIDGE DECK, TRUCKS ARE TO BE DETOURED FROM THE EXPRESSWAY AT TALLMADGE AVENUE. THIS DETOUR MUST REMAIN IN EFFECT UNTIL THE CONCRETE HAS BEEN CURED. NORTHBOUND TRAFFIC - THE NUMBER OF LANES IS REDUCED FROM THREE TO TWO PRIOR TO THE VIADUCT APPROACH. DURING THE PERIOD WHEN CONCRETE IS BEING POURED FOR THE BRIDGE DECK, TRUCKS ARE TO BE DETOURED FROM THE EXPRESSWAY AT PERKINS STREET. THIS DETOUR MUST REMAIN IN EFFECT UNTIL THE CONCRETE HAS BEEN CURED.

PHASE 3

TWO-WAY TRAFFIC IS MAINTAINED ON THE WEST SIDE OF THE VIADUCT. SOUTHBOUND TRAFFIC - THE NUMBER OF LANES IS REDUCED FROM THREE TO ONE PRIOR TO THE VIADUCT APPROACH. THROUGH TRAFFIC IS ENCOURAGED TO FOLLOW THE ALTERNATE S.R. 8 SIGNING PROVIDED AT HOWE AVENUE AND TALLMADGE AVENUE. DURING THE PERIOD WHEN CONCRETE IS BEING POURED FOR THE BRIDGE DECK, TRUCKS ARE TO BE DETOURED FROM THE EXPRESSWAY AT TALLMADGE AVENUE. THIS DETOUR MUST REMAIN IN EFFECT UNTIL THE CONCRETE HAS BEEN CURED. NORTHBOUND TRAFFIC - THE NUMBER OF LANES IS REDUCED FROM THREE TO TWO THEN SHIFTED TO THE WEST SIDE OF THE VIADUCT USING THE CROSSOVER. THE PERKINS STREET NORTHBOUND ENTRANCE RAMP (RAMP "J") IS TO BE CLOSED DURING THIS PHASE. DURING THE PERIOD WHEN CONCRETE IS BEING POURED FOR THE BRIDGE DECK, TRUCKS ARE TO BE DETOURED FROM THE EXPRESSWAY AT PERKINS STREET. THIS DETOUR MUST REMAIN IN EFFECT UNTIL THE CONCRETE HAS BEEN CURED.

PHASE 4

MAINTAIN TRAFFIC IN THE TWO OUTSIDE LANES BOTH NORTHBOUND AND SOUTHBOUND FROM STATION 514+00 TO STATION 545+00. THE CROSSOVERS ARE TO BE REMOVED AND REPLACED WITH NEW CENTERLINE BARRIER MEDIAN ON THE SOUTH END OF THE VIADUCT AND REBUILT CENTERLINE BARRIER MEDIAN ON THE NORTH END OF THE VIADUCT.

PHASE 5

RECONSTRUCTION OF THE PERKINS STREET BRIDGE OVER THE NORTH EXPRESSWAY. ALL PERKINS STREET RAMPS ARE TO REMAIN OPEN. TRAFFIC WILL BE DETOURED AROUND THE BRIDGE SITE USING THE LOCAL STREET SYSTEM. THE CONTRACTOR SHALL NOT STAGE HIS CONSTRUCTION SUCH THAT THIS BRIDGE IS OUT OF SERVICE WHILE PHASE 2 OR PHASE 3 OF THE VIADUCT CONSTRUCTION IS BEING PERFORMED.

AS AN ALTERNATE, THE CONTRACTOR MAY COMBINE WORK ELEMENT PHASES 5 AND 6. IF PHASES 5 AND 6 ARE COMBINED THE RAMP CONSTRUCTION FOR I, J, K AND L MUST BE COMPLETED FIRST.

PHASE 6

THIS PHASE IS INTENDED TO COVER THE CONSTRUCTION OF THE PERKINS STREET RAMPS.

THE CONTRACTOR IS TO STAGE HIS PAVEMENT CONSTRUCTION SUCH THAT RAMPS "I" AND "K" AT PERKINS STREET INTERSECTION CAN BE KEPT OPEN TO TRAFFIC.

DUE TO THE DIFFERENCE IN VERTICAL GRADE BETWEEN EXISTING AND PROPOSED OF RAMPS "L" AND "J" AT THE PERKINS STREET INTERSECTION, THESE RAMPS MUST BE CLOSED AND THE FOLLOWING DETOUR ROUTES ARE NECESSARY:

NORMAL PATTERN		DETOUR
RAMP "L," N.B. EXIT	TO	BUCHTEL/CARROLL EXIT
RAMP "J," N.B. ENTRANCE	TO	BUCHTEL/CARROLL ENTRANCE
RAMP "I," S.B. EXIT (E.B. PERKINS)	TO	UNION STREET AND FORGE STREET

SPECIAL NOTE FOR RAMP "J" MAINTENANCE OF TRAFFIC SEQUENCE:

DURING PHASE 3, WHEN RAMP ACCESS TO THE NORTH EXPRESSWAY IS DENIED, CONSTRUCTION SHALL BE FROM STATION 5+70 TO THE MAINLINE.

PHASE 4, OPEN.

PHASE 5, OPEN.

DURING PHASE 6, THE REMAINING PORTION, FROM PERKINS STREET TO STATION 5+70 CAN BE COMPLETED.

ITEM 622 TEMPORARY CONCRETE BARRIER, AS PER PLAN

M.O.T. PHASE	NB/SB	SHEET NO.	STATION LIMITS	DIRECTION TOTAL	PHASE TOTAL
1	NB	14	512+90 TO 524+00 = 1110'	1610'	3170'
		14	541+00 TO 546+00 = 500'		
	SB	14	519+00 TO 524+00 = 500'	1560'	
		14	541+00 TO 551+60 = 1060'		
2	NB	15	519+50 TO 545+00 = 2550'	2550'	3450'
	SB	15	519+00 TO 524+00 = 500'	900'	
		15	541+00 TO 545+00 = 400'		
3	NB	21	519+00 TO 524+00 = 500'	500'	3050'
	SB	21	519+50 TO 545+00 = 2550	2550'	
4	NB	22	507+40 TO 524+90 = 1750'	2250'	4500'
		22	541+00 TO 546+00 = 500'		
	SB	22	513+00 TO 524+90 = 1190'	2250'	
		22	541+00 TO 551+60 = 1060'		

PAYMENT SHALL BE MADE AT THE CONTRACT UNIT PRICE FOR ITEM 622, 4500 L.F. OF TEMPORARY CONCRETE BARRIER, AS PER PLAN. QUANTITY CARRIED TO GENERAL SUMMARY SHEET. THE MOVING, TRANSPORTING, STORING AND RESETTING OF THE BARRIERS FOR THE VARIOUS CONSTRUCTION PHASES SHALL BE INCLUDED IN THE CONTRACT LUMP SUM BID FOR ITEM 614, MAINTAINING TRAFFIC.

24. THE PHASES OF WORK DESCRIBED ABOVE SHALL BE PERFORMED IN THE FOLLOWING SEQUENCE AND SUBJECT TO THE CONDITIONS DESCRIBED BELOW.

DURING THE PERIOD MARCH 1, 1986 TO NOVEMBER 30, 1986 THE CONTRACTOR SHALL CONSTRUCT PHASES 1, 2, 5, AND 6. BEGINNING DECEMBER 1, 1986 ALL LANES SHALL BE OPENED TO TRAFFIC ON STATE ROUTE 8, PERKINS STREET, AND ALL RAMPS WITHIN THE PROJECT LIMITS. THE FAILURE OF THE CONTRACTOR TO MEET THIS DATE WILL CAUSE SEPARATE LIQUIDATED DAMAGES OF $2,000 PER CALENDAR DAY OF THE OVERRUN TO BE ASSESSED. THE PROVISIONS OF SECTION 108.06 OF THE CMS FOR EXTENSIONS OF TIME ARE WAIVED. UNDER NO CONDITION WILL THE CONTRACTOR BE GRANTED A TIME EXTENSION FOR MEETING THIS INTERIM COMPLETION DATE.

PRIOR TO OPENING ALL LANES OF TRAFFIC ON STATE ROUTE 8 ON DECEMBER 1, 1986 THE CONTRACTOR SHALL PLACE TEMPORARY CONCRETE BARRIER IN THE MEDIAN WITHIN THE LIMITS OF THE CROSSOVERS SHOWN ON SHEET 19. THE CONTRACTOR SHALL BE RESPONSIBLE FOR MAINTAINING THIS TEMPORARY MEDIAN BARRIER UNTIL IT IS REMOVED FOR PHASE 3 CONSTRUCTION.

DURING THE PERIOD MARCH 1, 1987 TO OCTOBER 31, 1987 THE CONTRACTOR SHALL CONSTRUCT PHASES 3 AND 4. CONSTRUCTION SHALL BE COMPLETE AND ALL LANES SHALL BE OPENED TO TRAFFIC NOVEMBER 1, 1987. THE FAILURE OF THE CONTRACTOR TO MEET THIS DATE WILL CAUSE SEPERATE LIQUIDATED DAMAGES OF $2,000 PER CALENDAR DAY OF OVERRUN TO BE ASSESSED. THE PROVISIONS OF SECTION 108.06 OF THE CMS FOR EXTENSIONS OF TIME ARE WAIVED. UNDER NO CONDITIONS WILL THE CONTRACTOR BE GRANTED A TIME EXTENSION FOR MEETING THIS DATE.

24. (CONT.) THE PROVISIONS OF SECTION 108.07 OF THE CMS INCLUDING LIQUIDATED DAMAGES SHALL APPLY FOR REMAINING ITEMS OF WORK NOT IMPACTING TRAFFIC FLOW OR LANE RESTRICTIONS.

MAINTENANCE OF TRAFFIC
GENERAL NOTES
AND QUANTITIES
2 OF 2 Rev. 12-2-85

614 WORK ZONE PAVEMENT MARKINGS

GENERAL

THE CONTRACTOR SHALL FURNISH, INSTALL, MAINTAIN AND WHEN NECESSARY, REMOVE WORK ZONE RETROREFLECTIVE PAVEMENT MARKINGS ON EXISTING, RECONSTRUCTED, RESURFACED OR TEMPORARY ROADS WITHIN THE WORK LIMITS, IN ACCORDANCE WITH THE FOLLOWING REQUIREMENTS.

THE MARKINGS SHALL BE MAINTAINED IN GOOD CONDITION TO PROVIDE DAY AND NIGHT VISIBILITY. THE MARKINGS SHALL BE REPAIRED OR REPLACED AS DIRECTED BY THE ENGINEER TO MAINTAIN REQUIRED VISUAL EFFECTIVENESS AND NIGHT VISIBILITY AT NO ADDITIONAL COST TO THE STATE.

THE CONTRACTOR SHALL, IN ADVANCE OF ANY SECTION OF ROADWAY LACKING OMUTCD FULL PATTERN STANDARD DIMENSION EDGE LINE OR CENTER LINE MARKINGS, ERECT A "NO EDGE LINES" (OW-167) SIGN OR "UNMARKED NO PASSING ZONES" (OW-168) SIGN OR BOTH AS MAY BE APPROPRIATE. THESE SIGNS SHALL BE IN PLACE PRIOR TO EXPOSING THE ROADWAY TO TRAFFIC. THESE SIGNS SHALL BE REPEATED EVERY 1 TO 2 MILES AND AT OTHER LOCATIONS AS NECESSARY. THESE SIGNS SHALL BE REMOVED WHEN THEY NO LONGER APPLY. THE COST FOR FURNISHING AND ERECTING AND SUBSEQUENTLY REMOVING THESE SIGNS SHALL BE INCLUDED IN 614 MAINTAINING TRAFFIC, UNLESS SPECIFICALLY ITEMIZED.

TEMPORARY PAVEMENT MARKING MATERIALS

UNLESS OTHERWISE INDICATED ON THE PLANS, TEMPORARY PAVEMENT MARKINGS MAY BE EITHER 621.02 PAINT OR 947.03 TYPE B OR C PREFORMED MATERIAL. *Where pavement markings are not liable to be tracked, either conventional or fast-drying paint may be used for 621.02.*

PAINT

PAINTED MARKINGS SHALL BE IN ACCORDANCE WITH 621 EXCEPT THAT THE INCREASE OF 25 PERCENT IN THE APPLICATION RATE FOR NEW BITUMINOUS PAVEMENT AND PARAGRAPH 621.14 SHALL NOT APPLY.

TYPE B AND TYPE C PREFORMED MATERIAL

PREFORMED MATERIAL SHALL COMPLY WITH 947.03 EXCEPT THAT NO PREFORMED MATERIAL CONTAINING METAL SHALL BE PLACED ON ANY SURFACE UNLESS IT WILL BE REMOVED LATER BY THE CONTRACTOR. TEMPORARY PAVEMENT MARKINGS OF 947.03 PREFORMED MATERIAL SHALL BE REMOVED PRIOR TO PLACEMENT OF 621 OR 847 SURFACE COURSE MARKINGS AT THAT LOCATION. PREFORMED MATERIAL SHALL BE APPLIED IN ACCORDANCE WITH 847 EXCEPT AS MODIFIED HEREIN.

PLACEMENT

TEMPORARY MARKINGS SHALL BE COMPLETE AND IN PLACE ON ALL PAVEMENT PRIOR TO EXPOSING IT TO TRAFFIC. WHEN TEMPORARY MARKINGS CONFLICT WITH THE TRAFFIC PATTERN, THEY SHALL BE REMOVED BY THE CONTRACTOR IN ACCORDANCE WITH 621.134.

TEMPORARY MARKING CLASSES

CLASS I MARKINGS

CLASS I MARKINGS SHALL BE APPLIED TO THE FULL DIMENSIONS AS DEFINED IN 621 WITH THE FOLLOWING ADDITIONS OR EXCEPTIONS:

1) LANE LINES SHALL BE 4-INCHES IN WIDTH.
2) TRANSVERSE LINES SHALL BE 8-INCHES IN WIDTH.
3) STOP LINES SHALL BE 12-INCHES IN WIDTH.
4) CROSS WALK LINES SHALL BE 8-INCHES IN WIDTH.

CLASS II MARKINGS

CLASS II MARKINGS (ABBREVIATED) SHALL BE DEFINED AS FOLLOWS:

CENTER LINES SHALL CONSIST OF SINGLE, YELLOW 4-INCH WIDE BY A MINIMUM OF 48-INCH LONG DASHES SPACED AT A MAXIMUM OF 40-FOOT INTERVALS.

LANE LINES SHALL CONSIST OF WHITE 4-INCH WIDE BY A MINIMUM OF 48-INCH LONG DASHES SPACED AT A MAXIMUM OF 40-FOOT INTERVALS.

GORE MARKINGS SHALL BE TWO CONTINUOUS, WHITE 4-INCH LINES PLACED AT THE THEORETICAL GORE OF AN EXIT RAMP OR DIVERGING ROADWAYS.

THE PAINT APPLICATION RATE SHALL BE NOT LESS THAN 1.6 GALLONS PER MILE FOR LANE LINE AND CENTER LINE AND 16 GALLONS PER MILE FOR GORE MARKINGS.

CONFLICTING EXISTING MARKINGS

THE CONTRACTOR SHALL, PRIOR TO PLACING TEMPORARY MARKINGS, REMOVE ALL CONFLICTING EXISTING MARKINGS VISIBLE TO THE TRAVELING PUBLIC DURING DAYLIGHT OR NIGHTTIME HOURS IN ACCORDANCE WITH 621.134. THE COST FOR REMOVAL OF CONFLICTING MARKINGS SHALL BE INCLUDED IN 614 MAINTAINING TRAFFIC UNLESS SPECIFICALLY ITEMIZED.

THE CONTRACTOR SHALL ALSO REMOVE THE PRISMATIC RETRO-REFLECTOR WITHIN ANY RAISED PAVEMENT MARKER (RPM) WHICH IS IN CONFLICT WITH THE TEMPORARY PAVEMENT MARKINGS. WHEN THE TEMPORARY PAVEMENT MARKINGS ARE REMOVED AND THE RPM IS NO LONGER IN CONFLICT, THE CONTRACTOR SHALL THOROUGHLY CLEAN THE RECESSED REFLECTOR ATTACHMENT AREA OF THE CASTING AND INSTALL A NEW PRISMATIC RETRO-REFLECTOR OF THE SAME KIND AND COLOR. THE COST FOR THIS WORK SHALL BE INCIDENTAL TO THE VARIOUS PAY ITEMS.

INTERIM MARKINGS

WITHIN 21 CALENDAR DAYS AFTER OPENING ANY LENGTH OF PAVEMENT TO TRAFFIC, THE 621 OR 847 PAVEMENT MARKINGS CALLED FOR IN THE PLANS OR EQUIVALENT 614 CLASS I, PAINT MARKINGS SHALL BE APPLIED. THE CONTRACTOR SHALL FURNISH ALL LABOR, EQUIPMENT, AND MATERIAL NECESSARY TO PLACE AND MAINTAIN 614 CLASS I PAINT MARKINGS AS PART OF THE LUMP SUM BID FOR 614 MAINTAINING TRAFFIC.

FOR EACH CALENDAR DAY BEYOND 21 DAYS THAT THIS WORK SHALL REMAIN UNCOMPLETED, THE PROVISIONS OF 108.07 WILL BE INVOKED, EXCEPT THAT BETWEEN NOVEMBER 15 AND APRIL 15 WEATHER CONDITIONS SHALL NOT BE AN ACCEPTABLE REASON FOR EXTENSION.

METHOD OF MEASUREMENT

TEMPORARY PAVEMENT MARKINGS WILL BE MEASURED COMPLETE IN PLACE, BY CLASS AND MATERIAL, IN THE UNITS DESIGNATED. LINE QUANTITIES WILL BE THE LENGTH OF THE COMPLETED STRIPE, INCLUDING GAPS, INTERSECTIONS, AND OTHER SECTIONS OF PAVEMENT NOT NORMALLY MARKED, IN ACCORDANCE WITH 621.15.

TEMPORARY PAVEMENT MARKINGS WILL INCLUDE THE LAYOUT, APPLICATION AND REMOVAL OF THE MARKINGS, WHEN REQUIRED.

BASIS OF PAYMENT

PAYMENT FOR ACCEPTED QUANTITIES COMPLETE IN PLACE WILL BE MADE AT THE CONTRACT UNIT PRICE. PAYMENT SHALL BE FULL COMPENSATION FOR ALL MATERIALS, LABOR, INCIDENTALS AND EQUIPMENT FOR PLACEMENT, MAINTENANCE AND NECESSARY REMOVAL OF THE MARKINGS.

ITEM	UNIT	DESCRIPTION
~~614~~	~~MILES~~	~~TEMPORARY LANE LINES, CLASS _____, ____*~~
~~614~~	~~MILES~~	~~TEMPORARY CENTER LINES, CLASS _____, ____*~~
614	LIN. FT.	TEMPORARY CHANNELIZING LINES, CLASS I, 947.03 Type C
614	MILES	TEMPORARY EDGE LINES, CLASS I, 947.03 Type C
~~614~~	~~LIN. FT.~~	~~TEMPORARY GORE MARKINGS, CLASS II, ____*~~
~~614~~	~~LIN. FT.~~	~~TEMPORARY STOP LINES, CLASS I, ____*~~
~~614~~	~~LIN. FT.~~	~~TEMPORARY CROSSWALK LINES, CLASS I, ____*~~
~~614~~	~~EACH~~	~~TEMPORARY LANE ARROWS, CLASS I, ____*~~
~~614~~	~~EACH~~	~~TEMPORARY RAILROAD SYMBOL MARKINGS, CLASS I, ____*~~
~~614~~	~~EACH~~	~~TEMPORARY WORD "ONLY" ON PAVEMENT, 72-INCH, CLASS I, ____*~~
~~614~~	~~LIN. FT.~~	~~TEMPORARY TRANSVERSE LINES, CLASS I, ____*~~
~~614~~	~~LIN. FT.~~	~~TEMPORARY DOTTED LINES, CLASS I, ____*~~

*621 PAINT, 947.03 TYPE B OR 947.03 TYPE C

TEMPORARY CHANNELIZING LINES, CLASS I, 947.03 Type C
MAINTENANCE OF TRAFFIC PHASE 2, SHEET Nº 15
NORTHBOUND - STA. 523+00 TO STA. 542+00 = 1900 L.F
MAINTENANCE OF TRAFFIC PHASE 3, SHEET Nº 21
NORTHBOUND - STA. 519+50 TO STA. 544+00 = 2450 L.F
TOTAL = 4350 L.F

TEMPORARY EDGE LINES, CLASS I, 947.03 Type C
MAINTENANCE OF TRAFFIC PHASE 2, SHEET Nº 18
RAMP FROM GLENWOOD AVE., 250'+120' = 370 L.F
MAINTENANCE OF TRAFFIC PHASE 3 SHEET Nº 21
NORTHBOUND - STA. 519+00 TO STA. 520+60 = 160 L.F
NORTHBOUND - STA. 541+00 TO STA. 545+00 = 400 L.F
TOTAL = 930 L.F = 0.18 MILES

QUANTITIES CARRIED TO GENERAL SUMMARY SHEET

July 25, 1984

CALC. BY. DATE	SUM - 8 - 1.73/1.95	OHIO	13 / 204
CHKD. BY. DATE		F.H.W.A. REGION 5	

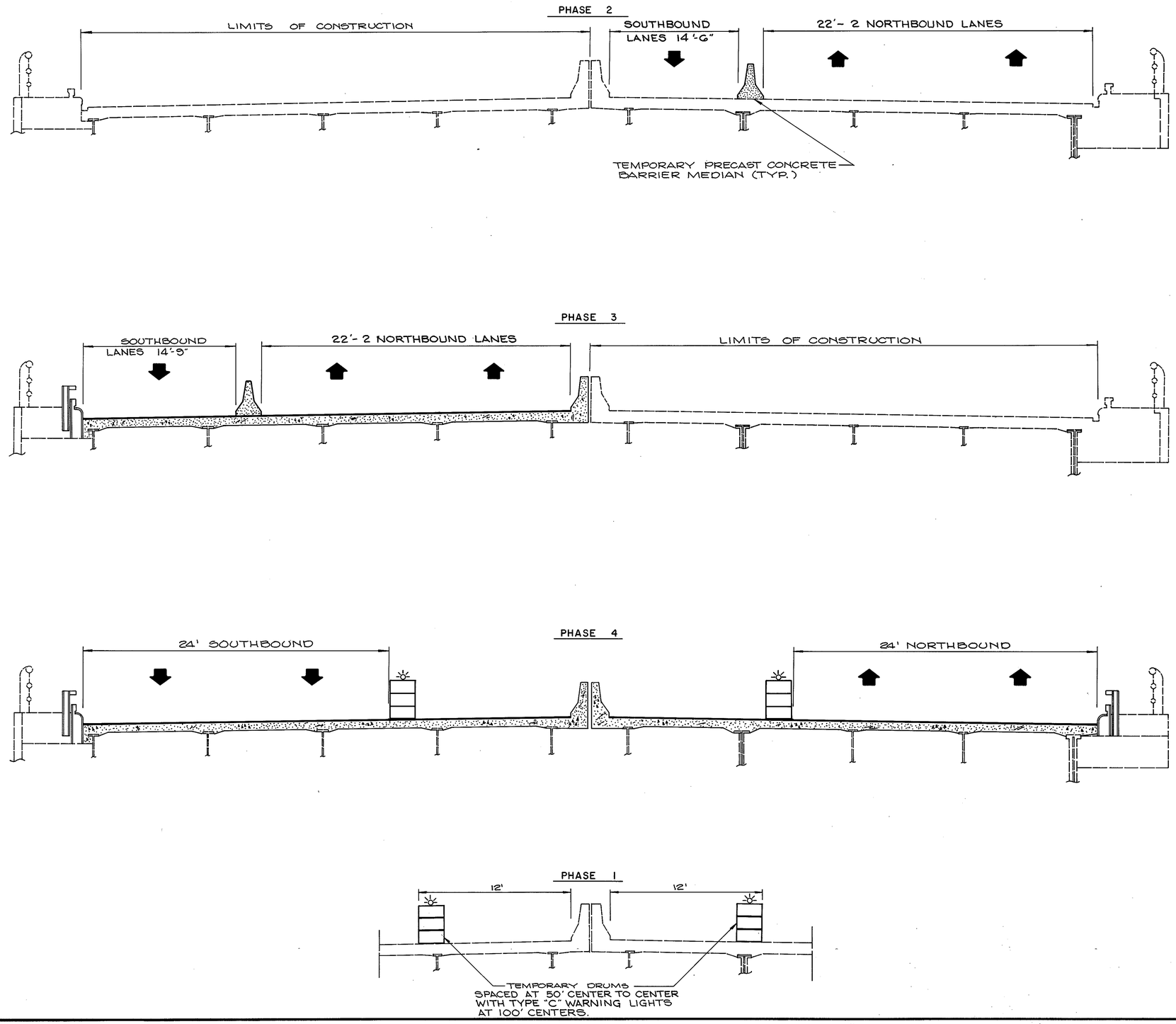

MAINTENANCE OF TRAFFIC ACROSS NORTH EXPRESSWAY VIADUCT

SCALE: 1" = 40'

CALC. BY. EWJK DATE 4/85	SUM - 8 - 1.73/1.95	OHIO
CHKD. BY. DSB DATE 4/85		F.H.W.A. REGION 5

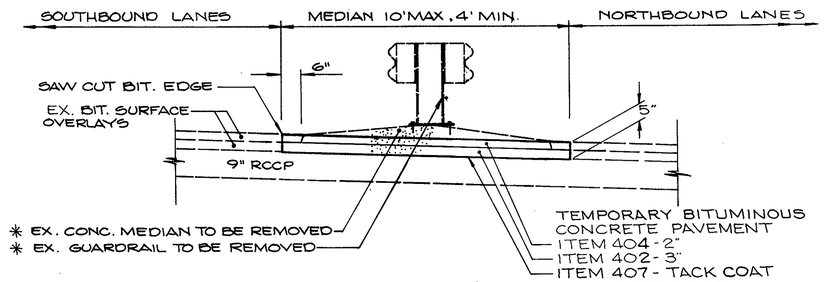

MEDIAN TO BE REBUILT WHEN MAINTENANCE OF TRAFFIC OPERATIONS REQUIRING THE USE OF THE CROSSOVER ARE COMPLETED. STANDARD TYPE A-50 CONCRETE MEDIAN IS TO BE CONSTRUCTED DURING PHASE 4 MAINTENANCE OF TRAFFIC.

* - PAYMENT INCLUDED IN ROADWAY QUANTITIES. SEE GENERAL SUMMARY SHEET.

CROSSOVER, STA. 519+50 TO STA. 524+00

NO SCALE

QUANTITES CARRIED TO GENERAL SUMMARY SHEET:

ITEM 404 - ASPHALT CONCRETE = 450 x 7 AVG. x 2/12 x 1/27 = 19.44 CU. YDS.
ITEM 402 - ASPHALT CONCRETE = 450 x 7 AVG. x 3/12 x 1/27 = 29.17 CU. YDS.
ITEM 407 - TACK COAT = 450 x 7 AVG. x 1/9 x 0.1 = 35 GALLONS

CONCRETE BARRIER, MODIFIED

ALL NOTES AND DIMENSIONS OF MC-9 APPLY UNLESS MODIFIED BY THIS DETAIL.

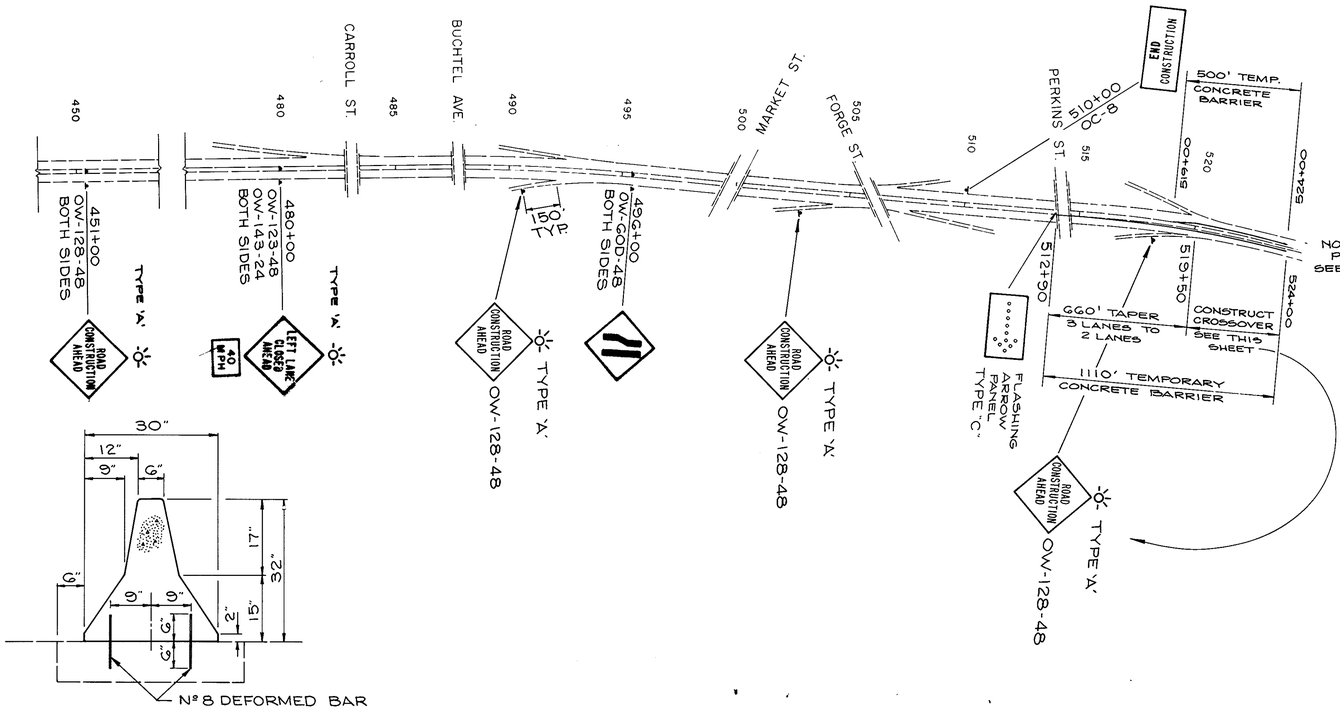

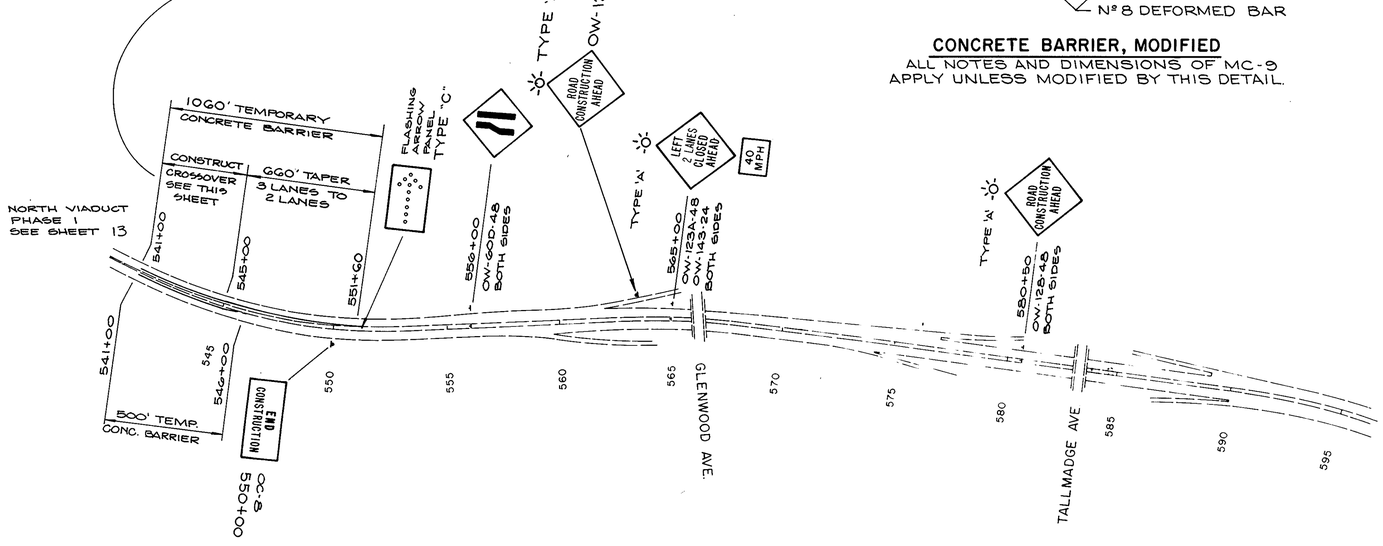

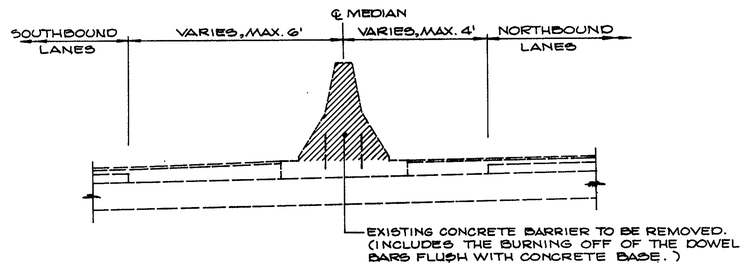

MEDIAN TO BE RESTORED WHEN MAINTENANCE OF TRAFFIC OPERATIONS REQUIRING THE USE OF THE CROSSOVER ARE COMPLETED. TYPE 'A' MODIFIED CONCRETE MEDIAN IS TO BE REBUILT UPON EXISTING BASE USING No. 8 DEFORMED BARS, 12" LONG, DRILLED AND GROUTED 6" DEEP AND STAGGERED ON 4' CENTERS. PAYMENT FOR RESTORING MEDIAN BARRIER SHALL INCLUDE ALL MATERIALS AND WORK REQUIRED AND SHALL BE INCLUDED IN THE PRICE BID FOR ITEM 622 - CONCRETE BARRIER, MODIFIED AS PER PLAN.

CROSSOVER, STA. 541+00 TO STA. 545+00

NO SCALE

THE CONTRACTOR SHALL BE RESPONSIBLE FOR THE CONTINUOUS MAINTENANCE OF THE SHOULDERS WHILE THEY ARE UTILIZED FOR TRAFFIC AND SHALL MAKE ALL NECESSARY REPAIRS AS REQUESTED AND DIRECTED BY THE ENGINEER. AFTER THE SHOULDERS ARE NO LONGER REQUIRED FOR TRAFFIC LANES, THEY SHALL BE INSPECTED BY THE ENGINEER FOR DAMAGE. SHOULDER REPAIR WORK SHALL BE MEASURED AND PAID FOR AS 402 ASPHALT CONCRETE, AS PER PLAN IN CUBIC YARDS AT THE CONTRACT UNIT PRICE.

QUANTITIES CARRIED TO GENERAL SUMMARY SHEET:

ITEM 202 - CONCRETE BARRIER REMOVED - 400' (STA. 540+93.50 TO 544+93.50)
ITEM 622 - CONCRETE BARRIER, MODIFIED - 400' (STA. 540+93.50 TO 544+93.50)
ITEM 402 - ASPHALT CONCRETE, AS PER PLAN - 35 CU. YD.

MAINTENANCE OF TRAFFIC PHASE 1

AA B/P# 71942R

CALC. BY. DATE	SUM - 8 - 1.73/1.95	OHIO
CHKD. BY. DATE		F.H.W.A. REGION 5

15/204

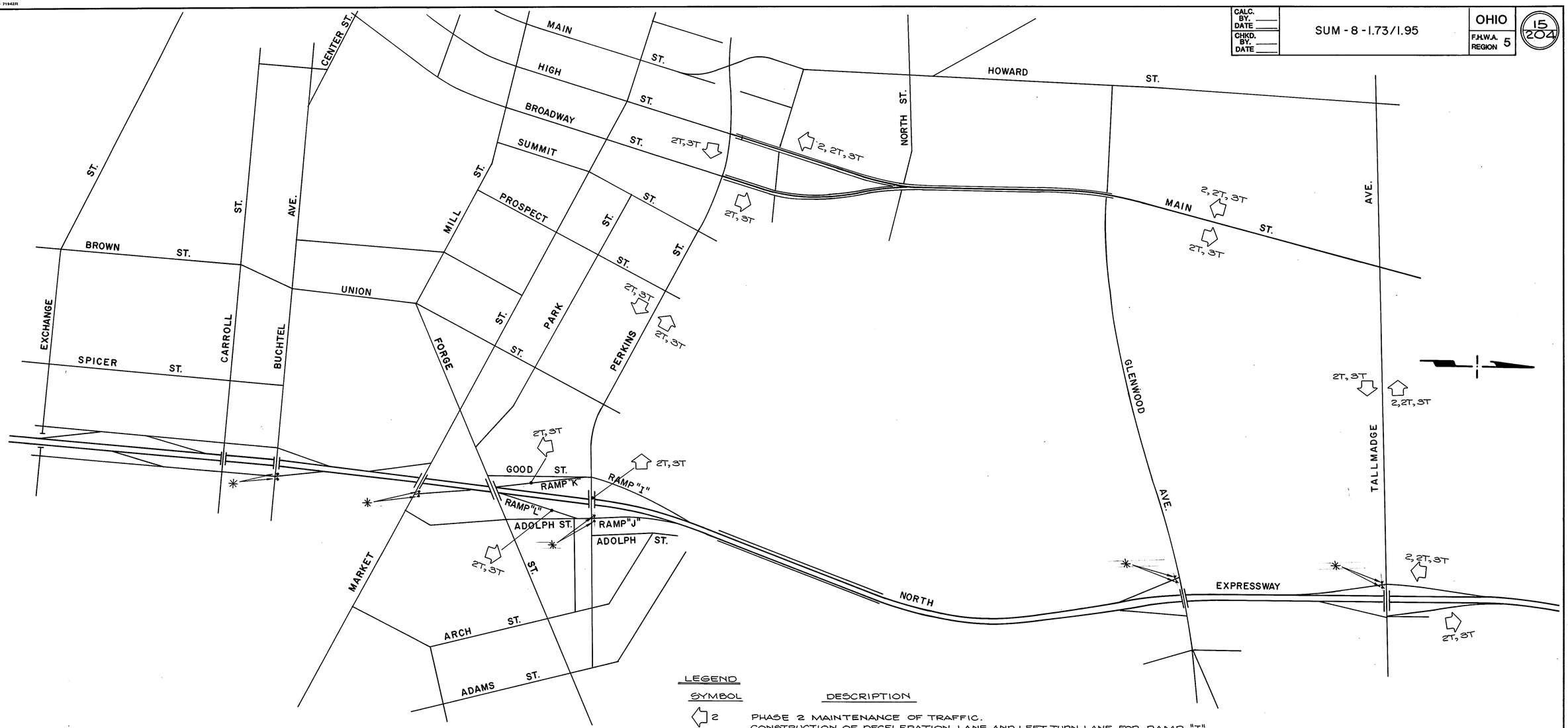

NOTES :

ALL NECESSARY DETOUR SIGNING ALONG THE LOCAL STREET SYSTEM WILL BE PERFORMED BY THE CITY OF AKRON TRAFFIC ENGINEERING DEPARTMENT. INCLUDED SHALL BE THOSE SIGNS NEEDED AT RAMP ENTRANCES TO THE EXPRESSWAY THAT RESTRICT TRUCK TRAFFIC AND THEIR COMPLEMENTARY ADVANCE WARNING SIGNS.

CONTRACTOR SHALL NOTIFY THE CITY OF AKRON TRAFFIC ENGINEERING DEPARTMENT TWO WEEKS IN ADVANCE OF BEGINNING EACH PHASE OF CONSTRUCTION.

LEGEND

SYMBOL	DESCRIPTION
2	PHASE 2 MAINTENANCE OF TRAFFIC. CONSTRUCTION OF DECELERATION LANE AND LEFT TURN LANE FOR RAMP "I".
2T / 2T	PHASE 2 MAINTENANCE OF TRAFFIC FOR TRUCKS. RECONSTRUCTION OF SOUTHBOUND VIADUCT BRIDGE DECK.
3T / 3T	PHASE 3 MAINTENANCE OF TRAFFIC FOR TRUCKS. RECONSTRUCTION OF NORTHBOUND VIADUCT BRIDGE DECK.

* R-142-30 — THE CITY OF AKRON TRAFFIC ENGINEERING DEPARTMENT SHALL FURNISH AND INSTALL PRIOR TO POURING CONCRETE FOR BRIDGE DECK AND SHALL REMAIN IN PLACE UNTIL CURING IS COMPLETED OR UNTIL THE ENGINEER DIRECTS THEIR REMOVAL.
THERE ARE TO BE TWO SEPARATE POURS OF CONCRETE FOR THE BRIDGE DECK. DURING THE PERIOD BETWEEN POURS WHEN TRUCK TRAFFIC IS PERMITTED TO USE THE EXPRESSWAY VIADUCT ALL TRUCK TRAFFIC SIGNS ARE TO BE COVERED. PRIOR TO THE SECOND POUR THE SIGNS MUST BE UNCOVERED.

NORTH EXPRESSWAY VIADUCT DETOUR PLAN

1 OF 2

CALC. BY. DATE	SUM - 8 - 1.73/1.95	OHIO	16/204
CHKD. BY. DATE		F.H.W.A. REGION 5	

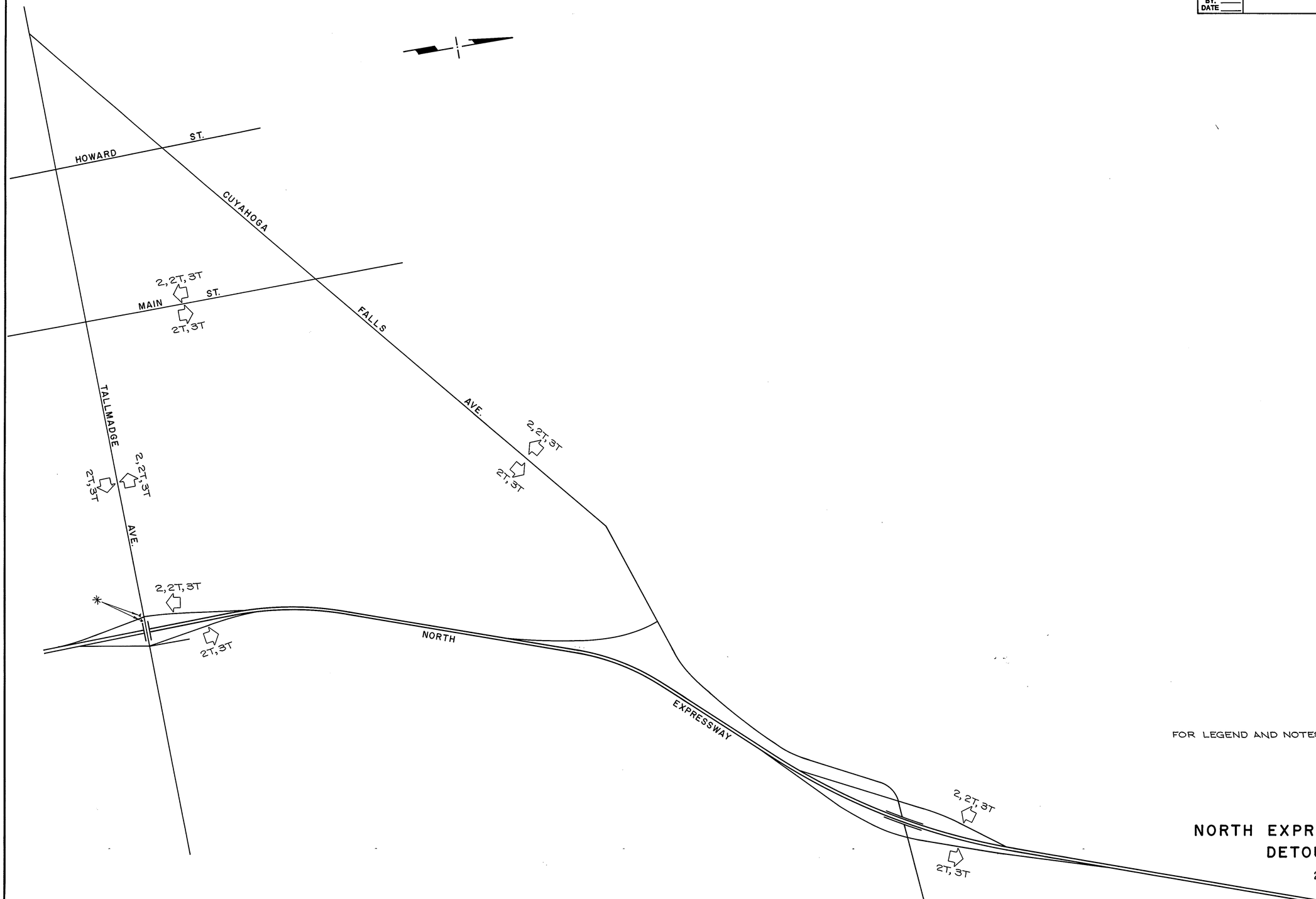

FOR LEGEND AND NOTES SEE SHEET Nº 15.

NORTH EXPRESSWAY VIADUCT DETOUR PLAN

2 OF 2

AA B/P# 71942R

CALC. BY. DATE	SUM - 8 - 1.73/1.95	OHIO	17
CHKD. BY. DATE		F.H.W.A. REGION 5	204

ADD SIGN G1-II
AS SHOWN AT STA 461+00 NB
SHOULD THE PHASE II DECK
POUR OCCUR WHILE THE PERKINS
STREET BRIDGE AND RAMPS
ARE CLOSED.

JOHNSTON ST. 445 450 455 460 465 EXCHANGE ST. 470 475 480 CARROLL ST. 485 BUCHTEL AVE. 490 495 500 MARKET ST. 505 FORGE ST. 510 PERKINS ST. 515 520

OW-128-48 BOTH SIDES
ROAD CONSTRUCTION AHEAD
TYPE 'A'
451+00
461+00
G1-II 11'-0"x6'-6" ALL TRUCKS EXIT 3/4 MILE BLACK ON WHITE
OW-143-24 40 MPH
OW-122-48 LEFT LANE CLOSED AHEAD
TYPE 'A'
480+00 BOTH SIDES
THIS SIGN SHOULD BE CHANGED TO "EXIT 1/4 MILE" IF THE DECK POUR FOR PHASE II OCCURS WHILE THE PERKINS STREET BRIDGE AND RAMPS ARE CLOSED.
OW-128-48 ROAD CONSTRUCTION AHEAD
TYPE 'A'
490+00
G1-II 11'-0"x6'-6" ALL TRUCKS EXIT 1/4 MILE BLACK ON WHITE
THIS SIGN MUST BE COVERED OR REMOVED IF THE DECK POUR FOR PHASE II OCCURS WHILE THE PERKINS STREET BRIDGE AND RAMPS ARE CLOSED.
150'
496+00 OW-GOD-48 BOTH SIDES
OW-128-48 ROAD CONSTRUCTION AHEAD
TYPE 'A'
503+00
G1-II 11'-0"x6'-6" ALL TRUCKS MUST EXIT HERE BLACK ON WHITE
THIS SIGN MUST BE REMOVED IF THE DECK POUR FOR PHASE II OCCURS WHILE THE PERKINS STREET BRIDGE AND RAMPS ARE CLOSED.
TYPE 'A'
FLASHING ARROW PANEL TYPE "C"
512+90
519+50
524+00
600' TAPER 3 LANES TO 2 LANES
CROSSOVER SEE SHEET 15
NORTH VIADUCT SEE SHEET 13
TEMPORARY DRUMS AT 25' SPACES
OW-128-48 ROAD CONSTRUCTION AHEAD
TYPE 'A'
END CONSTRUCTION 8-CO
510+10

NOTE: ALL SIGNS NOTED AS [ ] ARE TO BE INSTALLED PRIOR TO POURING CONCRETE FOR BRIDGE DECK AND SHALL REMAIN IN PLACE UNTIL CURING IS COMPLETED OR UNTIL THE ENGINEER DIRECTS THEIR REMOVAL. THERE ARE TO BE TWO SEPERATE POURS OF CONCRETE FOR THE BRIDGE DECK. DURING THE PERIOD BETWEEN POURS WHEN TRUCK TRAFFIC IS PERMITTED TO USE THE EXPRESSWAY VIADUCT ALL TRUCK TRAFFIC SIGNS ARE TO BE COVERED. PRIOR TO THE SECOND POUR THE SIGNS MUST BE UNCOVERED.

INSTALL CLOSED BLACK ON ORANGE PANEL G1-I 10'-0"x1'-6"
59 Perkins St. RIGHT LANE
542+50
3350' TEMPORARY DRUMS AT 50' SPACES
200' 1 LANE
GGO' TAPER 2 LANES TO 1 LANES
1680' - 2 LANES
GGO' TAPER 3 LANES TO 2 LANES
NORTH VIADUCT SEE SHEET 13
CROSSOVER SEE SHEET 15
541+00
545+00
547+00
TYPE 'C' FLASHING ARROW PANEL
553+60
150' OPENING
563+60 OW-122-48 BOTH SIDES
570+40
577+00
TYPE 'C' FLASHING ARROW PANEL
578+50
587+00 OW-GOD-48 BOTH SIDES
591+05
OVERLAY PANEL BLACK ON ORANGE G1-I 5'-0"x2'-0"
G1-II 15'-0"x9'-6" ALT 8 59 Perkins St. DETOUR
CLOSED SPEED 40 Perkins St. 1/2 MILE
FOR ATTACHMENT DETAILS SEE SHEET Nº 18
TYPE 'A'
598+00 PLACE DIRECTLY IN FRONT OF EXISTING SIGN (MINIMUM SPEED 40)
ALL TRUCKS MUST EXIT HERE
G1-II 11'-0"x6'-6" BLACK ON WHITE
TYPE 'A'
RIGHT 2 LANES CLOSED AHEAD
OW-122A-48
OW-143-24
40 MPH
603+00 BOTH SIDES
Perkins St. DETOUR NEXT RIGHT
G1-II 12'-0"x6'-6" BLACK ON ORANGE
609+50
550+00 OC-8
CONSTRUCTION END
545 550 555 560 565 GLENWOOD AVE. 570 575 580 TALLMADGE AVE. 585 590 595 600 605 610
TYPE 'A'
ROAD CONSTRUCTION AHEAD
OW-128-48
FOR GORE DETAIL SEE SHEET Nº 18
TYPE 'A'
ROAD CONSTRUCTION AHEAD
OW-128-48

G1-IV 9'-0"x4'-0" ALL TRUCKS EXIT AT TALLMADGE AVE BLACK ON WHITE G23+00
PLACE ALONG ENTRANCE RAMP FROM CUYAHOGA FALLS AVE.

G1-II 11'-0"x6'-6" ALL TRUCKS EXIT 1 MILE BLACK ON WHITE G50+80

G1-II 11'-0"x6'-6" ALL TRUCKS EXIT 1/2 MILE BLACK ON WHITE G25+50

* ALT 8 M-9-3G M-2-3G-2 Howe Ave Cuyahoga Falls Ave EXISTING GUIDE SIGN GG3+29

TYPE 'A' ROAD CONSTRUCTION AHEAD OW-128-48 BOTH SIDES G29+00

* ALT 8 M-9-3G M-2-3G-2 Howe Ave Cuyahoga Falls Ave RIGHT LANE EXISTING GUIDE SIGN G80+00

G1-II 16'-0"x7'-0" Perkins St. DETOUR AT TALLMADGE AVE BLACK ON ORANGE G34+00

* ALT 8 M-9-3G M-2-3G-2 Howe Ave Cuyahoga Falls Ave EXIT 1 MILE EXISTING GUIDE SIGN 72G+3G

* - FOR SIGN ATTACHMENT DETAIL SEE SHEET Nº 18

MAINTENANCE OF TRAFFIC PHASE 2

Rev. 12-2-85

AA B/P# 71942R

CALC. BY. DATE	SUM-8-1.73/1.95	OHIO	18/204
CHKD. BY. DATE		F.H.W.A. REGION 5	

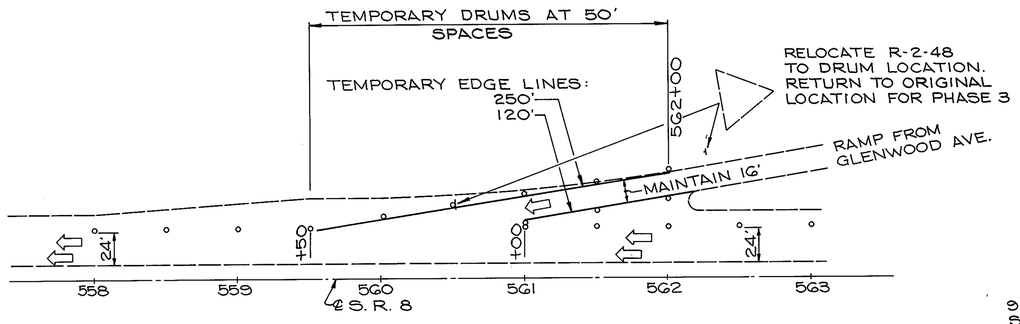

GORE DETAIL
S.R. 8 & GLENWOOD AVE.
PHASE 2 ONLY

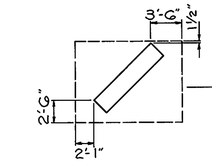

9'-0"x 2'-0" OVERLAY PANEL SHALL BE ATTACHED AS PER 630.04 SECTION 1C.

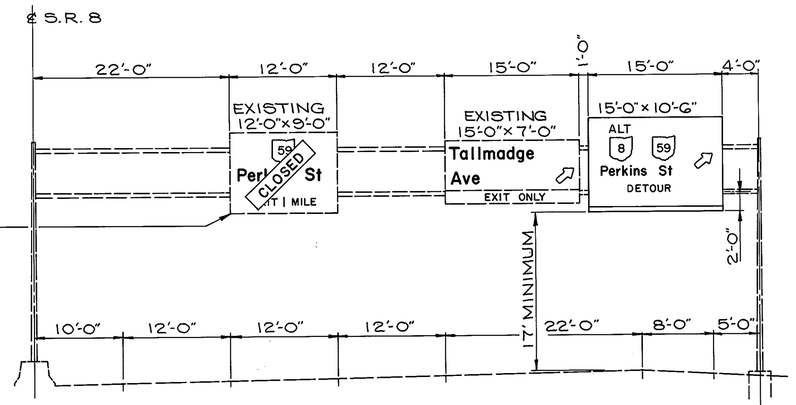

EXISTING OVERHEAD SIGN SUPPORT
STA. 591+05 ℄ S.R. 8 SOUTHBOUND

FOR INFORMATION ONLY

EXTRUSHEET - 15'-0"x 10'-0"= 150 SQ. FT. REQUIRED
SIGN ATTACHMENT ASSEMBLY - 3 HT. = 10'-6" SPACING= 14⅝", 75⅜", 75⅜", 14⅝"
SIGNS WIRED - 1 REQUIRED
MERCURY VAPOR LUMINAIRE, TYPE TC 31.21, WITH 175 WATT LAMP - 2 REQUIRED
LUMINAIRE SUPPORT ASSEMBLY, TYPE TC 31.21 - 2 REQUIRED
BALLAST, TYPE CMRI - 175/480 - 2 REQUIRED
BALLAST ENCLOSURE, TYPE B - 1 REQUIRED
BALLAST ENCLOSURE MOUNTING BRACKET ASSEMBLY, TYPE B - 1 REQUIRED

PERKINS ST. DETOUR
PHASE 2 ONLY

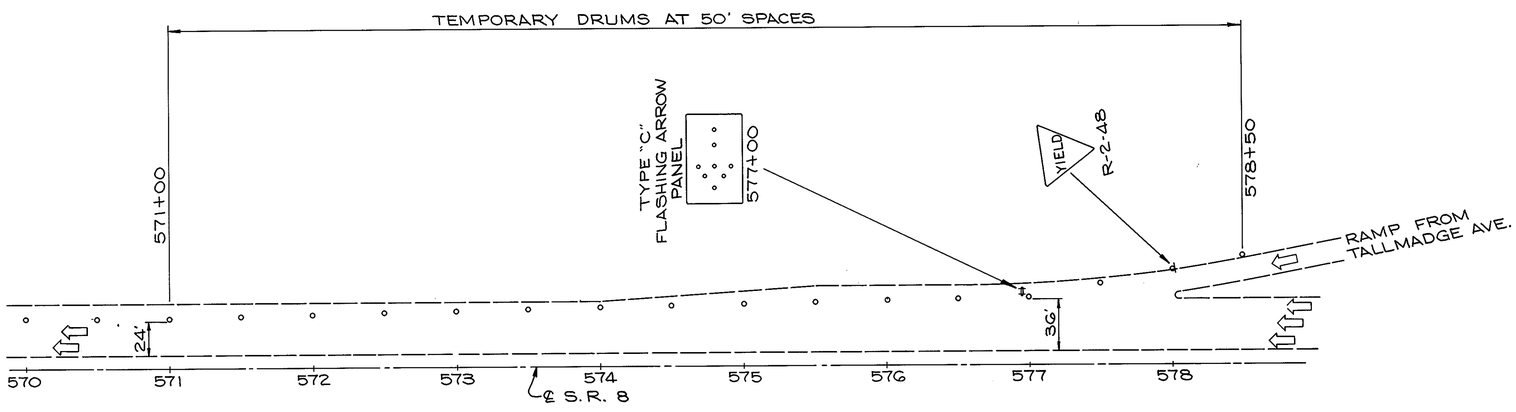

GORE DETAIL
S.R. 8 & TALLMADGE AVE.
PHASE 2 ONLY

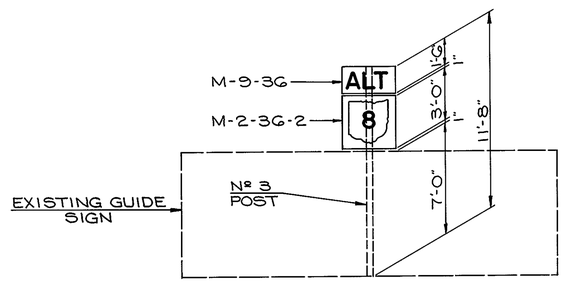

SIGN ATTACHMENT DETAIL

STA. 663+29
STA. 680+00
STA. 726+36

MAINTENANCE OF TRAFFIC DETAILS

AA B/Pe 71942R

CALC. BY. DATE	SUM - 8 - 1.73/1.95	OHIO
CHKD. BY. DATE		F.H.W.A. REGION 5

19/204

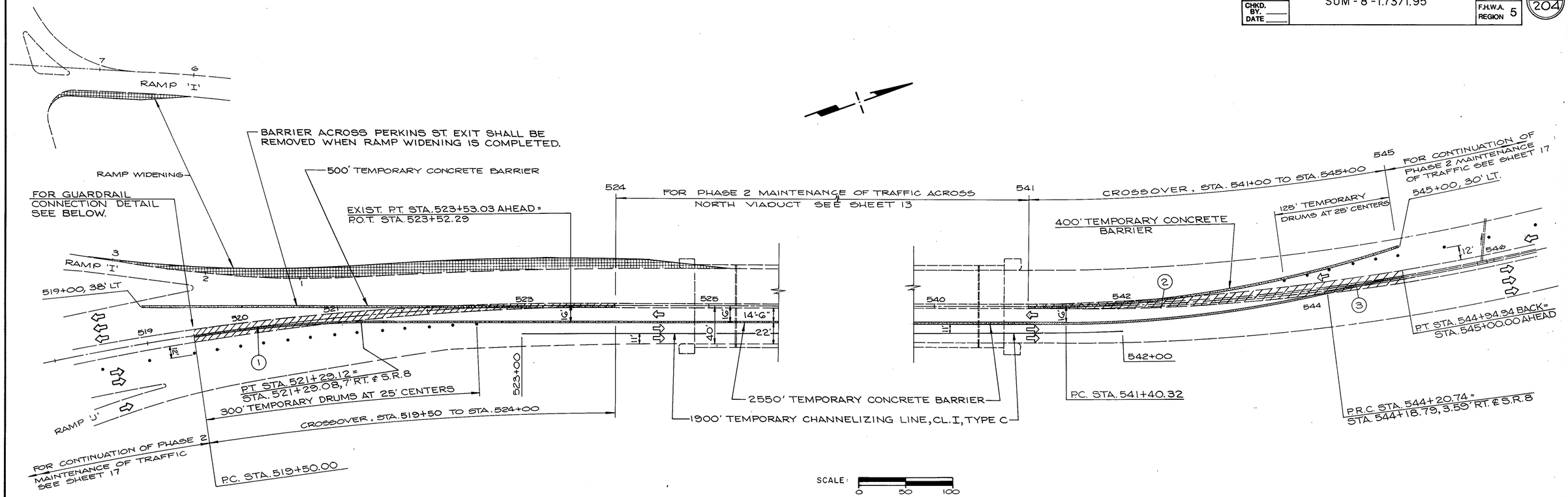

NOTE :
DURING THE CONSTRUCTION PERIOD WHEN RAMP 'I' IS CLOSED THE INTERSECTION TRAFFIC SIGNAL SHALL BE ADJUSTED TO OMIT RAMP 'I' PHASING AND TIMING. THE CONTRACTOR IS RESPONSIBLE FOR INFORMING THE CITY OF AKRON TRAFFIC ENGINEERING DEPARTMENT, WHO WILL MAKE THE NECESSARY ADJUSTMENTS, WHEN CLOSURE BEGIN AND THE SUBSEQUENT REOPENING.

CROSSOVER CURVE DATA

①	②	③
D = 4°30'00"	D = 4°30'00'	D = 4°30'00"
Δ = 8°03'38"	Δ = 12°37'08"	Δ = 3°20'21"
R = 1273.24'	R = 1273.24'	R = 1273.24'
L = 179.12'	L = 280.42'	L = 74.20'
T = 89.71'	T = 140.78'	T = 37.11'
P.C. STA. 519+50.00	P.C. STA. 541+40.32	P.R.C. STA. 544+20.74
P.T. STA. 521+29.12	P.R.C. STA. 544+20.74	P.T. STA. 544+94.94

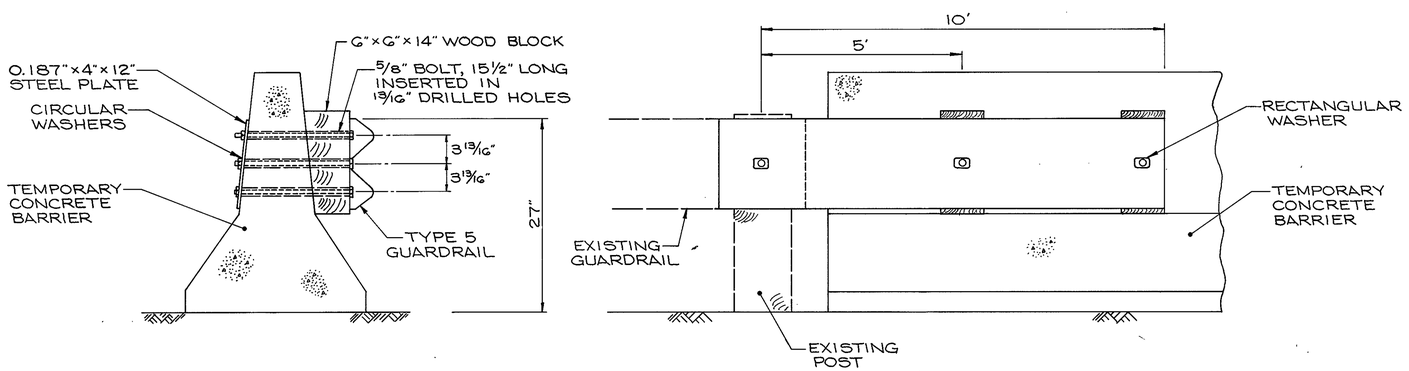

GUARDRAIL CONNECTION DETAIL

MAINTENANCE OF TRAFFIC PHASE 2

CALC. BY. DATE
CHKD. BY. DATE
SUM - 8 - 1.73/1.95
OHIO
F.H.W.A. REGION 5
20/204

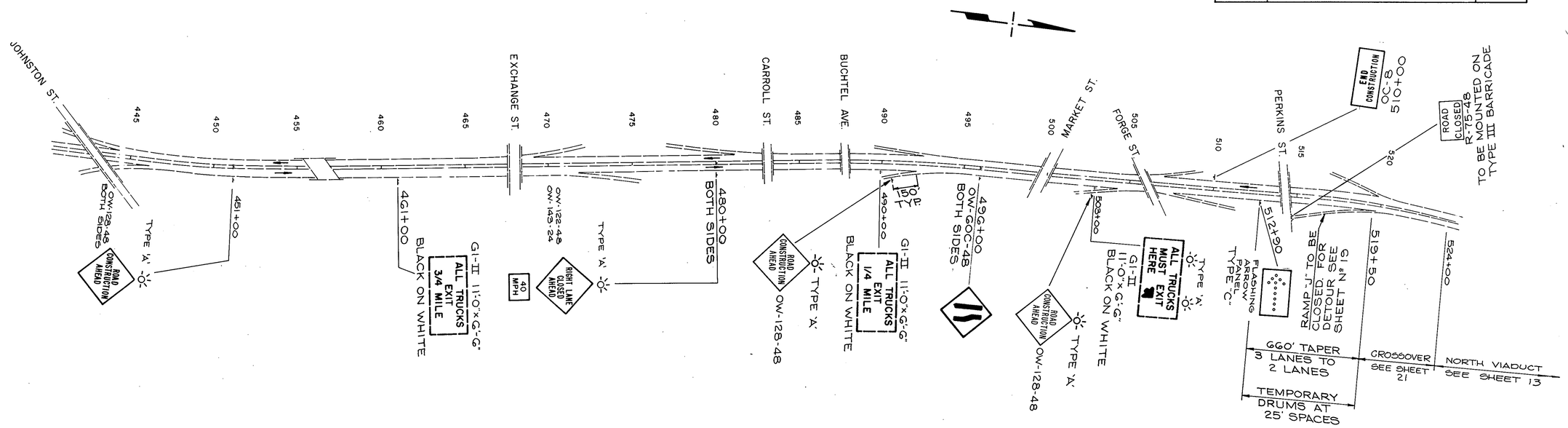

NOTE: ALL SIGNS NOTED AS [ ] ARE TO BE INSTALLED PRIOR TO POURING CONCRETE FOR BRIDGE DECK AND SHALL REMAIN IN PLACE UNTIL CURING IS COMPLETED OR UNTIL THE ENGINEER DIRECTS THEIR REMOVAL. THERE ARE TO BE TWO SEPERATE POURS OF CONCRETE FOR THE BRIDGE DECK. DURING THE PERIOD BETWEEN POURS WHEN TRUCK TRAFFIC IS PERMITTED TO USE THE EXPRESSWAY VIADUCT ALL TRUCK TRAFFIC SIGNS ARE TO BE COVERED. PRIOR TO THE SECOND POUR THE SIGNS MUST BE UNCOVERED.

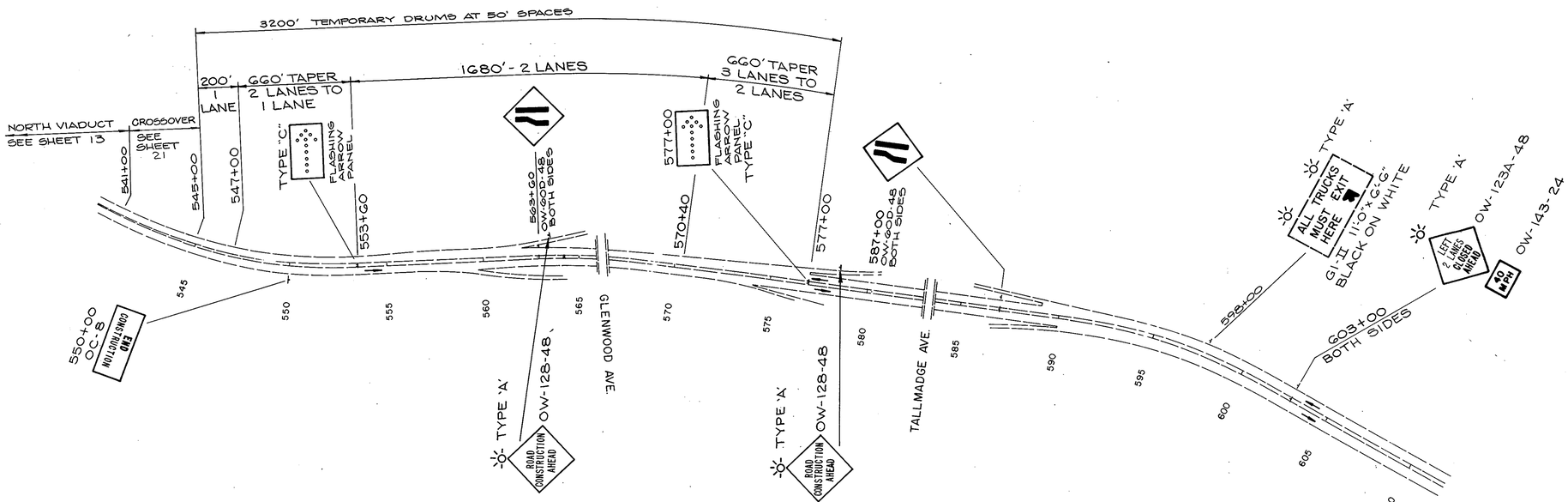

G1-IV 9'-0"x4'-0" ALL TRUCKS EXIT AT TALLMADGE AVE BLACK ON WHITE — PLACE ALONG ENTRANCE RAMP FROM CUYAHOGA FALLS AVE. 623+00

G1-II 11'-0"x6'-6" ALL TRUCKS EXIT 1/2 MILE BLACK ON WHITE — 625+50

TYPE 'A' ROAD CONSTRUCTION AHEAD — OW-128-48 BOTH SIDES 629+00

G1-II 11'-0"x6'-6" ALL TRUCKS EXIT 1 MILE BLACK ON WHITE — 650+80

MAINTENANCE OF TRAFFIC PHASE 3

CALC. BY. ____ DATE ____
CHKD. BY. ____ DATE ____
SUM - 8 - 1.73/1.95
OHIO
F.H.W.A. REGION 5
21/204

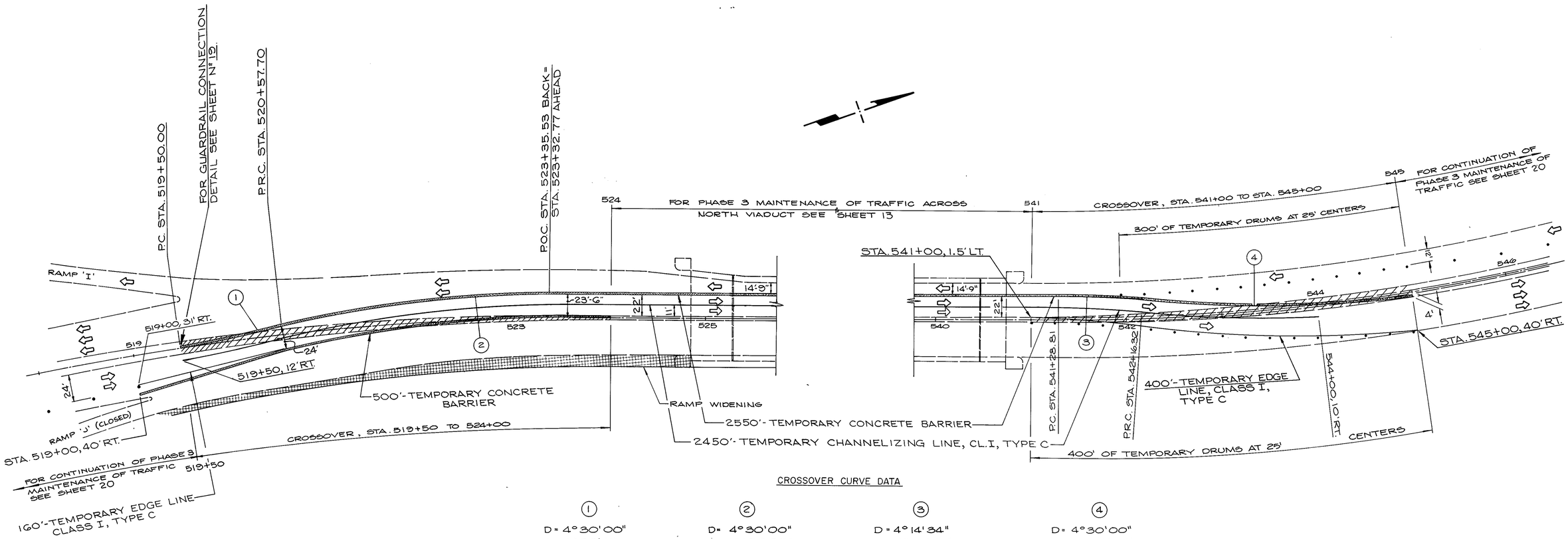

CROSSOVER CURVE DATA

①	②	③	④
D = 4°30'00"	D = 4°30'00"	D = 4°14'34"	D = 4°30'00"
Δ = 4°50'48"	Δ = 12°30'08"	Δ = 3°42'46"	Δ = 12°59'33"
R = 1273.24'	R = 1273.24'	R = 1350.47'	R = 1273.24'
L = 107.70'	L = 277.83'	L = 87.51'	L = 288.72'
T = 53.88'	T = 139.47'	T = 43.77'	T = 144.98'
P.C. STA. 519+50.00	P.R.C. STA. 520+57.70	P.C. STA. 541+28.81	P.R.C. STA. 542+16.32
P.R.C. STA. 520+57.70	P.T. STA. 523+35.53	P.R.C. STA. 542+16.32	P.T. STA. 545+00.45

SCALE: 0 50 100

MAINTENANCE OF TRAFFIC PHASE 3

AA 8/Pe 71482R

CALC. BY. DATE	SUM - 8 - 1.73/1.95	OHIO
CHKD. BY. DATE		F.H.W.A. REGION 5

22
204

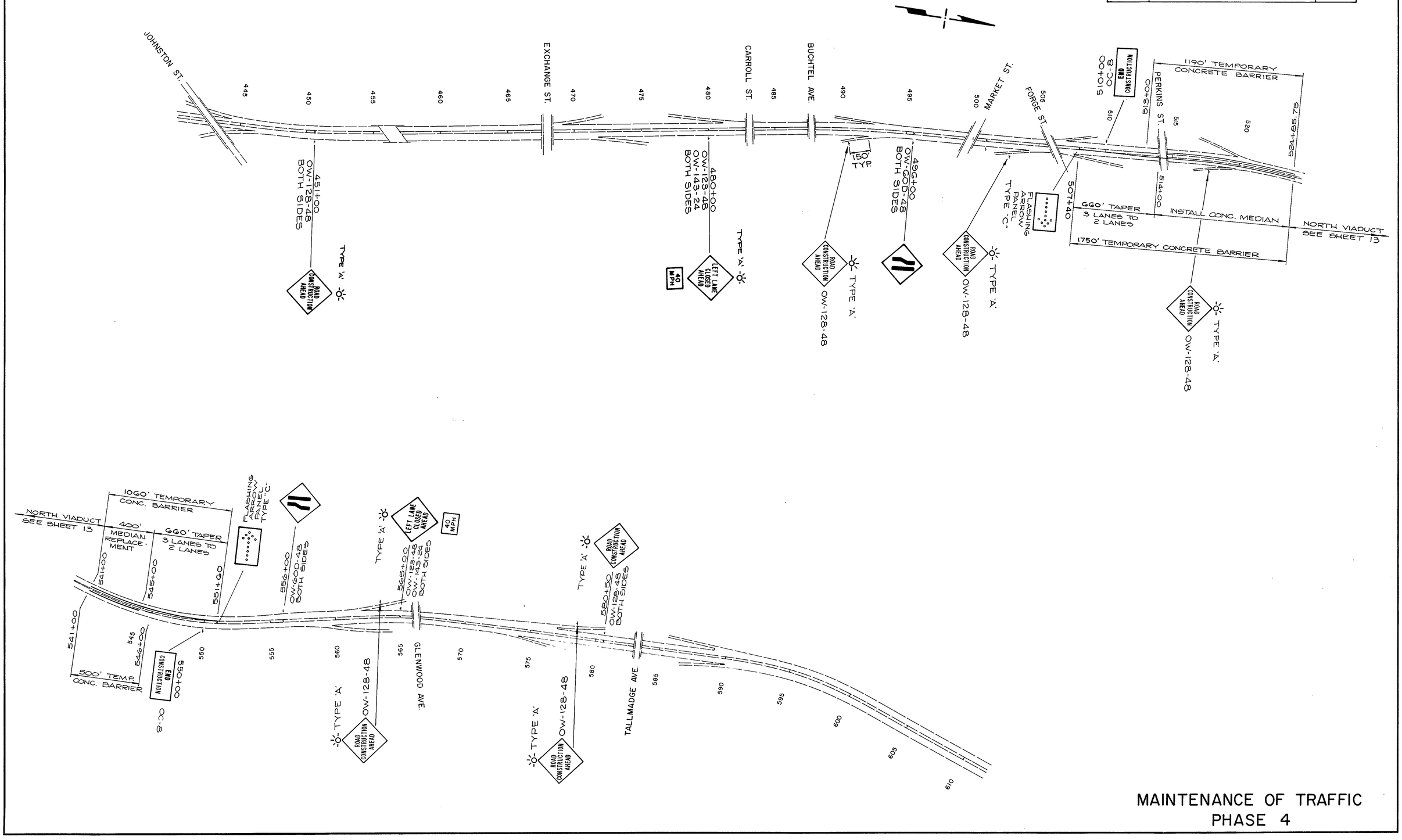

MAINTENANCE OF TRAFFIC
PHASE 4

AA B/Pe 71142R

CALC. BY. DATE	SUM-8-1.73/1.95	OHIO
CHKD. BY. DATE		F.H.W.A. REGION 5

23/204

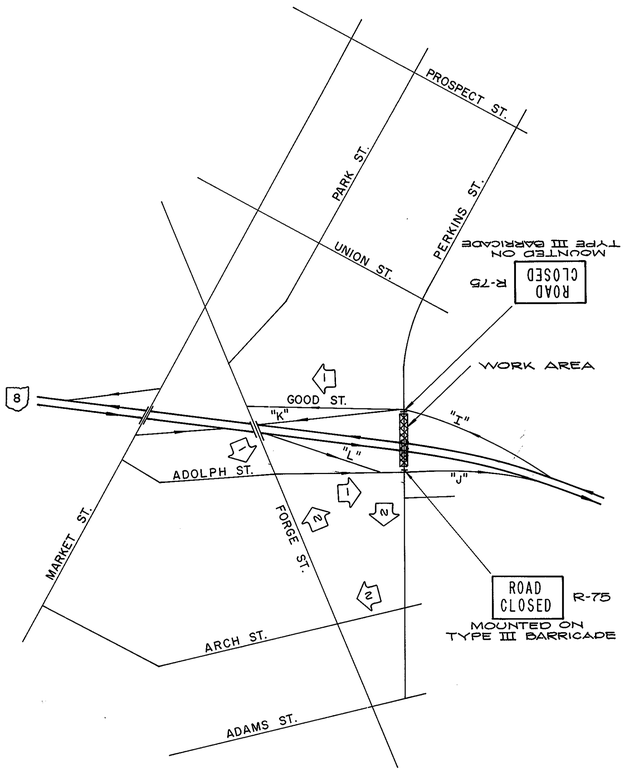

DETOUR ROUTE	DESCRIPTION
1	FOR EASTBOUND PERKINS
2	FOR WESTBOUND PERKINS

NOTES:

CONTRACTOR TO NOTIFY CITY OF AKRON TRAFFIC ENGINEERING DEPARTMENT TWO WEEKS PRIOR TO CLOSING PERKINS STREET.

CITY OF AKRON TRAFFIC ENGINEERING DEPARTMENT TO FURNISH AND PLACE ALL DETOUR SIGNS AND ADJUST SIGNALIZATION TIMING AND PHASING.

APPLICATION OF TYPE III BARRICADE IS AS PER OHIO MANUAL OF UNIFORM TRAFFIC CONTROL DEVICES, SECTION 7F-4 AND FIGURE C-7.

SEE SHEET 17 PHASE II FOR ADDITIONAL SIGNING FOR TRUCK DETOURS, SHOULD THE DECK POUR FOR PHASE II BE PERFORMED PRIOR TO COMPLETING THIS PHASE OF WORK.

PERKINS ST. BRIDGE
DETOUR PLAN
PHASE 5

DETOUR ROUTE	DESCRIPTION
1	RAMP 'L' WESTBOUND
2	RAMP 'L' EASTBOUND
3	RAMP 'J' FROM ADOLPH
4	RAMP 'J' FROM PERKINS WESTBOUND
5	RAMP 'J' FROM PERKINS EASTBOUND
6	RAMP 'I' EASTBOUND

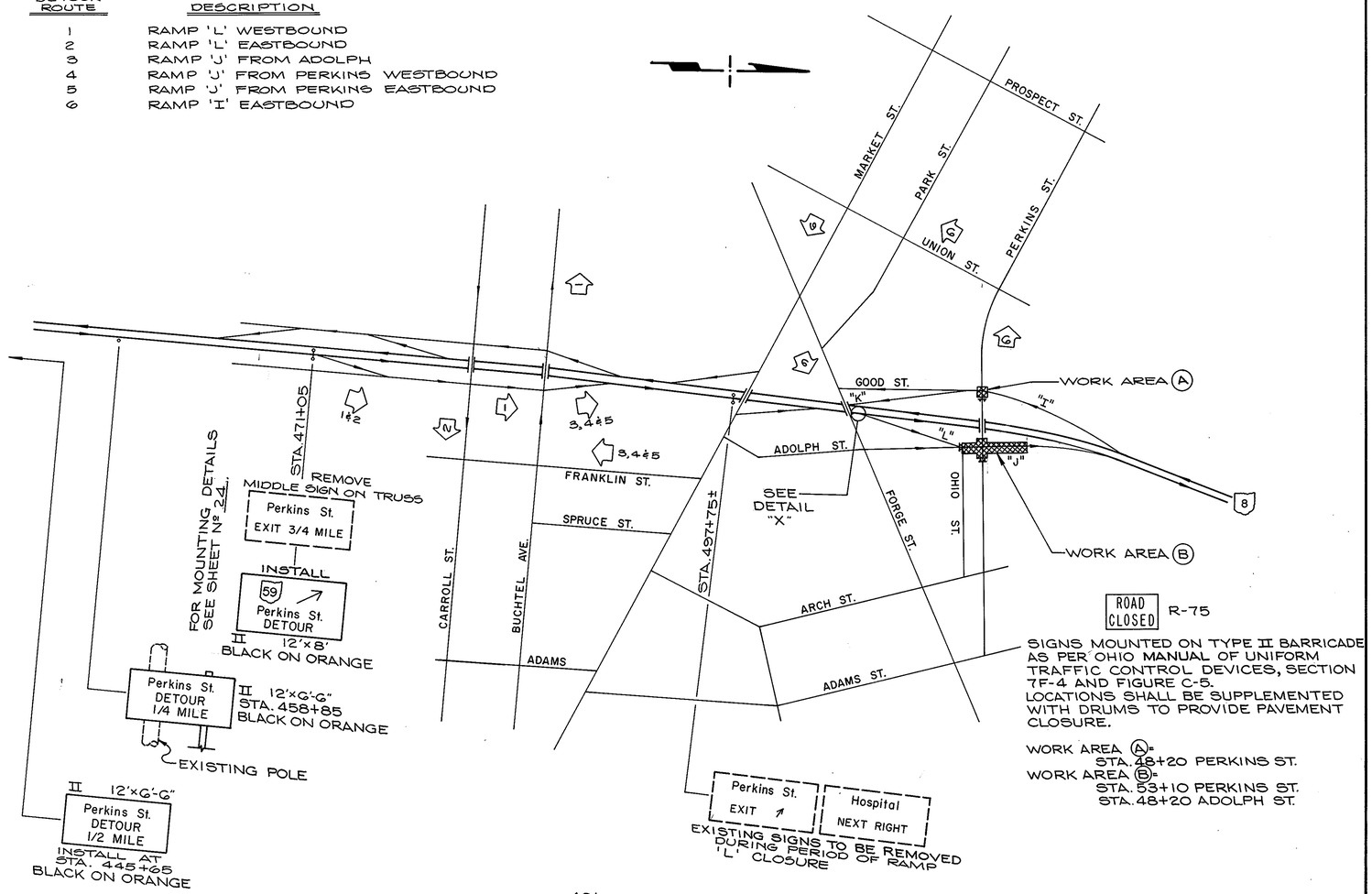

SIGNS MOUNTED ON TYPE II BARRICADE AS PER OHIO MANUAL OF UNIFORM TRAFFIC CONTROL DEVICES, SECTION 7F-4 AND FIGURE C-5. LOCATIONS SHALL BE SUPPLEMENTED WITH DRUMS TO PROVIDE PAVEMENT CLOSURE.

ROAD CLOSED R-75

WORK AREA (A)=
STA. 48+20 PERKINS ST.
WORK AREA (B)=
STA. 53+10 PERKINS ST.
STA. 48+20 ADOLPH ST.

N-29-24

H

ARROW PANEL

LOCATION	ARROW PANEL
471+05	M-27-21
461+00	M-27-21

CITY OF AKRON TRAFFIC ENGINEERING DEPARTMENT TO FURNISH AND INSTALL HOSPITAL SIGNS AND ARROW PANELS ALONG STREET SYSTEM TO HOSPITAL SITE FOR DETOUR PERIODS.

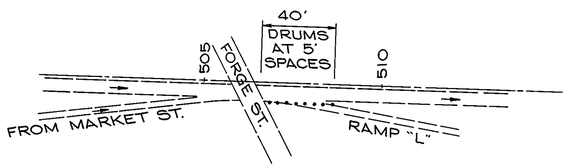

DETAIL "X"

PERKINS ST. RAMPS
DETOUR PLAN
PHASE 6

WORK AREA (A): CONTRACTOR TO MAINTAIN TRAFFIC THROUGH INTERSECTION EXCEPT WHERE RESTRICTED BY "ROAD CLOSED" SIGN.

WORK AREA (B): TRAFFIC NOT PERMITTED WITHIN CONSTRUCTION SITE.

CONTRACTOR TO NOTIFY CITY OF AKRON TRAFFIC ENGINEERING DEPARTMENT TWO WEEKS PRIOR TO ROAD CLOSURES.

CITY OF AKRON TRAFFIC ENGINEERING DEPARTMENT TO FURNISH AND PLACE ALL DETOUR SIGNS AND ADJUST SIGNALIZATION TIMING AND PHASING ALONG LOCAL STREETS.

SEE SHEET 17 PHASE II FOR ADDITIONAL SIGNING FOR TRUCK DETOURS, SHOULD THE DECK POUR FOR PHASE II BE PERFORMED PRIOR TO COMPLETING THIS PHASE OF WORK.

MAINTENANCE OF TRAFFIC

Rev. 12-2-85

AA B/Pe 71942R

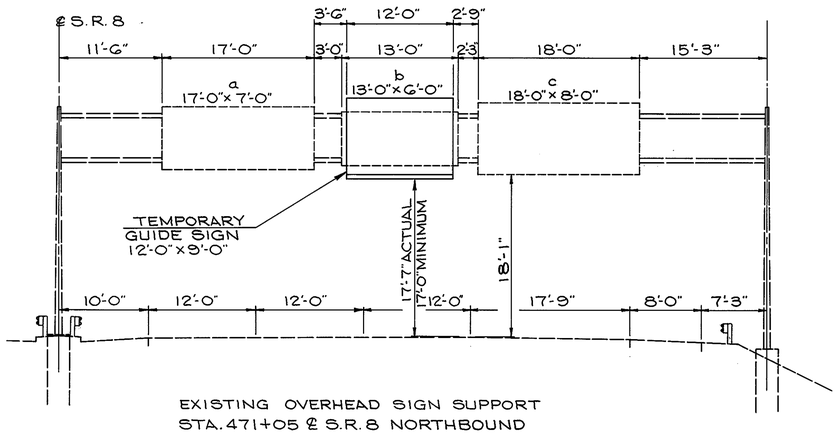

EXISTING OVERHEAD SIGN SUPPORT
STA. 471+05 ℄ S.R. 8 NORTHBOUND

EXISTING GUIDE SIGN "b" TO BE REMOVED, STORED AND REERECTED WHEN CONSTRUCTION IS COMPLETED.

FOR INFORMATION ONLY

EXTRUSHEET - 12'-0" x 8'-6" = 102 SQ. FT. REQUIRED
SIGN ATTACHMENT ASSEMBLY - 3, HT. = 9'-0", SPACING = 6", 66", 66", 6"
SIGNS WIRED = 1 REQUIRED
MERCURY VAPOR LUMINAIRE, TYPE TC 31.21 WITH 175 WATT LAMP - 2 REQUIRED
LUMINAIRE SUPPORT ASSEMBLY, TYPE TC 31.21 - 2 REQUIRED
BALLAST, TYPE CMR1 - 175/480 - 2 REQUIRED
BALLAST ENCLOSURE, TYPE B - 1 REQUIRED
BALLAST ENCLOSURE MOUNTING BRACKET ASSEMBLY, TYPE B - 1 REQUIRED

MAINTENANCE OF TRAFFIC
DETAILS

BHF FUNDS

CALC. BY. WAH DATE 10/83 | CHKD. BY. DSB DATE 11/83 | SUM - 8 - 1.73/1.95 | OHIO | F.H.W.A. REGION 5 | 25/204

LOCATION	ITEM 203 EXCAVATION	ITEM 203 EMBANKMENT	ITEM 659 SEEDING & MULCHING	ITEM 659 COMMERCIAL FERTILIZER .00009T./S.Y.	ITEM 659 AGRICULTURAL LIMING .00045T./S.Y.
	C.Y.	C.Y.	S.Y.	TONS	TONS
PERKINS STREET					
SHEET NO. 49					
STA 48+00 TO 50+90	177	159	784	.07	.35
SHEET NO. 50					
STA 51+70 TO 53+00	100	79	628	.06	.28
ADOLPH AVENUE					
SHEET NO. 69					
STA 49+00 TO 49+78	112	34	278	.03	.13
SHEET NO. 70					
STA 50+22 TO 51+00	24	0	19	.01	.01
GOOD STREET					
SHEET NO. 71					
STA 48+00 TO 50+00	3	0	12	.01	.01
	416	272	1,721	.18	.78

203 SUBGRADE COMPACTION

PERKINS STREET

STA 47+36 TO 47+50	AS PER PLAN 150 SF X 1/9	=	16.67 SY
STA 47+50 TO 49+32.06	182.06 X 63 X 1/9	=	1,274.42 SY
STA 50+52.58 TO 50+90.11	37.53 X 63 X 1/9	=	262.71 SY
STA 50+90.11 TO 53+00	209.89 X 51.75 AVG X 1/9	=	1,206.87 SY
		SUBTOTAL	2,760.67 SY

RAMP I

STA 17+00 TO 17+29	29 X 18.5 AVG X 1/9	=	59.61 SY
STA 17+29 TO 17+62	33 X 19.5 AVG X 1/9	=	71.50 SY
		SUBTOTAL	131.11 SY

GOOD STREET

STA 49+50 TO STA 49+73.50	25 X 4 X 1/9	=	11.11 SY
		SUBTOTAL	11.11 SY

RAMP J

STA 7+14.46 TO 7+35.50	AS PER PLAN 803 SF X 1/9	=	89.24 SY
		SUBTOTAL	89.24 SY

ADOLPH AVENUE

STA 48+50 TO 49+75	125.5 X 36.75 X 1/9	=	512.46 SY
	AS PER PLAN 280 SF X 1/9	=	31.11 SY
STA 50+24.50 TO 50+51	26.5 X 30 X 1/9	=	88.33 SY
	AS PER PLAN 193 SF X 1/9	=	21.44 SY
		SUBTOTAL	653.33 SY
		TOTAL	3,645.46 SY

203 PROOF ROLLING

AREA OF ITEM 203 SUBGRADE COMPACTION	3,645.46 SY X 1/3000	=	1.22 HR

310 6" SUBBASE TYPE II

PERKINS STREET

STA 47+36 TO 47+50
STA 47+50 TO 49+32.06
STA 50+52.58 TO 50+90.11
STA 50+90.11 TO 53+00

AS PER PLAN 150 SF X .5 X 1/27	=	2.78 CY
182.06 X 62 X .5 X 1/27	=	209.03 CY
37.53 X 62 X .5 X 1/27	=	43.09 CY
209.89 X 51.75 AVG X .5 X 1/27	=	201.14 CY
	SUBTOTAL	456.04 CY

RAMP I

STA 17+00 TO 17+29
STA 17+29 TO 17+62

29 X 18 AVG X .5 X 1/27	=	9.67 CY
33 X 19 AVG X .5 X 1/27	=	11.61 CY
	SUBTOTAL	21.28 CY

GOOD STREET

STA 49+50 TO STA 49+73.50

2.5 X 25 X .5 X 1/27	=	1.16 CY
	SUBTOTAL	1.16 CY

RAMP J

STA 7+14.46 TO 7+35.50

AS PER PLAN 775 SF X .5 X 1/27	=	14.35 CY
	SUBTOTAL	14.35 CY

ADOLPH AVENUE

STA 48+50 TO 49+75

125.5 X 36.75 X .5 X 1/27	=	85.41 CY
AS PER PLAN 280 SF X .5 X 1/27	=	5.19 CY
26.5 X 27 X .5 X 1/27	=	13.25 CY
AS PER PLAN 193 SF X .5 X 1/27	=	3.57 CY
	SUBTOTAL	107.42 CY
	TOTAL	600.25 CY

STA 50+24.50 TO 50+51

402 1 3/4" ASPHALT CONCRETE AC-20

PERKINS STREET

STA 47+36 TO 47+50
STA 47+50 TO 49+07.06
STA 50+77.58 TO 50+90.11
STA 50+90.11 TO 53+00

AS PER PLAN 150 SF X 1.75/12 X 1/27	=	.81 CY
157.06 X 59 X 1.75/12 X 1/27	=	50.05 CY
12.53 X 59 X 1.75/12 X 1/27	=	3.99 CY
209.89 X 48.75 AVG X 1.75/12 X 1/27	=	55.27 CY
	SUBTOTAL	110.12 CY

RAMP I

STA 17+00 TO 17+29
STA 17+29 TO 17+62

29 X 17 AVG X 1.75/12 X 1/27	=	2.66 CY
33 X 42.5 AVG X 1.75/12 X 1/27	=	7.58 CY
	SUBTOTAL	10.24 CY

GOOD STREET

STA 49+50 TO 49+73.50

23.5 X 28 X 1.75/12 X 1/27	=	3.55 CY
AS PER PLAN 124 SF X 1.75/12 X 1/27	=	.67 CY
	SUBTOTAL	4.22 CY

RAMP J

STA 7+14.46 TO 7+35.50

AS PER PLAN 740 SF X 1.75/12 X 1/27	=	4.00 CY
	SUBTOTAL	4.00 CY

ADOLPH AVENUE

STA 48+50 TO 49+75
STA 50+24.50 TO 50+51

125.5 X 35.75 AVG X 1.75/12 X 1/27	=	24.23 CY
AS PER PLAN 280 SF X 1.75/12 X 1/27	=	1.51 CY
26.5 X 26 X 1.75/12 X 1/27	=	3.72 CY
AS PER PLAN 193 SF X 1.75/12 X 1/27	=	1.04 CY
	SUBTOTAL	30.50 CY
	TOTAL	159.08 CY

404 1 1/4" ASPHALTIC CONCRETE AC-20

PERKINS STREET

STA 47+36 TO 47+50
STA 47+50 TO 49+07.06
STA 50+77.58 TO 50+90.11
STA 50+90.11 TO 53+00.00

AS PER PLAN 150 SF X 1.25/12 X 1/27	=	.58 CY
157.06 X 59 X 1.25/12 X 1/27	=	35.75 CY
12.53 X 59 X 1.25/12 X 1/27	=	2.85 CY
209.89 X 48.75 AVG X 1.25/12 X 1/27	=	39.48 CY
	SUBTOTAL	78.66 CY

RAMP I

STA 17+00 TO 17+62

AS PER PLAN 2,992 SF X 1.25/12 X 1/27	=	11.54 CY
	SUBTOTAL	11.54 CY

GOOD STREET

STA 49+50 TO 49+73.50

23.5 X 28 X 1.25/12 X 1/27	=	2.54 CY
AS PER PLAN 124 SF X 1.25/12 X 1/27	=	.48 CY
	SUBTOTAL	3.02 CY

RAMP J

STA 7+14.46 TO 7+35.50

AS PER PLAN 740 SF X 1.25/12 X 1/27	=	2.85 CY
	SUBTOTAL	2.85 CY

ADOLPH AVENUE

STA 48+50 TO 49+75
STA 50+24.50 TO 50+51

125.5 X 35.75 AVG X 1.25/12 X 1/27	=	17.31 CY
AS PER PLAN 280 SF X 1.25/12 X 1/27	=	1.08 CY
26.5 X 26 X 1.25/12 X 1/27	=	2.66 CY
AS PER PLAN 193 SF X 1.25/12 X 1/27	=	.74 CY
	SUBTOTAL	21.79 CY
	TOTAL	117.86 CY

407 TACK COAT

PERKINS STREET

STA 47+36 TO 47+50
STA 47+50 TO 49+07.06
STA 50+77.58 TO 50+90.11
STA 50+90.11 TO 53+00

AS PER PLAN 150 SF X 1/9 X 0.1	=	1.67 GAL
157.06 X 59 X 1/9 X 0.1	=	102.96 GAL
12.53 X 59 X 1/9 X 0.1	=	8.22 GAL
209.89 X 48.75 X 1/9 X 0.1	=	113.69 GAL
	SUBTOTAL	226.54 GAL

RAMP I

STA 17+00 TO 17+62

AS PER PLAN 2992 SF X 1/9 X 0.1	=	33.25 GAL
	SUBTOTAL	33.25 GAL

GOOD STREET

STA 49+50 TO STA 49+73.50

23.5 X 28 X 1/9 X 0.1	=	7.32 GAL
AS PER PLAN 124 SF X 1/9 X 0.1	=	1.38 GAL
	SUBTOTAL	8.70 GAL

RAMP J

STA 7+14.46 TO 7+35.50

AS PER PLAN 740 SF X 1/9 X 0.1	=	8.22 GAL
	SUBTOTAL	8.22 GAL

ADOLPH AVENUE

STA 48+50 TO 49+75
STA 50+24.50 TO 50+51

125.5 X 35.75 AVG X 1/9 X 0.1	=	49.85 GAL
AS PER PLAN 280 SF X 1/9 X 0.1	=	3.11 GAL
26.5 X 26 X 1/9 X 0.1	=	7.66 GAL
AS PER PLAN 193 SF X 1/9 X 0.1	=	2.15 GAL
	SUBTOTAL	62.77 GAL
	TOTAL	339.48 GAL

QUANTITY CALCULATIONS

BHF FUNDS

451 9" REINFORCED PORTLAND CEMENT CONCRETE PAVEMENT

PERKINS STREET

STA 47+36 TO 47+50	AS PER PLAN 150 SF X 1/9	= 16.67 SY
STA 47+50 TO 49+07.06	157.06 X 60 X 1/9	= 1,047.07 SY
STA 50+77.58 TO 50+90.11	12.53 X 60 X 1/9	= 85.53 SY
STA 50+90.11 TO 53+00	209.89 X 49.75 AVG X 1/9	= 1,160.23 SY
	SUBTOTAL	2,309.50 SY

RAMP I

STA 17+00 TO 17+29	29 X 17 AVG X 1/9	= 54.78 SY
STA 17+29 TO 17+62	33 X 18 AVG X 1/9	= 66.00 SY
	SUBTOTAL	120.78 SY

GOOD STREET

STA 49+50 TO STA 49+73.50	2.5 X 25 X 1/9	= 6.94 SY
	SUBTOTAL	6.94 SY

RAMP J

STA 7+14.46 TO 7+35.50	AS PER PLAN 740 SF X 1/9	= 82.22 SY
	SUBTOTAL	82.22 SY

ADLPH AVENUE

STA 48+50 TO 49+75	125.5 X 36.75 X 1/9	= 512.46 SY
	AS PER PLAN 280 SF X 1/9	= 31.11 SY
STA 50+24.50 TO 50+51	26.5 X 27 X 1/9	= 79.50 SY
	AS PER PLAN 193 SF X 1/9	= 21.44 SY
	SUBTOTAL	644.51 SY
	TOTAL	3,163.95 SY

608 6" CONCRETE WALK

PERKINS STREET

STA 49+58 GOOD STREET TO 48+28 PERKINS STREET RT	148 X 5	= 740 SF
STA 50+47 TO 49+55 ADOLPH AVENUE	66 X 5	= 330 SF
STA 51+52 TO 52+13 LT	62 X 6	= 372 SF
STA 49+45 ADLOPH TO 51+86 PERKINS	AS PER PLAN	= 370 SF
	SUBTOTAL	1,812 SF
	TOTAL	1,812 SF

609 CURB, TYPE 2B

PERKINS STREET

STA 47+99.31 TO 48+77.15 28' RT		= 78 LF
STA 48+29.40 TO 49+11.21 31' LT		= 82 LF
STA 50+98.12 TO 49+46.87 ADOLPH STREET		= 26 LF
STA 50+81.73 TO 7+14.46 RAMP J		= 45 LF
STA 51+69.80 TO 50+51 ADOLPH STREET		= 65 LF
STA 52+64.48 TO 53+00		= 36 LF
STA 51+65.24 TO 53+00		= 135 LF
	SUBTOTAL	467 LF

RAMP I

STA 17+00 TO 48+29.40 PERKINS STREET		= 47 LF
	SUBTOTAL	47 LF

GOOD STREET

STA 49+50 TO 47+99.31 PERKINS STREET		= 31 LF
	SUBTOTAL	31 LF

RAMP J

STA 7+14.46 TO 51+69.80 PERKINS STREET		= 37 LF
	SUBTOTAL	37 LF

ADOLPH AVENUE

STA 48+50 TO 49+46.87 LT		= 97 LF
STA 48+50 TO 51+65.24 PERKINS STREET		= 137 LF
STA 51+51 TO 52+64.48 PERKINS STREET		= 40 LF
	SUBTOTAL	274 LF
	TOTAL	856 LF

609 CURB, TYPE 2B MODIFIED, AS PER PLAN

PERKINS STREET

STA 48+77.15 TO 49+03.38 28' RT		= 27 LF
STA 50+73.90 TO 50+97.14 28' RT		= 25 LF
	TOTAL	52 LF

F FUNDS

LOCATION	ITEM 203 EXCAVATION C.Y.	ITEM 203 EMBANKMENT C.Y.	ITEM 659 SEEDING & MULCHING S.Y.	ITEM 659 COMMERCIAL FERTILIZER .00009T./S.Y. TONS	ITEM 659 AGRICULTURAL LIMING .00045T./S.Y. TONS
AKRON EXPRESSWAY					
SHEET NO. 53					
STA 518+00 TO 519+00	11	0	28	.01	.01
SHEET NO. 55					
STA 520+00 TO 521+00 RT	1,139	12	754	.07	.34
SHEET NO. 56					
STA 521+50 TO 523+00 RT	751	18	639	.06	.29
SHEET NO. 57					
STA 523+50 TO 524+85 RT	186	494	691	.06	.31
SHEET NO. 58					
STA 520+00 TO 521+00 LT	72	43	223	.02	.10
SHEET NO. 59					
STA 521+50 TO 523+00 LT	244	29	544	.05	.25
SHEET NO. 60					
STA 523+50 TO 524+85 LT	137	906	1,000	.09	.45
RAMP I					
SHEET NO. 61					
STA 11+73 TO 12+00	17	5	47	.01	.02
SHEET NO. 62					
STA 12+50 TO 14+50	137	9	334	.03	.15
SHEET NO. 63					
STA 15+00 TO 17+50	55	13	338	.03	.15
RAMP J					
SHEET NO. 64					
STA 2+79 TO 3+00	204	0	169	.02	.08
SHEET NO. 65					
STA 3+50 TO 4+50	1,043	4	1,033	.09	.46
SHEET NO. 66					
STA 5+00 TO 6+50	487	27	1,069	.10	.48
SHEET NO. 67					
STA 7+00 TO 7+45	68	46	289	.03	.13
ADOLPH AVENUE					
SHEET NO. 68					
STA 47+50 TO 48+82	9	37	180	.02	.08
	4,560	1,643	7,338	.69	3.30

203 SUBGRADE COMPACTION

ADOLPH AVENUE AND RAMP L

STA 47+38 TO 48+07	69 X 5.5 AVG X 1/9	= 42.17 SY
STA 48+07 TO 48+30	23 X 3.5 X 1/9	= 8.94 SY
	SUBTOTAL	51.11 SY

RAMP I

STA 12+58 TO 13+04 RT	46 X 11 AVG X 1/9	= 56.22 SY
STA 13+04 TO 14+04 RT	100 X 9.5 AVG X 1/9	= 105.56 SY
STA 12+58 TO 13+25 LT	67 X 4.5 X 1/9	= 33.50 SY
STA 15+88 TO 16+35	47 X 11.5 AVG X 1/9	= 60.06 SY
STA 16+35 TO 17+00	65 X 17 X 1/9	= 122.78 SY
	SUBTOTAL	378.12 SY

RAMP J

STA 3+24.18 TO 7+14.46	390.28 X 28 X 1/9	= 1,214.20 SY
STA 3+24.18 TO 4+62 RT	138 X 13 AVG X 1/9	= 199.33 SY
	SUBTOTAL	1,413.53 SY

AKRON NORTH EXPRESSWAY (RT)

STA 519+06.68 TO 524+60.75	554.07 X 26.13 AVG X 1/9	= 1,608.65 SY
STA 524+60.75 TO 524+85.75	25 X 61.5 X 1/9	= 170.83 SY
	SUBTOTAL	1,779.48 SY

AKRON NORTH EXPRESSWAY (LT)

STA 519+14.40 TO 519+59	1/2 (45 X 23) X 1/9	= 57.50 SY
STA 519+14.40 TO 520+50	138 X 14.5 X 1/9	= 222.33 SY
STA 520+50 TO 521+50	100 X 19.5 AVG X 1/9	= 216.67 SY
STA 521+50 TO 524+60.75	310.75 X 21.5 X 1/9	= 742.35 SY
STA 524+60.75 TO 524+85.75	25 X 61.5 X 1/9	= 170.83 SY
	SUBTOTAL	1,409.68 SY
	TOTAL	5,031.92 SY

203 PROOF ROLLING

AREA OF ITEM 203 SUBGRADE COMPACTION	5,031.92 SY X 1/3000	= 1.68 HR

301 3" BITUMINOUS AGGREGATE BASE AC-20, RT-11 OR RT-12

RAMP J

STA 3+24.18 TO 4+24.18	100 X 7 AVG X 3/12 X 1/27	= 6.48 CY
STA 4+24.18 TO 6+73	248.82 X 6 X 3/12 X 1/27	= 13.82 CY
STA 6+73 TO 7+14.46	41.46 X 4 AVG X 3/12 X 1/27	= 1.54 CY
	SUBTOTAL	21.84 CY

AKRON NORTH EXPRESSWAY (RT)

STA 519+06.68 TO 524+60.75	554.07 X 8 X 3/12 X 1/27	= 41.04 CY
	SUBTOTAL	41.04 CY

AKRON NORTH EXPRESSWAY (LT)

STA 518+64.40 TO 519+14.40	50 X 8 X 3/12 X 1/27	= 3.70 CY
STA 519+14.40 TO 524+60.75	546.35 X 8 X 3/12 X 1/27	= 40.47 CY
	SUBTOTAL	44.17 CY
	TOTAL	107.05 CY

F FUNDS

304 AGGREGATE BASE

RAMP J

STA 3+24.18 TO 4+24.18	100 X 5.03 SF AVG X 1/27	= 18.63 CY
STA 4+24.18 TO 6+73	248.82 X 4.28 SF AVG X 1/27	= 39.44 CY
STA 6+73 TO 7+14.46	41.46 X 2.78 SF AVG X 1/27	= 4.27 CY
	SUBTOTAL	62.34 CY

AKRON NORTH EXPRESSWAY (MEDIAN)

STA 512+88 TO 513+13	25 X 4.5 AVG X 4/12 X 1/27	= 1.39 CY
STA 513+13 TO 524+60.75	1147.75 X 7 AVG X 4/12 X 1/27	= 99.19 CY
	SUBTOTAL	100.58 CY

AKRON NORTH EXPRESSWAY (RT)

STA 519+06.68 TO 524+60.75	554.07 X 5.78 SF AVG X 1/27	= 118.61 CY
	SUBTOTAL	118.61 CY

AKRON NORTH EXPRESSWAY (LT)

STA 518+64.40 TO 519+40.40	50 X 5.78 SF AVG X 1/27	= 10.70 CY
STA 519+14.40 TO 524+60.75	546.35 X 5.78 SF AVG X 1/27	= 116.96 CY
	SUBTOTAL	127.66 CY
	TOTAL	409.19 CY

310 SUBBASE, TYPE II

ADOLPH AVENUE AND RAMP L

STA 47+38 TO 48+07	69 X 4 AVG X 6/12 X 1/27	= 5.11 CY
STA 48+07 TO 48+30	23 X 2 X 6/12 X 1/27	= .85 CY
	SUBTOTAL	5.96 CY

RAMP I

STA 12+58 TO 13+04 RT	46 X 10.5 AVG X 6/12 X 1/27	= 8.94 CY
STA 13+04 TO 14+04 RT	100 X 9 AVG X 6/12 X 1/27	= 16.67 CY
STA 12+58 TO 13+25 LT	67 X 4 X 6/12 X 1/27	= 4.96 CY
STA 15+88 TO 16+35	1/2 (16.5 + 5.5) X 47 X 6/12 X 1/27	= 9.57 CY
STA 16+35 TO 17+00	65 X 16.5 X 6/12 X 1/27	= 19.86 CY
	SUBTOTAL	60.00 CY

RAMP J

STA 3+24.18 TO 7+14.46	390.28 X 20 X 6/12 X 1/27	= 144.55 CY
STA 3+24.18 TO 4+24.18	100 X 1.87 SF AVG X 1/27	= 6.93 CY
STA 3+24.18 TO 4+62	138 X 16 AVG X 6/12 X 1/27	= 40.89 CY
STA 4+24.18 TO 6+72	247.82 X 1.50 SF AVG X 1/27	= 13.77 CY
STA 6+72 TO 7+14.46	42.46 X 2 AVG X 6/12 X 1/27	= 1.57 CY
STA 6+72 TO 7+14.46	42.46 X .75 SF AVG X 1/27	= 1.18 CY
	SUBTOTAL	208.89 CY

AKRON NORTH EXPRESSWAY (RT)

STA 519+06.68 TO 524+60.75	554.07 X 16.63 AVG X 6/12 X 1/27	= 170.63 CY
STA 519+06.68 TO 524+60.75	554.07 X 2.24 SF AVG X 1/27	= 45.97 CY
STA 524+60.75 TO 524+85.75	25 X 56 X 6/12 X 1/27	= 25.93 CY
	SUBTOTAL	242.53 CY

AKRON NORTH EXPRESSWAY (MEDIAN)

STA 512+88 TO 513+13	25 X 4 AVG X 11/12 X 1/27	= 3.40 CY
	SUBTOTAL	3.40 CY

AKRON NORTH EXPRESSWAY (LT)

STA 518+64.40 TO 519+14.40	50 X 8 X 6/12 X 1/27	= 7.41 CY
STA 519+14.40 TO 519+59	1/2 (45 X 23) X 6/12 X 1/27	= 9.58 CY
STA 519+14.40 TO 520+50	138 X 5 AVG X 6/12 X 1/27	= 12.78 CY
STA 519+14.40 TO 520+50	138 X 2.24 SF AVG X 1/27	= 11.45 CY
STA 520+50 TO 521+50	100 X 10 AVG X 6/12 X 1/27	= 18.52 CY
STA 520+50 TO 521+50	100 X 2.24 SF AVG X 1/27	= 8.30 CY
STA 521+50 TO 524+15	265 X 12 X 6/12 X 1/27	= 58.89 CY
STA 521+50 TO 524+60.75	310.75 X 2.24 SF AVG X 1/27	= 25.78 CY
STA 524+15 TO 524+60.75	45.75 X 9.5 AVG X 6/12 X 1/27	= 8.05 CY
STA 524+60.75 TO 524+85.75	25 X 55 AVG X 6/12 X 1/27	= 25.46 CY
	SUBTOTAL	186.22 CY
	TOTAL	707.00 CY

402 1 3/4" ASPHALTIC CONCRETE AC-20

ADOLPH AVENUE AND RAMP L

STA 47+21 TO 48+30	69 X 3.5 AVG X 1.75/12 X 1/27	= 1.30 CY
	128 X 1.5 X 1.75/12 X 1/27	= 1.04 CY
	SUBTOTAL	2.34 CY

RAMP I

STA 12+58 TO 13+04 RT	46 X 9.5 AVG X 1.75/12 X 1/27	= 2.36 CY
STA 13+04 TO 14+04 RT	100 X 8 AVG X 1.75/12 X 1/27	= 4.32 CY
STA 12+58 TO 13+25 LT	67 X 3 X 1.75/12 X 1/27	= 1.09 CY
STA 15+88 TO 16+34	1/2 (16 +5) X 46 X 1.75/12 X 1/27	= 2.61 CY
STA 16+34 TO 17+00	66 X 16 X 1.75/12 X 1/27	= 5.70 CY
	SUBTOTAL	16.08 CY

RAMP J

STA 3+24.18 TO 7+14.46	390.28 X 19 X 1.75/12 X 1/27	= 40.05 CY
STA 3+24.18 TO 4+62 RT	138 X 16 AVG X 1.75/12 X 1/27	= 9.69 CY
	SUBTOTAL	49.74 CY

AKRON NORTH EXPRESSWAY (RT)

STA 519+06.68 TO 524+60+75	554.07 X 17.63 AVG X 1.75/12 X 1/27	= 52.76 CY
	SUBTOTAL	52.76 CY

AKRON NORTH EXPRESSWAY (LT)

STA 519+14.40 TO 519+59	1/2 (45 X 23) X 1.75/12 X 1/27	= 2.80 CY
STA 519+14.40 TO 520+50	138 X 6 AVG X 1.75/12 X 1/27	= 4.47 CY
STA 520+50 TO 521+50	100 X 11 AVG X 1.75/12 X 1/27	= 5.94 CY
STA 521+50 TO 524+61	310.75 X 13 X 1.75/12 X 1/27	= 21.82 CY
	SUBTOTAL	35.03 CY

AKRON NORTH EXPRESSWAY (MEDIAN)

STA 512+88 TO 513+13	25 X 4 AVG X 3/12 X 1/27	= 0.93 CY
STA 513+13 TO 524+60.75	1147.75 X 7 AVG X 3/12 X 1/27	= 74.39 CY
	SUBTOTAL	75.32 CY
	TOTAL	231.27 CY

404 1 1/4" ASPHALTIC CONCRETE AC-20

ADOLPH AVENUE AND RAMP L

STA 47+21 TO 48+50	AS PER PLAN 4632 SF 1.25/12 X 1/27	= 17.87 CY
	SUBTOTAL	17.87 CY

RAMP I

STA 12+58 TO 13+22.60	64.6 X 29 AVG X 1.25/12 X 1/27	= 7.23 CY
STA 13+22.60 TO 14+25 RT	102.4 X 30.5 AVG X 1.25/12 X 1/27	= 12.05 CY
STA 14+25 TO 15+88 LT	163 X 34 AVG X 1.25/12 X 1/27	= 21.38 CY
STA 15+88 TO 16+34	46 X 39 AVG X 1.25/12 X 1/27	= 6.92 CY
STA 16+34 TO 17+00	66 X 44 X 1.25/12 X 1/27	= 11.20 CY
	SUBTOTAL	58.78 CY

RAMP J

STA 3+24.18 TO 7+14.46	390.28 X 19 X 1.25/12 X 1/27	= 28.61 CY
STA 3+24.18 TO 4+62 RT	138 X 16 AVG X 1.25/12 X 1/27	= 8.52 CY
	SUBTOTAL	37.13 CY

AKRON NORTH EXPRESSWAY (RT)

STA 519+06.68 TO 524+60.75	554.07 X 17.63 AVG X 1.25/12 X 1/27	= 37.69 CY
	SUBTOTAL	37.69 CY

AKRON NORTH EXPRESSWAY (LT. & RT.)

STA. 523+60.75 TO 524+60.75	100 X 76 X 1.25/12 X 1/27	= 29.32 CY
STA. 540+93.50 TO 541+93.50	100 X 76 X 1.25/12 X 1/27	= 29.32 CY
	SUBTOTAL	58.64 CY

AKRON NORTH EXPRESSWAY (LT)

STA 519+14.40 TO 519+59	1/2 (45 X 23) X 1.25/12 X 1/27	= 2.00 CY
STA 519+14.40 TO 520+50	138 X 6 AVG X 1.25/12 X 1/27	= 3.19 CY
STA 520+50 TO 521+50	100 X 11 AVG X 1.25/12 X 1/27	= 4.24 CY
STA 521+50 TO 524+60.75	310.75 X 13 X 1.25/12 X 1/27	= 15.59 CY
	SUBTOTAL	25.02 CY
	TOTAL	235.13 CY

407 TACK COAT

ADOLPH AVENUE AND RAMP L

STA 47+21 TO 48+50	AS PER PLAN 4632 SF X 1/9 X 0.1	= 51.47 GAL
	SUBTOTAL	51.47 Gal.

RAMP I

STA 12+58 TO 13+22.60	64.6 X 29 AVG X 1/9 X 0.1	= 20.82 GAL
STA 13+22.60 TO 14+25	102.4 X 30.5 AVG X 1/9 X 0.1	= 34.70 GAL
STA 14+25 TO 15+88	163 X 34 AVG X 1/9 X 0.1	= 61.58 GAL
STA 15+88 TO 16+34	46 X 39 AVG X 1/9 X 0.1	= 19.93 GAL
STA 16+34 TO 17+00	66 X 44 X 1/9 X 0.1	= 32.27 GAL
	SUBTOTAL	169.30 GAL

RAMP J

STA 3+24.18 TO 7+14.46	390.28 X 19 X 1/9 X 0.1	= 82.39 GAL
STA 3+24.18 TO 4+62 RT	138 X 16 AVG X 1/9 X 0.1	= 24.53 GAL
	SUBTOTAL	106.92 GAL

AKRON NORTH EXPRESSWAY (RT)

STA 519+06.68 TO 524+60.75	554.07 X 17.63 AVG X 1/9 X 0.1	= 108.54 GAL
	SUBTOTAL	108.54 GAL

AKRON NORTH EXPRESSWAY (LT)

STA 519+14.40 TO 519+59	1/2 (45 X 23) X 1/9 X 0.1	= 5.75 GAL
STA 519+14.40 TO 520+50	138 X 6 AVG X 1/9 X 0.1	= 9.20 GAL
STA 520+50 TO 521+50	100 X 11 AVG X 1/9 X 0.1	= 12.22 GAL
STA 521+50 TO 524+60.75	310.75 X 13 X 1/9 X 0.1	= 44.87 GAL
	SUBTOTAL	72.04 GAL

AKRON NORTH EXPRESSWAY (MEDIAN)

STA 512+88 TO 513+13	25 X 4 X 1/9 X 0.1	= 1.11 GAL
STA 513+13 TO 524+60.75	1,147.75 X 7 AVG X 1/9 X 0.1	= 89.27 GAL
	SUBTOTAL	90.38 GAL

AKRON NORTH EXPRESSWAY (LT. & RT.)

STA. 523+60.75 TO 524+60.75	100 X 76 X 1/9 X 0.1	= 84.44 GAL
STA. 540+93.50 TO 541+93.50	100 X 76 X 1/9 X 0.1	= 84.45 GAL
	SUBTOTAL	168.89 GAL
	TOTAL	767.54 GAL.

409 SEAL COAT BITUMINOUS MATERIAL

RAMP J

AREA ON ITEM 301 BITUMINOUS AGGREGATE	2355.40 SF X 1/9 X .3	= 78.51 GAL
	SUBTOTAL	78.51 GAL

AKRON NORTH EXPRESSWAY (MEDIAN)

AREA ON ITEM 402 ASPHALT CONCRETE	8134.25 SF X 1/9 X .3	= 271.14 GAL
	SUBTOTAL	271.14 GAL

AKRON NORTH EXPRESSWAY (RT)

AREA OF ITEM 301 BITUMINOUS AGGREGATE	4432.56 SF X 1/9 X .3	= 147.75 GAL
	SUBTOTAL	147.75 GAL

AKRON NORTH EXPRESSWAY (LT)

AREA OF ITEM 301 BITUMINOUS AGGREGATE	4770.8 SF X 1/9 X .3	= 159.03 GAL
	SUBTOTAL	159.03 GAL
	TOTAL	656.43 GAL

409 SEAL COAT COVER AGGREGATE NO. 8

RAMP J

AREA ON ITEM 409 SEAL COAT	2355.40 SF X 1/9 X .008	= 2.09 CY
	SUBTOTAL	2.09 CY

AKRON NORTH EXPRESSWAY (MEDIAN)

AREA ON ITEM 409 SEAL COAT	8134.25 SF X 1/9 X .008	= 7.23 CY
	SUBTOTAL	7.23 CY

AKRON NORTH EXPRESSWAY (RT)

AREA OF ITEM 409 SEAL COAT	4432.56 SF X 1/9 X .008	= 3.94 CY
	SUBTOTAL	3.94 CY

AKRON NORTH EXPRESSWAY (LT)

AREA OF ITEM 409 SEAL COAT	4770.8 SF X 1/9 X .008	= 4.24 CY
	SUBTOTAL	4.24 CY
	TOTAL	17.50 CY

451 9" REINFORCED PORTLAND CEMENT CONCRETE PAVEMENT

ADOLPH AVENUE AND RAMP L

STA 47+38 TO 48+07	69 X 4 AVG X 1/9	= 30.67 SY
STA 48+07 TO 48+30	23 X 2 X 1/9	= 5.11 SY
	SUBTOTAL	35.78 SY

RAMP I

STA 12+58 TO 13+04 RT	46 X 9.5 AVG X 1/9	= 48.56 SY
STA 13+04 TO 14+04 RT	100 X 8 AVG X 1/9	= 88.89 SY
STA 12+58 TO 13+25 LT	67 X 3 X 1/9	= 22.33 SY
STA 15+88 TO 16+35	1/2 (15.5 + 4.5) X 47 X 1/9	= 52.22 SY
STA 16+35 TO 17+00	65 X 15.5 X 1/9	= 111.94 SY
	SUBTOTAL	323.94 SY

RAMP J

STA 3+24.18 TO 7+14.46	390.28 X 19 X 1/9	= 823.92 SY
STA 3+24.18 TO 4+62	138 X 16 AVG X 1/9	= 245.33 SY
	SUBTOTAL	1,069.25 SY

AKRON NORTH EXPRESSWAY (RT)

STA 519+06.68 TO 524+60.75	554.07 X 16.63 AVG X 1/9	= 1,023.80 SY
	SUBTOTAL	1,023.80 SY

AKRON NORTH EXPRESSWAY (LT)

STA 519+14.40 TO 519+59	1/2 (45 X 23) X 1/9	= 57.50 SY
STA 519+14.40 TO 520+50	138 X 5 AVG X 1/9	= 76.67 SY
STA 520+50 TO 521+50	100 X 10 AVG X 1/9	= 111.11 SY
STA 521+50 TO 524+60.75	310.75 X 12 X 1/9	= 414.33 SY
	SUBTOTAL	659.61 SY
	TOTAL	3,112.38 SY

609 CURB, TYPE 2B

ADOLPH AVENUE AND RAMP L

STA 47+38 TO 48+30		= 55 LF
	SUBTOTAL	55 LF

RAMP I

STA 12+58 TO 14+04 RT		= 146 LF
STA 15+88 TO 17+00		= 115 LF
	SUBTOTAL	261 LF

RAMP J

STA 7+00 TO 7+14.46 RT		= 14.5 LF
	SUBTOTAL	14.5 LF
	TOTAL	330.5 LF

609 CURB, TYPE 6

ADOLPH AVENUE AND RAMP L

STA 47+21 TO 48+30		= 133 LF
	SUBTOTAL	133 LF

RAMP J

STA 3+24.18 TO 7+14.46 LT		= 391 LF
	SUBTOTAL	391 LF

AKRON NORTH EXPRESSWAY (RT)

STA 519+06.68 TO 524+60.75		= 554 LF
STA 540+93.50 TO 541+03.50		= 10 LF
	SUBTOTAL	564 LF

AKRON NORTH EXPRESSWAY (LT)

STA 519+14.40 TO 524+60.75		= 547 LF
STA 540+93.50 TO 541+03.50		= 10 LF
	SUBTOTAL	557 LF

ARCH STREET

EAST OF EXPRESSWAY		= 29 LF
	SUBTOTAL	29 LF

NORTH ADAMS STREET

WEST OF EXPRESSWAY		= 22 LF
EAST OF EXPRESSWAY		= 22 LF
	SUBTOTAL	44 LF
	TOTAL	1,718 LF

622 CONCRETE MEDIAN BARRIER, TYPE A50, MODIFICATION 1

AKRON NORTH EXPRESSWAY

STA 519+13.50 TO 524+60.75	547.25 - (1 X 10)	= 537.25 LF

622 CONCRETE MEDIAN BARRIER, TYPE A50, MODIFICATION 2

AKRON NORTH EXPRESSWAY

STA 513+13.50 TO 519+13.50	600 - (3 X 20)	= 540.00 LF

SPECIAL DRAINAGE CONNECTION, NO. 8 AGGREGATE

RAMP J

STA 3+24.18 TO 7+14.46	390.28 X 1.20 SF AVG X 1/27	= 17.35 CY
	SUBTOTAL	17.35 CY

AKRON NORTH EXPRESSWAY (RT)

STA 519+06.68 TO 524+60.75	554.07 X 1.20 SF AVG X 1/27	= 24.63 CY
	SUBTOTAL	24.63 CY

AKRON NORTH EXPRESSWAY (LT)

STA 519+14.40 TO 524+60.75	546.35 X 1.20 SF AVG X 1/27	= 24.28 CY
	SUBTOTAL	24.28 CY
	TOTAL	66.26 CY

GENERAL SUMMARY

CALCULATED BY DSB DATE 11/21/83
CHECKED BY R.E.R DATE 4-85

FED.RD.	STATE	PROJECT	
5	OHIO		

SUM-8-1.73/1.95

(25/204)

ITEM	BHF FUNDS SHEET NUMBER 7	9	14	25	26	31	34	77	SUB TOTAL	F FUNDS SHEET NUMBER 7	9	26	31	34	76	SUB TOTAL	BID ITEM	BID QUANTITY	BID UNIT	DESCRIPTION
																				ROADWAY
201										LUMP						Lump	201	Lump	LUMP	CLEARING & GRUBBING
202							24		24					276		276	202	300	LIN. FT.	PIPE REMOVED 24" AND UNDER
202														1		1	202	1	EACH	MANHOLE REMOVED
202							1		1					10		10	202	11	EACH	CATCH BASIN OR INLET REMOVED
202						2923			2923				1852			1852	202	4775	SQ. YD.	PAVEMENT REMOVED
202						3979			3979								202	3979	SQ. FT.	WALK REMOVED
202						1062			1062				1701			1701	202	2763	LIN. FT.	CURB REMOVED
202						460			460				2057			2057	202	2517	LIN. FT.	GUARDRAIL REMOVED
202						540			540				1313			1313	202	1853	LIN. FT.	FENCE REMOVED
202						37			37				882			882	202	919	SQ. YD.	CONCRETE MEDIAN REMOVED
202			400						400				25			25	202	425	LIN. FT.	CONCRETE BARRIER REMOVED
202						269			269				3559			3559	202	3528	SQ.YD.	WEARING COURSE REMOVED
203				416					416			4560				4560	203	4976	CU. YD.	EXCAVATION NOT INCLUDING EMBANKMENT CONSTRUCTION
203				272					272			1643				1643	203	1915	CU. YD.	EMBANKMENT
203				3646					3646			5032				5032	203	18678	SQ. YD.	SUBGRADE COMPACTION
203				1					1			2				2	203	3	HOUR	PROOF ROLLING
606						687.5			687.5				337.5			337.5	606	1625.0	LIN. FT.	GUARDRAIL, TYPE 5
606						18.75			18.75				18.75			18.75	606	18.75	LIN. FT.	GUARDRAIL, BARRIER DESIGN, TYPE 5
606						2			2				1			1	606	3	EACH	ANCHOR ASSEMBLY, STANDARD TYPE A
606													2			2	606	2	EACH	ANCHOR ASSEMBLY, STANDARD TYPE T
606													1			1	606	1	EACH	ANCHOR ASSEMBLY, BARRIER DESIGN STANDARD TYPE A, MOD. as per plan
606						4			4				4			4	606	8	EACH	BRIDGE TERMINAL ASSEMBLY, STANDARD TYPE A
606						1			1								606	1	EACH	ANCHOR ASSEMBLY, STANDARD TYPE B
607						575			575				1355			1355	607	1930	LIN. FT.	FENCE, TYPE CL
608					1812	278			2090								608	2090	SQ. FT.	6" CONCRETE WALK
608		20							20								608	20	SQ. FT.	CURB RAMP, STANDARD TYPE 2
608		6							6								608	6	EACH	CURB RAMP, STANDARD TYPE 2
616											1000					1000	616	1000	M. GAL.	WATER
616											10					10	616	10	TON	CALCIUM CHLORIDE
																				EROSION CONTROL
207		344							344		1466					1466	207	1810	SQ. YD.	TEMPORARY SEEDING AND MULCHING
207		72							72								207	72	EACH	STRAW OR HAY BALES
207											1080					1080	207	1080	LIN. FT.	FILTER FABRIC FENCE
207											110					110	207	110	LIN. FT.	TEMPORARY SLOPE DRAINS
207											550					550	207	550	CU. YD.	TEMPORARY BENCHES, DIKES, DAMS, AND SEDIMENT BASINS
601											5					5	601	5	CU. YD.	ROCK CHANNEL PROTECTION, TYPE C WITHOUT *Filter*
601							9		9								601	9	CU. YD.	DUMPED ROCK FILL, TYPE C
659		4							4		17					17	659	21	M. SQ. FT.	MOWING
659		3							3		11					11	659	14	M. GAL.	WATER
659				1721					1721			7330				7330	659	9055	SQ. YD.	SEEDING AND MULCHING, AS PER PLAN
659		86							86		367					367	659	453	SQ. YD.	REPAIR SEEDING AND MULCHING
659		.02		.18					.20		.07	63				63	659	0.96	TON	COMMERCIAL FERTILIZER
659				.78					.78			3.30				3.30	659	4.08	TON	AGRICULTURAL LIMING, AS PER PLAN
660		200							200							200	660	200	SQ.YD.	SODDING
																				WATERWORK *TYPE CODE YOGO*
814							112		112								814	112	LIN. FT.	16" WATERMAIN GALVANIZED EXTRA STRONG WELDED STEEL PIPE (ASTM A-53 GRADE B 16.0 O.D x 0.50" WALL THICKNESS INCLUDING FITTINGS COUPLINGS SUPPORT ASSEMBLIES INSULATION AND APPURTENANCES COMPLETE.
814							1		1								814	1	EACH	REMOVE AIR RELEASE ASSEMBLY
814							144		144								814	144	LIN. FT.	16" WATERMAIN WITH PUSH-ON JOINTS AND FITTINGS, CLASS 53 A.N.S.I. A 21.51 WITH LEAD JOINTS, ALL CEMENT LINED
814							5		5								814	5	EACH	VALVE BOX ADJUSTED TO GRADE
814							1		1								814	1	EACH	*Service Stop and Box Removed and Reset*
814							1		1								814	1	EACH	MANUAL AIR RELEASE ASSEMBLY, COMPLETE
																	814	1	EACH	*Fire Hydrant Removed and Reset*

GENERAL SUMMARY

CALCULATED BY DSB DATE 11/21/83
CHECKED BY R.E.R. DATE 4-85

FED.RD.	STATE	PROJECT	
5	OHIO		

30/204

SUM-8-1.73/1.95

* 100 % CITY OF AKRON FUNDS

ITEM	BHF FUNDS SHEET NUMBER 12	10	11	14	25	26	31	34	SUB TOTAL	F FUNDS SHEET NUMBER 26	27	28	31	34	SUB TOTAL	BID ITEM	BID QUANTITY	BID UNIT	DESCRIPTION
																			DRAINAGE
G02								1.7	1.7							G02	1.7	CU. YD.	CONCRETE MASONRY
G03														29	29	G03	29	LIN. FT.	12" CONDUIT, TYPE "B" 706.02
G03								235	235							G03	235	LIN. FT.	10" CONDUIT, TYPE "B" 706.01 , 706.02 OR 706.08
G03								164	164							G03	164	LIN. FT.	12" CONDUIT, TYPE "B" 706.01 , 706.02 OR 706.08
G03														14	14	G03	14	LIN. FT.	15" CONDUIT, TYPE "B" 706.01 , 706.02 OR 706.08
G03								228	228							G03	228	LIN. FT.	8" CONDUIT, TYPE "C" 706.01 , 706.02 OR 706.08
G03														234	234	G03	234	LIN. FT.	12" CONDUIT, TYPE "C" 706.01 , 706.02 OR 706.08
G03														54	54	G03	54	LIN. FT.	15" CONDUIT, TYPE "C" 706.01 , 706.02 OR 706.08
G03								14	14							G03	14	LIN. FT.	18" CONDUIT, TYPE "C" 706.01 , 706.02 OR 706.08
G03								115	115					71	71	G03	186	LIN. FT.	6" CONDUIT, TYPE "F"
G04														2	2	G04	2	EACH	CATCH BASIN, STANDARD No. 3
G04								1	1					5	5	G04	6	EACH	CITY OF AKRON INLET, No. 3
G04								3	3							G04	9	EACH	CATCH BASIN, STANDARD No. 2-2-B
G04														1	1	G04	1	EACH	INLET, STANDARD No. 2-A-6
G04														3	3	G04	3	EACH	INLET, STANDARD No. I-3A
G04								3	3					1	1	G04	4	EACH	MANHOLE, STANDARD No. 3
G04														1	1	G04	1	EACH	MANHOLE RECONSTRUCTED TO GRADE
G04							3		3							G04	3	EACH	SANITARY MANHOLE ADJUSTED TO GRADE
G05								269	269					1358	1358	G05	1627	LIN. FT.	6" SHALLOW PIPE UNDERDRAIN
G05							124		124							G05	124	LIN. FT.	6" SHALLOW PIPE UNDERDRAIN, 707.01 TYPE III OR 707.21 TYPE III
G05													55		55	G05	55	LIN. FT.	AGGREGATE DRAINS
SPECIAL																SPECIAL	LUMP*	LUMP	CLEANING SEWER (SEE SHEET No. 8)*
																			PAVEMENT
301										107					107	301	107	CU. YD.	BITUMINOUS AGGREGATE BASE : AC-20 RT-11 OR RT-12
304										410					410	304	410	CU. YD.	AGGREGATE BASE
310					601				G01	707					707	310	1308	CU. YD.	SUBBASE, TYPE II
402				29	159				188	232					232	402	420	CU. YD.	ASPHALT CONCRETE, AC-20
402				35					35							402	35	CU. YD.	ASPHALT CONCRETE, *AC-20, as per plan*
404				19	118				137	236					236	404	373	CU. YD.	ASPHALT CONCRETE, AC-20
407				*35*	*340*				*375*	768					768	407	1143	GAL.	TACK COAT
409												G57			G57	409	G57	GAL.	SEAL COAT BITUMINOUS MATERIAL
409												18			18	409	18	CU. YD.	SEAL COAT COVER AGGREGATE No. 8
451					3164				3164			3113			3113	451	G277	SQ. YD.	9" REINFORCED CONCRETE PAVEMENT
G09						856			856			331			331	G09	1187	LIN. FT.	CURB, STANDARD TYPE 2B
G09						52			52							G09	52	LIN. FT.	CURB, STANDARD TYPE 2B MODIFIED, AS PER PLAN
G09												1718			1718	G09	1718	LIN. FT.	CURB, STANDARD TYPE 6
G11							334		334				525		525	G11	859	SQ. YD.	REINFORCED CONCRETE APPROACH SLAB, *Modified as per plan (T=15")*
G12													11		11	G12	11	SQ. YD.	CONCRETE MEDIAN, STANDARD *Type*
G12													28		28	G12	28	SQ. YD.	CONCRETE MEDIAN, MODIFIED, AS PER PLAN
G22				400					400							G22	400	LIN. FT.	CONCRETE BARRIER, MODIFIED, AS PER PLAN
G22												537			537	G22	537	LIN. FT.	CONCRETE BARRIER, *Standard Type A50, Modification 1 as per plan*
G22												540			540	G22	540	LIN. FT.	CONCRETE BARRIER, *Standard Type A50, Modification 2 as per plan*
SPECIAL													184		184	SPECIAL	184	LIN. FT.	PRESSURE RELIEF JOINT, STANDARD TYPE C
SPECIAL							124		124							SPECIAL	124	LIN. FT.	PRESSURE RELIEF JOINT, STANDARD TYPE A
SPECIAL												67			67	SPECIAL	67	CU. YD.	DRAINAGE CONNECTION, *using* No 8 AGGREGATE
G22		4500							4500							G22	4500	LIN. FT.	TEMPORARY CONCRETE BARRIER, AS PER PLAN
																			FOR TRAFFIC CONTROL ESTIMATED QUANTITIES SEE SHEET No. 80
																			FOR LIGHTING ESTIMATED QUANTITIES SEE SHEET No. 94
																			FOR STRUCTURE ESTIMATED QUANTITIES SEE SHEET Nos 114 & 186
SPECIAL	LUMP								LUMP							SPECIAL	*Lump*	LUMP	TRAFFIC SAFETY COORDINATOR
SPECIAL	300								300							SPECIAL	*300*	HOUR	LAW ENFORCEMENT OFFICER WITH PATROL *Car*
G14									*LUMP*							*LUMP*	G14	*Lump*	LUMP	MAINTAINING TRAFFIC
G19									*LUMP*							*LUMP*	G19	*Lump*	LUMP	FIELD OFFICE
G23									*LUMP*							*LUMP*	G23	*Lump*	LUMP	CONSTRUCTION LAYOUT STAKES
G24									*LUMP*							*LUMP*	G24	*Lump*	LUMP	MOBILIZATION

Rev. 12-2-85

QUANTITY SUB-SUMMARY

CALCULATED BY DSB DATE 10-27-83
CHECKED BY CMB DATE 4/85

FHWA REGION	STATE	PROJECT	
5	OHIO		

SUM-8-1.73/1.95

31/204

REF. No.	SHEET No.	STATION TO STATION	SIDE	FUNDING	202 PAVEMENT REMOVED	202 WALK REMOVED	202 CURB REMOVED	202 GUARDRAIL REMOVED	202 FENCE REMOVED	202 WEARING COURSE REMOVED	202 CONCRETE MEDIAN REMOVED	202 CONCRETE BARRIER REMOVED	606 GUARDRAIL, TYPE 5	606 GUARDRAIL, BARRIER DESIGN TYPE 5	606 ANCHOR ASSEMBLY, TYPE A	606 ANCHOR ASSEMBLY, TYPE T	606 ANCHOR ASSEMBLY BARRIER DES. TYPE A MOD. AS PER PLAN	606 BRIDGE TERMINAL ASSEMBLY, TYPE A	606 ANCHOR ASSEMBLY TYPE B	612 CONCRETE MEDIAN MODIFIED AS PER PLAN	607 FENCE, TYPE CL	611 REINFORCED CONCRETE APPROACH SLAB	612 CONCRETE MEDIAN	SPECIAL PRESSURE RELIEF JOINT, TYPE A	SPECIAL PRESSURE RELIEF JOINT, TYPE C	604 SANITARY MANHOLE ADJUSTED TO GRADE	605 6" SHALLOW PIPE U.D. 707.01 TYPE III OR 707.21 TYPE III	605 AGGREGATE DRAINS	608 6" CONCRETE WALK
					SQ.YD.	SQ.FT.	LIN.FT.	LIN.FT.	L.F.	S.Y.	SQ.YD.	LIN. FT.	LIN.FT.	LIN.FT.	EACH	EACH	EACH	EACH	EACH	SQ.YD.	LIN.FT.	SQ.YD.	SQ.YD.	LIN.FT.	LIN.FT.	EACH	LIN.FT.	LIN.FT.	SQ.FT.
G-1	38	IG+90 RAMP "I" TO 49+38 PERKINS ST.	LT.	BHF									125		1			1											
G-2	38	49+58 GOOD ST. TO 48+87 PERKINS ST.	RT.	BHF									75					1	1										
G-3	33	50+53 PERKINS ST. TO 7+14.46 RAMP "J"	LT.	BHF									G2.5					1											
G-4	33	50+87 PERKINS ST. TO 2+88 RAMP "L"	RT.	BHF									4.25		1			1											
G-5	33	4+G5 TO 7+14.46 RAMP "J"	RT.	F									237.5			1													
G-6	33	49+GG ARCH ST.	L&R	F									25																
G-7	33	523+00 TO 524+85.75 S.R. 8	RT.	F									150		1			1											
G-8	33	520+13 TO 524+85.75 S.R. 8	LT.	F									450			1		1											
G-9	33	512+88 TO 513+31 S.R. 8	℄	F										18.75			1												
G-10	33	49+11 N. ADAMS ST.	L&R	F									25						4										
G-11	33	46+87 N. ADAMS ST.	L&R	F									25																
G-12	35	540+93.50 TO 541+18 S.R. 8	RT.	F									12.5					1											
G-13	35	540+93.50 TO 541+18 S.R. 8	LT.	F									12.5					1											
DR-1	35	49+05 ADOLPH AVE.	RT.	BHF																									90
DR-2	35	52+05 PERKINS ST.	RT.	BHF																									69
DR-3	35	52+88 PERKINS ST.		BHF																									119
GX-1	33	50+87 PERKINS ST. TO 2+88 RAMP "L"	RT.	BHF				460																					
GX-2	33	4+G5 RAMP "J" TO 50+94 PERKINS ST.	RT.	F				282																					
GX-3	33	522+80 TO 524+70 S.R. 8	LT.	F				190																					
GX-4	33	523+14 TO 524+70 S.R. 8	RT.	F				148																					
GX-5	33	540+84 TO 541+18 S.R. 8	LT.	F				34																					
GX-6	33	540+84 TO 541+18 S.R. 8	RT.	F				34																					
GX-7	33	512+88 TO 524+85.75 S.R. 8	℄	F				1198																					
X-26	35	540+93.50 TO 541+93.50 S.R. 8	L&R	F						845																			
M-1	35	512+88 TO 513+13 S.R. 8	℄	F																			11.2						
M-2	35	47+96 TO 48+27 ADOLPH AVE.	LT.	F																27.7									
X-1	35	47+21 TO 48+50 ADOLPH AVE.	LT.	F						504																			
X-2	38	47+36 TO 47+81 PERKINS ST.	LT.	BHF							37																		
X-3	38	47+50 TO 49+32.06 PERKINS ST.	℄	BHF	973	2445	262																						
X-4	38	49+50 TO 49+73 GOOD ST.	RT.	BHF	8		25																						
X-5	38	17+00 TO 17+60 RAMP "I"	LT.	BHF			52			269																			
X-6	35	48+50 TO 49+79 ADOLPH AVE.	℄	BHF	519		271																						
X-7	35	50+52.58 TO 53+00 PERKINS ST.	℄	BHF	1241	1534	291																						
X-8	35	50+22 TO 50+51 ADOLPH AVE.	℄	BHF	103		80																						
X-9	35	7+14.46 TO 7+44 RAMP "J"	℄	BHF	79		81																						
X-10	35	47+20 TO 48+50 ADOLPH AVE.	℄	F	65		141																						
X-11	40	15+88 TO 17+00 RAMP "I"	LT.	F			112			424																			
X-12	40	12+58 TO 14+04 RAMP "I"	℄	F			146																						
X-13	40	12+58 TO 15+88 RAMP "I"	LT.	F						1041																			
X-14	41	2+79.74 TO 7+14.46 RAMP "J"	℄	F	787		434																						
X-15	41	517+65 TO 519+15 S.R. 8	RT.	F			150																						
X-16	41	49+44 TO 49+GG ARCH ST.	℄	F	GB		78	75																					
X-17	42	519+52.45 TO 522+33 S.R. 8	RT.	F	248		278																						
X-18	42	519+50 TO 524+GO.75 S.R. 8	LT.	F	163																								
X-19	35	512+88 TO 524+85.75 S.R. 8	℄	F							798																		
X-20	42	522+33 TO 524+GO.75 S.R. 8	RT.	F			229																						
X-21	42	524+GO.75 TO 524+85.75 S.R. 8	℄	F	223		25																						
X-22	35	540+G8.50 TO 540+93.50 S.R. 8	℄	F	223							25																	
X-23	35	48+96.50 TO 49+17.50 N. ADAMS ST.	℄	F	49		63	21																					
X-24	35	46+85 TO 47+01 N. ADAMS ST.	℄	F	26		45	75																					
X-25	35	519+14.40 TO 519+59 S.R. 8	LT.	F							84																		
FX-1	38	48+20 TO 48+98 PERKINS ST.	LT.	BHF					178																				
FX-2	38	49+27 GOOD ST. TO 48+8G PERKINS ST.	RT.	BHF					137																				
FX-3	35	51+GO PERKINS ST. TO 524+85.75 S.R. 8	RT.	F					973																				
FX-4	33	521+59 TO 524+85.75 S.R. 8	LT.	F					340																				
FX-5	37	5+07 RAMP "L" TO 49+60 ADOLPH AVE.	LT.	BHF					225																				
S-1	33	51+90 PERKINS ST.	℄	BHF																									
S-2	33	48+87.5 ADOLPH AVE.	℄	BHF																						1			
J-1	38	48+70 PERKINS ST.	L&R	BHF																						1			
J-2	39	50+95 PERKINS ST.	L&R	BHF																									
J-3	42	523+77 S.R. 8	L&R	F																									
J-4	35	541+78 S.R. 8	L&R	F																									
X-27	42	523+GO.75 TO 524+GO.75 S.R. 8	L&R	F						845																			
F-1	38	48+43 PERKINS ST. TO 16+52 RAMP "I"	LT.	BHF																									
F-2	38	49+27 GOOD ST. TO 48+8G PERKINS ST.	RT.	BHF																	181								
F-3	39	50+55 TO 50+93 PERKINS ST.	LT.	BHF																	121								
F-4	39	51+GG PERKINS ST. TO 524+98 S.R. 8	RT.	F																	38								
F-5	33	521+59 TO 524+G9 S.R. 8	LT.	F																	1005								
F-6	37	5+07 RAMP "L" TO 49+60 ADOLPH AVE.	LT.	BHF																	350								
A-1	38	49+06.04 TO 49+31.09 PERKINS ST.	℄	BHF																	235								
A-2	39	50+51.61 TO 50+76.61 PERKINS ST.	℄	BHF																		167							
A-3	42	524+GO.75 TO 524+85.75 S.R. 8	℄	F																		167							
A-4	35	540+G8.50 TO 540+93.50 S.R. 8	℄	F																		302							
S-3	36	47+72 PERKINS ST.	℄	BHF																		223							
SUBTOTAL BHF					2923	3979	1062	460	540	269	37	—	687.5	—	2	—	—	4	1	—	575	334	—	124	—	3	124	—	278	
SUBTOTAL F					1852	—	1701	2057	1313	3659	882	25	937.5	18.75	1	2	1	4	—	27.7	1355	525	11.2	—	184	—	—	55	—	

AA-G Pg 11942R

CALC. BY. ____ DATE ____
CHKD. BY. ____ DATE ____

SUM-8-1.73/1.95

OHIO
F.H.W.A. REGION 5

32/204

STA. 51+43.36 PERKINS ST. = STA. 7+65.45 RAMP J

STA. 52+30.85 PERKINS ST. = STA. 50+00.00 ADOLPH AVE.

BEGIN APPROACH SLAB STA. 50+52.58

END APPROACH SLAB STA. 49+32.06

BEGIN WORK STA. 46+82

END WORK STA. 53+00

BEGIN PROJECT STA. 513+37.00 F-BHF-54(18)

STA 9/+50.11 PERKINS ST.
STA 50+00.02 UNION ST.

STA. 47+60.94 PERKINS ST.
STA 17+95.31 RAMP I

STA. 47+69.95 PERKINS ST.
STA. 50+00 GOOD ST.

STA. 49+92.32 PERKINS ST.
STA. 514+44.65 S.R. 8

STA 51+92.92 PERKINS ST.
STA 50+00 ADOLPH AVE.

PERKINS ST.

AKRON EXPRESSWAY

OAK TERRACE

WORRON CT.

UNION ST.

EARL CT.

GOOD ST.

ADOLPH AVE.

OHIO ST.

RAMP I

RAMP J

RAMP K

RAMP L

CONST. LIMITS

PROP 16" W.M.

W.M. Aband.

EXIST. 43"x76.97" Bk

EXIST. 43"x72.12" AHD

EXISTING STRUCTURE

TYPE: CONTINUOUS STEEL BEAM WITH CONCRETE DECK AND SUBSTRUCTURE.

SPANS: 57'-8⅜", 57'-8⅜" & 7 @ BRGS.

SKEW: 7°-28'-59"

ROADWAY: 44'-0" F/F SIDEWALKS & 11'-0" SIDEWALKS.

LOADING: S-20-44

WEARING: 2½" ASPHALTIC CONCRETE SURFACE

APPROACH SLAB: 15'

ALIGNMENT: TANGENT

SUPERELEVATION: NONE

PROPOSED STRUCTURE

TYPE: CONTINUOUS COMPOSITE STEEL BEAM WITH CONCRETE DECK AND SUBSTRUCTURE.

SPANS: 57'-8⅜", 57'-8⅜" & 7 @ BRGS.

SKEW: 7°-28'-59"

ROADWAY: 59'-0" FACE OF CONC. BARRIER TO FACE OF SIDEWALK. CONC. BARRIER LT. & 5'-0" SIDEWALK RT. W/ 1" CONC. PARAPET & DOUBLE PIPE RAIL.

LOADING: HS-20-44 (CASE II) & ALTERNATE MILITARY LOADING

WEARING: 1½" LATEX MODIFIED SURFACE CONCRETE OVERLAY

APPROACH SLAB: 25'

ALIGNMENT: TANGENT

SUPERELEVATION: NONE

FOR ROADWAY QUANTITIES, SEE SHEET No. 31.

FOR DRAINAGE QUANTITIES, SEE SHEET No. 34.

0 50 100 150
SCALE IN FEET

FOR PAVEMENT DETAILS OF PERKINS ST. & RAMP "I" SEE SHEET No. 38

FOR PAVEMENT DETAILS OF PERKINS ST & ADOLPH AVE. SEE SHEET No. 39.

PROFILE GRADE

EXISTING GROUND

EXIST. ℄ PROFILE PERKINS ST.

MEET EXIST. STA. 47+50

P.V.I. STA. 49+25
EL. = 1056.20

+3.00%

P.V.I. STA. 51+00
EL. = 1054.69

-0.86%

-1.81%

-1.02%

150' V.C.

100' V.C.

100' V.C.

P.V.I. STA. 52+50
EL. = 1051.97

MEET EXIST. STA. 53+00

STA 51+89, 1' RT.
MH. TO BE ADJUSTED TO GRADE
PROP T/C = 1053.08

16"W

8"W

6"W

8"San.

8"G

24" St.

1050.95 1051.70 1052.45 1053.20 1053.95 1054.62 1055.13 1055.48 1055.66 1055.69 1055.55 1055.38 1055.12 1054.89 1054.57 1054.21 1053.78 1053.33 1052.88 1052.45 1052.07 1051.74 1051.46

1040.22 1041.86 1043.45 1045.09 1046.53 1048.15 1049.50 1050.95 1052.23 1053.15 1053.73 1054.01 1053.95 1053.71 1053.06 1052.76 1052.34 1051.92 1051.46 1051.13 1050.82 1050.56 1050.27

1060 1055 1050 1045 1040 1035 1030 1025

41+00 42+00 43+00 44+00 45+00 46+00 47+00 48+00 49+00 50+00 51+00 52+00 53+00 54+00 55+00 56+00 57+00

PERKINS ST.

CALC. BY. DATE	SUM-8-1.73/1.95	OHIO
CHKD. BY. DATE		F.H.W.A. REGION 5

33 / 204

BEGIN PROJECT STA. 513+37.00
F-BHF-54(18)

RAMP K" | RAMP I | RAMP J | RAMP L"

PERKINS ST. | PROP. 16" W.L. | Existing Guardrail | CONST. LIMITS

AKRON EXPRESSWAY

ADOLPH AVE. | ADOLPH AVE. C.W. | ADOLPH AVE. 4'G

ARCH ST. | N. ADAMS ST. | OHIO ST. | 1-Sty Brk. Bldg. offices

STA. 521+58.87' LT. C.P.A.
STA. 523+75.33' LT. C.P.A.
STA. 524+18.17' LT. C.P.A.
STA. 524+45.11 6.5' LT. C.P.A.
STA. 524+69.53' LT. E.P.A.
END APPROACH SLAB STA. 524+85.75
MATCH LINE STA. 525+75
STA. 524+97.57' RT. E.P.A.
STA. 524+90.100' RT. C.P.A.
STA. 524+14.87' RT. C.P.A.
STA. 522+25.82' RT. C.P.A.
STA. 520+32.103' RT. C.P.A.
STA. 520+10.107' RT. C.P.A.
STA. 5+26.48' LT. C.P.A.
STA. 3+16.70' LT. C.P.A.
STA. 51+24.92 PERKINS ST.
STA. 50+00 ADOLPH ST.
STA. 7+65.45 RAMP J = STA. 51+43.36 PERKINS ST.
P.C. STA. 2+73.51 STA. 519+57.00
PT. STA. 5+46.45
Aband. M.H.
Existing Guardrail
Existing Guardrail
PC STA. 5+86.81
PT STA. 4+24.71

D1 D2 D3 D4 D5 D6 D7 D8 D9 D10 D11 D12 D13 D14
G-3 G-4 G-5 G-6 G-7 G-8 G-9 G-10 G-11
GX-1 GX-2 GX-3 GX-4 GX-7
M-1
S-1 S-2
F-4 F-5 FX-3 FX-4
X-19 X-23 X-24 X-25

0 50 100 150
SCALE IN FEET

* USE CAUTION WHEN EXCAVATING IN THIS AREA; MUST MAINTAIN A 6" MINIMUM VERTICAL CLEARANCE FROM BOTTOM OF PROP. 12" STORM SEWER INLET PIPE AND TOP OF EXISTING 6" WATER MAIN PIPE WHERE THEY CROSS.

PROFILE GRADE	1052.90	1053.56	1053.01	1052.36	1051.50	1050.44	1049.17	1047.70	1046.01	1044.23	1042.54	1041.05	1039.75	1038.65	1037.74	1037.03	1036.52	1036.12	1036.07	1036.14
EXISTING GROUND	1052.86	1052.53	1051.45	1049.46	1047.04	1044.62	1042.31	1039.97	1037.96	1037.30	1037.20	1037.20	1037.90							
			7+00		6+00		5+00		4+00		3+00		2+00							

1055 / 1050 / 1045 / 1040 / 1035

℄ PERKINS ST.
P.V.I. STA. 6+50
EL. = 1051.37
+2.19%
P.V.T. 1+25
150' V.C.
P.V.C. 5+75
P.V.T. 5+50
+7.14%
250' V.C.
P.V.C. 3+00
EXIST. GROUND
-0.64%
P.V.I. STA. 4+25
EL. = 1035.30
12" St. (To be removed)
PROP. 15" ST.

FOR SEWER PROFILES	
REF. Nº	SHEET Nº
D-1	44
D-2	
D-3	
D-4	
D-5	44
D-6	43
D-7	44
D-8	43
D-9	
D-10	
D-11	
D-12	
D-13	43
D-14	45

FOR ROADWAY QUANTITIES SEE SHEET No. 31

FOR DRAINAGE QUANTITIES SEE SHEET No. 34

NOTE: G-6, G-10 & G-11 ATTACH "FLARED END SECTION", AS PER STD. DWG. GR-1, TO BOTH ENDS. COST TO BE INCLUDED IN THE UNIT PRICE BID FOR ITEM 606 GUARDRAIL TYPE 5.

For G-9, See Sht. 47

RAMP J

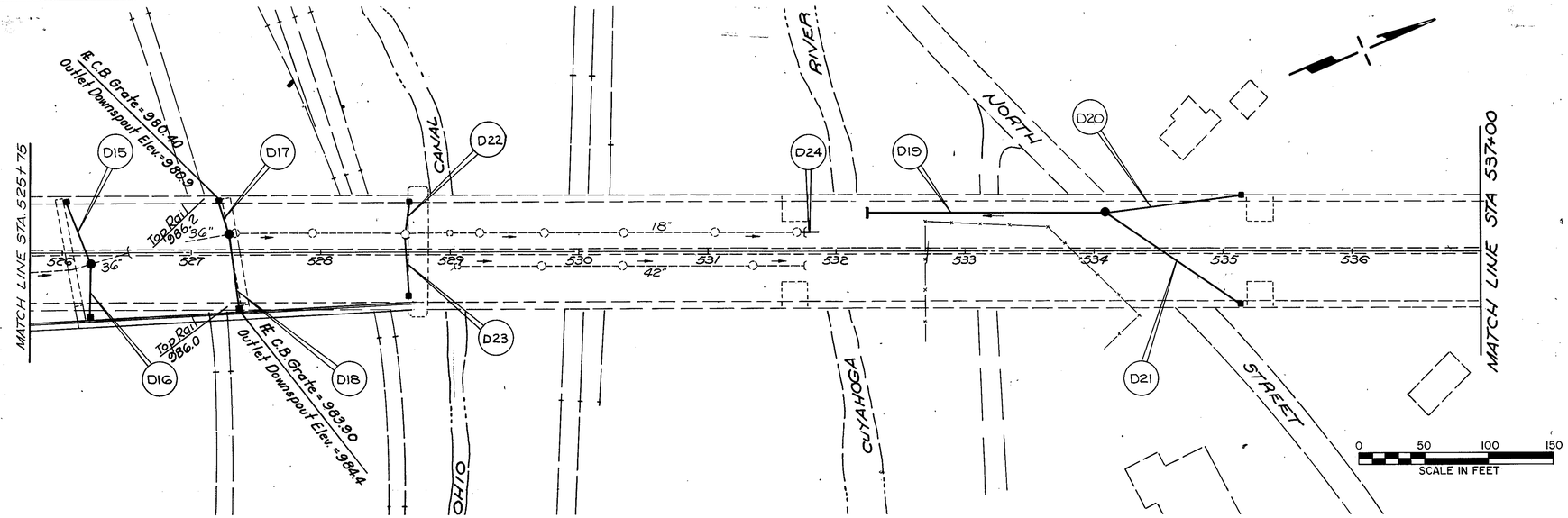

CALC. BY. DSB DATE 11/15/83	SUM-8-1.73/1.95	OHIO	34 / 204
CHKD. BY. CMB DATE 4/85		F.H.W.A. REGION 5	

FOR SEWER PROFILE	
REF. Nº	SHEET Nº
D-15	44
D-16	44
D-17	44
D-18	44
D-19	45
D-20	45
D-21	45
D-22	45
D-23	45
D-24	45

NOTE: 603 CONDUIT SHALL BE 706.01, 706.02 OR 706.08 UNLESS OTHERWISE NOTED.

* CONDUIT SHALL BE 706.02

DRAINAGE SUB-SUMMARY

REF. No.	STATION TO STATION	SHEET No.	BHF FUNDS 202 PIPE REMOVED 24"& UNDER L.F.	202 CATCH BASIN REMOVED EACH	601 DUMPED ROCK FILL, TYPE "C" C.Y.	602 CONCRETE MASONRY C.Y.	603 TYPE "B" CONDUIT SEE NOTE ABOVE 8" L.F.	10" L.F.	12" L.F.	15" L.F.	603 TYPE "C" CONDUIT SEE NOTE ABOVE 8" L.F.	10" L.F.	12" L.F.	18" L.F.	604 INLET, AKRON STD. No. 3 EACH	604 MANHOLE STD. No. 3 EACH	604 CATCH BASIN STD. No. 2-2-8 EACH	603 6" CONDUIT TYPE "F" L.F.	605 6" SHALLOW PIPE U'DRAIN L.F.	F FUNDS 202 PIPE REMOVED 24"& UNDER L.F.	202 MANHOLE REMOVED EACH	202 INLET REMOVED EACH	202 CATCH BASIN REMOVED EACH	603 6" CONDUIT TYPE "F" L.F.	603 TYPE "B" CONDUIT SEE NOTE ABOVE 8" L.F.	10" L.F.	12" L.F.	15" L.F.	603 TYPE "C" CONDUIT SEE NOTE ABOVE 8" L.F.	10" L.F.	12" L.F.	15" L.F.	604 INLET, AKRON STD. No.3 EACH	604 INLET, STD. No. 2-A-6 EACH	604 INLET, STD. No. I-3A EACH	604 MANHOLE STD. No. 3 EACH	604 MANHOLE RECON-STRUCTED TO GRADE EACH	604 CATCH BASIN STD. No. 3 EACH	605 6" SHALLOW PIPE UNDERDRAIN L.F.
D1	514+85 S.R. 8	33																				1																	
D2	517+00 S.R. 8	↑																				1																	
D3	519+00 S.R. 8																					1																	
D4	49+67 ARCH ST. TO 3+19 RAMP "J"																			125			1							115		1							
D5	3+19 RAMP "J"																					1							14				1						
D6	12+40 RAMP "I"																						1							9							1	1	
D7	48+56 PERKINS ST. TO 514+97 S.R. 8		24	1											1																							
D8	N. ADAMS ST.(N. SIDE) TO 48+90 N. ADAMS ST.																			8			1							28		1						1	
D9	N. ADAMS ST.(S. SIDE) TO 48+90 N. ADAMS ST.																			16			1							21		1							
D10	524+21, 51'LT. TO 524+23, 75'LT. S.R. 8																				1							29*							1			
D11	524+23, 75'LT. SR 8 TO N. ADAMS ST.(S. SIDE)																			45			1							21		1							
D12	524+23, 75'LT. S.R. 8 TO N. ADAMS ST.(N. SIDE)																			32			1							40		1							
D13	524+23, 75'LT. TO 524+73, 57'LT. S.R. 8	↓																		50											54								
D14	525+42, 15'RT. TO 525+42, 24.9'RT. S.R. 8	33									8						1																						
D15	526+22, 8'RT. TO 526+08, 39' LT. S.R. 8	34									45					1	1																						
D16	526+22, 8'RT. TO 526+23, 50'RT. S.R. 8	↓									40						1																						
D17	527+29, 14' LT. TO 527+22, 42'LT. S.R. 8										26					1	1																						
D18	527+29, 14'LT. TO 527+35, 47'RT. S.R. 8										44						1																						
D19	532+12, 30'LT. S.R. 8 TO 49+56, E. NORTH ST.				9	1.7			164							1																						
D20	49+56, E. NORTH ST. TO 535+14, 43'LT. S.R. 8							106									1																						
D21	49+56, E. NORTH ST. TO 535+14, 41'RT. S.R. 8							129									1																						
D22	528+65, 14'LT. TO 528+70, 33'LT. S.R. 8					-					17						1																						
D23	528+65, 14'LT. TO 528+70, 33'RT. S.R. 8	↓									48						1																						
D24	531+65, 14'LT TO 531+79, 14' LT. S.R. 8	34												14																									
U-1	48+40, 31'LT. TO 49+06, 31'LT. PERKINS ST.	38																10	38																				
U-2	48+98, 28'RT. PERKINS TO 49+16, 57'RT. GOOD ST.	38																60	124																				
U-3	50+76, 28'RT. PERKINS TO 49+30, 35'LT. ADOLPH ST.	35																28	47																				
U-4	50+83, 31'LT. PERKINS TO 6+86, 28'RT. RAMP "J"	35																17	60																				
U-5	3+19, 8'LT. TO 6+70, 2'LT. RAMP "J"	41																						10														341
U-6	3+19, 8'LT. RAMP "J" TO 522+48 56'RT. S.R. 8	41																						10														322
U-7	522+52, 56'RT. TO 524+55, 67'RT. S.R. 8	42																						21														187
U-8	12+40, 8'RT. RAMP "I" TO 521+48, 54'LT. S.R. 8	42																						10														212
U-9	521+52, 54'LT. TO 524+55, 60'LT. S.R. 8	42																						20														296
	TOTAL		24	1	9	1.7		235	164		228			14	1	3	9	115	269	276	1	4	6	71			29*	14			234	54	5	1	3	1	1	2	1358

AA B/P# 71942R

CALC. BY. DATE	SUM-8-1.73/1.95	OHIO
CHKD. BY. DATE		F.H.W.A. REGION 5

35/204

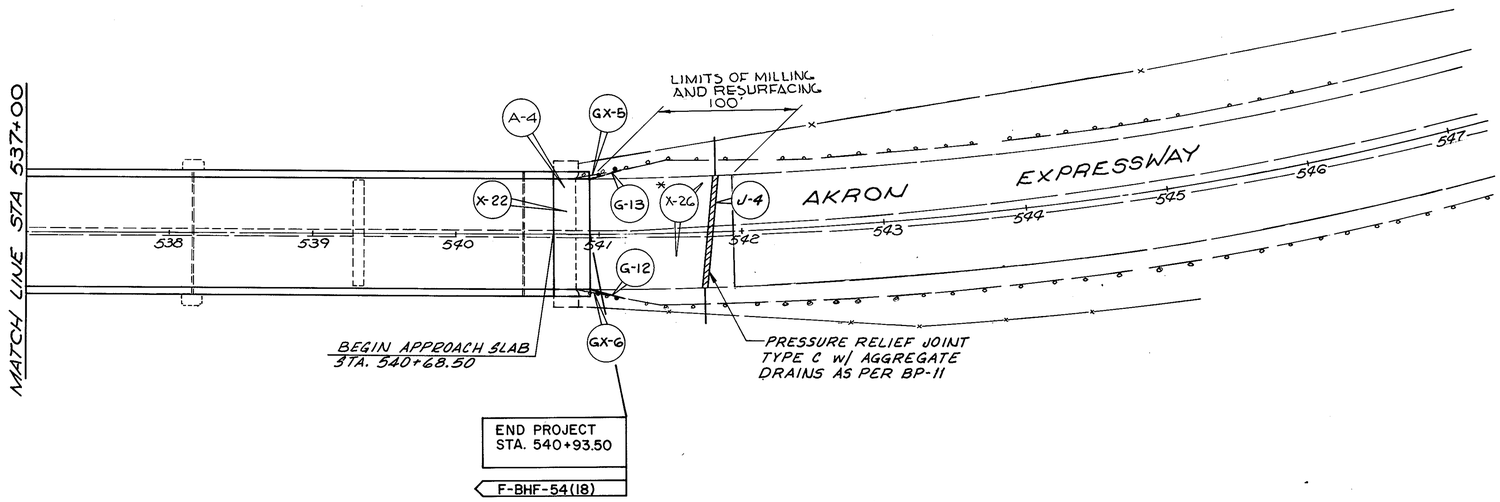

* MILL EXISTING WEARING COURSE 1 1/4" AND RESURFACE WITH 1 1/4" OF 404 ASPHALT CONCRETE, AC-20. APPLY 407 TACK COAT AT 0.3GAL/SY.

FOR APPROACH SLAB ELEVATIONS, SEE SHEET No. 184

FOR ROADWAY QUANTITIES, SEE SHEET No. 31.

0 50 100 150
SCALE IN FEET

AKRON EXPRESSWAY

CALC. BY.		SUM-8-1.73/1.95	OHIO
DATE			F.H.W.A. REGION 5
CHKD. BY.			
DATE			

36/204

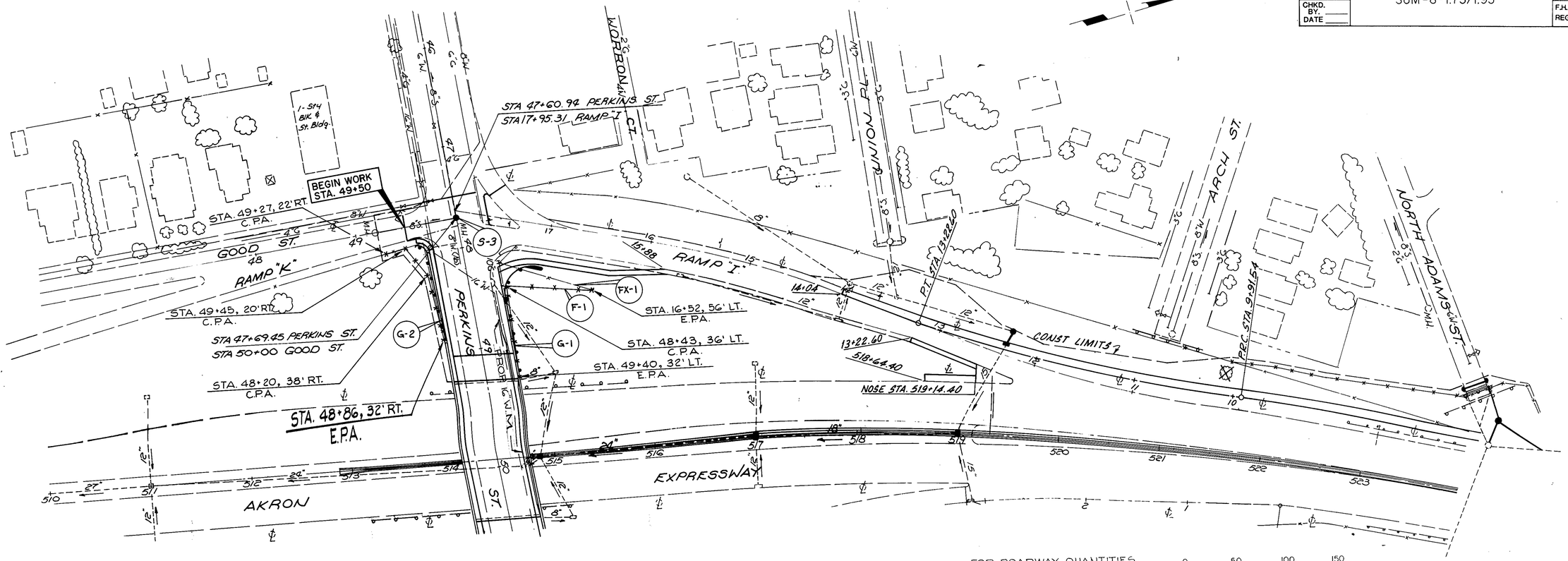

FOR ROADWAY QUANTITIES, SEE SHEET No. 31

0 50 100 150
SCALE IN FEET

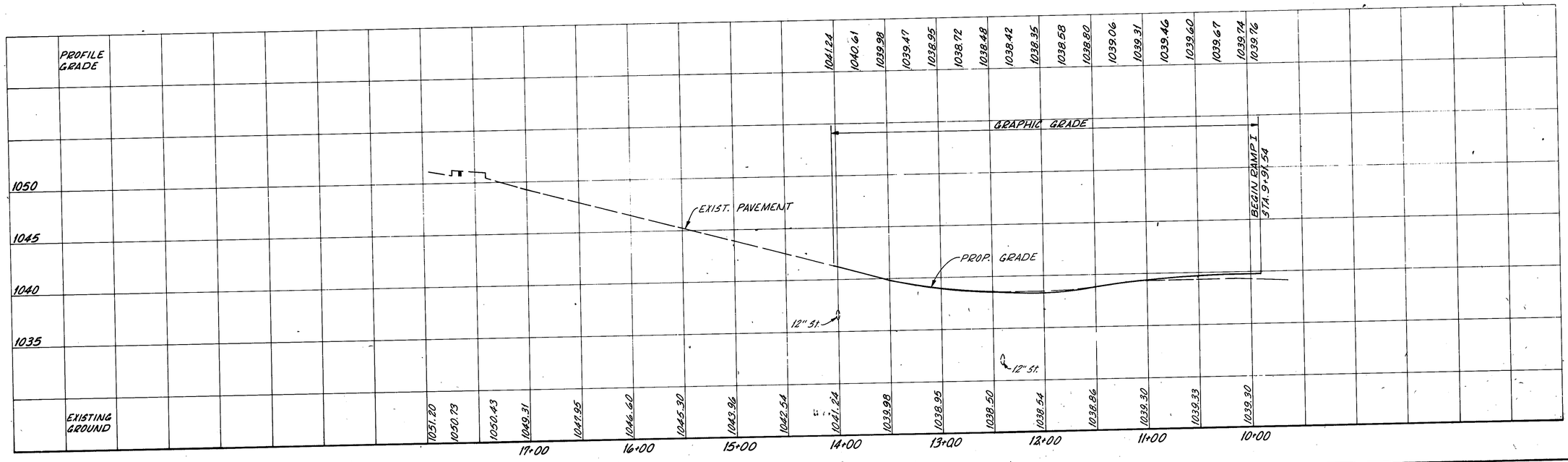

RAMP I

CALC. BY. DATE	SUM-8-1.73/1.95	OHIO	37 / 204
CHKD. BY. DATE		F.H.W.A. REGION 5	

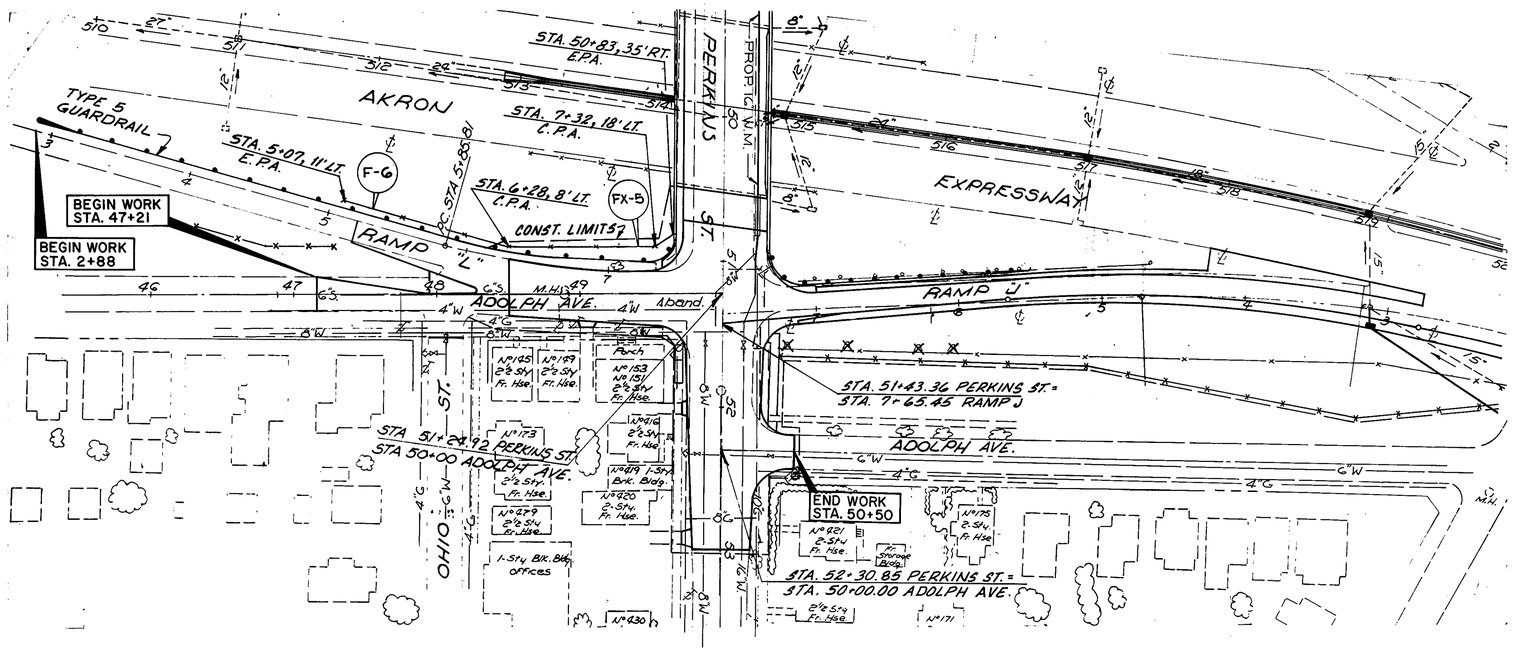

FOR PAVEMENT DETAILS OF PERKINS ST. & ADOLPH AVE. SEE SHEET No. 39

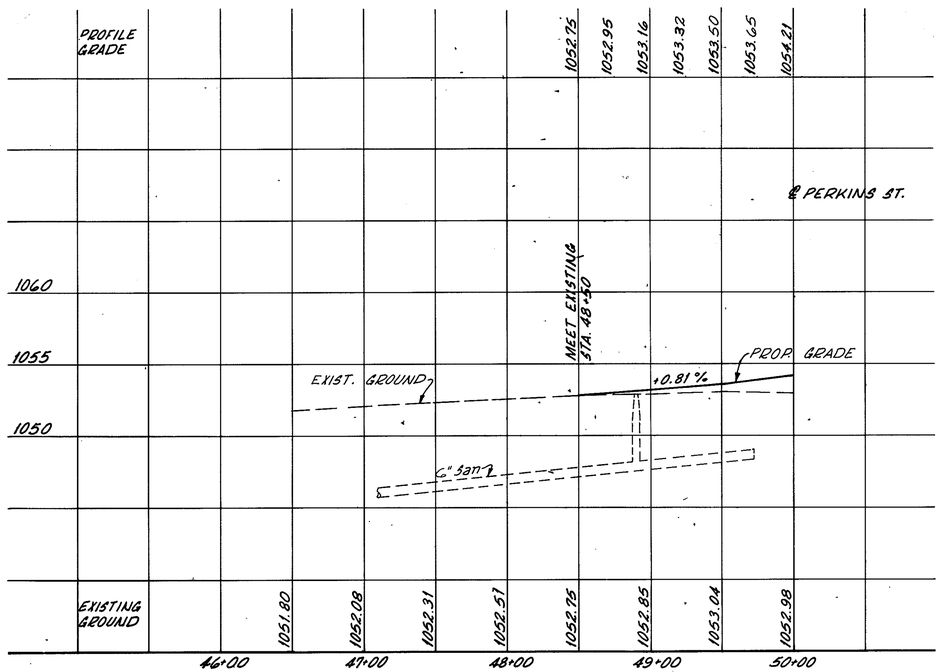

FOR ROADWAY QUANTITIES, SEE SHEET No. 31

0 50 100 150
SCALE IN FEET

ADOLPH AVE.

CALC. BY. DATE		SUM-8-1.73/1.95	OHIO	38 / 204
CHKD. BY. DATE			F.H.W.A. REGION 5	

REPLACE WITH CLASS C CONCRETE TO MATCH EXISTING MEDIAN. COST OF ALL MATERIAL AND LABOR SHALL BE INCLUDED IN THE UNIT PRICE BID FOR ITEM 609 CURB, STD. TYPE 6.

STA. 47+56.32, 33' LT. PERKINS ST.

STA. 47+79.34, 35' LT. PERKINS ST.

X-2

2'R

6" SAW CUT

2'R

45°

CONC. MEDIAN TO BE REMOVED

REPLACE WITH ITEM 609 CURB, STD. TYPE 6

CONCRETE MEDIAN DETAIL
NO SCALE

FOR PAVEMENT DETAILS OF RAMP "I" SEE SHEET No. 40

RAMP "I"

1046.60 1046.43 1046.45 1047.95 1047.83 1048.00 1049.31 1049.42 1049.60 1051.14 1052.56 1053.31 1053.98 1054.46 1054.78

F-1 FX-1 X-5 U-1 G-1 X-2

PROP. TYPE 2-B CONC. CURB

10'-G03'-6" CONDUIT TYPE "F"

STA. 49+06, 31' LT. PERKINS ST. 6" PLUG ℄ E=1052.04

SEE COMB. MEDIAN DETAIL THIS SHEET

1" Air Release

12" EX. 12" 9" EX.

CURVE DATA
RAMP I & PERKINS ST.
NE CURB RETURN

Δ = 40°23'14"
R = 66.00'
T = 24.27'
L = 46.52'
C = 45.57'
D = 86°48'42"
E = 4.32'
P.C. STA. 17+00.00, 38' LT. RAMP I
P.T. STA. 48+29.40 31' LT. PERKINS

2½ STY. FR. HSE. Nº 331

2½ STY. FR. HSE. Nº 339

8"W 8"W ℄ B 8"W 8"W

10"G 10"G 10"G

15"SS 15"SS

PERKINS ST. 45

8"S

M.H. M.H.

12" C.B.

6"W 8"S

MATCH LINE STA. 44+00

16"W 16"W 16"W

Nº 340 Nº 342 2½ STY. FR. APT.

Nº 348 Nº 350 2½ STY. FR. APT.

Nº 338 2½ STY. FR. HSE.

OAK TERRACE

BEGIN WORK STA. 46+82

STA. 47+60.94 PERKINS ST. = STA. 17+95.31 RAMP I

BEGIN WORK STA. 49+50

1 STY. BLK. & STN. BLDG.

46 1046.53 1048.15

47 1048.50

STA. 47+50 MEET EXIST.

BUTT JOINT

D-7 A-1 J-1 FX-2 X-3 X-4

1050.95 1051.28 1051.70 1051.53 1051.00 1051.88 1052.62 1053.37 1054.04 1054.52 1054.85

48 1052.45 1053.20 1053.95 1054.62 1055.13 1055.46

16"W 8"S 6"W

TYPE 2 CURB RAMP

PROP. 5' CONC. WALK

F-2 G-2 U-2

GOOD ST.

1051.49 1051.91 1051.84

M.H.

49

GO'-G03'-6" CONDUIT TYPE "F"

STA. 48+98, 28' RT. PERKINS ST. 6" PLUG ℄ E=1051.98

STA. 47+69.45 PERKINS ST. = STA. 50+00.00 GOOD ST.

PROP. TYPE 2-B CONC. CURB

STA. 49+16, 57' RT. GOOD ST. OUTLET 6" U.D W/ EROSION CONTROL PAD & ANIMAL GUARD PER MC-4

END APPROACH SLAB STA. 49+32.06

MATCH LINE STA. 49+50

PRESSURE RELIEF JOINT TYPE A W/ UNDERDRAIN AS PER STD. DWG. BP-10 OUTET @ U-1 & U-2

CURVE DATA
GOOD ST. & PERKINS ST.
SE CURB RETURN

Δ = 89°49'23"
R = 15.00'
T = 14.95'
L = 23.52'
C = 21.18'
P.C. STA. 49+57.10, 15' RT. GOOD ST.
P.T. STA. 47+99.31, 28' RT. PERKINS

STA. 49+58, 14.5' RT GOOD ST. 6"~45° BEND~ TYPE "F" E=1049.36

RAMP "K"

** LIMITS OF CURB TYPE 2B MOD., AS PER PLAN

RT. STA. 48+77.15 TO STA. 49+03.38

FOR TYPE 2B MOD. CURB DETAIL AND CURB TRANSITION DETAIL SEE SHEET No. 47

FOR GUARDRAIL AND FENCE MOUNTING DETAILS ON PROPOSED WINGWALLS, SEE SHEET Nos. 193 & 202

FOR SEWER PROFILE SEE SHEET No. 44

FOR ROADWAY QUANTITIES SEE SHEET No. 31

FOR DRAINAGE QUANTITIES SEE SHEET No. 34

NOTE: ALL CURB ELEVATIONS SHOWN ARE GUTTER LINE ELEVATIONS

LIMITS OF REMOVAL ITEM

GRAPHIC SCALE
0 20 40 60

PAVEMENT DETAILS
PERKINS ST. & RAMP "I"

CALC. BY DATE	SUM-8-1.73/1.95	OHIO	39 / 204
CHKD. BY DATE		F.H.W.A. REGION 5	

CURVE DATA RAMP J & PERKINS ST.

NW CURB RETURN	NE CURB RETURN
Δ = 95°00'00"	Δ = 85°00'00"
R = 30.00'	R = 25.00'
T = 32.74'	T = 22.91'
L = 49.74'	L = 37.09'
C = 44.24'	C = 33.78'
P.C. STA. 50+91.35, 31' LT. PERKINS	P.C. STA. 7+14.46, 6' LT. RAMP J
P.T. STA. 7+00.19, 16' RT. RAMP J	P.T. STA. 51+69.80, 28.5' LT. PERKINS

CURVE DATA ADOLPH AVE. & PERKINS ST.

SW CURB RETURN	SE CURB RETURN
Δ = 90°11'35"	Δ = 89°48'25"
R = 25.00'	R = 20.00'
T = 25.08'	T = 19.93'
L = 39.35'	L = 31.35'
C = 35.41'	C = 28.24'
P.C. STA. 50+84.75, 28' RT. PERKINS	P.C. STA. 49+55.14, 20.5' RT. ADOLPH
P.T. STA. 49+46.87, 15' LT. ADOLPH	P.T. STA. 51+65.27, 25' RT. PERKINS

CURVE DATA ADOLPH AVE. & PERKINS ST.

NW CURB RETURN	NE CURB RETURN
Δ = 89°08'45"	Δ = 90°51'15"
R = 20.00'	R = 20.00'
T = 19.70'	T = 20.30'
L = 31.12'	L = 31.71'
C = 28.07'	C = 28.49'
P.C. STA. 51+98.54, 26.5' LT. PERKINS	P.C. STA. 50+42.50, 13' RT. ADOLPH
P.T. STA. 50+46.01, 13' LT. ADOLPH	P.T. STA. 52+64.48, 22' LT. PERKINS

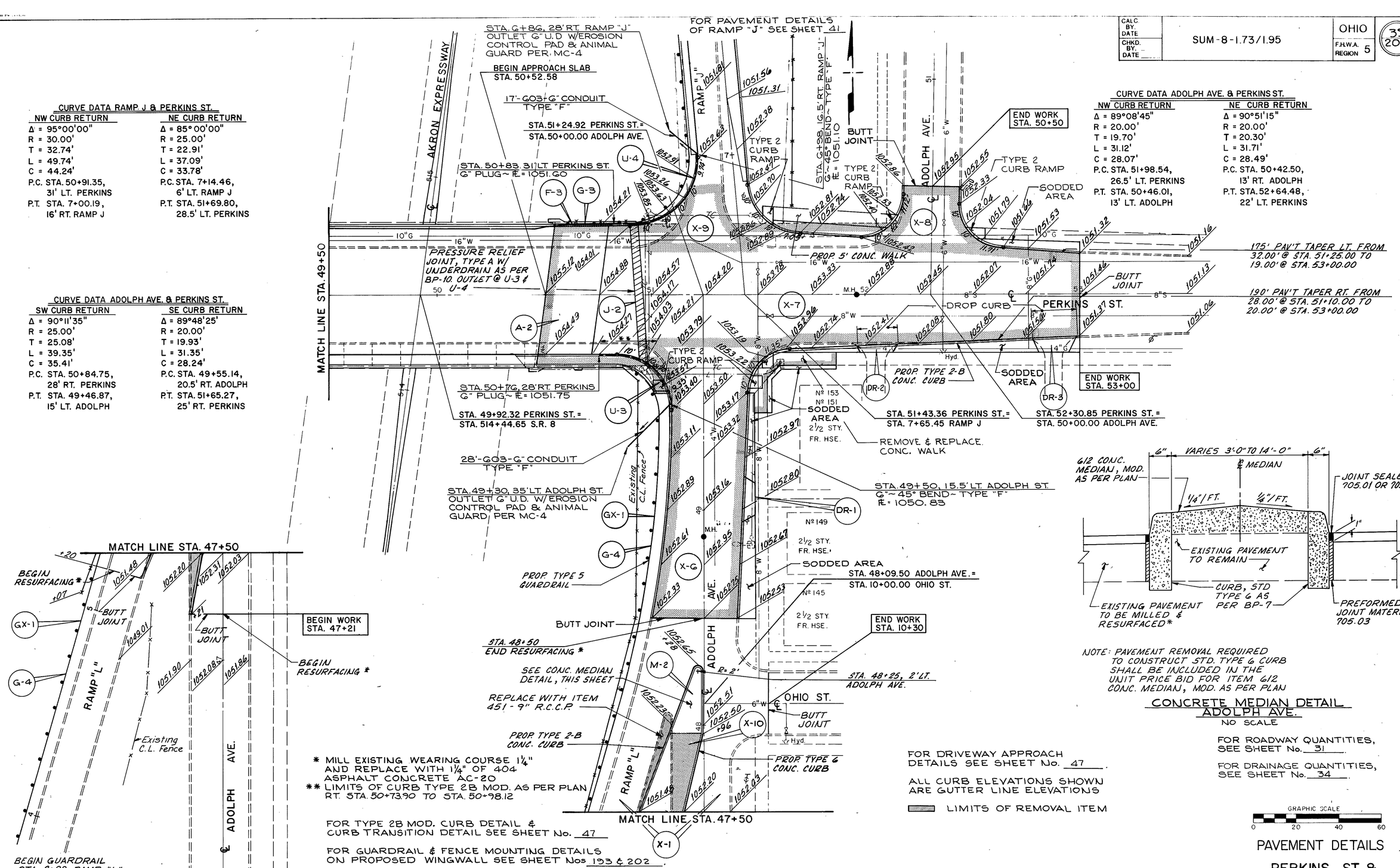

* MILL EXISTING WEARING COURSE 1¼" AND REPLACE WITH 1¼" OF 404 ASPHALT CONCRETE AC-20

** LIMITS OF CURB TYPE 2B MOD. AS PER PLAN RT. STA. 50+73.90 TO STA. 50+98.12

FOR TYPE 2B MOD. CURB DETAIL & CURB TRANSITION DETAIL SEE SHEET No. 47

FOR GUARDRAIL & FENCE MOUNTING DETAILS ON PROPOSED WINGWALL SEE SHEET Nos 193 & 202

FOR DRIVEWAY APPROACH DETAILS SEE SHEET No. 47

ALL CURB ELEVATIONS SHOWN ARE GUTTER LINE ELEVATIONS

▨ LIMITS OF REMOVAL ITEM

NOTE: PAVEMENT REMOVAL REQUIRED TO CONSTRUCT STD. TYPE 6 CURB SHALL BE INCLUDED IN THE UNIT PRICE BID FOR ITEM 612 CONC. MEDIAN, MOD. AS PER PLAN

CONCRETE MEDIAN DETAIL ADOLPH AVE.

NO SCALE

FOR ROADWAY QUANTITIES, SEE SHEET No. 31.

FOR DRAINAGE QUANTITIES, SEE SHEET No. 34.

GRAPHIC SCALE 0 20 40 60

PAVEMENT DETAILS PERKINS ST. & ADOLPH AVE.

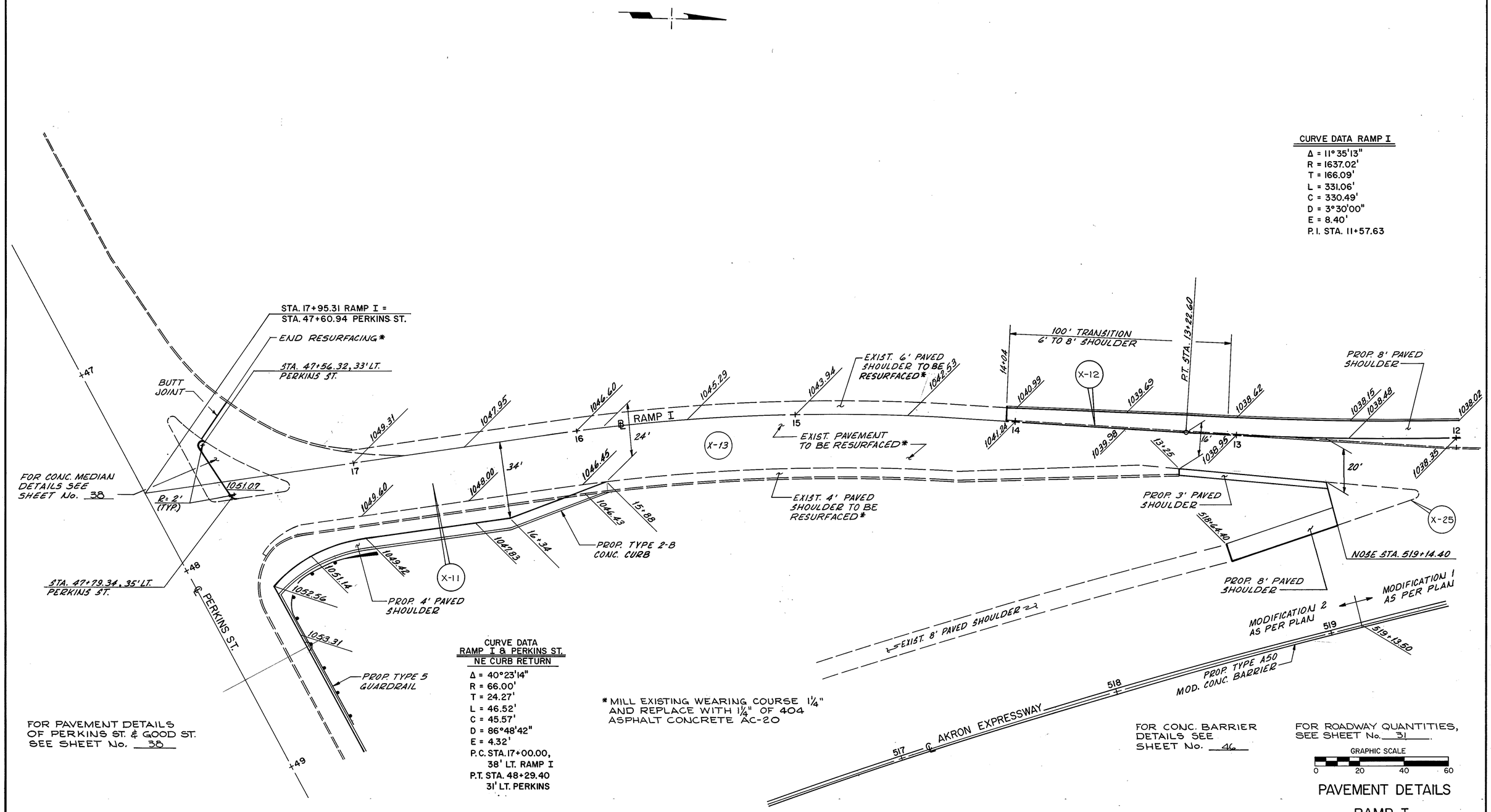

CURVE DATA RAMP I

Δ = 11°35'13"
R = 1637.02'
T = 166.09'
L = 331.06'
C = 330.49'
D = 3°30'00"
E = 8.40'
P.I. STA. 11+57.63

CURVE DATA
RAMP I & PERKINS ST.
NE CURB RETURN

Δ = 40°23'14"
R = 66.00'
T = 24.27'
L = 46.52'
C = 45.57'
D = 86°48'42"
E = 4.32'
P.C. STA. 17+00.00, 38' LT. RAMP I
P.T. STA. 48+29.40 31' LT. PERKINS

* MILL EXISTING WEARING COURSE 1¼" AND REPLACE WITH 1¼" OF 404 ASPHALT CONCRETE AC-20

FOR PAVEMENT DETAILS OF PERKINS ST. & GOOD ST. SEE SHEET No. 38

FOR CONC. BARRIER DETAILS SEE SHEET No. 46

FOR ROADWAY QUANTITIES, SEE SHEET No. 31

GRAPHIC SCALE
0 20 40 60

PAVEMENT DETAILS
RAMP I

CALC. BY. D.S.B. DATE 11/84	SUM-8-1.73/1.95	OHIO
CHKD. BY. RER DATE 1/85		F.H.W.A. REGION 5

41
204

CURVE DATA RAMP J & PERKINS ST.

NW CURB RETURN	NE CURB RETURN
Δ = 95°00'00"	Δ = 85°00'00"
R = 30.00'	R = 25.00'
T = 32.74'	T = 22.91'
L = 49.74'	L = 37.09'
C = 44.24'	C = 33.78'
P.C. STA. 50+91.35, 31' LT. PERKINS	P.C. STA. 7+14.46, 6' LT. RAMP J
P.T. STA. 7+00.19, 16' RT. RAMP J	P.T. STA. 51+69.80, 28.5' LT. PERKINS

RAMP J CURVE DATA

Δ = 16° 39' 45"
R = 938.67'
T = 137.46'
L = 272.98'
C = 272.02'
D = 6°06'14"
E = 10.01'
P.I. STA. 4+10.97

FOR CONCRETE BARRIER DETAILS SEE SHEET No. 46

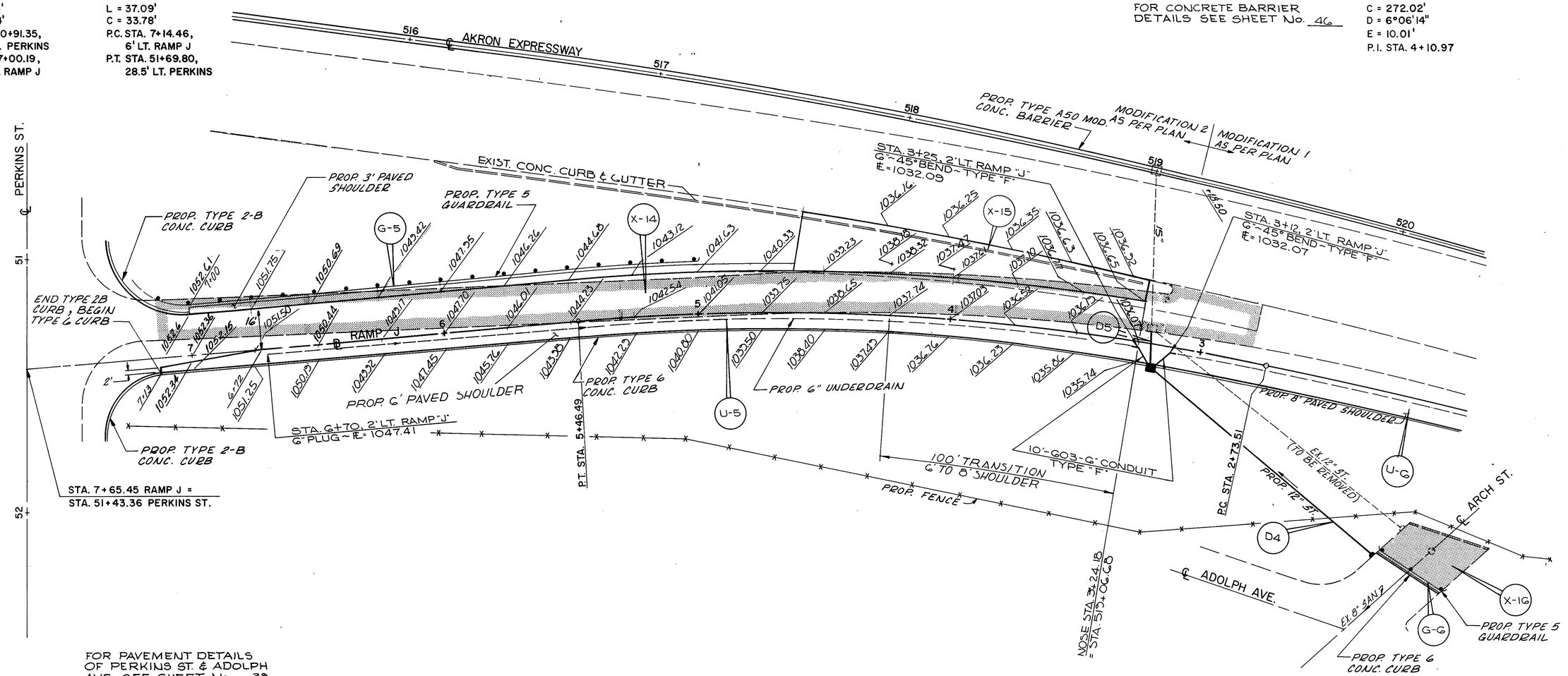

FOR PAVEMENT DETAILS OF PERKINS ST. & ADOLPH AVE. SEE SHEET No. 39

NOTE: ALL CURB ELEVATIONS SHOWN ARE GUTTER LINE ELEVATIONS

FOR SEWER PROFILES SEE SHEET No. 44.

FOR ROADWAY QUANTITIES, SEE SHEET No. 31.

FOR DRAINAGE QUANTITIES, SEE SHEET No. 34.

GRAPHIC SCALE
0 20 40 60

PAVEMENT DETAILS
RAMP J

CALC. BY. DSB DATE 11/84
CHKD. BY. RER DATE 1/85
SUM-8-1.73/1.95
OHIO
F.H.W.A. REGION 5
42/204

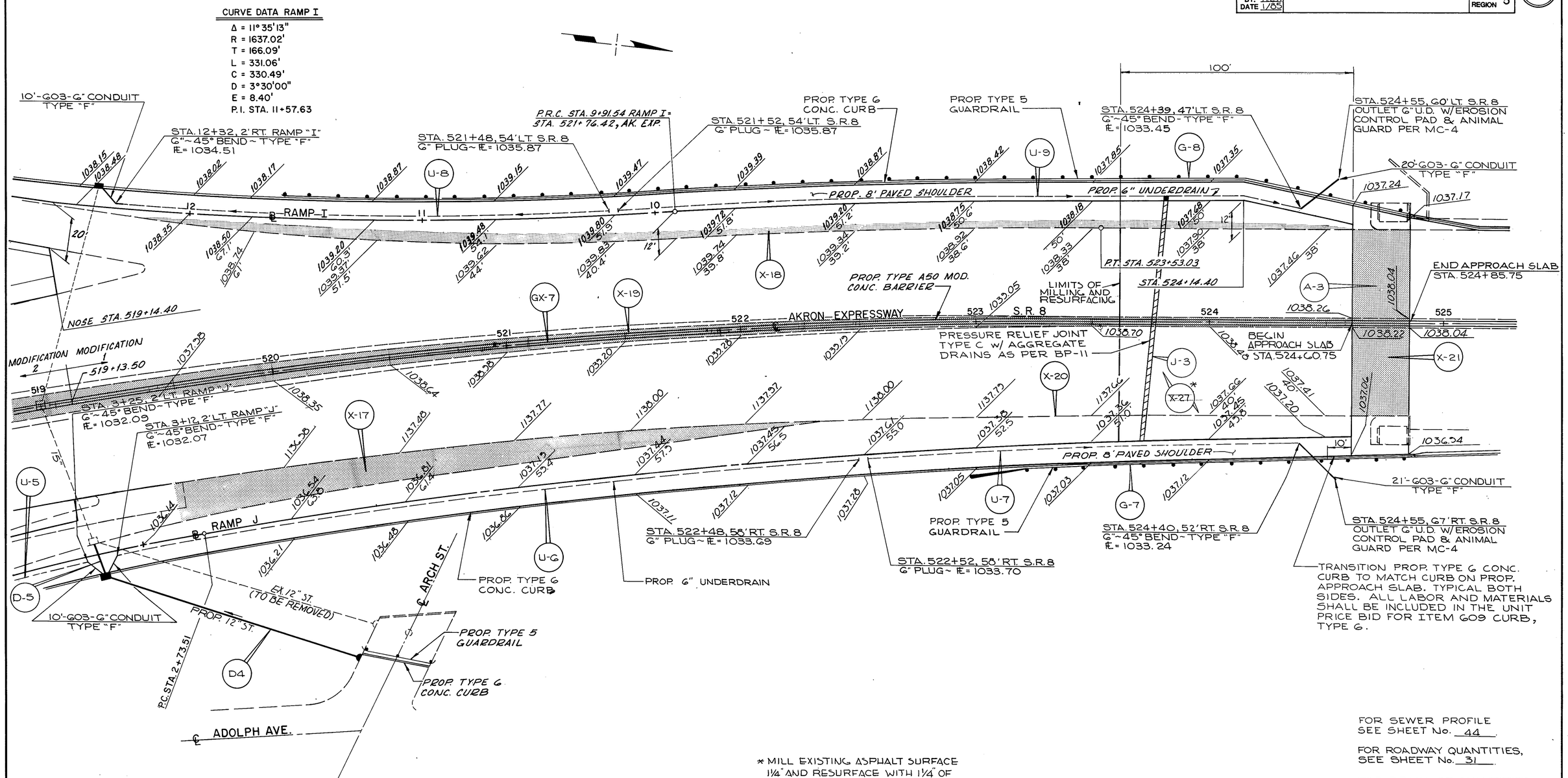

* MILL EXISTING ASPHALT SURFACE 1¼" AND RESURFACE WITH 1¼" OF 404 ASPHALT CONCRETE, AC-20. USE 407 TACK COAT AT 0.3 GAL/SY.

NOTE: ALL CURB ELEVATIONS SHOWN ARE GUTTER LINE ELEVATIONS

FOR CONCRETE BARRIER DETAILS SEE SHEET No. 46

FOR SEWER PROFILE SEE SHEET No. 44

FOR ROADWAY QUANTITIES, SEE SHEET No. 31

FOR DRAINAGE QUANTITIES, SEE SHEET No. 34

GRAPHIC SCALE
0 20 40 60

PAVEMENT DETAILS

RAMP I
& RAMP J

AA B/P# 71948R

CALC. BY.		SUM-8-1.73/1.95	OHIO	43
CHKD. BY.			F.H.W.A. REGION 5	204
DATE				

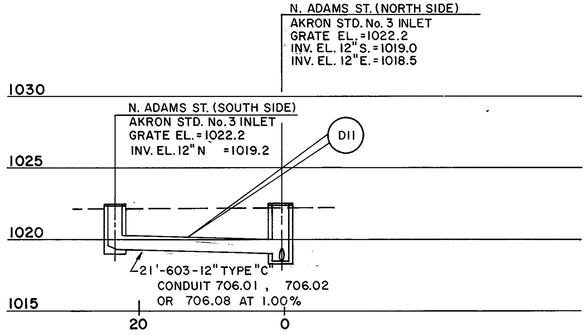

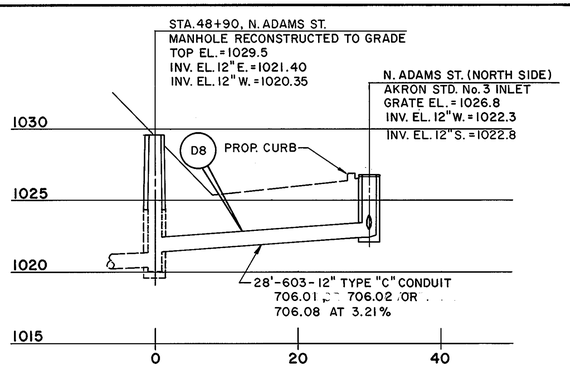

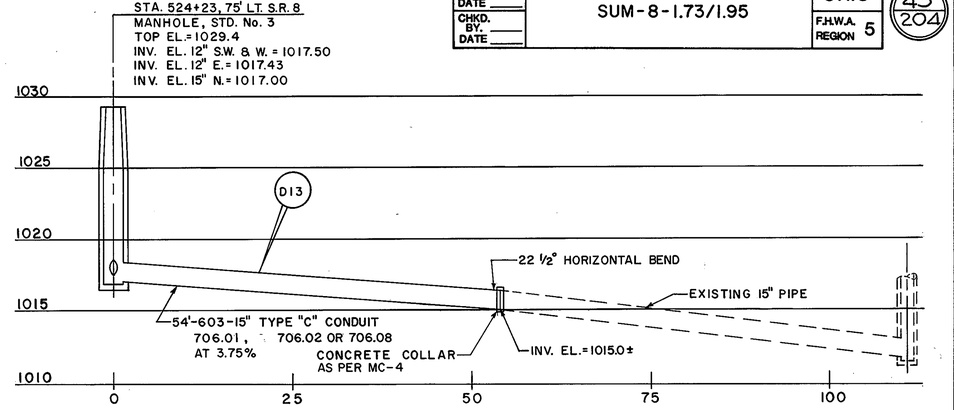

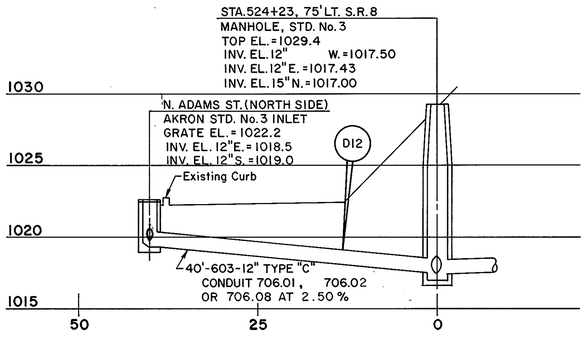

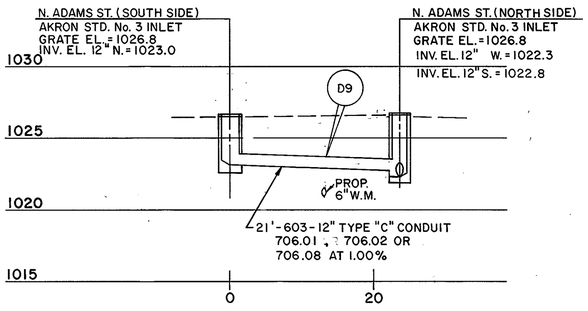

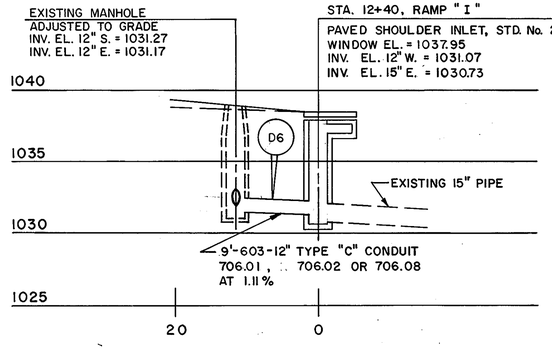

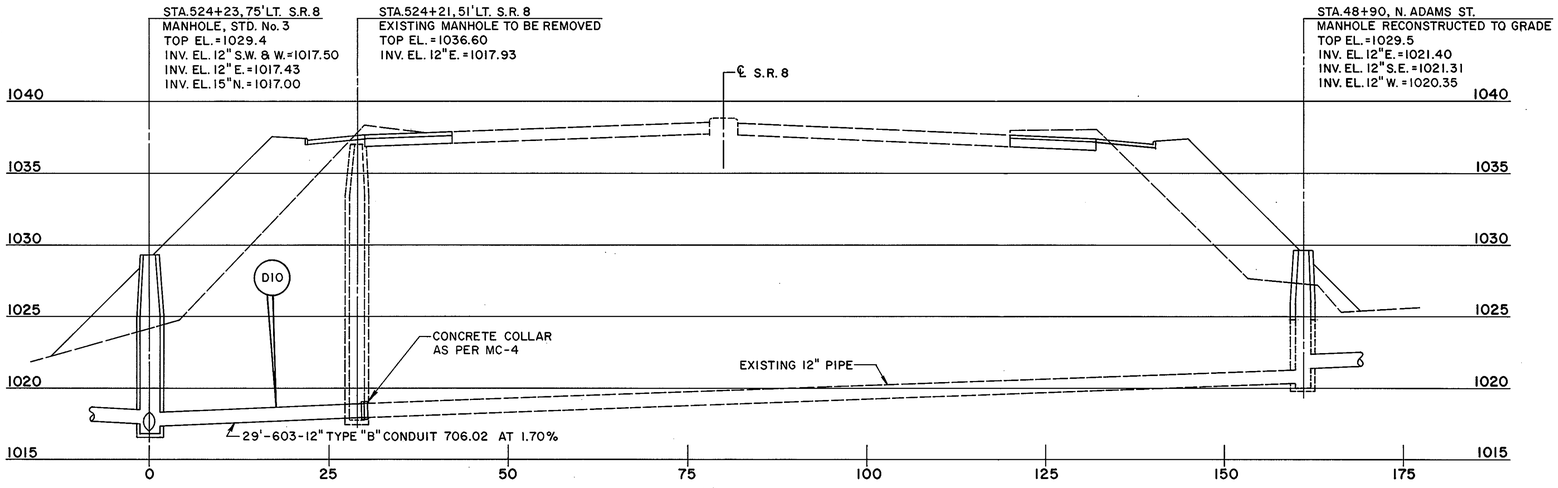

SEWER PROFILES

AA 9/P# 71942R

CALC. BY. DATE
CHKD. BY. DATE
SUM-8-1.73/1.95
OHIO
F.H.W.A. REGION 5
44 / 204

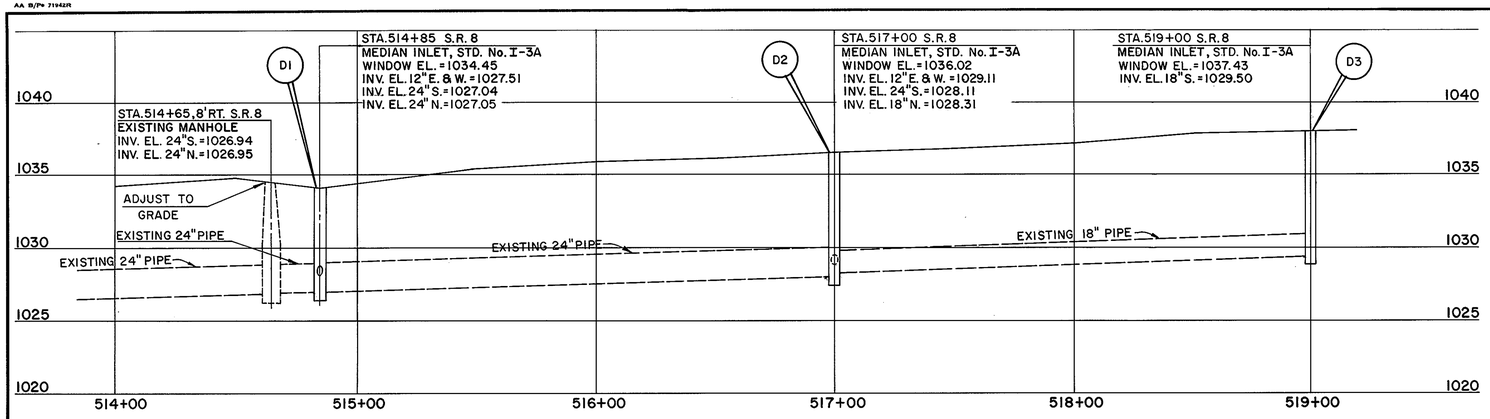

NOTE: CONNECTIONS FOR LATERAL PIPES AND TRUNK LINE PIPES INCLUDING REMOVAL OF EXISTING PIPE, OR ADDITIONAL NEW PIPE REQUIRED SHALL BE INCLUDED IN THE UNIT PRICE BID FOR ITEM 604, MEDIAN INLET TYPE I-3A ANY PIPE DAMAGED BY THE CONTRACTOR DURING REMOVAL OF THE EXISTING INLET, SHALL BE REPLACED WITH NEW PIPE IN ACCORDANCE WITH ITEM 603 AND SHALL BE INCLUDED IN THE UNIT PRICE BID FOR ITEM 604, MEDIAN INLET, TYPE I-3A.

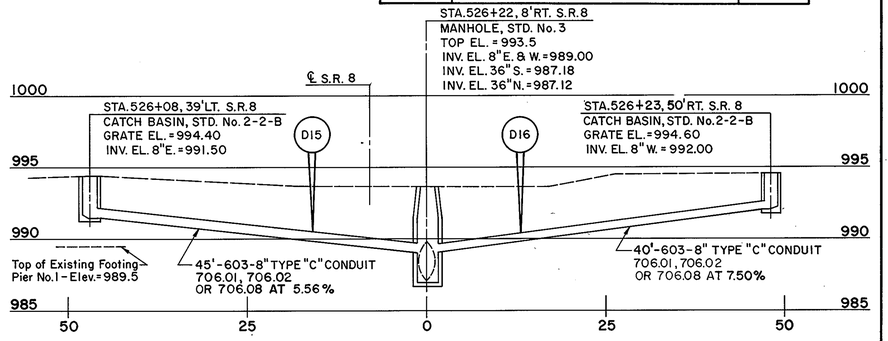

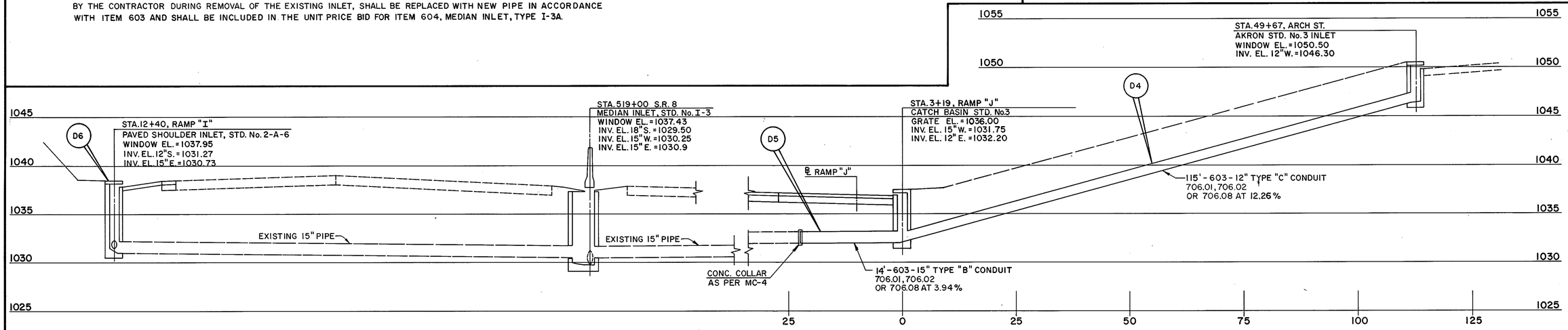

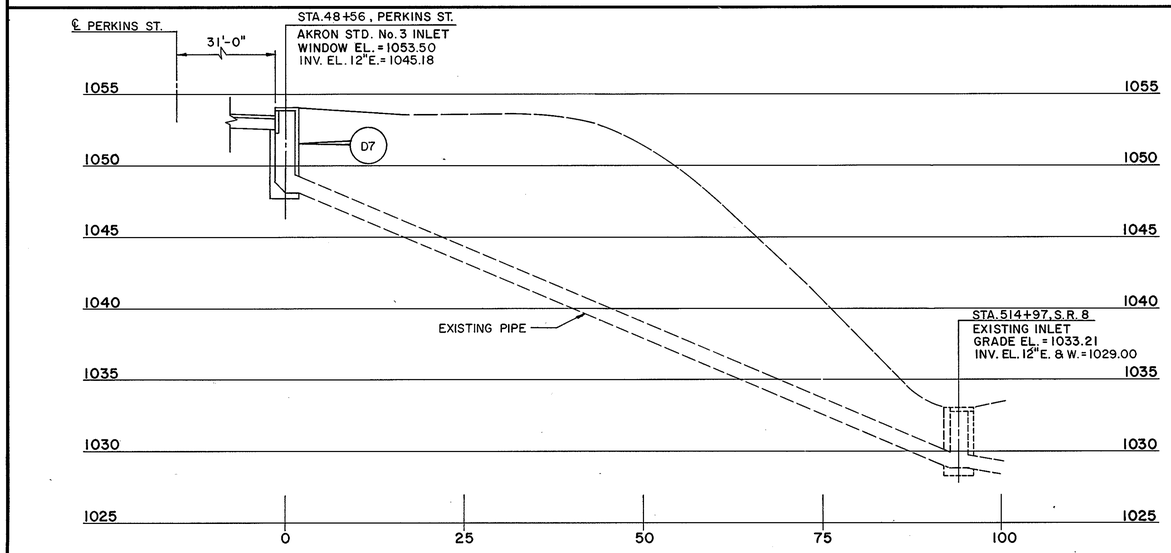

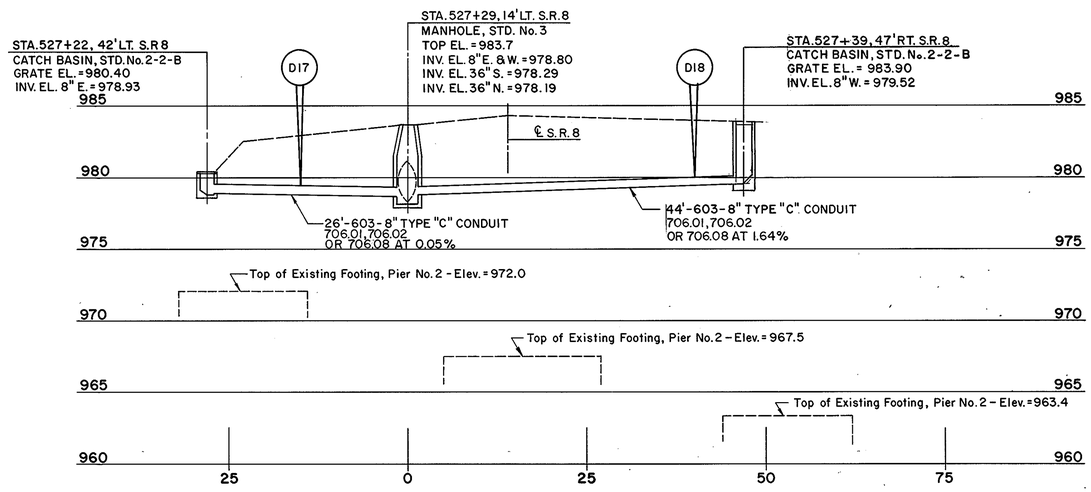

SEWER PROFILES

AA 9/P+ 71942R

CALC. BY. DATE	SUM-8-1.73/1.95	OHIO
CHKD. BY. DATE		F.H.W.A. REGION 5

45/204

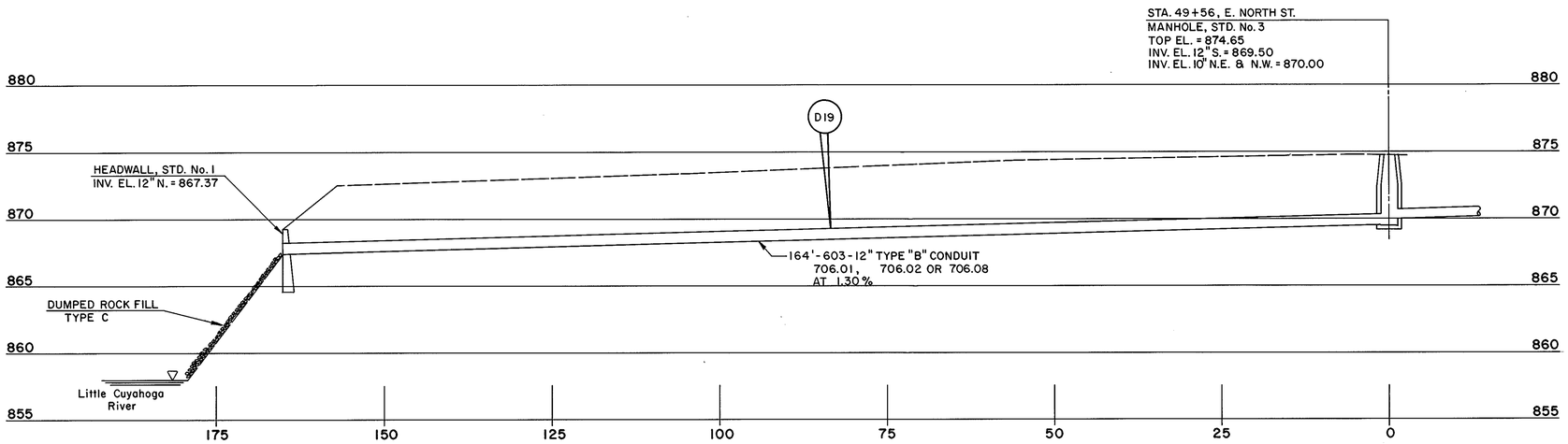

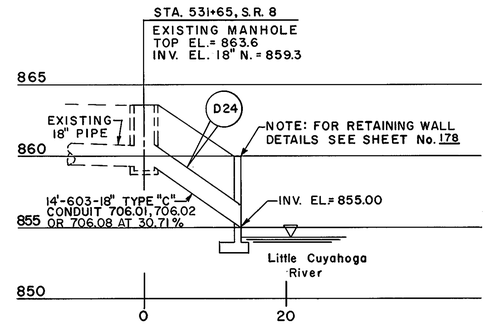

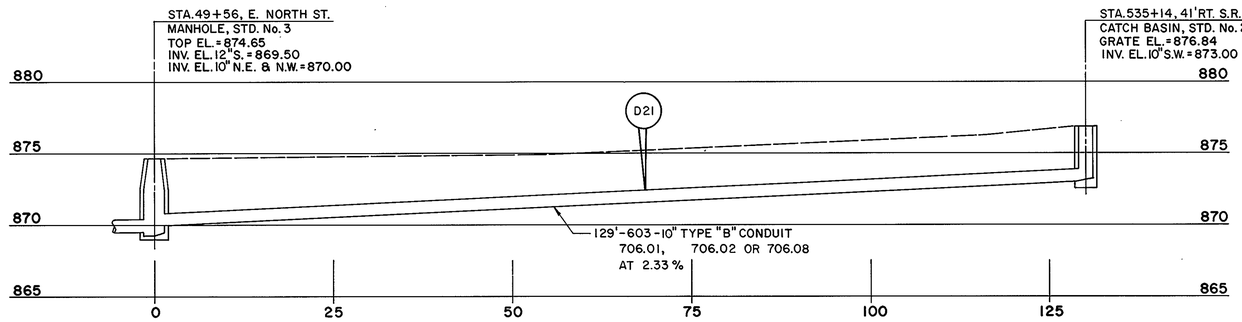

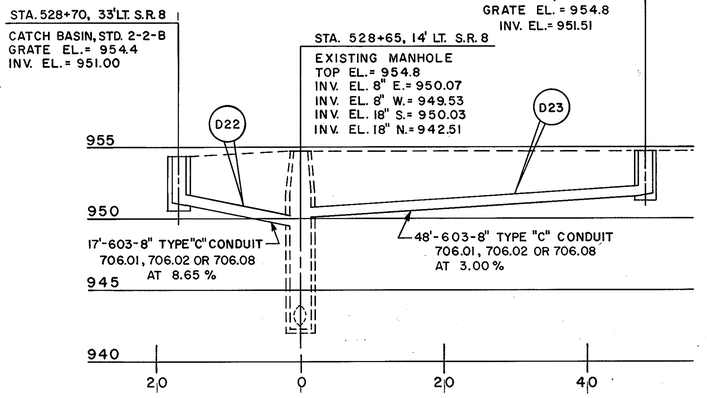

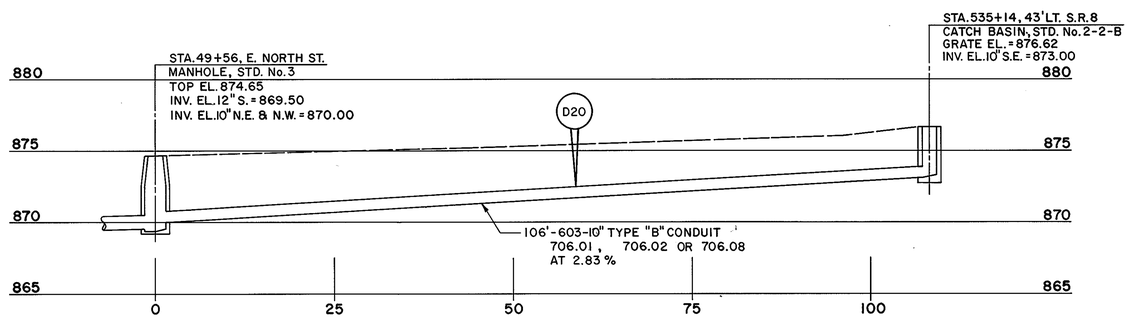

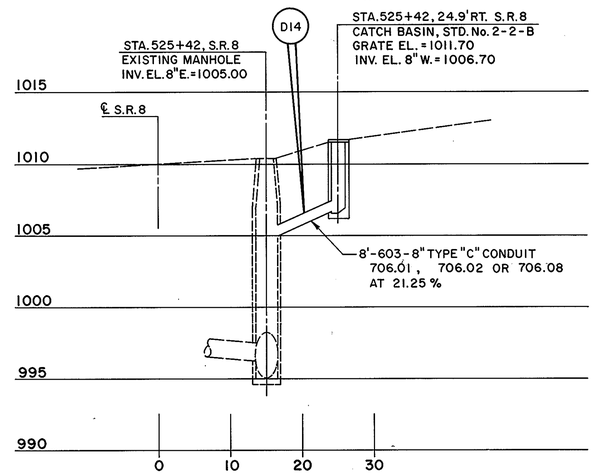

SEWER PROFILES

CALC. BY.		SUM-8-1.73/1.95	OHIO	46
CHKD. BY.			F.H.W.A. REGION 5	204
DATE				

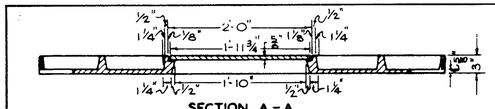

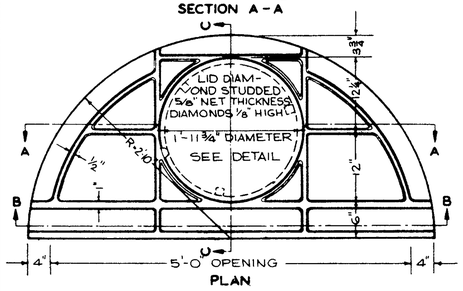

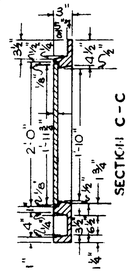

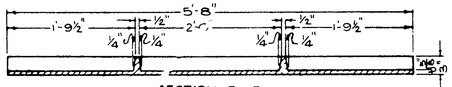

Approximate Wt. = 1.5 lbs

TOP CASTING FOR STRAIGHT CURB

When casting is set, the space between the webs is to be filled with 1:2 mortar.

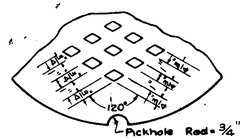

DETAIL OF LID

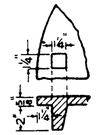

UNDERSIDE OF LID
Showing Lugs

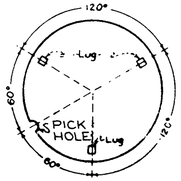

UNDERSIDE OF LID
Showing Location of Lugs and Picknole

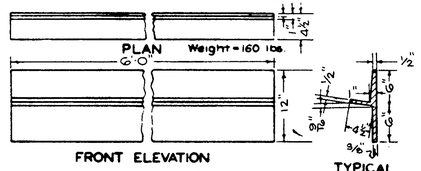

Note~
Material shall be cast iron of good quality. Castings shall be free from blowholes and other defects. They shall be cleaned of all scale and grease and receive two coats of bituminous paint.

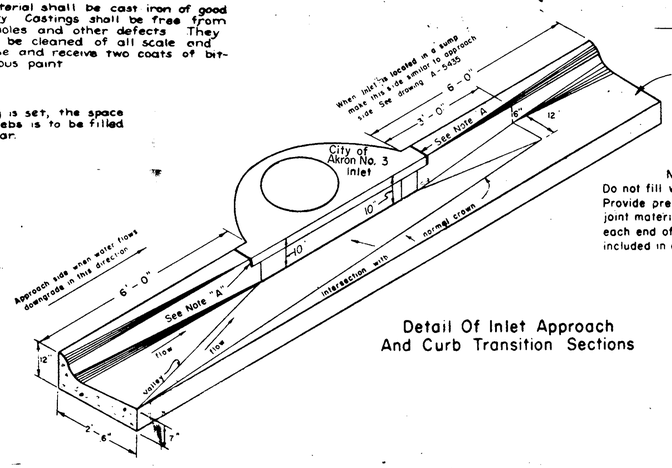

INLET APPROACH WILL BE INCLUDED IN THE COST OF THE INLETS

NOTE "A"
Do not fill with mortar. Provide premolded bituminous joint material 1/4" thick at each end of casting. Cost to be included in cost of inlet.

Detail Of Inlet Approach And Curb Transition Sections

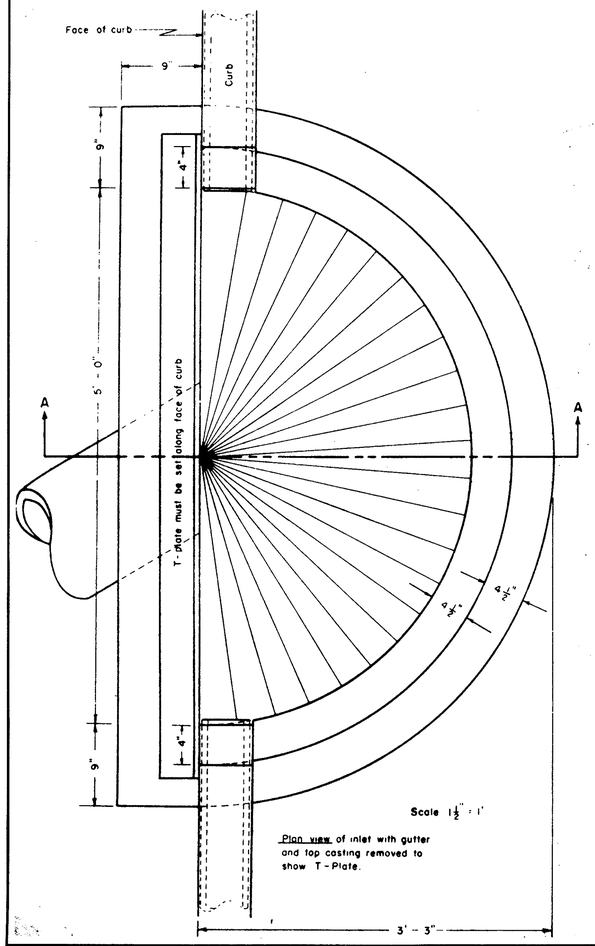

Scale 1 1/2" = 1'

Plan view of inlet with gutter and top casting removed to show T-Plate.

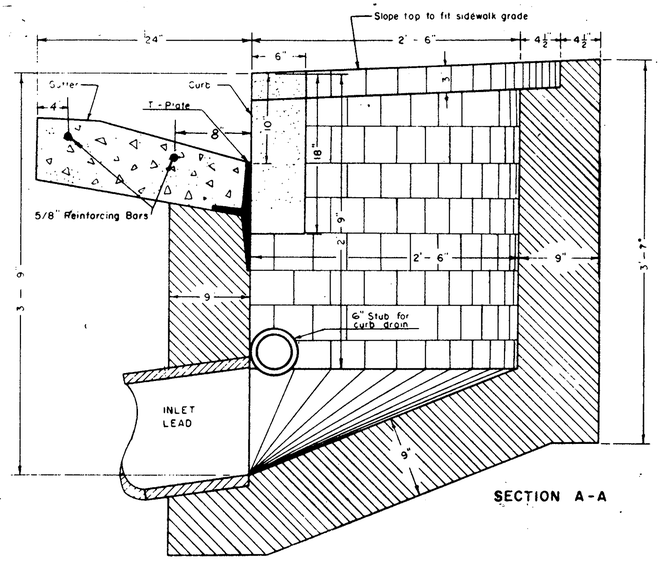

1/4 Coat 1 2 1/4" mortar over entire outside

SECTION A-A

CITY OF AKRON
No. 3 INLET

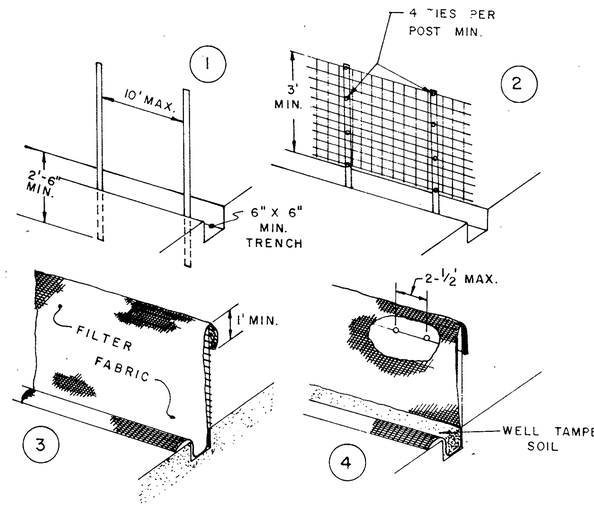

NOTE:
SEE GENERAL NOTES SHEET NO. 8.

FILTER FABRIC FENCE
NO SCALE

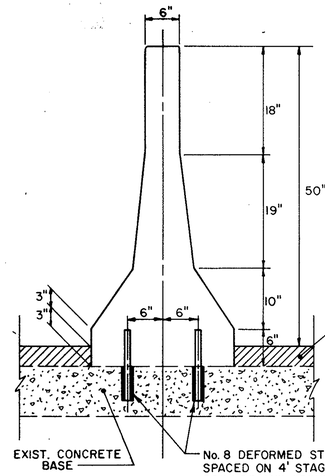

NOTE: ALL OTHER DIMENSIONS AND SPECIFICATIONS NOT SHOWN SHALL BE AS PER STANDARD DRAWING MC-9

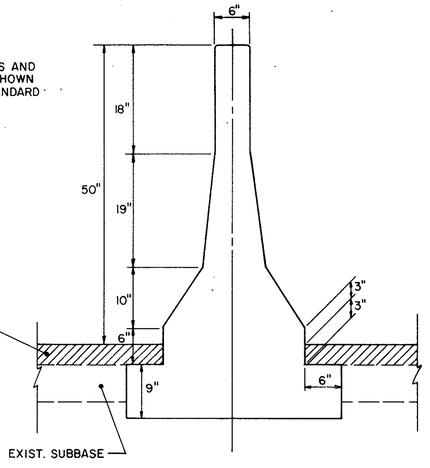

CONCRETE BARRIER TYPE A50
MODIFICATION 1

CONCRETE BARRIER TYPE A50
MODIFICATION 2

CONCRETE BARRIER DETAILS
NO SCALE

ROADWAY DETAILS

CALC. BY. DATE	SUM-8-1.73/1.95	OHIO
CHKD. BY. DATE		F.H.W.A. REGION 5

47/204

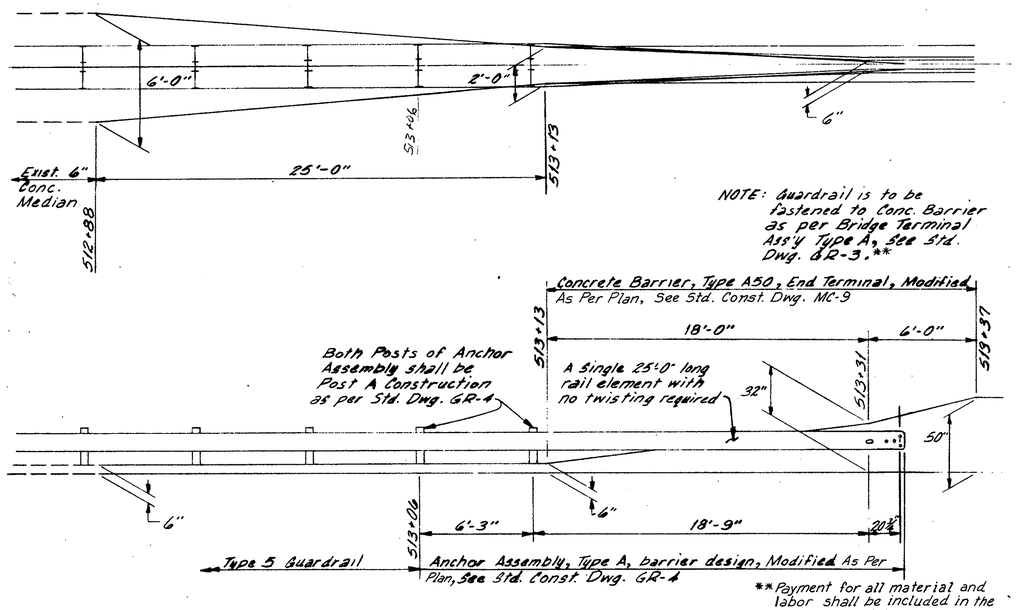

**Payment for all material and labor shall be included in the unit price bid for Item 606 Anchor Assembly, Type A, Barrier Design, Modified, As per plan

MEDIAN DETAIL
Sta. 512+88
Scale: ½"=1'-0"

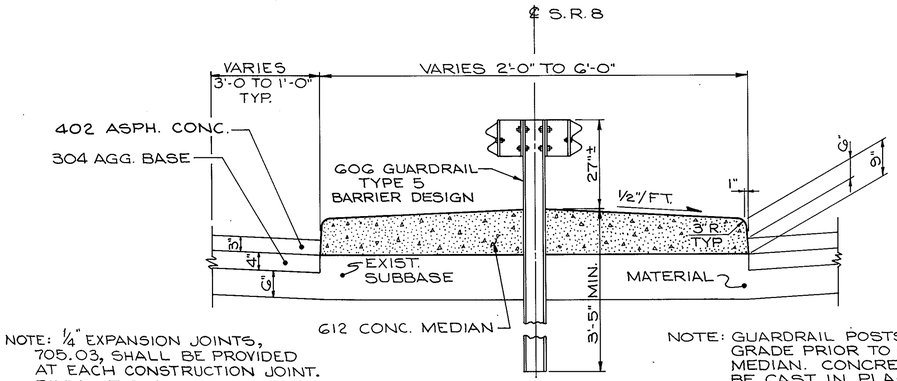

NOTE: ¼" EXPANSION JOINTS, 705.03, SHALL BE PROVIDED AT EACH CONSTRUCTION JOINT. PAYMENT SHALL BE INCLUDED IN THE UNIT PRICE BID FOR ITEM 612 CONCRETE MEDIAN

CONCRETE MEDIAN DETAIL
NO SCALE
STA. 512+88 TO STA. 513+13

NOTE: GUARDRAIL POSTS SHALL BE DRIVEN TO GRADE PRIOR TO CONSTRUCTION OF CONCRETE MEDIAN. CONCRETE MEDIAN SHALL THEN BE CAST IN PLACE. A COATING OF AN OIL SUCH AS S.A.E. 140 OR OTHER "BOND-BREAKING" MATERIAL SHALL BE APPLIED TO THE GUARDRAIL POST TO THE DEPTH OF THE MEDIAN PRIOR TO PLACING OF THE CONCRETE. PAYMENT SHALL BE INCLUDED IN THE UNIT PRICE BID FOR ITEM 612 CONCRETE MEDIAN.

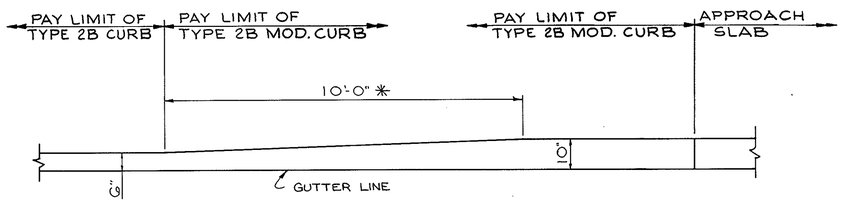

TYPE 2B MODIFED
CURB TRANSITION DETAIL
NO SCALE
* - STA. 48+77.15 RT. TO STA. 48+87.15 RT. PERKINS ST.

STA. 50+73.90 RT. TO STA. 50+83.90 RT. PERKINS ST.

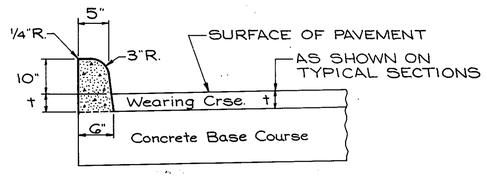

TYPE 2-B MODIFIED CURB
NO SCALE

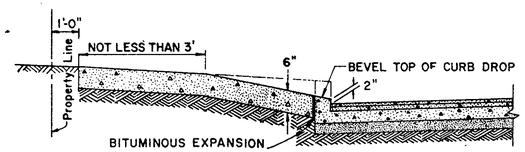

SECTION A-A

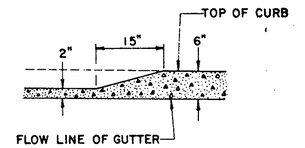

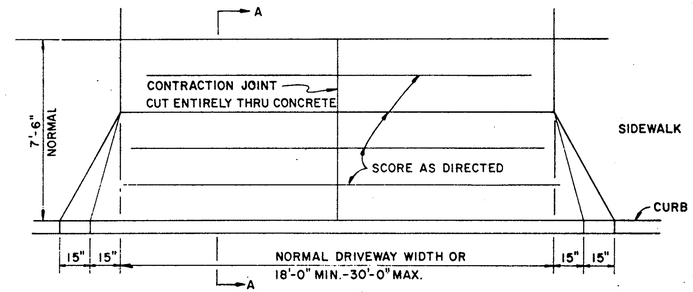

The cost of all work, materials and equipment necessary to construct the driveway approaches and curbs as shown on this plan will be included in the bid price for item 608 6"Concrete Walk.

DRIVE APPROACH DETAILS

ROADWAY DETAILS

CALC. BY WAH
DATE 11/83
CHKD. BY DSB
DATE 11/83

FED. RD. DIVISION	STATE	PROJECT	
2	OHIO		

SUM-8-1.73/1.95

48
204

SEEDING & MULCHING
L.F. S.Y.

END AREA CUT S.F. | END AREA FILL S.F. | VOLUME CUT C.Y. | VOLUME FILL C.Y.

AHEAD 0 0

℄ PERKINS ST.

PORTION OF CONC. ISLAND TO BE REMOVED

47+50
1050.95
MEET EXISTING
P.G. = 1050.95

R/W

47+0
1049.50

46+50
1048.15

R/W

R/W

℄ PERKINS ST.

46+0
1046.53

1052
1050
1048
1050
1048
1048
1046

60 50 40 30 20 10 0 10 20 30 40 50 60

PERKINS ST.
STA. 46+00 TO 47+50

BRUNING 44-142 26372-2

CALC. BY: WAH DATE: 11/83	SUM-8-1.73/1.95	OHIO	49 / 204
CHKD. BY: DAB DATE: 11/83		F.H.W.A. REGION 5	

SEEDING & MULCHING

L.F.	S.Y.
34	
	116
20	
	0
20	
	69
20	
	169
41	
	272
57	
	158

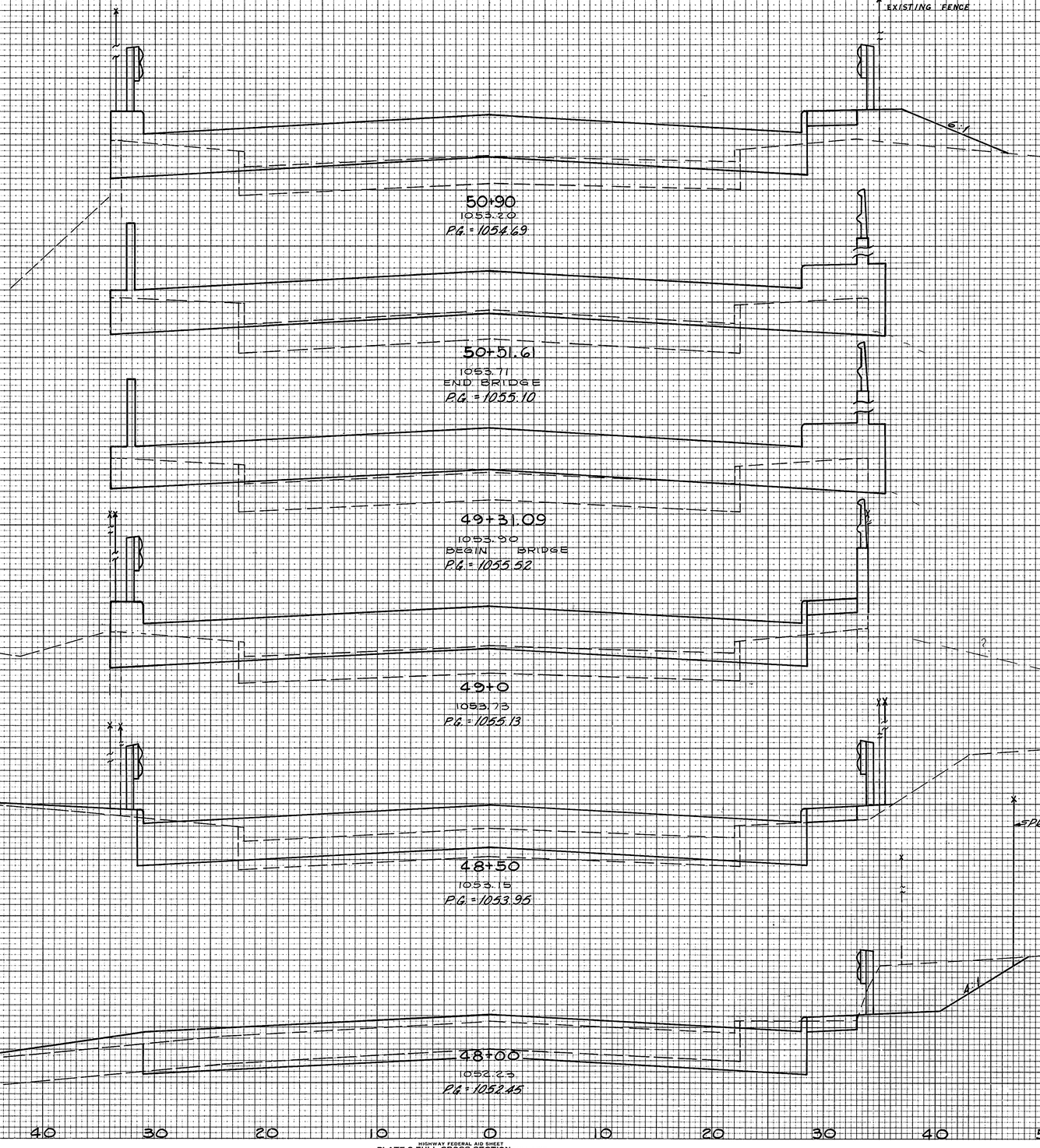

	END AREA CUT S.F.	END AREA FILL S.F.	VOLUME CUT C.Y.	VOLUME FILL C.Y.
	16	50		
D: 38.39'			27	65
AHEAD	22	41		
BACK	17	50		
D: 31.09'			18	48
	15	34		
			33	35
	21	4		
			59	7
	43	4		
			40	4

PERKINS ST.
STA. 48+00 TO 50+90

60 50 40 30 20 10 0 10 20 30 40 50 60 70

FINAL SURVEY — SURVEYED, PLOTTED, TEMPLATE, AREAS CHECKED, NOTE BOOK, PAGE, NO., BY, DATE

ORIGINAL SURVEY — SURVEYED, PLOTTED, NOTE BOOK, TEMPLATE, PAGE, NO., AREAS CHECKED, BY, DATE

CALC. BY WAH DATE 11/83
CHKD. BY DSB DATE 11/83

SUM-8-1.73/1.95

OHIO
F.H.W.A. REGION 5

50
204

FINAL SURVEY
NOTE BOOK
NO.
SURVEYED
PLOTTED
TEMPLATE
AREAS
AREAS CHECKED
BY
DATE

ORIGINAL SURVEY
NOTE BOOK
NO.
SURVEYED
PLOTTED
TEMPLATE
AREAS
AREAS CHECKED
BY
DATE

SEEDING & MULCHING
L.F. S.Y.

END AREA VOLUME
CUT FILL CUT FILL
S.F. C.Y.

1054
1052

14

Existing R/W

0 0

53+00
1051.46
MEET EXISTING

1054
1052

52+88
1051.64
℄ 8' CONC. DR. RT.
P.G. = 1051.59

1056
1054

244

D=100'

26 2

1052

52+30.85
1052.14
℄ ADOLPH AVE. LT.
P.G. = 1052.36

1054
1052

52+05
1052.34
℄ 8.5' BRICK DR. RT.
P.G. = 1052.79

1054

30

10:1

14 1

1052

100

D=30'

19 1

Existing R/W

52+00
1052.34
P.G. = 1052.88

30

1054

8:1

6:1

21 1

284

D=80'

55 76

1052

51+70
1054.80
P.C. OF CURBS
P.G. = 1053.42

PERKINS ST.
STA. 51+70 TO 53+00

60 50 40 30 20 10 0 10 20 30 40 50 60 70

HIGHWAY FEDERAL AID SHEET
PLATE 3-FULL CROSS SECTION-FULL LINE
TELEDYNE
PRINTED IN U.S.A.

CALC. BY WAH DATE 11/83	SUM-8-1.73/1.95	OHIO	51/204
CHKD. BY DSB DATE 11/83		F.H.W.A. REGION 5	

SEEDING & MULCHING
L.F. S.Y.

END AREA CUT S.F. FILL S.F.

VOLUME CUT C.Y. FILL C.Y.

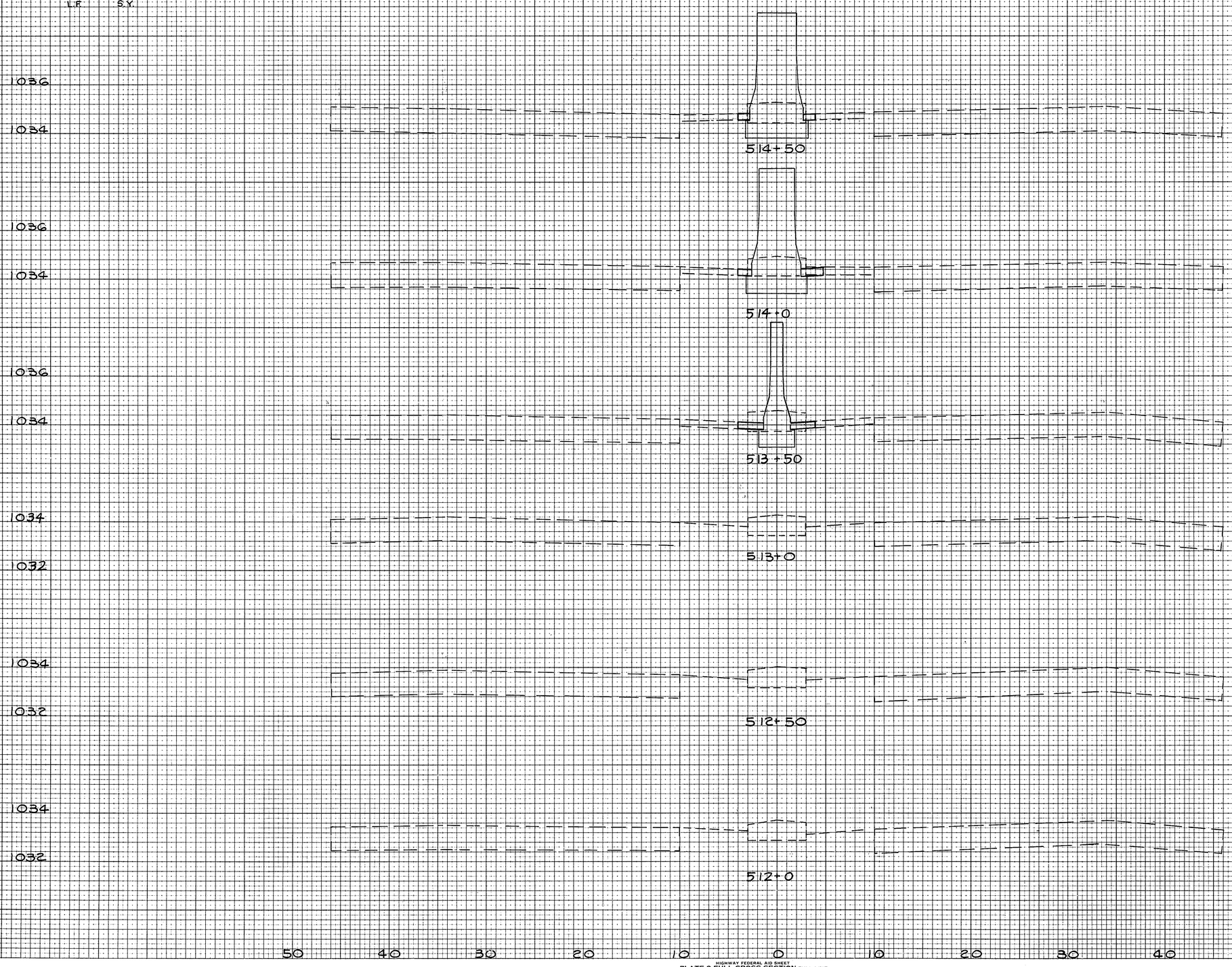

NORTH EXPRESSWAY
STA 512+00 TO 514+50

FINAL SURVEY
NOTE BOOK
NO.
SURVEYED BY DATE
PLOTTED
TEMPLATE
AREAS
AREAS CHECKED

ORIGINAL SURVEY
NOTE BOOK
NO.
SURVEYED BY DATE
PLOTTED
TEMPLATE
AREAS
AREAS CHECKED

CALC. BY: WAH DATE 11/83	SUM-8-1.73/1.95	OHIO	52 / 204
CHKD. BY: DSB DATE 11/83		F.H.W.A. REGION 5	

SEEDING & MULCHING
L.F. S.Y.

END AREA CUT S.F. FILL | VOLUME CUT C.Y. FILL

FINAL SURVEY — NOTE BOOK — NO. — SURVEYED — PLOTTED — TEMPLATE — AREAS — AREAS CHECKED — BY — DATE

ORIGINAL SURVEY — NOTE BOOK — NO. — SURVEYED — PLOTTED — TEMPLATE — AREAS — AREAS CHECKED — BY — DATE

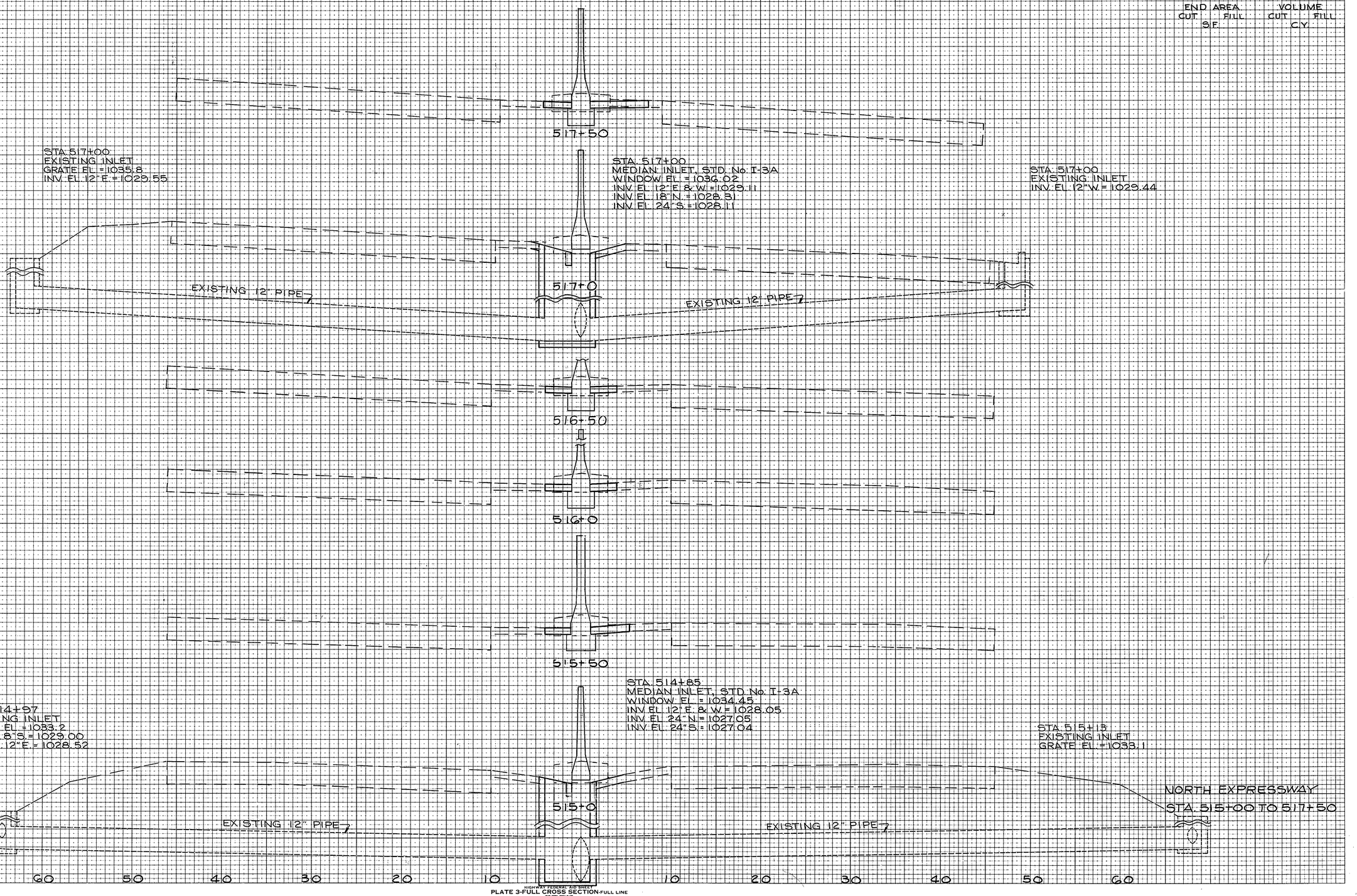

HIGHWAY FEDERAL AID SHEET
PLATE 3-FULL CROSS SECTION-FULL LINE
R. TELEDYNE
PRINTED IN U.S.A.

CALC. BY WAH DATE 4/83
CHKD. BY DSG DATE 4/83

SUM-8-1.73/1.95

OHIO
F.H.W.A. REGION 5

53
204

SEEDING & MULCHING
L.F. S.Y.

END AREA CUT FILL S.F.

VOLUME CUT FILL C.Y.

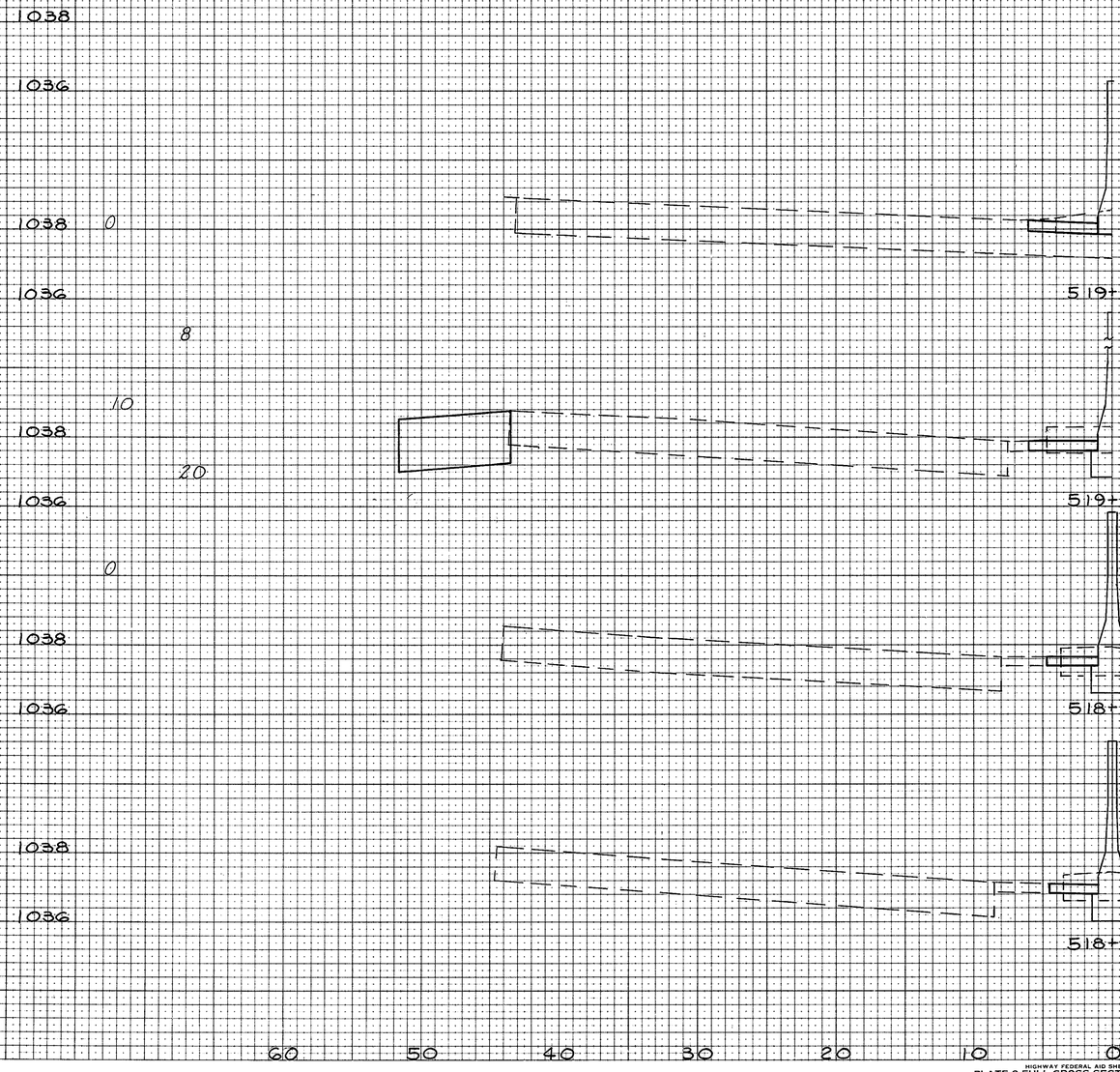

0 0

D=14.4' 3 0

12 0

D=35.6' 8 0

0 0

NORTH EXPRESSWAY
STA. 5+18+00 TO 5+19+50

FINAL SURVEY
NOTE BOOK
NO.
SURVEYED
PLOTTED
TEMPLATE
AREAS
AREAS CHECKED
BY
DATE

ORIGINAL SURVEY
NOTE BOOK
NO.
SURVEYED
PLOTTED
TEMPLATE
AREAS
AREAS CHECKED
BY
DATE

CALC. BY WAH DATE 4/83	SUM-8-1.73/1.95	OHIO	54 / 204
CHKD. BY DAB DATE 11/83		F.H.W.A. REGION 5	

FINAL SURVEY — SURVEYED, PLOTTED, TEMPLATE, AREAS, AREAS CHECKED, NOTE BOOK, NO., BY, DATE

ORIGINAL SURVEY — SURVEYED, PLOTTED, TEMPLATE, AREAS, AREAS CHECKED, NOTE BOOK, NO., BY, DATE

SEEDING & MULCHING
L.F. S.Y.

52 AHEAD

0 BACK

519+57 ℄ = 2+73.51 RAMP J"

MATCH LINE
RAMP J"
STA 2+73.51
SEE SHEET Nº 64

℄

Type 6 Curb

* Existing Fence

END AREA CUT S.F.	END AREA FILL S.F.	VOLUME CUT C.Y.	VOLUME FILL C.Y.
AHEAD	200	0	
BACK	0	0	
		0	0
		0	0

1052 1050 1048 1046 1044 1042 1040 1038 1036 1050 1048 1046 1044 1042 1040 1038 1036

519+0

0 10 20 30 40 50 60 70 80 90 100 110 120 130 140

NORTH EXPRESSWAY RT SIDE
STA. 519+00 TO 519+57

HIGHWAY FEDERAL AID SHEET
PLATE 3-FULL CROSS SECTION-FULL LINE
TELEDYNE
PRINTED IN U.S.A.

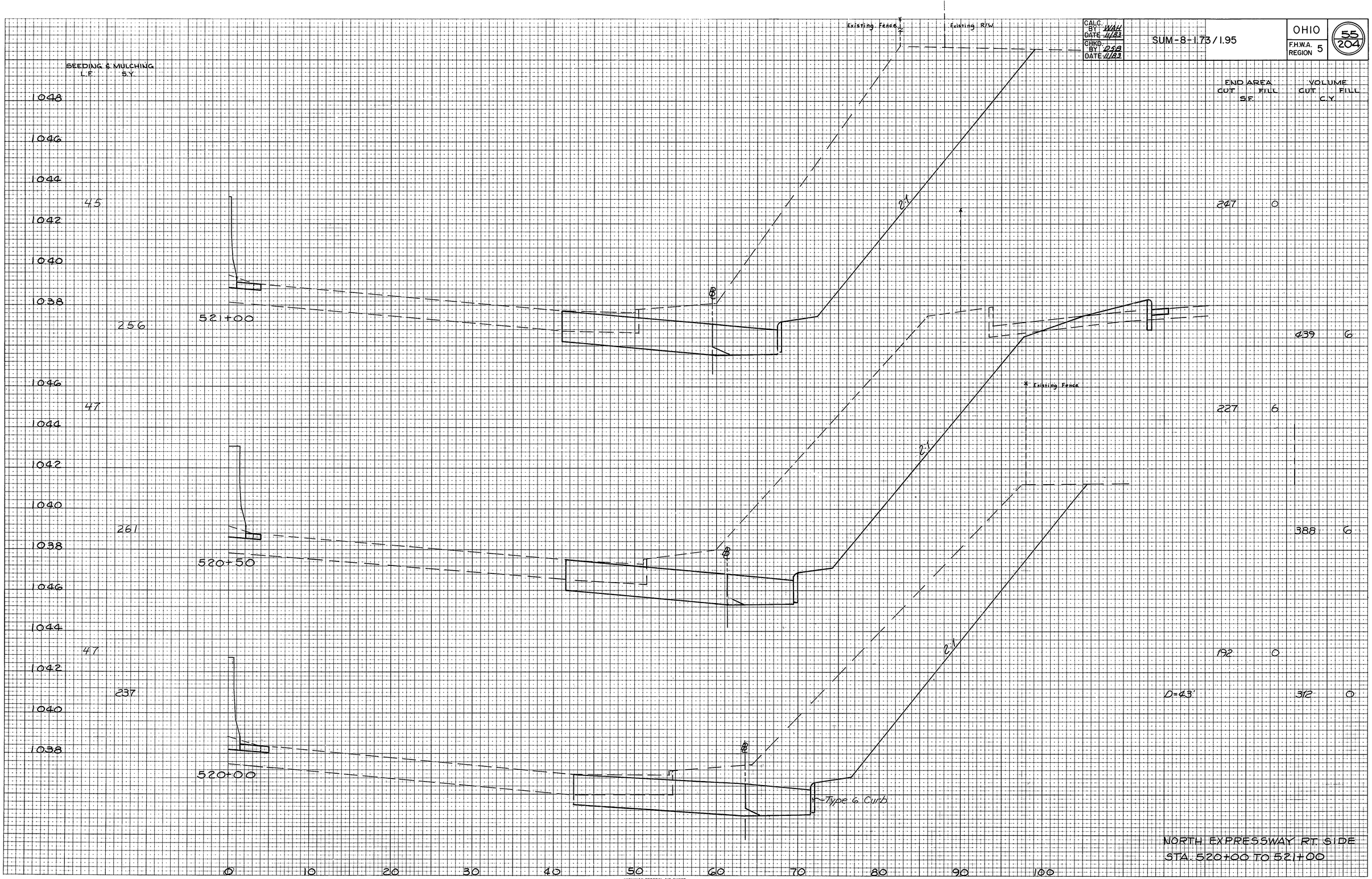

FINAL SURVEY NOTE BOOK NO. SURVEYED PLOTTED TEMPLATE AREAS AREAS CHECKED BY DATE

ORIGINAL SURVEY NOTE BOOK NO. SURVEYED PLOTTED TEMPLATE AREAS AREAS CHECKED BY DATE

HIGHWAY FEDERAL AID SHEET
PLATE 3-FULL CROSS SECTION-FULL LINE
TELEDYNE
PRINTED IN U.S.A.

CALC. BY WAH DATE 11/83	SUM-8-1.73/1.95	OHIO	56
CHKD. BY DSB DATE 11/83		F.H.W.A. REGION 5	204

FINAL SURVEY — SURVEYED, PLOTTED, TEMPLATE, FIELD, AREAS CHECKED, NOTE BOOK, NO., BY, DATE

ORIGINAL SURVEY — SURVEYED, PLOTTED, TEMPLATE, FIELD, AREAS CHECKED, NOTE BOOK, NO., BY, DATE

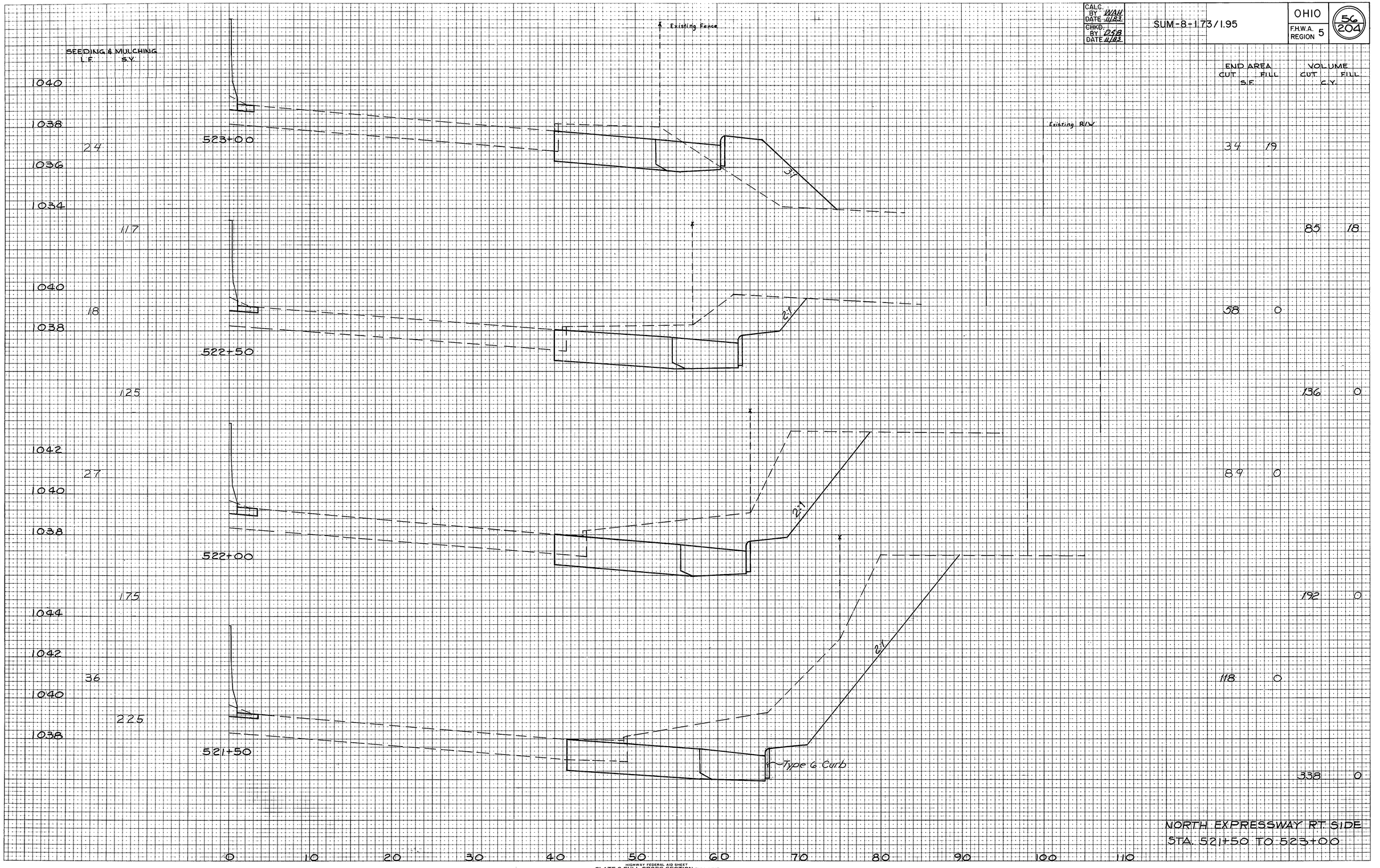

END AREA CUT S.F.	END AREA FILL S.F.	VOLUME CUT C.Y.	VOLUME FILL C.Y.
	34	19	
			85 18
	58	0	
			136 0
	89	0	
			192 0
	118	0	
			338 0

NORTH EXPRESSWAY RT. SIDE
STA. 521+50 TO 523+00

CALC. BY: WAH DATE: 11/83
CHKD. BY: DSB DATE: 11/83

SUM-8-1.73 / 1.95

OHIO
F.H.W.A. REGION 5

57
204

FINAL SURVEY
NOTE BOOK
NO.
SURVEYED
PLOTTED
TEMPLATE
AREAS
AREAS CHECKED
BY
DATE

ORIGINAL SURVEY
NOTE BOOK
NO.
SURVEYED
PLOTTED
TEMPLATE
AREAS
AREAS CHECKED
BY
DATE

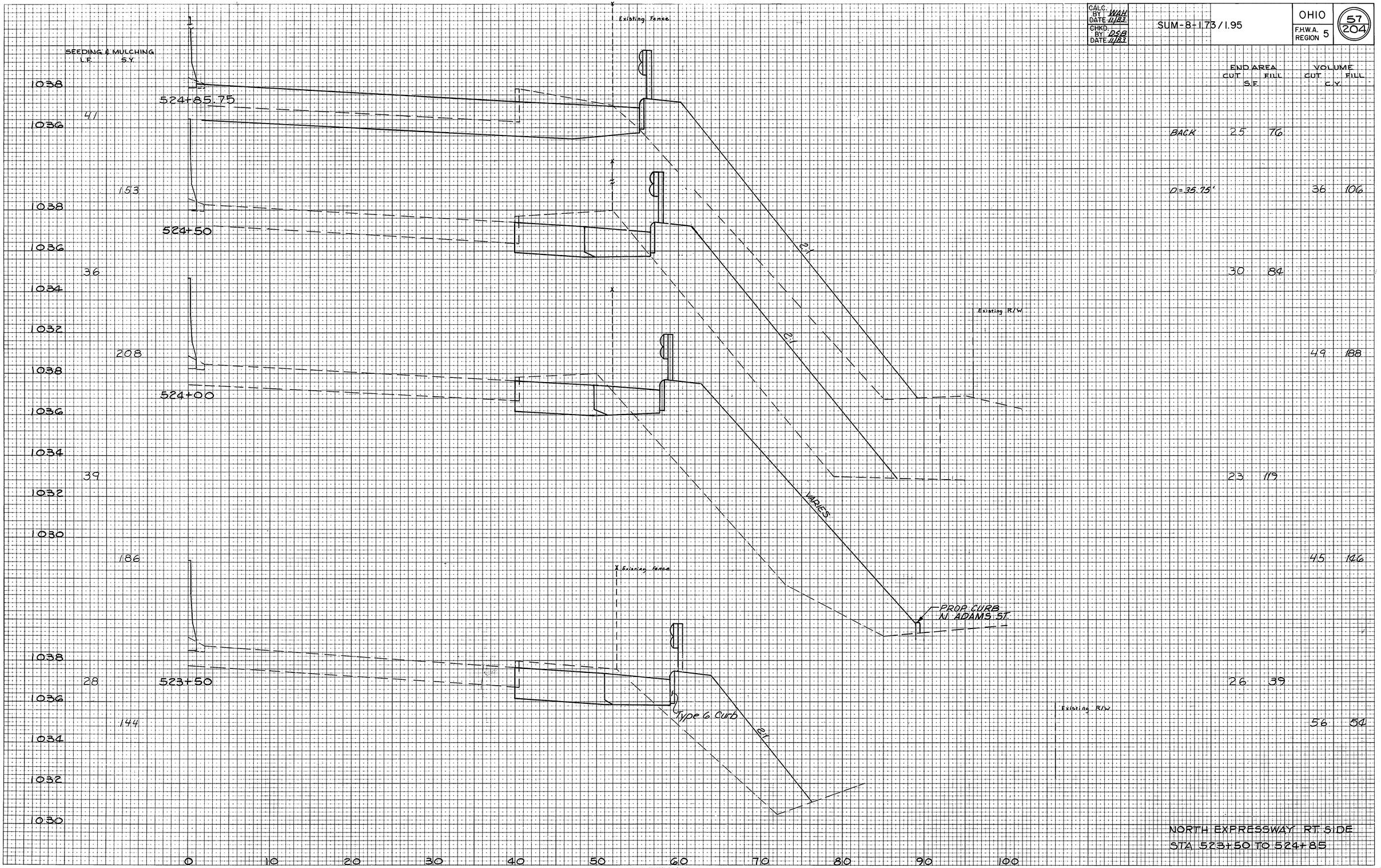

	END AREA CUT S.F.	END AREA FILL S.F.	VOLUME CUT C.Y.	VOLUME FILL C.Y.
BACK	25	76		
D=35.75'			36	106
	30	84		
			49	188
	23	119		
			45	146
	26	39		
			56	54

NORTH EXPRESSWAY RT SIDE
STA 523+50 TO 524+85

CALC. BY WAH DATE 11/83	SUM-8-1.73/1.95	OHIO	58 / 204
CHKD. BY DSB DATE 11/83		F.H.W.A. REGION 5	

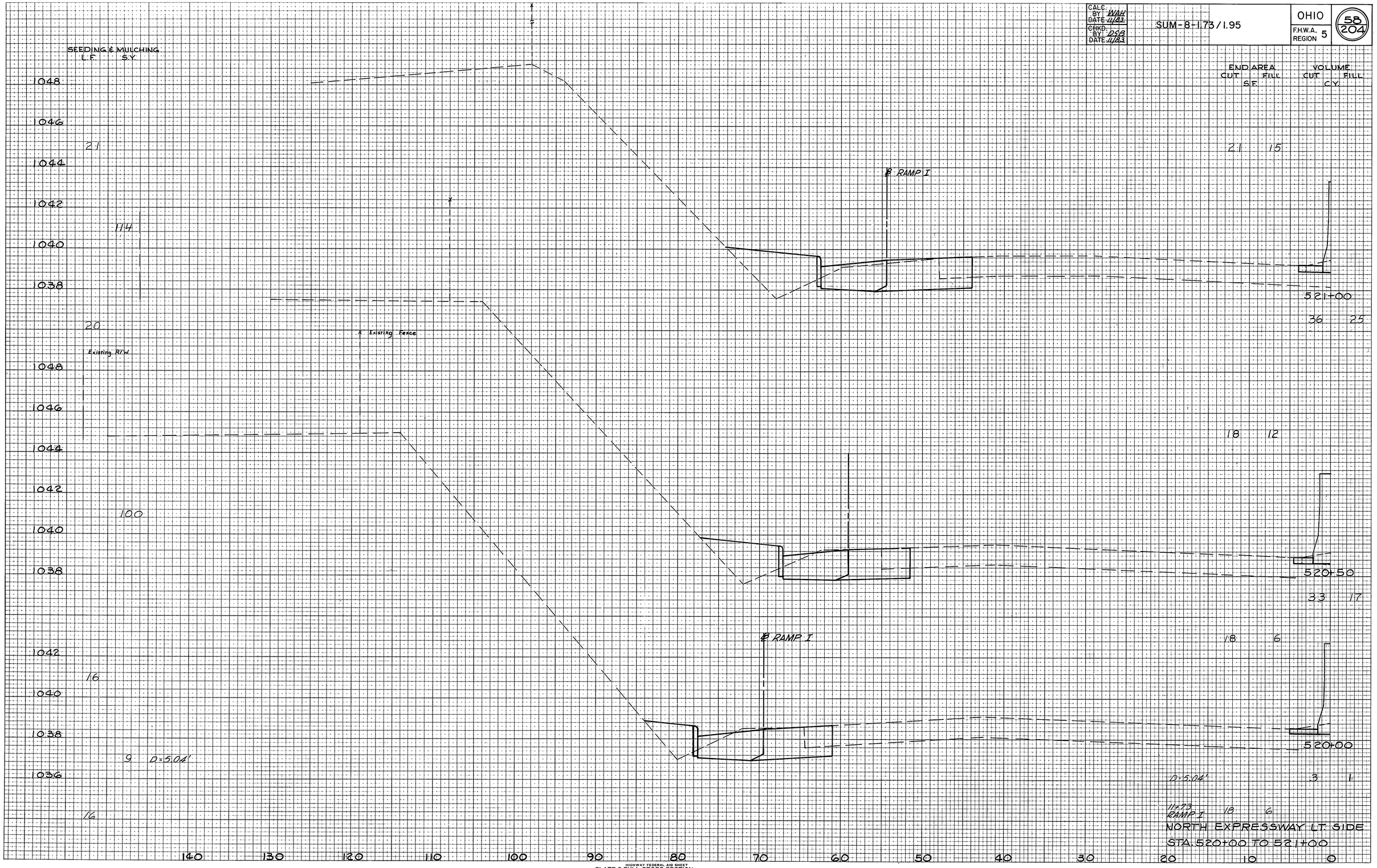

NORTH EXPRESSWAY LT. SIDE
STA. 520+00 TO 521+00

FINAL SURVEY — NOTE BOOK NO. — SURVEYED — PLOTTED — TEMPLATE — AREAS — AREAS CHECKED — BY — DATE

ORIGINAL SURVEY — NOTE BOOK NO. — SURVEYED — PLOTTED — TEMPLATE — AREAS — AREAS CHECKED — BY — DATE

HIGHWAY FEDERAL AID SHEET
PLATE 3-FULL CROSS SECTION-FULL LINE
TELEDYNE
PRINTED IN U.S.A.

CALC. BY: WAH DATE: 11/83
CHKD. BY: DAB DATE: 11/83

SUM-8-1.73/1.95

OHIO
F.H.W.A. REGION 5

55
204

FINAL SURVEY
NOTE BOOK
NO.
SURVEYED
PLOTTED
TEMPLATE
AREAS
AREAS CHECKED
BY
DATE

ORIGINAL SURVEY
SURVEYED
PLOTTED
TEMPLATE
AREAS
AREAS CHECKED
NOTE BOOK
NO.
BY
DATE

SEEDING & MULCHING
L.F. S.Y.

Existing R/W

Existing Fence

℄ RAMP I

	END AREA CUT S.F.	END AREA FILL S.F.	VOLUME CUT C.Y.	VOLUME FILL C.Y.
523+00	21	3		
	67	3		
522+50	51	0		
	19	0		
522+00	34	0		
	55	6		
	25	7		
521+50	43	20		

NORTH EXPRESSWAY LT. SIDE
STA. 521+50 TO 523+00

HIGHWAY FEDERAL AID SHEET
PLATE 3-FULL CROSS SECTION-FULL LINE
TELEDYNE
PRINTED IN U.S.A.

CALC. BY	WAH
DATE	11/83
CHKD. BY	DSB
DATE	11/83

SUM-8-1.73/1.95

OHIO
F.H.W.A. REGION 5

60
204

SEEDING & MULCHING

	L.F.	S.Y.
1038		
1036	74	
1034		
	284	
1038		
1036	69	
1034		
	322	
1032		
1038	47	
1036		
	233	
1034		
1032		
1038		
1036		
1034		
1032		
1030		
	37	
	161	

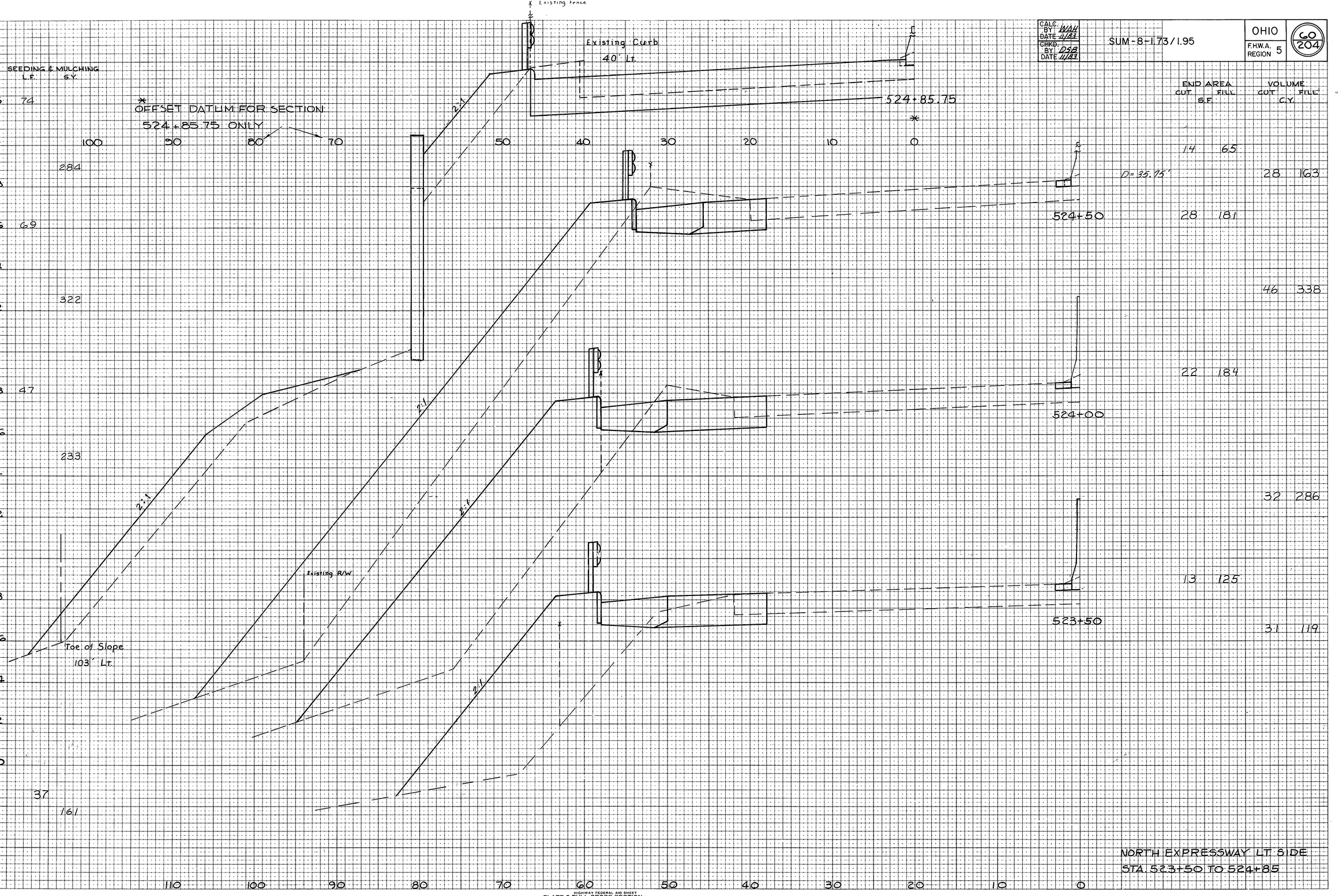

	END AREA CUT S.F.	END AREA FILL S.F.	VOLUME CUT C.Y.	VOLUME FILL C.Y.
	1.4	65		
			28	163
	28	181		
			46	338
	22	184		
			32	286
	13	125		
			31	119

NORTH EXPRESSWAY LT. SIDE
STA. 523+50 TO 524+85

FINAL SURVEY — SURVEYED, PLOTTED, VOLUMES, NOTE BOOK, AREAS, NO., DATE, BY, AREAS CHECKED

ORIGINAL SURVEY — SURVEYED, PLOTTED, VOLUMES, NOTE BOOK, AREAS, NO., DATE, BY, AREAS CHECKED

CALC BY WAH
DATE 11/83
CHKD BY DSB
DATE 11/83

	STATE	PROJECT	
	OHIO		

SUM-8-1.73/1.95

61
204

SEEDING & MULCHING

LF SY

END AREA CUT FILL SF

VOLUME CUT FILL CY

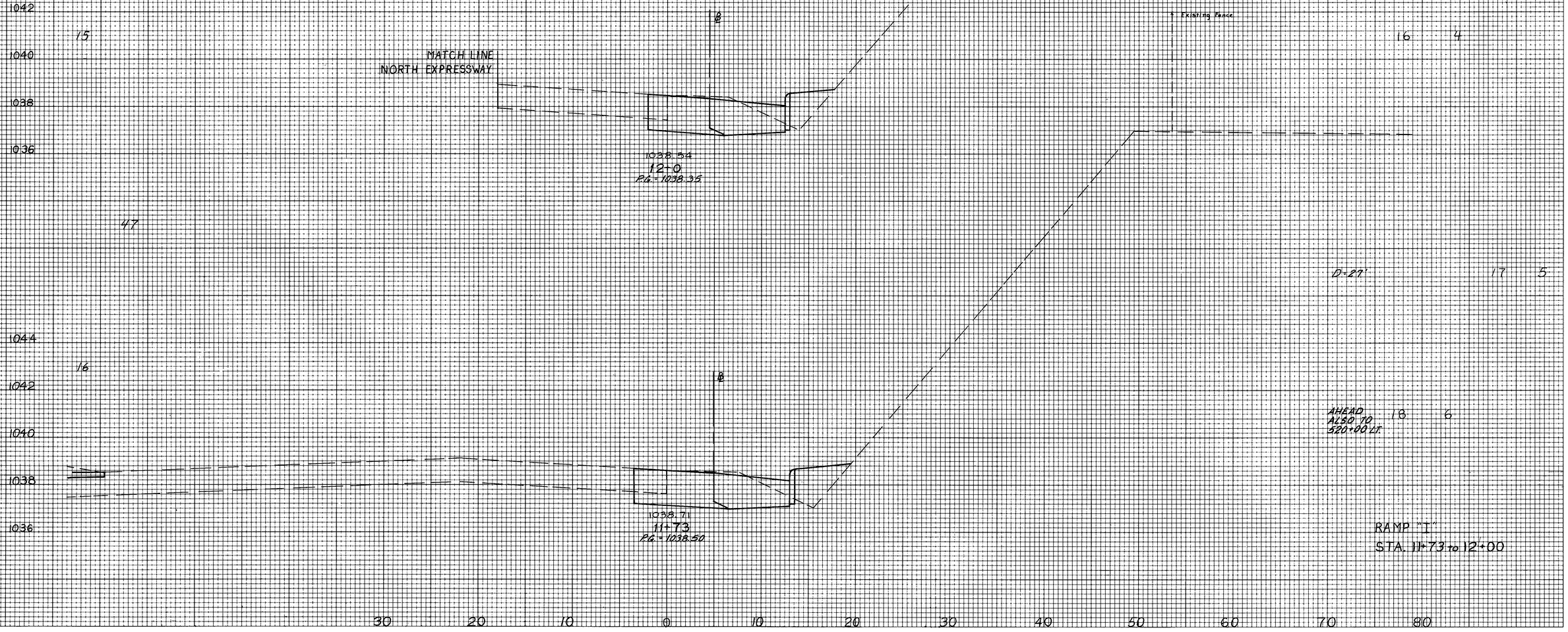

BRUNING 44-142 26372-2

CALC. BY: WAH DATE 11/83
CHKD. BY: DSB DATE 11/83

SUM-8-1.73/1.95

OHIO

F.H.W.A. REGION 5

62/204

FINAL SURVEY		BY	DATE
	SURVEYED		
	PLOTTED		
NOTE BOOK	TEMPLATE		
NO.	AREAS		
	AREAS CHECKED		

ORIGINAL SURVEY		BY	DATE
	SURVEYED		
	PLOTTED		
NOTE BOOK	TEMPLATE		
NO.	AREAS		
	AREAS CHECKED		

END AREA VOLUME
CUT FILL CUT FILL
S.F. C.Y.

SEEDING & MULCHING
L.F.
S.Y.

RAMP "H"
STA. 12+50 TO 14+50

HIGHWAY FEDERAL AID SHEET
PLATE 3-FULL CROSS SECTION-FULL LINE
TELEDYNE
PRINTED IN U.S.A.

HIGHWAY FEDERAL AID SHEET
PLATE 3-FULL CROSS SECTION-FULL LINE
TELEDYNE
PRINTED IN U.S.A.

CALC. BY WAH
DATE 11/83
CHKD. BY DSB
DATE 11/83

	STATE	PROJECT	
	OHIO		

SUM-8-1.73/1.95

64
204

END AREA CUT SF	END AREA FILL SF	VOLUME CUT CY	VOLUME FILL CY
229	0		
D=26.49'		204	0
187	0		

RAMP "J"
STA. 2+73.51 to 3+00

BRUNING 44-142 26372-2

CALC. BY WAH DATE 11/83	SUM-8-1.73 / 1.95	OHIO	65 / 204
CHKD. BY DSB DATE 11/83		F.H.W.A. REGION 5	

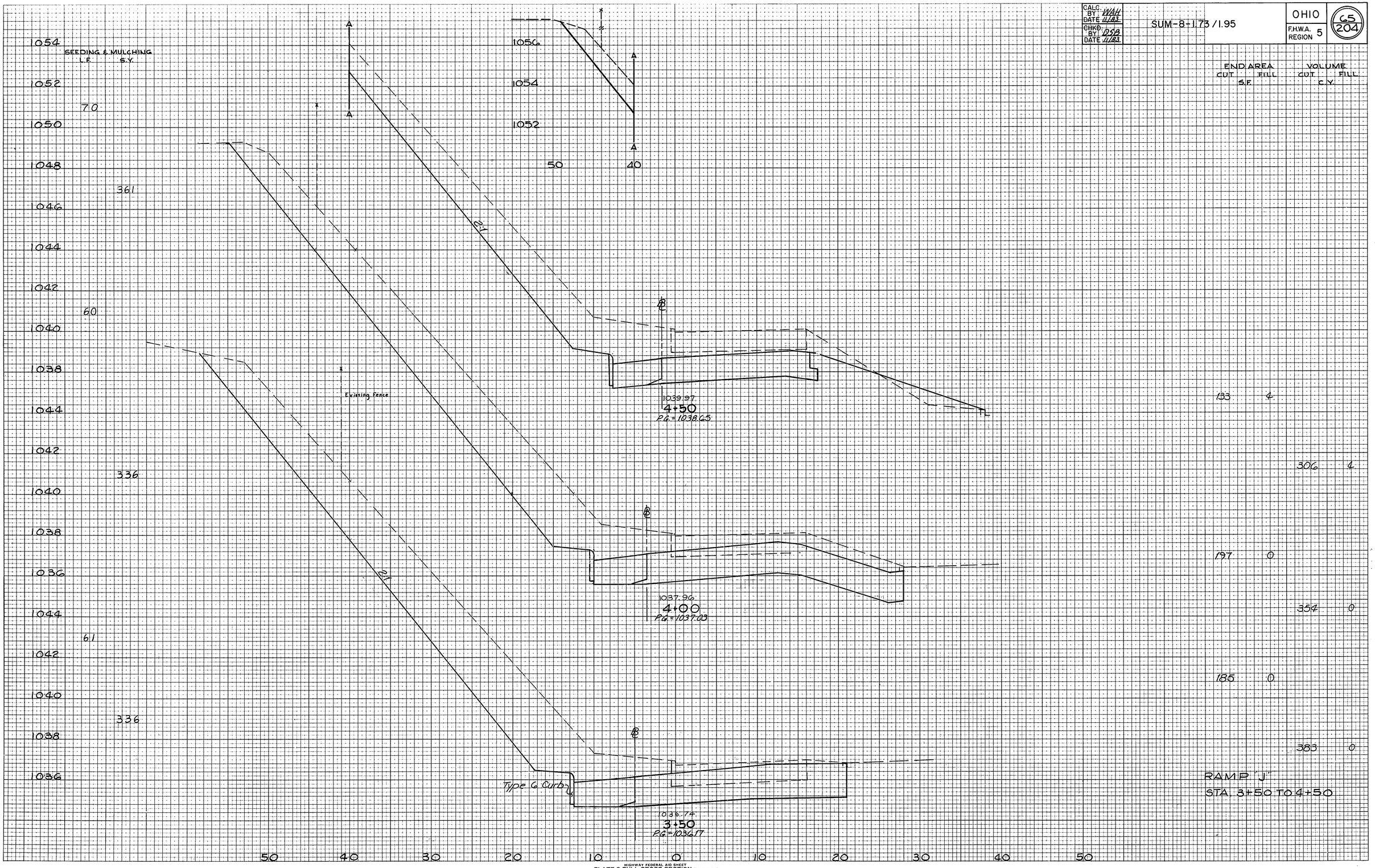

END AREA CUT S.F.	END AREA FILL S.F.	VOLUME CUT C.Y.	VOLUME FILL C.Y.
133	4		
		306	4
197	0		
		354	0
185	0		
		383	0

RAMP "J"
STA. 3+50 TO 4+50

FINAL SURVEY — NOTE BOOK NO. — SURVEYED — PLOTTED — TEMPLATE — AREAS — AREAS CHECKED — BY — DATE

ORIGINAL SURVEY — NOTE BOOK NO. — SURVEYED — PLOTTED — TEMPLATE — AREAS — AREAS CHECKED — BY — DATE

HIGHWAY FEDERAL AID SHEET
PLATE 3-FULL CROSS SECTION-FULL LINE
TELEDYNE
PRINTED IN U.S.A.

CALC. BY WAH DATE 11/83
CHKD. BY DSB DATE 11/83

SUM-8-1.73/1.95

OHIO | F.H.W.A. REGION 5 | 66/204

FINAL SURVEY — NOTE BOOK NO. — SURVEYED — PLOTTED — TEMPLATE — AREAS — AREAS CHECKED — BY — DATE

ORIGINAL SURVEY — NOTE BOOK NO. — SURVEYED — PLOTTED — TEMPLATE — AREAS — AREAS CHECKED — BY — DATE

SEEDING & MULCHING

L.F.	S.Y.
41	
211	
35	
231	
48	
283	
54	
344	

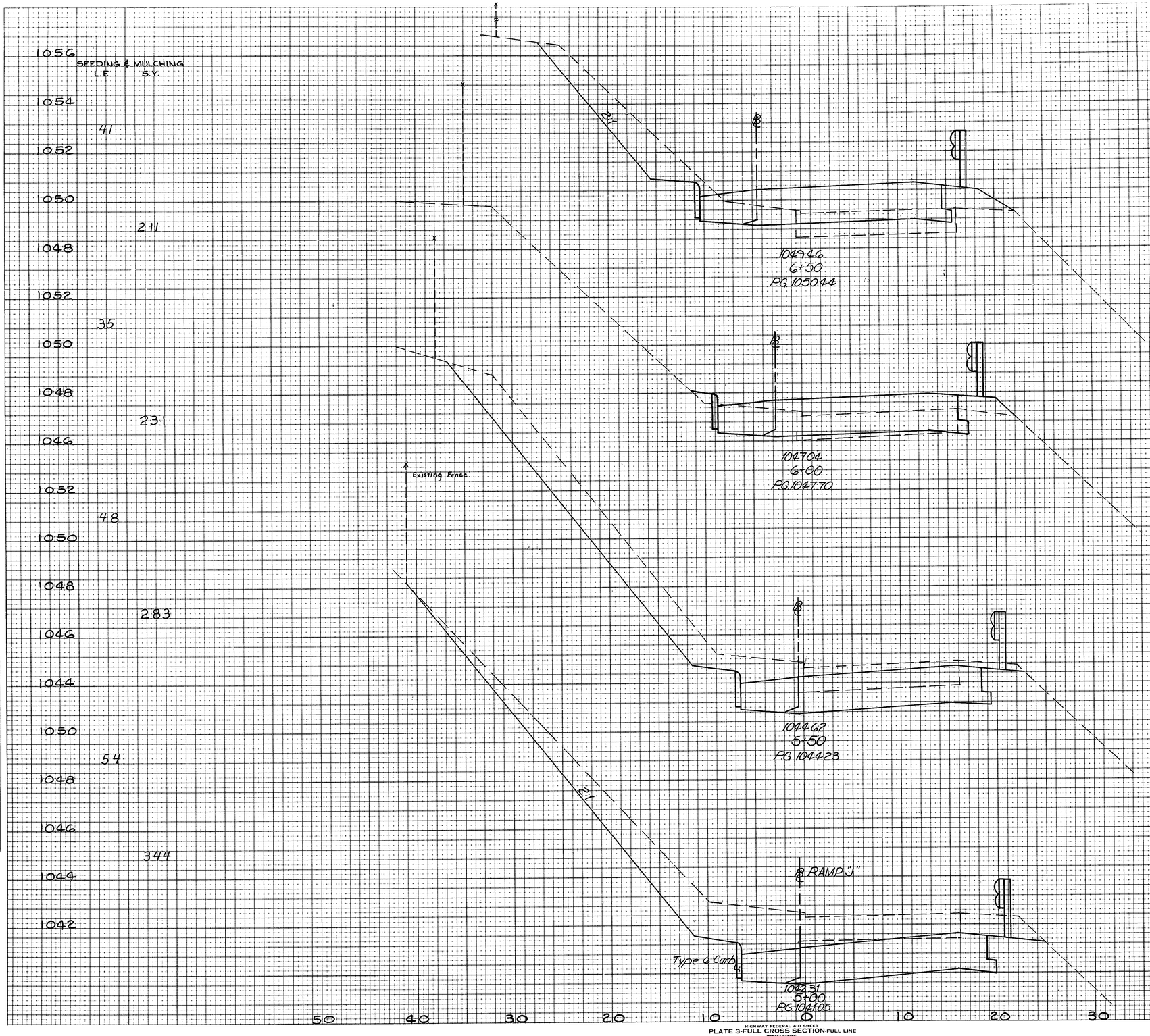

END AREA CUT S.F.	END AREA FILL S.F.	VOLUME CUT C.Y.	VOLUME FILL C.Y.
		31	14
		37	18
		9	5
		81	5
		78	0
		169	0
		94	0
		210	4

RAMP "J"
STA. 5+00 TO 6+50

CALC. BY WMH DATE 11/83
CHKD. BY DSB DATE 11/83

SUM-8-1.73/1.95

OHIO
F.H.W.A. REGION 5

67
204

SEEDING & MULCHING
L.F. S.Y.

END AREA CUT S.F. FILL

VOLUME CUT C.Y. FILL

FINAL SURVEY
NOTE BOOK NO.
SURVEYED
PLOTTED
TEMPLATE
AREAS
AREAS CHECKED
BY
DATE

ORIGINAL SURVEY
NOTE BOOK NO.
SURVEYED
PLOTTED
TEMPLATE
AREAS
AREAS CHECKED
BY
DATE

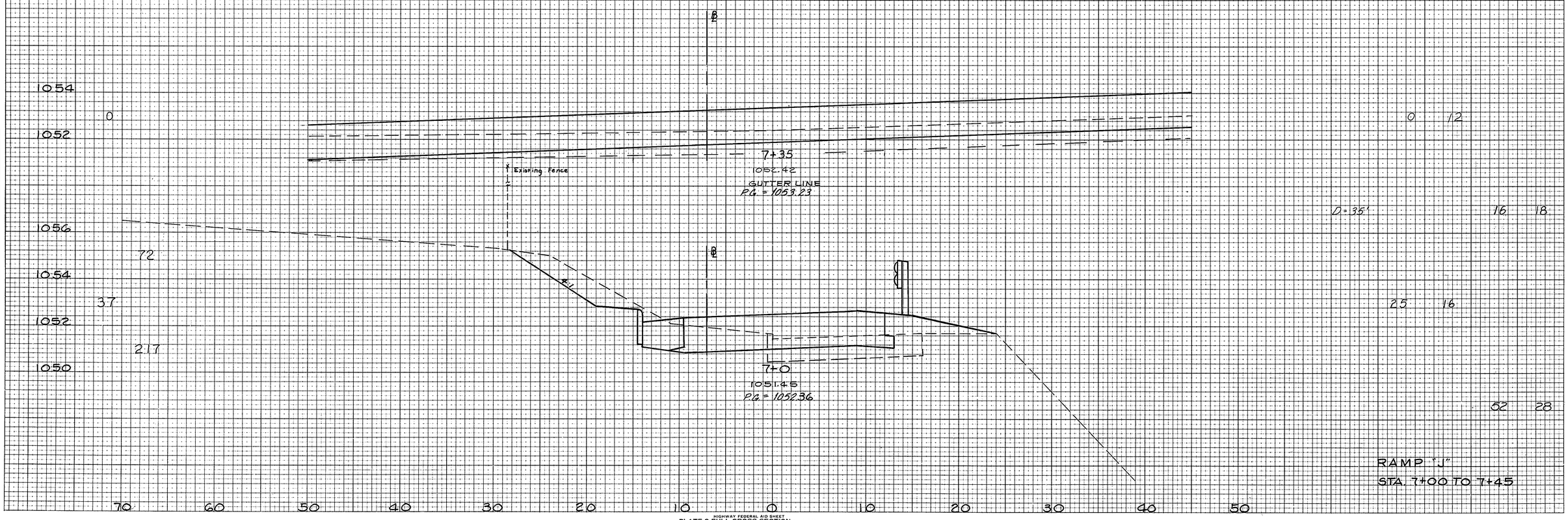

RAMP "J"
STA. 7+00 TO 7+45

BRUNING 44-142 26372-2

SEEDING & MULCHING
L.F. S.Y.

END AREA CUT S.F. | END AREA FILL S.F. | VOLUME CUT C.Y. | VOLUME FILL C.Y.

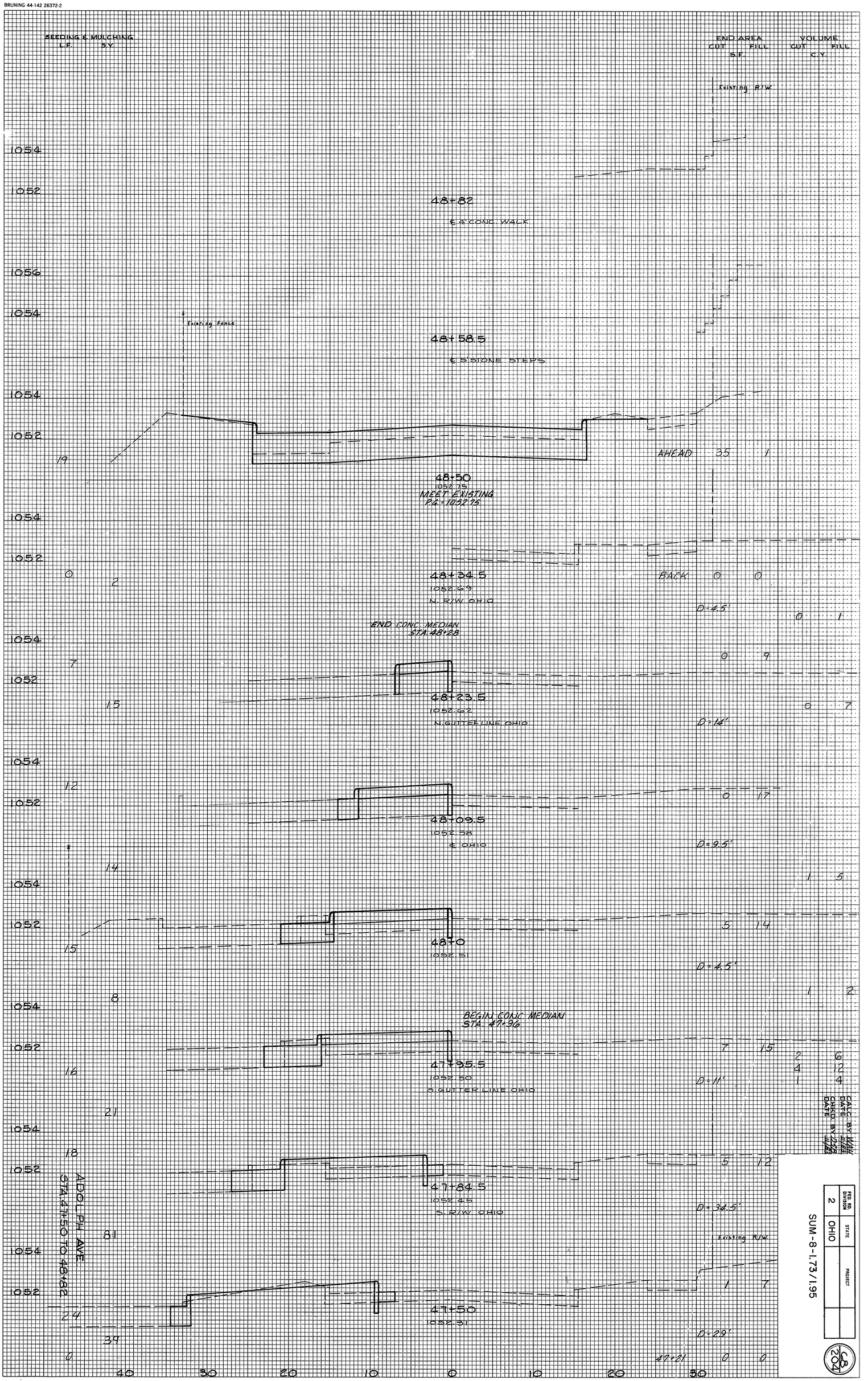

ADOLPH AVE.
STA. 47+50 TO 48+82

CALC. BY
DATE
CHKD. BY
DATE

FED. RD. DIVISION	STATE	PROJECT	
2	OHIO		

SUM-8-I-73/I-95

58
207

BRUNING 44-142 26372

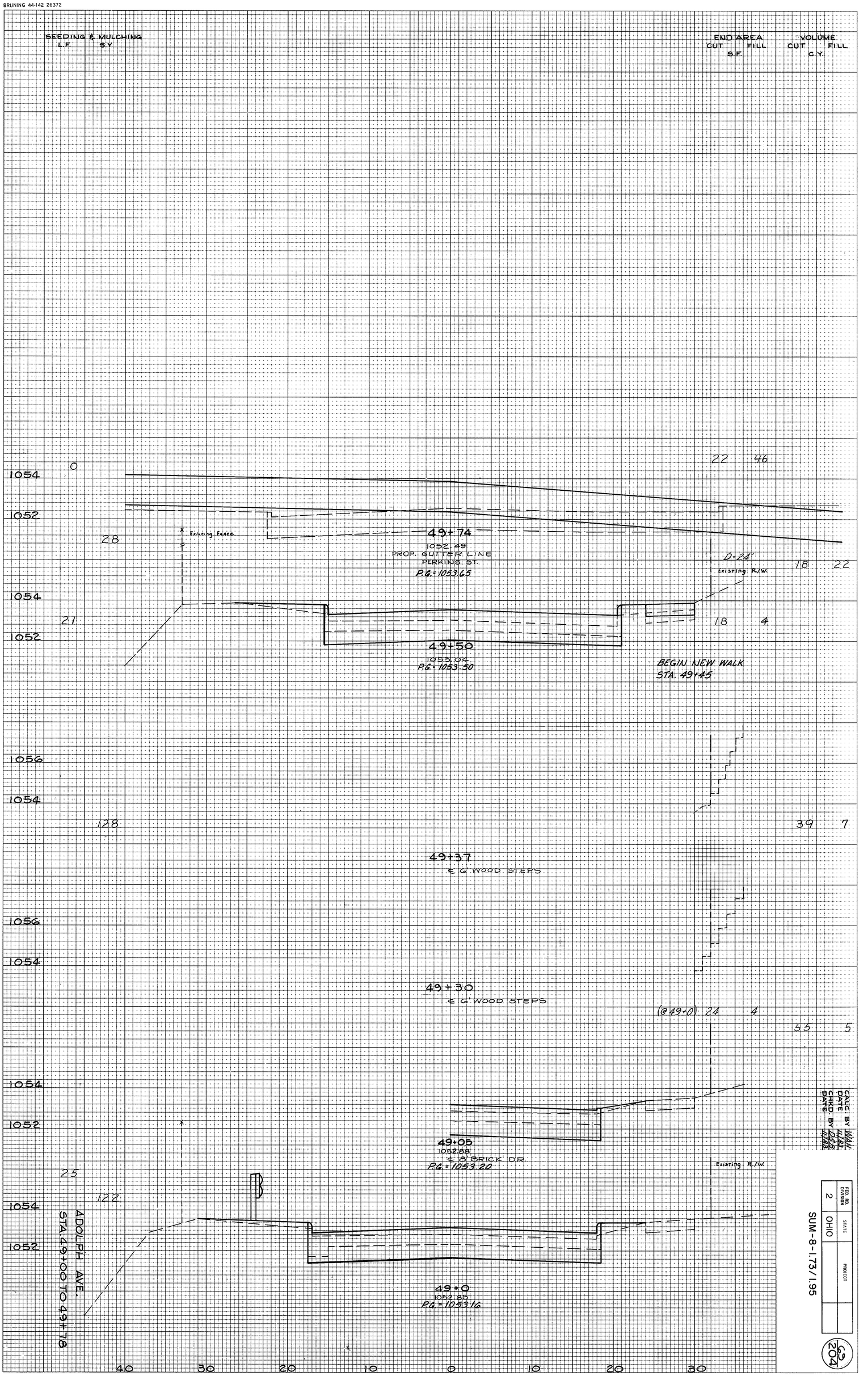

CALC. BY WAH
DATE 11/83
CHKD. BY DSB
DATE 11/83

FED. RD. DIVISION	STATE	PROJECT
2	OHIO	

SUM-8-1.73/1.95

69
204

CALC. BY WAH DATE 11/83
CHKD. BY DSB DATE 11/83

SUM-8-1.73/1.95

OHIO
F.H.W.A. REGION 5

70
204

END AREA
VOLUME
CUT S.F.
FILL S.F.
CUT C.Y.
FILL C.Y.

FINAL SURVEY
SURVEYED
PLOTTED
NOTE BOOK
NO.
PARTY CHIEF
AREAS
AREAS CHECKED
BY
DATE

ORIGINAL SURVEY
SURVEYED
PLOTTED
NOTE BOOK
NO.
PARTY CHIEF
AREAS
AREAS CHECKED
BY
DATE

SEEDING & MULCHING
L.F.
S.Y.

Existing R/W

51+04 ℄ 9" CONC. DR. RT.

51+0
1053.43

50+50
1052.95
MEET EXISTING
P.I. = 1052.95

50+42
1052.70
P.I. = 1052.64

50+24
1051.75
GUTTER LINE
P.I. = 1051.95

Existing R/W

ADOLPH AVE. NORTH
STA. 50+22 TO 51+00

BRUNING 44-142 26372

SEEDING & MULCHING
L.F. S.Y.

END AREA
CUT FILL
S.F.

VOLUME
CUT FILL
C.Y.

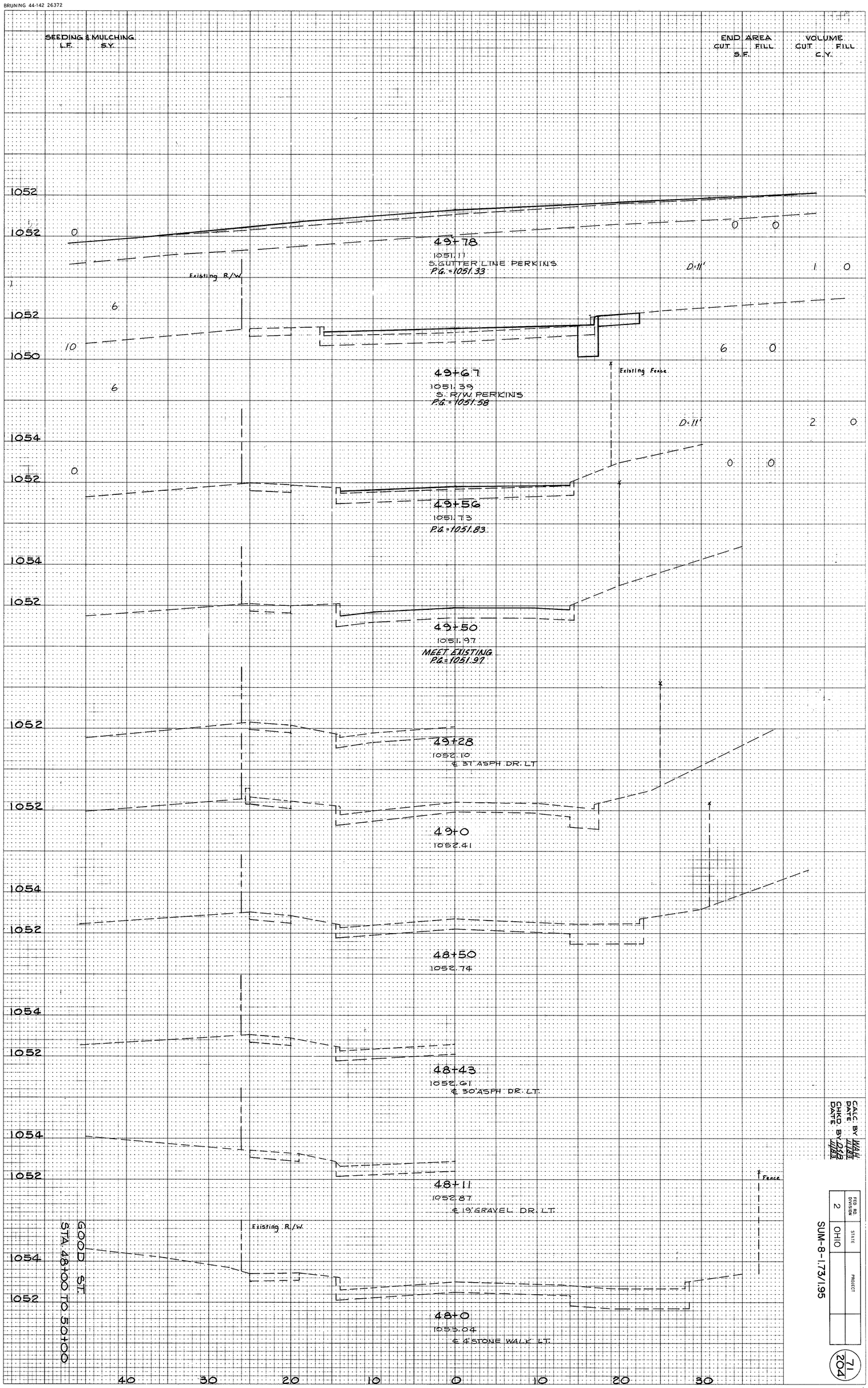

CALC. BY
DATE
CHKD. BY
DATE

FED. RD. DIVISION	STATE	PROJECT
2	OHIO	SUM-8-1.73/1.95

71
204

SCOPE OF WORK

THE WORK CONTEMPLATED UNDER THIS CONTRACT COMPRISES THE FURNISHING AND INSTALLING OF DUCTILE IRON CLASS 53 CEMENT LINED PIPE, WITH ALL APPURTENANCES, COMPLETE IN ALL DETAILS, TESTED AND READY FOR OPERATION. THE CONTRACTOR SHALL DO ALL THE WORK AND FURNISH ALL THE LABOR AND MATERIALS NECESSARY FOR THE PROPER AND FINAL COMPLETION OF THIS CONTRACT IN THE MANNER AND UNDER THE CONDITIONS HEREIN SPECIFIED AND PROVIDED AND IN ACCORDANCE WITH THE CONTRACT DRAWINGS.

DEFINITIONS

WHEREVER IN THESE SPECIFICATIONS OR IN OTHER CONTRACT DOCUMENTS THE FOLLOWING TERMS OR PRONOUNS IN PLACE OF THEM ARE USED, THE INTENT AND MEANING SHALL BE INTERPRETED AS FOLLOWS:

THE STATE

THE STATE IS THE STATE OF OHIO ACTING THROUGH ITS AUTHORIZED REPRESENTATIVE.

ENGINEER

THE ENGINEER IS DIVISION DEPUTY DIRECTOR OR DIVISION ENGINEER, THE DIVISION CONSTRUCTION ENGINEER OR THE DIVISION MAINTENANCE ENGINEER OR THE PROJECT ENGINEER ASSIGNED TO ADMINISTER THE CONTRACT.

THE CITY

THE CITY IS THE DIRECTOR, DEPARTMENT OF PUBLIC SERVICE OF THE CITY OF AKRON.

STATUS OF CITY INSPECTOR

INSPECTORS AS DESIGNATED BY THE DIRECTOR OF PUBLIC SERVICE SHALL BE AUTHORIZED TO INSPECT ALL WORK DONE AND MATERIALS FURNISHED. SUCH INSPECTION MAY EXTEND TO ALL OR ANY PART OF THE WATERWORKS, AND TO THE PREPARATION OR MANUFACTURE OF THE MATERIALS TO BE USED IN THE WATERWORKS. THE CITY INSPECTORS AS DESIGNATED BY THE DIRECTOR OF PUBLIC SERVICE SHALL MAKE WORK INSTRUCTIONS THROUGH THE PROJECT ENGINEER.

ACCESS TO WORK AND PLACE OF MANUFACTURE

THE CONTRACTOR SHALL NOTIFY THE ENGINEER AND DIRECTOR OF PUBLIC SERVICE, AT LEAST SEVEN DAYS PRIOR TO THE COMMENCEMENT OF THE MANUFACTURE OF ANY MATERIALS, OF THE TIME AND PLACE WHERE THE MANUFACTURE IS TO COMMENCE, IN ORDER THAT A REPRESENTATIVE OF THE ENGINEER AND DIRECTOR MAY BE PRESENT TO INSPECT THE MANUFACTURE. THE CONTRACTOR SHALL PROVIDE, WITHOUT CHARGE OR EXPENSE TO THE STATE AND CITY, ALL NECESSARY ASSISTANCE TO THE ENGINEER AND DIRECTOR WHEN REQUIRED FOR INSPECTION OR VERIFICATION OF WORK DONE. DIMENSIONS, DETAILED DRAWINGS, AND ELEVATIONS:

YOU WILL BE REQUIRED TO CONTACT THE UTILITIES SERVICES DIVISION, MR. THOMAS J. MITAN, AT 375-2420, 48 HOURS PRIOR TO BEGINNING OF CONSTRUCTION IN AREAS HERETOFORE LISTED.

A. FIGURED DIMENSIONS ON DRAWINGS SHALL TAKE PRECEDENCE OVER MEASUREMENTS BY SCALE, AND DETAILED DRAWINGS ARE TO TAKE PRECEDENCE OVER GENERAL DRAWINGS AND SHALL BE CONSIDERED AS EXPLANATORY OF THEM AND NOT AS INDICATING EXTRA WORK. HOWEVER, IF ANY OF THE DETAILED DRAWINGS SHOW THE ELABORATE OR EXPENSIVE WORK THAN IS SPECIFIED AND INDICATED BY THE CONTRACT DRAWINGS, NOTICE THEREOF MUST BE GIVEN TO THE ENGINEER BY THE CONTRACTOR WITHIN TEN DAYS AFTER THE RECEIPT OF SUCH DETAILED DRAWINGS IN ORDER THAT THE DRAWINGS MAY BE AMENDED OR THE ADDITIONAL EXPENSE ON ACCOUNT OF SUCH WORK MAY BE ADJUSTED AND AUTHORIZED. IF THE ENGINEER DOES NOT RECEIVE SUCH NOTICE FROM THE CONTRACTOR WITHIN TEN DAYS AFTER DETAILED DRAWINGS HAVE BEEN RECEIVED BY HIM, IT IS HEREBY AGREED THAT THE CONTRACTOR ACCEPTS THE DRAWINGS AND WILL EXECUTE THEM WITHOUT CLAIM FOR EXTRA COMPENSATION.

FLOODS AND FREEZING WEATHER

PROPER FACILITIES SHALL BE PROVIDED FOR PROTECTING THE WORK FROM DAMAGE BY FLOOD, RAIN, OR FROST AND WORK DONE IN FREEZING WEATHER SHALL BE DONE IN SUCH MANNER AS THE ENGINEER MAY APPROVE. VALVES SHALL BE PROTECTED FROM FREEZING UNTIL BACKFILLED IN THE COMPLETED WORK.

ADDITIONAL WORK

A. ATTENTION IS CALLED TO THE FACT THAT THE WORK ON THIS CONTRACT INCLUDES CERTAIN PERFORMANCES AS INCIDENTAL TO THE ITEMIZED REQUIREMENTS HEREOF AND, THOUGH NOT EXCLUSIVE, ARE AS FOLLOWS: TO PERFORM ALL EXCAVATION, BACKFILLING, SHEETING, BRACING, AND TO TEST THE INSTALLATION. FOR THE PERFORMANCES HEREIN DESCRIBED AND FOR OTHER INCIDENTAL PERFORMANCES OF LIKE NATURE, THE STATE WILL MAKE NO SPECIFIC OR SEPEARATE PAYMENT OF ALLOWANCE, BUT THE COST THEREOF SHALL BE INCLUDED IN THE PRICES STIPULATED TO BE PAID FOR THE VARIOUS ITEMS OF THE WORK TO BE DONE UNDER THIS CONTRACT.

B. PRELIMINARY FLUSHING: BEFORE BEING PLACED IN SERVICE, ALL DIRT AND FOREIGN MATTER SHALL BE REMOVED FROM THE NEW WATER MAIN OR EXTENSIONS TO EXISTING MAINS BY A THOROUGH FLUSHING THROUGH THE HYDRANTS OR BY OTHER APPROVED MEANS. EACH VALVED SECTION OR NEWLY LAID PIPE SHALL BE FLUSHED INDEPENDENTLY. THIS SHALL BE DONE AFTER THE PRESSURE TEST AND MAY BE DONE BEFORE OR AFTER THE TRENCH HAS BEEN BACKFILLED.

C. CHLORINATION: FOLLOWING PRELIMINARY FLUSHING, THE NEWLY LAID WATER PIPE SHALL BE CHLORINATED. THE PROCESS OF CHLORINATING, THE METHOD OF PROCEDURE, THE CHLORINATING AGENT, AND THE RATE OF APPLICATION SHALL BE DETERMINED BY THE ENGINEER. THE CITY WILL FURNISH THE NECESSARY LABOR AND MATERIAL REQUIRED FOR SUCH CHLORINATION AND INSTALL THE NECESSARY TAPS AT THE ENDS OF THE WATER MAIN SECTIONS TO BE CHLORINATED. NO CHARGE WILL BE ASSESSED THE CONTRACTOR FOR ANY MATERIAL, LABOR, TOOLS, EQUIPMENT, AND INCIDENTALS FURNISHED BY THE CITY OF AKRON, DIVISION OF WATER, FOR THE CHLORINATION AND THE SAMPLING OF THE WATER. THE CONTRACTOR SHALL FURNISH THE NECESSARY LABOR FOR EXCAVATING AND BACKFILLING WHICH WILL BE REQUIRED FOR THE INSTALLATION OF TAPS FOR INJECTING THE CHLORINE SOLUTION, OPERATING PUMPS, AND FLUSHING MAINS.

D. WHERE PAINTING CLAUSES APPEAR HEREINAFTER, THEY SHALL TAKE PRECEDENCE OVER THIS SECTION, EXCEPT THAT TEMPORARY PROTECTION HEREIN DESCRIBED MAY BE REQUIRED.

E. ALL OF THIS WORK SHALL BE INCLUDED IN THE PRICE BID FOR THE PARTICULAR ITEM REQUIRING THE PAINTING.

TESTS, INSPECTION, AND REPORTS

NOT WITHSTANDING THE REQUIREMENTS OF ANY OTHER PROVISIONS OF THESE SPECIFICATIONS, THE CONTRACTOR SHALL ARRANGE FOR AND PAY ALL COSTS INVOLVED FOR SHOP INSPECTION OF ALL MATERIALS FURNISHED, MANUFACTURE OF ALL PIPE, VALVES, FITTINGS, ETC., FIELD AND SHOP WELDS AND WELDING, AND FURNISH TO THE STATE AND THE CITY COPIES OF ALL SHOP, FABRICATION, MANUFACTURE, AND OTHER RELATED INSPECTION REPORTS OF MATERIALS FURNISHED. THIS INSPECTION SHALL BE DONE BY A RECOGNIZED INSPECTION LABORATORY APPROVED BY THE CITY.

IN THE CASE OF ANY ITEM NOT SPECIFICALLY MENTIONED IN THE "WATERWORK NOTES," THE STATE OF OHIO, DEPARTMENT OF TRANSPORTATION, "CONSTRUCTION AND MATERIAL SPECIFICATIONS - JANUARY 1, 1983" SHALL GOVERN.

F. FINAL FLUSHING AND TEST: FOLLOWING CHLORINATION, ALL TREATED WATER SHALL BE THOROUGHLY FLUSHED FROM THE NEWLY LAID PIPE AT ITS EXTREMETIES UNTIL THE REPLACEMENT WATER THROUGHOUT ITS LENGTH SHALL, UPON TEST, BOTH CHEMICALLY AND BACTERIOLOGICALLY, BE PROVEN EQUAL TO THE WATER QUALITY SERVED THE PUBLIC FROM THE EXISTING WATER SUPPLY SYSTEM.

G. FOR THE PERFORMANCE DESCRIBED IN PARAGRAPHS B, C, AND F, THE STATE WILL MAKE NO SPECIFIC OR SEPARATE PAYMENT OR ALLOWANCES, BUT THE COST THEREOF SHALL BE INCLUDED IN THE PRICES STIPULATED TO BE PAID FOR EACH LINEAR FOOT OF PIPE FURNISHED AND INSTALLED.

MAINTENANCE OF SERVICE AND CONNECTING RELOCATED MAINS

THE CONTRACTOR SHALL FOLLOW STRICTLY THE SEQUENCE OF CONSTRUCTION SHOWN ON THE PLANS. ALL EXISTING FIRE HYRDANT LEADS AND HOUSE SERVICES SHALL BE HAND TUNNELED USING SPECIAL CARE TO AVOID ANY DAMAGE WHICH MIGHT REQUIRE SHUTTING DOWN THE EXISTING MAIN UNTIL THE NEW MAIN IS READY TO BE PLACED IN SERVICE.

WHEN THE NEW MAINS HAVE BEEN TESTED AND CHLORINATED AND ARE READY TO BE CONNECTED TO THE OLD MAIN, THE CONTRACTOR SHALL MAKE SUCH CONNECTIONS AT A TIME DESIGNATED BY THE CITY. PRIOR TO SHUTTING DOWN THE EXISTING MAINS, THE CONTRACTOR SHALL TAKE SUITABLE PRECAUTIONS TO ASSURE A MINIMUM INTERRUPTION TO SERVICES, INCLUDING THE FOLLOWING:

1. PERFORM ALL NECESSARY EXCAVATION, INCLUDING BELL HOLES EXPOSING THE EXISTING MAIN SUFFICIENTLY FOR THE OPERATION OF THE PIPE SAW BY THE CITY.

2. REMOVE THE CAP OR PLUG FROM THE END OF THE NEW MAIN.

3. SWAB THE INSIDE OF ALL PIPES, BENDS, AND SLEEVES TO BE USED IN CONNECTION THOROUGHLY WITH A CHLORINE SOLUTION OF AT LEAST 100 P.P.M.

4. MAKE UP AS MUCH OF THE CONNECTION AS POSSIBLE OUTSIDE THE DITCH TO ELIMINATE THE NEED FOR CAULKING MOST OF THE NECESSARY JOINTS DURING THE SHUTDOWN. BY CAREFUL MEASUREMENT, ALL PIPE CUTS CAN BE MADE BY THE CONTRACTOR PRIOR TO SHUTTING DOWN.

5. HAVE SUFFICIENT MANPOWER AND EQUIPMENT ON THE SITE TO PERFORM THE OPERATION IN A MINIMUM OF TIME.

6. ANY HYDRANTS, VALVES, VALVE BOXES, CURB BOXES, SERVICE LINES, METER PITS OR WATER MAINS THAT ARE DAMAGED OR MUST BE ADJUSTED AND/OR MOVED WILL HAVE TO BE REPAIRED, ADJUSTED, MOVED AND/OR REPLACED AND ALL WORK DONE SHALL BE AT PROJECT EXPENSE.

PAINTING

A. IT IS THE INTENTION OF THESE SPECIFICATIONS TO PROVIDE THAT ALL METAL WORK SUBJECT TO CORROSION SHALL BE SATISFACTORILY PROTECTED BY A DURABLE COATING OF PAINT OR OTHER APPROVED MATERIAL AND THAT ALL METAL SURFACES NOT BURIED IN EARTH, OR IN CONCRETE, SHALL BE LEFT CLEAN AND WELL PAINTED AT THE COMPLETION OF THE CONTRACT. UNLESS OTHERWISE SPECIFIED, THE PROTECTION SHALL BE AT LEAST THAT GIVEN BY THREE COATS OF APPROVED PAINT. THE FIRST COAT IS TO BE APPLIED AT THE SHOP BEFORE THE METAL HAS RUSTED AND AFTER ALL GREASE, DIRT, AND SCALE HAS BEEN REMOVED. BOLTS AND NUTS SHALL NOT BE SHOP COATED, BUT SHALL RECEIVE THREE COATS OF APPROVED PAINT AFTER INSTALLATION.

B. ALL METAL WORK WHICH HAS NOT BEEN COATED BEFORE THE ARRIVAL ON THE JOB SHALL BE GIVEN A TEMPORARY PROTECTIVE COATING OF SUCH A NATURE AS TO PERMIT THE READY ADHERENCE OF FUTURE COATINGS. THE TEMPORARY COATING SHALL BE A GOOD GRADE ASPHALTIC PAINT OR OTHER APPROVED MATERIAL. THIS TEMPORARY PROECTION SHALL APPLY PARTICULARLY TO THE FOLLOWING MATERIALS AND ELSEWHERE WHEN, IN THE OPINION OF THE ENGINEER, SUCH PROTECTION IS NECESSARY:

1. VALVE BOXES AND COVERS

C. ALL SURFACES OF METAL WHICH WILL BE IN CONTACT AFTER ASSEMBLING SHALL BE PAINTED, AT LEAST ONE COAT, BEFORE ASSEMBLING. THE FINAL COAT OF PAINT ON ALL EXPOSED WORK SHALL BE GIVEN SHORTLY BEFORE THE COMPLETION OF THE CONTRACT.

HANDLING PIPE AND ACCESSORIES

A. UNLOADING: DUCTILE IRON PIPE, FITTINGS, VALVES, HYDRANTS, AND OTHER ACCESSORIES SHALL, UNLESS OTHERWISE DIRECTED, BE UNLOADED AT THE POINT OF DELIVERY, HAULED TO AND DISTRIBUTED AT THE SITE OF THE PROJECT BY THE CONTRACTOR; THEY SHALL AT ALL TIMES BE HANDLED WITH CARE TO AVOID DAMAGE. IN LOADING AND UNLOADING, THEY SHALL BE LIFTED BY HOISTS OR SLID OR ROLLED ON SKIDWAYS IN SUCH MANNER AS TO AVOID SHOCK. UNDER NO CIRCUMSTANCES SHALL THEY BE DROPPED. PIPE HANDLED ON SKIDWAYS MUST NOT BE SKIDDED OR ROLLED AGAINST PIPE ALREADY ON THE GROUND.

B. AT SITE OF WORK: IN DISTRIBUTING THE MATERIAL AT THE SITE OF WORK, EACH PIECE SHALL BE UNLOADED OPPOSITE OR NEAR THE PLACE WHERE IT IS TO BE LAID IN THE TRENCH.

WATER MAIN SPECIFICATION

CALC. BY. WRS DATE 8-12-83	SUM-8-1.73/1.95	OHIO
CHKD. BY. ____ DATE ____		F.H.W.A. REGION 5

73/204

C. PROTECTION OF PIPE COATING: PIPE SHALL BE HANDLED IN SUCH MANNER THAT A MINIMUM AMOUNT OF DAMAGE TO THE COATING WILL RESULT. ANY DUCTILE IRON PIPE OR FITTING, THE COATING OF WHICH HAS BEEN DAMAGED IN SHIPPING OR HANDLING, SHALL HAVE THE DAMAGED PORTION WELL CLEANED AND COVERED WITH AN ASPHALT PAINT, APPROVED BY THE ENGINEER, BEFORE BEING PLACED IN THE WORK. THE CONTRACTOR SHALL THOROUGHLY COAT ALL EXPOSED PARTS OF BOLTS AND NUTS WITH AN APPROVED ASPHALT PAINT AFTER ALL PIPE HAS BEEN LAID AND BEFORE BACKFILLING HAS BEEN PLACED. ALL FIELD COATING SHALL BE FURNISHED BY THE CONTRACTOR.

D. PIPE KEPT CLEAN: THE INTERIOR OF THE PIPE, FITTINGS, AND OTHER ACCESSORIES SHALL BE KEPT FREE FROM DIRT AND FOREIGN MATTER AT ALL TIMES.

E. FROST PROTECTION: VALVES AND HYDRANTS BEFORE INSTALLATION SHALL BE DRAINED AND STORED IN A MANNER THAT WILL PROTECT THEM FROM DAMAGE BY FREEZING.

CHANGES IN WATER PIPES

WHEREVER IT BECOMES NECESSARY, IN THE OPINION OF THE ENGINEER, TO CHANGE THE LOCATION OR ELEVATION OF WATER MAINS AND WHERE CONNECTIONS ARE TO BE MADE BETWEEN EXISTING DISTRIBUTION MAINS AND WATER MAINS UNDER THIS CONTRACT, THE CONTRACTOR SHALL REMOVE AND DISPOSE OF ALL EXISTING WATERLINE MATERIALS REQUIRED TO MAKE THE CONNECTION AND SHALL FURNISH AND INSTALL COMPLETE ALL THE DUCTILE IRON PIPE, FITTINGS, AND VALVES TO MAKE THE CONNECTIONS INDICATED. THE CONTRACTOR SHALL ALSO FURNISH ALL NECESSARY LABOR, MATERIALS, TOOLS, AND EQUIPMENT AND MAKE THE EXCAVATION, BACKFILL, AND REPAVING FOR SUCH CONNECTIONS. PAYMENT FOR THIS WILL BE INCLUDED IN PRICE BID UNDER APPROPRIATE ITEM FOR SIZE OF WATER MAIN OR CONNECTION TO BE INSTALLED. ALL PIPES, VALVES, AND APPURTENANCES REMOVED SHALL REMAIN THE PROPERTY OF THE CITY OF AKRON. (SEE WORK TO BE DONE BY THE CITY.)

EXCAVATION (814.05)

A. THE CONTRACTOR SHALL REMOVE ALL EXISTING STRUCTURE, ROADWAYS, DRIVEWAYS, AND OTHER SIMILAR MATERIALS AND MAKE TO THE LINES AND GRADES GIVEN, ALL EXCAVATION NECESSARY FOR THE PROPER CONSTRUCTION OF THE WATER MAIN, PIPE CONNECTIONS, AND APPURTENANT STRUCTURE, INCLUDING TUNNEL AND SHAFT EXCAVATION. THE EXCAVATION SHALL INCLUDE THE REMOVAL, HANDLING, REHANDLING, AND DISPOSAL OF MATERIALS ENCOUNTERED IN THE WORK AND SHALL INCLUDE ALL PUMPING, BAILING, DRAINING, SHEETING, AND BRACING. MOREOVER, THE CONTRACTOR MUST ASSUME ALL RESPONSIBILITY FOR ANY ADDED EXPENSE OR OTHER LIABILITY WHICH MAY ARISE BY MEANS OF QUICKSAND, OBSTACLES OR CONDITIONS FORESEEN OR UNFORESEEN AND ENCOUNTERED IN THE WORK OF THIS CONTRACT.

B. TRENCHES SHALL, IN EVERY CASE, BE OF SUFFICIENT WIDTH TO PERMIT SOLID PACKING OR REFILL UNDER AND AROUND PIPES AND SATISFACTORY CONSTRUCTION OF ALL APPURTENANCES AND FOR SUCH SHEETING AND BRACING AND PUMPING AND DRAINING AS MAY BE NECESSARY.

C. THE TRENCH SHALL BE DUG TO THE ALIGNMENT AND DEPTH REQUIRED AND ONLY SO FAR IN ADVANCE OF PIPE LAYING AS THE ENGINEER SHALL PERMIT. THE TRENCH SHALL BE SO BRACED AND DRAINED THAT WORKMEN MAY WORK THEREIN SAFELY AND EFFICIENTLY. IT IS ESSENTIAL THAT THE DISCHARGE FROM PUMPS BE LED TO NATURAL DRAINAGE CHANNELS, TO DRAINS, OR TO SEWERS.

D. THE TRENCH WIDTH MAY VARY WITH AND DEPEND UPON THE DEPTH OF TRENCH AND THE NATURE OF THE EXCAVATED MATERIAL ENCOUNTERED, BUT, IN ANY CASE, SHALL BE OF AMPLE WIDTH TO PERMIT THE PIPE TO BE LAID AND JOINTED PROPERLY AND OF THE BACKFILL TO BE PLACED AND COMPACTED PROPERLY. THE MINIMUM WIDTH OF UNSHEETED TRENCH SHALL BE 18" AND FOR PIPE 10" OR LARGER, AT LEAST 12" LARGER THAN THE OUTSIDE DIAMETER OF THE PIPE FOR DUCTILE IRON AND STEEL PIPE. EXCEPT BY CONSENT OF THE ENGINEER, THE MAXIMUM CLEAN WIDTH OF TRENCH SHALL BE NOT MORE THAN 2' GREATER THAN THE OUTSIDE PIPE DIAMETER. WHEN SHEETING AND BRACING IS USED, THE TRENCH WIDTH SHALL BE INCREASED ACCORDINGLY.

E. THE TRENCH, UNLESS OTHERWISE SPECIFIED, SHALL HAVE A FLAT BOTTOM CONFORMING TO THE GRADE TO WHICH THE PIPE IS TO BE LAID. THE PIPE SHALL BE LAID UPON SOUND SOIL CUT TRUE AND EVEN, SO THAT THE BARREL OF THE PIPE WILL HAVE A BEARING FOR ITS FULL LENGTH.

F. ANY PART OF THE TRENCH EXCAVATED BELOW GRADE SHALL BE CORRECTED WITH APPROVED MATERIAL, THOROUGHLY COMPACTED.

G. WHEN THE UNCOVERED TRENCH BOTTOM AT SUBGRADE IS SOFT AND, IN THE OPINION OF THE ENGINEER, CANNOT SUPPORT THE PIPE, A FURTHER DEPTH AND/OR WIDTH SHALL BE EXCAVATED AND REFILLED TO PIPE FOUNDATION GRADE AS REQUIRED UNDER (F), OR OTHER APPROVED MEANS SHALL BE ADOPTED TO ASSURE A FIRM FOUNDATION FOR THE PIPE.

H. LEDGE ROCK, BOULDERS, LARGE STONES, AND SHALE SHALL BE REMOVED TO PROVIDE A CLEARANCE OF AT LEAST 6" BELOW ALL PARTS OF THE PIPE, VALVES, OR FITTINGS, AND TO A CLEAR WIDTH OF 9" ON EACH SIDE OF ALL DUCTILE IRON AND STEEL PIPE.

I. EXCAVATION BELOW SUBGRADE IN ROCK, SHALE, OR IN BOULDERS SHALL BE REFILLED TO SUBGRADE WITH APPROVED MATERIAL, THOROUGHLY COMPACTED.

J. BELL HOLES OF AMPLE DIMENSIONS SHALL BE DUG IN EARTH TRENCHES AT EACH JOINT TO PERMIT THE JOINTING TO BE MADE PROPERLY. ADEQUATE CLEARANCE FOR PROPERLY JOINTING PIPE LAID IN ROCK SHALL BE PROVIDED AT BELL HOLES.

K. THE USE OF EXCAVATING MACHINERY WILL BE PERMITTED EXCEPT IN PLACES WHERE OPERATION OF SAME WILL CAUSE DAMAGE TO TREES, BUILDINGS, OR EXISTING STRUCTURES ABOVE OR BELOW GROUND, IN WHICH CASE, HAND METHODS SHALL BE EMPLOYED.

L. TREES, FENCES, POLES, AND ALL OTHER PROPERTY SHALL BE PROTECTED UNLESS THEIR REMOVAL IS AUTHORIZED. ANY PROPERTY DAMAGED SHALL BE SATISFACTORILY RESTORED BY THE CONTRACTOR.

M. HYDRANTS UNDER PRESSURE, VALVE PIT COVERS, VALVE BOXES, CURB STOP BOXES, FIRE OR POLICE CALL BOXES, OR OTHER UTILITY CONTROLS SHALL BE LEFT UNOBSTRUCTED AND ACCESSIBLE DURING THE CONSTRUCTION PERIOD.

N. THE CONTRACTOR SHALL MAINTAIN ALL EXCAVATIONS IN GOOD ORDER DURING THE CONSTRUCTION SO AS NOT TO HINDER OR INJURE THE PIPE LAYING, MASONRY, OR OTHER WORK. HE SHALL TAKE ALL REASONABLE PRECAUTIONS TO PREVENT MOVEMENT OF THE SIDES OF SUCH EXCAVATION, AND SHALL REMOVE AT HIS OWN EXPENSE ANY MATERIAL SLIDING INTO THE EXCAVATION.

SHEETING AND BRACING

A. THE CONTRACTOR SHALL FURNISH AND PUT IN PLACE SUCH SHEETING AND BRACING AS MAY BE REQUIRED TO SUPPORT THE SIDES OF TRENCHES OR OTHER EXCAVATION AND SHALL REMOVE SUCH SHEETINGS AND BRACINGS AS THE TRENCH OR EXCAVATION IS FILLED UP.

B. WHENEVER THE EXCAVATIONS FOR THE WORK HEREIN TO BE DONE ARE IMMEDIATELY ADJACENT TO OTHER SUBSURFACE STRUCTURES, THE CONTRACTOR SHALL FURNISH AND PLACE SHEETING AND BRACING WHERE NOTED ON CONTRACT DRAWINGS AND AS MAY BE NECESSARY, SO AS TO REDUCE TO A MINIMUM THE POSSIBILITY OF INJURING OR DAMAGING THE SAME.

C. IF THE ENGINEER IS OF THE OPINION THAT AT ANY POINT SUFFICIENT OR PROPER SUPPORTS, SHEETING, OR BRACINGS HAVE NOT BEEN PROVIDED, HE MAY ORDER ADDITIONAL SUPPORTS, SHEETING, OR BRACING AT THE EXPENSE OF THE CONTRACTOR AND THE COMPLIANCE WITH SUCH ORDERS BY THE CONTRACTOR SHALL NOT RELIEVE OR RELEASE HIM FROM HIS RESPONSIBILITY FOR SUFFICIENCY OF SUCH SUPPORTS.

REMOVAL OF EXCAVATED MATERIAL

THIS ITEM SHALL BE AS SPECIFIED IN SECTION 203.05 OF STATE OF OHIO, DEPARTMENT OF TRANSPORTATION, CONSTRUCTION AND MATERIAL SPECIFICATIONS DATED JANUARY 1, 1983.

LAYING PIPE (814.06)

A. PROPER IMPLEMENTS, TOOLS, AND FACILITIES, SATISFACTORY TO THE ENGINEER, SHALL BE PROVIDED AND USED BY THE CONTRACTOR FOR THE SAFE AND CONVENIENT PROSECUTION OF THE WORK. ALL PIPE, FITTINGS, AND VALVES SHALL BE CAREFULLY LOWERED INTO THE TRENCH PIECE BY PIECE BY MEANS OF DERRICK, PROPER SLINGS, AND OTHER SUITABLE TOOLS OR EQUIPMENT IN SUCH MANNER AS TO PREVENT DAMAGE TO PIPE OR COATING. UNDER NO CIRCUMSTANCES SHALL PIPE OR ACCESSORIES BE DROPPED OR DUMPED INTO THE TRENCH. IF ANY DEFECTIVE PIECE IS DISCOVERED WHILE PIPE IS SUSPENDED OR AFTER BEING LAID, A NEW PIECE SHALL BE FURNISHED AND INSTALLED BY THE CONTRACTOR AT THE SITE OF THE WORK.

B. ALL FOREIGN MATTER OR DIRT SHALL BE REMOVED FROM THE INSIDE OF THE PIPE BEFORE IT IS LOWERED INTO ITS POSITION IN THE TRENCH, AND IT SHALL BE KEPT CLEAN BY APPROVED MEANS DURING AND AFTER LAYING.

C. AT TIMES, WHEN PIPE LAYING IS NOT IN PROGRESS, THE OPEN ENDS OF PIPE SHALL BE CLOSED BY APPROVED MEANS, AND NO TRENCH WATER SHALL BE PERMITTED TO ENTER THE PIPE. NO PIPE SHALL BE LAID IN WATER OR WHEN THE TRENCH CONDITIONS OR THE WEATHER IS UNSUITABLE FOR SUCH WORK, EXCEPT BY PERMISSION OF THE ENGINEER.

D. WHEREVER NECESSARY TO DEFLECT PIPE FROM A STRAIGHT LINE, EITHER IN THE VERTICAL OR HORIZONTAL PLANE TO AVOID OBSTRUCTIONS, TO PLUMB STEMS, OR FOR OTHER REASONS, THE DEGREE OF DEFLECTION SHALL BE APPROVED BY THE ENGINEER.

E. BEFORE LAYING DUCTILE IRON PIPE, ALL LUMPS, BLISTERS, AND EXCESS COAL TAR COATING SHALL BE REMOVED FROM THE BELL AND SPIGOT ENDS OF EACH PIPE. THE PIPE ENDS SHALL THEN BE KEPT CLEAN UNTIL JOINTS ARE MADE.

BACKFILLING (814.08)

A. THIS WORK INCLUDES ALL BACKFILLING, TOGETHER WITH RAMMING, PUDDLING, AND ROLLING, AS REQUIRED, THE REGRADING OF GROUNDS, THE REPLACING OF SURFACE AND SUBSURFACE STRUCTURES, THE PLACING AND MAINTAINING OF TEMPORARY SIDEWALKS AND DRIVEWAYS, THE FURNISHING OF SUITABLE MATERIAL FOR BACKFILL, RESEEDING LAWNS AND REPLACING TREES AND SHRUBBERY DAMAGED BY THE CONTRACTOR, AND ALL APPURTENANT WORK INCIDENTAL THERETO. PAVEMENTS, CURBS, SIDEWALKS, AND DRIVEWAYS WITHIN THE LIMITS OF THE WORK SHALL BE TEMPORARILY SURFACED, MAINTAINED, AND FINALLY REPLACED OR REPAVED AS SET FORTH UNDER "ROAD SURFACES, SIDEWALKS, DRIVEWAYS, AND CURBING." (SEE SECOND COLUMN.)

B. BACKFILL, UNLESS OTHERWISE SPECIFIED, MAY BE MADE WITH MATERIAL EXCAVATED FROM THE TRENCHES, PROVIDING SAME IS SATISFACTORY TO THE ENGINEER. IF, IN THE OPINION OF THE ENGINEER, THE MATERIAL EXCAVATED IS UNSATISFACTORY, THEN THE CONTRACTOR SHALL FURNISH AT HIS OWN EXPENSE OTHER MATERIAL SUITABLE FOR BACKFILL. ALL BACKFILL SHALL BE FREE FROM SLAB, CINDERS, RUBBISH, AND OTHER OBJECTIONABLE MATERIAL.

C. BEFORE LAYING THE PIPE, THE BOTTOM OF THE TRENCH SHALL BE BROUGHT TO THE GRADE OF THE BOTTOM OF THE PIPE, EXCEPT AT FIELD JOINTS. WHEREVER THE BOTTOM OF THE TRENCH HAS BEEN EXCAVATED BELOW THE BOTTOM OF THE PIPE, THE CONTRACTOR SHALL PLACE SAND OR OTHER MATERIAL SATISFACTORY TO THE ENGINEER TO BRING THE BOTTOM OF THE TRENCH TO THE GRADE OF THE BOTTOM OF THE PIPE. THIS BED SHALL BE THOROUGHLY TAMPED BEFORE THE PIPE IS LAID.

D. UNLESS OTHERWISE SPECIFIED, THE BACKFILL UNDER, AROUND, AND TO A DEPTH OF 1' ABOVE THE TOP OF ALL PIPE SHALL BE MADE WITH MATERIAL SATISFACTORY TO THE ENGINEER, WHICH MATERIAL SHALL BE FREE FROM STONE AND OTHER OBJECTIONABLE MATERIAL NOTED ABOVE. THE CONTRACTOR MUST USE SPECIAL CARE IN PLACING THIS PORTION OF THE BACKFILL, SO AS TO AVOID INJURING, DISTORTING, OR MOVING THE PIPE WHEN COMPACTING SAME. ABOVE THIS LEVEL, THE BACKFILL SHALL BE MADE WITH MATERIAL SATISFACTORY TO THE ENGINEER. HOWEVER, WHERE SPECIFIED, SAND SHALL BE USED FOR THE ENTIRE PORTION OF THE BACKFILL - SEE PARAGRAPH H.

E. BACKFILLING, AS NOTED IN PARAGRAPH D, SHALL BE TAMPED IN THIN LAYERS, SIMULTANEOUSLY ON EACH SIDE OF THE PIPE, AND THOROUGHLY COMPACTED SO AS TO PROVIDE A SOLID BACKING AGAINST THE EXTERNAL SURFACE OF THE PIPE.

F. ONLY AFTER THE BACKFILL PREVIOUSLY MENTIONED HAS BEEN SATISFACTORILY COMPACTED, MAY WORK PROCEED IN PLACING THE REMAINING BACKFILL WHICH MUST BE CAREFULLY PLACED AND COMPACTED BY TAMPING, PUDDLING, OR ROLLING. ALL PRECUATIONS MUST BE TAKEN TO ELIMINATE FUTURE SETTLEMENT. THE NUMBER OF MEN TAMPING SHALL BE NOT LESS THAN THE NUMBER BACKFILLING, AND ADDITIONAL MEN SHALL BE KEPT IN THE TRENCH TO SPREAD THE MATERIAL.

G. BACKFILLING SHALL NOT BE DONE IN FREEZING WEATHER, EXCEPT BY PERMISSION OF THE ENGINEER, AND IT SHALL NOT BE MADE WITH FROZEN MATERIAL, NOR SHALL ANY FILL BE MADE WHERE THE MATERIAL ALREADY IN THE DITCH IS FROZEN.

WATER MAIN SPECIFICATION

H. THE ENTIRE BACKFILL SHALL BE MADE WITH SAND WHERE PERMANENT PAVEMENTS, CURBS, DRIVEWAYS, OR SIDEWALKS HAVE BEEN OPENED FOR OR UNDERCUT BY THE EXCAVATION.

I. ALL SAND TO BE USED FOR BACKFILL SHALL BE A NATURAL BANK SAND, GRADED FROM FINE TO COARSE, NOT LUMPY OR FROZEN, AND FREE FROM SLAB, CINDERS, ASHES, RUBBISH, OR OTHER DELETERIOUS OR OBJECTIONABLE MATERIALS. IT SHALL NOT CONTAIN A TOTAL OF MORE THAN 10 PERCENT BY WEIGHT OF LOAM AND CLAY, AND ALL MATERIAL MUST BE CAPABLE OF BEING PASSED THROUGH A 3/4" SIEVE. NOT MORE THAN 5 PERCENT SHALL REMAIN ON A NO. 4 SIEVE.

DUCTILE IRON PIPE AND FITTINGS (814.02)

WORK INCLUDED

THE CONTRACTOR SHALL FURNISH ALL THE MATERIALS FOR AND SHALL PROPERLY CONSTRUCT AND CONNECT IN PLACE AT THE LOCATION SHOWN ON THE DRAWINGS, OR AS DIRECTED, ALL DUCTILE IRON PIPE AND FITTINGS, INCLUDING ALL EXCAVATION WORK, THE CUTTING INTO AND REMOVAL OF EXISTING PIPE, BACKFILLING, SAND BACKFILL, AND REPAVING, ALL AS REQUIRED FOR THE PROPER COMPLETION OF THE WORK INCLUDED UNDER THIS CONTRACT.

A. ALL CENTRIFUGALLY CAST DUCTILE IRON PIPE SHALL BE MANUFACTURED IN STRICT CONFORMITY WITH THE AMERICAN NATIONAL STANDARDS INSTITUTE STANDARD A.N.S.I. - A 21.51-1971 AS APPROVED BY THE AMERICAN WATER WORKS ASSOCIATION. A.W.W.A. C-151-71 RESPECTIVELY, THE ABOVE STANDARDS CONSTITUTE AN ESSENTIAL PART OF THIS CONTRACT AND ARE HEREBY MADE SUCH PART THEREOF.

B. ALL DUCTILE IRON PIPE AND FITTINGS, UNLESS OTHERWISE SHOWN IN THE PLANS, SHALL BE CEMENT LINED AND OF THE SIZE AND CLASS NOTED ON THE RESPECTIVE CONTRACT DRAWINGS. EVERY PIPE SHALL BE MARKED IN ACCORDANCE WITH AMERICAN NATIONAL STANDARD A.N.S. A 21.51-1971 AND WITH LETTERS A.W.W.

C. THE THICKNESS OF THE CENTRIFUGALLY CAST DUCTILE IRON PIPE SHALL CONFORM TO THE FOLLOWING:

SIZE	WORKING PRESSURE	STANDARD THICKNESS	CLASS
16"	350	0.43	53

ALL FITTINGS, SUCH AS BENDS, TEES, CROSSES, OFFSETS, HYDRANT BRANCHES, ETC., SHALL HAVE BELL AND BELL OR BELL AND SPIGOT ENDS WITH CAST LEAD JOINTS. PIPE BETWEEN OFFSETS OR BENDS AND ON HYDRANT BRANCHES SHALL ALSO BE OF BELL AND SPIGOT TYPE WITH LEAD JOINTS.

D. ALL PIPE SHALL HAVE BELL AND SPIGOT ENDS FOR CAST LEAD JOINTS OR A SLIP ON TYPE JOINT WITH COMPRESSED RUBBER RING INSERTS. ALL PIPE AND FITTINGS SHALL BE CEMENT LINED.

E. GASKETS SHALL BE OF RUBBER OR OTHER EQUALLY EFFECTIVE PROTECTION AGAINST UNEVEN DISTORTION OF THE GASKET.

F. WHERE FITTINGS ARE SHOWN, WHICH ARE NOT COVERED BY THE ABOVE SPECIFICATIONS, THEY IN SUCH PARTICULARS AS ARE LACKING THEREON, SHALL CONFORM TO THE DIMENSIONS AND OTHERWISE MEET THE SPECIFICATIONS FOR THE RESPECTIVE TYPE WHICH ARE CARRIED IN THE LATEST REVISIONS TO THE CURRENT EDITION OF THE "HANDBOOK OF CAST IRON PIPE" BY THE CAST IRON PIPE RESEARCH ASSOCIATION OR WHICH ARE OTHERWISE SHOWN ON THE CONTRACT DRAWINGS.

G. WHEREVER CHANGES IN LINE AND GRADES OF THE MAIN AS SHOWN ON THE DRAWINGS ARE NOT STANDARD FITTING DEFLECTIONS, THE CONTRACTOR WILL BE PERMITTED TO SUBMIT DETAILS USING COMBINATIONS OF STANDARD FITTINGS AND SMALL DEFLECTIONS (NOT TO EXCEED A MAXIMUM OF 1/2" JOINT OPENING) IN THE ADJOINING LENGTHS OF PIPE.

H. PLUGS FOR BELL AND SPIGOT PIPE SHALL BE FURNISHED WITH TWO PLUGGED 1" TAPS FOR DRAIN AND AIR COCK CONNECTIONS.

I. CLOSURE PIECES SHALL BE ACCURATELY MEASURED AND CUT IN THE FIELD AND INSTALLED USING SOLID TYPE PATTERN SLEEVES AS SHOWN OR AS REQUIRED.

J. TESTS, INSPECTION, REPORTS, AND ANALYSES OF TESTS OF SAMPLES FOR ALL MATERIALS SHALL BE FURNISHED AS SET FORTH ELSEWHERE IN THESE NOTES.

K. BITUMASTIC COATING SHALL BE APPLIED ON THE EXTERIOR OF ALL DUCTILE IRON PIPE AND FITTINGS IN ACCORDANCE WITH A.W.W.A. SPECIFICATIONS.

CEMENT LINING

ALL DUTICLE IRON PIPE AND FITTINGS, UNLESS OTHERWISE SHOWN IN THE PLANS, SHALL BE GIVEN A CEMENT MORTAR LINING AT THE POINT OF MANUFACTURE. THE LINING SHALL CONFORM TO THE AMERICAN STANDARD SPECIFICATION. CEMENT LINED PIPE 16" SHALL BE LINED IN ACCORDANCE WITH A.N.S.I. STANDARD FOR CEMENT MORTAR LINING FOR CAST IRON PIPE AND FITTINGS - A21.4-1971 AS APPROVED BY THE AMERICAN WATER WORKS ASSOCIATION (A.W.W.A. C-104-71) OR LATEST REVISIONS THEREOF.

MARKING

ALL DUCTILE IRON PIPE AND FITTINGS SHALL BE MARKED IN ACCORDANCE WITH A.W.W.A. C-110-71 AND WITH THE LETTERS A.W. W.

LAYING

A. PROPER AND SUITABLE TOOLS AND APPLIANCES FOR THE SAFE AND CONVENIENT HANDLING AND LAYING OF THE PIPES AND FITTINGS SHALL BE USED. GREAT CARE SHALL BE TAKEN TO PREVENT THE PIPE COATING FROM BEING DAMAGED PARTICULARLY ON THE INSIDE OF PIPES AND FITTINGS AND ANY SUCH DAMAGE SHALL BE REMEDIED AS DIRECTED. ALL PIPES AND FITTINGS SHALL BE CAREFULLY EXAMINED BY THE CONTRACTOR FOR DEFECTS JUST BEFORE LAYING AND NO PIPE OR FITTINGS SHALL BE LAID WHICH IS KNOWN TO BE DEFECTIVE.

B. IF ANY DEFECTIVE PIPE IS DISCOVERED AFTER HAVING BEEN LAID, IT SHALL BE REMOVED AND REPLACED WITH A SOUND PIPE OR FITTING IN A SATISFACTORY MANNER BY THE CONTRACTOR AT HIS OWN EXPENSE. ALL PIPES AND FITTINGS SHALL BE THOROUGHLY CLEANED BEFORE THEY ARE LAID, SHALL BE KEPT CLEAN UNTIL THEY ARE USED IN THE COMPLETED WORK AND WHEN LAID SHALL CONFORM TO THE LINES AND GRADES GIVEN BY THE ENGINEER. OPEN ENDS OF PIPES SHALL BE KEPT PLUGGED WITH A BULKHEAD DURING CONSTRUCTION. IN NO EVENT SHALL ANY PORTION OF THE DAMAGED PIPE BE PERMITTED TO REMAIN IN THE LINE. ANY APPROVAL STAMPS FOUND ON THE PIPE SHALL BE REMOVED OR THE PIPE BROKEN UP FOR SCRAP.

C. PIPE LAID IN TRENCH SHALL BE LAID TO A FIRM AND EVEN BEARING FOR ITS FULL LENGTH. PRECAUTIONS SHALL BE TAKEN AGAINST FLOATING.

D. IT IS THE INTENTION OF THESE SPECIFICATIONS TO SECURE FIRST CLASS WORKMANSHIP IN THE PLACING OF PIPE AND ACCESSORIES. IN SUCH DETAILS AS ARE NOT SPECIFICALLY MENTIONED HEREIN OR CALLED FOR ON THE DRAWINGS, THE CONTRACTOR WILL BE REQUIRED TO CONFORM WITH THE APPLICABLE SECTIONS OF THE LATEST "STANDARD SPECIFICATIONS FOR LAYING CAST IRON PIPE" AS ADOPTED BY THE AMERICAN WATER WORKS ASSOCIATION.

CUTTING PIPE

WHENEVER THE PIPES REQUIRE CUTTING TO FIT INTO THE LINES, THE WORK SHALL BE DONE IN A SATISFACTORY MANNER SO AS TO LEAVE A SMOOTH END AT RIGHT ANGLES TO THE AXIS OF THE PIPE. IN NO EVENT SHALL FLAME CUTTING BE USED. WHEN A PIECE OF PIPE IS CUT TO FIT INTO THE LINE, NO PAYMENT WILL BE MADE FOR THE PORTION CUT OFF AND NOT USED IN THE LINE.

JOINTS - PUSH-ON

A. LEAD JOINTS: IN JOINTING ALL BELL AND SPIGOT PIPE AND FITTINGS HAVING LEAD JOINTS, THE SPIGOT OF EACH PIPE SHALL BE PROPERLY SEATED IN THE BELL OF THE NEXT ADJACENT PIECE AND ADJUSTED SO AS TO GIVE A UNIFORM ANNULAR SPACE. THE JOINT SHALL BE MADE WITH TWISTED HARD JUTE AND SOFT PIG LEAD. BEFORE PLACING THE JUTE, IT SHALL BE STERILIZED EITHER BY BOILING OR BY DIPPING IN A CONCENTRATED SOLUTION OF "HTH." THE JUTE SHALL BE TWISTED AND THOROUGHLY DRIVEN INTO THE BELL SO THAT THE LEAD, AFTER HAVING BEEN CAULKED, SHALL HAVE THE FOLLOWING DEPTH:

SIZE OF PIPE	DEPTH OF LEAD
16"	2 1/2"
SLEEVES	SOLID

THE FURNACE AND MELTING POT SHALL BE KEPT NEAR THE JOINT TO BE POURED AND EACH JOINT SHALL BE MADE WITH ONE POURING. DROSS SHALL NOT BE ALLOWED TO ACCUMULATE IN THE MELTING POT. THE JOINTS SHALL BE THOROUGHLY CAULKED BY COMPETENT PIPE JOINERS AND IN SUCH MANNER AS WILL SECURE A TIGHT JOINT WITHOUT OVERSTRAINING THE IRON OF THE BELL.

GASKETS AND LUBRICANT FURNISHED UNDER THESE SPECIFICATIONS FOR PUSH-ON JOINTS SHALL BE MANUFACTURED IN ACCORDANCE WITH A.N.S.I. STANDARD A 21.11-1971, AS APPROVED BY THE AMERICAN WATER WORKS ASSOCIATION (A.W.W.A C111-71) OR LATEST REVISION THEREOF.

PAINTING

AFTER ERECTION, ALL EXPOSED OR DAMAGED COATINGS AND ALL BOLTS FOR LUGGED JOINTS SHALL BE CLEANED AND PAINTED WITH THREE FIELD COATS OF INTEROL 50 OR BITUMASTIC 50 OR APPROVED EQUAL.

DRAWINGS

A. THE CONTRACTOR SHALL SUBMIT TO THE ENGINEER FOR APPROVAL DUPLICATE PRINTS OF ALL SHOP DRAWINGS FOR DUCTILE IRON PIPE AND FITTINGS AND MISCELLANEOUS DETAILS WHICH ARE NOT STANDARD CONSTRUCTION AND ARE NOT MENTIONED IN THE REGULAR CATALOGUE OF THE COMPANY FURNISHING THE PIPE. NO WORK SHALL BE DONE IN THE SHOP UNTIL AFTER THE DRAWINGS HAVE BEEN APPROVED.

MEASUREMENT

THE NUMBER OF LINEAL FEET OF DUCTILE IRON PIPE MAINS AND CONNECTIONS TO BE PAID FOR SHALL BE THE ACTUAL NUMBER OF LINEAL FEET FURNISHED AND PLACED IN ACCORDANCE WITH THESE SPECIFICATIONS AS MEASURED ALONG THE AXIS OF THE PIPING INCLUDING FITTINGS AND VALVES CONNECTED UP IN PLACE. FOR CONNECTION BETWEEN NEW AND EXISTING MAINS, MEASUREMENT SHALL BE THE DISTANCE FROM CENTERLINE TO CENTERLINE OF MAINS AND THE ACTUAL LENGTH OF EXISTING MAIN ORDERED TO BE REMOVED TO MAKE THE CONNECTION.

PAYMENT

THE FOOTAGE MEASURED AS PROVIDED ABOVE SHALL BE PAID FOR AT THE CONTRACT UNIT PRICE BID PER LINEAR FOOT FOR "ITEM 814 - WATER MAIN" CLASSIFIED AS TO SIZE AND TYPE, WHICH PRICE AND PAYMENT SHALL CONSTITUTE FULL COMPENSATION FOR EXCAVATING AND FOR FURNISHING, HAULING, PLACING, CUTTING INTO AND CONNECTING THE PIPE, PIPE BENDS, C.I. PLUGS AND CLAMPS AT DEAD ENDS, CONCRETE THRUST BLOCKS OR CONCRETE ANCHORS, SHEETING AND BRACING, SAND BACKFILL, WATER USED FOR COMPACTION, INCIDENTAL CONCRETE, THE REMOVAL OF ALL SURPLUS EXCAVATION AND DISCARDED MATERIAL, REPAVING, AND FOR THE FURNISHING OF ALL LABOR, MATERIALS, TOOLS, EQUIPMENT, AND INCIDENTALS NECESSARY TO COMPLETE THIS ITEM, EXCEPT FOR THE ITEMS SPECIFICALLY LISTED AS SEPARATE PAY ITEMS.

THE CHLORINATION BY THE CITY OF AKRON, DIVISION OF WATER, FOR THE NEWLY LAID WATER MAINS WHICH IS DESCRIBED UNDER "ADDITIONAL WORK, PART C CHLORINATION" WILL BE AT PROJECT EXPENSE.

REMOVAL ITEMS

ALL MATERIALS CONSISTING OF THE AIR RELEASE VALVE ASSEMBLY AND ALL APPURTENANCES WHICH ARE INDICATED FOR REMOVAL BY THE CONTRACTOR SHALL REMAIN THE PROPERTY OF THE CITY OF AKRON AND SHALL BE REMOVED TO A PLACE OF STORAGE DESIGNATED BY THE CITY ENGINEER.

SPECIFICATION 814.03

SHOULD THE CITY HAVE NO INSPECTOR AT THE WORKS, THE CONTRACTOR SHALL FURNISH A SWORN STATEMENT THAT THE INSPECTION AND ALL OF THE SPECIFIED TESTS HAVE BEEN MADE AND THE RESULTS THEREOF COMPLY WITH THE REQUIREMENTS OF THIS STANDARD.

TEMPORARY PLUGS

WHEN THE CONTRACTOR INSTALLS A WATER MAIN PLUG AND SUBSEQUENTLY REMOVES THE SAME PLUG UNDER PHASE CONSTRUCTION, SAID PLUG SHALL BE CLASSIFIED AS A TEMPORARY PLUG.

TEMPORARY PLUGS WILL NOT BE PAID FOR UNDER A SEPARATE PAY ITEM.

PAYMENT FOR TEMPORARY PLUGS SHALL BE INCLUDED IN THE UNIT PRICE BID FOR LINEAL FEET OF ITEM 814 - WATER MAINS TYPE AND SIZE SPECIFIED ON THE PLANS.

FLOATING

THE CONTRACTOR SHALL TAKE EVERY PRECAUTION AGAINST THE FLOATING OF THE PIPE DUE TO WATER COMING INTO THE TRENCH, OR THROUGH CAVING IN, FLUSHING OR PUDDLING. IN CASE OF SUCH FLOATING, THE CONTRACTOR SHALL REPLACE THE PIPE AT HIS OWN EXPENSE AND MAKE WHOLLY GOOD ANY INJURY OR DAMAGE WHICH MAY HAVE RESULTED.

TESTING (814.07)

AFTER THE PIPE HAS BEEN LAID AND THE MIDDLE PORTION OF EACH LENGTH BACKFILLED, LEAVING THE JOINTS EXPOSED, THE MAINS SHALL BE SLOWLY FILLED WITH WATER AND TESTED UNDER LOCAL LINE PRESSURE. WHILE UNDER THIS PRESSURE, THE MAIN SHALL BE INSPECTED FOR POOR JOINTS AND DEFECTIVE PIPE. IF THE MAIN, AS LAID, IS FOUND SATISFACTORY BY THE ENGINEER, THE TRENCH MAY BE BACKFILLED; OTHERWISE THE DEFECTIVE JOINTS SHALL BE REPAIRED OR DEFECTIVE PIPE REPLACED AND THE TEST REPEATED.

AFTER THE MAIN HAS BEEN FILLED WITH WATER AND WHEN, IN THE OPINION OF THE ENGINEER, FURTHER TESTING IS REQUIRED, A LEAKAGE TEST SHALL BE MADE UNDER A PRESSURE OF 50 POUNDS PER SQUARE INCH GREATER THAN MAXIMUM STATIC LINE PRESSURE. THE DURATION OF THE TEST SHALL BE 15 MINUTES AND THE LEAKAGE DURING THE TEST SHALL NOT EXCEED 75 GALLONS PER INCH DIAMETER PER MILE OF PIPE PER 24 HOURS. IN THE EVENT THAT THE MAIN FAILS TO MEET THE TEST REQUIREMENTS, THE ENGINEER MAY ORDER THE CONTRACTOR TO EXPOSE THE JOINTS AND DO OTHER WORK TO BRING THE LEAKAGE WITHIN THE SPECIFIED LIMIT.

THE MAIN SHALL BE TESTED IN LENGTHS OF NOT MORE THAN 2,000'. THE CONTRACTOR SHALL FURNISH THE NECESSARY PUMPS AND PIPE, MAKE ALL TAPS AND CONNECTIONS FOR MAKING THE TESTS, AND SHALL INSTALL AND REMOVE THE TEMPORARY BULKHEADS FURNISHED BY THE CITY. THE CITY WILL FURNISH GAUGES AND MEASURING DEVICES FOR THE TEST.

THE CONTRACTOR SHALL BE RESPONSIBLE FOR ANY DAMAGE TO THE TRENCH, PIPING OF ANY APPURTENANCES WHICH MAY ARISE FROM OR IN CONNECTION WITH THE TESTS AND ALL DAMAGED PIPE OR APPURTENANCES SHALL BE REPLACED BY THE CONTRACTOR IMMEDIATELY.

CLOSING VALVES

THE CLOSING OF ALL GATE VALVES ON EXISTING MAINS FOR MAKING CONNECTIONS, TESTS, OR FOR ANY OTHER CAUSE SHALL BE DONE BY THE CITY AND SUFFICIENT NOTICE SHALL BE GIVEN TO THE CITY, BY THE CONTRACTOR, SO THAT THE WORK MAY BE DONE WITH A MINIMUM OF INCONVENIENCE TO THE PUBLIC AND DELAY TO THE CONTRACTOR.

ITEM 814 - CUTTING AND PLUGGING EXISTING WATER MAINS AND BRANCHES

THE WORK INCLUDED UNDER THIS ITEM CONSISTS OF THE PLUGGING OF THE EXISTING WATER MAINS AND BRANCHES AT THE LOCATIONS SHOWN ON THE PLANS OR AS ORDERED BY THE ENGINEER. THE CONTRACTOR SHALL FURNISH AND HAUL THE CALK TYPE C.I. PLUGS AND STEEL CLAMPS AND ACCESSORIES FOR THE LOCATIONS SHOWN ON THE PLANS OR AS REQUIRED BY THE ENGINEER FOR THE PROPER COMPLETION OF THE WORK UNDER THIS CONTRACT. THE CONTRACTOR SHALL, IN ADDITION, DO ALL THE NECESSARY EXCAVATION, BACKFILLING, SURFACE RESTORATION AND CONCRETE PIERS AND WOOD BLOCKING. THE CONTRACTOR WILL CUT AND REMOVE A SECTION OF PIPE AND INSTALL THE C.I. PLUG AND CLAMPS AND ACCESSORIES AND SHALL MEET PUBLIC UTILITIES BUREAU INSPECTION APPROVAL. BASIS OF PAYMENT SHALL BE MADE PER ITEM 814 - CUTTING AND PLUGGING EXISTING WATER MAINS AND BRANCHES, OF THE SIZES SHOWN AND SHALL CONSITUTE FULL COMPENSATION FOR THE HAULING AND DELIVERING THE C.I. PLUG AND STEEL CLAMPS AND ACCESSORIES TO THE PROPER LOCATION INCLUDING PERFORMING ALL EXCAVATION, BACKFILLING, SURFACE RESTORATION, AND CONCRETE PIERS AND WOOD BACKING AND THE FURNISHING OF ALL LABOR, EQUIPMENT, AND SMALL TOOLS NECESSARY TO COMPLETE THE WORK AS SPECIFIED.

ITEM 814 - SERVICE STOP AND BOX REMOVED AND RESET (814.18)

THE WORK OF REMOVING AND RESETTING A STOP AND BOX WILL BE PERFORMED BY THE AKRON PUBLIC UTILITIES BUREAU. ALL NECESSARY EXCAVATION, BACKFILLING, AND SURFACE RESTORATION SHALL BE PERFORMED BY THE CONTRACTOR. BASIS OF PAYMENT SHALL BE MADE PER EACH ITEM 814 - SERVICE STOP AND BOX REMOVED AND RESET,

VALVE BOX ADJUSTED TO GRADE (814.18)

WHERE CALLED FOR ON THE PLANS, THE CONTRACTOR SHALL PERFORM THE NECESSARY WORK OF EXCAVATION AROUND THE VALVE BOX AND RESETTING THE TOP SECTION BY SCREWING UP OR DOWN THE CENTER SECTION, TO ADJUST TO THE NEW GRADE. IF AN EXTENSION IS NECESSARY TO REACH THE NEW GRADE, IT SHALL BE FURNISHED OR A NEW TOP SECTION FURNISHED, BY THE CONTRACTOR. THIS WORK, WHEN COMPLETED, SHALL GIVE AN UNDAMAGED VALVE BOX WITH THE TOP FLUSH WITH THE PAVEMENT OR NEW GROUND SURFACE AND SHALL BE PAID FOR AT THE UNIT PRICE BID PER EACH ITEM 814 - VALVE BOX ADJUSTED TO GRADE.

PLAIN CONCRETE MASONRY

THE CONTRACTOR SHALL FURNISH ALL NECESSARY LABOR, MATERIALS, TOOLS, AND EQUIPMENT FOR THE CONSTRUCTION, COMPLETE, OF ALL MISCELLANEOUS MASONRY STRUCTURES, INCLUDING ALL ANCHORS AND PIERS AT PIPE BENDS AND UNDER LINE VALVES, AND OTHER APPURTENANT WORK TOGETHER WITH THE HAULING, MIXING, PLACING, ALL AS SPECIFIED, REQUIRED OR SHOWN ON THE CONTRACT DRAWINGS.

MASONRY MATERIAL

(A) THE MATERIAL FURNISHED BY THE CONTRACTOR FOR THE VARIOUS KINDS OF MASONRY CONSTRUCTION TO BE CONSTRUCTED SHALL CONFORM TO THE FOLLOWING SPECIFICATIONS:

(B) PORTLAND CEMENT, A.S.T.M. C150, TYPE 1. STATE OF OHIO DEPARTMENT OF TRANSPORTATION SEPC. 701.04.

(C) AGGREGATE FOR PORTLAND CEMENT CONCRETE STATE OF OHIO DEPARTMENT OF TRANSPORTATION SPEC. 703.02.

PAYMENT FOR CONCRETE MASONRY SHALL BE INCLUDED WITH THE PERTINENT "ITEM 814" AND NO SEPARATE PAYMENT WILL BE MADE.

16" STEEL WATER MAIN

GENERAL

THIS ITEM CONSISTS OF FURNISHING AND INSTALLING A 16" STEEL WATER MAIN ON THE PERKINS STREET BRIDGE AS SHOWN ON THE DRAWINGS, INCLUDING STEEL CASING SLEEVES AS DETAILED ON THE PLANS AND ALL APPURTENANCES.

MATERIALS

STEEL CASING PIPE SHALL BE IN ACCORDANCE WITH A.W.W.A. SPECIFICATION C-202 LATEST REVISION. PIPE SIZE IS NOMINAL 30" O.D. WITH 0.50 WALL THICKNESS. PIPE LENGTHS SHALL BE AS SHOWN ON THE PLANS. ENDS SHALL BE PLAIN END FOR USE WITH DRESSER STYLE 38 COUPLINGS, AND DRESSER EXPANSION COUPLING TYPE 2 STYLE 63.

CONSTRUCTION

THE TRANSPORTATION AND HANDLING OF THE ENAMELED STEEL WATER MAIN PIPE AND STEEL CASING PIPE SHALL BE AS PROVIDED FOR IN A.W.W.A. SPECIFICATION C-204, COAL TAR ENAMEL PROTECTIVE COATING. PRIOR TO MANUFACTURE OF ALL PIPE AND FITTINGS, THE CONTRACTOR SHALL SUBMIT FOR APPROVAL ASSEMBLY AND DETAILED SHOP DRAWINGS OF PIPE AND BENDS AND FITTINGS AND SUPPORTS. AFTER THE PIPE HAS BEEN SATISFACTORILY TESTED, THE CONTRACTOR SHALL COMPLETELY COVER ALL DRESSER TYPE COUPLINGS AND PORTIONS OF PIPE WHICH ARE UNCOATED AND UNWRAPPED BY ENCLOSING THE ENDS OF THE PIPE AND THE COUPLINGS WITH A TIGHT CANVAS OR LIGHT GUAGE METAL AND SHALL POUR THE SPACE INCLUDING THE EXTERIOR OF THE DRESSER COUPLINGS FULL OF COMPOUND OF THE SAME TYPE AS USED BY THE MANUFACTURER OF THE PIPE FOR ENAMEL COATING. THE 16" WATER MAIN PIPE SHALL THEN BE COVERED WITH 2" JOHNS-MANVILLE "METAL-ON" INSULATION OR APPROVED EQUAL AS DETAILED ON SHEET 78.

PROTECTIVE COATINGS FOR STEEL CASING PIPE

THE STEEL CASING PIPES SHALL BE COATED IN ACCORDANCE WITH A.W.W.A. SPECIFICATION C203-62. THE INSIDE OF ALL PIPE SHALL BE COATED WITH COAL TAR PRIMER FOLLOWED BY A HOT COAT OF COAL TAR ENAMEL APPLIED EITHER BY MECHANICAL OR MANUAL MEANS. THE OUTSIDE OF ALL PIPE TO BE PLACED ABOVE GROUND SHALL HAVE ONE COAT OF COAL TAR PRIMER TYPE A, ONE COAT OF HEAVY-BODIED COAL TAR COATING, ONE COAT OF HEAVY-BODIED TAR EMULSION.

PAYMENT

PAYMENT SHALL BE THE LUMP SUM PRICE BID FOR "ITEM 814 - 16" WATER MAIN" GALVANIZED EXTRA STRONG WELDED STEEL PIPE (A.S.T.M. A-53 GRADE B 16" O.D. X0.50" WALL THICKNESS) WHICH PRICE SHALL CONSTITUTE FULL COMPENSATION FOR FURNISHING ALL LABOR, MATERIALS, EQUIPMENT, TOOLS, AND INCIDENTALS NECESSARY TO COMPLETE THE ITEM AS SPECIFIED, INCLUDING THE FOLLOWING:

1. ALL HANGER ASSEMBLIES INSTALLED IN PLACE, INCLUDING HANGER RODS, PIPE ROLLERS, PIPE SADDLES.
2. ALL COUPLINGS INSTALLED, INCLUDING THOSE TO CONNECT THE STEEL PIPE TO THE DUCTILE IRON PIPE.
3. ALL INSULATION INSTALLED.
4. THE TWO 30" WALL SLEEVES AS DETAILED ON THE PLANS.
5. ALL NECESSARY MATERIAL, LABOR, EQUIPMENT, TOOLS, AND INCIDENTALS TO PROVIDE STERILIZATION AS DEFINED UNDER ITEM 814.01.

CALC. BY. DSB DATE 11-5-84	SUM-8-1.73/1.95	OHIO	76
CHKD. BY. ____ DATE ____		F.H.W.A. REGION 5	204

REMOVING AND RESETTING OF HYDRANT (814.13)

WORK INCLUDED

THE CONTRACTOR SHALL PERFORM ALL OPERATIONS NECESSARY FOR THE PROPER REMOVAL OF THE HYDRANT AT THE LOCATION SHOWN ON THE PLANS. THE CONTRACTOR SHALL INSPECT, CLEAN, AND RESET THE HYDRANT AT THE LOCATION SHOWN ON THE CONTRACT DRAWINGS, FURNISHING ALL MATERIAL, LABOR, TOOLS, AND EQUIPMENT REQUIRED FOR THE PROPER COMPLETION OF THE WORK INCLUDED UNDER THIS CONTRACT.

PAYMENT

THE UNIT PRICE STIPULATED TO BE PAID FOR EACH "ITEM 814 - FIRE HYDRANT REMOVED AND RESET WHICH PRICE AND PAYMENT SHALL INCLUDE THE REMOVING, INSPECTION, CLEANING, SETTING, CONNECTING, TESTING, PAINTING, EXCAVATION, SHEETING AND BRACING, BACKFILLING, SEEDING AND SODDING, REPAVING, PIPE OR FITTINGS, AND THE FURNISHING OF ALL LABOR MATERIAL, TOOLS, AND APPLIANCES NECESSARY TO COMPLETE THE WORK AS SPECIFIED OR AS SHOWN.

SETTING

THE HYDRANT SHALL BE RESET AS FOLLOWS:

(A) GENERAL LOCATION: HYDRANT SHALL BE LOCATED IN A MANNER TO PROVIDE COMPLETE ACCESSIBILITY AND IN SUCH MANNER THAT THE POSSIBILITY OF DAMAGE FROM VEHICLES OR INJURY TO PEDESTRIANS WILL BE MINIMIZED. UNLESS OTHERWISE DIRECTED, THE SETTING OF ANY FIRE HYDRANT SHALL CONFORM TO THE FOLLOWING:

(B) LOCATION REGARDING CURB LINES: WHEN PLACED BEHIND CURB, THE HYDRANT BARREL SHALL BE SET SO THAT CENTER OF BARREL WILL BE NO LESS THAN 3' FROM THE GUTTER FACE OF THE CURB OR DEVIATE FROM LOCATION INDICATED ON CONTRACT DRAWINGS EXCEPT BY CONSENT OF THE ENGINEER.

(C) LOCATION REGARDING SIDEWALK: WHEN SET IN THE LAWN SPACE BETWEEN THE CURB AND THE SIDEWALK OR BETWEEN THE SIDEWALK AND THE PROPERTY LINE, NO PORTION OF THE HYDRANT OR NOZZLE CAP SHALL BE WITHIN 6" OF THE PROPERTY LINE.

(D) POSITION OF NOZZLES: THE HYDRANT SHALL STAND PLUMB WITH NOZZLE POINTING TOWARD CURB AND AT AN ANGLE OF FORTY-FIVE DEGREES THEREFROM. WHERE HYDRANT BRANCH PIPING IS PARALLEL WITH, OR NOT AT RIGHT-ANGLES TO CURB, THE CONTRACTOR SHALL RELEASE SWIVEL HEAD BOLTS AND ADJUST HYDRANT NOZZLES TO FACE CURB AT PROPER ANGLE. HYDRANT WITHOUT SWIVEL HEADS WILL BE ADJUSTED BY THE CITY WHERE NECESSARY TO CORRECT ANGLE ON NOZZLES WITH CURBING. ELEVATION SHALL CONFORM TO THE ESTABLISHED GRADE WITH TOPS OF FROST CASING AT LEAST 4" ABOVE GRADE.

(E) CONNECTION TO MAIN: THE FIRE HYDRANT SHALL BE CONNECTED TO THE MAIN PIPE WITH A CAST IRON BRANCH CONTROLLED BY THE INDEPENDENT GATE VALVE OF THE SAME SIZE AS FIRE HYDRANT EXCEPT AS OTHERWISE DIRECTED.

(F) DRAINAGE AT HYDRANT: DRAINAGE SHALL BE PROVIDED AT BASE OF THE HYDRANT BY FILLING AROUND ELBOW WITH COARSE GRAVEL OR CRUSHED STONE TO AT LEAST 6" ABOVE THE WASTE OPENING. WHEREVER HYDRANT IS SET IN ROCK, CLAY OR OTHER IMPERVIOUS SOIL, THE TRENCH SHALL BE SIDENED AND DEEPENED ON EACH SIDE OF HYDRANT BASE. WHICH SPACE SHALL BE FILLED COMPACTLY WITH COARSE GRAVEL OR BROKEN STONE MIXED WITH COARSE SAND OF SUFFICIENT QUANTITY TO ABSORB ALL WATER TO BE DRAINED FROM HYDRANT WHEN VALVE IS CLOSED.

(G) ANCHORAGE FOR HYDRANT: THE HYDRANT SHALL BE SET ON A STONE SLAB OR SIMILAR FOUNDATION AND BASE OF HYDRANT AND HYDRANT TEE WELL BRACED AGAINST UNEXCAVATED EARTH AT THE END OF THE TRENCH WITH CONCRETE BACKING OR IT SHALL BE TIED TO THE PIPE WITH SUITABLE RODS OR CLAMPS AS DIRECTED BY THE ENGINEER.

(H) CLEANING: HYDRANT SHALL BE THOROUGHLY CLEANED OF DIRT OR FOREIGN MATTER BEFORE SETTING.

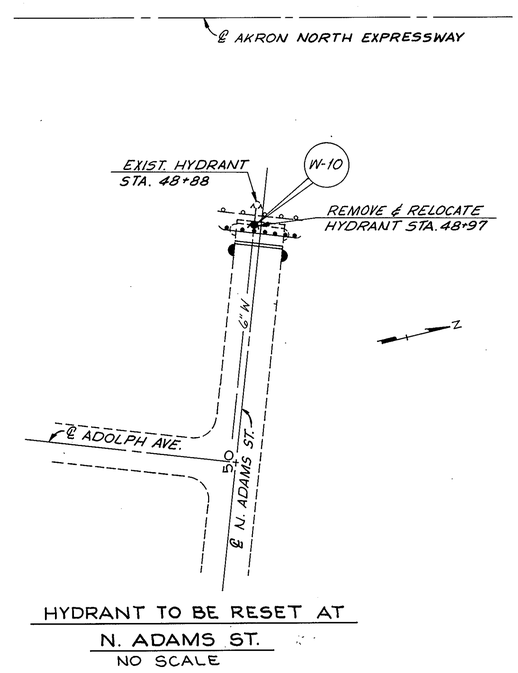

HYDRANT TO BE RESET AT N. ADAMS ST.
NO SCALE

WATER MAIN SPECIFICATION

AA B/P# 71942R

CALC. BY. B.R.S. DATE 8/15/83	SUM – 8 – 1.73 / 1.95	OHIO	77
CHKD. BY. D.S.B. DATE 11/16/83		F.H.W.A. REGION 5	204

ITEM 814 - ESTIMATED QUANTITIES

REF. NO.	DESCRIPTION	QUAN.	UNIT
W-1	REMOVE AIR RELEASE ASSEMBLY	1	EACH
W-2	16" WATER MAIN (STEEL PIPE)	112	LIN. FT.
W-D	16" WATER MAIN CLASS 53 A.N.S.I. A. 21.51	144	LIN. FT.
	WITH LEAD JOINTS, ALL CEMENT LINED (D.I. PIPE)		
W-3	MANUAL AIR RELEASE ASSEMBLY, COMPLETE	1	EACH
W4-8	VALVE BOX ADJUSTED TO GRADE	5	EACH
W-9	*Service Stop and Box Removed and Reset*	1	EACH

BEGIN 16" WATER MAIN RELOC.
PERKINS ST. STA. 48+64±, 25' LT. ℄

℄ RAMP "I"

72'± 16" D.I. PIPE (CLASS 53 PIPE)

2-22½° VERT. BENDS (ROTATE)

112'± 16" STL. PIPE

FOR DETAILS ON STRUCTURE SEE SHEET NO. 77 & 78

72'± 16" D.I. PIPE (CLASS 53 PIPE)

2-22½° VERT. BENDS (ROTATE)

℄ RAMP "J"

END 16" WATER MAIN RELOC.
PERKINS ST. STA. 51+20±, 25' LT. ℄

30" O.D. STEEL CASING STEEL

30" O.D. STEEL CASING SLEEVE

RELOC. WATER MAIN

EXIST. WATER MAIN

EXIST. 1" AIR RELEASE

W 16"

10"G

25'

26.4'

℄ PERKINS STREET

48 49 50 51 52 53

TEST TO HERE *

TEST TO HERE *

16" VALVE

7.8'

19.9'

19.8'

℄ GOOD ST.

EXIST. 10' CONC. WALK

PROP. 5' CONC. WALK

℄ S.R. 8

514

STA. 514+44.65 ℄ S.R. 8 =
STA. 49+92.32 ℄ PERKINS ST.

℄ ADOLPH AVE.

PERKINS ST.
STA. 51+56, 15' LT. ℄
EXTEND VALVE BOX TO GRADE W/VALVE BOX TOP EXTENSION

PROP. 5' CONC. WALK

EX. 5' CONC. WALK

16" VALVE

8" VALVE

M.H.

EXIST. 8" SAN.

8"

6" VALVE

EXIST. CONC. WALK

PROP 5' CONC. WALK

№153
№151

№ 416

PERKINS ST.
STA. 51+50, 11' RT. ℄
EXTEND VALVE BOX TO GRADE W/VALVE BOX TOP EXTENSION

PERKINS ST.
STA. 51+56, 10.5' RT.
EXTEND VALVE BOX TO GRADE W/VALVE BOX TOP EXTENSION

ADOLPH AVE.

EXIST. 5' CONC. WALK

PERKINS ST.
STA. 52+36, 33' LT. ℄
VALVE BOX ADJUSTED TO GRADE

PERKINS ST.
STA. 52+36, 12.5' RT. ℄
VALVE BOX ADJUSTED TO GRADE

№ 149

NOTE: 16" WATER MAIN, PERKINS ST. ALL PROP. WATER MAIN RELOCATION, PIPE, PIPE SUPPORTS, HANGERS, ANCHORS, STRAPS REMOVAL OR INSTALLATION, TOGETHER WITH ANY ADJUSTMENTS, ETC., AND ALL RELATED WORK SHALL BE DONE BY THE CONTRACTOR AND SHALL MEET THE APPROVAL OF THE CITY OF AKRON PUBLIC UTILITIES BUREAU ENGINEER AND THE PUBLIC UTILITIES BUREAU MANAGER AND SHALL MEET THE CITY OF AKRON WATER SUPPLY DIVISION RULES, REGULATIONS AND STANDARDS.

* CONTRACTOR SHALL SUPPLY TEMPORARY PLUGS TO TEST NEW WATER MAIN BEFORE FINAL CONNECTIONS ARE MADE SEE WATER SPECIFICATION NOTES SHEET 15.

W STA. 0+14.58 = PERKINS ST. STA. 49+00.47, 26' LT. ℄
STD. 1"x1" CORP. COCK, MANUAL AIR RELEASE ASSEMBLY (SEE DETAIL THIS SHEET.)

TEST TO HERE *

P.V.I. STA. 49+25
EL. 1056.20
P.G. EL. 1055.47

PERKINS STREET
STRUCTURE LIMITS = 120.52'

TEST TO HERE *

P.V.I. STA. 51+00
EL. 1054.69
P.G. EL. 1054.57

PROP. GRADE
EXIST. GRADE
+3.00%
-0.86%
-1.81%
5'

EXIST. 16" D.I.W.M. CL. 53

150' V.C.

S.B. S.R. 8

N.B. S.R. 8.

100' V.C.

EXIST. 16" VALVE

EXIST. 16" D.I.W.M. CL. 53

49 50 51 52

112 LIN. FT. 16" O.D. STEEL PIPE

PROP. 144 LIN. FT. -16" I.D. CLASS 53 DUCTILE IRON PIPE WATER MAIN (FOR DETAILS SEE SHEETS NO. 77 & 78.)

BEGIN 16" WATER MAIN RELOC.
W STA. 0+00 = PERKINS ST.
STA. 48+64±, 25' LT. ℄
EXIST. P.H.I. HΔ 45°-
EXIST. 16"~45° HORIZ. BEND

W STA. 0+26.75
STA. 48+90.75, 25.5' LT. ℄
P.V.I. VΔ 22½°-16"~22½° VERT. BEND W/CONC. ANCHOR

W STA. 0+35.15
STA. 48+98.47, 26.4' LT. ℄
P.V.I. VΔ 22½°-16"~22½° VERT. BEND
DEFLECT PIPE

END 16" WATER MAIN RELOC.
W STA. 2+61.57 = PERKINS ST.
STA. 51+20±, 25' LT. ℄
EXIST. P.H.I. HΔ 22½°
EXIST. 16"~22½° HORIZ. BEND

W STA. 2+41.25 = PERKINS ST.
STA. 50+99.68, 25.5 LT. ℄
P.V.I. VΔ 22½°-16"~22½° VERT. BEND W/CONC. ANCHOR (ROTATE BEND)

W STA. 2+31.85 = PERKINS ST.
STA. 50+90.99, 26.4' LT. ℄
P.V.I. VΔ 22½°-16"~22½° VERT. BEND (ROTATE BEND TO ACHEIVE ALIGNMENT)
DEFLECT PIPE

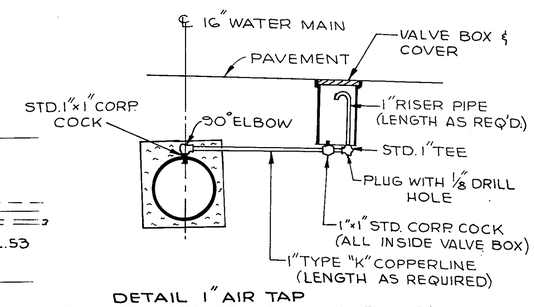

DETAIL 1" AIR TAP MANUAL AIR RELEASE ASSEMBLY
(NOT TO SCALE)

SCALE: HORIZ. 1"= 20'
VERT. 1"= 20'

UTILITIES ~ 16" WATER MAIN PERKINS STREET

AA B/Pe 71942R

CALC. BY. B.R.S. DATE 8/12/83	SUM – 8 – I.73 / I.95	OHIO
CHKD. BY. D.S.B. DATE 11/8/83		F.H.W.A. REGION 5

78 / 204

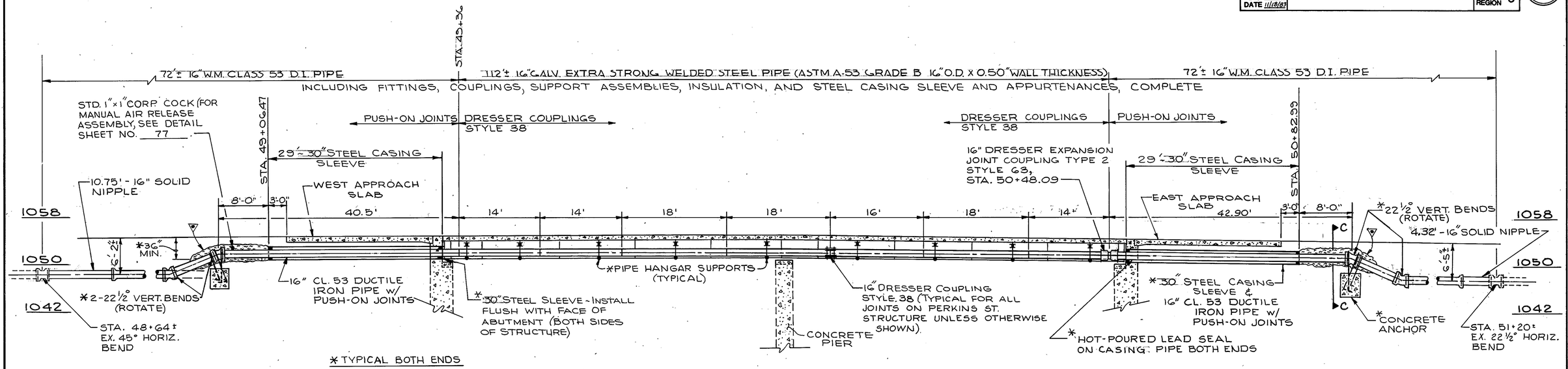

*TYPICAL BOTH ENDS

16" WATER MAIN – PERKINS ST. STRUCTURE

SCALE: 1/8" = 1'-0"

NOTE: 30" STEEL CASING SLEEVE SHALL BE INSTALLED AS TO PREVENT FORMATION OF A WATERWAY UNDER ROADWAY AND WITH AN EVEN BEARING THROUGH OUT ITS LENGTH AND SLOPE TO ONE END. THE CASING PIPE JOINTS SHALL BE WELDED WATER TIGHT.

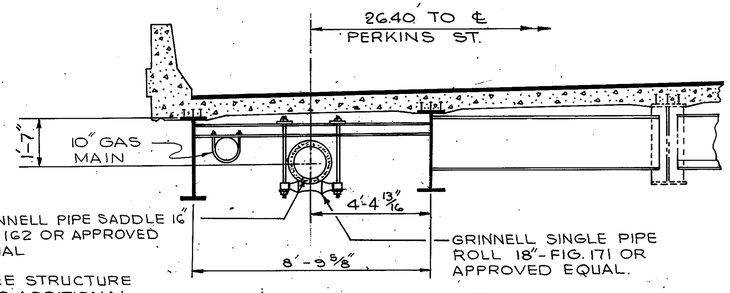

NOTE: SEE STRUCTURE PLANS FOR ADDITIONAL INFORMATION AND DETAILS ON PIPE SUPPORTS.

PIPE SUPPORT DETAIL

SCALE: 3/8" = 1'-0"

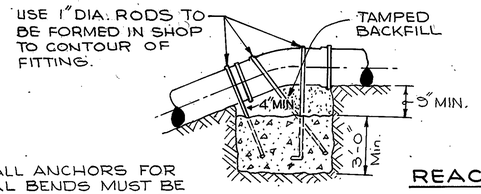

NOTE: ALL ANCHORS FOR VERTICAL BENDS MUST BE SET AND IN PLACE PRIOR TO TESTING AND FINAL CONNECTION.

SECTION A-A

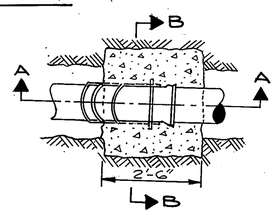

DETAIL
REACTION ANCHORAGE

TO BE USED WHERE REACTION BACKING IS REQUIRED FOR VERTICAL BENDS
NO SCALE

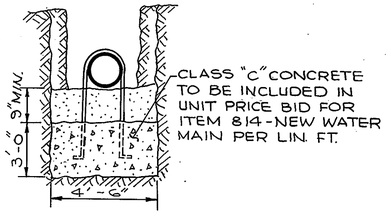

SECTION B-B

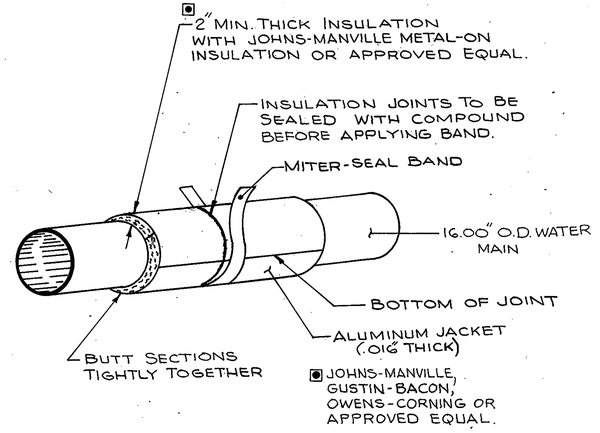

DETAIL - PIPE INSULATION ON BRIDGE

NO SCALE

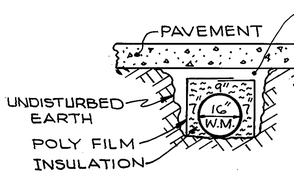

WITCO-LITE BY THE PIONEER DIVISION OF WITCO CHEMICAL, GILSO-GUARD BY THE AMERICAN GILSONITE CO. OR APROVED EQUAL, TO BE INCLUDED IN THE BID PRICE - ITEM 814-16" WATER MAIN, DUCTILE IRON PIPE.

SECTION C-C

* POURED INSULATION / LESS 36" COVER

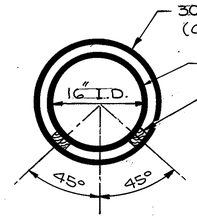

DETAIL 16" W.M. SET IN STEEL SLEEVE CASING

NOT TO SCALE

WATER MAIN PROFILE & DETAILS

TRAFFIC CONTROL GENERAL NOTES

CALC. BY. DATE	SUM-8-1.73/1.95	OHIO	79
CHKD. BY. DATE		F.H.W.A. REGION 5	204

614 TEMPORARY MAINTENANCE OF TRAFFIC SIGNAL INSTALLATIONS

INCIDENTAL TO THE REQUIREMENTS FOR MAINTAINING TRAFFIC IN ACCORDANCE WITH 614.03, THE CONTRACTOR SHALL BE RESPONSIBLE FOR MAINTAINING TRAFFIC SIGNAL INSTALLATIONS UNDER THE FOLLOWING CONDITIONS:

A) EXISTING SIGNAL INSTALLATIONS WHICH THE PLANS REQUIRE THE CONTRACTOR TO ADJUST, MODIFY, ADD ONTO OR REMOVE, OR WHICH THE CONTRACTOR ACTUALLY ADJUSTS, MODIFIES OR OTHERWISE DISTURBS. THE CONTRACTOR SHALL BE RESPONSIBLE FOR THE ENTIRE INSTALLATION (AT AN INTERSECTION) FROM THE TIME HIS OPERATIONS FIRST DISTURBS THE INSTALLATION UNTIL THE INSTALLATION HAS BEEN SUBSEQUENTLY REMOVED OR MODIFIED AND THE WORK IS ACCEPTED.

B) NEW SIGNAL INSTALLATIONS OR DEVICES, INSTALLED BY THE CONTRACTOR. THE CONTRACTOR SHALL BE RESPONSIBLE FOR MAINTENANCE OF THESE FROM THE TIME OF INSTALLATION UNTIL THE WORK IS ACCEPTED.

THE NORMAL MAINTENANCE OF EXISTING SIGNALS SHALL BE THE RESPONSIBILITY OF THE CITY OF AKRON. OUTAGES, OTHER THAN THAT OF NORMAL WEAR, SHALL BE THE RESPONSIBILITY OF THE CONTRACTOR.

THE CONTRACTOR SHALL CORRECT AS QUICKLY AS POSSIBLE ALL OUTAGES OR MALFUNCTIONS. HE SHALL PROVIDE THE CITY OF AKRON AND THE ENGINEER SUCH ADDRESSES AND PHONE NUMBERS WHERE HIS MAINTENANCE FORCES CAN BE CONTACTED. THE CONTRACTOR SHALL PROVIDE ONE OR MORE PERSONS TO RECEIVE ALL CALLS AND DISPATCH THE NECESSARY MAINTENANCE FORCES TO CORRECT OUTAGES. SUCH A PERSON OR PERSONS MAY BE USED TO PERFORM OTHER DUTIES AS LONG AS PROMPT ATTENTION IS GIVEN TO THESE CALLS AND A PERSON IS READILY AVAILABLE CONTINUOUSLY 24 HOURS A DAY, 7 DAYS A WEEK. ALL OUTAGES SHALL BE CORRECTED TO THE SATISFACTION OF THE ENGINEER WITH THE SIGNAL BACK IN SERVICE WITHIN 4 HOURS AFTER THE CONTRACTOR HAS BEEN NOTIFIED OF THE OUTAGE. IF THE SIGNAL CANNOT IMMEDIATELY BE PLACED BACK INTO SERVICE, POLICE PROTECTION FOR THE INTERSECTION SHALL BE PROVIDED AT THE CONTRACTORS EXPENSE.

IN THE EVENT NEW SIGNALS ARE DAMAGED PRIOR TO ACCEPTANCE ALL DAMAGED EQUIPMENT EXCEPT POLES AND CONTROL EQUIPMENT SHALL BE REPLACED BY THE CONTRACTOR TO THE SATISFACTION OF THE ENGINEER WITH THE SIGNAL BACK IN SERVICE WITHIN 8 HOURS AFTER THE CONTRACTOR'S NOTIFICATION OF THE OUTAGE. IF THE SIGNAL CANNOT IMMEDIATELY BE PLACED BACK INTO SERVICE, POLICE PROTECTION FOR THE INTERSECTION SHALL BE PROVIDED AT THE CONTRACTOR'S EXPENSE.

IF POLES AND/OR CONTROL EQUIPMENT ARE DAMAGED AND MUST BE REPLACED, THE CONTRACTOR SHALL MAKE TMEPORARY REPAIRS AS NECESSARY TO BRING THE SIGNAL BACK INTO FULL OPERATION WITHIN THE ALLOWED 8 HOUR PERIOD AND SHALL MAKE PERMANENT REPAIRS OR REPLACEMENT AS SOON THEREAFTER AS POSSIBLE.

NONE OF THE ABOVE SHALL BE CONSTRUED AS COLLECTIVE OR CONSECUTIVE OUTAGE TIME PERIODS AT ANY ONE LOCATION. THAT IS, WHERE MORE THAN ONE OUTAGE OCCURS AT ANY ONE LOCATION, THAN THE ALLOTED TIME LIMIT SHALL BE FOR THE WORST SINGLE OUTAGE.

WHERE OUTAGES ARE THE DIRECT RESULT OF A VEHICLE ACCIDENT THE RESPONSE OF THE CONTRACTOR SHALL BE AS OUTLINED ABOVE. THE CONTRACTOR SHALL BE RESPONSIBLE FOR COLLECTION OF ANY COMPENSATION FOR THIS WORK FROM THOSE PARTIES RESPONSIBLE FOR THE DAMAGE.

WHERE THE CONTRACTOR HAS FAILED TO OR CANNOT RESPOND TO AN OUTAGE OR SIGNAL EQUIPMENT MALFUNCTION, AT THESE LOCATIONS WITHIN HIS RESPONSIBILITY, WITHIN PERIODS AS SPECIFIED ABOVE, THE ENGINEER MAY INVOKE THE PROVISIONS OF SECTION 105.15 AND ANY SUBSEQUENT BILLINGS TO THE STATE OR CITY OF AKRON FOR POLICE SERVICES AND MAINTENANCE SERVICES BY CITY FORCES SHALL BE DEDUCTED FROM MONIES DUE OR TO BECOME DUE THE CONTRACTOR IN ACCORDANCE WITH PROVISIONS OF SECTION 105.15.

THE CONTRACTOR SHALL PROVIDE THE MAINTENANCE SERVICE ENTIRELY WITH HIS FORCES OR HE MAY CHOOSE TO ENTER INTO A COOPERATIVE UNDERSTANDING WITH THE CITY OF AKRON TO PROVIDE THE MAINTENANCE IN THE FOLLOWING MEHTODS (OR ANOTHER METHOD AS MAY BE AGREED BY THE CONTRACTOR, LOCAL AGENCY AND THE ENGINEER):

1. _____ AM TO _____ PM WEEKDAYS WITH THE CITY OF AKRON PROVIDING COVERAGE FROM _____ PM TO _____ AM WEEKDAYS, AND WEEKENDS AT THE CONTRACTOR'S EXPENSE AS PREVIOUSLY PROVIDED HEREIN.
2. COMPLETE CITY MAINTENANCE AT THE CONTRACTOR'S EXPENSE, AS PREVIOUSLY PROVIDED HEREIN.

THE CONTRACTOR SHALL INFORM THE ENGINEER, IN WRITING, OF THE MAINTENANCE METHOD SELECTED.

THE CONTRACTOR SHALL BE RESPONSIBLE FOR ANY DAMAGE TO ANY TRAFFIC SIGNAL COMPONENTS REQUIRED TO BE HANDLED DURING THE RELOCATION OF POLES AND REVISIONS TO THE SIGNAL SYSTEM.

WHEN A TRAFFIC SIGNAL MUST BE TAKEN OUT OF SERVICE BY THE CONTRACTOR, DUE TO CONSTRUCTION PROCEDURES, THIS OUTAGE SHALL NOT EXCEED 6 HOURS AND SHALL NOT INCLUDE THE HOURS OF 7 A.M. TO 9:30 A.M. AND 3 P.M. TO 6 P.M. ON WEEKDAYS. ANY SIGNALIZED INTERSECTION, WHERE THE SIGNAL IS OUT OF SERVICE DUE TO CONSTRUCTION PROCEDURES, OR DUE TO AN OUTAGE OR MALFUNCTION OF EQUIPMENT AS DESCRIBED ABOVE, SHALL BE PROTECTED BY OFF-DUTY CITY OF AKRON POLICE, HIRED BY THE CONTRACTOR.

ANY VEHICULAR TRAFFIC SIGNAL HEAD, EITHER NEW OR EXISTING WHICH WILL BE OUT OF OPERATION SHALL BE COVERED IN THE MANNER DESCRIBED IN 632.24.

ALL COSTS RESULTING FROM THE ABOVE REQUIREMENTS SHALL BE CONSIDERED TO BE INCLUDED IN THE LUMP SUM PRICE BID FOR ITEM 614, MAINTENANCE OF TRAFFIC. SEE MAINTENANCE OF TRAFFIC GENERAL NOTES SHEET NO. 10

625 CONCRETE PULLBOX, AS PER PLAN

CONCRETE PULLBOXES SHALL BE FURNISHED AND INSTALLED WHERE INDICATED ON THE PLANS. SIZE, MANUFACTURING DETAILS, AND COVER MATERIAL SHALL BE AS DETAILED ON SHEET 91. PULLBOX COVERS SHALL DISPLAY THE WORD "TRAFFIC" FORMED ON THE SURFACE OR DISPLAYED ON AN ATTACHED METAL PLATE, IN ACCORDANCE WITH 713.09.

PAYMENT WILL BE AT THE CONTRACT UNIT PRICE FOR EACH CONCRETE PULLBOX, BY SIZE, FURNISHED AND INSTALLED, INCLUDING AGGREGATE.

625 EACH CONCRETE PULLBOX, AS PER PLAN

630 REMOVAL OF OVERHEAD SIGN SUPPORT, BY TYPE

IN ADDITION TO THE REQUIREMENTS OF 630.12, ALL CANTILEVER SUPPORTS REMOVED SHALL BE STORED ON PROJECT SITE FOR PICK-UP BY THE CITY OF AKRON. ITEMS SHALL BE SUITABLY PROTECTED UNTIL DELIVERED. ALL SPAN SUPPORTS REMOVED SHALL BE STORED FOR PICK UP BY THE STATE OF OHIO.

632 SIGNAL MAST ARM, TC-81.20, DESIGN 3, AS PER PLAN

ONLY THE ARM SHALL BE FURNISHED AND INSTALLED FOR THE ATTACHMENT OF TRAFFIC SIGNALS. ALL LABOR, MATERIALS, EQUIPMENT, TOOLS, AND HARDWARE NECESSARY TO PERFORM THE REQUIRED WORK SHALL BE INCLUDED IN THE CONTRACT BID PRICE PER EACH 632 SIGNAL MAST ARM, TC-81.20, DESIGN 3, AS PER PLAN.

632 COMBINATION SIGNAL POLE, TC-81.20, DESIGN 2, AS PER PLAN

ONLY THE SIGNAL POLE SHALL BE FURNISHED AND INSTALLED FOR THE ATTACHMENT OF SIGNAL MAST ARM. ALL LABOR, MATERIALS, EQUIPMENT, TOOLS, AND HARDWARE NECESSARY TO PERFORM THE REQUIRED WORK SHALL BE INCLUDED IN THE CONTRACT BID PRICE PER EACH 632 COMBINATION SIGNAL POLE, TC-81.20, DESIGN 2, AS PER PLAN.

632 REUSE OF SIGNAL MAST ARM

IN ADDITION TO THE REQUIREMENTS OF 632.26, A SECTION OF SIGNAL MAST ARM SHALL BE REMOVED AS DETAILED ON SHEET 91. ALL LABOR, MATERIALS, EQUIPMENT, TOOLS, AND HARDWARE NECESSARY TO PERFORM THE REQUIRED WORK SHALL BE INCLUDED IN THE CONTRACT BID PRICE PER EACH 632 REUSE OF SIGNAL MAST ARM.

632 REUSE OF SIGNAL POLE AND SIGNAL MAST ARM

SIGNAL POLES AND SIGNAL MAST ARMS REUSED SHALL BE PAINTED IN ACCORDANCE WITH 625.05 AND 713.01.9 EXCEPT THAT THE ENTIRE PAINTING PROCESS SHALL BE SHOP PERFORMED. THE GALVANIZED MATERIAL SHALL BE TREATED FOR PAINTING IN ACCORDANCE WITH ASTM D2092.

ALL EXTERIOR SURFACES SHALL BE PAINTED AND TWO COATS OF A FINAL "MATTE" BLACK PAINT SHALL BE APPLIED. TOTAL DRY FILM THICKNESS OF THE PAINT SYSTEM SHALL BE TWO MILS.

THE CONTRACTOR SHALL SUBMIT FOR APPROVAL, COLOR SAMPLES AND METHOD OF PAINTING.

THE POLES SHALL BE WRAPPED IN A PROTECTIVE MATERIAL FOR SHIPPING TO THE SITE. THE PROTECTIVE WRAPPING SHALL NOT BE REMOVED UNTIL INSTALLATION IS COMPLETE. CABLES AND CHAINS SHALL NOT BE USED TO ERECT THE POLES AND MAST ARMS.

AFTER ERECTION, POLES AND MAST ARMS SHALL BE INSPECTED FOR DEFECTS IN THE SURFACES. MINOR SCRATCHES SHALL BE TOUCHED UP WITH AN EQUIVALENT PRIMER AND "MATTE" BLACK PAINT APPROVED FOR THE SHOP APPLICATION, BUT SUITABLE FOR FIELD USE. POLES AND ARMS HAVING MAJOR SCRATCHES OR DEFECTS IN THE SURFACES WILL NOT BE ACCEPTED.

632 TESTING

TESTING, AS REQUIRED IN 632.27, SHALL BE PERFORMED AFTER BOTH SIGNAL SYSTEMS, PERKINS ST. AND GOOD ST., AND PERKINS ST. AND ADOLPH ST., ARE IN PLACE.

TRAFFIC CONTROL SUMMARY

CALCULATED BY T.K.I. DATE 10-12-83
CHECKED BY DSB DATE 4/85

FHWA REGION	STATE	PROJECT	
5	OHIO		

80/204

SUM-8-1.73/1.95

SHEET No. PAINTING	SHEET No. SIGNING	SHEET No. SIGNAL	BHF FUNDS	F FUNDS	TOTAL	ITEM	UNIT	DESCRIPTION
83			—	7	7	620	EACH	DELINEATORS, TYPE C, FLEXIBLE POST MOUNTED
↑			—	4	4	620	EACH	DELINEATORS, TYPE D, FLEXIBLE POST MOUNTED
			—	2	2	620	EACH	DELINEATORS, TYPE C, BRACKET MOUNTED
			1.20	0.62	1.82	621	MILES	EDGE LINES
			1.35	2.84	4.19	621	MILES	LANE LINES
			0.08	—	0.08	621	MILES	CENTER LINES
			613	670	1283	621	LIN. FT.	CHANNELIZING LINES
			193	—	193	621	LIN. FT.	STOP LINES
			355	—	355	621	LIN. FT.	CROSSWALK LINES
			180	280	460	621	LIN. FT.	TRANSVERSE LINES,
			10	—	10	621	EACH	LANE ARROWS
			3	3	6	621	EACH	WORD ON PAVEMENT, 72 INCH, ONLY
			97	—	97	621	LIN. FT.	DOTTED LINES, 4 INCH
↓			2	2	4	621	EACH	REMOVAL OF PAVEMENT MARKINGS
83			306	190	496	621	LIN. FT.	REMOVAL OF PAVEMENT MARKINGS
12			4350		4350	614	Lin.Ft.	Temporary Channelizing Lines, Class I, 947.03, Type C
12			0.18		0.18	614	Miles	Temporary Edge Lines, Class I, 947.03, Type C
	84	90	8	1	9	625	EACH	GROUND ROD
		↑	6	—	6	625	EACH	PULL BOX, CONCRETE, 18-INCH, AS PER PLAN
			2	—	2	625	EACH	PULL BOX, CONCRETE, 24-INCH, AS PER PLAN
			168	—	168	625	LIN. FT.	TRENCH
			98	—	98	625	LIN. FT.	TRENCH IN PAVED AREAS, TYPE A
			200	—	200	625	LIN. FT.	TRENCH IN PAVED AREAS, TYPE B
		↓	404	—	404	625	LIN. FT.	CONDUIT - 713.07, 3-INCH CONCRETE ENCASED
		90	217	—	217	625	LIN. FT.	CONDUIT - 713.04, 3 INCH
	84		—	0.5	0.5	630	CU. YD.	CONCRETE FOR EMBEDDED FOUNDATIONS
	↑		—	14	14	630	CU. YD.	CONCRETE FOR ANCHOR BASE FOUNDATIONS
			38	—	38	630	LIN. FT.	GROUND-MOUNTED SUPPORTS, NO. 2 POST
			—	148	148	630	LIN. FT.	GROUND-MOUNTED SUPPORTS, NO. 3 POST
			14	15	29	630	LIN. FT.	GROUND-MOUNTED SUPPORTS, NO. 4 POST
			44	—	44	630	LIN. FT.	ONE-WAY SUPPORTS, NO. 3 POST
			—	32	32	630	LIN. FT	GROUND-MOUNTED SUPPORTS, S4 X 7.7 BEAM
			—	2	2	630	EACH	BREAKAWAY BEAM CONNECTIONS
			—	1	1	630	EACH	OVERHEAD SIGN SUPPORT, TYPE 7.65, DESIGN 6, SPAN 74 FEET, MODIFIED
			—	15	15	630	EACH	SIGN ATTACHMENT ASSEMBLY
			—	6	6	630	EACH	LUMINAIRE SUPPORT ASSEMBLY, TYPE 31.20
			—	10	10	630	EACH	LUMINAIRE SUPPORT ASSEMBLY, TYPE 31.21
			6	6	12	630	EACH	SIGN SUPPORT ASSEMBLY, POLE MOUNTED
			—	59	59	630	SF	SIGNS, FLAT SHEET, TYPE G
			—	648	648	630	SF	SIGNS, EXTRUSHEET, TYPE G
			21	12	33	630	EACH	REMOVAL OF GROUND-MOUNTED SIGN AND REERECTION
			—	5	5	630	EACH	REMOVAL OF GROUND-MOUNTED SIGN AND STORAGE
			7	10	17	630	EACH	REMOVAL OF GROUND-MOUNTED POST SUPPORT
			—	6	6	630	EACH	REMOVAL OF OVERHEAD MOUNTED SIGN AND STORAGE
			4	—	4	630	EACH	REMOVAL OF OVERHEAD MOUNTED SIGN AND REERECTION
	↓		—	1	1	630	EACH	REMOVAL OF OVERHEAD SIGN SUPPORT AND STORAGE, TYPE 7.65
	84		—	1	1	630	EACH	REMOVAL OF OVERHEAD SIGN SUPPORT AND STORAGE, TYPE 12.30

SHEET No. PAINTING	SHEET No. SIGNING	SHEET No. SIGNAL	BHF FUNDS	F FUNDS	TOTAL	ITEM	UNIT	DESCRIPTION
	84		—	1	1	631	EACH	SIGN SERVICE
	↑		4	7	11	631	EACH	SIGNS WIRED
			—	1	1	631	EACH	DISCONNECT SWITCH WITH ENCLOSURE, TYPE X
			—	4	4	631	EACH	BALLAST, TYPE CMRI-100/480
			—	10	10	631	EACH	BALLAST, TYPE CMRI-175/480
			—	3	3	631	EACH	BALLAST WIRING ENCLOSURE, TYPE A
			—	2	2	631	EACH	BALLAST WIRING ENCLOSURE MOUNTING BRACKET
			—	4	4	631	EACH	MERCURY VAPOR LUMINAIRE, TYPE TC 31.20, WITH 100-WATT LAMP
			—	10	10	631	EACH	MERCURY VAPOR LUMINAIRE, TYPE TC 31.21, WITH 175-WATT LAMP
			4	—	4	631	EACH	REMOVAL OF LUMINAIRE AND REERECTION
			4	—	4	631	EACH	REMOVAL OF BALLAST AND REERECTION
			2	—	2	631	EACH	REMOVAL OF PHOTOELECTRIC CONTROL AND REERECTION
	↓			10	10	631	EACH	REMOVAL OF LUMINAIRE AND STORAGE
	84			5	5	631	EACH	REMOVAL OF BALLAST AND STORAGE
		90	13.7	—	13.7	632	CU. YD.	CONCRETE FOR ANCHOR BASE FOUNDATIONS
		↑	1	—	1	632	EACH	COMBINATION SIGNAL SUPPORT, TYPE 81.20, DESIGN 3
			1	—	1	632	EACH	COMBINATION SIGNAL POLE, TC-81.20, DESIGN 2, AS PER PLAN
			1	—	1	632	EACH	SIGNAL MAST ARM, TC-81.20, DESIGN 3, 35 FOOT, AS PER PLAN
			1	—	1	632	EACH	SIGNAL MAST ARM, TC-81.20, DESIGN 3, 38 FOOT, AS PER PLAN
			2	—	2	632	EACH	CABLE SUPPORT ASSEMBLY
			554	—	554	632	LIN. FT.	SIGNAL CABLE, 5-CONDUCTOR NO. 14 AWG
			1354	—	1354	632	LIN. FT.	SIGNAL CABLE, 7-CONDUCTOR NO. 14 AWG
			411	—	411	632	LIN. FT.	INTERCONNECT CABLE, 12-CONDUCTOR NO. 14 AWG
			138	—	138	632	LIN. FT.	POWER CABLE, 2-CONDUCTOR NO. 4 AWG
			76	—	76	632	LIN. FT.	POWER CABLE, 3-CONDUCTOR NO. 4 AWG
			2	—	2	632	EACH	POWER SERVICE
			2	—	2	632	EACH	REMOVAL OF TRAFFIC SIGNAL INSTALLATION
			2	—	2	632	EACH	REUSE OF CONTROLLER
			2	—	2	632	EACH	REUSE OF CONTROLLER CABINET
			2	—	2	632	EACH	REUSE OF SIGNAL POLE
			3	—	3	632	EACH	REUSE OF SIGNAL MAST ARM
			1	—	1	632	EACH	REUSE OF INSULATOR
			1	—	1	632	EACH	REUSE OF 2-INCH WEATHER HEAD
			13	—	13	632	EACH	REUSE OF TRAFFIC SIGNAL
			6	—	6	632	EACH	REUSE OF PEDESTRIAN SIGNAL
			2	—	2	632	EACH	REUSE OF PEDESTAL
		↓	1	—	1	632	EACH	REUSE OF DISCONNECT SWITCH
		90	1	—	1	632	EACH	REUSE OF DISCONNECT SWITCH ENCLOSURE
		90	2	—	2	861	CU. YD.	CONCRETE FOR CABINET FOUNDATIONS
		90	17	—	17	608	SQ. FT.	CONCRETE WALK, 4"

CALC. BY.		SUM-8-1.73/1.95	OHIO	81 / 204
CHKD. BY.			F.H.W.A. REGION 5	
DATE				

(10) NO PEDESTRIAN CROSSING RELOCATE TO
- a- STA. 48+18, 31' RT.
- b- STA. 50+90, 31' RT.
- c- STA. 51+51, 40' LT.

SIGNS TO HAVE 5' MOUNTING HEIGHT

BEGIN WORK STA. 46+82

(11) RELOCATE TO STA. 47+75, 35' LT.

(12) RELOCATE TO STA. 48+00, 31.5' RT. POLE MOUNTED

(13) RELOCATE TO STA. 48+00, 31.5' RT.

(14) (18) SOUTH

(15) RELOCATE TO STA. 48+32, 35' LT.

STRUCTURE NO. SU-5-122

(16) (18) RELOCATE TO STA. 48+50, 34' RT. STA. 50+70, 37' RT.

(17) (59) RELOCATE TO STA. 49+14, 37' LT. POLE MOUNTED

(19) RELOCATE TO STA. 50+97, 40.5' RT.

(20) POLE MOUNTED RELOCATE TO STA. 51+02.5, 40' LT.

(21) (8) (8) (1593) (1100)

(22) NORTH (8) EAST (59) RELOCATE TO STA. 51+02.5, 40' LT.

(23) RELOCATE TO STA. 51+55, 43' LT. POLE MOUNTED

(24) W-GOD-36 STA. 45+00, 19' LT.

(25) RELOCATE TO STA. 47+80, 8' LT.

(26) RELOCATE TO STA. 48+15, 4' LT.

(27) RELOCATE TO STA. 12+00, 12' RT. POLE MOUNTED

(28) (59) WEST DOWNTOWN

(29) RELOCATE TO STA. 13+00, 10' RT.

(30) EXIT GF-72 STA. 12+50, 22 LT

(31) R-31M-48 STA. 14+80 LT. & RT. STA. 17+37, LT.

(32) RELOCATE TO STA. 15+20, 12' RT. POLE MOUNTED

(33) RELOCATE TO STA. 16+78, 12' RT. POLE MOUNTED

(34) TO BE REMOVED

(35) REMOVE EXISTING SIGN STA. 4+00, LT.

(36) RELOCATE TO STA. 6+20 9' LT.

(37) RELOCATE TO STA. 7+10, 12' LT. POLE MOUNTED

(38) Buchtel Ave. Carroll St. EXIT ONLY

(39) a Buchtel Ave. Carroll St. EXIT 1/2 MILE 14'-0" x 7'-0"

(40) REMOVE EXISTING OVERHEAD SIGN SUPPORT STA. 523+10

(41) REMOVE EXISTING OVERHEAD SIGNS AND SIGN SUPPORT STA. 519+32

Perkins St Downtown 15'-0" x 8'-0"

STA. 520+38

9+91.54 RAMP "I" 521+76.42 S.R. 8

518+64.40

520+60

517+66.45

519+06.68 S.R. 8

NOSE 3+24.18 RAMP "J"

MATCH LINE STA. 524+00

AKRON NORTH EXPRESSWAY

PERKINS ST. GOOD ST. UNION ST. ARCH ST. NORTH ADAMS ST. SOUTH ADOLPH ST. NORTH ADOLPH ST.

RAMP "I" RAMP "J" RAMP "K" RAMP "L"

4" YELLOW EDGE LINE
4" WHITE EDGE LINE
8" WHITE CHANNELIZING LINE
24" WHITE TRANSVERSE LINE
6" LANE LINE
EXISTING LANE LINES

REMOVE EXISTING SIGN R-7B-48 STA. 522+60, RT. ERECT NEW SIGN R-7B-48 STA. 523+43, RT. POLE MOUNTED

NOTE: GUIDE SIGN SIZES SHOWN DO NOT INCLUDE THE 6" GLARE SHIELD OR THE 6" TUBE AS SHOWN ON TC-31.21

FOR LEGEND, SEE SHEET No. 86

FOR TRAFFIC SIGNAL PLANS, SEE SHEET No. 86 & 87

FOR GUIDE SIGN ELEVATION VIEWS, SEE SHEET No. 85

SIGN LEGEND
- EXISTING TO REMAIN
- EXISTING TO BE RELOCATED
- EXISTING TO BE REMOVED
- PROPOSED

GRAPHIC SCALE 0 50 100 150 FEET

SIGNING AND PAVEMENT MARKING PLAN

AA B/P# 71942R

CALC. BY:		SUM-8-1.73/1.95	OHIO	82/204
DATE			F.H.W.A. REGION 5	
CHKD. BY:				
DATE				

NORTH ADAMS ST.

BEGIN PAVEMENT MARKINGS STA. 524+60 S.R.8

4" YELLOW EDGE LINE

4" WHITE EDGE LINE

MATCH LINE STA. 524+00

NORTH ADAMS ST.

4" WHITE EDGE LINE

4" YELLOW EDGE LINE

R.R.

R.R.

CANAL

R.R.

G" LANE LINE

LITTLE CUYAHOGA

NORTH

4" YELLOW EDGE LINE

4" WHITE EDGE LINE

MATCH LINE STA. 537+00

525 526 527 528 529 530 531 532 533 534 535 536

STRUCTURE NO. SU-5-124

13'-9" 12' 13'

AKRON NORTH EXPRESSWAY S.R. 8

13' 12' 13'-9"

ERIE

A.C. & Y.

PENNSYLVANIA & OHIO

B. & O.

G" LANE LINE

RIVER

4" WHITE EDGE LINE

4" YELLOW EDGE LINE

ST.

REMOVE EXISTING OVERHEAD SIGN

59 Perkins St. RIGHT LANE

59 Perkins St. Downtown EXIT 1/2 MILE

13' x 10'

STA. 542+50

42

Tallmadge Ave. EXIT ONLY

15'-7"

Tallmadge Ave. EXIT ONLY

REMOVE EXISTING OVERHEAD SIGN

59 Perkins St. EXIT 1/2 MILE

59 Perkins St. Downtown EXIT 1/2 MILE

13' x 10'

STA. 551+05

43

4" WHITE EDGE LINE

G" LANE LINE

4" YELLOW EDGE LINE

MATCH LINE STA. 537+00

538 539 540 541 542 543 544 545 546 547

AKRON NORTH EXPRESSWAY S.R. 8

4" YELLOW EDGE LINE

G" LANE LINE

4" WHITE EDGE LINE

END PAVEMENT MARKINGS STA. 541+00 S.R. 8

Tallmadge Ave. EXIT 1/2 MILE

16' x 5'

15' x 5'

Glenwood Ave. RIGHT LANE

REMOVE EXISTING FLUORESCENT LIGHTING. INSTALL MERCURY VAPOR LIGHTING.

590 591 592

AKRON NORTH EXPRESSWAY S.R. 8

NOTE: GUIDE SIGN SIZES SHOWN DO NOT INCLUDE THE 6" GLARE SHIELD OR THE 6" TUBE AS SHOWN ON TC-31.21

FOR SIGN LEGEND, SEE SHEET No. 81

FOR LEGEND, SEE SHEET No. 86

FOR GUIDE SIGN ELEVATION VIEWS, SEE SHEET No. 85

GRAPHIC SCALE

0 50 100 150 FEET

SIGNING AND PAVEMENT MARKING PLAN

CALC. BY. T.K.I. DATE 10/83	SUM-8-1.73/1.95	OHIO
CHKD. BY. DSB DATE 4/85		F.H.W.A. REGION 5

83 204

BHF FUNDS

REMOVAL OF PAVEMENT MARKINGS

REMOVAL OF 8" CHANNELIZING LINE

17+00 TO 17+40	RAMP "I" 12' LT	40 LF
17+10 TO 47+18	RAMP "I" 12' LT TO PERKINS STREET 23' LT	99 LF
46+79 TO 47+50	PERKINS STREET 23' LT	71 LF

REMOVAL OF 12" TRANSVERSE LINE

17+10 TO 17+31	RAMP "I" LT	16 LF

REMOVAL OF LANE ARROWS

17+22	RAMP "I" CENTERLINE	1 EA
17+26	RAMP "I" 18' LT	1 EA

REMOVAL OF 4" LANE LINE

46+79 TO 47+34	PERKINS 12' LT	55 LF

REMOVAL OF STOP LINE

47+33	PERKINS STREET	25 LF

TOTAL REMOVAL OF PAVEMENT MARKINGS 306 LF

TOTAL REMOVAL OF PAVEMENT MARKINGS 2 EA

PAVEMENT MARKINGS

EDGE LINES (WHITE)

524+85.75 TO 540+68.50	S.R. 8 LT AND RT	3,168 LF

EDGE LINES (YELLOW)

524+85.75 TO 540+68.50	S.R. 8 LT AND RT	3,166 LF

TOTAL EDGE LINES 6,334 LF/5,280' = 1.20 MILES

LANE LINES, 6"

524+85.75 TO 540+68.50	S.R. 8 13.25' AND 25.25' RT	3,166 LF
524+85.75 TO 527+76.07	S.R. 8 37.25' RT	290 LF
524+85.75 TO 540+68.50	S.R. 8 13.25' AND 25.25' LT	3,166 LF

TOTAL LANE LINES, 6" 6,622 LF/5,280' = 1.25 MILES

LANE LINES, 4"

46+82 TO 47+02	PERKINS STREET 12' LT	20 LF
49+07 TO 50+67	PERKINS STREET 19' LT	160 LF
51+65 TO 52+17	PERKINS STREET 17' LT TO 14' LT	52 LF
49+07 TO 49+76	PERKINS STREET 7' LT	69 LF
48+11 TO 50+61	PERKINS STREET 16' RT	250 LF

TOTAL LANE LINES, 4" 551 LF/5,280' = 0.10 MILES

CENTER LINES

48+57 TO 50+61	PERKINS STREET 4' RT	204 LF
49+46 TO 49+76	PERKINS STREET 4' RT TO 7' LT	32 LF
49+76 TO 50+22	PERKINS STREET 7' LT	46 LF
50+22 TO 50+61	PERKINS STREET 7' LT TO 4' RT	41 LF
51+65 TO 52+17	PERKINS STREET CENTERLINE	52 LF
51+65 TO 52+17	PERKINS STREET 5' TO 2' LT	63 LF

TOTAL CENTER LINES 438 LF/5,280' = 0.08 MILES

CHANNELIZING LINES

16+96 TO 46+82	RAMP "I" 12' LT TO PERKINS STREET 24' LT	146 LF
16+96 TO 47+84	RAMP "I" 12' LT TO PERKINS STREET 29' LT	63 LF
46+82 TO 47+84	PERKINS STREET 24' TO 29' LT	102 LF
17+00 TO 17+46	RAMP "I" 23' LT	46 LF
48+47 TO 49+07	PERKINS STREET 19' LT	60 LF
48+57 TO 49+07	PERKINS STREET 7' LT	50 LF
47+02 TO 47+68	Perkins Street 12' To 16' LT	66 LF
49+09 TO 49+49	ADOLPH STREET 6' LT TO 4' LT	40 LF
49+09 TO 49+49	ADOLPH STREET 6' RT TO 8 RT	40 LF

TOTAL CHANNELIZING LINES = 613 LF

STOP LINES

47+32	PERKINS STREET RT	24 LF
17+46	RAMP "I" LT	37 LF
48+47	PERKINS STREET LT'	24 LF
48+57	PERKINS STREET LT	11 LF
50+61	PERKINS STREET RT	24 LF
51+65	PERKINS STREET LT	24 LF
49+49	ADOLPH STREET	36 LF
50+45	ADOLPH STREET	13 LF

TOTAL STOP LINES = 193 LF

CROSSWALK LINES

49+59	GOOD STREET	73 LF
49+55	ADOLPH STREET	81 LF
51+59	PERKINS STREET	133 LF
50+39	ADOLPH STREET	68 LF

TOTAL CROSSWALK LINES = 355 LF

TRANSVERSE LINES, 24" (WHITE)

17+00 TO 17+33	RAMP "I" LT	25 LF
47+00 TO 47+62	PERKINS ST LT	35 LF

TRANSVERSE LINES, 24" (YELLOW)

49+46 TO 50+61	PERKINS STREET LT AND RT	109 LF
51+65 TO 52+17	PERKINS STREET LT	11 LF

TOTAL TRANSVERSE LINES, 24" = 180 LF

LANE ARROWS

17+06	RAMP "I" 2' LT, 17.5' LT AND 28.5' LT	3 EA
48+75	PERKINS STREET 13' LT AND 25' LT	2 EA
48+85	PERKINS STREET 1.5' LT	1 EA
50+33	PERKINS STREET 10' RT	1 EA
49+29	ADOLPH STREET 10' LT, 1' RT AND 13.5' RT	3 EA

TOTAL LANE ARROWS = 10 EA

WORD ON PAVEMENT, 72"

49+84	PERKINS STREET 10' RT	1 EA
49+09	ADOLPH STREET CENTERLINE AND 11' LT	2 EA

TOTAL WORD ON PAVEMENT, 72" = 3 EA

DOTTED LINES, 4"

50+67 TO 49+49	PERKINS STREET 19' LT TO ADOLPH STREET 4' LT	97 LF

TOTAL DOTTED LINES, 4" = 97 LF

F FUNDS

REMOVAL OF PAVEMENT MARKINGS

REMOVAL OF LANE ARROWS

16+25	RAMP "I" LT AND RT	2 EA

REMOVAL OF 8" CHANNELIZING LINE

15+10 TO 17+00	RAMP "I" 12' LT	190 LF

TOTAL REMOVAL OF PAVEMENT MARKINGS 2 EA

TOTAL REMOVAL OF PAVEMENT MARKINGS 190 LF

PAVEMENT MARKINGS

EDGE LINES (WHITE)

RAMP "L"	RT	95 LF
17+00 TO 524+85.75	RAMP "I" CENTERLINE TO S.R. 8 36' LT	1,017 LF
7+00 TO 524+85.75	RAMP "J" CENTERLINE TO S.R. 8 48' RT	954 LF
517+66.45 TO 520+00	S.R. 8 36' RT	234 LF
518+64.40 TO 519+14.40	S.R. 8 36' LT	50 LF

EDGE LINES (YELLOW)

12+54 TO 17+00	RAMP "I" LT	563 LF
3+24.18 TO 7+00	RAMP "J" 16' RT	376 LF

TOTAL EDGE LINES 3,289 LF/5,280' = 0.62 MILES

LANE LINES, 6"

14+30 TO 16+32	RAMP "I" 12' LT	202 LF
520+60 TO 524+00	S.R. 8 36' LT	340 LF
520+00 TO 522+70	S.R. 8 42' TO 36' RT	270 LF
507+40 TO 524+85.75	S.R. 8 RT. X2	3492 LF
540+68.50 TO 546+00	S.R. 8 RT X2	1063 LF
513+00 TO 524+85.75	S.R. 8 LT X2	2372 LF
540+68.50 TO 577+00	S.R. 8 LT X2	7263 LF

TOTAL LANE LINES, 6" 15,002 LF/5,280' = 2.84 MILES

CHANNELIZING LINES (WHITE)

16+32 TO 16+96	RAMP "I" 12' LT	64 LF
11+08 TO 12+54	RAMP "I" 16' LT	146 LF
519+14.40 TO 520+60	S.R. 8 36' LT	146 LF
3+24.18 TO 520+00	RAMP "J" 16' RT TO S.R. 8 42' RT	93 LF

CHANNELIZING LINES (YELLOW)

46+20 TO 48+40	ADOLPH STREET 15' LT TO CENTERLINE	221 LF

TOTAL CHANNELIZING LINES = 670 LF

TRANSVERSE LINES, 24" (WHITE)

519+14.40 TO 520+60	S.R. 8 36' LT	142 LF

TRANSVERSE LINES, 24" (YELLOW)

46+20 TO 47+95	ADOLPH STREET 15' LT TO CENTERLINE	138 LF

TOTAL TRANSVERSE LINES, 24" = 280 LF

WORD ON PAVEMENT, 72"

16+73	RAMP "I" 2' LT, 17.5' LT AND 28.5' LT	3 EA

TOTAL WORK ON PAVEMENT, 72" = 3 EA

620 - DELINEATORS (F FUNDS)

APPROX. LOCATION	SPACING	BRACKET MOUNTING C	BRACKET MOUNTING D	POST MOUNTING C	POST MOUNTING D
14+60 LT RAMP "I" TO S23+08 LT S.R.8	200'	—	—	4	7
6+40 RT RAMP "J" TO 527+92 RT S.R.8	200'	2	2	2	4
TOTAL		2	2	6	11

PAVEMENT MARKING SUB-SUMMARY

CALCULATED BY T.K.I. DATE 10-10-83
CHECKED BY DSB DATE 4/85

SIGNING QUANTITIES SUB-SUMMARY

F.H.W.A REG.	STATE	PROJECT	
5	OHIO		

SUM-8-1.73/1.95

BHF FUNDS

LINE No.	SIGN REF. No.	STATION	OFFSET	REMOVAL OF OVERHEAD MOUNTED SIGN AND REERECTION (EA.)	REMOVAL OF GROUND MOUNTED SIGN AND REERECTION (EA.)	GROUND-MOUNTED SUPPORTS, No. 2 POST (L.F.)	GROUND-MOUNTED SUPPORTS, No. 4 POST (L.F.)	ONE WAY SUPPORTS, No. 3 POST (L.F.)	SIGN SUPPORT ASSEMBLY, POLE MOUNTED (EA.)		REMOVAL OF LUMINAIRE AND REERECTION (EA.)	REMOVAL OF BALLAST AND REERECTION (EA.)	DISCONNECT SWITCH WITH ENCLOSURE, TYPE X (EA.)	REMOVAL OF PHOTOELECTRIC CONTROL AND REERECTION (EA.)	REMOVAL OF GROUND MOUNTED POST SUPPORT (EA.)	SIGNS WIRED (EA.)	
PERKINS ST.																	
1	10	SEE SH'T. No. 81			3	37.5									3		
2	11	47+75	35' LT.		2			14.5							1		
3	12	48+00	31.5'RT.		1				1								
4	13	48+00	31.5'RT.	1							1	1				1	
5	14	48+00	31.5'RT.	1							1	1	*	1		1	
6	15	48+32	35' LT.		3			14.5							1		
7	16	48+50	34' RT.		1		13.5								1		
8	17	49+14	37' LT.		2				1								
9	18	50+70	37' RT.		1				1								
10	19	50+97	40.5'RT.		3			14.5							1		
11	20	51+02.5	40' LT.		3				1								
12	21	51+02.5	40' LT.	1							1	1	*	1		1	
13	22	51+02.5	40' LT.	1							1	1				1	
14	23	51+55	43' LT.		2				2								
15																	
ADOLPH ST.																	
16	24	45+00	19' LT.														
17	25	47+80	8' LT.														
18	26	48+15	4' LT.														
19																	
RAMP "I"																	
20	27	12+00	12' RT.														
21	28	13+00	10' RT.														
22	29	13+60	12' RT.														
23	30	12+50	22' LT.														
24	31	14+80	LT. & RT.														
25	32	15+20	12' RT.														
26	33	16+78	12' RT.														
27	34	17+37	3.5'LT.														
28																	
RAMP "J"																	
29	35	4+00	9' LT.														
30	36	6+20	9' LT.														
31	37	7+10	12' LT.														
32																	
S.R. 8																	
33	38	519+32	LT.														
34	39a	520+38	LT.														
35	39b	520+38	LT.														
36	40	523+10	LT.														
37	41	523+43	RT.														
38	42a	542+50	LT.														
39	42b	542+50	RT.														
40	42c	542+50	RT.														
41	43a	591+05	LT.														
42	43b	591+05	LT.														
TOTAL				4	21	37.5	13.5	43.5	6		4	4	*	2	7	4	

F FUNDS

LINE No.	W-60D-36 (9.00 S.F.) (EA.)	R-3IM-48 (10.00 S.F.) (EA.)	REMOVAL OF GROUND MOUNTED POST SUPPORT (EA.)	REMOVAL OF GROUND MOUNTED SIGN AND REERECTION (EA.)	REMOVAL OF OVERHEAD MOUNTED MAJOR SIGN AND STORAGE (EA.)		REMOVAL OF OVERHEAD SIGN SUPPORT AND STORAGE, TYPE 12.30 (EA.)	REMOVAL OF OVERHEAD SIGN SUPPORT AND STORAGE, TYPE 7.65 (EA.)	REMOVAL OF GROUND MOUNTED SIGN AND STORAGE (EA.)	SIGNS, FLAT SHEET TYPE G (S.F.)	SIGNS, EXTRUSHEET TYPE G (S.F.)	R-7B-48 (20.00 S.F.) (EA.)		GROUND-MOUNTED SUPPORTS, No. 3 POST (L.F.)	GROUND-MOUNTED SUPPORTS, No. 4 POST (L.F.)	SIGN SUPPORT ASSEMBLY, POLE MOUNTED (EA.)	GROUND-MOUNTED SUPPORTS, S4 X 7.7 BEAM (L.F.)	CONCRETE FOR ANCHOR BASE FOUNDATIONS (C.Y.)	CONCRETE FOR EMBEDDED FOUNDATIONS (C.Y.)	OVERHEAD SIGN SUPPORT, TYPE 7.65, DESIGN 6, SPAN 74 FEET (EA.)	BREAKAWAY BEAM CONNECTIONS (EA.)
1																					
2																					
3																					
4																					
5																					
6																					
7																					
8																					
9																					
10																					
11																					
12																					
13																					
14																					
15																					
16	1									9.0					14.5						
17			1	1										13.5							
18			1	1										13							
19																					
20				1												1					
21			2	4										30							
22			1	1												1					
23											30						32		0.54		2
24		2								20				52							
25			2	1					1							1					
26				1												1					
27		1	1						2	10				26							
28																					
29			1						1												
30			1	1										13							
31				1												1					
32																					
33					2			1													
34											105							13.88		1	
35											127.5										
36					1		1														
37									1	20		1				1					
38					1						136.5										
39																					
40																					
41					1						136.5										
42					1						112.5										
TOTAL	1	3	10	12	6		1	1	5	59	648	1		147.5	14.5	6	32	13.88	0.54	1	2

F FUNDS (continued)

LINE No.	SIGN ATTACHMENT ASSEMBLY (EA.)	LUMINAIRE SUPPORT ASSEMBLY, TYPE 31.21 (EA.)	LUMINAIRE SUPPORT ASSEMBLY, TYPE 31.20 (EA.)	GROUND ROD (EA.)	SIGN SERVICE (EA.)	SIGNS WIRED (EA.)		DISCONNECT SWITCH WITH ENCLOSURE, TYPE X (EA.)		BALLAST TYPE CMRI-100/480 (EA.)	BALLAST, TYPE CMRI-175/480 (EA.)		BALLAST WIRING ENCLOSURE, TYPE A (EA.)	BALLAST WIRING ENCLOSURE MOUNTING BRACKET (EA.)		MERCURY VAPOR LUMINAIRE, TYPE 31.20 WITH 100-WATT LAMP (EA.)	MERCURY VAPOR LUMINAIRE, TYPE 31.21 WITH 175-WATT LAMP (EA.)		REMOVAL OF LUMINAIRE AND STORAGE (EA.)	REMOVAL OF BALLAST AND STORAGE (EA.)		
1																						
2																						
3																						
4																						
5																						
6																						
7																						
8																						
9																						
10																						
11																						
12																						
13																						
14																						
15																						
16																						
17																						
18																						
19																						
20																						
21																						
22																						
23																						
24																						
25																						
26																						
27																						
28																						
29																						
30																						
31																						
32																						
33																						
34		2		1	1	1		1			2		1				2					
35		2				1					2						2					
36																						
37																						
38	3	2				1					2		1	1			2		2	1		
39	3		3			1				2						2			2	1		
40	3		3			1				2						2			2	1		
41	3	2				1					2		1	1			2		2	1		
42	3	2				1					2						2		2	1		
TOTAL	15	10	6	1	1	7		1		4	10		3	2		4	10		10	5		

* COMBINED WITH POWER SERVICE
SEE SHEET No. 86

AA B/Pn 71942R

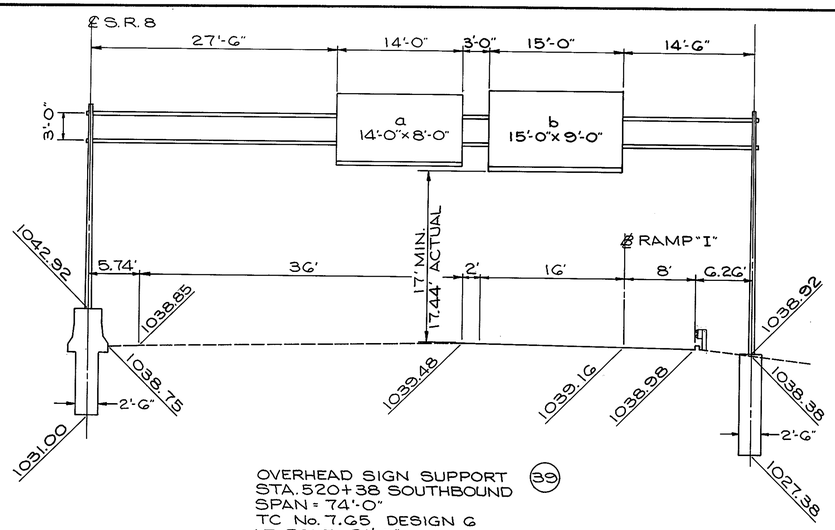

OVERHEAD SIGN SUPPORT (39)
STA. 520+38 SOUTHBOUND
SPAN = 74'-0"
TC No. 7.65 DESIGN G
LT. POLE = 21'-0"
RT. POLE = 25'-0"

a

14'-0" x 7'-6" = 105 SQ. FT.
SPACING = 8 5/8", 75 3/8", 75 3/8", 8 5/8"
NO. OF BRACKETS = 3 HT. = 8'-0"
FIXTURES = 2 AT 175 WATTS

b

15'-0" x 8'-6" = 127.5 SQ. FT.
SPACING = 14 5/8", 75 3/8", 75 3/8", 14 5/8"
NO. OF BRACKETS = 3 HT. = 9'-0"
FIXTURES = 2 AT 175 WATTS

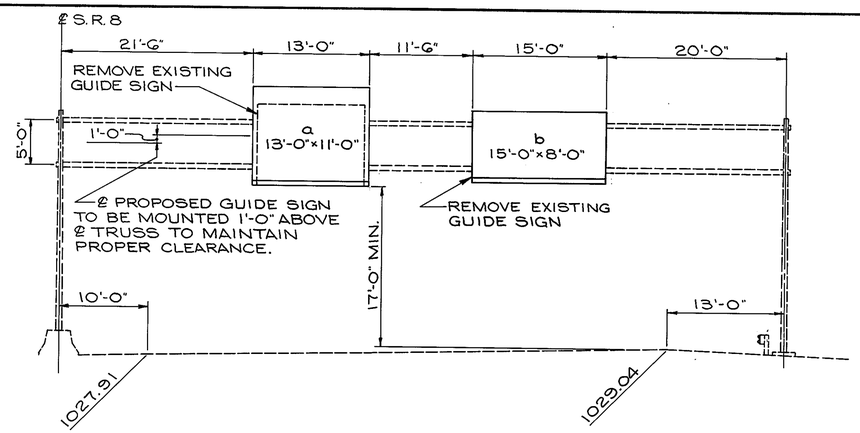

EXISTING OVERHEAD SIGN SUPPORT (43)
STA. 591+05 SOUTHBOUND
SPAN = 81'-0"

a

13'-0" x 10'-6" = 136.5 SQ. FT.
SPACING = 6", 72", 72", 6"
NO. OF BRACKETS = 3 HT. = 11'-0"
FIXTURES = 2 AT 175 WATTS

b

15'-0" x 7'-6" = 112.5 SQ. FT.
SPACING = 14 5/8", 75 3/8", 75 3/8", 14 5/8"
NO. OF BRACKETS = 3 HT. = 8'-0"
FIXTURES = 2 AT 175 WATTS

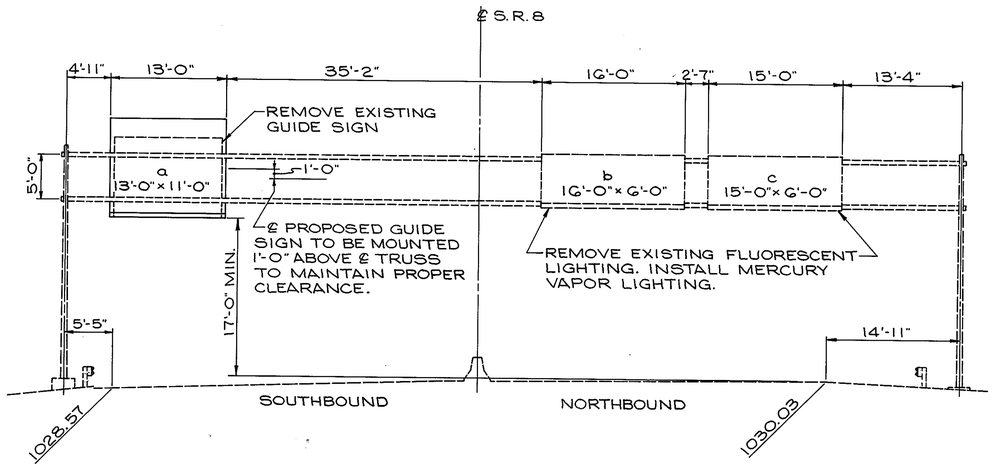

EXISTING OVERHEAD SIGN SUPPORT (42)
STA. 542+50
SPAN = 100'

a

13'-0" x 10'-6" = 136.5 SQ. FT.
SPACING = 6", 72", 72", 6"
NO. OF BRACKETS = 3 HT. = 11'-0"
FIXTURE = 2 AT 175 WATTS

b

16'-0" x 5'-6" = 88 SQ. FT.
SPACING = 8 5/8", 75 3/8", 99 3/8", 8 5/8"
NO. OF BRACKETS = 3 HT. = 6'-0"
FIXTURES = 2 AT 100 WATTS

c

15'-0" x 5'-6" = 82.5 SQ. FT.
SPACING = 14 5/8", 75 3/8", 75 3/8", 14 5/8"
NO. OF BRACKETS = 3 HT. = 6'-0"
FIXTURES = 2 AT 100 WATTS

CALC. BY. ____ DATE ____	SUM-8-1.73/1.95	OHIO	85 / 204
CHKD. BY. ____ DATE ____		F.H.W.A. REGION 5	

GUIDE SIGN ELEVATION VIEWS

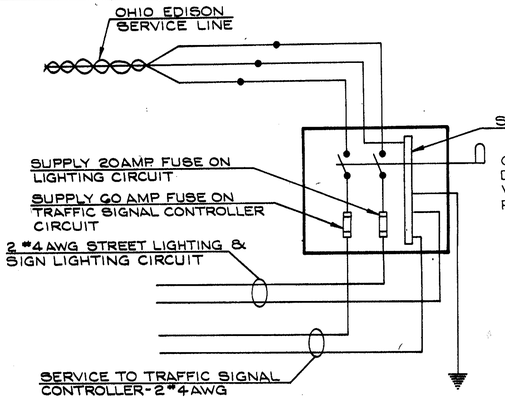

POWER SERVICE TO TRAFFIC SIGNALS AND STREET LIGHTING (TYPICAL)

IN LIEU OF A DISCONNECT FOR SIGN SERVICE, ONE 60 AMP FUSED DISCONNECT FOR SIGNALS, SIGNS AND STREET LIGHTING SHALL BE SUPPLIED. POWER SERVICE FOR INTERSECTION No. 1, PERKINS ST. AND ADOLPH ST., SHALL BE MOUNTED ON POLE SP1-2. INSULATOR, WEATHER HEAD, DISCONNECT SWITCH WITH ENCLOSURE AND MOUNTING HARDWARE SHALL BE INCLUDED IN POWER SERVICE PAY ITEM. ALL WIRING SHALL BE INSIDE THE POLE. THE CONTRACTOR SHALL LEAVE 3 CONDUCTORS OF No.4 AWG CABLE WITH 5 FEET OF SLACK, COILED AT TOP OF POLE, FOR FINAL CONNECTION BY OHIO EDISON CO. FORCES.

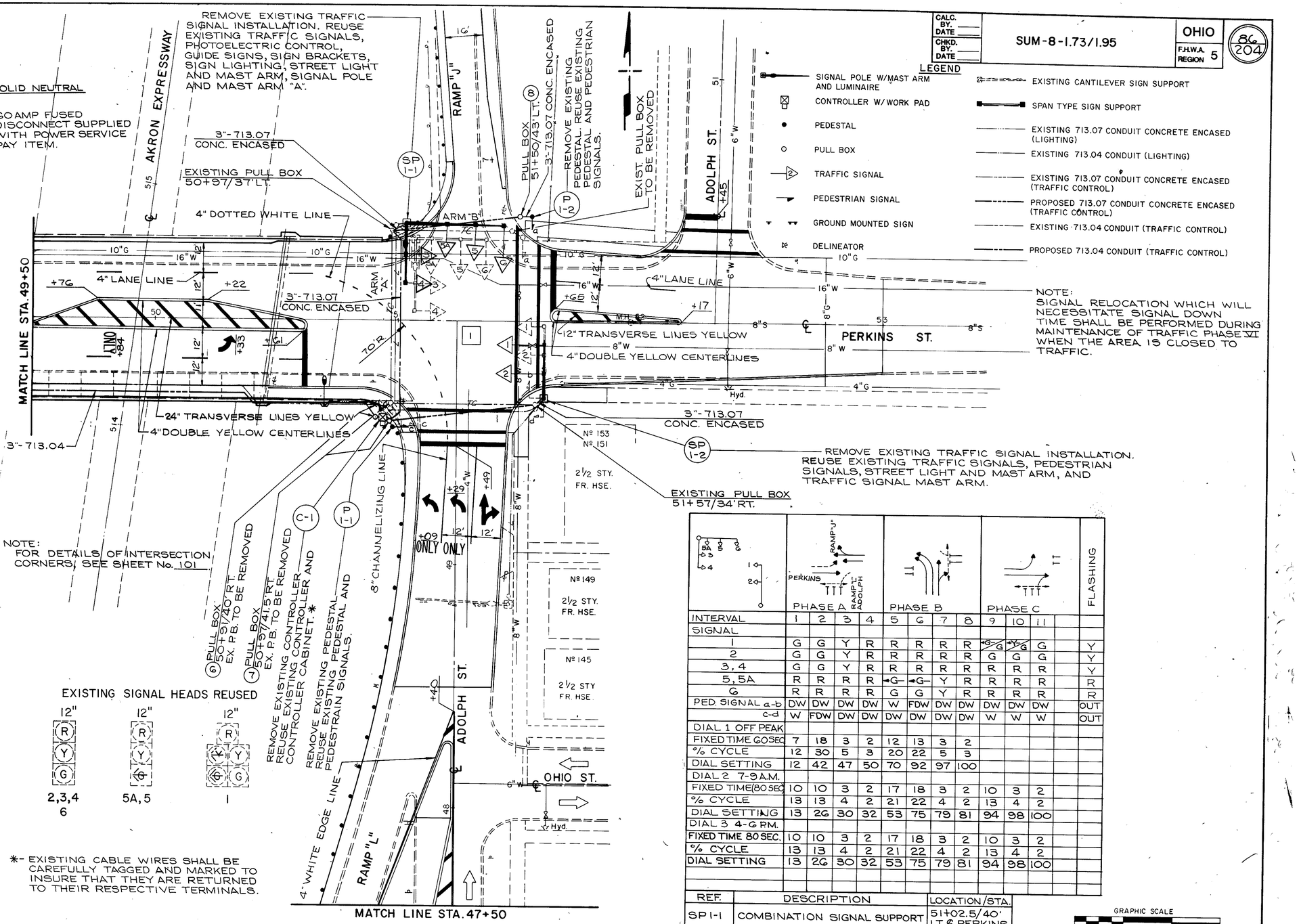

NOTE:
SIGNAL RELOCATION WHICH WILL NECESSITATE SIGNAL DOWN TIME SHALL BE PERFORMED DURING MAINTENANCE OF TRAFFIC PHASE VI WHEN THE AREA IS CLOSED TO TRAFFIC.

LEGEND

- SIGNAL POLE W/MAST ARM AND LUMINAIRE
- CONTROLLER W/ WORK PAD
- PEDESTAL
- PULL BOX
- TRAFFIC SIGNAL
- PEDESTRIAN SIGNAL
- GROUND MOUNTED SIGN
- DELINEATOR
- EXISTING CANTILEVER SIGN SUPPORT
- SPAN TYPE SIGN SUPPORT
- EXISTING 713.07 CONDUIT CONCRETE ENCASED (LIGHTING)
- EXISTING 713.04 CONDUIT (LIGHTING)
- EXISTING 713.07 CONDUIT CONCRETE ENCASED (TRAFFIC CONTROL)
- PROPOSED 713.07 CONDUIT CONCRETE ENCASED (TRAFFIC CONTROL)
- EXISTING 713.04 CONDUIT (TRAFFIC CONTROL)
- PROPOSED 713.04 CONDUIT (TRAFFIC CONTROL)

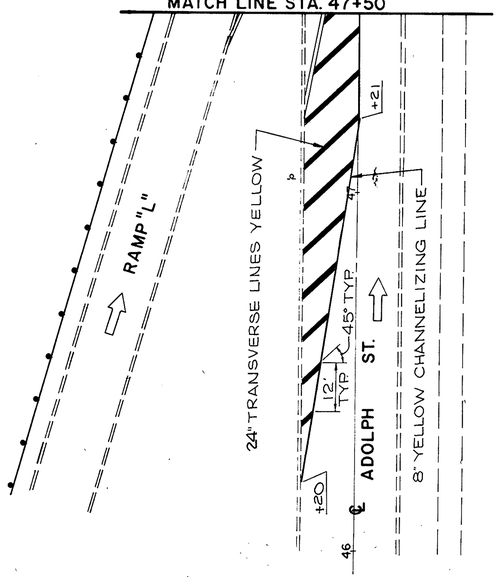

EXISTING SIGNAL HEADS REUSED

*- EXISTING CABLE WIRES SHALL BE CAREFULLY TAGGED AND MARKED TO INSURE THAT THEY ARE RETURNED TO THEIR RESPECTIVE TERMINALS.

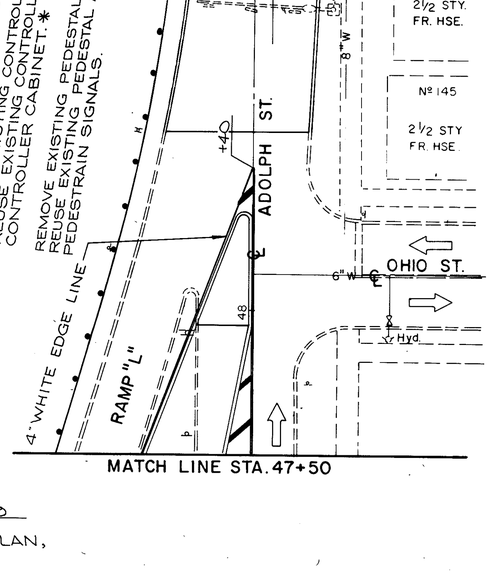

FOR WIRING DIAGRAM, SEE SHEET No. 89

FOR SIGNING AND PAVEMENT MARKING PLAN, SEE SHEET No. 81

FOR TRAFFIC SIGNAL ELEVATION VIEWS, SEE SHEET No. 88

	PHASE A				PHASE B				PHASE C			FLASHING
INTERVAL	1	2	3	4	5	6	7	8	9	10	11	
SIGNAL												
1	G	G	Y	R	R	R	R	R	G/G	Y/G	G	Y
2	G	G	Y	R	R	R	R	R	G	G	G	Y
3, 4	G	G	Y	R	R	R	R	R	R	R	R	Y
5, 5A	R	R	R	R	←G	←G	Y	R	R	R	R	R
6	R	R	R	R	G	G	Y	R	R	R	R	R
PED. SIGNAL a-b	DW	DW	DW	DW	W	FDW	DW	DW	DW	DW	DW	OUT
c-d	W	FDW	DW	DW	DW	DW	DW	DW	W	W	W	OUT
DIAL 1 OFF PEAK												
FIXED TIME 60 SEC	7	18	3	2	12	13	3	2				
% CYCLE	12	30	5	3	20	22	5	3				
DIAL SETTING	12	42	47	50	70	92	97	100				
DIAL 2 7-9 A.M.												
FIXED TIME (80 SEC)	10	10	3	2	17	18	3	2	10	3	2	
% CYCLE	13	13	4	2	21	22	4	2	13	4	2	
DIAL SETTING	13	26	30	32	53	75	79	81	94	98	100	
DIAL 3 4-6 P.M.												
FIXED TIME 80 SEC.	10	10	3	2	17	18	3	2	10	3	2	
% CYCLE	13	13	4	2	21	22	4	2	13	4	2	
DIAL SETTING	13	26	30	32	53	75	79	81	94	98	100	

REF.	DESCRIPTION	LOCATION/STA.
SP1-1	COMBINATION SIGNAL SUPPORT	51+02.5/40' LT. & PERKINS
SP1-2	COMBINATION SIGNAL SUPPORT	51+60/31.5' RT. & PERKINS
C-1	CONTROLLER	50+94/40' RT. & PERKINS
P1-1	PEDESTAL	50+98/44' RT. & PERKINS
P1-2	PEDESTAL	51+55/43' LT. & PERKINS

GRAPHIC SCALE
0 20 40 60

TRAFFIC CONTROL
PERKINS ST. & ADOLPH ST.

AA B/P# 71942R

IN LIEU OF A DISCONNECT FOR SIGN SERVICE, REUSE 60 AMP FUSED DISCONNECT FOR POWER SERVICE FOR SIGNALS, SIGNS AND STREET LIGHTING. POWER SERVICE FOR INTERSECTION No. 2, PERKINS ST. AND GOOD ST., SHALL BE MOUNTED ON SP 2-2. REUSE INSULATOR, WEATHER HEAD, DISCONNECT SWITCH ENCLOSURE AND MOUNTING HARDWARE. ALL WIRING SHALL BE INSIDE THE POLE. THE CONTRACTOR SHALL LEAVE 3 CONDUCTORS OF No.4 AWG CABLE WITH 5 FEET OF SLACK, COILED AT TOP OF POLE, FOR FINAL CONNECTION BY OHIO EDISON CO. FORCES. SEE SHEET No. 85 FOR WIRING DIAGRAM.

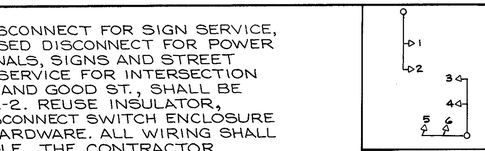

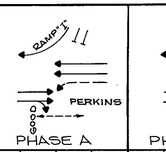

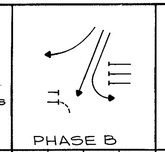

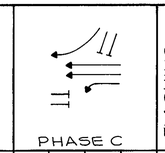

INTERVAL	1	2	3	4	5	6	7		8	9	10	FLASHING
SIGNAL												
1	G	G	Y	R	R	R	R		G	G	G	Y
2	G	G	Y	R	R	R	R		G	G	G	Y
3,4	G	G	Y	R	R	R	R		R	R	R	Y
5,6	R	R	R	R	G	Y	R		R	R	R	R
PEDESTRIAN SIGNAL												
a-b	W	FDW	DW	DW	DW	DW	DW		DW	DW	DW	
DIAL 1 OFF PEAK												
FIXED TIME (60 SEC)	20	15	3	2	15	3	2					
% CYCLE	34	25	5	3	25	5	3					
DIAL SETTING	34	59	64	67	92	97	100					
DIAL 2 7-9 A.M.												
FIXED TIME (80 SEC)	40	15	3	2	15	3	2					
% CYCLE	50	19	4	2	19	4	2					
DIAL SETTING	50	69	73	75	94	98	100					
DIAL 3 4-6 P.M.												
FIXED TIME (80 SEC)	25	15	3	2	15	3	2		10	3	2	
% CYCLE	31	19	4	2	19	4	2		13	4	2	
DIAL SETTING	31	50	54	56	75	79	81		94	98	100	

REF. NO.	DESCRIPTION	LOCATION/STA
SP2-1	COMBINATION SIGNAL SUPPORT	47+70/38.5' LT. ℄ PERKINS
SP2-2	COMBINATION SIGNAL SUPPORT	48+00/37' RT. ℄ PERKINS
C-2	CONTROLLER	48+10/37' RT. ℄ PERKINS
P2-1	EXISTING PEDESTAL	47+46/37' RT. ℄ PERKINS

CALC. BY. ____ DATE ____
CHKD. BY. ____ DATE ____

SUM-8-1.73/1.95

OHIO
F.H.W.A. REGION 5

87/204

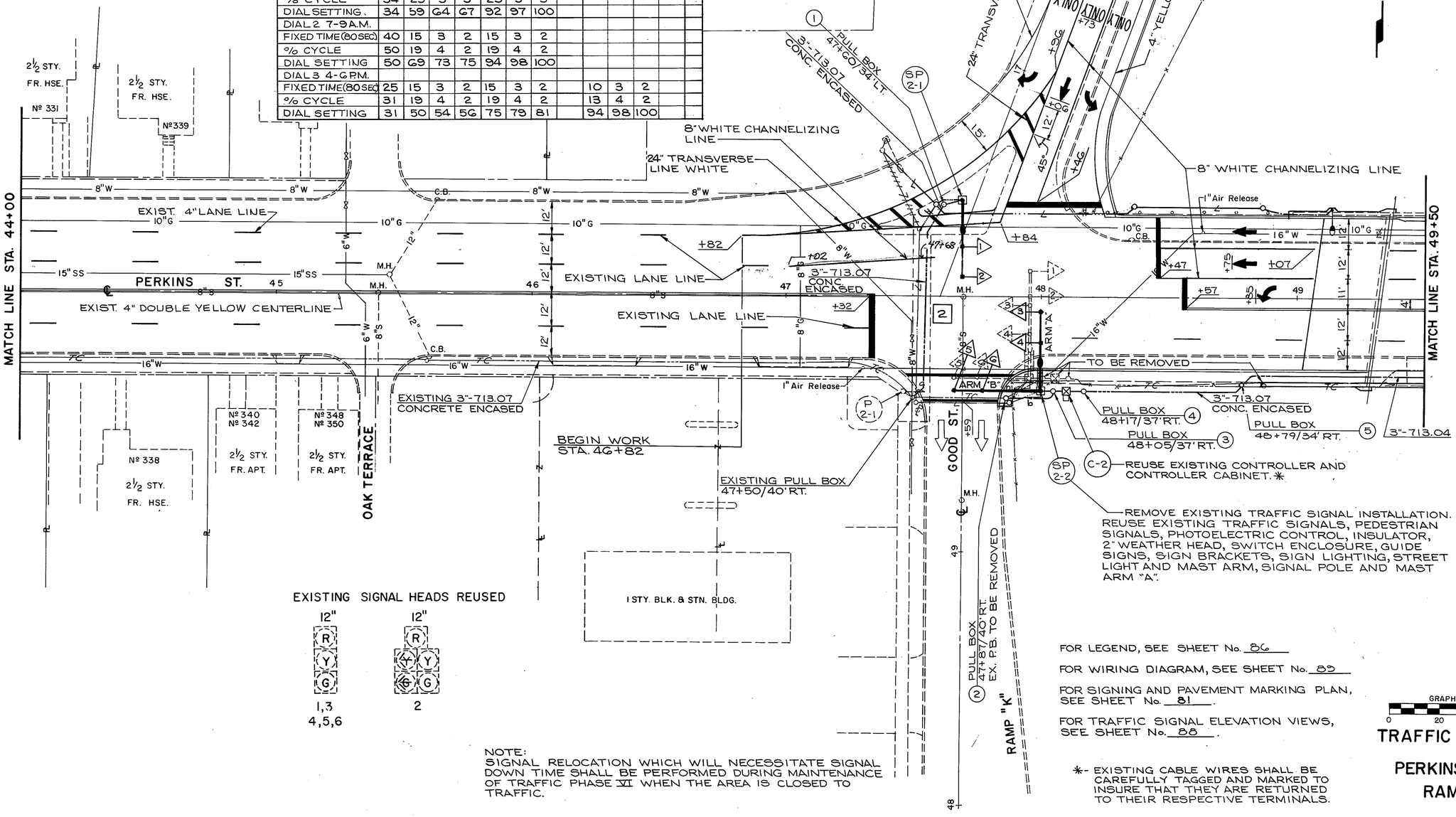

NOTE:
SIGNAL RELOCATION WHICH WILL NECESSITATE SIGNAL DOWN TIME SHALL BE PERFORMED DURING MAINTENANCE OF TRAFFIC PHASE VI WHEN THE AREA IS CLOSED TO TRAFFIC.

FOR LEGEND, SEE SHEET No. 86

FOR WIRING DIAGRAM, SEE SHEET No. 85

FOR SIGNING AND PAVEMENT MARKING PLAN, SEE SHEET No. 81.

FOR TRAFFIC SIGNAL ELEVATION VIEWS, SEE SHEET No. 88.

*- EXISTING CABLE WIRES SHALL BE CAREFULLY TAGGED AND MARKED TO INSURE THAT THEY ARE RETURNED TO THEIR RESPECTIVE TERMINALS.

GRAPHIC SCALE
0 20 40 60

TRAFFIC CONTROL

PERKINS ST. & RAMP "I"

AA B/P# 71942R

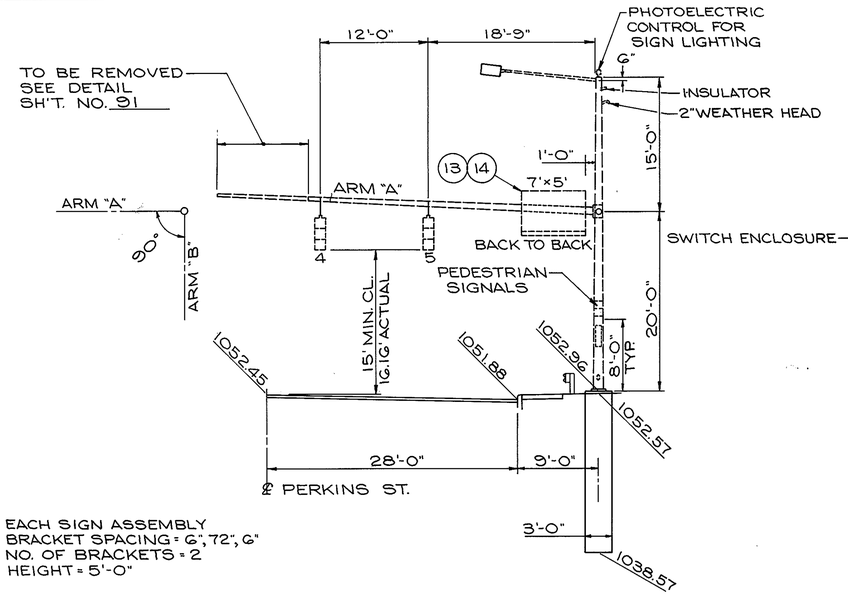

EACH SIGN ASSEMBLY
BRACKET SPACING = 6', 72", 6"
NO. OF BRACKETS = 2
HEIGHT = 5'-0"

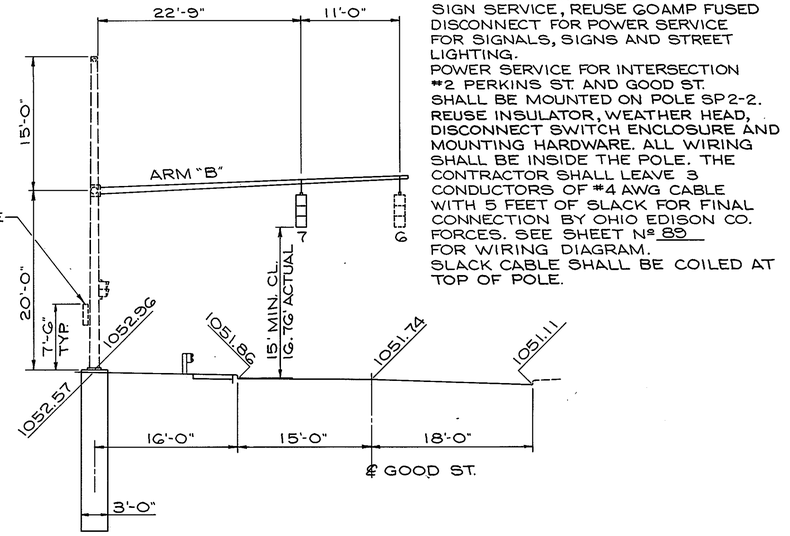

IN LIEU OF A DISCONNECT FOR SIGN SERVICE, REUSE GOAMP FUSED DISCONNECT FOR POWER SERVICE FOR SIGNALS, SIGNS AND STREET LIGHTING.
POWER SERVICE FOR INTERSECTION #2 PERKINS ST. AND GOOD ST. SHALL BE MOUNTED ON POLE SP 2-2. REUSE INSULATOR, WEATHER HEAD, DISCONNECT SWITCH ENCLOSURE AND MOUNTING HARDWARE. ALL WIRING SHALL BE INSIDE THE POLE. THE CONTRACTOR SHALL LEAVE 3 CONDUCTORS OF #4 AWG CABLE WITH 5 FEET OF SLACK FOR FINAL CONNECTION BY OHIO EDISON CO. FORCES. SEE SHEET Nº 89 FOR WIRING DIAGRAM.
SLACK CABLE SHALL BE COILED AT TOP OF POLE.

COMBINATION SIGNAL, SIGN AND LIGHT SUPPORT SP 2-2
STA. 48+00, 37' RT. ℄ PERKINS ST.
REUSE EXISTING SIGNAL POLE
.358G-15.0"×10.10"×35'-0"

ARM "A"
REUSE EXISTING MAST ARM
.299-12.0"×9.865"×15'-3"
.1793-9.69"×7.17"×18'-0"

ARM "B"
.179-9.0"×4.10"×35'-0"

CALC. BY. DATE	SUM-8-1.73/1.95	OHIO
CHKD. BY. DATE		F.H.W.A. REGION 5

88/204

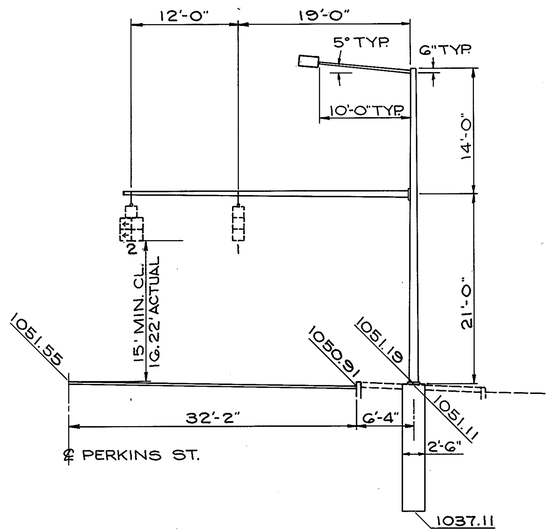

COMBINATION SIGNAL AND LIGHT SUPPORT SP 2-1
STA. 47+70, 38.5' LT. ℄ PERKINS ST.
TC 81.20 DESIGN 3
POLE = .179-12.0"×7.10"×35'-0" ARM = .179-9.0"×4.52"×32'-0"

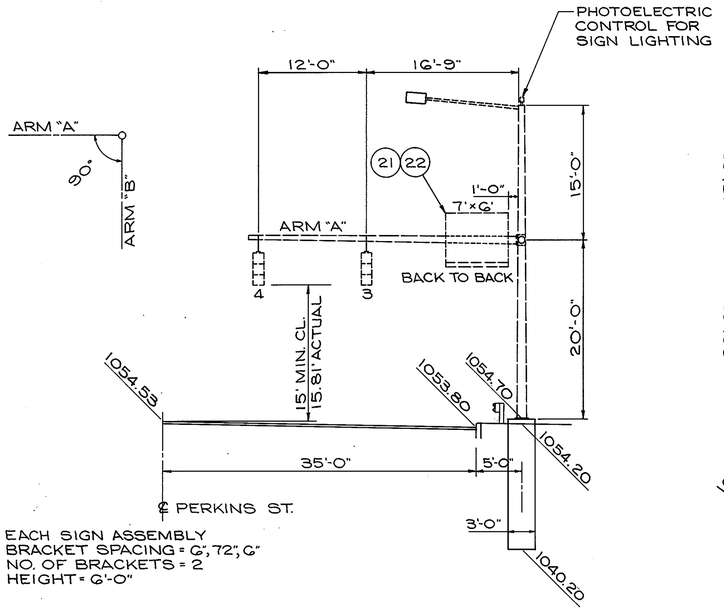

EACH SIGN ASSEMBLY
BRACKET SPACING = 6', 72", 6"
NO. OF BRACKETS = 2
HEIGHT = 6'-0"

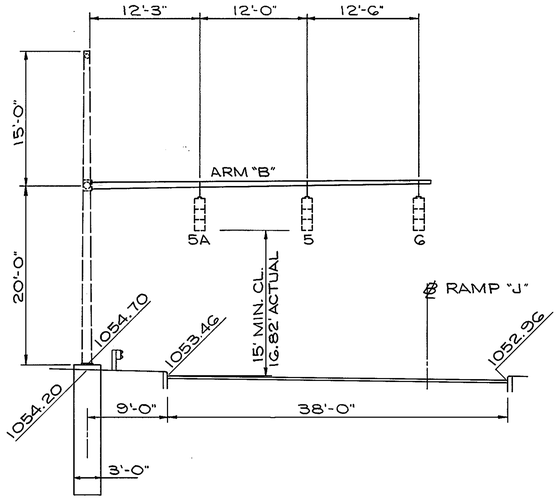

COMBINATION SIGNAL, SIGN AND LIGHT SUPPORT SP1-1
STA. 51+02.5, 40' LT. ℄ PERKINS ST.
REUSE EXISTING SIGNAL POLE
.239-13.0"×8.10"×35'-0"

ARM "A"
REUSE EXISTING MAST ARM
.179-10.0"×5.80"×30'-0"

ARM "B"
.179-9.0"×3.68"×38'-0"

POWER SERVICE FOR SIGNALS, SIGNS AND STREET LIGHTING AT INTERSECTION #1 PERKINS ST. AND ADOLPH ST. SHALL BE MOUNTED ON POLE SP1-2.
INSULATOR, WEATHER HEAD DISCONNECT AND MOUNTING HARDWARE SHALL BE INCLUDED IN POWER SERVICE PAY ITEM.
ALL WIRING SHALL BE INSIDE THE POLE.
THE CONTRACTOR SHALL LEAVE 3 CONDUCTORS OF #4 AWG CABLE WITH 5 FEET OF SLACK FOR FINAL CONNECTION BY OHIO EDISON CO. FORCES. SEE SHEET NO. 89 FOR WIRING DIAGRAM.
SLACK CABLE SHALL BE COILED AT TOP OF POLE.

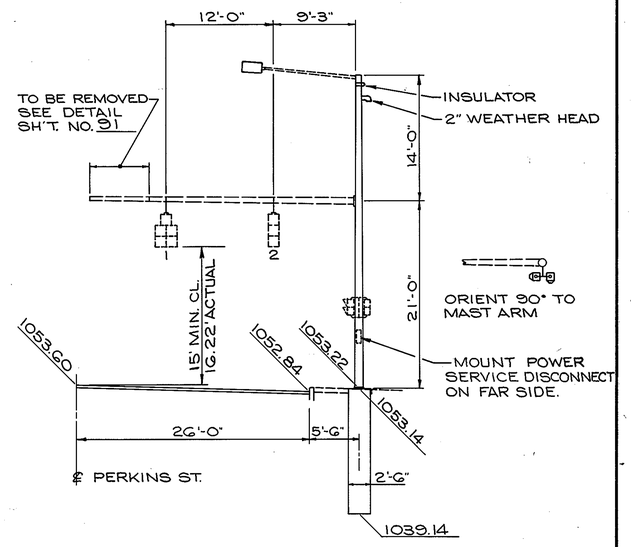

COMBINATION SIGNAL AND LIGHT SUPPORT SP1-2
STA. 51+60, 31.5' RT. ℄ PERKINS ST.
POLE = .179-11.0"×6.10"×35'-0" EXISTING ARM = .179-9.0"×5.78"×23'-0"

TRAFFIC SIGNAL ELEVATION VIEWS

CALC. BY. DATE	SUM - 8 - 1.73/1.95	OHIO
CHKD. BY. DATE		F.H.W.A. REGION 5

89 / 204

LEGEND

TRAFFIC CONTROLLER	SIGNAL CABLE 7/C STRANDED No. 14 AWG
PULL BOX	SIGNAL CABLE 5/C STRANDED No. 14 AWG
TRAFFIC SIGNAL	—E— POWER CABLE 2/C No. 4 AWG
PEDESTRIAN SIGNAL	—IC— INTERCONNECT CABLE 12/C STRANDED No. 14 AWG
2 INTERSECTION REFERENCE No.	

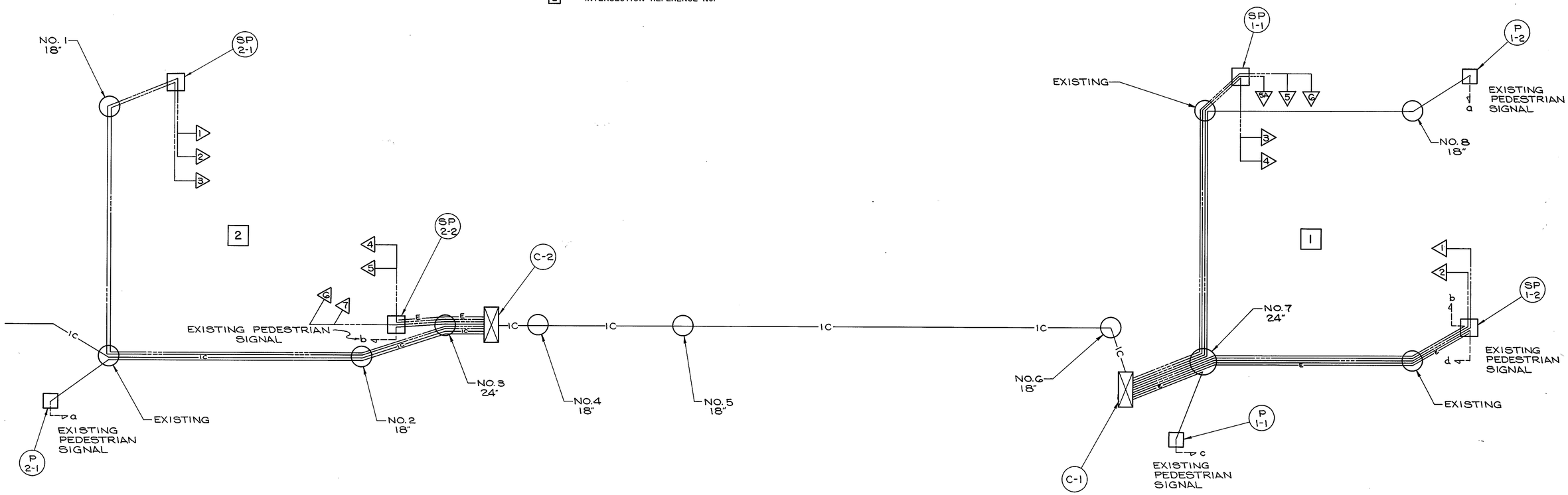

NOTE:
ALL EXISTING WIRING SHALL BE REMOVED.

WIRING DIAGRAM

CALCULATED BY T.K.I. DATE 10-7-83
CHECKED BY DSB DATE 4/85

CODE TYPE 7221

TRAFFIC SIGNAL QUANTITIES SUB-SUMMARY

FHWA REGION	STATE	PROJECT	
5	OHIO		

SUM-8-1.73/1.95

90/204

LINE NO.	INTERSECTION NO.	FROM	TO	DISTANCE	REUSE OF CONTROLLER EA.	REUSE OF CONTROLLER CABINET EA.	REUSE OF SIGNAL MAST ARM EA.	REUSE OF INSULATOR EA.	REUSE OF 2" WEATHER HEAD EA.	REUSE OF TRAFFIC SIGNAL EA.	REUSE OF PEDESTRIAN SIGNAL EA.	REUSE OF PEDESTAL EA.	REUSE OF DISCONNECT SWITCH EA.	REUSE OF DISCONNECT SWITCH ENCLOSURE EA.	REUSE OF SIGNAL POLE EA.	REMOVAL OF TRAFFIC SIGNAL INSTALLATION EA.	TRENCH L.F.	TRENCH IN PAVED AREAS, TYPE A L.F.	TRENCH IN PAVED AREAS, TYPE B L.F.	3" CONDUIT - 713.07 CONCRETE ENCASED L.F.	3" CONDUIT - 713.04 L.F.	CONCRETE PULL BOX 18" AS PER PLAN EA.	CONCRETE PULL BOX 24" AS PER PLAN EA.	SIGNAL CABLE 7 - CONDUCTOR No.14 AWG L.F.	SIGNAL CABLE 5 - CONDUCTOR No.14 AWG L.F.	INTERCONNECT CABLE 12 - CONDUCTOR No.14 AWG L.F.	POWER CABLE 2 - CONDUCTOR No.4 AWG L.F.	POWER CABLE 3 - CONDUCTOR No.4 AWG L.F.	POWER SERVICE EA.	GROUND ROD EA.	4" CONCRETE WALK S.F.	CONCRETE FOR CABINET FOUNDATIONS C.Y.	CONCRETE FOR ANCHOR BASE FOUNDATIONS C.Y.	CABLE SUPPORT ASSEMBLY EA.	COMBINATION SIGNAL SUPPORT - TYPE 81.20, DESIGN 3 EA.	SIGNAL MAST ARM TC 81.20 DES. 3 35'-0" AS PER PLAN EA.	SIGNAL MAST ARM TC 81.20 DES. 3 38'-0" AS PER PLAN EA.	COMBINATION SIGNAL POLE TC 81.20 DES. 2 AS PER PL 1N EA.	LINE NO.
1	2	SP 2-1	PB-1	10'													10			10		1											2.59	1	1				1
2	2	PB-1	EXISTING PB	75'													5	70		75																			2
3	2	EXISTING PB	P 2-1	5'																																			3
4	2	EXISTING PB	PB-2	37'																		1																	4
5	2	PB-2	PB-3	20'													20			20			1																5
6	2	PB-3	C-2	5'													5			5										1		8.3	0.99						6
7	2	PB-3	SP 2-2	5'			1	1	1				1	1	1		5			5										1				3.83			1			7
8																1																							8
9																																							9
10	2	C-2	SIGNAL 1	—	1	1				1														219															10
11	2	C-2	SIGNAL 2	—						1														231															11
12	2	C-2	SIGNAL 3,4	—						2														85															12
13	2	C-2	SIGNAL 5,6	—						2														88															13
14	2	C-2	PED a	—							1														37														14
15	2	C-2	PED b	—							1														104														15
16	2	C-2	SP 2-2	—																							36	38		1									16
17	2	C-2	EXISTING PB	—																						84													17
18																																							18
19																																							19
20																																							20
21	—	C-2	PB-4	7'													7			7		1																	21
22	—	PB-4	PB-5	64'													64			64		1																	22
23	—	PB-5	PB-6	212'													7	55			217	1																	23
24	—	PB-6	C-1	3'													3			3																			24
25																																		1		8.3	0.99				25
26																																									26
27																																									27
28																1																								28
29	1	C-1	PB-7	3'													3			3			1																	29
30	1	PB-7	P 1-1	3'							1						3			3										1				0.39						30
31	1	PB-7	EXISTING PB	60'														17	43	60																			31
32	1	EXISTING PB	SP 1-2	4'			1										4			4										1				2.59		1			1	32
33	1	PB-7	EXISTING PB	79'														11	68	79																			33
34	1	EXISTING PB	SP 1-1	7'			1								1		7			7										1				3.87				1		34
35	1	EXISTING PB	PB-8	54'													35		19	54		1																	35
36	1	PB-8	P 1-2	5'							1						5			5										1				0.39						36
37																																									37
38																																									38
39	1	C-1	SIGNAL 1	—	1	1				1														131															39
40	1	C-1	SIGNAL 2	—						1														119															40
41	1	C-1	SIGNAL 3,4	—						2														165															41
42	1	C-1	SIGNAL 5A	—						1														143															42
43	1	C-1	SIGNAL 5,6	—						2														173															43
44	1	C-1	PED a	—							1														177														44
45	1	C-1	PED b	—							1														103														45
46	1	C-1	PED c	—							1														30														46
47	1	C-1	PED d	—							1														103														47
48	—	C-2	C-1	—																						327													48
49	1	C-1	SP 1-2	—																							102	38		1									49
50																																								50
TOTAL BHF FUNDS					2	2	3	1	1	13	6	2	1	1	2	2	168	98	200	404	217	6	2	1354	554	411	138	76	2	8	16.6	1.98	13.66	2	1	1	1	1	

ITEMS 625-632-861 TRAFFIC SIGNAL SUB-SUMMARY

CALC. BY. ____ DATE ____	SUM - 8 - 1.73/1.95	OHIO
CHKD. BY. ____ DATE ____		F.H.W.A. REGION 5

91
204

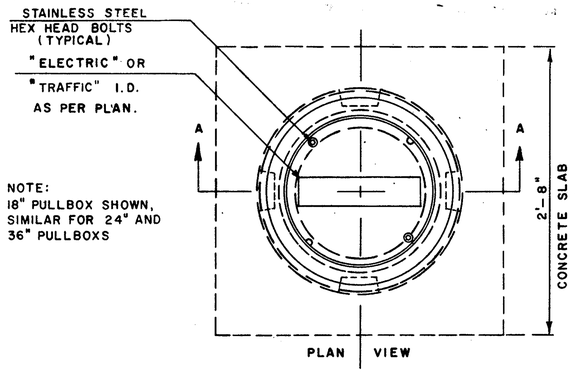

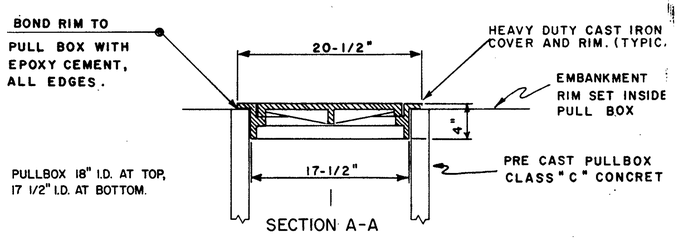

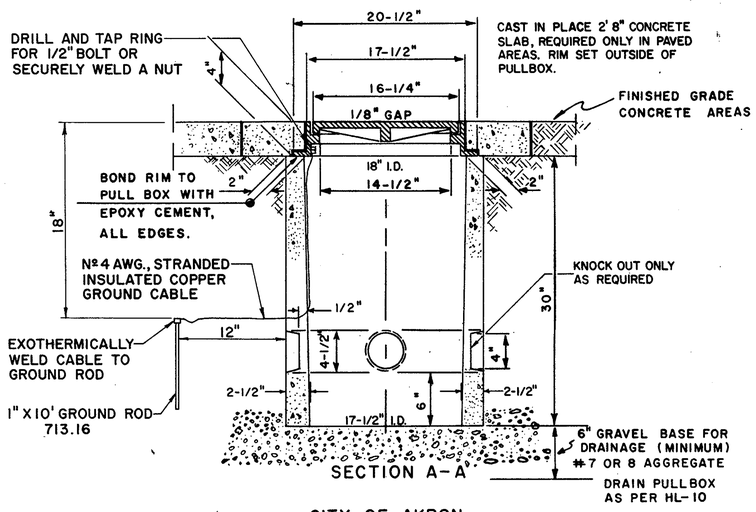

CITY OF AKRON
STANDARD
CONCRETE PULLBOX.

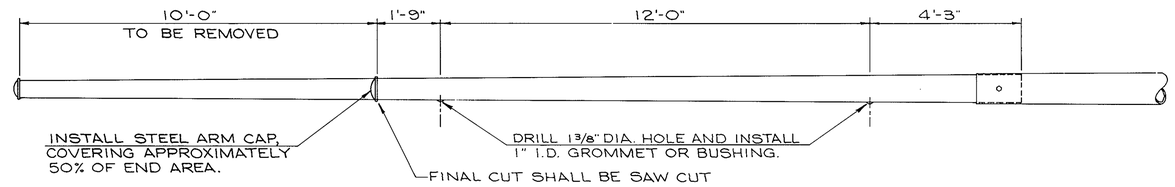

EXISTING ARM "A"
STA. 48+00, 37' RT. ℄ PERKINS STREET

EXISTING = .299 - 12.0" x 9.865" x 15'-3"
.1793 - 9.69" x 5.77" x 28'-0"
PROPOSED = .299 - 12.0" x 9.865" x 15'-3"
.1793 - 9.69" x 7.17" x 18'-0"

NOTE: ALL SHARP EDGES INSIDE THE MAST ARM SHALL BE REMOVED.

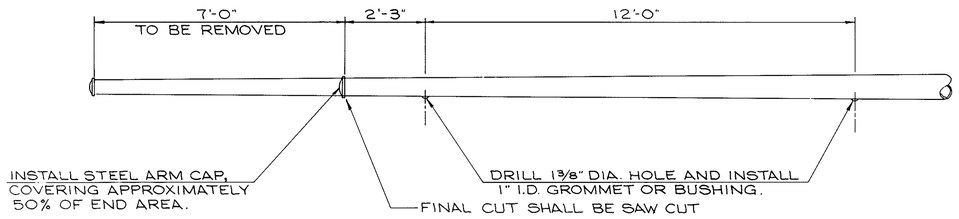

EXISTING ARM
STA. 51+60, 31.5' RT. ℄ PERKINS STREET

EXISTING = .1793 - 9.0" x 4.80" x 30'-0"
PROPOSED = .1793 - 9.0" x 5.78" x 23'-0"

EXISTING MAST ARM ADJUSTMENT DETAIL

SCALE : 1/2" = 1'-0"

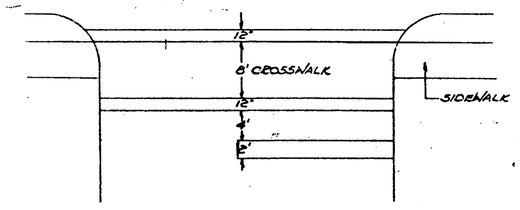

CROSSWALK TYPICAL

TRAFFIC CONTROL DETAILS

GENERAL LIGHTING NOTES

SPECIFICATIONS

THESE NOTES ARE SUPPLEMENTAL TO ITEMS 625 AND 713 OF THE STATE OF OHIO DEPARTMENT OF TRANSPORTATION CONSTRUCTION AND MATERIAL SPECIFICATIONS

REFERENCE SHALL BE MADE TO STANDARD CONSTRUCTION DRAWINGS LISTED ON THE TITLE SHEET OF THESE PLANS.

625.03 - GENERAL

THE POWER SUPPLYING AGENCY FOR THIS PROJECT IS OHIO EDISON COMPANY, III CASCADE PLAZA, AKRON, OHIO 44308, TELEPHONE 384-5095.

THE PROJECT HAS BEEN DESIGNED ON THE BASIS OF FIVE PERCENT VOLTAGE DROP PERMISSIBLE ON BRANCH CIRCUITS. THE PROJECT WILL RECEIVE 480 VOLT TWO-WIRE SECONDARY SERVICE ONE SIDE GROUNDED FROM OHIO EDISON COMPANY.

THE PROJECT HAS BEEN DESIGNED ON THE BASIS OF FULL LIGHTING WITH 1.2 FOOT CANDLE AVERAGE INITIAL, WITH A MAXIMUM UNIFORMITY RATIO OF 4.0 TO 1.

HIGH-PRESSURE SODIUM LAMPS

HIGH-PRESSURE SODIUM LAMPS SHALL BE GENERAL ELECTRIC "LUCALOX", SYLVANIA "LUMALUX", WESTINGHOUSE "CERAMALUX", OR EQUAL APPROVED BY THE ENGINEER. THE 150 WATT LAMPS SHALL HAVE AN OPERATING VOLTAGE OF 100 VOLT DESIGN, ANSI S56.

CONDUIT ON STRUCTURES

EXPANSION FITTINGS FOR CONDUIT ON STRUCTURES SHALL BE OZ TYPE AX, SPRING CITY TYPE AF, APPLETON TYPE XJ-4, OR EQUAL APPROVED BY THE ENGINEER FOR BRIDGE NO. (SUM-8-0175 AND OZ TYPE AX-8, OZ TYPE EX, SPRING CITY TYPE EF, APPLETON TYPE XJ-8, OR EQUAL APPROVED BY THE ENGINEER FOR BRIDGE NO. SUM-8-0195).
EACH EXPANSION FITTING SHALL HAVE A COPPER EXTERNAL BONDING JUMPER.

713.07 POLYVINYL CHLORIDE PLASTIC CONDUIT

CONDUIT FURNISHED UNDER THIS SPECIFICATION SHALL CONFORM TO NEMA STANDARDS PUBLICATION NO. TC-6 WITH THE EXCEPTION THAT CONDUIT AND CONDUIT FITTINGS COMPOSED OF ACRYLONITRILE-BUTADIENE-STYRENE (ABS) SHALL NOT BE ACCEPTABLE.

AS AN ALTERNATE TO POLYVINYL CHLORIDE, CORRUGATED COILABLE POLYPROPYLENE CONFORMING TO NEMA STANDARDS PUBLICATION NO. TC-5 MAY BE USED.

ELECTRICAL SERVICE FOR ILLUMINATED SIGNS

THE PAY ITEMS IN THE LIGHTING GENERAL SUMMARY INCLUDE THE PULL BOX OR JUNCTION BOX ADJACENT TO EACH LIGHTED SIGN AND THE ELECTRICAL SERVICE CONNECTIONS LEADING INTO THE BOX, INCLUDING SPLICES OR CONNECTOR KITS IN THE PULL BOX OR JUNCTION BOX. QUANTITIES FOR ELECTRICAL SERVICE FROM THE CONNECTION IN THE PULL BOX OR JUNCTION BOX TO THE SIGN ARE INCLUDED IN THE TRAFFIC CONTROL GENERAL SUMMARY.

STANDARD CONSTRUCTION DRAWING HL-3

POLE BASE DETAILS SHOWN ON THIS DRAWING ARE ESSENTIALLY FOR GALVANIZED STEEL POLES. FOR ALUMINUM DESIGNS, OR OTHER PERMITTED STEEL MATERIAL DESIGNS, VARIATIONS FROM THESE DETAILS WILL BE ACCEPTABLE AS APPROVED BY THE ENGINEER.

ITEM 625 - CABLE SPLICING KIT

THIS ITEM SHALL CONSIST OF PROVIDING AND INSTALLING AN APPROVED CABLE SPLICING KIT AS DESCRIBED IN PARAGRAPH 5 OF SECTION 713.15 OF THE ODOT CONSTRUCTION AND MATERIAL SPECIFICATIONS. THE COST OF ALL MATERIALS, LABOR, AND EQUIPMENT NECESSARY FOR THIS ITEM SHALL BE INCLUDED IN THE UNIT PRICE BID FOR EACH ITEM 625 - CABLE SPLICING KIT.

UNDERDRAINS FOR PULL BOXES

REFERENCE IS MADE TO STANDARD DRAWING HL-10 FOR DETAILS OF DRAINING PULL BOXES. UNDERDRAINS FOR PULL BOXES SHALL BE USED AS DIRECTED BY THE ENGINEER AND SHALL BE PROVIDED WHERE THE LENGTH REQUIRED FOR A SATISFACTORY OUTLET DOES NOT EXCEED APPROXIMATELY 40'. AN ESTIMATED QUANTITY OF "360 LIN FT OF ITEM 603, 4" SHALLOW PIPE UNDERDRAINS" IS INCLUDED IN THE LIGHTING GENERAL SUMMARY FOR THIS PURPOSE.

BRACKET ARMS FOR LUMINAIRE SUPPORT ON COMBINATION POLES

BRACKET ARMS FOR LUMINAIRE SUPPORT SHALL BE .1196 THICK STEEL ELLIPSOIDAL OR ROUND CROSS SECTION AND TAPERED ITS FULL LENGTH. THIS ARM SHALL BE STRAIGHT AND ATTACHED WITH ONLY SIMPLEX CONNECTION SIMILAR TO THE CONNECTION SHOWN ON STANDARD DRAWING HL-2. THE ARM SHALL BE INSTALLED AT FIVE DEGREES (5^0) ABOVE HORIZONTAL. SEE DETAIL ON SHEET NO. 100.

625.07 - 713.11 LUMINAIRES

STYLE B LUMINAIRES SHALL HAVE SINGLE RATED 480 VOLT, 200 WATT, INTEGRAL REGULATOR BALLASTS FOR USE WITH HIGH-PRESSURE SODIUM LAMPS AND SHALL BE GENERAL ELECTRIC M400, CROUSE-HINDS OV-25 TUDOR, ITT AMERCIAN 400, OR EQUAL APPROVED BY THE ENGINEER.

LUMINAIRES

LUMINAIRES DESIGNATED ON THE PLAN AS "CITY OF AKRON LUMINAIRE" SHALL, WITH THE SPECIFIED LAMP, COMPLY WITH I.E.S. CLASSIFICATIONS, TYPE II MEDIUM-CUTOFF AT 6 1/2° UP TILT. SEE SHEET NO. 100 FOR DETAIL.

THE LUMINAIRE HOUSING SHALL BE SQUARE IN SHAPE AND CONSIST OF A ONE-PIECE RIGID, CAST OR EXTRUDED ALUMINUM UNIT. EXTRUDED UNITS SHALL HAVE A ONE-PIECE ALUMINUM TOP, FORMING AN INTEGRAL ASSEMBLY. FULL INTERIOR WELDS SHALL BE USED THROUGHOUT. THE TOP SHALL BE SILICONE-GASKETTED TO THE LUMINAIRE SIDE PANELS.

THE LENS SHALL BE ONE PIECE, FLAT, TEMPERED, HEAT, AND IMPACT-RESISTANT GLASS. THE GLASSWARE SHALL BE SILICONE SEALED IN A HINGED FRAME MADE OF EXTRUDED ALUMINUM SECTIONS HAVING MITERED CORNERS. THE FRAMED LENS SHALL BE HINGED FOR RELAMPING EASE WITH STAINLESS STEEL CAPTIVE HARDWARE. THE FRAME SHALL BE GASKETTED AGAINST THE LUMINAIRE HOUSING FOR WEATHERTIGHT, DUST-TIGHT, BUG-TIGHT SEAL AND SHALL BE EASILY REMOVED FOR CLEANING.

THE RELFECTOR SHALL BE OF AN APPROVED SPECULAR POLISHED ALUMINUM REFLECTIVE SURFACE. IT SHALL BE HELD FIRMLY IN THE LUMINAIRE BUT SHALL BE EASILY REMOVED WITHOUT THE USE OF SPECIAL TOOLS. THE REFLECTION SHALL BE CLEAN AND FREE FROM SCRATCHES.

(LUMINAIRES CONT'D.)

THE SOCKET SHALL BE MOGUL SCREW SHELL WITH LARGE CENTER CONTACT SPRING PROVIDING A FIRM CONTACT WITH THE LAMP BASE. THE SOCKET SHELL SHALL HAVE LAMP GRIPS TO PREVENT THE LAMP FROM LOOSENING. THE SHELL MAY BE OF THE SKELETON TYPE OR SHROUDED IN PORCELAIN. THE CONTACTS SHALL BE IDENTIFIABLE.

A LAMP STABILIZER SHALL BE PROVIDED TO RELIEVE MECHANICAL STRESSES DUE TO VIBRATION. THE STABILIZER SHALL BE A SPRING-LOADED DEVICE OR A SPRING-TYPE ACTIVE ARRANGEMENT AROUND THE LAMP. THE STABILIZER SHALL BE ATTACHED TO THE HOUSING ABOVE OR IN FRONT OF THE LAMP.

THE BALLAST SHALL BE A HIGH-POWER FACTOR, CONSTANT-WATTAGE OR REGULATOR TYPE WITH SEPARATE PRIMARY AND SECONDARY WINDINGS AND SHALL BE RATED TO THE CIRCUIT VOLTAGE AND SIZE OF LAMP SPECIFIED. THE BALLAST SHALL START THE LAMP AT TEMPERATURES AS LOW AS -20^0F AND SHALL DELIVER RATED LAMP CURRENT AT CIRCUIT VOLTAGE VARIATION OF PLUS OR MINUS 10 PERCENT. THE REGULATION OUTPUT OF LAMP WATTAGE SHALL NOT EXCEED A TOTAL RANGE OF 4 PERCENT FOR LAMPS RATED 400 WATTS OR LESS OR 6 PERCENT FOR LAMPS RATED IN EXCESS OF 400 WATTS.

LUMINAIRES SHALL BE COMPLETELY PRE-WIRED WITH HIGH-TEMPERATURE WIRE AND HAVE AN INTEGRAL TERMINAL BLOCK FOR CONNECTING THE CABLE, AN INTEGRAL STRAIN RELIEF BAND SHALL BE PROVIDED FOR THE POLE AND BRACKET CABLE.

LUMINAIRES SHALL BE FITTED WITH A 2" CAST ALUMINUM SLIPFITTER CONNECTOR OR INTEGRAL SUPPORT CLAMP. AN ENGAGEMENT OF AT LEAST 4 1/2" OF THE ARM SHALL BE PROVIDED. A MINIMUM OF FOUR STAINLESS STEEL SET SCREWS SHALL BE PROVIDED ON SLIPFITTER CONNECTIONS. ARRANGEMENT OF THE SET SCREWS SHALL PROVIDE A GOOD MECHANICAL CONNECTION SO THE LUMINAIRE CAN BE ADJUSTED AND HELD IN ITS SPECIFIED VERTICAL AND HORIZONTAL POSITION. SLIPFITTER CONNECTIONS SHALL BE ATTACHED TO THE LUMINAIRE HOUSING WITH FOUR STAINLESS STEEL HEX HEAD NUTS AND BOLTS WITH LOCK WASHERS.

LUMINAIRES AND SLIPFITTERS SHALL BE PAINTED "MATTE BLACK" TO MATCH THE PAINT DESIGNED FOR THE POLES. THE FINISH SHALL CARRY A MANUFACTURER'S GUARANTEE OF FIVE (5) YEARS. ALL LUMINAIRES SHALL BE FROM THE SAME MANUFACTURED SOURCE.

LUMINAIRES USED FOR "UNDERPASS" LIGHTING SHALL HAVE AN INTEGRAL 10 AMP FUSE AND FUSE HOLDER.

LUMINAIRES WILL BE ACCEPTED UPON THE MANUFACTURER'S CERTIFICATION THAT THEY MEET THE REQUIREMENTS OF THIS SPECIFICATION AS WELL AS HAVING UNDERWRITERS' LABORATORY APPROVAL.

BASIS OF PAYMENT WILL BE AT THE CONTRACT BID PRICE PER EACH 625 LUMINAIRE, CITY OF AKRON, (WATTAGE AND TYPE) AS PER PLAN, WHICH PRICE WILL INCLUDE ALL LABOR, MATERIALS, EQUIPMENT, INSTALLATION, AND INCIDENTALS.

GENERAL LIGHTING NOTES

MAINTAINING EXISTING LIGHTING

BEFORE ANY WORK IS STARTED IN THE IMMEDIATE VICINITY OF ANY EXISTING LIGHTING CIRCUITS, REPRESENTATIVES OF THE STATE, CITY, AND THE CONTRACTOR SHALL MAKE A VISUAL INSPECTION OF THE EXISTING ROADWAY AND SIGN LIGHTING SYSTEMS ON THE CIRCUITS AFFECTED. RECORDS OF THIS INSPECTION AS TO POLE, SIGN, AND CIRCUIT OUTAGES AND POLE KNOCK-DOWNS SHALL BE KEPT IN WRITING BY THE STATE. THIS PROCEDURE SHALL APPLY AT EACH LOCATION WHERE THERE IS EXISTING CIRCUITRY.

IT SHALL BE THE CONTRACTOR'S RESPONSIBILITY TO CONTINUOUSLY MAINTAIN THE EXISTING ROADWAY AND SIGN LIGHTING SYSTEMS WHICH HAVE BEEN INSPECTED AND DETERMINED OPERATIONAL BY THE ABOVE PARTIES. ALL OUTAGES SHALL BE REPAIRED WITHIN 24 HOURS AFTER NOTIFICATION BY THE ENGINEER.

PAYMENT FOR THIS ITEM SHALL BE MADE AT THE LUMP SUM BID PRICE FOR ITEM 625, MAINTAINING EXISTING LIGHTING, AND SHALL INCLUDE ALL LABOR, MATERIAL, EQUIPMENT, AND INCIDENTALS NECESSARY TO COMPLETE THE WORK AS SPECIFIED.

ITEM SPECIAL - PLASTIC CAUTION TAPE

THE LOCATION OF UNDERGROUND DUCT CABLE OR NON-METALLIC CONDUIT, WHEN INSTALLED IN LOCATIONS OTHER THAN THE NORMAL OR ALTERNATE TRENCH ALIGNMENT SHOWN ON STANDARD CONSTRUCTION DRAWING HL-1, SHALL BE MARKED BY THE USE OF A CONTINUOUS IDENTIFYING TAPE BURIED IN THE TRENCH ABOVE THE LINE. THE IDENTIFYING TAPE SHALL BE AN INERT MATERIAL, APPROXIMATELY 6" WIDE, COMPOSED OF POLYETHYLENE PLASTIC, HIGHLY RESISTANT TO ALKALIS, ACID OR OTHER CHEMICAL COMPONENTS LIKELY TO BE ENCOUNTERED IN SOILS. THE TAPE SHALL BE BRIGHT YELLOW WITH IDENTIFYING PRINTING "ELECTRIC" IN BLACK LETTERS, ONE SIDE ONLY. TAPES SHALL BE SUPPLIED IN CONTINUOUS ROLLS WITH THE IDENTIFYING LETTERING REPEATED CONTINUOUSLY THE FULL LENGTH OF THE TAPE. IDENTIFYING TAPES SHALL BE BURIED IN THE ELECTRIC LINE TRENCH WITH ONE STRIP PLACED APPROXIMATELY DOWN THE CENTERLINE AND LOCATED APPROXIMATELY 8" TO 12" BELOW THE FINAL FINISHED GRADE. THE TAPE SHALL BE PLACED IN THE TRENCH WITH PRINTED SIDE UP AND SHALL BE ESSENTIALLY PARALLEL WITH THE FINISHED SURFACE. THE CONTRACTOR SHALL TAKE NECESSARY PRECAUTIONS TO INSURE THAT THE TAPE IS NOT PULLED, DISTORTED, OR OTHERWISE MISPLACED IN COMPLETING THE TRENCH BACKFILL. TAPE SHALL BE ALLEN SYSTEM'S, TERRA TAPE, TECTA TAPE, OR EQUAL AS APPROVED BY THE ENGINEER.

THE TAPE SHALL BE PAID FOR PER LINEAR FEET OF "ITEM SPECIAL - PLASTIC CAUTION TAPE," COMPLETE AND IN PLACE.

202 REMOVAL OF EXISTING LIGHTING INSTALLATIONS FOR STORAGE

THIS ITEM SHALL CONSIST OF REMOVING THE EXISTING LIGHT POLES, LUMINARIES, BRACKET ARMS, AND POLE WIRING AT THE LOCATION SHOWN ON THE PLANS, AND STORING THEM AT A SITE TO BE DETERMINED BY THE CITY OF AKRON AT THE TIME OF REMOVAL.

PAYMENT SHALL BE UNIT PRICE BID FOR EACH INSTALLATION REMOVED INCLUDING ALL MATERIAL, LABOR AND INCIDENTALS NECESSARY TO COMPLETE THE WORK AS SPECIFIED.

LIGHT POLES

LIGHT POLES DESIGNATED ON THE PLAN AS "CITY OF AKRON STANDARD" SHALL COMPLY WITH SECTIONS 625.05 AND 713.01 WITH THE FOLLOWING ADDITIONS AND/OR EXCEPTIONS.

ANCHOR BOLTS SHALL BE SUPPLIED WITH DOUBLE NUTS. THE FIRST SET SHALL BE INSTALLED 1/4 INCH MAXIMUM FROM THE TOP OF FOUNDATION AND LEVELED TO ALIGN AND PLUMB THE POLE.

THE POLE SHAFT SHALL BE A EQUILATERAL DIAMOND CROSS SECTION ITS FULL LENGTH, TAPERED THROUGHOUT. SEE DETAIL ON SHEET NO. 100.

THE LUMINAIRE ARM OF THE SAME SHAPE, CROSS SECTION AND TAPER SHALL BE WELDED TO THE POLE AT 6 1/2° WITH A 1/2 INCH BACK UP PLATE. A SMOOTH WIRE WAY SHALL BE PROVIDED BETWEEN THE POLE AND ARM. A 2 INCH SCHEDULE 40 TENON SHALL BE WELDED TO THE END OF THE LUMINAIRE ARM. THE TENON SHALL PROJECT FROM THE END OF THE ARM A MINIMUM OF 6 INCHES.

LIGHT POLES, SIGN SUPPORTS, SIGNAL POLES AND VARIOUS COVER BASES AND HAND HOLE COVERS SHALL BE SHOP PAINTED BY ONE OF THE FOLLOWING METHODS:

1. IN ACCORDANCE WITH 625.05 AND 713.01.9, EXCEPT THE ENTIRE PAINTING PROCESS SHALL BE SHOP PERFORMED. THE GALVANIZED MATERIAL SHALL BE TREATED FOR PAINTING IN ACCORDANCE WITH ASTM D2092.

2. A PAINT SYSTEM APPROVED FOR STEEL PRODUCTS OF A FLUOROPOLYMER COATING WITH A MINIMUM OF 70% BASE RESIN OF POLYVINYLIDENE FLUORIDE (PVF_2) MAY BE USED.

3. A PAINT SYSTEM OF STRAIGHT EPOXY AND ASSOCIATED PRIMERS MAY BE USED.

ALL INTERIOR EXCEPT GALVANIZED POLES AND EXTERIOR SURFACES SHALL BE PAINTED AND TWO COATS OF A FINAL "MATTE" BLACK PAINT SHALL BE APPLIED. TOTAL DRY FILM THICKNESS OF THE PAINT SYSTEM SHALL BE TWO MILS.

THE CONTRACTOR SHALL SUBMIT FOR APPROVAL, COLOR SAMPLES AND METHOD OF PAINTING. THE APPLIED PAINT SHALL CARRY A FIVE YEAR LIMITED WARRANTY AGAINST PEELING, CRACKING AND SPALLING.

THE POLES SHALL BE WRAPPED IN A PROTECTIVE MATERIAL FOR SHIPPING TO THE SITE. THE PROTECTIVE WRAPPING SHALL NOT BE REMOVED UNTIL INSTALLATION IS COMPLETE. CABLES AND CHAINS SHALL NOT BE USED TO ERECT THE POLES AND MAST ARMS.

AFTER ERECTION, POLES AND MAST ARMS SHALL BE INSPECTED FOR DEFECTS IN THE SURFACES. MINOR SCRATCHES SHALL BE TOUCHED UP WITH AN EQUIVALENT PRIMER AND "MATTE" BLACK PAINT APPROVED FOR THE SHOP APPLICATION, BUT SUITABLE FOR FIELD USE. POLES AND ARMS HAVING MAJOR SCRATCHES OR DEFECTS IN THE SURFACES WILL NOT BE ACCEPTED.

BASIS OF PAYMENT WILL BE AT THE CONTRACT BID PRICE PER EACH 625 LIGHT POLE, DESIGN A 8 B 32.5 CITY OF AKRON STANDARD, AS PER PLAN, WHICH PRICE WILL INCLUDE ALL LABOR, MATERIALS, EQIUPMENT, INSTALLATION, ANCHOR BOLTS, COVER BASE, PAINTING AND INCIDENTALS.

PULL BOXES, CONCRETE

THIS WORK SHALL CONSIST OF THE FURNISHING AND INSTALLATION OF CONCRETE PULL BOXES AS DETAILED ON SHEET NO. 91.

PULL BOXES SHALL BE AS MANUFACTURED BY SHUMER AND COMPANY, INCORPORATED, NORWALK MANUFACTURING COMPANY, LAKELAND QUICKSET INCORPORATED OR APPROVED EQUAL. THE RIM AND COVER SHALL BE AS MANUFACTURED BY NEENAH FOUNDRY COMPANY, EAST AKRON CASTING COMPANY, LECTROMELT CASTING AND MACHINERY COMPANY OR APPROVED EQUAL. SEE DETAILED ON SHEET 91.

EACH STEEL PLATE COVER SHALL HAVE A BRASS OR STAINLESS STEEL PLATE APPROXIMATELY 1/32" IN THICKNESS AND NOT LESS THAN 2" IN WIDTH BY 10" IN LENGTH WITH THE WORD "ELECTRIC" OR "TRAFFIC" ETCHED, ENGRAVED OR DIE-STAMPED THEREON IN LETTERS APPROXIMATELY 5/8" WIDE BY 1/4" HIGH, RIVETED OR OTHERWISE PERMANENTLY ATTACHED TO THE STEEL PLATE COVER, OR THE WORK "ELECTRIC" OR "TRAFFIC" SHALL BE CAST IN THE TOP SURFACE OF THE COVER FORMING LETTERS 1" OR 2" IN HEIGHT.

BASIS OF PAYMENT WILL BE AT THE CONTRACT BID PRICE PER EACH 625 PULL BOXES, CONCRETE, WHICH PRICE WILL INCLUDE ALL LABOR, MATERIALS, EQUIPMENT, GRANULAR MATERIAL, AND INCIDENTALS NECESSARY TO PERFORM THE REQUIRED WORK.

EXISTING PULL BOX CONNECTIONS

CONDUITS JACKED OR DRILLED UNDER PAVEMENT THAT ARE TERMINATED AT EXISTING PULL BOXES SHALL BE INSTALLED IN SUCH A MANNER THAT THE EXISTING ELECTRICAL CIRCUITS AND THE EXISTING PULL BOXES ARE NOT DAMAGED.

IF IT IS NECESSARY TO REMOVE THE PULL BOX TO INSTALL THE CONDUIT JACKED OR DRILLED UNDER PAVEMENT, THE CONTRACTOR SHALL REMOVE THE PULL BOX IN SUCH A MANNER THAT THE PULL BOX MAY BE REUSED. ANY PULL BOX THAT IS REMOVED AND REUSED SHALL BE INSTALLED ACCORDING TO HL-10.

ANY COST INCURRED TO REMOVE OR REINSTALL EXISTING PULL BOXES SHALL BE CONSIDERED AS INCIDENTAL TO THE UNIT PRICE BID FOR ITEM 625 - CONDUIT JACKED OR DRILLED UNDER PAVEMENT, AS PER PLAN.

625.02 HAZARDOUS MATERIALS

NO MATERIAL FURNISHED UNDER THIS SPECIFICATION SHALL CONTAIN POLYCHLORINATED BIPHENYLS (PCBs). TRANSFORMERS, BALLASTS, AND CAPACITORS SHALL BE MARKED "NO PCBs" IN ACCORDANCE WITH FEDERAL ENVIRONMENTAL PROTECTION AGENCY REGULATION 40 CFR 761.

PADLOCKS AND KEYS

PADLOCKS FURNISHED SHALL BE EITHER BRASS OR BRONZE, EQUAL TO MASTER NO. 48 BKA OR WILSON BOHANNAN 660A, AND SHALL BE KEYED IN ACCORDANCE WITH SPECIFICATION 631.08, PARAGRAPH 3. PAYMENT SHALL BE INCLUDED IN THE BID FOR THE ITEM(S) BEING LOCKED.

GENERAL SUMMARY LIGHTING QUANTITIES

CALC. BY EDR DATE 2/85	SUM-8-1.73/1.95	OHIO	94
CHKD. BY T.A.K. DATE 3/85		F.H.W.A. REGION 5	204

SHEET NO. 92	SHEET NO. 96	SHEET NO. 97	BHF FUNDS	F FUNDS	TOTAL	ITEM	UNIT	DESCRIPTION	REF. LET.	LINE NO.
		21	21		21	625	EACH	LIGHT POLE DESIGN A8B30	A	1
	2		2		2	625	EACH	LIGHT POLE DESIGN A8B32.5, CITY OF AKRON, AS PER PLAN	B	2
	13			13	13	625	EACH	LIGHT POLE DESIGN AT12B41.7	C	3
										4
	1		1		1	625	EACH	10' BRACKET ARM		5
										6
	13			13	13	625	EACH	LIGHT POLE FOUNDATION 24" X 8'		7
										8
	6			6	6	625	EACH	LUMINAIRE STYLE B TYPE II CITY OF AKRON, 250 WATT HIGH PRESSURE SODIUM, AS PER PLAN		9
	7			7	7	625	EACH	LUMINAIRE STYLE B TYPE II 200 WATT HIGH-PRESSURE SODIUM 713.11		10
	6	21	21	6	27	625	EACH	LUMINAIRE STYLE B TYPE III 200 WATT HIGH-PRESSURE SODIUM 713.11		11
										12
	13			13	13	625	EACH	GROUND ROD 713.16		13
										14
	3		3		3	625	EACH	PULL BOX, CONCRETE, AS PER PLAN		15
	4	2		6	6	625	EACH	PULL BOX, 713.08, 18 INCH		16
										17
	2388	75	404	2059	2463	625	LIN. FT.	TRENCH, 24" DEEP		18
	90			90	90	Spec.	LIN. FT.	PLASTIC CAUTION TAPE		19
										20
	108	466	574		574	625	LIN. FT.	CONDUIT, 713.04, 2 INCH		21
	81			81	81	625	LIN. FT.	CONDUIT, 713.04, 3 INCH		22
	244		244		244	625	LIN. FT.	CONDUIT, 713.07, ENCASED, 2 INCH		23
	90			90	90	625	LIN. FT.	CONDUIT, 713.07, ENCASED, 3 INCH		24
	107		107		107	625	LIN. FT.	CONDUIT, 713.04, JACKED OR DRILLED UNDER PAVEMENT, 3 INCH		25
	1862	6886	8106	642	8748	625	LIN. FT.	NO. 4 AWG 5000 VOLT DISTRIBUTION CABLE		26
	1906	1596	2098	1404	3502	625	LIN. FT.	NO. 10 AWG POLE AND BRACKET CABLE		27
	2068			2068	2068	625	LIN. FT.	1 1/2" DUCT CABLE WITH TWO NO. 4 AWG 5000 VOLT CABLES		28
										29
	21	21	26	16	42	625	EACH	CONNECTOR KIT, TYPE II		30
	21	21	26	16	42	625	EACH	CONNECTOR KIT, TYPE III		31
										32
	30		16	14	30	625	EACH	CABLE SPLICING KIT		33
										34
	2	21	23		23	625	EACH	JUNCTION BOX, 18" X 8" X 6"		35
										36
	1	2	3		3	202	EACH	REMOVE EXISTING PULL BOX, CIRCULAR		37
	1	1		2	2	202	EACH	REMOVE EXISTING CONTROL CENTER		38
	14	21	23	12	35	202	EACH	REMOVE ENTIRE EXISTING LIGHTING INSTALLATION		39
										40
	8		8		8	625	EACH	LIGHT POLE ANCHOR BOLTS, FOR STRUCTURE NO. SUM-8-0175		41
		84	84		84	625	EACH	LIGHT POLE ANCHOR BOLTS, FOR STRUCTURE NO. SUM-8-0195		42
										43
	1	1		2	2	625	EACH	POWER SERVICE		44
										45
	LUMP	LUMP	LUMP	LUMP	LUMP	625	LUMP	HIGH VOLTAGE TEST		46
	1		1		1	625	EACH	STRUCTURE GROUNDING SYSTEM FOR STRUCTURE NO. SUM-8-0175		47
		1	1		1	625	EACH	STRUCTURE GROUNDING SYSTEM FOR STRUCTURE NO. SUM-8-0195		48
360			120	240	360	605	LIN. FT.	4 INCH SHALLOW PIPE UNDERDRAINS		49
										50
										51
										52

STATION REFERENCED TO:
"ML." = MAINLINE
"I" = RAMP "I"
"J" = RAMP "J"
"AD" = ADOLPH ST.
"PE" = PERKINS ST.

LIGHTING QUANTITIES SUB-SUMMARY

	LINE NO.	SIDE	FROM	TO	PLAN REFERENCE (UNIT)	LIGHT POLE DESIGN A8B 30 "A" (EA.)	LIGHT POLE DESIGN A8B32.5, CITY OF AKRON, AS PER PLAN (EA.)	LIGHT POLE DESIGN AT12B 41.7 "C" (EA.)	10' BRACKET ARM (EA.)	LIGHT POLE FOUNDATION 24"X8' (EA.)	LUMINAIRE STYLE B TYPE II 200W. H.P.S. 713.11 (EA.)	LUMINAIRE STYLE B TYPE III 200W. H.P.S. 713.11 (EA.)	LUMINAIRE, CITY OF AKRON TYPE II 250W. H.P.S. 713.11 (EA.)	GROUND ROD 713.16 (EA.)	PULL BOX, CONCRETE, AS PER PLAN (EA.)	PULL BOX, 18" 713.08 (EA.)	TRENCH, 24" (L.F.)	PLASTIC CAUTION TAPE (L.F.)	CONDUIT, 713.04, 2" (L.F.)	CONDUIT, 713.04, 3" (L.F.)	1-1/2" DUCT-CABLE W/2, NO. 4 AWG 5000V. CABLES (L.F.)	NO. 4 AWG. 5000 V. DISTRIBUTION CABLE (L.F.)	NO. 10 AWG POLE AND BRACKET CABLE (L.F.)	CABLE SPLICING KIT (EA.)	CONDUIT, 713.07, ENCASED, 2" (L.F.)	CONDUIT, 713.07, ENCASED, 3" (L.F.)	CONNECTOR KIT, TYPE II (EA.)	CONNECTOR KIT, TYPE III (EA.)	JUNCTION BOX 18"X8"X6" (EA.)	LIGHT POLE ANCHOR BOLTS FOR STRUCTURE (EA.)	CONDUIT, JACKED OR DRILLED UNDER PAV'T. 3" (L.F.)	POWER SERVICE (EA.)	STRUCTURE GROUNDING SYSTEM FOR STRUCTURE NO. SUM-8-0175 (EA.)	STRUCTURE GROUNDING SYSTEM FOR STRUCTURE NO. SUM-8-0195 (EA.)	REMOVE EXISTING PULL BOX, CIRCULAR (EA.)	REMOVE ENTIRE EXIST. LIGHTING INSTALLATION (EA.)	REMOVE EXISTING CONTROL CENTER (EA.)	LINE NO.
	1																																					1
"BHF" FUNDS SHEET 96	2	LT.	47+38	47+60	"PE"										1							84		4							32							2
	3	LT.	47+60	47+70	"PE"	(SP2-1)			1				1				13					46	85		13		1	1										3
	4	LT./RT.	47+60	47+51	"PE"												78					176		2	78										1			4
	5	LT.	47+60	48+36	"PE"										1							170		2							75							5
	6	LT.	48+36	49+14	"PE"		1	(STUB OUT)					1				63		78			176	81				1	1	1	4			1			1		6
	7																																					7
	8	RT.	47+51	47+88	"PE"																	94		2														8
	9	RT.	47+88	48+00	"PE"	(SP2-2)							1				13					46	85		13		1	1										9
	10	RT.		50+70	"PE"		1	(STUB OUT)					1										81				1	1	1	4						1		10
	11	RT.	50+70	51+00	"PE"										1		18		30			80		2														11
	12	RT.	51+00	51+57	"PE"												58					136		2	58													12
	13	RT.	51+57	51+60	"PE"	(SP1-2)							1										85				1	1										13
	14	RT./LT.	51+00	50+98.5	"PE"												82					184		2	82													14
	15	LT.	50+98.5	51+02.5	"PE"	(SP1-1)							1				4					28	85				1	1										15
	16																																					16
"F" FUNDS SHEET 96	17	RT.		16+78	"I"			1		1	1			1									108				1	1										17
	18	RT.	16+78	15+20	"I"			1		1	1			1			158				168		108				1	1								1		18
	19	RT.	15+20	13+60	"I"			1		1	1			1			160				170		108				1	1								1		19
	20	RT.	13+60	12+80	"I"											1	80				90			2												1		20
	21	XING	12+80	518+90	"I"												47			47		114					1	1										21
	22	RT.	12+80	12+00	"I"			1		1	1			1			80				90		108				1	1										22
	23	LT.	12+00	520+48	"ML"											1	72				82			2														23
	24	LT.	520+48	520+38	"ML"												10				20																	24
	25	LT.	520+48	521+03	"ML"			1		1		1		1			55				65		108				1	1								1		25
	26	LT.	521+03	522+38	"ML"			1		1		1		1			135				145		108				1	1								1		26
	27	LT.	522+38	523+68	"ML"			1		1		1		1			130				140		108				1	1								1		27
	28	LT.	523+68	524+50	"ML"											1	82				92			2														28
	29	LT.	524+50	524+25	"ML"			(DOWN 2:1 SLOPE)									58	58				272		2		58						1					1	29
"BHF" FUNDS SHEET 97	30	LT.	524+50	525+01	"ML"	1						1					40		66			152	76				1	1	1	4				1	1	1		30
	31	LT.	525+01	525+98	"ML"	1						1										214	76				1	1	1	4						1		31
	32	LT.	525+98	527+66	"ML"	1						1										356	76				1	1	1	4						1		32
	33	LT.	527+66	529+43	"ML"	1						1										374	76				1	1	1	4						1		33
	34	LT.	529+43	531+23	"ML"	1						1										380	76				1	1	1	4						1		34
	35	LT.	531+23	532+89	"ML"	1						1										352	76				1	1	1	4						1		35
	36	LT.	523+89	534+61	"ML"	1						1										364	76				1	1	1	4						1		36
	37	LT.	534+61	536+19	"ML"	1						1										336	76				1	1	1	4						1		37
	38	LT.	536+19	538+00	"ML"	1						1										382	76				1	1	1	4						1		38
	39	LT.	538+00	539+74	"ML"	1						1										368	76				1	1	1	4						1		39
	40	LT.	539+74	540+58.33	"ML"	1						1										190	76				1	1	1	4						1		40
	41																																					41
"F" FUNDS SHEET 96	42	LT.		7+10	"J"			1		1	1			1									108				1	1								1		42
	43	LT.	7+10	5+53	"J"			1		1	1			1			157				167		108				1	1								1		43
	44	LT.	5+53	4+15	"J"											1	138				148			2														44
	45	XING	4+15	518+07	"J"												34			34		88					1	1										45
	46	LT.	4+15	3+91	"J"			1		1	1			1			24				34		108				1	1								1		46
	47	LT.	3+91	2+25	"J"			1		1		1		1			166				176		108				1	1								1		47
	48	LT.	2+25	521+74	"ML"			1		1		1		1			165				175		108				1	1								1		48
	49	RT.	521+74	523+43	"ML"			1		1		1		1			169				179		108				1	1								1		49
	50	RT.	523+43	523+60	"ML"											1	17				27			2														50
	51			523+60	"ML"			(DOWN 2:1 SLOPE)									32	32				168				32						1					1	51
	52	RT.	523+60	524+50	"ML"		(MATCH LINE IS AT 524+00 OF PLAN SHEET)									1	90				100			2														52
"BHF" FUNDS SHEET 97	53	RT.	524+50	525+01	"ML"	1						1					35		51			122	76				1	1	1	4					1	1		53
	54	RT.	525+01	526+80	"ML"	1						1							179			378	76				1	1	1	4						1		54
	55	RT.	526+80	528+50	"ML"	1						1							170			360	76				1	1	1	4						1		55
	56	RT.	528+50	530+37	"ML"	1						1										394	76				1	1	1	4						1		56
	57	RT.	530+37	532+10	"ML"	1						1										366	76				1	1	1	4						1		57
	58	RT.	532+10	533+74	"ML"	1						1										348	76				1	1	1	4						1		58
	59	RT.	533+74	535+47	"ML"	1						1										366	76				1	1	1	4						1		59
	60	RT.	535+47	537+13	"ML"	1						1										352	76				1	1	1	4						1		60
	61	RT.	537+13	538+86	"ML"	1						1										366	76				1	1	1	4						1		61
	62	RT.	538+86	540+58.33	"ML"	1						1										366	76				1	1	1	4						1		62
	63																																					63
	64																																					64
BHF	65																																					65
	66		BHF FUNDS	TOTAL		21	2		1			21	6		3		404		574			8106	2098	16	244		26	26	23	9	107		1	1	3	23		66
	67																																					67
F	68																																					68
	69		F FUNDS	TOTAL				13		13	7	6		13		6	2059	90		81	2068	642	1404	14		90	16	16				2			1	12	2	69
	70																																					70
	71																																					71
	72																																					72
	73																																					73
	74																																					74
	75																																					75

CALC. BY. DATE	SUM-8-1.73/1.95	OHIO
CHKD. BY. DATE		F.H.W.A. REGION 5

96
204

FOR DETAIL OF THIS INTERSECTION SEE SHEET 101

PERKINS ST.

GOOD ST.

RAMP "K"

47+70/COMB.

16+78/12'RT.
A12 17A(C)

15+20/12'RT.
A12 16A(C)

13+60/12'RT.
A12 15A(C)

12+00/12'RT.
A12 14A(C)

12+80/12'RT.
18" PULL BOX

48+00/COMB.

49+14/WALL
(B)

STRUCTURE NO. SUM-8-0175

518+90/11'LT.
EXIST. A12 18A

518+07/10'RT.
EXIST. A12 18B

RAMP "I"

RAMP "J"

UNION ST.

ARCH ST.

NORTH ADAMS ST.

520+38
A12 A(GS39)700W.

521+03/12'LT.
A12 13A(C)

522+38/12'LT.
A12 12A(C)

523+68/12'LT.
A12 11A(C)

+48/20 LT.
18" P.B.

+60/14'RT.
18" P.B.

4+15/12'LT.
18" PULL BOX

3+94/12'LT.
A12 15B(C)

5+53/12'LT.
A12 16B(C)

7+10/12'LT.
A12 17B(C)

AKRON NORTH EXPRESSWAY S.R. 8

50+70/WALL
(B)

51+02.5/COMB.
SP1-1

51+60/COMB.
SP1-2

RAMP "L"

SOUTH ADOLPH ST.

NORTH ADOLPH ST.

ARCH ST.

NORTH ADAMS ST.

OHIO ST.

PERKINS ST.

MATCH LINE STA. 524+00

3" 713.07 CONDUIT CONC. ENCASED DOWN 2:1 SLOPE

521+74/12'RT.
A12 13B(C)

523+43/12'RT.
A12 12B(C)

2+25/12'RT.
A12 14B(C)

523+50/84'RT. ℄
SERVICE POLE

523+60/84'RT. ℄
CONTROL CENTER "AE"

FOR DETAIL OF THIS INTERSECTION SEE SHEET 101

LEGEND

- PROPOSED OVERHEAD SIGN
- EXISTING OVERHEAD SIGN
- POWER POLE
- PULL BOX 18" CIRCULAR CONCRETE
- PULL BOX 24" CIRCULAR CONCRETE
- EXISTING CONTROL CENTER
- PROPOSED CONTROL CENTER
- EXISTING LIGHT POLE TO REMAIN
- EXISTING LIGHT POLE TO BE REMOVED
- EXISTING CONDUIT TO BE ABANDONED, CABLES TO BE REMOVED
- STRUCTURE GROUNDING

- 200W. H.P.S. TYPE III 30' M.H.
- 250W. H.P.S. TYPE II 32.5' M.H.
- 200W. H.P.S. TYPE II 41.7' M.H.
- 200W. H.P.S. TYPE III 41.7' M.H.
- 1 1/2" DUCT CABLE W/2 NO. 4 AWG
- CONDUIT, 713.04, 2"
- CONDUIT, 713.04, 3"
- EXISTING 2" 713.07 CONDUIT CONCRETE ENCASED
- EXISTING 3" 713.07 CONDUIT CONCRETE ENCASED
- CONDUIT, 713.07, ENCASED, 2", TYPE EB
- CONDUIT, 713.07, ENCASED, 3", TYPE EB
- CONDUIT, 713.04, 3", JACKED OR DRILLED UNDER PAVEMENT

525+01/RT.
44 AE (1)(A)

TYPICAL LIGHT POLE DESIGNATION - STATION/OFFSET (FROM EDGE OF PAVEMENT)
44 = CIRCUIT NUMBER
AE = CONTROL CENTER ID
(1) = POLE NUMBER WITHIN CIRCUIT
(A) = POLE REFERENCE LETTER

GRAPHIC SCALE
0 50 100 150

STA. 510+00 TO STA. 524+00
LIGHTING PLAN

AA 8/P+ 7142R

CALC. BY. DATE	SUM-8-1.73/1.95	OHIO
CHKD. BY. DATE		F.H.W.A. REGION 5

97
204

525+15/108'LT.
SERVICE POLE

525+25/109'LT.
CONTROL CENTER "AW"

NORTH ADAMS ST.

525+01/LT.
43-AW(1)(A)

525+98/LT.
43-AW(2)(A)

527+66/LT.
43-AW(3)(A)

529+43/LT.
43-AW(4)(A)

531+23/LT.
43-AW(5)(A)

532+89/LT.
43-AW(6)(A)

534+61/LT.
43-AW(7)(A)

536+19/LT.
43-AW(8)(A)

EXIST. 3" RIGID ASBESTOS-CEMENT CONDUIT
(TO BE REMOVED)

R.R.

R.R.

CANAL

R.R.

LITTLE CUYAHOGA

NORTH

+50

+50

MATCH LINE STA. 524+00

MATCH LINE STA. 537+00

58'-3" 713.07 CONC.
ENCASED DOWN
2:1 SLOPE

STRUCTURE NO. SUM-8-0195

525 526 527 528 529 530 531 532 533 534 535 536

AKRON NORTH EXPRESSWAY S.R. 8

2" 713.04 CONDUIT

ERIE

A.C.&Y.

PENNSYLVANIA & OHIO

B.&O.

RIVER

ST.

525+01/RT.
44-AE(1)(A)

526+80/RT.
44-AE(2)(A)

528+50/RT.
44-AE(3)(A)

530+37/RT.
44-AE(4)(A)

532+10/RT.
44-AE(5)(A)

533+74/RT.
44-AE(6)(A)

535+47/RT.
44-AE(7)(A)

EXIST. 2" 713.04 CONDUIT
BACK OF HANDRAIL

Note:
Grounds or expansion joints shown are not to be considered complete in number or better than approximate in location.

EXIST. 3" RIGID ASBESTOS-CEMENT CONDUIT
(TO BE REMOVED)

538+00/LT.
43-AW(9)(A)

539+74/LT.
43-AW(10)(A)

540+58.33/LT.
43-AW(11)(A)

MATCH LINE STA. 537+00

538 539 540 541 542 543 544 545 546 547

AKRON NORTH EXPRESSWAY S.R. 8

537+13/RT.
44-AE(8)(A)

538+86/RT.
44-AE(9)(A)

540+58.33/RT.
44-AE(10)(A)

EXIST. 2" 713.04 CONDUIT
BACK OF HANDRAIL

@ 540+39 CONNECT
EXIST. 2" 713.04 CONDUIT
TO NEW 2" 713.04 CONDUIT
18' LENGTH BACK OF HAND-
RAIL TYPICAL BOTH SIDES.

FOR LEGEND SEE SHEET NO. 96

590 591 592

AKRON NORTH EXPRESSWAY S.R. 8

GRAPHIC SCALE
0 50 100 150

STA. 524+00 TO STA. 547+00
LIGHTING PLAN

CALC. BY. DATE	SUM-8-1.73/1.95	OHIO
CHKD. BY. DATE		F.H.W.A. REGION 5

98/204

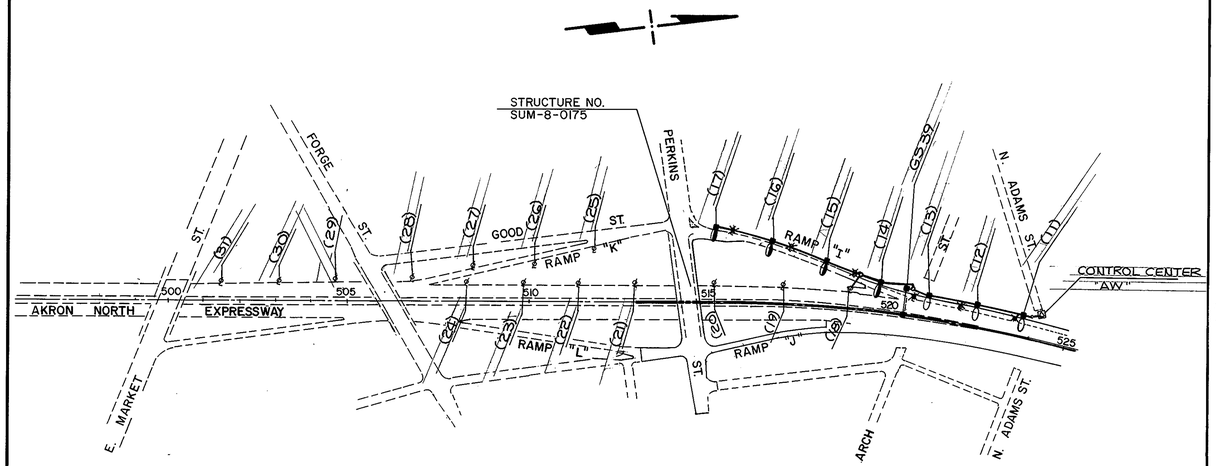

EXISTING
CIRCUIT A-12A
PLAN SHEET NO. 96

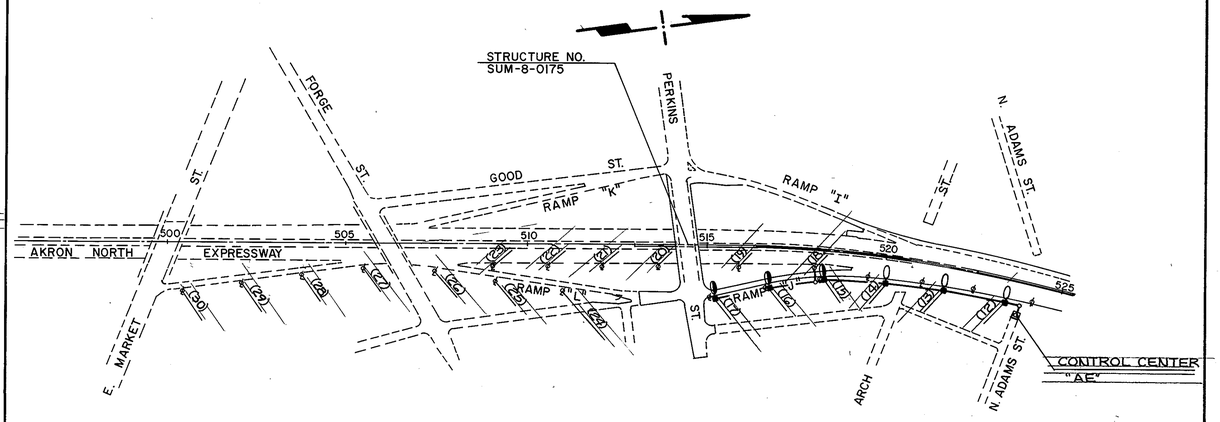

EXISTING
CIRCUIT A-12B
PLAN SHEET NO. 96

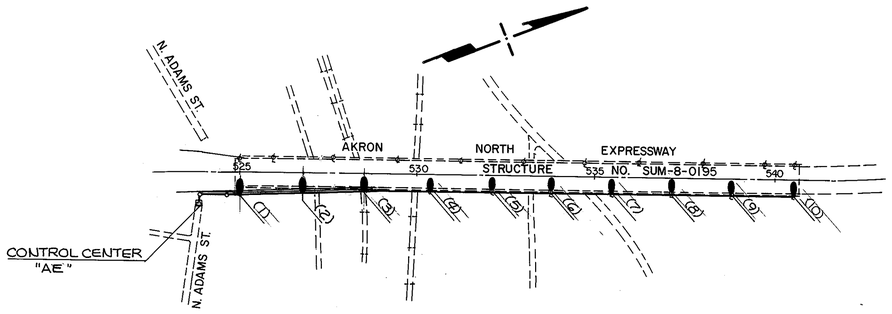

EXISTING
CIRCUIT 43-AE
PLAN SHEET NO. 97

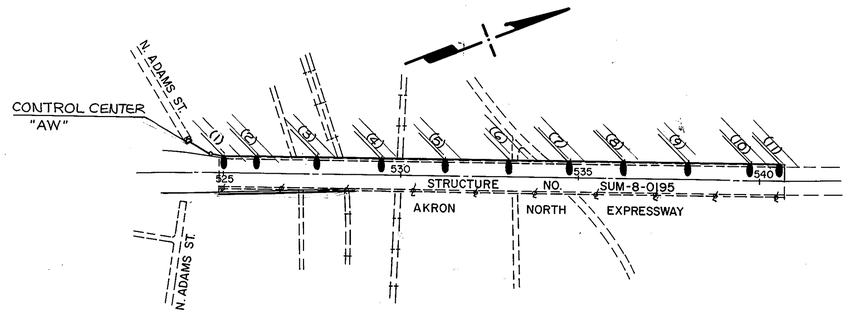

EXISTING
CIRCUIT 43-AW
PLAN SHEET NO. 97

CIRCUIT SCHEMATIC PLAN

DATE

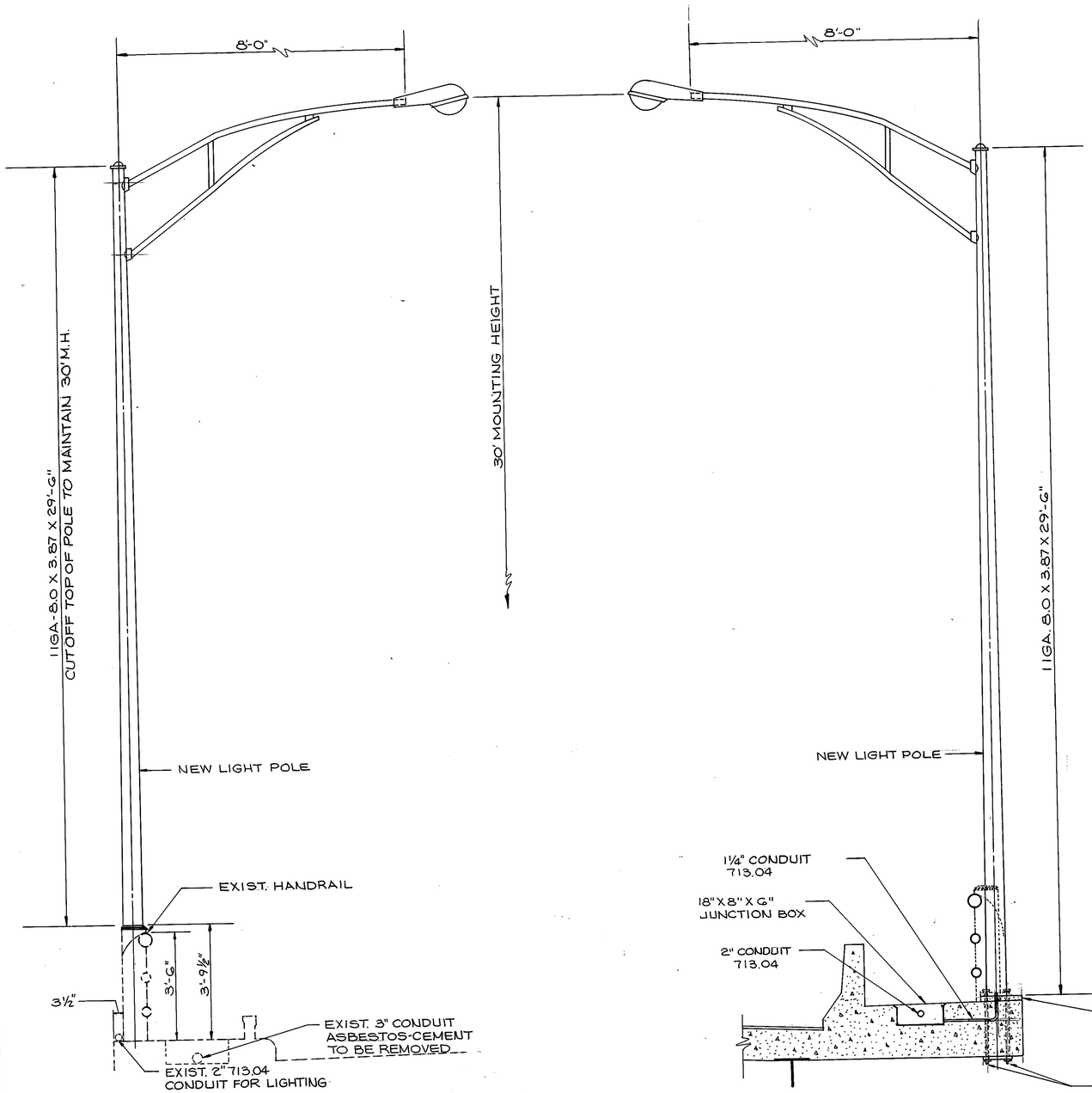

SECTION THROUGH EXISTING

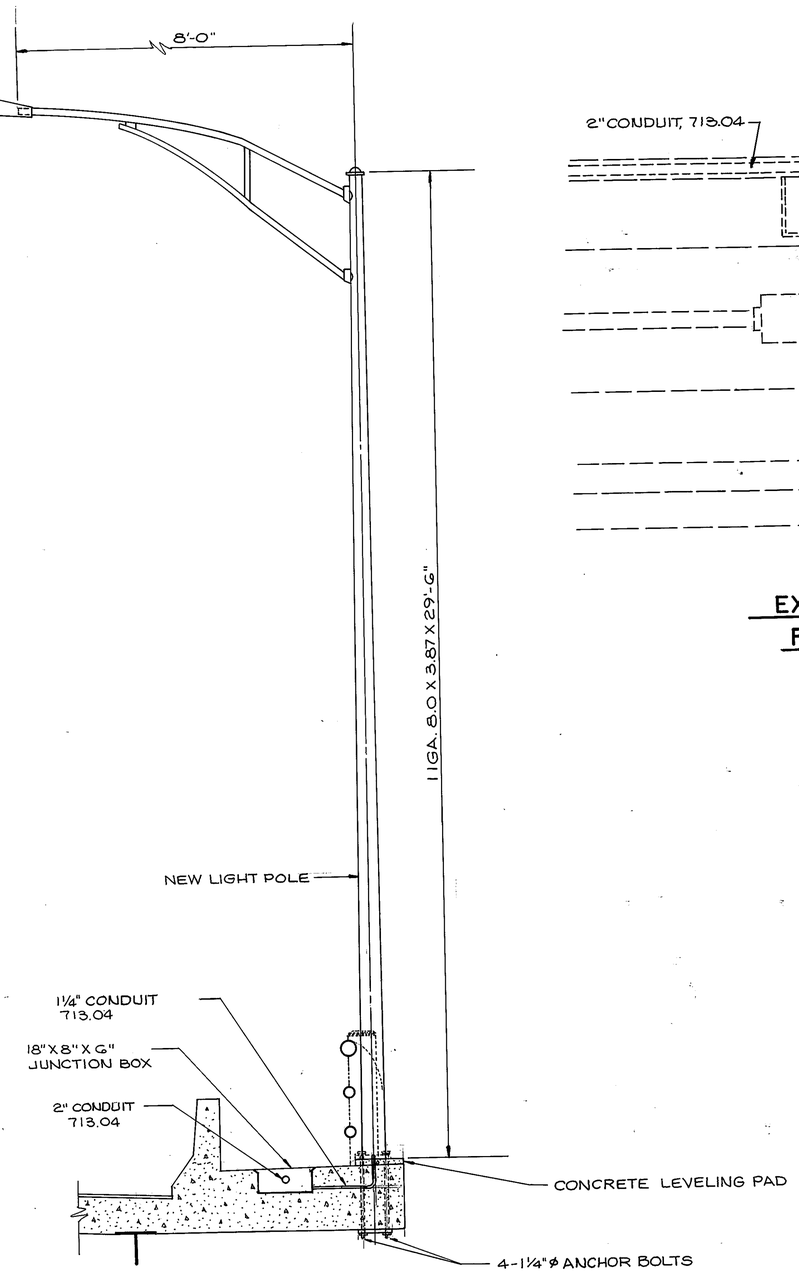

SECTION THROUGH WIDENING

LIGHT POLE SUPPORT DETAILS
FOR STRUCTURE NO. SUM-8-0195

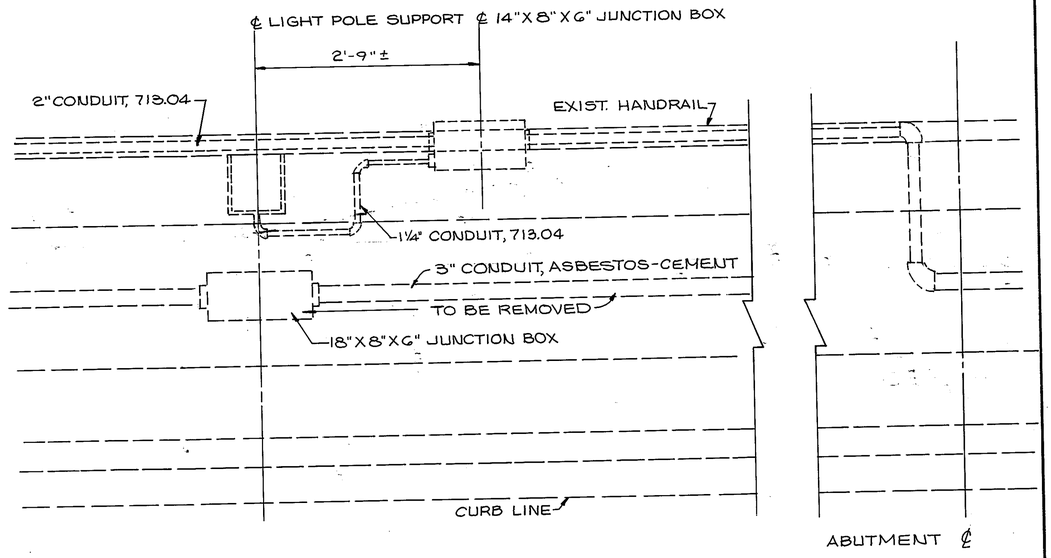

EXISTING LIGHT POLE CONNECTION
FOR STRUCTURE NO. SUM-8-0195

LIGHT POLE DATA				
REFERENCE LETTER	DESIGN NUMBER	FOUNDATION ANCHOR BOLTS: SIZE DIAMETER X LENGTH	FOUNDATION ANCHOR BOLTS: BOLT CIRCLE DIAMETER	TRANSFORMER BASE STYLE
A	A8B30	1" X 40"	11"	STRUCTURE MOUNTED-NONE
B	A9B32.5	1¼"X48"	11½"	STRUCTURE MOUNTED-NONE
C	AT12B41.7	1"X40"	15"	AT-A

NOTE: FOR EXPLANATION OF DESIGN NUMBER SEE STD. CONST. DWG. HL.8

LIGHTING DETAILS

CALC. BY. DATE
CHKD. BY. DATE
SUM-8-1.73/1.95
OHIO
F.H.W.A. REGION 5
100/204

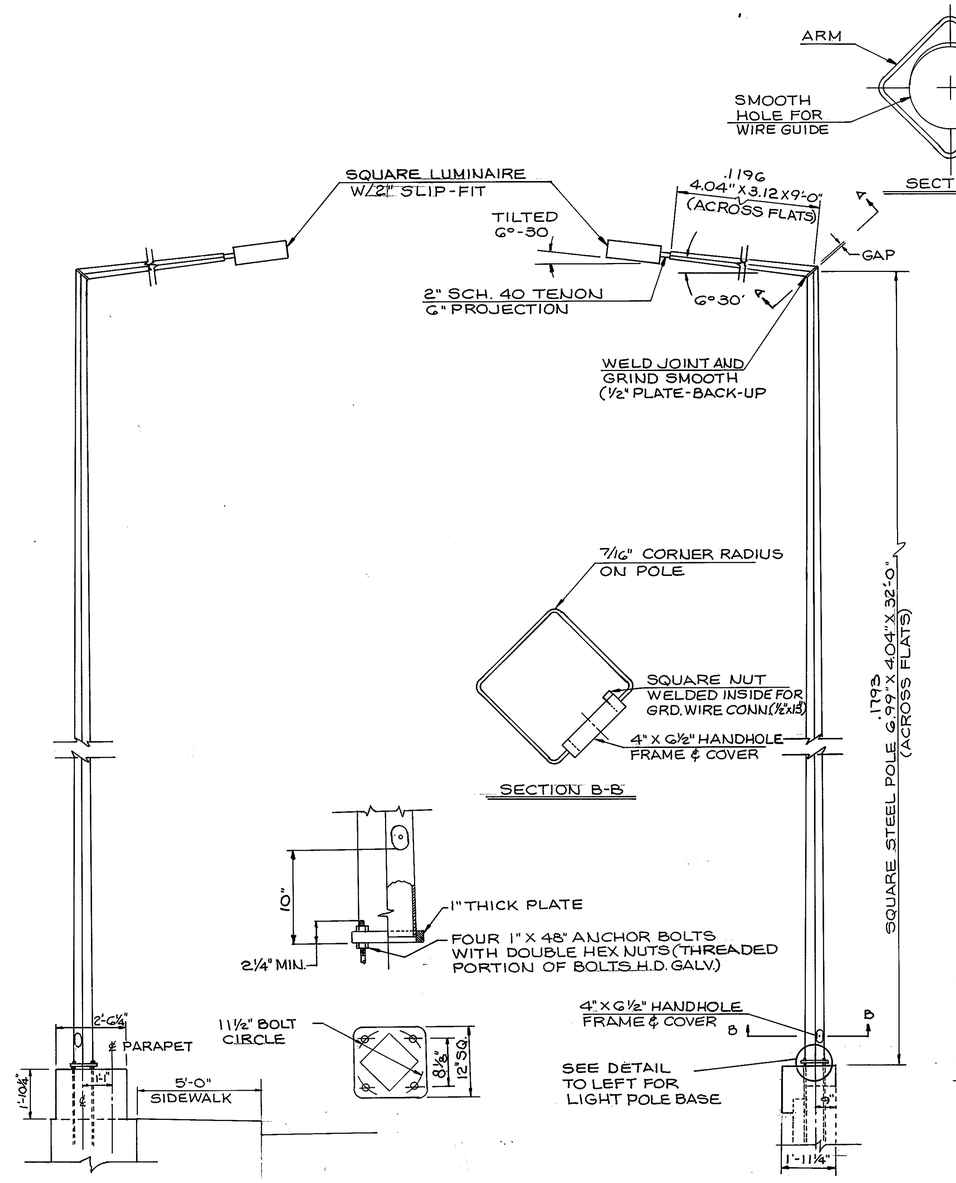

CITY OF AKRON STANDARD FOR LIGHT POLES FOR STRUCTURE SUM-8-0165

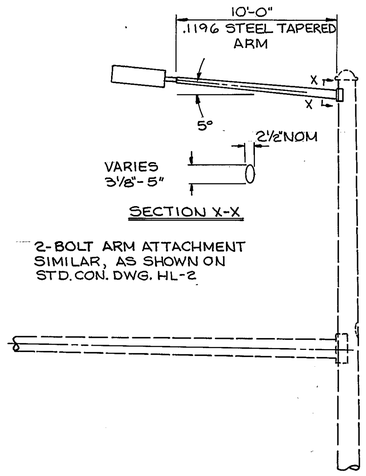

CITY OF AKRON STANDARD FOR COMBINATION POLES

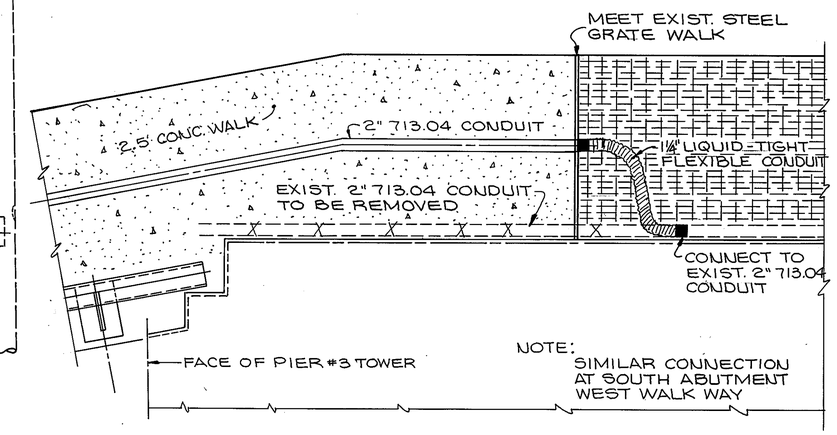

CONDUIT CONNECTION DETAIL ON STRUCTURE SUM-8-0195

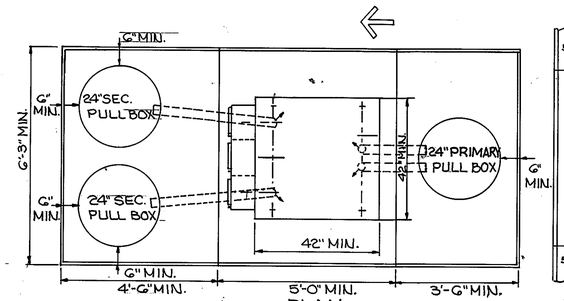

PLAN

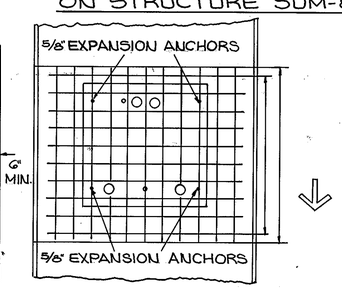

REINFORCING PLAN

OPTION TO CONTRACTOR:
PROVIDE A SINGLE UNIT THREE COMPARTMENT ENCLOSURE WITH A SEPARATE DOOR FOR EACH COMPARTMENT TO HOUSE THE LOW VOLTAGE CONTROL CENTER APPARATUS AND RELATED WIRING UTILIZE ONE COMPARTMENT FOR THE SAFETY SWITCH AND ONE COMPARTMENT EACH FOR CONTROLLER.

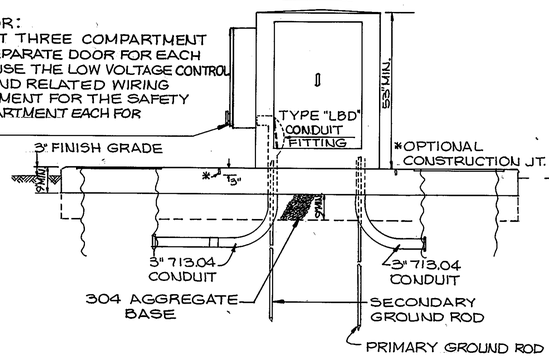

SIDE VIEW
TRANSFORMER ENCLOSURE W/CONTROL CENTERS

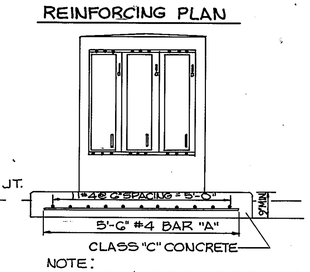

NOTE:
EXPANSION BOLT LOCATIONS AS SHOWN ARE TYPICAL. CONTRACTOR SHALL OBTAIN EXACT BOLT LOCATIONS FROM THE MANUFACTURE OF THE TRANSFORMER.
CONTRACTOR SHALL FIELD DETERMINE THE BEST ORIENTATION FOR MOUNTING THE EQUIPMENT IN THE TRANSFORMER ENCLOSURE TO FACILITATE CONNECTION TO PRIMARY SERVICE.
THE CONTRACTOR SHALL OBTAIN THE PHYSICAL SIZE OF THE TRANSFORMER FROM THE POWER COMPANY IN ORDER TO SIZE THE TRANSFORMER ENCLOSURE AS REQUIRED FOR THIS PROJECT AT CONTROL CENTER "AW" & "AE".

ELEVATION
REINFORCING DETAIL

LIGHTING DETAILS

CALC. BY. DATE
CHKD. BY. DATE
SUM-8-1.73/1.95
OHIO
F.H.W.A. REGION 5
101
204

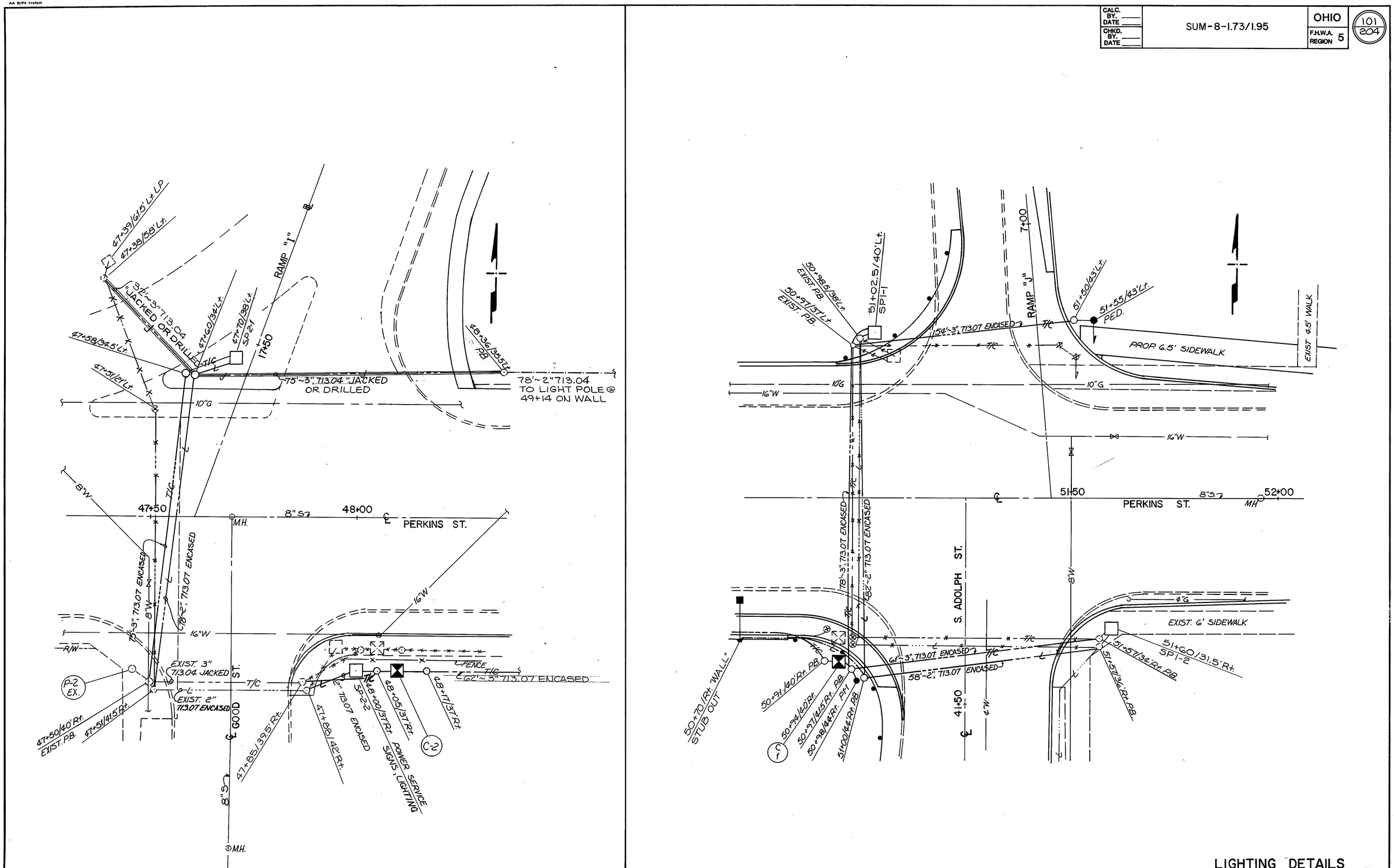

LIGHTING DETAILS

CALC. BY. DATE	SUM-8-1.73/1.95	OHIO
CHKD. BY. DATE		F.H.W.A. REGION 5

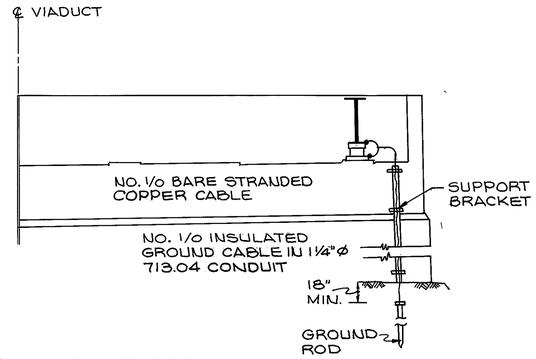

STRUCTURE GROUNDING AT ABUTMENTS
(TYPICAL BOTH SIDES)

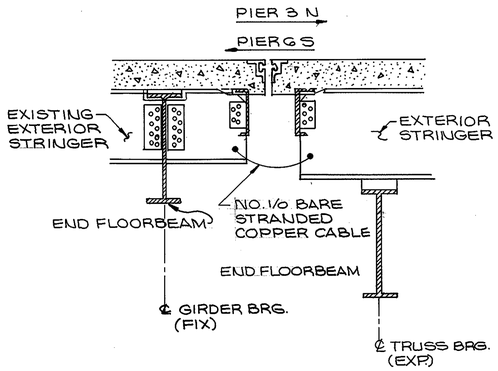

STRUCTURE GROUNDING AT PIERS 3 AND 6 EXPANSION JOINTS
(TYPICAL-EAST & WEST SIDE)

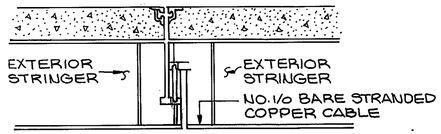

STRUCTURE GROUNDING AT UNIT 2 CONTRACTION JOINTS
(TYPICAL-EAST & WEST SIDE)

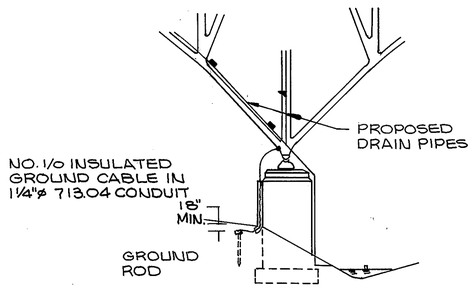

STRUCTURE GROUNDING AT PIER 4
(TYPICAL-EAST & WEST SIDE)

STRUCTURE NO. SUM-8-0195 GROUNDING DETAIL

F.H.W.A. REG.	STATE	PROJECT	
5	OHIO		

103
204

SUM - 8 - 1.73 / 1.95

BRIDGE LIMITS = 1582.75'

UNIT #1 — UNIT #2

℄ BRG. SOUTH ABUT. — ℄ PIER 1 — ℄ PIER 2 — ℄ PIER 3 — ℄ PIER 4

71'-11¾" (SPAN 1) — 126'-11⅞" (SPAN 2) — 139'-6" (SPAN 3) — 288'-11" (SPAN 4) — 360'-0" (SPAN 5)

5.5:1 TAPER

℄ LIGHT POLE STA. 525+01 FOR DETAIL SEE SHEET 24/73

℄ LIGHTPOLE STA. 525+98

℄ LIGHTPOLE STA. 527+66

℄ LIGHTPOLE STA. 529+43

℄ LIGHTPOLE STA. 531+23

℄ LIGHTPOLE STA. 532+89

END TAPER STA. 525+14.40

END APPROACH SLAB STA. 524+85.75

PRESSURE RELIEF JOINT TYPE C

℄ 10°-30'

MIN. CLEARANCE (EXISTING & PROPOSED) 14'-0" — 1'-6"

POINT OF MIN. VERTICAL CLEARANCE

38'-9"

EXIST. 36" ST.

EXIST. 24" ST.

CONRAIL

℄ S.R. 8 ℄ 1" SEALED JOINT

EXIST. 18" ST.

EXIST. 42" ST.

80'-0" F/F CURBS

1'-3"

524 — 525 — 526 — 527 — 528 — 529 — 530 — 531 — 532

90°-00'-00" (TYPICAL U.N.)

70'-0"

B&O COMPANY JOINT

VARIES

5'-2½"

NEW R.R.

NEW R.R.

B&O SYSTEM

CANAL

CUYAHOGA RIVER

LITTLE CUYAHOGA

80'-0" F/F CURBS

38'-6"

MIN. CLEARANCE (EXISTING & PROPOSED) 13'-3"

MIN. CLEARANCE (EXISTING) 2'-0"

STA. 528+71.44 FACE OF CURB

30° MIN. CLEARANCE (EXISTING & PROPOSED)

15'-0"

14'-0" MIN. CLEARANCE (PROPOSED)

5'-0"

MIN. CLEARANCE (PROPOSED)

21 — 22 — 23 — 24 — 25 — 26 — 27 — 28 — 29 — 30

℄ LIGHTPOLE STA. 525+01 FOR DETAIL SEE SHEET 32/73

℄ LIGHTPOLE STA. 526+80 FOR DETAIL SEE SHEET 55/73

STA. 526+91.44 FACE OF CURB

℄ LIGHT POLE STA. 528+50 FOR DETAIL SEE SHEET 55/73.

℄ LIGHTPOLE STA. 530+37

℄ LIGHTPOLE STA. 532+10

MATCH LINE STA. 533+00 REFER TO SHEET 2/73

GENERAL PLAN

TYPE "C" SUPPORTS

GRADE -0.47%

EXP. — EXP. — EXP.

24.62' MIN. EXISTING CLEARANCE

*32.02'

30.54'

EXPANSION ASSEMBLY FOR DETAIL SEE SHEET 65/73

STRUCTURE GROUNDING

SLOPE PROTECTION

FOR SOUTH ABUTMENT DRAINAGE DETAILS SEE SHEET 62/73

TYPE "C" SUPPORTS

*MINIMUM EXISTING AND PROPOSED VERT. CLEARANCE

FOR PIER Nº 1 & 2 DRAINAGE DETAILS SEE SHEET 63/73

FIX

EXP. EXPANSION ASSEMBLY, FOR DETAIL SEE SHEET 65/73

TYPE "C" SUPPORTS

EXISTING SUPPORTS

TYPE "F" SUPPORTS

FOR PIER Nº 3 DRAINAGE DETAILS SEE SHEET 64/73

TYPE "2" CLEANOUT @ 40'-0" c/c (MAX.) FOR DETAIL SEE SHEET 61/73

TYPE "D" SUPPORTS

TYPE "1" CLEANOUT @ 40'-0" c/c (MAX.) FOR DETAIL SEE SHEET 61/73

TYPE "B" SUPPORTS

TYPE "C" SUPPORTS

1034.295

1034.060

533

STRUCTURE GROUNDING

FIX

FOR PIER Nº 4 DOWNSPOUT DETAILS SEE SHEET 65/73

FOR RETAINING WALLS AND SLOPE WORK SEE SHEETS 67/73 & 68/73

DRAINAGE NOTES

1. TYPE "A" SUPPORTS SHALL BE USED ON ALL HORIZONTAL CONDUCTORS UNLESS NOTED OTHERWISE.
2. PIPE SUPPORTS SHALL BE SPACED AT 10'-0" MAX. WITH A MIN. OF 2 SUPPORTS PER LENGTH OF PIPE.
3. DOWNSPOUTS AT VERTICAL MEMBERS SHALL HAVE A MIN. OF 3 SUPPORTS.
4. FOR PIPE SUPPORT DETAILS SEE SHEET 66/73.
5. FOR TYPICAL DRAINAGE LAYOUTS AND TABLE OF DRAINAGE DATA, SEE SHEET 61/73.
6. FOR SCUPPER DETAILS, SEE SHEET 62/73.
7. ALL HORIZONTAL CONDUCTORS AND DOWNSPOUTS SHALL BE 8" ϕ. GALV. STEEL PIPES.
8. FOR ADDITIONAL NOTES, SEE STRUCTURAL GENERAL NOTES SHEETS. 103/204 THRU 106/204.

FOR LIGHTING CONDUIT DETAILS, SEE SHEETS 92/204 THRU 101/204.

FOR STRUCTURE GROUNDING SYSTEM DETAILS, SEE SHEET 102/204.

LEGEND

- ⬡ INDICATES SCUPPER IDENTIFICATION NUMBER.
- ◆ FOR LIGHTPOLE SUPPORT DETAIL SEE SHEET 60/73 UNLESS NOTED OTHERWISE.
- ◥ INDICATES 45° LATERALS, NECK UP WITH TYPE "2" CLEANOUT
- — INDICATES TYPE "1" CLEANOUT.

ELEVATION

PROPOSED PROFILE GRADE ELEVATIONS

	1037.88	1037.820	1037.585	1037.350	1037.115	1036.880	1036.645	1036.410	1036.175	1035.940	1035.705	1035.470	1035.235	1035.000	1034.765	1034.530
+85.75	525		526		527		528			529		530		531		532

DALTON · DALTON · NEWPORT

CLEVELAND, OHIO — AKRON, OHIO

1/73

GENERAL PLAN AND ELEVATION

NORTH EXPRESSWAY VIADUCT

SUM - 8 - 01 95

DESIGNED	DRAWN	TRACED	CHECKED	REVIEWED	DATE	REVISED
RLF	D.T.		A.H.	JGH	2-1-95	

F.H.W.A. REG.	STATE	PROJECT	
5	OHIO		

104 / 204

SUM-8-1.73 / 1.95

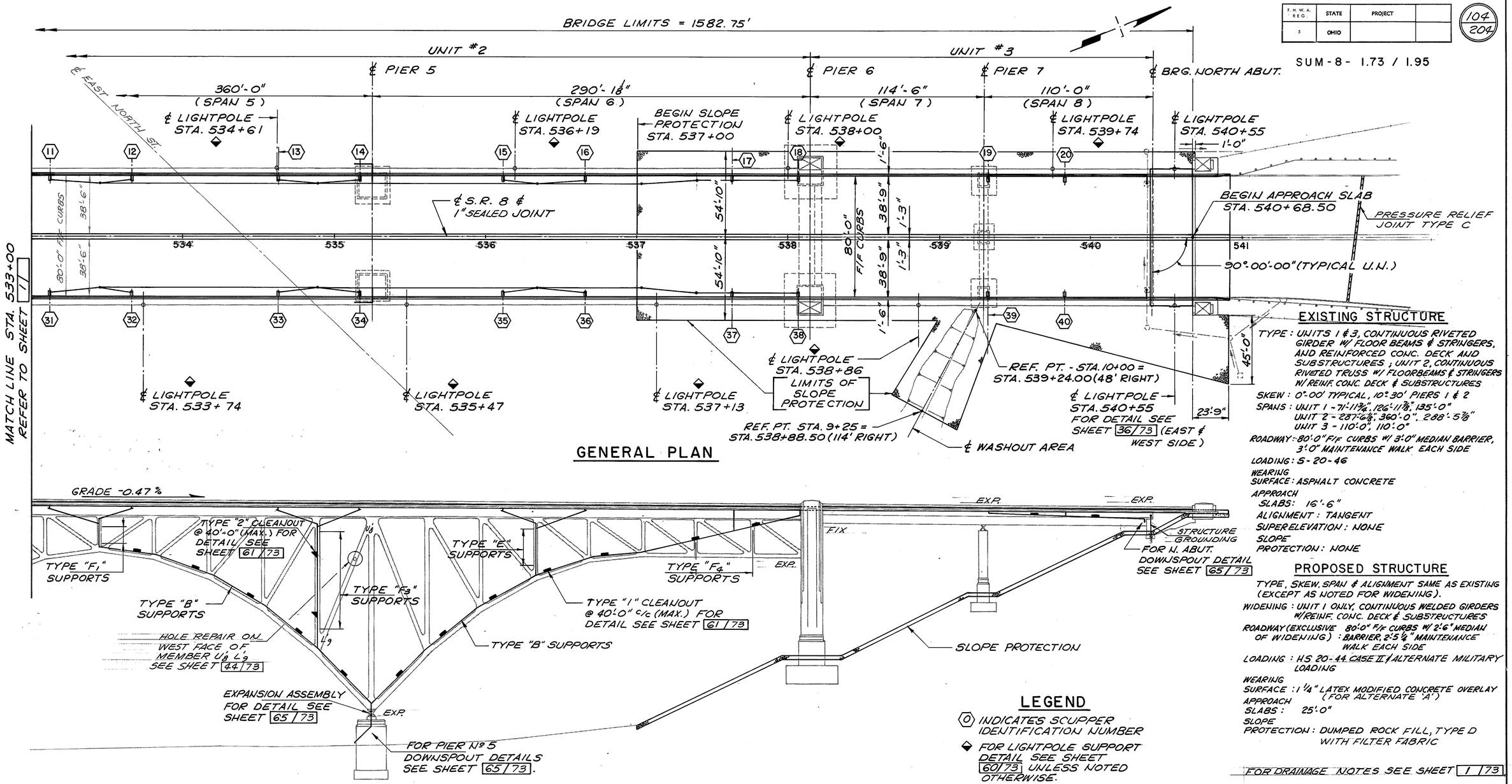

GENERAL PLAN

EXISTING STRUCTURE

TYPE : UNITS 1 & 3, CONTINUOUS RIVETED GIRDER W/ FLOOR BEAMS & STRINGERS, AND REINFORCED CONC. DECK AND SUBSTRUCTURES ; UNIT 2, CONTINUOUS RIVETED TRUSS W/ FLOORBEAMS & STRINGERS W/ REINF. CONC. DECK & SUBSTRUCTURES

SKEW : 0°-00' TYPICAL, 10°-30' PIERS 1 & 2

SPANS : UNIT 1 - 71'-11¾", 126'-11⅞", 135'-0"
UNIT 2 - 287'-6⅝", 360'-0", 288'-5⅞"
UNIT 3 - 110'-0", 110'-0"

ROADWAY : 80'-0" F/F CURBS W/ 3'-0" MEDIAN BARRIER, 3'-0" MAINTENANCE WALK EACH SIDE

LOADING : S-20-46

WEARING SURFACE : ASPHALT CONCRETE

APPROACH SLABS : 16'-6"

ALIGNMENT : TANGENT

SUPERELEVATION : NONE

SLOPE PROTECTION : NONE

PROPOSED STRUCTURE

TYPE, SKEW, SPAN & ALIGNMENT SAME AS EXISTING (EXCEPT AS NOTED FOR WIDENING).

WIDENING : UNIT 1 ONLY, CONTINUOUS WELDED GIRDERS W/ REINF. CONC. DECK & SUBSTRUCTURES

ROADWAY (EXCLUSIVE OF WIDENING) : 80'-0" F/F CURBS W/ 2'-6" MEDIAN BARRIER, 2'-5½" MAINTENANCE WALK EACH SIDE

LOADING : HS 20-44 CASE II / ALTERNATE MILITARY LOADING

WEARING SURFACE : 1¼" LATEX MODIFIED CONCRETE OVERLAY (FOR ALTERNATE 'A')

APPROACH SLABS : 25'-0"

SLOPE PROTECTION : DUMPED ROCK FILL, TYPE D WITH FILTER FABRIC

FOR DRAINAGE NOTES SEE SHEET 1/73

LEGEND

⬡ INDICATES SCUPPER IDENTIFICATION NUMBER

◆ FOR LIGHTPOLE SUPPORT DETAIL SEE SHEET 60/73 UNLESS NOTED OTHERWISE.

◥ INDICATES 45° LATERALS NECK UP WITH TYPE "2" CLEANOUT.

▬ INDICATES TYPE "I" CLEANOUT.

ELEVATION

PROPOSED PROFILE GRADE ELEVATIONS

533	534	535	536	537	538	539	540	+68.50
1034.060	1033.825	1033.590	1033.355	1033.120	1032.885	1032.650	1032.415	1032.180	1031.945	1031.710	1031.475	1031.240	1031.005	1030.770	1030.535	1030.450

DALTON · DALTON · NEWPORT
CLEVELAND, OHIO — AKRON, OHIO

2/73

GENERAL PLAN AND ELEVATION

NORTH EXPRESSWAY VIADUCT

SUM-8-01 95

DESIGNED	DRAWN	TRACED	CHECKED	REVIEWED	DATE	REVISED
RLF	D.T.		A.L.H.	JBP	2-1-85	

F.H.W.A. REG.	STATE	PROJECT	
5	OHIO		

105
204

SUM-8 - 1.73 / 1.95

DESIGN SPECIFICATIONS

THE PROPOSED REHABILITATION WORK FOR THESE STRUCTURES CONFORMS TO "STANDARD SPECIFICATIONS FOR HIGHWAY BRIDGES" ADOPTED BY THE AMERICAN ASSOCIATION OF STATE HIGHWAY AND TRANSPORTATION OFFICIALS, 1977, INCLUDING THE 1978 THROUGH 1983 INTERIM SPECIFICATIONS AND THE OHIO "SUPPLEMENT" TO THESE SPECIFICATIONS.

DESIGN DATA

DESIGN LOADING - HS 20-44 (CASE II) AND ALTERNATE MILITARY LOADING

CONCRETE CLASS S - COMPRESSIVE STRENGTH 4500 PSI FOR SUPERSTRUCTURE

CONCRETE CLASS C - COMPRESSIVE STRENGTH 4000 PSI FOR SUBSTRUCTURE

STRUCTURAL STEEL - ASTM A-36 UNIT STRESS 20,000 PSI

REINFORCING STEEL - ASTM A615, A616, OR A617 - GRADE 60, MINIMUM YIELD STRENGTH 60,000 PSI

DECK PROTECTIVE METHOD - EPOXY COATED REINFORCING STEEL, TOP MAT ONLY, AND LATEX MODIFIED CONCRETE OVERLAY (FOR ALTERNATE "A")

MONOLITHIC WEARING SURFACE - MONOLITHIC WEARING SURFACE IS ASSUMED, FOR DESIGN PURPOSES, TO BE 1" THICK.

UTILITY LINES

ALL EXPENSE INVOLVED IN RELOCATING THE AFFECTED PRIVATE UTILITY LINES SHALL BE BORNE BY THE OWNERS. THE CONTRACTOR AND OWNERS ARE REQUESTED TO COOPERATE BY ARRANGING THEIR WORK IN SUCH A MANNER THAT INCONVENIENCE TO EITHER BE HELD TO A MINIMUM.

THE FOLLOWING IS A LIST OF THE UTILITIES WITHIN THE LIMITS OF THIS PROJECT:

CITY OF AKRON WATER DEPARTMENT
65 SOUTH HIGH STREET
AKRON, OHIO
375-2690

EAST OHIO GAS COMPANY
ONE CASCADE PLAZA
AKRON, OHIO
762-5100

OHIO EDISON COMPANY
THREE CASCADE PLAZA
AKRON, OHIO
762-9661

THE ABOVE UTILITIES SHALL BE NOTIFIED AT LEAST 24 HOURS PRIOR TO COMMENCING WORK IN THE AREA OF THEIR SERVICES.

REFERENCES

REFERENCE SHALL BE MADE TO THE FOLLOWING SUPPLEMENTAL SPECIFICATIONS AND STANDARD DRAWINGS OF THE STATE OF OHIO:

STANDARD DRAWING AS-1-81	DATED 11-27-81
STANDARD DRAWING BR-1	DATED 5-29-79
STANDARD DRAWING BR-2-82	DATED 11-01-82
STANDARD DRAWING RB-1-55	REVISED 2-02-59
SUPPLEMENTAL SPECIFICATION 824	DATED 10-08-82
SUPPLEMENTAL SPECIFICATION 836	DATED 3-12-75
SUPPLEMENTAL SPECIFICATION 845	DATED 1-13-84
SUPPLEMENTAL SPECIFICATION 953	DATED 8-21-80

EXISTING STRUCTURE VERIFICATION

DETAILS AND DIMENSIONS SHOWN ON THESE PLANS PERTAINING TO THE EXISTING STRUCTURE HAVE BEEN OBTAINED FROM PLANS OF THE EXISTING STRUCTURE AND/OR FROM FIELD OBSERVATIONS AND MEASUREMENTS. CONSEQUENTLY, THEY ARE INDICATIVE OF THE EXISTING STRUCTURE AND THE PROPOSED WORK BUT THEY SHALL BE CONSIDERED TENTATIVE AND APPROXIMATE. THE CONTRACTOR IS REFERRED TO CMS SECTIONS 102.05, 105.02, AND 513.02.

CONTRACT BID PRICES SHALL BE BASED UPON A RECOGNITION OF THE UNCERTAINTIES DESCRIBED ABOVE AND UPON A PREBID EXAMINATION OF THE EXISTING STRUCTURE BY THE CONTRACTOR. HOWEVER, ALL PROJECT WORK SHALL BE BASED UPON ACTUAL DETAILS AND DIMENSIONS WHICH HAVE BEEN VERIFIED BY THE CONTRACTOR IN THE FIELD.

EXISTING STRUCTURE PLANS

THE EXISTING STRUCTURE PLANS ARE ON FILE AND MAY BE REVIEWED AT THE CITY OF AKRON, BUREAU OF ENGINEERING.

DEMOLITION OF PORTIONS OF EXISTING STRUCTURE

REMOVAL OF PORTIONS OF EXISTING STRUCTURE AS SHOWN ON THE CONTRACT DRAWINGS SHALL CONFORM IN ALL RESPECTS TO ITEM 202 OF THE STATE OF OHIO DEPARTMENT OF TRANSPORTATION CONSTRUCTION AND MATERIALS SPECIFICATIONS.

THE CONTRACTOR SHALL PREPARE DETAILED PROCEDURES AND PLANS FOR REMOVAL OF THE EXISTING STRUCTURE INCLUDING METHODS OF PROTECTING EXISTING OR RELOCATED UTILITIES AND PROTECTING THE PEDESTRIAN AND THE VEHICULAR TRAFFIC WITHIN THE LIMITS OF THE PROJECT. SUCH PLANS SHALL INCLUDE INFORMATION AS TO EQUIPMENT AND MATERIALS TO BE USED, PERSONNEL, SUPERVISION, THE HOURS OF OPERATION AND DURATION OF THE JOB.

THESE PLANS SHALL BE APPROVED BY THE ENGINEER AND RAILROADS BEFORE COMMENCING ANY DEMOLITION OPERATION. THE REVIEW AND APPROVAL BY THE ENGINEER AND RAILROADS SHALL NOT RELIEVE THE CONTRACTOR OF HIS FULL RESPONSIBILITY FOR SAFE DEMOLITION OPERATIONS. THE CONTRACTOR SHALL BE AND SHALL REMAIN RESPONSIBLE FOR A SAFE DEMOLITION OPERATION.

REPLACEMENT OF EXISTING REINFORCING STEEL

ANY EXISTING REINFORCING BARS WHICH ARE TO BE INCORPORATED INTO THE NEW WORK AND WHICH ARE MADE UNUSABLE BY THE CONTRACTOR'S CONCRETE REMOVAL OPERATIONS SHALL BE REPLACED WITH NEW STEEL AT HIS COST.

ANY EXISTING REINFORCING BARS DEEMED BY THE ENGINEER TO BE UNUSABLE BECAUSE OF CORROSION SHALL BE REPLACED WITH NEW STEEL. THERE IS AN ALLOWANCE OF 7500 LBS. (NORTH EXPRESSWAY VIADUCT) AND 1500 LBS. (PERKINS STREET BRIDGE) IN THE ESTIMATED QUANTITY OF ITEM 509 FOR THIS PURPOSE.

GRAVEL AGGREGATE

GRAVEL AGGREGATE WILL NOT BE PERMITTED IN ANY PORTLAND CEMENT CONCRETE EXPOSED TO VIEW. GRAVEL AGGREGATE MAY BE USED ONLY IN CONCRETE THAT WILL BE PLACED 1' OR MORE BELOW THE FINISHED GROUND LINE.

CUTTING OR BENDING OF REINFORCING BARS

ANY CUTTING OR BENDING OF REINFORCING BARS NECESSARY TO ACCOMMODATE THE UTILITY OPENINGS OR ANY OTHER ESSENTIAL ELEMENT OF WORK RELATED TO THE PROJECT, SHALL BE INCLUDED IN THE PRICE BID PER POUND FOR "ITEM 509 - REINFORCING STEEL-GRADE 60," AND/OR "ITEM 824 - EPOXY COATED REINFORCING STEEL, GRADE 60," UNLESS OTHERWISE NOTED.

STRUCTURE GROUNDING (NORTH EXPRESSWAY VIADUCT)

REMOVAL OF THE EXISTING STRUCTURE GROUNDING SYSTEM SHALL BE INCLUDED FOR PAYMENT WITH "ITEM 202, PORTIONS OF STRUCTURES REMOVED".

THE EXISTING SYSTEM CONSISTS OF WIRES CONNECTED TO THE BOTTOM FLANGE OF THE EXISTING EXTERIOR GIRDERS AND THEIR EXPANSION SHOES AT BOTH ABUTMENTS, WHICH ARE JOINED AT THE WESTERLY CORNERS AND EXTENDED DOWN THE FACE OF ABUTMENTS TO A CLUSTER OF THREE 8' GROUND RODS. ALSO ACROSS THE EXPANSION JOINTS AT PIERS 3 AND 6 AT EACH OUTSIDE STRINGER ARE GROUND WIRES CONNECTED TO THE LOWER FLANGES.

THE PROPOSED GROUNDING SYSTEM SHALL BE INSTALLED AS SHOWN IN THE PLANS AND IN STANDARD DRAWING HL-7 AND IN ACCORDANCE WITH "ITEM 625, STRUCTURE GROUNDING SYSTEM".

FINISHING MACHINE SUPPORTS

AREAS ALONG THE FASCIA STRINGERS HAVE BEEN DESIGNATED IN THE CONTRACT PLANS WHERE WELDED ATTACHMENTS MAY BE MADE FOR THE CONCRETE FINISHING MACHINE SUPPORTS. ATTACHMENT DETAILS, WHERE PERMITTED, SHOULD NOT EMPLOY FILLET WELDS LONGER THAN 2". TO MINIMIZE THE POSSIBILITY OF EDGE DAMAGE, WELDS SHOULD BE NO CLOSER THAN 1" FROM THE EDGE OF FLANGE.

CONTINGENCY QUANTITIES

THE CONTRACTOR SHALL NOT ORDER MATERIALS OR PERFORM WORK LISTED IN THE GENERAL SUMMARY FOR ITEMS DESIGNATED BY PLAN NOTE TO BE USED "AS DIRECTED BY THE ENGINEER" UNLESS AUTHORIZED BY THE ENGINEER. THE ACTUAL WORK LOCATIONS AND QUANTITIES USED AT THE ENGINEER'S DISCRETION SHALL BE MADE A MATTER OF RECORD BY INCORPORATION INTO THE FINAL CHANGE ORDER GOVERNING COMPLETION OF THIS PROJECT.

COOPERATION WITH RAILROADS

THE CONTRACTOR SHALL COOPERATE AT ALL TIMES WITH THE LOCAL OFFICIALS OF THE RAILROAD COMPANIES. HE SHALL USE ALL REASONABLE CARE AND DILIGENCE IN THE WORK IN ORDER TO AVOID ACCIDENTS, DAMAGE, OR INTERFERENCE WITH THE TRAINS OR OTHER PROPERTY OF THE RAILROADS. THE CONTRACTOR SHALL NOTIFY THE LOCAL OFFICIALS OF THE RAILROADS PRIOR TO STARTING WORK THAT MAY AFFECT RAILROAD PROPERTY AND FACILITIES AND SHALL PAY THE RAILROAD COMPANIES THE COST OF FLAGMEN FURNISHED BY THE RAILROAD COMPANIES AND MADE NECESSARY BECAUSE OF ANY OF THE CONTRACTOR'S OPERATIONS OVER OR ADJACENT TO THE TRACKS.

NO SCAFFOLD, PLANKS, OR OTHER EQUIPMENT SHALL BE SUSPENDED OR ERECTED ABOVE OR WITHIN 10' OF A RAIL OVER WHICH TRAINS ARE OPERATING WITHOUT PRIOR WRITTEN APPROVAL OF THE CHIEF ENGINEER, OR HIS AUTHORIZED REPRESENTATIVE, OF THE RAILROAD COMPANY.

FAILURE TO NOTIFY THE RAILROAD COMPANIES AS NOTED ABOVE SHALL BE CAUSE FOR STOPPING WORK UNTIL ALL PROVISIONS FOR PROTECTING RAILROAD PROPERTY HAVE BEEN PROVIDED.

STATE SAFETY REQUIRED

THE CONTRACTOR IS REQUIRED TO MEET THE APPLICABLE SAFETY REQUIREMENTS OF THE OHIO INDUSTRIAL COMMISSION.

FOUNDATIONS (NORTH EXPRESSWAY VIADUCT)

PILES SHALL BE DRIVEN TO REFUSAL ON BEDROCK. REFUSAL SHALL BE CONSIDERED AS ATTAINED BY PENETRATING SOFT BEDROCK WITH A MINIMUM RESISTANCE OF 20 BLOWS PER INCH, OR REFUSAL SHALL BE CONSIDERED AS ATTAINED AFTER THE PILE HAS CONTACTED HARD BEDROCK AND THE PILE THEN RECEIVED AT LEAST 20 BLOWS.

THE DESIGN LOAD IS 50.2 TONS PER PILE FOR THE ABUTMENT PILES.

FOUNDATION BEARING PRESSURE

ABUTMENT FOOTINGS, AS DESIGNED, PRODUCE A MAXIMUM BEARING PRESSURE OF THREE TONS PER SQUARE FOOT.

PIER FOOTINGS, AS DESIGNED, PRODUCE A MAXIMUM BEARING PRESSURE OF 5.2 TONS PER SQUARE FOOT.

FOOTINGS SHALL EXTEND A MINIMUM OF 12" INTO BEDROCK OR TO THE ELEVATION SHOWN, WHICHEVER IS LOWER.

SUPERSTRUCTURE CONCRETE AND DECK PROTECTION ALTERNATES

THE CONTRACTOR MUST SUBMIT ALTERNATE BIDS FOR SUPERSTRUCTURE CONCRETE AND DECK PROTECTION ITEMS FOR THE NORTH EXPRESSWAY VIADUCT AND FOR THE PERKINS STREET BRIDGE.

ALTERNATE "A" SHALL CONSIST OF THE FOLLOWING ITEMS:

ITEM	UNIT	DESCRIPTION
511	C.Y.	CLASS S CONCRETE
845	S.Y.	LATEX MODIFIED CONCRETE OVERLAY (1 1/4" THICK)

THIS ALTERNATE IS THE ONE WHICH HAS BEEN DETAILED IN THESE PLANS. THE QUANTITY OF CLASS S CONCRETE FOR EACH BRIDGE INCLUDES THE CONCRETE FOR THE BRIDGE SUPERSTRUCTURE WITH PARAPETS, AND THE ABUTMENT SLABS WITH PARAPETS FOR THE NORTH EXPRESSWAY VIADUCT. THE LMC OVERLAY QUANTITY IS FOR THE AREAS AS DETAILED IN THE PLANS.

ALTERNATE "B" SHALL CONSIST OF THE FOLLOWING ITEMS:

ITEM	UNIT	DESCRIPTION
511	C.Y.	CLASS S CONCRETE, USING SHRINKAGE COMPENSATING CEMENT (AS PER PLAN)

THE CLASS S CONCRETE WITH SHRINKAGE COMPENSATING CEMENT SHALL BE USED IN ALL LOCATIONS WHERE THE CLASS S CONCRETE ITEM AND THE LMC OVERLAY ITEM ARE SPECIFIED FOR THE ALTERNATE "A" DESIGN. DECKS SHALL BE POURED MONOLITHICALLY AND TO THE SAME TOTAL THICKNESS AS DETAILED IN THE PLANS FOR THE ALTERNATE "A" DESIGN.

ITEM 510 - DOWEL HOLES

THIS ITEM SHALL BE PERFORMED AS INDICATED ON THE PLANS OR AS DIRECTED BY THE ENGINEER AND SHALL BE USED TO REPLACE THE DETERIORATED BARS WHICH WERE TO REMAIN, OR PLACING NEW DOWEL BARS WHERE A NEW CONCRETE SECTION IS BEING ATTACHED TO THE REMAINING PORTIONS OF EXISTING CONCRETE. AN ALLOWANCE OF 70 DOWEL HOLES FOR THE NORTH EXPRESSWAY VIADUCT AND 35 DOWEL HOLES FOR THE PERKINS STREET BRIDGE IS INCLUDED IN THE ESTIMATED QUANTITY OF ITEM 510 IN REPLACING DETERIORATED BARS.

THE DOWEL BARS ARE TO BE PAID FOR UNDER "ITEM 509 - REINFORCING STEEL, GRADE 60" AND THE DOWEL HOLES ARE TO BE PAID FOR UNDER "ITEM 510 - DOWEL HOLES".

ITEM 511 - CLASS S CONCRETE, USING SHRINKAGE COMPENSATING CEMENT (AS PER PLAN)

DESCRIPTION

THIS ITEM SHALL CONSIST OF FURNISHING AND PLACING PORTLAND CEMENT CONCRETE USING SHRINKAGE COMPENSATING CEMENT FOR BRIDGE SUPERSTRUCTURES, ABUTMENT SLABS, AND ALL PARAPETS, IN ACCORDANCE WITH THESE SPECIFICATIONS, AND IN REASONABLY CLOSE CONFORMITY WITH THE LINES, GRADES, AND DIMENSIONS SHOWN ON THE PLANS. ALL APPLICABLE PROVISIONS OF ITEM 511 OF THE SPECIFICATIONS SHALL APPLY EXCEPT AS MODIFIED HEREIN.

MEETING

A MEETING MUST BE HELD WELL IN ADVANCE OF THE FIRST ANTICIPATED POURING DATE, WITH THE CEMENT MANUFACTURER'S REPRESENTATIVE, THE CONCRETE SUPPLIER, THE CONTRACTOR, AND THE ENGINEER IN ATTENDANCE, TO DISCUSS THE DESIGN MIX AND SPECIAL REQUIREMENTS FOR HANDLING, POURING, FINISHING, AND CURING OF CONCRETE WITH SHRINKAGE COMPENSATING CEMENT.

DALTON • DALTON • NEWPORT
CLEVELAND, OHIO AKRON, OHIO

3/73

STRUCTURAL GENERAL NOTES
NORTH EXPRESSWAY VIADUCT
PERKINS STREET BRIDGE
SUM-8-0175/0195

DESIGNED	DRAWN	TRACED	CHECKED	REVIEWED	DATE	REVISED
RLF	C.D.G.		RLF JFP	JFP	2-1-85	

F.H.W.A. REG.	STATE	PROJECT	
5	OHIO		

105A 204

SUM-8-1.73/1.95

SLUMP

MAXIMUM SLUMP AT THE TIME AND PLACE OF CONCRETE PLACEMENT SHALL BE SIZE INCHES (6").

PLACING CONCRETE

MAXIMUM AMBIENT TEMPERATURE AT THE TIME OF PLACEMENT OF CONCRETE SHALL BE 80° F.

CURING AND LOADING

CONCRETE SHALL BE CURED BY 511.14 METHOD (A) WATER CURING EXCEPT THE USE OF WHITE POLYETHYLENE SHEETING OR PLASTIC COATED BURLAP BLANKETS WILL NOT BE PERMITTED. IF REQUIRED BY THE ENGINEER, THE SURFACE OF THE CONCRETE SHALL BE GIVEN A FOG SPRAY OF WATER. THIS MAY BE REQUIRED PRIOR TO WATER CURING IF WEATHER CONDITIONS DICTATE. EQUIPMENT SHALL BE ON HAND.

IN ADDITION TO THE LOADING REQUIREMENTS OF 511.14, NO CONSTRUCTION TRAFFIC IN EXCESS OF SIX (6) TONS WILL BE PERMITTED ON THE DECK AND ABUTMENT SLAB CONCRETE UNTIL THE 28-DAY COMPRESSIVE DESIGN STRENGTH HAS BEEN OBTAINED.

CONCRETE TEST SPECIMENS

ON ALL STRUCTURES, FIVE TEST CYLINDERS WILL BE MADE FROM EACH 100 CUBIC YARDS, OR FRACTION THEREOF, OF CONCRETE THAT IS INCORPORATED INTO THE WORK EACH DAY. ON INDIVIDUAL STRUCTURES, AN ADDITIONAL THREE TEST CYLINDERS WILL BE MADE FROM EACH DAY'S DECK POUR (INCLUDING ABUTMENT SLABS AND PARAPETS).

FROM THE FIVE TEST CYLINDERS, A 7-DAY COMPRESSIVE STRENGTH SHALL BE DETERMINED FROM ONE CYLINDER. AT 28 DAYS, THREE CYLINDERS ARE TO BE TESTED AND THE AVERAGE COMPRESSIVE STRENGTH RECORDED AND DEFINED AS THE "STRENGTH TEST". THE REMAINING CYLINDER SHALL BE HELD IN RESERVE AS A SPARE.

THE THREE ADDITIONAL CYLINDERS SHALL BE USED FOR DETERMINING WHEN THE DECK OR ABUTMENT SLAB MAY BE OPENED TO CONSTRUCTION TRAFFIC IN EXCESS OF 6 TONS OR WHEN SURFACE TREATMENT MAY BE APPLIED TO THE NEW CONCRETE SURFACES IN ACCORDANCE WITH THE REQUIREMENTS OF "ITEM SPECIAL - SEALING OF CONCRETE SURFACES."

WHEN NECESSARY, TO PERMIT EARLY REMOVAL OF FALSEWORK OR OPENING TO TRAFFIC OF 6 TONS OR LESS, CONCRETE TEST BEAMS SHALL BE MADE AND TESTED ACCORDING TO STANDARD METHODS.

METHODS OF SAMPLING, CURING, AND TESTING CONCRETE TEST SPECIMENS SHALL BE IN ACCORDANCE WITH THE "AMERICAN SOCIETY FOR TESTING MATERIALS," APPLICABLE SECTIONS.

RESPONSIBILITY OF CONTRACTOR

TO FACILITATE TESTING AND INSPECTION, THE CONTRACTOR SHALL:

A. FURNISH ANY NECESSARY LABOR TO ASSIST THE DESIGNATED TESTING AGENCY IN OBTAINING AND HANDLING SAMPLES AT THE PROJECT.

B. PROVIDE AND MAINTAIN FOR THE SOLE USE OF THE TESTING AGENCY ADEQUATE FACILITIES FOR SAFE STORAGE AND PROPER CURING OF CONCRETE TEST SPECIMENS ON THE PROJECT SITE FOR THE FIRST 24 HOURS AS REQUIRED BY "METHOD OF MAKING AND CURING CONCRETE TEST SPECIMENS IN THE FIELD" (ASTM C31).

NO SEPARATE PAYMENT WILL BE MADE TO THE CONTRACTOR FOR THIS WORK BUT WILL BE INCLUDED IN THE UNIT PRICE BID FOR "ITEM 511 - CLASS S CONCRETE, USING SHRINKAGE COMPENSATING CEMENT (AS PER PLAN).

ACCEPTANCE OF CONCRETE

THE STRENGTH LEVEL OF THE CONCRETE WILL BE CONSIDERED SATISFACTORY SO LONG AS THE "STRENGTH TEST" EQUALS OR EXCEEDS THE SPECIFIED STRENGTH.

TEST RESULTS FAILING TO MEET THE ABOVE REQUIREMENTS WILL BE THE BASIS FOR DETERMINING REPLACEMENT OF THE CONCRETE AT THE EXPENSE OF THE CONTRACTOR OR A PROPORTIONATE CREDIT TO THE DEPARTMENT.

METHOD OF MEASUREMENT

THE QUANTITY SHALL BE MEASURED AS PER 511.18 OF THE SPECIFICATIONS AND SHALL INCLUDE ALL LABOR, MATERIALS, EQUIPMENT, AND INCIDENTALS NECESSARY TO COMPLETE THIS ITEM OF WORK.

BASIS OF PAYMENT

THE PAYMENT WILL BE MADE AT THE CONTRACT UNIT PRICE BID FOR THE FOLLOWING:

ITEM	UNIT	DESCRIPTION
511	C.Y.	CLASS S CONCRETE, USING SHRINKAGE COMPENSATING CEMENT (AS PER PLAN)

MATERIALS

THE CEMENT SHALL BE EXPANSIVE HYDRAULIC CEMENT CONFORMING TO ASTM C845, TYPE K.

THE CHEMICAL ADMIXTURES, WHEN REQUIRED BY 511.06, SHALL BE LIMITED TO 705.12, TYPE D.

THE 703.02 COARSE AGGREGATE SHALL BE CRUSHED CARBONATE STONE.

PROPORTIONS

THE MAXIMUM WATER/CEMENT RATIO GIVEN FOR CLASS S CONCRETE IN 499.03 OF THE SPECIFICATIONS SHALL BE REVISED FROM 0.44 TO 0.50.

ITEM 513 - STRUCTURAL STEEL (A36) FOR REPAIRS (NORTH EXPRESSWAY VIADUCT)

THIS ITEM SHALL CONSIST OF FURNISHING THE NECESSARY LABOR, MATERIALS, AND EQUIPMENT FOR STIFFENER REPAIRS AS SHOWN IN THE CONTRACT DRAWINGS AT THE HINGE ROLLER LOCATIONS OF UNIT 2 AS DIRECTED BY THE ENGINEER, AND FOR THE PATCHING OR REPLACEMENT OF ANY CORRODED STEEL SHAPES AS DIRECTED BY THE ENGINEER.

THE ESTIMATED NUMBER OF REPAIRS AT HINGE ROLLER LOCATIONS AS SHOWN IN THE PLANS IS APPROXIMATE ONLY AND IS USED TO ARRIVE AT A TOTAL QUANTITY OF STRUCTURAL STEEL FOR STIFFENER REPAIRS AT HINGE ROLLERS ONLY. THIS QUANTITY INCLUDES THE WEIGHT OF HIGH-STRENGTH BOLTS REQUIRED FOR REPAIRS AT HINGE LOCATIONS.

A HOLE CAUSED BY CORROSION IN A TRUSS MEMBER SHALL BE PATCHED AS SHOWN IN THE PLANS. NO DEFINITE LOCATIONS OF STEEL SHAPES WITH SUFFICIENT SECTION LOSS TO WARRANT REMOVAL WERE DETERMINED IN A PRIOR BRIDGE INSPECTION. THESE LOCATIONS, IF ANY, SHALL BE DETERMINED BY THE ENGINEER AFTER DECK REMOVAL. AN ALLOWANCE OF 7000 LBS. HAS BEEN ADDED TO THE ESTIMATED QUANTITY AT THE HINGE ROLLERS FOR PATCHING OR REPLACEMENT OF CORRODED STEEL. ANY WELDING REQUIRED AT THESE LOCATIONS SHALL BE INCLUDED FOR PAYMENT WITH THIS ITEM. RIVET REMOVAL WITH BOLT REPLACEMENT AT THESE LOCATIONS WILL BE PAID FOR SEPARATELY PER "ITEM SPECIAL - RIVET REMOVAL AND REPLACEMENT".

MATERIALS

THE STRUCTURAL STEEL REQUIRED FOR REPAIR PURPOSES SHALL BE ASTM A36, UNLESS NOTED OTHERWISE. HIGH-STRENGTH BOLTS SHALL CONFORM TO ASTM A325.

CONSTRUCTION

THE CONTRACTOR SHALL SANDBLAST AND INSPECT THE EXISTING STRUCTURE TO DETERMINE THE EXACT NUMBER AND EXTENT OF REPAIRS REQUIRED. THE CONTRACTOR SHALL OBTAIN THE WRITTEN APPROVAL OF THE ENGINEER AS TO THE NUMBER OF REPAIRS AND EXTENT OF REPAIRS AT EACH INDIVIDUAL LOCATION BEFORE FABRICATION OF ANY STRUCTURAL STEEL OR COMMENCING ANY STEEL REPAIR WORK. IT IS THE CONTRACTOR'S RESPONSIBILITY TO DETERMINE THE EXACT LENGTHS OF STEEL SHAPES REQUIRED TO MAKE THE REPAIRS. HIGH-STRENGTH BOLTS SHALL BE INSTALLED IN ACCORDANCE WITH ITEM 513 OF THE CMS. WELDING SHALL BE IN ACCORDANCE WITH AASHTO ARTICLE 1.7.21.

METHOD OF MEASUREMENT

THE QUANTITY WILL BE MEASURED AS THE ACTUAL WEIGHT IN POUNDS OF STRUCTURAL STEEL USED TO MAKE APPROVED REPAIRS. THE QUANTITY SO MEASURED SHALL INCLUDE ALL LABOR, MATERIALS, WELDING, EQUIPMENT, SHORING, AND INCIDENTALS NECESSARY FOR SANDBLASTING, INSPECTION BY THE ENGINEER, AND SATISFACTORILY PERFORMING THE REPAIRS IN ACCORDANCE WITH THE PLANS AND SPECIFICATIONS AND AS DIRECTED BY THE ENGINEER.

BASIS OF PAYMENT

PAYMENT WILL BE MADE AT THE CONTRACT UNIT PRICE BID PER POUND FOR "ITEM 513 - STRUCTURAL STEEL (A36) FOR REPAIRS".

ITEM 513 - CURB PLATES AND MISCELLANEOUS STEEL (AS PER PLAN) (NORTH EXPRESSWAY VIADUCT)

THIS ITEM INCLUDES ALL CURB PLATES WITH SUPPORTS, LIGHT POLE STANDARD MODIFICATIONS, GRATING SUPPORT ANGELS, REPLACEMENT OF DAMAGED HANDRAIL ELEMENTS, AND ALL OTHER MISCELLANEOUS STEEL AS NOTED IN THE PLANS, EXCLUSIVE OF EXPANSION JOINT STEEL. THIS WORK SHALL CONFORM IN ALL RESPECTS TO ITEM 513.

STEEL SHALL CONFORM TO ASTM A36 UNLESS NOTED OTHERWISE. GALVANIZING OF ALL CURB PLATES AND ANY OTHER MISCELLANEOUS STEEL NOTED IN THE PLANS SHALL BE PER CMS SECTION 711.02. THE PAINTING OF ALL NON-GALVANIZED STEEL FOR THIS ITEM SHALL BE AS NOTED IN THE SPECIAL PROVISION FOR THIS BRIDGE.

PAYMENTS FOR THE WORK DESCRIBED HEREIN WILL BE MADE AT THE CONTRACT UNIT PRICE BID PER POUND FOR "ITEM 513, CURB PLATES AND MISCELLANEOUS STEEL (AS PER PLAN)", AND SHALL INCLUDE ALL LABOR, MATERIALS, AND EQUIPMENT NECESSARY TO COMPLETE THIS ITEM.

ITEM 517 - RAILING (AS PER PLAN) (NORTH EXPRESSWAY VIADUCT)

THIS ITEM SHALL INCLUDE THE FURNISHING OF ALL MATERIALS AND THE NECESSARY LABOR TO CONSTRUCT AND ERECT THE COMPLETED STEEL RAILING OF THE TYPE SHOWN ON THE PLANS AND SPECIFIED HEREIN. RAILINGS PER THIS ITEM ARE REQUIRED AT EACH ABUTMENT AND ON THE EAST (WIDENED) SIDE OF UNIT 1. THIS WORK SHALL CONFORM TO ITEM 517 OF THE CMS EXCEPT AS HEREIN NOTED.

THE CONTRACTOR SHALL SALVAGE AND REUSE PORTIONS OF THE EXISTING RAILING BEING REMOVED, AS FOUND TO BE IN ACCEPTABLE CONDITION BY THE ENGINEER. THE CONTRACTOR SHALL MAKE ALL NECESSARY ADJUSTMENTS TO ACCOMMODATE THE EXISTING RAILING CONFIGURATION AND POST SPACING TO THE PROPOSED LOCATIONS AND SUBMIT THE REVISED POST SPACING TO THE ENGINEER FOR APPROVAL.

NEW STEEL HANDRAIL REQUIRED SHALL BE STANDARD WEIGHT SEAMLESS STEEL PIPE, GRADE B, OF THE SIZES SPECIFIED IN THE PLANS. NEW RAILING POSTS REQUIRED SHALL CONFORM TO ASTM A36. ANCHOR BOLTS, NUTS, AND WASHERS SHALL CONFORM TO ASTM A 325. ALL EXPOSED NEW RAIL ELEMENTS SHALL BE PAINTED AS NOTED IN THE SPECIAL PROVISIONS.

PAYMENT FOR THE WORK DESCRIBED HEREIN WILL BE MADE THE THE CONTRACT UNIT PRICES BID FOR THE FOLLOWING:

ITEM	UNIT	DESCRIPTION
517	L.F.	NEW RAILING (AS PER PLAN)
517	L.F.	SALVAGED RAILING (AS PER PLAN)

THESE PRICES SHALL INCLUDE ALL LABOR, MATERIALS, AND EQUIPMENT NECESSARY TO COMPLETE THIS WORK.

THERE IS A TOTAL ESTIMATED RAILING REPLACEMENT LENGTH OF 492 L.F. FOR THIS STRUCTURE. FOR BIDDING PURPOSES ONLY, IT SHALL BE ASSUMED THAT 250 L.F. WILL BE NEW RAILING AND 242 L.F. WILL BE SALVAGED RAILING.

DALTON • DALTON • NEWPORT
CLEVELAND, OHIO AKRON, OHIO

34/73

STRUCTURAL GENERAL NOTES
NORTH EXPRESSWAY VIADUCT
PERKINS STREET BRIDGE
SUM-8-0175/0195

DESIGNED	DRAWN	TRACED	CHECKED	REVIEWED	DATE	REVISED
R.L.F.	F.F.		GTC	JJP	4-29-85	

F.H.W.A. REG.	STATE	PROJECT	
5	OHIO		

106
204

SUM-8 - 1.73 / 1.95

ITEM 518 - DRAINAGE (NORTH EXPRESSWAY VIADUCT)

THE DRAINAGE SYSTEM FOR THIS STRUCTURE SHALL BE ACCORDING TO ITEM 518 OF THE CONSTRUCTION AND MATERIAL SPECIFICATIONS WITH THE FOLLOWING EXCEPTIONS:

MATERIALS

STEEL PIPE SHALL MEET THE REQUIREMENTS OF 707.08 AND SHALL BE GALVANIZED. PLASTIC PIPE (711.29) AS LISTED IN 518.02 WILL NOT BE ALLOWED ON THIS PROJECT.

PIPE SPECIALS SHALL BE ASTM A234 AND SHALL BE GALVANIZED.

THE STRUCTURAL STEEL USED TO FABRICATE DRAINAGE SYSTEM SUPPORTS SHALL CONFORM TO ASTM A36 AND SHALL BE GALVANIZED, UNLESS NOTED OTHERWISE. REFER TO 711.02 FOR TREATMENT OF GALVANIZED STEEL TO BE PLACED IN CONCRETE.

CORRUGATED FLEXIBLE METAL HOSE SHALL MEET THE REQUIREMENTS OF ASTM A312, TYPE 316L.

STAINLESS STEEL BRAID SHALL BE TYPE 321 STAINLESS STEEL.

THE STRIP WOUND LINER SHALL BE TYPE 302 STAINLESS STEEL.

FITTINGS USED FOR THE PIPE EXPANSION ASSEMBLY SHALL MEET THE REQUIREMENTS OF ASTM A105. THE COVER FOR THE CLEANOUT OPENINGS, SHALL BE A PIPE REPAIR CLAMP AS MANUFACTURED BY THE FOLLOWING: CLOW CORPORATION (F-1203); JCM INDUSTRIES, INC. (101); DRESSER INDUSTRIES, INC. (360), OR AN APPROVED EQUAL.

THE CLAMP SHALL BE A MINIMUM OF 18" LONG AS INDICATED IN THE CONTRACT DRAWINGS.

SCUPPERS, AS DETAILED IN THE PLANS, SHALL CONFORM TO CMS SECTION 711.12.

CONSTRUCTION

THE CONTRACTOR SHALL REMOVE THE EXISTING DRAINAGE SYSTEM IN ACCORDANCE WITH ITEM 202 OF THE CMS. INCLUDED IN THE REMOVAL ARE ALL TROUGHS, INLETS, CONDUCTORS, DOWNSPOUTS, AND OTHER DRAINAGE ITEMS. DOWNSPOUTS SHALL BE REMOVED TO 1' BELOW THE EXISTING GROUND LINE AND BULKHEADED.

WHERE MECHANICAL COUPLINGS ARE USED, THEY SHALL BE SET SUCH THAT THE END SEPARATION OF THE PIPE ENDS SHALL ALLOW EQUAL AMOUNTS OF EXPANSION AND CONTRACTION OF THE PIPE. WHERE MECHANICAL COUPLINGS ARE USED TO PRODUCE A CURVE IN THE PIPE, THE DEFLECTION SHALL BE TAKEN EQUALLY BY ALL COUPLINGS WITHIN THE CURVED SECTION.

THE MAXIMUM PIPE LENGTH WITHIN THE LIMITS FOR USE OF MECHANICAL COUPLINGS SHALL BE 20'. THE MAXIMUM SPACING OF PIPE SUPPORTS SHALL BE 10' EXCEPT THAT EACH INDIVIDUAL PIPE SHALL HAVE AT LEAST ONE PIPE SUPPORT.

THE BOLT SIDE OF THE REPAIR CLAMP FOR THE CLEANOUT COVER SHALL BE PLACED TOWARD THE INSIDE OF THE BRIDGE FOR PURPOSES OF AESTHETICS.

MEASUREMENT AND PAYMENT

MEASUREMENT AND PAYMENT SHALL BE AS NOTED HEREIN AND IN ITEM 518. ALL PIPE SUPPORTS SHALL BE INCLUDED FOR PAYMENT WITH THE 8" STEEL PIPE. PAYMENT WILL BE MADE AT THE CONTRACT UNIT PRICE PER LINEAL FOOT FOR 8" STEEL PIPE, INCLUDING SPECIALS.

REMOVAL OF THE EXISTING DRAINAGE SYSTEM SHALL BE INCLUDED IN THE COST OF "ITEM 202 - PORTIONS OF STRUCTURES REMOVED".

ITEM 601 - RIPRAP (AS PER PLAN) (NORTH EXPRESSWAY VIADUCT)

THE RIPRAP SHALL BE CLASS C CONCRETE IN CLOTH OR BURLAP BAGS. THE BAGS SHALL BE SOAKED WITH WATER AND FILLED WITH APPROXIMATELY 2/3 CUBIC FOOT OF CLASS C CONCRETE AND THEN HAND PLACED TO PROTECT THE SLOPE AND FOOTINGS AS SHOWN ON THE PLANS OR AS DIRECTED BY THE ENGINEER. THE PLACEMENT PROCEDURE SHALL BE THE SAME AS INDICATED IN ARTICLE 601.04(2) OF THE C.M.S. MANUAL.

MEASUREMENT AND PAYMENT

RIPRAP WILL BE MEASURED BY THE CUBIC YARD COMPLETED IN PLACE TO PLAN DIMENSIONS.

THE BID PRICE SHALL BE FULL COMPENSATION FOR ALL MATERIALS, EXCAVATION, BACKFILL, DISPOSAL OF SURPLUS MATERIALS, AND INCIDENTALS NECESSARY FOR COMPLETION OF THIS ITEM.

ITEM 601 - DUMPED ROCK FILL, TYPE D, WITH FILTER FABRIC (AS PER PLAN) (NORTH EXPRESSWAY VIADUCT)

THIS ITEM SHALL CONSIST OF REGRADING THE EXISTING SLOPES, PROVIDING SOIL MATERIAL TO FILL IN THE WASHED OUT AREAS AND CONSTRUCTING THE NEW EMBANKMENT AND PROVIDING THE DUMPED ROCK FILL, TYPE D, WITH FILTER FABRIC AS INDICATED IN THE CONTRACT DOCUMENTS.

THE FILTER FABRIC SHALL BE A NON-WOVEN FABRIC AS MANUFACTURED BY THE FOLLOWING: CROWN ZELLERBACH (FIBRETEX 300); HOECHST FIBERS INDUSTRIES (TREVIRA SPUN BOND 1127); PHILLIPS PETROLEUM (SUPAC 5-P), OR AN APPROVED EQUAL.

THIS ITEM SHALL CONFORM IN ALL RESPECTS TO ITEM 601. THE REGRADING OF THE EMBANKMENT SHALL CONFORM IN ALL RESPECTS TO "ITEM 203 - ROADWAY EXCAVATION AND EMBANKMENT".

PAYMENT FOR THE WORK DESCRIBED HEREIN WILL BE MADE AT THE CONTRACT UNIT PRICE BID PER CUBIC YARD FOR "ITEM 601 - DUMPED ROCK FILL, TYPE D WITH FILTER FABRIC (AS PER PLAN)" AND SHALL INCLUDE ALL LABOR, MATERIALS, AND EQUIPMENT NECESSARY TO COMPLETE THIS ITEM. NO SEPARATE PAYMENT WILL BE MADE FOR THE REGRADING OF THE EXISTING SLOPES, THE FURNISHING OF ADDITIONAL EMBANKMENT MATERIAL OR THE FURNISHING AND PLACEMENT OF THE FILTER FABRIC BUT THE COST THEREOF SHALL BE INCLUDED IN "ITEM 601 - DUMPED ROCK FILL, TYPE D WITH FILTER FABRIC (AS PER PLAN)" FOR PAYMENT.

CONSTRUCTION CLEARANCE (NORTH EXPRESSWAY VIADUCT)

CONSTRUCTION CLEARANCE OF 8' HORIZONTALLY FROM THE CENTER OF TRACKS AND 23' VERTICALLY FROM A POINT LEVEL WITH THE TOP OF THE HIGHER RAIL SHALL BE MAINTAINED AT ALL TIMES.

IF STRUCTURE EXCAVATION IS WITHIN THE LIMITS AS SHOWN ON RAILROAD CROSS SECTION DIAGRAM BELOW, THE EXCAVATION PLANS AND PROCEDURES CONCERNING THIS WORK MUST BE SUBMITTED TO THE RAILROAD IN QUESTION FOR APPROVAL. THESE EXCAVATION PLANS SHALL INCLUDE THE FOLLOWING:

1. THREE COPIES OF DETAILED DRAWINGS SHOWING THE FOLLOWING:
   A. TIMBER, STEEL, BOLT AND WELD SIZES AND DETAILS.
   B. DIMENSIONS SHOWING DISTANCES FROM CENTERLINE OF TRACK TO TEMPORARY SHEETING AND BETWEEN SUPPORTING ELEMENTS.
   C. SECTION SHOWING TEMPORARY SHEETING HEIGHTS AND TRACK ELEVATION.
2. CALCULATIONS COVERING TEMPORARY SHEETING DESIGN.

CRITERIA FOR TEMPORARY SHORING INCLUDES THE FOLLOWING:

1. THE LIVE LOAD SURCHARGE FROM TRACK ADJACENT TO SHEETING SHALL BE TAKEN INTO ACCOUNT IN THE SHEET DESIGN.
2. ALLOWABLE STRESSES CONTAINED IN THE AMERICAN RAILWAY ENGINEERING ASSOCIATION SPECIFICATIONS (CHAPTERS 7, 8, AND 15) SHALL BE USED.
3. A CONSTRUCTION PROCEDURE FOR TEMPORARY SHEETING CONSTRUCTION SHALL BE INCLUDED ON THE DRAWING.
4. SAFETY RAILINGS SHALL BE INSTALLED WHEN TEMPORARY SHEETING IS WITHIN 15' OF THE TRACK.
5. A SAFETY FACTOR OF 2 SHALL BE USED IN THE TEMPORARY SHEETING DESIGN.

THIS WORK SHALL BE DONE IN FULL COMPLIANCE WITH C.M.S. ITEMS 501 AND 503 AND SHALL BE INCLUDED IN THE BID PRICE FOR "ITEM 503 - COFFERDAMS, CRIBS, AND SHEETING" FOR PAYMENT.

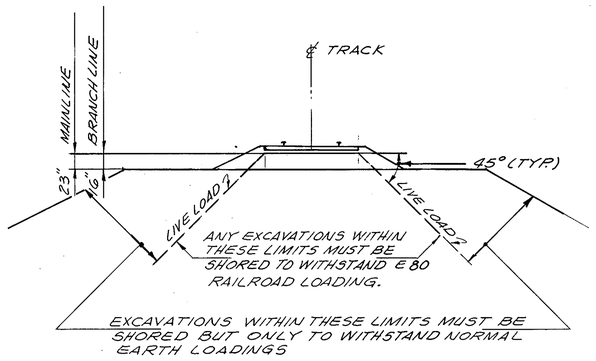

RAILROAD CROSS SECTION

DALTON • DALTON • NEWPORT
CLEVELAND, OHIO AKRON, OHIO

38/73

STRUCTURAL GENERAL NOTES
NORTH EXPRESSWAY VIADUCT
PERKINS STREET BRIDGE

SUM-8-0175/0195

DESIGNED	DRAWN	TRACED	CHECKED	REVIEWED	DATE	REVISED
RLF	D.T.		RLF JFP	JFP	2-1-85	

F.H.W.A. REG.	STATE	PROJECT	
5	OHIO		

107
204

SUM-8-1.73 / 1.95

ITEM 516 - MODULAR EXPANSION JOINT DEVICE, AS PER PLAN (NORTH EXPRESSWAY VIADUCT)

DESCRIPTION

THIS ITEM SHALL CONSIST OF FURNISHING AND INSTALLING MODULAR EXPANSION JOINT DEVICES (HEREINAFTER REFERRED TO AS THE EXPANSION JOINT), INCLUDING ANCHORS, SUPPORT ASSEMBLIES, AND SLIDING PLATE ASSEMBLIES, FOR BRIDGE JOINTS OF THE SIZE SPECIFIED, IN ACCORDANCE WITH THESE SPECIFICATIONS AND WITHIN REASONABLY CLOSE CONFORMITY TO THE LINES, ELEVATIONS, LOCATIONS, DETAILS AND NOTES SHOWN ON THE PLANS.

THE MODULAR EXPANSION JOINT SHALL BE AS FOLLOWS:

1. "WABO-MAURER SYSTEM" AS MANUFACTURED BY THE WATSON-BOWMAN AND ACME ASSOCIATES, INC., 95 PINEVIEW DRIVE, AMHERST, N.Y. 14120.
2. MAURER SYSTEM AS MANUFACTURED BY THE D.S. BROWN COMPANY, P.O. BOX 158 NORTH BALTIMORE, OHIO 45872

OR APPROVED EQUAL.

THE EXPANSION JOINTS SHALL BE DESIGNED TO SUPPORT, IN ALL POSITIONS, A HIGHWAY LOADING OF CLASS HS 20-44 AS DEFINED AND ESTABLISHED IN ACCORDANCE WITH THE REQUIREMENTS OF AASHTO STANDARD SPECIFICATIONS FOR HIGHWAY BRIDGES PLUS 100 PERCENT IMPACT. THE EXPANSION JOINT SHALL ALSO CONFORM TO THE APPLICABLE FATIGUE DESIGN REQUIREMENTS FOR CASE II OF ARTICLE 1.7.2 OF THE AASHTO SPECIFICATIONS.

THE EXPANSION JOINT SHALL BE OF THE TYPE THAT WILL SEAL THE DECK SURFACE, GUTTERS AND CURBS TO PREVENT WATER AND OTHER CONTAMINANTS FROM DESCENDING ONTO THE SUBSTRUCTURE. THE ANCHORAGE SYSTEM FOR THE EXPANSION JOINT SHALL BE AS DETAILED ON THE PLANS. THERE SHALL BE NO APPRECIABLE CHANGE IN THE DECK SURFACE DUE TO EXPANSION AND CONTRACTION MOVEMENT OF THE EXPANSION JOINT.

EXPANSION AND CONTRACTION MOVEMENTS OF THE BRIDGE DECK SHALL BE TAKEN ENTIRELY BY DEFORMATION OF THE ELASTOMERIC SEAL ELEMENT. THE ELASTOMERIC SEAL ELEMENT SHALL BE RECESSED AND DESIGNED TO BE SELF-CLEANING AND POSITIVELY GRIPPED BY THE EXTRUDED STEEL SECTIONS THROUGHOUT THE RANGE OF THE ANTICIPATED MOVEMENT. THE SEAL ELEMENT SHALL BE FURNISHED AND INSTALLED IN ONE PIECE AND PROVIDED WITH AN END PLUG.

MATERIALS

A. GENERAL

ALL PARTS AND ELEMENTS SHALL BE OF THE MATERIAL AND DESIGN INDICATED IN THE MANUFACTURER'S CATALOG EXCEPT AS OTHERWISE SPECIFIED IN THESE SPECIFICATIONS OR ON THE PLANS. THE CONTRACTOR SHALL FURNISH A GENERAL CERTIFICATION STATING THAT THE MATERIALS FURNISHED CONFORM TO THE REQUIREMENTS OF THESE SPECIFICATIONS.

B. METALS

ALL METALS USED IN FABRICATION OF THE EXPANSION JOINT SHALL MEET THE REQUIREMENTS OF SECTION 513 OF THE CONSTRUCTION AND MATERIAL SPECIFICATIONS OF THE OHIO DEPARTMENT OF TRANSPORTATION (HEREINAFTER REFERRED TO AS STANDARD SPECIFICATIONS) AND AS SPECIFIED HEREIN.

THE EXTRUDED STEEL SECTIONS AND THE SUPPORT BARS SHALL BE FABRICATED FROM SOLID HIGH-STRENGTH LOW ALLOY STRUCTURAL STEEL MEETING THE REQUIREMENTS OF ASTM A588-75, GRADE 50.

STAINLESS STEEL SHEETS FOR THE SLIDING SURFACES OF THE SUPPORT BARS SHALL CONFORM TO THE REQUIREMENTS OF ASTM A167-74, ALLOY 304, 20 MICRO-INCHES RMS FINISH. MINIMUM THICKNESS OF THE STAINLESS STEEL SHEETS SHALL BE 1/4".

ALL OTHER STEEL PLATES, BARS, AND SHAPES SHALL CONFORM TO THE REQUIREMENTS OF ASTM A36-75, UNLESS NOTED OTHERWISE.

BOLTS, NUTS, AND WASHERS SHALL CONFORM TO THE REQUIREMENTS OF ASTM A325-74, TYPE 3, UNLESS OTHERWISE NOTED,

ALL METALLIC COMPONENTS (OTHER THAN ANCHORS, SUPPORT ASSEMBLIES, SLIDING PLATE ASSEMBLIES EXCEPT AS NOTED, STAINLESS STEEL SURFACES, BEARING AREAS IN CONTACT WITH THE ELASTOMERIC SEAL AND CONCRETE) SHALL BE GALVANIZED PER SECTION 711.02 OF THE STANDARD SPECIFICATIONS.

THE METAL SURFACES IN DIRECT CONTACT WITH THE ELASTOMERIC SEAL ELEMENTS SHALL BE SANDBLASTED AND AN ADHESIVE USED TO PROVIDE A HIGH STRENGTH BOND BETWEEN THE ELASTOMERIC SEAL AND THE MATING METAL SURFACES.

ALL WELDING SHALL BE IN ACCORDANCE WITH THE REQUIREMENTS OF SECTION 513.17 OF THE STANDARD SPECIFICATIONS.

STEEL FABRICATION SHALL BE IN ACCORDANCE WITH THE APPLICABLE REQUIREMENTS OF SECTION 513 OF THE STANDARD SPECIFICATIONS.

C. ELASTOMERIC SEAL

THE ELASTOMERIC SEAL ELEMENTS SHALL CONFORM TO ASTM DESIGNATION D2628, EXCEPT AS NOTED HEREIN:

PROPERTY	REQUIREMENTS	ASTM METHOD
HARDNESS, TYPE A DUROMETER EXCLUDE RECOVERY TEST REQUIREMENTS	60±7	D2240 (MODIFIED)

D. SUPPORT BAR BEARINGS

SUPPORT BAR BEARINGS SHALL BE FABRICATED FROM SOLID URETHANE BONDED TO A STEEL SUBSTRATE, TO WHICH IS BONDED A TFE SHEET CONFORMING TO MANUFACTURER'S SPECIFICATIONS AND THE REQUIREMENTS LISTED HEREIN.

METHODS AND MATERIALS USED IN BONDING THE BEARING COMPONENTS TOGETHER SHALL BE THE MANUFACTURER'S STANDARD AND SHALL BE SUBJECT TO THE ENGINEER'S APPROVAL.

URETHANE

URETHANE SHALL MEET THE FOLLOWING PROPERTIES:

PROPERTY	ASTM TEST METHOD	
SPECIFIC GRAVITY:	D792	1.25
TENSILE STRENGTH:	D638	3,100 PSI (220 KP/CM^2)
TEAR RESISTANCE:	D638	1,400 PSI (100 KP/CM^2)
COMPRESSION SET:		
70 HR. AT 20^{0}C (68^{0}F)	D695	20 PERCENT
24 HR. AT 70^{0}C (158^{0}F)	D695	25 PERCENT
24 HR. AT 100^{0}C (212^{0}F)	D695	40 PERCENT
ELONGATION:		
100 PERCENT ELONGATION	D638	1,100 PSI (80 KP/CM^2)
300 PERCENT ELONGATION	D638	2,000 PSI (140 KP/CM^2)
ELONGATION AT BREAK	D638	25 PERCENT

TFE

FILLED OR UNFILLED PTFE SHEETS SHALL BE MANUFACTURED FROM VIRGIN PTFE (POLYTETRAFLUOROETHYLENE) RESIN. TFE RESIN SHALL MEET THE FOLLOWING REQUIREMENTS:

PROPERTY	ASTM TEST METHOD	
SPECIFIC GRAVITY:	D792	2.13-2.19
MELTING POINT	D1457	623^{0}F±2
TENSILE STRENGTH (MIN.)	D1457	2,800 PSI
ELONGATION (MIN.)	D1457	200 PERCENT

FILLER MATERIAL, WHEN USED, SHALL BE MILLED GLASS FIBERS, CARBON, OR OTHER APPROVED INERT FILLER MATERIAL.

FINISHED TFE SHEETS CONTAINING GLASS FIBER OR CARBON SHALL CONFORM TO THE FOLLOWING REQUIREMENTS:

MECHANICAL	ASTM METHOD	15% GLASS FIBERS	25% CARBON
TENSILE STRENGTH (MIN.)	D1457	2,000 PSI	1,300 PSI
ELONGATION (MIN.)	D1457	150 PERCENT	75 PERCENT
PHYSICAL	ASTM METHOD	15% GLASS FIBERS	25% CARBON
SPECIFIC GRAVITY (MIN.)	D792	2.20	2.10
MELTING POINT	D1457	327^{0}C ± 10^{0}C	327^{0}C ± 10^{0}C

E. CONTROL SPRINGS, COMPRESSION SPRINGS, AND PLASTIC MOLDINGS

CONTROL SPRINGS, COMPRESSION SPRINGS, AND PLASTIC MOLDINGS SHALL BE THE MANUFACTURER'S STANDARD SUBJECT TO ENGINEER'S APPROVAL.

F. ADHESIVE

ADHESIVES SHALL BE SIKASTIX 360, FEL-POXY FP-101 OR AN APPROVED ALTERNATE.

PREPARATIONS FOR INSTALLATION: TO AVOID THE SUBSEQUENT CONTAMINATION OF PREPARED SURFACES, ALL SURFACES OF THE ELASTOMERIC SEALS SHALL BE CLEANED WITH METHYL ETHYL KETONE (MEK), TOLUENE (T) OR OTHER APPROVED SOLVENT USING CLEAN DISPOSABLE CLOTHS. THEN NOT MORE THAN 7 DAYS PRIOR TO THE SEAL INSTALLATION, A THIN COATING OF CYCLIZING PASTE* SHALL BE APPLIED TO THE BONDING SURFACES (BULBED EDGES). AFTER 25 TO 40 MINUTES, THE PASTE SHALL BE WASHED FROM THE SURFACES WITH CLEAN WATER.

THE BONDING SURFACES OF THE STEEL EXTRUSION (THE INTERIOR OF THE ANCHOR GROOVES) SHALL BE PREPARED TO GRADE SA 3, ASTM D2200. PREPARATION SHALL BE ACCOMPLISHED NOT MORE THAN 24 HOURS PRIOR TO ADHESIVE BONDING.

INSTALLATION: IMMEDIATELY PRIOR TO ADHESIVE APPLICATION, BONDING SURFACES SHALL BE CLEAN, DRY, AND WARMER THAN 45^{0}F, AND THEY SHALL BE MAINTAINED AT OR ABOVE THIS TEMPERATURE UNTIL THE ADHESIVE HAS CURED. ADHESIVE SHALL BE APPLIED LIBERALLY TO BOTH STEEL AND ELASTOMERIC BONDING SURFACES USING A STIFF BRUSH IF NECESSARY TO ACHIEVE A COMPLETE AND RELATIVELY UNIFORM COAT. THEN THE BULBED EDGES OF THE ELASTOMERIC SEAL SHALL BE INSERTED INTO THE ANCHOR GROOVES. AFTER INSTALLATION, EXCESS ADHESIVE SHALL BE REMOVED FROM THE EXPOSED SEAL SURFACES.

*CYCLIZING PASTE IS A MIXTURE OF ONE POUND OF PITTSBURGH PLATE GLASS INDUSTRIES' HISIL 223 OR AN APPROVED ALTERNATE AND SIX POUNDS OF CONCENTRATED SULFURIC ACID (18 MOLAR). TO MIX THE PASTE, ADD HISIL TO ACID SLOWLY WHILE STIRRING MIXTURE TO ACHIEVE A SMOOTH VISCOUS PASTE. NOTE: SINCE CONCENTRATED SULFURIC ACID IS VERY CORROSIVE AND HISIL IS AN EXTREMELY FINE NON-TOXIC POWDER, RUBBER GLOVES AND GLASSES SHALL BE USED BY THOSE USING THE PASTE WHILE GLOVES, GLASSES, AND A RESPIRATOR SHALL BE USED BY THOSE MIXING THE PASTE.

JOINT CLASSIFICATIONS

THE MOVEMENT CLASSIFICATIONS OF THE EXPANSION JOINT SHALL IN NO CASE BE LESS THAN THE MOVEMENT CLASSIFICATION SPECIFIED ON THE PLANS.

THE EXPANSION JOINT, WHEN FULLY EXPANDED OR COMPRESSED, SHALL NOT EXERT A FORCE GREATER THAN 270 LBS/LIN. FT., ONTO THE CONCRETE DECK. TOLERANCE OF MAXIMUM 5 PERCENT WILL BE PERMITTED.

CONSTRUCTION REQUIREMENTS

THE CONTRACTOR SHALL FURNISH SHOP DRAWINGS IN CONFORMANCE WITH THE REQUIREMENTS OF SECTION 501.05 OF THE STANDARD SPECIFICATIONS. THE SHOP DRAWINGS SHALL INDICATE ALL MATERIAL SPECIFICATIONS AND DIMENSIONS AND ANY ADDITIONAL DETAILS NOT SHOWN ON THE PLANS. THE CONTRACTOR SHALL FURNISH ALONG WITH THE SHOP DRAWINGS, DESIGN CALCULATIONS SHOWING THAT THE JOINTS ARE DESIGNED TO SUPPORT, IN BOTH THE TRANSVERSE AND LONGITUDINAL DIRECTIONS AND UNDER ALL TEMPERATURE CONDITIONS, A HIGHWAY LOADING CLASS HS 20-44, AS DESCRIBED PREVIOUSLY IN THESE SPECIFICATIONS. APPROVAL OF THE DESIGN CALCULATIONS AND THE SHOP DRAWINGS BY THE ENGINEER SHALL BE REQUIRED PRIOR TO FABRICATION AND INSTALLATION OF THE EXPANSION JOINT.

A REPRESENTATIVE OF THE JOINT SEAL MANUFACTURER SHALL BE PRESENT PRIOR TO AND DURING INITIAL SEAL INSTALLATION TO FURNISH TECHNICAL ASSISTANCE AND GUIDANCE TO THE CONTRACTOR AND ENGINEER. HE SHALL REMAIN ON THE PROJECT UNTIL HE IS SATISFIED THAT THE INSTALLATION OF THE SEALS IS BEING ACCOMPLISHED TO HIS SATISFACTION. WHERE SPECIAL INSTRUCTIONS ARE NOT CONTAINED HEREIN, DIRECTION FOR THE INSTALLATION SHALL BE ACCORDING TO THE RECOMMENDATIONS OF THIS REPRESENTATIVE.

THE CONTRACTOR SHALL BE RESPONSIBLE FOR NOTIFYING THE MANUFACTURER'S REPRESENTATIVE OF THE DATE OF THE JOINT SEAL ADJUSTMENT AND INSTALLATION AND HE SHALL COORDINATE THE WORK AS NECESSARY TO ENSURE THAT THIS REPRESENTATIVE WILL BE AT THE SITE TO GIVE DIRECTION FOR THIS PHASE OF THE WORK. ALL JOINT ADJUSTMENTS MADE PRIOR TO INSTALLATION AND DURING FINAL ATTACHMENT OF THE JOINT SEAL TO THE STRUCTURE SHALL BE UNDER THE DIRECT SUPERVISION OF THIS REPRESENTATIVE. THE EXPANSION JOINT SHALL BE SET AND CAREFULLY SHIMMED TO LINE AND GRADE UNTIL JOINT'S UPPERMOST PLANE IS 1/4" BELOW THE FINISHED ROADWAY SURFACE AND MATCHES THE ROADWAY GRADIENT.

ALL REINFORCING STEEL FORMING PART OF THE ANCHORING SYSTEM SHALL BE INSTALLED.

THE JOINT SHALL BE FABRICATED FULL WIDTH OF THE ROADWAY DECK. NO FIELD SPLICES IN SEALS AND SEAL RETAINING ELEMENTS WILL BE PERMITTED).

THE EXPANSION JOINT SHALL BE FABRICATED, FULLY SHOP ASSEMBLED, AND SHIPPED WITH A JOINT SETTING DIMENSION AS SHOWN ON THE PLANS AND THE APPROVED SHOP DRAWINGS. ONCE IN PLACE, THE SETTING DIMENSION SHALL BE ADJUSTED TO THE PROPER AMBIENT TEMPERATURE DIMENSION BY MEANS OF PRESTRESSING DEVICES FURNISHED BY THE MANUFACTURER WHICH SHALL ACCOMPANY THE EXPANSION JOINT ASSEMBLY TO THE JOB SITE.

THE EXPANSION JOINT INSTALLATION SHALL BE ADEQUATELY PROTECTED TO ENSURE THAT IT IS NOT DAMAGED DURING THE PLACEMENT AND FINISHING OF THE CONCRETE, THE BARRIERS OR ANY OTHER SUBSEQUENT CONSTRUCTION.

METHOD OF MEASUREMENT

THIS WORK WILL BE MEASURED CONTINUOUSLY BY LINEAR FOOT, AS THE HORIZONTAL LENGTH OF THE JOINT ACCEPTABLY INSTALLED, ALONG THE CENTERLINE OF THE JOINT, BETWEEN GUTTER LINES.

BASIS OF PAYMENT

PAYMENT WILL BE MADE AT THE CONTRACT UNIT PRICE PER LINEAR FOOT OF "ITEM 516 - MODULAR EXPANSION JOINT DEVICE (AS PER PLAN)" WHICH SHALL CONSTITUTE FULL COMPENSATION FOR ALL MATERIAL, LABOR, TOOLS, AND EQUIPMENT NECESSARY TO COMPLETE THIS ITEM ACCORDING TO THESE SPECIFICATIONS.

ITEM 513 - CURB PLATES AND MISCELLANEOUS STEEL (AS PER PLAN) (PERKINS STREET BRIDGE)

THIS ITEM INCLUDES ALL CURB PLATES AND CHANNELS WITH SUPPORTS, AND ALL OTHER MISCELLANEOUS STEEL AS NOTED IN THE PLANS, EXCLUSIVE OF EXPANSION JOINT STEEL. THIS WORK SHALL CONFORM IN ALL RESPECTS TO ITEM 513.

STEEL SHALL CONFORM TO ASTM A36 UNLESS NOTED OTHERWISE. GALVANIZING OF ALL CURB PLATES AND CHANNELS AND ANY OTHER MISCELLANEOUS STEEL NOTED IN THE PLANS SHALL BE PER CMS SECTION 711.02. THE PAINTING OF ALL NON-GALVANIZED STEEL FOR THIS ITEM SHALL BE AS NOTED IN THE SPECIAL PROVISION FOR THIS BRIDGE.

PAYMENT FOR THE WORK DESCRIBED HEREIN WILL BE MADE AT THE CONTRACT UNIT PRICE BID PER POUND FOR "ITEM 513, CURB PLATES AND MISCELLANEOUS STEEL (AS PER PLAN)", AND SHALL INCLUDE ALL LABOR, MATERIALS, AND EQUIPMENT NECESSARY TO COMPLETE THIS ITEM.

DALTON • DALTON • NEWPORT
CLEVELAND, OHIO AKRON, OHIO

3C/73

STRUCTURAL GENERAL NOTES
NORTH EXPRESSWAY VIADUCT
PERKINS STREET BRIDGE

SUM-8-0175/0195

DESIGNED	DRAWN	TRACED	CHECKED	REVIEWED	DATE	REVISED
R.L.F.	F.F.		GTC	JJH	4-29-85	

F.H.W.A. REG.	STATE	PROJECT	
5	OHIO		

108
204

SUM - 8 - 1.73 / 1.95

ITEM 517 - RAILING (CONCRETE PARAPET W/ALUMINUM RAIL) (PERKINS STREET BRIDGE)

DESCRIPTION: THIS ITEM SHALL CONSIST OF THE CONSTRUCTION AND INSTALLATION OF AN ALUMINUM RAILING ON A CONCRETE PARAPET AT THE LOCATIONS AND TO THE CONFIGURATION AND GRADES SHOWN ON THE PLANS, ACCORDING TO ITEM 517 OF THE CONSTRUCTION AND MATERIAL SPECIFICATIONS EXCEPT AS MODIFIED HEREIN.

MATERIAL: SHALL BE AS FOLLOWS:

POSTS: FABRICATED WROUGHT ALUMINUM ASTM B221, ALLOY 6061-T6 OR ALLOY 6351-T5.

RAIL: EXTRUDED ALUMINUM ASTM B221, ALLOY 6061-T6 OR 6351-T5.

RIVET, RAIL SPLICE, CLAMP BAR: ALUMINUM ASTM B221, ALLOY 6061-T6. SPLICE BAR DIMPLED IN SIX (6) PLACES FOR INTERFERENCE FIT.

END CAP: CAST ALUMINUM ASTM B26, ALLOY SG 70 A-F (ALUMINUM ASSOCIATION DESIGNATION A 356-F).

RAIL TO POST HARDWARE:

(4) (4 PER HANDRAIL) 3/8" N.C. x 7/8" LONG HEXAGON HEAD BOLTS, STAINLESS A.S.T.M. A 193, B8.
(4) (4 PER HANDRAIL) 3/4" O.D. x 3/8" I.D. x 1/16" THICK WASHERS, ALUMINUM A.S.T.M. B209, ALCLAD 2024-T4.
(4) (4 PER BARRIER RAIL) 1/2" - 13 N.C. x 1" LONG HEXAGON HEAD BOLTS, STAINLESS A.S.T.M. A 193, B8.
(4) (4 PER BARRIER RAIL) 7/8" O.D. x 1/2" I.D. x 1/16" THICK WASHER, ALUMINUM A.S.T.M. B 209, ALCLAD 2024-T3.

ANCHOR HARDWARE:

(2) FRONT BOLTS, 3/4" x 9" LONG STAINLESS A.S.T.M. A 276, TYPE 430 HEXAGON BOLTS WITH 3/4" - 10 ALUMINUM NUTS, A.S.T.M. B 211, ALLOY 6061-T6 OR 6062-T6.
(2) FRONT WASHERS, 1-1/2" O.D. x 13/16" I.D. x 1/8" THICK ALUMINUM WASHERS A.S.T.M. B 209, ALCLAD 2024-T3.
(2) REAR BOLTS, 5/8" x 9" LONG STAINLESS A.S.T.M. A 276, TYPE 430 BOLTS WITH 5/8" - 11 ALUMINUM HEXAGON NUTS, A.S.T.M. B 211, ALLOY 6061-T6 OR 6062-T6.
(2) REAR WASHERS, 1-1/2" O.D. x 13/16" I.D. x 1/8" THICK, ALUMINUM A.S.T.M. B 209, ALLOY ALCLAD 2024-T3.
(2) CHANNEL BARS, DIAGONALLY CROSSED AND WELDED, 1-3/4" WITH 3/4" -60° WING BEND x 1/8" THICK. A.S.T.M. A36.

POST BASES TO BE PAINTED WITH ZINC CHROMATE CAULKING COMPOUND. SHIM MATERIAL SHALL CONFORM TO A.S.T.M. B 209, ALLOY 1100-0.

ALL THE ALUMINUM METALLIC COMPONENTS SHALL HAVE ANODIC COATING.

ITEM SPECIAL - SEALING OF CONCRETE SURFACES

SPECIFIED CONCRETE SURFACES SHALL BE SEALED USING MATERIALS SPECIFIED IN THE PROPOSAL NOTE. SEE SHEETS 114 AND 186 FOR DETAIL OF AREAS TO BE SEALED. SEE THE PROPOSAL NOTE FOR SURFACE PREPARATION REQUIREMENTS, APPLICATION, RATES, MATERIAL REQUIREMENTS, APPLICATION PROCEDURES, AND MEASUREMENT AND PAYMENT.

ITEM SPECIAL - EXPANSION JOINT SEALS

THIS ITEM SHALL INCLUDE ALL WORK REQUIRED TO PROVIDE AND INSTALL THE STEEL EXTRUSIONS, ANCHORS, SUPPORT ASSEMBLIES, SLIDING PLATE ASSEMBLIES, AND THE ELASTOMERIC STRIP SEAL, AS INDICATED IN THE CONTRACT PLANS. THIS ITEM SHALL CONFORM TO ITEM 516 OF THE CONSTRUCTION AND MATERIAL SPECIFICATIONS EXCEPT AS NOTED HEREIN. NOMINAL JOINT SEAL MOVEMENT REQUIREMENTS ARE SHOWN ON THE DRAWINGS.

THE STEEL EXTRUSION SHALL BE PROVIDED IN MAXIMUM LENGTH POSSIBLE AND SHALL BE WELDED TOGETHER TO FORM A WATERTIGHT JOINT. THE ELASTOMERIC STRIP SEAL SHALL BE ONE CONTINUOUS PIECE. NO FIELD VULCANIZATION SHALL BE ALLOWED. THE STRIP SEAL SHALL NOT BE INSTALLED UNTIL ALL OTHER WORK IS COMPLETE UPON THE STRUCTURE. AN ADHESIVE SHALL BE USED TO FACILITATE PLACEMENT OF THE ELASTOMERIC STRIP SEAL. THE CONTRACTOR SHALL VERIFY ALL DIMENSIONS PRIOR TO FABRICATION.

PHYSICAL PROPERTIES

A. THE STEEL EXTRUSION SHALL CONFORM TO ASTM A 588 OR A36. ALL OTHER STEEL PLATES, BARS, AND SHAPES SHALL CONFORM TO ASTM A36. GALVANIZING OF SLIDING PLATES NOTED IN THE PLANS SHALL BE PER CMS SECTION 711.02. BOLTS, NUTS, AND WASHERS SHALL CONFORM TO ASTM A325 UNLESS OTHERWISE NOTED. STEEL SHALL BE PAINTED AS SPECIFIED IN THE SPECIAL PROVISIONS FOR THE PERTINENT STRUCTURE. COST TO BE INCLUDED WITH SEAL.
B. ADHESIVES SHALL BE SIKASTIX 360, FEL-POXY FP-101 OR AN APPROVED ALTERNATE.

C. THE ELASTOMERIC STRIP SEAL SHALL CONFORM TO THE PHYSICAL PROPERTIES SPECIFIED FOR AASHTO M 220 EXCEPT FOR THE RECOVERY TEST.

THE FOLLOWING JOINT SEAL COMPONENTS WILL BE ACCEPTED AS ALTERNATES FOR THE EXPANSION JOINT SYSTEM:

EXTRUSION: ONFLEX TYPE C
SEAL: ONFLEX SS SERIES

AS MANUFACTURED BY STRUCTURAL ACCESSORIES, INC.

EXTRUSION: WABO-ACME TYPE M
SEAL: WABO-ACME S SERIES

AS MANUFACTURED BY WATSON-BOWMAN AND ACME ASSOCIATES, INC.

OR APPROVED EQUAL.

THE CONTRACTOR SHALL FURNISH MATERIAL SPECIFICATIONS, CERTIFIED MATERIAL TEST RESULTS, CERTIFICATION THAT THE PRODUCT MEETS SPECIFICATIONS, AND APPROPRIATE INSTALLATION PROCEDURES INCLUDING ANY PLAN MODIFICATIONS NECESSARY TO ACCOMMODATE THE ALTERNATE DESIGN.

THE APPROVAL OF AN ALTERNATE JOINT SEAL DESIGN AND THE ISSUANCE OF REVISED PROJECT PLANS SHALL BE BASED ON THE UNDERSTANDING THAT SUCH PROJECT MODIFICATIONS WILL BE DONE WITHOUT COST TO THE STATE OR CITY OF AKRON.

PREPARATIONS FOR INSTALLATION

TO AVOID THE SUBSEQUENT CONTAMINATION OF PREPARED SURFACES, ALL SURFACES OF ELASTOMERIC STRIP SEALS SHALL BE CLEANED WITH METHYL ETHYL KETONE (MEK), TOLUENE (T) OR OTHER APPROVED SOLVENT USING CLEAN DISPOSABLE CLOTHS. THEN NOT MORE THAN 7 DAYS PRIOR TO THE SEAL INSTALLATION, A THIN COATING OF CYCLIZING PASTE* SHALL BE APPLIED TO THE BONDING SURFACES (BULBED EDGES). AFTER 25 TO 40 MINUTES, THE PASTE SHALL BE WASHED FROM THE SURFACES WITH CLEAN WATER.

* CYCLIZING PASTE IS A MIXTURE OF ONE POUND OF PITTSBURGH PLATE GLASS INDUSTRIES' HISIL 223 OR AN APPROVED ALTERNATE AND SIX POUNDS OF CONCENTRATED SULFURIC ACID (18 MOLAR). TO MIX THE PASTE, ADD HISIL TO ACID SLOWLY WHILE STIRRING MIXTURE TO ACHIEVE A SMOOTH VISCOUS PASTE. NOTE: SINCE CONCENTRATED SULFURIC ACID IS VERY CORROSIVE AND HISIL IS AN EXTREMELY FINE NON-TOXIC POWDER, RUBBER GLOVES AND GLASSES SHALL BE USED BY THOSE USING THE PASTE WHILE GLOVES, GLASSES AND A RESPIRATOR SHALL BE USED BY THOSE MIXING THE PASTE.

THE BONDING SURFACES OF THE STEEL EXTRUSION (THE INTERIOR OF THE ANCHOR GROOVES) SHALL BE PREPARED TO GRADE SA 3, ASTM D2200. PREPARATION SHALL BE ACCOMPLISHED NOT MORE THAN 24 HOURS PRIOR TO ADHESIVE BONDING.

INSTALLATION

IMMEDIATELY PRIOR TO ADHESIVE APPLICATION, BONDING SURFACES SHALL BE CLEAN, DRY, AND WARMER THAN 45°F, AND THEY SHALL BE MAINTAINED AT OR ABOVE THIS TEMPERATURE UNTIL THE ADHESIVE HAS CURED. ADHESIVE SHALL BE APPLIED LIBERALLY TO BOTH STEEL AND ELASTOMERIC BONDING SURFACES USING A STIFF BRUSH IF NECESSARY TO ACHIEVE A COMPLETE AND RELATIVELY UNIFORM COAT. THEN THE BULBED EDGES OF THE ELASTOMERIC SEAL SHALL BE INSERTED INTO THE ANCHOR GROOVES. AFTER INSTALLATION, EXCESS ADHESIVE SHALL BE REMOVED FROM THE EXPOSED SEAL SURFACES.

MEASUREMENT AND PAYMENT

THIS WORK WILL BE MEASURED PER LINEAL FOOT, BETWEEN GUTTER LINES, EXCEPT AT PERKINS STREET SIDEWALKS THE PAY LIMIT SHALL BE THE FACE OF BARRIER.

PAYMENT SHALL BE AT THE CONTRACT UNIT PRICE BID PER LINEAL FOOT FOR "ITEM SPECIAL - EXPANSION JOINT SEALS (SIZE AS NOTED)," AND SHALL INCLUDE ALL LABOR, MATERIAL, EQUIPMENT, AND INCIDENTALS NECESSARY TO COMPLETE THE WORK AS DESCRIBED HEREIN.

ITEM SPECIAL - REPAIR OF CRACKS BY THE INJECTION OF AN EPOXY RESIN ADHESIVE

DESCRIPTION

THIS WORK CONSISTS OF REPAIR OF CRACKS BY STRUCTURAL BONDING PROCESS USING EPOXY RESIN ADHESIVES. THE ACTUAL QUANTITY OF REPAIR WORK SHALL BE DETERMINED BY THE ENGINEER IN THE FIELD.

MATERIALS AND EQUIPMENT

THE SPECIFIC TYPE OF INJECTION MATERIALS USED SHALL BE AS RECOMMENDED BY THE EPOXY MANUFACTURER. ALL EPOXY INJECTION MATERIALS SHALL BE TWO COMPONENT, 100 PERCENT SOLIDS, WITH LOW VISCOSITY AND SHALL BE BROUGHT TO THE JOB SITE IN SEALED CONTAINERS PROPERLY MARKED AS ITS CONTENTS, MANUFACTURER'S NAME, DATE OF MANUFACTURE, BATCH NUMBER, SHELF LIFE, POT LIFE, ETC., ALL LEGIBLE AT THE TIME OF USE. ALL CONTAINERS SHALL BE OPENED IN THE PRESENCE OF THE ENGINEER. MATERIALS SHALL BE STORED UNDER COVER IN A DRY PLACE, FREE FROM DIRECT SUNLIGHT AND AMBIENT TEMPERATURES BELOW FREEZING.

SURFACE SEAL MATERIAL IS THAT MATERIAL USED TO CONFINE THE INJECTION ADHESIVE IN THE FISSURE DURING INJECTION AND CURE. THIS MATERIAL SHALL HAVE ADEQUATE STRENGTH TO HOLD INJECTION FITTINGS FIRMLY IN PLACE AND TO RESIST INJECTION PRESSURES ADEQUATELY TO PREVENT LEAKAGE DURING INJECTION. MATERIAL USED SHALL BE AS RECOMMENDED BY THE EPOXY MANUFACTURER.

THE EQUIPMENT USED TO INJECT THE EPOXY ADHESIVE INTO THE CRACKS SHALL BE PORTABLE AND SHALL BE ELECTRIC OR AIR POWERED, CAPABLE OF DISCHARGING PRESSURES OF AT LEAST 200 PSI WITH A MANUAL PRESSURE CONTROL OVERRIDE.

APPROVED MANUFACTURERS OF THE EPOXY MATERIALS USED FOR INJECTION INCLUDE THE FOLLOWING:

ADHESIVE ENGINEERING COMPANY
1411 INDUSTRIAL ROAD
SAN CARLOS, CA 94070
(415) 592-7900

THERMAL-CHEM, INC.
1400 LOUIS AVENUE
ELK GROVE VILLAGE, IL 60007
(312) 364-0364

SIKA CORPORATION
P. O. BOX 297
LYNDHURST, NJ 07071
(201) 933-8800

IPA SYSTEMS, INC.
2745 NORTH AMBER
PHILADELPHIA, PA 19134
(215) 425-6607

POLY-CARB
33095 BAINBRIDGE ROAD
SOLON, OH 44139
(216) 248-1223

CONSTRUCTION

ALL WORK SHALL BE DONE IN ACCORDANCE WITH THE PRINTED INSTRUCTIONS OF THE MANUFACTURER OF THE EPOXY ADHESIVE.

BEFORE REPAIR WORK BEGINS, SURFACES ADJACENT TO CRACKS OR OTHER AREAS OF APPLICATION SHALL BE CLEANED OF DIRT, DUST, GREASE, OIL, EFFLORESCENCE OR OTHER FOREIGN MATTER DETRIMENTAL TO BOND OF EPOXY INJECTION SURFACE SEAL SYSTEM. ACIDS AND CORROSIVES SHALL NOT BE PERMITTED.

ENTRY PORTS SHALL BE PROVIDED ALONG THE CRACK AT INTERVALS NOT GREATER THAN THE THICKNESS OF THE CONCRETE AT THAT LOCATION. ENTRY PORTS SHALL BE DRILLED AND/OR PLACED IN ACCORDANCE WITH THE EPOXY MANUFACTURER'S WRITTEN INSTRUCTIONS.

SURFACE SEAL MATERIAL SHALL BE APPLIED TO THE FACE OF THE CRACK BETWEEN THE ENTRY PORTS. FOR THROUGH CRACKS, SURFACE SEAL SHALL BE APPLIED TO BOTH FACES. SURFACE SEAL MATERIAL SHALL BE ALLOWED ENOUGH TIME TO GAIN ADEQUATE STRENGTH BEFORE PROCEEDING WITH THE INJECTION.

EPOXY ADHESIVE SHALL BE FORCED INTO A VERTICAL CRACK OR JOINT AT THE LOWEST INJECTION POINT WITH SUFFICIENT PRESSURE TO ADVANCE UP THE CRACK AS FAR AS THE NEXT INJECTOR. FOR HORIZONTAL SURFACES, INJECTION SHOULD START AT THE FARTHEST END OF THE CRACK AND WORK TOWARDS THE OTHER END OF THE CRACK.

WHEN EPOXY ADHESIVE TRAVEL IS INDICATED BY APPEARANCE AT THE NEXT ADJACENT PORT, INJECTION SHALL BE DISCONTINUED ON THE ENTRY PORT BEING PUMPED, AND EPOXY INJECTION SHALL BE TRANSFERRED TO NEXT ADJACENT PORT WHERE EPOXY ADHESIVE HAS APPEARED.

PERFORM EPOXY ADHESIVE INJECTION CONTINUOUSLY UNTIL CRACKS ARE COMPLETELY FILLED.

CERTIFICATES OF COMPLIANCE

THE CONTRACTOR SHALL FURNISH CERTIFICATES REQUIRED FOR DEMONSTRATING PROOF OF COMPLIANCE IN TRIPLICATE.

THIS ITEM CONTINUED ON SHEET 4 / 73

DALTON • DALTON • NEWPORT
CLEVELAND, OHIO AKRON, OHIO

30/73

STRUCTURAL GENERAL NOTES & SPECIAL PROVISIONS

NORTH EXPRESSWAY VIADUCT
PERKINS STREET BRIDGE
SUM-8-0175/0195

DESIGNED	DRAWN	TRACED	CHECKED	REVIEWED	DATE	REVISED
RLF	C.D.G.		RLF JFP	JFP	2-1-95	

THE CONTRACTOR SHALL FURNISH A LETTER OF COMPLIANCE STATING THAT HE HAS SUCCESSFULLY BEEN INVOLVED IN THE SPECIFIED TYPE OF WORK FOR THE LAST SIX YEARS. THE CONTRACTOR SHALL FURNISH THE NAMES AND ADDRESSES OF AT LEAST TEN PROJECTS OF SIMILAR NATURE HE HAS COMPLETED OVER THE LAST THREE YEARS.

CONTRACTOR'S WORKMEN ENGAGED IN THE EPOXY INJECTION PROCESS SHALL HAVE SATISFACTORILY COMPLETED A PROGRAM OF INSTRUCTION IN THE METHODS OF RESTORING CONCRETE STRUCTURES UTILIZING EPOXY INJECTION. THE CURRICULUM SHALL INCLUDE THEORY ON THE NATURE AND CAUSES OF CRACKING IN CONCRETE, METHODS FOR PERMANENTLY REPAIRING DAMAGED CONCRETE STRUCTURES, THE TECHNICAL ASPECTS OF CORRECT MATERIAL SELECTION AND USE, AND THE OPERATION, MAINTENANCE AND TROUBLE SHOOTING OF EQUIPMENT.

METHOD OF MEASUREMENT

THE QUANTITY OF STRUCTURAL CRACK REPAIR BY EPOXY ADHESIVE INJECTION SHALL BE MEASURED PER LINEAL FOOT OF CRACK INJECTED, COMPLETED AND ACCEPTED.

BASIS OF PAYMENT

THE PAYMENT FOR REPAIRS OF CRACKS AS DESCRIBED ABOVE, SHALL BE MADE AT THE CONTRACT PRICE BID PER LINEAR FOOT OF "ITEM SPECIAL - REPAIR OF CRACKS BY THE INJECTION OF AN EPOXY RESIN ADHESIVE" WHICH SHALL CONSTITUTE FULL COMPENSATION FOR ALL LABOR, MATERIALS, TOOLS, AND EQUIPMENT NECESSARY TO SATISFACTORILY COMPLETE THIS ITEM. ENTRY PORTS, SURFACE PREPARATION, SURFACE SEAL, AND OTHER RELATED ITEMS WILL NOT BE PAID FOR SEPARATELY, BUT THE COST THEREFORE SHALL BE INCLUDED IN THE COST OF "THE REPAIR OF CRACKS BY THE INJECTION OF AN EPOXY RESIN ADHESIVE" OF WHICH THEY ARE A PART.

ITEM SPECIAL - STONEWORK (NORTH EXPRESSWAY VIADUCT)

DESCRIPTION

THIS WORK CONSISTS OF MODIFYING EXISTING STONEWORK AS SHOWN ON THE DRAWINGS AND AS SPECIFIED HEREIN.

MATERIALS

MASONRY CEMENT:	ASTM C 91, NON-STAINING
HYDRATED LIME:	ASTM C 207, TYPE S
SAND:	ASTM C 144
WATER:	CLEAR AND FREE OF DELETERIOUS MATERIALS WHICH WOULD IMPAIR THE WORK
MORTAR:	NON-STAINING, CEMENT/LIME MORTAR, COMPLYING WITH ASTM C 270, TYPE S, USING SPECIFIED MATERIALS
STONE ANCHORS:	TYPE AND SIZE REQUIRED TO SECURELY ANCHOR AND FASTEN STONEWORK IN PLACE. FABRICATE ANCHORS FROM AISI TYPE 302/304 STAINLESS STEEL

PROCEDURE

A. REMOVE STONE AS SHOWN ON THE DRAWINGS OR AS REQUIRED. REMOVE ADDITIONAL STONE FACING AND THE CAPSTONE IF REQUIRED. HANDLE STONE IN A MANNER THAT WILL NOT DAMAGE OR STAIN THE STONEWORK. REPLACE STONEWORK BROKEN DURING CONSTRUCTION.

B. CUT EXISTING STONE AS SHOWN ON THE DRAWINGS, TO PROVIDE A SMOOTH SURFACE.

C. PROVIDE AND INSTALL NEW ANCHORS AS SPECIFIED AND REQUIRED TO SECURELY ANCHOR AND FASTEN STONEWORK IN PLACE.

D. PROVIDE MORTAR JOINTS TO MATCH THE EXISTING, USING MORTAR OF THE TYPE SPECIFIED.

MEASUREMENT AND PAYMENT

PAYMENT WILL BE MADE AT THE CONTRACT LUMP SUM PRICE FOR "ITEM SPECIAL - STONEWORK," WHICH SHALL CONSTITUTE FULL COMPENSATION FOR ALL MATERIALS, LABOR, TOOLS, AND EQUIPMENT NECESSARY TO COMPLETE THIS ITEM ACCORDING TO THESE SPECIFICATIONS.

ITEM SPECIAL - SEALING OF CONCRETE SURFACES USING EPOXY SEALER (AS PER PLAN) (NORTH EXPRESSWAY VIADUCT)

DESCRIPTION

THE TOP CONCRETE SURFACES OF PIERS NO. 4 AND 5 AS INDICATED IN THE CONTRACT DRAWINGS SHALL BE SEALED WITH THE EPOXY SEALER AS LISTED IN THE PROPOSAL NOTE. ALL WORK FOR THIS ITEM SHALL CONFORM IN ALL RESPECTS TO "ITEM SPECIAL - SEALING OF CONCRETE SURFACES" (SEE PROPOSAL NOTE) EXCEPT THAT THE SEALER SHALL BE OF THE EPOXY TYPE.

ITEM SPECIAL - REPAIR BY SHOTCRETING (NORTH EXPRESSWAY VIADUCT)

DESCRIPTION

THIS ITEM CONSISTS OF THE REMOVAL OF ALL LOOSE AND DISINTEGRATED CONCRETE, THE PREPARATION OF THE SURFACE, REMOVAL OF DETERIORATED REINFORCING STEEL AS DIRECTED BY THE ENGINEER, THE FURNISHING AND PLACING OF WELDED WIRE FABRIC AND ANCHOR BOLTS, AND REPAIRING THE PREPARED SURFACES BY SHOTCRETING. REFER TO THE DRAWINGS FOR THE APPROXIMATE AREAS TO BE REPAIRED.

THE CONTRACTOR SHALL PROVIDE ACCESS FOR THE ENGINEER TO ALL AREAS OF THE SUBSTRUCTURE. THE ENGINEER WILL SOUND ALL CONCRETE SURFACES AND MAKE THE FINAL DETERMINATION OF THE AREAS TO BE REPAIRED.

CONCRETE REMOVAL

REMOVAL LIMITS AND OPERATION SHALL CONFORM TO CMS 520.01 AND 520.03.

IN ADDITION, CARE SHALL BE TAKEN WHEN WORKING AROUND BEARINGS. ANY STRUCTURAL STEEL DAMAGED AS A RESULT OF THE CONTRACTORS OPERATIONS SHALL BE REPAIRED AT NO ADDITIONAL COST TO THE DEPARTMENT.

REMOVED CONCRETE SHALL BE LEGALLY DISPOSED OF BY THE CONTRACTOR.

REINFORCING STEEL

ALL EXISTING REINFORCING BARS SHALL BE REUSED IN THE REPAIRED SUBSTRUCTURE UNITS EXCEPT AS OTHERWISE SPECIFIED HEREIN. THE REUSED BARS SHALL BE THOROUGHLY CLEANED OF ALL CONCRETE FRAGMENTS AND RUST BY SANDBLASTING.

REINFORCING BARS THAT HAVE DETERIORATED TO LESS THAN 75 PERCENT OF THEIR ORIGINAL CROSS SECTION, AS DETERMINED BY THE ENGINEER, SHALL BE CUT OUT AND REPLACED WITH NEW BARS OF THE SAME SIZE AS THE EXISTING BARS AND OF ADEQUATE LENGTH TO LAP SPLICE WITH EXISTING SOUND BARS. CUTTING OF DAMAGED AND CORRODED BARS FOR THEIR REMOVAL SHALL BE BY APPROVED MEANS AND IN ACCORDANCE WITH CMS SECTION 509.

PREPARATION OF CONCRETE REPAIR SURFACES

THE SURFACES OF SOUND CONCRETE EXPOSED BY THE REMOVAL OPERATION SHALL BE PREPARED FOR SHOTCRETE BY SANDBLASTING TO REMOVE ALL LOOSE PARTICLES. WATER BLAST MAY BE USED FOR FINAL CLEANING. THE PREPARED SURFACE SHALL BE KEPT WET DURING THE TWO HOURS PRECEDING PLACEMENT OF THE MORTAR. ALL SURFACES SHALL BE DAMP, WITHOUT FREE WATER, AS MORTAR IS PLACED.

WELDED WIRE FABRIC

ALL SHOTCRETE SURFACES SHALL BE REINFORCED WITH 3" BY 3"-10 GAGE OR 4" BY 4"-8 GAGE WELDED STEEL WIRE FABRIC. THE FABRIC MATERIALS SHALL BE IN ACCORDANCE WITH CMS SECTION 709.10 OR 709.12. THE FABRIC SHALL BE LAPPED 1 1/2 SQUARES IN BOTH DIRECTIONS AND SHALL BE PREBENT TO FIT AROUND CORNERS. IN NO CASE SHALL THE FABRIC BE SPRUNG INTO PLACE. ALL OTHER PLACEMENT AND CLEARANCE REQUIREMENTS FOR THE WIRE FABRIC SHALL BE IN ACCORDANCE WITH CMS SECTION 520.04. WELDED WIRE FABRIC INCLUDED WITH REPAIR BY SHOTCRETING FOR PAYMENT.

ANCHOR BOLTS

WIRE FABRIC SHALL BE SUPPORTED BY 1/4" (MINIMUM) DIAMETER EXPANSION HOOK ANCHOR BOLTS EXCEPT WHERE EXISTING REINFORCING STEEL IN THE REPAIR AREA IS CONSIDERED BY THE ENGINEER TO BE SATISFACTORY FOR THIS PURPOSE. ANCHOR BOLT MATERIALS SHALL BE IN ACCORDANCE WITH CMS SECTION 509.

ENGAGEMENT, CLEARANCES, AND SPACING OF ANCHOR BOLTS SHALL BE IN ACCORDANCE WITH CMS SECTION 520.04.

SHOTCRETE

A. GENERAL REQUIREMENTS

SHOTCRETING SHALL CONFORM TO ALL REQUIREMENTS OF THE "SPECIFICATIONS FOR MATERIALS, PROPORTIONING, AND APPLICATION OF SHOTCRETE" (ACI 506.2-77), PUBLISHED BY THE AMERICAN CONCRETE INSTITUTE, EXCEPT AS MODIFIED BY THE REQUIREMENTS OF THIS SPECIAL PROVISION, AND SHALL BE PERFORMED IN GENERAL COMPLIANCE WITH "RECOMMENDED PRACTICE FOR SHOTCRETING" (ACI 506-66), PUBLISHED BY THE AMERICAN CONCRETE INSTITUTE.

ALL SHOTCRETE WORK SHALL BE PERFORMED UNDER THE SUPERVISION OF A FOREMAN WHO HAS HAD AT LEAST FOUR YEARS EXPERIENCE IN DIRECT CHARGE OF THIS TYPE OF WORK. NOZZLEMEN SHALL HAVE HAD AT LEAST TWO YEARS EXPERIENCE IN SIMILAR WORK. SATISFACTORY WRITTEN EVIDENCE OF SUCH EXPERIENCE SHALL BE FURNISHED TO THE ENGINEER UPON DEMAND.

THE CONTRACTOR SHALL SUBMIT HIS PROPOSED DETAILED SCHEDULE OF OPERATIONS TO THE ENGINEER FOR APPROVAL PRIOR TO START OF WORK. THE SCHEDULE SHALL INCLUDE BUT NOT BE LIMITED TO SEQUENCE OF WORK, LISTING OF EQUIPMENT, SCAFFOLDING METHODS AND DETAILS, METHOD OF OBTAINING ALIGNMENT AND THICKNESS CONTROL, AND METHOD OF CURING.

SHOTCRETE SHALL BE PRODUCED BY THE DRY-MIX METHOD, WHERE THE CEMENT AND DAMP AGGREGATE ARE PREMIXED AND CONVEYED BY A HOSE TO A NOZZLE WHERE THE REMAINING MIXING WATER IS ADDED. THE CONTRACTOR MAY, AT HIS OPTION, REQUEST APPROVAL TO USE THE PNEUMATIC FEED WET-MIX PROCESS WHERE ALL OF THE MATERIALS, INCLUDING THE WATER, ARE PREMIXED BEFORE ENTERING THE CONVEYING HOSE. THE REQUEST FOR APPROVAL SHALL CONTAIN DETAILS ON THE EQUIPMENT AND PROCEDURES PROPOSED, AND PRIOR EXPERIENCE WITH THE PROCESS.

ALL SAMPLING AND TESTING OF SHOTCRETE AND ITS CONSTITUENTS, INCLUDING BOTH PRECONSTRUCTION TESTING AND APPROVAL TESTS DURING CONSTRUCTION, SHALL BE PERFORMED BY AN INDEPENDENT TESTING LABORATORY SELECTED BY THE CONTRACTOR SUBJECT TO THE APPROVAL OF THE DIRECTOR. ALL SAMPLING AND TESTING SHALL BE PERFORMED AT THE CONTRACTOR'S EXPENSE.

SHOTCRETE SHALL HAVE A MINIMUM 28-DAY COMPRESSIVE STRENGTH OF 3,500 PSI. STRENGTH WILL BE DETERMINED FROM TEST PANELS MADE BY THE CONTRACTOR AND BY TESTS ON CORES TAKEN FROM THE COMPLETED WORK. ALL SHOTCRETE SHALL BE SUBSTANTIALLY FREE FROM SANDPOCKETS AND LENSES, AND BE WELL BONDED TO THE REINFORCEMENT.

B. MATERIALS

PORTLAND CEMENT - CEMENT SHALL BE PORTLAND CEMENT CONFORMING TO THE REQUIREMENTS OF ASTM C 150 FOR PORTLAND CEMENT TYPE IA, AND SHALL BE THE PRODUCT OF ONE MILL FOR ALL WORK ON THE PROJECT.

AGGREGATE - AGGREGATE SHALL CONSIST OF HARD, CLEAN, STRONG, DURABLE AND UNCOATED PARTICLES CONFORMING TO THE REQUIREMENTS OF ASTM C 33 FOR CONCRETE AGGREGATES. THE GRADING SHALL CONFORM TO GRADATION NO. 1 IN ACI 506.2-77. THE MOISTURE CONTENT OF THE MATERIAL SHALL BE SUCH AS TO PROMOTE BEST OPERATION OF THE EQUIPMENT, WHICH IS GENERALLY IN THE RANGE OF 3 TO 6 PERCENT.

WATER - MIXING WATER SHALL BE POTABLE, OR IT SHALL MEET THE REQUIREMENTS OF MORTAR CUBES TESTED IN ACCORDANCE WITH ASTM C 109.

C. PRECONSTRUCTION TESTING

AN INVESTIGATION SHALL BE MADE PRIOR TO THE START OF THE WORK TO CHECK THE OPERATION OF THE EQUIPMENT AND QUALIFICATIONS OF THE APPLICATION CREWS, AND TO SELECT MIX PROPORTIONS CAPABLE OF PRODUCING A SATISFACTORY QUALITY OF SHOTCRETE ON THE PROJECT.

AT LEAST TWO CEMENT CONTENTS SHALL BE INVESTIGATED, AND A TEST PANEL SHALL BE MADE FOR EACH IN EACH SHOOTING POSITION TO BE ENCOUNTERED IN THE JOB. A PANEL SHALL BE FABRICATED BY GUNNING ONTO THE PLYWOOD BOTTOM OF AN OPEN BOX 4' SQUARE AND WITH A DEPTH EQUAL TO 4" OR THE MAXIMUM THICKNESS OF THE SHOTCRETE IN THE PIERS, WHICHEVER IS GREATER. THE SIDES OF THE BOX SHALL FLARE OUT ON A 45^{0} ANGLE. REINFORCEMENT CONSISTING OF #10 BARS AT 5" SPACING AND THE WIRE FABRIC SHALL BE INCORPORATED. THE DESIGN OF THE PANELS SHALL BE APPROVED BY THE ENGINEER. ONE BOX FOR EACH CEMENT CONTENT SHALL BE MOUNTED IN EACH SHOOTING POSITION AND SHOTCRETE SHALL BE APPLIED USING THE PERSONNEL, EQUIPMENT, AND PROCEDURES PROPOSED FOR THE JOB, UNTIL THE BOX IS FULL. THE MIXING WATER SHALL BE ADJUSTED TO PROVIDE SHOTCRETE OF THE PROPER CONSISTENCY BUT THE TOTAL WATER CONTENT, INCLUDING THE FREE MOISTURE IN THE AGGREGATE AND WATER ADDED AT THE NOZZLE, SHALL NOT EXCEED 4.5 GALLONS PER SACK OF CEMENT.

CORES WILL BE TAKEN FROM THE PANELS AND TESTED ACCORDING TO ASTM C 42. A COMPRESSIVE STRENGTH OF AT LEAST 3,500 PSI AT 28 DAYS WILL BE REQUIRED. IN ORDER TO PRECLUDE A POSSIBLE DELAY IN STARTING THE WORK, 2,650 PSI AT SEVEN DAYS WILL BE ACCEPTED.

THE PANELS WILL ALSO BE BROKEN AND CHIPPED SO THAT THE INTERIOR PORTIONS CAN BE CAREFULLY EXAMINED. THEY SHALL BE SUBSTANTIALLY FREE OF LENSES AND SAND POCKETS, AND THE SHOTCRETE SHALL BE WELL BONDED TO THE REINFORCEMENT.

EACH CREW MUST FABRICATE A SATISFACTORY PANEL BEFORE APPLYING SHOTCRETE TO THE STRUCTURE.

THIS ITEM CONTINUED ON SHEET 4A | 73

DALTON • DALTON • NEWPORT
CLEVELAND, OHIO AKRON, OHIO

4 | 73

SPECIAL PROVISIONS

NORTH EXPRESSWAY VIADUCT
PERKINS STREET BRIDGE
SUM-8-0175/0195

DESIGNED	DRAWN	TRACED	CHECKED	REVIEWED	DATE	REVISED
RLF	CMR		MAB	JGP	2-1-85	

THE CONTRACTOR MAY REQUEST APPROVAL TO APPLY THE SHOTCRETE TO THE PREPARED SURFACES OF A SUBSTRUCTURE UNIT IN LIEU OF PANELS. IN THE EVENT OF SUCH TESTING, ALL SUCH SHOTCRETE SHALL BE REMOVED FROM THE STRUCTURE AT THE CONCLUSION OF THE TESTS.

D. EQUIPMENT

ALL EQUIPMENT FOR USE IN THE SHOTCRETING OPERATION SHALL BE SUBJECT TO APPROVAL BY THE ENGINEER AND SHALL BE ON THE JOB SITE PRIOR TO START OF SHOTCRETING.

AN ON-SITE BATCHING AND MIXING PLANT SHALL BE PROVIDED. AGGREGATE SHALL BE WEIGHED. CEMENT MAY BE WEIGHED OR BATCHED BY THE BAG - ASSUMING EACH BAG WEIGHS 94 LBS. WEIGHING EQUIPMENT SHALL MEET THE ACCURACY SPECIFIED IN ASTM C 94. A METER SHALL BE INSTALLED IN THE WATER LINE LEADING TO THE NOZZLE.

THE CEMENT AND DAMP AGGREGATE SHALL BE THOROUGHLY MIXED, AND THEN PASSED THROUGH A SIEVE TO REMOVE ALL LARGE PARTICLES BEFORE PLACING IN THE HOPPER OF THE CEMENT GUN. REMIXING OR TEMPERING SHALL NOT BE PERMITTED. UNUSED MATERIAL SHALL BE DISCARDED 30 MINUTES (20 MINUTES IF THE AMBIENT TEMPERATURE IS ABOUT 85^{0}F) AFTER MIXING. THE MIXER SHALL BE THOROUGHLY CLEANED AT LEAST ONCE EACH DAY.

THE CEMENT GUN SHALL BE OF A DESIGN AND CAPACITY THAT HAS GIVEN GOOD RESULTS IN PREVIOUS SIMILAR WORK. A HYDRO-MIX OR PREWETTING LONG NOZZLE SHALL BE USED.

AN AIR COMPRESSOR OF SUFFICIENT CAPACITY TO PROVIDE A SUPPLY OF CLEAN, DRY AIR AT THE PRESSURES AND VOLUMES NECESSARY FOR THE LONGEST HOSE DELIVERY WHILE SIMULTANEOUSLY MEETING OTHER REQUIREMENTS FOR AIR, SHALL BE PROVIDED.

THE WATER PRESSURE AT THE DISCHARGE NOZZLE SHALL BE AT LEAST 15 PSI GREATER THAN THE OPERATING AIR PRESSURE IN ORDER TO ASSURE THAT THE WATER IS INTIMATELY MIXED WITH THE OTHER MATERIALS.

IF THE LINE WATER PRESSURE IS INADEQUATE, A WATER PUMP OR PRESSURIZED TANK SHALL BE INTRODUCED INTO THE LINE.

SCAFFOLDING SHALL BE DESIGNED AND PLACED SO THAT THE QUALITY OF SHOTCRETE IN PLACE WILL IN NO WAY BE IMPAIRED BY LACK OF SPACE OR BY SCAFFOLDING COMPONENTS LOCATED BETWEEN THE WORKMEN AND THE WORK. ADEQUATE SPACE FOR CONVENIENT INSPECTION BY THE ENGINEER SHALL ALSO BE PROVIDED.

E. APPLICATION

EACH LAYER OF SHOTCRETE IS BUILT UP BY MAKING SEVERAL PASSES OF THE NOZZLE OVER A SECTION OF THE WORK AREA. CORNERS SHALL BE FILLED FIRST. THE NOZZLE SHALL GENERALLY BE HELD APPROXIMATELY 3' FROM THE WORK, AND AT AN ANGLE PERPENDICULAR TO THE SURFACE. IF THE FLOW OF MATERIAL AT THE NOZZLE IS NOT UNIFORM AND SLUGS, SANDPOCKETS, OR SLOUGHING OF THE SHOTCRETE RESULT, THE NOZZLEMAN SHALL DIRECT THE NOZZLE AWAY FROM THE WORK UNTIL THE FAULTY CONDITIONS ARE CORRECTED. SUCH DEFECTS SHALL BE REPLACED AS THE WORK PROGRESSES.

SHOTCRETE SHALL BE APPLIED IN ONE OR MORE LAYERS TO PRODUCE THE TOTAL THICKNESS REQUIRED.

THE TIME INTERVAL BETWEEN SUCCESSIVE LAYERS MUST BE SUFFICIENT TO ALLOW INITIAL BUT NOT FINAL SET TO DEVELOP. AT ABOUT THE TIME OF INITIAL SET, THE SURFACE SHALL BE BROOMED OR OTHERWISE CLEANED TO REMOVE THE THIN FILM OF LAITANCE IN ORDER TO ASSURE GOOD BOND WITH SUCCEEDING APPLICATIONS. IF TWO HOURS IS EXCEEDED BETWEEN LAYERS, THE SURFACE SHALL BE DAMPENED PRIOR TO APPLYING THE NEXT LAYER.

WHEN SHOOTING THROUGH AND ENCASING REINFORCING BARS, THE NOZZLE SHALL BE HELD CLOSER THAN NORMAL AND AT A SLIGHT ANGLE FROM THE PERPENDICULAR TO PERMIT BETTER ENCASEMENT AND MINIMIZE THE ACCUMULATION OF REBOUND. ALSO, THE MIX SHOULD BE A LITTLE WETTER THAN NORMAL, ALTHOUGH NOT SO WET THAT MATERIAL WILL SLOUGH BEHIND THE BARS. THIS PROCEDURE FORCES THE PLASTIC SHOTCRETE BEHIND THE BAR WHILE PREVENTING BUILD-UP ON THE FRONT FACE OF THE BAR.

GROUND WIRES AND GUIDE STRIPS SHALL BE USED TO ESTABLISH LINES AND GRADES FOR THE SHOTCRETE.

SHOTCRETING SHALL BE TEMPORARILY SUSPENDED IF:

1. HIGH WINDS SEPARATE THE CEMENT FROM THE SAND AFTER THE MATERIAL LEAVES THE NOZZLE.
2. TEMPERATURES APPROACH FREEZING AND THE WORK CANNOT BE PROTECTED.
3. RAIN OCCURS WHICH MAY CAUSE WASHOUTS OR SLOUGHING OF THE SURFACE.

IF PREMATURE STIFFENING IS EXPERIENCED IN WARM WEATHER, THE CONTRACTOR SHALL COOL THE INGREDIENTS, USE A RETARDER, OR TAKE SUCH OTHER MEASURES AS APPROPRIATE.

F. CONSTRUCTION JOINTS

ALL HORIZONTAL JOINTS SHALL BE SQUARE JOINTS, AND SPECIAL CARE SHALL BE TAKEN TO AVOID OR REMOVE TRAPPED REBOUND AT THE JOINT. THE ENTIRE JOINT SHOULD BE THOROUGHLY CLEANED AND WETTED PRIOR TO THE APPLICATION OF ADDITIONAL SHOTCRETE. VERTICAL JOINTS MAY BE TAPERED TO A SHALLOW EDGE FORM ABOUT 1" THICK.

G. SURFACE FINISH

THE NOZZLEMAN SHALL CARRY THE SHOTCRETE TO A POINT JUST BEYOND THE GUIDE STRIPS OR GROUND WIRES. THE SHOTCRETE SHALL THEN BE ALLOWED TO STIFFEN OR HARDEN TO THE POINT WHERE THE SURFACE WILL NOT PULL OR CRACK WHEN SCREEDED WITH A ROD OR TROWEL. EXCESS MATERIAL IS THEN TRIMMED, SLICED OR SCRAPED TO BRING THE SURFACE TO TRUE LINE AND GRADE. LOW AREAS SHALL BE FILLED IN AND THE ENTIRE SURFACE SHALL BE GIVEN A FLASHCOAT FINISH.

H. CURING

SHOTCRETE SURFACES SHALL BE KEPT CONTINUOUSLY WET FOR AT LEAST SEVEN DAYS, AT A TEMPERATURE ABOVE 40^{0}F.

I. INSPECTION AND TESTING

ACCEPTANCE OF THE SHOTCRETE WILL BE BASED PRIMARILY ON CORES FROM THE SUBSTRUCTURE, TESTED ACCORDING TO ASTM C 42. THREE CORES WILL BE TAKEN FOR EACH 50 CU. YD. OF SHOTCRETE BUT NOT LESS THAN THREE PER SHIFT. THE AVERAGE COMPRESSIVE STRENGTH OF THE THREE CORES SHALL NOT BE LESS THAN 3,500 PSI AND NO CORE SHALL TEST LOWER THAN 3,000 PSI. EXCESSIVE LENSES AND SAND POCKETS AND POOR BOND TO THE REINFORCEMENT WILL ALSO BE CAUSE FOR REJECTION.

A TEST PANEL SHALL ALSO BE MADE FOR EACH 50 CU. YD. OF SHOTCRETE, BUT NOT LESS THAN ONE PER SHIFT. THE PANELS SHALL BE 3' SQUARE AT THE BASE, WITH THE SIDES FLARED OUT AT 45 DEGREES. UNLESS OTHERWISE APPROVED, THE PANELS SHALL BE REINFORCED. THE DESIGN OF THE PANELS SHALL BE APPROVED BY THE ENGINEER. THE AVERAGE 28-DAY STRENGTH OF THE THREE CORES FROM A PANEL SHALL BE AT LEAST 3,500 PSI. SEVEN DAY STRENGTH RESULTS WILL ALSO BE DETERMINED ON PANELS CAST EARLY IN THE WORK. THE INTERIOR OF THE SHOTCRETE SHALL BE FREE FROM SUBSTANTIAL VISUAL DEFECTS.

IF THE RESULTS OF CORES FROM THE STRUCTURES ARE FOUND TO CORRELATE WITH THOSE FROM THE PANELS, CONSIDERATION WILL BE GIVEN TO REDUCING THE NUMBER OF PANELS OR CORES FROM THE STRUCTURE, OR BOTH.

IF AT ANY TIME DURING THE APPLICATION OF SHOTCRETE, THE QUALITY OF SHOTCRETE IN PLACE IS UNSATISFACTORY IN THE OPINION OF THE ENGINEER, THE ENGINEER SHALL HAVE THE RIGHT TO STOP THE WORK UNTIL CHANGES OR ADJUSTMENTS IN THE MATERIALS, PROPORTIONS, EQUIPMENT, NOZZLE OPERATORS, AND/OR COMPONENTS OF THE SHOTCRETE OPERATION ARE MADE THAT WILL PRODUCE SATISFACTORY SHOTCRETE AS DETERMINED BY THE ENGINEER.

ALL DEFECTIVE SHOTCRETE SHALL BE REMOVED AND REPLACED BY AN APPROVED PROCEDURE. CORE HOLES SHALL BE FILLED WITH CONVENTIONAL CONCRETE.

METHOD OF MEASUREMENT

THE QUANTITY SHALL BE THE ACTUAL AREA IN SQUARE FEET OF THE EXPOSED SURFACES OF ALL COMPLETED SHOTCRETE REPAIRS, IRRESPECTIVE OF THE DEPTH OR THICKNESS OF THE REPAIR, AND SHALL INCLUDE ALL MATERIALS, LABOR, EQUIPMENT, AND INCIDENTALS REQUIRED TO COMPLETE THE WORK EXCEPT FURNISHING AND PLACING NEW REINFORCING STEEL REQUIRED TO REPLACE DETERIORATED REINFORCING STEEL.

BASIS OF PAYMENT

PAYMENT SHALL BE MADE AT THE CONTRACT UNIT PRICE PER SQUARE FOOT BID FOR "ITEM SPECIAL - REPAIR BY SHOTCRETING". REINFORCING STEEL (EXCLUDING WELDED WIRE FABRIC AND ANCHOR BOLTS) PLACED AT THE DIRECTION OF THE ENGINEER WILL BE PAID FOR UNDER ITEM 509.

ITEM SPECIAL - RIVET REMOVAL AND REPLACEMENT (NORTH EXPRESSWAY VIADUCT)

DESCRIPTION

THIS ITEM SHALL CONSIST OF FURNISHING THE NECESSARY LABOR, MATERIALS, AND EQUIPMENT TO REPLACE RIVETS DESIGNATED FOR REMOVAL AND REPLACEMENT TO ACCOMMODATE NEW CONSTRUCTION, EXISTING DAMAGED RIVETS NOT DAMAGED BY THE CONTRACTOR'S OPERATIONS, AND RIVETS CONNECTING CORRODED STEEL MEMBERS TO BE REPLACED. THE RIVETS SHALL BE REPLACED WITH HIGH-STRENGTH BOLTS AT THE LOCATIONS SHOWN ON THE CONTRACT DRAWINGS OR AS DIRECTED BY THE ENGINEER. ALL APPLICABLE PROVISIONS OF ITEM 513 OF THE CMS SHALL APPLY.

THE RIVET REMOVAL AND REPLACEMENT WORK IS LOCATED AT BUT NOT LIMITED TO LOCATIONS FOR NEW DIAPHRAGM AND CROSS FRAME LOCATIONS IN UNIT 1.

NO KNOWN LOCATIONS OF DAMAGED RIVETS WERE FOUND IN A PRIOR INSPECTION OF THE BRIDGE. ALSO, NO DEFINITE LOCATIONS OF STEEL MEMBERS WITH SUFFICIENT SECTION LOSS TO WARRANT REMOVAL ARE KNOWN AT PRESENT. THESE LOCATIONS, IF ANY, SHALL BE AS DIRECTED BY THE ENGINEER AFTER DECK REMOVAL. AN ALLOWANCE FOR THE REMOVAL AND REPLACEMENT OF 250 RIVETS HAS BEEN INCLUDED IN THE ESTIMATED QUANTITY OF THIS ITEM FOR DAMAGED RIVETS OR REMOVAL AND REPLACEMENT OF CORRODED STEEL MEMBERS.

PAYMENT FOR ALL MATERIALS, EQUIPMENT, LABOR, AND INCIDENTALS NECESSARY FOR THE INSPECTION BY THE ENGINEER SHALL BE INCLUDED IN THE UNIT PRICE BID FOR THIS ITEM.

MATERIALS

HIGH-STRENGTH STEEL BOLTS, NUTS, AND WASHERS SHALL CONFORM TO ASTM A 325.

CONSTRUCTION

AT EACH SPECIFIED CONNECTION AND AT LOCATIONS DESIGNATED BY THE ENGINEER, THE EXISTING RIVETS SHALL BE REMOVED AND REPLACED WITH NEW HIGH-STRENGTH BOLTS. THE SEQUENCE AND THE METHOD OF WORK SHALL BE DETERMINED BY THE CONTRACTOR AND AS APPROVED BY THE ENGINEER. BURNING WILL NOT BE AN ACCEPTABLE METHOD OF RIVET REMOVAL. THE DETAILS OF THE CONTRACTOR'S PROPOSED METHOD SHALL BE SUBMITTED TO THE ENGINEER FOR APPROVAL.

THE CONTRACTOR SHALL EXERCISE EXTREME CARE DURING RIVET REMOVAL OPERATION SO AS NOT TO DAMAGE THE UNDERLYING CONNECTED MATERIALS. ANY DAMAGE TO THE CONNECTED MATERIAL DUE TO THE CONTRACTOR'S RIVET REMOVAL OPERATION SHALL BE RECTIFIED TO THE SATISFACTION OF THE ENGINEER AT THE COST OF THE CONTRACTOR.

THE HIGH-STRENGTH BOLTS SHALL BE INSTALLED IN ACCORDANCE WITH ITEM 513 OF THE CMS. ONLY ONE RIVET AT A TIME SHALL BE REMOVED FOR REPLACEMENT AT ANY ONE CONNECTION EXCEPT WHERE AN ENTIRE ELEMENT OF THE EXISTING STRUCTURE IS BEING REPLACED.

METHOD OF MEASUREMENT

THE QUANTITY WILL BE MEASURED AS THE ACTUAL NUMBER OF RIVETS REMOVED AND REPLACED WITH HIGH-STRENGTH BOLTS AS SPECIFIED. THE QUANTITY SO MEASURED SHALL INCLUDE ALL LABOR, MATERIALS, EQUIPMENT, AND INCIDENTALS NECESSARY TO SATISFACTORILY PERFORM THE WORK ON THIS ITEM.

BASIS OF PAYMENT

PAYMENT WILL BE MADE AT THE CONTRACT UNIT PRICE BID PER EACH FOR "ITEM SPECIAL - RIVET REMOVAL AND REPLACEMENT".

PAYMENT FOR ANY STEEL (EXCLUSIVE OF REPLACEMENT BOLTS) WHICH MAY BE REQUIRED FOR THE REPLACEMENT OF CORRODED STEEL MEMBERS AS DIRECTED BY THE ENGINEER SHALL BE MADE AT THE CONTRACT PRICE BID PER POUND FOR "ITEM 513 - STRUCTURAL STEEL (A36) FOR REPAIRS".

ITEM SPECIAL - PAINTING STRUCTURAL STEEL (NORTH EXPRESSWAY VIADUCT)

DESCRIPTION

THIS WORK SHALL CONSIST OF FURNISHING ALL LABOR, EQUIPMENT AND MATERIALS FOR CLEANING AND COATING ALL NEW NON-GALVANIZED METAL AND FOR THE COMPLETE BLAST CLEANING AND COATING OF THE METAL SURFACES OF EXISTING PAINTED STEEL TO REMAIN ON THE STRUCTURE. CONTACT SURFACES OF CONNECTIONS WHICH ARE TO BE BOLTED WITH HIGH-STRENGTH BOLTS AND THE TOP SURFACES OF ALL TOP FLANGES AND OTHER STEEL TO BE IN CONTACT WITH CONCRETE SHALL ALSO BE BLAST CLEANED ACCORDING TO THIS SPECIFICATION, BUT NOT COATED. THIS WORK ALSO INCLUDES THE CLEANING AND PAINTING OF RAILINGS, BEARINGS, AND THE INSPECTION WALKWAY BUT EXCLUDES THE LIGHT STANDARDS AND GALVANIZED LIGHTING CONDUITS, DRAINAGE ITEMS, LADDERS, GRATINGS, FLOOR PLATES, AND CURB PLATES.

TERMINOLOGY USED HEREIN IS IN ACCORDANCE WITH THE DEFINITIONS USED IN VOLUME 2, SYSTEMS AND SPECIFICATIONS, OF THE SSPC STEEL STRUCTURES PAINTING MANUAL (1982 EDITION).

COOPERATION OF CONTRACTOR

IF, DURING BLAST CLEANING OPERATIONS, ANY STRUCTURAL MEMBER IS FOUND TO BE SEVERELY CORRODED OR CONTAIN A VISIBLE CRACK, THE ENGINEER SHALL BE NOTIFIED AND THE MEMBER INSPECTED BEFORE PAINTING OF THE MEMBER IS PERMITTED. REFER TO "ITEM 513 - STRUCTURAL STEEL (A36) FOR REPAIRS" FOR ADDITIONAL NOTES AND PAYMENT.

DURING HIS OPERATIONS, THE CONTRACTOR SHALL ENSURE THAT ALL EXISTING DRAIN HOLES IN THE STEEL SUPERSTRUCTURE AND BEARING LOCATIONS AT POTENTIAL WATER COLLECTION POCKETS ARE CLEAN OF DEBRIS AND IN AN UNPLUGGED CONDITION. IT IS ESTIMATED THERE ARE ABOUT 300 DRAIN HOLES IN THE EXISTING SUPERSTRUCTURE AND BEARINGS. IF SUFFICIENT DRAIN HOLES DO NOT EXIST AT SOME LOCATIONS, THE CONTRACTOR SHALL PROVIDE SUITABLE DRAIN HOLES AS APPROVED BY THE ENGINEER. THIS WORK SHALL BE INCLUDED IN THE COST OF THE PAINTING FOR PAYMENT.

THIS ITEM CONTINUED ON SHEET 4B/73.

DALTON • DALTON • NEWPORT
CLEVELAND, OHIO AKRON, OHIO

44/73

SPECIAL PROVISIONS

NORTH EXPRESSWAY VIADUCT
PERKINS STREET BRIDGE
SUM-8-0175/0195

DESIGNED	DRAWN	TRACED	CHECKED	REVIEWED	DATE	REVISED
RLF	CML		MAB	JAP	2-1-85	

F.H.W.A. REG.	STATE	PROJECT	
5	OHIO		

111/204

SUM - 8 - 1.73 / 1.95

LIMITATIONS OF OPERATIONS

THE CONTRACTOR SHALL NOT PERFORM WORK ON SUNDAYS, LEGAL HOLIDAYS, OR HOLIDAY WEEKENDS WITHOUT THE APPROVAL OF THE ENGINEER. NO NIGHTTIME WORK SHALL BE PERMITTED.

ENGLISH LANGUAGE

FOR CLARITY AND EASE OF COMMUNICATION, THE CONTRACTOR SHALL ALWAYS HAVE A SUPERVISOR ON THE JOB WHO CAN CONVERSE IN FLUENT ENGLISH.

PROVISIONS FOR FIELD INSPECTION

IN ADDITION TO THE REQUIREMENTS OF CMS 105.11, THE CONTRACTOR SHALL FURNISH AND ERECT SCAFFOLDING OR OTHER APPROPRIATE ACCESS TO PERMIT INSPECTION OF ANY PORTION OF THE BRIDGE DURING ALL PHASES OF THE CLEANING AND PAINTING OPERATIONS AND AFTER THE PAINTING IS COMPLETED. SCAFFOLDING SHALL MEET OHIO ADMINISTRATIVE CODE REQUIREMENTS. RUBBER ROLLERS, OR OTHER PROTECTIVE DEVICES MEETING THE APPROVAL OF THE ENGINEER, SHALL BE USED ON SCAFFOLD FASTENINGS. METAL ROLLERS OR CLAMPS AND OTHER TYPES OF FASTENINGS WHICH WILL MAR OR DAMAGE FRESHLY COATED SURFACES SHALL NOT BE USED.

PROTECTION OF PERSONS AND PROPERTY

THE CONTRACTOR SHALL COLLECT, REMOVE, AND DISPOSE OF ALL BUCKETS, RAGS, OR OTHER DISCARDED MATERIALS AND HE SHALL LEAVE THE JOB SITE IN A CLEAN MANNER AND CONDITION.

THE CONTRACTOR SHALL PROTECT ALL PORTIONS OF THE STRUCTURE WHICH ARE NOT TO BE PAINTED AGAINST DAMAGE OR DISFIGUREMENT BY SPLASHES, SPATTERS, AND SMIRCHES OF PAINT.

WHEN OR WHERE ANY DIRECT OR INDIRECT DAMAGE OR INJURY IS DONE TO PUBLIC OR PRIVATE PROPERTY BY OR ON ACCOUNT OF ANY ACT, OMISSION, NEGLECT, OR MISCONDUCT IN THE EXECUTION OF THE WORK, OR IN CONSEQUENCE OF THE NONEXECUTION THEREOF BY THE CONTRACTOR, HE SHALL RESTORE, AT HIS OWN EXPENSE, SUCH PROPERTY TO A CONDITION EQUAL OR BETTER TO THAT EXISTING BEFORE SUCH DAMAGE OR INJURY WAS DONE, BY REPAIRING, REBUILDING, OR OTHERWISE RESTORING AS MAY BE DIRECTED, OR HE SHALL MAKE GOOD SUCH DAMAGE OR INJURY IN AN ACCEPTABLE MANNER.

THE CONTRACTOR SHALL SUBMIT TO THE ENGINEER FOR HIS APPROVAL A PROCEDURE FOR HANDLING COMPLAINTS RESULTING FROM OVERSPRAY OF CARS, TRUCKS, ETC. NO WORK SHALL COMMENCE UNTIL THE METHOD OF HANDLING COMPLAINTS HAS BEEN APPROVED BY THE ENGINEER.

THE CONTRACTOR SHALL APPRISE HIMSELF OF THE SPECIFIC REQUIREMENTS OF THE RAILROADS AND BE IN COMPLIANCE AT ALL TIMES. NO WORK SHALL COMMENCE UNTIL THE CERTIFICATES OF INSURANCE HAVE BEEN FURNISHED TO THE ENGINEER AND THE VARIOUS RAILROADS INVOLVED.

PROTECTION OF PUBLIC

THE CONTRACTOR SHALL INSTALL AND MAINTAIN SUITABLE SHIELDS BETWEEN HIS OPERATIONS AND OPEN TRAFFIC LANES TO PREVENT DAMAGE TO VEHICLES TRAVELING ON OR UNDER THE STRUCTURE. THE SHIELDS SHALL BE OF A TYPE AND CONSTRUCTION APPROVED BY THE ENGINEER TO PREVENT MATERIALS FROM DROPPING ONTO OR BEING BLOWN INTO PAVEMENT LANES OPEN TO TRAFFIC. SHIELDS SHALL BE SUITABLY ANCHORED AND REINFORCED TO PREVENT INTERFERENCE WITH TRAFFIC OPERATIONS IN THE OPEN LANES. PAYMENT FOR SHIELDS SHALL BE INCLUDED IN THE LUMP SUM PRICE BID FOR "ITEM SPECIAL - PAINTING STRUCTURAL STEEL."

WHENEVER THE INTENDED PURPOSES OF THE PROTECTIVE DEVICES AND METHODS FOR BLASTING AND PAINTING ARE NOT BEING ACCOMPLISHED, WORK SHALL BE SUSPENDED UNTIL CORRECTIONS ARE MADE.

POLLUTION CONTROL

THE CONTRACTOR SHALL TAKE ALL NECESSARY PRECAUTIONS TO COMPLY WITH POLLUTION LAWS, RULES, OR REGULATIONS OF FEDERAL, STATE, OR LOCAL AGENCIES.

IN ADDITION, THE ENGINEER SHALL HAVE THE CONTRACTOR CEASE OPERATIONS IF THE WIND OR OTHER CONDITIONS ARE SUCH THAT THE SURROUNDING ENVIRONMENT IS BEING DETRIMENTALLY AFFECTED DUE TO THE WORK.

ANY ADDITIONAL COST RESULTING FROM RESTRICTIONS OR ADDITIONS TO THE BLAST CLEANING AND PAINTING OPERATIONS SHALL BE BORNE BY THE CONTRACTOR. ANY PENALTIES RESULTING FROM VIOLATION OF ANY POLLUTION CONTROL ORDINANCES SHALL ALSO BE BORNE BY THE CONTRACTOR.

THE CONTRACTOR IS RESPONSIBLE FOR CLEANUP OF ALL BLASTING DEBRIS WHICH HAS COLLECTED ON ROADWAYS, SIDEWALKS, AND BUILDINGS IN THE VICINITY OF THE STRUCTURE AT THE END OF EACH DAY'S WORK OR AS DIRECTED BY THE ENGINEER. ALSO, SHOULD SOIL TESTING (SEE "ITEM SPECIAL - SOIL TESTING") REVEAL THAT LEAD LEVELS IN SOIL SAMPLES TAKEN WITHIN 300 YARDS EAST AND WEST OF THE BRIDGE HAVE RISEN SUFFICIENTLY IN THE OPINION OF THE ENGINEER AND THE CITY OF AKRON DUE TO THE CONTRACTOR'S PAINT REMOVAL OPERATIONS, THE CONTRACTOR SHALL REMOVE AND LEGALLY DISPOSE OF THE OFFENDING SOIL AND DEBRIS, AND RESTORE THE GROUND TO ITS ORIGINAL CONDITION, AT HIS OWN EXPENSE.

COATING SYSTEM

THE CONTRACTOR SHALL SELECT A COMPLETE COATING SYSTEM FROM THE QUALIFIED PRODUCTS LIST.

QUALIFIED PRODUCTS LIST

PRODUCER	REPRESENTED BY	COATS	PRODUCTS	DRY FILM THICKNESS MILS/MIN	COLOR EACH COAT	MIN/TIME BETWEEN COATS HRS
DURAKO PAINT AND COLOR CORP. 201 NORTH BERRY ST. DETROIT, MI 48234 313-891-2560	SAME	1ST	1040 ALUMINUM FILLED DURATHANE PRIMER	2	TINTED ALUMINUM	8
		2ND	SAME	2	ALUMINUM	8
		3RD	36W1 DURAPON HI-BUILD EPOXY SYSTEM	4	WHITE	12
		4TH	1055 DURATHANE ENAMEL SYSTEM	*	25200	
GENERAL POLY CORP. P. O. BOX 12168 CINCINNATI, OH 45121 513-631-0649	SAME	1ST	ASPII TINTED	2	TINTED ALUMINIM	8
		2ND	ASPII	2	ALUMINUM	8
		3RD	HI-SOLIDS EPOXY COATING DE 3543	4	WHITE	8
		4TH	4608	*	25200	
TNEMEC CO. P. O. BOX 1749 KANSAS CITY, MO 64141 816-474-3400	GEO. SHANNON ASSOC. 102 MARKET ST. PITTSBURGH, PA 15222 412-355-0700	1ST	50-330 POLY-URA-PRIME	2	TINTED ALUMINUM	12
		2ND	50-330 POLY-URA-PRIME	2	ALUMINUM	12
		3RD	SERIES 66-HI-BUILD EPOXOLINE	4	WHITE	12
		4TH	SERIES 73 ENDURA-SHIELD III	*	25200	

* THE URETHANE TOPCOAT SHALL BE OF SUFFICIENT DRY FILM THICKNESS TO COMPLETELY COVER THE INTERMEDIATE TOP COAT AND PRODUCE A UNIFORM APPEARANCE.

THE COLOR FOR THE FINAL COAT SHALL BE COLOR NUMBER 25200 (MEDIUM BLUE) FROM FEDERAL STANDARDS NUMBER 595a DATED JANUARY 2, 1968. THE CONTRACTOR SHALL SUPPLY THE ENGINEER WITH THE PRODUCT DATA SHEETS BEFORE ANY COATING IS DONE. THE PRODUCT DATA SHEETS SHALL INDICATE THE MIXING AND THINNING DIRECTIONS AND THE RECOMMENDED APPLICATION EQUIPMENT.

THE COATING MATERIALS SPECIFIED ON THIS PROJECT CAN BE HAZARDOUS TO THE HEALTH OF THE APPLICATOR IF NOT APPLIED AS PER MANUFACTURER'S INSTRUCTIONS. THE CONTRACTOR SHALL FOLLOW THE RECOMMENDATIONS CONTAINED ON THE MATERIAL SAFETY DATA SHEET, PRODUCT DATA SHEET AND THE LABEL ON THE PAINT CONTAINERS. THESE PRECAUTIONS SHALL INCLUDE THE USE OF RESPIRATORS AND EYE AND SKIN PROTECTION AS SPECIFIED.

CLEANING EXISTING STEEL

THE EXISTING COATINGS ON THE STRUCTURE CONSIST OF A HIGH-BUILD SOLIDS ALUMINUM PIGMENTED EPOXY MASTIC SYSTEM OVER LEAD BASED PAINT SYSTEMS. DUE TO TOXICITY OF LEAD PAINT RESIDUES, THE CONTRACTOR SHALL PROVIDE SUITABLE RESPIRATORY AND EYE PROTECTION TO ALL WORKERS AND INSPECTORS IN THE VICINITY OF BLASTING OPERATIONS. ALSO, TO ELIMINATE ENVIRONMENTAL HEALTH HAZARDS OF LEAD PARTICULATES POLLUTING THE AIR, WATER, AND SOIL, THE CONTRACTOR SHALL PROVIDE A BLAST ENCLOSURE, OR USE VACUUM-SHROUDED BLASTERS AND HAND TOOLS, OR BOTH AS NECESSARY ON THE STRUCTURE IN ORDER TO CONTAIN AND RECOVER ALL REMOVED PAINT AS NEARLY AS PRACTICABLE, AS DETERMINED BY THE ENGINEER.

THE CONTRACTOR SHALL SUBMIT THE METHOD OF WORKER PROTECTION AND DETAILS OF HIS METHODS OF PAINT REMOVAL, CONTAINMENT, AND RECOVERY FOR THE GIRDER AND TRUSS PORTIONS OF THE BRIDGE TO THE ENGINEER FOR APPROVAL PRIOR TO COMMENCING ANY PAINT REMOVAL OPERATIONS.

AFTER THE DECK HAS BEEN REMOVED, THE TOP PORTION OF THE EXISTING STRUCTURE TO A LEVEL AT LEAST BELOW THE FLOOR BEAMS AS SHOWN ON SHEET 116 OF THE PLANS SHALL BE BLAST CLEANED AND PAINTED WITH THE FIRST AND SECOND PRIME COATS PRIOR TO DECK REPLACEMENT.

THIS ITEM CONTINUED ON SHEET 4C/73

DALTON • DALTON • NEWPORT
CLEVELAND, OHIO AKRON, OHIO

48/73

SPECIAL PROVISIONS

NORTH EXPRESSWAY VIADUCT
PERKINS STREET BRIDGE
SUM-8-0175/0195

DESIGNED	DRAWN	TRACED	CHECKED	REVIEWED	DATE	REVISED
RLF	CMR		MKE	JDP	2-1-85	

F.H.W.A. REG.	STATE	PROJECT	
5	OHIO		

112/204

SUM - 8 - 1.73 / 1.95

ALL UNGALVANIZED STEEL SURFACES SHALL BE BLAST CLEANED, INCLUDING THE INSIDE SURFACES OF TRUSS MEMBERS.

AREAS OF OIL AND GREASE ON SURFACES TO BE COATED SHALL BE CLEANED WITH CLEAN PETROLEUM SOLVENTS AND THEN ALL THE SURFACES TO BE COATED SHALL BE BLAST CLEANED TO A COMMERCIAL BLAST CLEANING STANDARD WHICH IS DEFINED AS FOLLOWS:

COMMERCIAL BLAST CLEANING IS A METHOD OF PREPARING STEEL SURFACES WHICH, WHEN VIEWED WITHOUT MAGNIFICATION, SHALL BE FREE OF ALL VISIBLE OIL, GREASE, DIRT, DUST, MILL SCALE, RUST, AND PAINT. GENERALLY, EVENLY DISPERSED VERY SLIGHT SHADOWS, STREAKS, AND DISCOLORATIONS CAUSED BY STAINS OF RUST, STAINS OF MILL SCALE, AND STAINS OF PREVIOUSLY APPLIED PAINT MAY REMAIN ON NO MORE THAN 33 PERCENT OF THE SURFACE. SLIGHT RESIDUES OF RUST AND PAINT MAY ALSO BE LEFT IN THE CRATERS OF PITS IF THE ORIGINAL SURFACE IS PITTED. (FOR REFERENCE, SEE SSPC-SP-6, PAGE 41, VOLUME 2.) SLIGHT RESIDUES OF PAINT OR RUST IN SEAMS BETWEEN PLATES AND IN SEAMS AROUND RIVET HEADS ARE ACCEPTABLE AND NEED NOT BE COMPLETELY REMOVED IN A COMMERCIAL BLAST PROCEDURE.

ALL FINS, TEARS, SLIVERS, AND BURRED OR SHARP EDGES THAT ARE PRESENT ON ANY STEEL MEMBER, OR THAT APPEAR DURING THE BLASTING OPERATION, SHALL BE REMOVED BY GRINDING AND THE AREA REBLASTED TO GIVE A 2- TO 3-MIL SURFACE PROFILE.

SCALING HAMMERS MAY BE USED TO REMOVE HEAVY SCALE BUT HEAVIER TYPE CHIPPING HAMMERS WHICH WOULD EXCESSIVELY SCAR THE METAL SHALL NOT BE USED.

ABRASIVES USED FOR BLAST CLEANING SHALL BE EITHER CAST STEEL SHOT AND GRIT, MALLEABLE IRON SHOT AND GRIT, CHILLED CAST IRON SHOT AND GRIT, CRUSHED METAL REFINING SLAG, ZIRCON, NOVACULITE, COPPER SLAG, SILICON CARBIDE, OR ALUMINUM OXIDE. NOT MORE THAN 1 PERCENT BY WEIGHT OF THE ABRASIVE SHALL BE ABLE TO PASS THROUGH A NO. 70 U.S. STANDARD SIEVE, AND AFTER BLASTING, NOT MORE THAN 1.8 PERCENT BY WEIGHT SHALL BE 0.005 MILLIMETERS OR SMALLER. THE ABRASIVE SHALL HAVE A GRADATION WHICH WILL PRODUCE A UNIFORM PROFILE OF 2 TO 3 MILS, AS MEASURED WITH TESTEX REPLICA TAPE.

BEFORE ANY WORK AT THE SITE BEGINS, THE CONTRACTOR SHALL DEMONSTRATE HIS ABILITY TO PROVIDE THE REQUIRED SURFACE PREPARATION. THIS WILL BE ACCOMPLISHED ON A SMALL AREA OF THE BRIDGE NEAR ONE ABUTMENT. THE APPEARANCE OF THE BLAST CLEANED DEMONSTRATION AREA SHALL CORRESPOND TO THE APPLICABLE PICTORIAL STANDARDS OF SSPC-VIS 1-67T. WORK WILL NOT PROCEED UNTIL IT IS ASSURED THAT THE CONTRACTOR CAN MEET THESE REQUIREMENTS. AT THAT TIME, WORK CAN PROCEED AND THE CONTRACTOR IS EXPECTED TO CLEAN THE REMAINDER OF THE BRIDGE TO THE SAME DEGREE AS THE DEMONSTRATION AREA.

ALL ABRASIVE AND PAINT RESIDUE SHALL BE REMOVED FROM STEEL SURFACES WITH A GOOD COMMERCIAL GRADE VACUUM CLEANER EQUIPPED WITH A BRUSH-TYPE CLEANING TOOL, OR BY DOUBLE BLOWING. IF THE DOUBLE BLOWING METHOD IS USED, THE EXPOSED TOP SURFACES OF ALL STRUCTURAL STEEL, INCLUDING FLANGES, LONGITUDINAL STIFFENERS, SPLICE PLATES, HANGERS, ETC., SHALL BE VACUUMED AFTER THE DOUBLE BLOWING OPERATIONS ARE COMPLETED. THE STEEL SHALL THEN BE KEPT DUST FREE AND PRIMED WITHIN EIGHT HOURS AFTER BLAST CLEANING.

CARE SHALL BE TAKEN TO PROTECT FRESHLY COATED SURFACES, ALL APPURTENANCES NOT INTENDED TO BE PAINTED, ALL GALVANIZED SURFACES, AND ANY ADJACENT CONCRETE FROM BLAST CLEANING OPERATIONS. THESE AREAS SHALL BE PROTECTED FROM BLAST CLEANING OPERATIONS BY MASKING. BLAST DAMAGED PRIMED SURFACES SHALL BE THOROUGHLY WIRE BRUSHED OR, IF VISIBLE RUST OCCURS, REBLASTED TO A COMMERCIAL CONDITION. THE WIRE BRUSHED OR BLAST CLEANED SURFACES SHALL BE VACUUMED AND REPRIMED.

AT PIERS, A MINIMUM OF 5' ON EACH SIDE OF THE PIERS SHALL BE BLAST CLEANED ON THE SAME DAY AND PRIMED AS A UNIT TO PREVENT DAMAGE TO PREVIOUSLY PRIMED SURFACES.

MIXING THE COATING: THE COATING SHALL BE MIXED WITH A HIGH SHEAR MIXER (SUCH AS A JIFFY MIXER), IN ACCORDANCE WITH THE PRODUCER'S DIRECTIONS, TO A SMOOTH, LUMP-FREE CONSISTENCY. PADDLE MIXERS OR PAINT SHAKERS ARE NOT ALLOWED. MIXING SHALL BE DONE, AS FAR AS POSSIBLE, IN THE ORIGINAL CONTAINERS AND SHALL BE CONTINUED UNTIL ALL OF THE METALLIC POWDER OR PIGMENT IS IN SUSPENSION.

CARE SHALL BE TAKEN TO ENSURE THAT ALL OF THE COATING SOLIDS THAT MAY HAVE SETTLED TO THE BOTTOM OF THE CONTAINER ARE THOROUGHLY DISPERSED. THE COATING SHALL THEN BE STRAINED THROUGH A SCREEN HAVING OPENINGS NO LARGER THAN THOSE SPECIFIED FOR A NO. 50 SIEVE IN ASTM E 11.

THINNING THE COATING: IN GENERAL, THE COATINGS ARE SUPPLIED FOR NORMAL USE WITHOUT THINNING. IF IT IS NECESSARY TO THIN THE COATING FOR PROPER APPLICATION IN COOL WEATHER OR TO OBTAIN BETTER COVERAGE OF THE URETHANE TOPCOAT, THE THINNING SHALL BE DONE IN ACCORDANCE WITH THE MANUFACTURER'S RECOMMENDATIONS.

CONDITIONS FOR COATING: COATING SHALL BE APPLIED ONLY WHEN THE FOLLOWING CONDITIONS HAVE BEEN MET:

1. TEMPERATURE - THE TEMPERATURE OF THE AIR AND STEEL SHALL BE ABOVE 40 F FOR COATINGS OTHER THAN EPOXIES. FOR EPOXIES, THE TEMPERATURE OF THE AIR AND STEEL SHALL BE ABOVE 50 F. COATINGS SHALL NOT BE APPLIED IF THE TEMPERATURE IS HIGH ENOUGH TO CAUSE BLISTERING.

2. HUMIDITY - THE COATING SHALL NOT BE APPLIED WHEN THE RELATIVE HUMIDITY IS GREATER THAN 85 PERCENT NOR WHEN A COMBINATION OF TEMPERATURE AND HUMIDITY CONDITIONS ARE SUCH THAT A CLEARLY DEFINED THIN FILM OF WATER PLACED WITH A DAMP CLOTH UPON THE SURFACE BEING COATED FAILS TO EVAPORATE WITHIN 15 MINUTES.

SHOP PAINTING NEW STEEL

REQUIREMENTS FOR SHOP COATING NEW UNGALVANIZED STEEL SHALL CONFORM TO APPLICABLE PORTIONS OF SECTION 514.03 AND 514.04, EXCEPT THE TWO PRIME COATS TO BE APPLIED SHALL CONFORM TO THOSE OF THE COATING SYSTEM CHOSEN FROM THE QUALIFIED PRODUCTS LIST FOR THIS STRUCTURE.

FIELD PAINTING NEW STEEL

REQUIREMENTS FOR FIELD PAINTING NEW UNGALVANIZED STEEL SHALL CONFORM TO APPLICABLE PORTIONS OF SECTION 514.05 AND THIS SPECIFICATION, EXCEPT THE COATING SYSTEM SHALL CONFORM TO THAT CHOSEN FROM THE QUALIFIED PRODUCTS LIST FOR THIS STRUCTURE.

COATING OF STRUCTURES

AFTER THE SURFACES TO BE COATED HAVE BEEN CLEANED AND APPROVED BY THE ENGINEER, THE COATINGS SHALL BE APPLIED WITH THE SPRAY EQUIPMENT AS RECOMMENDED BY THE PRODUCER OF THE COATING SYSTEM SO AS TO ATTAIN THE FILM THICKNESSES SPECIFIED. THE RECOMMENDED PRESSURES AND NOZZLE SIZES MUST BE SUPPLIED TO THE INSPECTOR.

COMPATIBLE BRUSHES AND ROLLERS SHALL BE USED FOR PORTIONS OF THE STRUCTURE OVER NORTH STREET RIGHT OF WAY AND IN THE VICINITY OF BUILDINGS TO PREVENT OVERSPRAY, AND IN OTHER LOCATIONS OF THE STRUCTURE WHERE STEEL TO BE COATED IS INACCESSIBLE WITH SPRAY EQUIPMENT. BRISTLES AND ROLLER MATERIAL SHALL NOT BE LEFT IN THE PAINT FILM. IF THIS OCCURS, NO FURTHER COATING SHALL BE DONE UNTIL SYSTEM-COMPATIBLE APPLICATION EQUIPMENT IS OBTAINED AND USED. THE MINIMUM DRY FILM THICKNESS IS LISTED ON THE QUALIFIED PRODUCTS LIST. THE DRY FILM THICKNESS WILL BE DETERMINED BY USE OF A MAGNETIC FILM THICKNESS GAGE. THE GAGE SHALL BE CALIBRATED ON THE BLASTED STEEL WITH PLASTIC SHIMS APPROXIMATELY THE SAME THICKNESS AS THE MINIMUM DRY FILM THICKNESS. A TOOKE FILM THICKNESS GAGE MAY BE USED TO VERIFY THE COATING THICKNESS WHEN REQUESTED BY THE ENGINEER. IF THE TOOKE GAGE SHOWS THE PRIMER COAT TO BE LESS THAN THE SPECIFIED MINIMUM THICKNESS, THE TOTAL COATING SYSTEM WILL BE REJECTED EVEN IF THE TOTAL DRY FILM THICKNESS EXCEEDS THE MINIMUM TOTAL THICKNESS OF ALL COATS.

IF THE APPLICATION OF COATING AT THE REQUIRED THICKNESS IN ONE PASS PRODUCES RUNS, BUBBLES, OR SAGS, THE COATING SHALL BE APPLIED IN MULTIPLE PASSES OF THE APPLICATION EQUIPMENT, THE PASSES SEPARATED BY SEVERAL MINUTES. WHERE EXCESSIVE COATING THICKNESS PRODUCES "MUD-CRACKING," SUCH COATING SHALL BE SCRAPED BACK TO SOUNDLY BONDED COATING AND THE AREA RECOATED TO THE REQUIRED THICKNESS.

PARTICULAR CARE SHALL BE GIVEN TO RIVET HEADS, BOLTS, EDGES, AND CORNERS TO ENSURE ADEQUATE COVERAGE.

ALL DRY SPRAY SHALL BE REMOVED, BY SANDING IF NECESSARY. IN AREAS OF DEFICIENT PRIMER THICKNESS, THE AREAS SHALL BE THOROUGHLY CLEANED WITH POWER WASHING EQUIPMENT, IF NECESSARY, TO REMOVE ALL DIRT; THE AREAS SHALL THEN BE WIRE BRUSHED, VACUUMED, AND RECOATED.

PROPER CURING CONDITIONS WILL BE REQUIRED BETWEEN THE APPLICATION OF ALL COATS. MINIMUM CURING TIMES FOR EACH PRODUCT OF THE SYSTEM ARE LISTED ON THE QUALIFIED PRODUCTS LIST.

AFTER THE STEEL IS PRIMED, IT SHALL BE VACUUMED AGAIN BEFORE ANY REMAINING COATS ARE APPLIED. VACUUMING BETWEEN COATS SHALL BE CONTINUED UNTIL THE ENTIRE STRUCTURE IS BLASTED. UPON COMPLETION OF BLASTING, THE VACUUMING REQUIREMENT MAY BE SUSPENDED BY THE ENGINEER. IF, FOR ANY REASON, VACUUMING DOES NOT REMOVE ALL THE ACCUMULATED DUST AND/OR DIRT, OR IF MORE THAN THREE WEEKS HAS ELAPSED SINCE THE STEEL WAS PRIMED, OR IF IN THE OPINION OF THE ENGINEER THE SURFACE IS UNFIT FOR TOPCOATING, THE SURFACE SHALL BE SCRUBBED WITH A MILD DETERGENT SOLUTION (ANY COMMERCIAL LAUNDRY DETERGENT) AND THOROUGHLY RINSED WITH WATER BEFORE THE SURFACE IS TOPCOATED.

ALL COATING SHALL BE DONE IN A NEAT AND WORKMANLIKE MANNER AS DESCRIBED IN SSPC-PA 1, PRODUCING A UNIFORM EVEN COATING WHICH IS BONDED TO THE UNDERLYING SURFACE. ALL METAL COATED WITH IMPURE, UNSATISFACTORY, OR UNAUTHORIZED COATING MATERIAL, OR COATED IN AN UNWORKMANLIKE OR OBJECTIONABLE MANNER SHALL BE THOROUGHLY CLEANED AND RECOATED OR OTHERWISE CORRECTED AS DIRECTED BY THE ENGINEER.

STENCILING REQUIREMENT

THE COMPLETION DATE OF THE FINISH COAT OF PAINT (MONTH, YEAR) SHALL BE STENCILED ON THE STRUCTURE, AS DIRECTED BY THE ENGINEER, IN A CONTRASTING COLOR. STENCILING IS CONSIDERED A PART OF THE WORK OF "ITEM SPECIAL - PAINTING STRUCTURAL STEEL" AND WILL NOT BE PAID FOR SEPARATELY.

METHOD OF MEASUREMENT

FIELD PAINTING OF STRUCTURAL STEEL IS BASED ON LUMP SUM.

BASIS OF PAYMENT

SHOP PRIME PAINTING OF NEW STEEL IS INCLUDED IN THE PRICE BID FOR STRUCTURAL STEEL. PAYMENT FOR FIELD PAINTING WILL BE MADE AT THE CONTRACT LUMP SUM PRICE BID FOR "ITEM SPECIAL - PAINTING STRUCTURAL STEEL". THIS PRICE SHALL INCLUDE ALL LABOR, MATERIALS, EQUIPMENT, ETC., NECESSARY FOR BLAST CLEANING, COATING, INSPECTION, PROTECTION, AND CLEANUP OPERATIONS AS STATED IN THIS ITEM.

ITEM SPECIAL - SOIL TESTING (NORTH EXPRESSWAY VIADUCT)

DESCRIPTION

ENVIRONMENTAL SAMPLING AND ANALYSIS FOR LEAD IN THE SOIL BENEATH AND WITHIN 300 YARDS EAST AND WEST OF THE STRUCTURE SHALL BE CONDUCTED PRIOR TO BLASTING OPERATIONS AND AFTER PAINTING IS COMPLETED. LOCATIONS OF SAMPLING SITES SHALL BE DETERMINED BY THE ENGINEER AND THE CITY OF AKRON.

TESTING

ANALYSIS OF THE SOIL SAMPLES FOR DETERMINATION OF THE MOBILE FRACTION OF LEAD IN THE SOIL SHALL BE PERFORMED ACCORDING TO THE EXTRACTION PROCEDURE (EP) TOXICITY TEST IN ACCORDANCE WITH ENVIRONMENTAL PROTECTION AGENCY REQUIREMENTS.

ALL SAMPLING AND ANALYSIS SHALL BE PERFORMED BY AN INDEPENDENT TESTING LABORATORY SELECTED BY THE CONTRACTOR SUBJECT TO THE APPROVAL OF THE ENGINEER AND THE CITY OF AKRON.

MEASUREMENT AND PAYMENT

PAYMENT FOR ALL MATERIALS, EQUIPMENT, LABOR, AND INCIDENTALS NECESSARY FOR SOIL SAMPLING AND TESTING SHALL BE AT THE CONTRACT UNIT PRICE BID PER EACH SOIL TEST FOR "ITEM SPECIAL - SOIL TESTING". FOR BIDDING PURPOSES ONLY, AN ESTIMATED QUANTITY OF 50 TESTS HAS BEEN ASSUMED.

THIS ITEM CONTINUED ON SHEET 4D/73

ITEM SPECIAL - LADDERS, GRATINGS, AND FLOOR PLATE (NORTH EXPRESSWAY VIADUCT)

DESCRIPTION

THIS ITEM SHALL INCLUDE THE FURNISHING OF ALL MATERIALS AND LABOR NECESSARY TO INSTALL NEW GRATING, FLOOR PLATE, AND LADDERS OF THE TYPE AND SIZE SPECIFIED. THIS WORK SHALL BE AS SHOWN ON THE DRAWINGS OR AS DIRECTED BY THE ENGINEER. THE QUANTITIES SHOWN HEREIN INCLUDE AN ALLOWANCE FOR REPLACEMENT OF DAMAGED SIDEWALK GRATING AND PLATE AT THE INSPECTION WALKWAY, WITH SPECIFIC AREAS OF REPLACEMENT TO BE DETERMINED BY THE ENGINEER AT THE TIME OF CONSTRUCTION.

REMOVAL OF EXISTING GRATING, PLATE, AND LADDERS SHALL BE INCLUDED FOR PAYMENT WITH "ITEM 202 -, PORTIONS OF STRUCTURE REMOVED".

A. STEEL BAR GRATING

1. PROVIDE STEEL BAR GRATING AS SHOWN ON THE DRAWINGS, COMPLYING WITH FEDERAL SPECIFICATION RR-G-661 AND AS SPECIFIED HEREIN, PROVIDE 85 PSF MINIMUM LIVE LOAD CAPACITY. USE 1" GRATING TO MATCH EXISTING.

2. MATERIALS

STEEL BAR GRATING:	ASTM A 36
TRAFFIC SURFACE:	PLAIN
STEEL FINISH:	HOT DIP GALVANIZE AFTER FABRICATION PER CMS SECTION 711.02

3. INSTALLATION

REMOVE EXISTING GRATING WHERE NEW GRATING IS INDICATED ON THE DRAWINGS OR AS DIRECTED BY THE ENGINEER.

CUT OPENINGS AROUND HANDRAIL POSTS, LIGHT POLE STANDARDS, AND OTHER STRUCTURAL MEMBERS AS REQUIRED.

WELD NON-REMOVABLE UNITS TO SUPPORTING MEMBERS.

B. LADDERS

1. FABRICATE LADDERS FOR THE LOCATIONS SHOWN, WITH DIMENSIONS, SPACINGS, DETAILS, AND ANCHORAGES AS INDICATED. COMPLY WITH THE REQUIREMENTS OF ANSI A14.3, EXCEPT AS OTHERWISE INDICATED. REFER TO THE DRAWINGS.

A) PROVIDE 1/2" X 2 1/2" CONTINUOUS STRUCTURAL STEEL FLAT BAR SIDE RAILS WITH EASED EDGES, SPACED 18" APART.

B) PROVIDE 3/4" DIAMETER SOLID STRUCTURAL STEEL BAR RUNGS, SPACED 12" O.C.

C) PROVIDE A LADDER SAFETY DEVICE WHERE THE LENGTH OF CLIMB EXCEEDS 20'. THIS FALL PREVENTION SYSTEM SHALL BE OF THE TYPE THAT INCORPORATES SAFETY DEVICES SUCH AS LIFE BELTS, FRICTION BRAKES, AND SLIDING ATTACHMENTS FOR SAFE MOVEMENT UP AND DOWN THE LADDER AND MEETS THE REQUIREMENTS OF OSHA REGULATIONS D1910.27

DALTON • DALTON • NEWPORT
CLEVELAND, OHIO AKRON, OHIO

4C/73

SPECIAL PROVISIONS

NORTH EXPRESSWAY VIADUCT
PERKINS STREET BRIDGE
SUM-8-0175/0195

DESIGNED	DRAWN	TRACED	CHECKED	REVIEWED	DATE	REVISED
RLF	CMR		MAB	JGD	2-7-85	

F.H.W.A. REG.	STATE	PROJECT	
5	OHIO		

113/204

SUM - 8 - 1.73 / 1.95

D) AT THE LOCATIONS SHOWN, EXTEND THE RAILS ABOVE THE TOP RUNG AND RETURN THE RAILS TO THE STRUCTURE IN ACCORDANCE WITH ANSI REQUIREMENTS.

2. FIT RUNGS IN CENTERLINE OF SIDE RAILS, PLUG WELD AND GRIND SMOOTH ON OUTER RAIL FACES.

3. SUPPORT EACH LADDER AT TOP AND BOTTOM AND AT INTERMEDIATE POINTS SPACED NOT MORE THAN 5'-0" O.C. USE WELDED OR BOLTED STEEL BRACKETS, DESIGNED FOR ADEQUATE SUPPORT AND ANCHORAGE. USE 3/4" DIAMETER ASTM A 307 ANCHOR BOLTS, THREADED FULL LENGTH, DRILLED AND GROUTED 1'-0" INTO EXISTING CONCRETE.

4. PROVIDE NONSLIP SURFACE ON THE TOP OF EACH RUNG, EITHER BY COATING THE RUNG WITH ALUMINUM OXIDE GRANULES SET IN EPOXY RESIN ADHESIVE, OR BY USING A TYPE OF MANUFACTURER'S RUNG WHICH IS FILLED WITH ALUMINUM OXIDE GROUT.

5. GALVANIZE ALL COMPONENTS.

C. FLOOR PLATE

1. PROVIDE CHECKERED STEEL FLOOR PLATE (ASTM A36, GALVANIZED) TO REPLACE DETERIORATED PLATES ON THE INSPECTION WALK. SPECIFIC LOCATIONS SHALL BE DETERMINED BY THE ENGINEER AT THE TIME OF CONSTRUCTION. REFER TO THE DRAWINGS.

2. WELD NEW PLATES TO SUPPORTING MEMBERS.

3. WELD EXISTING HANDRAIL MEMBERS ALONG THE INSPECTION WALK TO POSTS WHERE THE CONNECTION IS BROKEN. THE COST OF THIS WORK IS INCLUDED IN THE PRICE BID FOR FLOOR PLATE.

METHOD OF MEASUREMENT

THE QUANTITY SHALL BE THE ACTUAL NUMBER OF SQUARE FEET OF GRATING OR FLOOR PLATE, AND THE NUMBER OF LINEAL FEET OF LADDER INCLUDING FALL PREVENTION SYSTEMS ACTUALLY IN PLACE. REMOVAL OF EXISTING GRATING, PLATE, AND LADDERS SHALL BE INCLUDED FOR PAYMENT WITH "ITEM 202 - PORTIONS OF STRUCTURE REMOVED".

BASIS OF PAYMENT

PAYMENT WILL BE MADE AT THE CONTRACT PRICE FOR THE FOLLOWING:

ITEM	UNIT	DESCRIPTION
SPECIAL	SQ. FT.	STEEL BAR GRATING
SPECIAL	SQ. FT.	FLOOR PLATE
SPECIAL	LIN. FT.	LADDERS

ITEM SPECIAL - PAINTING STRUCTURAL STEEL (PERKINS STREET BRIDGE)

DESCRIPTION

THIS WORK SHALL CONSIST OF FURNISHING ALL LABOR, EQUIPMENT AND MATERIALS FOR CLEANING AND COATING ALL NEW NON-GALVANIZED METAL AND FOR THE COMPLETE BLAST CLEANING AND COATING OF THE METAL SURFACES OF EXISTING PAINTED STEEL TO REMAIN ON THE STRUCTURE. CONTACT SURFACES OF CONNECTIONS WHICH ARE TO BE BOLTED WITH HIGH-STRENGTH BOLTS AND THE TOP SURFACES OF ALL TOP FLANGES AND OTHER STEEL TO BE IN CONTACT WITH CONCRETE SHALL ALSO BE BLAST CLEANED ACCORDING TO THIS SPECIFICATION, BUT NOT COATED. THIS WORK ALSO INCLUDES THE CLEANING AND PAINTING OF BEARINGS BUT EXCLUDES THE LIGHT STANDARDS, RAILINGS, FENCING, AND GALVANIZED CURB PLATES AND CHANNELS.

LIMITATIONS OF OPERATIONS

THE CONTRACTOR SHALL NOT PERFORM WORK ON SUNDAYS, LEGAL HOLIDAYS, OR HOLIDAY WEEKENDS WITHOUT THE APPROVAL OF THE ENGINEER. NO NIGHTTIME WORK SHALL BE PERMITTED.

ENGLISH LANGUAGE

FOR CLARITY AND EASE OF COMMUNICATION, THE CONTRACTOR SHALL ALWAYS HAVE A SUPERVISOR ON THE JOB WHO CAN CONVERSE IN FLUENT ENGLISH.

PROVISIONS FOR FIELD INSPECTION

IN ADDITION TO THE REQUIREMENTS OF CMS 105.11, THE CONTRACTOR SHALL FURNISH AND ERECT SCAFFOLDING OR OTHER APPROPRIATE ACCESS TO PERMIT INSPECTION OF ANY PORTION OF THE BRIDGE DURING ALL PHASES OF THE CLEANING AND PAINTING OPERATIONS AND AFTER THE PAINTING IS COMPLETED. SCAFFOLDING SHALL MEET OHIO ADMINISTRATIVE CODE REQUIREMENTS. RUBBER ROLLERS, OR OTHER PROTECTIVE DEVICES MEETING THE APPROVAL OF THE

ENGINEER, SHALL BE USED ON SCAFFOLD FASTENINGS. METAL ROLLERS OR CLAMPS AND OTHER TYPES OF FASTENINGS WHICH WILL MAR OR DAMAGE FRESHLY COATED SURFACES SHALL NOT BE USED.

PROTECTION OF PUBLIC

THE CONTRACTOR SHALL INSTALL AND MAINTAIN SUITABLE SHIELDS BETWEEN HIS OPERATIONS AND OPEN TRAFFIC LANES TO PREVENT DAMAGE TO VEHICLES TRAVELING ON OR UNDER THE STRUCTURE. THE SHIELDS SHALL BE OF A TYPE AND CONSTRUCTION APPROVED BY THE ENGINEER TO PREVENT MATERIALS FROM DROPPING ONTO OR BEING BLOWN INTO PAVEMENT LANES OPEN TO TRAFFIC. SHIELDS SHALL BE SUITABLY ANCHORED AND REINFORCED TO PREVENT INTERFERENCE WITH TRAFFIC OPERATIONS IN THE OPEN LANES. PAYMENT FOR SHIELDS SHALL BE INCLUDED IN THE LUMP SUM PRICE BID FOR "ITEM SPECIAL - PAINTING STRUCTURAL STEEL."

WHENEVER THE INTENDED PURPOSES OF THE PROTECTIVE DEVICES AND METHODS FOR BLASTING AND PAINTING ARE NOT BEING ACCOMPLISHED, WORK SHALL BE SUSPENDED UNTIL CORRECTIONS ARE MADE.

PROTECTION OF PERSONS AND PROPERTY

THE CONTRACTOR SHALL COLLECT, REMOVE, AND DISPOSE OF ALL BUCKETS, RAGS, OR OTHER DISCARDED MATERIALS AND HE SHALL LEAVE THE JOB SITE IN A CLEAN CONDITION. ALL BLASTING DEBRIS WHICH HAS COLLECTED ON ROADWAYS, SIDEWALKS, GROUND SURFACES, ETC., IN THE VICINITY OF THE STRUCTURE SHALL BE REMOVED AT THE END OF EACH DAY'S WORK.

THE CONTRACTOR SHALL PROTECT ALL PORTIONS OF THE STRUCTURE WHICH ARE NOT TO BE PAINTED AGAINST DAMAGE OR DISFIGUREMENT BY SPLASHES, SPATTERS, AND SMIRCHES OF PAINT.

WHEN OR WHERE ANY DIRECT OR INDIRECT DAMAGE OR INJURY IS DONE TO PUBLIC OR PRIVATE PROPERTY BY OR ON ACCOUNT OF ANY ACT, OMISSION, NEGLECT, OR MISCONDUCT IN THE EXECUTION OF THE WORK, OR IN CONSEQUENCE OF THE NONEXECUTION THEREOF BY THE CONTRACTOR, HE SHALL RESTORE, AT HIS OWN EXPENSE, SUCH PROPERTY TO A CONDITION EQUAL OR BETTER TO THAT EXISTING BEFORE SUCH DAMAGE OR INJURY WAS DONE, BY REPAIRING, REBUILDING, OR OTHERWISE RESTORING AS MAY BE DIRECTED, OR HE SHALL MAKE GOOD SUCH DAMAGE OR INJURY IN AN ACCEPTABLE MANNER.

THE CONTRACTOR SHALL SUBMIT TO THE ENGINEER FOR HIS APPROVAL A PROCEDURE FOR HANDLING COMPLAINTS RESULTING FROM OVERSPRAY OF CARS, TRUCKS, ETC. NO WORK SHALL COMMENCE UNTIL THE METHOD OF HANDLING COMPLAINTS HAS BEEN APPROVED BY THE ENGINEER.

POLLUTION CONTROL

THE CONTRACTOR SHALL TAKE ALL NECESSARY PRECAUTIONS TO COMPLY WITH POLLUTION LAWS, RULES, OR REGULATIONS OF FEDERAL, STATE, OR LOCAL AGENCIES.

IN ADDITION, THE ENGINEER SHALL HAVE THE CONTRACTOR CEASE OPERATIONS IF THE WIND OR OTHER CONDITIONS ARE SUCH THAT THE SURROUNDING ENVIRONMENT IS BEING DETRIMENTALLY AFFECTED DUE TO THE WORK.

ANY ADDITIONAL COST RESULTING FROM RESTRICTIONS OR ADDITIONS TO THE BLAST CLEANING AND PAINTING OPERATIONS SHALL BE BORNE BY THE CONTRACTOR. ANY PENALTIES RESULTING FROM VIOLATION OF ANY POLLUTION CONTROL ORDINANCES SHALL ALSO BE BORNE BY THE CONTRACTOR.

PAINTING MATERIALS, APPLICATION, AND SURFACE PREPARATION

ALL PAINTING MATERIALS, PAINTING APPLICATION, AND PREPARATION OF METAL SURFACES TO BE PAINTED, WHETHER THE MATERIALS AND PREPARATION BE APPLIED IN THE SHOP OR IN THE FIELD, SHALL BE IN ACCORDANCE WITH THIS SPECIAL PROVISION AND CMS SECTION 514 AS APPLICABLE.

THE COATING SYSTEM USED FOR ALL NEW AND EXISTING STRUCTURAL STEEL SHALL BE SYSTEM A AS SPECIFIED IN SECTION 514.

SURFACE PREPARATION FOR NEW AND EXISTING STEEL SHALL CONFORM TO SECTION 514 AND AS NOTED HEREIN. THE EXISTING PAINT SYSTEM ON THIS BRIDGE IS ALSO SYSTEM A; THEREFORE, NO SPECIAL LEAD TOXICITY SAFETY REQUIREMENTS ARE NECESSARY.

ABRASIVES USED FOR BLAST CLEANING EXISTING STEEL SHALL BE EITHER CAST STEEL SHOT AND GRIT, MALLEABLE IRON SHOT AND GRIT, CHILLED CAST IRON SHOT AND GRIT, CRUSHED METAL REFINING SLAG, ZIRCON, NOVACULITE, COPPER SLAG, SILICON CARBIDE, OR ALUMINUM OXIDE. NOT MORE THAN 1 PERCENT BY WEIGHT OF THE ABRASIVE SHALL BE ABLE TO PASS THROUGH A NO. 70 U.S. STANDARD SIEVE, AND AFTER BLASTING, NOT MORE THAN 1.8 PERCENT BY WEIGHT SHALL BE 0.005 MILLIMETERS OR SMALLER. THE ABRASIVE SHALL HAVE A GRADATION WHICH WILL PRODUCE A UNIFORM PROFILE OF 2 TO 3 MILS, AS MEASURED WITH TESTEX REPLICA TAPE.

AFTER THE DECK HAS BEEN REMOVED, THE EXISTING STEEL TO REMAIN SHALL BE BLAST CLEANED AND PAINTED WITH A PRIME COAT PRIOR TO DECK REPLACEMENT.

STENCILING REQUIREMENT

THE COMPLETION DATE, MONTH AND YEAR, OF THE FINISH COAT AND THE LETTERS "ZV" SHALL BE STENCILED WITH A VINYL PAINT IN A CONTRASTING COLOR AT A LOCATION DIRECTED BY THE ENGINEER. PAYMENT OF THIS WORK IS INCLUDED IN THE PRICE PAID FOR "ITEM SPECIAL - PAINTING STRUCTURAL STEEL".

METHOD OF MEASUREMENT

FIELD PAINTING OF STRUCTURAL STEEL IS BASED ON LUMP SUM.

BASIS OF PAYMENT

SHOP PRIME PAINTING OF NEW STEEL IS INCLUDED IN THE PRICE BID FOR STRUCTURAL STEEL. PAYMENT FOR FIELD PAINTING WILL BE MADE AT THE CONTRACT LUMP SUM PRICE BID FOR "ITEM SPECIAL - PAINTING STRUCTURAL STEEL". THIS PRICE SHALL INCLUDE ALL LABOR, MATERIALS, EQUIPMENT, ETC., NECESSARY FOR BLAST CLEANING, COATING, INSPECTION, PROTECTION, AND CLEANUP OPERATIONS AS STATED IN CMS SECTION 514 AND THIS SPECIAL PROVISION.

ITEM SPECIAL - RAISING EXISTING STRUCTURAL STEEL (PERKINS STREET BRIDGE)

THIS ITEM CONSISTS OF THE FOLLOWING:

1. SUBMIT A DESCRIPTION OF THE METHODS AND EQUIPMENT TO BE USED FOR REVIEW AND APPROVAL BY THE ENGINEER. THE REVIEW AND APPROVAL BY THE ENGINEER SHALL NOT RELIEVE THE CONTRACTOR OF HIS FULL RESPONSIBILITY FOR SAFE OPERATIONS.

2. RAISING THE EXISTING STRUCTURAL STEEL STRINGERS THAT ARE TO REMAIN IN THE PROPOSED STRUCTURE TO AN ELEVATION ABOVE THE PROPOSED LOCATION TO PERMIT CONSTRUCTION OF NEW PEDESTALS. REFER TO THE DRAWINGS FOR THE PROPOSED JACK LOCATIONS. REMOVE THE EXISTING SLAB PRIOR TO JACKING OPERATIONS. RAISE ALL STRINGERS SIMULTANEOUSLY AT A UNIFORM RATE. DO NOT PERMIT DIFFERENTIAL MOVEMENT BETWEEN ADJACENT STRINGERS OR ALONG THE STRINGERS BETWEEN SUPPORTS.

3. PLACE STRINGERS ON NEW PEDESTALS, USING EXISTING BEARING ASSEMBLIES. PROVIDE NEW ANCHOR BOLTS AT PIERS AND NEW 1/8" LEAD PADS AT ALL LOCATIONS AS SHOWN IN THE DRAWINGS.

MEASUREMENT AND PAYMENT

PAYMENT WILL BE MADE AT THE CONTRACT LUMP SUM PRICE BID FOR "ITEM SPECIAL - RAISING EXISTING STRUCTURAL STEEL" AND SHALL INCLUDE ALL LABOR, MATERIAL, EQUIPMENT, AND INCIDENTALS NECESSARY TO COMPLETE THE WORK AS DESCRIBED HEREIN.

DALTON • DALTON • NEWPORT

CLEVELAND, OHIO AKRON, OHIO

40/73

SPECIAL PROVISIONS

NORTH EXPRESSWAY VIADUCT
PERKINS STREET BRIDGE
SUM-8-0175/0195

DESIGNED	DRAWN	TRACED	CHECKED	REVIEWED	DATE	REVISED
RLF	CMR		MAB	JSH	2-1-95	

F.H.W.A. REG.	STATE	PROJECT	
5	OHIO		

114/204

SUM - 8 - 1.73 / 1.95

ESTIMATED QUANTITIES

B&F Funds

	ITEM	TOTAL	UNIT	DESCRIPTION	SUPER.	ABUT.	PIER	RET. WALL	GEN'L		
	202	LUMP	L.S.	PORTIONS OF STRUCTURES REMOVED							
	503	LUMP	L.S.	COFFERDAMS, CRIBS, AND SHEETING							
	503	146	C.Y.	UNCLASSIFIED EXCAVATION		60	86				
	503	110	C.Y.	UNCLASSIFIED EXCAVATION INCLUDING SHALE				110			
	503	285	C.Y.	ROCK EXCAVATION		45	240				
	507	214	L.F.	STEEL PILES, HP 12 X 53		214					
	509	534,394	LB.	REINFORCING STEEL (GRADE 60)	392,139	72,302	60,222	2,231	7,500		
	824	627,000	LB.	EPOXY COATED REINFORCING STEEL (GRADE 60)	591,957	35,043					
	510	538	EA.	DOWEL HOLES		268	200		70		
	511	17	C.Y.	CLASS "C" CONCRETE, RETAINING WALLS ABOVE FOOTINGS				17			
	511	290	C.Y.	CLASS "C" CONCRETE, PIERS ABOVE FOOTINGS			290				
	511	310	C.Y.	CLASS "C" CONCRETE, ABUTMENTS ABOVE FOOTINGS		310					
	511	138	C.Y.	CLASS "C" CONCRETE, FOOTINGS		16	107	15			
* ALT. A	511	4,255	C.Y.	CLASS "S" CONCRETE, SUPERSTRUCTURE	3,928	327				*ALT. A	
* ALT. A	845	14,022	S.Y.	LATEX MODIFIED CONCRETE OVERLAY (1 1/4" THICK)- (SEE PROPOSAL NOTE)	13,259	763				*ALT. A	
* ALT. B	511	4,742	C.Y.	CLASS "S" CONCRETE USING SHRINKAGE COMPENSATING CEMENT (AS PER PLAN)	4,388	354				*ALT. B	
	SPEC.	4,034	S.Y.	SEALING OF CONCRETE SURFACES (SEE PROPOSAL NOTE)	3,490	544					
	513	220,762	LB.	STRUCTURAL STEEL (AISC CATEGORY III)	220,762						
	513	218,587	LB.	CURB PLATES AND MISCELLANEOUS STEEL (AS PER PLAN)	208,542	10,045					
	513	10,000	LB.	STRUCTURAL STEEL (A36) FOR REPAIRS (AISC CATEGORY I)	10,000						
	516	78	L.F.	MODULAR EXPANSION JOINT DEVICE (AS PER PLAN)	78						
	516	31	L.F.	JOINT SEALER		31					
	516	107	S.F.	1" PREFORMED EXPANSION JOINT FILLER	8	88		11			
	516	791	S.F.	1" PREFORMED EXPANSION JOINT FILLER (AS PER PLAN)	752	39					
	517	250	L.F.	NEW RAILING (AS PER PLAN)	170	80					
	517	242	L.F.	SALVAGED RAILING (AS PER PLAN)	164	78					
	518	21	C.Y.	POROUS BACKFILL				21			
	518	1,241	L.F.	8" DIAMETER CONDUCTOR PIPE, INCLUDING SPECIALS	1,140	101					
	518	2,567	L.F.	8" DIAMETER DOWNSPOUTS, INCLUDING SPECIALS	2,548	19					
	518	40	EA.	SCUPPERS, INCLUDING SUPPORTS	38	2					
	601	2,311	C.Y.	DUMPED ROCKFILL, TYPE "D" WITH FILTER FABRIC					2,311		
	601	26	C.Y.	RIP RAP (AS PER PLAN)					26		
	SPEC.	388	L.F.	EXPANSION JOINT SEALS (3")	388						
	SPEC.	78	L.F.	EXPANSION JOINT SEALS (4")	78						
	SPEC.	170	L.F.	EXPANSION JOINT SEALS (5")	170						
	SPEC.	LUMP	L.S.	PAINTING STRUCTURAL STEEL							
	SPEC.	50	EA.	SOIL TESTING					50		
	SPEC.**	11,933**	S.F.	REPAIR BY SHOTCRETING **		172	11,761				
	SPEC.	302	L.F.	REPAIR OF CRACKS BY THE INJECTION OF AN EPOXY RESIN ADHESIVE		88	214				
	SPEC.	400	S.F.	STEEL BAR GRATING	400						
	SPEC.	80	S.F.	FLOOR PLATE	80						
	SPEC.	120	L.F.	LADDERS		38	82				
	SPEC.	500	EA.	RIVET REMOVAL AND REPLACEMENT	500						
	SPEC.	LUMP	L.S.	STONEWORK							
	SPEC.	220	S.Y.	SEALING OF CONCRETE SURFACES USING EPOXY SEALER (SEE PROPOSAL NOTE) (AS PER PLAN)			220				

* THE CONTRACTOR MUST SUBMIT BIDS FOR THE SUPERSTRUCTURE CONCRETE AND DECK PROTECTION ITEMS OF ALTERNATES 'A' AND 'B' ABOVE. REFER TO "SUPERSTRUCTURE CONCRETE AND DECK PROTECTION ALTERNATES" IN THE GENERAL NOTES.

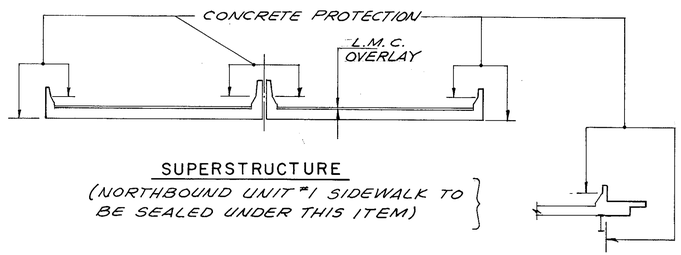

SUPERSTRUCTURE

(NORTHBOUND UNIT #1 SIDEWALK TO BE SEALED UNDER THIS ITEM)

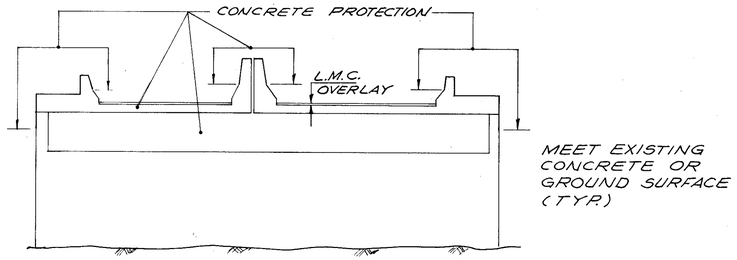

ABUTMENTS

(ALL EXPOSED FACES ON NEW ABUTMENT & WINGWALL CONCRETE SHALL BE SEALED UNDER THIS ITEM.)

LIMITS OF CONCRETE PROTECTION

THE CONCRETE PROTECTION SHALL BE APPLIED AS DESCRIBED IN THE PROPOSAL UNDER "SEALING OF CONCRETE SURFACES."

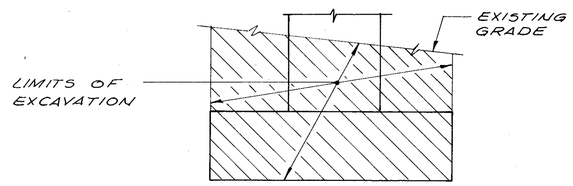

PIERS Nº 1 & Nº 2

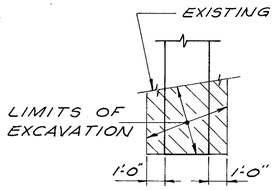

WINGWALL

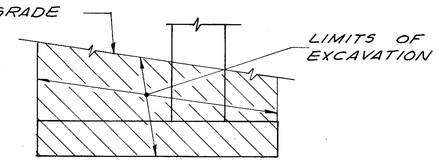

SOUTH ABUTMENT

LIMITS OF EXCAVATION

** 50% OF THIS QUANTITY IS ELIGIBLE FOR FEDERAL PARTICIPATION

NOTES

(1) FOR ADDITIONAL NOTES AND DETAILS SEE STRUCTURAL GENERAL NOTES AND SPECIAL PROVISIONS SHEETS 105/204 THRU 113/204

DALTON • DALTON • NEWPORT
CLEVELAND, OHIO — AKRON, OHIO

5/73

ESTIMATED QUANTITIES

NORTH EXPRESSWAY VIADUCT

SUM - 8 - 0195

DESIGNED	DRAWN	TRACED	CHECKED	REVIEWED	DATE	REVISED
RLF GTC	F.F.		MAB	JDH	2-1-85	

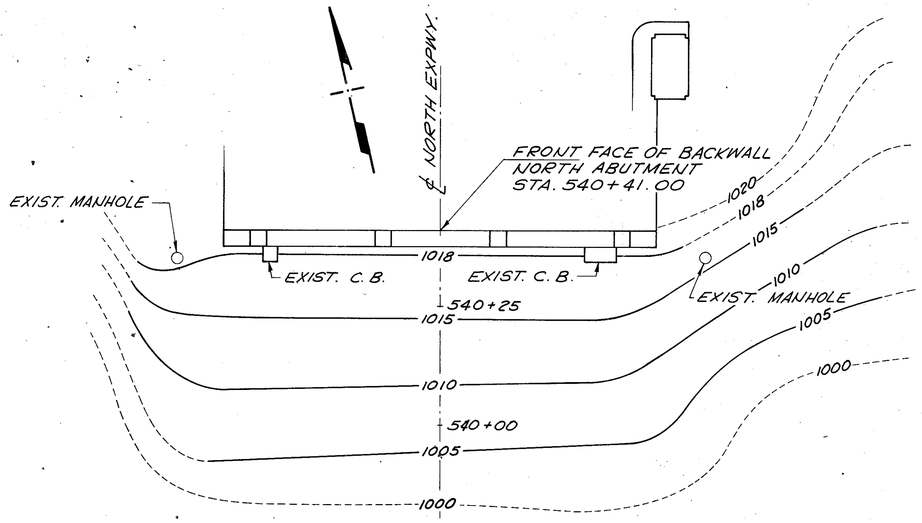

PLAN - NORTH SLOPE

SCALE : 1" = 15'

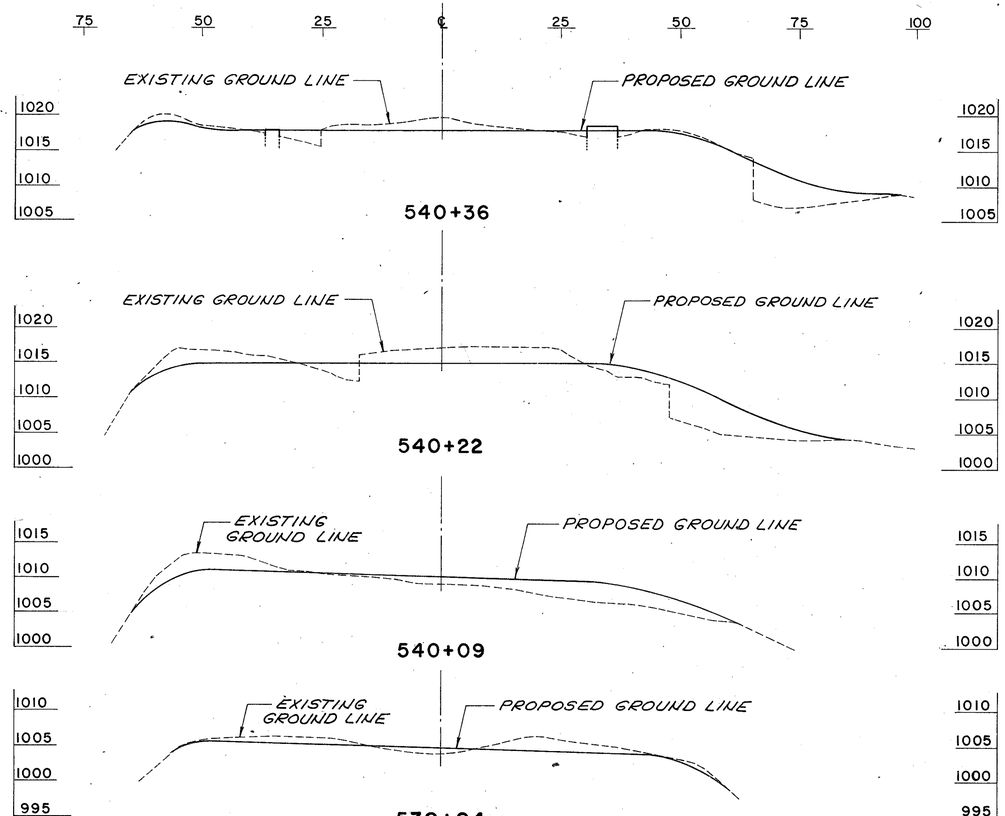

CROSS SECTIONS - NORTH SLOPE

SCALE :
HORIZ. : 1" = 15'
VERT. : 1" = 10'

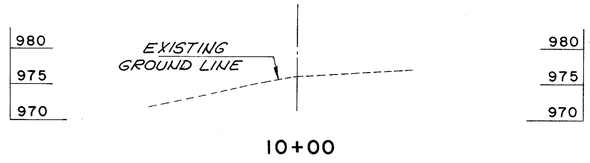

END WORK

CROSS SECTIONS - WASH-OUT

SCALE : HORIZ. : 1" = 10'
VERT. : 1" = 10'

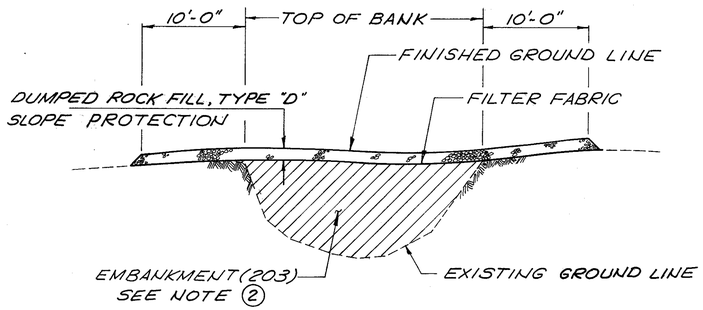

TYPICAL SECTION THRU WASH-OUT AREA

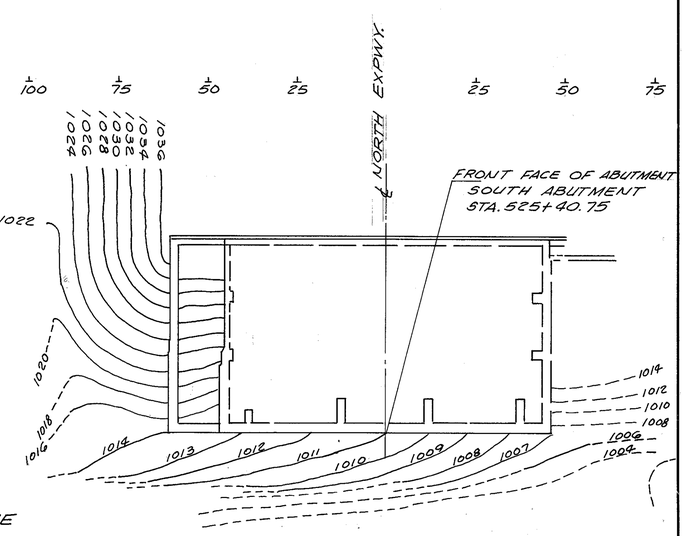

PLAN - SOUTH ABUTMENT

F. H. W. A. REG.	STATE	PROJECT	
5	OHIO		

115
204

SUM-8 - 1.73 / 1.95

NOTES

1. REFER TO THE SITE PLAN FOR LIMITS OF SLOPE PROTECTION AND WASH-OUT AREA LOCATION.
2. ALL EARTHWORK REQUIRED FOR INSTALLATION OF SLOPE PROTECTION AT SOUTH ABUTMENT, NORTH SLOPE, AND WASH-OUT AREA AS SHOWN ON THIS SHEET SHALL BE INCIDENTAL TO ITEM 601, DUMPED ROCK FILL, TYPE "D" WITH FILTER FABRIC. REFER TO THE GENERAL NOTES.
3. DRESSING OF SLOPE TO PROPOSED CONTOURS ADJACENT TO THE PROPOSED EAST WALL OF THE SOUTH ABUTMENT SHALL BE INCLUDED FOR PAYMENT WITH ITEM 503, ~ UNCLASSIFIED EXCAVATION

DALTON • DALTON • NEWPORT
CLEVELAND, OHIO AKRON, OHIO

6/73

SLOPE PROTECTION & DETAILS

NORTH EXPRESSWAY VIADUCT

SUM - 8 - 01 95

DESIGNED	DRAWN	TRACED	CHECKED	REVIEWED	DATE	REVISED
D.T.	D.T.		R.L.F.	J.O.P.	2-1-85	

F.H.W.A. REG.	STATE	PROJECT	
5	OHIO		

116
204

SUM-8- 1.73 / 1.95

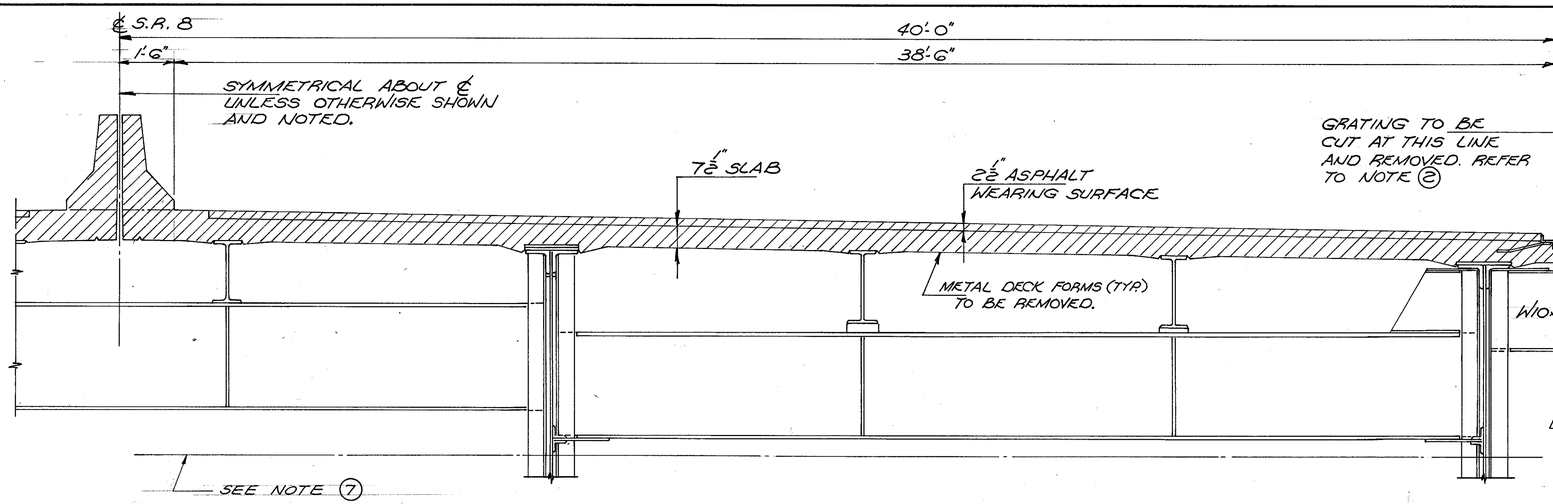

HALF TRANSVERSE SECTION-(EXISTING STRUCTURE)

UNIT 1- SOUTHBOUND & NORTHBOUND AS NOTED
UNIT 3 - NORTHBOUND & SOUTHBOUND

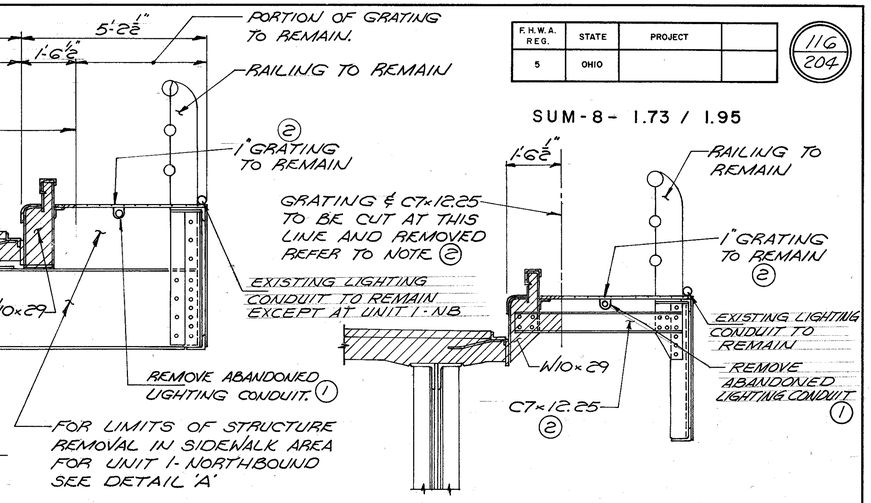

INTERMEDIATE SIDEWALK SUPPORT

UNIT 1 - SOUTHBOUND
UNIT 3 - NORTHBOUND & SOUTHBOUND

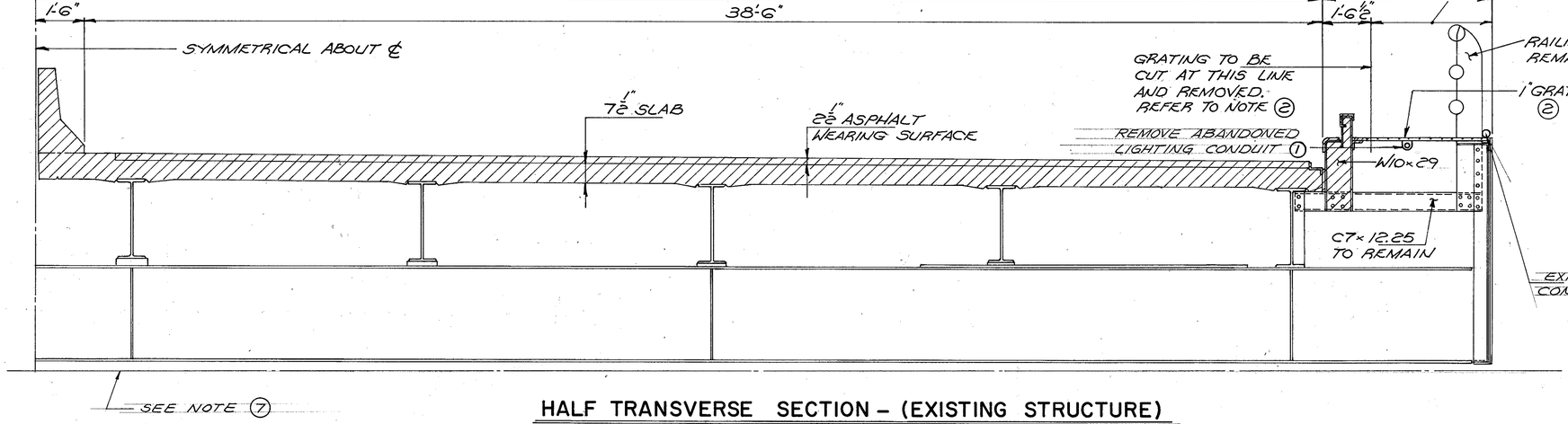

HALF TRANSVERSE SECTION – (EXISTING STRUCTURE)

UNIT 2 - NORTHBOUND & SOUTHBOUND

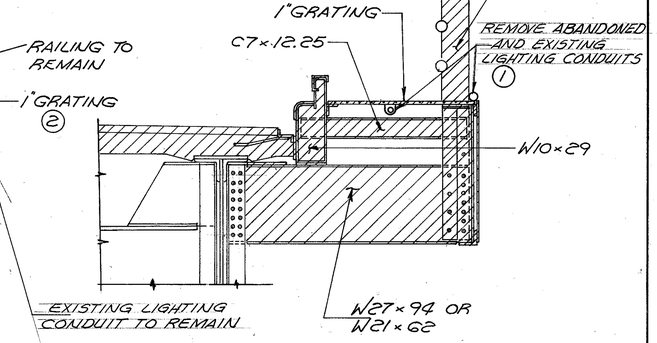

DETAIL A

FOR UNIT 1- NORTHBOUND

NOTES

① ▨ - DENOTES REMOVAL PER ITEM 202 - PORTIONS OF STRUCTURES REMOVED. REFER TO THE GENERAL NOTES.

② PROVIDE TEMPORARY SUPPORT FOR THE GRATING AND C7×12.25 UNTIL PERMANENT CONNECTION TO THE NEW TRAFFIC BARRIER IS COMPLETED.

③ FOR ADDITIONAL STRUCTURE DETAILS, REFER TO THE EXISTING PLANS.

④ FOR ADDITIONAL REMOVAL DETAILS, REFER TO DETAIL DRAWINGS FOR PIERS, ABUTMENTS, AND EXPANSION JOINTS.

⑤ THE EXISTING BRIDGE DRAINAGE SYSTEM SHALL BE REMOVED EXCEPT AS NOTED IN THE DRAINAGE DETAILS.

⑥ REFER TO MAINTENANCE OF TRAFFIC FOR PHASE CONSTRUCTION REQUIREMENTS.

⑦ CONDUCT BLASTING OPERATIONS AND COAT WITH TWO PRIME COATS ABOVE THIS LINE AFTER DECK REMOVAL BUT PRIOR TO ITS REPLACEMENT (SEE "ITEM SPECIAL - PAINTING STRUCTURAL STEEL").

DALTON • DALTON • NEWPORT
CLEVELAND, OHIO — AKRON, OHIO

7 | 73

STRUCTURE REMOVAL DETAILS

NORTH EXPRESSWAY · VIADUCT
SUM - 8 - 01 95

DESIGNED	DRAWN	TRACED	CHECKED	REVIEWED	DATE	REVISED
BKL	JWW		RLF	JAP	2-1-85	

F. H. W. A. REG.	STATE	PROJECT	
5	OHIO		

117/204

SUM - 8 - 1.73/1.95

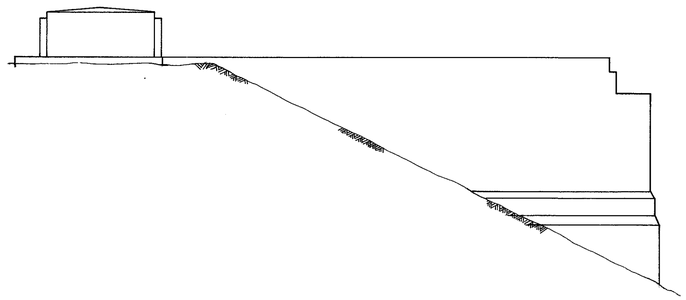

EAST ELEVATION

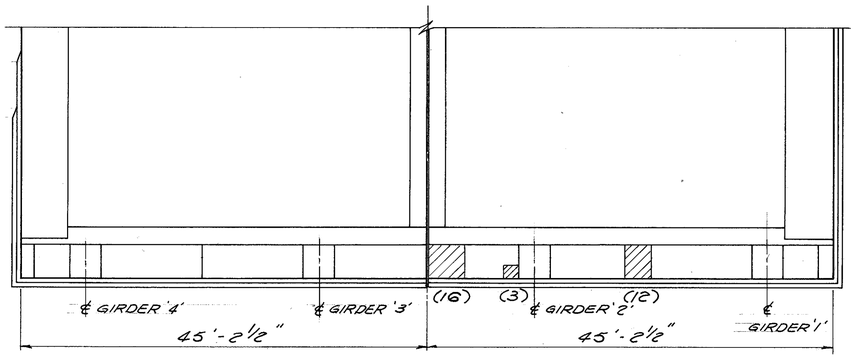

PLAN

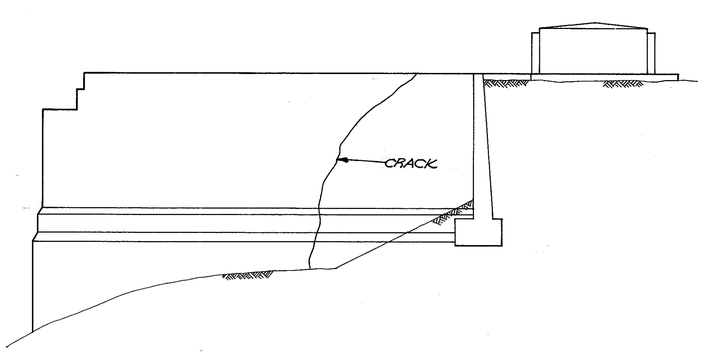

WEST ELEVATION

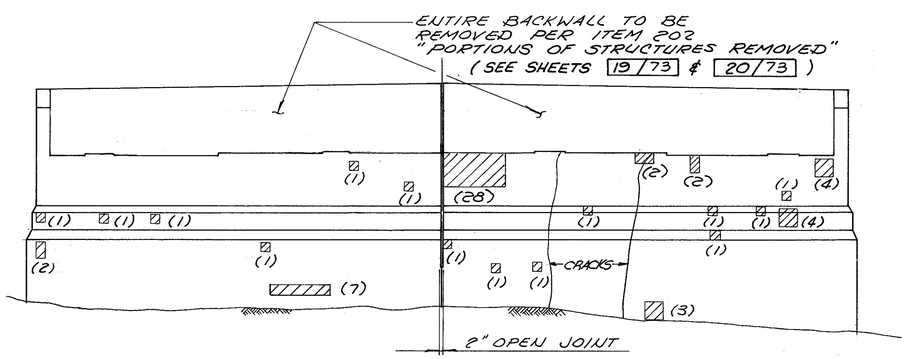

FRONT ELEVATION

NOTES

1. ALL AREAS NOTED ▨ SHALL BE REPAIRED BY SHOTCRETING, REFER TO THE SPECIAL PROVISIONS. THE AREAS SHOWN ON THESE DRAWINGS ARE APPROXIMATE, FINAL DETERMINATION OF THE AREAS TO BE REPAIRED WILL BE MADE BY THE ENGINEER AT THE TIME OF CONSTRUCTION.
2. REPLACEMENT OF EXISTING REINFORCING STEEL SHALL BE AT THE DIRECTION OF THE ENGINEER. REFER TO THE SPECIAL PROVISIONS.
3. NUMBERS SHOWN THUS ( ) ARE THE APPROXIMATE AREAS IN SQUARE FEET OF THE SPALL OR DELAMINATION.
4. ALL LOOSE OR MISSING FORM TIE PATCHES SHALL BE REPAIRED BY SHOTCRETING.
5. THE TOTAL AREA TO BE REPAIRED FOR EACH SUBSTRUCTURE UNIT HAS BEEN INCREASED TO ACCOUNT FOR ADDITIONAL WORK WHICH MAY BE REQUIRED.
6. ALL CRACKS NOTED SHALL BE SEALED AS PER ITEM SPECIAL— REPAIR OF CRACKS BY THE INJECTION OF AN EPOXY RESIN ADHESIVE. REFER TO THE SPECIAL PROVISIONS. THE ACTUAL QUANTITY OF REPAIR WORK SHALL BE DETERMINED BY THE ENGINEER IN THE FIELD.

LEGEND

▨ INDICATES AREA TO BE REPAIRED

TOTAL AREA TO BE REPAIRED SOUTH ABUTMENT ~ 102 SQ. FT.

TOTAL LENGTH OF CRACK REPAIR SOUTH ABUTMENT ~ 78 LIN. FT.

DALTON • DALTON • NEWPORT

CLEVELAND, OHIO — AKRON, OHIO

8/73

SUBSTRUCTURE REPAIRS SOUTH ABUTMENT

NORTH EXPRESSWAY VIADUCT

SUM - 8 - 01 95

DESIGNED	DRAWN	TRACED	CHECKED	REVIEWED	DATE	REVISED
CAF	CAF		RER	JGP	2-1-85	

F. H. W. A. REG.	STATE	PROJECT	
5	OHIO		

118/204

SUM - 8 - 1.73/1.95

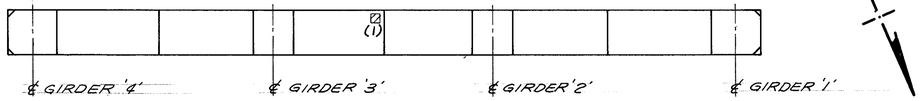

PLAN

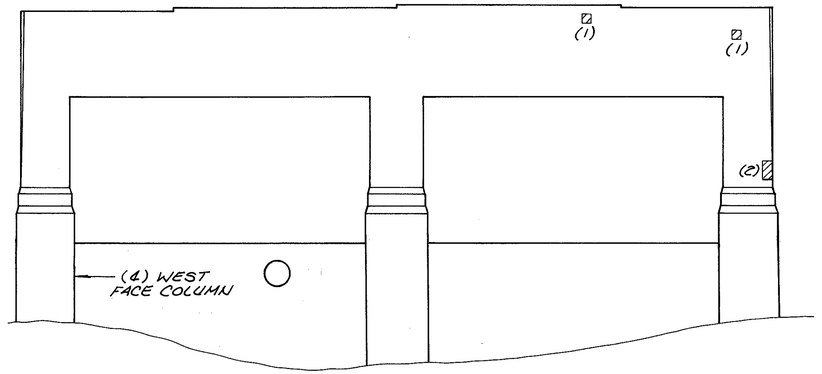

NORTH ELEVATION

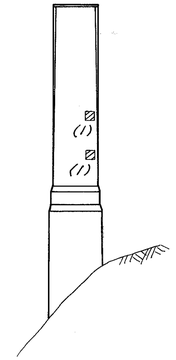

WEST ELEVATION

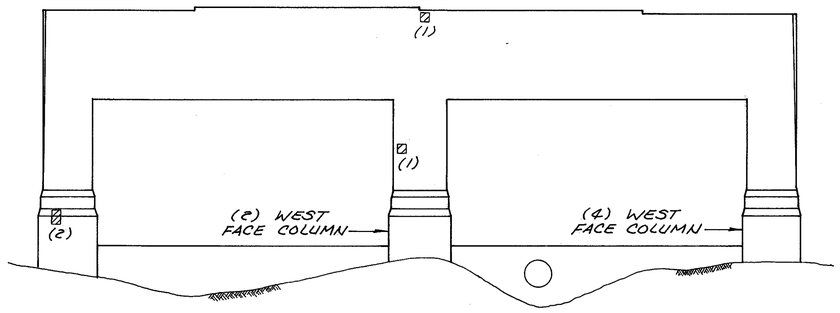

SOUTH ELEVATION

NOTES

(1) REFER TO SHEET 8/73 FOR ADDITIONAL NOTES.

LEGEND

INDICATES AREA TO BE REPAIRED

TOTAL AREA TO BE REPAIRED PIER № 1 ~ 30 SQ. FT.

DALTON • DALTON • NEWPORT

CLEVELAND, OHIO — AKRON, OHIO

9/73

SUBSTRUCTURE REPAIRS
PIER 1
NORTH EXPRESSWAY VIADUCT
SUM - 8 - 01 95

DESIGNED	DRAWN	TRACED	CHECKED	REVIEWED	DATE	REVISED
CAF	CAF		RER	JDP	2-1-88	

F. H. W. A. REG.	STATE	PROJECT	
5	OHIO		

119
204

SUM - 8 - 1.73/1.95

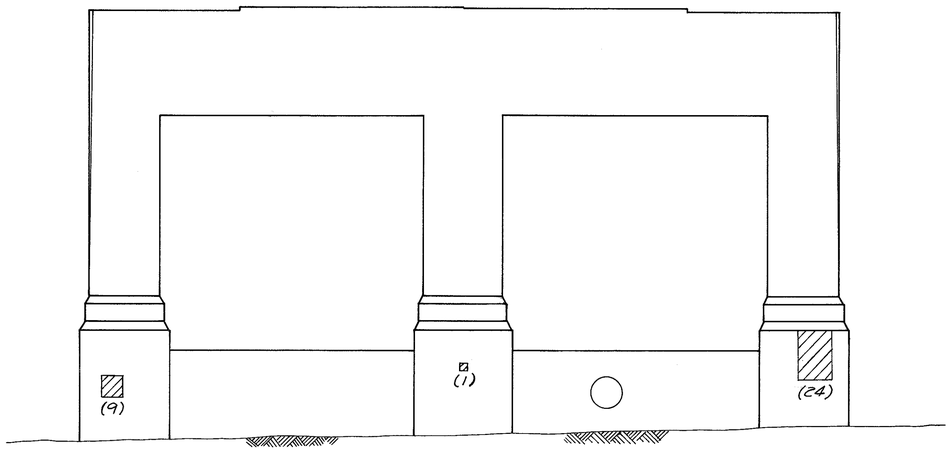

NORTH ELEVATION

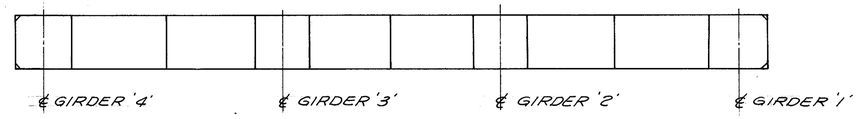

PLAN

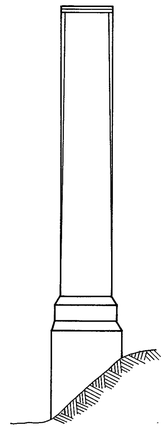

WEST ELEVATION

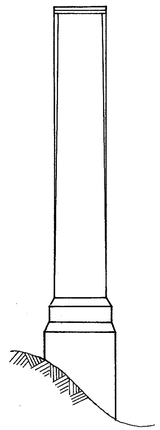

EAST ELEVATION

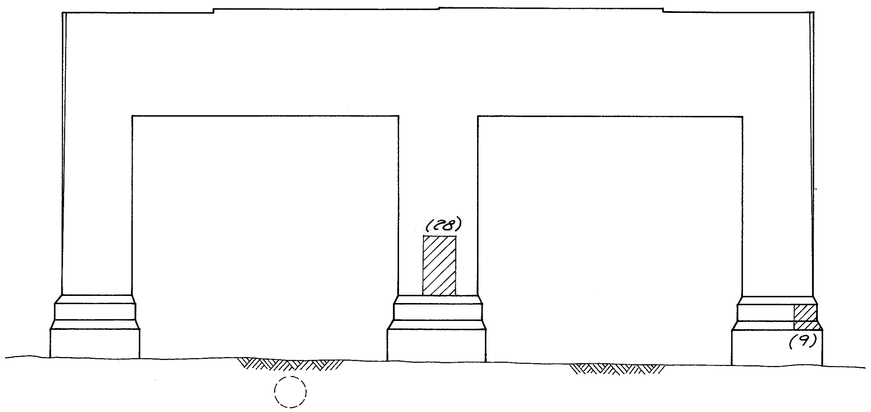

SOUTH ELEVATION

NOTES

(1) REFER TO SHEET 8/73 FOR ADDITIONAL NOTES.

TOTAL AREA TO BE REPAIRED
PIER Nº 2 ~ 100 SQ. FT.

DALTON • DALTON • NEWPORT
CLEVELAND, OHIO AKRON, OHIO

10/73

SUBSTRUCTURE REPAIRS
PIER 2
NORTH EXPRESSWAY VIADUCT
SUM - 8 - 01 95

DESIGNED	DRAWN	TRACED	CHECKED	REVIEWED	DATE	REVISED
CAF	CAF		RER	JJP	2-1-85	

F.H.W.A. REG.	STATE	PROJECT	
5	OHIO		

120
204

SUM - 8 - 1.73 / 1.95

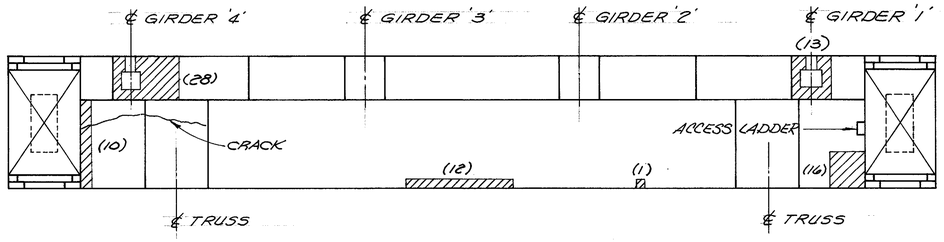

TOP PLAN

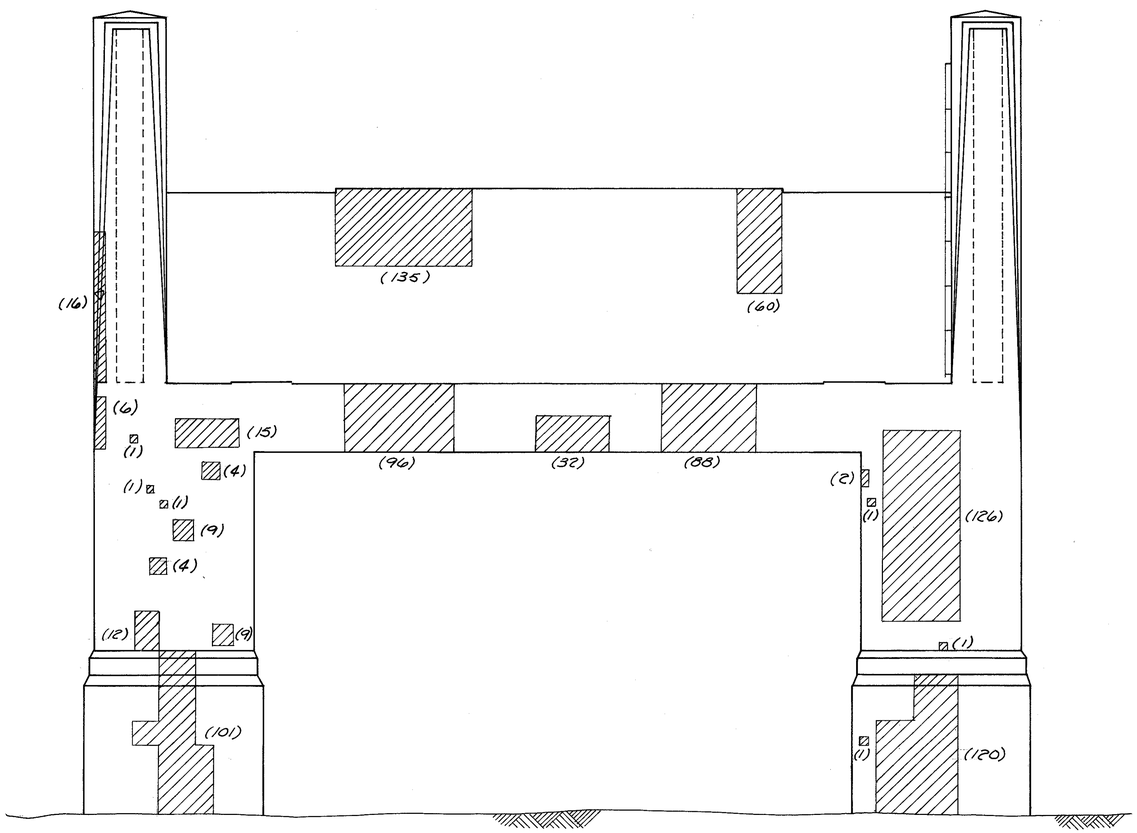

NORTH ELEVATION

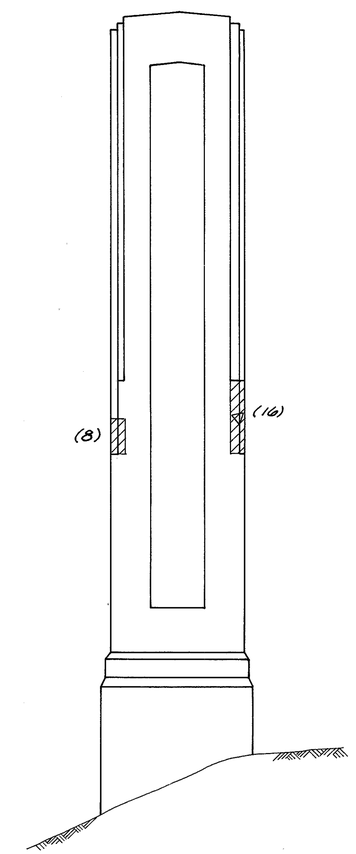

WEST ELEVATION

NOTES

(1) REFER TO SHEET 8 / 73 FOR ADDITIONAL NOTES.

LEGEND

INDICATES AREA TO BE REPAIRED

△ INDICATES AREA IN WHICH REINFORCING IS EXPOSED

DALTON • DALTON • NEWPORT
CLEVELAND, OHIO — AKRON, OHIO

11 / 73

SUBSTRUCTURE REPAIRS
PIER 3
NORTH EXPRESSWAY VIADUCT
SUM - 8 - 01 95

DESIGNED	DRAWN	TRACED	CHECKED	REVIEWED	DATE	REVISED
CAF	CAF		RER	gjp	2-1-85	

F. H. W. A. REG.	STATE	PROJECT	
5	OHIO		

121/204

SUM - 8 - 1.73 / 1.95

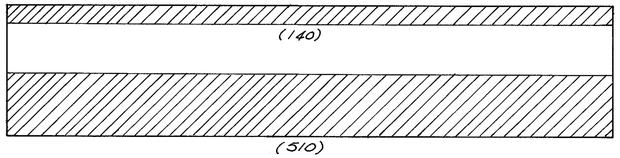

BOTTOM PLAN

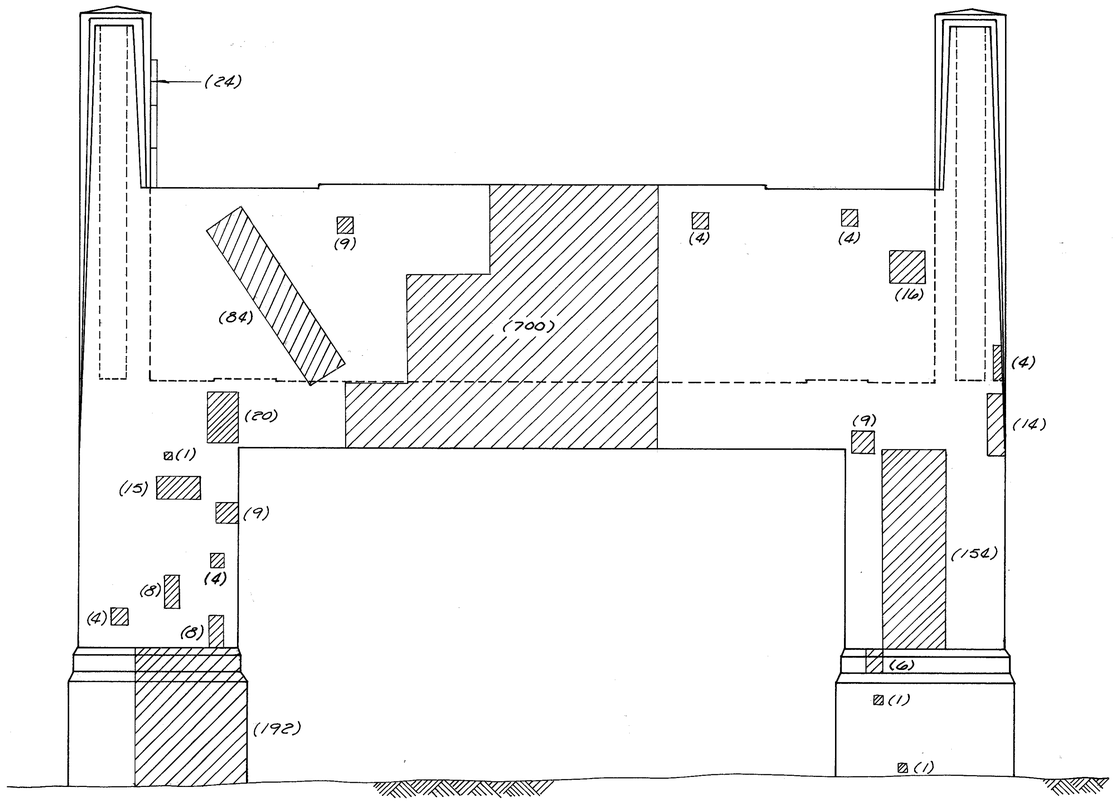

SOUTH ELEVATION

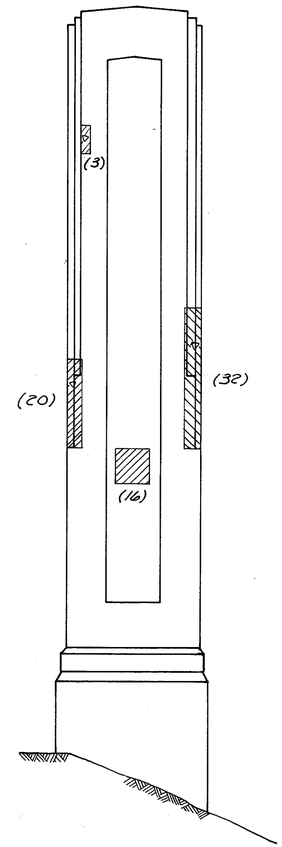

EAST ELEVATION

NOTES

(1) REFER TO SHEET 8/73 FOR ADDITIONAL NOTES.

LEGEND

△ INDICATES AREA IN WHICH REINFORCING IS EXPOSED

▨ INDICATES AREA TO BE REPAIRED

TOTAL AREA TO BE REPAIRED PIER №3 ~ 3690 SQ. FT.

TOTAL LENGTH OF CRACK REPAIR PIER №3 ~ 15 LIN. FT.

DALTON • DALTON • NEWPORT

CLEVELAND, OHIO — AKRON, OHIO

12/73

SUBSTRUCTURE REPAIRS
PIER 3
NORTH EXPRESSWAY VIADUCT
SUM - 8 - 01 95

DESIGNED	DRAWN	TRACED	CHECKED	REVIEWED	DATE	REVISED
CAF	CAF		RER	JDP	2-1-85	

F. H. W. A. REG.	STATE	PROJECT	
5	OHIO		

122/204

SUM - 8 - I.73/I.95

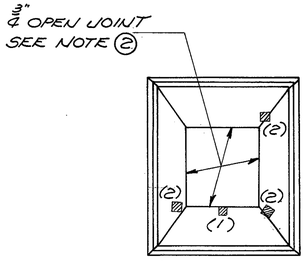

EAST

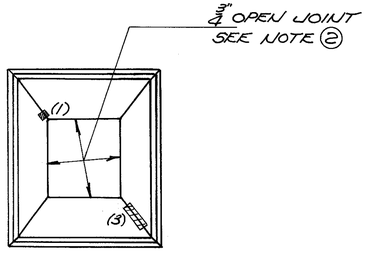

WEST

TOP PLAN

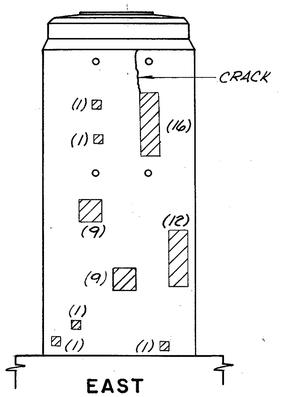

EAST

NORTH ELEVATION

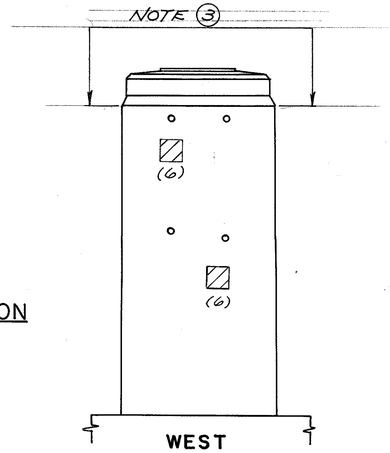

WEST

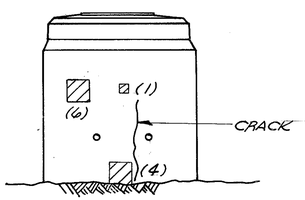

WEST

SOUTH ELEVATION

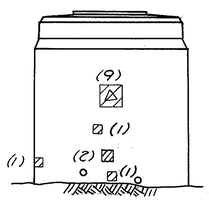

EAST

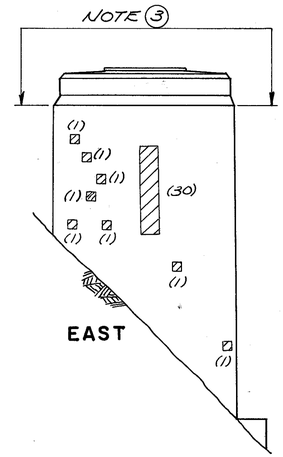

EAST

END VIEWS

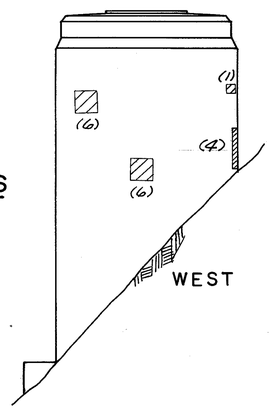

WEST

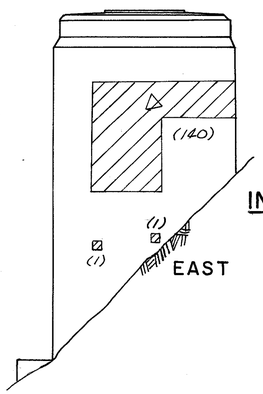

EAST

INTERIOR VIEWS

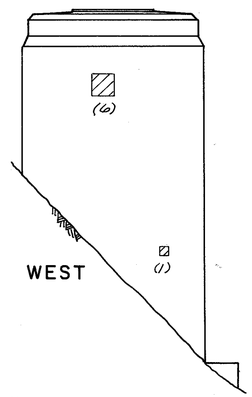

WEST

NOTES

(1) REFER TO SHEET 8/73 FOR ADDITIONAL NOTES.

(2) THE ¾" OPEN JOINTS NOTED SHALL BE SEALED AS PER ITEM SPECIAL- REPAIR OF CRACKS BY THE INJECTION OF AN EPOXY RESIN ADHESIVE. REFER TO THE SPECIAL PROVISIONS. THE ACTUAL QUANTITY OF REPAIR WORK SHALL BE DETERMINED BY THE ENGINEER IN THE FIELD.

(3) AREA TO BE SEALED WITH EPOXY SEALER TO BE PAID FOR UNDER ITEM SPECIAL- SEALING OF CONCRETE SURFACES USING EPOXY SEALER (AS PER PLAN). TYPICAL FOR TOPS OF PIERS.

LEGEND

△ INDICATES AREA IN WHICH REINFORCING IS EXPOSED

▨ INDICATES AREA TO BE REPAIRED

TOTAL AREA TO BE REPAIRED PIER Nº 4 ~ 358 SQ. FT.

TOTAL LENGTH OF CRACK & JOINT REPAIR. PIER Nº 4 - 89 LIN. FT.

DALTON • DALTON • NEWPORT

CLEVELAND, OHIO AKRON, OHIO

13/73

SUBSTRUCTURE REPAIRS PIER 4

NORTH EXPRESSWAY VIADUCT

SUM - 8 - 01 95

DESIGNED	DRAWN	TRACED	CHECKED	REVIEWED	DATE	REVISED
CAF	CAF		RER	JDP	2-1-86	

F.H.W.A. REG.	STATE	PROJECT	
5	OHIO		

123/204

SUM - 8 - I.73 / I.95

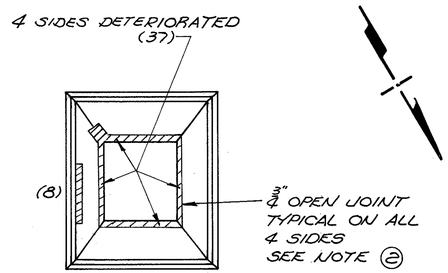

EAST

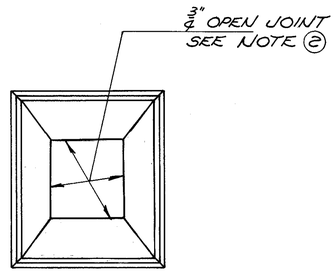

WEST

TOP PLAN

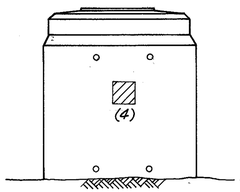

EAST

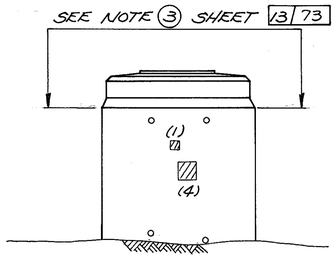

WEST

NORTH ELEVATION

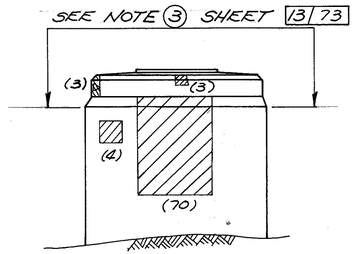

EAST PEDESTAL

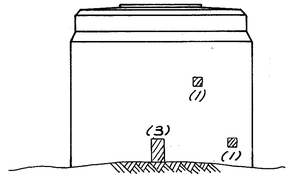

WEST PEDESTAL

END VIEWS

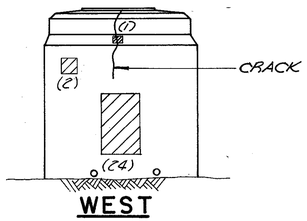

WEST

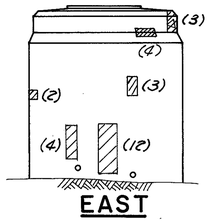

EAST

SOUTH ELEVATION

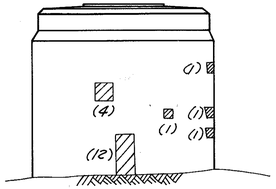

EAST PEDESTAL

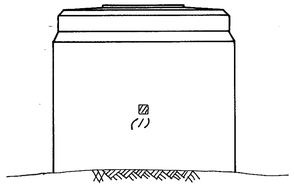

WEST PEDESTAL

INTERIOR VIEWS

NOTES

(1) REFER TO SHEET 8/73 FOR ADDITIONAL NOTES.

(2) THE ¾" OPEN JOINTS NOTED SHALL BE SEALED AS PER ITEM SPECIAL – REPAIR OF CRACKS BY THE INJECTION OF AN EPOXY RESIN ADHESIVE. REFER TO THE SPECIAL PROVISIONS. THE ACTUAL QUANTITY OF REPAIR WORK SHALL BE DETERMINED BY THE ENGINEER IN THE FIELD.

LEGEND

△ INDICATES AREAS IN WHICH REINFORCING IS EXPOSED

▨ INDICATES AREAS TO BE REPAIRED

TOTAL AREA TO BE REPAIRED
PIER Nº 5 ~ 259 SQ. FT.

TOTAL LENGTH OF CRACK & JOINT REPAIR
PIER Nº 5 ~ 80 LIN. FT.

DALTON • DALTON • NEWPORT
CLEVELAND, OHIO AKRON, OHIO

14/73

SUBSTRUCTURE REPAIRS
PIER 5
NORTH EXPRESSWAY VIADUCT
SUM - 8 - 01 95

DESIGNED	DRAWN	TRACED	CHECKED	REVIEWED	DATE	REVISED
CAF	CAF		RER	JJP	2-1-85	

F. H. W. A. REG.	STATE	PROJECT	
5	OHIO		

124/204

SUM - 8 - 1.73 / 1.95

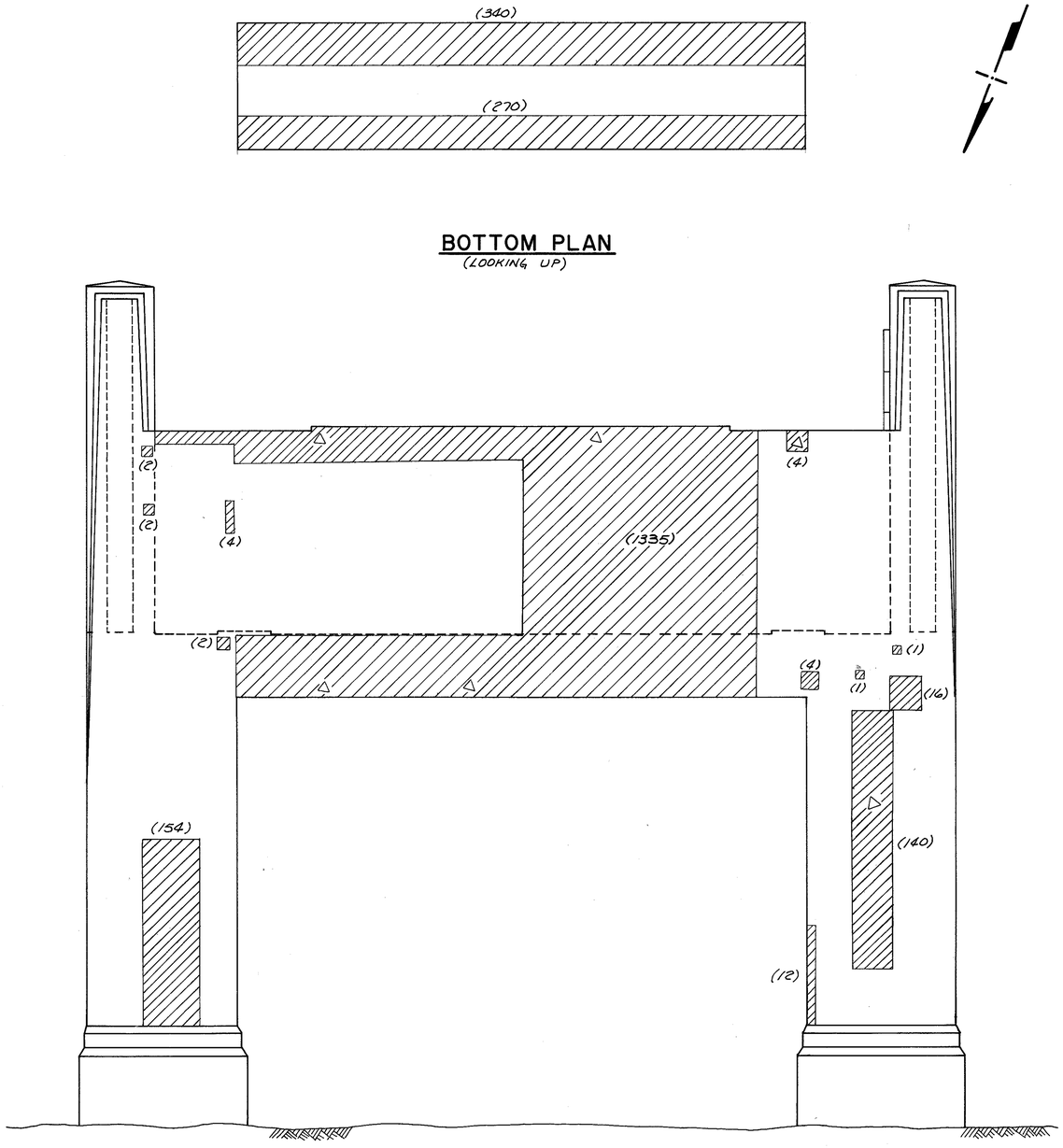

BOTTOM PLAN
(LOOKING UP)

NORTH ELEVATION

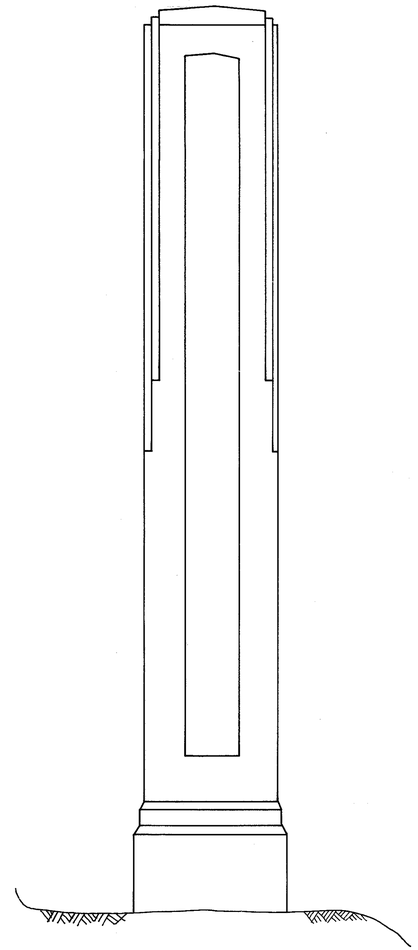

WEST ELEVATION

NOTES.

(1) REFER TO SHEET 8/73 FOR ADDITIONAL NOTES.

LEGEND

△ INDICATES AREA IN WHICH REINFORCING IS EXPOSED

▨ INDICATES AREA TO BE REPAIRED

DALTON • DALTON • NEWPORT
CLEVELAND, OHIO — AKRON, OHIO

15/73

SUBSTRUCTURE REPAIRS
PIER 6
NORTH EXPRESSWAY VIADUCT
SUM - 8 - 01 95

DESIGNED	DRAWN	TRACED	CHECKED	REVIEWED	DATE	REVISED
CAF	CAF		RER	JGP	2-1-85	

F.H.W.A. REG.	STATE	PROJECT	
5	OHIO		

125
204

SUM - 8 - 1.73 / 1.95

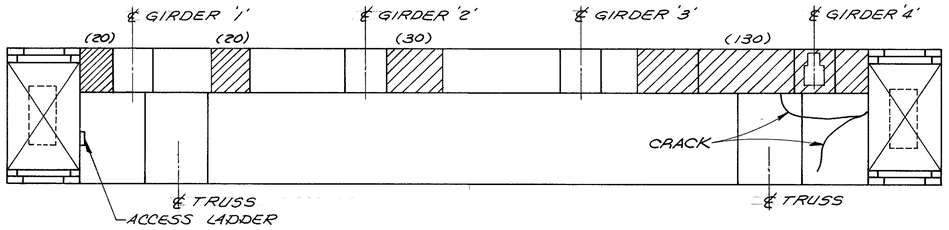

TOP PLAN

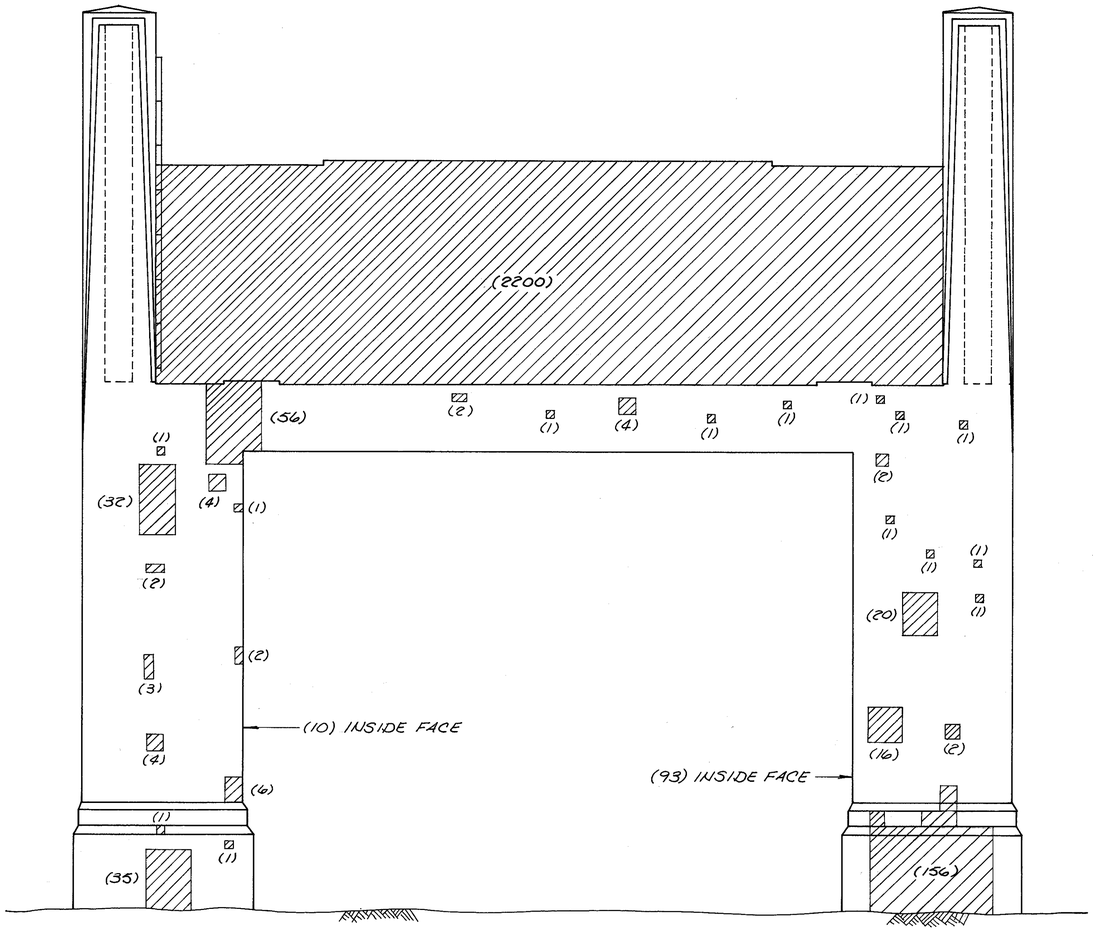

SOUTH ELEVATION

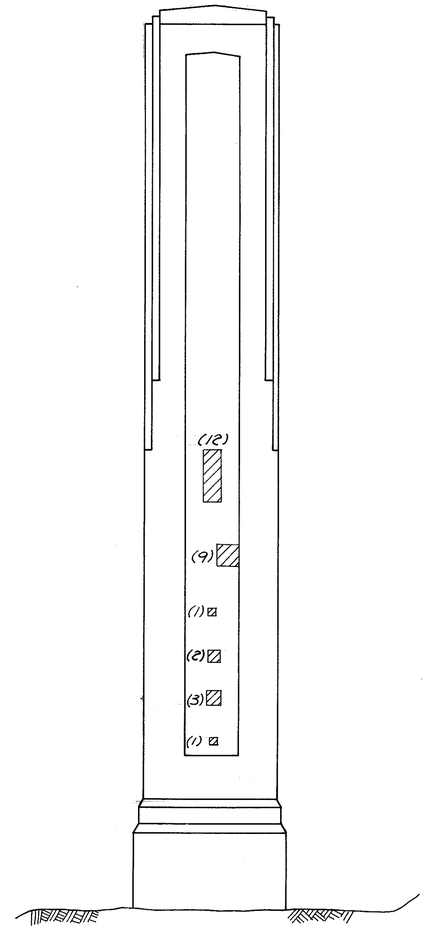

EAST ELEVATION

NOTES

(1) REFER TO SHEET 8/73 FOR ADDITIONAL NOTES.

LEGEND

△ INDICATES AREA IN WHICH REINFORCING IS EXPOSED

▨ INDICATES AREA TO BE REPAIRED

TOTAL AREA TO BE REPAIRED PIER Nº 6 ~ 6470 SQ. FT.

TOTAL LENGTH OF CRACK REPAIR PIER Nº 6 ~ 30 LIN. FT.

DALTON • DALTON • NEWPORT
CLEVELAND, OHIO AKRON, OHIO

16/73

SUBSTRUCTURE REPAIRS
PIER 6
NORTH EXPRESSWAY VIADUCT
SUM - 8 - 01 95

DESIGNED	DRAWN	TRACED	CHECKED	REVIEWED	DATE	REVISED
CAF	CAF		RER	JGP	2/1/86	

F. H. W. A. REG.	STATE	PROJECT	
5	OHIO		

126
204

SUM - 8 - 1.73 / 1.95

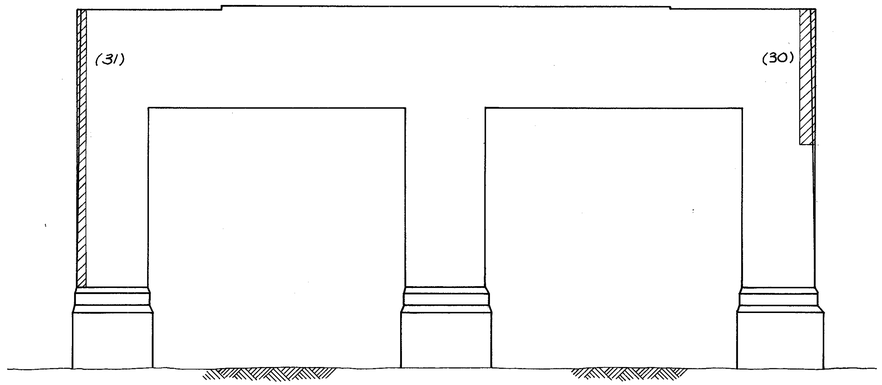

NORTH ELEVATION

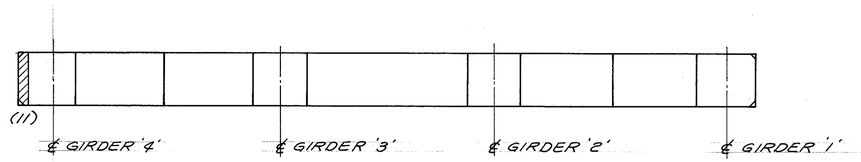

PLAN

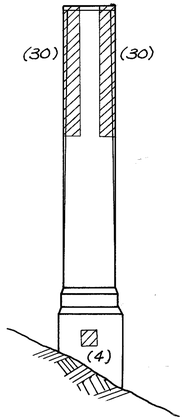

WEST ELEVATION

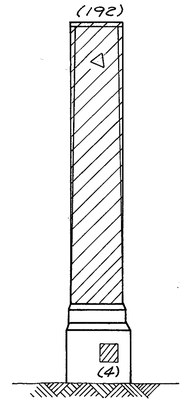

EAST ELEVATION

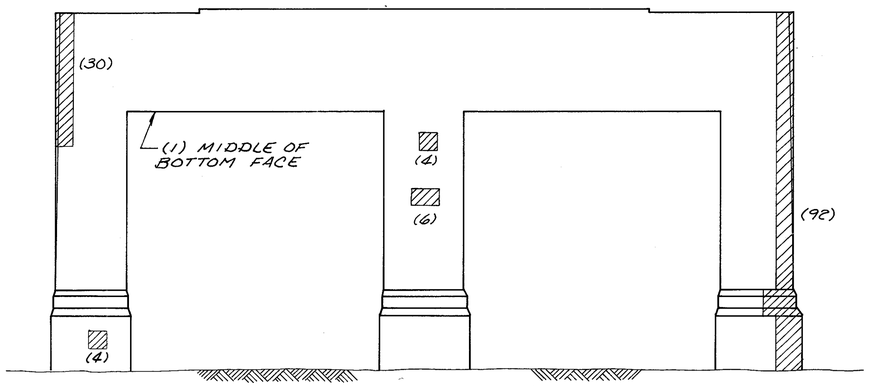

SOUTH ELEVATION

NOTES

(1) REFER TO SHEET 8 73 FOR ADDITIONAL NOTES.

LEGEND

△ INDICATES AREA IN WHICH REINFORCING IS EXPOSED

▨ INDICATES AREA TO BE REPAIRED

TOTAL AREA TO BE REPAIRED PIER Nº 7 ~ 584 SQ. FT.

DALTON • DALTON • NEWPORT

CLEVELAND, OHIO — AKRON, OHIO

17 73

SUBSTRUCTURE REPAIRS PIER 7

NORTH EXPRESSWAY VIADUCT

SUM - 8 - 01 95

DESIGNED	DRAWN	TRACED	CHECKED	REVIEWED	DATE	REVISED
CAF	CAF		RER	JDF	2-76	

F.H.W.A. REG.	STATE	PROJECT	
5	OHIO		

127/204

SUM - 8 - 1.73/1.95

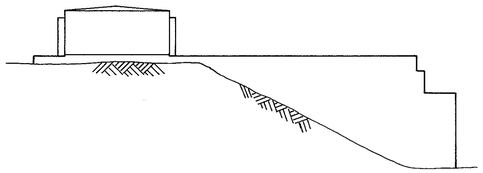

WEST ELEVATION

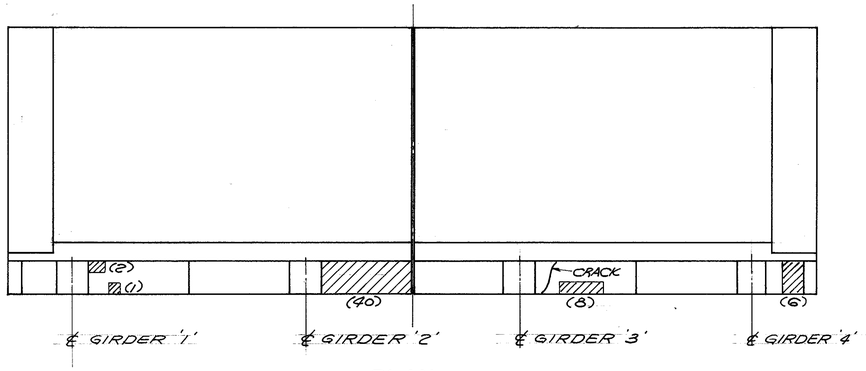

PLAN

NOTES

(1) REFER TO SHEET 8/73 FOR ADDITIONAL NOTES.

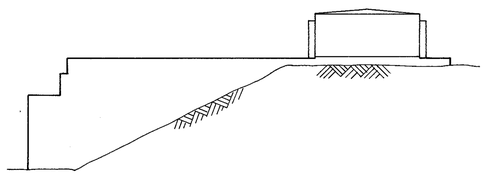

EAST ELEVATION

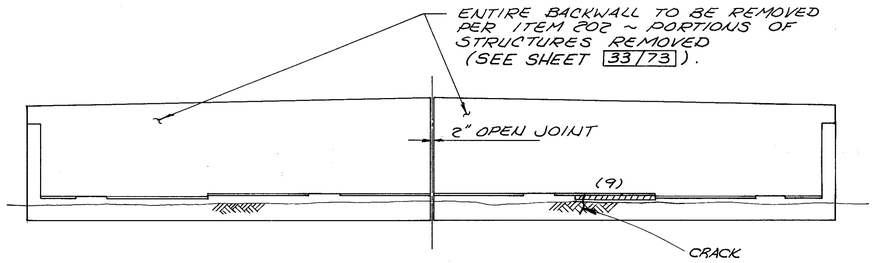

FRONT ELEVATION

LEGEND

INDICATES AREA TO BE REPAIRED

TOTAL AREA TO BE REPAIRED NORTH ABUTMENT ~ 70 SQ. FT.

TOTAL LENGTH OF CRACK REPAIR NORTH ABUTMENT ~ 10 LIN. FT.

DALTON • DALTON • NEWPORT
CLEVELAND, OHIO AKRON, OHIO

18/73

SUBSTRUCTURE REPAIRS
NORTH ABUTMENT
NORTH EXPRESSWAY VIADUCT
SUM - 8 - 01 95

DESIGNED	DRAWN	TRACED	CHECKED	REVIEWED	DATE	REVISED
CAF	CAF		RER	JJP	2-1-86	

F.H.W.A. REG.	STATE	PROJECT	
5	OHIO		

128/204

SUM-8 - 1.73 / 1.95

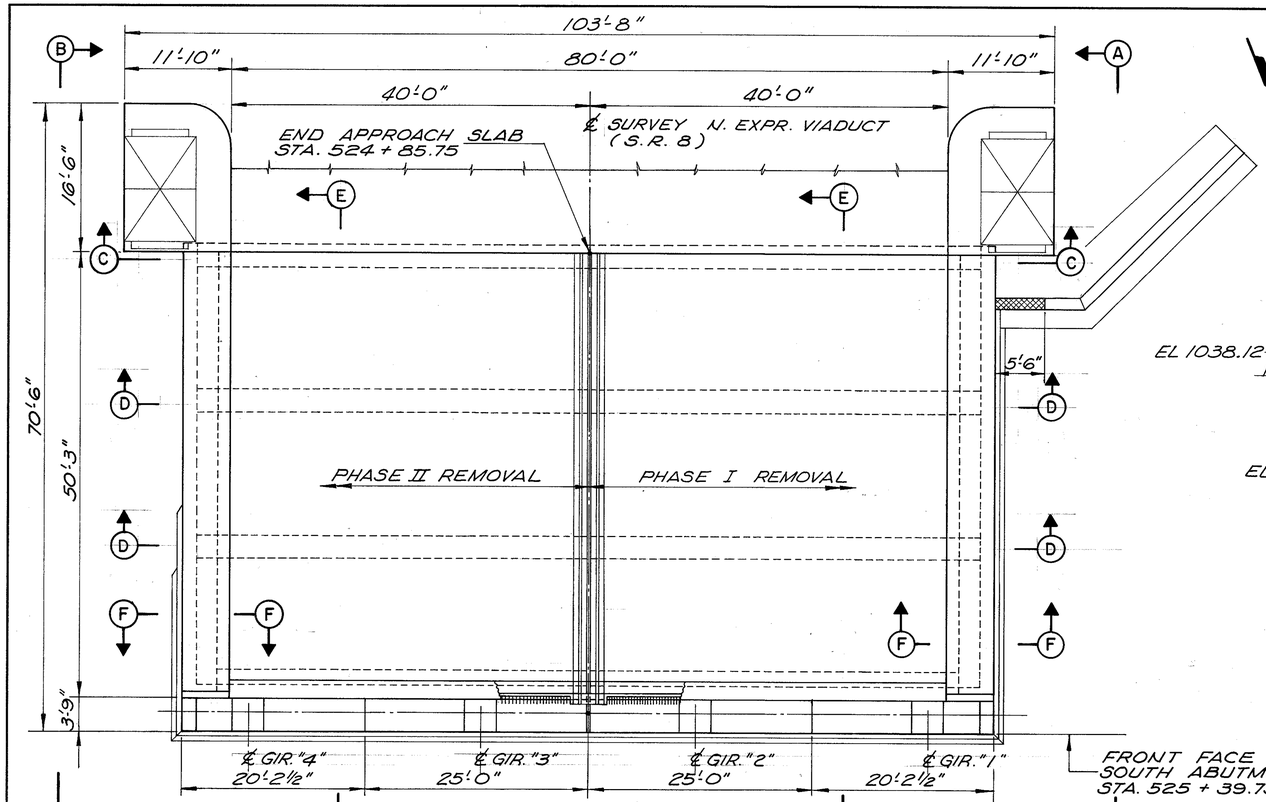

PLAN SOUTH ABUTMENT

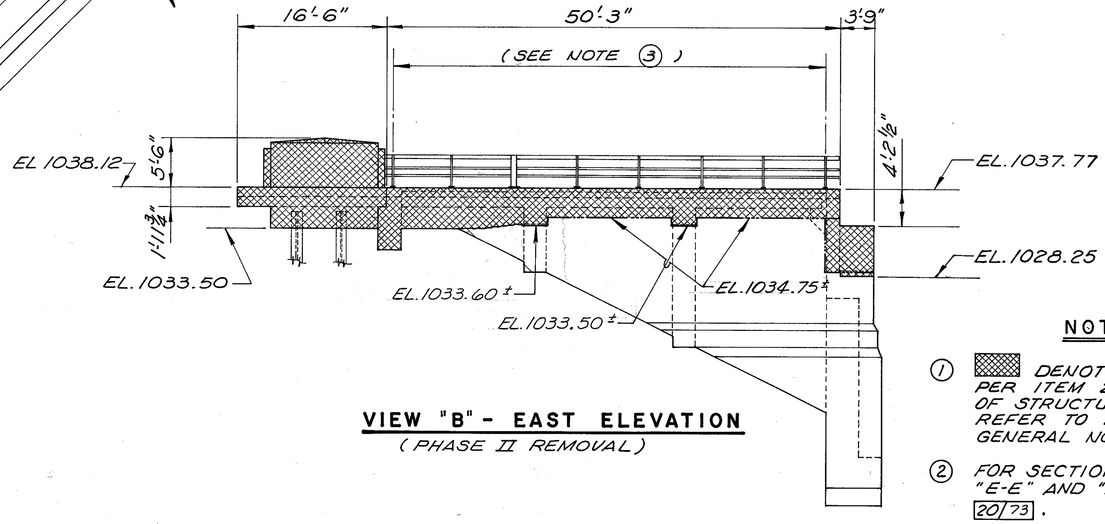

VIEW "B" - EAST ELEVATION
(PHASE II REMOVAL)

NOTES:

① ▨ DENOTES REMOVAL PER ITEM 202, PORTIONS OF STRUCTURES REMOVED. REFER TO THE STRUCTURAL GENERAL NOTES.

② FOR SECTIONS "C-C", "D-D", "E-E" AND "F-F" SEE SHEET 20/73.

③ HANDRAIL AND POST SHALL BE CAREFULLY REMOVED FOR REUSE; SEE STRUCTURAL GENERAL NOTES.

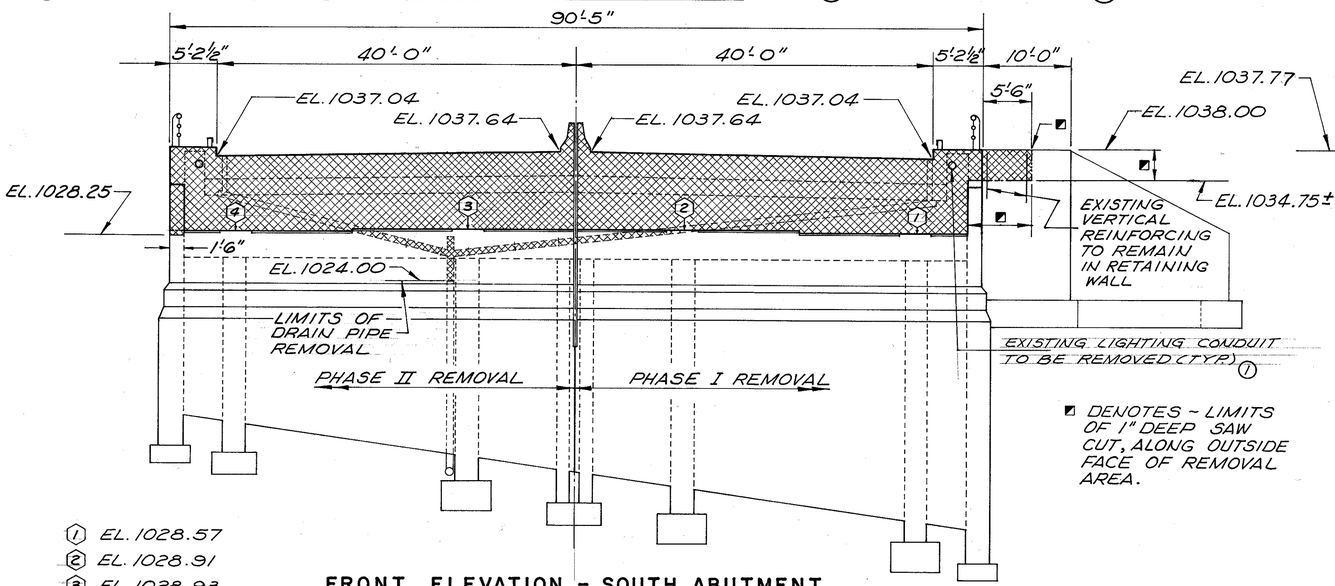

FRONT ELEVATION - SOUTH ABUTMENT

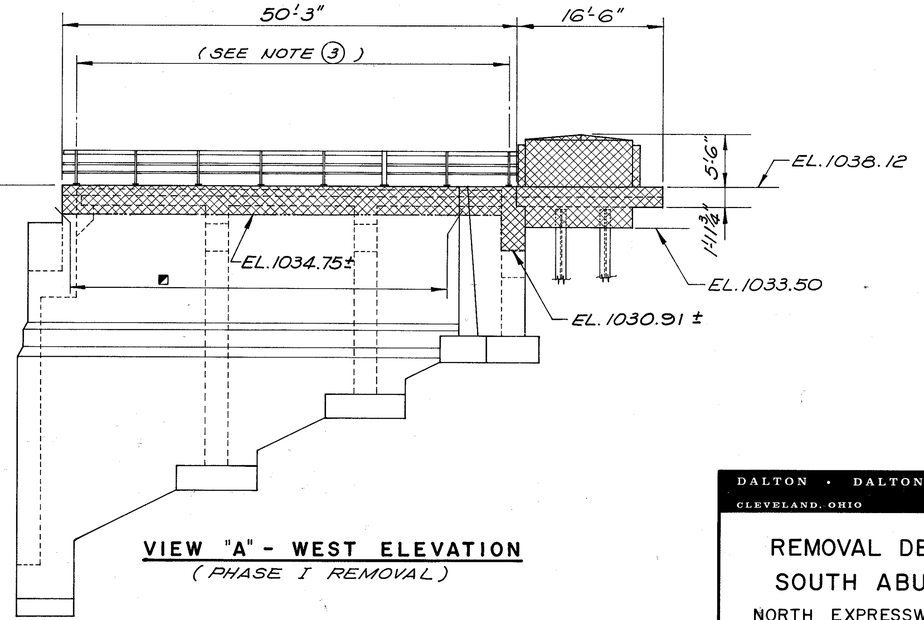

VIEW "A" - WEST ELEVATION
(PHASE I REMOVAL)

DALTON • DALTON • NEWPORT
CLEVELAND, OHIO — AKRON, OHIO

19/73

REMOVAL DETAILS - SOUTH ABUTMENT

NORTH EXPRESSWAY VIADUCT
SUM-8-01 95

DESIGNED	DRAWN	TRACED	CHECKED	REVIEWED	DATE	REVISED
GTC	ALH		JWW	JJP	2-1-86	

F.H.W.A. REG.	STATE	PROJECT	
5	OHIO		

129/204

SUM - 8 - 1.73 / 1.95

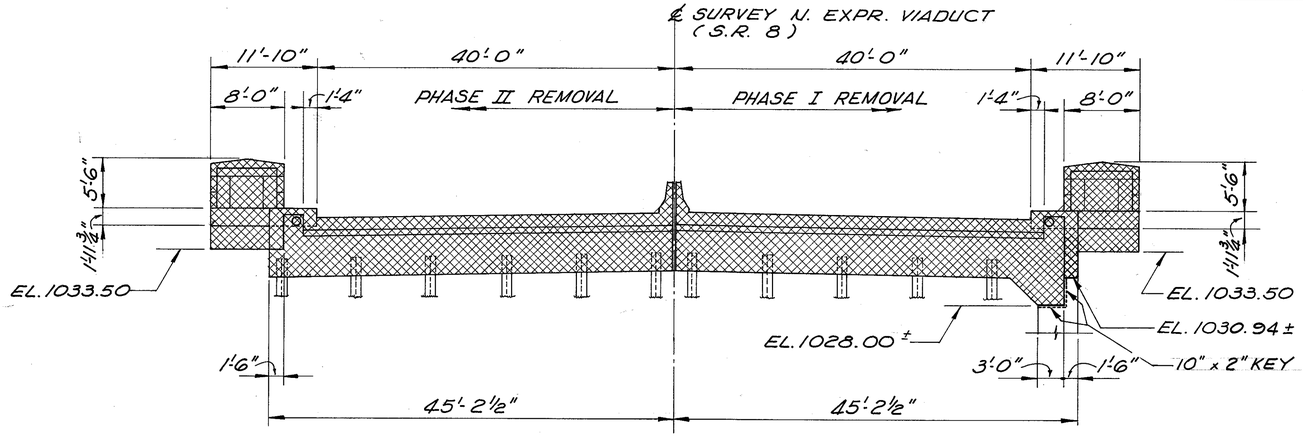

SECTION "C-C"

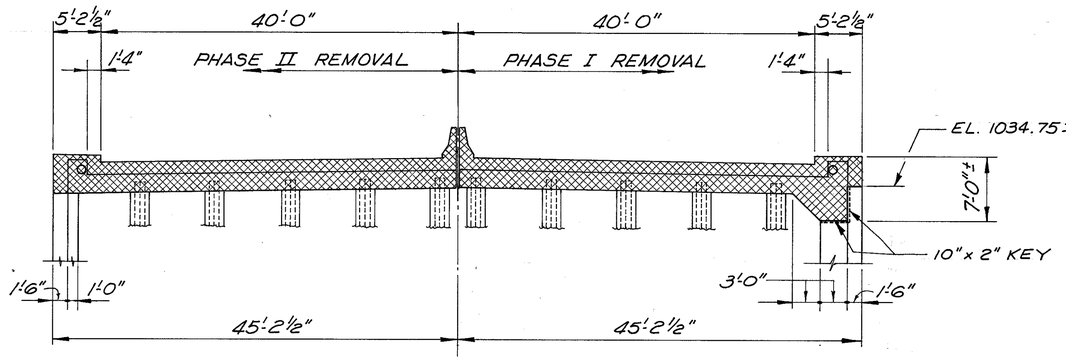

SECTION "D-D"

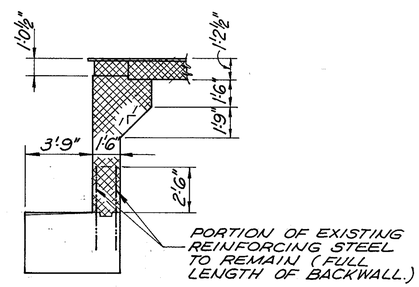

DETAIL "G"

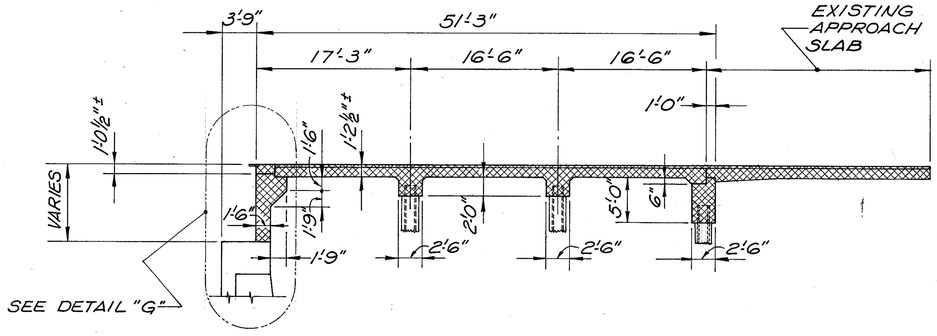

SECTION "E-E"

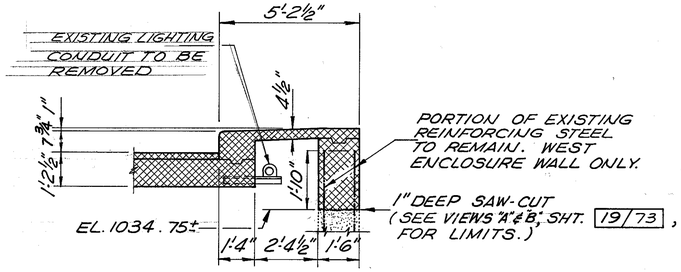

SECTION "F-F"

DALTON • DALTON • NEWPORT
CLEVELAND, OHIO AKRON, OHIO

20/73

REMOVAL DETAILS - SOUTH ABUTMENT

NORTH EXPRESSWAY VIADUCT
SUM - 8 - 01 95

DESIGNED	DRAWN	TRACED	CHECKED	REVIEWED	DATE	REVISED
GTC	ALH	·	JWW	JJP	2-1-85	

F.H.W.A. REG.	STATE	PROJECT	
5	OHIO		

130
204

SUM - 8 - 1.73 / 1.95

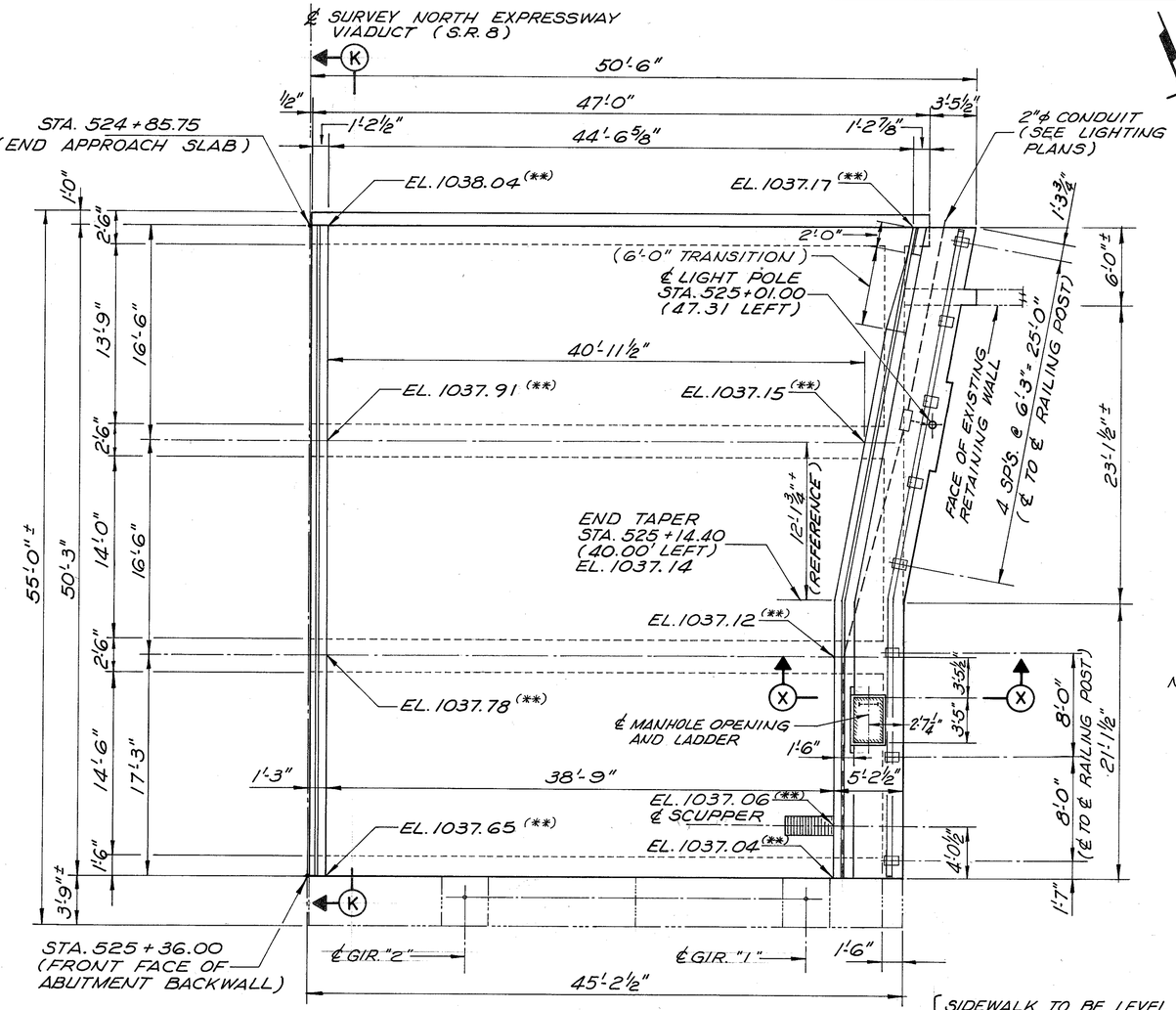

KEY PLAN

(SOUTH ABUTMENT ~ PHASE I)

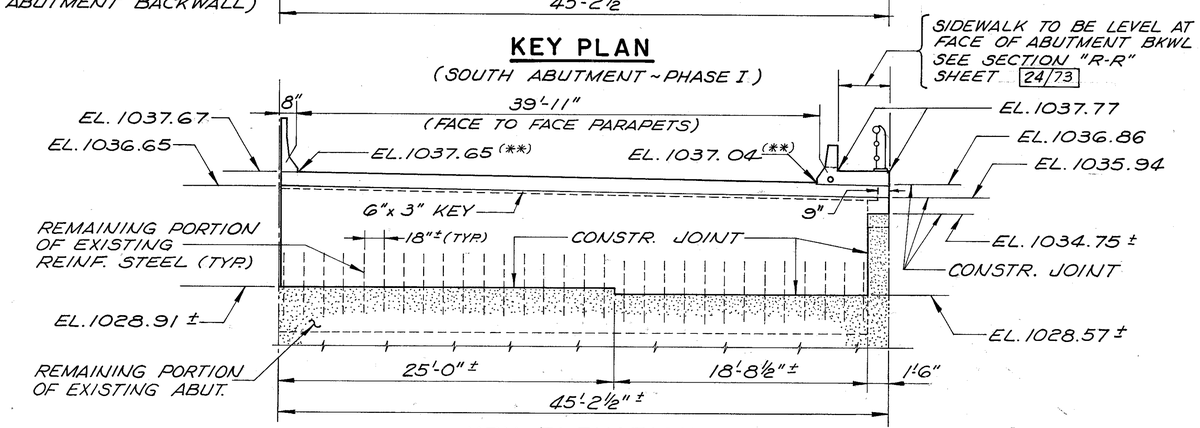

KEY ELEVATION

(SOUTH ABUTMENT ~ PHASE I)

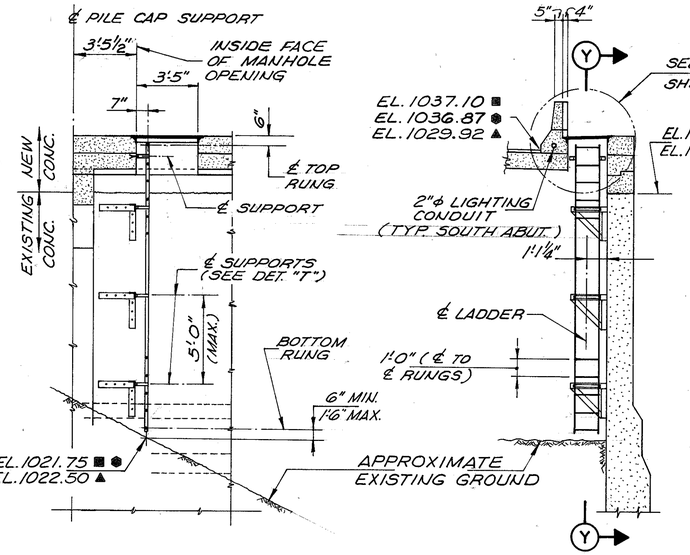

VIEW "Y-Y"

SECTION "X-X"

ELEVATIONS SHOWN ARE AS FOLLOWS:
- ■ SOUTH ABUT. ~ PHASE I
- ● SOUTH ABUT. ~ PHASE II
- ▲ NORTH ABUT. ~ PHASE I

NOTE: CROSS SLOPE OF ABUTMENT SLAB VARIES FROM .020'/FT. @ APPROACH SLAB TO .0156 '/FT. @ ABUTMENT BACKWALL

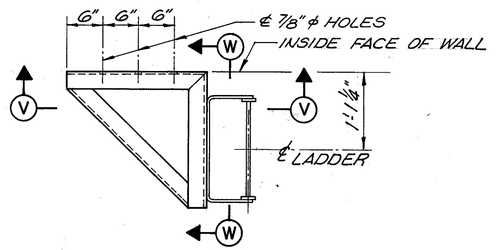

DETAIL "T"

(PLAN ~ LADDER SUPPORT BRACKET)

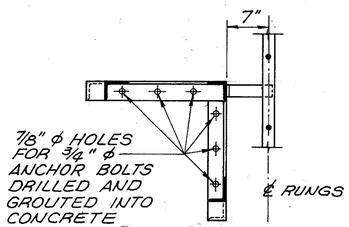

SECTION "V-V"

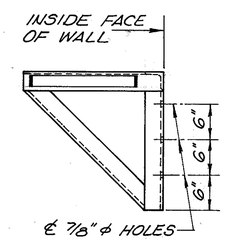

SECTION "W-W"

NOTES:

1. THE PREFIX (11A) SHALL BE ADDED TO ALL REINFORCING BAR MARKS (SOUTH ABUTMENT ~ PHASE I) UNLESS OTHERWISE SHOWN.
2. ELEVATIONS SHOWN THUS (**) ARE GIVEN TO THE TOP OF 1¼" LATEX MODIFIED CONCRETE OVERLAY.
3. THE MANHOLE SHALL BE RECTANGULAR LIGHT DUTY WITH BOLTED GASKET-SEALED HINGED LID AND FLUSH LIFT RINGS, WITH A MINIMUM NET OPENING OF 24"x 41" SUCH AS NEENAH R-6665-1 R.H (AS SHOWN), FLOCKHART TYPE 656-CD #22627 W/HINGES, OR APPROVED EQUAL. MANHOLE TO BE INCLUDED WITH ITEM 511, "CLASS 'S' CONCRETE" FOR PAYMENT.
4. FOR EXPANSION JOINT DETAILS SEE SHEETS 57/73 ~ 58/73.
5. FOR ADDITIONAL DETAILS AND SECTIONS OF ABUTMENT BACKWALL, ENCLOSURE WALL, PILE CAPS AND END SUPPORT BEAM SEE SHEET 22/73.
6. FOR ADDITIONAL DETAIL AND SECTION THRU ABUTMENT SLAB SEE SHEET 23/73.
7. FOR ADDITIONAL DETAIL OF MEDIAN BARRIER (VIEW K-K), SIDEWALK WITH SAFETY BARRIER AND LIGHT SUPPORT DETAIL SEE SHEET 24/73.
8. FOR ADDITIONAL RAILING DETAILS SEE SHEET 55/73.
9. FIELD BENDING OR CUTTING OF REINFORCING BARS SHALL BE INCLUDED WITH ITEM 509, REINFORCING STEEL FOR PAYMENT.
10. MIN. LAP REQUIRED:
    - Nº 4 BARS - 1'-4"
    - Nº 5 BARS - 1'-8"
    - Nº 6 BARS - 2'-0"
    - Nº 7 BARS - 2'-7"
11. FOR DRAINAGE DETAILS SEE SHEETS 61/73 - 62/73.

FOR ADDITIONAL NOTES SEE "STRUCTURAL GENERAL NOTES" SHEETS 3/73 TO 40/73.

DALTON • DALTON • NEWPORT
CLEVELAND, OHIO AKRON, OHIO

21/73

SOUTH ABUTMENT DETAILS PHASE I

NORTH EXPRESSWAY VIADUCT

SUM - 8 - 01 95

DESIGNED	DRAWN	TRACED	CHECKED	REVIEWED	DATE	REVISED
GTC	ALH		JWN	JAP	2-1-95	

F.H.W.A. REG.	STATE	PROJECT	
5	OHIO		

131/204

SUM - 8 - 1.73 / 1.95

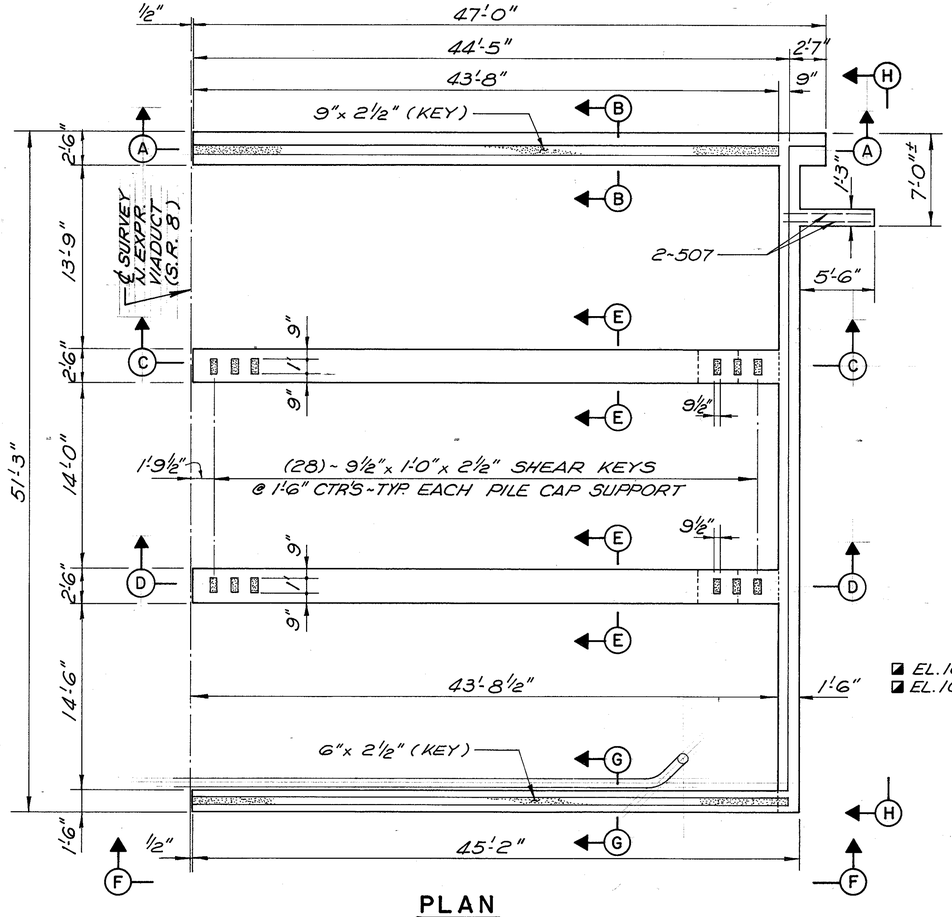

PLAN

(SOUTH ABUTMENT PHASE I CONSTRUCTION, ABUTMENT SLAB NOT SHOWN.)
SEE SHEET 23/73 FOR ABUTMENT SLAB.

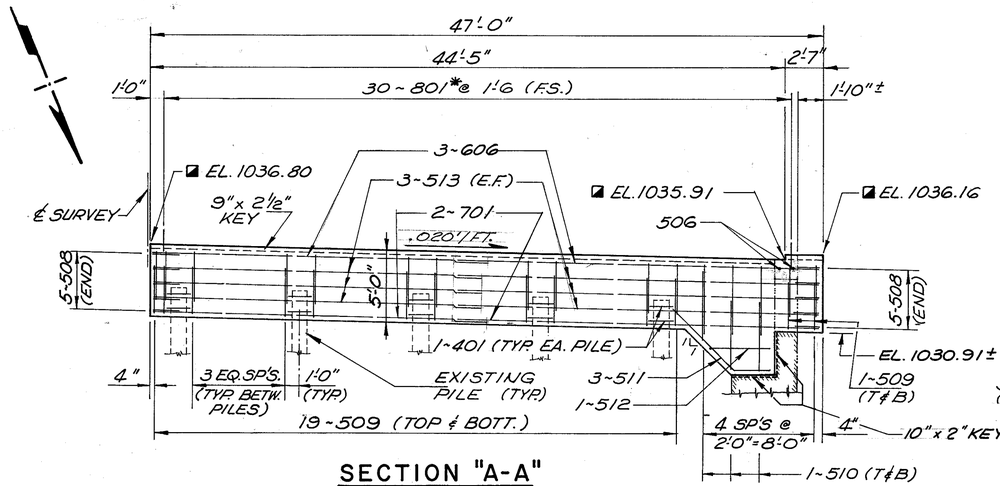

SECTION "A-A"

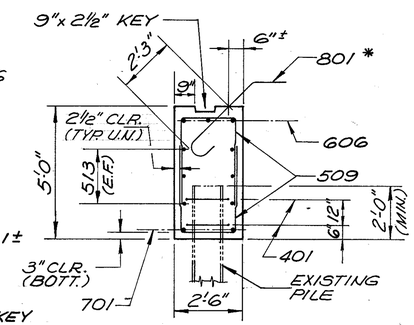

SECTION "B-B"

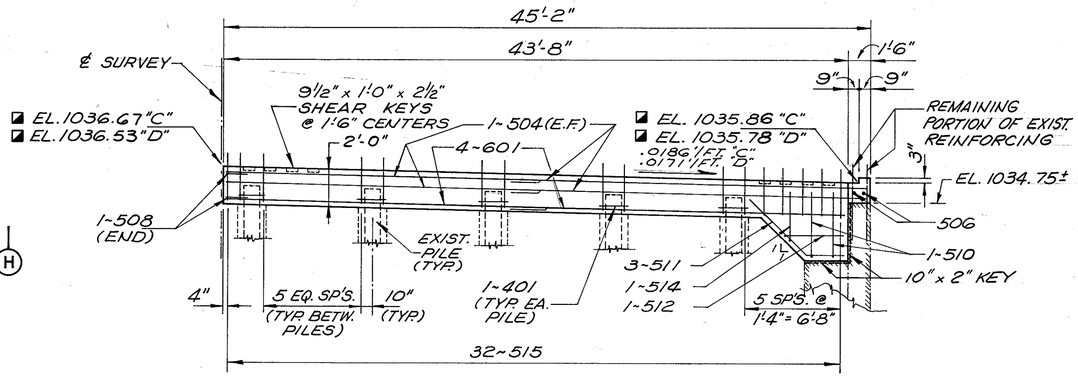

SECTION "C-C"
SECTION "D-D"

(AS SHOWN ≠ NOTED)

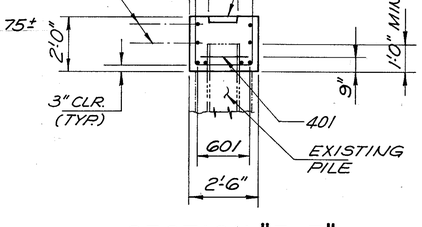

SECTION "E-E"

■ - DENOTES ELEVATIONS AT ℄ OF PILE CAPS.

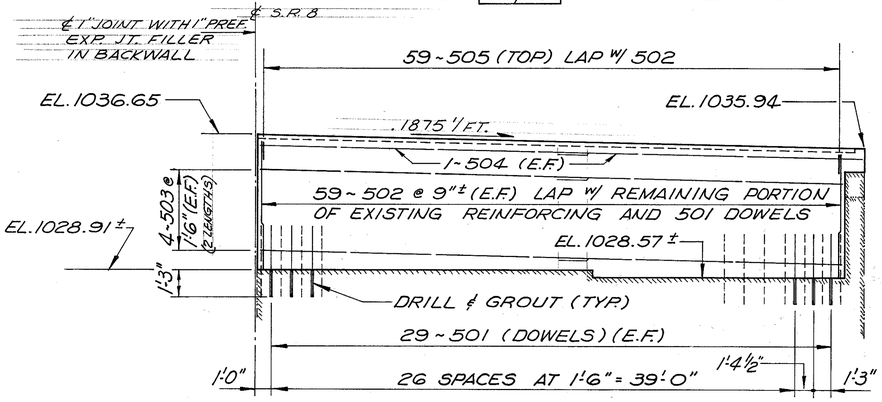

VIEW "F-F"

(ABUTMENT BACKWALL)

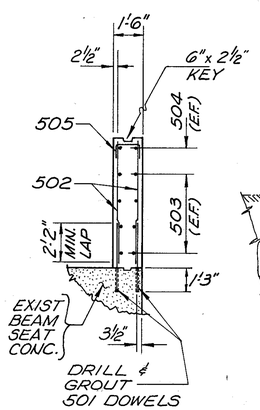

SECTION "G-G"

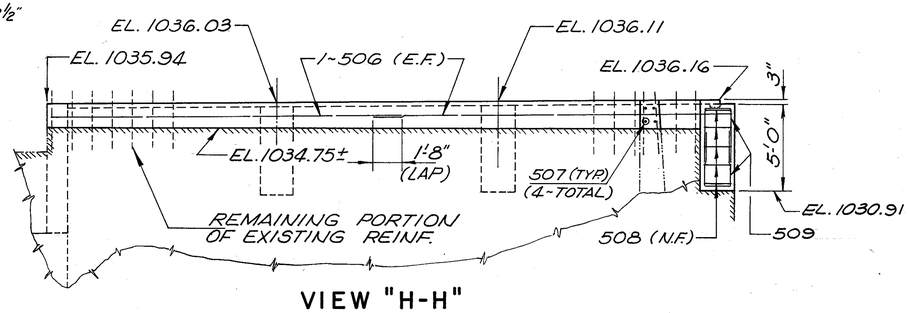

VIEW "H-H"

(ALONG EXISTING WEST ENCLOSURE WALL)

NOTES

1. FOR SOUTH ABUTMENT PHASE I CONSTRUCTION NOTES, SEE SHEET 21/73.
2. ALL CONCRETE ON THIS SHEET TO BE CLASS "C".

DALTON • DALTON • NEWPORT
CLEVELAND, OHIO — AKRON, OHIO

22/73

SOUTH ABUTMENT DETAILS
PHASE I
NORTH EXPRESSWAY VIADUCT
SUM - 8 - 01 95

DESIGNED	DRAWN	TRACED	CHECKED	REVIEWED	DATE	REVISED
GTC	ALH		JWW	JDD	2-1-85	

F.H.W.A. REG.	STATE	PROJECT	
5	OHIO		

132/204

SUM - 8 - 1.73 / 1.95

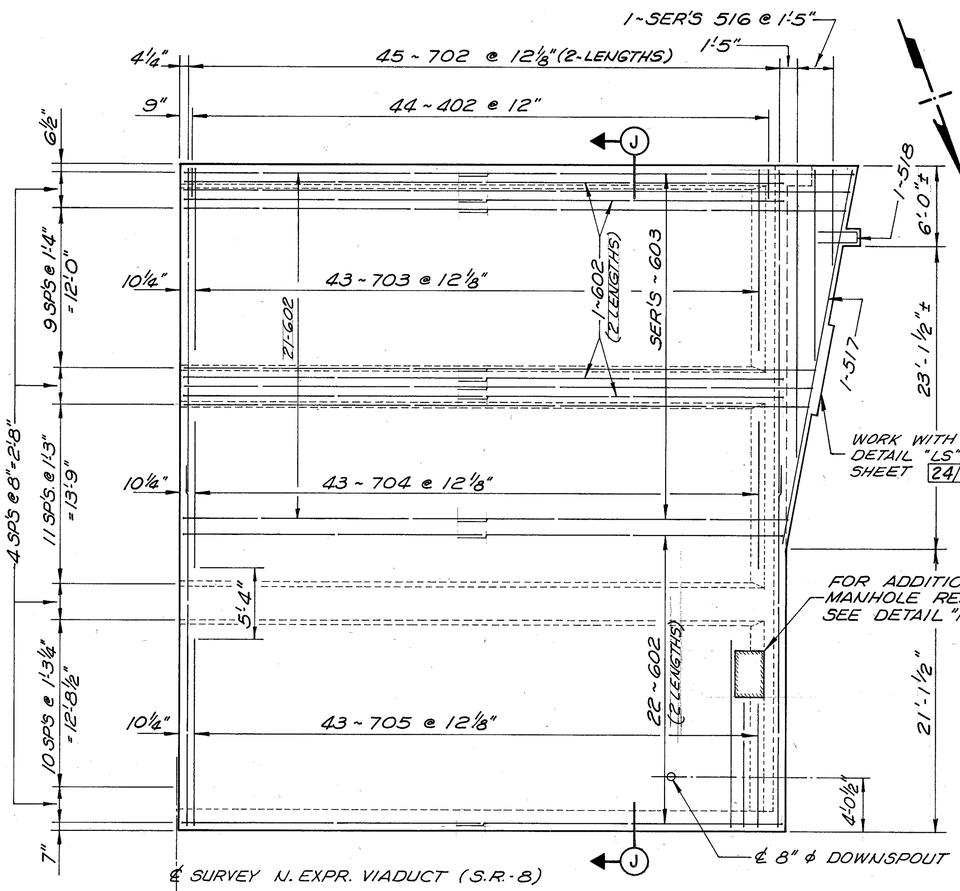

ABUTMENT SLAB PLAN

(SOUTH ABUTMENT ~ PHASE I ~ REINFORCING, BOTTOM OF SLAB)

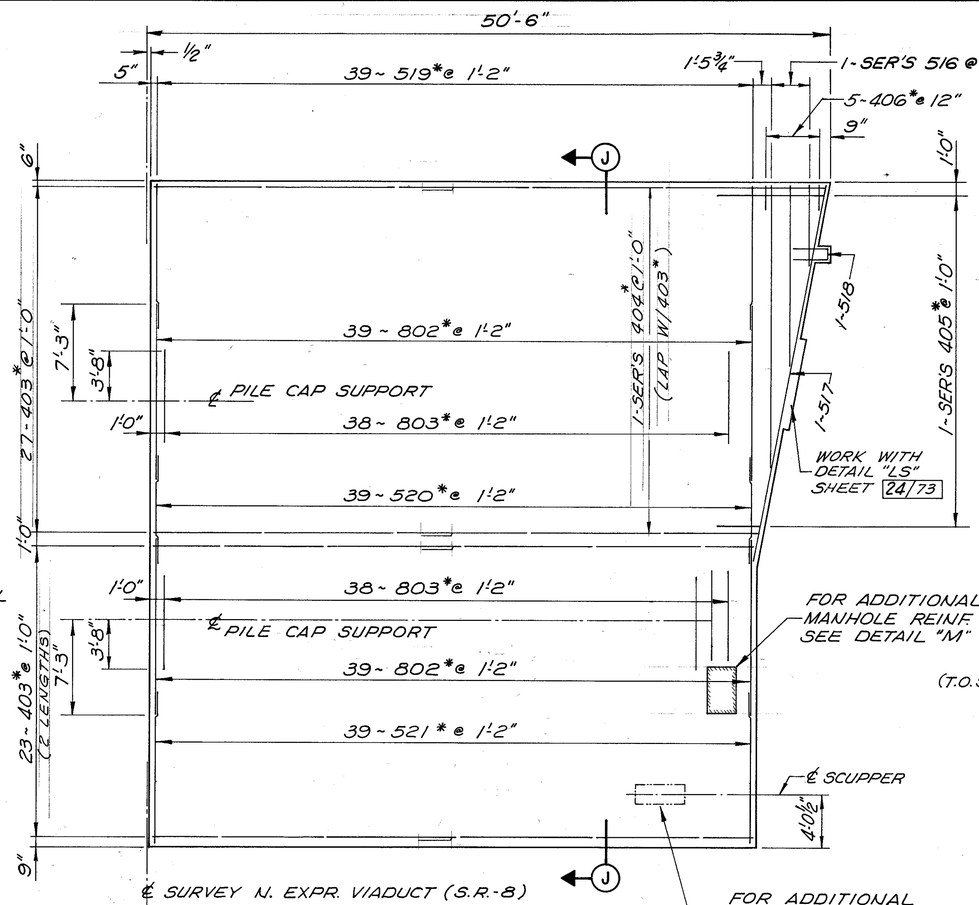

ABUTMENT SLAB PLAN

(SOUTH ABUTMENT ~ PHASE I ~ REINFORCING, TOP OF SLAB)

FOR ADDITIONAL SCUPPER REINF. SEE DETAIL "S"

ABBREVIATIONS:
T.O.S. - TOP OF SLAB
B.O.S. - BOTTOM OF SLAB
T. - TOP
B. - BOTTOM

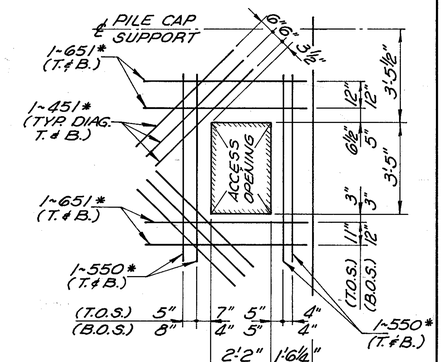

DETAIL "M"

(ADDITIONAL MANHOLE REINF.)

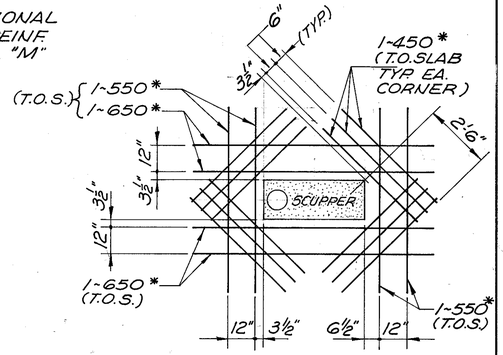

DETAIL "S"

(ADDITIONAL SCUPPER REINF.)

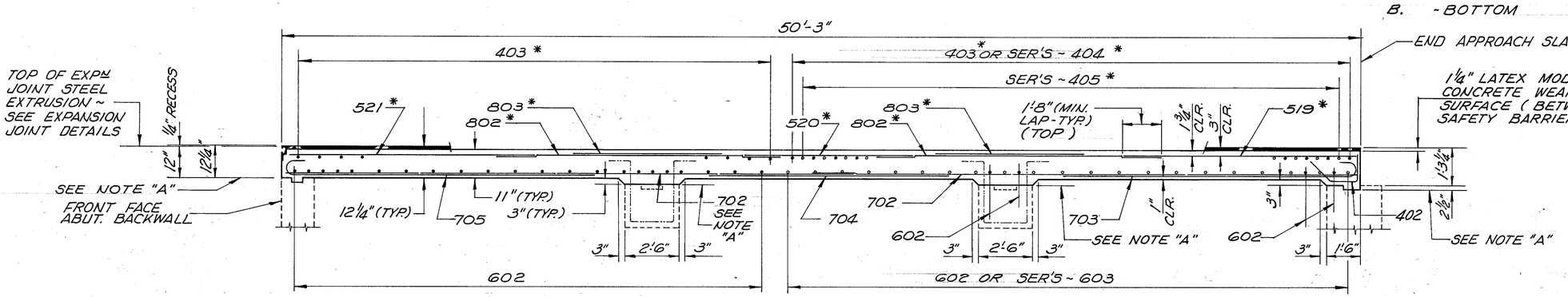

SECTION "J-J"

NOTE "A" ~ CONCRETE ABOVE THIS POINT SHALL BE INCLUDED WITH ITEM 511 ~ CLASS "S" CONCRETE, FOR PAYMENT.

NOTES:

1. FOR ADDITIONAL REINFORCING TO BE PLACED IN THE SLAB, SEE SHEET 24/73.
2. FOR ADDITIONAL NOTES, AND MINIMUM BAR LAP LENGTHS, SEE SHEET 21/73.

* 3. REINFORCING BARS MARKED THUS (*) ARE TO BE EPOXY COATED.

DALTON · DALTON · NEWPORT
CLEVELAND, OHIO — AKRON, OHIO

23/73

SOUTH ABUTMENT DETAILS PHASE I

NORTH EXPRESSWAY VIADUCT

SUM - 8 - 01 95

DESIGNED	DRAWN	TRACED	CHECKED	REVIEWED	DATE	REVISED
GTC	AL H		JWW	JGP	2-1-85	

F.H.W.A. REG.	STATE	PROJECT	
5	OHIO		

133
204

SUM - 8 - 1.73 / 1.95

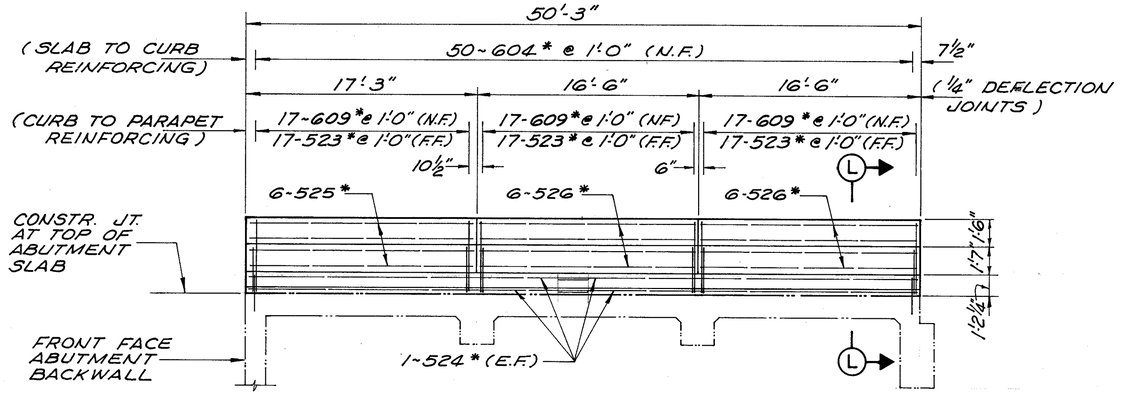

VIEW "K-K"
(SHOWING MEDIAN REINF.)

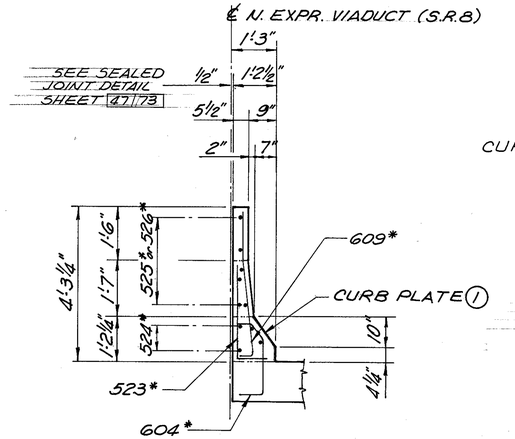

SECTION "L-L"
(TYPICAL MEDIAN SECTION)

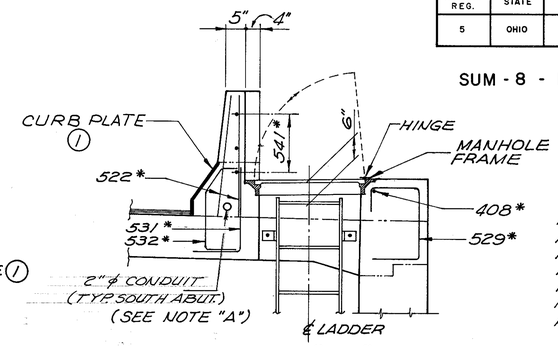

DETAIL "AO"
(TYPICAL ACCESS OPENING)

NOTE "A"
DETAIL "AO" SHOWN FOR THE SOUTH ABUT. PHASE 1 CONSTR. ACCESS OPENINGS FOR SOUTH ABUT. - PHASE II & NORTH ABUT. - PHASE 1, SIMILAR

ABBREVIATIONS:
T.O.S.W. - TOP OF SIDEWALK
N. F. - NEAR FACE
F. F. - FAR FACE
E. F. - EACH FACE

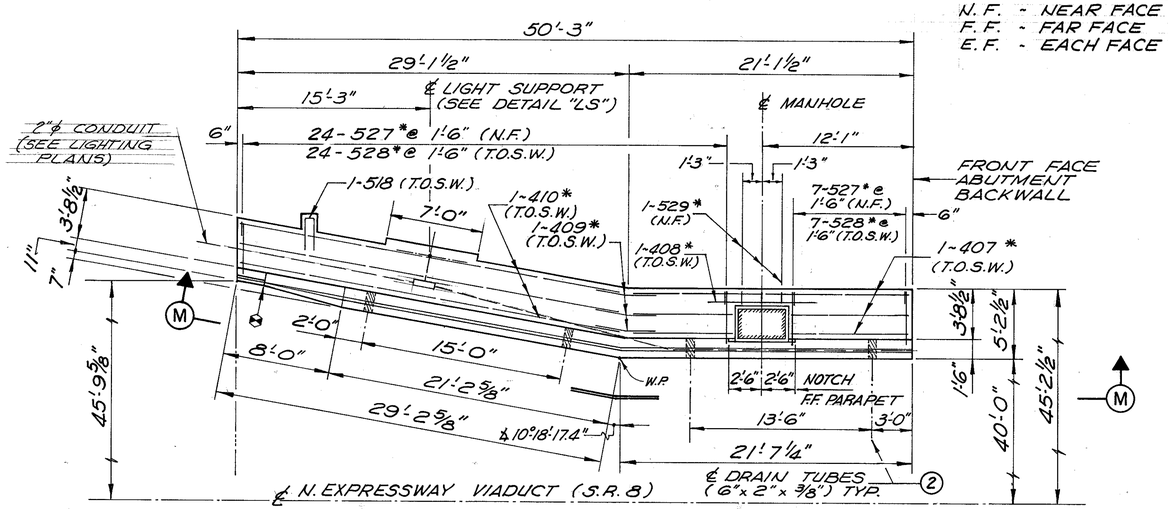

ABUTMENT SIDEWALK PLAN
(WEST SIDEWALK)

DENOTES BEGIN ⅜" BENT CURB PLATE.

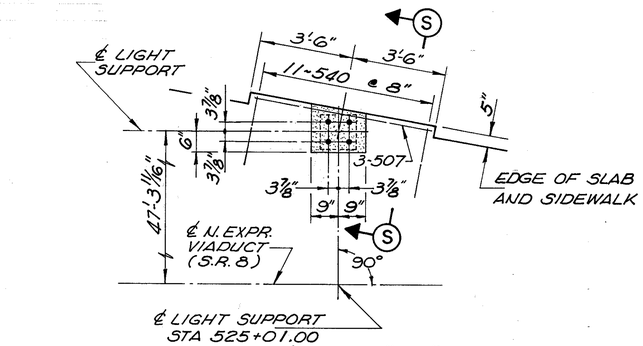

DETAIL "LS"
(PARTIAL PLAN AT LIGHT SUPPORT)

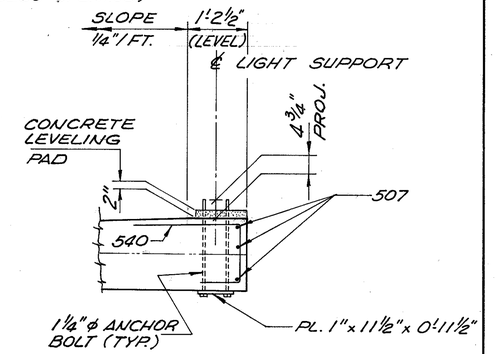

SECTION "S-S"

LEGEND (Sect. "R-R")

■ 4¼" AT STA 525+36.00 (FACE OF BACKWALL)
4⅞" AT STA 525+26.00 TO STA 524+85.75

▲ CROSS SLOPE VARIES FROM LEVEL AT FACE OF ABUTMENT BACKWALL STA 525+36.00 TO ½"/FT AT STA. 525+26.00.

NOTES:

1. FOR DETAIL OF ⅜" BENT CURB PLATES ON MEDIAN AND SIDEWALK BARRIERS SEE DETAIL "A", SHEET 54/73.
2. FOR DETAIL OF 6"x 2"x ⅜" DRAIN TUBES THRU SIDEWALK BARRIER SEE DETAIL "H", SHEET 47/73
3. FOR ADDITIONAL NOTES SEE SHEET 21/73
4. FOR LOCATION OF VIEW "K-K" SEE SHEET 21/73
5. FOR RAILING AND POST ANCHORAGE DETAILS, SEE SHEET 55/73.

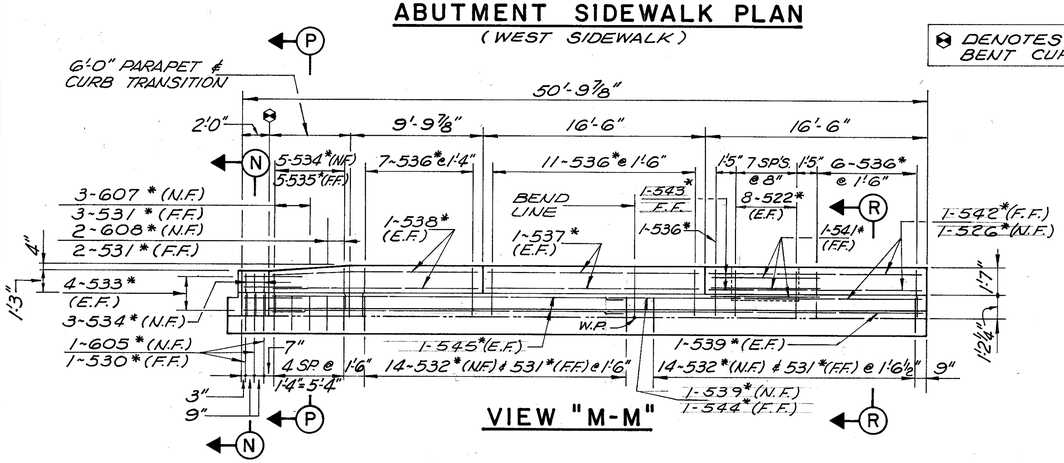

VIEW "M-M"

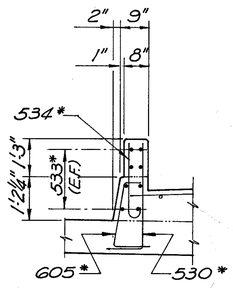

SECTION "N-N"

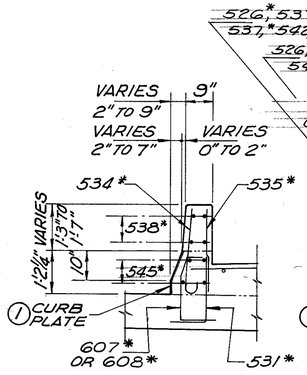

SECTION "P-P"

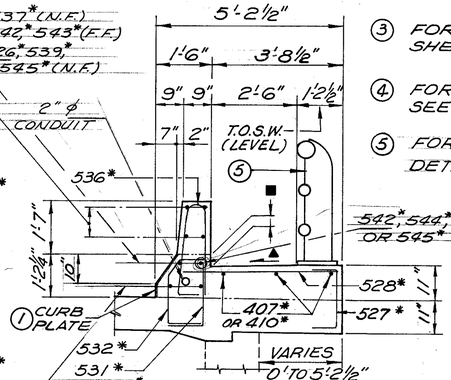

SECTION "R-R"

DALTON • DALTON • NEWPORT
CLEVELAND, OHIO AKRON, OHIO
24/73

SOUTH ABUTMENT DETAILS PHASE I

NORTH EXPRESSWAY VIADUCT

SUM -8 - 01 95

DESIGNED	DRAWN	TRACED	CHECKED	REVIEWED	DATE	REVISED
GTC	ALH		JWH	gdp	2-1-85	

F.H.W.A. REG.	STATE	PROJECT	
5	OHIO		

134
204

SUM - 8 - 1.73 / 1.95

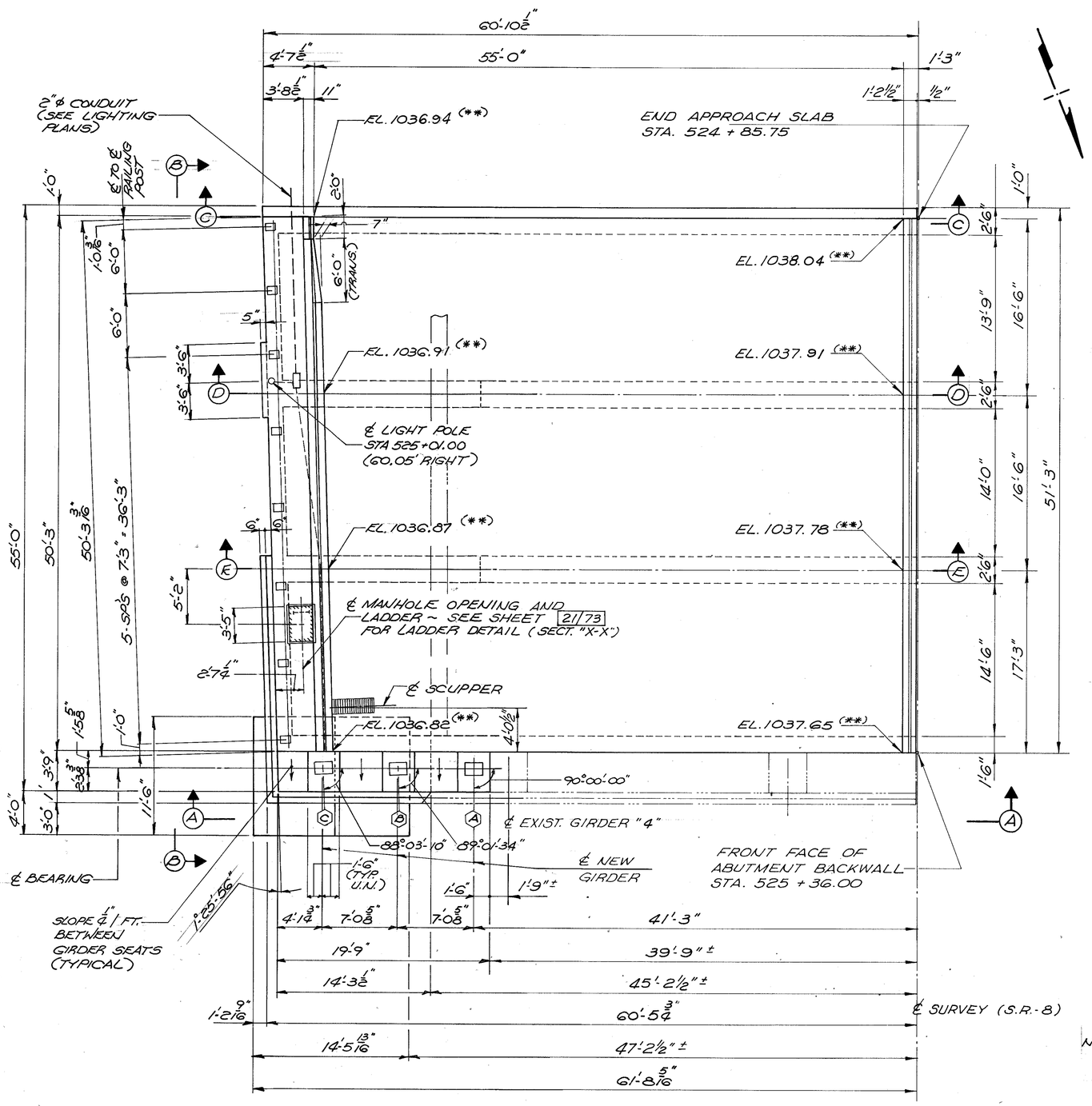

KEY PLAN

SOUTH ABUTMENT ~ PHASE II CONSTRUCTION

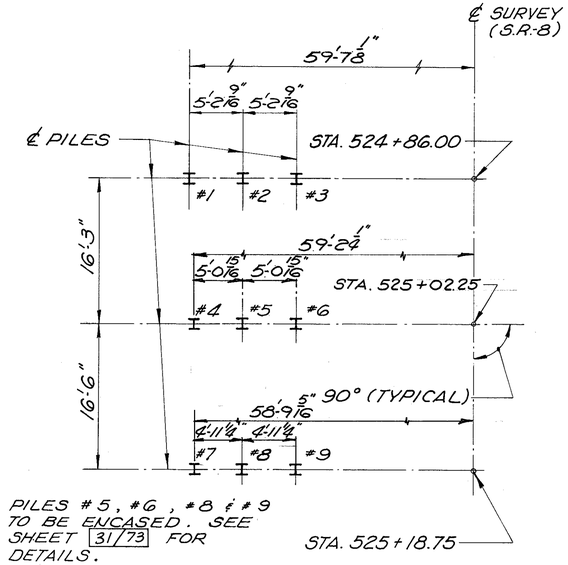

PILING PLAN

SOUTH ABUTMENT PILING TABLE			
PILE Nº	PILE TYPE	CUT-OFF ELEV.	EST. LENGTH
1 ~ 3	HP 12x53	EL. 1032.82	23'
4	do	EL. 1027.00	17'
5 & 6	do	EL. 1034.76	28'
7	do	EL. 1020.00	12'
8 & 9	HP 12x53	EL. 1034.70	30'

PILING NOTES

Ⓐ PILES SHALL BE DRIVEN TO REFUSAL ON BEDROCK. REFUSAL SHALL BE CONSIDERED AS ATTAINED BY PENETRATING SOFT BEDROCK WITH A MINIMUM RESISTANCE OF 20 BLOWS PER INCH, OR REFUSAL SHALL BE CONSIDERED AS ATTAINED AFTER THE PILE HAS CONTACTED HARD BEDROCK AND THE PILE HAS THEN RECEIVED AT LEAST 20 BLOWS.

Ⓑ THE DESIGN LOAD IS (50.2) TONS PER PILE FOR THE ABUTMENT PILES.

NOTE: CROSS SLOPE OF ABUTMENT SLAB VARIES FROM .020'/FT. @ APPROACH SLAB TO .0156'/FT. @ ABUTMENT BACKWALL

NOTES:

1. THE PREFIX (21A) SHALL BE ADDED TO ALL REINFORCING BAR MARKS (SOUTH ABUTMENT PHASE II) UNLESS OTHERWISE SHOWN.
2. ELEVATIONS SHOWN THUS (**) ARE GIVEN TO THE TOP OF 1¼" LATEX MODIFIED CONCRETE OVERLAY.
3. SEE NOTE (3) SHEET 21/73 FOR APPROVED MANHOLE TYPES. MANHOLE TO BE INCLUDED WITH ITEM, 511 CLASS "S" CONCRETE FOR PAYMENT.
4. FOR DRAINAGE DETAILS SEE SHEETS 61/73 ~ 62/73
5. FOR EXPANSION JOINT DETAILS SEE SHEETS 57/73 ~ 58/73
6. FOR ADDITIONAL RAILING DETAILS SEE SHEET 55/73.
7. FIELD BENDING OR CUTTING OF REINFORCING BARS SHALL BE INCLUDED WITH ITEM 509, REINFORCING STEEL, FOR PAYMENT.
8. FOR ADDITIONAL DETAIL OF ABUTMENT SLAB AND SECTION LOCATIONS SEE SHEET 30/73.
9. FOR VIEW "A-A" SEE SHEET 26/73.
10. FOR VIEW "B-B" SEE SHEET 27/73.
11. FOR VIEWS "C-C", "D-D" AND "E-E" SEE SHEET 29/73.

MIN. LAP REQ'D.

Nº 4 BARS = 1'-4"
Nº 5 BARS = 1'-8"
Nº 6 BARS = 2'-0"
Nº 7 BARS = 2'-6"

DALTON • DALTON • NEWPORT
CLEVELAND, OHIO — AKRON, OHIO

25/73

SOUTH ABUTMENT DETAILS PHASE II

NORTH EXPRESSWAY VIADUCT
SUM -8 - 01 95

DESIGNED	DRAWN	TRACED	CHECKED	REVIEWED	DATE	REVISED
GTC	ALH		JWW	JGP	2-1-95	

F.H.W.A. REG.	STATE	PROJECT	
5	OHIO		

135 / 204

SUM-8 - 1.73 / 1.95

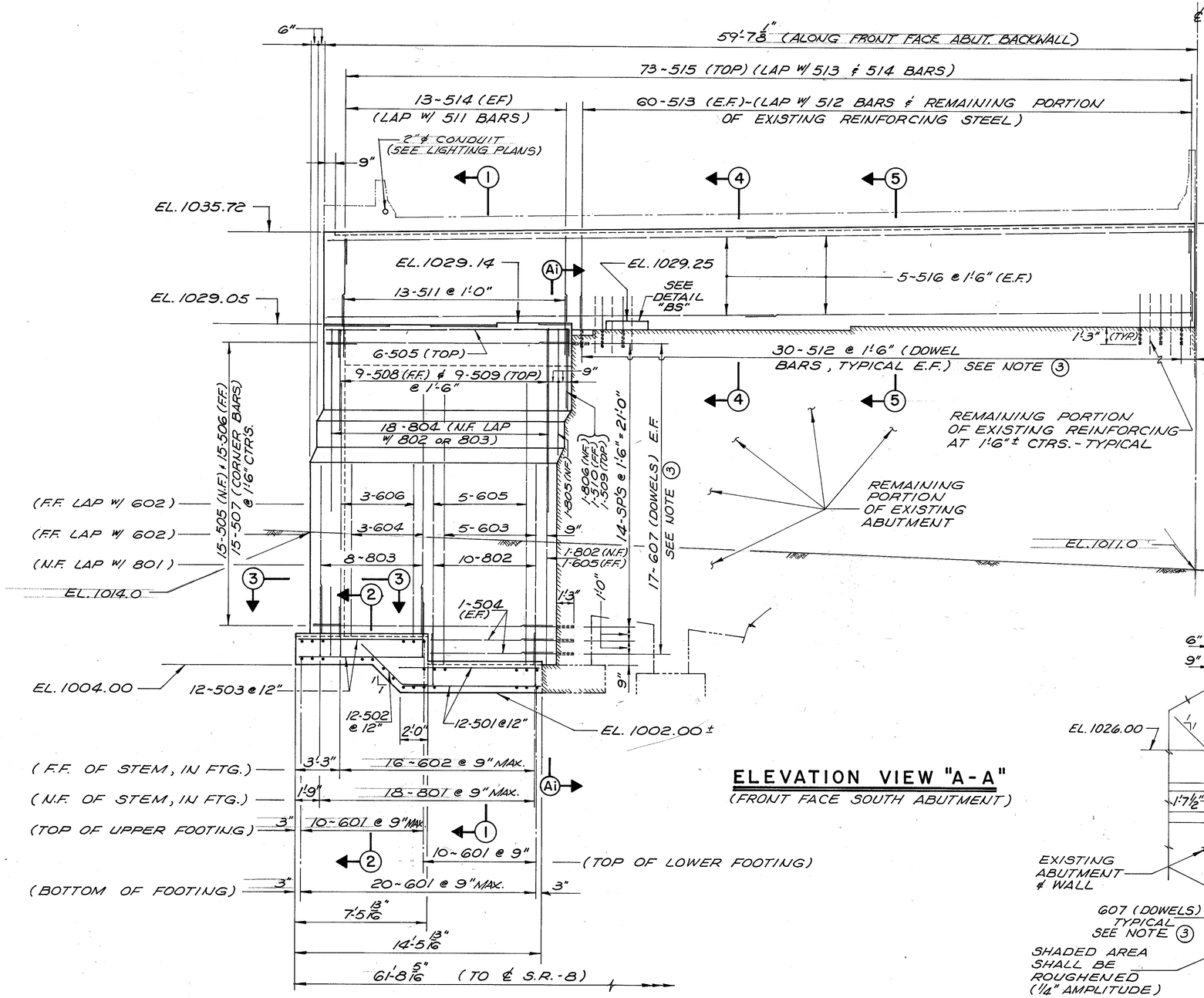

ELEVATION VIEW "A-A"

(FRONT FACE SOUTH ABUTMENT)

NOTES:

1. FOR KEY PLAN, LOCATION OF VIEW "A-A" AND ADDITIONAL NOTES SEE SHEET 25/73.
2. FOR SECTION "1-1" THRU SECTION "5-5" SEE SHEET 28/73.
3. DOWEL BARS SHALL BE DRILLED AND GROUTED IN ACCORDANCE WITH CONSTRUCTION AND MATERIAL SPECIFICATIONS ~ SECTION 510 IN THE EXISTING ABUTMENT AS SHOWN.

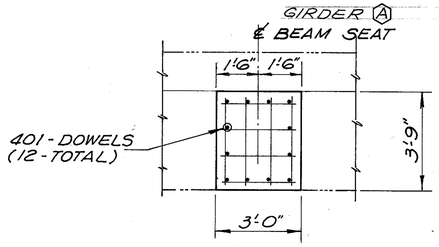

PLAN

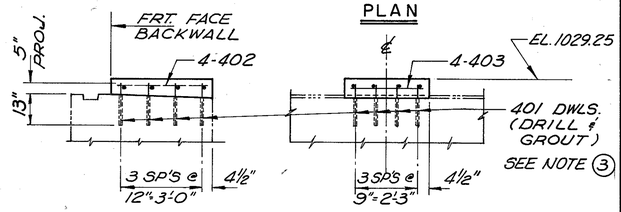

END ELEVATION

FRONT ELEVATION

DETAIL "BS"

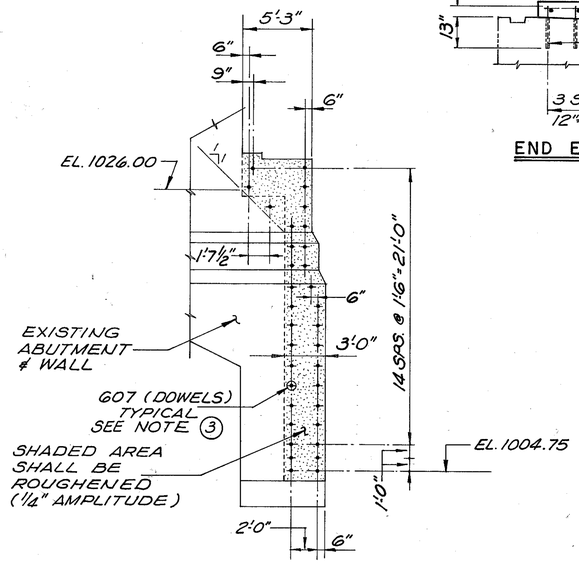

VIEW "Ai-Ai"

(SHOWING SURFACE OF EXISTING CONCRETE TREATMENT AND LOCATION OF 607 DOWEL HOLES)

DALTON • DALTON • NEWPORT

CLEVELAND, OHIO — AKRON, OHIO

26/73

SOUTH ABUTMENT DETAILS PHASE II

NORTH EXPRESSWAY VIADUCT

SUM-8-01 95

DESIGNED	DRAWN	TRACED	CHECKED	REVIEWED	DATE	REVISED
GTC	ALH		JWW	JAP	2-1-85	

F.H.W.A. REG.	STATE	PROJECT	
5	OHIO		

136/204

SUM-8 - 1.73 / 1.95

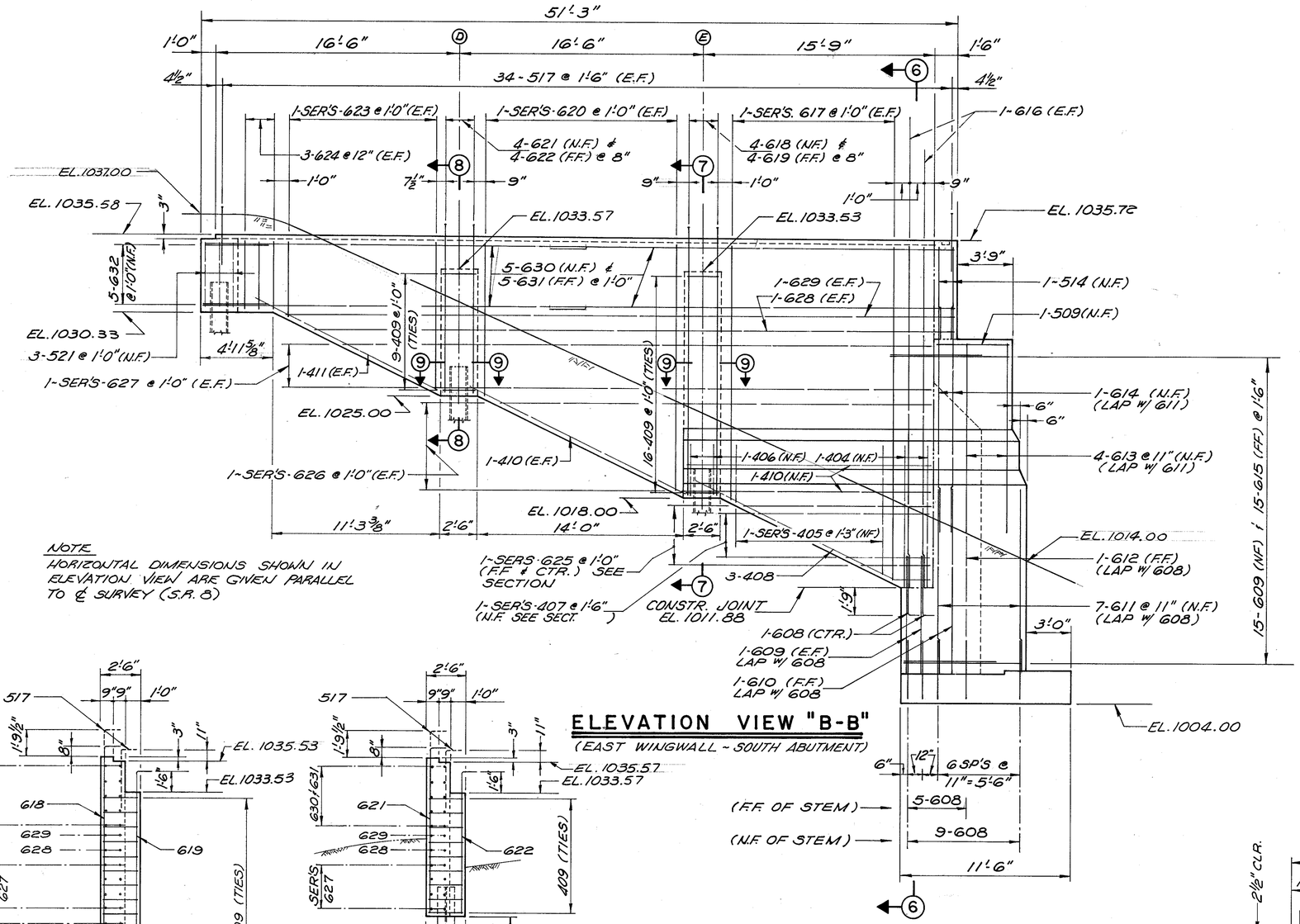

NOTE
HORIZONTAL DIMENSIONS SHOWN IN ELEVATION VIEW ARE GIVEN PARALLEL TO ℄ SURVEY (S.R. 8)

ELEVATION VIEW "B-B"
(EAST WINGWALL - SOUTH ABUTMENT)

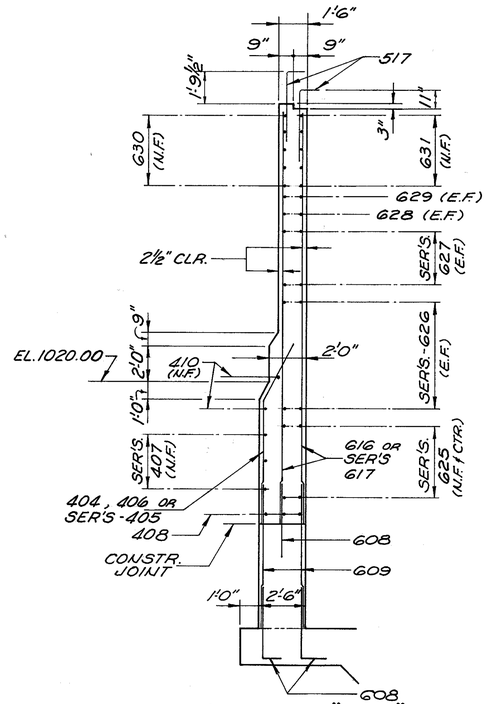

SECTION "6-6"
(TYPICAL WALL SECTION)

NOTE:
FOR KEY PLAN, LOCATION OF VIEW "B-B" AND ADDITIONAL NOTES SEE SHEET 25/73.

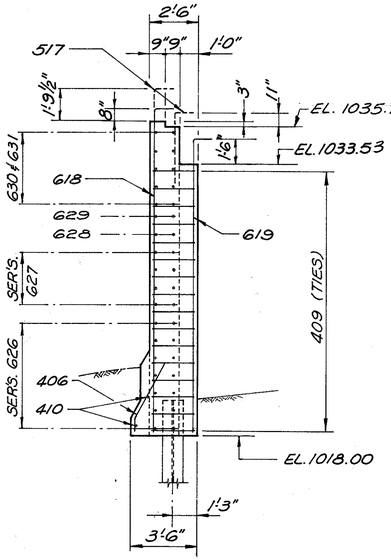

SECTION "7-7"
(COLUMN SUPPORT "E")

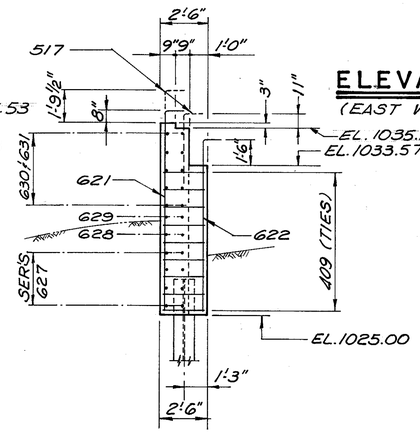

SECTION "8-8"
(COLUMN SUPPORT "D")

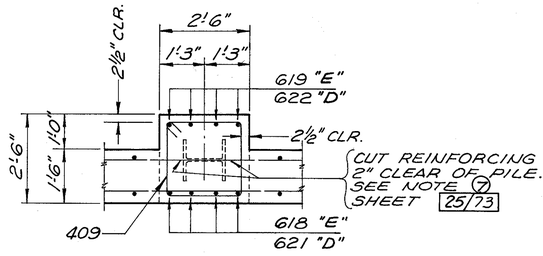

SECTION "9-9"
(TYPICAL COLUMN SECTION, AS NOTED)

DALTON • DALTON • NEWPORT
CLEVELAND, OHIO — AKRON, OHIO

27/73

SOUTH ABUTMENT DETAILS
PHASE II
NORTH EXPRESSWAY VIADUCT
SUM-8-01 95

DESIGNED	DRAWN	TRACED	CHECKED	REVIEWED	DATE	REVISED
GTC	ALH		JWW	JJP	2-1-85	

F.H.W.A. REG.	STATE	PROJECT	
5	OHIO		

137
204

SUM-8 - 1.73 / 1.95

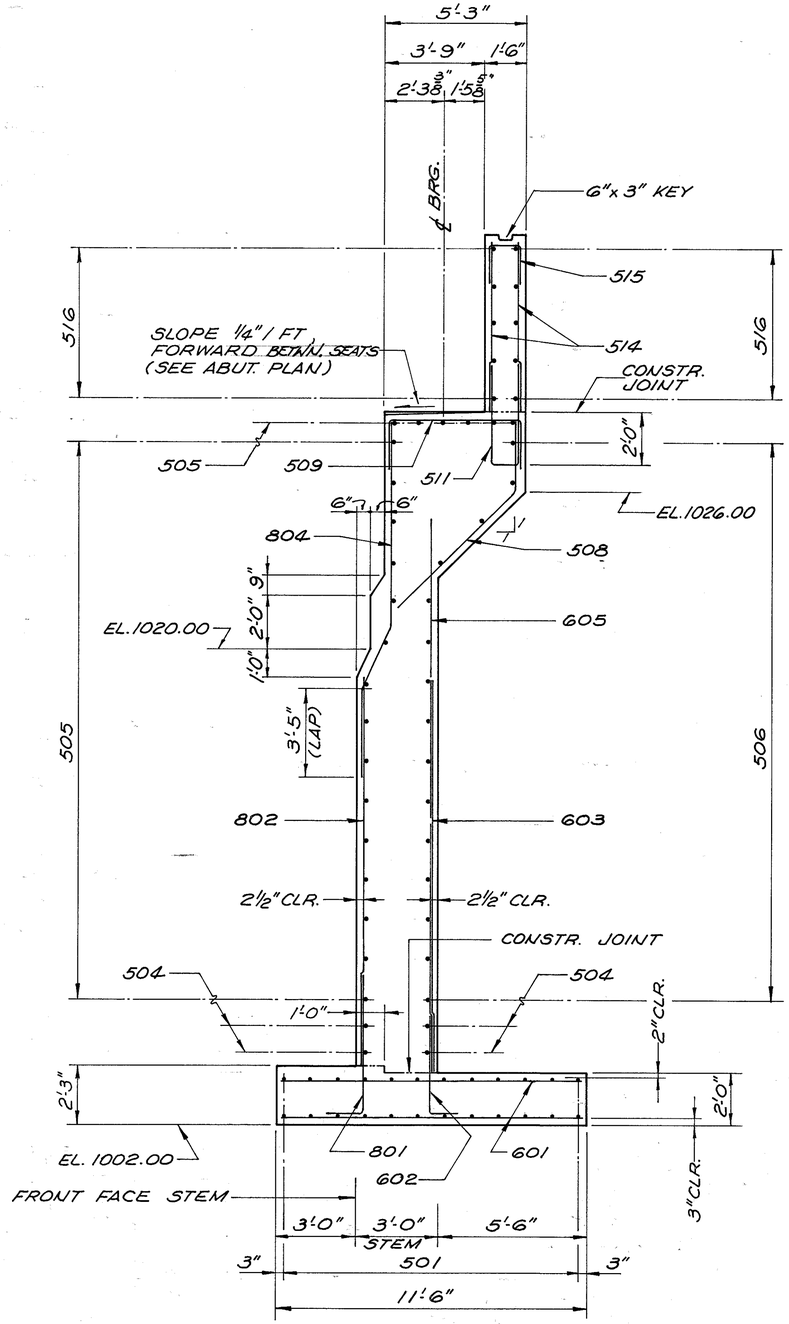

SECTION "1-1"

(TYPICAL SECTION THRU ABUTMENT EXTENSION)

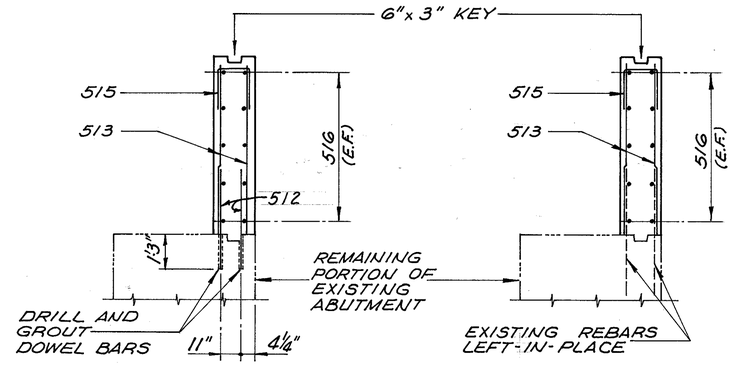

SECTION "4-4"

(BACKWALL REINFORCING LAPPING W/ NEW DOWELS)

SECTION "5-5"

(BACKWALL REINFORCING LAPPING W/ EXISTING STEEL)

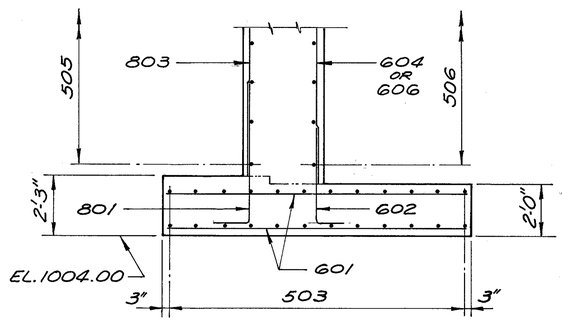

SECTION "2-2"

(FOR ADDITIONAL DETAIL SEE SECTION "1-1")

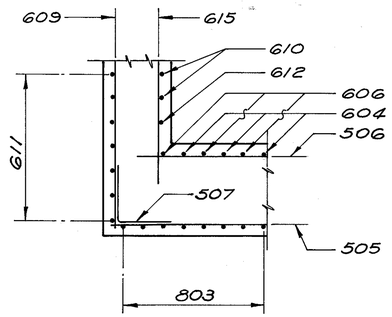

SECTION "3-3"

(TREATMENT AT CORNER)

NOTES:

1. FOR LOCATION OF SECTIONS "1-1", "2-2", "3-3", "4-4", AND "5-5" SEE SHEET 26/73.
2. FOR ADDITIONAL NOTES SEE SHEETS 25/73 & 26/73.

DALTON • DALTON • NEWPORT
CLEVELAND, OHIO AKRON, OHIO

28/73

SOUTH ABUTMENT DETAILS
PHASE II
NORTH EXPRESSWAY VIADUCT
SUM-8-01 95

DESIGNED	DRAWN	TRACED	CHECKED	REVIEWED	DATE	REVISED
GTC	AL H		JWW	JGH	2-1-85	

F.H.W.A. REG.	STATE	PROJECT	
5	OHIO		

138/204

SUM - 8 - 1.73 / 1.95

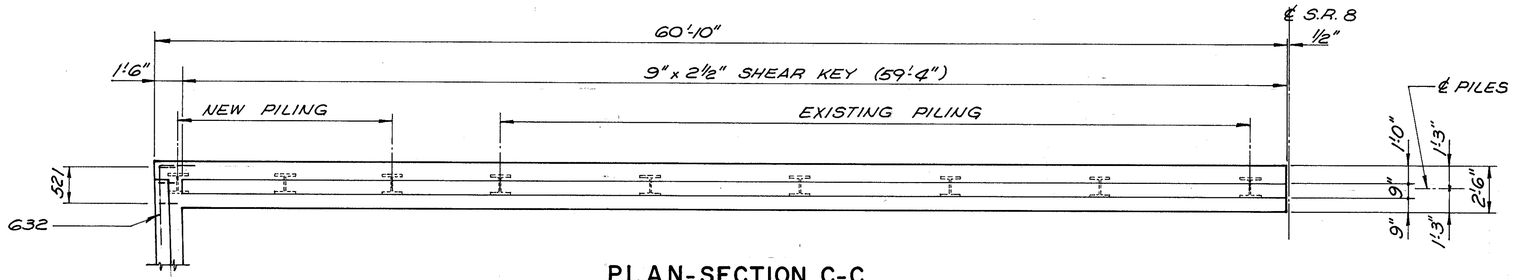

PLAN-SECTION C-C

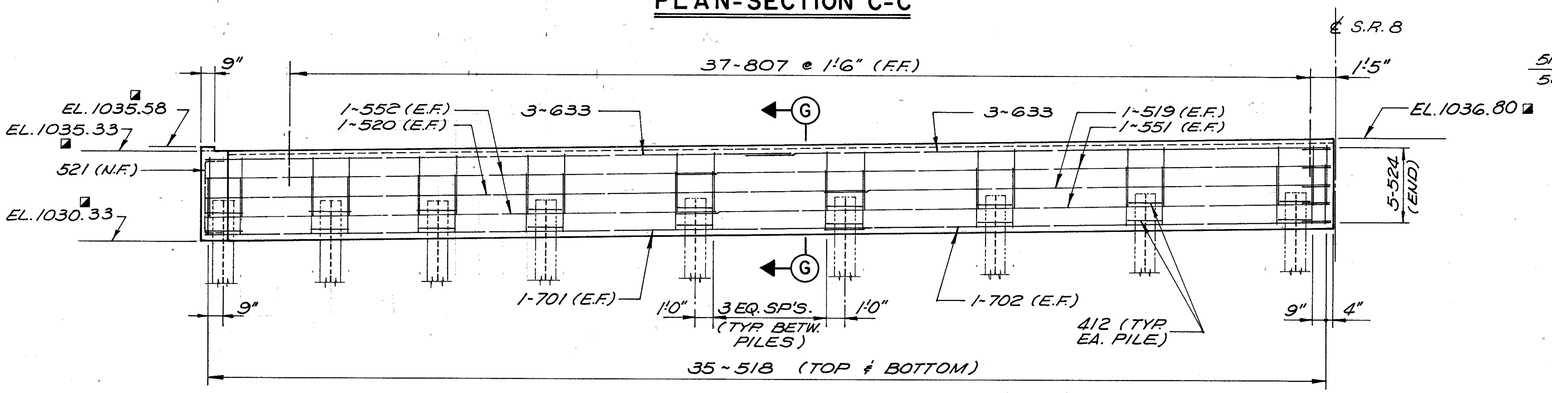

SECTION C-C

(APPROACH SLAB SUPPORT BEAM)

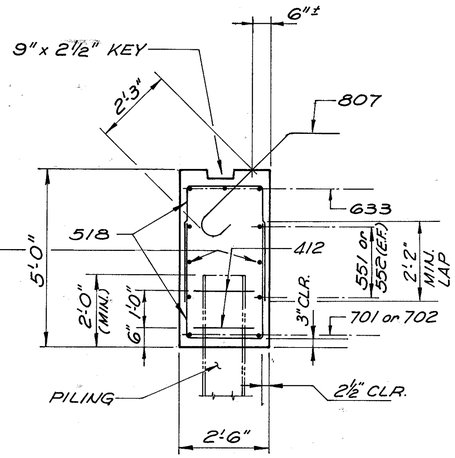

SECTION "G-G"

NOTE:

① FOR ADDITIONAL NOTES AND LOCATIONS OF SECTIONS "C-C", "D-D" AND "E-E" SEE SHEET 25/73.

② ◪ DENOTES ELEVATIONS AT ℄ OF PILE CAP SUPPORT BEAMS.

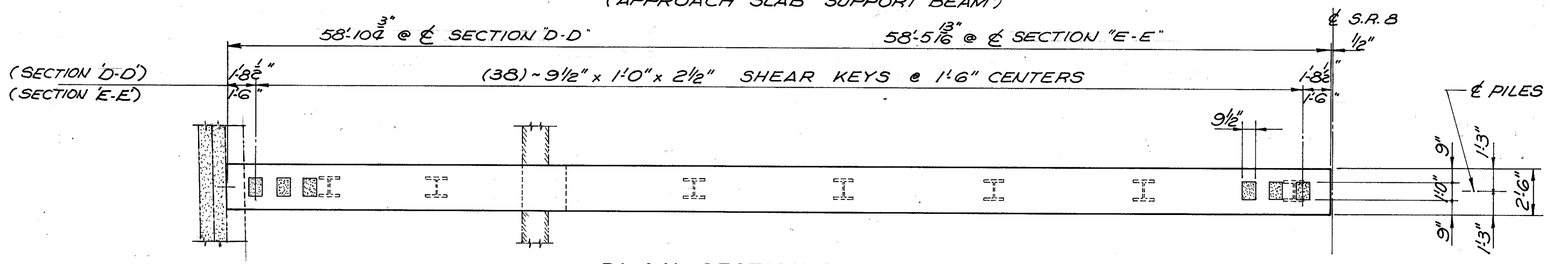

PLAN-SECTION D-D & E-E

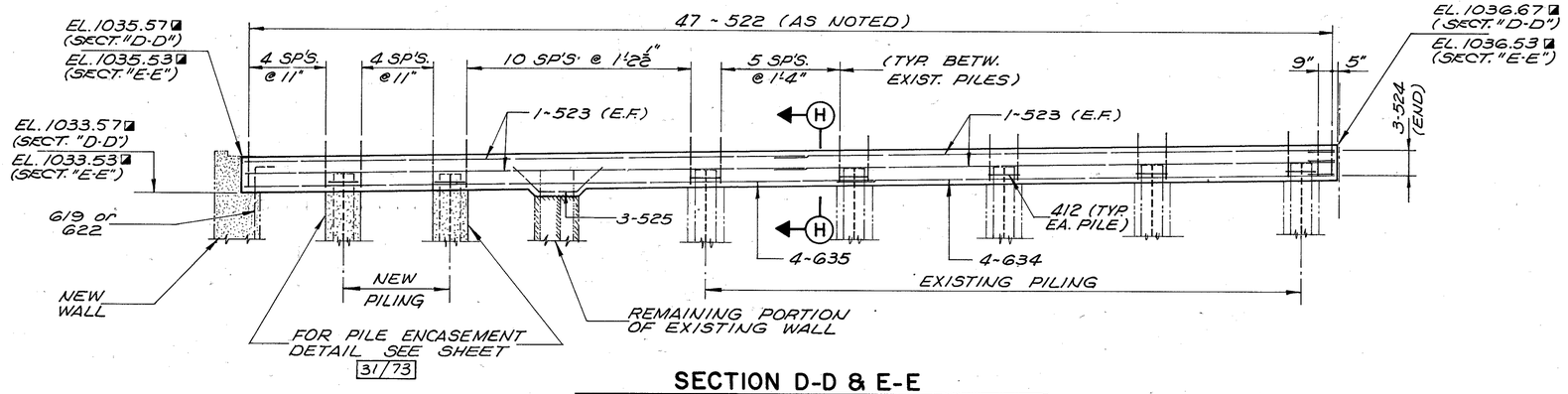

SECTION D-D & E-E

(PILE CAP SUPPORT BEAMS-AS NOTED)

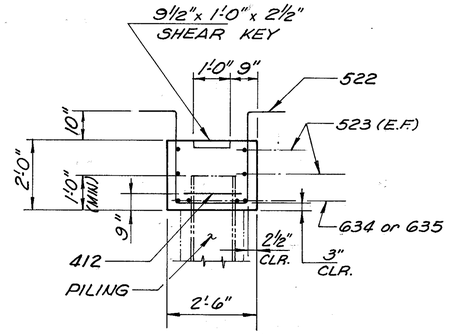

SECTION "H-H"

DALTON • DALTON • NEWPORT
CLEVELAND, OHIO AKRON, OHIO

29/73

SOUTH ABUTMENT DETAILS
PHASE II
NORTH EXPRESSWAY VIADUCT
SUM-8-01 95

DESIGNED	DRAWN	TRACED	CHECKED	REVIEWED	DATE	REVISED
GTC	ALH		JWW	JGT	2-1-85	

F.H.W.A. REG.	STATE	PROJECT	
5	OHIO		

139
204

SUM-8 - 1.73 / 1.95

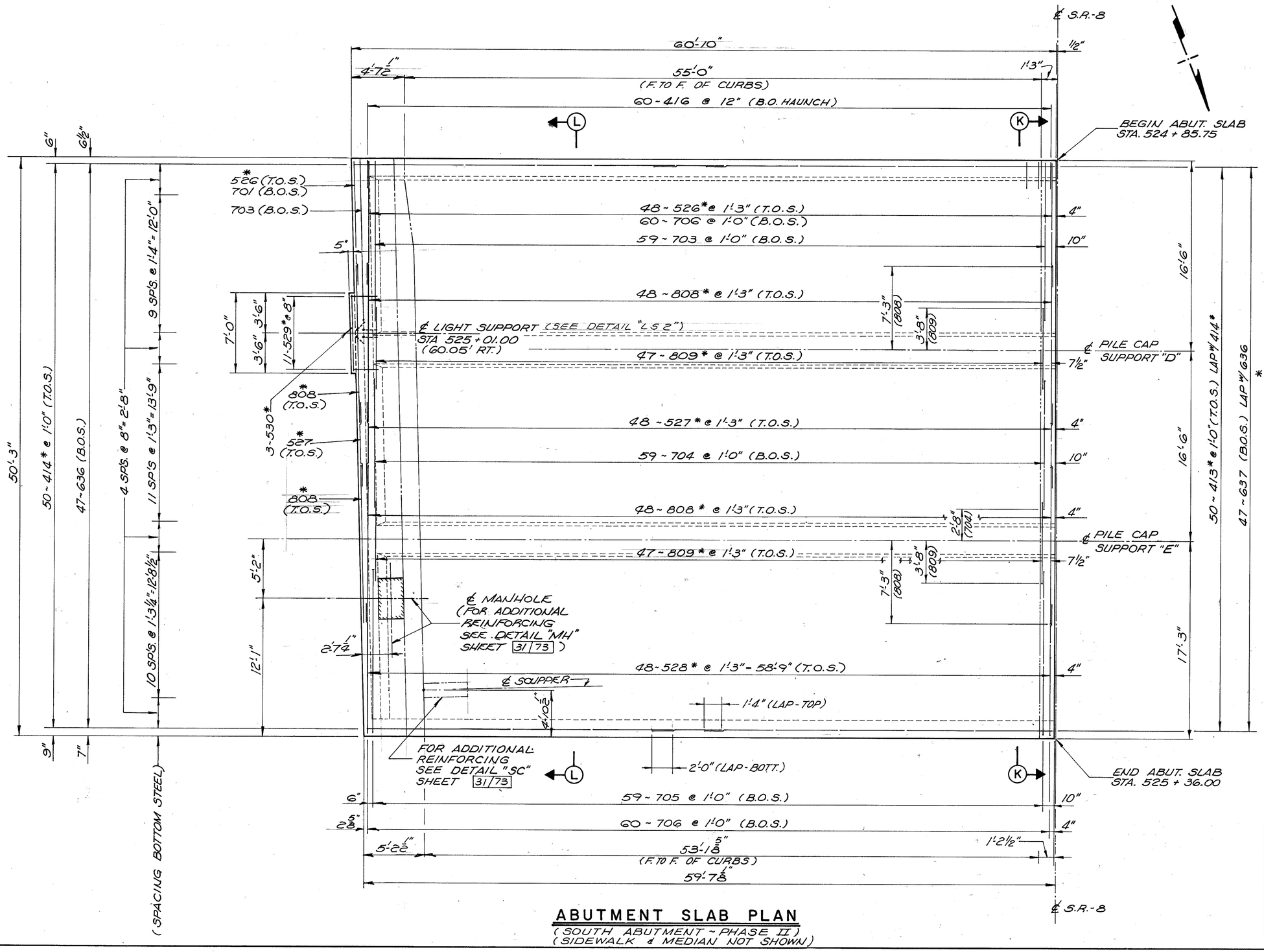

ABUTMENT SLAB PLAN

(SOUTH ABUTMENT - PHASE II)
(SIDEWALK & MEDIAN NOT SHOWN)

NOTES:

1. FOR SIDEWALK, CONCRETE BARRIER & RAILING POST SPACING; MEDIAN BARRIER VIEW "K-K" & DETAIL "LS2" SEE SHEET 32/73
2. FOR ADDITIONAL SCUPPER & MANHOLE DETAILS AND LONGITUDINAL SECTION "L-L" SEE SHEET 31/73
3. * REINFORCING BARS SHOWN THUS (*) ARE TO BE EPOXY COATED.
4. (T.O.S.) DENOTES TOP OF ABUTMENT SLAB (B.O.S.) DENOTES BOTTOM OF ABUTMENT SLAB.
5. FOR KEY PLAN, MINIMUM LAP REQUIREMENTS AND ADDITIONAL NOTES SEE SHEET 25/73
6. FOR ADDITIONAL SLAB REINFORCEMENT SEE SHEET 32/73

DALTON • DALTON • NEWPORT
CLEVELAND, OHIO — AKRON, OHIO

30/73

SOUTH ABUTMENT DETAILS
PHASE II
NORTH EXPRESSWAY VIADUCT
SUM-8-01 95

DESIGNED	DRAWN	TRACED	CHECKED	REVIEWED	DATE	REVISED
GTC	AL H		JWW	JGP	2-1-85	

F.H.W.A. REG.	STATE	PROJECT	
5	OHIO		

140/204

SUM - 8 - 1.73 / 1.95

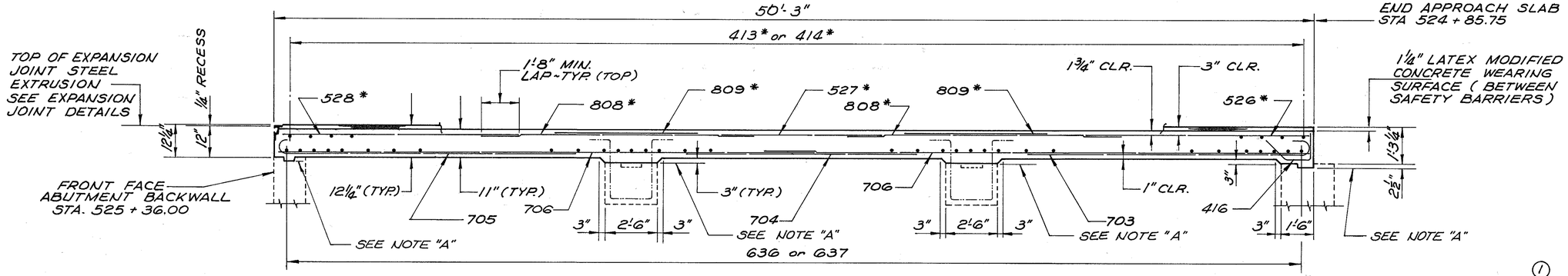

SECTION "L-L"

(TYPICAL LONGITUDINAL SLAB SECTION ~ PHASE II)

NOTE "A": CONCRETE ABOVE THIS POINT SHALL BE INCLUDED WITH ITEM 511 ~ CLASS "S" CONCRETE FOR PAYMENT.

NOTES

1. FOR LOCATION OF SECTION "L-L", DETAILS "MH" AND "SC" SEE SHEET 30/73.
2. FOR ADDITIONAL NOTES SEE SHEETS 25/73 & 26/73.

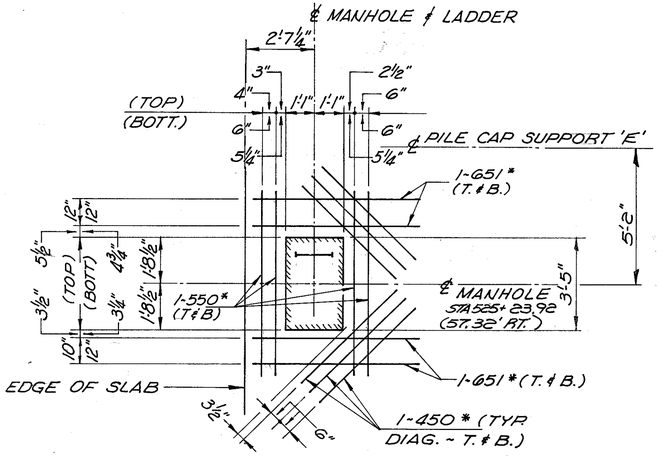

DETAIL "MH"

(ADDITIONAL MANHOLE REINFORCING)

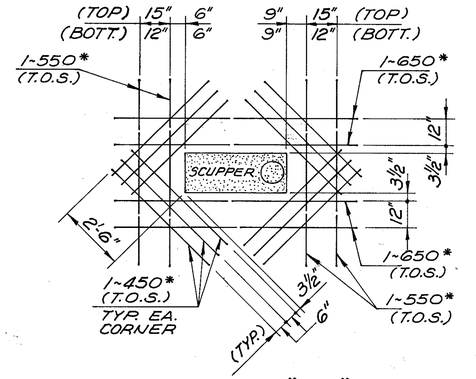

DETAIL "SC"

(ADDITIONAL SCUPPER REINFORCING)

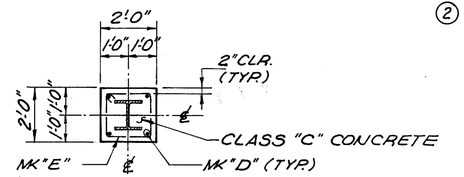

PLAN

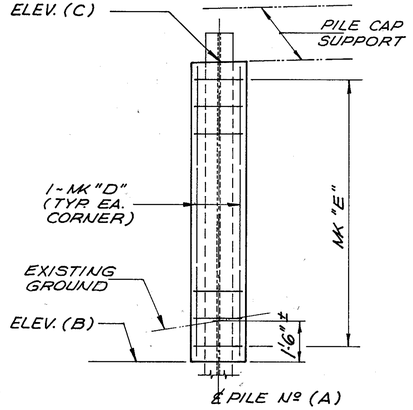

ELEVATION

PILE ENCASEMENT DETAIL

PILE ENCASEMENT TABLE				
(A)	(B)	(C)	(D)	(E)
#5	1028.50	1033.66	642	5~4'7 @ 1'0"
#6	1029.50	1033.75	643	5~4'7 @ 10"
#8	1019.50	1033.61	644	14~4'7 @ 1'0"
#9	1020.00	1033.70	645	14~4'7 @ 1'0"

FOR LOCATION OF PILES #5, #6, #8 & #9 SEE PILING PLAN SHEET 25/73.

DALTON • DALTON • NEWPORT
CLEVELAND, OHIO AKRON, OHIO

31/73

SOUTH ABUTMENT DETAILS PHASE II

NORTH EXPRESSWAY VIADUCT

SUM - 8 - 01 95

DESIGNED	DRAWN	TRACED	CHECKED	REVIEWED	DATE	REVISED
GTC	ALH		JWW	JSP	2-1-85	

F.H.W.A. REG.	STATE	PROJECT	
5	OHIO		

141/204

SUM - 8 - 1.73 / 1.95

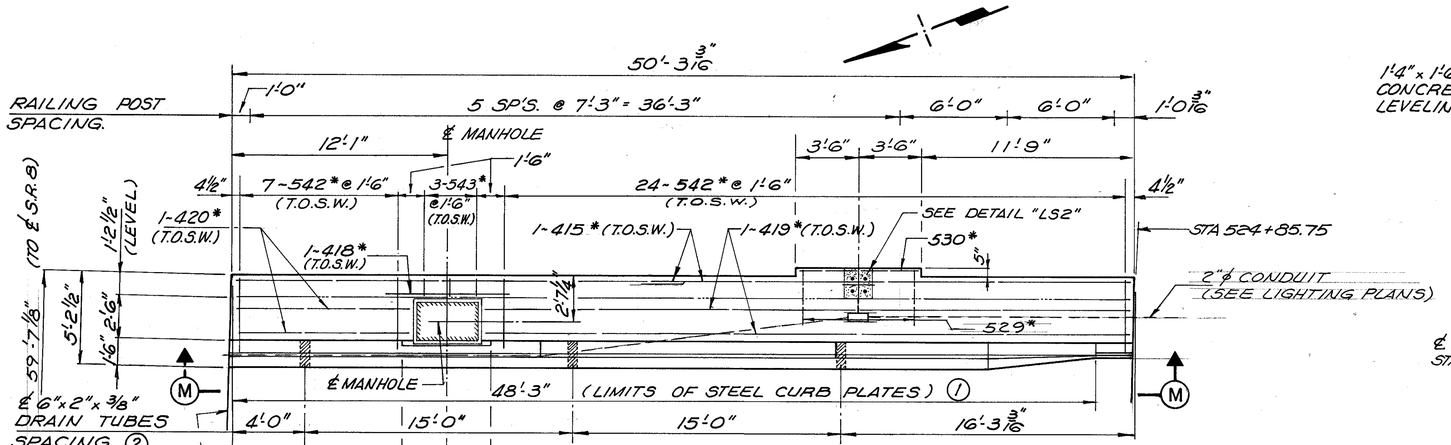

ABUTMENT SIDEWALK PLAN
(EAST SIDEWALK)

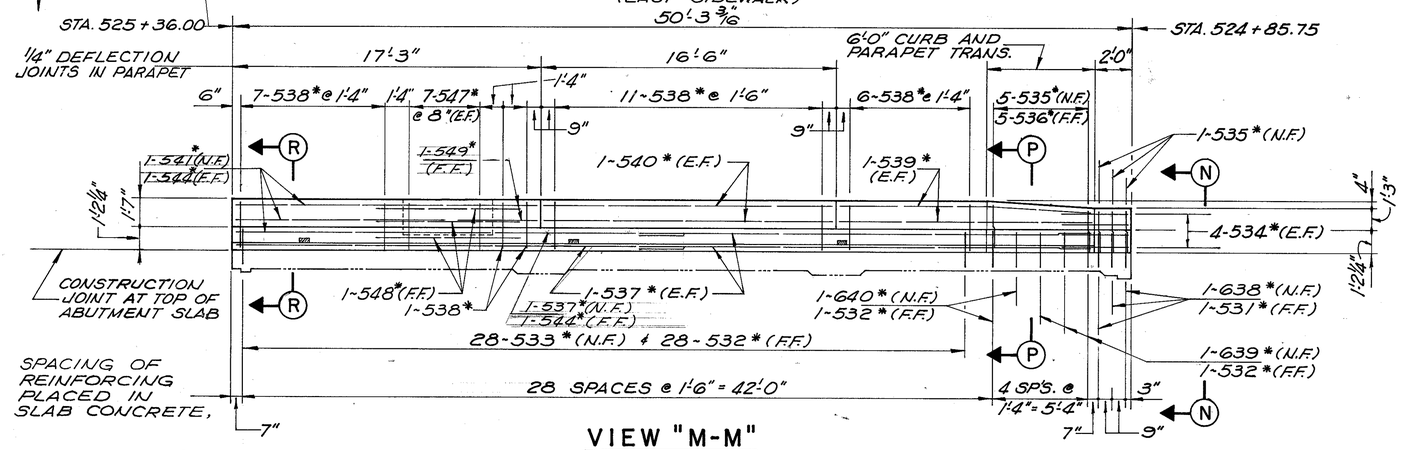

VIEW "M-M"
(SIDEWALK BARRIER)

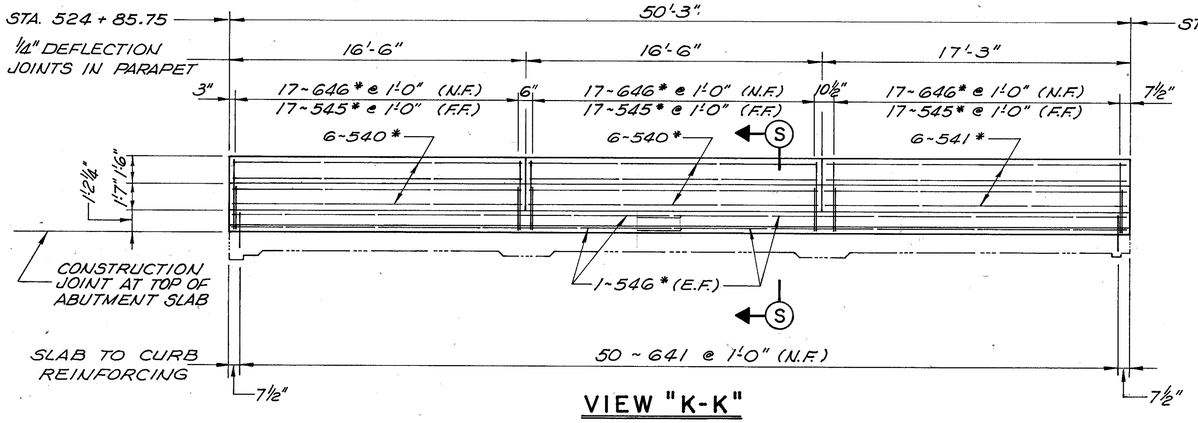

VIEW "K-K"
(MEDIAN BARRIER)

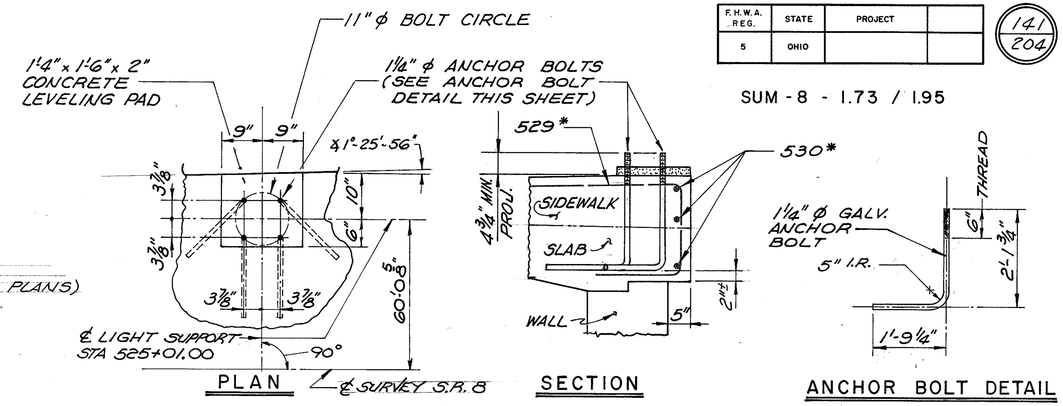

DETAIL "LS2"
(LIGHT SUPPORT)

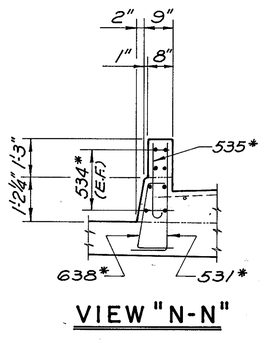

VIEW "N-N"

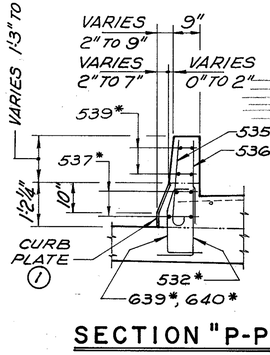

SECTION "P-P"

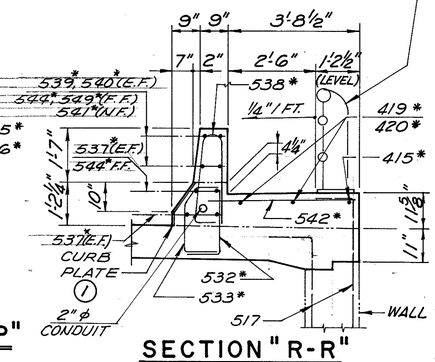

SECTION "R-R"

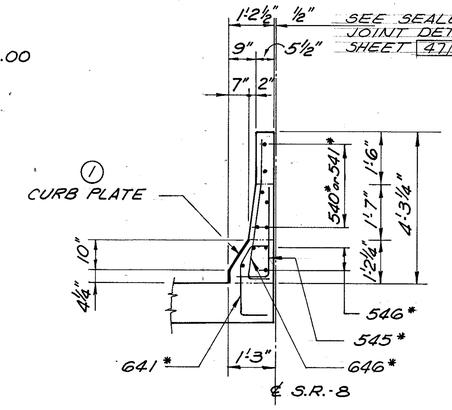

SECTION "S-S"

NOTES:

1. FOR DETAIL OF ⅜" BENT CURB PLATES ON SIDEWALK AND MEDIAN BARRIERS SEE DETAIL "A" SHEET 54/73.
2. FOR DETAIL OF 6"x 2"x ⅜" DRAIN TUBES THRU SIDEWALK BARRIER SEE DETAIL "H", SHEET 47/73.
3. FOR LOCATION OF VIEW "K-K" SEE ABUTMENT SLAB PLAN SHEET 30/73.
4. FOR ADDITIONAL NOTES SEE SHEETS 25/73 & 30/73.

DALTON • DALTON • NEWPORT
CLEVELAND, OHIO AKRON, OHIO

32/73

SOUTH ABUTMENT DETAILS PHASE II

NORTH EXPRESSWAY VIADUCT

SUM -8 - 01 95

DESIGNED	DRAWN	TRACED	CHECKED	REVIEWED	DATE	REVISED
GTC	ALH		JWW	JDP	2-1-95	

	STATE	PROJECT	
	OHIO		

142/204

SUM-8 - 1.73 / 1.95

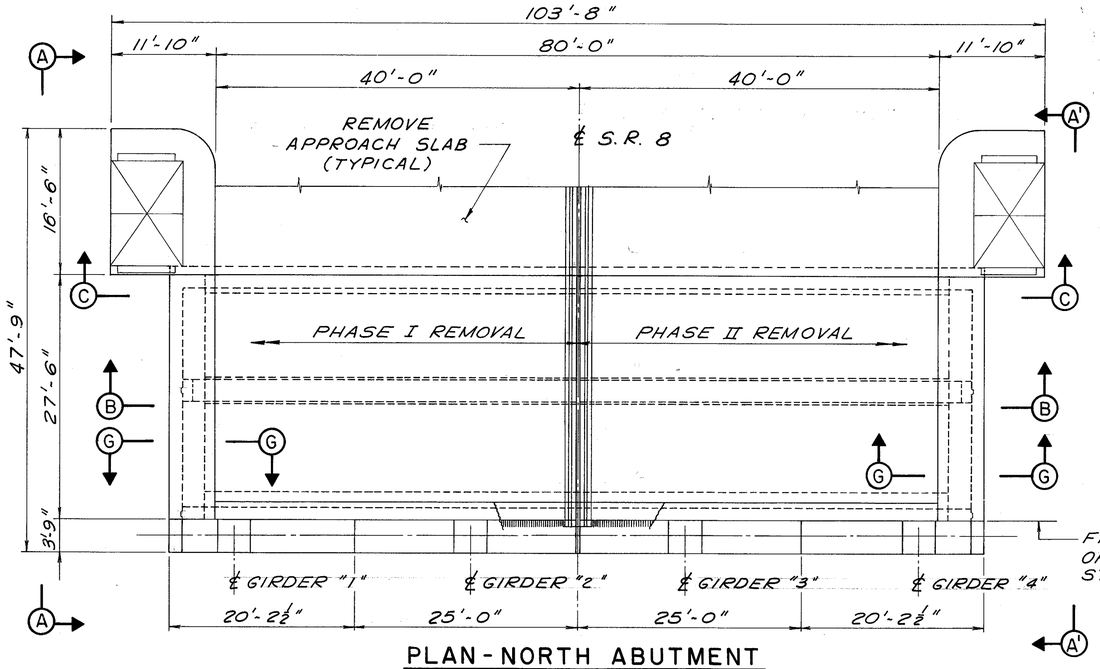

PLAN - NORTH ABUTMENT

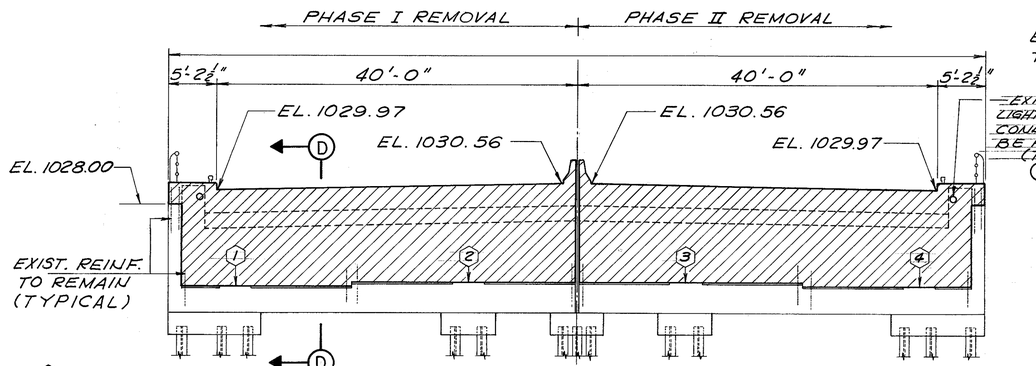

① EL. 1019.02
② EL. 1019.33
③ EL. 1019.33
④ EL. 1019.02

ELEVATION - NORTH ABUTMENT

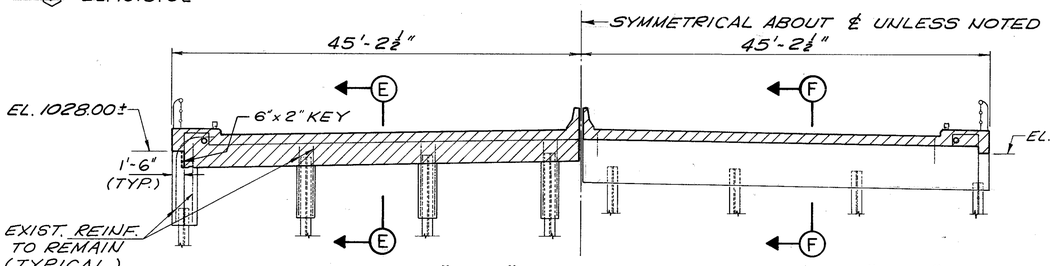

HALF - SECTION "B-B"

HALF - SECTION "C-C"

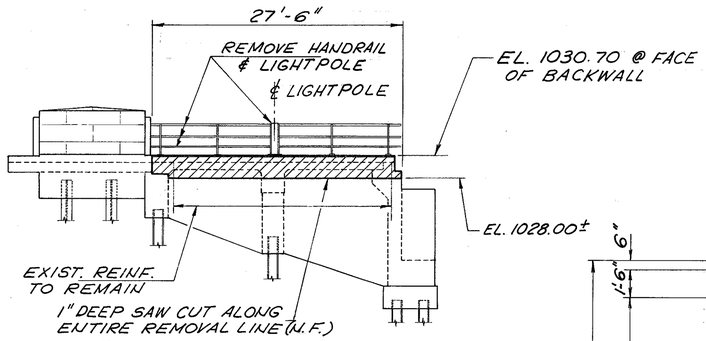

VIEW "A" - WEST ELEVATION

PHASE I REMOVAL SHOWN, VIEW "A'" - EAST ELEVATION (PHASE II REMOVAL) OPPOSITE HAND.

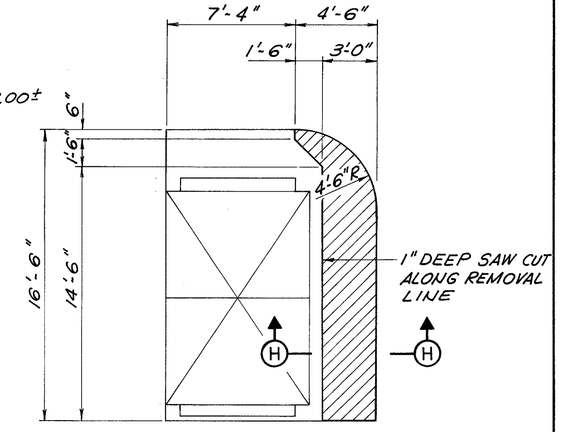

ENDPOST DETAIL

(WEST ENDPOST SHOWN, EAST ENDPOST OPPOSITE HAND)

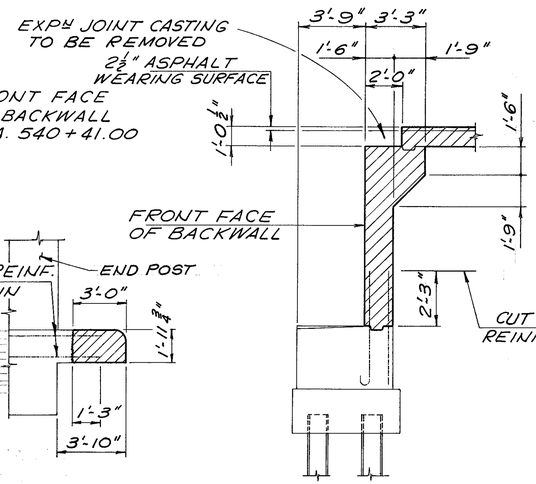

SECTION "H-H"

SECTION "D-D"

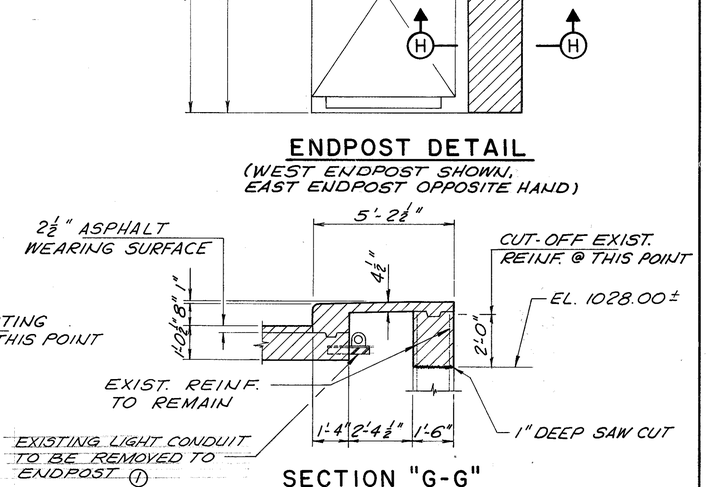

SECTION "G-G"

(CURB, HANDRAIL AND LIGHTPOLE NOT SHOWN, REFER TO GENERAL NOTES FOR RE-USE OF HANDRAIL)

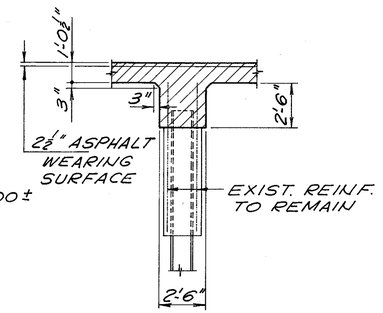

SECTION "E-E"

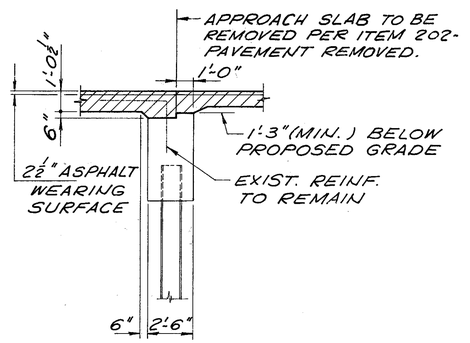

SECTION "F-F"

NOTES

① ▨ - DENOTES REMOVAL PER ITEM 202 - PORTIONS OF STRUCTURES REMOVED. REFER TO THE STRUCTURAL GENERAL NOTES.

DALTON • DALTON • NEWPORT
CLEVELAND, OHIO — AKRON, OHIO

33/73

REMOVAL DETAILS - NORTH ABUTMENT

NORTH EXPRESSWAY VIADUCT
SUM-8-01 95

DESIGNED	DRAWN	TRACED	CHECKED	REVIEWED	DATE	REVISED
GTC	D.T.		RLF	JGP	2-1-85	

F.H.W.A. REG.	STATE	PROJECT	
5	OHIO		

143/204

SUM-8 - 1.73 / 1.95

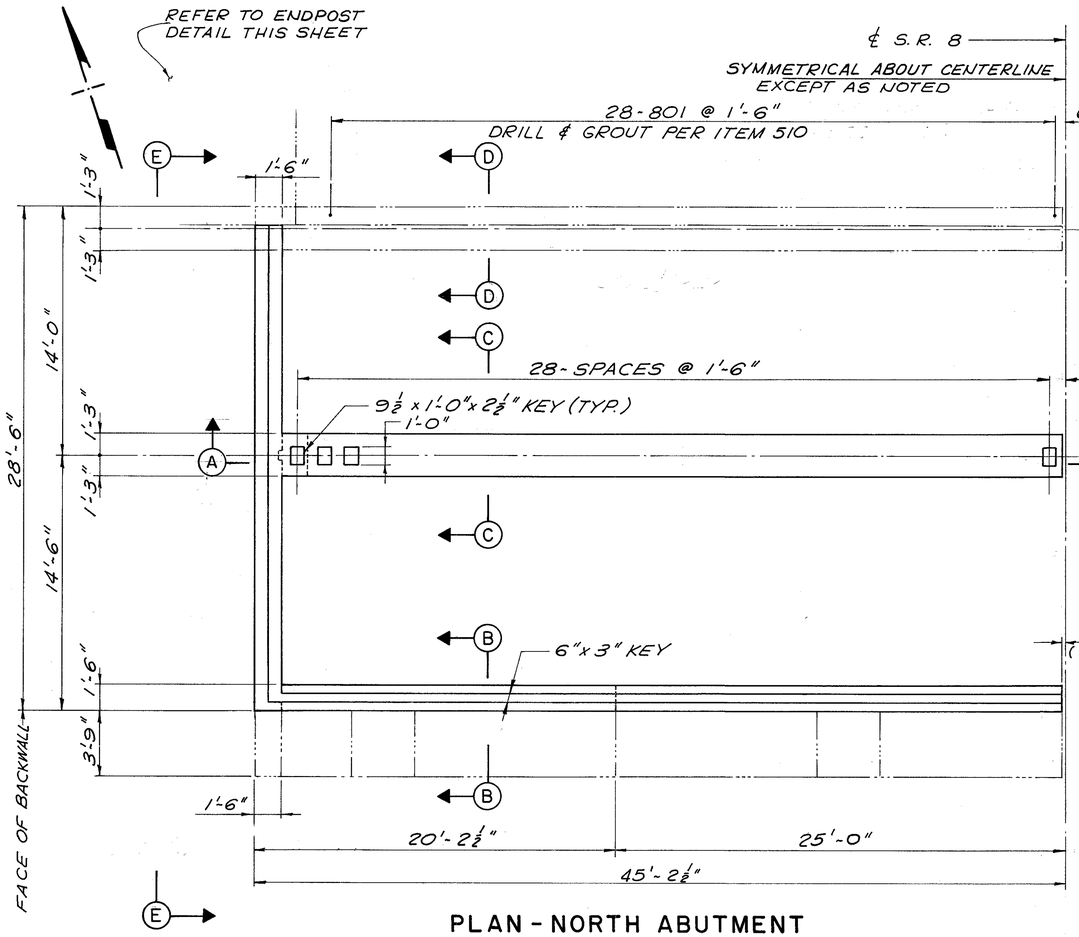

PLAN - NORTH ABUTMENT

WEST SIDE (PHASE I) SHOWN,
EAST SIDE (PHASE II) OPPOSITE HAND.

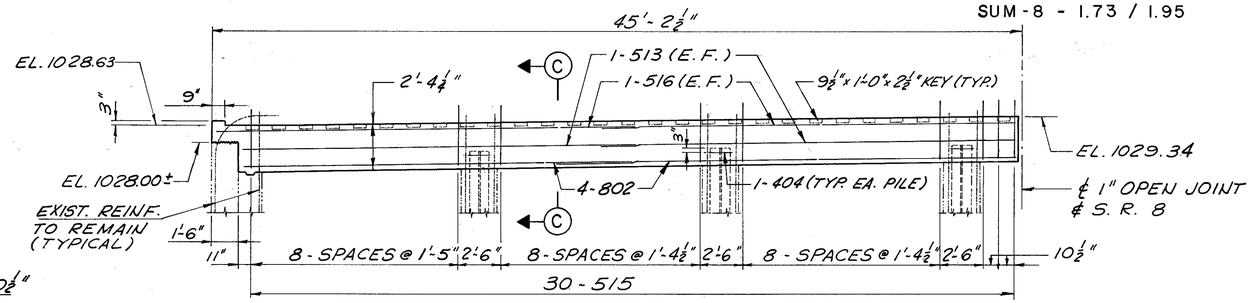

SECTION A-A

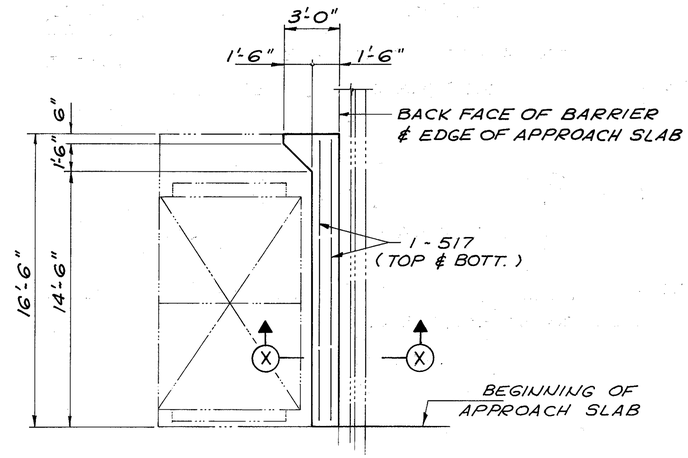

ENDPOST DETAIL

(WEST ENDPOST SHOWN,
EAST ENDPOST OPPOSITE HAND)

NOTES

1. FOR ADDITIONAL NOTES REFER TO SHEET 36/73.
2. FOR SECTIONS "B-B, C-C, D-D" AND VIEW "E-E" REFER TO SHEET 36/73.
3. ALL CONCRETE ON THIS SHEET TO BE CLASS "C".
4. MINIMUM LAP REQUIRED:
   - Nº 4 BARS - 1'-4"
   - Nº 5 BARS - 1'-8"
   - Nº 6 BARS - 2'-0"
   - Nº 7 BARS - 2'-7"
   - Nº 8 BARS - 4'-3"

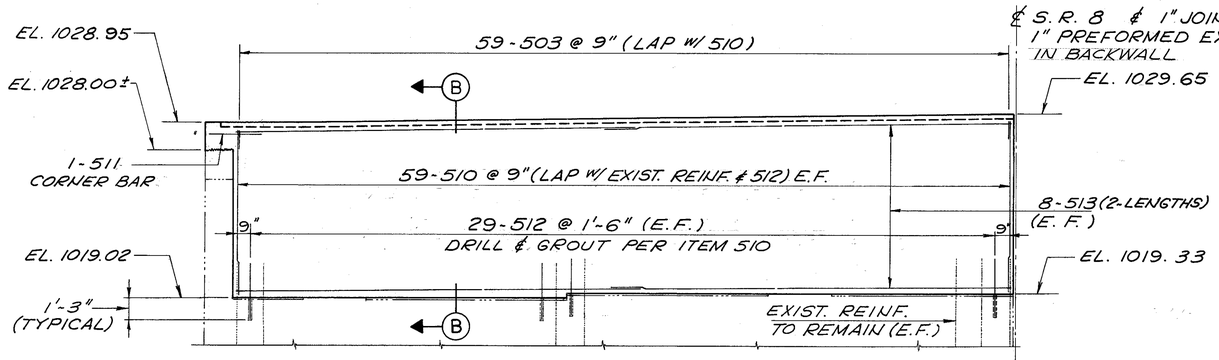

ELEVATION - NORTH ABUTMENT

WEST SIDE (PHASE I) SHOWN,
EAST SIDE (PHASE II) OPPOSITE HAND.

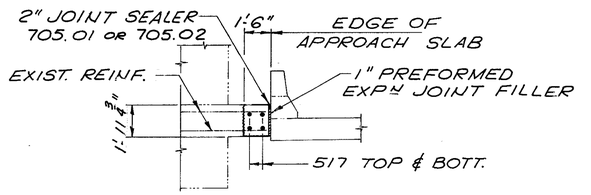

SECTION X-X

DALTON • DALTON • NEWPORT
CLEVELAND, OHIO — AKRON, OHIO

34/73

NORTH ABUTMENT DETAILS

NORTH EXPRESSWAY VIADUCT
SUM-8-01 95

DESIGNED	DRAWN	TRACED	CHECKED	REVIEWED	DATE	REVISED
GTC	D.T.		RLF	JBP	2-1-85	

F.H.W.A. REG.	STATE	PROJECT	
5	OHIO		

144/204

SUM-8 - 1.73 / 1.95

■ - 4 7/8" STA. 540+48.00 TO STA. 540+68.50
4 1/8" STA. 540+41.00

▲ - CROSS-SLOPE VARIES FROM LEVEL @ FACE OF BACKWALL, STA. 540+41.00 TO 1/4"/FT. AT STA. 540+48.00

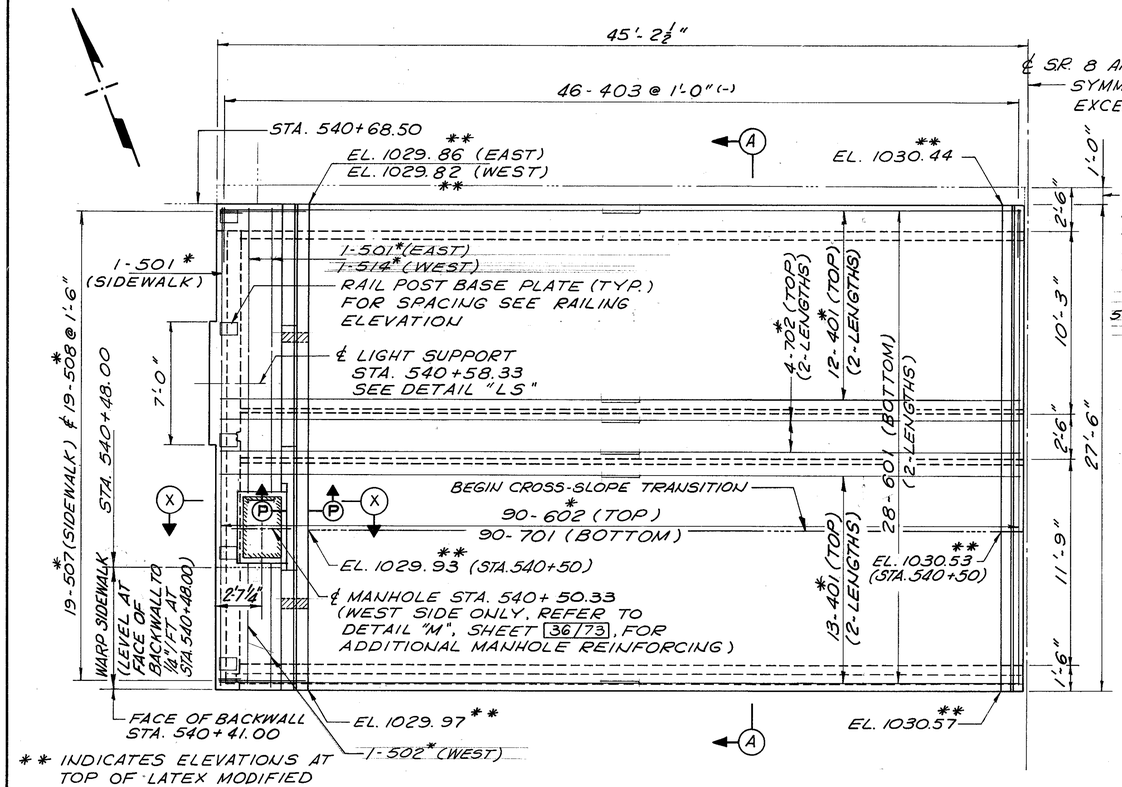

** INDICATES ELEVATIONS AT TOP OF LATEX MODIFIED CONC. WEARING SURFACE.

HALF SLAB PLAN - NORTH ABUTMENT

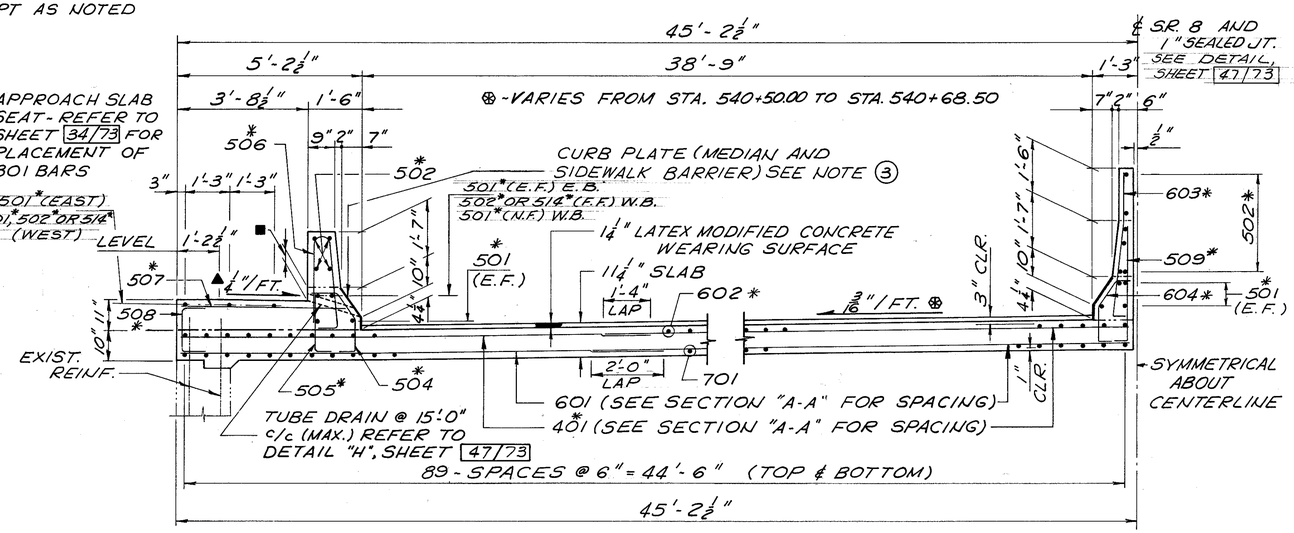

TYPICAL SECTION

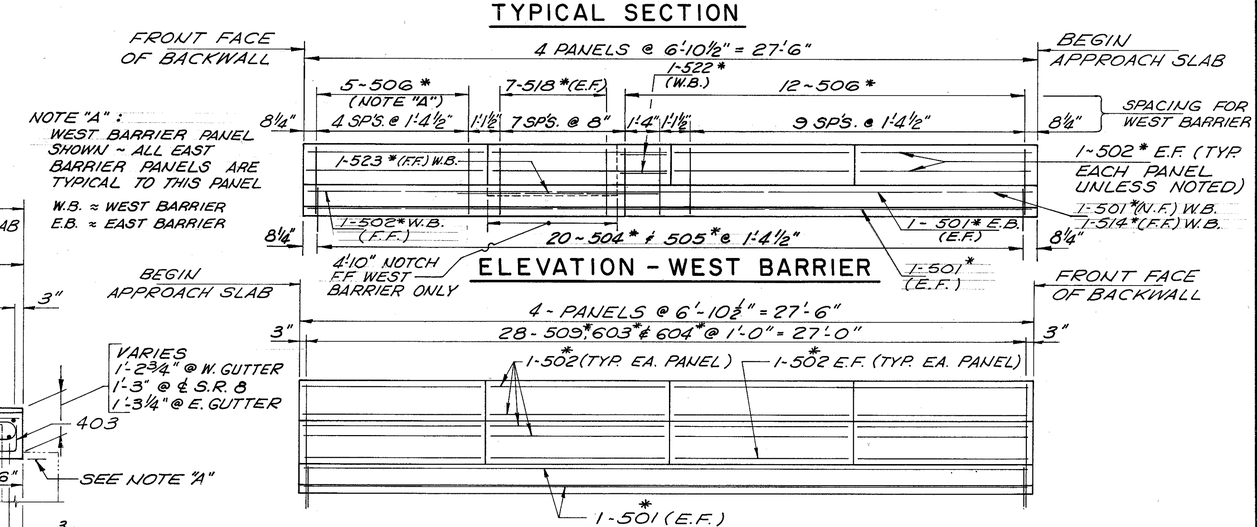

NOTE "A": WEST BARRIER PANEL SHOWN ~ ALL EAST BARRIER PANELS ARE TYPICAL TO THIS PANEL

W.B. ≈ WEST BARRIER
E.B. ≈ EAST BARRIER

ELEVATION - WEST BARRIER

ELEVATION - MEDIAN BARRIER

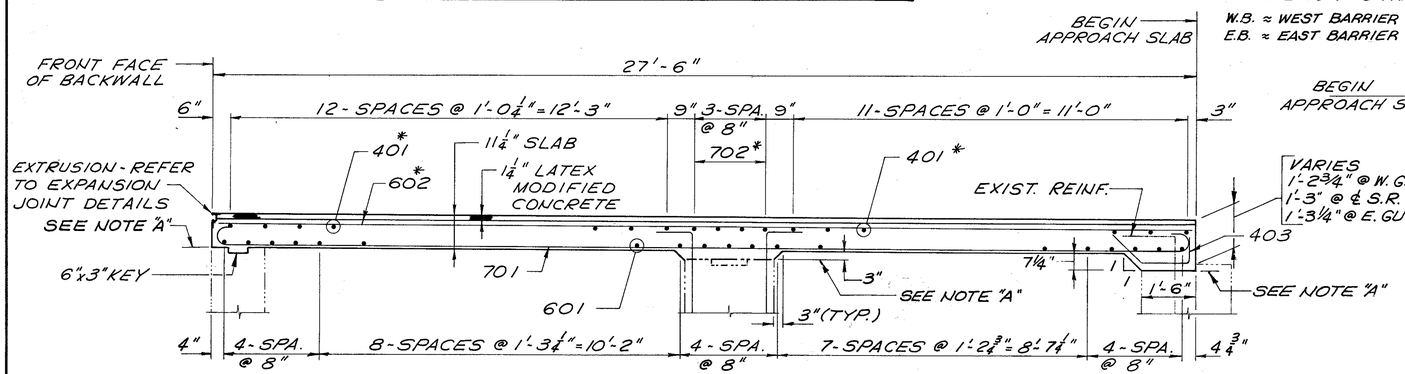

SECTION A-A

NOTE "A" ~ CONCRETE ABOVE THIS POINT SHALL BE INCLUDED WITH ITEM 511 ~ CLASS "S" CONCRETE, FOR PAYMENT.

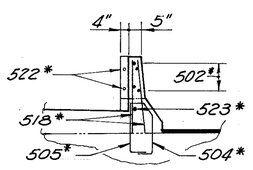

SECTION "P-P"

SHOWING NOTCH, PARAPET & CURB REINFORCING.

NOTES

1. REFER TO SHEET 36/73 FOR ADDITIONAL NOTES.
2. FOR DETAIL "LS", REFER TO SHEET 36/73.
3. FOR DETAIL OF 3/4" BENT CURB PLATES ON MEDIAN AND SIDEWALK BARRIERS, SEE DETAIL "A", SHEET 54/73.
4. REFER TO SHEET 36/73 FOR RAILING ELEVATION.
5. FOR SECTION "X-X", REFER TO SHEET 21/73.
6. FOR ADDITIONAL TRAFFIC BARRIER DETAILS, REFER TO STANDARD DRAWING BR-1.
7. FOR MINIMUM BAR LAP LENGTHS, SEE SHEET 34/73.

DALTON • DALTON • NEWPORT
CLEVELAND, OHIO AKRON, OHIO

35/73

NORTH ABUTMENT DETAILS

NORTH EXPRESSWAY VIADUCT
SUM-8-01 95

DESIGNED	DRAWN	TRACED	CHECKED	REVIEWED	DATE	REVISED
GTC	D.T.		R.L.C.	JGP	2-1-85	

F.H.W.A. REG.	STATE	PROJECT	
5	OHIO		

145/204

SUM-8 - 1.73 / 1.95

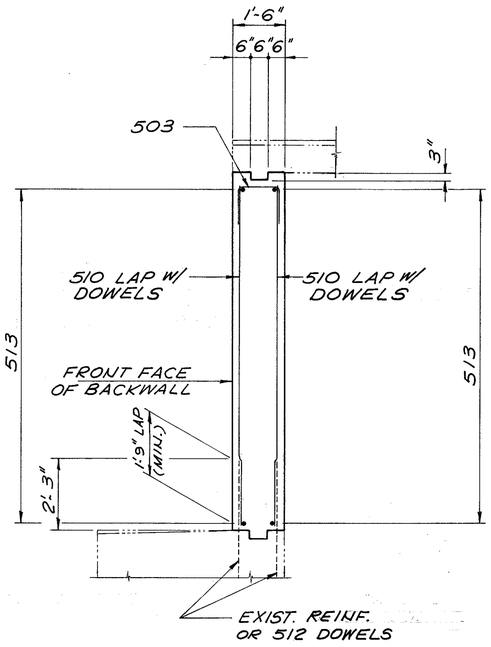

SECTION B-B

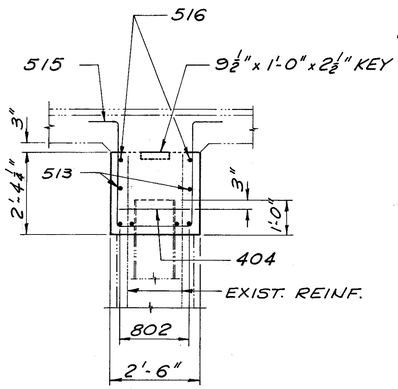

SECTION C-C

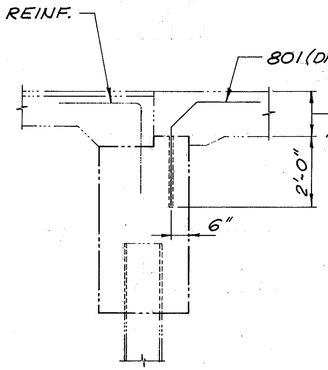

SECTION D-D

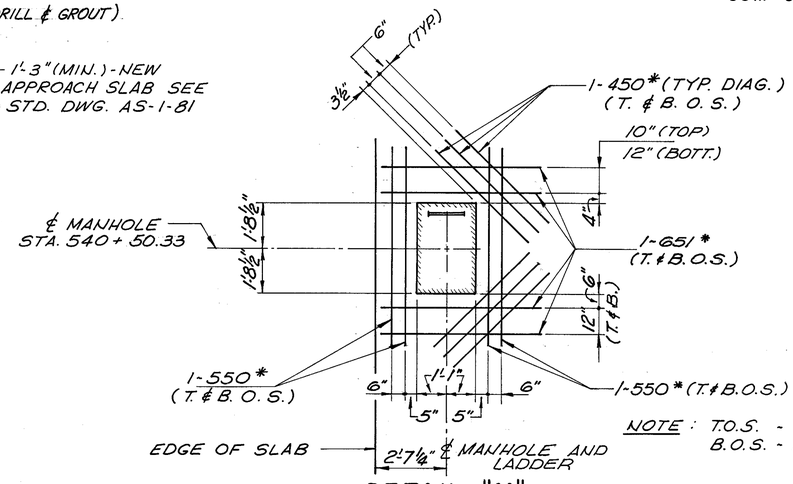

NOTE: T.O.S. - TOP OF SLAB
B.O.S. - BOTTOM OF SLAB

DETAIL "M"

ADDITIONAL MANHOLE REINF. (SIDEWALK NOT SHOWN)

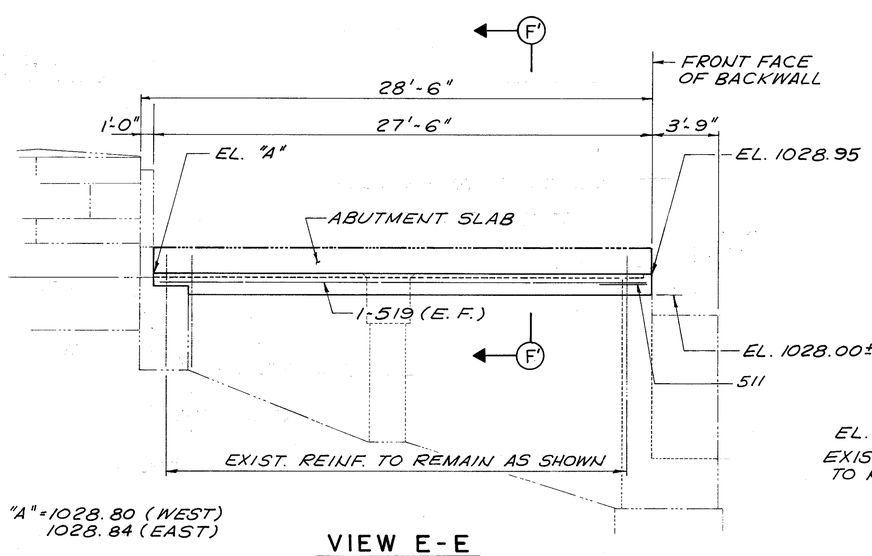

VIEW E-E

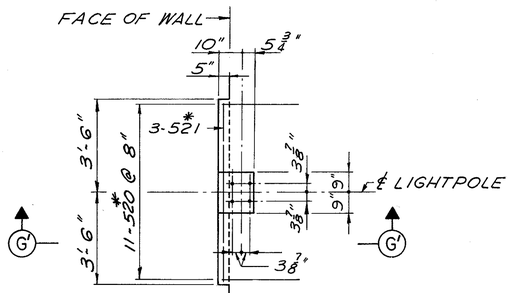

DETAIL "LS"
(PARTIAL PLAN AT LIGHT SUPPORT)

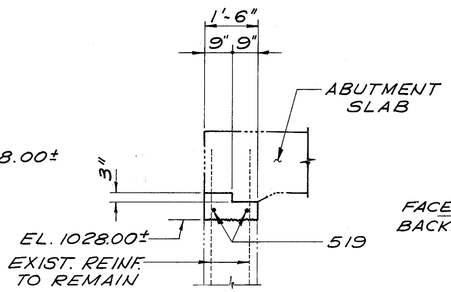

SECTION F'-F'

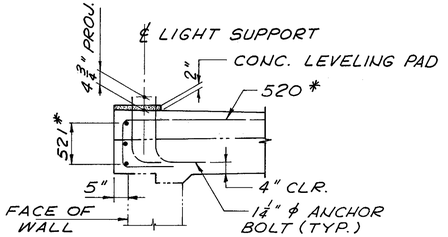

SECTION G'-G'

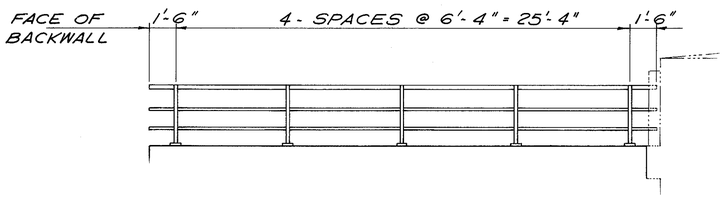

RAILING ELEVATION

NOTES

1. THE PREFIXES "12A" AND "22A" SHALL BE ADDED TO ALL REINFORCING BAR MARKS FOR THE NORTH ABUTMENT, FOR PHASE I AND PHASE II, RESPECTIVELY.
2. FOR POST ANCHORAGE AND ADDITIONAL RAILING DETAILS, SEE SHEET 55/73.
3. FOR EXPANSION JOINT DETAILS, SEE SHEETS 57/73 AND 58/73.
4. FOR MANHOLE DETAILS, SEE VIEW "Y-Y" & SECTION "X-X", SHEET 21/73.
5. FIELD BENDING OR CUTTING OF REINFORCING BARS SHALL BE INCLUDED WITH ITEM 509, REINFORCING STEEL FOR PAYMENT.

* 6. * INDICATES REINFORCING BARS TO BE EPOXY COATED.

DALTON • DALTON • NEWPORT
CLEVELAND, OHIO AKRON, OHIO

36/73

NORTH ABUTMENT DETAILS

NORTH EXPRESSWAY VIADUCT
SUM-8-01 95

DESIGNED	DRAWN	TRACED	CHECKED	REVIEWED	DATE	REVISED
GTC	D.T.		RLF	JAP	2-1-88	

F.H.W.A. REG.	STATE	PROJECT	
5	OHIO		

146
204

SUM-8 - 1.73 / 1.95

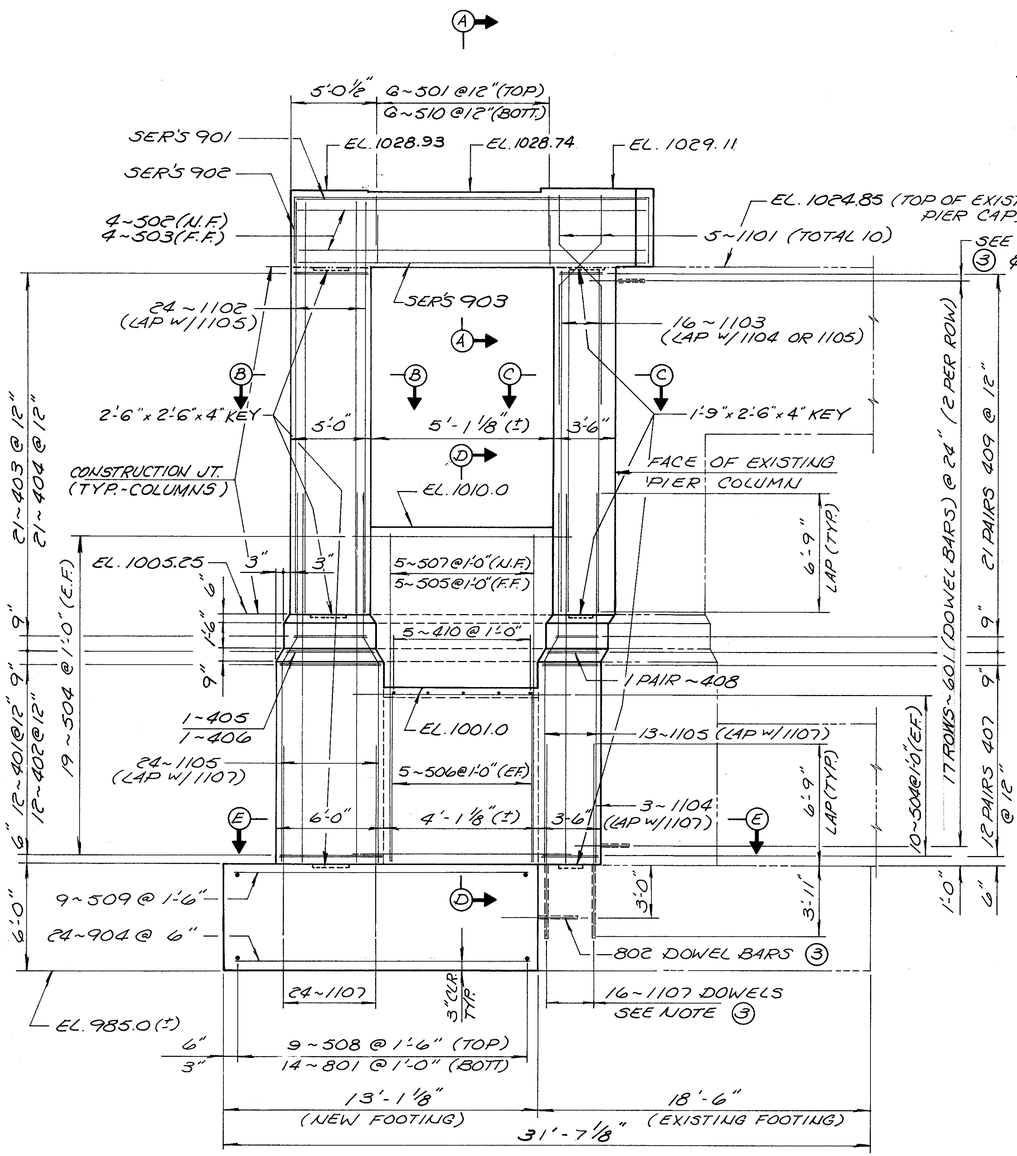

VIEW F-F

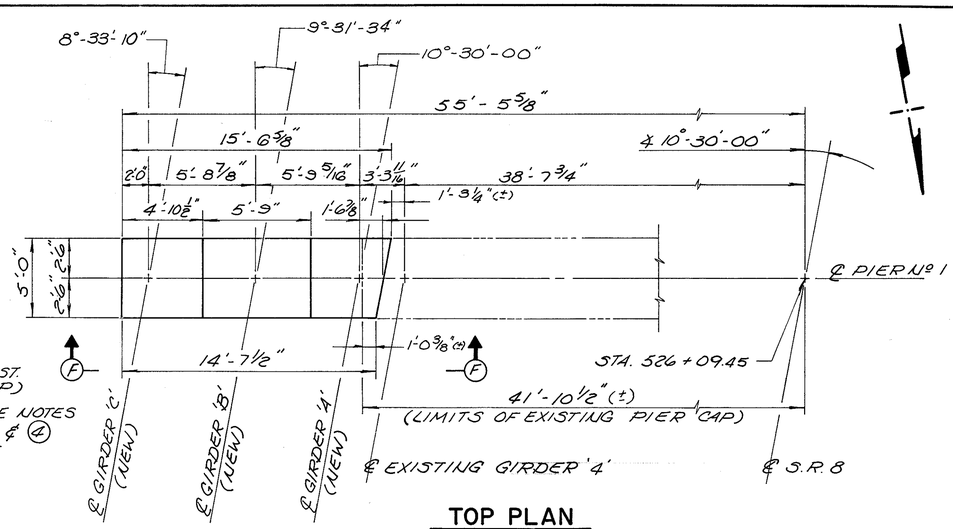

TOP PLAN
(PIER Nº 1 EXTENSION)

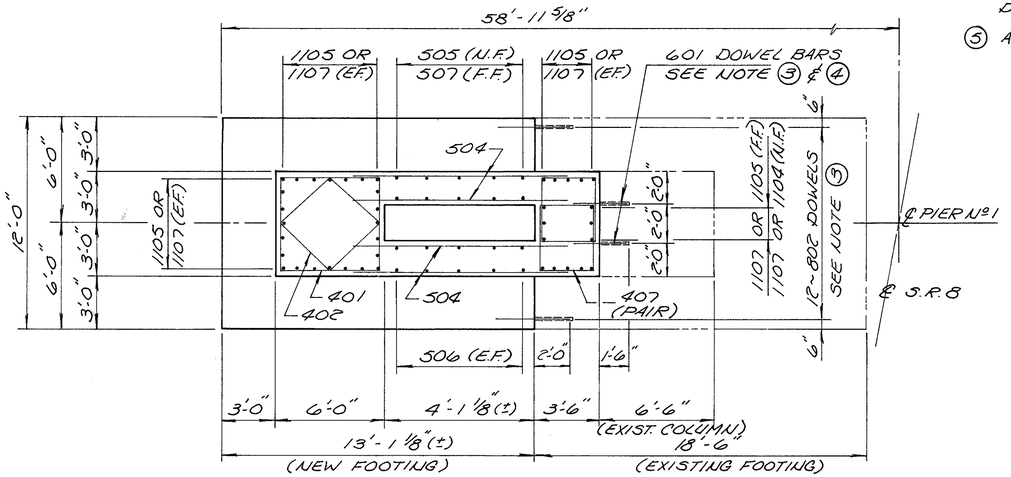

SECTION E-E

NOTES

1. THE PREFIX "21-P" SHALL BE ADDED TO ALL REINFORCING BAR MARKS IN PIER Nº 1 EXTENSION.
2. FOR SECTIONS "A-A", "B-B" "C-C" AND "D-D", SEE SHEET 40|73.
3. DOWEL BARS SHALL BE DRILLED AND GROUTED IN ACCORDANCE WITH C.M.S. SECTION 510 IN COLUMNS OR FOOTINGS AS SHOWN.
4. DOWEL HOLES SHALL BE SPACED TO MISS THE EXISTING COLUMN REINFORCING. REMOVE CONCRETE ON THE FACE OF THE EXISTING COLUMN AT A SUFFICIENT NUMBER OF LOCATIONS TO ACCURATELY DETERMINE THE POSITION AND SPACING OF THE EXISTING REINFORCING STEEL. INCLUDE THE COST OF THIS WORK WITH ITEM 510, DOWEL HOLES.
5. ABBREVIATIONS :
   - N.F. ~ NEAR FACE
   - E.F. ~ EACH FACE
   - F.F. ~ FAR FACE
   - BOTT. ~ BOTTOM
   - EXIST. ~ EXISTING

DALTON • DALTON • NEWPORT
CLEVELAND, OHIO — AKRON, OHIO

37|73

WIDENING DETAILS PIER 1

NORTH EXPRESSWAY VIADUCT
SUM-8-0195

DESIGNED	DRAWN	TRACED	CHECKED	REVIEWED	DATE	REVISED
GTC	MAB		JWW	GJP	2-1-85	

F.H.W.A. REG.	STATE	PROJECT	
5	OHIO		

147/204

SUM - 8 - 1.73/1.95

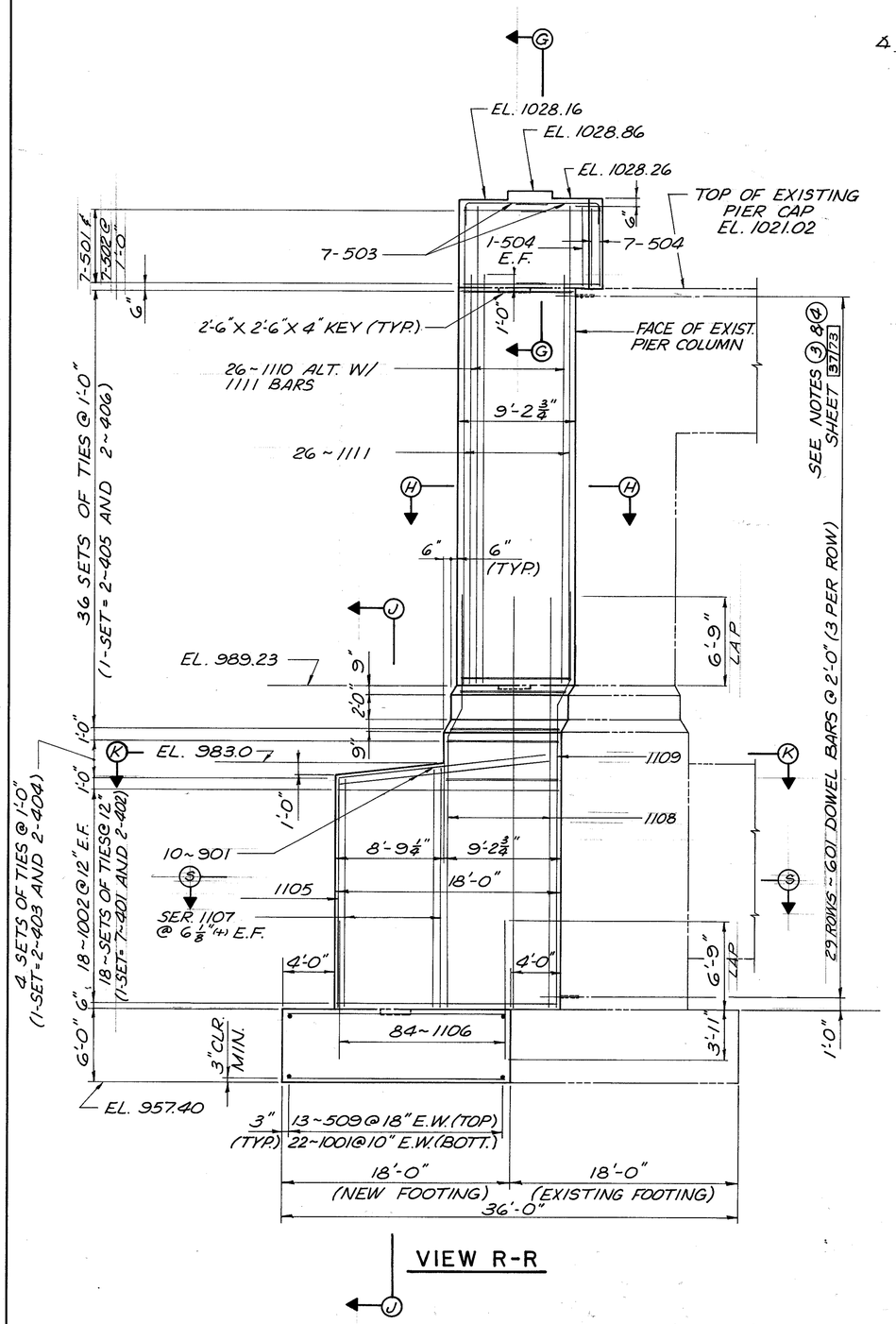

VIEW R-R

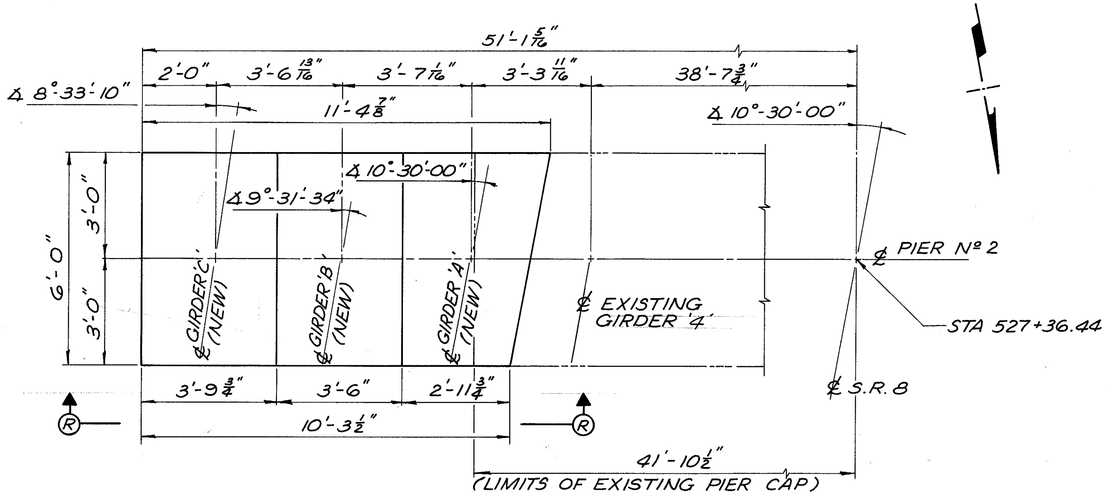

TOP PLAN
(PIER Nº 2 EXTENSION)

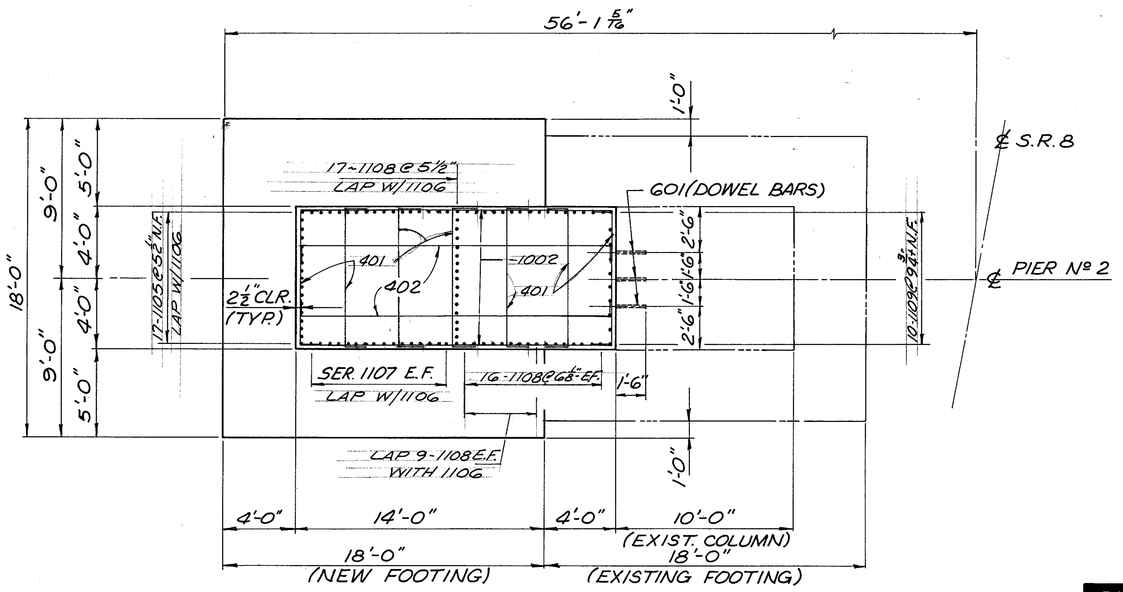

SECTION S-S

NOTES

① THE PREFIX "22-P" SHALL BE ADDED TO ALL REINFORCING BAR MARKS IN PIER Nº 2 EXTENSION.

② FOR SECTIONS "G-G", "H-H", "J-J" AND "K-K", SEE SHEET 40/73

FOR NOTES ③ ④ & ⑤ SEE SHEET 37/73

DALTON • DALTON • NEWPORT
CLEVELAND, OHIO AKRON, OHIO

38/73

WIDENING DETAILS PIER 2

NORTH EXPRESSWAY VIADUCT
SUM - 8 - 1 95

DESIGNED	DRAWN	TRACED	CHECKED	REVIEWED	DATE	REVISED
GTC	HK II		MAB	JJP	2-1-85	

F.H.W.A. REG.	STATE	PROJECT	
5	OHIO		

148
204

SUM-8- 1.73 / 1.95

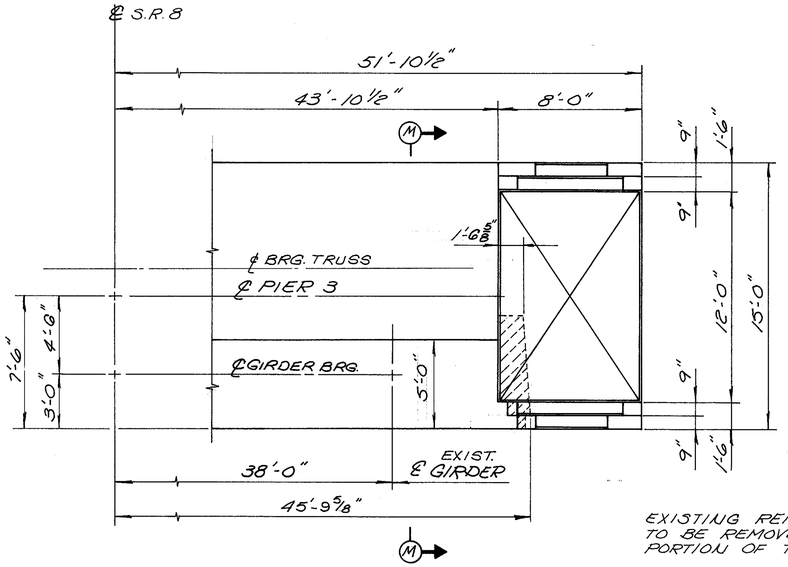

PLAN

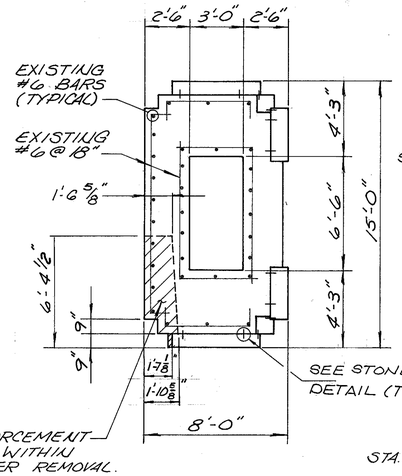

SECTION L-L

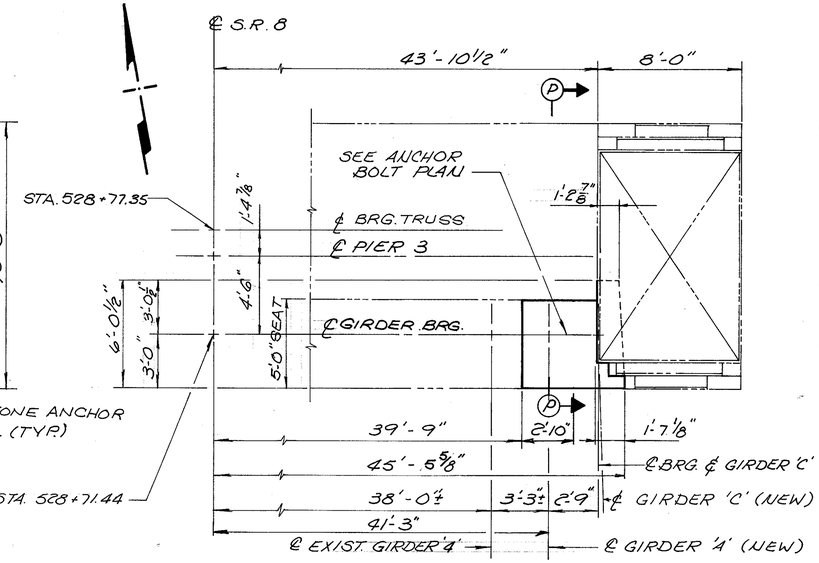

PLAN

NOTES

1. BRIDGE SEAT REINFORCING: SPECIAL CARE SHALL BE TAKEN IN PLACING REINFORCING STEEL IN THE VICINITY OF THE BRIDGE SEAT SO AS TO AVOID INTERFERENCE WITH THE DRILLING OF BEARING ANCHOR HOLES OR PRESETTING OF BEARING ANCHORS.
2. THE PREFIX "23-P" SHALL BE ADDED TO ALL REINFORCING BARS IN PIER Nº 3 MODIFICATION.
3. FOR SECTIONS 'N-N', 'P-P' AND ISOMETRIC VIEW, SEE SHEET 40/73.
4. REMOVE STONEWORK AND CUT TO LIMITS SHOWN. REMOVE ADDITIONAL STONE AS REQUIRED TO ACCOMPLISH THE WORK. PROVIDE NEW ANCHORS FOR ALL STONE REMOVED AND RESET. REFER TO THE SPECIAL PROVISIONS.

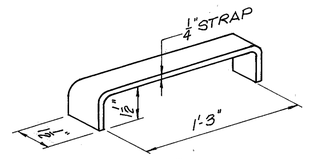

STONE ANCHOR DETAIL
ANCHORS SHALL BE FABRICATED FROM A151 TYPE 302/304 STAINLESS STEEL.

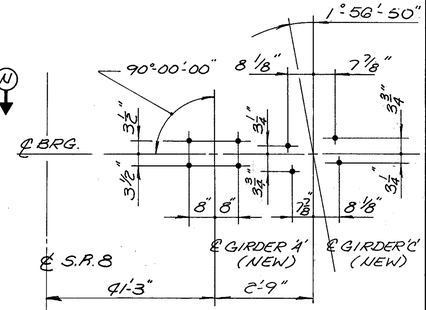

ANCHOR BOLT PLAN

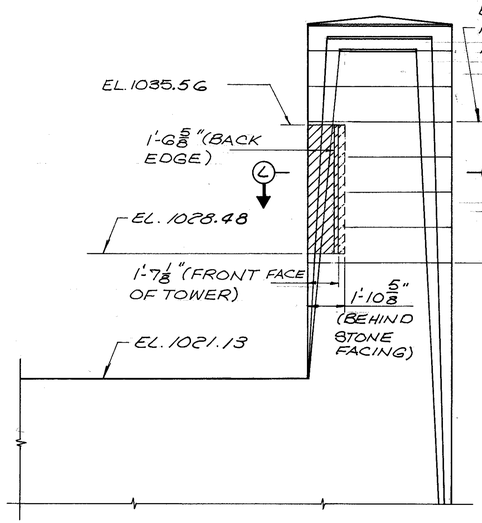

ELEVATION

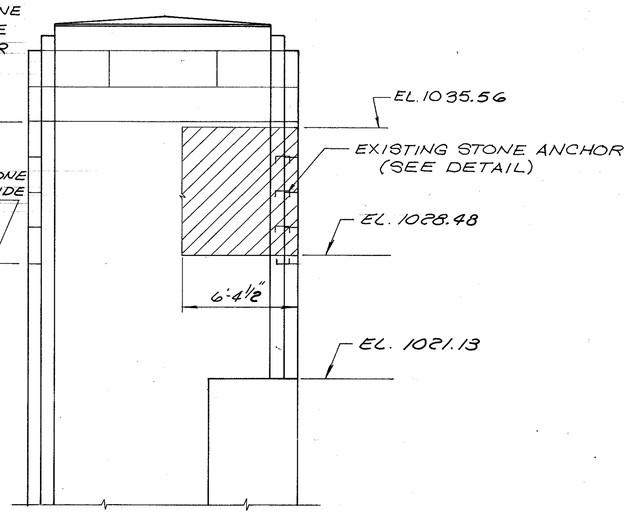

VIEW M-M

REMOVAL DETAILS — PIER Nº 3

▨ ~ INDICATES LIMITS OF REMOVAL OF EXISTING PIER (INCLUDED WITH ITEM 202 PORTIONS OF STRUCTURE REMOVED FOR PAYMENT)

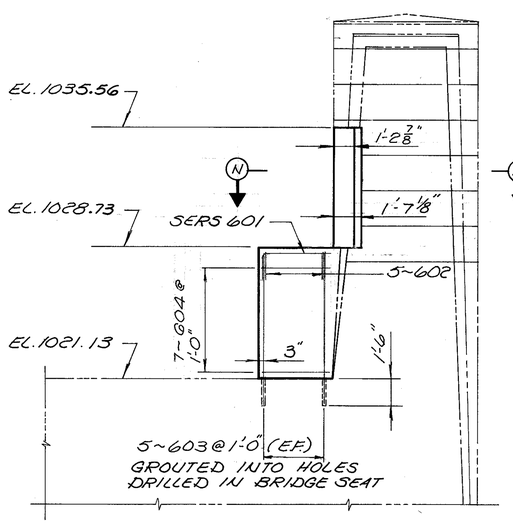

ELEVATION

MODIFICATION DETAILS — PIER Nº 3

DALTON • DALTON • NEWPORT
CLEVELAND, OHIO AKRON, OHIO

39/73

PIER 3

NORTH EXPRESSWAY VIADUCT
SUM-8-01 95

DESIGNED	DRAWN	TRACED	CHECKED	REVIEWED	DATE	REVISED
RLF	M.A.B		JWW	JGP	2-1-88	

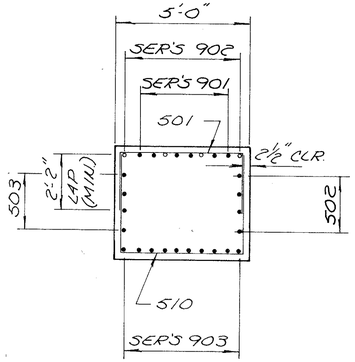

SECTION A-A

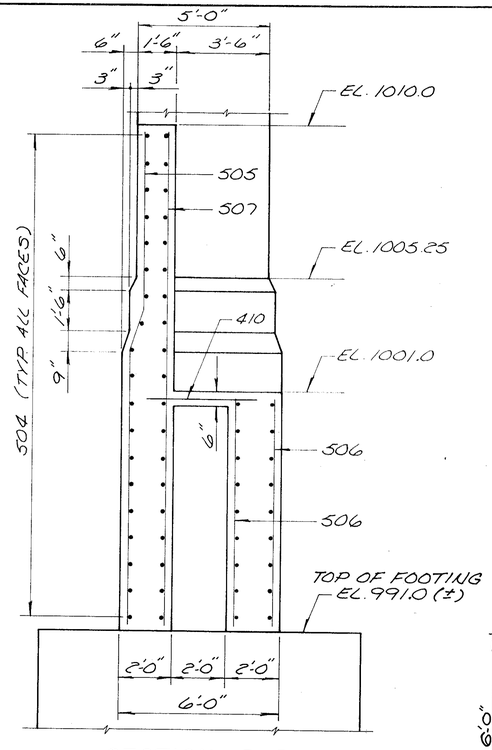

SECTION D-D

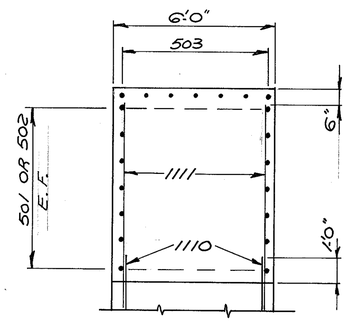

SECTION G-G

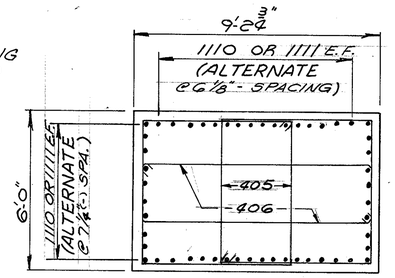

SECTION H-H

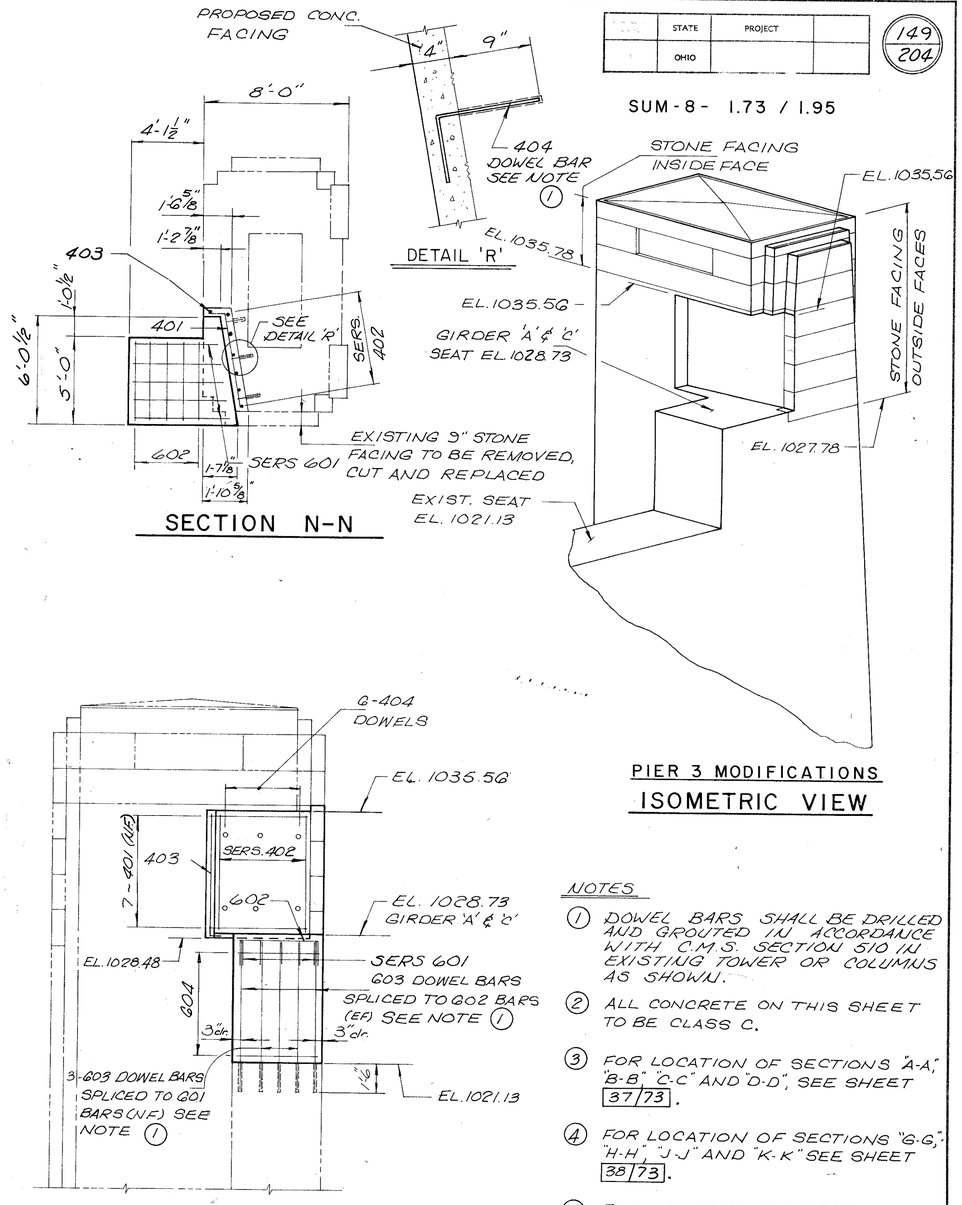

SECTION N-N

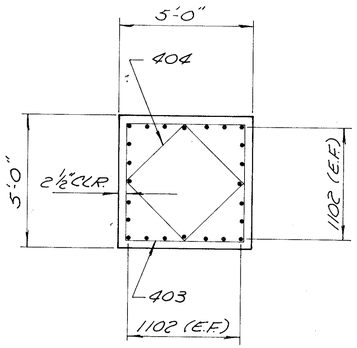

SECTION B-B

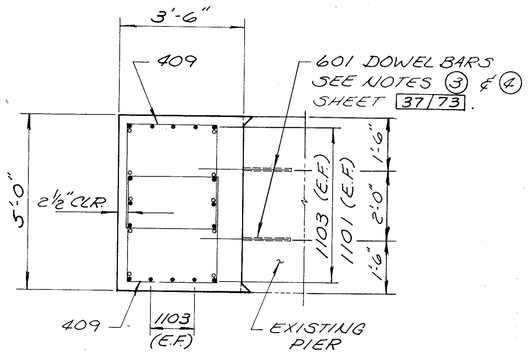

SECTION C-C

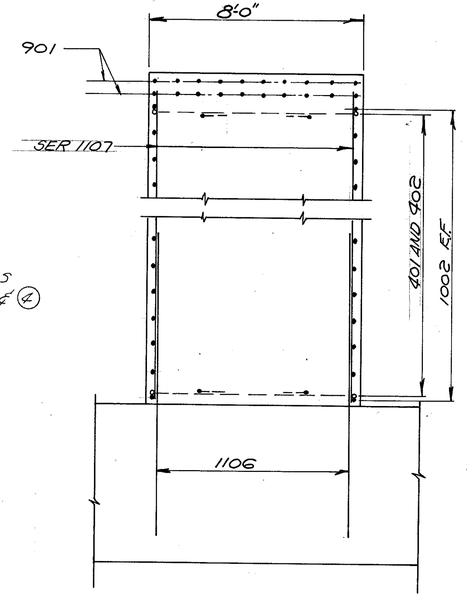

SECTION J-J

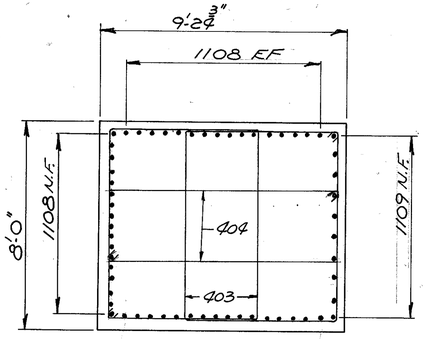

SECTION K-K

SECTION P-P

	STATE	PROJECT	
	OHIO		

149
204

SUM-8- 1.73 / 1.95

PIER 3 MODIFICATIONS

ISOMETRIC VIEW

NOTES

1. DOWEL BARS SHALL BE DRILLED AND GROUTED IN ACCORDANCE WITH C.M.S. SECTION 510 IN EXISTING TOWER OR COLUMNS AS SHOWN.
2. ALL CONCRETE ON THIS SHEET TO BE CLASS C.
3. FOR LOCATION OF SECTIONS "A-A," "B-B" "C-C" AND "D-D", SEE SHEET 37/73.
4. FOR LOCATION OF SECTIONS "G-G," "H-H" "J-J" AND "K-K" SEE SHEET 38/73.
5. FOR LOCATION OF SECTIONS "N-N" AND "P-P" SEE SHEET 39/73.

DALTON • DALTON • NEWPORT

CLEVELAND, OHIO — AKRON, OHIO

40/73

PIER DETAILS

NORTH EXPRESSWAY VIADUCT

SUM-8-01 95

DESIGNED	DRAWN	TRACED	CHECKED	REVIEWED	DATE	REVISED
M.A.B.	M.A.B.		JWN	JJP	2-1-95	

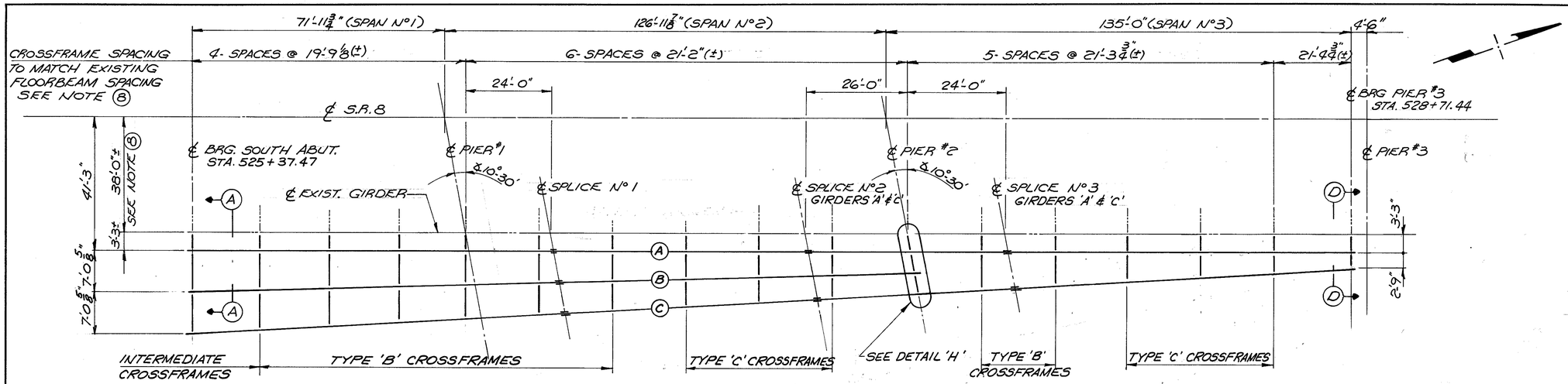

PARTIAL FRAMING PLAN

(UNIT N°1 WIDENING)

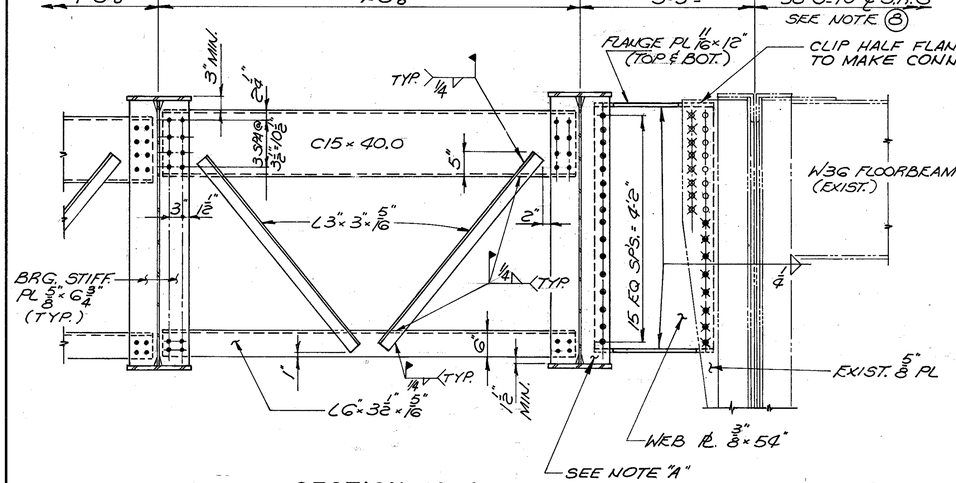

SECTION A-A

(END DIAPHRAGM AT SOUTH ABUTMENT)

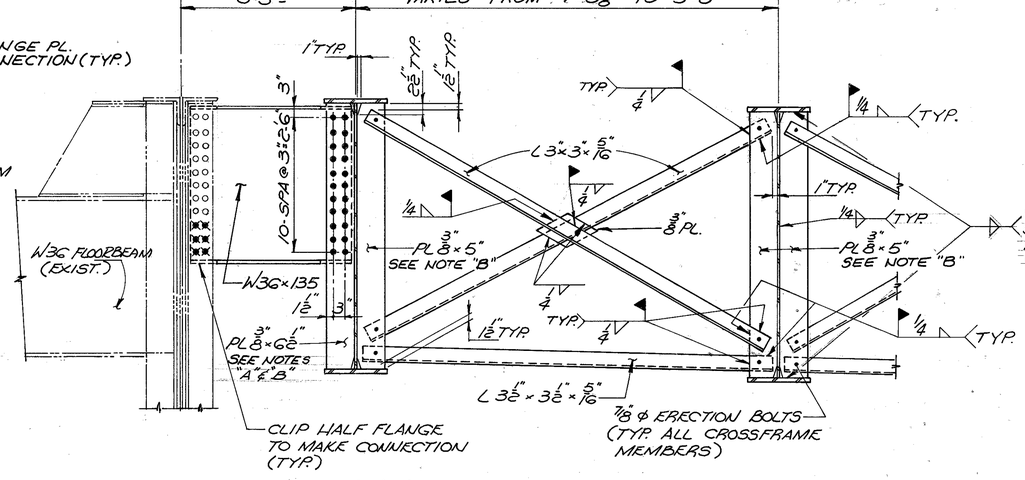

TYPE 'B' INTERMEDIATE CROSSFRAMES

NOTE "A": THIS STIFFENER SHALL BE WELDED IN THE FIELD TO MATCH BOTH HORIZONTAL AND VERTICAL ALIGNMENT OF THE EXISTING STIFFENER PLATES. THIS WELD MAY BE MADE IN THE SHOP ONLY AFTER EXISTING STIFFENER LOCATIONS HAVE BEEN VERIFIED IN THE FIELD.

NOTE "B": ALL INTERMEDIATE STIFFENERS WHICH ARE CONNECTED TO CROSSFRAMES SHALL BE WELDED TO TOP AND BOTTOM GIRDER FLANGES.

F.H.W.A. R.E.O.	STATE	PROJECT	
5	OHIO		

150/204

SUM-8-1.73 / 1.95

NOTES

(1) FOR GIRDER DETAILS AND ADDITIONAL NOTES SEE SHEET 42/73 AND 43/73.

(2) FOR DETAIL 'H', SECTION 'D-D' AND TYPE 'C' CROSSFRAME, SEE SHEET 43/73.

(3) ⊠ INDICATES EXISTING RIVETS WHICH ARE TO BE REMOVED UNDER ITEM 202, "PORTIONS OF STRUCTURES REMOVED" BUT NOT REPLACED.

(4) ○ INDICATES EXISTING RIVETS WHICH ARE ARE TO BE REMOVED AND REPLACED WITH 7/8" ϕ H.S. BOLTS, AS PER "ITEM SPECIAL, RIVET REMOVAL AND REPLACEMENT."

(5) ● INDICATES PROPOSED NUMBER AND LOCATION OF NEW 7/8" ϕ H.S. BOLTS THAT REQUIRE FIELD DRILLING OF EXISTING STEEL DURING ERECTION. INCLUDE WITH "ITEM 513, STRUCTURAL STEEL."

(6) ● INDICATES PROPOSED NUMBER AND LOCATION OF NEW 7/8" ϕ BOLTS REQUIRED. INCLUDE WITH "ITEM 513, STRUCTURAL STEEL."

(7) ERECTION BOLTS: HOLE DIAMETER IN THE CROSSFRAMES AND GIRDER STIFFENERS SHALL BE RESPECTIVELY 1/16 AND 1/4" LARGER THAN THE DIAMETER OF THE ERECTION BOLTS. UNLESS REPLACED BY PERMANENT HIGH STRENGTH BOLTS, ERECTION BOLTS SHALL REMAIN IN PLACE. LOCK WASHERS SHALL BE FURNISHED FOR OTHER THAN FULLY TORQUED HIGH STRENGTH ERECTION BOLTS. BOLTS SHALL BE FURNISHED AS PART OF "ITEM 513, STRUCTURAL STEEL."
IN LIEU OF ERECTION BOLTS AND AT THE OPTION OF THE CONTRACTOR, ALTERNATIVE MEANS OF TEMPORARY BRACING MAY BE USED SUBJECT TO THE APPROVAL OF THE DIRECTOR (501.06).

(8) CONTRACTOR TO VERIFY DIMENSIONS IN FIELD PRIOR TO SHOP FABRICATION OF STRUCTURAL STEEL.

DALTON • DALTON • NEWPORT
CLEVELAND, OHIO — AKRON, OHIO

41/73

FRAMING PLAN & DETAILS

NORTH EXPRESSWAY VIADUCT

SUM-8-01 95

DESIGNED	DRAWN	TRACED	CHECKED	REVIEWED	DATE	REVISED
HKII	JWW		BKL	JJP	2-1-88	

F.H.W.A. REG.	STATE	PROJECT	
5	OHIO		

151 / 204

SUM-8 - 1.73 / 1.95

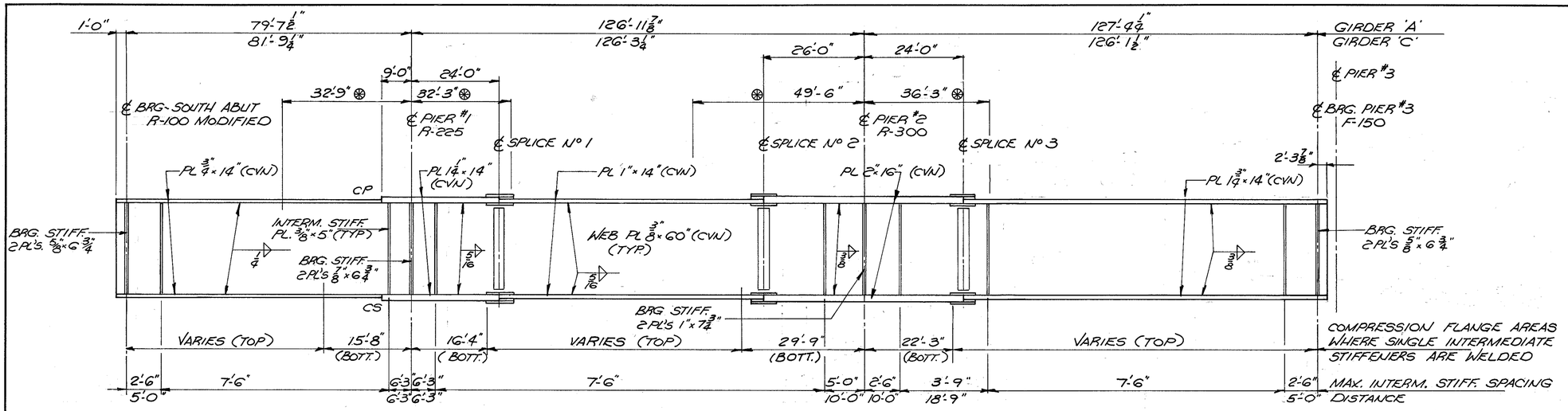

ELEVATION – GIRDERS 'A' & 'C' (NEW)

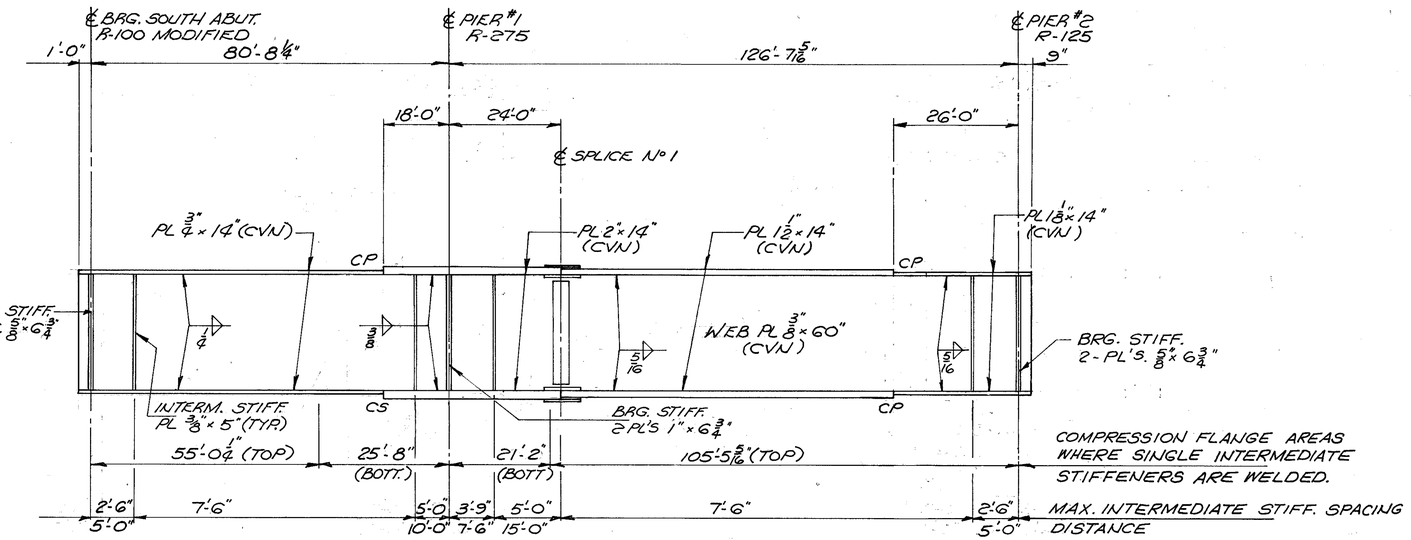

ELEVATION – GIRDER 'B' (NEW)

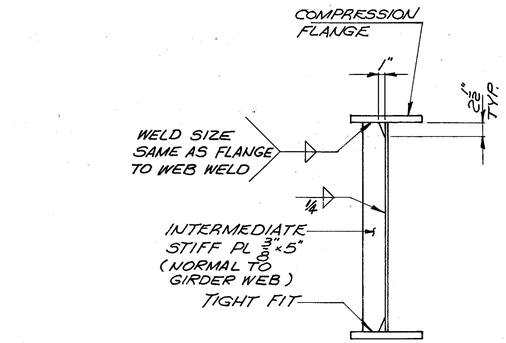

BEARING STIFFENER DETAIL

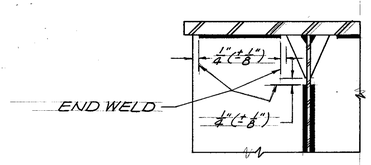

TYPICAL STIFFENER WELD TERMINATION DETAIL

INTERMEDIATE STIFFENER DETAIL

(AT LOCATIONS OTHER THAN CROSSFRAMES)

NOTES

1. ALL STRUCTURAL STEEL SHALL CONFORM TO ASTM A 36 UNLESS NOTED OTHERWISE.
2. INTERMEDIATE STIFFENERS AT LOCATIONS OTHER THAN CROSSFRAMES SHALL BE PLACED ON ONE SIDE OF THE GIRDER WEB IN ACCORDANCE WITH MAXIMUM STIFFENER SPACING SHOWN ON THE GIRDER ELEVATION. THOSE STIFFENERS SHALL ALTERNATE ON EACH SIDE OF INTERIOR GIRDERS WEB. FOR EXTERIOR GIRDER ALL STIFFENERS SHALL BE PROVIDED ON THE INSIDE.
3. INTERMEDIATE STIFFENERS AT CROSSFRAME LOCATIONS SHALL BE PLACED IN PAIRS EXCEPT FOR EXTERIOR GIRDERS.
4. FOR BEARING R-100 MODIFIED DETAILS SEE SHEET 44/73
5. FOR DEFLECTION AND CAMBER DETAIL SEE SHEET 45/73
6. WHERE A SHAPE OR PLATE IS DESIGNATED "CVN" THE MATERIAL SHALL MEET SPECIFIED MINIMUM NOTCH TOUGHNESS REQUIREMENTS, AS SPECIFIED IN 711.01 OF CMS.
7. FOR SPLICE DETAILS SEE SHEET 43/73
- ⊛ 8. WELDED ATTACHMENT OF SUPPORTS FOR CONCRETE DECK FINISHING MACHINE MAY BE MADE TO THE TOP FLANGE OF THE FASCIA GIRDER 'C', EXCEPT IN THE AREAS SHOWN THUS ⊛.

   FILLET WELDS TO COMPRESSION FLANGES SHALL BE NOT CLOSER THAN 1" FROM EDGE OF FLANGE, BE NOT MORE THAN 2" LONG, AND BE NOT SMALLER THAN THE MINIMUM SIZE REQUIRED BY AASHTO.
9. 'CS' DENOTES BUTT WELD SUBJECT TO COMPRESSIVE STRESS ONLY.
10. CP - DENOTES COMPLETE PENETRATION WELD.

DALTON • DALTON • NEWPORT
CLEVELAND, OHIO AKRON, OHIO

42/73

GIRDER DETAILS

NORTH EXPRESSWAY VIADUCT
SUM-8-01 95

DESIGNED	DRAWN	TRACED	CHECKED	REVIEWED	DATE	REVISED
HKII	JWW		BKL	JDP	2-1-88	

	STATE	PROJECT	
	OHIO		

152
204

SUM - 8 - 1.73 / 1.95

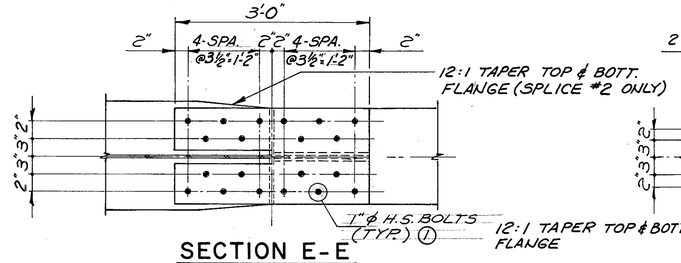

SECTION E-E

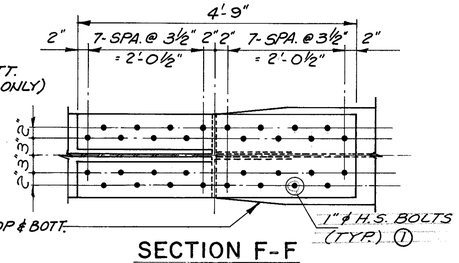

SECTION F-F

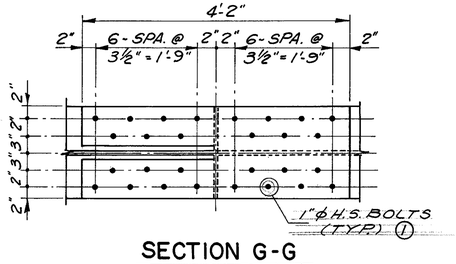

SECTION G-G

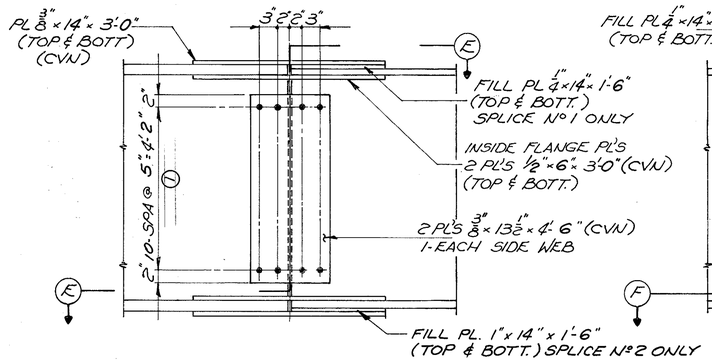

SPLICE N° 1 & 2
GIRDERS 'A' & 'C'

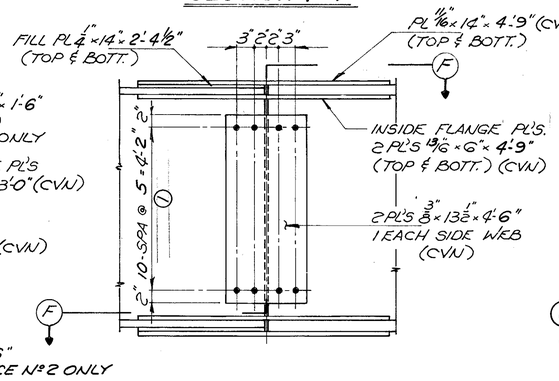

SPLICE N° 3
GIRDER 'A' & 'C'

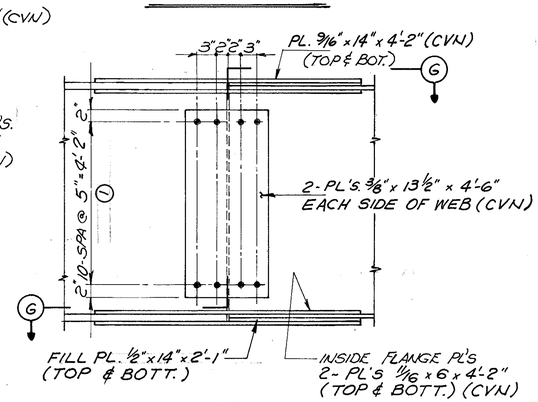

SPLICE N° 1
GIRDER 'B'

NOTES

① ALL MAIN GIRDER FIELD SPLICES SHALL BE MADE WITH 1" ϕ HIGH STRENGTH STEEL BOLTS CONFORMING TO A325, TYPE 3. THE BOLTS SHALL BE PLACED WITH THEIR HEADS ON THE OUTSIDE FACE OF THE EXTERIOR GIRDER WEB AND ON THE BOTTOM OF THE BOTTOM FLANGE PLATES AND AND TOP OF THE TOP FLANGE PLATES.

② FOR BOLT SYMBOLS SEE NOTES ③ ④ ⑤ & ⑥ SHEET 41/73

③ DIAPHRAGM WEB PLATES CONNECTING TO BEARING STIFFENERS ARE TO BE BENT AS REQUIRED AT ENDS, PRIOR TO WELDING OF FLANGE PLATES.

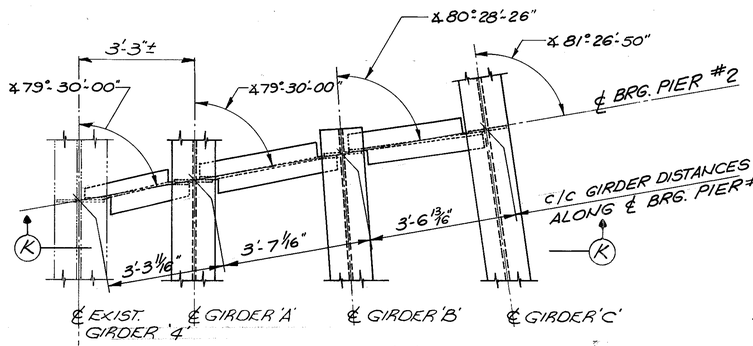

DETAIL 'H'

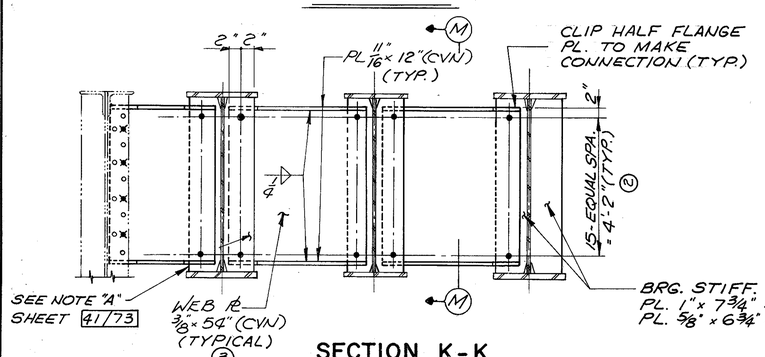

SECTION K-K

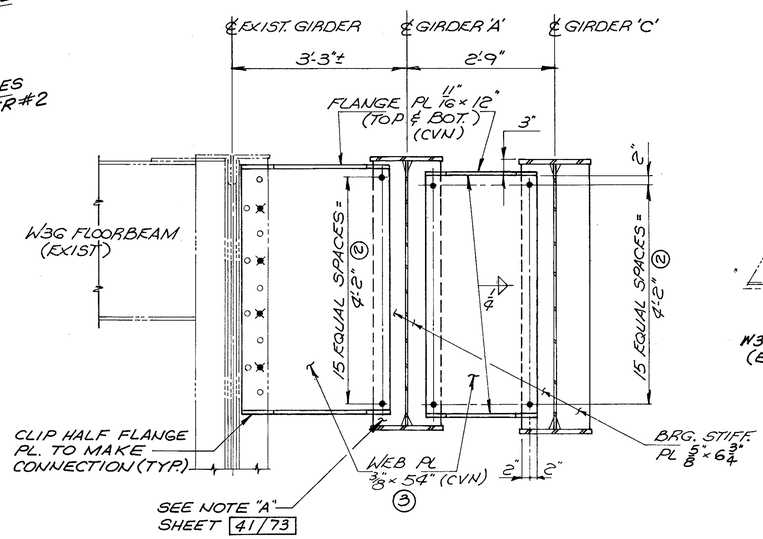

SECTION D-D

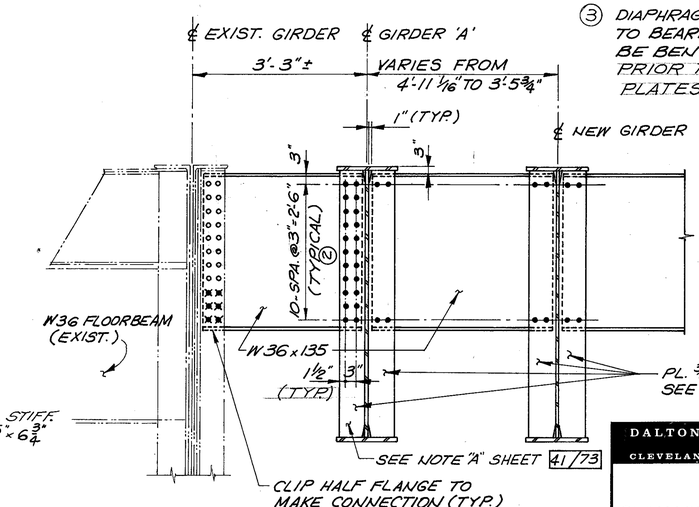

TYPE 'C' INTERMEDIATE CROSSFRAMES

DALTON • DALTON • NEWPORT
CLEVELAND, OHIO — AKRON, OHIO

43/73

STRUCTURAL STEEL DETAILS

NORTH EXPRESSWAY VIADUCT
SUM - 8 - 01 95

DESIGNED	DRAWN	TRACED	CHECKED	REVIEWED	DATE	REVISED
HK II	JWW		BKL	JOP	2-1-95	

F.H.W.A. REG.	STATE	PROJECT	
5	OHIO		

153 / 204

SUM - 8 - 1.73 / 1.95

NOTES

1. FOR FRAMING PLAN, SEE SHEET 41/73
2. FOR LOCATION OF R-100 MODIFIED BEARING, SEE SHEET 42/73.
3. THIS WORK SHALL BE PAID FOR UNDER ITEM 513 - STRUCTURAL STEEL (A36) FOR REPAIRS.
4. ✦ INDICATES PROPOSED NUMBER AND LOCATION OF NEW 7/8" DIAMETER H.S. BOLTS CONFORMING TO ASTM A-325 THAT REQUIRE DRILLING OF EXISTING STEEL FOR ERECTION. HOLES FOR 7/8" DIAMETER BOLTED CONNECTIONS SHALL BE 15/16" DIAMETER. INCLUDE COST OF FIELD DRILLING HOLES WITH "ITEM 513, STRUCTURAL STEEL (A36) FOR REPAIRS" FOR PAYMENT.

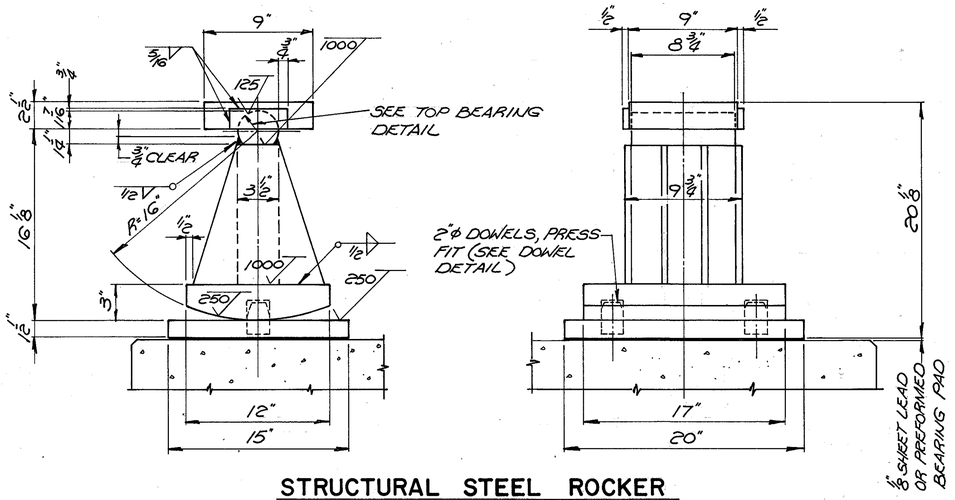

STRUCTURAL STEEL ROCKER

R-100 MODIFIED (3-REQUIRED)

FOR DETAILS & NOTES NOT SHOWN SEE OHIO STATE STD. DWG. RB-1-55 DATED 2-2-59

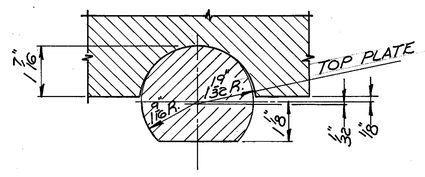

TOP BEARING DETAIL

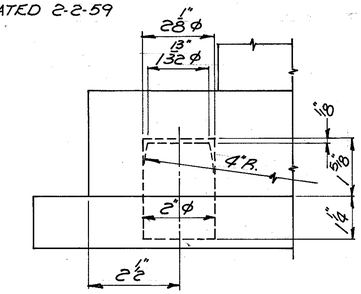

DOWEL DETAIL

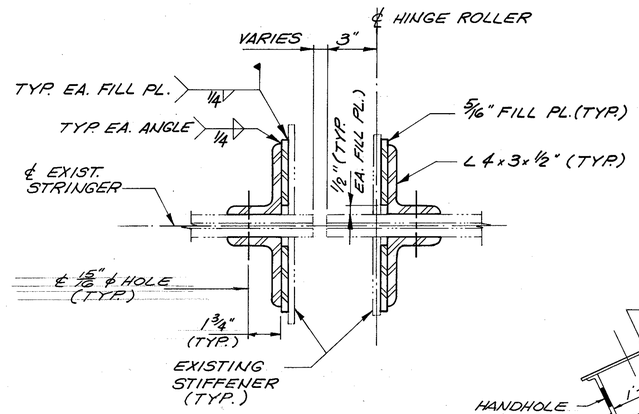

SECTION A-A

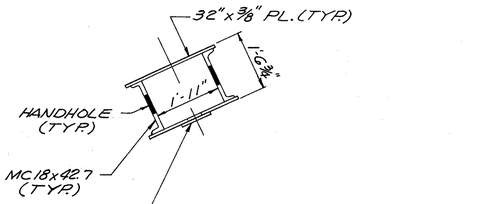

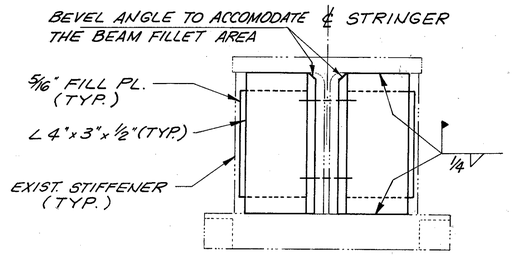

SECTION B-B

(SHOWING A TYPICAL SHORT STIFFENER REPAIR)

HOLE REPAIR

WEST FACE OF MEMBER U8' L9'
SEE NOTE (3)

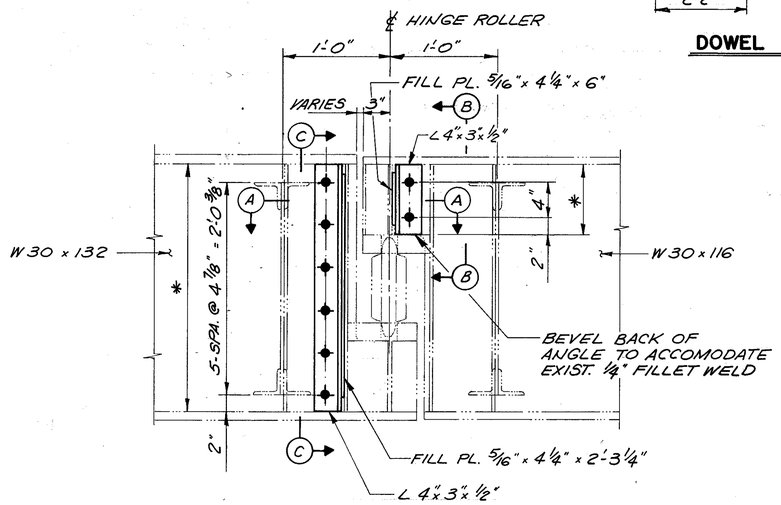

✱ - DIMENSION TO BE FIELD MEASURED TO INSURE A TIGHT FIT.

EXISTING STIFFENER REPAIR DETAIL

SEE NOTE (3)

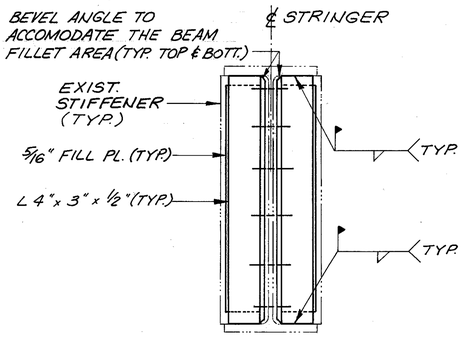

SECTION C-C

(SHOWING A TYPICAL LONG STIFFENER REPAIR)

STRUCTURAL STEEL REPAIR @ HINGE ROLLERS

TYPE OF REPAIR PER HINGE	EST. QUANTITY OF A36 STRUCTURAL STEEL PER REPAIR	NO. OF 7/8" ϕ H.S. BOLTS PER REPAIR	EST. TOTAL WT. OF ALL STEEL PER. REPAIR	EST. NO. REPAIRS PER HINGE	EST. NO. OF HINGES TO BE REPAIRED
LONG STIFFENER REPAIRS.	72 LBS.	6	78 LBS.	2	15
SHORT STIFFENER REPAIRS	20 LBS.	2	22 LBS	2	

TOTAL ESTIMATED WEIGHT OF STRUCTURAL STEEL FOR HINGE REPAIRS = 3,000 LBS. THIS WEIGHT HAS BEEN ARRIVED AT BY USING THE ESTIMATED NUMBER OF REPAIRS AND THE ESTIMATED QUANTITY OF STRUCTURAL STEEL PER ONE REPAIR IN EACH CASE BASED UPON AN ASSUMED CONDITION AS DETAILED. THE ACTUAL TOTAL QUANTITY OF STRUCTURAL STEEL MAY VARY DEPENDING ON THE ACTUAL AMOUNT OF REPAIRS REQUIRED FOR EACH INDIVIDUAL CASE. THE ACTUAL QUANTITY OF STRUCTURAL STEEL USED TO MAKE APPROVED REPAIRS AT HINGES WILL BE PAID FOR PER "ITEM 513 - STRUCTURAL STEEL (A36) FOR REPAIRS."

DALTON • DALTON • NEWPORT

CLEVELAND, OHIO — AKRON, OHIO

44/73

STRUCTURAL STEEL DETAILS

NORTH EXPRESSWAY VIADUCT

SUM - 8 - 01.95

DESIGNED	DRAWN	TRACED	CHECKED	REVIEWED	DATE	REVISED
RLF	JWW		BKL	JDP	2-1-85	

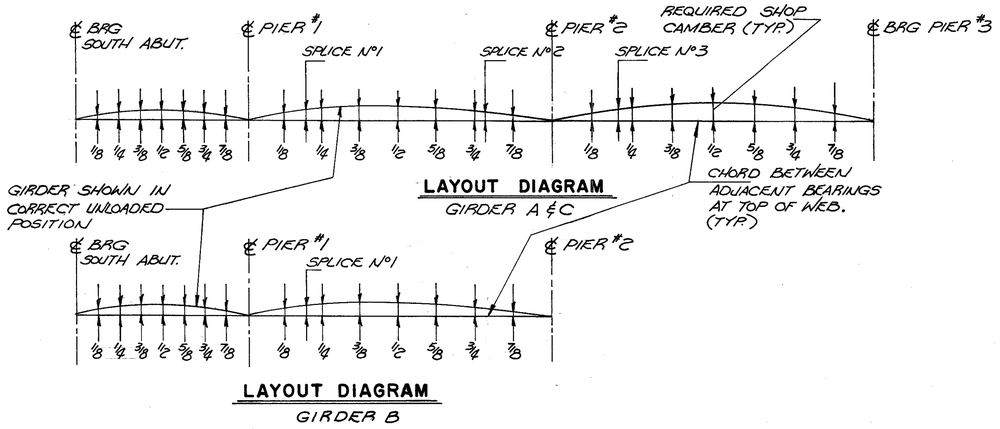

F.H.W.A. REG.	STATE	PROJECT	
5	OHIO		

154
204

SUM - 8 - 1.73 / 1.95

DEFLECTION & CAMBER (GIRDER A)

POINTS	DEFLECTION DUE TO WEIGHT OF STEEL	DEFLECTION DUE TO REMAIN. DEAD LOAD	REQUIRED SHOP CAMBER
SOUTH ABUT.			
1/8	0"	1/8"	1/8"
1/4	1/16"	1/4"	5/16"
3/8	1/16"	1/4"	5/16"
1/2	1/16"	1/4"	5/16"
5/8	1/16"	3/16"	1/4"
3/4	0"	1/8"	1/8"
7/8	0"	0"	0"
PIER #1			
1/8	1/16"	1/8"	3/16"
SPLICE N°1	1/16"	3/16"	1/4"
1/4	1/16"	5/16"	3/8"
3/8	1/8"	7/16"	9/16"
1/2	1/8"	1/16"	9/16"
5/8	1/16"	5/16"	3/8"
3/4	0"	1/8"	1/8"
SPLICE N° 2	0	1/16"	1/16"
7/8	-1/16"	0"	-1/16"
PIER #2			
1/8	1/8"	3/16"	5/16"
SPLICE N°3	3/16"	5/16"	1/2"
1/4	1/4"	1/2"	3/4"
3/8	7/16"	3/4"	1 3/16"
1/2	1/2"	13/16"	1 7/16"
5/8	1/2"	15/16"	1 7/16"
3/4	3/8"	13/16"	1 3/16"
7/8	1/4"	7/16"	11/16"
℄ BRG. PIER #3			

DEFLECTION & CAMBER (GIRDER B)

POINTS	DEFLECTION DUE TO WEIGHT OF STEEL	DEFLECTION DUE TO REMAIN. DEAD LOAD	REQUIRED SHOP CAMBER
SOUTH ABUT.			
1/8	0"	1/16"	1/16"
1/4	-1/16"	1/8"	1/16"
3/8	-1/16"	1/16	0"
1/2	-1/8"	1/16	-1/16"
5/8	-1/8"	-1/16	-3/16"
3/4	-1/8"	-1/16"	-3/16"
7/8	-1/16"	-1/16	-1/8"
PIER #1			
1/8	3/16"	5/16"	1/2"
SPLICE N°1	1/4"	9/16"	13/16"
1/4	3/8"	3/4"	1 1/8"
3/8	1/2"	1 1/8"	1 5/8"
1/2	5/8"	1 5/16"	1 15/16"
5/8	9/16"	1 5/16"	1 7/8"
3/4	1/2"	1 1/16"	1 9/16"
7/8	1/4"	5/8"	7/8"
PIER #2			

DEFLECTION & CAMBER (GIRDER C)

POINTS	DEFLECTION DUE TO WEIGHT OF STEEL	DEFLECTION DUE TO REMAIN. DEAD LOAD	REQUIRED SHOP CAMBER
SOUTH ABUT.			
1/8	1/16"	1/8"	3/16"
1/4	1/16"	1/4"	5/16"
3/8	1/16"	5/16"	3/8"
1/2	1/16"	5/16"	3/8"
5/8	1/16"	3/16"	1/4"
3/4	0"	1/8"	1/8"
7/8	0"	0"	0"
PIER #1			
1/8	1/16"	1/8"	3/16"
SPLICE N°1	1/16"	1/4"	5/16"
1/4	1/16"	3/8"	7/16"
3/8	1/8"	1/2"	5/8"
1/2	1/8"	3/16"	1 1/16"
5/8	1/16"	7/16"	1/2"
3/4	0"	3/16"	3/16"
SPLICE N°2	0"	1/8"	1/8"
7/8	-1/16"	1/16"	0"
PIER #2			
1/8	1/8"	3/16"	5/16"
SPLICE N°3	3/16"	5/16"	1/2"
1/4	1/4"	1/2"	3/4"
3/8	3/8"	13/16"	1 3/16"
1/2	1/2"	1"	1 1/2"
5/8	1/2"	1"	1 1/2"
3/4	3/8"	13/16	1 3/16"
7/8	1/4"	7/16	11/16"
℄ BRG PIER #3			

NOTE

A MINUS SIGN IN THE DEFLECTION & CAMBER TABLES INDICATES A VALUE BELOW THE CHORD BETWEEN ADJACENT BEARINGS.

DALTON • DALTON • NEWPORT
CLEVELAND, OHIO AKRON, OHIO

45/73

DEFLECTION AND CAMBER

NORTH EXPRESSWAY VIADUCT
SUM - 8 - 01 95

DESIGNED	DRAWN	TRACED	CHECKED	REVIEWED	DATE	REVISED
HII	JWH		RLF	JJP	2-1-85	

F.H.W.A. REG.	STATE	PROJECT	
5	OHIO		

155
204

SUM - 8 - 1.73 / 1.95

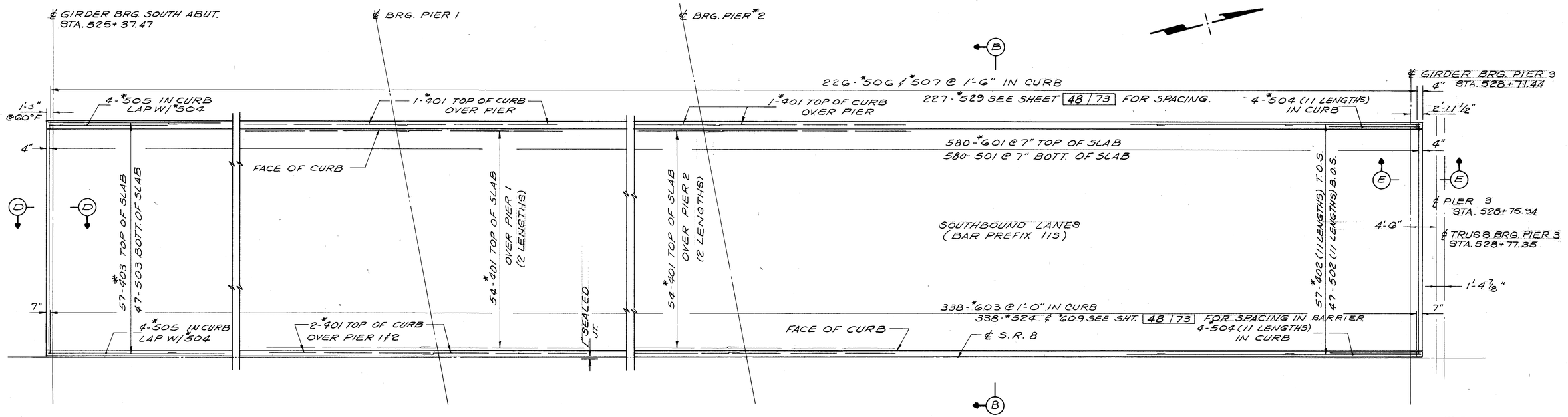

SLAB PLAN

UNIT 1 ~ SOUTHBOUND LANES

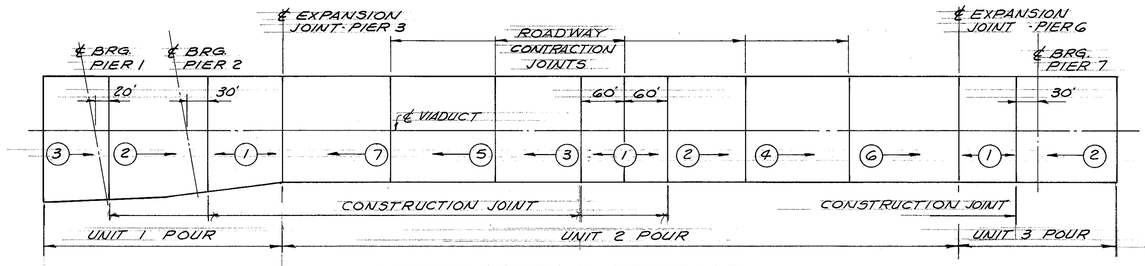

POURING SEQUENCE

THE CONTRACTOR MAY SUBMIT ALTERNATE POURING SEQUENCES SUBJECT TO APPROVAL OF THE ENGINEER.

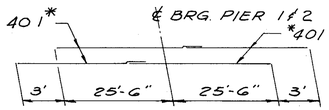

DIAGRAM SHOWING STAGGER OF *401 BARS OVER PIERS

REINFORCING BARS
MIN LAPS REQUIRED

#4 BARS = 1'-4"
#5 BARS = 1'-8"
#6 BARS = 2'-0"

NOTES

1. THE PREFIX 115 SHALL BE ADDED TO ALL REINFORCING BAR MARKS IN SOUTHBOUND LANES UNIT 1.
2. * INDICATES REINFORCING STEEL TO BE EPOXY COATED
3. FOR SECTION B-B SEE SHEET 52/73.
4. FOR SECTION D-D SEE SHEET 54/73.
5. FOR ADDITIONAL NOTES AND DETAILS SEE SHEET 47/73 AND 48/73.
6. FOR SECTION E-E SEE SHEET 50/73.
7. SEE SHEETS 48/73 AND 52/73 FOR ADDITIONAL REINFORCING STEEL IN PARAPETS.

DALTON • DALTON • NEWPORT
CLEVELAND, OHIO AKRON, OHIO

40/73

SLAB PLAN - UNIT 1 SOUTHBOUND LANES

NORTH EXPRESSWAY VIADUCT

SUM - 8 - 0195

DESIGNED	DRAWN	TRACED	CHECKED	REVIEWED	DATE	REVISED
BKL	CDG		GTC	gap	2-1-85	

F.H.W.A. REG.	STATE	PROJECT	
5	OHIO		

156/204

SUM - 8 - 1.73 / 1.95

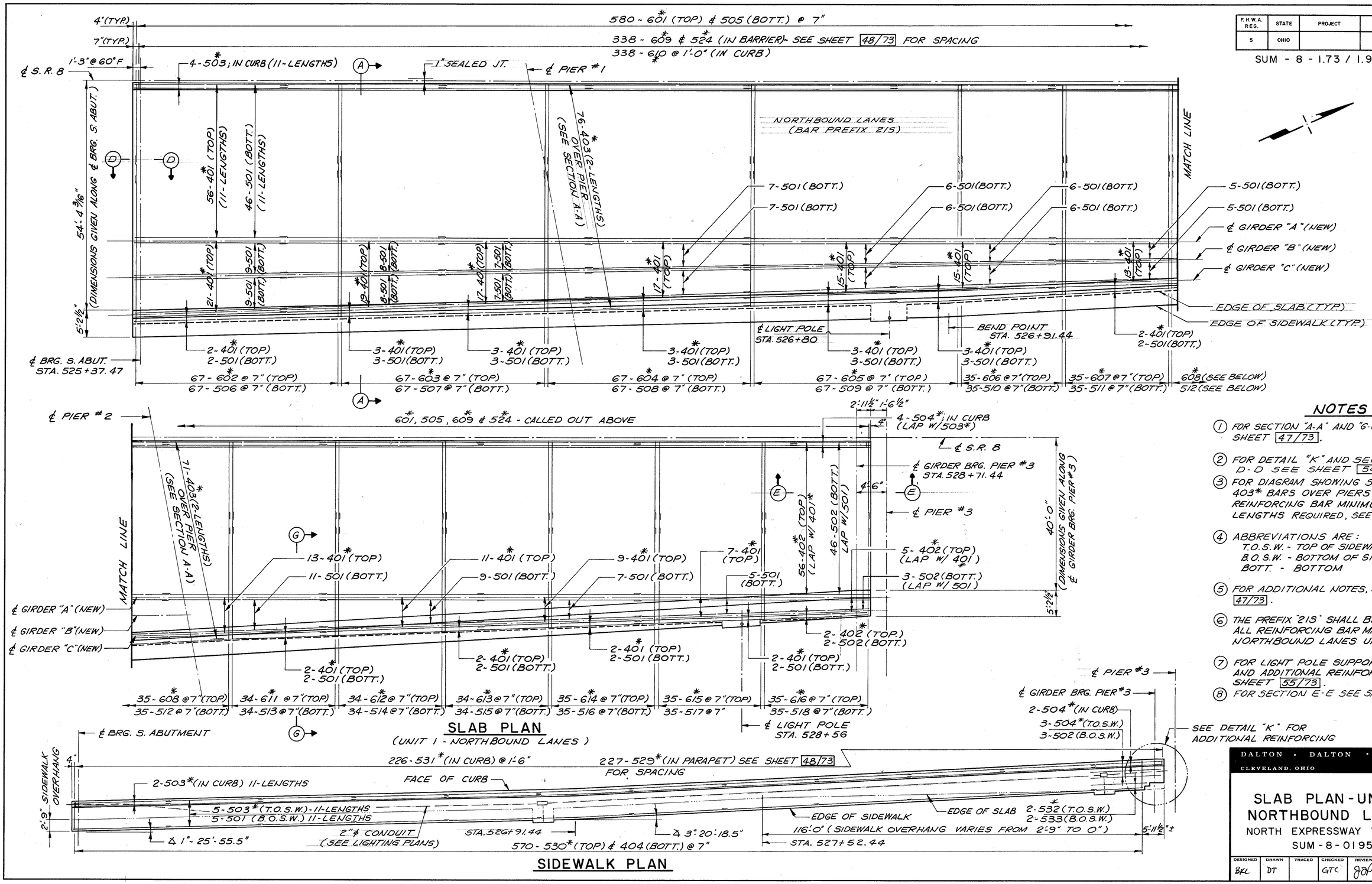

NOTES

1. FOR SECTION "A-A" AND "G-G", SEE SHEET 47/73.
2. FOR DETAIL "K" AND SECTION D-D SEE SHEET 54/73.
3. FOR DIAGRAM SHOWING STAGGER OF 403* BARS OVER PIERS AND REINFORCING BAR MINIMUM LAP LENGTHS REQUIRED, SEE SHEET 47/73.
4. ABBREVIATIONS ARE:
   T.O.S.W. - TOP OF SIDEWALK
   B.O.S.W. - BOTTOM OF SIDEWALK
   BOTT. - BOTTOM
5. FOR ADDITIONAL NOTES, SEE SHEET 47/73.
6. THE PREFIX "215" SHALL BE ADDED TO ALL REINFORCING BAR MARKS IN NORTHBOUND LANES UNIT 1.
7. FOR LIGHT POLE SUPPORT DETAILS AND ADDITIONAL REINFORCING, SEE SHEET 55/73.
8. FOR SECTION E-E SEE SHEET 50/73.

DALTON • DALTON • NEWPORT
CLEVELAND, OHIO AKRON, OHIO

464/73

SLAB PLAN - UNIT 1 NORTHBOUND LANES

NORTH EXPRESSWAY VIADUCT

SUM - 8 - 0195

DESIGNED	DRAWN	TRACED	CHECKED	REVIEWED	DATE	REVISED
BKL	DT		GTC	GDP	2-1-85	

E.H.W.A. REG.	STATE	PROJECT	
5	OHIO		

157 / 204

SUM-8- 1.73 / 1.95

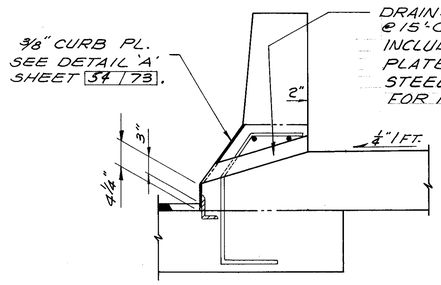

DETAIL "H"

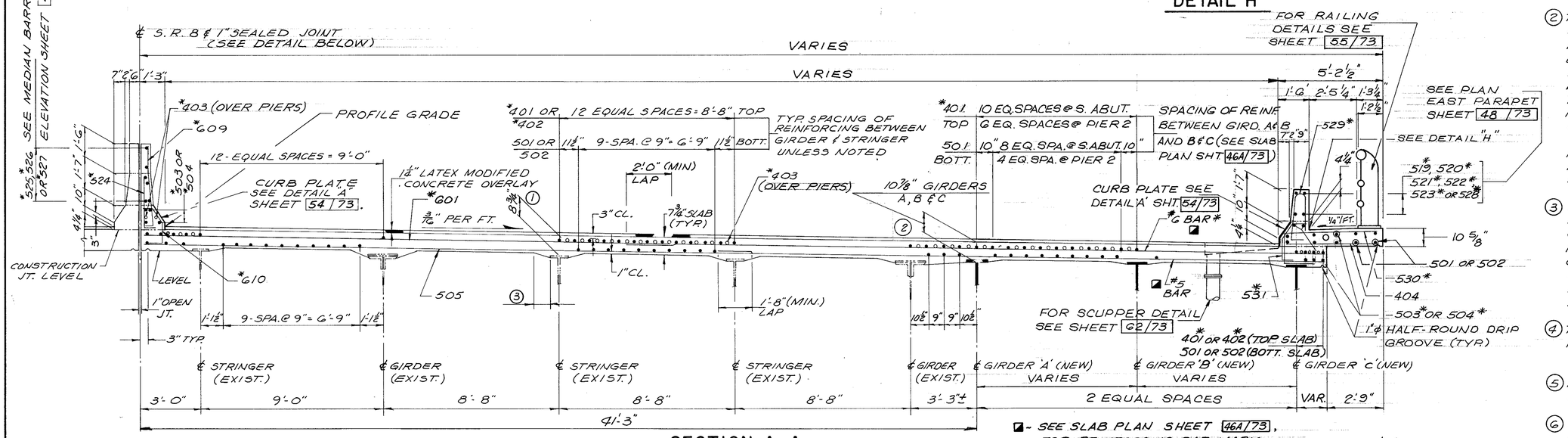

SECTION A-A

UNIT 1 NORTHBOUND STRUCTURE
BAR PREFIX 215
(SOUTH ABUTMENT TO PIER 2)

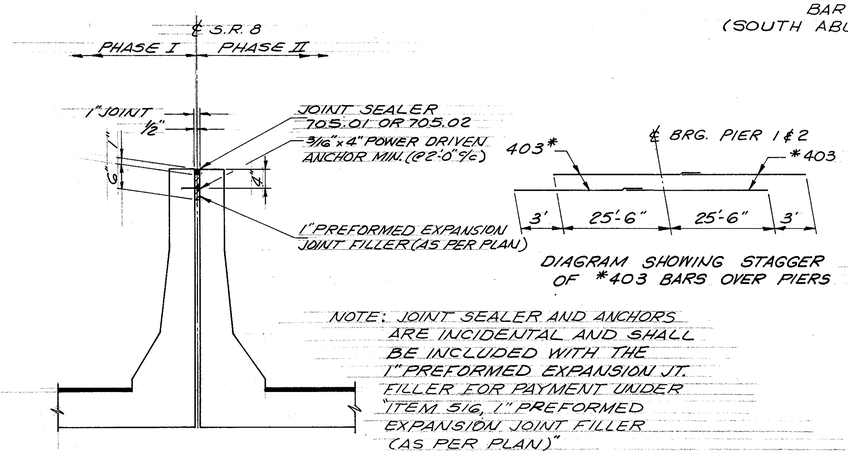

DIAGRAM SHOWING STAGGER OF *403 BARS OVER PIERS

NOTE: JOINT SEALER AND ANCHORS ARE INCIDENTAL AND SHALL BE INCLUDED WITH THE 1" PREFORMED EXPANSION JT. FILLER FOR PAYMENT UNDER "ITEM 516, 1" PREFORMED EXPANSION JOINT FILLER (AS PER PLAN)"

1" SEAL JOINT DETAIL

(TYP. @ ABUTMENT & SUPERSTRUCTURE)

REINFORCING BARS MIN. LAPS REQUIRED

#4	BARS	1'-4"
#5	BARS	1'-8"
#6	BARS	2'-0"

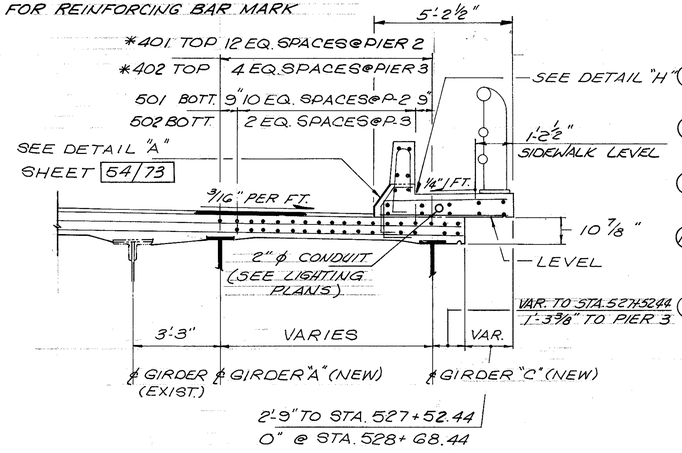

SECTION G-G

UNIT 1 NORTHBOUND STRUCTURE
BAR PREFIX 215
(PIER 2 TO PIER 3)

◪ - SEE SLAB PLAN SHEET 46A / 73, FOR REINFORCING BAR MARK

NOTES

(1) THE DISTANCE SHOWN FROM TOP OF DECK SLAB TO TOP OF EXISTING BEAMS WAS OBTAINED BY USING DIMENSIONS TAKEN FROM EXISTING PLANS. THE QUANTITY OF DECK CONCRETE TO BE PAID FOR SHALL BE BASED ON THESE DIMENSIONS, EVEN THOUGH DEVIATIONS MAY OCCUR. REFER TO CMS SECTION 105.02.

(2) THIS IS THE DESIGN DIMENSION. THE QUANTITY OF DECK CONCRETE TO BE PAID FOR SHALL BE BASED UPON THIS DIMENSION, EVEN THOUGH DEVIATION FROM IT MAY BE NECESSARY BECAUSE THE TOP FLANGE OF THE GIRDER MAY NOT HAVE THE EXACT CAMBER OR CONFORMATION REQUIRED TO PLACE IT PARALLEL TO THE FINISHED GRADE. DEDUCTION SHALL BE MADE FOR VOLUME OF ENCASED STEEL PLATES AS PER 511.18

(3) A HAUNCH WIDTH OF 9" SHALL BE USED FOR COMPUTING QUANTITY OF CONCRETE. HOWEVER, THE HAUNCH WIDTH MAY VARY BETWEEN 6" AND 12" PROVIDED THAT THE SLOPE SHALL BE NOT MORE THAN 1:4 FOR A HAUNCH LESS THAN 9" IN WIDTH

(4) THE PREFIX 215 SHALL BE ADDED TO ALL REINFORCING BAR MARKS IN UNIT-1 NORTHBOUND STRUCTURE.

(5) FOR SCREED ELEVATION TABLES SEE SHEET 56 / 73.

(6) TRANSVERSE AND LONGITUDINAL REINFORCEMENT SHALL BE FIELD BENT AS REQUIRED. PAYMENT SHALL BE INCLUDED WITH ITEM 509.

(7) ALL REINFORCING BARS SHOWN THUS *ARE TO BE EPOXY COATED.

(8) PROFILE GRADE IS GIVEN TO TOP OF FINISHED PAVEMENT.

(9) FOR SCUPPER LOCATIONS SEE SHEET 1 / 73.

(10) FOR ADDITIONAL REINFORCING AT SCUPPERS SEE DETAIL 'S' SHEET 54 / 73

(11) FOR ADDITIONAL NOTES AND DETAILS SEE SHEETS 46A / 73 & 48 / 73

DALTON • DALTON • NEWPORT
CLEVELAND, OHIO AKRON, OHIO

47 / 73

SLAB DETAILS-UNIT 1 NORTHBOUND LANES

NORTH EXPRESSWAY VIADUCT

SUM-8-0195

DESIGNED	DRAWN	TRACED	CHECKED	REVIEWED	DATE	REVISED
BKL	F.F.		JWW	JJP	2-1-85	

F.H.W.A. REG.	STATE	PROJECT	
5	OHIO		

158
204

SUM-8 - 1.73 / 1.95

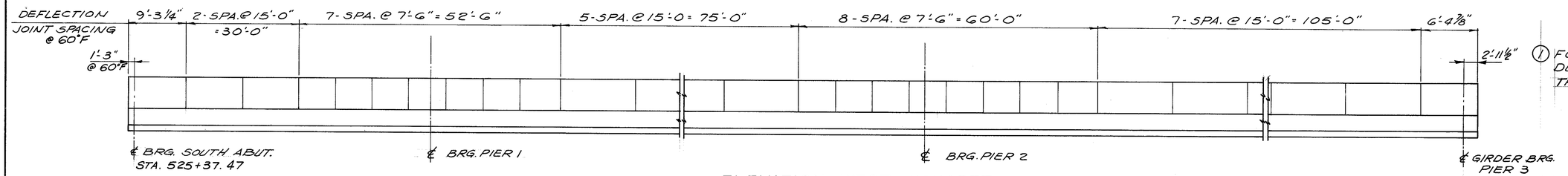

ELEVATION WEST PARAPET

UNIT 1
(BAR PREFIX 115)

NOTES

(1) FOR ADDITIONAL NOTES AND DETAILS SEE SHEET 46 73 THRU 47 73.

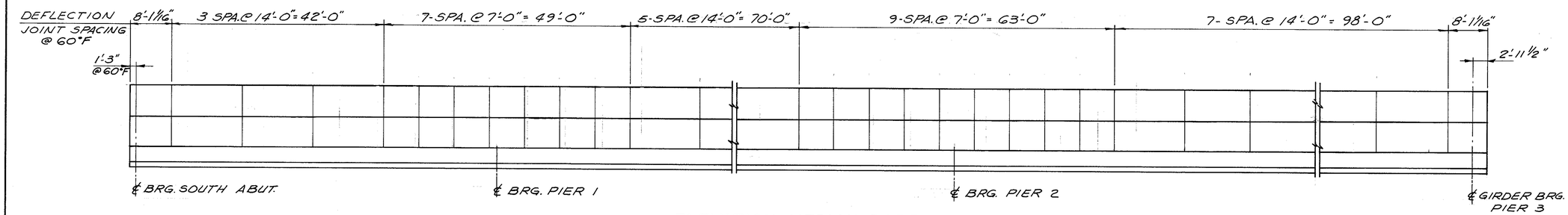

ELEVATION MEDIAN BARRIER

EAST SIDE OF MEDIAN SHOWN (BAR PREFIX 215)
WEST SIDE SIMILAR (BAR PREFIX 115)
UNIT 1

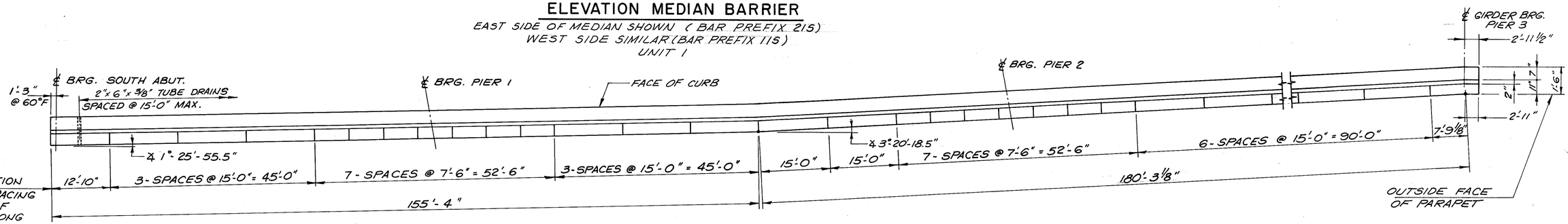

PLAN EAST PARAPET

UNIT 1
(BAR PREFIX 215)

9"	9-SPA. @ 1'-6" = 13'-6" (10-*529)	9"	15'-0" PANELS
9"	4-SPA. @ 1'-6" = 6'-0" (5-*529)	9"	7'-6" PANELS
6½"	6-SPA @ 1'-4" = 8'-0" (7-*529)	9"	9'-3¼" PANEL
5"	8-SPA @ 1'-6" = 12'-0" (9-*529)	5"	12'-10" PANEL
4½"	7-SPA @ 1'-5" = 9'-11" (8-*529)	4⅝"	10'-8⅛" PANEL
9"	4-SPA @ 1'-4" = 5'-4" (5-*529)	3⅜"	6'-4⅞" PANEL

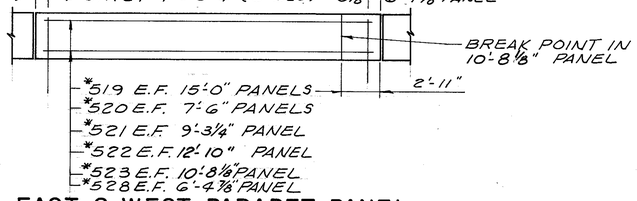

EAST & WEST PARAPET PANEL

6"	13-SPA. @ 1'-0" = 13'-0" (14-*524 / *609)	6"	14'-0" PANELS
6"	6-SPA. @ 1'-0" = 6'-0" (7-*524 / *609)	6"	7'-0" PANELS
6½"	7-SPA. @ 1'-0" = 7'-0" (8-*524 / *609)	6½"	8'-1⅛" PANELS

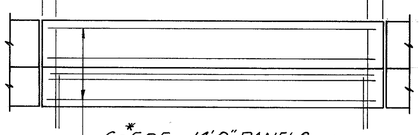

MEDIAN BARRIER PANEL

DALTON • DALTON • NEWPORT
CLEVELAND, OHIO AKRON, OHIO

48 73

SLAB DETAILS - UNIT 1

NORTH EXPRESSWAY VIADUCT
SUM-8-01 95

DESIGNED	DRAWN	TRACED	CHECKED	REVIEWED	DATE	REVISED
BKL	F.F.		JWW	JJP	2-1-85	

F.H.W.A. REG.	STATE	PROJECT	
5	OHIO		

159/204

SUM-8- 1.73 / 1.95

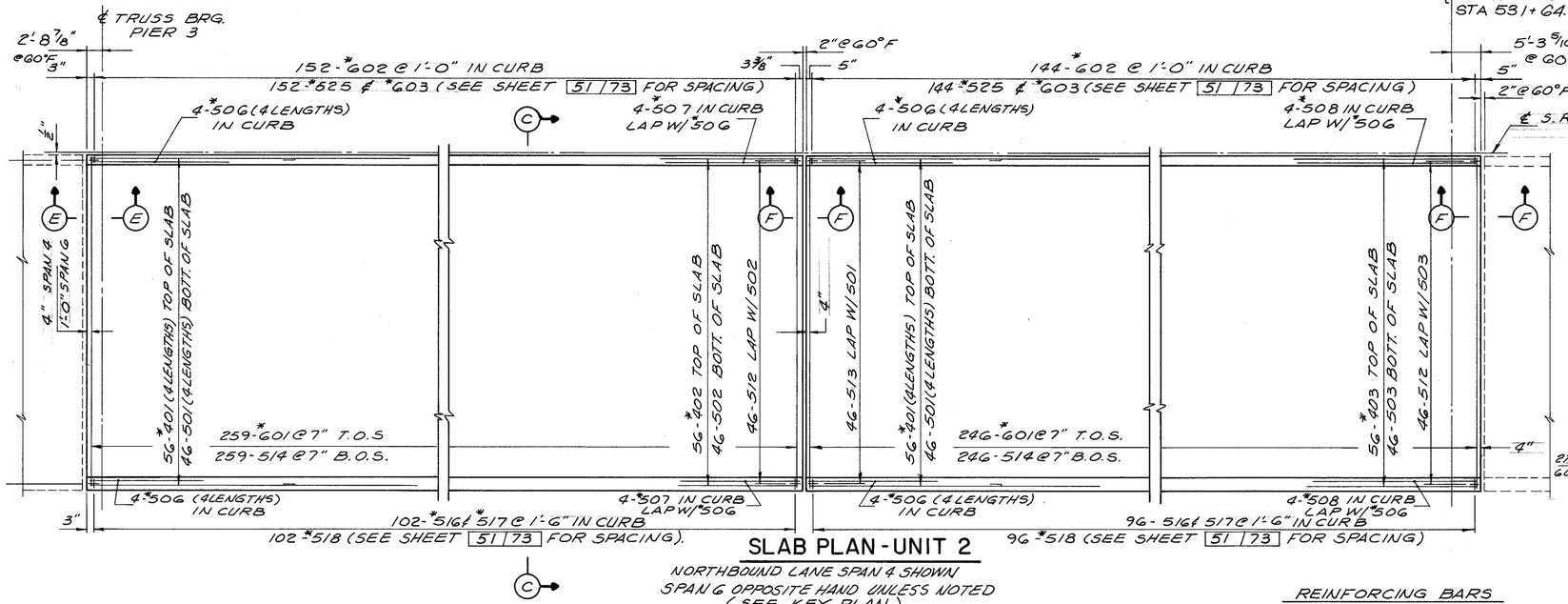

SLAB PLAN-UNIT 2

NORTHBOUND LANE SPAN 4 SHOWN
SPAN 6 OPPOSITE HAND UNLESS NOTED
(SEE KEY PLAN)
SLAB PLAN SYMMETRICAL ABOUT ℄ S.R. 8

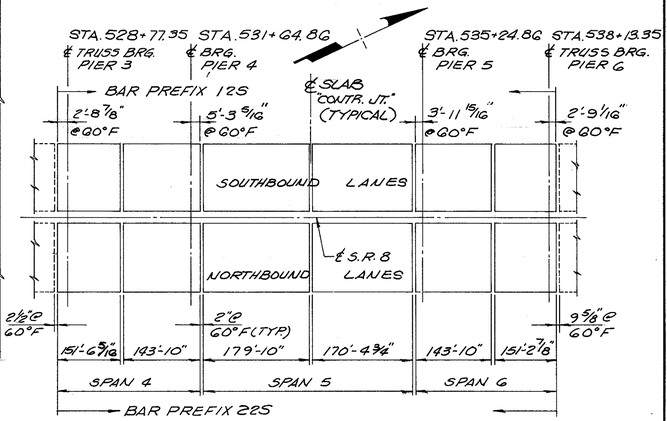

KEY PLAN-UNIT 2

REINFORCING BARS MIN LAPS REQUIRED

#4 BARS = 1'-4"
#5 BARS = 1'-8"

ABBREVIATIONS

T.O.S. ~ TOP OF SLAB
B.O.S. ~ BOTTOM OF SLAB

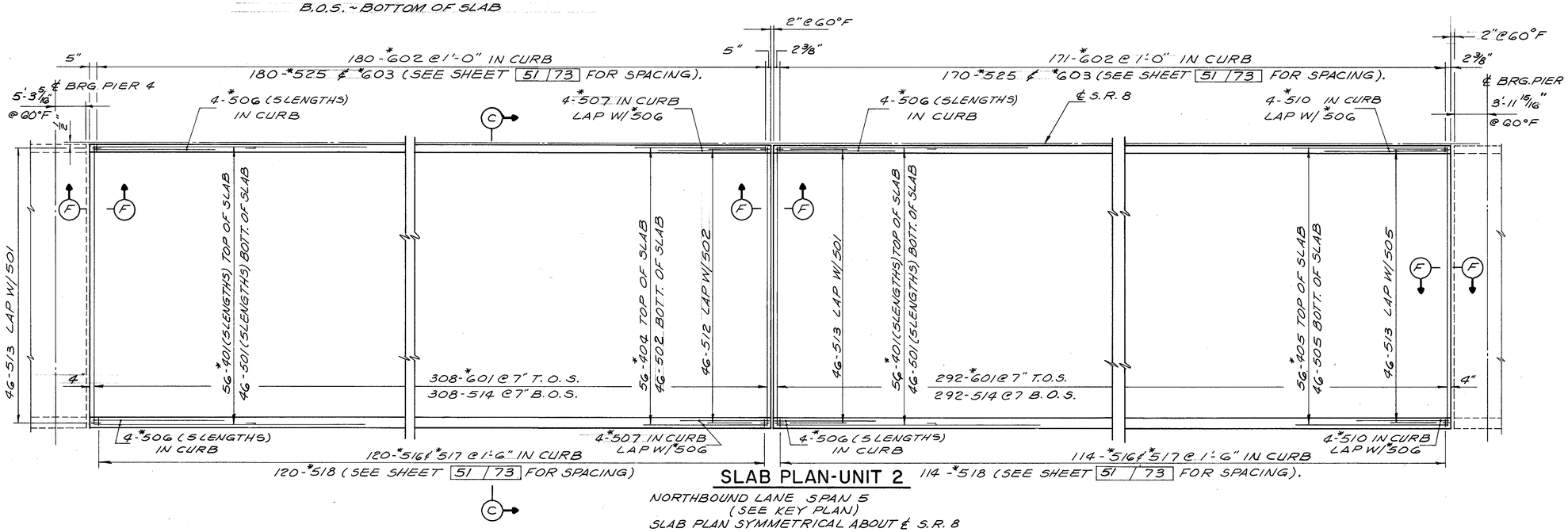

SLAB PLAN-UNIT 2

NORTHBOUND LANE SPAN 5
(SEE KEY PLAN)
SLAB PLAN SYMMETRICAL ABOUT ℄ S.R. 8

* ALL REINFORCING BARS SHOWN THUS * ARE TO BE EPOXY COATED.

NOTES

1. THE PREFIX 225 SHALL BE ADDED TO ALL REINFORCING BAR MARKS IN NORTHBOUND LANES UNIT 2, AND PREFIX 125 ADDED TO ALL REINFORCING BAR MARKS IN SOUTHBOUND LANES UNIT 2.
2. FOR SECTION C-C, E-E & F-F SEE SHEET 50/73.
3. FOR ELEVATION OF MEDIAN BARRIER AND PARAPETS SEE SHEET 51/73.
4. FOR SCUPPER LOCATIONS SEE SHEET 1/73 & 2/73.
5. FOR ADDITIONAL REINFORCING AT SCUPPERS SEE DETAIL 'S' SHEET 54/73
6. REFER TO SHEET 54/73 FOR SIDEWALK GRATING REPLACEMENT IN UNIT 2.
7. FOR ADDITIONAL NOTES AND DETAILS SEE SHEETS 50/73 AND 51/73

DALTON · DALTON · NEWPORT
CLEVELAND, OHIO AKRON, OHIO

49/73

SLAB PLAN - UNIT 2

NORTH EXPRESSWAY VIADUCT
SUM-8-01 95

DESIGNED	DRAWN	TRACED	CHECKED	REVIEWED	DATE	REVISED
BKL	F.F.		JWW	JGP	2-1-85	

F.H.W.A. REG.	STATE	PROJECT	
5	OHIO		

160
204

SUM-8- 1.73 / 1.95

NOTES

(1) FOR ADDITIONAL NOTES, SEE SHEET 49|73.

(2) NOTES (5) THRU (8) ON SHEET 47|73 ALSO APPLY TO UNIT 2 SLAB.

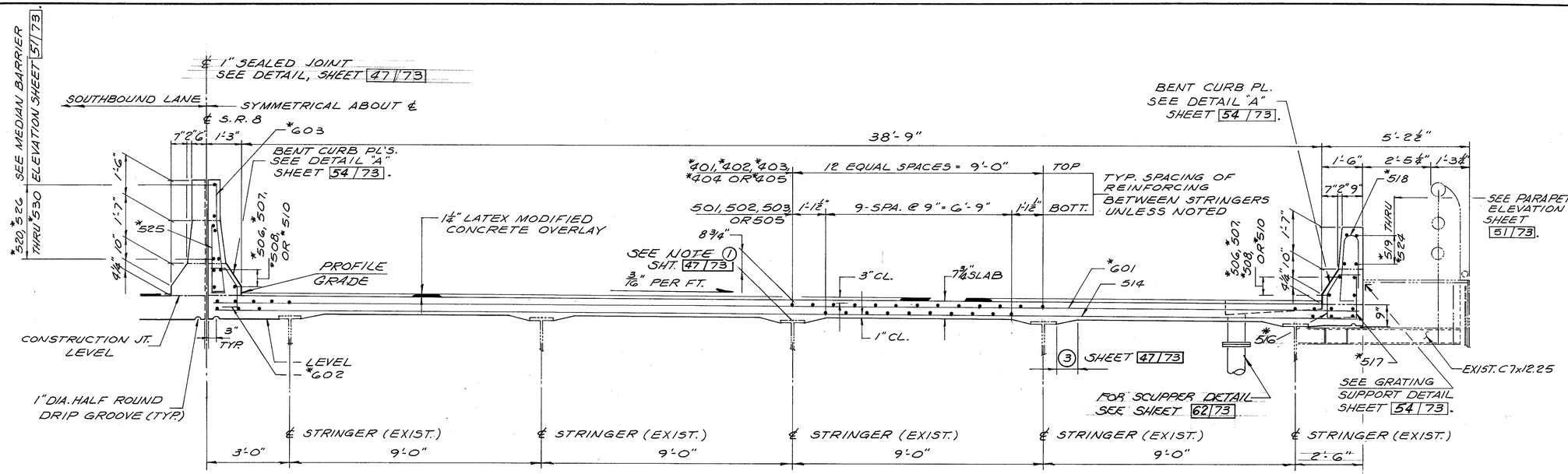

SECTION C-C

UNIT 2

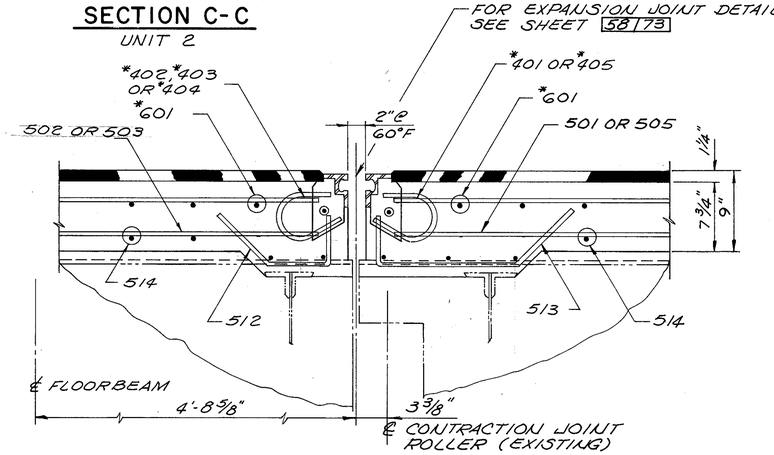

SECTION F-F

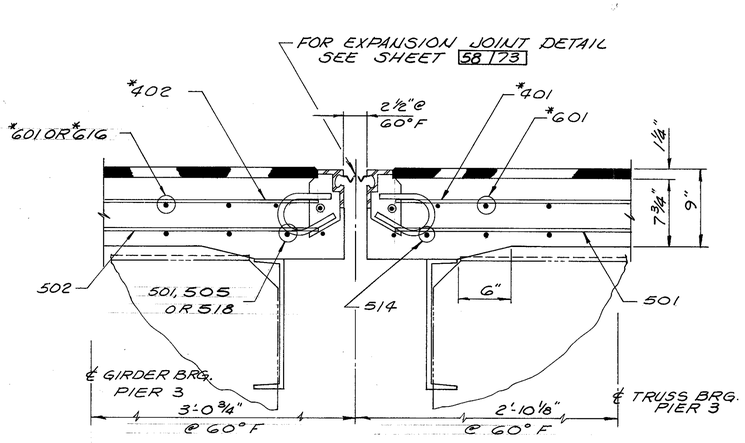

SECTION E-E

DALTON • DALTON • NEWPORT

CLEVELAND, OHIO — AKRON, OHIO

50|73

SLAB DETAILS- UNIT 2

NORTH EXPRESSWAY VIADUCT

SUM-8-01 95

DESIGNED	DRAWN	TRACED	CHECKED	REVIEWED	DATE	REVISED
BKL	F.F.		JWW	JAP	2-1-85	

F.H.W.A. REG.	STATE	PROJECT	
5	OHIO		

161 / 204

SUM-8- 1.73 / 1.95

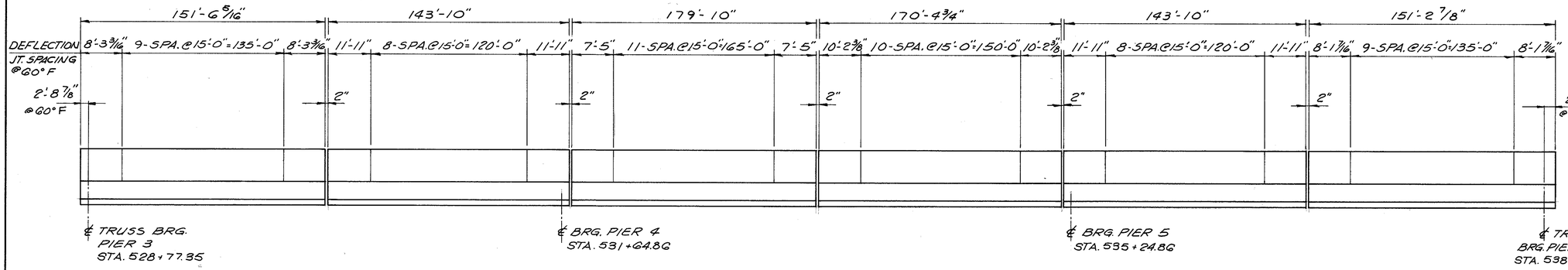

NOTES

1. BAR PREFIXES ARE AS FOLLOWS:
   WEST PARAPET - 12S
   EAST PARAPET - 22S
   EAST SIDE OF MEDIAN 22S
   WEST SIDE OF MEDIAN 12S
2. FOR ADDITIONAL NOTES AND DETAILS SEE SHEET 49 / 73 & 50 / 73.

ELEVATION WEST PARAPET - UNIT 2

EAST PARAPET SIMILAR

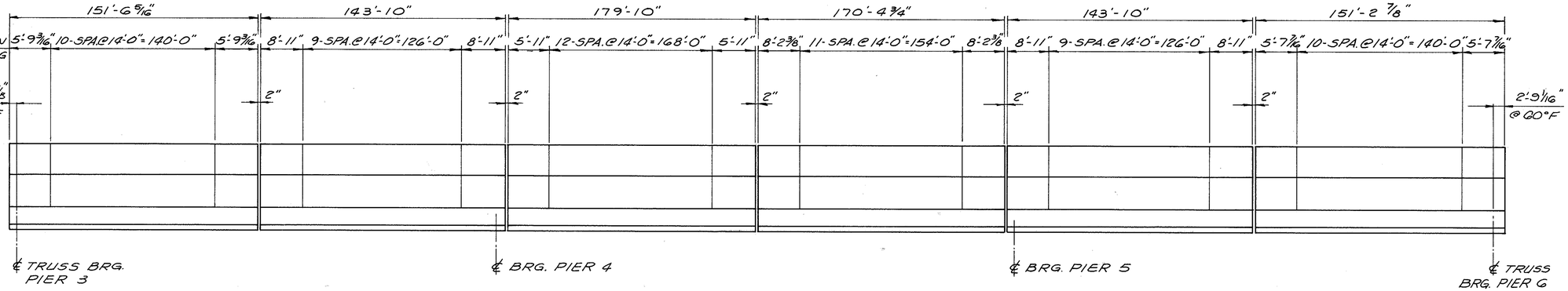

ELEVATION MEDIAN BARRIER - UNIT 2

EAST SIDE OF MEDIAN SHOWN
WEST SIDE SIMILAR

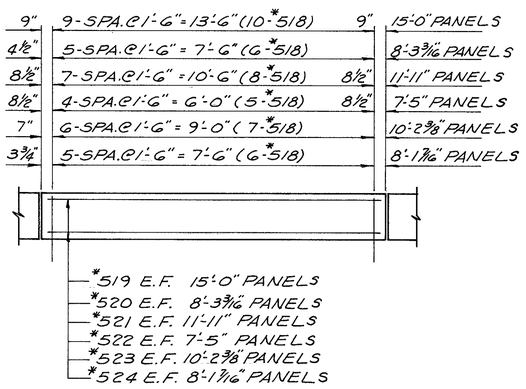

EAST & WEST PARAPET PANEL

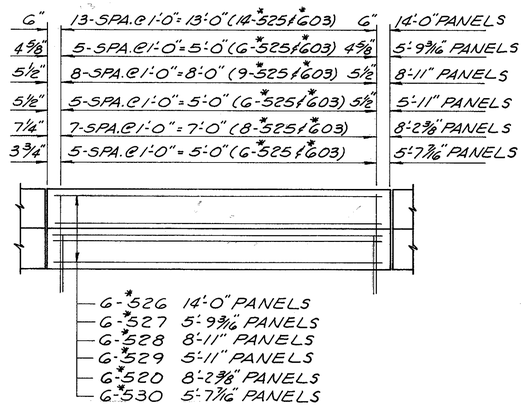

MEDIAN BARRIER PANEL

DALTON • DALTON • NEWPORT
CLEVELAND, OHIO AKRON, OHIO

51 / 73

SLAB DETAILS - UNIT 2

NORTH EXPRESSWAY VIADUCT
SUM-8-01 95

DESIGNED	DRAWN	TRACED	CHECKED	REVIEWED	DATE	REVISED
BKL	F.F.		JWW	JJP	2-1-85	

F.H.W.A. REG.	STATE	PROJECT	
5	OHIO		

162
204

SUM-8- 1.73 / 1.95

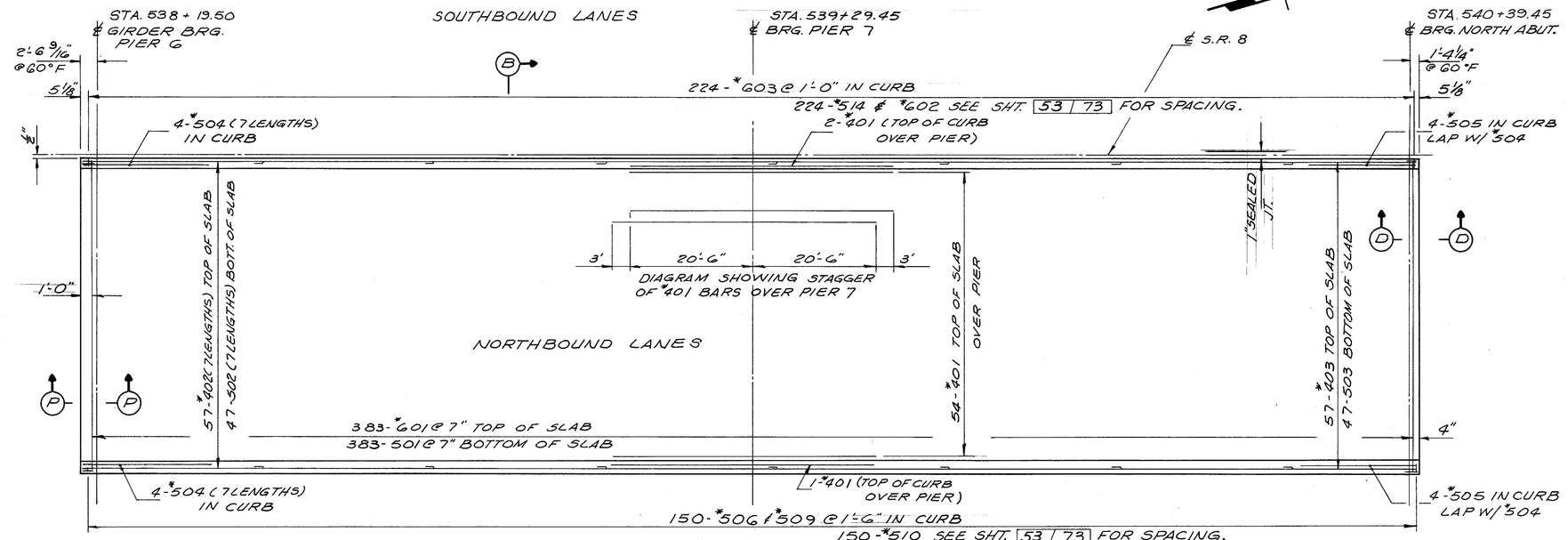

SLAB PLAN - UNIT 3

NORTHBOUND LANE SHOWN
SLAB PLAN SYMMETRICAL ABOUT ℄ S.R. 8

REINFORCING BARS MIN. LAPS REQUIRED
4 BARS = 1'-4"
5 BARS = 1'-8"

NOTES

1. NOTES (5) THRU (8) ON SHEET 47 73 ALSO APPLY TO UNIT 3 SLAB
2. FOR SECTIONS P-P AND D-D SEE SHEET 54 73.
3. THE REINFORCING BAR PREFIXES ARE AS FOLLOWS:
   UNIT # 1 SOUTHBOUND LANE - 1 1 S
   UNIT # 3 NORTHBOUND LANE - 2 3 S
   UNIT # 3 SOUTHBOUND LANE - 1 3 S
4. FOR ELEVATION OF PARAPETS AND MEDIAN BARRIER SEE SHEET 48 73 AND 53 73.
5. FOR GRATING SUPPORT DETAIL AND INTERMEDIATE SIDEWALK SUPPORT DETAIL SEE SHEET 54 73.
6. FOR SCUPPER LOCATIONS SEE SHEET 2 73
7. FOR ADDITIONAL REINFORCING AT SCUPPERS SEE DETAIL 'S' SHEET 54 73

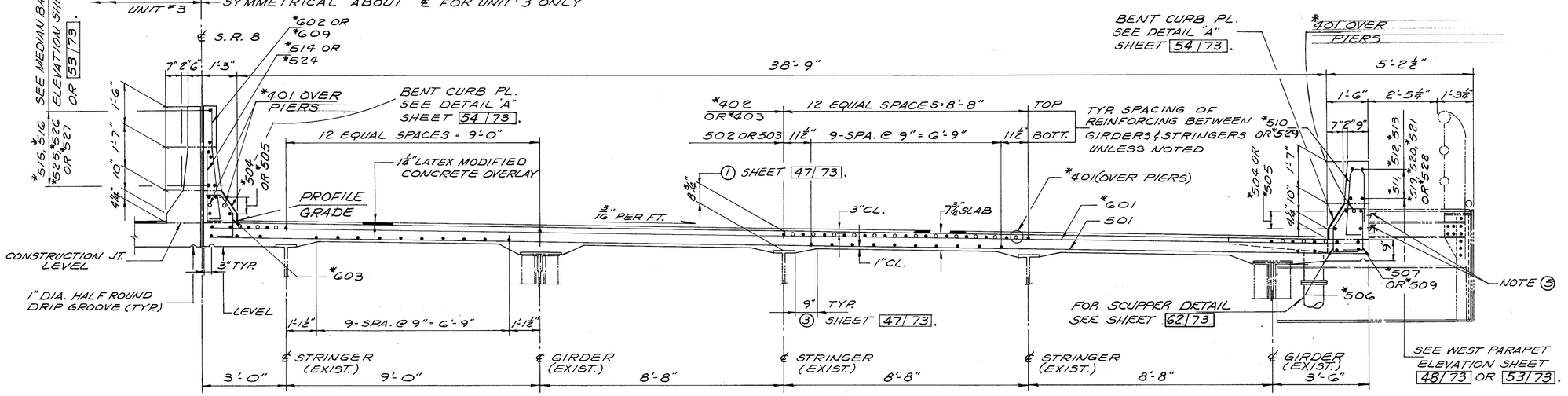

SECTION B-B

UNIT 3 NORTHBOUND LANE
UNIT 1 SOUTHBOUND LANE

DALTON • DALTON • NEWPORT
CLEVELAND, OHIO — AKRON, OHIO

52 73

SLAB PLAN - UNIT 3

NORTH EXPRESSWAY VIADUCT
SUM-8-01 95

DESIGNED	DRAWN	TRACED	CHECKED	REVIEWED	DATE	REVISED
BKL	F.F.		JWW	JGP	2-1-85	

F.H.W.A. REG.	STATE	PROJECT	
5	OHIO		

163/204

SUM-8- 1.73 / 1.95

NOTES

(1) BAR PREFIXES ARE AS FOLLOWS:
WEST PARAPET - 13S
EAST PARAPET - 23S
EAST SIDE OF MEDIAN - 23S
WEST SIDE OF MEDIAN - 13S

(2) FOR ADDITIONAL NOTES AND DETAILS SEE SHEETS 52/73.

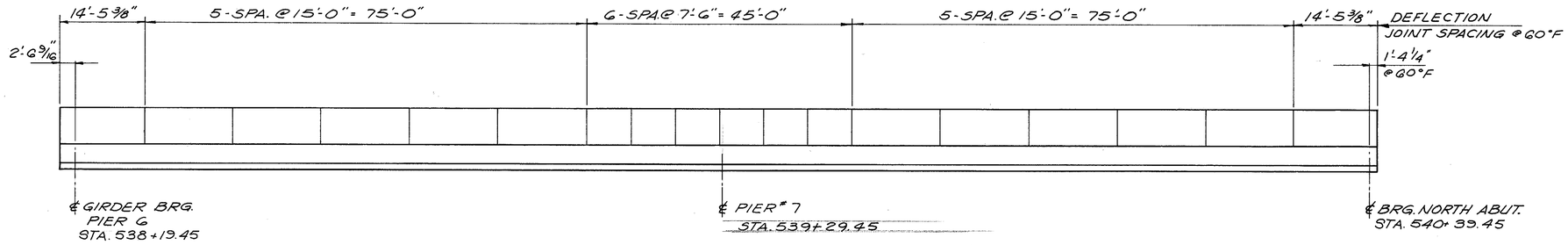

ELEVATION WEST PARAPET

EAST PARAPET SIMILAR
UNIT 3

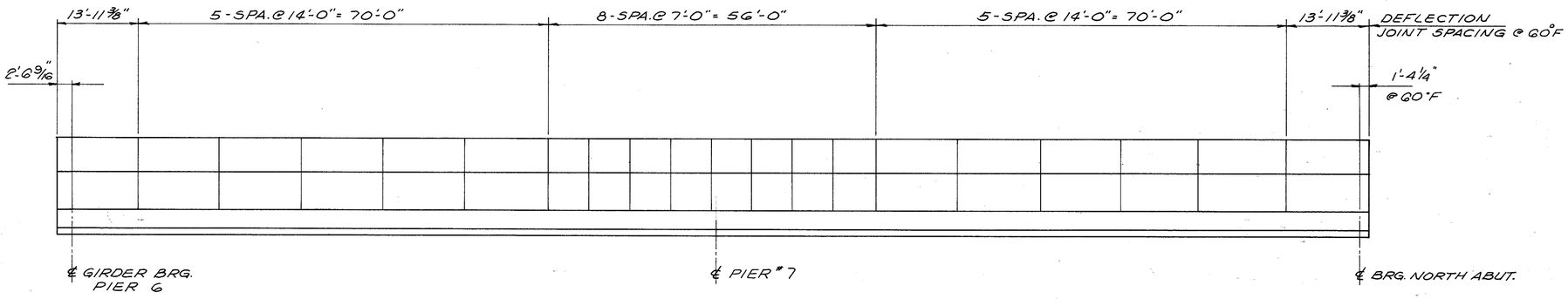

ELEVATION MEDIAN BARRIER

EAST SIDE OF MEDIAN SHOWN
WEST SIDE SIMILAR
UNIT 3

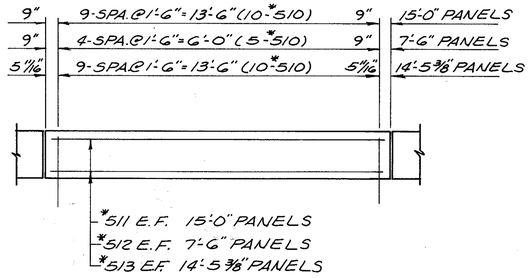

EAST & WEST PARAPET PANEL

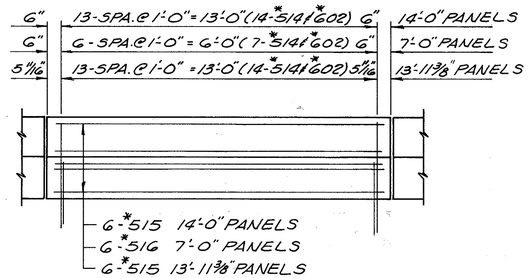

MEDIAN BARRIER PANEL

DALTON • DALTON • NEWPORT
CLEVELAND, OHIO AKRON, OHIO

53/73

SLAB DETAILS - UNIT 3

NORTH EXPRESSWAY VIADUCT
SUM-8-01 95

DESIGNED	DRAWN	TRACED	CHECKED	REVIEWED	DATE	REVISED
BKL	F.F.		JWN	JDP	2-1-85	

F.H.W.A. REG.	STATE	PROJECT	
5	OHIO		

164
204

SUM-8 - 1.73 / 1.95

NOTES

1. STEEL CURB FACING SHALL BE SO FABRICATED THAT THE 4"x3"x3/8" ANGLES WILL BE PARALLEL TO THE FLANGES OF THE EXTERIOR BEAMS AND GIRDERS BEFORE AND AFTER THE DECK CONCRETE IS POURED. THE 3/8" BENT PLATES SHALL BE FABRICATED IN PROPER LENGTHS AND CAMBERS IN ORDER TO PLACE THEM PARALLEL TO THE FINISHED LINE AND GRADE AS SHOWN ON THE PLANS. JOINTS IN ADJACENT FABRICATED SECTIONS SHALL BE BUTT WELDED AS INDICATED IN VIEW B-B.
2. ALL THE STRUCTURAL STEEL FOR CURB PLATE ASSEMBLY SHALL BE ASTM-A36 UNLESS NOTED OTHERWISE.
3. GRATING REPLACEMENT IS REQUIRED AT THE LOCATIONS SHOWN ON THIS SHEET, AT UNIT 2 SLAB CONTRACTION JOINT LOCATIONS, AND AT OTHER LOCATIONS AS DIRECTED BY THE ENGINEER. REFER TO THE SPECIAL PROVISIONS.

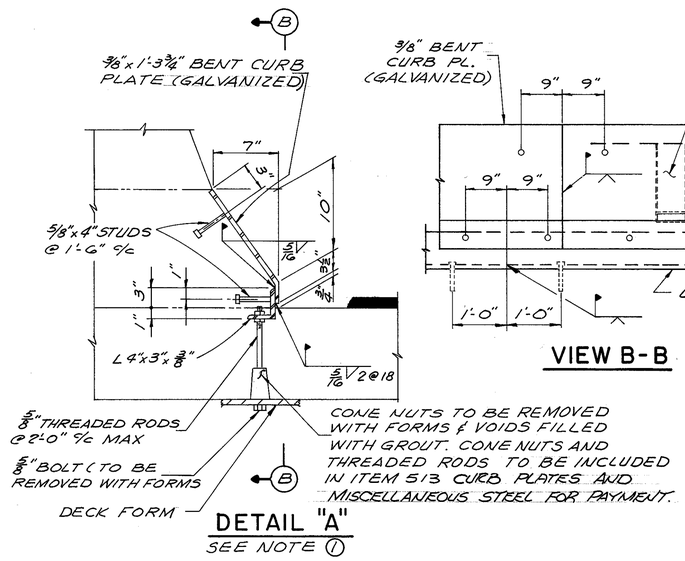

DETAIL "A"
SEE NOTE (1)

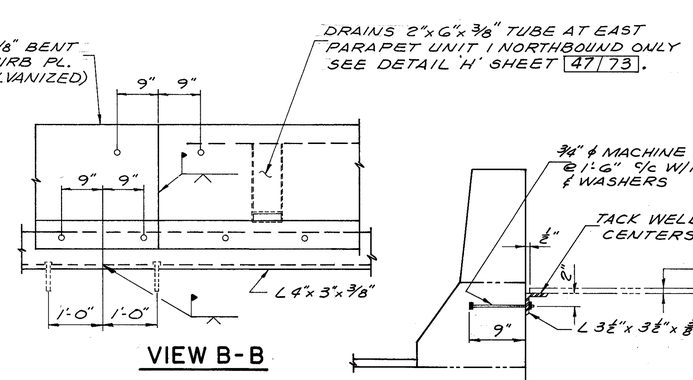

VIEW B-B

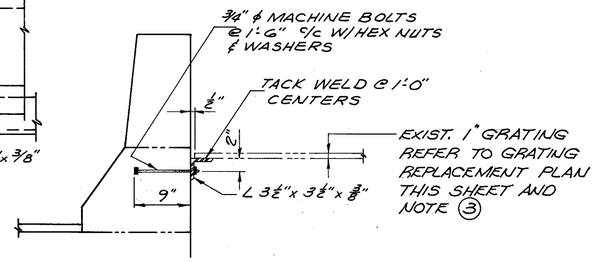

GRATING SUPPORT DETAIL

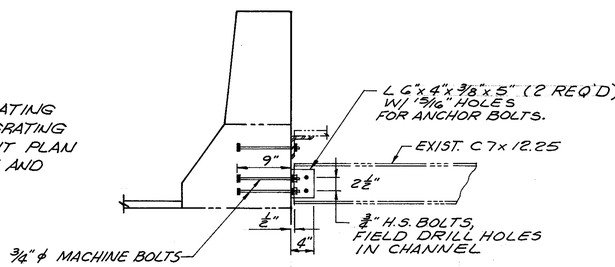

INTERMEDIATE SIDEWALK SUPPORT DETAIL

UNIT 1 S.B.L. & UNIT 3 N.B.L & S.B.L.
(72 REQUIRED)

FOR EXPANSION JOINT DETAIL SEE SHEET 59/73

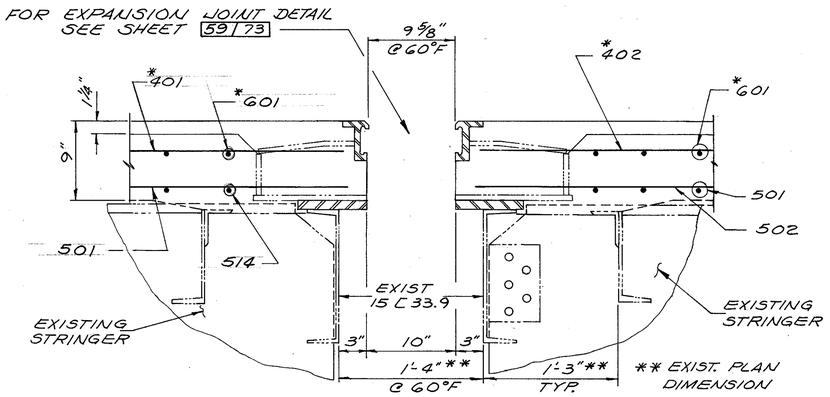

SECTION P-P
(@ PIER 6)

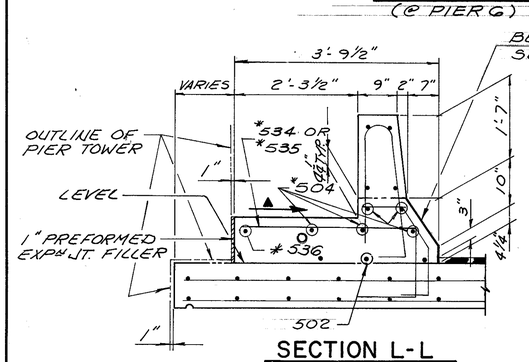

SECTION L-L

▲ - CROSS SLOPE VARIES FROM LEVEL AT PIER #3 END OF SLAB TO 1/4"/FT. AT 4'-6" FROM END

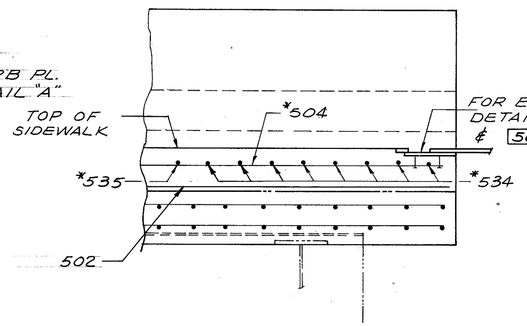

SECTION M-M

FOR EXPANSION JOINT DETAILS SEE SHEET 57/73 & 58/73

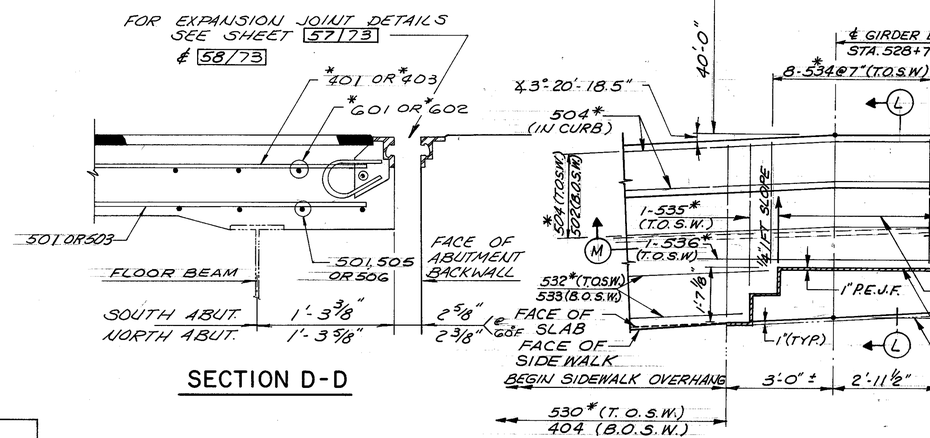

SECTION D-D

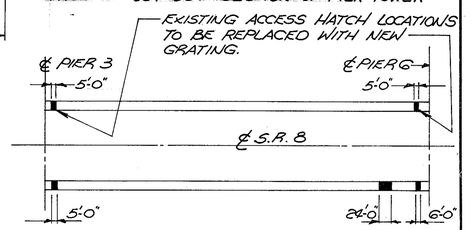

GRATING REPLACEMENT PLAN
SEE NOTE (3)

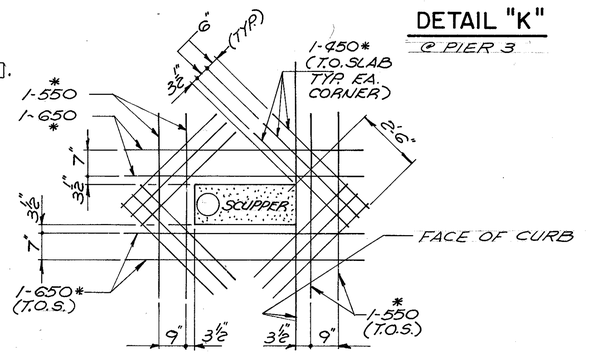

DETAIL "K"
@ PIER 3

DETAIL S
(ADDITIONAL SCUPPER REINF.)

DALTON • DALTON • NEWPORT
CLEVELAND, OHIO — AKRON, OHIO

54/73

SLAB DETAILS

NORTH EXPRESSWAY VIADUCT
SUM-8-01 95

DESIGNED	DRAWN	TRACED	CHECKED	REVIEWED	DATE	REVISED
BKL	F.F.		JWW	JDP	2-1-85	

F.H.W.A. REG.	STATE	PROJECT	
5	OHIO		

165/204

SUM-8- 1.73 / 1.95

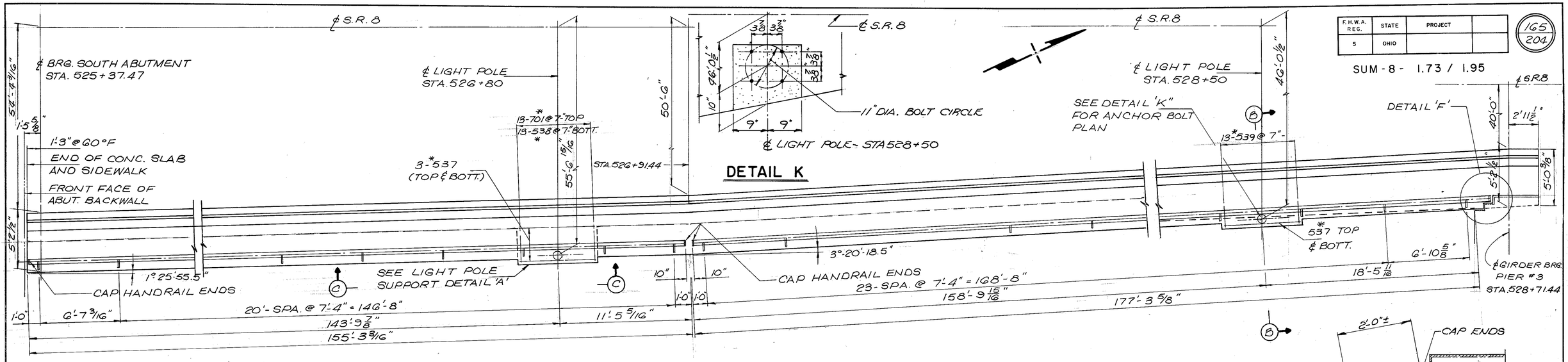

DETAIL K

RAILING PLAN
UNIT #1 NORTHBOUND

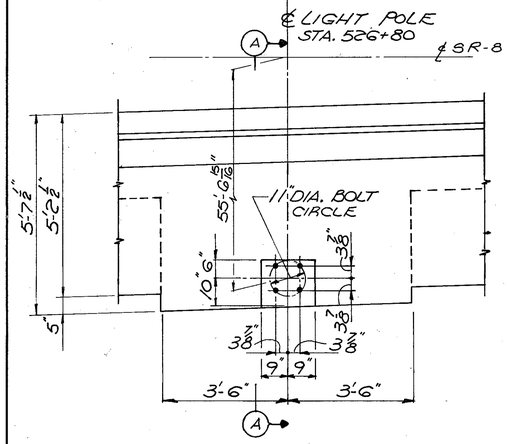

LIGHT POLE SUPPORT DETAIL 'A'

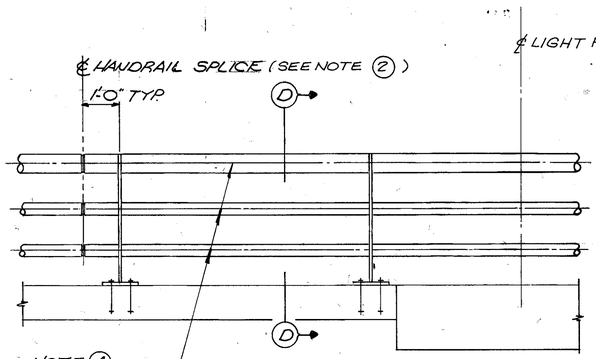

NOTE (A)
REPLACE DAMAGED OR MISSING PIPE RAILS IN THE EXISTING RAILING TO REMAIN IN PLACE ON THE BRIDGE, AS DIRECTED BY THE ENGINEER. INCLUDE FOR PAYMENT WITH ITEM 513 - CURB PLATES AND MISCELLANEOUS STEEL (AS PER PLAN).

VIEW C-C

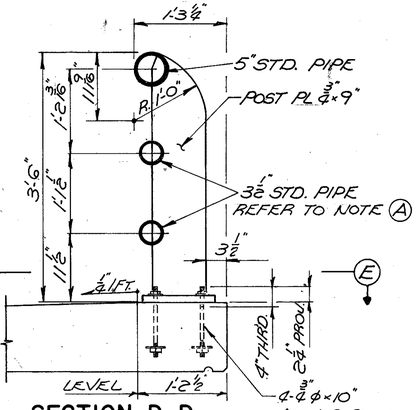

SECTION D-D

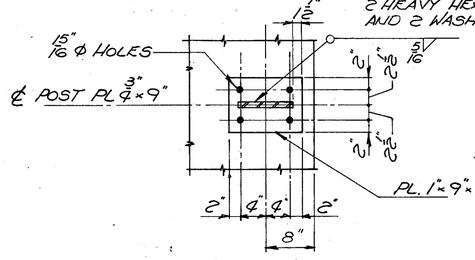

SECTION E-E

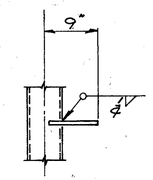

PLAN OF TOP RAIL
NOTCH PIPE AND WELD TO EXCLUDE MOISTURE

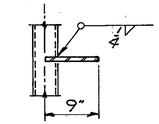

PLAN OF BOTTOM RAILS
NOTCH PIPE AND WELD TO EXCLUDE MOISTURE

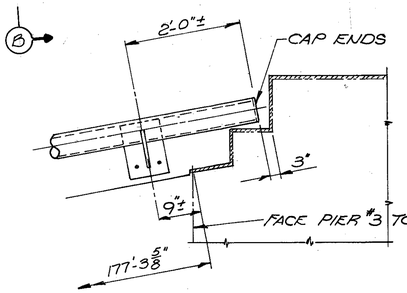

DETAIL F

NOTES

① THE PREFIX 215 SHALL BE ADDED TO ALL REINFORCING BARS SHOWN ON THIS SHEET.

② THE HANDRAIL SPLICES SHALL BE LOCATED IN SUCH A MANNER SO AS TO PROVIDE AT LEAST TWO POSTS PER SECTION SPLICED.

③ SEE STRUCTURE GENERAL NOTES FOR RAILING SPECIFICATIONS.

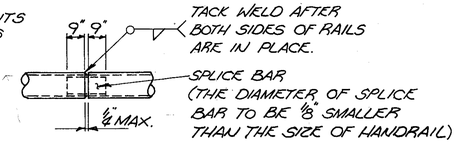

TYPICAL HANDRAIL SPLICE

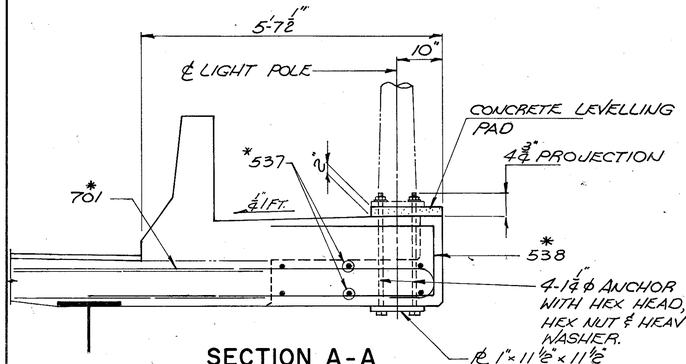

SECTION A-A

FOR REINFORCING NOT SHOWN SEE SECTION "A-A" SHEET 47/73

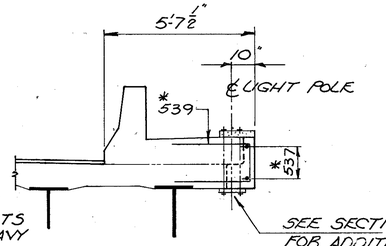

SECTION B-B

FOR REINFORCING NOT SHOWN SEE SECTION G-G SHEET 47/73

DALTON • DALTON • NEWPORT
CLEVELAND, OHIO — AKRON, OHIO

55/73

RAILING & POLE SUPPORT DETAILS

NORTH EXPRESSWAY VIADUCT

SUM-8-01 95

DESIGNED	DRAWN	TRACED	CHECKED	REVIEWED	DATE	REVISED
BKL	JWN		RLF	JGP	2-1-85	

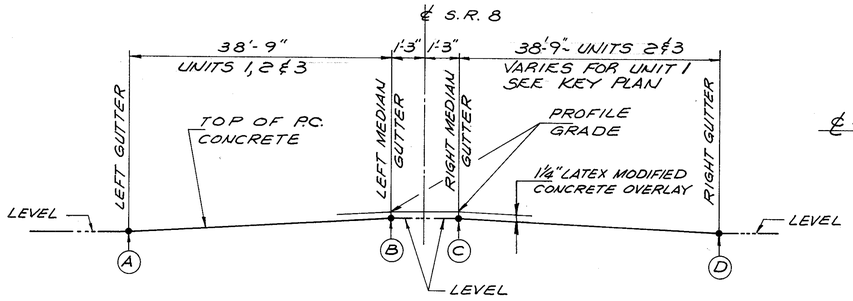

KEY TRANVERSE SECTION

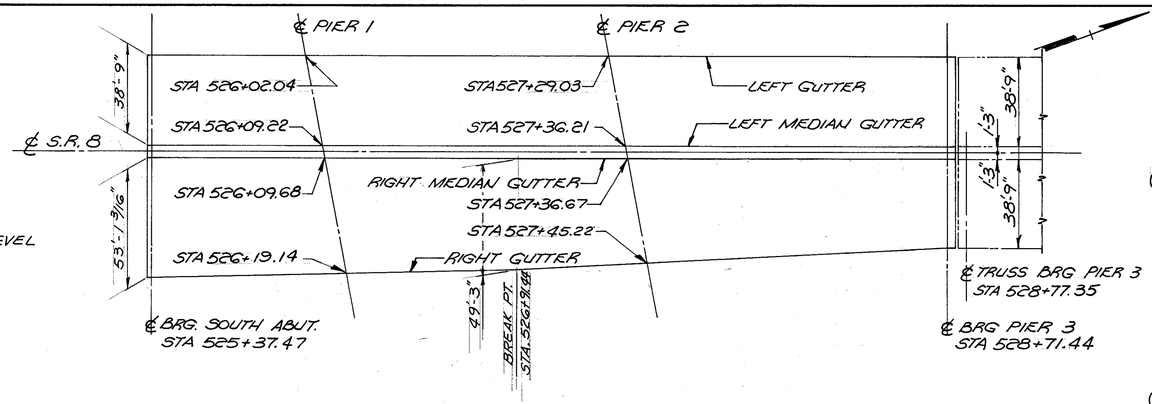

KEY PLAN - UNIT 1

F.H.W.A. REG.	STATE	PROJECT	
5	OHIO		

166
204

SUM-8 - 1.73 / 1.95

NOTES

(1) (A) THRU (D) ELEVATIONS SHOWN ARE ON TOP OF PORTLAND CEMENT CONCRETE AND ARE THOSE WHICH ARE REQUIRED BEFORE THE CONCRETE IS PLACED. PROPER ALLOWANCE HAS BEEN MADE FOR DEAD LOAD DEFLECTIONS CAUSED BY THE WEIGHT OF CONCRETE AND LATEX MODIFIED CONCRETE WEARING SURFACE.

(2) THE STATIONS SHOWN IN THE SCREED ELEVATION TABLE ARE AT THE TRANSVERSE FLOOR BEAM AND DIAPHRAGM LOCATIONS.

SCREED ELEVATION TABLE

LOCATION	(A)	(B)	(C)	(D)
UNIT 1				
@ SOUTH ABUT. 525+37.50	1036.93	1037.54	1037.54	1036.71
525+57.26	1036.85	1037.46	1037.46	1036.65
525+77.02	1036.75	1037.36	1037.37	1036.56
525+96.78	1036.65	1037.26	1037.26	1036.46
℄ PIER 1(ON SKEW)	1036.63	1037.20	1037.20	1036.35
526+16.54	1036.57	1037.17	1037.17	1036.37
526+37.71	1036.49	1037.10	1037.09	1036.29
526+58.88	1036.39	1037.00	1037.00	1036.23
526+80.04	1036.28	1036.90	1036.90	1036.15
527+01.21	1036.17	1036.78	1036.78	1036.05
527+22.38	1036.06	1036.67	1036.67	1035.94
℄ PIER 2(ON SKEW)	1036.03	1036.60	1036.60	1035.84
527+43.54	1035.97	1036.57	1036.57	1035.85
527+64.85	1035.89	1036.50	1036.49	1035.79
527+86.17	1035.81	1036.42	1036.42	1035.74
528+07.48	1035.72	1036.33	1036.32	1035.69
528+28.79	1035.61	1036.23	1036.22	1035.60
528+50.10	1035.49	1036.10	1036.10	1035.49
@ PIER 3 UNIT 1 528+71.50	1035.36	1035.97	1035.97	1035.36
UNIT 2				
@ PIER 3 UNIT 2 528+77.50	1035.34	1035.94	1035.94	1035.34
528+95.50	1035.30	1035.90	1035.90	1035.30
529+13.50	1035.24	1035.85	1035.85	1035.24
529+31.50	1035.19	1035.80	1035.80	1035.19
529+49.50	1035.14	1035.74	1035.74	1035.14
529+67.50	1035.07	1035.68	1035.68	1035.07
529+85.50	1035.00	1035.60	1035.60	1035.00
530+03.50	1034.92	1035.52	1035.52	1034.92
530+21.50	1034.82	1035.43	1035.43	1034.82
530+39.50	1034.73	1035.34	1035.34	1034.73

LOCATION	(A)	(B)	(C)	(D)
CONTINUATION UNIT 2				
530+57.50	1034.63	1035.23	1035.23	1034.63
530+75.50	1034.53	1035.13	1035.13	1034.53
530+93.50	1034.42	1035.03	1035.03	1034.42
531+11.50	1034.32	1034.93	1034.93	1034.32
531+29.50	1034.22	1034.82	1034.82	1034.22
531+47.50	1034.12	1034.72	1034.72	1034.12
@ PIER 4 531+65.50	1034.00	1034.60	1034.60	1034.00
531+83.50	1033.92	1034.53	1034.53	1033.92
532+01.50	1033.83	1034.43	1034.43	1033.83
532+19.50	1033.74	1034.35	1034.35	1033.74
532+37.50	1033.65	1034.26	1034.26	1033.65
532+55.50	1033.57	1034.18	1034.18	1033.57
532+73.50	1033.48	1034.09	1034.09	1033.48
532+91.50	1033.40	1034.00	1034.00	1033.40
533+09.50	1033.31	1033.92	1033.92	1033.31
533+27.50	1033.24	1033.84	1033.84	1033.24
533+45.50	1033.14	1033.75	1033.75	1033.14
533+63.50	1033.07	1033.67	1033.67	1033.07
533+81.50	1032.97	1033.58	1033.58	1032.97
533+99.50	1032.89	1033.50	1033.50	1032.89
534+17.50	1032.80	1033.41	1033.41	1032.80
534+35.50	1032.73	1033.33	1033.33	1032.73
534+53.50	1032.64	1033.24	1033.24	1032.64
534+71.50	1032.56	1033.16	1033.16	1032.56
534+89.50	1032.47	1033.08	1033.08	1032.47
535+07.50	1032.40	1033.01	1033.01	1032.40
@ PIER 5 535+25.50	1032.31	1032.91	1032.91	1032.31
535+43.50	1032.26	1032.86	1032.86	1032.26
535+61.50	1032.19	1032.79	1032.79	1032.19
535+79.50	1032.12	1032.73	1032.73	1032.12

LOCATION	(A)	(B)	(C)	(D)
CONTINUATION UNIT 2				
535+97.50	1032.06	1032.66	1032.66	1032.06
536+15.50	1031.99	1032.60	1032.60	1031.99
536+33.50	1031.92	1032.52	1032.52	1031.92
536+51.50	1031.86	1032.46	1032.46	1031.86
536+69.50	1031.77	1032.38	1032.38	1031.77
536+87.50	1031.70	1032.31	1032.31	1031.70
537+05.50	1031.61	1032.22	1032.22	1031.61
537+23.50	1031.52	1032.12	1032.12	1031.52
537+41.50	1031.42	1032.02	1032.02	1031.42
537+59.50	1031.30	1031.91	1031.91	1031.30
537+77.50	1031.18	1031.79	1031.79	1031.18
537+95.50	1031.07	1031.67	1031.67	1031.07
@ PIER 6 UNIT 2 538+13.50	1030.94	1031.54	1031.54	1030.94
UNIT 3				
@ PIER 6 UNIT 3 538+19.50	1030.91	1031.51	1031.51	1030.91
538+41.50	1030.83	1031.44	1031.44	1030.83
538+63.50	1030.74	1031.35	1031.35	1030.74
538+85.50	1030.63	1031.24	1031.24	1030.63
539+07.50	1030.50	1031.11	1031.11	1030.50
@ PIER 7 539+29.50	1030.39	1031.00	1031.00	1030.39
539+51.50	1030.30	1030.90	1030.90	1030.30
539+73.50	1030.21	1030.82	1030.82	1030.21
539+95.50	1030.12	1030.73	1030.73	1030.12
540+17.50	1030.00	1030.62	1030.62	1030.00
@ NORTH ABUT. 540+39.50	1029.87	1030.48	1030.48	1029.87

DALTON • DALTON • NEWPORT
CLEVELAND, OHIO AKRON, OHIO

56/73

SCREED ELEVATIONS

NORTH EXPRESSWAY VIADUCT

SUM-8-01 95

DESIGNED	DRAWN	TRACED	CHECKED	REVIEWED	DATE	REVISED
HII	F.F.		RLF	JDP	2-1-84	

F.H.W.A. REG.	STATE	PROJECT	
5	OHIO		

167/204

℄ S.R. 8 (SYMMETRICAL ABOUT ℄ EXCEPT AS NOTED)

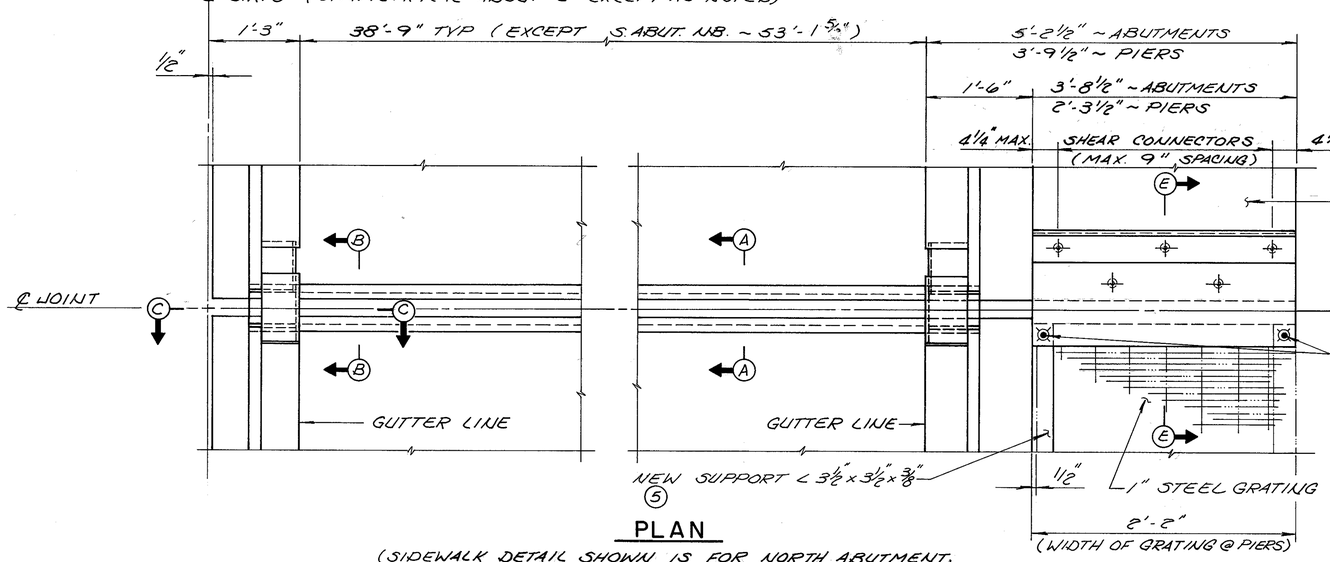

PLAN

(SIDEWALK DETAIL SHOWN IS FOR NORTH ABUTMENT, SOUTH ABUTMENT S.B. ℄ PIER 3 N.B., REFER TO DETAILS 'A', 'B' ℄ 'C' FOR ALTERNATE TREATMENT @ OTHER LOCATIONS)

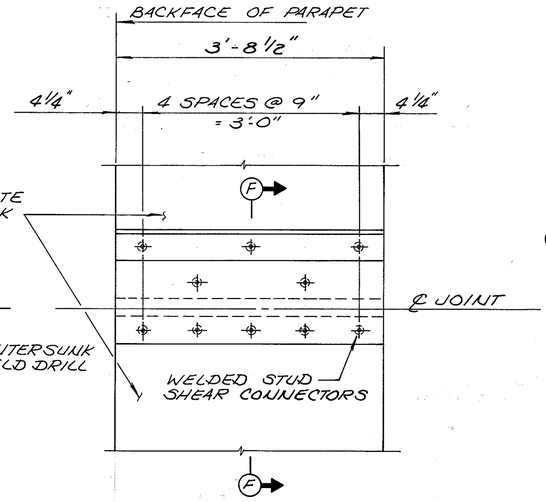

DETAIL "A"

(SIDEWALK DETAIL FOR SOUTH ABUTMENT N.B. ONLY)

SUM-8 - 1.73 / 1.95

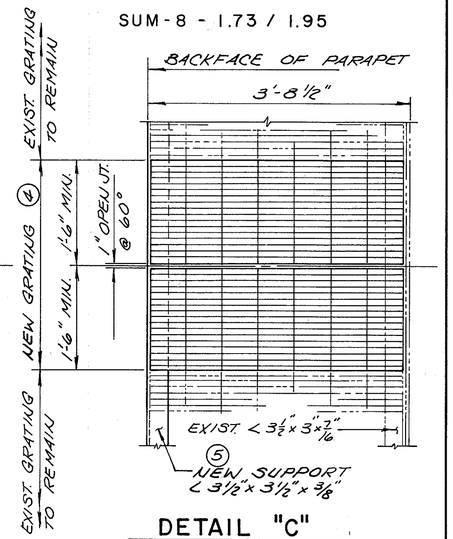

DETAIL "C"

(UNIT ℄ ~ SLAB CONTRACTION JTS.)

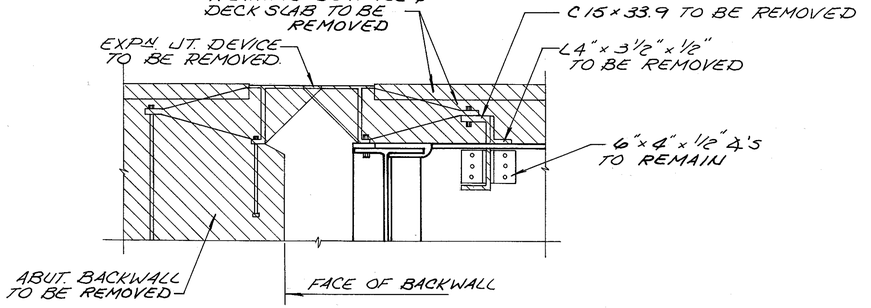

ABUTMENTS

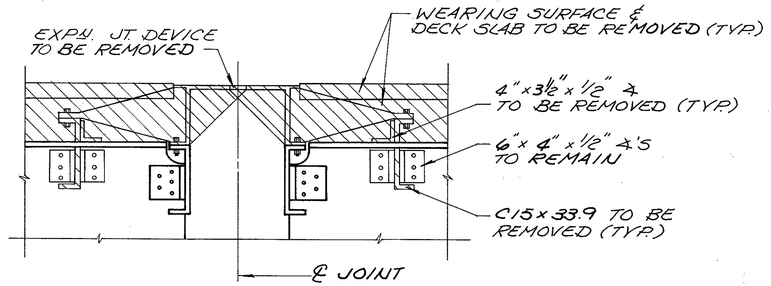

PIERS 3 AND 6

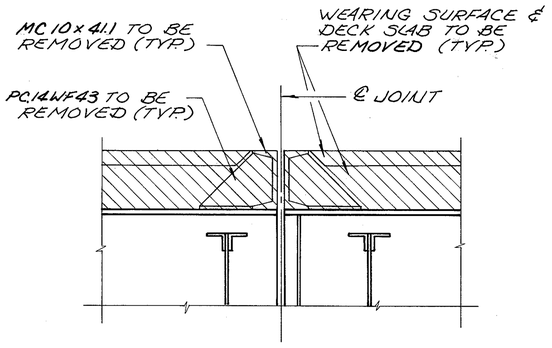

CONTRACTION JOINTS

(UNIT ℄ ~ 5 LOCATIONS)

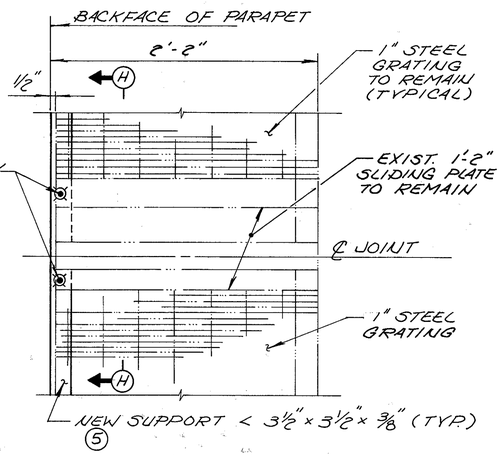

DETAIL "B"

(PIER 3 S.B AND PIER 6)

NOTES

1. REFER TO SHEET 58/73 FOR SECTIONS "A-A", "B-B", "C-C", "E-E", "F-F" AND "H-H".
2. REFER TO SHEET 58/73 FOR ADDITIONAL NOTES.
3. REMOVAL OF EXISTING EXPANSION ASSEMBLIES SHALL BE INCLUDED FOR PAYMENT PER ITEM 202 ~ "PORTIONS OF STRUCTURES REMOVED"
4. REMOVAL OF EXISTING GRATING AT CONTRACTION JOINTS SHALL BE INCLUDED FOR PAYMENT WITH ITEM 202 ~ "PORTIONS OF STRUCTURES REMOVED". REFER TO SPECIAL PROVISIONS FOR NEW GRATING REQUIREMENTS.
5. FOR ADDITIONAL SUPPORT ANGLE DETAILS, SEE SHEET 54/73.

REMOVAL DETAILS — TYPICAL SECTIONS

DALTON • DALTON • NEWPORT

CLEVELAND, OHIO — AKRON, OHIO

57/73

EXPANSION JOINT DETAILS

NORTH EXPRESSWAY VIADUCT

SUM-8-01 95

DESIGNED	DRAWN	TRACED	CHECKED	REVIEWED	DATE	REVISED
BKL	M.A.B.		RLF	JJP	2-1-85	

F.H.W.A. REG.	STATE	PROJECT	
5	OHIO		

168
204

SUM-8 - 1.73 / 1.95

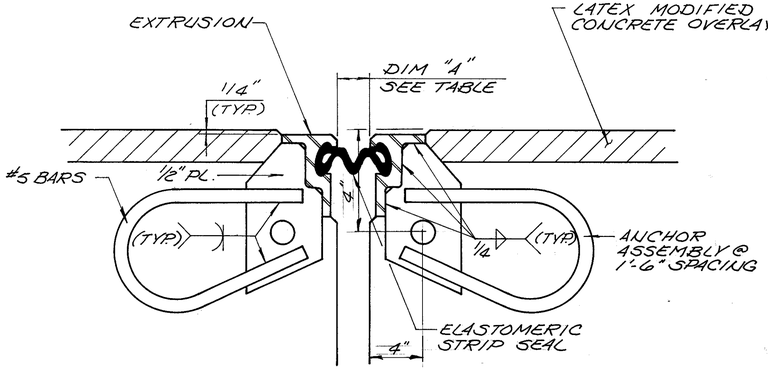

SECTION A-A

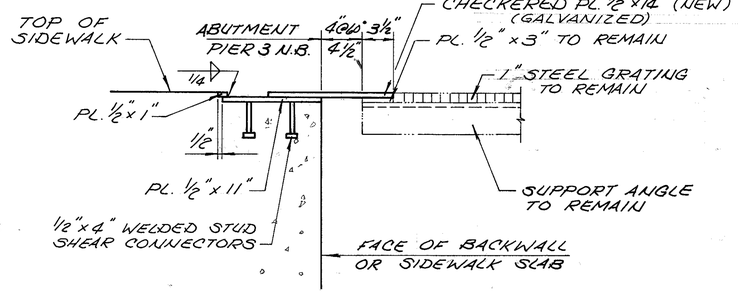

SECTION E-E

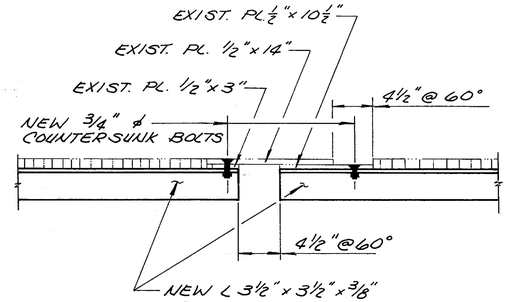

SECTION H-H

NOTES

1. ALL STRUCTURAL STEEL ASSOCIATED WITH THE STRUCTURAL EXPANSION JOINT, ITS ANCHORS, SUPPORT ASSEMBLIES, AND SLIDING PLATE ASSEMBLIES, SHALL BE INCLUDED FOR PAYMENT WITH "ITEM SPECIAL, EXPANSION JOINT SEALS".
2. STAINLESS STEEL BOLTS SHALL BE PLACED ON THE NORTH SIDE OF JOINT FOR SOUTH-BOUND TRAFFIC AND ON THE SOUTH SIDE OF JOINT FOR NORTH-BOUND TRAFFIC.
3. REFER TO THE SPECIAL PROVISIONS FOR ADDITIONAL EXPANSION JOINT REQUIREMENTS.
4. REFER TO SHEET 57/73 FOR REMOVAL OF EXISTING JOINT ASSEMBLIES.

JOINT SETTING TABLE

DIM. "A"	TEMPERATURE °F							NOMINAL SEAL MOVEMENT
	30	40	50	60	70	80	90	
SOUTH ABUT.	3 7/16	3 1/8	2 7/8	2 5/8	2 3/8	2 1/8	1 13/16	5"
PIER 3	3 3/16	2 15/16	2 3/4	2 1/2	2 1/4	2 1/16	1 13/16	5"
CONTR. JTS. (*)	2 7/16	2 1/4	2 1/8	2	1 7/8	1 3/4	1 9/16	3"
NORTH ABUT.	2 7/8	2 3/4	2 9/16	2 3/8	2 3/16	2	1 7/8	4"

(*) 5 LOCATIONS ~ UNIT 2

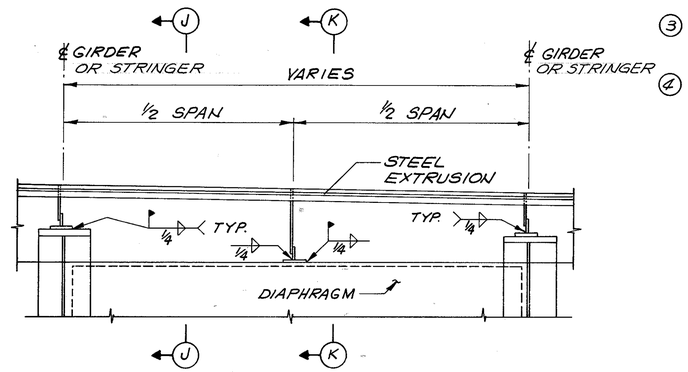

TYPICAL EXPANSION SUPPORT DETAILS

(SUPPORTS AT CONTRACTION JOINT SHOWN, SUPPORTS AT ABUTMENTS & PIER Nº 3 SIMILAR)

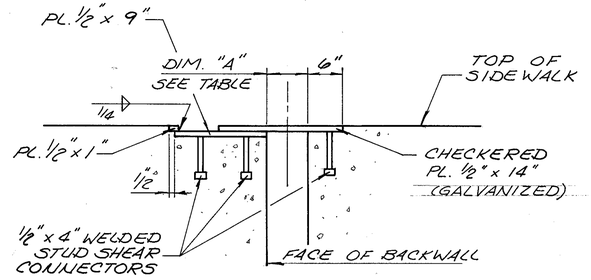

SECTION F-F

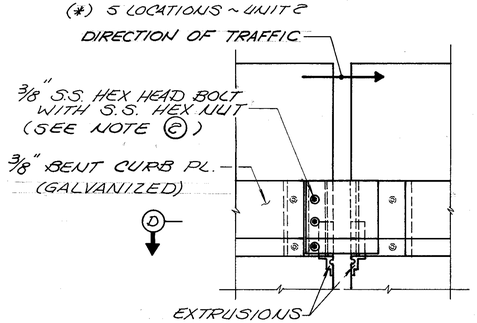

SECTION B-B

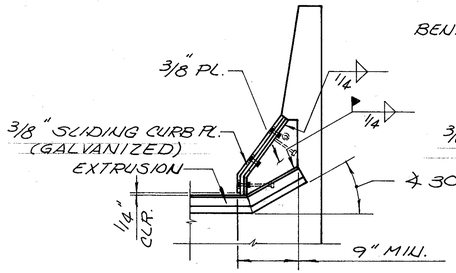

SECTION C-C

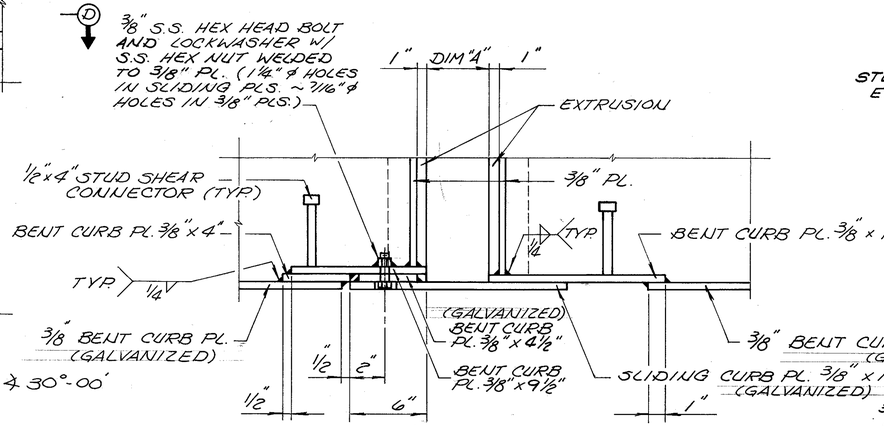

SECTION D-D

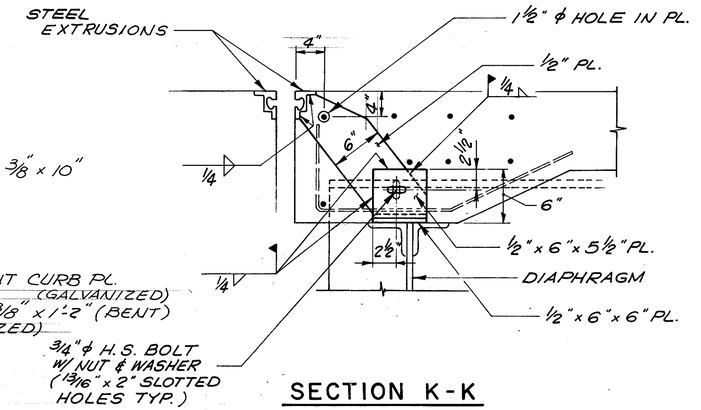

SECTION K-K

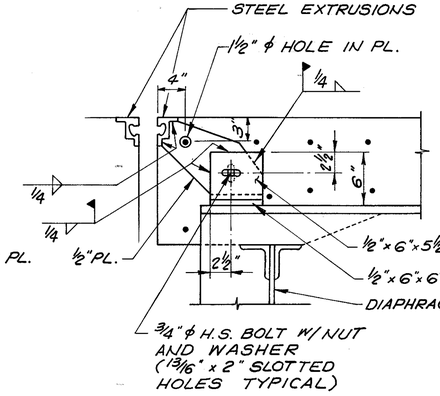

SECTION J-J

DALTON • DALTON • NEWPORT
CLEVELAND, OHIO — AKRON, OHIO

58/73

EXPANSION JOINT DETAILS

NORTH EXPRESSWAY VIADUCT
SUM-8-01 95

DESIGNED	DRAWN	TRACED	CHECKED	REVIEWED	DATE	REVISED
BKL	M.A.B.		RLF	jgf	2-1-85	

F.H.W.A. REG.	STATE	PROJECT	
5	OHIO		

169/204

SUM-8 - 1.73 / 1.95

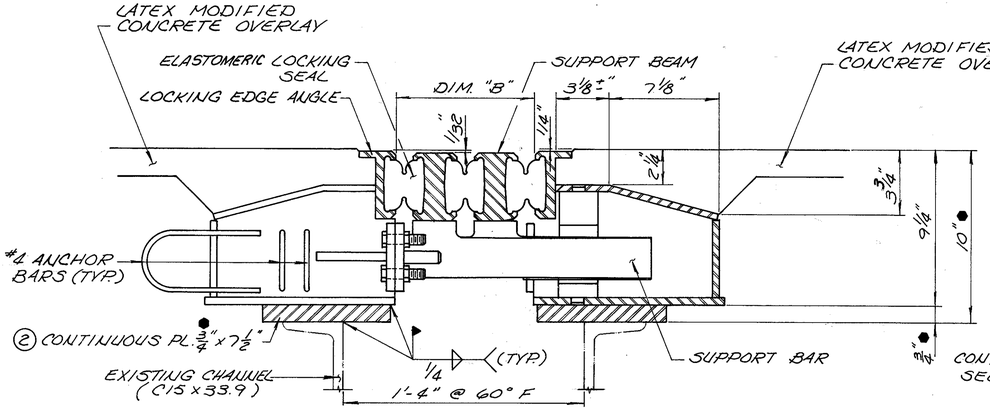

TYPICAL SECTION AT SUPPORT BOXES

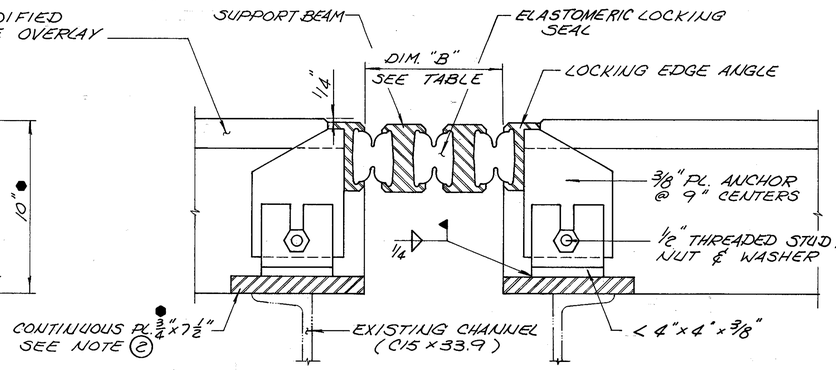

TYPICAL SECTION BETWEEN SUPPORT BOXES

JOINT SETTING TABLE

DIM. "B"	TEMPERATURE °F						
	30	40	50	60	70	80	90
PIER 6	11⅛	10⅝	10⅛	9⅝	9⅛	8⅝	8⅛

● ~ INDICATES DISTANCE FROM FINISHED GRADE TO TOP OF EXISTING CHANNEL (C15x33.9) TO BE VERIFIED. (VARY FILL PLATE THICKNESS IF REQUIRED)

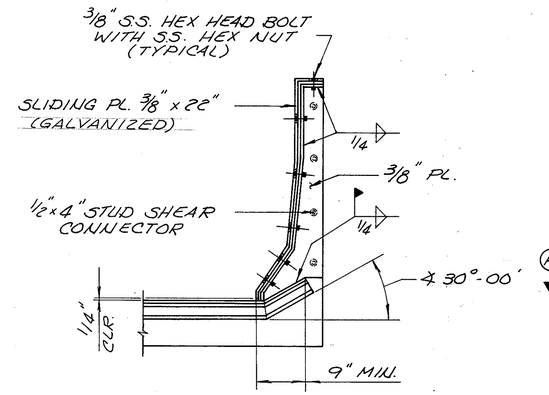

SECTION K-K

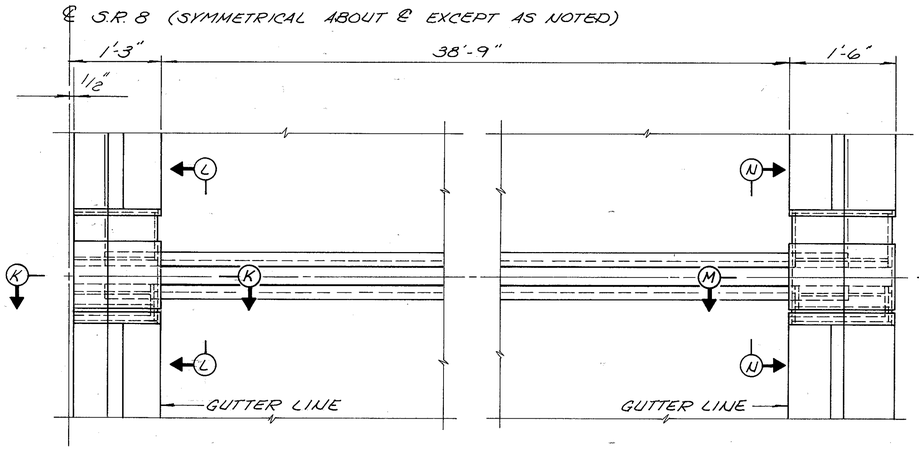

PLAN

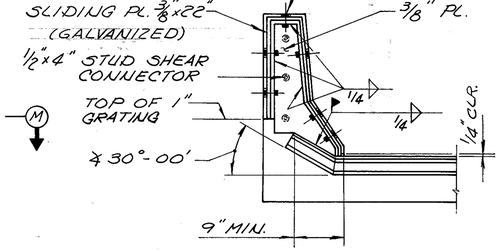

SECTION M-M

NOTES

1. REFER TO SHEET 58/73 FOR ADDITIONAL NOTES.
2. ALL STRUCTURAL STEEL ASSOCIATED WITH THE MODULAR EXPANSION JOINT DEVICE INCLUDING ANCHORS, SUPPORT ASSEMBLIES, AND SLIDING PLATE ASSEMBLIES, SHALL BE INCLUDED FOR PAYMENT WITH "ITEM 516, MODULAR EXPANSION JOINT DEVICE(AS PER PLAN)" SEE GENERAL NOTES FOR ADDITIONAL INFORMATION AND DETAILS.

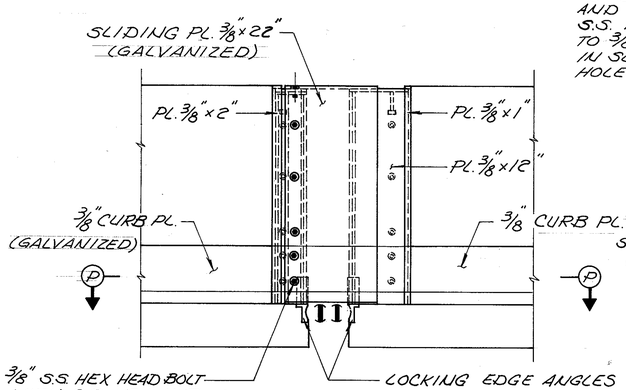

SECTION L-L

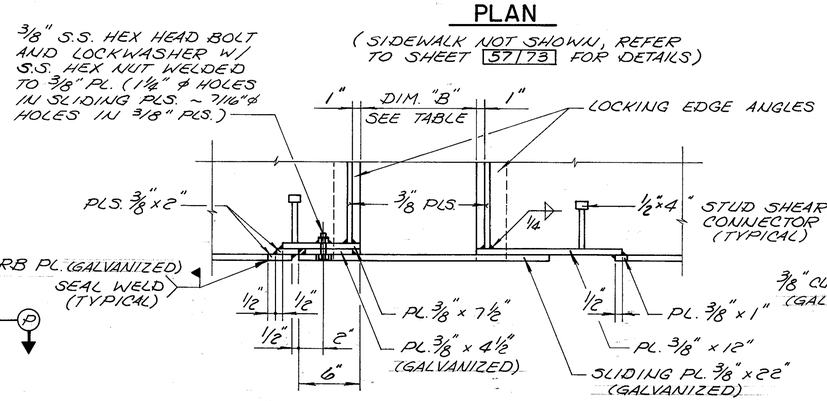

SECTION P-P

(SECTION R-R SIMILAR)

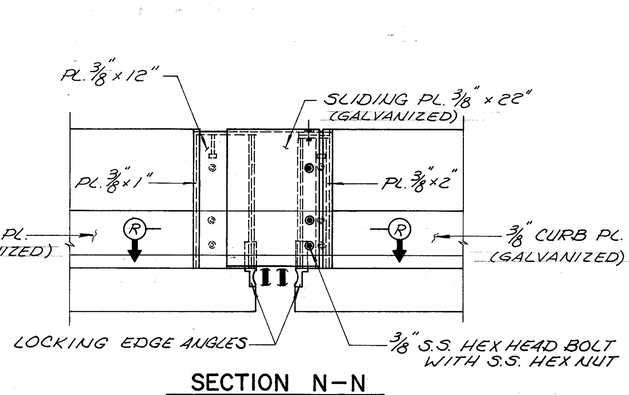

SECTION N-N

DALTON • DALTON • NEWPORT
CLEVELAND, OHIO — AKRON, OHIO

59/73

EXPANSION JOINT DETAILS PIER 6

NORTH EXPRESSWAY VIADUCT

SUM-8-01 95

DESIGNED	DRAWN	TRACED	CHECKED	REVIEWED	DATE	REVISED
BKL	M.A.B.		RLF	JJP	2-1-85	

F.H.W.A. REG.	STATE	PROJECT	
5	OHIO		

170/204

SUM-8 - 1.73 / 1.95

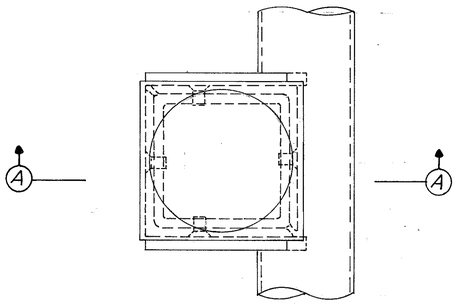

PLAN

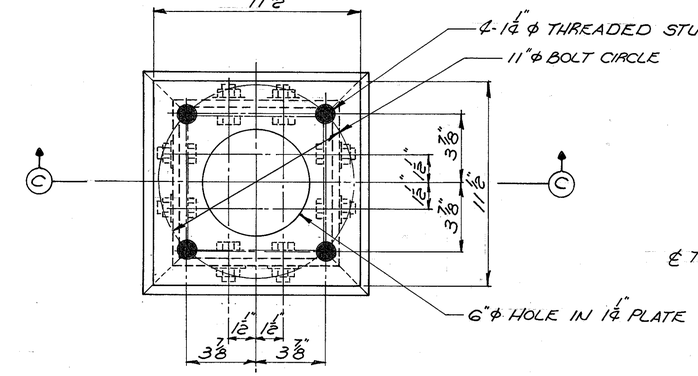

PLAN

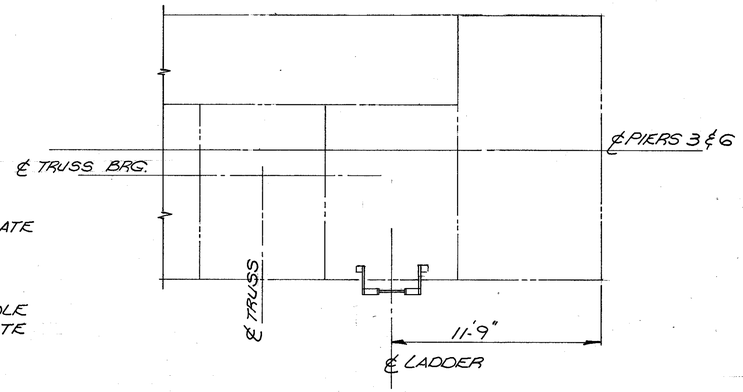

PLAN - ACCESS LADDER

LOCATED AT WEST END OF PIERS 3 & 6

NOTES

1. FOR LIGHT POLE LOCATIONS, SEE GENERAL PLAN AND ELEVATION, SHEET 1/73 AND 2/73.
2. FOR LIGHTING DETAILS, SEE LIGHTING DRAWINGS SHEET No 97/204 THRU 100/204.
3. THE STRUCTURAL STEEL FOR THE NEW LIGHT POLE SUPPORTS HAS BEEN INCLUDED WITH ITEM 513, "CURB PLATES AND MISCELLANEOUS STEEL, AS PER PLAN," FOR PAYMENT.
4. THE REMOVAL OF PORTIONS OF EXISTING LIGHT POLE SUPPORTS AND THE EXISTING LIGHT POLES SHALL BE AS PER ITEM 202, "PORTIONS OF STRUCTURE REMOVED."
5. REFER TO THE SPECIAL PROVISIONS FOR ADDITIONAL LADDER AND FALL PREVENTION SYSTEM REQUIREMENTS.

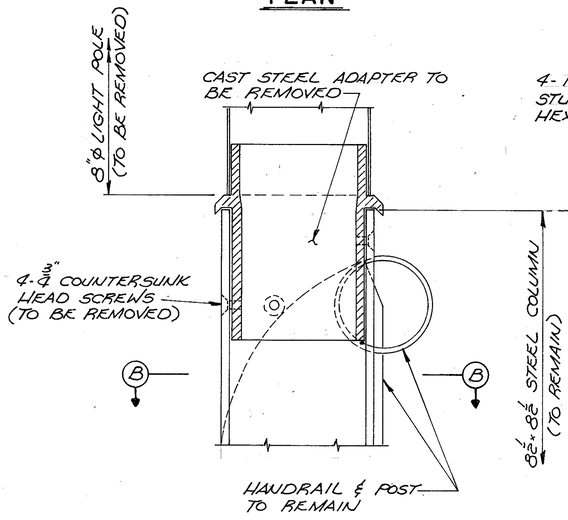

SECTION A-A

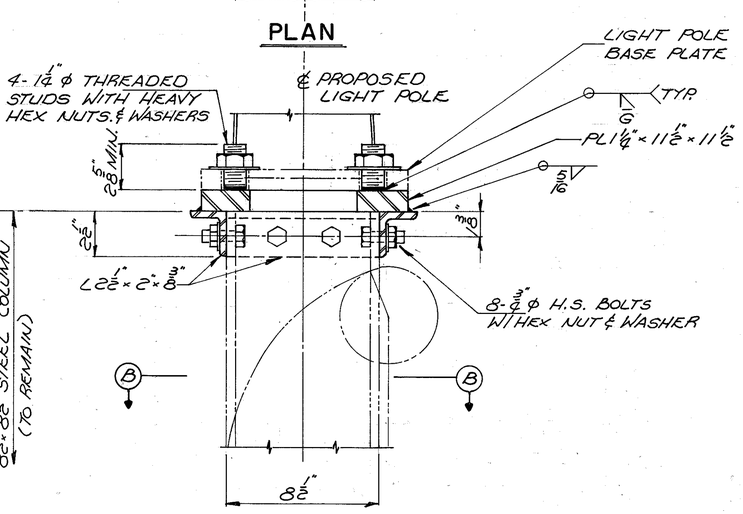

SECTION C-C

PROPOSED LIGHT POLE SUPPORT DETAIL

(17 REQUIRED)

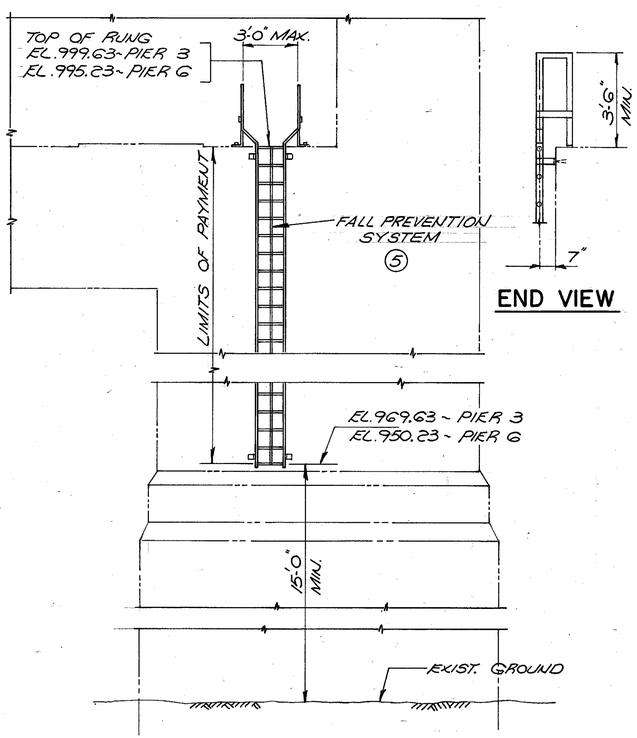

ELEVATION

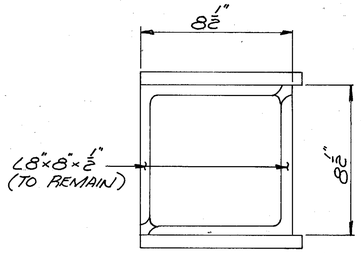

SECTION B-B

EXISTING LIGHT POLE SUPPORT DETAIL

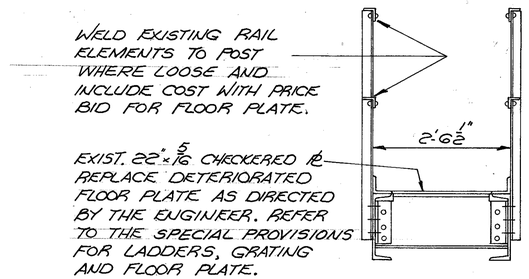

TYPICAL SECTION THRU' INSPECTION WALKWAY

DALTON • DALTON • NEWPORT

CLEVELAND, OHIO AKRON, OHIO

60/73

ACCESS LADDERS & POLE SUPPORT MODIFICATION

NORTH EXPRESSWAY VIADUCT

SUM-8-01 95

DESIGNED	DRAWN	TRACED	CHECKED	REVIEWED	DATE	REVISED
BKL	JWW		RLF	JBP	2-1-85	

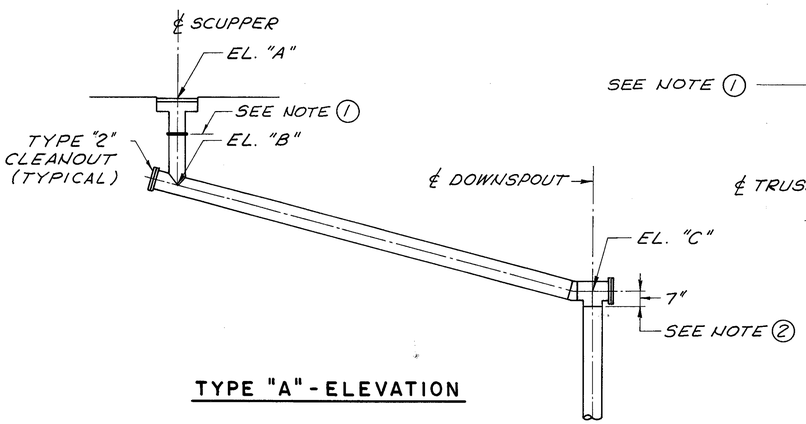

TYPE "A" - ELEVATION

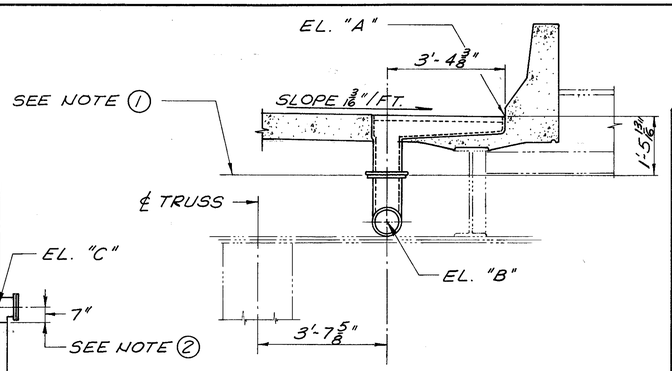

TYPE "1" - SECTION

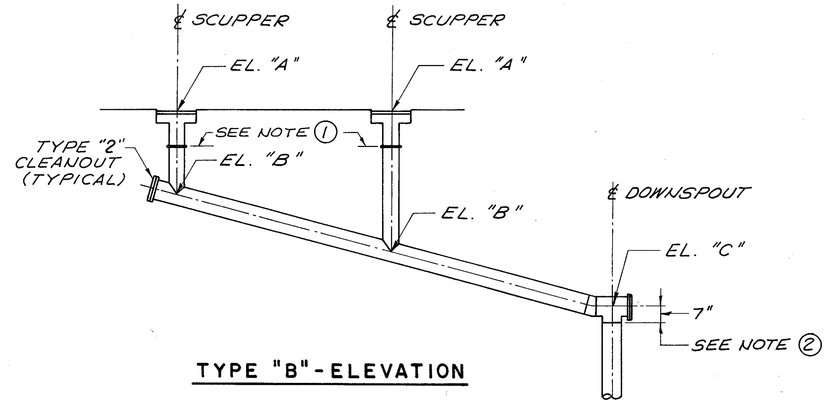

TYPE "B" - ELEVATION

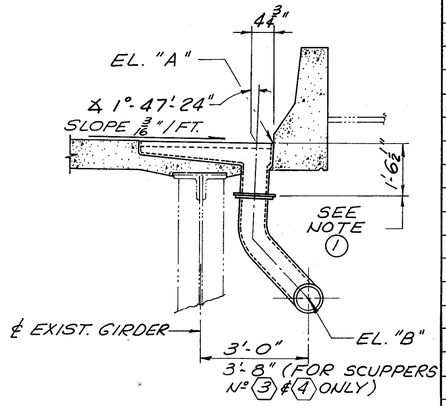

TYPE "2" - SECTION

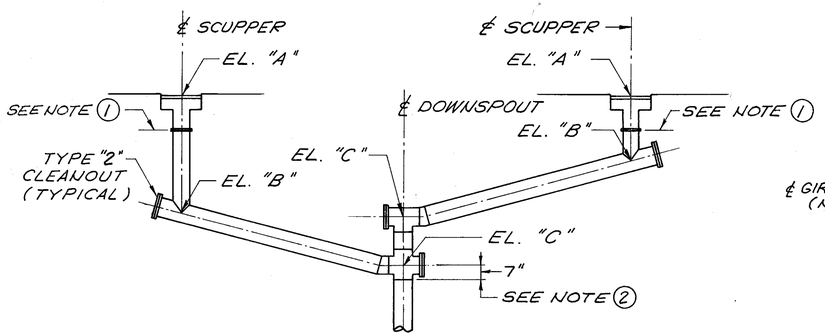

TYPE "C" - ELEVATION

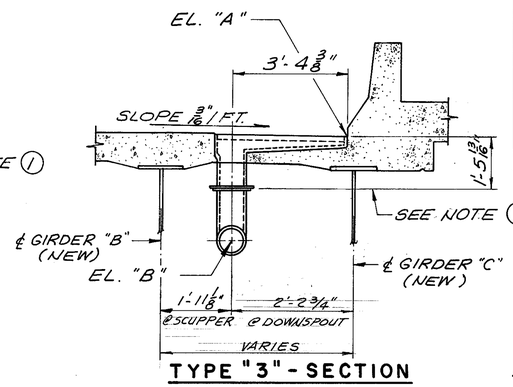

TYPE "3" - SECTION

TABLE OF DRAINAGE DATA

SCUPPER Nº.	SCUPPER STATION	DOWNSPOUT STATION	TYPES ELEV.	TYPES SECT.	EL. "A"	EL. "B"	EL. "C"
1	525+31.96	525+42.42	~ SEE NOTE (3) ~				
2	526+32.00	526+05.24	A	2	1036.57	1032.21	1027.47
3	527+08.00	527+26.68	C	2	1036.21	1031.21	1024.42
4	527+40.00	527+26.68	C	2	1036.06	1031.06	1026.50
5	528+43.00	528+67.61	A	2	1035.58	1031.25	1024.25
6	528+98.00	528+67.61	A	1	1035.32	1032.32	1025.13
7	529+98.00	530+22.00	C	1	1034.85	1030.85	1024.35
8	530+52.00	530+22.00	C	1	1034.59	1030.59	1022.35
9	531+44.00	531+65.67	C	1	1034.16	1029.16	1023.66
10	531+96.00	531+65.67	C	1	1033.92	1029.92	1021.66
11	533+13.00	533+46.00	C	1	1033.37	1029.37	1019.87
12	533+67.00	533+46.00	C	1	1033.12	1029.12	1021.87
13	534+63.00	534+90.00	C	1	1032.66	1028.66	1021.16
14	535+17.00	534+90.00	C	1	1032.41	1028.41	1019.16
15	536+12.00	536+34.00	C	1	1031.96	1027.96	1021.96
16	536+66.00	536+34.00	C	1	1031.71	1027.71	1019.96
17	537+63.00	537+63.00	VERT.	1	1031.25	1016.40	1016.40
18	538+07.00	538+07.00	VERT.	1	1031.05	1026.55	1026.55
19	539+32.00	540+36.00	B	2	1030.46	1026.10	1022.00
20	539+83.00	540+36.00	B	2	1030.22	1024.09	1022.00
21	525+31.96	525+42.42	~ SEE NOTE (3) ~				
22	526+32.00	526+22.15	A	3	1036.40	1033.40	1031.42
23	527+35.00	527+41.15	B	4	1035.98	1032.98	1028.34
24	527+38.00	527+41.15	B	4	1035.97	1030.72	1028.34
25	528+62.00	528+67.61	~ SEE NOTE (4) ~				
26	528+98.00	528+67.61	A	1	1035.32	1031.32	1025.13
27	529+98.00	530+22.00	C	1	1034.85	1030.85	1024.35
28	530+52.00	530+22.00	C	1	1034.59	1030.59	1022.35
29	531+44.00	531+65.67	C	1	1034.16	1030.16	1023.66
30	531+96.00	531+65.67	C	1	1033.92	1029.92	1021.66
31	533+13.00	533+46.00	C	1	1033.37	1029.37	1019.87
32	533+67.00	533+46.00	C	1	1033.12	1029.12	1021.87
33	534+63.00	534+90.00	C	1	1032.66	1028.66	1021..16
34	535+17.00	534+90.00	C	1	1032.41	1028.41	1019.16
35	536+12.00	536+34.00	C	1	1031.96	1027.96	1021.96
36	536+66.00	536+34.00	C	1	1031.71	1027.71	1019.96
37	537+63.00	537+63.00	VERT.	1	1031.25	1016.40	1016.40
38	538+07.00	538+07.00	VERT.	1	1031.05	1026.55	1026.55
39	539+32.00	540+36.00	B	2	1030.46	1026.10	1021.50
40	539+83.00	540+36.00	B	2	1030.22	1023.84	1021.50

NOTES

(1) 8"℄ PIPE AND SPECIALS BELOW THIS POINT TO BE INCLUDED WITH ITEM 518 - 8"℄ CONDUCTOR PIPE, INCLUDING SPECIALS UNLESS OTHERWISE NOTED.

(2) 8"℄ PIPE AND SPECIALS BELOW THIS POINT TO BE INCLUDED WITH ITEM 518 - 8"℄ DOWNSPOUTS, INCLUDING SPECIALS.

(3) FOR DETAIL OF DRAINAGE AT SOUTH ABUTMENT, SEE SHEET 62/73.

(4) FOR DETAIL OF DRAINAGE AT PIER Nº 3, SEE SHEET 64/73.

(5) FOR DETAIL OF SCUPPER, SEE SHEET 62/73.

(6) FOR ADDITIONAL NOTES, SEE GENERAL PLAN AND ELEVATION SHEET 1/73.

(7) ABBREVIATION: VERT. - DENOTES VERTICAL DROP TO DOWNSPOUT.

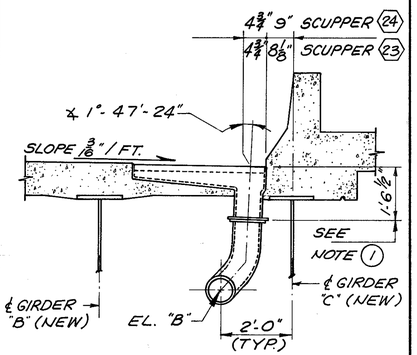

TYPE "4" SECTION

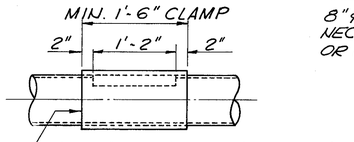

ELEVATION

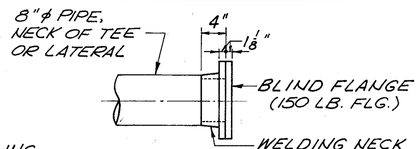

ELEVATION

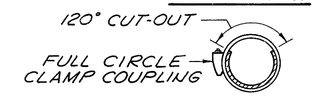

SECTION

TYPE "1" CLEANOUT

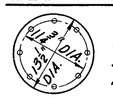

8-⅞"℄ HOLES
8-¾"℄ STAINLESS STEEL BOLTS W/ HEX NUTS & LOCK WASHER

BLIND FLANGE

TYPE "2" CLEANOUT

TYPICAL DRAINAGE LAYOUTS

F.H.W.A. REG.	STATE	PROJECT	
5	OHIO		

171/204

SUM-8 - 1.73 / 1.95

DALTON · DALTON · NEWPORT
CLEVELAND, OHIO AKRON, OHIO

61/73

DRAINAGE DETAILS

NORTH EXPRESSWAY VIADUCT
SUM - 8 - 01 95

DESIGNED	DRAWN	TRACED	CHECKED	REVIEWED	DATE	REVISED
BKL	D.T.		A.L.H.	JSP	2-1-85	

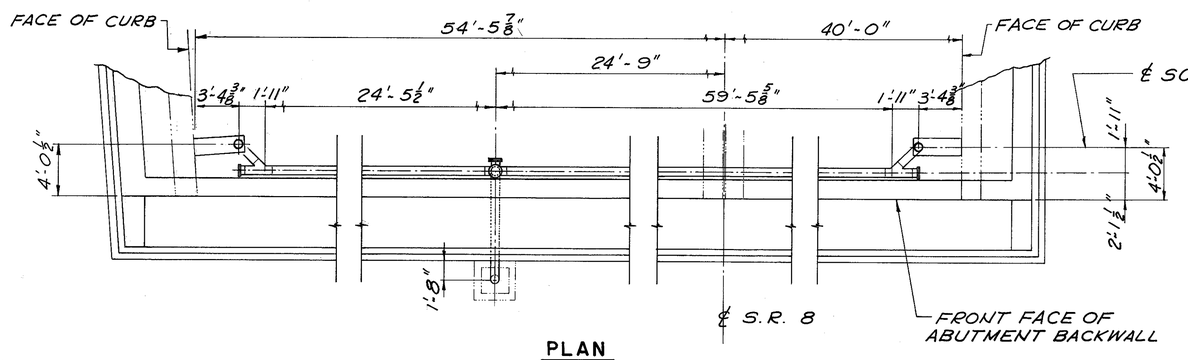

PLAN

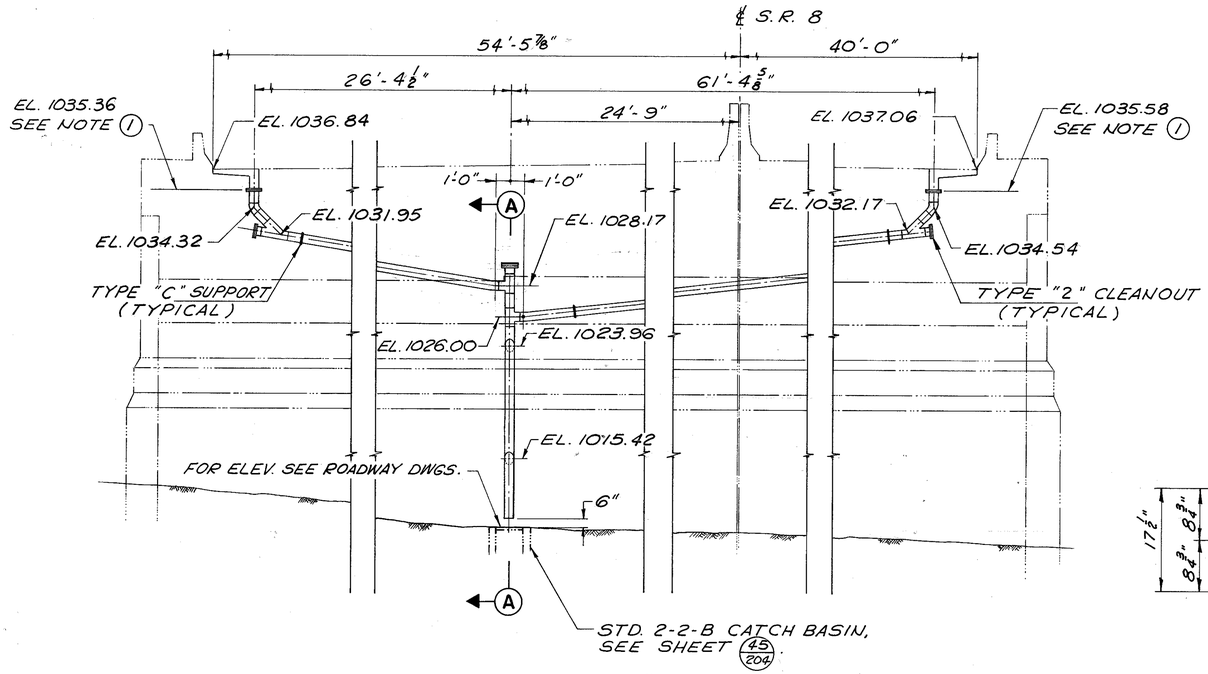

ELEVATION

SOUTH ABUTMENT DRAINAGE DETAILS

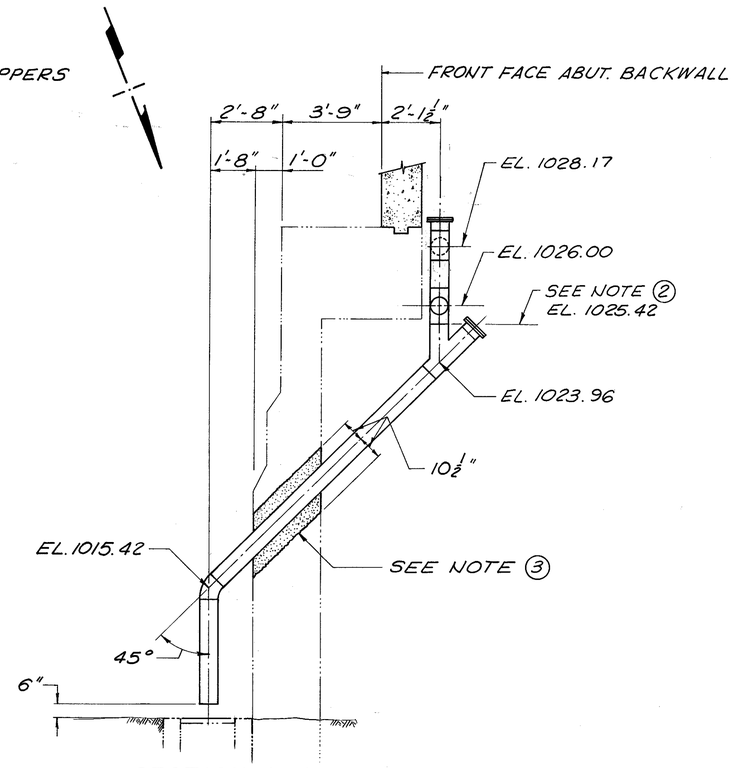

SECTION A-A

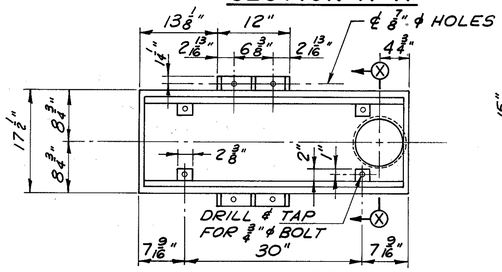

PLAN - SCUPPER

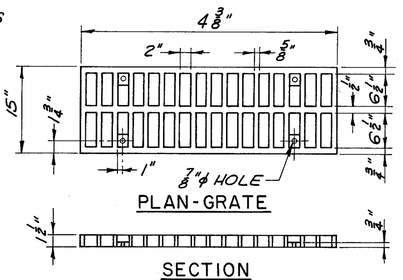

PLAN - GRATE

SECTION

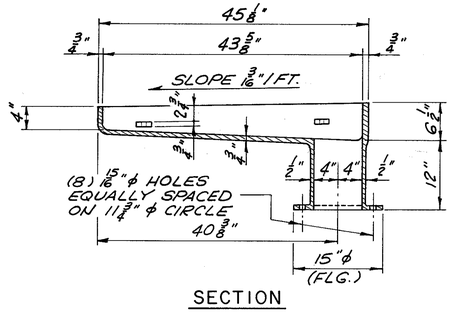

SECTION

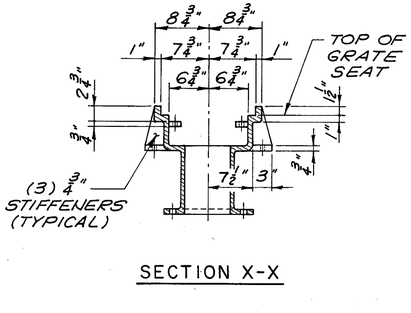

SECTION X-X

SCUPPER DETAILS

F.H.W.A. REG.	STATE	PROJECT	
5	OHIO		

172/204

SUM - 8 - 1.73 / 1.95

NOTES

(1) 8"ϕ PIPE AND SPECIALS BELOW THIS POINT TO BE INCLUDED WITH ITEM 518, 8"ϕ CONDUCTOR PIPE INCLUDING SPECIALS, UNLESS OTHERWISE NOTED.

(2) 8"ϕ PIPE AND SPECIALS BELOW THIS POINT TO BE INCLUDED WITH ITEM 518, 8"ϕ DOWNSPOUTS INCLUDING SPECIALS.

(3) REMOVE CONCRETE AS SHOWN FOR 8"ϕ PIPE TO PASS THRU ABUTMENT WALL. CUT EXISTING REINFORCING TO CLEAR THE PIPE. GROUT PIPE IN PLACE USING CLASS "C" CONCRETE. THE COST OF THIS WORK SHALL BE INCIDENTAL TO ITEM 518, 8"ϕ DOWNSPOUTS INCLUDING SPECIALS.

(4) FOR ADDITIONAL NOTES, SEE GENERAL PLAN AND ELEVATION SHEET 1/73.

DALTON • DALTON • NEWPORT
CLEVELAND, OHIO — AKRON, OHIO

62/73

DRAINAGE DETAILS
SOUTH ABUTMENT & SCUPPERS
NORTH EXPRESSWAY VIADUCT
SUM - 8 - 01 95

DESIGNED	DRAWN	TRACED	CHECKED	REVIEWED	DATE	REVISED
BKL	D.T.		AL	JJP	2-1-95	

F.H.W.A. REG.	STATE	PROJECT	
5	OHIO		

173 / 204

SUM-8 - 1.73 / 1.95

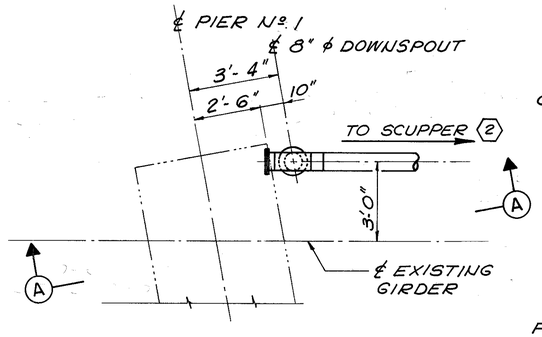

PLAN - WEST END

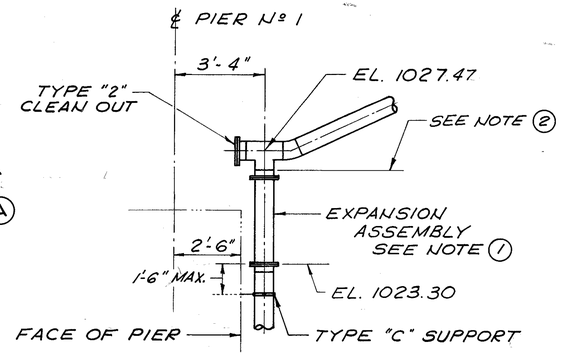

SECTION A-A

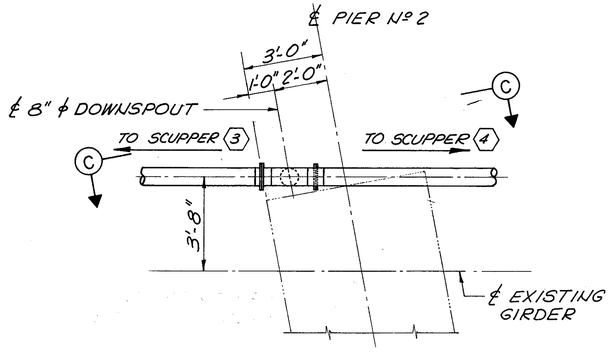

PLAN - WEST END

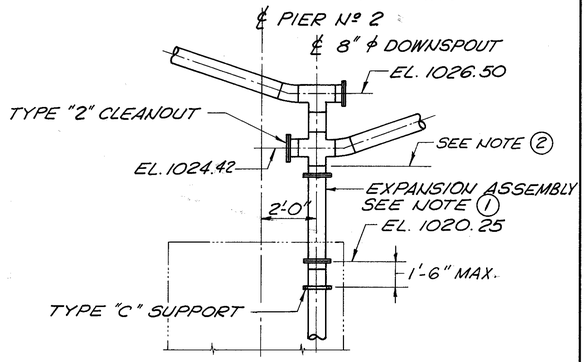

SECTION C-C

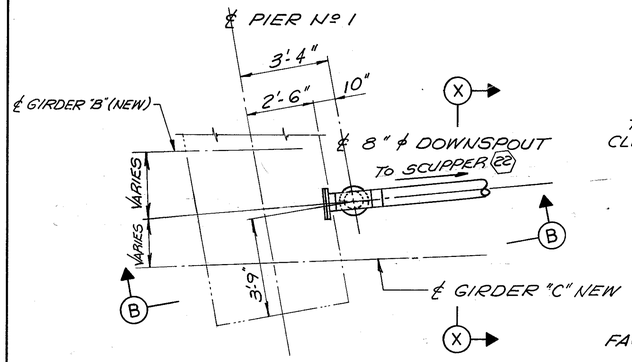

PLAN - EAST END

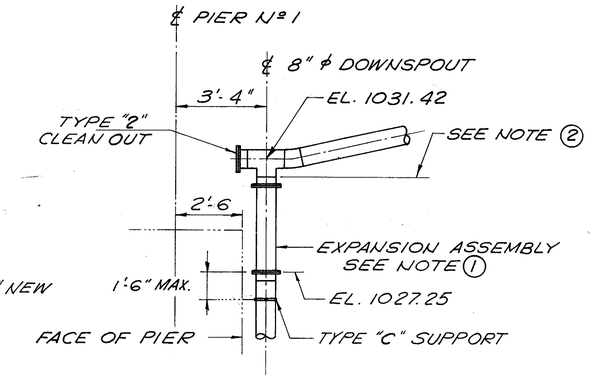

SECTION B-B

PIER Nº 1 DRAINAGE DETAILS

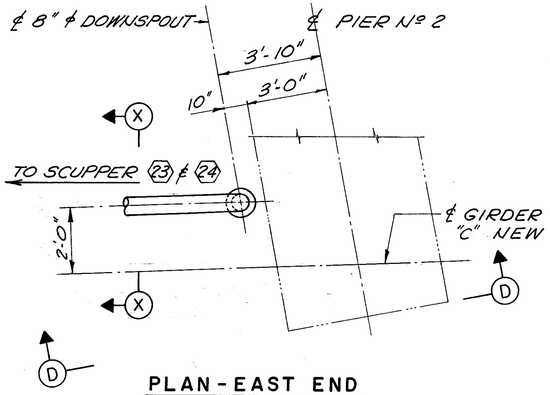

PLAN - EAST END

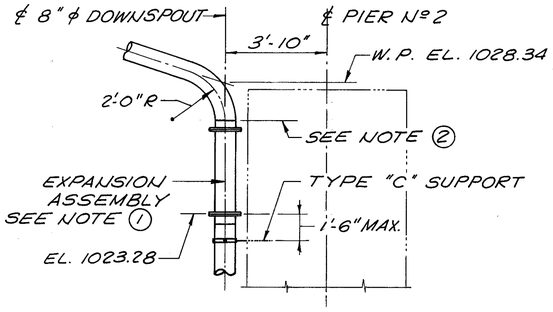

SECTION D-D

PIER Nº 2 DRAINAGE DETAILS

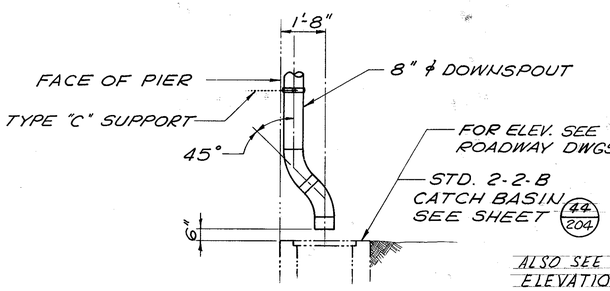

TYPICAL OUTLET - PIER Nº 1 & EAST SIDE PIER Nº 2

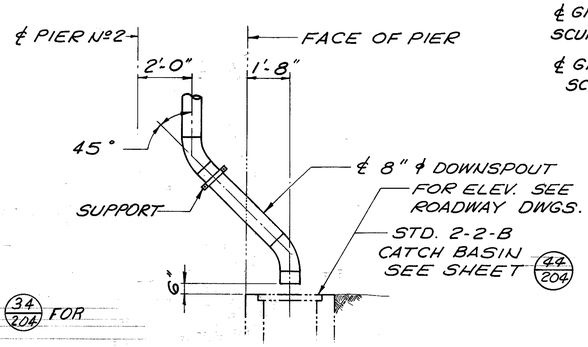

OUTLET - WEST SIDE PIER Nº 2

DOWNSPOUT OUTLET DETAILS

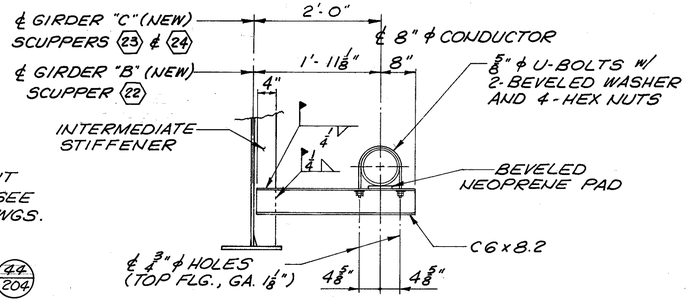

SECTION X-X

(FOR SCUPPERS (22), (23) ℄ (24) ONLY)

NOTES

1. FOR DETAIL OF EXPANSION ASSEMBLY, SEE SHEET 65/73.
2. 8" ϕ DOWNSPOUTS AND SPECIALS BELOW THIS POINT SHALL BE INCLUDED WITH ITEM 518, 8" ϕ DOWNSPOUTS AND SPECIALS FOR PAYMENT.
3. FOR ADDITIONAL NOTES AND REFERENCES, SEE SHEET 1/73.

DALTON • DALTON • NEWPORT

CLEVELAND, OHIO — AKRON, OHIO

63/73

DRAINAGE DETAILS

PIERS Nº 1 & Nº 2

NORTH EXPRESSWAY VIADUCT

SUM-8-01 95

DESIGNED	DRAWN	TRACED	CHECKED	REVIEWED	DATE	REVISED
BKL	D.T.		AL.H.	JJP	2-1-85	

F.H.W.A. REG.	STATE	PROJECT	
5	OHIO		

174/204

SUM - 8 - 1.73 / 1.95

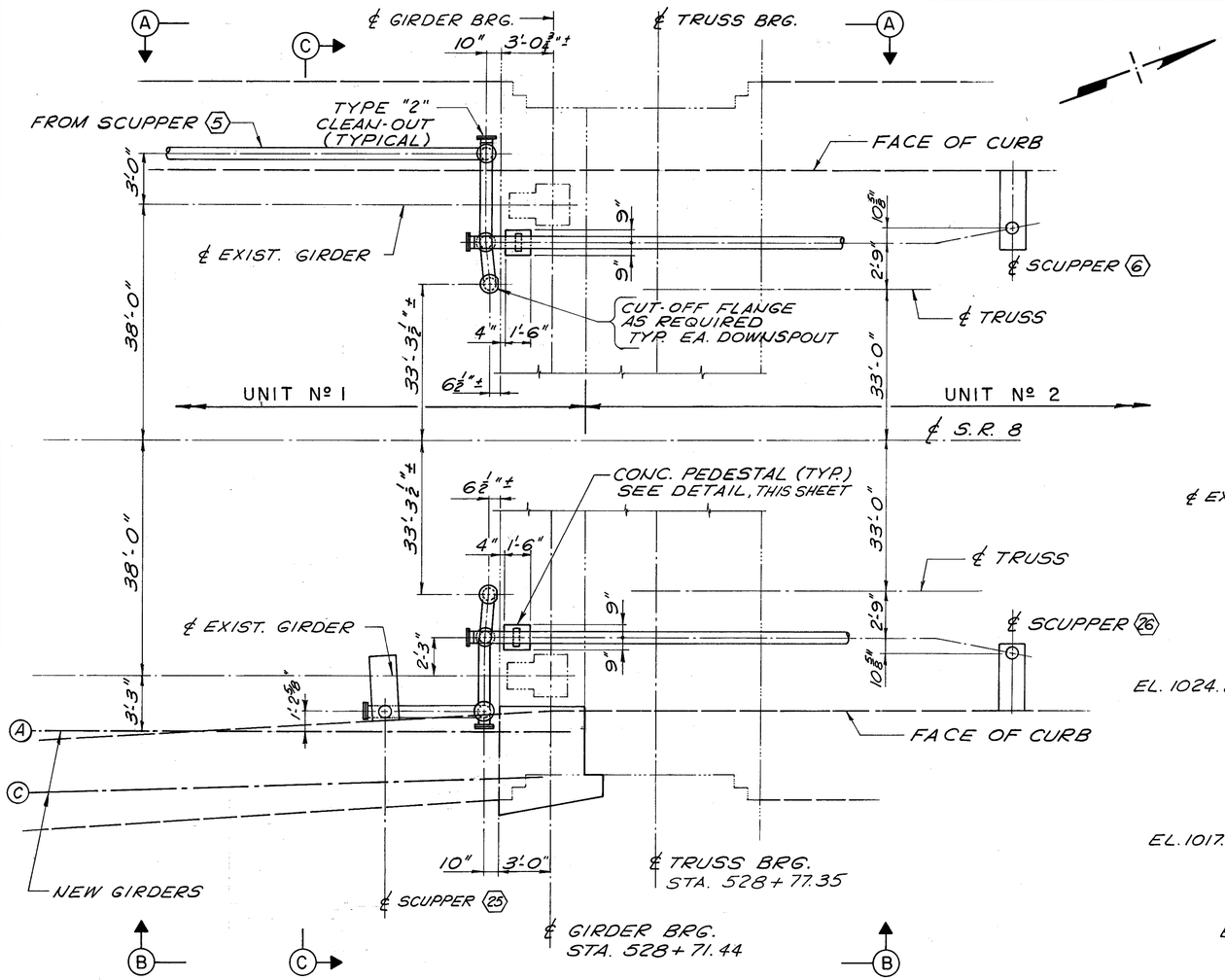

DRAINAGE PLAN - PIER Nº 3

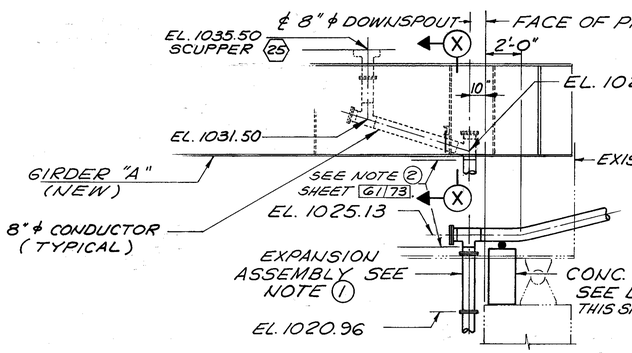

VIEW B-B

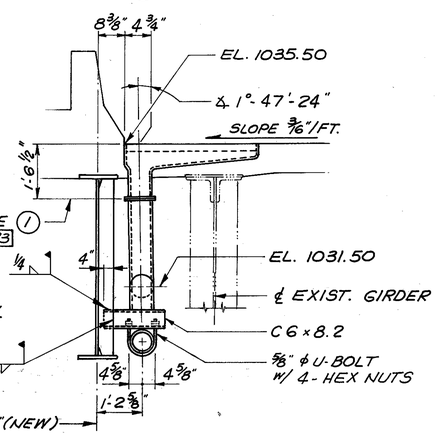

SECTION X-X

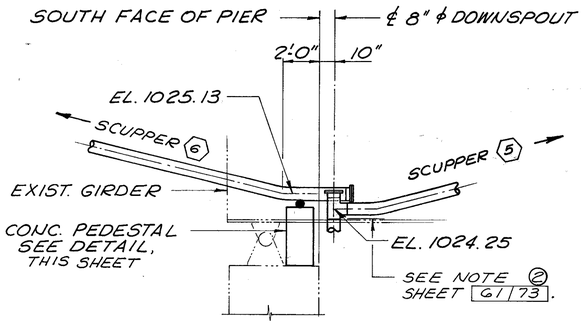

VIEW A-A

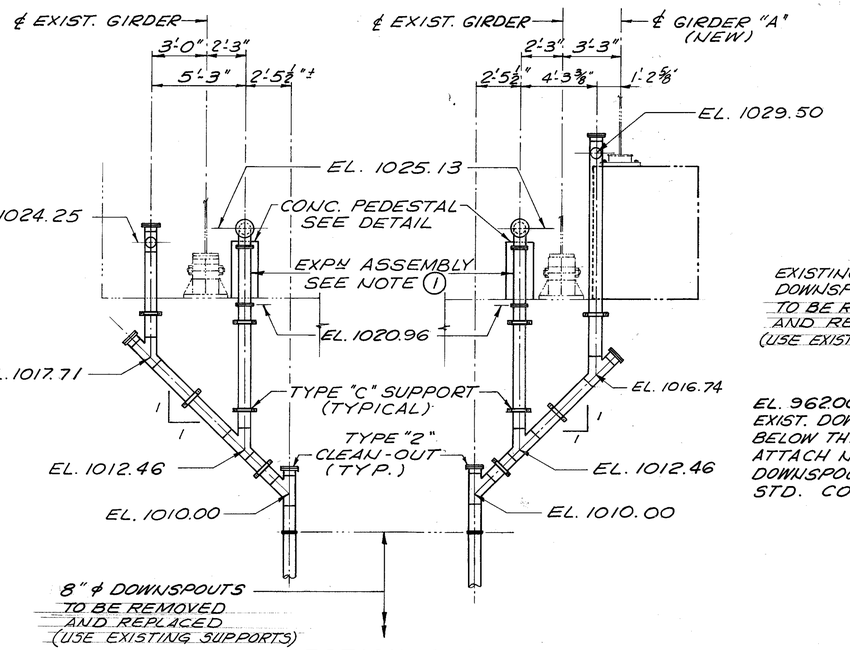

SECTION C-C

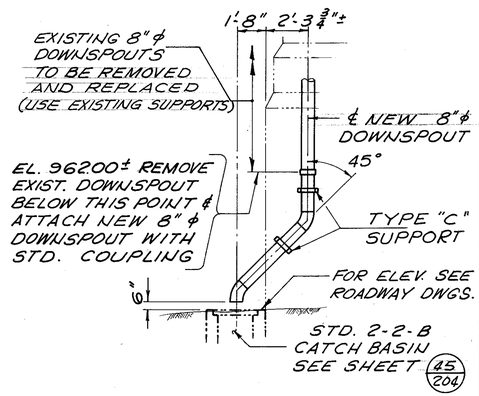

DOWNSPOUT OUTLET DETAIL

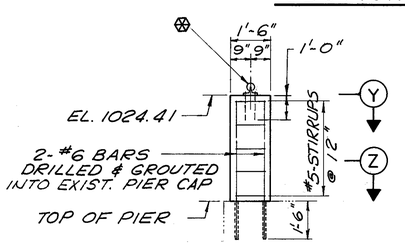

CONCRETE PEDESTAL DETAIL
SEE NOTE (3)

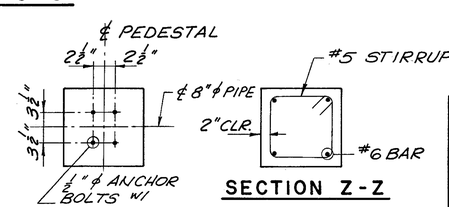

SECTION Y-Y

SECTION Z-Z

NOTES

1. FOR DETAIL OF EXPANSION ASSEMBLY, SEE SHEET 65/73.
2. FOR ADDITIONAL NOTES AND REFERENCES, SEE GENERAL PLAN AND ELEVATION SHEET 1/73.
3. THE COST FOR CLASS C CONCRETE AND REINFORCEMENT BARS REQUIRED FOR PEDESTALS SHALL BE INCIDENTAL TO ITEM 518, 8" ϕ DOWNSPOUTS, INCLUDING SPECIALS. DOWEL HOLES SHALL BE PAID FOR PER ITEM 510, DOWEL HOLES.

℄ PIPE ROLL STAND GRINNEL FIG. 271 OR APPROVED EQUAL

DALTON • DALTON • NEWPORT
CLEVELAND, OHIO — AKRON, OHIO
64/73

DRAINAGE DETAILS
PIER Nº 3
NORTH EXPRESSWAY VIADUCT
SUM - 8 - 01 95

DESIGNED	DRAWN	TRACED	CHECKED	REVIEWED	DATE	REVISED
BKL	D.T.		ALH	JGP	2-1-85	

F.H.W.A. REG.	STATE	PROJECT	
5	OHIO		

175/204

SUM-8-1.73 / 1.95

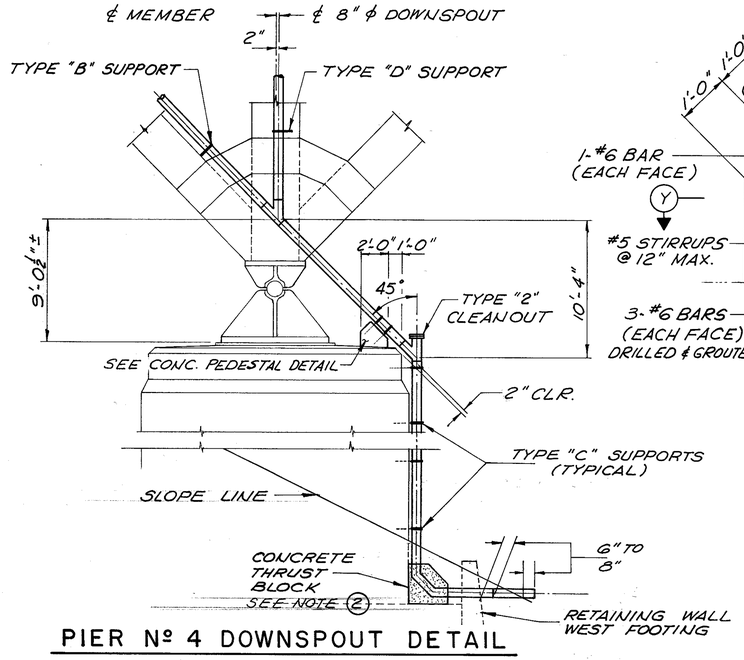

PIER Nº 4 DOWNSPOUT DETAIL

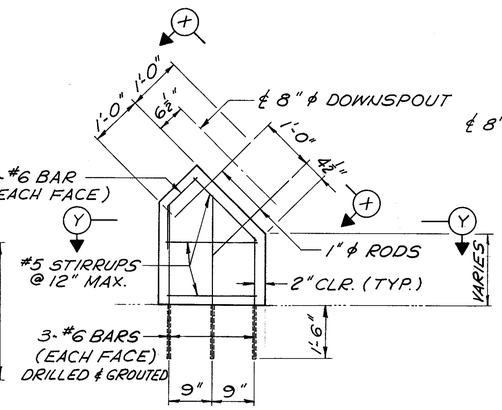

PLAN

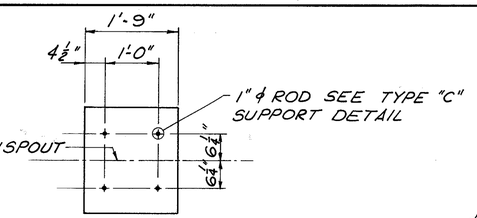

VIEW X-X

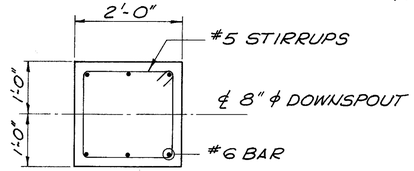

SECTION Y-Y

CONCRETE PEDESTAL DETAILS

SEE NOTE (2)

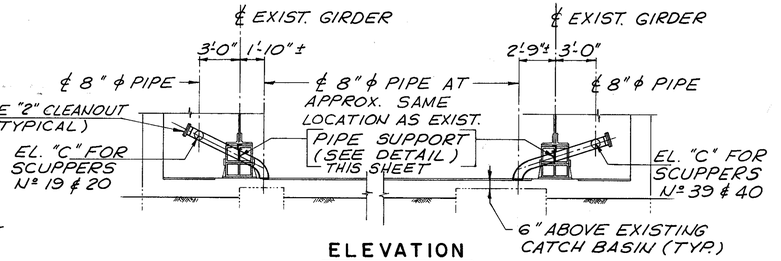

ELEVATION

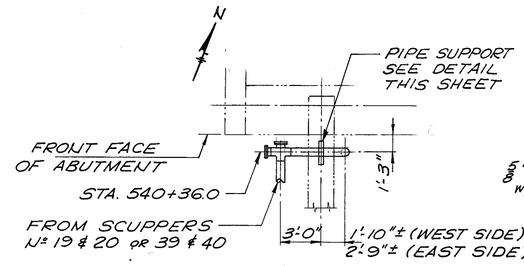

PARTIAL PLAN VIEW

(WEST SIDE SHOWN, EAST SIDE OPPOSITE-HAND EXCEPT AS NOTED.)

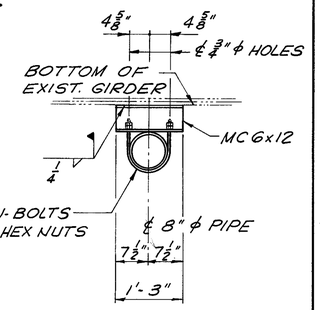

PIPE SUPPORT DETAIL

NORTH ABUTMENT DOWNSPOUT DETAILS

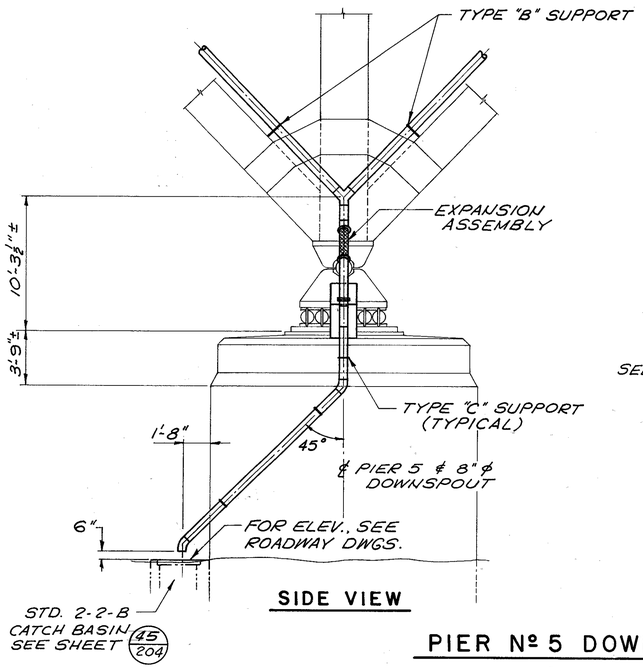

SIDE VIEW

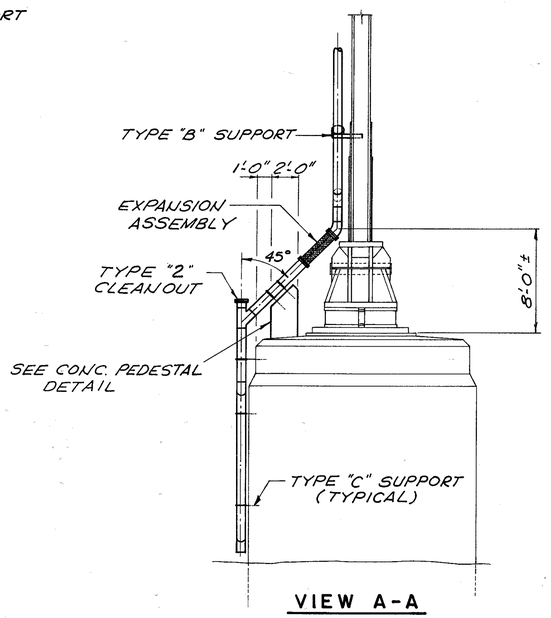

VIEW A-A

PIER Nº 5 DOWNSPOUT DETAILS

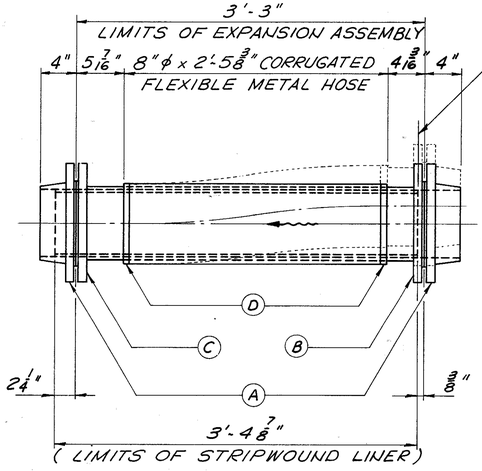

* (A) 8" RAISED FACE WELDING NECK FLANGE

* (B) 8" RAISED FACE SLIP-ON FLANGE WITH SPACER NIPPLE

* (C) 8" LAP JOINT FLANGE WITH STUB END

(D) TYPE 302 STAINLESS STEEL RETAINER RING

* 13½" ϕ FLANGE WITH 8-⅞" ϕ HOLES ON 11¾" ϕ BOLT CIRCLE FOR 8-¾" ϕ STAINLESS STEEL BOLTS, NUTS & WASHERS

PIPE EXPANSION ASSEMBLY DETAIL

TO BE INCLUDED WITH ITEM 518-8" ϕ DOWNSPOUTS, INCLUDING SPECIALS FOR PAYMENT

NOTE

(1) FOR NOTES AND REFERENCES, SEE GENERAL PLAN AND ELEVATION SHEET 1/73.

(2) THE COST FOR CLASS C CONCRETE AND REINFORCEMENT BARS REQUIRED FOR PEDESTALS AND THRUST BLOCKS SHALL BE INCIDENTAL TO ITEM 518, 8" ϕ DOWNSPOUTS, INCLUDING SPECIALS. DOWEL HOLES SHALL BE PAID FOR PER ITEM 510, DOWEL HOLES.

DALTON • DALTON • NEWPORT

CLEVELAND, OHIO — AKRON, OHIO

65/73

DRAINAGE DETAILS

PIERS Nº 4, Nº 5 AND MISC.

NORTH EXPRESSWAY VIADUCT

SUM-8-01 95

DESIGNED	DRAWN	TRACED	CHECKED	REVIEWED	DATE	REVISED
BKL	D.T.		A.L.H.	JDP	2-1-85	

F.H.W.A. REG.	STATE	PROJECT	
5	OHIO		

176/204

SUM-8 - 1.73 / 1.95

NOTE

FOR NOTES AND REFERENCES, SEE GENERAL PLAN AND ELEVATION SHEET 1/73.

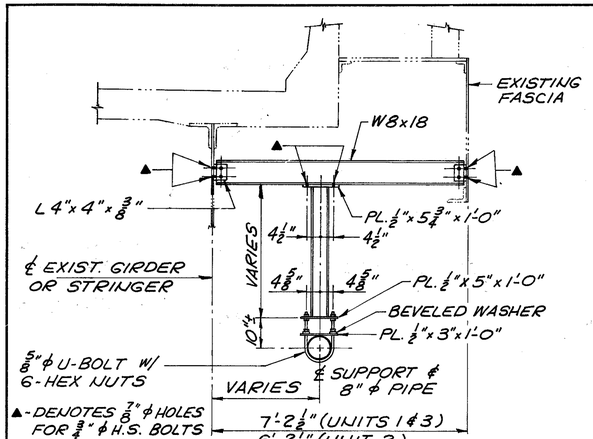

FRONT VIEW

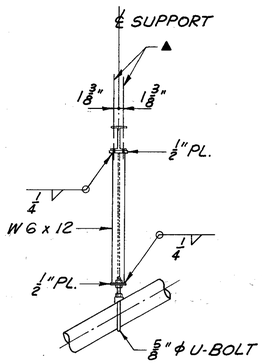

SIDE VIEW

TYPE "A" SUPPORT

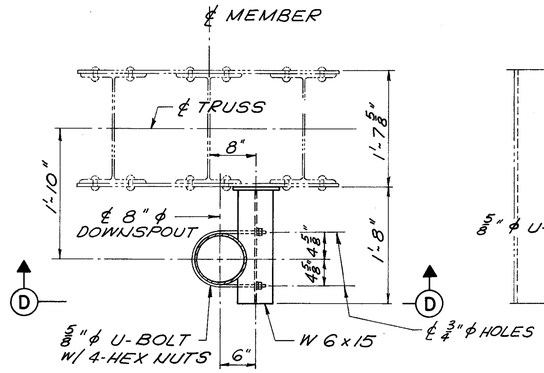

PLAN

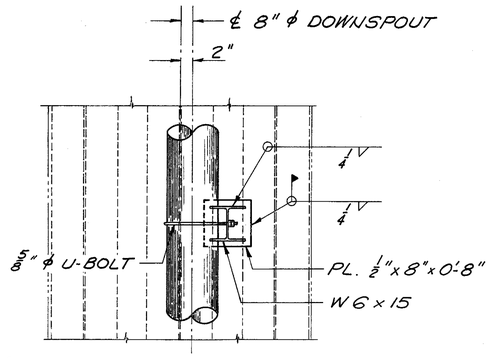

VIEW D-D

TYPE "D" SUPPORT

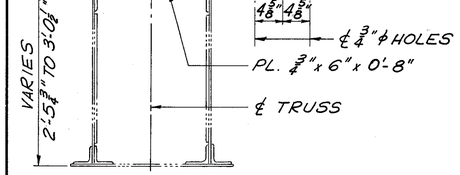

FRONT VIEW

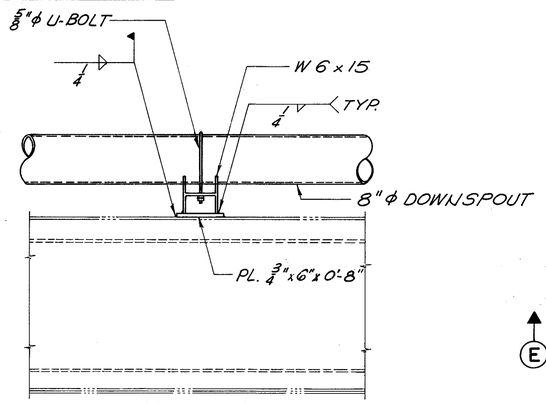

SIDE VIEW

TYPE "B" SUPPORT

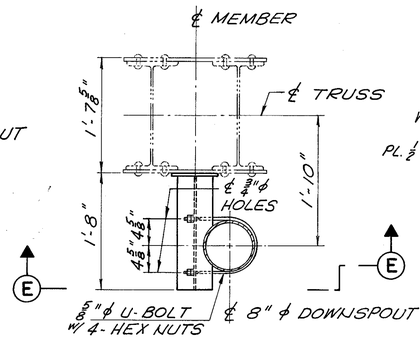

PLAN

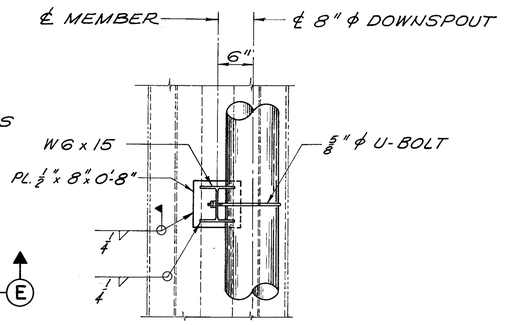

VIEW E-E

TYPE "E" SUPPORT

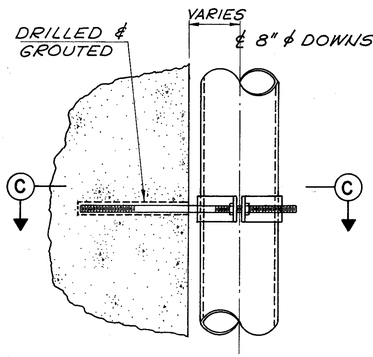

ELEVATION

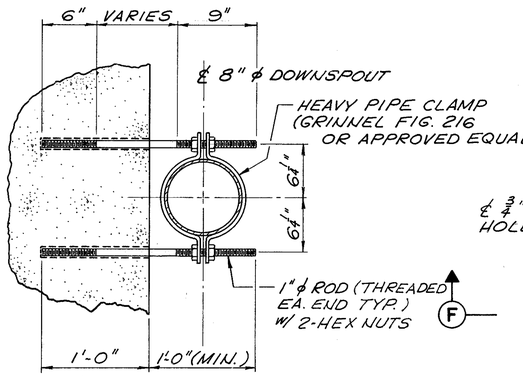

SECTION C-C

TYPE "C" SUPPORT

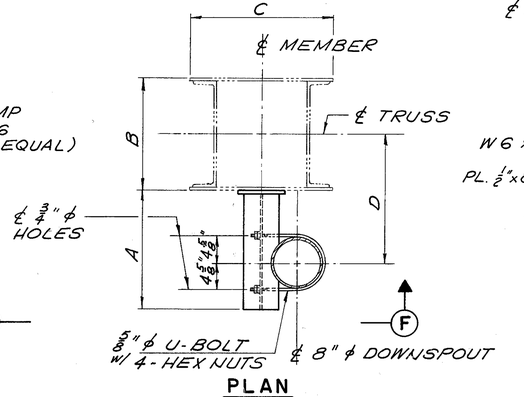

PLAN

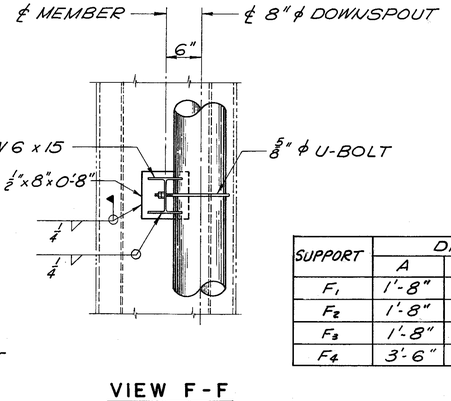

VIEW F-F

TYPE "F" SUPPORT

SUPPORT	DIMENSION			
	A	B	C	D
F_1	1'-8"	1'-7"	2'-0"	1'-10"
F_2	1'-8"	1'-7 1/8"	2'-0"	1'-10"
F_3	1'-8"	1'-7 1/8"	2'-8"	1'-10"
F_4	3'-6"	1'-7"	2'-0"	3'-7 5/8"

DALTON • DALTON • NEWPORT

CLEVELAND, OHIO - AKRON, OHIO

66/73

DRAINAGE DETAILS

SUGGESTED PIPE SUPPORTS

NORTH EXPRESSWAY VIADUCT

SUM-8-01 95

DESIGNED	DRAWN	TRACED	CHECKED	REVIEWED	DATE	REVISED
BKL	D.T.		A.L.H.	JGP	2-1-85	

F.H.W.A. REG.	STATE	PROJECT	
5	OHIO		

177/204

SUM - 8 - 1.73 / 1.95

NOTES

(1) FOR ADDITIONAL NOTES AND DETAILS SEE SHEET 68/73.

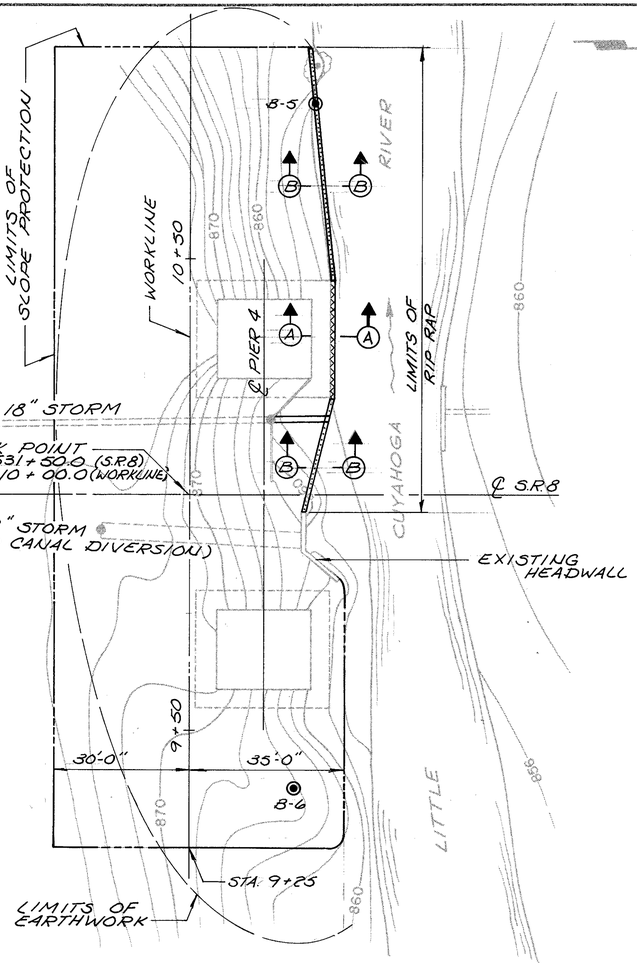

PLAN

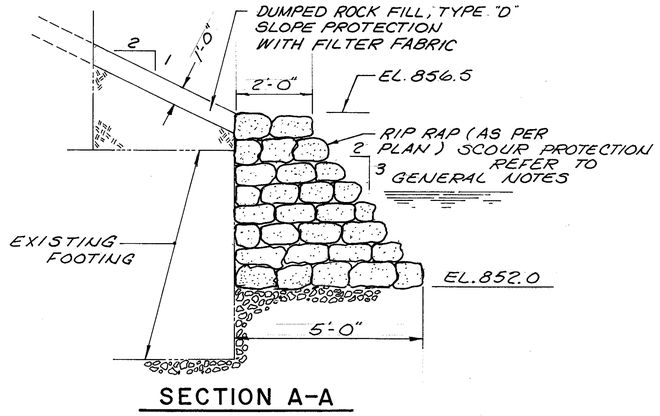

SECTION A-A

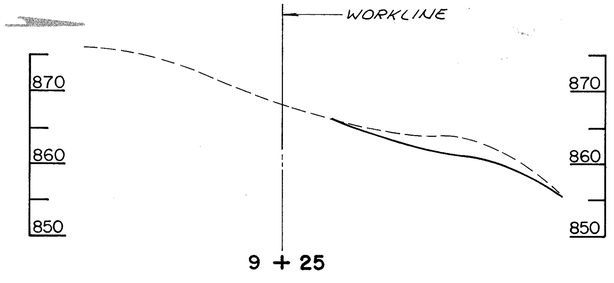

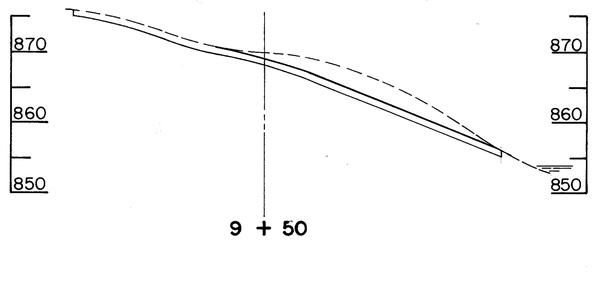

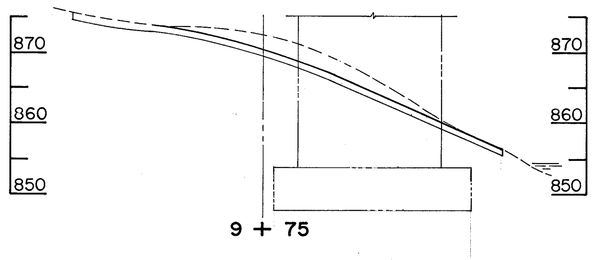

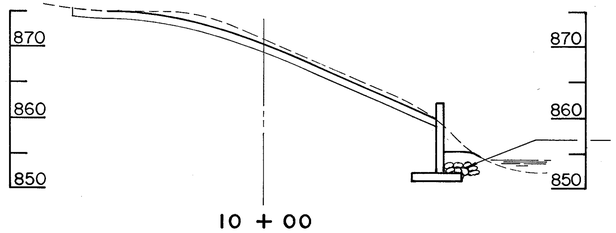

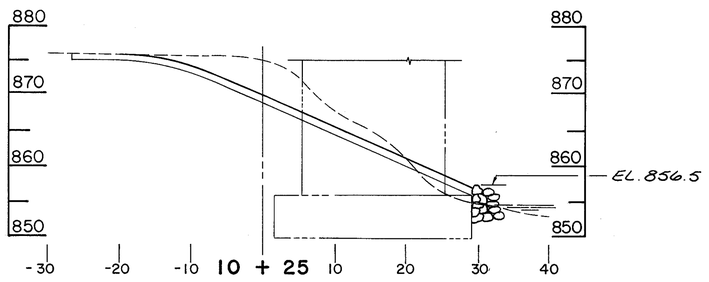

CROSS SECTIONS

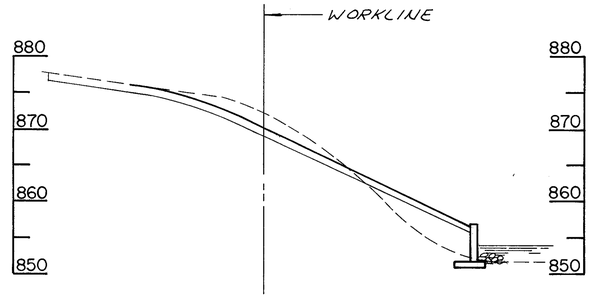

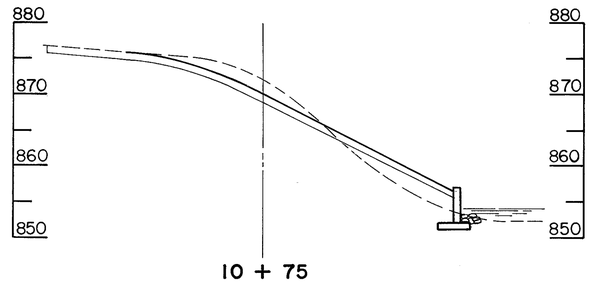

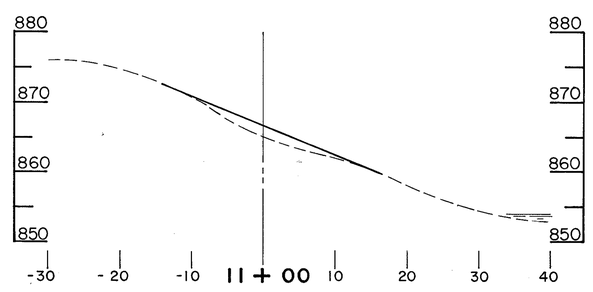

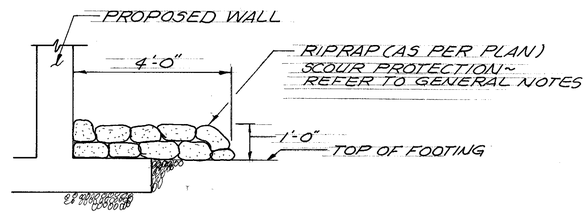

SECTION B-B

DALTON · DALTON · NEWPORT
CLEVELAND, OHIO AKRON, OHIO

67/73

RETAINING WALL AT PIER 4

NORTH EXPRESSWAY VIADUCT

SUM - 8 - 01 95

DESIGNED	DRAWN	TRACED	CHECKED	REVIEWED	DATE	REVISED
M.A.B.	M.A.B.		R.L.F.	J.B.P.	2-1-85	

F.H.W.A. REG.	STATE	PROJECT	
5	OHIO		

178 / 204

SUM - 8 - 1.73 / 1.95

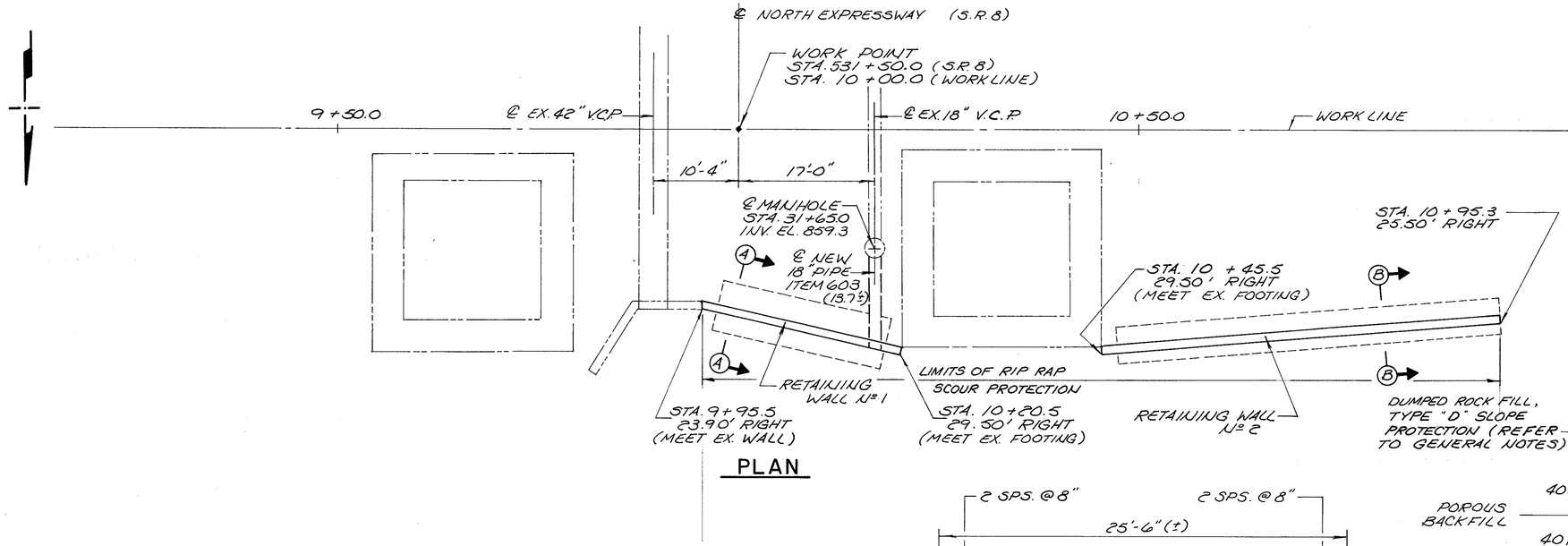

PLAN

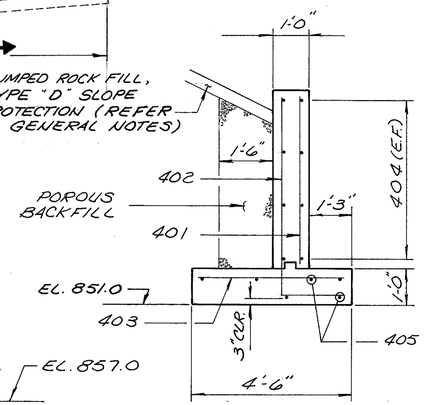

SECTION B-B

NOTES

1. FOOTINGS SHALL EXTEND A MINIMUM OF 1'-0" INTO SOUND SHALE OR TO THE ELEVATION SHOWN, WHICHEVER IS LOWER.
2. REINFORCEMENT CLEARANCE SHALL BE 2" UNLESS NOTED OTHERWISE.
3. ABBREVIATIONS:
   E.F. ~ EACH FACE
   N.F. ~ NEAR FACE
   F.F. ~ FAR FACE
   T.O.F. ~ TOP OF FOOTING
   EX. ~ EXISTING
4. REFER TO SHEET 67/73 FOR SITE WORK AND ADDITIONAL SLOPE AND CHANNEL PROTECTION DETAILS.
5. REFER TO SHEET 45/204 FOR 18" PIPE.
6. CUT THE REINFORCING STEEL AS REQUIRED AT THE 18" PIPE. INCLUDE THE COST WITH ITEM 509.
7. REFER TO SHEET 67/73 FOR SCOUR PROTECTION DETAILS.
8. THE REINFORCING BAR PREFIXES ARE AS FOLLOWS:

   RETAINING WALL Nº 1 ~ 1RW
   RETAINING WALL Nº 2 ~ 2RW

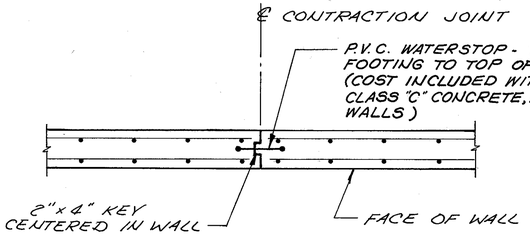

CONTRACTION JOINT DETAIL

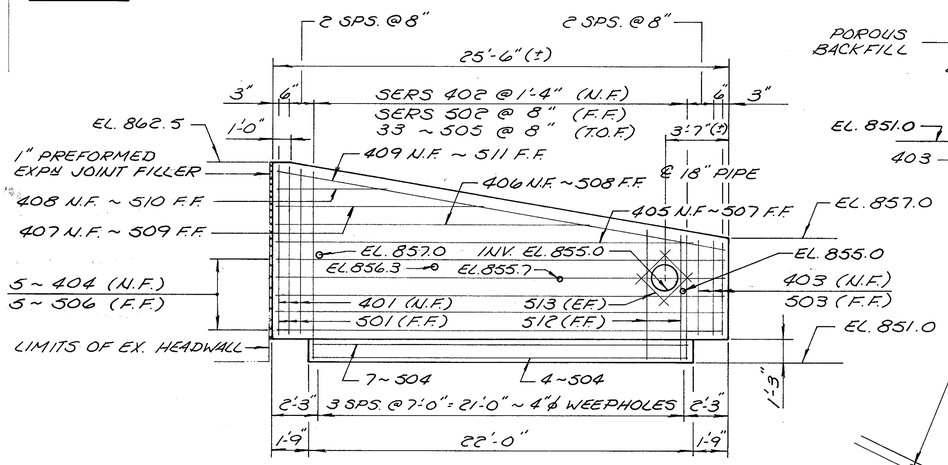

ELEVATION RETAINING WALL Nº 1

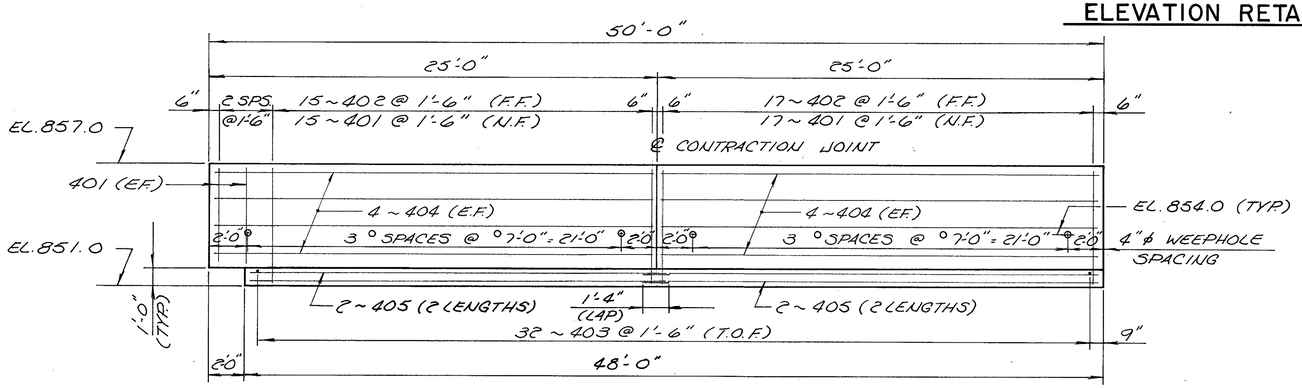

ELEVATION RETAINING WALL Nº 2

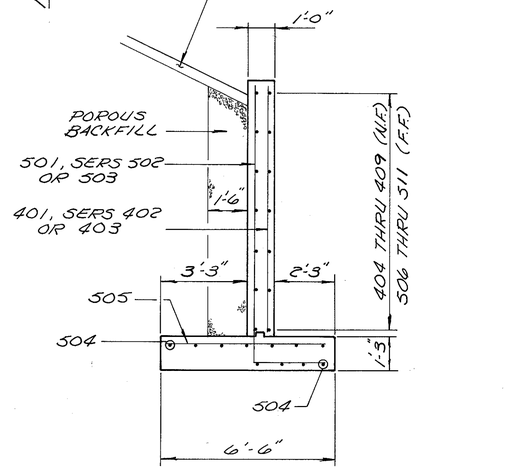

SECTION A-A

DALTON • DALTON • NEWPORT
CLEVELAND, OHIO — AKRON, OHIO

68/73

RETAINING WALL AT PIER 4

NORTH EXPRESSWAY VIADUCT

SUM - 8 - 01 95

DESIGNED	DRAWN	TRACED	CHECKED	REVISED	DATE	REVISED
M.A.B.	M.A.B.		R.L.F.	JDP	2-1-85	

F.H.W.A. REG.	STATE	PROJECT	
5	OHIO		

179/204

SUM-8- 1.73 / 1.95

MARK	Nº REQ'D.	LENGTH	TYPE	DIMENSIONS A	B	C	D	INCRM.	WEIGHT LBS.
S. ABUTMENT PHASE I									
11A401	20	7'-1"	14	1'-8"	1'-8"				95
11A402	44	3'-1"	16	10"	1'-1"	11"	1'-4"		91
* 11A403	73	23'-1"	ST.						1126
* SERIES OF 11A404	1-SET OF 27 BAR	23'-2" TO 28'-5"	ST.					2 3/16"	465
* SERIES OF 11A405	1-SET OF 26 BAR	3'-5" TO 8'-0"	ST.					2 3/16"	99
* 11A406	5	2'-2"	1	6"	1'-9"				7
* 11A407	3	20'-9"	ST.						42
* 11A408	1	8'-0"	ST.						5
* 11A409	3	4'-6"	12	2'-3"	2'-3"	5"			9
* 11A410	3	28'-9"	ST.						58
* 11A450	24	5'-0"	ST.						80
11A501	58	3'-9"	ST.						227
11A502	118	7'-0"	ST.						862
11A503	16	22'-6"	ST.						375
11A504	20	23'-3"	ST.						485
11A505	59	2'-9"	2	1'-0"	1'-0"				169
11A506	4	26'-3"	ST.						110
11A507	7	6'-6"	ST.						47
11A508	14	4'-9"	2	1'-6"	2'-0"				69
11A509	42	8'-6"	2	3'-4"	2'-1"				372
11A510	10	11'-2"	2	4'-8"	2'-1"				116
11A511	9	8'-5"	12	6'-0"	2'-6"	1'-9"			79
11A512	3	10'-1"	2	4'-2"	2'-0"				32
11A513	12	24'-3"	ST.						304
11A514	2	8'-10"	2	3'-6"	2'-1"				18
11A515	64	8'-9"	4	2'-7"	2'-1"	1'-0"			584
SERIES OF 11A516	2-SETS OF 3 6 BAR	21'-9" TO 6'-6"	ST.					7'-7 1/2"	88
11A517	2	29'-2"	ST.						61
11A518	3	6'-0"	2	2'-9"	9"				19
* 11A519	39	10'-8"	ST.						434
* 11A520	39	7'-0"	ST.						285
* 11A521	39	11'-8"	ST.						475
* 11A522	16	2'-7"	ST.						43
* 11A523	51	3'-2"	1	9"	2'-6"				168
* 11A524	8	25'-9"	ST.						215
* 11A525	6	16'-9"	ST.						105
* 11A526	15	16'-0"	ST.						250
* 11A527	31	3'-4"	2	1'-0"	1'-7"				108
* 11A528	31	4'-1"	ST						132
* 11A529	3	3'-10"	8	1'-0"	1'-7"	1'-1"	6"		12
* 11A530	3	3'-10"	1	1'-0"	2'-11"				12
* 11A531	33	2'-9"	1	1'-0"	1'-10"				95
* 11A532	28	2'-8"	56	4"					78
* 11A533	8	4'-4"	ST.						36
* 11A534	8	2'-8"	6	2'-1"					22
* 11A535	5	2'-1"	ST.						11
* 11A536	25	5'-8"	23	2'-2"	2'-6"				148
* 11A537	4	16'-0"	12	4'-10"	11'-2"	2'-0"			67
* 11A538	4	15'-5"	ST.						64
* 11A539	3	23'-0"	12	1'-8"	21'-4"	3'-10"			72
* 11A540	11	5'-4"	3	3'-0"	1'-7"	1'-0"			61
* 11A541	3	8'-0"	ST.						25
* 11A542	3	9'-3"	ST.						29
* 11A543	2	1'-7"	ST.						3
* 11A544	1	8'-6"	12	1'-8"	6'-10"	1'-3"			9
* 11A545	4	27'-0"	ST.						113
* 11A550	12	7'-0"	ST.						88
11AG01	16	22'-9"	ST.						547
11AG02	73	23'-5"	ST.						2568
SERIES OF 11AG03	1-SET OF 21 BAR	23'-6" TO 28'-10"	ST.					3 3/16"	825
* 11AG04	50	2'-8"	58	8"	1'-4"	6"	4"		200
* 11AG05	3	3'-0"	18	1'-10"	1'-0"	6"	3"		14
11AG06	6	24'-3"	ST.						219
* 11AG07	3	2'-7"	56	2"					12
* 11AG08	2	2'-8"	56	4"					8
* 11AG09	51	4'-3"	52						326
* 11AG50	4	9'-0"	ST.						54
* 11AG51	8	6'-3"	ST.						75
11A701	4	24'-6"	ST.						200
11A702	90	26'-2"	ST.						4814
11A703	43	14'-5"	6	13'-7"					1267
11A704	43	11'-2"	ST.						981
11A705	43	15'-2"	6	14'-4"					1383
* 11A801	30	5'-9"	38	3'-6"	1'-5"	1'-0"			461
* 11A802	78	13'-8"	ST.						2846
* 11A803	76	7'-0"	ST.						1420
NON EPOXY COATED = 16957 LBS.									
EPOXY COATED = 10467 LBS.									
N. ABUTMENT PHASE I									
* 12A401	50	23'-1"	ST.						771
12A403	46	3'-3"	16	10"	1'-2"	1'-0"	1'-5"		100
12A404	3	7'-9"	14	1'-10"	1'-10"				16
* 12A450	12	5'-0"	ST.						40
12A501	8	27'-0"	ST.						225
* 12A502	43	6'-6"	ST.						292
12A503	59	3'-6"	2	1'-4"	1'-1"				215
* 12A504	20	3'-2"	20	11"	9"	6"			66
* 12A505	20	2'-5"	1	11"	1'-7"				50
* 12A506	17	5'-7"	23	2'-2"	2'-5"				99
* 12A507	19	4'-3"	ST.						84
* 12A508	19	3'-0"	2	1'-0"	1'-3"				59
* 12A509	28	4'-1"	1	11"	3'-3"				119
12A510	118	9'-8"	ST.						1190
12A511	1	5'-11"	1	3'-0"	3'-0"				6
12A512	58	3'-6"	ST.						212
12A513	36	22'-6"	ST.						845
* 12A514	3	15'-5"	ST.						48
12A515	30	9'-3"	4	3'-0"	2'-1"	10"			289
12A516	4	23'-3"	ST.						97
12A517	4	16'-0"	ST.						67
* 12A518	14	2'-6"	ST.						37
12A519	2	27'-0"	ST.						56
* 12A520	11	4'-10"	3	3'-0"	1'-1"	1'-0"			55
* 12A521	3	6'-6"	ST.						20
* 12A522	2	1'-6"	ST.						3
* 12A523	1	7'-6"	ST.						8
* 12A550	8	6'-3"	ST.						52
12AG01	56	23'-5"	ST.						1970
* 12AG02	90	27'-0"	ST.						3650
* 12AG03	28	4'-3"	52						179
* 12AG04	28	3'-2"	20	11"	9"	6"			133
* 12AG51	8	6'-3"	ST.						75
12A701	90	28'-8"	7	27'-0"					5274
* 12A702	8	23'-8"	ST.						387
12A801	28	4'-4"	19	2'-2"	8"	8"	1'-5"		324
12A802	8	24'-6"	ST.						523
NON EPOXY COATED = 11184 LBS.									
EPOXY COATED = 6452 LBS.									
SUPERSTRUCTURE UNIT - 1 PHASE I									
* 115401	228	27'-8"	ST.						4214
* 115402	627	30'-0"	ST.						12565
* 115403	57	22'-8"	ST.						863
* 115450	48	5'-0"	ST.						160
115501	580	41'-1"	ST.						24853
115502	517	30'-0"	ST.						16177
115503	47	26'-4"	ST.						1291
* 115504	88	30'-0"	ST.						2754
* 115505	8	26'-4"	ST.						220
* 115506	226	2'-11"	55						688
* 115507	226	2'-5"	1	10"	1'-8"				570

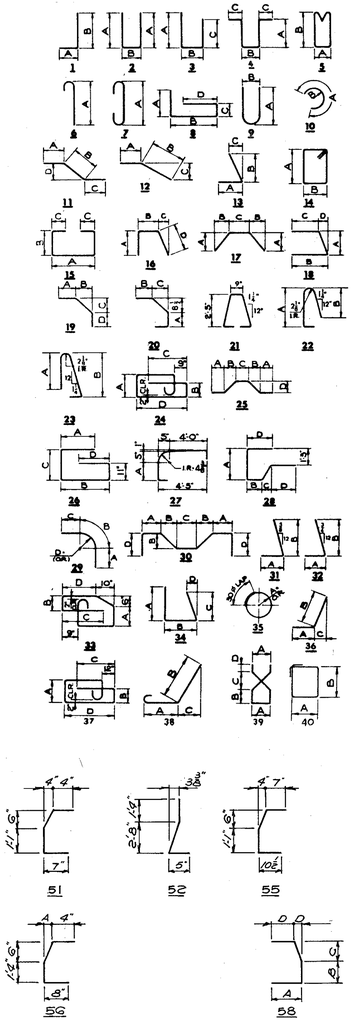

(*) DENOTES BARS TO BE EPOXY COATED

DALTON • DALTON • NEWPORT
CLEVELAND, OHIO AKRON, OHIO

69/73

REINFORCING SCHEDULE

NORTH EXPRESSWAY VIADUCT
SUM-8-0195

DESIGNED	DRAWN	TRACED	CHECKED	REVIEWED	DATE	REVISED
R.L.F.	F.F.		GTC	JGP	4-29-68	

F.H.W.A. REG.	STATE	PROJECT	
5	OHIO		

180
204

SUM - 8 - 1.73 / 1.95

MARK	Nº REQ'D.	LENGTH	TYPE	DIMENSIONS A	B	C	D	INCRM.	WEIGHT LBS.
* 115519	56	14'-6"	ST.						847
* 115520	60	7'-0"	ST.						438
* 115521	4	8'-9"	ST.						37
* 115524	338	3'-3"	1	10"	2'-6"				1146
* 115525	90	13'-6"	ST.						1267
* 115526	96	6'-6"	ST.						651
* 115527	12	7'-7"	ST.						95
* 115528	4	5'-11"	ST.						25
* 115529	227	5'-8"	23	2'-2"	2'-6"				1342
* 115550	16	6'-3"	ST.						104
* 115601	580	41'-1"	ST.						35790
* 115603	338	2'-4"	51						1185
* 115609	338	4'-3"	52						2158
* 115650	16	9'-0"	ST.						216
	NON	EPOXY COATED =		42321 LBS.					
		EPOXY COATED =		67335 LBS.					

SUPERSTRUCTURE UNIT - 2 PHASE I

* 125401	1456	30'-0"	ST.							29178
* 125402	112	36'-8"	ST.							2743
* 125403	112	29'-0"	ST.							2170
* 125404	56	36'-4"	ST.							1359
* 125405	56	27'-0"	ST.							1010
* 125450	156	5'-0"	ST.							521
125501	1196	30'-0"	ST.							37423
125502	138	38'-0"	ST.							5469
125503	92	30'-4"	ST.							2911
125505	46	28'-7"	ST.							1371
* 125506	208	30'-0"	ST.							6508
* 125507	24	38'-0"	ST.							951
* 125508	16	30'-4"	ST.							506
* 125510	8	28'-7"	ST.							238
125512	230	1'-8"	16	6"	7"	6"	9"			400
125513	230	2'-3"	16	6"	1'-2"	6"	9"			540
125514	1610	41'-1"	ST.							68988
* 125516	630	2'-11"	55							1917
* 125517	630	2'-5"	1	10"	1'-8"					1588
* 125518	630	5'-8"	23	2'-2"	2'-6"					3724
* 125519	220	14'-6"	ST.							3327
* 125520	20	7'-9"	ST.							162
* 125521	16	11'-5"	ST.							191
* 125522	8	6'-11"	ST.							58
* 125523	8	9'-10"	ST.							82
* 125524	8	7'-7"	ST.							63
* 125525	942	3'-3"	1	10"	2'-6"					3193
* 125526	366	13'-6"	ST.							5153
* 125527	12	5'-3"	ST.							66

MARK	Nº REQ'D.	LENGTH	TYPE	DIMENSIONS A	B	C	D	INCRM.	WEIGHT LBS.
* 125528	24	8'-5"	ST.						211
* 125529	12	5'-5"	ST.						68
* 125530	12	5'-1"	ST.						64
* 125550	52	6'-3"	ST.						339
* 125601	1610	41'-1"	ST.						99849
* 125602	943	2'-4"	51						3305
* 125603	942	4'-3"	52						6013
* 125650	52	9'-0"	ST.						703
	NON	EPOXY COATED =		117102 LBS.					
		EPOXY COATED =		174760 LBS.					

SUPERSTRUCTURE UNIT - 3 PHASE I

* 135401	57	44'-0"	ST.							1675
* 135402	399	30'-0"	ST.							7996
* 135403	57	23'-0"	ST.							876
* 135450	24	5'-0"	ST.							80
135501	383	41'-1"	ST.							16412
135502	329	30'-0"	ST.							10294
135503	47	25'-4"	ST.							1242
* 135504	56	30'-0"	ST.							1752
* 135505	8	25'-4"	ST.							211
135506	150	2'-11"	55							456
135509	150	2'-5"	1	10"	1'-8"					378
* 135510	150	5'-8"	23	2'-2"	2'-6"					887
* 135511	40	14'-6"	ST.							605
* 135512	24	7'-0"	ST.							175
* 135513	8	13'-11"	ST.							116
* 135514	224	3'-3"	1	10"	2'-6"					759
* 135515	72	13'-6"	ST.							1014
* 135516	48	6'-6"	ST.							325
* 135550	8	6'-3"	ST.							52
* 135601	383	41'-1"	ST.							23634
* 135602	224	4'-3"	52							1430
* 135603	224	2'-4"	51							785
* 135650	8	9'-0"	ST.							108
	NON	EPOXY COATED =		28782 LBS.						
		EPOXY COATED =		42480 LBS.						

RETAINING WALL Nº 1

MARK	Nº REQ'D.	LENGTH	TYPE	DIMENSIONS A	B	C	D	INCRM.	WEIGHT LBS.
1RW401	3	9'-9"	ST.						20
SERIES OF 1RW402	1-SET OF 17 BAR	4'-11" TO 9'-9"	ST.					3 5/8"	83
1RW403	3	4'-5"	ST.						9
1RW404	5	25'-1"	ST.						84
1RW405	1	22'-9"	ST.						15
1RW406	1	18'-2"	ST.						12
1RW407	1	13'-6"	ST.						9
1RW408	1	8'-10"	ST.						6
1RW409	1	25'-8"	ST.						17
1RW501	3	9'-9"	ST.						31
SERIES OF 1RW502	1-SET OF 33 BAR	8'-9" TO 13'-6"	1	2'-10"	6'-0" TO 10'-9"			1 13/16"	383
1RW503	3	4'-5"	ST.						14
1RW504	11	21'-6"	ST.						247
1RW505	33	6'-0"	ST.						207
1RW506	5	25'-1"	ST.						131
1RW507	1	22'-9"	ST.						24
1RW508	1	18'-2"	ST.						19
1RW509	1	13'-6"	ST.						14
1RW510	1	8'-10"	ST.						9
1RW511	1	25'-8"	ST.						27
1RW512	2	9'-0"	1	2'-10"	6'-3"				19
1RW513	8	4'-6"	ST.						38
	NON	EPOXY COATED =		1418 LBS.					

RETAINING WALL Nº 2

2RW401	36	4'-9"	ST.						114
2RW402	32	7'-2"	1	1'-9"	5'-6"				153
2RW403	32	4'-1"	ST.						87
2RW404	16	24'-7"	ST.						263
2RW405	12	24'-6"	ST.						196
	NON	EPOXY COATED =		813 LBS.					

PHASE I

REINFORCING STEEL, GRADE 60

ABUTMENTS = 28141
PIERS = 0
SUPERSTRUCTURE = 188205
TOTAL = 216346 LBS.

EPOXY COATED REINFORCING STEEL, GRADE 60

ABUTMENTS = 16919
PIERS = 0
SUPERSTRUCTURE = 284575
TOTAL = 301494 LBS.

RETAINING WALLS

REINFORCING STEEL, GRADE 60

RW-1 = 1418
RW-2 = 813
TOTAL = 2231 LBS.

EPOXY COATED REINFORCING STEEL, GRADE 60

RW-1 = 0
RW-2 = 0
TOTAL = 0 LBS.

(*) DENOTES BARS TO BE EPOXY COATED

DALTON · DALTON · NEWPORT
CLEVELAND OHIO AKRON OHIO

70/73

REINFORCING SCHEDULE

NORTH EXPRESSWAY VIADUCT
SUM-8-0195

DESIGNED	DRAWN	TRACED	CHECKED	REVIEWED	DATE	REVISED
R.L.F.	F.F.		GTC	JGH	4-29-85	

F.H.W.A. REG.	STATE	PROJECT	
5	OHIO		

181/204

SUM-8- 1.73 / 1.95

S. ABUTMENT PHASE II

MARK	Nº REQ'D.	LENGTH	TYPE	DIMENSIONS A	B	C	D	INCRM.	WEIGHT LBS.
21A401	12	1'-6"	ST.						12
21A402	4	3'-3"	ST.						9
21A403	4	2'-6"	ST.						7
21A404	2	10'-6"	12	7'-0"	3'-6"	1'-6"			14
SERIES OF 21A405	1-SET OF 9 = 9 BAR	9'-9" TO 4'-9"	12	6'-3" TO 1'-3"	3'-6"	1'-6"		7½"	44
21A406	2	4'-4"	12	10"	3'-6"	1'-6"			6
SERIES OF 21A407	1-SET OF 3 = 3 BAR	5'-9" TO 11'-9"	ST.					3'-0"	18
21A408	3	16'-4"	12	14'-4"	2'-0"	1'-0"			33
21A409	25	8'-9"	14	2'-1"	2'-1"				146
21A410	4	16'-6"	ST.						44
21A411	2	14'-6"	ST.						19
21A412	32	7'-1"	14	1'-8"	1'-8"				151
* 21A413	50	30'-0"	ST.						1002
* 21A414	50	31'-10"	ST.						1063
* 21A415	2	25'-7"	ST.						34
21A416	60	3'-1"	16	10"	1'-1"	11"	1'-4"		124
21A417	38	7'-1"	14	1'-8"	1'-8"				180
* 21A418	1	8'-0"	ST.						5
* 21A419	2	35'-11"	ST.						48
* 21A420	2	9'-9"	ST.						13
* 21A450	24	5'-0"	ST.						80
21A501	24	8'-9"	ST.						219
21A502	12	6'-2"	12	4'-3"	2'-0"	1'-5"			77
21A503	24	7'-0"	ST.						175
21A504	4	7'-6"	ST.						31
21A505	21	14'-0"	ST.						307
21A506	15	13'-0"	ST.						203
21A507	15	3'-11"	1	2'-0"	2'-0"				61
21A508	9	8'-9"	12	2'-8"	6'-2"	4'-4"			82
21A509	9	8'-1"	2	1'-9"	4'-10"				76
21A510	1	7'-5"	12	2'-8"	4'-10"	3'-5"			8
21A511	13	8'-4"	2	3'-9"	1'-1"				113
21A512	60	3'-9"	ST.						235
21A513	120	6'-11"	ST.						866
21A514	28	6'-4"	ST.						185
21A515	73	3'-10"	2	1'-6"	1'-1"				292
21A516	20	30'-6"	ST.						636
21A517	68	4'-11"	1	1'-0"	4'-0"				349
21A518	70	8'-4"	2	3'-3"	2'-1"				608
21A519	2	28'-3"	ST.						59
21A520	2	33'-11"	ST.						71
21A521	3	6'-3"	2	1'-0"	4'-6"				20
21A522	94	8'-9"	4	2'-7"	2'-1"	1'-0"			858
21A523	16	30'-2"	ST.						503
21A524	11	5'-1"	2	1'-11"	1'-6"				58
21A525	6	6'-2"	17	1'-5"	1'-5"	2'-3"			39
* 21A526	49	10'-8"	ST.						545

MARK	Nº REQ'D.	LENGTH	TYPE	DIMENSIONS A	B	C	D	INCRM.	WEIGHT LBS.
* 21A527	49	7'-0"	ST.						358
* 21A528	48	11'-8"	ST.						584
* 21A529	11	5'-4"	3	3'-0"	1'-7"	1'-0"			61
* 21A530	3	6'-7"	ST.						21
* 21A531	3	3'-10"	1	1'-0"	2'-11"				12
* 21A532	33	2'-9"	1	1'-0"	1'-10"				95
* 21A533	28	2'-8"	56	4"					78
* 21A534	8	4'-4"	ST.						36
* 21A535	8	2'-8"	6	2'-1"					22
* 21A536	5	2'-1"	ST.						11
* 21A537	7	24'-9"	ST.						181
* 21A538	26	5'-8"	23	2'-2"	2'-6"				154
* 21A539	4	14'-0"	ST.						58
* 21A540	16	16'-0"	ST.						267
* 21A541	9	16'-9"	ST.						157
* 21A542	31	4'-0"	ST.						129
* 21A543	3	2'-4"	2	9"	1'-1"				7
* 21A544	4	9'-4"	ST.						39
* 21A545	51	3'-2"	1	9"	2'-6"				168
* 21A546	8	25'-11"	ST.						216
* 21A547	14	2'-7"	ST.						38
* 21A548	3	8'-0"	ST.						25
* 21A549	2	2'-4"	ST.						5
* 21A550	12	6'-3"	ST.						78
21A551	4	36'-4"	ST.						152
21A552	4	25'-10"	ST.						108
21AG01	40	11'-0"	ST.						661
21AG02	16	4'-6"	1	1'-0"	3'-8"				108
21AG03	5	14'-9"	ST.						111
21AG04	3	12'-9"	ST.						57
21AG05	5	20'-9"	ST.						156
21AG06	3	18'-9"	ST.						84
21AG07	34	3'-6"	ST.						179
21AG08	16	4'-10"	1	1'-0"	4'-0"				116
21AG09	19	8'-0"	ST.						228
21AG10	2	25'-0"	ST.						75
21AG11	7	12'-6"	ST.						131
21AG12	1	22'-9"	ST.						34
21AG13	4	13'-6"	11	7'-10"	2'-3"	3'-6"	1'-0"		81
21AG14	2	15'-8"	11	10'-0"	2'-3"	3'-6"	1'-0"		47
21AG15	15	6'-6"	ST.						146
21AG16	4	23'-5"	ST.						141
SERIES OF 21AG17	2-SETS OF 12 = 24 BAR	22'-10" TO 17'-4"	ST.					6"	724
21AG18	4	19'-0"	1	1'-0"	18'-2"				114
21AG19	4	17'-7"	1	1'-0"	16'-9"				106
SERIES OF 21AG20	2-SETS OF 14 = 28 BAR	16'-10" TO 10'-4"	ST.					6"	571
21AG21	4	12'-0"	1	1'-0"	11'-2"				72

MARK	Nº REQ'D.	LENGTH	TYPE	DIMENSIONS A	B	C	D	INCRM.	WEIGHT LBS.
21AG22	4	10'-8"	1	1'-0"	9'-10"				64
SERIES OF 21AG23	2-SETS OF 11 = 22 BAR	10'-0" TO 5'-0"	ST.					6"	248
21AG24	6	4'-6"	ST.						41
SERIES OF 21AG25	2-SETS OF 5 = 10 BAR	4'-9" TO 12'-9"	ST.					2'-0"	131
SERIES OF 21AG26	2-SETS OF 7 = 14 BAR	17'-6" TO 29'-6"	ST.					2'-0"	494
SERIES OF 21AG27	2-SETS OF 4 = 8 BAR	34'-0" TO 40'-0"	ST.					2'-0"	445
21AG28	2	43'-3"	ST.						130
21AG29	2	45'-4"	ST.						136
21AG30	10	26'-5"	ST.						397
21AG31	10	25'-6"	ST.						383
21AG32	5	6'-1"	1	2'-0"	4'-3"				46
21AG33	6	31'-3"	ST.						282
21AG34	8	28'-6"	ST.						342
21AG35	8	32'-0"	ST.						385
21AG36	47	27'-9"	ST.						1959
21AG37	47	34'-9"	ST.						2453
* 21AG38	3	3'-0"	18	1'-10"	1'-0"	6"	3"		14
* 21AG39	3	2'-7"	56	2"					12
* 21AG40	2	2'-8"	56	4"					8
* 21AG41	50	2'-8"	58	8"	1'-4"	6"	4"		200
21AG42	4	4'-9"	ST.						29
21AG43	4	3'-10"	ST.						23
21AG44	4	13'-8"	ST.						82
21AG45	4	13'-2"	ST.						79
21AG46	51	4'-3"	52						326
* 21AG50	4	9'-0"	ST.						54
* 21AG51	8	6'-3"	ST.						75
21A701	3	33'-9"	ST.						207
21A702	2	29'-3"	ST.						120
21A703	60	14'-5"	6	13'-7"					1768
21A704	59	11'-2"	ST.						1347
21A705	59	15'-2"	6	14'-4"					1829
21A706	120	26'-3"	ST.						6439
21A801	18	6'-5"	1	1'-4"	5'-3"				308
21A802	10	14'-7"	ST.						389
21A803	8	12'-7"	ST.						269
21A804	18	13'-5"	11	7'-9"	2'-3"	3'-6"	1'-0"		645
21A805	1	9'-3"	ST.						25
21A806	1	6'-0"	ST.						16
* 21A807	37	5'-9"	38	3'-6"	1'-5"	1'-0"			568

(*) DENOTES BARS TO BE EPOXY COATED

DALTON · DALTON · NEWPORT
CLEVELAND, OHIO AKRON, OHIO

71/73

REINFORCING SCHEDULE

NORTH EXPRESSWAY VIADUCT
SUM-8-0195

DESIGNED	DRAWN	TRACED	CHECKED	REVIEWED	DATE	REVISED
R.L.F.	F.F.		GTC	JDP	4-29-85	

F.H.W.A. REG.	STATE	PROJECT	
5	OHIO		

182 / 204

SUM - 8 - 1.73 / 1.95

	MARK	Nº REQ'D.	LENGTH	TYPE	DIMENSIONS A	B	C	D	INCRM.	WEIGHT LBS.
*	21A808	98	13'-8"	ST.						3576
*	21A809	94	7'-0"	ST.						1757
		NON	EPOXY COATED =		32977	LBS.				
			EPOXY COATED =		11854	LBS.				
			N. ABUTMENT PHASE II							
*	22A401	50	23'-1"	ST.						771
	22A403	46	3'-3"	16	10"	1'-2"	1'-0"	1'-5"		100
	22A404	3	7'-9"	14	1'-10"	1'-10"				16
*	22A501	11	27'-0"	ST.						310
*	22A502	40	6'-6"	ST.						271
	22A503	59	3'-6"	2	1'-4"	1'-1"				215
*	22A504	20	3'-2"	20	11"	9"	6"			66
*	22A505	20	2'-5"	1	11"	1'-7"				50
*	22A506	20	5'-7"	23	2'-2"	2'-5"				116
*	22A507	19	4'-3"	ST.						84
*	22A508	19	3'-0"	2	1'-0"	1'-3"				59
*	22A509	28	4'-1"	1	11"	3'-3"				119
	22A510	118	9'-8"	ST.						1190
	22A511	1	5'-11"	1	3'-0"	3'-0"				6
	22A512	58	3'-6"	ST.						212
	22A513	36	22'-6"	ST.						845
	22A515	30	9'-3"	4	3'-0"	2'-1"	10"			289
	22A516	4	23'-3"	ST.						97
	22A517	4	16'-0"	ST.						67
	22A519	2	27'-0"	ST.						56
*	22A520	11	4'-10"	3	3'-0"	1'-1"	1'-0"			55
*	22A521	3	6'-6"	ST.						20
	22AG01	56	23'-5"	ST.						1970
*	22AG02	90	27'-0"	ST.						3650
*	22AG03	28	4'-3"	52						179
*	22AG04	28	3'-2"	20	11"	9"	6"			133
	22A701	90	28'-8"	7	27'-0"					5274
*	22A702	8	23'-8"	ST.						387
	22A801	28	4'-4"	19	2'-2"	8"	8"	1'-5"		324
	22A802	8	24'-6"	ST.						523
		NON	EPOXY COATED =		11184	LBS.				
			EPOXY COATED =		6270	LBS.				

	MARK	Nº REQ'D.	LENGTH	TYPE	DIMENSIONS A	B	C	D	INCRM.	WEIGHT LBS.
			PIER P-1 PHASE II							
	21P401	12	22'-9"	14	5'-7"	5'-7"				182
	21P402	12	16'-5"	14	4'-0"	4'-0"				132
	21P403	21	18'-9"	14	4'-7"	4'-7"				263
	21P404	21	13'-9"	14	3'-4"	3'-4"				193
	21P405	1	20'-9"	14	5'-1"	5'-1"				14
	21P406	1	15'-1"	14	3'-8"	3'-8"				10
	21P407	24	14'-1"	14	3'-9"	3'-1"				226
	21P408	2	12'-9"	14	3'-4"	2'-10"				17
	21P409	42	11'-7"	14	3'-0"	2'-7"				325
	21P410	5	5'-0"	ST.						17
	21P501	6	8'-10"	2	2'-3"	4'-7"				55
	21P502	4	14'-3"	ST.						59
	21P503	4	15'-3"	ST.						64
	21P504	58	7'-11"	ST.						479
	21P505	5	18'-8"	11	11'-4"	1'-7"	5'-10"	6"		97
	21P506	10	9'-9"	ST.						102
	21P507	5	18'-10"	ST.						98
	21P508	9	11'-6"	ST.						108
	21P509	9	12'-7"	ST.						118
	21P510	6	11'-6"	2	3'-7"	4'-7"				72
	21P601	34	3'-0"	ST.						153
	21P801	14	11'-6"	ST.						430
	21P802	12	4'-0"	ST.						128
	SERIES OF 21P901	1-SET OF 6 BAR	15'-0" TO 14'-4"	ST.					1 5/8"	299
	SERIES OF 21P902	1-SET OF 4 BAR	21'-9" TO 20'-9"	2	3'-7"	15'-1" TO 14'-1"			4"	289
	SERIES OF 21P903	1-SET OF 10 BAR	15'-1" TO 14'-3"	ST					1 1/8"	499
	21P904	24	12'-7"	ST.						1027
	21P1101	10	12'-6"	11	6'-9"	3'-5"	2'-8"	2'-6"		664
	21P1102	24	23'-2"	ST.						2954
	21P1103	16	19'-6"	ST.						1658
	21P1104	3	21'-0"	ST.						335
	21P1105	37	20'-10"	11	11'-5"	1'-7"	8'-0"	7"		4095
	21P1107	40	10'-8"	ST.						2267
		NON	EPOXY COATED =		17429	LBS.				

MARK	Nº REQ'D.	LENGTH	TYPE	DIMENSIONS A	B	C	D	INCRM.	WEIGHT LBS.
		PIER P-2 PHASE II							
22P401	126	9'-4"	2	1'-0"	7'-7"				786
22P402	36	19'-4"	2	1'-0"	17'-7"				465
22P403	8	27'-6"	40	5'-9"	7'-7"				147
22P404	8	29'-0"	40	8'-10"	5'-3"				155
22P405	72	23'-8"	40	5'-10"	5'-7"				1138
22P406	72	26'-2"	40	8'-10"	3'-10"				1259
22P501	7	17'-0"	2	5'-10"	5'-7"				124
22P502	7	18'-3"	18	5'-8"	6'-11"	5'-10"	1'-1"		133
22P503	14	7'-2"	1	1'-0"	6'-3"				105
22P504	9	6'-9"	ST.						63
22P509	26	17'-6"	ST.						475
22P601	87	3'-0"	ST.						392
22P901	20	17'-6"	ST.						1190
22P1001	44	17'-6"	ST.						3313
22P1002	36	17'-7"	ST.						2724
22P1105	17	18'-4"	ST.						1656
22P1106	84	10'-8"	ST.						4760
SERIES OF 22P1107	2-SETS OF 16 = 32 BAR	18'-4" TO 19'-4"	ST					13/16"	3202
22P1108	49	33'-1"	11	21'-9"	2'-6"	9'-0"	1'-0"		8613
22P1109	10	33'-5"	11	24'-4"	2'-6"	6'-9"	1'-0"		1775
22P1110	26	32'-10"	ST.						4536
22P1111	26	38'-5"	ST.						5307
	NON	EPOXY COATED =		42318	LBS.				
		PIER P-3 PHASE II							
23P401	7	6'-2"	36	1'-0"	5'-3"	4"			29
SERIES OF 23P402	1-SET OF 6 BAR	7'-10" TO 8'-10"	1	1'-0" TO 2'-0"	6'-11"			2 3/8"	33
23P403	1	7'-9"	1	1'-0"	6'-10"				5
23P404	6	2'-0"	1	1'-1"	1'-0"				8
SERIES OF 23P601	1-SET OF 5 BAR	6'-4" TO 6'-7"	1	1'-6"	5'-0" TO 5'-3"			3/4"	49
23P602	5	7'-3"	2	1'-6"	4'-7"				54
23P603	13	8'-10"	ST.						172
23P604	7	11'-11"	2	3'-10"	4'-7"				125
	NON	EPOXY COATED =		475	LBS.				

(*) DENOTES BARS TO BE EPOXY COATED

DALTON • DALTON • NEWPORT
CLEVELAND, OHIO AKRON, OHIO

72 / 73

REINFORCING SCHEDULE

NORTH EXPRESSWAY VIADUCT
SUM-8-0195

DESIGNED	DRAWN	TRACED	CHECKED	REVIEWED	DATE	REVISED
R.L.F.	F.F.		GTC	JGP	4-29-85	

F.H.W.A. REG.	STATE	PROJECT	
5	OHIO		

183/204

SUM-8- 1.73 / 1.95

SUPERSTRUCTURE UNIT-1 PHASE II

MARK	Nº REQ'D.	LENGTH	TYPE	DIMENSIONS A	B	C	D	INCRM.	WEIGHT LBS.
* 215401	800	30'-0"	ST.						16032
* 215402	58	22'-9"	ST.						881
* 215403	294	27'-9"	ST.						5450
215404	570	4'-10"	ST.						1840
* 215450	48	5'-0"	ST.						160
215501	716	30'-0"	ST.						22404
215502	51	26'-6"	ST.						1410
* 215503	121	30'-0"	ST.						3786
* 215504	9	26'-6"	ST.						249
215505	580	30'-0"	ST.						18148
215506	67	28'-0"	ST.						1957
215507	67	27'-0"	ST.						1887
215508	67	26'-3"	ST.						1834
215509	67	25'-3"	ST.						1764
215510	35	24'-3"	ST.						885
215511	35	23'-3"	ST.						849
215512	35	22'-6"	ST.						821
215513	34	21'-9"	ST.						771
215514	34	20'-9"	ST.						736
215515	34	20'-0"	ST.						709
215516	35	19'-0"	ST.						694
215517	35	18'-3"	ST.						666
215518	35	17'-3"	ST.						630
* 215519	104	14'-7"	ST.						1582
* 215520	116	7'-1"	ST.						857
* 215521	4	8'-10"	ST.						37
* 215522	4	12'-5"	ST.						52
* 215523	4	10'-3"	ST.						43
* 215524	338	3'-3"	1	10"	2'-6"				1146
* 215525	108	13'-7"	ST.						1530
* 215526	96	6'-7"	ST.						659
* 215527	16	7'-8"	ST.						128
* 215528	4	6'-0"	ST.						25
* 215529	227	5'-8"	23	2'-2"	2'-6"				1342
* 215530	570	7'-4"	8	6"	4'-7"	1'-4"	1'-3"		4360
* 215531	226	2'-11"	55						688
* 215532	2	21'-6"	ST.						45
215533	2	21'-6"	ST.						45
* 215534	8	3'-5"	ST.						29
* 215535	1	3'-10"	ST.						4
* 215536	1	7'-6"	ST.						8
* 215537	8	6'-8"	ST.						56
* 215538	13	8'-10"	3	4'-10"	1'-5"	2'-10"			120
* 215539	13	6'-10"	2	2'-10"	1'-5"				93
* 215550	16	6'-3"	ST.						104
* 215601	580	25'-9"	ST.						22432
* 215602	67	32'-9"	ST.						3296
* 215603	67	31'-9"	ST.						3195
* 215604	67	30'-9"	ST.						3094

MARK	Nº REQ'D.	LENGTH	TYPE	DIMENSIONS A	B	C	D	INCRM.	WEIGHT LBS.
* 215605	67	29'-9"	ST.						2994
* 215606	35	28'-9"	ST.						1511
* 215607	35	28'-0"	ST.						1472
* 215608	35	27'-0"	ST.						1419
* 215609	338	4'-3"	52						2158
* 215610	338	2'-4"	51						1185
* 215611	34	26'-3"	ST.						1341
* 215612	34	25'-6"	ST.						1302
* 215613	34	24'-6"	ST.						1251
* 215614	35	23'-9"	ST.						1249
* 215615	35	22'-9"	ST.						1196
* 215616	35	22'-0"	ST.						1157
* 215650	16	9'-0"	ST.						216
* 215701	13	7'-10"	6	7'-0"					208
	NON EPOXY COATED = 58050 LBS.								
	EPOXY COATED = 90142 LBS.								

SUPERSTRUCTURE UNIT-2 PHASE II

MARK	Nº REQ'D.	LENGTH	TYPE	DIMENSIONS A	B	C	D	INCRM.	WEIGHT LBS.
* 225401	1456	30'-0"	ST.						29178
* 225402	112	36'-8"	ST.						2743
* 225403	112	29'-0"	ST.						2170
* 225404	56	36'-4"	ST.						1359
* 225405	56	27'-0"	ST.						1010
* 225450	156	5'-0"	ST.						521
225501	1196	30'-0"	ST.						37423
225502	138	38'-0"	ST.						5469
225503	92	30'-4"	ST.						2911
225505	46	28'-7"	ST.						1371
* 225506	208	30'-0"	ST.						6508
* 225507	24	38'-0"	ST.						951
* 225508	16	30'-4"	ST.						506
* 225510	8	28'-7"	ST.						238
225512	230	1'-8"	16	6"	7"	6"	9"		400
225513	230	2'-3"	16	6"	1'-2"	6"	9"		540
225514	1610	41'-1"	ST.						68988
* 225516	630	2'-11"	55						1917
* 225517	630	2'-5"	1	10"	1'-8"				1588
* 225518	630	5'-8"	23	2'-2"	2'-6"				3724
* 225519	220	14'-6"	ST.						3327
* 225520	20	7'-9"	ST.						162
* 225521	16	11'-5"	ST.						191
* 225522	8	6'-11"	ST.						58
* 225523	8	9'-10"	ST.						82
* 225524	8	7'-7"	ST.						63
* 225525	942	3'-3"	1	10"	2'-6"				3193
* 225526	366	13'-6"	ST.						5153
* 225527	12	5'-3"	ST.						66
* 225528	24	8'-5"	ST.						211

MARK	Nº REQ'D.	LENGTH	TYPE	DIMENSIONS A	B	C	D	INCRM.	WEIGHT LBS.
* 225529	12	5'-5"	ST.						68
* 225530	12	5'-1"	ST.						64
* 225550	52	6'-3"	ST.						339
* 225601	1610	41'-1"	ST.						99349
* 225602	943	2'-4"	51						3305
* 225603	942	4'-3"	52						6013
* 225650	52	9'-0"	ST.						703
	NON EPOXY COATED = 117102 LBS.								
	EPOXY COATED = 174760 LBS.								

SUPERSTRUCTURE UNIT-3 PHASE II

MARK	Nº REQ'D.	LENGTH	TYPE	DIMENSIONS A	B	C	D	INCRM.	WEIGHT LBS.
* 235401	57	44'-0"	ST.						1675
* 235402	399	30'-0"	ST.						7996
* 235403	57	23'-0"	ST.						876
* 235450	24	5'-0"	ST.						80
235501	383	41'-1"	ST.						16412
235502	329	30'-0"	ST.						10294
235503	47	25'-4"	ST.						1242
* 235504	56	30'-0"	ST.						1752
* 235505	8	25'-4"	ST.						211
235506	150	2'-11"	55						456
235509	150	2'-5"	1	10"	1'-8"				378
* 235510	150	5'-8"	23	2'-2"	2'-6"				887
* 235511	40	14'-6"	ST.						605
* 235512	24	7'-0"	ST.						175
* 235513	8	13'-11"	ST.						116
* 235514	224	3'-3"	1	10"	2'-6"				759
* 235515	72	13'-6"	ST.						1014
* 235516	48	6'-6"	ST.						325
* 235550	8	6'-3"	ST.						52
* 235601	383	41'-1"	ST.						23634
* 235602	224	4'-3"	52						1430
* 235603	224	2'-4"	51						785
* 235650	8	9'-0"	ST.						108
	NON EPOXY COATED = 28782 LBS.								
	EPOXY COATED = 42480 LBS.								

PHASE II

REINFORCING STEEL, GRADE 60

ABUTMENTS	= 44161
PIERS	= 60222
SUPERSTRUCTURE	= 203934
TOTAL	= 308317 LBS.

EPOXY COATED REINFORCING STEEL, GRADE 60

ABUTMENTS	= 18124
PIERS	= 0
SUPERSTRUCTURE	= 307382
TOTAL	= 325506 LBS.

GRAND TOTAL

REINFORCING STEEL, GRADE 60

RETAINING WALLS	= 2231
ABUTMENTS	= 72302
PIERS	= 60222
SUPERSTRUCTURE	= 392139
TOTAL	= 526894 LBS.

EPOXY COATED REINFORCING STEEL, GRADE 60

RETAINING WALLS	= 0
ABUTMENTS	= 35043
PIERS	= 0
SUPERSTRUCTURE	= 591957
TOTAL	= 627000 LBS.

REINFORCING STEEL SAMPLES:
REFER TO CMS SECTIONS 106.03, 700, 709.01 THROUGH 709.05 AND 709.08. SUFFICIENT ADDITIONAL REINFORCING STEEL SHALL BE PROVIDED FOR SAMPLING. RANDOM SAMPLES SHALL BE REPLACED IN THE STRUCTURES BY THE ADDITIONAL STEEL, SPLICED IN ACCORDANCE WITH 509.08.

(*) DENOTES BARS TO BE EPOXY COATED

DALTON · DALTON · NEWPORT
CLEVELAND, OHIO AKRON, OHIO

73/73

REINFORCING SCHEDULE

NORTH EXPRESSWAY VIADUCT
SUM-8-0195

DESIGNED	DRAWN	TRACED	CHECKED	REVIEWED	DATE	REVISED
R.L.F.	F.F.		GTC	JGP	4-29-85	

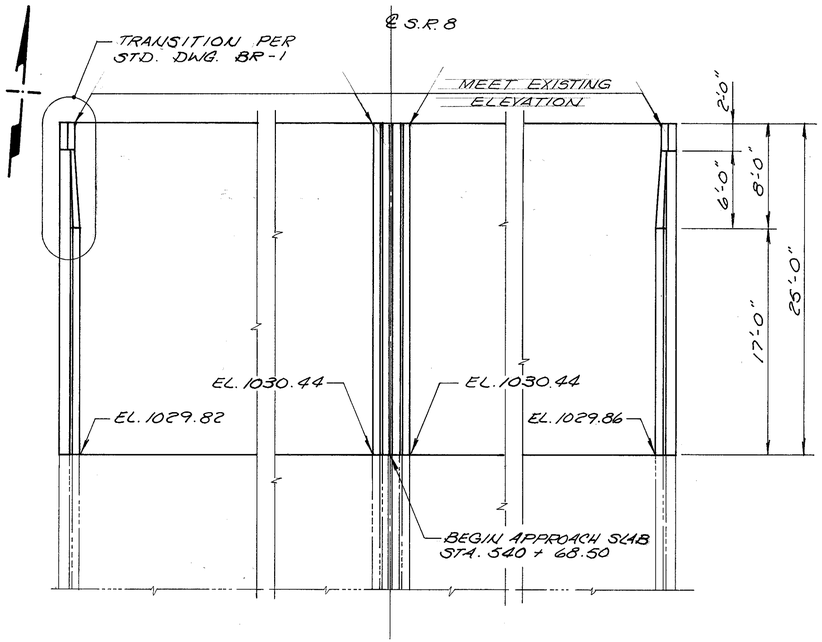

PLAN

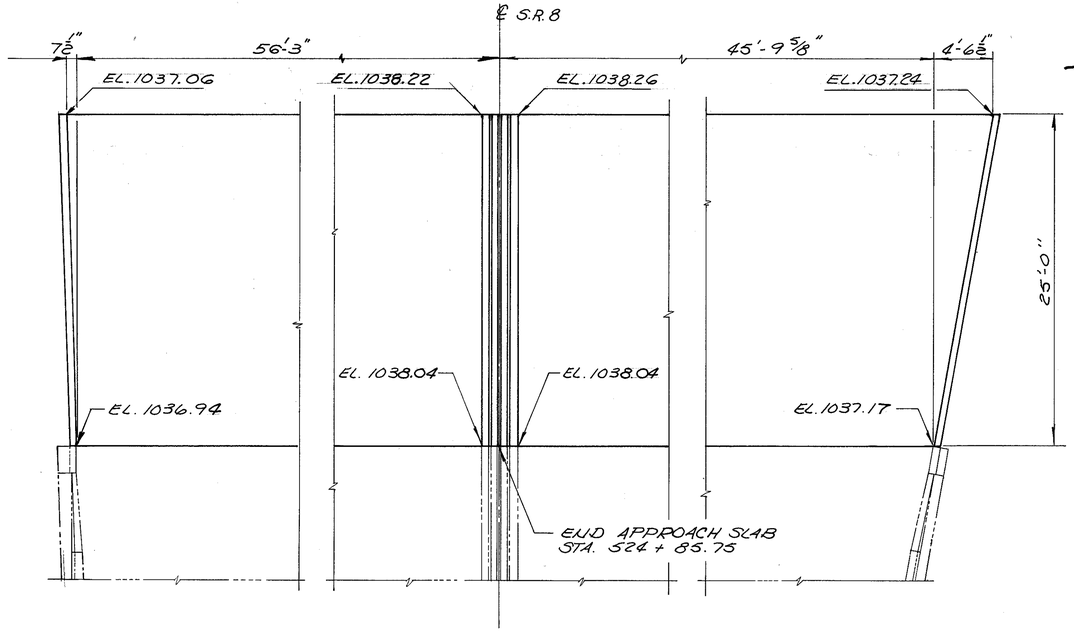

PLAN

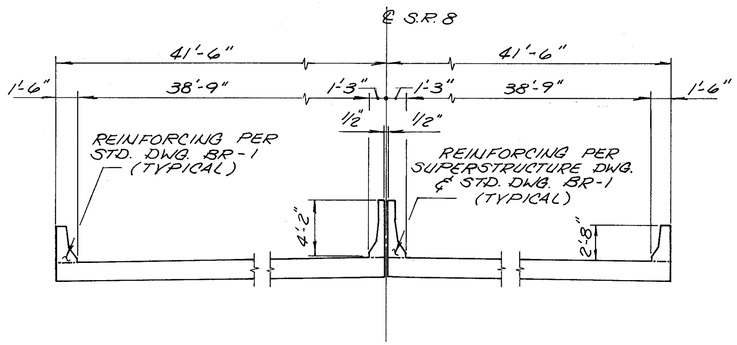

SECTION

NORTH APPROACH SLAB

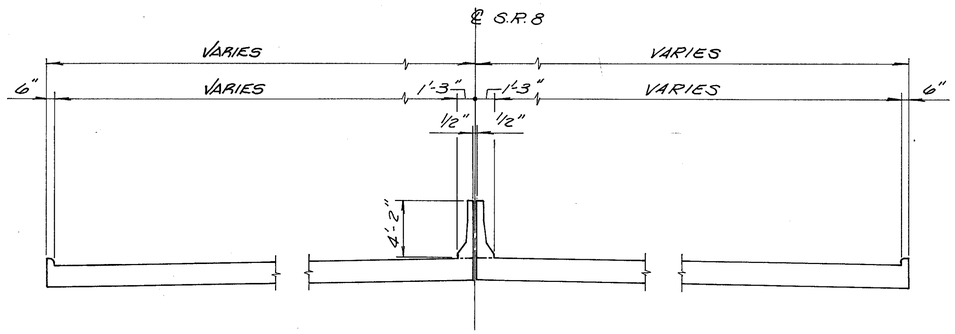

SECTION

SOUTH APPROACH SLAB

F.H.W.A. REG.	STATE	PROJECT	
5	OHIO		

184
204

SUM - 8 - 1.73 / 1.95

NOTES

1. REFER TO STD. DWG. AS-1-81 FOR ADDITIONAL APPROACH SLAB DETAILS.
2. ALL BARRIERS AND CURBS SHALL BE INCLUDED WITH THE PRICE BID FOR THE APPROACH SLABS.
3. THE ELEVATIONS SHOWN ARE GIVEN AT THE TOP OF THE WEARING SURFACE.

DALTON • DALTON • NEWPORT
CLEVELAND, OHIO AKRON, OHIO

1 / 1

APPROACH SLAB DETAILS

NORTH EXPRESSWAY VIADUCT
SUM - 8 - 01 95

DESIGNED	DRAWN	TRACED	CHECKED	REVIEWED	DATE	REVISED
A.L.H	M.A.B.		G.T.C.	J.J.P.	2-1-85	

F.H.W.A. REG.	STATE	PROJECT	
5	OHIO		

185
204

SUM - 8 - 1.73 / 1.95

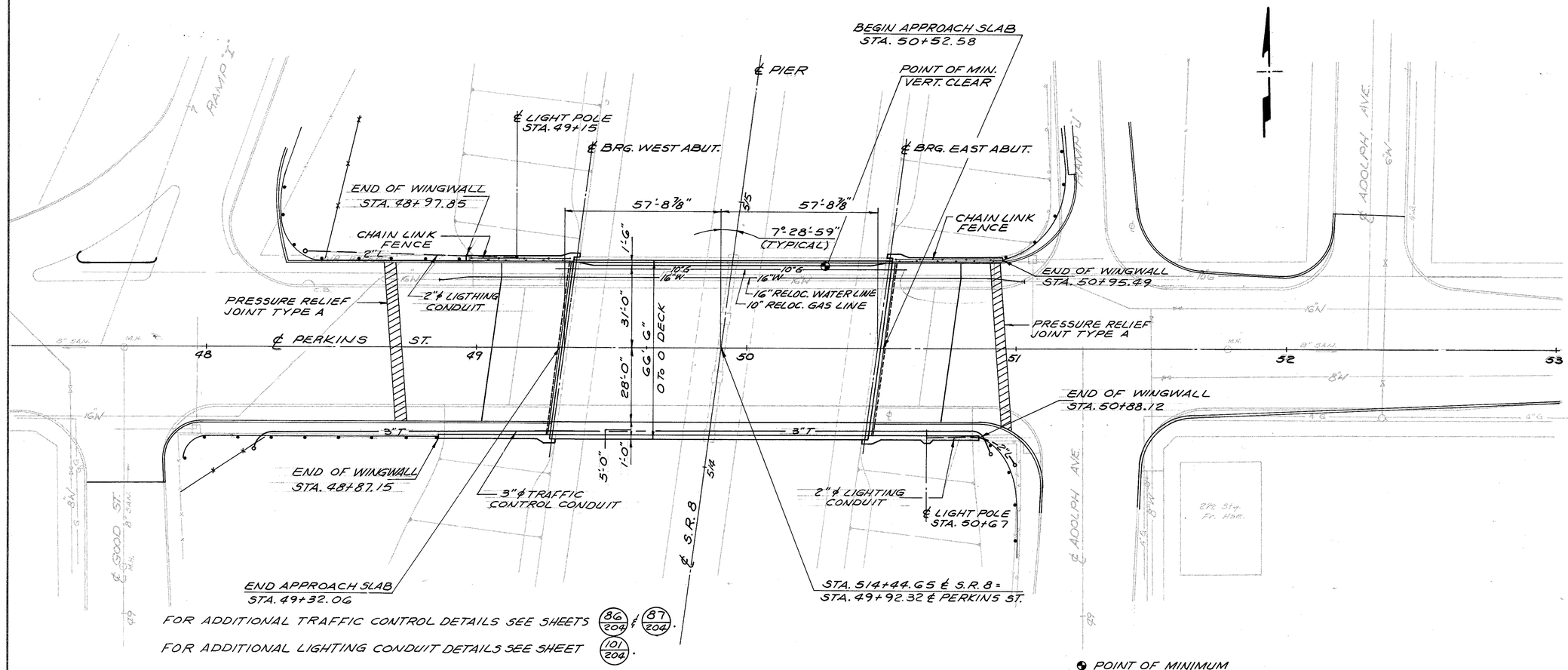

FOR ADDITIONAL TRAFFIC CONTROL DETAILS SEE SHEETS (86/204) & (87/204).

FOR ADDITIONAL LIGHTING CONDUIT DETAILS SEE SHEET (101/204).

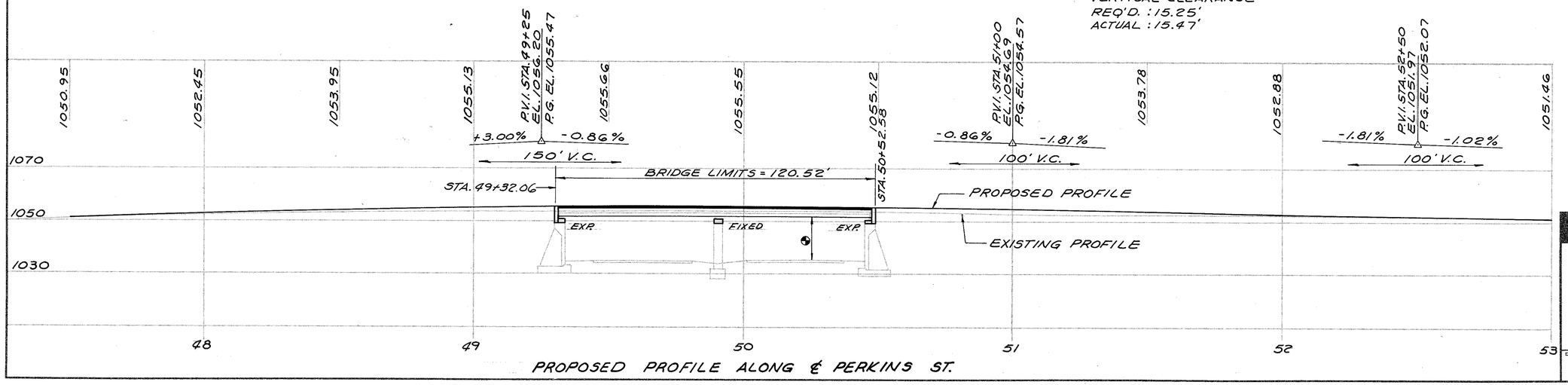

PROPOSED PROFILE ALONG ℄ PERKINS ST.

● POINT OF MINIMUM VERTICAL CLEARANCE
REQ'D. : 15.25'
ACTUAL : 15.47'

EXISTING STRUCTURE

TYPE: CONTINUOUS STEEL BEAM WITH CONCRETE DECK AND SUBSTRUCTURE.

SPANS: 57'-8 7/8", 57'-8 7/8" ℄ TO ℄ BRGS.

SKEW: 7°-28'-59"

ROADWAY: 44'-0" F/F SIDEWALKS 2'-11'-0" SIDEWALKS.

LOADING: S-20-4G

WEARING: 2½" ASPHALTIC CONCRETE SURFACE

APPROACH SLAB: 15'

ALIGNMENT: TANGENT

SUPERELEVATION: NONE

PROPOSED STRUCTURE

TYPE: CONTINUOUS COMPOSITE STEEL BEAM WITH CONCRETE DECK AND SUBSTRUCTURE.

SPANS: 57'-8 7/8", 57'-8 7/8" ℄ TO ℄ BRGS.

SKEW: 7°28'-59"

ROADWAY: 59'-0" FACE OF CONC. BARRIER TO FACE OF SIDEWALK. CONC. BARRIER LT. & 5'-0" SIDEWALK RT. W/ 1' CONC. PARAPET & DOUBLE PIPE RAIL.

LOADING: HS-20-44 (CASE II) & ALTERNATE MILITARY LOADING

WEARING: 1¼" LATEX MODIFIED SURFACE CONCRETE OVERLAY (FOR ALTERNATE 'A')

APPROACH SLAB: 25'

ALIGNMENT: TANGENT

SUPERELEVATION: NONE

TRAFFIC:

ADT = 15,100 (2000)
ADTT = 755 (2000)

DALTON · DALTON · NEWPORT
CLEVELAND, OHIO AKRON, OHIO

1/20

GENERAL PLAN AND ELEVATION

PERKINS STREET BRIDGE

SUM - 8 - 01 75

DESIGNED	DRAWN	TRACED	CHECKED	REVIEWED	DATE	REVISED
HKII	F.F.		JAP	JAP	2-1-95	

F.H.W.A. REG.	STATE	PROJECT	
5	OHIO		

186/204

SUM - 8 - 1.73 / 1.95

ESTIMATED QUANTITIES

BHF Funds

	ITEM	TOTAL	UNIT	DESCRIPTION	SUPER.	ABUT.	PIER	GEN'L.	
	202	LUMP	L.S.	PORTIONS OF STRUCTURES REMOVED					
	503	LUMP	L.S.	COFFERDAMS, CRIBS, AND SHEETING					
	503	78	C.Y.	UNCLASSIFIED EXCAVATION		78			
	509	27,265	LB.	REINFORCING STEEL (GRADE 60)	23,518	1,739	508	1,500	
	824	40,137	LB.	EPOXY COATED REINFORCING STEEL (GRADE 60)	35,742	4,395			
	510	404	EA.	DOWEL HOLES		297	72	35	
	511	4	C.Y.	CLASS "C" CONCRETE, PIERS			4		
	511	42	C.Y.	CLASS "C" CONCRETE, ABUTMENT REPAIRS		42			
	511	77	C.Y.	CLASS "C" CONCRETE, ABUTMENTS		77			
*ALT. 'A'	511	235	C.Y.	CLASS "S" CONCRETE, SUPERSTRUCTURE	235				*ALT. A
*ALT. 'A'	845	754	S.Y.	LATEX MODIFIED CONCRETE OVERLAY (1 1/4" THICK) (SEE PROPOSAL NOTE)	754				*ALT. A
*ALT. 'B'	511	261	C.Y.	CLASS "S" CONCRETE, USING SHRINKAGE COMPENSATING CEMENT (AS PER PLAN)	261				*ALT. B
	SPEC.	800	S.Y.	SEALING OF CONCRETE SURFACES (SEE PROPOSAL NOTE)	322	478			
	513	90,541	LB.	STRUCTURAL STEEL (AISC CATEGORY I)	87,429	3,112 △			
	513	2,032	EA.	WELDED STUD SHEAR CONNECTORS	2,032				
	513	5,644	LB.	CURB PLATES AND MISCELLANEOUS STEEL (AS PER PLAN)	5,644				
	517	201	L.F.	RAILING (CONCRETE PARAPET WITH ALUMINUM RAILING)	118	83			
	519**	100	S.F.	PATCHING CONCRETE STRUCTURES **		22	78		
	607	76	L.F.	FENCE, TYPE CL (AS PER PLAN)		76			
	SPEC.	132	L.F.	EXPANSION JOINT SEALS (3")	132				
	SPEC.	LUMP	L.S.	RAISING EXISTING STRUCTURAL STEEL					
	SPEC.	LUMP	L.S.	PAINTING STRUCTURAL STEEL					

* THE CONTRACTOR MUST SUBMIT BIDS FOR THE SUPERSTRUCTURE CONCRETE AND DECK PROTECTION ITEMS OF ALTERNATES 'A' AND 'B' ABOVE. REFER TO "SUPERSTRUCTURE CONCRETE AND DECK PROTECTION ALTERNATES" IN THE GENERAL NOTES.

△ COST FOR THIS STEEL QUANTITY TO BE PAID BY THE EAST OHIO GAS COMPANY TO THE STATE OF OHIO.

** 50% OF THIS QUANTITY IS ELIGIBLE FOR FEDERAL PARTICIPATION.

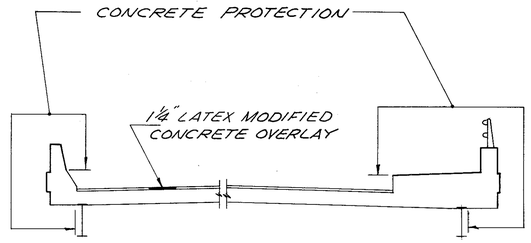

SUPERSTRUCTURE

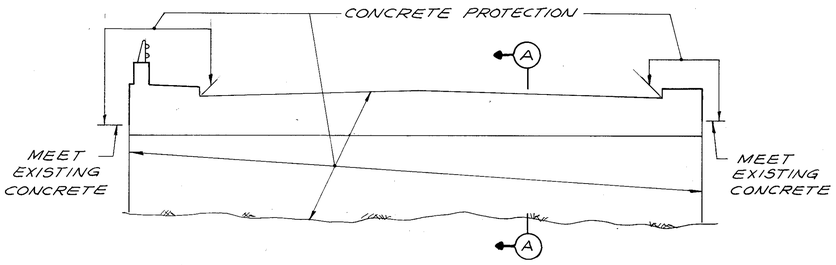

ABUTMENTS

(ALL EXPOSED FACES ON NEW WINGWALL CONCRETE SHALL BE SEALED UNDER THIS ITEM.)

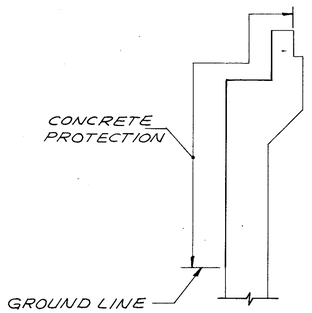

SECTION A-A

LIMITS OF CONCRETE PROTECTION

THE CONCRETE PROTECTION SHALL BE APPLIED AS DESCRIBED IN THE PROPOSAL UNDER "SEALING OF CONCRETE SURFACES"

NOTES

(1) FOR ADDITIONAL NOTES AND DETAILS SEE STRUCTURAL GENERAL NOTES AND SPECIAL PROVISIONS SHEET (105/204) THRU (113/204)

DALTON • DALTON • NEWPORT
CLEVELAND, OHIO — AKRON, OHIO

2/20

ESTIMATED QUANTITIES

PERKINS STREET BRIDGE

SUM - 8 - 01 75

DESIGNED	DRAWN	TRACED	CHECKED	REVIEWED	DATE	REVISED
HKII	F.F.		JEP	JJP	2-1-85	

F.H.W.A. REG.	STATE	PROJECT	
5	OHIO		

187
204

SUM -8 - 1.73 / 1.95

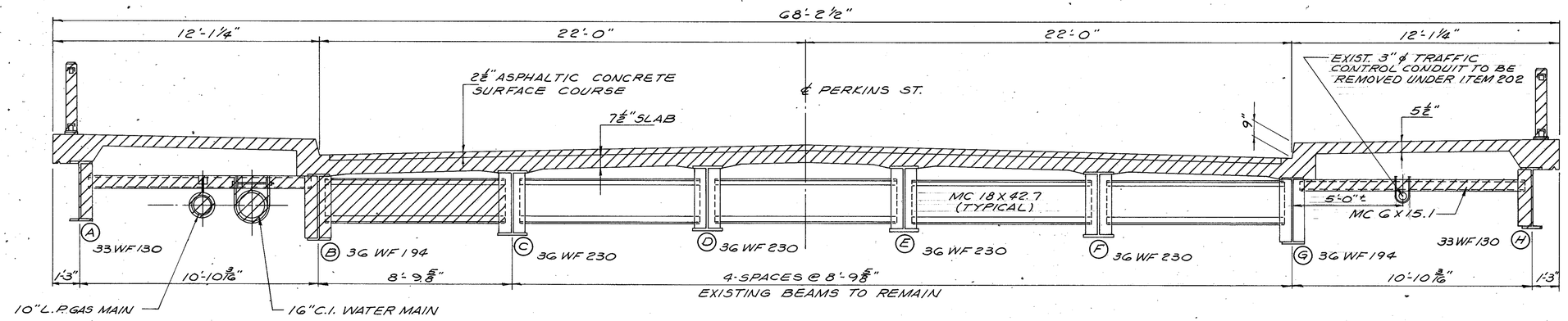

TRANSVERSE SECTION

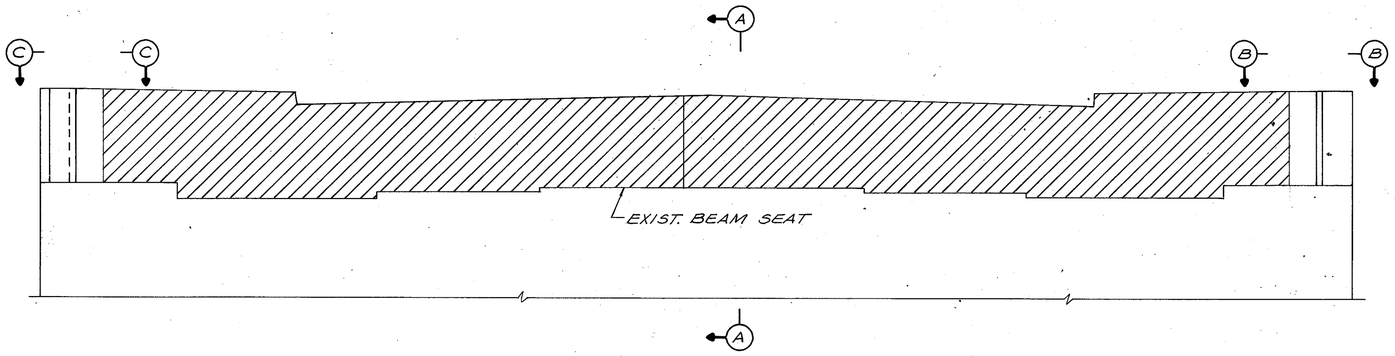

ABUTMENT ELEVATION

(WEST ABUT. SHOWN, EAST ABUT. SIMILAR)

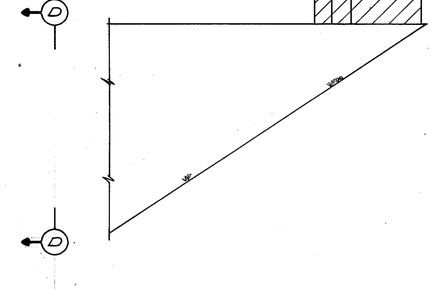

VIEW D-D

(TYPICAL ALL WINGWALLS)

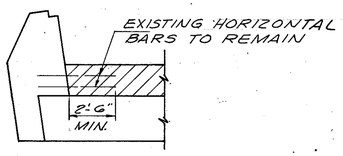

SECTION C-C

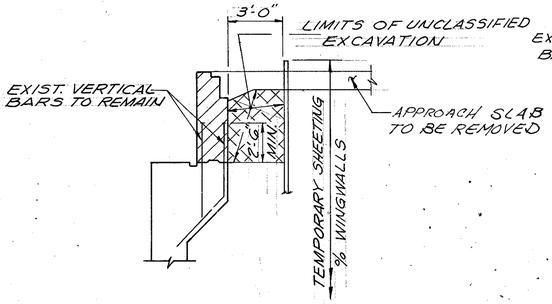

SECTION A-A

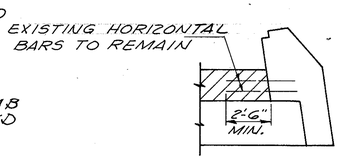

SECTION B-B

NOTES

(1) THE FOLLOWING ARE THE APPROXIMATE QUANTITIES FOR SOME OF THE MAJOR ITEMS FOR REMOVAL:

ITEM	APPROXIMATE QUANTITY
A) SUPERSTRUCTURE CONCRETE INCLUDING 2½" ASPHALT SURFACE COURSE	235 C.Y.
B) RAILING	363 L.F.
C) SUBSTRUCTURE STEEL	57900 LBS.
D) SUBSTRUCTURE CONCRETE	42 C.Y.

THE ABOVE REMOVAL QUANTITIES HAVE BEEN ARRIVED AT USING THE EXISTING STRUCTURE PLANS AND HAVE BEEN GIVEN FOR INFORMATION ONLY AND ARE NOT TO BE USED FOR ANY OTHER PURPOSE. IT IS THE CONTRACTOR'S REPONSIBILITY TO ARRIVE AT THE REMOVAL QUANTITIES TO BE USED TO BASE HIS BID PRICE FOR ITEM 202 PORTIONS OF STRUCTURE REMOVED.

LEGEND

INDICATES LIMITS OF EXISTING STRUCTURE TO BE TOTALLY REMOVED, AS PER ITEM 202.

DALTON • DALTON • NEWPORT
CLEVELAND, OHIO AKRON, OHIO

3/20

STRUCTURE REMOVAL DETAILS

PERKINS STREET BRIDGE

SUM - 8 - 01 75

DESIGNED	DRAWN	TRACED	CHECKED	REVIEWED	DATE	REVISED
HKII	F.F.		JFP	JOP	2-185	

F.H.W.A. REG.	STATE	PROJECT	
5	OHIO		

188
204

SUM-8-1.73 / 1.95

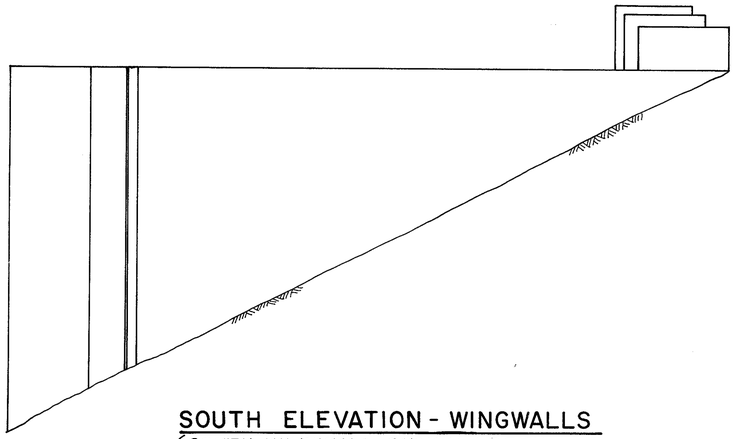

SOUTH ELEVATION - WINGWALLS

(SOUTH WINGWALL SHOWN, NORTH WINGWALL OPPOSITE HAND)

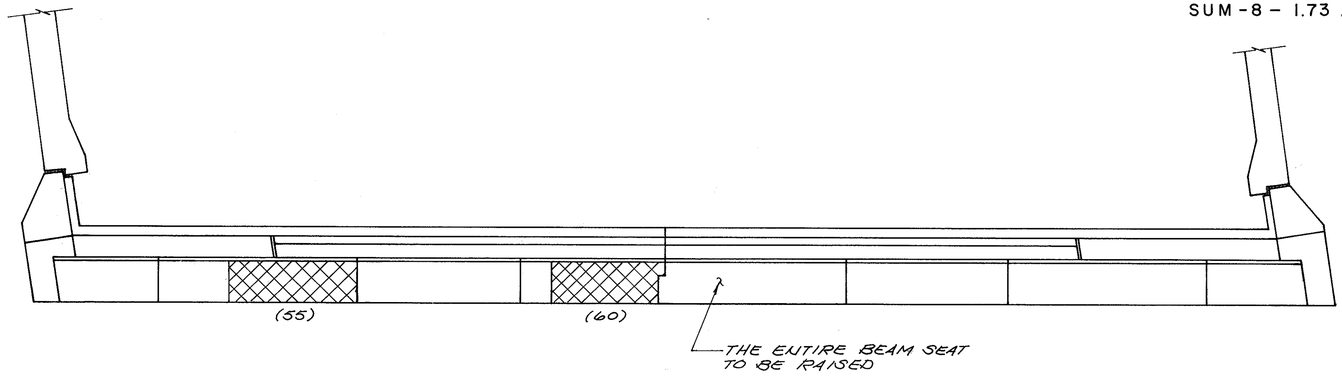

PLAN

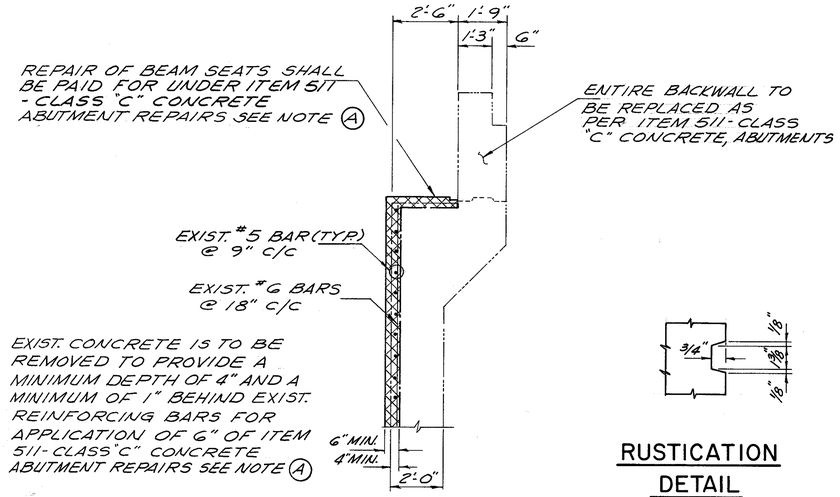

SECTION A-A

RUSTICATION DETAIL

NOTES:

(A) CARE SHALL BE TAKEN IN REMOVING EXISTING CONCRETE TO AVOID DAMAGING EXISTING REINFORCEMENT. WHERE EXISTING BARS ARE DETERIORATED OR DAMAGED, NEW DOWELS OF THE SAME SIZE AND GO DIA. LONGER THAN THE SECTION BEING REPLACED SHALL BE PROVIDED. EMBED DOWELS 30 DIA. OR AS DIRECTED BY THE ENGINEER INTO EXISTING CONCRETE WITH NON-SHRINK GROUT. PAYMENT FOR REMOVAL OF EXISTING CONCRETE SHALL BE INCLUDED WITH ITEM 202 - PORTIONS OF STRUCTURE REMOVED. PAYMENT FOR REPLACING DETERIORATED BARS SHALL BE INCLUDED WITH ITEM 509 - REINFORCING STEEL AND ITEM 510 - DOWEL HOLES.

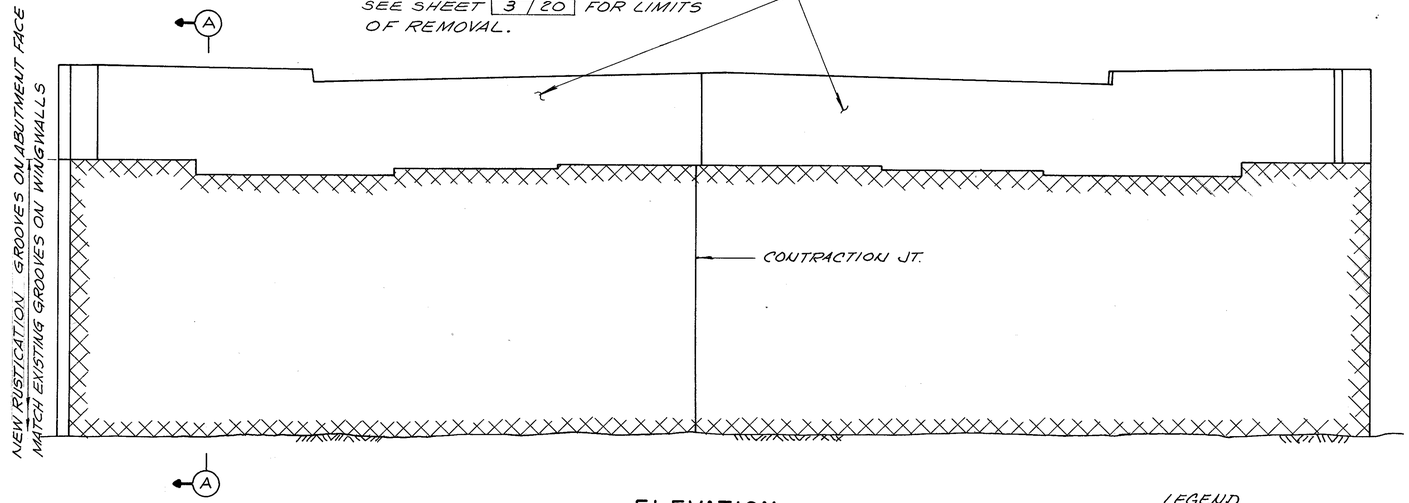

ELEVATION

NOTES

(1) ALL AREAS NOTED ▨ SHALL BE REPAIRED BY ITEM 519 - "PATCHING CONCRETE STRUCTURES". THE AREAS SHOWN ON THESE DRAWINGS ARE APPROXIMATE, FINAL DETERMINATION OF THE AREAS TO BE REPAIRED WILL BE MADE BY THE ENGINEER AT THE TIME OF CONSTRUCTION.

(2) REPLACEMENT OF EXISTING REINFORCING STEEL SHALL BE AT THE DIRECTION OF THE ENGINEER, AND IN ACCORDANCE WITH THE GENERAL NOTES.

(3) NUMBERS SHOWN THUS ( ) ARE THE APPROXIMATE AREAS IN SQUARE FEET OF THE SPALL OR DELAMINATION.

(4) ALL LOOSE OR MISSING FORM TIE PATCHES SHALL BE REPAIRED UNDER ITEM 519.

LEGEND

▩ INDICATES AREA TO BE REPAIRED UNDER ITEM 511 CLASS "C" CONCRETE, ABUTMENT REPAIR.

DALTON • DALTON • NEWPORT
CLEVELAND, OHIO AKRON, OHIO

4/20

SUBSTRUCTURE REPAIRS
EAST ABUTMENT
PERKINS STREET BRIDGE
SUM-8-01 75

DESIGNED	DRAWN	TRACED	CHECKED	REVIEWED	DATE	REVISED
CAF	CAF		RER	JAP	2-1-85	

F. H. W. A. REG.	STATE	PROJECT	
5	OHIO		

189/204

SUM-8 – 1.73 / 1.95

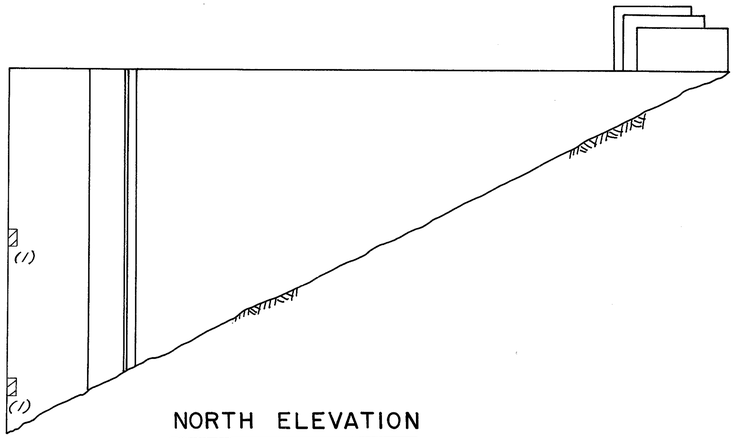

NORTH ELEVATION

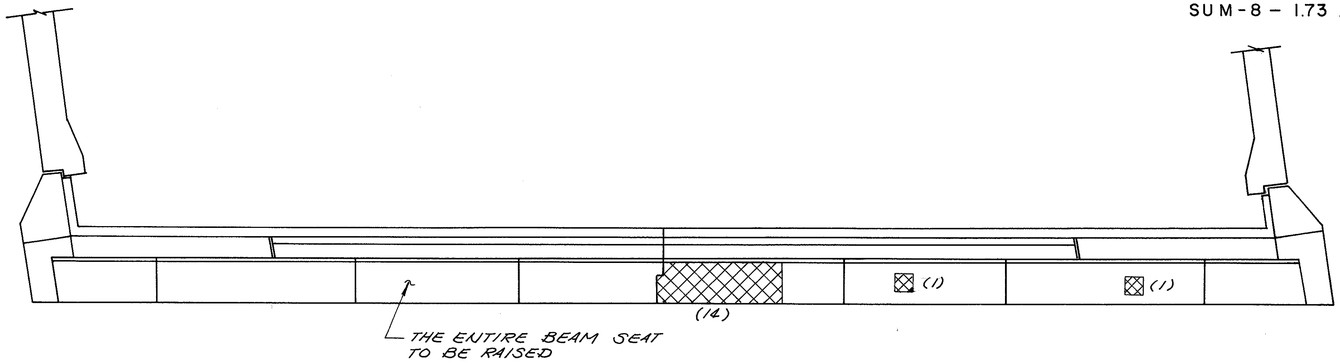

PLAN

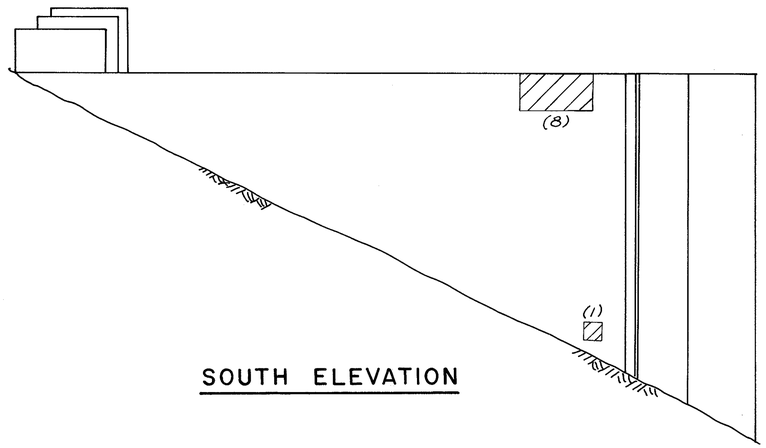

SOUTH ELEVATION

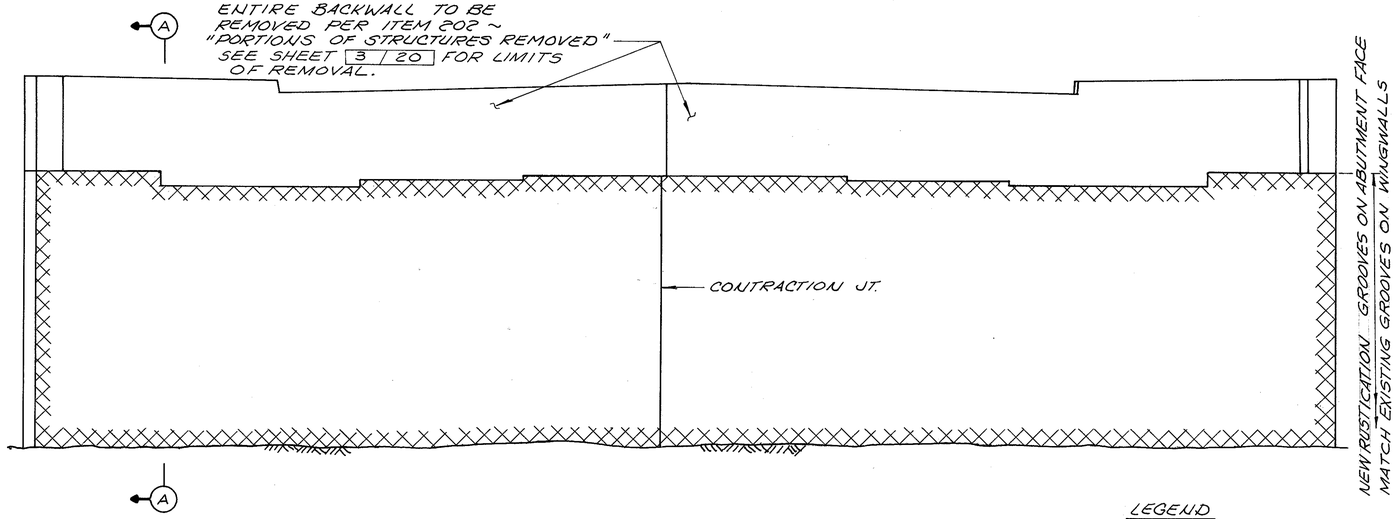

ELEVATION

LEGEND

INDICATES AREA TO BE REPAIRED BY ITEM 519.

INDICATES AREA TO BE REPAIRED UNDER ITEM 511-CLASS "C" CONCRETE, ABUTMENT REPAIR.

NOTES

(1) REFER TO SHEET 4 20 FOR ADDITIONAL NOTES.

(2) FOR SECTION A-A, SEE SHEET 4 20

DALTON • DALTON • NEWPORT

CLEVELAND, OHIO AKRON, OHIO

5 20

SUBSTRUCTURE REPAIRS WEST ABUTMENT

PERKINS STREET BRIDGE

SUM-8-01 75

DESIGNED	DRAWN	TRACED	CHECKED	REVIEWED	DATE	REVISED
CAF	CAF		RER	JJP	2-1-85	

F.H.W.A. REG.	STATE	PROJECT	
5	OHIO		

190/204

SUM-8-1.73 / 1.95

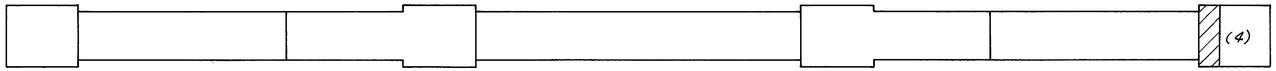

PLAN

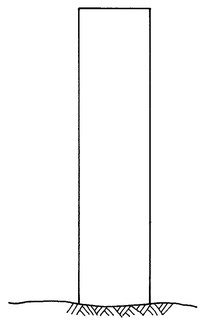

NORTH ELEVATION

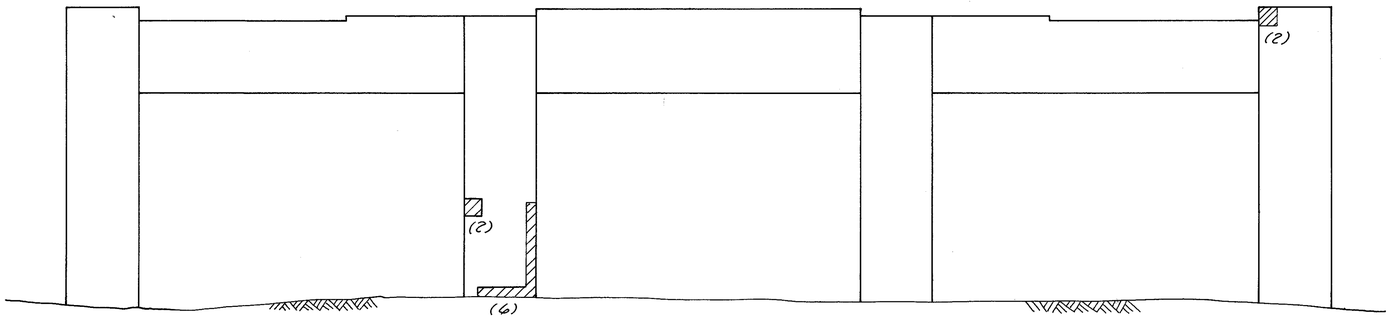

WEST ELEVATION

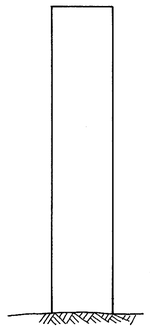

SOUTH ELEVATION

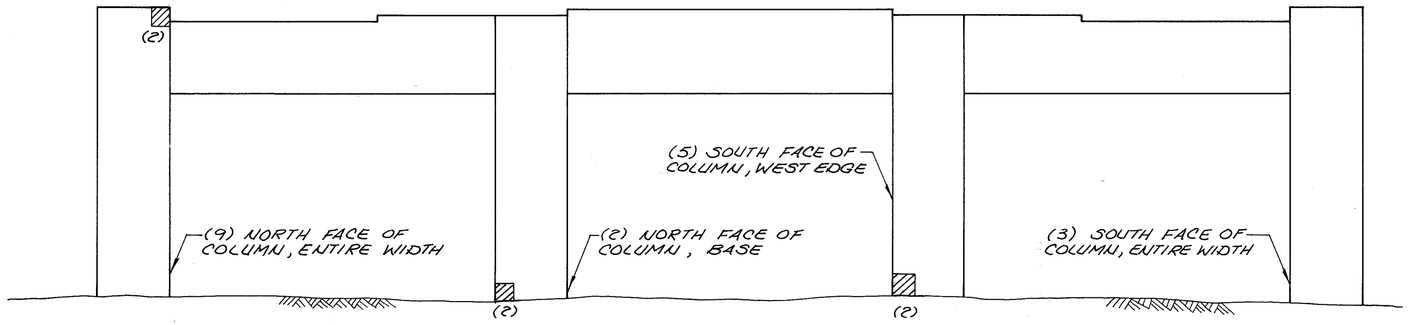

EAST ELEVATION

NOTES

(1) REFER TO SHEET 4/20 FOR ADDITIONAL NOTES.

LEGEND

INDICATES AREA TO BE REPAIRED BY ITEM 519 - PATCHING CONCRETE STRUCTURES.

DALTON • DALTON • NEWPORT
CLEVELAND, OHIO AKRON, OHIO

6/20

SUBSTRUCTURE REPAIRS
PIER
PERKINS STREET BRIDGE
SUM-8-01 75

DESIGNED	DRAWN	TRACED	CHECKED	REVIEWED	DATE	REVISED
CAF	CAF		RER	JJP	2-1-85	

F.H.W.A. REG.	STATE	PROJECT	
5	OHIO		

191
204

SUM - 8 - 1.73 / 1.95

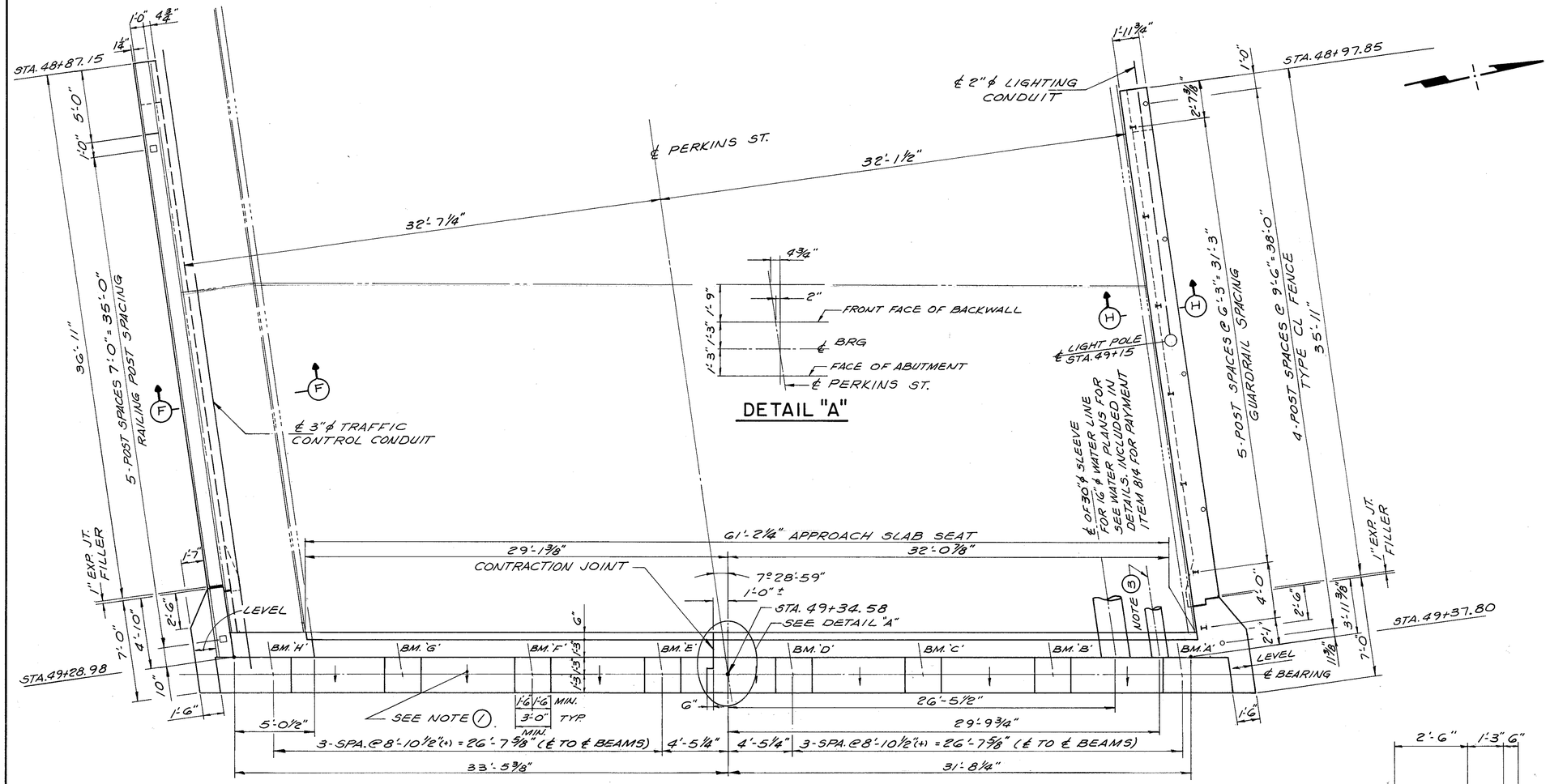

PLAN

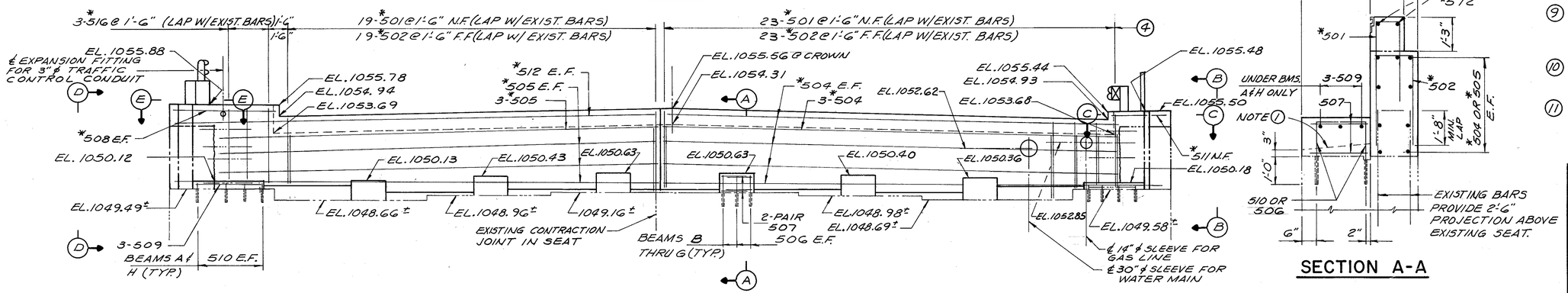

ELEVATION

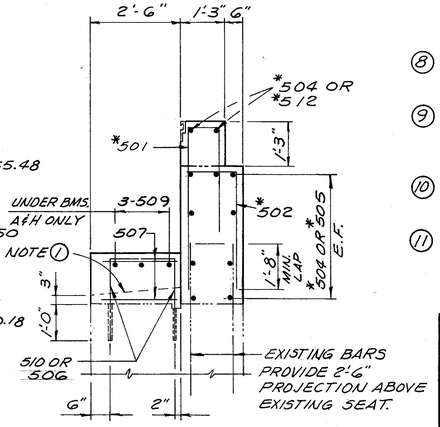

SECTION A-A

NOTES

(1) BUILD UP AREA BETWEEN SEATS WITH 3" MINIMUM OF CLASS 'C' CONCRETE PER ITEM 519. SLOPE 2" TOWARD FACE OF ABUTMENT. TO BE INCLUDED WITH ITEM 511 - 'CLASS 'C' CONCRETE, ABUTMENTS' FOR PAYMENT.

(2) ABBREVIATIONS:
N.F. = NEAR FACE
F.F. = FAR FACE
E.F. = EACH FACE
P.E.J.F. = PREFORMED EXPN. JT. FILLER

(3) 12"ϕ OD (SCHEDULE 30) PIPE SLEEVE FOR E.O.G. LINE SHALL EXTEND 2' BEYOND APPROACH SLAB. SLEEVE SHALL BE INCLUDED WITH ITEM 513 "STRUCTURAL STEEL" FOR PAYMENT. COST OF SLEEVE SHALL BE PAID FOR BY THE EAST OHIO GAS COMPANY TO THE STATE OF OHIO.

(4) CUT REINFORCING BARS AS REQUIRED TO PLACE BAR, MAINTAINING THE MINIMUM LAP. MINIMUM BAR LAPS SHALL BE AS FOLLOWS:
#5 BAR ~ 1'-8" MIN

(5) THE PREFIX "1A" SHALL BE ADDED TO ALL REINFORCING BARS IN THE WEST ABUTMENT.

*(6) * DENOTES REINFORCING BARS WHICH ARE TO BE EPOXY COATED.

(7) BACKWALL CONCRETE ABOVE THE APPROACH SLAB CONSTRUCTION JOINT SHALL NOT BE PLACED UNTIL AFTER THE DECK CONCRETE IN THE SPAN ADJACENT TO THE ABUTMENT HAS BEEN PLACED

(8) FOR ADDITIONAL SECTIONS AND DETAILS, SEE SHEET 8 | 20.

(9) FOR ADDITIONAL BRIDGE SIDEWALK RAILING DETAILS SEE SHEET 19 | 20.

(10) FOR FENCE DETAILS, SEE SHEET 18 | 20.

(11) FOR GUARDRAIL ANCHORAGE DETAILS SEE SHEET 9 | 20.

DALTON • DALTON • NEWPORT
CLEVELAND, OHIO AKRON, OHIO

7 | 20

WEST ABUTMENT

PERKINS STREET BRIDGE

SUM - 8 - 01 75

DESIGNED	DRAWN	TRACED	CHECKED	REVIEWED	DATE	REVISED
HKII	F.F.		JFP	JAP	2-1-85	

F.H.W.A. REG.	STATE	PROJECT	
5	OHIO		

192/204

SUM-8-1.73 / 1.95

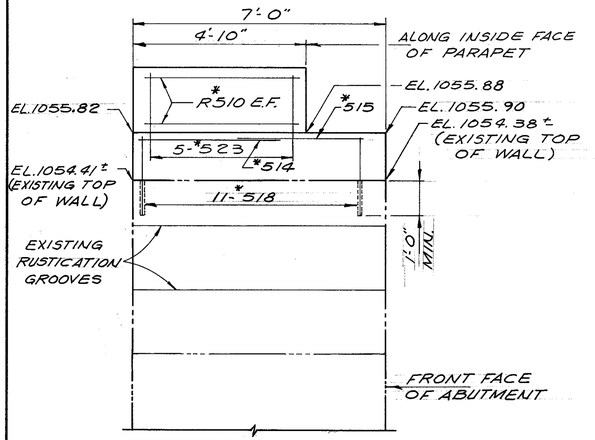

VIEW D-D

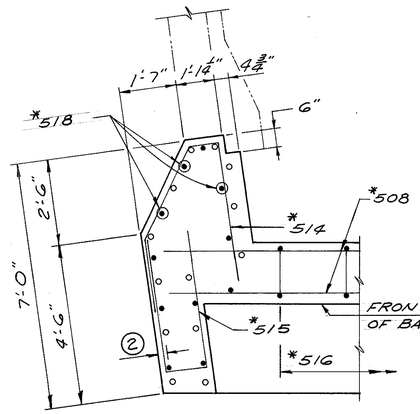

SECTION E-E

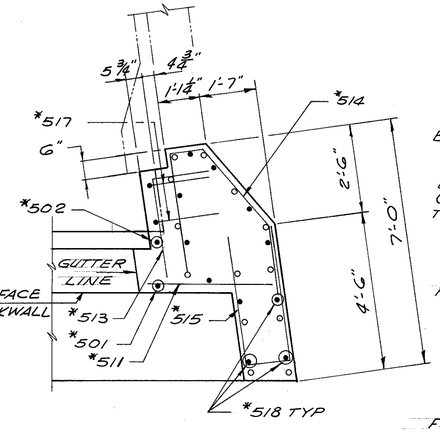

SECTION C-C

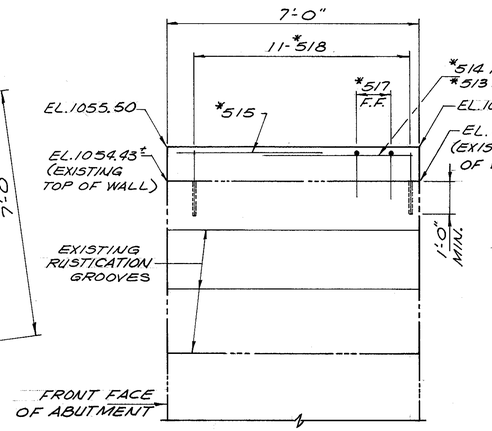

VIEW B-B

NOTES

1. ○ DENOTES APPROXIMATE LOCATION OF EXISTING VERTICAL REBARS
2. LOCATE DOWEL HOLES 4" FROM FACE OF EXISTING CONCRETE SO AS TO AVOID INTERFERENCE WITH THE EXISTING REBARS.
3. FOR ADDITIONAL NOTES AND DETAILS, SEE SHEET 7/20.
4. FOR ADDITIONAL LIGHTING DETAILS, SEE ROADWAY SHEET 100/204
5. THE PREFIX 'R' SHALL INDICATE REINFORCING BARS TO BE PLACED IN THE BRIDGE RAILING AND TO BE INCLUDED IN ITEM 517- RAILING (CONCRETE PARAPET WITH ALUMINUM RAILING) FOR PAYMENT.

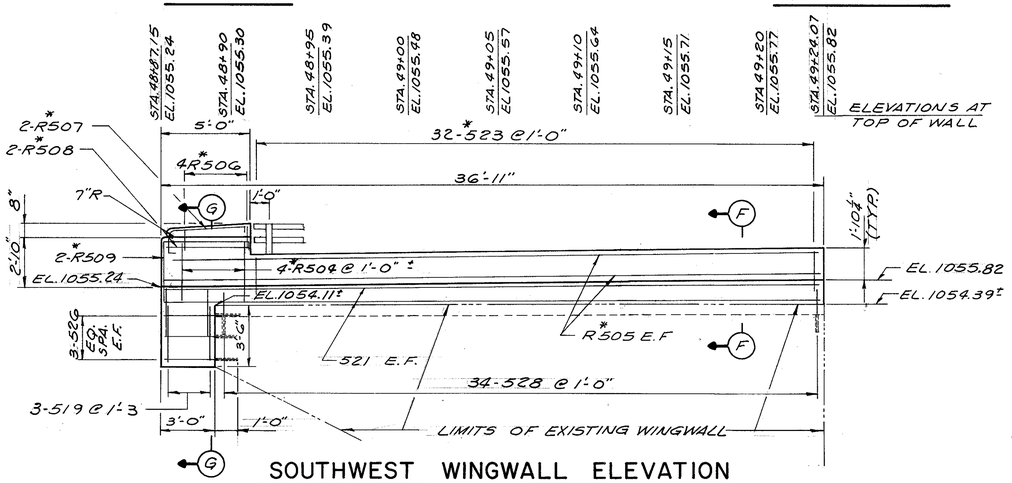

SOUTHWEST WINGWALL ELEVATION

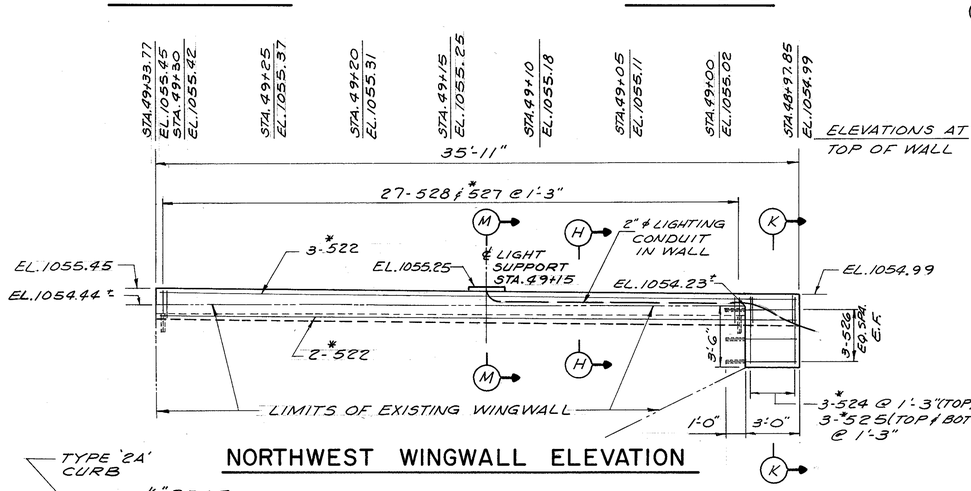

NORTHWEST WINGWALL ELEVATION

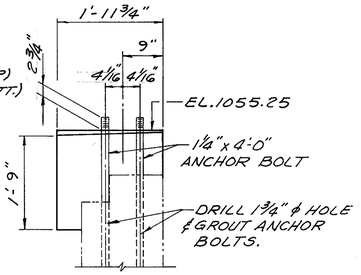

SECTION M-M
(ANCHOR BOLT DETAILS FOR LIGHT SUPPORT)

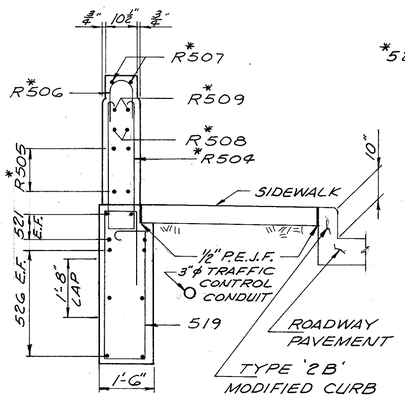

SECTION G-G

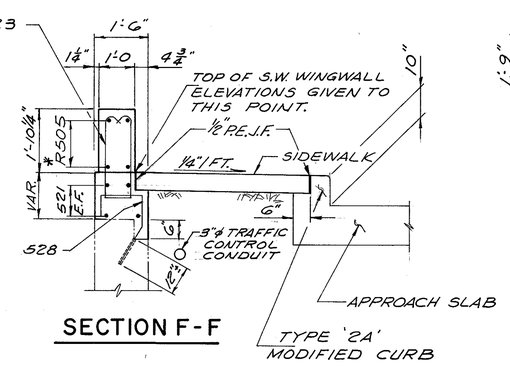

SECTION F-F

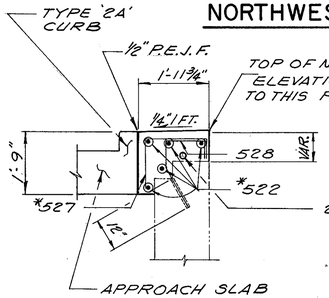

SECTION H-H

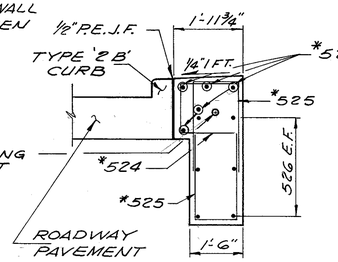

SECTION K-K

DALTON • DALTON • NEWPORT
CLEVELAND, OHIO AKRON, OHIO

8/20

WEST ABUTMENT

PERKINS STREET BRIDGE
SUM-8-01 75

DESIGNED	DRAWN	TRACED	CHECKED	REVIEWED	DATE	REVISED
HKII	F.F.		JFP	SGP	2-1-85	

F.H.W.A. REG.	STATE	PROJECT	
5	OHIO		

193 / 204

SUM - 8 - 1.73 / 1.95

NOTES

1. FOR NOTES, SEE SHEET 7 | 20.
2. FOR ADDITIONAL SECTIONS AND DETAILS, SEE SHEET 10 | 20.
3. FOR ADDITIONAL GUARD RAIL DETAILS, SEE STD. DWGS GR-1, GR-2B AND GR-3.
4. THE PREFIX "2-A" SHALL BE ADDED TO ALL REINFORCING BARS IN THE EAST ABUTMENT.

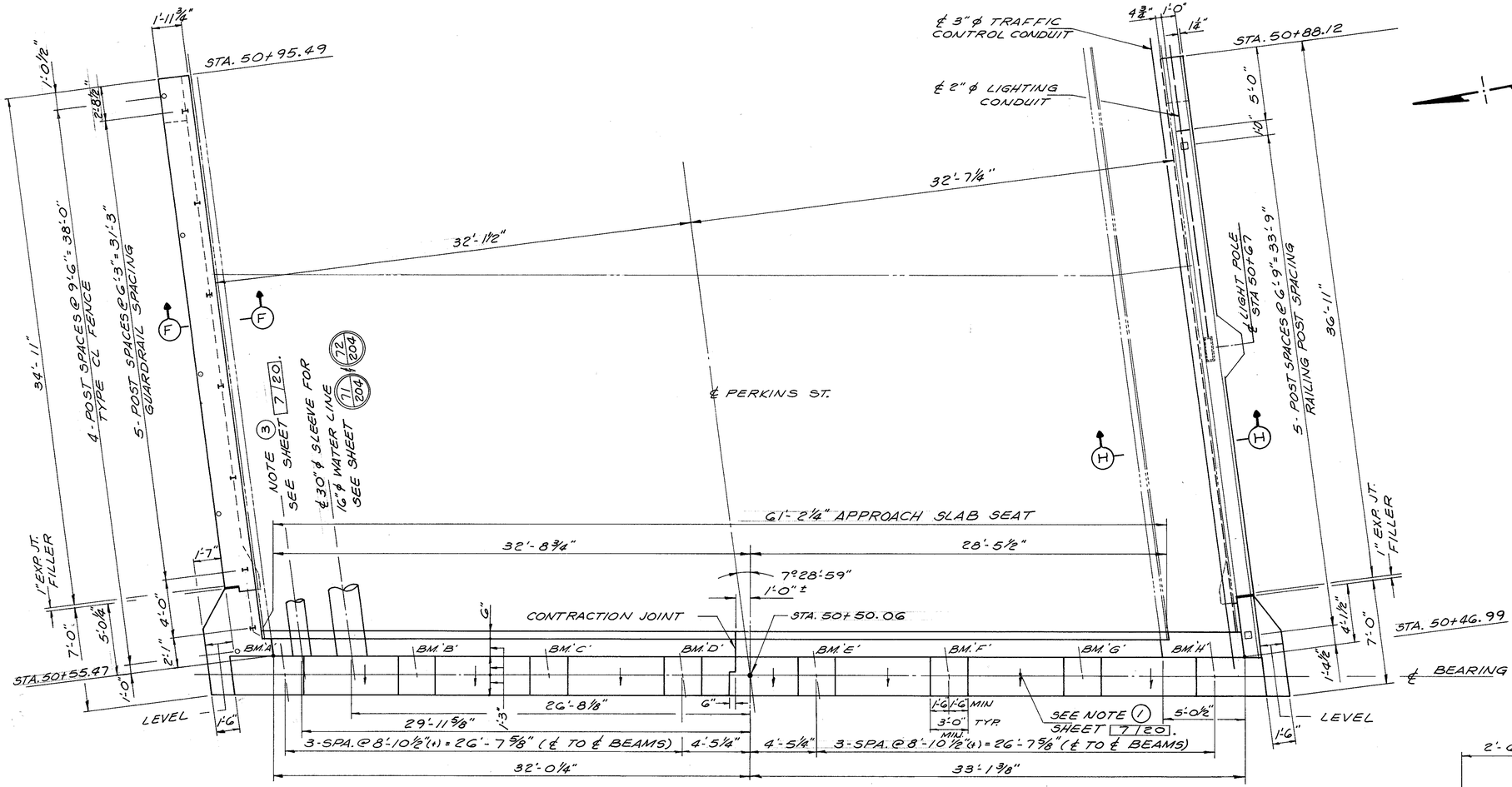

PLAN

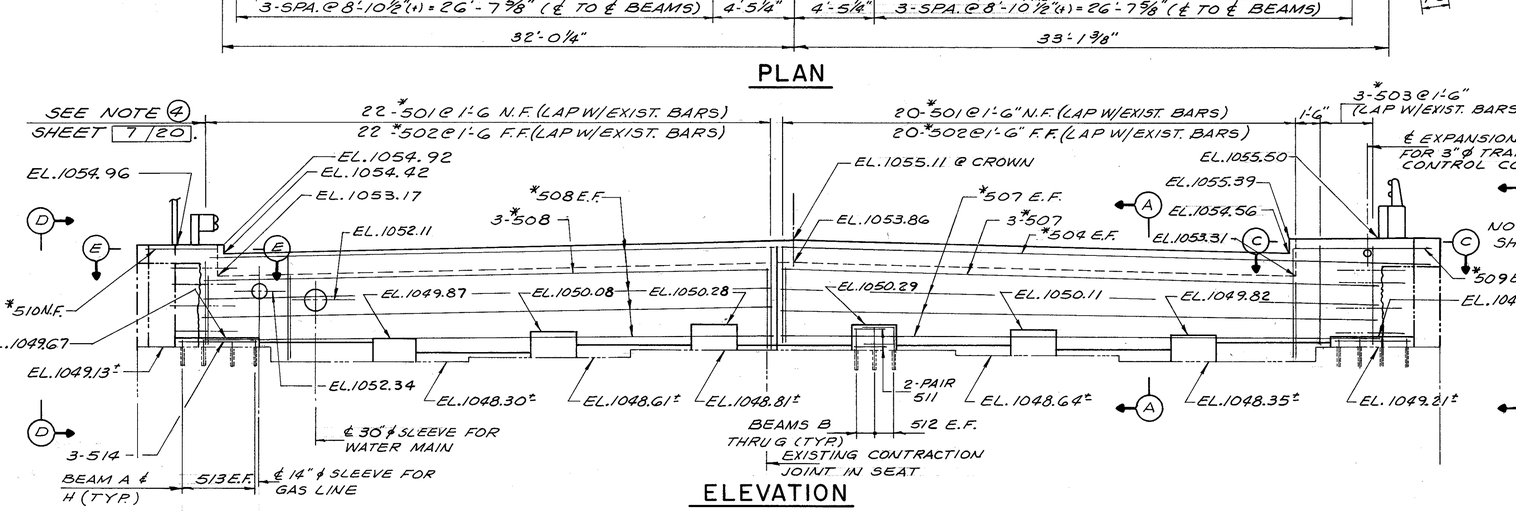

ELEVATION

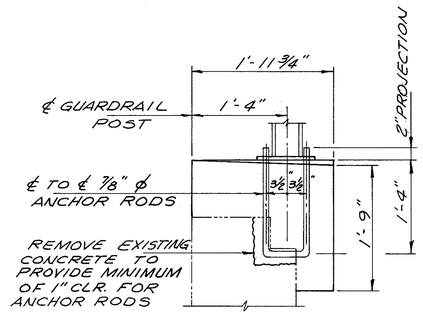

GUARDRAIL ANCHOR DETAILS

(TYPICAL NORTH WINGWALLS)

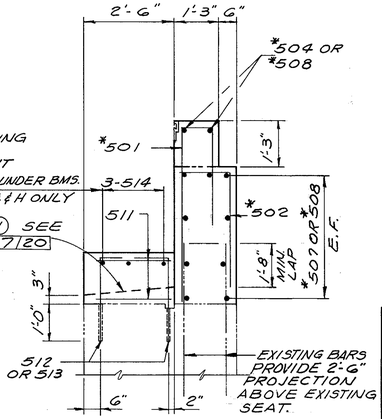

SECTIONS A-A

DALTON • DALTON • NEWPORT
CLEVELAND, OHIO — AKRON, OHIO

9/20

EAST ABUTMENT

PERKINS STREET BRIDGE

SUM - 8 - 01 75

DESIGNED	DRAWN	TRACED	CHECKED	REVIEWED	DATE	REVISED
HII	F.F.		JFP	JFP	2-1-86	

F.H.W.A. REG.	STATE	PROJECT	
5	OHIO		

194
204

SUM - 8 - 1.73 / 1.95

NOTES

(1) FOR ADDITIONAL NOTES AND DETAILS SEE SHEET 9 20.

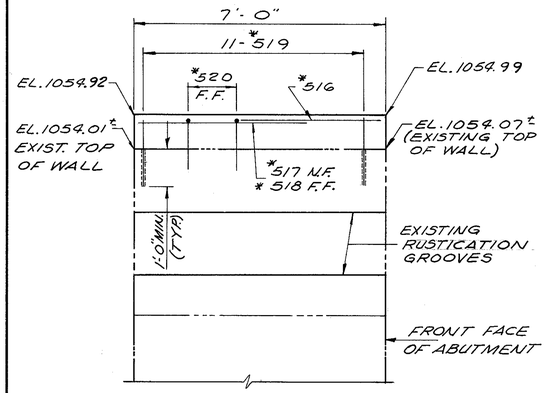

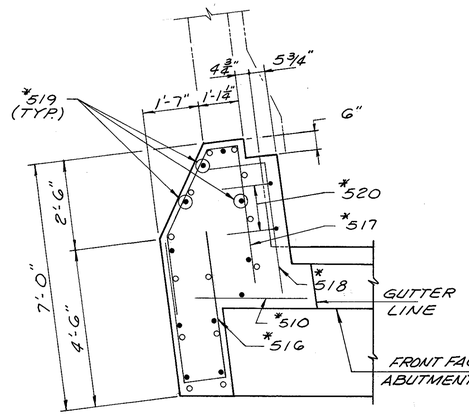

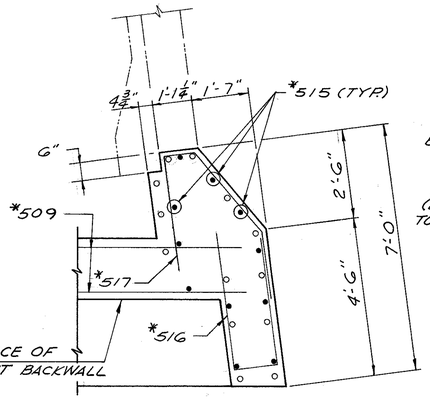

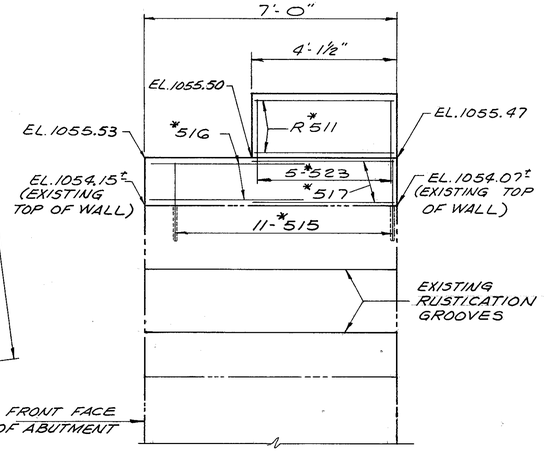

VIEW D-D

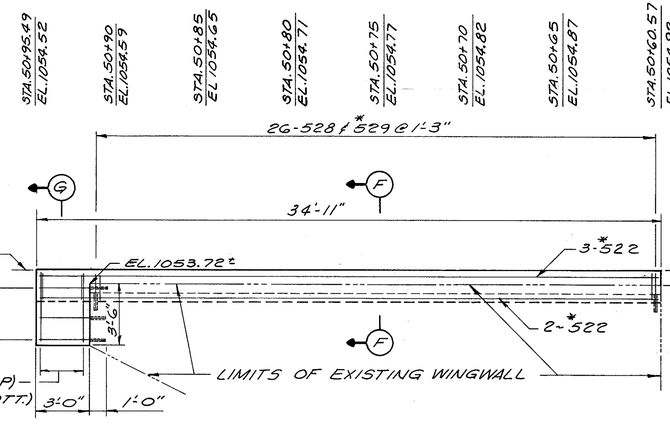

NORTHEAST WINGWALL ELEVATION

SECTION E-E

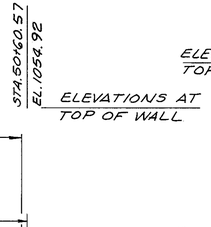

SECTION C-C

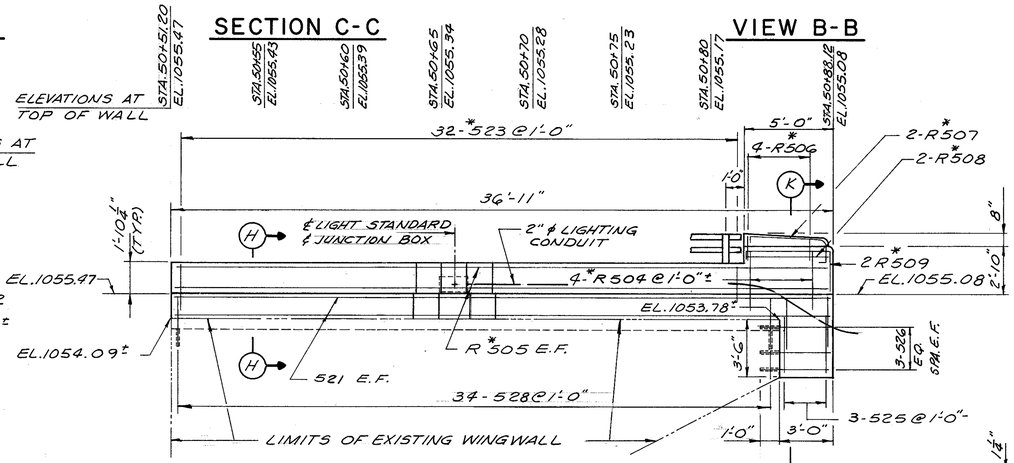

SOUTHEAST WINGWALL ELEVATION

VIEW B-B

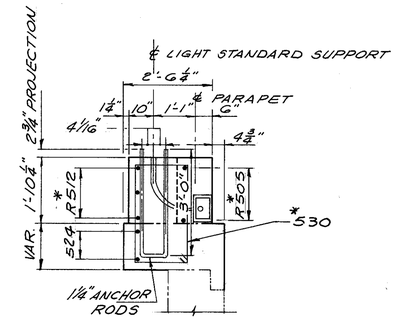

SECTION L-L

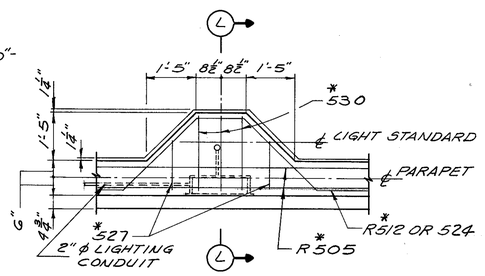

LIGHT-STANDARD SUPPORT DETAIL

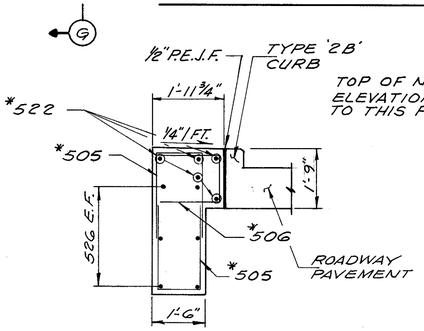

SECTION G-G

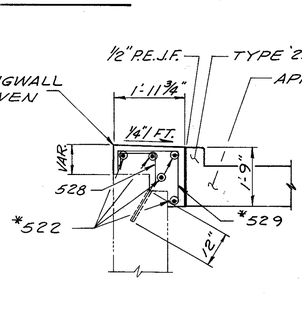

SECTION F-F

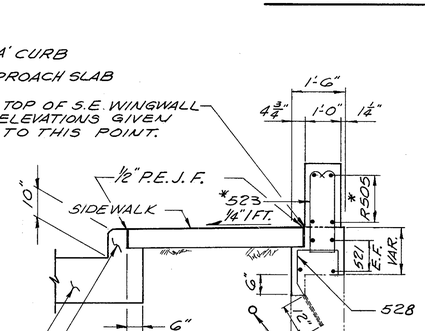

SECTION H-H

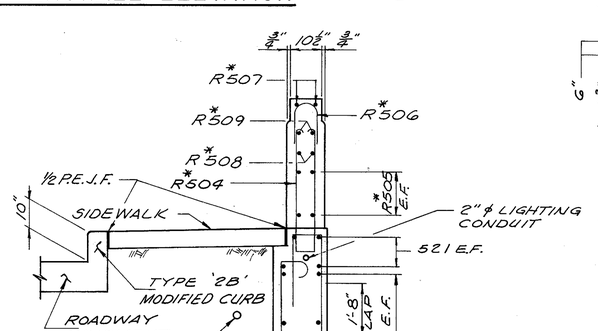

SECTION K-K

DALTON • DALTON • NEWPORT
CLEVELAND, OHIO — AKRON, OHIO
10/20

EAST ABUTMENT

PERKINS STREET BRIDGE
SUM-8-01 75

DESIGNED	DRAWN	TRACED	CHECKED	REVIEWED	DATE	REVISED
HKII	F.F.		JFP	JFP	2-1-85	

F. H. W. A. REG.	STATE	PROJECT	
5	OHIO		

195/204

SUM - 8 - 1.73 / 1.95

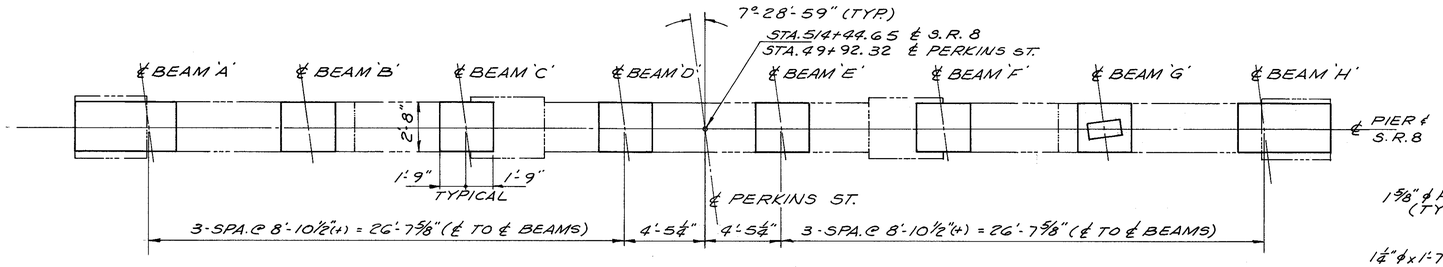

PLAN

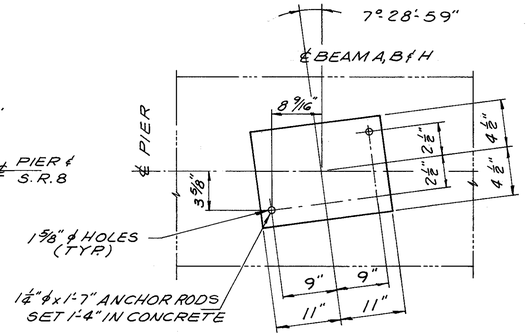

ANCHOR BOLT LOCATION DETAIL

(NEW F-100 BEARINGS)

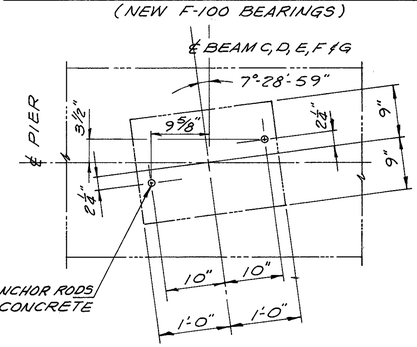

ANCHOR BOLT LOCATION DETAIL

EXISTING BOLSTER BEARING

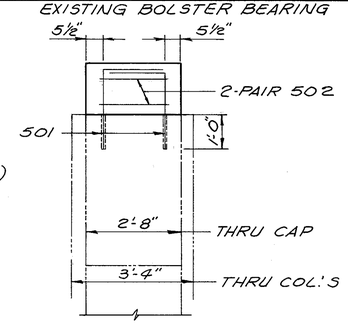

SECTION A-A

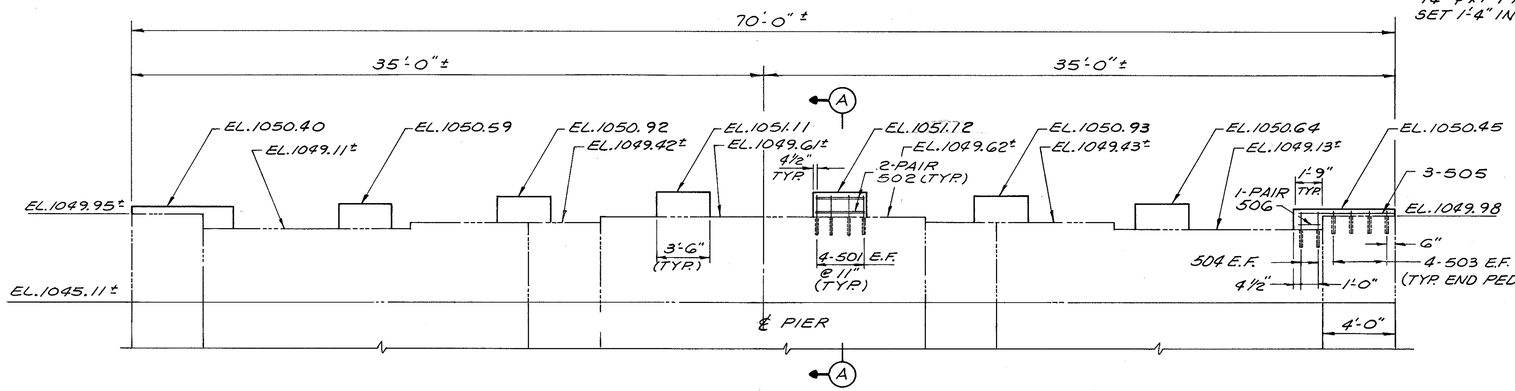

ELEVATION

(LOOKING EAST)

NOTES

1. AT THE OPTION OF THE CONTRACTOR, BEARING ANCHORS (OR FORM HOLES) LOCATED AND SUPPORTED BY TEMPLATES, MAY BE CAST IN PLACE.
2. REINFORCING STEEL IN THE VICINITY OF THE BRIDGE SEAT SHALL BE ACCURATELY PLACED TO AVOID INTERFERENCE WITH THE DRILLING OF BEARING ANCHOR HOLES OR THE PRESETTING OF BEARING ANCHORS.
3. FOR FRAMING PLAN AND STRUCTURAL STEEL DETAILS, SEE SHEET 12|20 AND 13|20.
4. THE PREFIX 'P' SHALL BE ADDED TO ALL REINFORCING BARS IN THE PIER.

DALTON • DALTON • NEWPORT
CLEVELAND, OHIO — AKRON, OHIO

11|20

PIER DETAILS

PERKINS STREET BRIDGE
SUM - 8 - 01 75

DESIGNED	DRAWN	TRACED	CHECKED	REVIEWED	DATE	REVISED
HKII	F.F.		JAP	JAP	2-1-85	

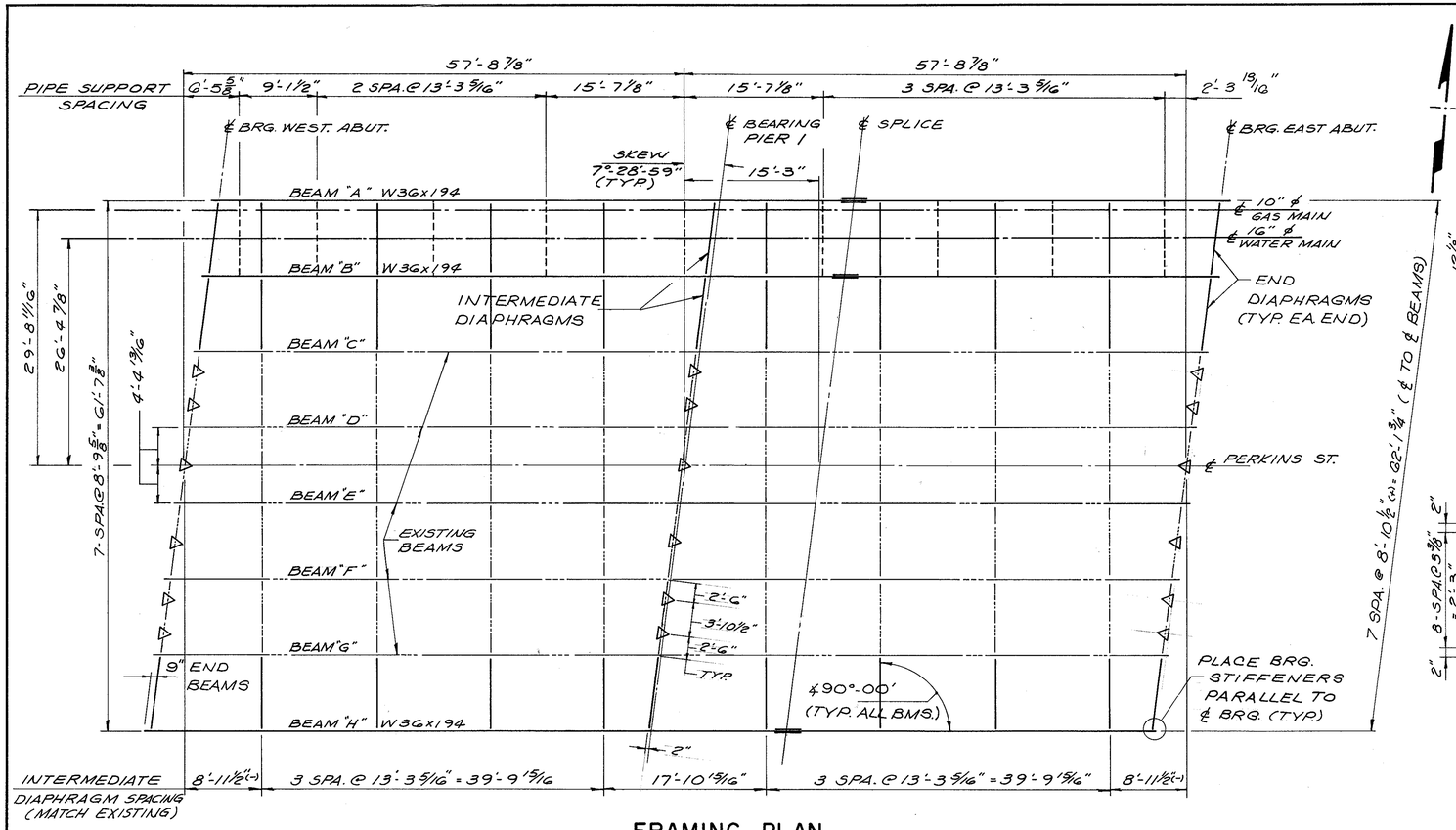

FRAMING PLAN

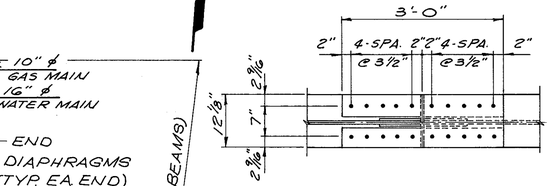

SECTION A-A

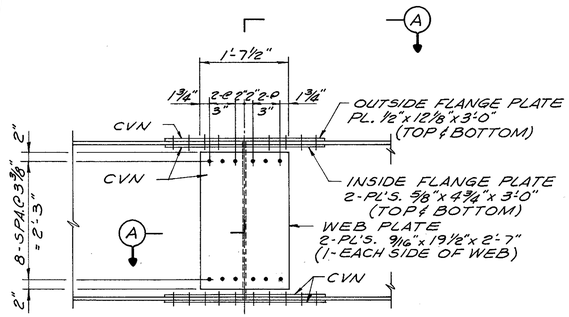

SPLICE DETAIL

(BEAMS A, B & H)

BOTTOM FLANGE COVER PLATE DETAIL

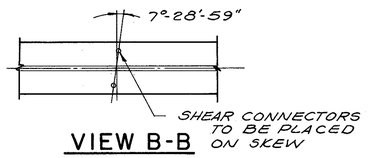

VIEW B-B

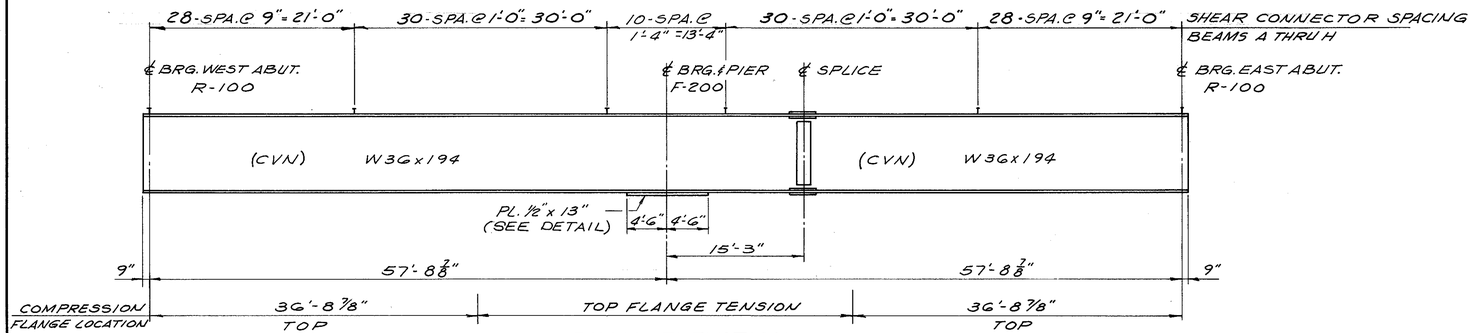

BEAM ELEVATION

BEAMS A, B & H

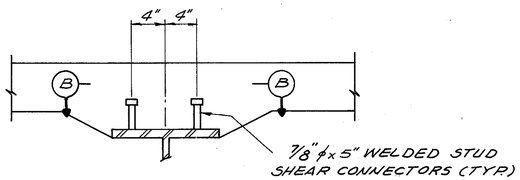

TYPICAL STUD SPACING

F.H.W.A. REG.	STATE	PROJECT	
5	OHIO		

196 / 204

SUM -8 - 1.73 / 1.95

NOTES

1. HIGH-STRENGTH BOLTS SHALL BE 1" DIAMETER A-325 UNLESS NOTED OTHERWISE.
2. ON ALL FIELD SPLICES, BOLT HEADS SHALL BE PLACED ON THE OUTSIDE FACE OF THE EXTERIOR BEAM ON THE BOTTOM OF THE BOTTOM FLANGE PLATES AND TOP OF THE TOP FLANGE PLATES.
3. ERECTION BOLTS: HOLE DIAMETER IN THE CROSSFRAMES AND CONNECTION PLATES SHALL BE RESPECTIVELY 1/16" AND 1/4" LARGER THAN THE DIAMETER OF THE ERECTION BOLTS. UNLESS REPLACED BY PERMANENT HIGH-STRENGTH BOLTS, ERECTION BOLTS SHALL REMAIN IN PLACE. LOCK WASHERS SHALL BE FURNISHED FOR OTHER THAN FULLY TORQUED HIGH-STRENGTH ERECTION BOLTS. BOLTS SHALL BE FURNISHED AS PART OF ITEM 513-STRUCTURAL STEEL. IN LIEU OF ERECTION BOLTS AND AT THE OPTION OF THE CONTRACTOR, ALTERNATIVE MEANS OF TEMPORARY BRACING MAY BE USED SUBJECT TO THE APPROVAL OF THE DIRECTOR (501.06).
4. WHERE A SHAPE OR PLATE IS DESIGNATED (CVN) THE MATERIAL SHALL MEET THE SPECIFIED MINIMUM NOTCH TOUGHNESS REQUIREMENTS.
5. WELDED ATTACHMENT OF SUPPORTS FOR CONCRETE DECK FINISHING MACHINE MAY BE MADE TO AREAS OF THE FASCIA STRINGER FLANGES DESIGNATED "COMPRESSION". ATTACHMENTS SHALL NOT BE MADE TO AREAS DESIGNATED "TENSION". FILLET WELDS TO COMPRESSION FLANGES SHALL BE NOT CLOSER THAN 1" FROM EDGE OF FLANGE, BE NOT MORE THAN 2" LONG AND BE NOT SMALLER THAN THE MINIMUM SIZE REQUIRED BY AASHTO.
6. REFER TO SHEET 14 / 20 FOR THE CAMBER DIAGRAM.
7. FOR ADDITIONAL STRUCTURAL STEEL DETAILS, REFER TO SHEETS 13 / 20, 15 / 20, 16 / 20 & 17 / 20.
8. △ INDICATES JACK LOCATIONS FOR RAISING EXISTING STRUCTURAL STEEL. REFER TO THE SPECIAL PROVISIONS.

DALTON • DALTON • NEWPORT
CLEVELAND, OHIO AKRON, OHIO
12/20

FRAMING PLAN

PERKINS STREET BRIDGE

SUM - 8-01 75

DESIGNED	DRAWN	TRACED	CHECKED	REVIEWED	DATE	REVISED
HK II	F.F.		RLF	JDP	2-1-88	

F. H. W. A. REG.	STATE	PROJECT	
5	OHIO		

197
204

SUM -8- 1.73 / 1.95

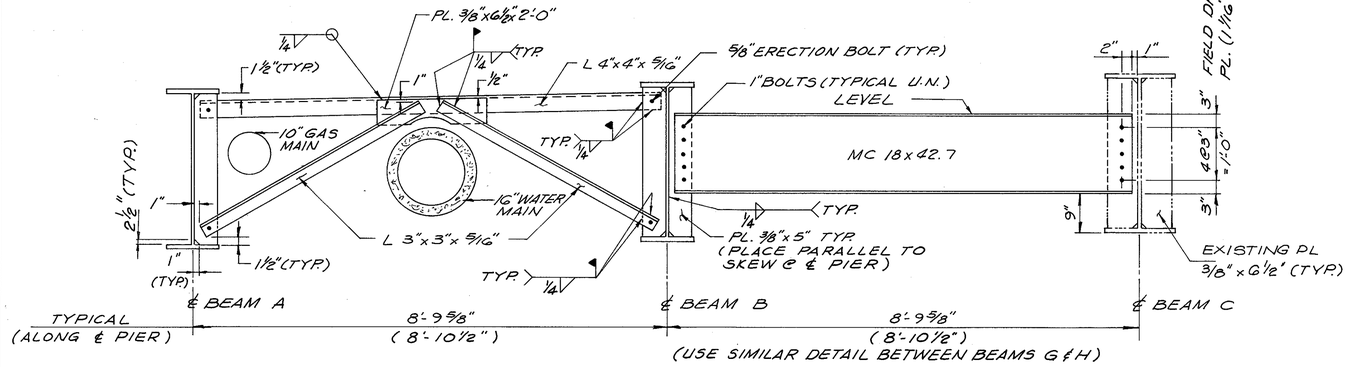

INTERMEDIATE DIAPHRAGM

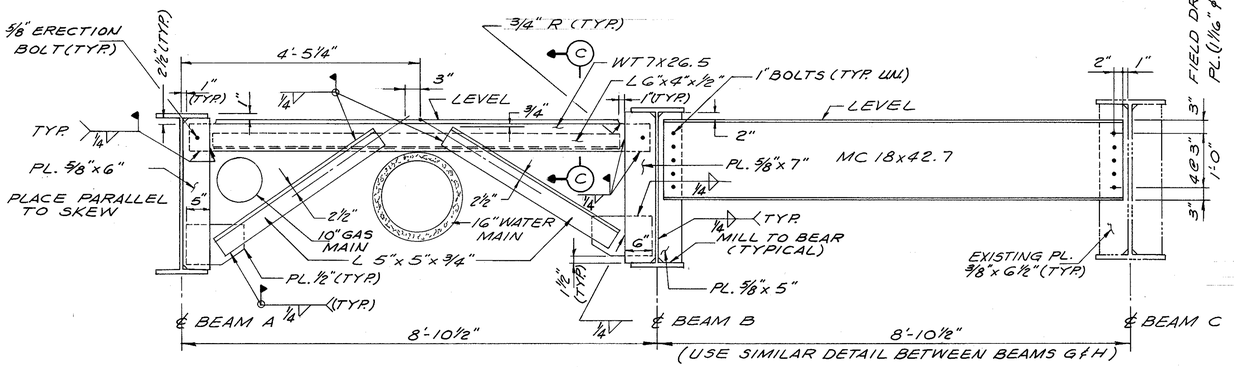

END DIAPHRAGM

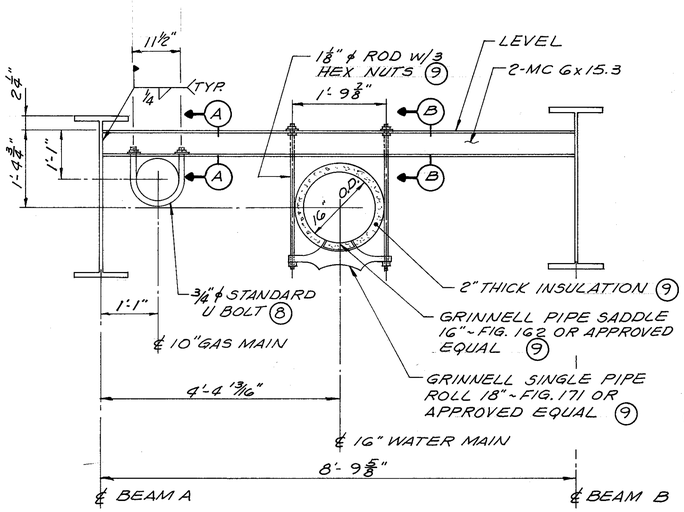

TYPICAL SUPPORT DETAIL

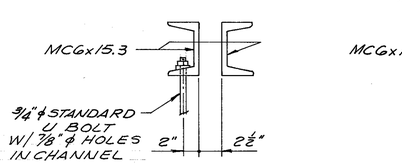

SECTION A-A

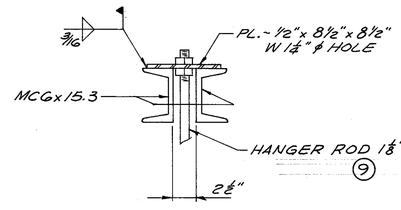

SECTION B-B

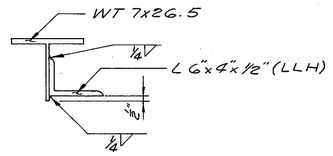

SECTION C-C

NOTES

1. REFER TO SHEET 12/20 FOR FRAMING PLAN AND ADDITIONAL NOTES.
2. REFER TO THE ROADWAY DRAWINGS FOR WATER MAIN DETAILS.
3. WELDED STUD SHEAR CONNECTORS ARE TO BE PLACED ON THE EXISTING BEAMS. TOP FLANGES SHALL BE CLEANED TO A DEGREE SUITABLE FOR WELDING, IN ACCORDANCE WITH SUPPLEMENTAL SPECIFICATION 1027.
4. THE STRUCTURAL STEEL SHALL BE AASHTO M-109 FOR WELDED STUD SHEAR CONNECTORS.
5. REFER TO STANDARD DRAWINGS RB-1-55 AND FB-1-82 FOR BEARING DETAILS. PAYMENT FOR BEARINGS SHALL BE INCLUDED IN ITEM 513-"STRUCTURAL STEEL".
6. THE ANCHOR RODS AND 1/8" LEAD PADS FOR ALL EXISTING BEARINGS SHALL BE REPLACED AND PAID FOR UNDER ITEM 513-"STRUCTURAL STEEL".
7. ALL STRUCTURAL STEEL SHALL BE ASTM A-36 UNLESS NOTED OTHERWISE.
8. 10" GAS MAIN AND 3/4" ϕ U-BOLT SHALL BE INSTALLED AND PAID FOR BY OTHERS. THE REMAINDER OF THE SUPPORT STEEL SHALL BE INCLUDED IN ITEM 513-"STRUCTURAL STEEL" FOR PAYMENT.
9. INSULATION, PIPE SADDLES, ROLLERS, AND HANGER RODS FOR WATER MAIN SHALL BE INCLUDED IN ITEM 814 FOR PAYMENT.

DALTON • DALTON • NEWPORT
CLEVELAND, OHIO — AKRON, OHIO

13/20

STRUCTURAL STEEL DETAILS

PERKINS STREET BRIDGE

SUM-8-01 75

DESIGNED	DRAWN	TRACED	CHECKED	REVIEWED	DATE	REVISED
HKII	F.F.		RLF	JJP	2-1-85	

F.H.W.A. REG.	STATE	PROJECT	
5	OHIO		

198
204

SUM - 8 - 1.73 / 1.95

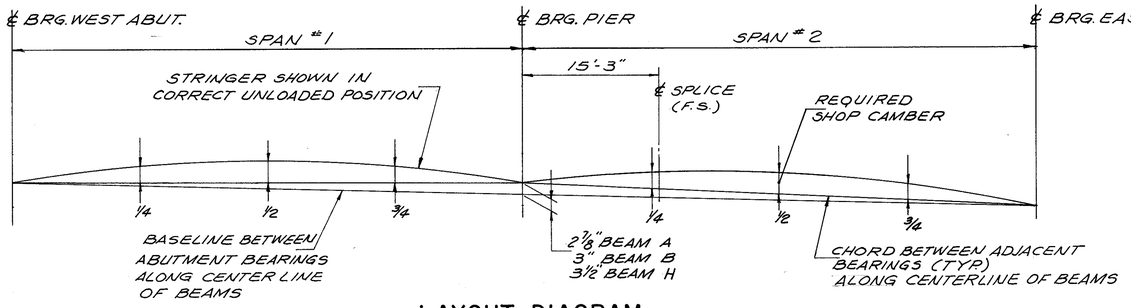

LAYOUT DIAGRAM

(SEE DEFLECTION AND CAMBER TABLE)

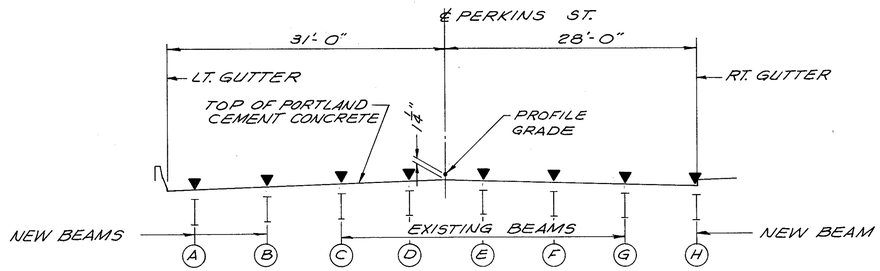

KEY TRANSVERSE SECTION

▼ ~ INDICATES LOCATION OF ELEVATIONS GIVEN IN SCREED ELEVATION TABLE

DEFLECTION AND CAMBER TABLE								
	SPANS	SPAN # 1			SPAN # 2			
BEAM A	POINTS	1/4	1/2	3/4	1/4	F.S.	1/2	3/4
	DEFLECTION DUE TO WEIGHT OF STEEL	1/16"	1/16"	1/16"	1/16"	1/16"	1/16"	1/16"
	DEFLECTION DUE TO REMAINING DEAD LOAD	1/4"	5/16"	1/8"	1/8"	1/8"	5/16"	1/4"
	ADJUSTMENT REQUIRED FOR VERTICAL CURVE	15/16"	1 1/4"	15/16"	0	0	0	0
	REQUIRED SHOP CAMBER	1 1/4"	1 5/8"	1 1/8"	3/16"	3/16"	3/8"	5/16"
BEAM B	POINTS	1/4	1/2	3/4	1/4	F.S.	1/2	3/4
	DEFLECTION DUE TO WEIGHT OF STEEL	1/16"	1/16"	1/16"	1/16"	1/16"	1/16"	1/16"
	DEFLECTION DUE TO REMAINING DEAD LOAD	1/4"	5/16"	1/8"	1/8"	1/8"	5/16"	1/4"
	ADJUSTMENT REQUIRED FOR VERTICAL CURVE	15/16"	1 1/4"	15/16"	0	0	0	0
	REQUIRED SHOP CAMBER	1 1/4"	1 5/8"	1 1/8"	3/16"	3/16"	3/8"	5/16"
BEAM H	POINTS	1/4	1/2	3/4	1/4	F.S.	1/2	3/4
	DEFLECTION DUE TO WEIGHT OF STEEL	1/16"	1/16"	1/16"	1/16"	1/16"	1/16"	1/16"
	DEFLECTION DUE TO REMAINING DEAD LOAD	1/4"	5/16"	1/8"	1/8"	1/8"	5/16	1/4"
	ADJUSTMENT REQUIRED FOR VERTICAL CURVE	15/16"	1 3/16"	15/16"	3/16"	3/16"	1/8"	1/16"
	REQUIRED SHOP CAMBER	1 1/4"	1 11/16"	1 1/8"	3/8"	3/8"	1/2"	3/8"

NOTES

(1) FOR FRAMING PLAN AND STRUCTURAL STEEL DETAILS, SEE SHEET 12 20 & 13 20.

(2) FOR SLAB PLAN AND SLAB DETAILS, SEE SHEET 15 20 & 16 20.

SCREED ELEVATION TABLE								
LOCATION	(A)	(B)	(C)	(D)	(E)	(F)	(G)	(H)
℄ BRG. WEST ABUT.	1054.85	1055.03	1055.20	1055.38	1055.37	1055.17	1054.98	1054.84
1/4 POINT	1054.95	1055.13	1055.30	1055.48	1055.48	1055.29	1055.10	1054.97
1/2 POINT	1054.98	1055.16	1055.34	1055.52	1055.52	1055.34	1055.15	1055.03
3/4 POINT	1054.93	1055.12	1055.31	1055.49	1055.50	1055.32	1055.14	1055.01
℄ BRG. PIER	1054.84	1055.03	1055.22	1055.41	1055.42	1055.24	1055.07	1054.95
1/4 POINT	1054.73	1054.92	1055.11	1055.30	1055.31	1055.14	1054.97	1054.85
1/2 POINT	1054.61	1054.81	1055.00	1055.19	1055.20	1055.03	1054.86	1054.74
3/4 POINT	1054.49	1054.68	1054.87	1055.06	1055.07	1054.90	1054.73	1054.61
℄ BRG. EAST ABUT.	1054.34	1054.53	1054.73	1054.92	1054.93	1054.76	1054.58	1054.47

THE ELEVATIONS SHOWN ARE ON TOP OF PORTLAND CEMENT CONCRETE AND ARE THOSE WHICH ARE REQUIRED BEFORE THE CONCRETE IS PLACED. PROPER ALLOWANCE HAS BEEN MADE FOR DEAD LOAD DEFLECTIONS CAUSED BY THE WEIGHT OF CONCRETE AND LATEX MODIFIED CONCRETE WEARING SURFACE.

DALTON • DALTON • NEWPORT
CLEVELAND, OHIO AKRON, OHIO

14 20

DEFLECTION, CAMBER & SCREED ELEVATION TABLES

PERKINS STREET BRIDGE

SUM - 8 - 01 75

DESIGNED	DRAWN	TRACED	CHECKED	REVIEWED	DATE	REVISED
HKII	F.F.		RLF	JOP	2-1-85	

F. H. W. A. REG.	STATE	PROJECT	
5	OHIO		

199
204

SUM - 8 - 1.73 / 1.95

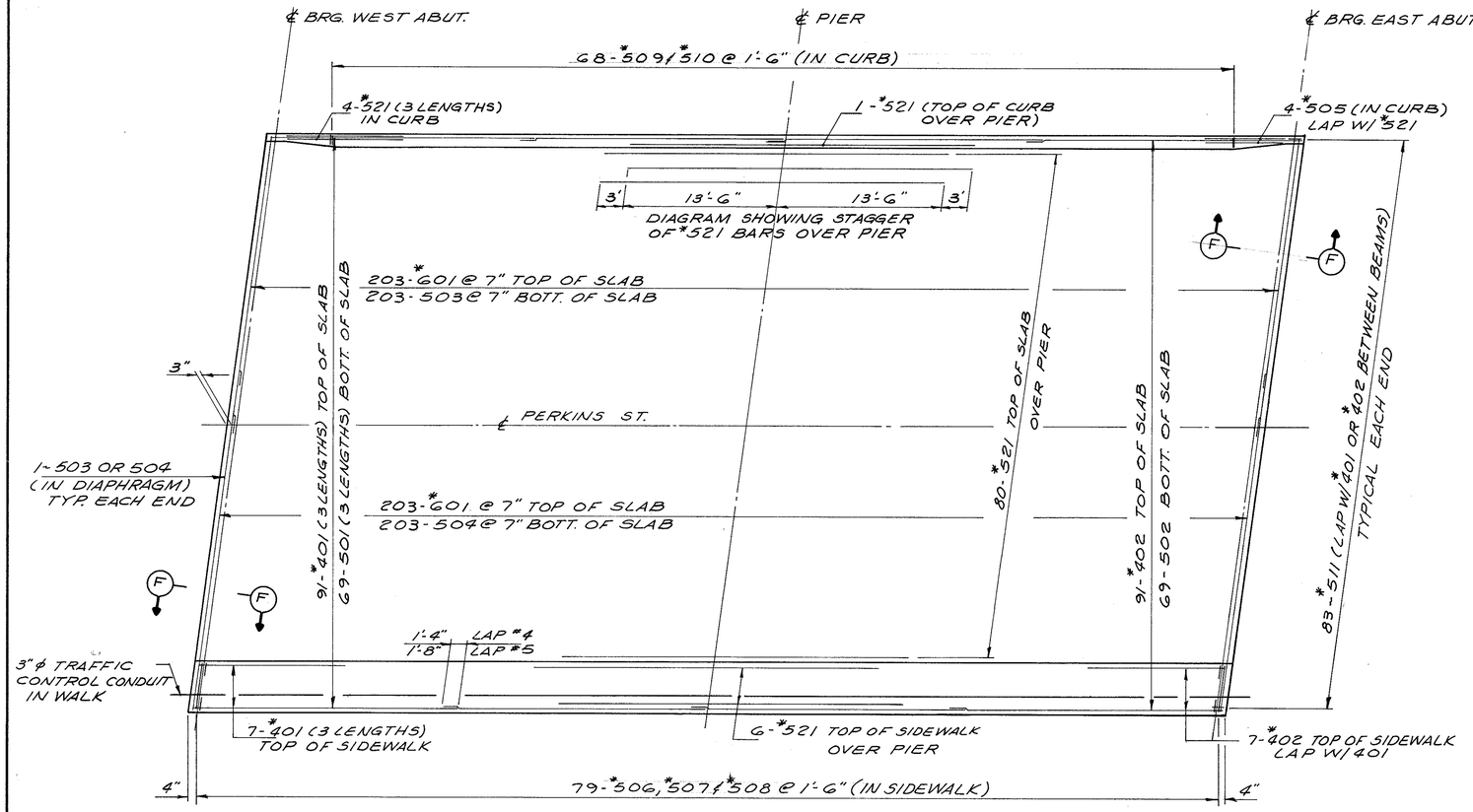

SLAB PLAN

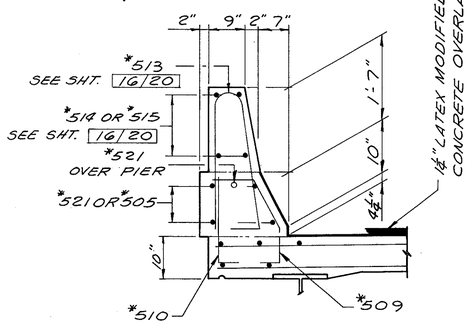

DETAIL "A"

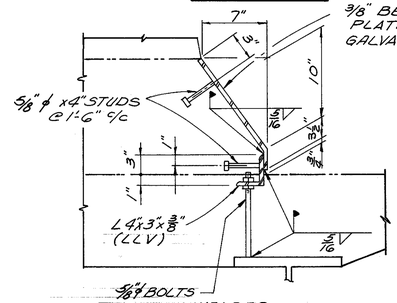

DETAIL "B"

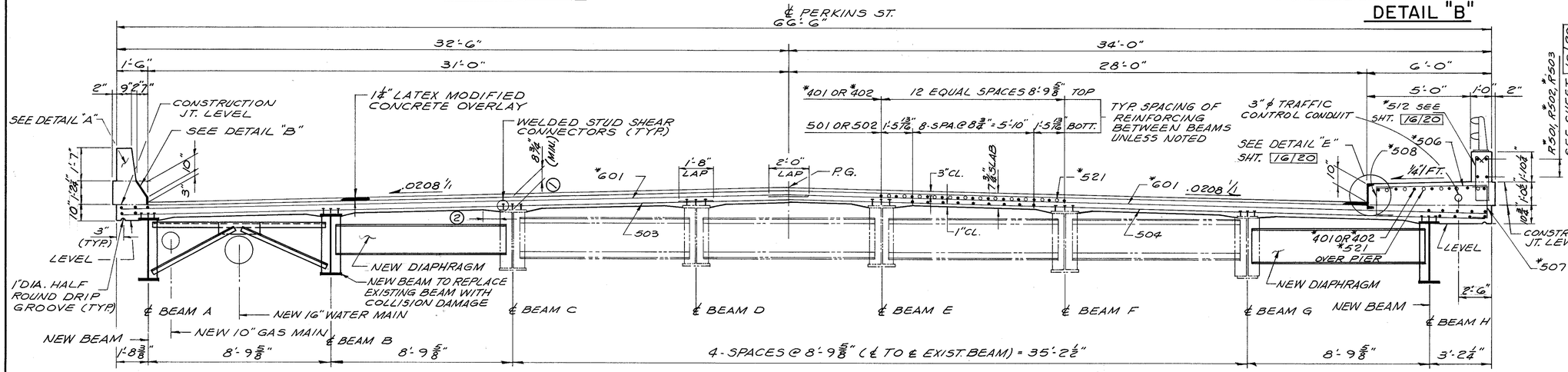

TRANSVERSE SECTION

NOTES

1. THE DISTANCE SHOWN FROM TOP OF CLASS 'S' CONCRETE TO TOP OF STEEL BEAM IS THE DESIGN DIMENSION. THE QUANTITY OF DECK CONCRETE TO BE PAID FOR SHALL BE BASED ON THIS DIMENSION, EVEN THOUGH DEVIATION FROM IT MAY BE NECESSARY BECAUSE THE TOP FLANGE OF THE BEAM MAY NOT HAVE THE EXACT CAMBER OR CONFORMATION REQUIRED TO PLACE IT PARALLEL TO THE FINISHED GRADE.
2. A HAUNCH WIDTH OF 9" SHALL BE USED FOR COMPUTING QUANTITY OF CONCRETE HOWEVER, THE HAUNCH WIDTH MAY VARY BETWEEN 6" AND 12".
3. TRANSVERSE AND LONGITUDINAL REINFORCEMENT SHALL BE FIELD BENT AS REQUIRED. PAYMENT SHALL BE INCLUDED WITH ITEM 509, REINFORCING STEEL.
* 4. ALL REINFORCING BARS SHOWN THUS * ARE EPOXY COATED.
5. PROFILE GRADE IS GIVEN TO TOP OF FINISHED PAVEMENT.
6. FOR SCREED ELEVATION TABLE SEE SHEET 14 20.
7. FOR ADDITIONAL TRAFFIC CONTROL CONDUIT DETAILS SEE SHEETS 86 208 & 87 208
8. FOR RAILING DETAILS, SEE SHEET 19 20.
9. THE PREFIX 'S' SHALL BE ADDED TO ALL REINFORCING BAR MARKS IN THE SUPERSTRUCTURE.
10. FOR SECTION F-F SEE SHEET 16 20.
11. ALL STRUCTURAL STEEL ASSOCIATED WITH THE CURB PLATES OR CURB CHANNELS SHALL BE INCLUDED WITH ITEM 513 - CURB PLATES AND MISCELLANEOUS STEEL (AS PER PLAN).

DALTON · DALTON · NEWPORT
CLEVELAND, OHIO — AKRON, OHIO

15 20

SLAB PLAN

PERKINS STREET BRIDGE

SUM - 8 - 01 75

DESIGNED	DRAWN	TRACED	CHECKED	REVIEWED	DATE	REVISED
HKII	F.F.		JFP	JSP	2-1-88	

F. H. W. A. REG.	STATE	PROJECT	
5	OHIO		

200
204

SUM - 8 - 1.73 / 1.95

NOTES

1. FOR DETAILS NOT SHOWN REFER TO STANDARD DRAWING BR-1
2. FOR LOCATION AND DESCRIPTION OF ¼ INCH PREFORMED EXPANSION JOINT FILLER SEE STANDARD DRAWING BR-1
3. FOR SLAB PLAN, TRANSVERSE SECTION AND ADDITIONAL NOTES, SEE SHEET 15 | 20 .

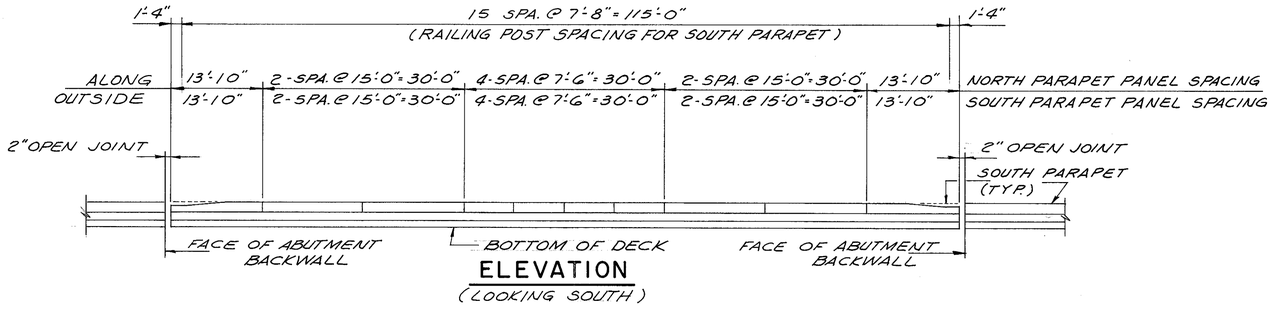

ELEVATION
(LOOKING SOUTH)

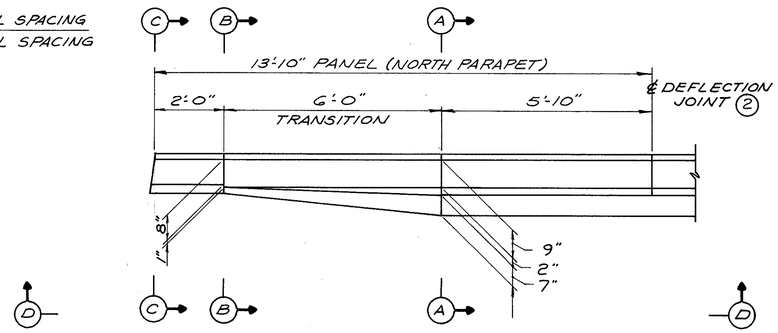

PLAN
(NORTHWEST CORNER SHOWN
NORTHEAST CORNER SIMILAR)

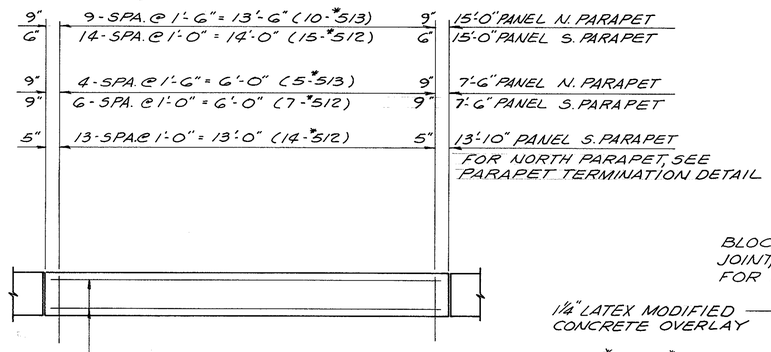

1 - *514 E.F. 15'-0 PANEL N. PARAPET
1 R *501 E.F. 15'-0" PANEL S. PARAPET
1 - *515 E.F. 7'-6" PANEL N. PARAPET
1 R - *502 E.F. 7'-6" PANEL S. PARAPET
1 R - *503 E.F. 13'-10" PANEL S. PARAPET

TYPICAL PARAPET PANEL

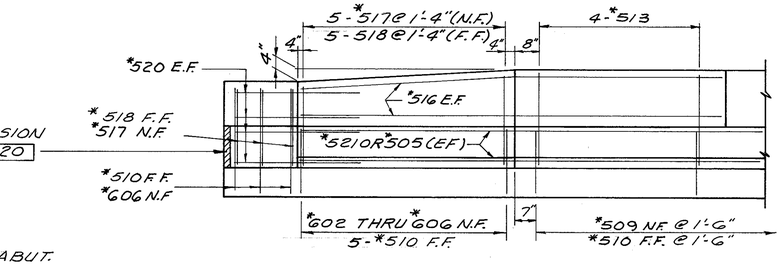

BLOCKOUT FOR EXPANSION JOINT, SEE SHEET 17 | 20 FOR DETAILS.

VIEW D-D
PARAPET TERMINATION DETAIL

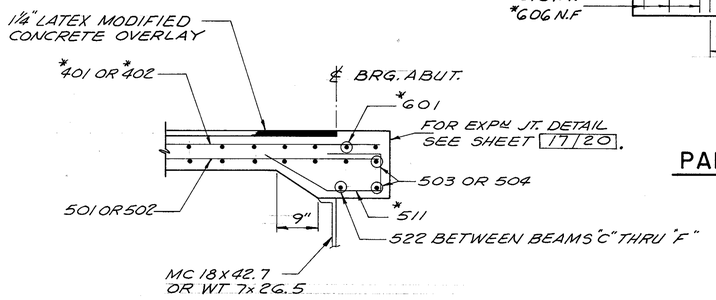

SECTION F-F

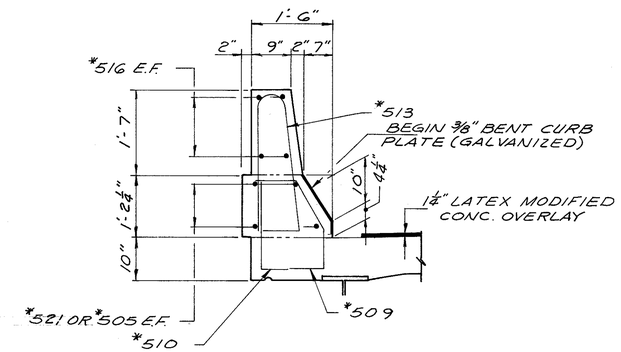

SECTION A-A

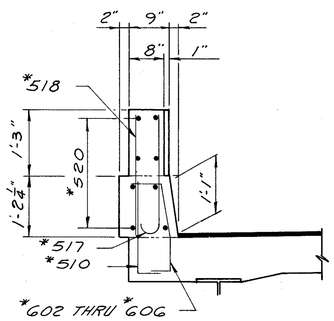

SECTION B-B

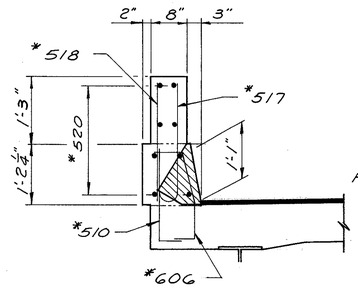

SECTION C-C

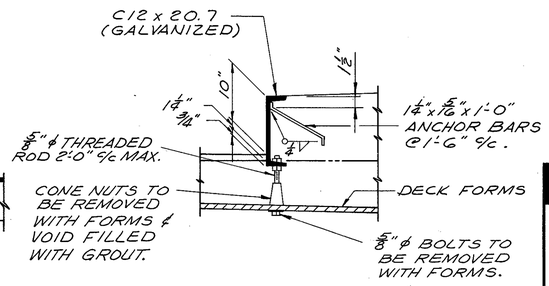

DETAIL E

DALTON • DALTON • NEWPORT
CLEVELAND, OHIO — AKRON, OHIO

16 | 20

SLAB DETAILS

PERKINS STREET BRIDGE
SUM - 8 - 01 75

DESIGNED	DRAWN	TRACED	CHECKED	REVIEWED	DATE	REVISED
HKII	F.F.		JFP	JFP	2-1-85	

F.H.W.A. REG.	STATE	PROJECT	
5	OHIO		

201 / 204

SUM-8- 1.73 / 1.95

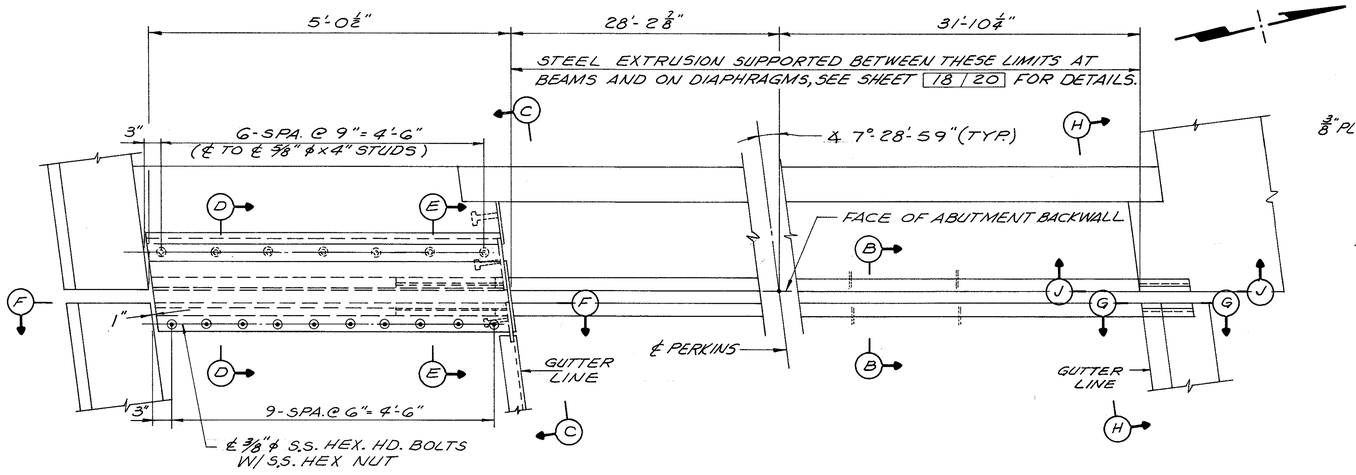

PLAN WEST ABUTMENT

EAST ABUTMENT SIMILAR

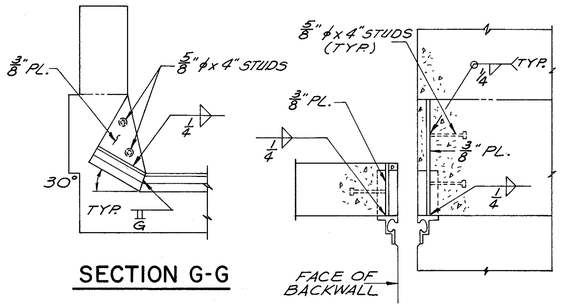

SECTION G-G

SECTION H-H

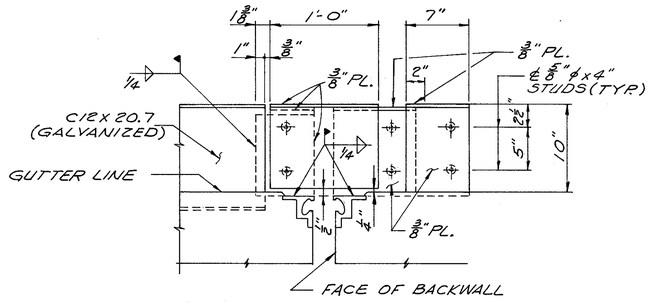

SECTION C-C

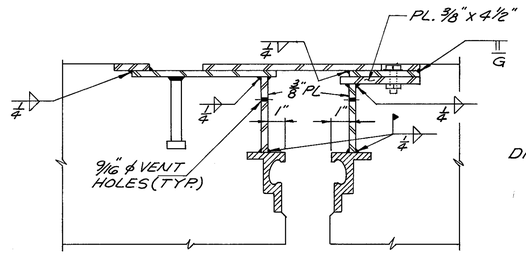

SECTION E-E

(SIMILAR TO SECTION D-D EXCEPT AS NOTED)

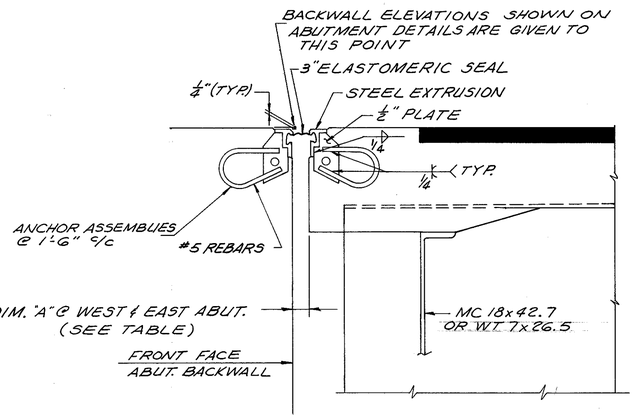

SECTION B-B

FOR SUPPORT OF STEEL EXTRUSION AT BEAMS AND ON END DIAPHRAGM SEE SHEET 18 | 20.

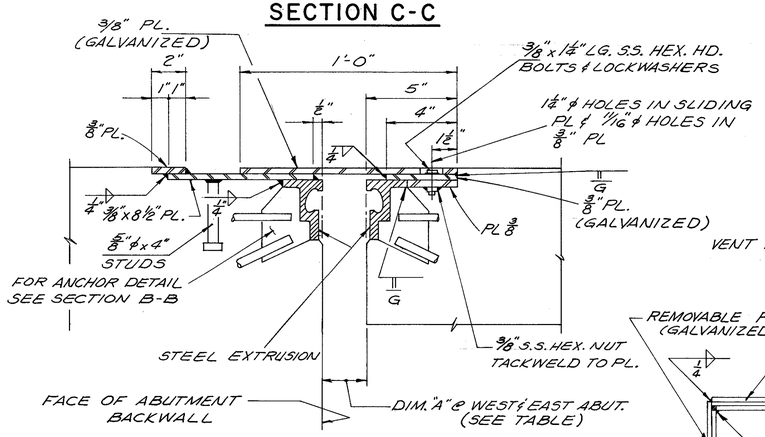

SECTION D-D

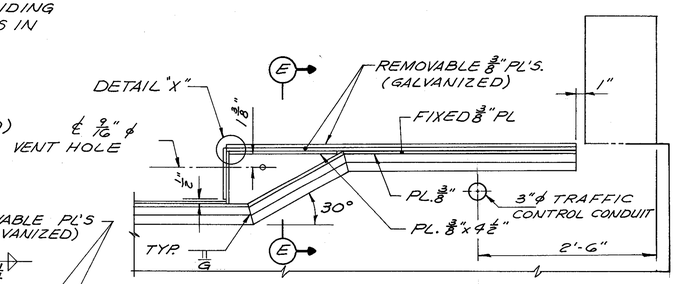

SECTION F-F

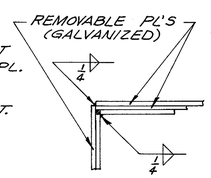

DETAIL "X"

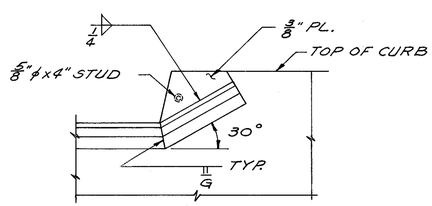

SECTION J-J

	DIM. "A"						
TEMP	30°	40°	50°	60°	70°	80°	90°
WEST ℄ EAST ABUT.	2⅛"	2 1/16"	2 1/16"	2"	1 15/16"	1 15/16"	1⅞"

NOTES

1. FOR ADDITIONAL EXPANSION JOINT DETAILS, SEE SHEET 18 | 20.
2. THE ELASTOMERIC STRIP SEAL FOR THE EXPANSION JOINT SHALL BE:
   A) WABO-ACME STRIP SEAL "S-300" AS MANUFACTURED BY WATSON BOWMAN ℄ ACME INC.
   B) ONFLEX STRIP SEAL "40 55" AS MANUFACTURED BY STRUCTURAL ACCESSORIES INC.
   C) OR APPROVED EQUAL
3. ALL STRUCTURAL STEEL ASSOCIATED WITH THE STRUCTURAL EXPANSION JOINT, ITS ANCHORS, SUPPORT ASSEMBLIES AND SLIDING PLATE ASSEMBLIES SHALL BE INCLUDED FOR PAYMENT WITH ITEM SPECIAL - EXPANSION JOINTS SEALS.
4. FOR SLAB PLAN AND SLAB DETAILS SEE SHEETS 15 | 20 AND 16 | 20.
5. FOR FRAMING PLAN AND STRUCTURAL STEEL DETAILS, SEE SHEETS 12 | 20 AND 13 | 20.

DALTON • DALTON • NEWPORT

CLEVELAND, OHIO — AKRON, OHIO

17/20

EXPANSION JOINT DETAILS

PERKINS STREET BRIDGE

SUM-8-01 75

DESIGNED	DRAWN	TRACED	CHECKED	REVISED	DATE	REVISED
HKII	F.F.		JFP	JFP	2-1-85	

F.H.W.A. REG.	STATE	PROJECT	
5	OHIO		

202
204

SUM-8-1.73 / 1.95

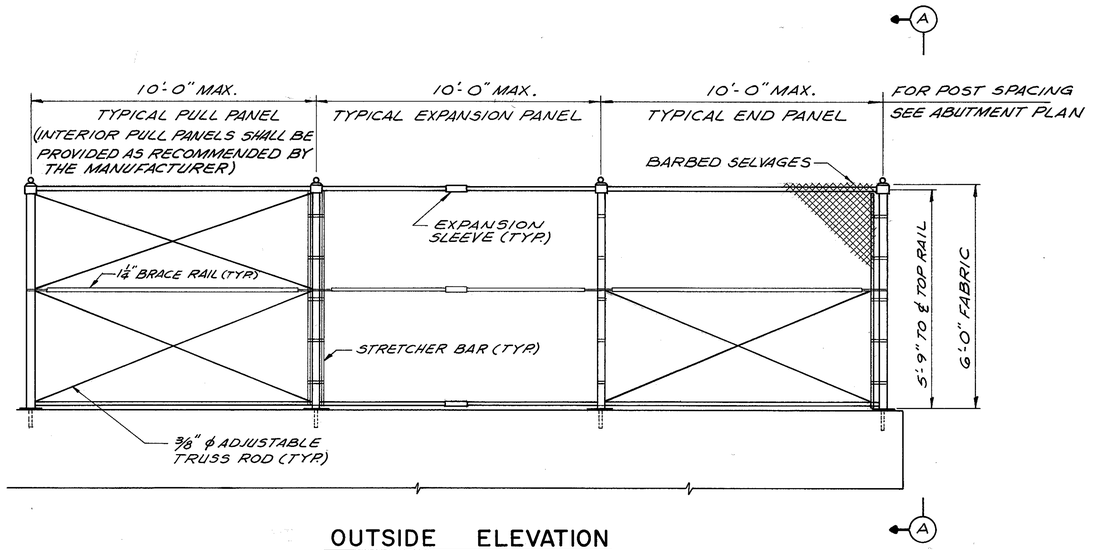

OUTSIDE ELEVATION

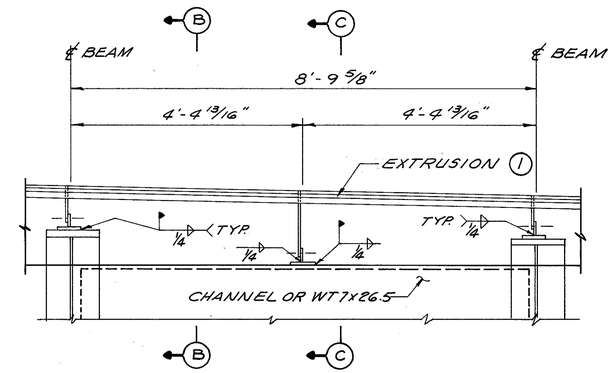

TYPICAL EXPANSION SUPPORT DETAILS

NOTES

(1) THIS STRUCTURAL STEEL SHALL BE INCLUDED FOR PAYMENT WITH ITEM SPECIAL - EXPANSION JOINT STRIP SEALS. SEE NOTE (3), SHEET 17 20.

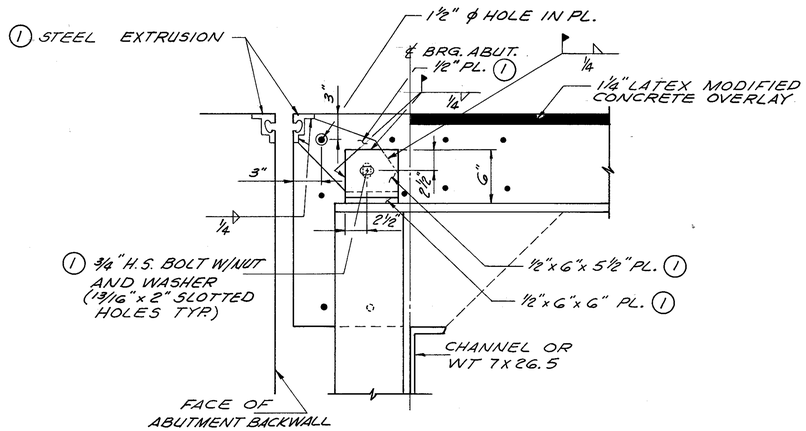

SECTION B-B

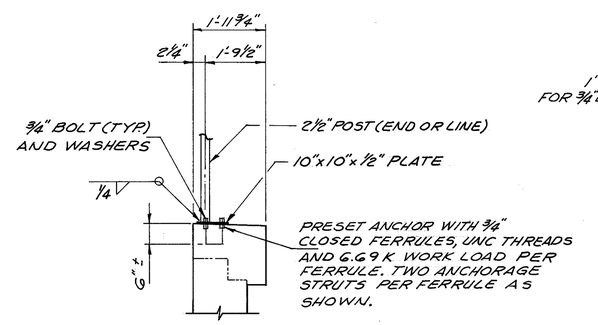

SECTION A-A

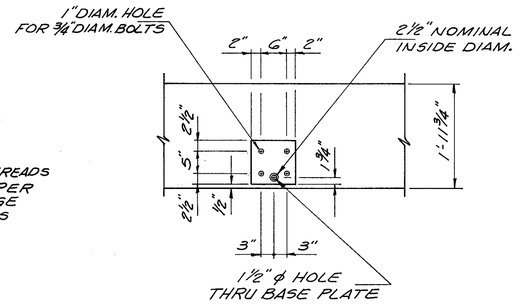

PLAN VIEW

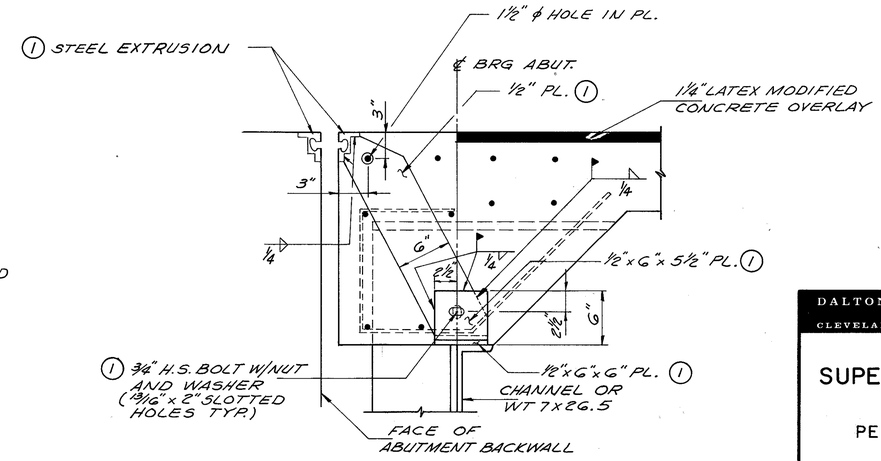

SECTION C-C

TYPE CL FENCE DETAILS

ITEM 607 - FENCE TYPE CL. (AS PER PLAN)
THIS ITEM INCLUDES THE FURNISHING OF ALL MATERIALS, LABOR, EQUIPMENT AND INCIDENTALS NECESSARY TO COMPLETE THE FENCING. TENSION BANDS SHALL BE A MINIMUM OF 12 GAUGE STEEL BY ⅞ INCHES WIDE ASSEMBLED WITH 5/16 INCH DIAMETER BY 1¼ INCH GALVANIZED OR CADMIUM PLATED BOLTS. ONE TENSION BAND SHALL BE REQUIRED FOR EACH FOOT OF FABRIC HEIGHT. FENCE POSTS AND ANCHOR BOLTS SHALL BE PERPENDICULAR TO GRADE. RAILS SHALL BE PARALLEL TO GRADE. THE FABRIC AND RAILS SHALL BE FREE TO EXPAND OR CONTRACT ACROSS BRIDGE EXPANSION JOINTS. MATERIALS AND WORKMANSHIP SHALL MEET THE REQUIREMENTS OF ITEM 607 EXCEPT THAT ALLOY POSTS AND BASE PLATES SHALL NOT BE USED. FABRIC TIES SHALL BE SPACED 14 INCH c/c MAXIMUM ON LINE OR END POSTS AND 24 INCH c/c MAXIMUM ON ALL RAILS. ALL POSTS AND PIPE SIZES ARE NOTED IN TERMS OF THE NOMINAL INSIDE DIAMETER OF STANDARD WEIGHT PIPE, SCHEDULE 40. STRETCHER BARS AND MISCELLANEOUS HARDWARE SHALL BE THAT OF THE CHAIN LINK FENCE INDUSTRY STANDARD. BASE PLATES AND MISCELLANEOUS BRACKETS FOR STEEL POSTS MAY BE OF ANY COMMERCIALLY WELDABLE STEEL HAVING A YIELD STRENGTH OF NOT LESS THAN 33,000 P.S.I. ALUMINUM ALLOY FABRIC (AASHTO M-181, TYPE III) SHALL BE USED. POST STEEL SHALL HAVE A MINIMUM YIELD STRENGTH OF 30 KSI.

DALTON · DALTON · NEWPORT
CLEVELAND, OHIO AKRON, OHIO

18 20

SUPERSTRUCTURE DETAILS

PERKINS STREET BRIDGE
SUM-8-0175

DESIGNED	DRAWN	TRACED	CHECKED	REVIEWED	DATE	REVISED
RLF	F.F.		MAB	JJP	2-1-85	

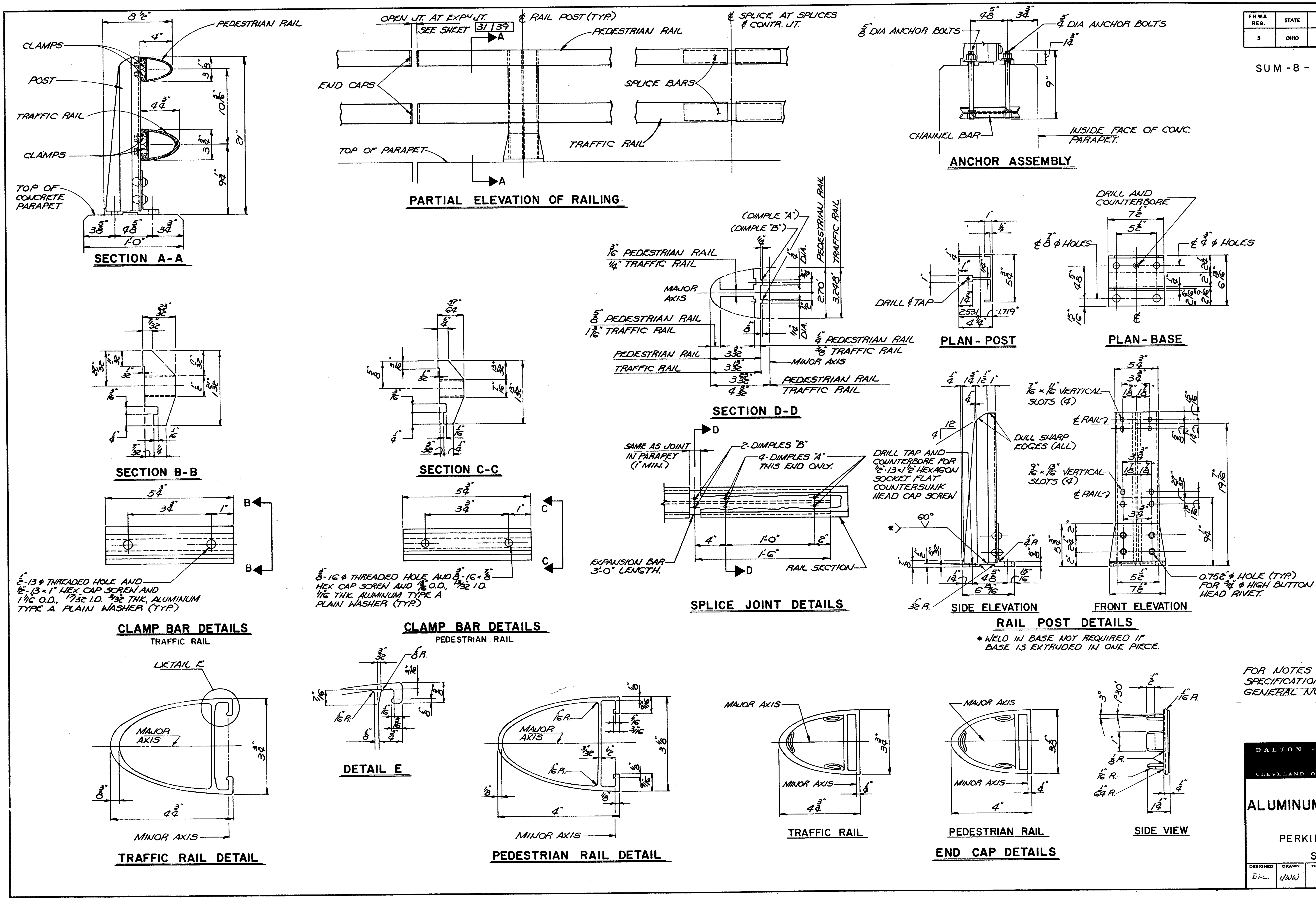

F.H.W.A. REG.	STATE	PROJECT	
5	OHIO		

203/204

SUM-8- 1.73 / 1.95

FOR NOTES AND MATERIAL SPECIFICATIONS, SEE STRUCTURAL GENERAL NOTES SHEET 108/204

DALTON · DALTON · NEWPORT
CLEVELAND, OHIO — AKRON, OHIO

19/20

ALUMINUM RAILING DETAILS

PERKINS STREET BRIDGE

SUM-8-01 75

DESIGNED	DRAWN	TRACED	CHECKED	REVIEWED	DATE	REVISED
BKL	JWW		JFP	JJP	2-1-85	

	MARK	Nº REQ'D.	LENGTH	TYPE	DIMENSIONS A	B	C	D	INCRM.	WEIGHT LBS.
					WEST ABUTMENT					
*	1A501	42	9'-7"	3	5'-11"	11"	3'-0"			420
*	1A502	42	6'-1"	1	1'-5"	4'-9"				266
*	1A504	11	33'-0"	ST.						379
*	1A505	9	31'-6"	ST.						296
	1A506	36	4'-0"	1	1'-9"	2'-4"				150
	1A507	24	6'-8"	2	2'-6"	1'-11"				167
*	1A508	2	6'-9"	ST.						14
	1A509	6	4'-3"	ST.						27
	1A510	16	3'-0"	1	1'-9"	1'-4"				50
*	1A511	1	3'-8"	ST.						4
*	1A512	2	34'-3"	ST.						71
*	1A513	1	4'-8"	1	1'-9"	3'-0"				5
*	1A514	2	8'-9"	51	3'-6"	9"	1'-7"	2'-9"		18
*	1A515	2	8'-3"	2	3'-9"	1'-0"				17
*	1A516	3	13'-2"	2	6'-0"	1'-5"				41
*	1A517	2	2'-11"	1	1'-5"	1'-7"				6
*	1A518	22	2'-8"	1	1'-0"	1'-9"				61
	1A519	3	12'-7"	24	1'-2"	8"	2'-0"	4'-3"		39
	1A521	4	36'-7"	ST.						153
*	1A522	5	35'-7"	ST.						186
*	1A523	28	7'-0"	5	8"	2'-9"				204
*	1A524	3	4'-4"	2	1'-7"	1'-5"				14
*	1A525	6	7'-5"	2	3'-3"	1'-2"				46
	1A526	12	3'-10"	ST.						48
*	1A527	27	3'-3"	3	1'-5"	1'-7"	6"			92
	1A528	61	3'-7"	52	1'-4"	10"	1'-2"	6"		228
			NON EPOXY COATED = 862 LBS.							
			EPOXY COATED = 2140 LBS.							
					EAST ABUTMENT					
*	2A501	42	9'-7"	3	5'-11"	11"	3'-0"			420
*	2A502	42	5'-11"	1	1'-5"	4'-7"				259
*	2A503	3	13'-0"	2	5'-11"	1'-5"				41
*	2A504	2	35'-6"	ST.						74
*	2A505	6	6'-7"	2	2'-10"	1'-2"				41
*	2A506	3	4'-4"	2	1'-7"	1'-5"				14
*	2A507	9	33'-3"	ST.						312
*	2A508	11	31'-6"	ST.						361
*	2A509	2	6'-9"	ST.						14
*	2A510	1	3'-9"	ST.						4
	2A511	24	6'-8"	2	2'-6"	1'-11"				167
	2A512	36	3'-11"	1	1'-9"	2'-3"				147
	2A513	16	2'-11"	1	1'-9"	1'-3"				49
	2A514	6	4'-3"	ST.						27
*	2A515	11	3'-1"	1	1'-0"	2'-2"				35
*	2A516	3	8'-3"	2	3'-9"	1'-0"				26
*	2A517	3	8'-9"	51	3'-6"	9"	1'-7"	2'-9"		27
*	2A518	1	5'-8"	1	1'-9"	4'-0"				6
*	2A519	11	2'-7"	1	1'-0"	1'-8"				30
*	2A520	2	2'-11"	1	1'-5"	1'-7"				6
	2A521	4	36'-7"	ST.						153

	MARK	Nº REQ'D.	LENGTH	TYPE	DIMENSIONS A	B	C	D	INCRM.	WEIGHT LBS.
*	2A522	5	34'-7"	ST.						180
*	2A523	37	7'-0"	5	8"	2'-9"				270
	2A524	2	10'-3"	25	1'-7"	2'-1"	1'-5"	2'-1"		21
	2A525	3	13'-1"	24	1'-2"	8"	2'-0"	4'-6"		41
	2A526	12	3'-10"	ST.						48
*	2A527	2	8'-8"	14	2'-9"	1'-4"				18
	2A528	60	3'-7"	52	1'-4"	10"	1'-2"	6"		224
*	2A529	26	3'-3"	3	1'-5"	1'-7"	6"			88
*	2A530	3	9'-2"	14	2'-9"	1'-7"				29
			NON EPOXY COATED = 877 LBS.							
			EPOXY COATED = 2255 LBS.							
					PIER					
	P501	48	3'-11"	1	1'-9"	2'-3"				196
	P502	24	7'-3"	2	2'-10"	1'-10"				181
	P503	16	2'-10"	1	1'-2"	1'-9"				47
	P504	8	3'-8"	1	2'-0"	1'-9"				31
	P505	6	5'-4"	ST.						33
	P506	4	4'-10"	2	2'-0"	1'-1"				20
			NON EPOXY COATED = 508 LBS.							
					SUPERSTRUCTURE					
*	5401	294	30'-0"	ST.						5892
*	5402	98	31'-6"	ST.						2062
	5501	207	30'-0"	ST.						6477
	5502	69	32'-6"	ST.						2339
	5503	205	29'-0"	ST.						6201
	5504	205	39'-6"	ST.						8446
*	5505	4	28'-6"	ST.						119
*	5506	79	5'-8"	ST.						467
*	5507	79	3'-3"	2	1'-0"	1'-6"				268
*	5508	79	3'-0"	2	1'-0"	1'-3"				247
*	5509	68	3'-1"	20	10"	9"	6"			219
*	5510	84	2'-4"	1	10"	1'-7"				204
*	5511	83	3'-8"	52	1'-3"	1'-0"	8"	1'-0"		317
*	5512	116	6'-6"	5	8"	2'-6"				786
*	5513	68	5'-7"	23	2'-2"	2'-5"				396
*	5514	16	14'-6"	ST.						242
*	5515	16	7'-0"	ST.						117
*	5516	8	11'-6"	ST.						96
*	5517	16	2'-9"	6	2'-2"					46
*	5518	16	2'-2"	ST.						36
*	5520	16	4'-4"	ST.						72
*	5521	99	30'-0"	ST.						3098
	5522	6	8'-9"	ST.						55

	MARK	Nº REQ'D.	LENGTH	TYPE	DIMENSIONS A	B	C	D	INCRM.	WEIGHT LBS.
*	5601	406	34'-5"	ST.						20988
*	5602	2	3'-1"	20	10"	9"	6"			9
*	5603	2	3'-0"	20	10"	8"	5"			9
*	5604	2	2'-11"	20	10"	8"	4"			9
*	5605	2	2'-10"	20	10"	7"	3"			9
*	5606	8	2'-10"	20	10"	7"	2"			34
			NON EPOXY COATED = 23518 LBS.							
			EPOXY COATED = 35742 LBS.							
					RAILING △					
*	R501	16	14'-6"	ST.						
*	R502	16	7'-0"	ST.						
*	R503	8	13'-6"	ST.						
*	R504	8	8'-6"	5	8"	3'-6"				
*	R505	8	36'-7"	ST.						
*	R506	8	3'-3"	9	1'-6"	6"				
*	R507	4	7'-2"	27	1'-0"					
*	R508	4	4'-8"	ST.						
*	R509	4	8'-11"	3	3'-6"	4'-8"	1'-0"			
*	R510	4	4'-5"	ST.						
*	R511	4	3'-8"	ST.						
*	R512	3	10'-3"	25	1'-7"	2'-1"	1'-5"	2'-1"		
	△ RAILING REINFORCEMENT BARS WILL BE INCLUDED AS PART OF ITEM 517 FOR PAYMENT.									
	REINFORCING STEEL, GRADE 60									
	ABUTMENTS = 1739									
	PIER = 508									
	SUPERSTRUCTURE = 23518									
	TOTAL = 25765 LBS.									
	EPOXY COATED REINFORCING STEEL, GRADE 60									
	ABUTMENTS = 4395									
	PIER = 0									
	SUPERSTRUCTURE = 35742									
	TOTAL = 40137 LBS.									

REINFORCING STEEL SAMPLES
REFER TO CMS SECTIONS 106.03, 700, 709.01 THROUGH 709.05 AND 709.08. SUFFICIENT ADDITIONAL REINFORCING STEEL SHALL BE PROVIDED FOR SAMPLING. RANDOM SAMPLES SHALL BE REPLACED IN THE STRUCTURES BY THE ADDITIONAL STEEL, SPLICED IN ACCORDANCE WITH 509.08.

F.H.W.A. REG.	STATE	PROJECT	
5	OHIO		

203A
204

SUM - 8 - 1.73 / 1.95

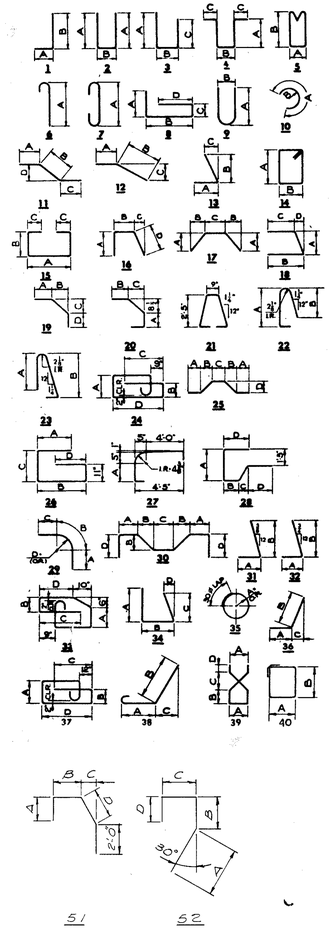

(*) DENOTES BARS TO BE EPOXY COATED

DALTON • DALTON • NEWPORT
CLEVELAND, OHIO AKRON, OHIO
20/20

REINFORCING SCHEDULE

PERKINS STREET BRIDGE
SUM - 8 - 0175

DESIGNED	DRAWN	TRACED	CHECKED	REVIEWED	DATE	REVISED
HKII	E.F.		GTC/JPP	JPP	4-29-88	

CALC. BY. DATE	SUM-8-1.73/1.95 F-BHF-54(18)	OHIO F.H.W.A. REGION 5
CHKD. BY. DATE		

STATE OF OHIO
DEPARTMENT OF TRANSPORTATION
SUM-8-1.73/1.95
NORTH EXPRESSWAY VIADUCT / PERKINS STREET BRIDGE
CITY OF AKRON
SUMMIT COUNTY

RW ONLY | SUM-8-1.73/1.95 F-BHF-54(18)

DESIGN DESIGNATION

Current A.D.T. (1984)	=70,800
Design Year A.D.T. (2004)	=124,000
D.H.V.	=12,400
D	= 50 %
T	= 5 %
V	= 60 m.p.h.

CONVENTIONAL SIGNS

Township Line
Section Line
Corporation Line
Fence Line (existing) — x — x — x — (proposed) — x — x — x —
Center Line 234 235
Trees , Stumps , (to be removed)
Utility Poles: Telephone , Power , Light

Limited Access (only) — LA —
Right of Way (only) — RW —
Limited Access & Right of Way — LA & RW —
Existing Right of Way — RW —
Property Line — (in existing fence) — x — x —
Railroad or
Guardrail (existing) (proposed)

INDEX OF SHEETS

RIGHT OF WAY PLAN	1
CONRAIL PLAT	2
N & W (AC & Y) PLAT	3

LINE DATA

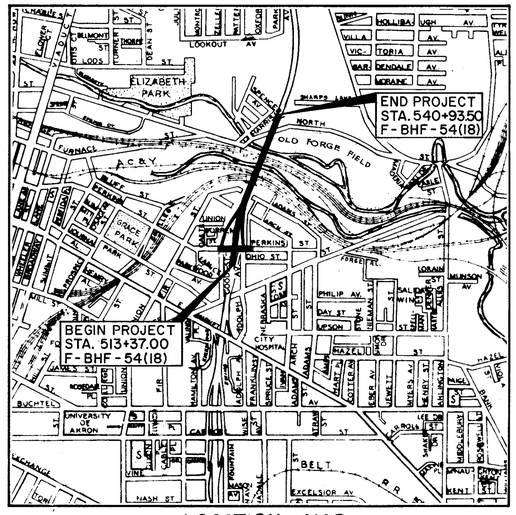

LOCATION MAP

SCALE IN FEET
0 1200 2400

Portion to be improved
Other Roads

SCALES

Plan 0 50'
Profile: Horizontal 0 50', Vertical 0 5
Cross Section: Horizontal 0 5', Vertical 0 2'

SUPPLEMENTAL	SPECIFICATIONS	
814	1-1-69	
839	11-25-70	
948	2-19-74	
803	5-27-83	
824	10-8-82	
836	3-12-75	
845	1-13-84	
953	8-21-80	
843	10-23-75	

SUPPLEMENTAL PRINTS OF STANDARD CONSTRUCTION DRAWINGS

BP-1	6-1-65	GR-1	2-5-82	MH-3	6-1-79	TC-41.40	6-18-79	HL-1	9-6-73	HL-19	3-22-77
BP-2	12-6-76	GR-2B	2-5-82	LA-1	6-1-79	TC-41.50	3-26-79	HL-2	7-27-73	MH-1	6-12-75
BP-3	12-6-76	GR-3	2-5-82	MC-11	8-1-78	TC-42.10	8-19-77	HL-3	7-27-73	MH-5	6-12-75
BP-4	7-16-81	GR-4	2-5-82	TC-7.65	3-1-79	TC-42.20	3-26-79	HL-4	1-21-76	CB-3	5-1-79
BP-5	7-16-81	GR-4A	1-30-84	TC-21.10	5-24-79	TC-51.10	3-30-79	HL-5	9-6-73	MC-6	1-30-84
BP-7	12-6-76	GR-5	2-5-82	TC-21.20	5-31-79	TC-61.10	4-5-82	HL-7	1-21-76		
BP-9	12-6-76	GR-6	2-5-82	TC-21.40	3-1-79	TC-71.10	4-9-79	HL-8	1-21-76	AS-1-81	11-27-81
BP-10	1-30-84	HW-1	6-1-65	TC-22.10	3-1-79	TC-72.20	2-26-82	HL-9	3-22-77	BR-1	5-29-79
BP-12	7-7-81	I-2A	5-1-79	TC-22.20	3-1-79	TC-81.20	4-8-80	HL-10	6-1-79	BR-2-82	11-1-82
CB-2-2-B	5-1-79	I-3A	4-1-80	TC-31.20	3-1-79	TC-83.10	4-13-79	HL-11	6-1-79	RB-1-55	2-2-59
F-1	5-1-76	MC-4	7-26-76	TC-31.21	3-6-79	TC-83.20	4-17-79	HL-12	4-6-73		
F-3	5-1-76	MC-9	1-30-84	TC-32.10	3-8-79	TC-85.10	4-18-79	HL-15	1-21-76	TC-35.10	8-29-84
BP-11	1-30-84	MC-9A	5-1-81	TC-41.20	3-26-79	TC-85.20	4-18-79	HL-16	4-6-73		

LIMITED ACCESS

THIS IMPROVEMENT IS ESPECIALLY DESIGNED FOR THROUGH TRAFFIC AND HAS BEEN DECLARED A LIMITED ACCESS HIGHWAY OR FREEWAY BY ACTION OF THE DIRECTOR IN ACCORDANCE WITH THE PROVISION OF SECTION 5511.02 OF THE REVISED CODE OF OHIO.

1985 SPECIFICATIONS

THE STANDARD SPECIFICATIONS OF THE STATE OF OHIO, DEPARTMENT OF TRANSPORTATION, INCLUDING CHANGES AND SUPPLEMENTAL SPECIFICATIONS LISTED IN THE PROPOSAL SHALL GOVERN THIS IMPROVEMENT.

I HEREBY APPROVE THESE PLANS AND DECLARE THE MAKING OF THIS IMPROVEMENT WILL NOT REQUIRE THE CLOSING OF THE HIGHWAY TO TRAFFIC AND THAT PROVISIONS FOR THE MAINTENANCE AND SAFETY OF TRAFFIC WILL BE AS SET FORTH ON THE PLANS AND ESTIMATES.

APPROVED _____
DATE _____ CITY OF AKRON DIRECTOR OF PUBLIC SERVICE

APPROVED _____
DATE _____ CITY ENGINEER

APPROVED _____
DATE _____ CITY OF AKRON DESIGN DIVISION MANAGER

APPROVED _____
DATE _____ CITY OF AKRON CONSTRUCTION MANAGER

APPROVED _____
DATE _____ DISTRICT DEPUTY DIRECTOR OF TRANSPORTATION

APPROVED _____
DATE _____ ENGINEER, BUREAU OF BRIDGES AND STRUCTURAL DESIGN

APPROVED _____
DATE _____ CHIEF ENGINEER, PLANNING AND DESIGN

APPROVED _____
DATE _____ DIRECTOR, DEPARTMENT OF TRANSPORTATION

DEPARTMENT OF TRANSPORTATION
FEDERAL HIGHWAY ADMINISTRATION

APPROVED:

_____ _____
DIVISION ADMINISTRATOR DATE

UNDERGROUND UTILITIES

2 WORKING DAYS BEFORE YOU DIG
Call ··· 800-362-2764 (Toll Free)
OHIO UTILITIES PROTECTION SERVICE

NON-MEMBERS MUST BE CALLED DIRECTLY

PLANS PREPARED BY

DALTON • DALTON • NEWPORT
ARCHITECTS ENGINEERS PLANNERS
AKRON OHIO CLEVELAND

F. J. RICHARDSON REG. ENGINEER Nº 19531

Project: SUM-8-1.73/1.95
Date of Letting _____ 19___, Contract No. _____

CALC. BY DATE	F-BHF-54(18)	OHIO
CHKD. BY DATE		F.H.W.A. REGION 5

SUMMIT COUNTY
SUM-8-1.73/1.95
RIGHT OF WAY PLANS

1/3

CHRISTY ALLOTMENT
P.B. 3 PG. 20

BLOCK 36
PERKINS ADDITION
BK. 1 PG. 13

EXISTING CURVE DATA
P.I. STA. 519+93.86
Δ = 14°26'39" RT
D_c = 2°00'00"
R = 2864.79'
T = 363.03'
L = 722.20'
E = 22.91'

BEGIN ACQUISITION
SUM-8-1.73/1.95
STA. 520+85.45

BEGIN PROJECT
SUM-8-1.73/1.95
STA. 513+37.00
F-BHF-54(18)

END ACQUISITION
SUM-8-1.73/1.95
STA. 528+46.34

END PROJECT
SUM-8-1.73/1.95
STA. 540+93.50
F-BHF-54(18)

℄ AKRON EXPRESSWAY
℄ BRG. SOUTH ABUT.
℄ PIER 1
℄ PIER 2
℄ PIER 3
EXIST. CURVE
P.T. STA. 523+53.03
EXIST. LA
EXIST. FENCE
PROP. R/W FENCE
℄ CONST. LIMITS
VACANT LOT
2 St. Frame
CONRAIL
EXIST. 36" ST
EXIST. 24" ST
A.C.& Y.
CANAL
S.R. 8
℄ ADOLPH AVE.
℄ ARCH ST.
℄ N. ADAMS ST.
ADAMS ST.
EXIST. R/W
LOT 7
LOT 17
LOT 30
LOT 31
LOT 34
LOT 35
100 WL
101 WL
102 R
102A R
102
102A
103 R
103

PROPERTY MAP FOR PCL. 101-WL
SCALE: 1" = 60'
LOT 42 | LOT 41 | LOT 40 | LOT 39 | LOT 38 | LOT 37 | LOT 36 | LOT 35 | LOT 34 (PART)
J. WILLIAM SHOLITON & LOUIS SHOLITON

CITY OF AKRON
ORIGINAL PORTAGE TOWNSHIP
T2N R11W TRACT 7
SUMMIT COUNTY

11-1-85 ADDED C.C. HOLDER TO PCL. 101-WL.
7-24-85 DELETED PCL. 101-E, REVISED DEED AREAS & RESIDUE PCL. 101-WL. ADDED PROPERTY FROM PCL. 101-WL.

SUMMARY OF ADDITIONAL RIGHT OF WAY

PARCEL NO.	OWNER	DEED RECORD BOOK	DEED RECORD PAGE	DEED AREA	TOTAL P.R.O.	TO BE ACQUIRED GROSS TAKE	P.R.O. IN TAKE	NET TAKE LAND	NET TAKE BLDG.	NET RESIDUE LEFT	NET RESIDUE RIGHT	FUNDS
100 WL	JESSE K. ROARK & VIOLA ROARK, FEE OWNERS; ROBERT C. MURRAY, HOLDER OF LAND CONTRACT	3701	51	3520	0	300	0	300	No	0	3220	F
101 WL	J. WILLIAM SHOLITON & LOUIS SHOLITON	5301	443	59154	0	1610	0	1610	No	57,544	0	F
												F
102 R	CONRAIL CORP.					1212	-	1212	No			BHF
102A R						1211	-	1211	No			BHF
102						46	-	46	No			BHF
102A						82	-	82	No			BHF
103 R	AKRON, CANTON & YOUNGSTOWN RAILROAD					3305		3305	No			BHF
103						125		125	No			BHF

PARCEL 102A-R

(5)	N 20°56'52"E	60.60'
(6)	S 76°28'59"E	20.17' (20.17'=ARC 1235.29'=R)
(7)	S 20°56'52"W	60.47'
(8)	N 76°51'54"W	20.19' (20.19'=ARC 1175.28'=R)

PARCEL 102 R

(1)	N 20°56'52"E	60.67'
(2)	S 76°51'54"E	20.19' (20.19'=ARC 1175.28'=R)
(3)	S 20°56'52"W	60.52'
(4)	N 77°17'17"W	20.21' (20.21'=ARC 1115.28'=R)

PARCEL 103R

(9)	N 20°56'52"E	163.96'
(10)	S 83°44'05"E	20.68'
(11)	S 20°56'52"W	166.59'
(12)	N 76°28'59"W	20.19' (20.19'=ARC 1235.28'=R)

PARCELS 102 & 102A
NO SCALE

PARCEL 103
NO SCALE

SCALE IN FEET 0 30 60 90

FUNDS	F & BHF

RIGHT OF WAY
STA. 520+00 TO STA. 529+00

CALC. BY. DATE		F-BHF-54 (18)	OHIO
CHKD. BY. DATE			F.H.W.A. REGION 5

SUMMIT COUNTY
SUM-8-1.73/1.95
RIGHT OF WAY PLANS

2
3

CITY OF AKRON
ORIGINAL PORTAGE TOWNSHIP
T2N R11W TRACT 7
BLOCK 36
PERKINS ADDITION
BK.1 PG. 13

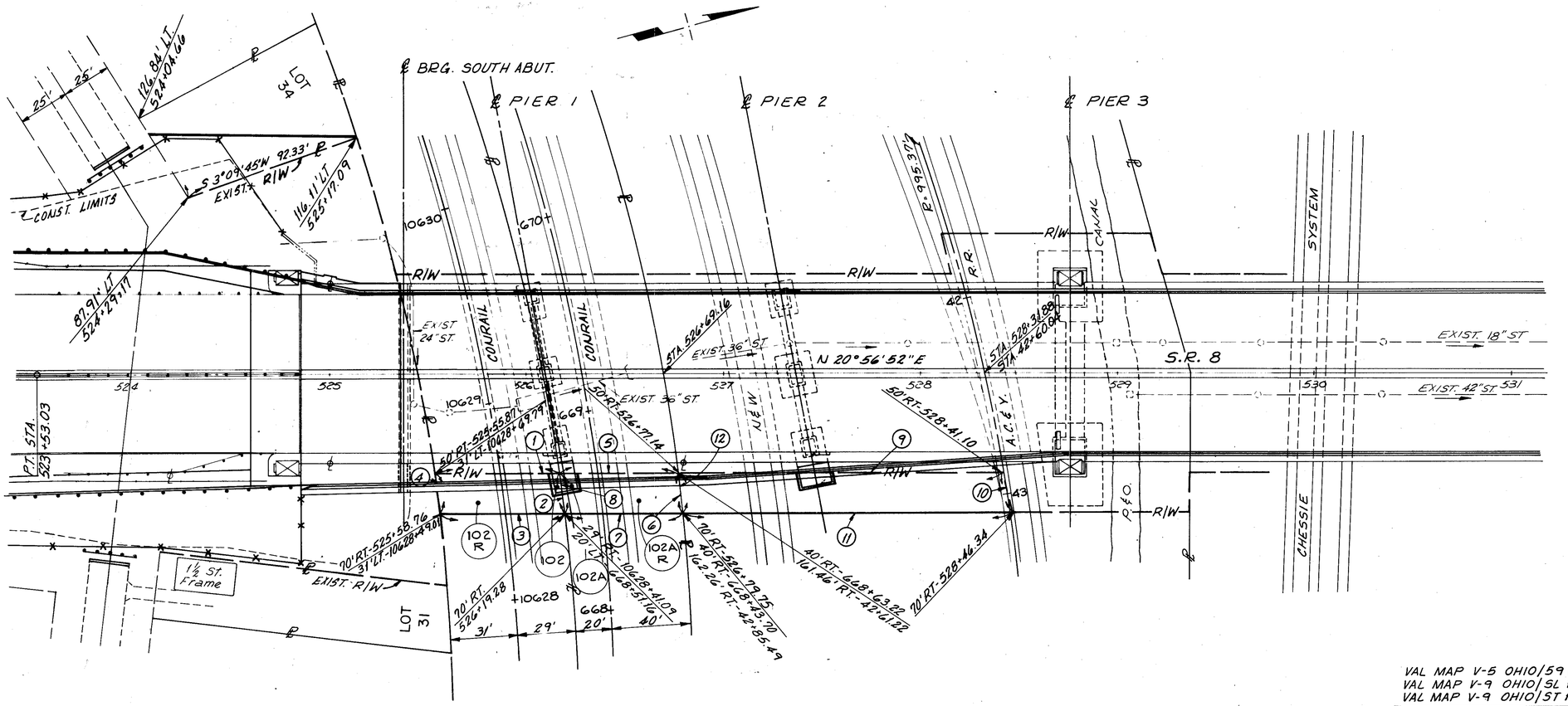

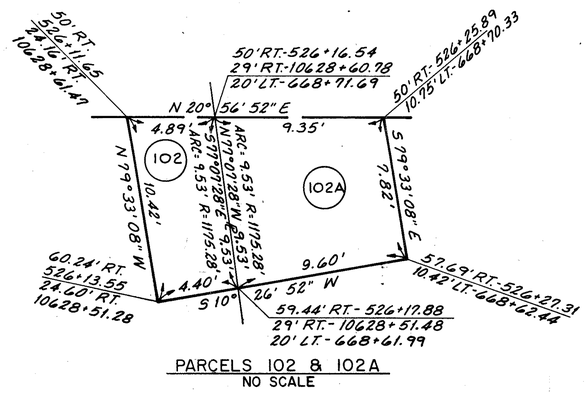

PARCELS 102 & 102A
NO SCALE

PARCEL 102 R

(1)	N 20° 56' 52" E	60.67'
(2)	S 76° 51' 54" E	20.19' (20.19'=ARC 1175.28'=R)
(3)	S 20° 56' 52" W	60.52'
(4)	N 77° 17' 17" W	20.21' (20.21'=ARC 1115.28'=R)

PARCEL 102A-R

(5)	N 20° 56' 52" E	60.60'
(6)	S 76° 28' 59" E	20.17' (20.17'=ARC 1235.29'=R)
(7)	S 20° 56' 52" W	60.47'
(8)	N 76° 51' 54" W	20.19' (20.19'=ARC 1175.28'=R)

VAL MAP V-5 OHIO/59 (ERIE-LACKA. R.R.)
VAL MAP V-9 OHIO/SL1 } (PENNA. R.R.)
VAL MAP V-9 OHIO/ST1 }

PARCEL NO.	INSTRUMENT REQUIRED	AREA OF OVERLAP	TOTAL AREA
102R	AERIAL EASEMENT	46	1212
102A-R	AERIAL EASEMENT	82	1211
102	ROADWAY EASEMENT	-	46
102A	ROADWAY EASEMENT	-	82

0 30 60 90
SCALE IN FEET

CONRAIL CORP. PLAT

AA B/Pa 71942R

CALC. BY. DATE	F-BHF-54 (18)	OHIO
CHKD. BY. DATE		F.H.W.A. REGION 5

SUMMIT COUNTY
SUM-8-1.73/1.95
RIGHT OF WAY PLANS

3/3

CITY OF AKRON
ORIGINAL PORTAGE TOWNSHIP
T2N R11W TRACT 7
BLOCK 36
PERKINS ADDITION
BK.1 PG. 13

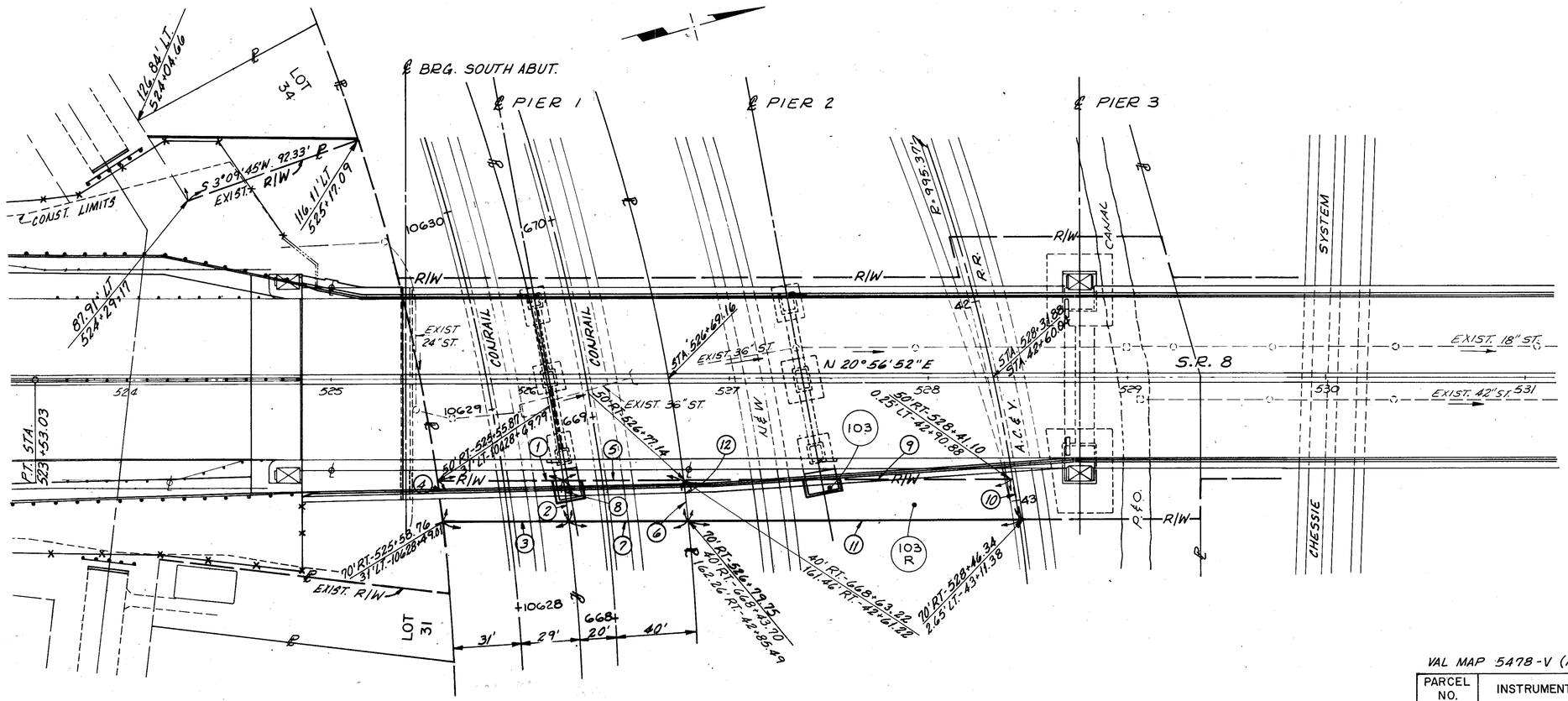

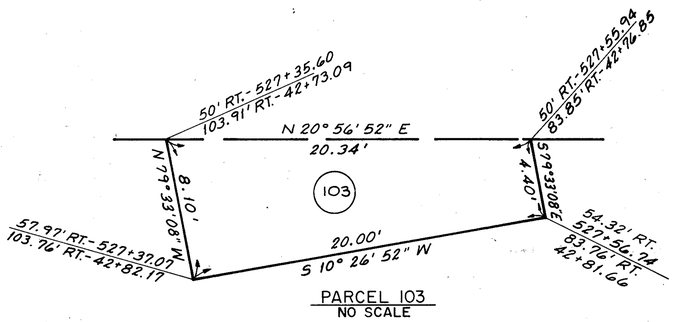

PARCEL 103
NO SCALE

VAL MAP 5478-V (A.C.&Y. R.R.)

PARCEL NO.	INSTRUMENT REQUIRED	AREA OF OVERLAP	TOTAL AREA
103R	AERIAL EASEMENT	125	3305
103	ROADWAY EASEMENT	-	125

PARCEL 103R

(9)	N 20°56'52"E	163.96'
(10)	S 83°44'05"E	20.68'
(11)	S 20°56'52"W	166.59'
(12)	N 76°28'59"W	20.17' (20.17'=ARC 1235.28'=R)

0 30 60 90
SCALE IN FEET

N & W RAILROAD - OPERATED BY
AKRON CANTON & YOUNGSTOWN RAILROAD