STATE OF OHIO
DEPARTMENT OF TRANSPORTATION
TUS-77-0.00
OXFORD TOWNSHIP
TUSCARAWAS COUNTY

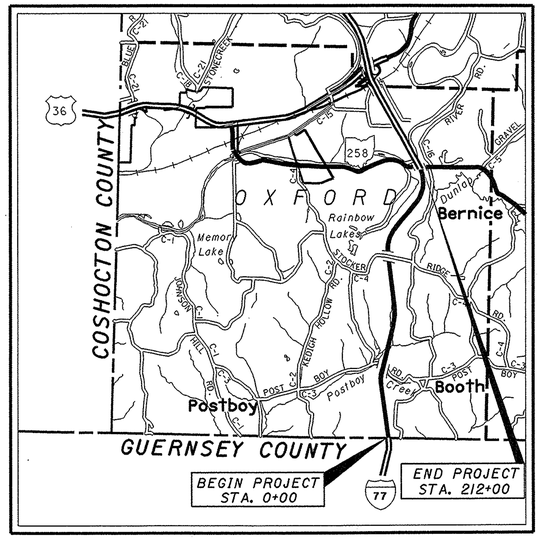

LOCATION MAP

LATITUDE: N40°15'00" LONGITUDE: W81°33'05"

SCALE IN MILES 0 1 2 3 4

N

PORTION TO BE IMPROVED
INTERSTATE HIGHWAY
STATE & FEDERAL ROUTES
COUNTY & TOWNSHIP ROADS
OTHER ROADS

DESIGN DESIGNATION

CURRENT ADT (2013)	17,600
DESIGN YEAR ADT (2025)	20,280
DESIGN HOURLY VOLUME (2025)	2,030
DIRECTIONAL DISTRIBUTION	53%
TRUCKS (24 HOUR B&C)	35%
DESIGN SPEED	70 MPH
LEGAL SPEED	65 MPH
DESIGN FUNCTIONAL CLASSIFICATION: RURAL INTERSTATE	
NHS PROJECT	YES

DESIGN EXCEPTIONS

NONE REQUIRED

INDEX OF SHEETS:

TITLE SHEET	1
SCHEMATIC PLAN	2
TYPICAL SECTIONS	3
GENERAL NOTES	4, 5
MAINTENANCE OF TRAFFIC	6, 7
GENERAL SUMMARY	8, 9
ESTIMATED QUANTITIES	10-12
PLAN SHEETS	13-17
MISCELLANEOUS DETAILS	18-20
TRAFFIC CONTROL	21

PROJECT EARTH DISTURBED AREA = N/A MAINTENANCE PROJECT
ESTIMATED CONTRACTOR EARTH DISTRUBED AREA = N/A MAINTENANCE PROJECT
NOTICE OF INTENT EARTH DISTURBED AREA = N/A MAINTENANCE PROJECT

STANDARD CONSTRUCTION DRAWINGS

BP-1.1	7-28-00					MT-101.70	4-15-11	TC-41.20	1-19-01	800	10-19-12
BP-2.1	7-18-08			MT-95.30	7-17-09	MT-101.90	10-21-11			821	4-20-12
BP-2.2	7-18-08							TC-42.20	1-21-11	823	7-15-11
						MT-102.30	4-17-09	TC-52.10	1-19-07	832	5-5-09
BP-2.5	7-18-08							TC-52.20	1-19-07		
BP-3.1	4-20-12					MT-105.10	1-16-09				
BP-9.1	4-15-05							TC-61.30	4-20-12		
		DM-4.3	4-17-09								
GR-1.1	7-16-04	DM-4.4	4-17-09					TC-65.10	4-20-12		
GR-2.1	1-16-04							TC-65.11	4-20-12		
GR-4.2	1-20-12			MT-99.20	1-16-09			TC-73.10	4-20-12		
GR-5.1	4-16-10										
GR-5.2	4-16-10										
GR-5.3	4-16-10										
GR-6.1	4-16-10										

SUPPLEMENTAL SPECIFICATIONS

SPECIAL PROVISIONS

ENGINEERS SEAL:

STATE OF OHIO JASON P. BERANEK E-67628 REGISTERED PROFESSIONAL ENGINEER

SIGNED: Jason P. Beranek
DATE: 7-19-2012

PLAN PREPARED BY:
O.D.O.T.
DISTRICT 11
NEW PHILADELPHIA, OHIO

UNDERGROUND UTILITIES
CONTACT BOTH SERVICES
CALL TWO WORKING DAYS
BEFORE YOU DIG
CALL
1-800-362-2764
(TOLL FREE)
OHIO UTILITIES PROTECTION SERVICE
NON-MEMBERS
MUST BE CALLED DIRECTLY
OIL & GAS PRODUCERS PROTECTIVE SERVICE CALL: **1-800-925-0988**

PROJECT DESCRIPTION

RESURFACING OF 4.02 MILES OF I.R. 77, INCLUDING NEW GUARDRAIL, PAVEMENT MARKING, AND RUMBLE STRIPS.

LIMITED ACCESS

THIS IMPROVEMENT IS ESPECIALLY DESIGNED FOR THROUGH TRAFFIC AND HAS BEEN DECLARED A LIMITED ACCESS HIGHWAY OR FREEWAY BY ACTION OF THE DIRECTOR IN ACCORDANCE WITH THE PROVISIONS OF SECTION 5511.02 OF THE OHIO REVISED CODE.

2010 SPECIFICATIONS

THE STANDARD SPECIFICATIONS OF THE STATE OF OHIO, DEPARTMENT OF TRANSPORTATION, INCLUDING CHANGES AND SUPPLEMENTAL SPECIFICATIONS LISTED IN THE PROPOSAL SHALL GOVERN THIS IMPROVEMENT.

I HEREBY APPROVED THESE PLANS AND DECLARE THAT THE MAKING OF THIS IMPROVEMENT WILL NOT REQUIRE THE CLOSING TO TRAFFIC OF THE HIGHWAY AND THAT PROVISIONS FOR THE MAINTENANCE AND SAFETY OF TRAFFIC WILL BE AS SET FORTH ON THE PLANS AND ESTIMATES.

UNDER AUTHORITY OF SECTION 4511.21, DIVISION (H) OF THE OHIO REVISED CODE, THE REVISED PRIMA FACIE SPEED LIMITS AS INDICATED HEREIN ARE DETERMINED TO BE REASONABLE AND SAFE, AND ARE HEREBY ESTABLISHED FOR THE DURATION OF THIS PROJECT. THE PRIMA FACIE SPEED LIMIT OR LIMITS HEREBY ESTABLISHED SHALL BECOME EFFECTIVE WHEN APPROPRIATE SIGNS GIVING NOTICE THEREOF ARE ERECTED.

APPROVED Lloyd V. MacAdam, P.E., P.S.
DATE 07/19/12 DISTRICT DEPUTY DIRECTOR

APPROVED Jerry Wray Jr.
DATE 8-6-12 DIRECTOR, DEPARTMENT OF TRANSPORTATION

FEDERAL PROJECT NO. E120(387)
PID NO. 78245
CONSTRUCTION PROJECT NO.
RAILROAD INVOLVEMENT NONE
TUS-77-0.00
1 / 21

TUS-90-77-0.00
128043
DIST 11
PID 78245
11/29/2012

Contract Proposal Available @www.contracts.dot.state.oh.us/home

I:\PROJECTS\78245\Prod\Dgn\GT001.dgn 19-JUL-2012 12:26PM

There are no existing landscaped ares within the work limits.

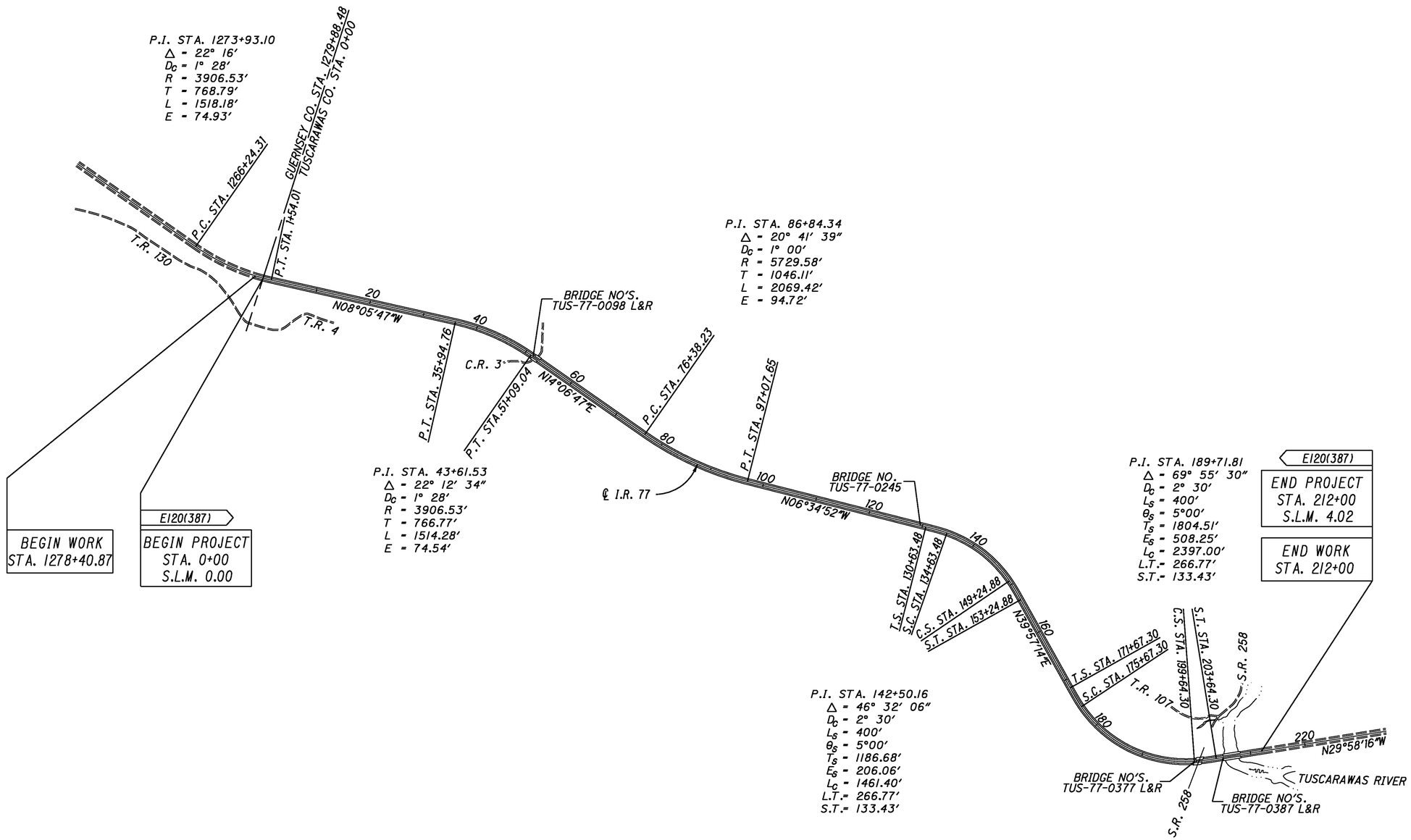

HORIZONTAL SCALE IN FEET
0 500 1000

CALCULATED RDA
CHECKED JPB

SCHEMATIC PLAN

TUS-77-0.00

I:\PROJECTS\78245\Prod\Dgn\GB001.dgn 20-JUL-2012 8:17AM ramstutz

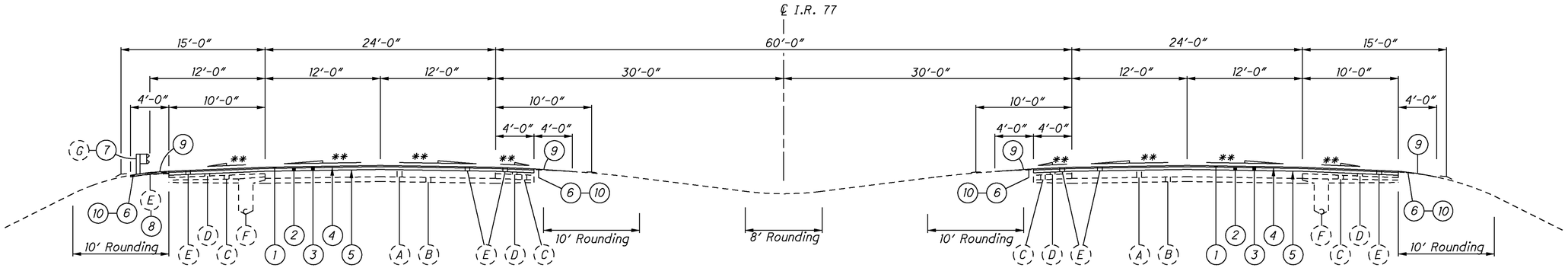

NORMAL SECTION

STA. 1+86.12 TO STA. 35+63.88
STA. 53+03.06 TO STA. 76+48.45
STA. 97+01.55 TO STA. 131+06.91
STA. 152+81.45 TO STA. 172+10.73
STA. 203+20.87 TO STA. 212+00.00

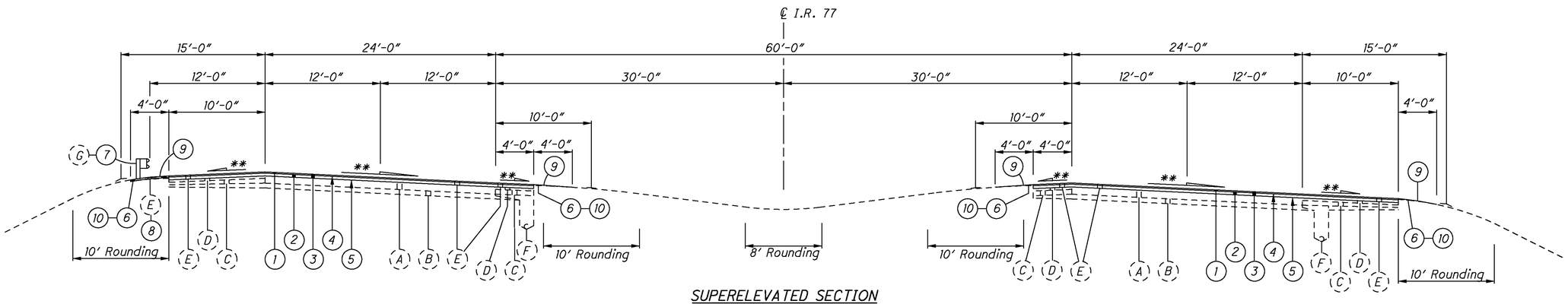

SUPERELEVATED SECTION

STA. 0+00 TO STA. 1+86.12
STA. 35+63.88 TO STA. 53+03.06
STA. 76+48.45 TO STA. 97+01.55
STA. 131+06.91 TO STA. 152+81.45
STA. 172+10.73 TO STA. 203+20.87

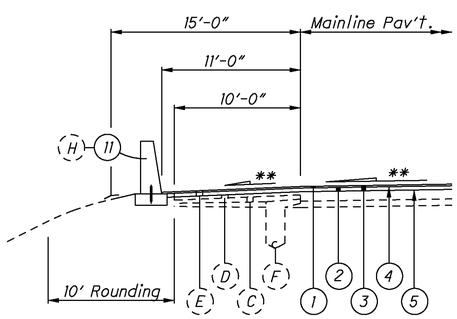

NORMAL BARRIER SECTION

Note: Pave to face of barrier

EXISTING LEGEND

- (A) EXISTING 9" REINFORCED CONCRETE PAVEMENT
- (B) EXISTING SUBBASE
- (C) EXISTING AGGREGATE BASE
- (D) EXISTING BITUMINOUS AGGREGATE BASE
- (E) EXISTING ASPHALT CONCRETE
- (F) EXISTING UNDERDRAIN
- (G) EXISTING GUARDRAIL
- (H) EXISTING 50" ROCK BARRIER

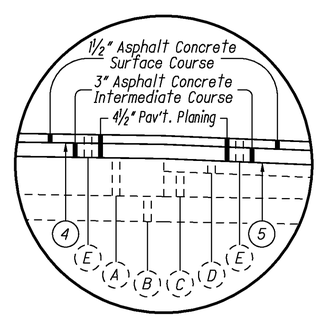

TYPICAL RESURFACING DETAIL
(MAINLINE & SHOULDER)

PROPOSED LEGEND

1. ITEM 442 - ASPHALT CONCRETE SURFACE COURSE, 12.5MM, TYPE B (446), AS PER PLAN
2. ITEM 442 - ASPHALT CONCRETE INTERMEDIATE COURSE, 19MM, TYPE B (446)
3. ITEM 254 - PAVEMENT PLANING, ASPHALT CONCRETE, AS PER PLAN (4 1/2" NOMINAL DEPTH TO CONCRETE)
4. ITEM 407 - TACK COAT FOR INTERMEDIATE COURSE (0.04 GAL./S.Y.)
5. ITEM 407 - TACK COAT (0.075 GAL./S.Y.)
6. ITEM 209 - LINEAR GRADING, AS PER PLAN
7. ITEM 606 - GUARDRAIL, TYPE 5
8. ITEM 202 - PAVEMENT REMOVED
9. ITEM 408 - PRIME COAT, AS PER PLAN
10. ITEM 617 - COMPACTED AGGREGATE
11. ITEM 512 - SEALING OF CONCRETE SURFACES (EPOXY-URETHANE)

CALCULATED RDA
CHECKED JPB

TYPICAL SECTIONS

TUS-77-0.00

I:\PROJECTS\78245\Prod\Dgn\GY001.dgn 20-JUL-2012 8:20AM ramstutz

ROUNDING

The rounding at slope breakpoints shown on the Typical Sections apply to all cross sections even though otherwise shown.

UTILITIES

There are no underground utilities shown on this plan. The nature of the work required by this project will not affect any known underground utilities that exist under or adjacent to the work area.

ELEVATION DATUM

All elevations are assumed, unless otherwise noted.

WORK LIMITS

The work limits shown on these plans are for the physical construction only. The installation and operation of all work zone traffic control and work zone traffic control devices required by these plans shall be provided by the Contractor whether inside or outside these work limits.

PROFILE AND ALIGNMENT

The work proposed by this project is for the grinding of the existing pavement. The alignment and superelevation rates of the existing pavement will not be changed and the profile of the proposed surface will be similar to that of the existing pavement. Previous construction plans showing the original alignment and profile are listed below.

PREVIOUS CONSTRUCTION PLANS

The following previous construction plans, which show the original alignment and profile, are available for inspection at the ODOT District 11 office:

TUS-77-0.00 Original Construction Plan, 1965
TUS-77-2.17 Original Construction Plan, 1966
TUS-77-0.00 Safety Upgrading Plan, 1988
TUS-77-0.00 Mill & Fill Plan, 2001
TUS-77-0.19 Rock Barrier Plan, 2005

SAME SEASON COMPLETION OF SURFACE COURSE

Any length of resurfacing work started in a construction season shall have the surface course placed that same season.

ITEM 201 - CLEARING AND GRUBBING

Although there are no trees or stumps specifically marked for removal within the limits of the project, a lump sum quantity is included in the General Summary for Item 201, Clearing and Grubbing.

The Contractor shall remove all trees and brush around the bridge structures under this item. The limits for this work are all trees and brush within twenty feet of the outside of the structures and, if applicable, between structures.

All provisions as set forth in the specifications under this item are included in the lump sum price bid for Item 201, Clearing and Grubbing.

CENTERLINE REFERENCE MONUMENTS

Existing centerline monument assemblies are located at the following stations on I.R. 77. The Contractor shall take care not to disturb any of these centerline reference monuments.

STATION	
P.T.	1+54.01
P.O.T.	6+00
P.O.T.	12+00
P.O.T.	18+00
P.O.T.	24+00
P.O.T.	30+00
P.C.	35+94.76
P.O.C.	41+00
P.O.C.	46+00
P.T.	51+09.04
P.O.T.	56+00
P.O.T.	61+00
P.O.T.	66+00
P.O.T.	71+00
P.C.	76+38.23
P.O.C.	82+00
P.O.C.	87+00
P.O.C.	92+00
P.T.	97+07.65
P.O.T.	103+00
P.O.T.	109+00
P.O.T.	114+00
P.O.T.	120+00
P.O.T.	126+00
P.C.	131+96.82
P.O.C.	138+00
P.O.C.	144+00
P.T.	151+91.60
P.O.T.	156+00
P.O.T.	162+00
P.O.T.	168+00
P.C.	173+00.64
P.O.C.	179+50
P.O.C.	185+00
P.O.C.	191+00
P.O.C.	196+50
P.T.	202+31.02
P.O.T.	209+00
P.O.T.	214+00
P.O.T.	220+00

ITEM 621 - RAISED PAVEMENT MARKER REMOVED

Existing raised pavement markers shall become the property of the Contractor for disposal off the project. The requirement to fill the depressions shall be waived. The following quantity has been carried to the General Summary to remove existing raised pavement markers:

Item 621, Raised Pavement Marker Removed - - - - - - - - 342 Each

ITEM 617 - COMPACTED AGGREGATE

Graded shoulders shall be reshaped as per the requirements of Item 617, Compacted Aggregate. Grindings may be used in lieu of Item 617, Compacted Aggregate. The cost for storing the grindings on the project and placing the grindings shall also be included in this item.

COORDINATION OF RESURFACING AND PLANING OPERATIONS

The pavement planing and resurfacing operation shall be completed in a timely manner as directed by the Engineer. The grindings shall become the property of the Contractor with the exception that some grindings may be utilized by the Contractor as noted in the plans.

ITEM 442 - ASPHALT CONCRETE SURFACE COURSE, 12.5mm, TYPE B (446), AS PER PLAN

Materials furnished for fine and coarse aggregates used in this item shall exclude all stone and crushed carbonate stone.

ITEM 408 - PRIME COAT, AS PER PLAN

The Contractor will apply "MC-70" at a rate of 0.4 gallons per square yard, or as determined by the Engineer, to the completed aggregate shoulder. A shield shall be provided to prevent the spraying or drifting of liquid bituminous material onto the edge of the pavement or edgeline. The attention of the Contractor is directed to 107.10 of the specifications.

ITEM 512 - SEALING OF CONCRETE SURFACES (EPOXY-URETHANE)

The Contractor shall apply the epoxy-urethane concrete sealer to all exposed sufaces of the concrete rock barrier. The epoxy sealer shall be tinted Federal Color Standard No. 1778 (Light Neutral).

ITEM 254 - PAVEMENT PLANING, ASPHALT CONCRETE

The Contractor shall plane the existing asphalt to a depth that will expose a clean concrete surface.

ITEM 254 - PAVEMENT PLANING, ASPHALT CONCRETE, AS PER PLAN

This item shall include hauling the grindings from the pavement planing operation to the address listed below and stockpiling the material in a manner acceptable to the Engineer. Continuous end dumping will not be permitted.

1000 Tons (4000 S.Y.) delivered to:

Newcomerstown Outpost
600 N. College St.
Newcomerstown, Ohio 43832

All labor, equipment, and incidentals necessary to complete the above work shall be included in the square yard bid price for Item 254 Pavement Planing, Asphalt Concrete, As Per Plan.

CALCULATED RDA CHECKED JPB

GENERAL NOTES

TUS-77-0.00

I:\PROJECTS\78245\Prod\Dgn\GN001.dgn 23-JUL-2012 8:40AM ramstutz

ITEM 606 - ANCHOR ASSEMBLY, TYPE E

This item shall consist of furnishing and installing any of the guardrail end terminals as listed on Roadway Engineering's Web Page under roadside safety devices for approved guardrail end treatments. Installation shall be at the locations specified in the plans, in accordance with the manufacturer's specifications.

The face of the Type E impact head shall be covered with a sheet of Type G reflective sheeting, per CMS 730.19.

Refer to the manufacturer's instruction reguarding the installation of, and the grading around the foundation tubes and ground strut. The top of any foundation tube should be less than 4-inches above the ground. The placement of the foundation tubes should be an appropriate depth below the level line in order to maintain the finished guardrail height of 27.75 inches from the edge of the shoulder.

On-site grading is required if the top of the foundation tubes or top of the ground strut does project more than 4 inches above the ground line.

Payment for the above work shall be made at the unit price bid for Item 606, Anchor Assembly, Type E, Each, and shall include all labor, tools, equipment and materials necessary to construct a complete and functional anchor assembly system, including all related transitions, reflective sheeting, hardware, grading, embankment and excavation not separately specified, as required by the manufacturer. Grading, embankment and excavation shall be as detailed in the ODOT Standard Construction Drawings.

ITEM 606 - ANCHOR ASSEMBLY, TYPE B

This item shall consist of furnishing and installing any of the guardrail end terminals as listed on Roadway Engineering's Web Page under roadside safety devices for approved guardrail end treatments. Installation shall be at the locations specified in the plans, in accordance with the manufacturer's specifications.

Refer to the manufacturer's instruction reguarding the installation of, and the grading around the foundation tubes and ground strut. The top of any foundation tube should be less than 4-inches above the ground. The placement of the foundation tubes should be an appropriate depth below the level line in order to maintain the finished guardrail height of 27.75 inches from the edge of the shoulder.

On-site grading is required if the top of the foundation tubes or top of the ground strut does project more than 4 inches above the ground line.

The face of the Type B impact head shall be covered with a sheet of Type G reflective sheeting, per CMS 730.19.

Payment for the above work shall be made at the unit price bid for Item 606, Anchor Assembly, Type B, Each, and shall include all labor, tools, equipment and materials necessary to construct a complete and functional anchor assembly system, including reflective sheeting and all related hardware, grading, embankment and excavation not separately specified, as required by the manufacturer. Grading, embankment and excavation shall be as detailed in the ODOT Standard Construction Drawings.

CONNECTION BETWEEN EXISTING AND PROPOSED GUARDRAIL

When it is necessary to splice proposed guardrail to existing guardrail, only the existing guardrail shall be cut, drilled, or punched. The connection shall be made using a "W-Beam Rail Splice" as shown in AASHTO M 180. Payment shall be included in the contract price for the respective guardrail items.

GUARDRAIL PLACEMENT

No hazard shall be left unprotected except for the actual time necessary to remove the existing guardrail, prepare the site, and install new guardrail in a continuous operation. The removal of all guardrail shall at all times be as directed by the Engineer. No guardrail shall be removed until the replacement material is on the site, ready for installation. Failure to comply with this requirement shall be deemed sufficient cause to order work suspended until such time as the Engineer is assured of compliance.

MAINTAINING TRAFFIC, AS PER PLAN

The Contractor shall maintain traffic at all times in accordance with the requirements of CMS Item 614, these maintenance of traffic notes and details, the Standard Construction Drawings, and the traffic control details described in these plans.

The minimum lane width for traffic control shall be 11 feet at all times. It is the responsibility of the Contractor to organize his work in such a manner to provide the most safety with the least inconvenience to the traveling public.

The Contractor is responsible for designing the maintenance of traffic scheme. The Contractor shall submit, in writing, this maintenance of traffic scheme and a schedule of operations to the Engineer and receive approval before work is started on the project.

The proposed median shoulder work shall be completed before traffic is permitted to be maintained on it.

Any open pavement trench or dropoff shall be adequately maintained and protected. The protection used shall meet the requirements of Standard Construction Drawing MT-101.90.

Under no circumstances shall the Contractor be permitted to have work zones which alternately close both the passing and travel lane unless the distance between the lane restrictions exceeds 2 miles.

The Contractor shall be responsible for smooth and orderly flow of traffic through the project area 24 hours per day for the duration of the project. This consists of notifying the Ohio State Patrol after encountering any accidents or disabled vehicles or objects hindering the flow of traffic.

The Contractor shall designate to the Engineer a person responsible for maintenance of traffic control during non-work hours who shall be available within (30) minutes after notification.

Payment for providing watchmen, furnishing, erecting, maintaining and removing signs, cones, markers, special lighting, floodlighting, work zone pavement markings, work zone raised pavement markers, etc., shall be included in the lump sum price bid for Item 614 Maintaining Traffic, As Per Plan.

The Contractor shall furnish, install and maintain all additional signs or other traffic control devices as required above. All costs involved in furnishing, installing and maintaining these devices shall be included in the lump sum price bid for Item 614, Maintaining Traffic, As Per Plan.

Unless the Engineer deems it physically impossible, all construction equipment shall exit all work zones from the downstream end of the work zone or by interchange ramps. Under no circumstances shall the Contractor be permitted to directly transport or operate any equipment across the open lanes of the roadway.

Length and duration of lane closures and restrictions shall be at the approval of the Engineer. It is the intent to minimize the impact to the traveling public. Lane closures or restrictions over segments of the project in which no work is anticipated within a reasonable time frame, as determined by the Engineer, shall not be permitted. The level of utilization of maintenance of traffic devices shall be commensurate with the work in progress.

The Contractor will perform all work on this project that requires a lane closure during the following hours:

- 6:00 am Monday thru 12:00 am Friday.

The Contractor will not perform any work on this project that requires a lane closure during the following hours:

- 12:01 am Friday thru 6:00 am Monday.

The planing and resurfacing will proceed continuously a minimum of five (5) days per week, weather permitting, excepting holidays and events listed below:

No work shall be performed and all existing lanes shall be open to traffic during the following designated holidays and events:

Memorial Day	Fourth of July
Labor Day	Thanksgiving

The period of time that the lanes are to be opened depends on the day of the week on which the holiday or event falls. The following schedule shall be used to determine this period:

Day of the week	Time all lanes must be opened to traffic
Sunday	12:00N Friday through 12:00N Monday
Monday	12:00N Friday through 12:00N Tuesday
Tuesday	12:00N Monday through 12:00N Wednesday
Wednesday	12:00N Tuesday through 12:00N Thursday
Thursday	12:00N Wednesday through 12:00N Monday
Friday	12:00N Thursday through 12:00N Monday
Saturday	12:00N Friday through 12:00N Monday

MAINTAINING TRAFFIC, AS PER PLAN cont.

No extensions of time shall be granted for delays in material deliveries, unless such delays are industry-wide, or for labor strikes, unless such strikes are area-wide.

All work and traffic control devices shall be in accordance with 614 and other applicable portions of the specifications, as well as the Ohio Manual of Uniform Traffic Control Devices. Payment for all labor, equipment and materials shall be included in the lump sum contract price for Item 614, Maintaining Traffic, As Per Plan, unless separately itemized in the plan.

NOTIFICATION OF WORK ZONE LANE RESTRICTIONS

The Contractor shall notify the Engineer at least eighteen (18) days prior to implementing any work zone restriction that will reduce the width or vertical clearance of any lane on which traffic will be maintained during construction. The Engineer shall immediately notify the District Roadway Services Manager to advise the Office of Highway Management of the restrictions.

CONTRACTOR'S EQUIPMENT - OPERATION AND STORAGE

In addition to the requirements of section 614.03 of the Construction and Material Specifications the following shall apply. The Contractor's equipment shall be operated in the direction of traffic where practical. A flagger shall be used where the Contractor's equipment must merge with the traffic stream. The Contractor's vehicles and equipment shall be equipped with at least one amber flashing light.

Equipment may be parked in areas along the highway, thirty feet (30') from the edge of traveled highway unless behind guardrail, when various operations are scheduled to continue the next workday. On weekends or at other times of suspension of work, the equipment shall be stored at a storage area removed from the interstate route right of way. No equipment shall be parked in the median of the highway. Adequate barricades and light shall be placed on the pavement side of the equipment to identify the limits of the equipment. All other equipment, including private vehicles, shall be stored at the approved Contractor's storage area.

COORDINATION OF RESURFACING AND PLANING OPERATIONS

The pavement planing and resurfacing operation shall be completed in a timely manner. The 442 Intermediate course shall be placed no more than seven (7) days after reaching the final milled surface.

FLOODLIGHTING

Floodlighting of the work site for operations conducted during night time periods shall be accomplished so that the lights do not cause glare to the drivers on the roadway. To ensure the adequacy of the floodlight placement, the Contractor and the Engineer shall drive throughout the worksite each night when the lighting is in place and operative prior to commencing any work. If glare is detected, the light placement and shielding shall be adjusted to the satisfaction of the Engineer before work proceeds. Payment for all labor, equipment and materials shall be included in the lump sum contract price for Item 614, Maintaining Traffic, As Per Plan.

ITEM 614, ASPHALT CONCRETE FOR MAINTAINING TRAFFIC

The following estimated quantity has been carried to the General Summary for use as directed by the Engineer:

Item 614, Asphalt Concrete for Maintaining Traffic - - - 100 Cu. Yd.

ITEM 614, REPLACEMENT DRUM

Drums furnished by the Contractor in accordance with the requirements of the plans, specifications and proposal which become damaged by traffic for reasons beyond the control of the Contractor shall be replaced in kind when ordered by the Engineer. Replacement drums shall be new.

Payment for the new drums shall be made at the contract price per each for Item 614, Replacement Drum, and shall include the cost of removing and disposing of the damaged drum, and providing and maintaining the replacement drum in accordance with the contract requirements for the original drum.

An estimated quantity of 50 each has been provided in the General Summary.

MOVEMENT OF DRUMS

The row of drums along a closed lane shall be moved out of the open lane onto the new pavement as soon as paving operations permit.

WORK ZONE PAVEMENT MARKINGS AND SIGNS

The Contractor shall be required to install work zone markings and signs at locations identified by the Engineer per the requirements of CMS 614.04 and 614.11.

Work zone pavement markings shall be 642 paint.

Prior to placement of any work zone pavement markings, the Contractor shall completely obliterate, as per 641.10, all existing pavement markings that would create confusion or conflict with the work zone pavement markings.

The following estimated quantity has been carried to the General Summary for work zone pavement markings:

Item 614, Work Zone Lane Line, Class 1, 642 Paint - - - - - - - 24.09 Mile
Item 614, Work Zone Edge Line, Class 1, 642 Paint - - - - - - - 48.24 Mile

Work zone raised pavement markers cannot be used to simulate (replace) any type of work zone pavement marking.

The following estimated quantity has been carried to the General Summary for work zone signs:

Item 614, Work Zone Marking Sign (W8-11-36) - - - - - - - - 8 Each
Item 614, Replacement Sign - - - - - - - - - - - - - - - - 2 Each

ITEM 614 - WORK ZONE INCREASED PENALTIES SIGN (R11-H5a)

R11-H5a-48 signs shall be furnished, erected, and maintained in good condition and/or replaced as necessary and subsequently removed by the Contractor. Signs shall be mounted at the appropriate offsets and elevations as prescribed by the Ohio Manual of Uniform Traffic Control Devices. They shall be maintained on supports meeting current safety criteria.

The signs may be erected or uncovered no more than four hours before the actual start of work. The signs shall be removed or covered no later than four hours following restoration of all lanes to traffic with no restrictions, or sooner as directed by the Engineer. Temporary sign covering and uncovering due to temporary lane restorations shall be guided by the four-hour limitations stated above. Such lane restorations should be expected to remain in effect for 30 or more consecutive calendar days, such as during winter shut-downs.

The signs shall be dual mounted. The first sign shall be placed between the "ROAD WORK AHEAD" (W20-1) sign and the next sign in the sequence. Signs shall be erected on each entrance ramp and every 2 miles through the construction work limits.

The Contractor may use signs and supports in used, but good, condition provided the signs meet current ODOT specifications. Sign faces shall be reflectorized with Type G sheeting complying with the requirements of CMS 730.19.

Work zone increased penalties signs and supports will be measured as the number of sign installations, including the sign and necessary supports. If a sign and support combination is removed and re-erected at another location as directed by the Engineer, it shall be considered as another unit.

Payment for accepted quantities, complete in place, will be made at the contract unit price. Payment shall be full compensation for all materials, labor, incidentals and equipment for furnishing, erecting, maintaining, covering during suspension of work, and removal of the sign and support.

Item 614, Work Zone Increased Penalties Sign - - - - - - 8 Each

DROPOFFS IN WORK ZONES

The wedge treatment as detailed in Standard Drawing MT-101.90 will be required and shall be included in the lump sum bid for Item 614 - Maintaining Traffic, As Per Plan.

EXISTING RUMBLE STRIPS

If the Contractor chooses to move traffic onto the outside shoulder to maintain two lanes of travel, the existing rumble strips will have to be removed. The area of the existing rumble strips shall be milled at least 2 inches; the milled surface and the sides need to be covered with ODOT approved AC liquid and then filled with asphalt. Pavement for Maintaining Traffic Class A shall be used to fill the rumble strips. Payment for all work associated with milling, AC liquid, traffic control and the filling of the rumble strips shall be considered incidental to and included with Item 614 Maintaining Traffic, As Per Plan.

CALCULATED RDA
CHECKED JPB

MAINTENANCE OF TRAFFIC

TUS-77-0.00

I:\PROJECTS\78245\Prod\Dgn\GN001.dgn 20-JUL-2012 8:25AM ramstutz

ITEM 614 - WORK ZONE SPEED LIMIT SIGN

The Contractor shall furnish, install, maintain, cover during suspension of work, and subsequently remove Work Zone Speed Limit (R2-1-48) (55 MPH Speed Limit) signs and supports within the work limits in accordance with the following requirements:

The Contractor shall cover or remove any existing Speed Limit signs within the reduced Speed Zone. These signs shall be restored during suspension or termination of the reduced speed limit. The expense of covering or removal and restoration of existing Speed Limit or Minimum Speed Limit signs shall be included in the pay item for the Work Zone Speed Limit signs.

The Work Zone Speed Limit signs may be erected or uncovered no more than 4 hours before the actual start of work. The signs shall be removed or covered no later than 4 hours following restoration of all lanes to traffic with no restrictions, or sooner as directed by the Engineer. Temporary sign covering and uncovering due to temporary lane restorations shall be guided by the four-hour limitations stated above. Such lane restorations should be expected to remain in effect for 30 or more days, such as during winter shut-downs. Cleanup work and other work beyond the shoulder such as seeding, to be performed after restoration of all full-width lanes and shoulders to traffic, does not constitute a condition warranting a speed reduction. Therefore, when activity is limited to such work, the speed limit in effect shall be the normal speed limit for the site.

Construction and Material Specifications, Item 614, Paragraph 614.02(B) indicates that the two directions of a divided highway are considered separate highway sections. Therefore, if the work on a multi-lane divided highway is limited to only one direction, speed reduction in the direction of the work does not automatically constitute speed reduction in the opposite direction. Speed limit reduction in the opposite direction, in such case, is appropriate only if conditions are expected to have an impact on the directional traffic flow, as directed by the Engineer.

The Contractor shall erect a Work Zone Speed Limit sign in advance of any lane restriction expected to last at least 30 consecutive calendar days, or as directed by the Engineer. The sign shall be mounted on both sides of a directional roadway of divided highways. The first Work Zone Speed Limit sign shall be placed 500 feet in advance of the lane reduction or shift taper or other roadway or shoulder restriction. On undivided highways the sign shall be mounted on the right side, approximately 250 feet in advance of such restrictions. The sign shall be repeated every 1 mile for 55 mph zones and every one-half mile for 50 mph and 45 mph zones. These signs shall also be erected immediately after each open entrance ramp within the zone.

On projects for which the activity or roadway restriction is limited to one section of the project for at least thirty days and then is moved to another section of the project upon completion of work in the first section, the speed limit reduction shall be limited to only the active portion of the project at the given time. Signing for a speed limit reduction, as well as all other advance construction signing, shall be relocated when the concentration of activity is relocated.

On projects for which speed reduction is called for on more than one roadway, the display of reduced speed limit signing on a given roadway shall be dependent on the scheduling of work activity on the given roadway.

Speed Reduction signs (W3-5) shall be erected in advance of the speed reduction, approximately 1250 feet on multi-lane highways and 500 feet on 2-lane highways.

A sign(s) to indicate the resumption of the statutory speed limit shall be erected at the end of any reduced Speed Zone, typically at the point where roadway and shoulder widths return to normal. On undivided roadways, the R2-1 (Speed Limit) sign shall be used. On divided highways where the speed limit varies by vehicle type, the R2-1 (Speed Limit) sign and the R2-H2a (Truck Speed Limit) signs shall be mounted side-by-side on separate supports. The Contractor may use signs and supports in used, but good condition, provided the signs meet current ODOT specifications. Sign faces shall be retroreflectorized with Type G sheeting complying with the requirements of CMS 730.19.

Work Zone Speed Limit signs shall be mounted on two Item 630, Ground Mounted Supports, No. 3 Posts.

Work Zone Speed Limit signs and supports will be measured as the number of sign installations, including the signs and necessary supports. If a sign and support combination is removed and reerrected at another location within the project due to changes in the Speed Zone directed by the Engineer, it shall be considered another unit.

Payment for accepted quantities, complete in place, will be made at the contract unit price. Payment shall be full compensation for all materials, labor, incidentals and equipment for furnishing, erecting, maintaining, covering during suspension of work, and removing the signs and supports. Speed limit signing for the point of resumption of the statutory speed limit shall be paid for as Work Zone Speed Limit signs. The following estimated quantity has been carried to the General Summary.

Item 614, Speed Zone Ahead Symbol Sign - - - - - - - - 4 Each
Item 614, Work Zone Speed Limit Sign - - - - - - - - - 16 Each

ITEM 614 - LAW ENFORCEMENT OFFICER (WITH PATROL CAR) FOR ASSISTANCE DURING CONSTRUCTION OPERATIONS

Use of Law Enforcement Officers (LEOs) by Contractors other than the uses specified below will not be permitted at project cost. LEOs should not be used where the Ohio Manual of Uniform Traffic Control Devices (OMUTCD) intends that flaggers be used.

In addition to the requirements of CMS 614 and the OMUTCD, a uniformed LEO with an official patrol car (car with top-mounted emergency flashing lights and complete markings of the appropriate law enforcement agency) shall be provided for the following traffic control tasks:

For lane closures:
During initial set-up periods, tear down periods, substantial shifts of a closure point or when new lane closure arrangements are initiated for long-term lane closures/shifts (for the first and last day of major changes in traffic control setup). In general, LEOs should be positioned at the point of lane restriction or road closure and to manually control traffic movements through intersections in work zones.

When construction vehicles are entering/exiting the zone directly from/into an open lane of traffic. If a lane has been closed to provide an acceleration/deceleration lane for the vehicle, the LEO will not be required.

LEOs should not forgo their traffic control responsibilities to apprehend motorists for routine traffic violations. However, if a motorist's actions are considered to be reckless, then pursuit of the motorist is appropriate.

The LEOs work at the direction of the Contractor. The Contractor is responsible for securing the services of the LEOs with the appropriate agencies and communicating the intentions of the plans with respect to duties of the LEOs. The Engineer shall have final control over the LEO's duties and placement, and will resolve any issues that may arise between the two parties.

The LEO shall report in to the Contractor prior to the start of the shift, in order to receive instructions regarding specific work assignments during his/her shift. The LEO is expected to stay at the project site for the entire duration of his/her shift. The LEO shall report to the Contractor at the end of his/her shift. Once the LEO has completed the duties described above and still has time remaining on his/her shift, the LEO may be asked to patrol through the work zone (with flashing lights off) or be placed at a location to deter motorists from speeding. Should it be necessary to leave the project site, the LEO shall notify the Engineer. The Contractor shall provide the LEO with a two-way communication device which shall be returned to the Contractor at the end of his/her shift.

LEOs (with patrol car) required by the traffic maintenance tasks above shall be paid for on a unit price (hourly) basis under Item 614, Law Enforcement Officer (with patrol car) for Assistance. The following estimated quantity has been carried to the General Summary.

Item 614, Law Enforcement Officer with Patrol Car for Assistance - - 50 Hours

The hours paid shall include minimum show-up time required by the law enforcement agency involved.

Any additional costs (administrative or otherwise) incurred by the Contractor to obtain the services of an LEO are included with the bid unit price for Item 614, Law Enforcement Officer with Patrol Car for Assistance.

SHEET NUMBER										OFFICE CALC'S.	PARTICIPATION			ITEM	ITEM EXT.	GRAND TOTAL	UNIT	DESCRIPTION	SEE SHEET NO.
4		11	12					20				01/IMS/PV	02/NFP/OT						
																		ROADWAY	
LUMP												LUMP		201	11000	LUMP		CLEARING AND GRUBBING	4
		9,739										9,739		202	23000	9,739	SQ YD	PAVEMENT REMOVED	
		21,975										21,975		202	38000	21,975	FT	GUARDRAIL REMOVED	
		7										7		202	42000	7	EACH	ANCHOR ASSEMBLY REMOVED, TYPE A	
		8										8		202	42010	8	EACH	ANCHOR ASSEMBLY REMOVED, TYPE E	
		12										12		202	42040	12	EACH	ANCHOR ASSEMBLY REMOVED, TYPE T	
										825		825		209	60200	825	STATION	LINEAR GRADING	
			3,626									3,626		512	10100	3,626	SQ YD	SEALING OF CONCRETE SURFACES (EPOXY-URETHANE)	4
		21,962.5										21,962.5		606	13000	21,962.5	FT	GUARDRAIL, TYPE 5	
		87.5										87.5		606	15500	87.5	FT	GUARDRAIL, BARRIER DESIGN, TYPE 5	
		3										3		606	26000	3	EACH	ANCHOR ASSEMBLY, TYPE B	5
		15										15		606	26100	15	EACH	ANCHOR ASSEMBLY, TYPE E	5
		12										12		606	26500	12	EACH	ANCHOR ASSEMBLY, TYPE T	
																		EROSION CONTROL	
												1000		832	30000	1000	EACH	EROSION CONTROL	
																		DRAINAGE	
								200				200		605	31100	200	FT	AGGREGATE DRAINS	20

CALCULATED RDA
CHECKED JPB

GENERAL SUMMARY

TUS-77-0.00

I:\PROJECTS\78245\Prod\Dgn\GG001.dgn 20-JUL-2012 8:28AM ramstutz

SHEET NUMBER 4	6	7	11	12		19	20	21		OFFICE CALC'S.	PARTICIPATION	01/IMS/PV	02/NFP/OT	ITEM	ITEM EXT.	GRAND TOTAL	UNIT	DESCRIPTION	SEE SHEET NO.
																		PAVEMENT	
							1,055					1,055		253	01000	1,055	SQ YD	PAVEMENT REPAIR	20
						738				170,149		170,887		254	01000	170,887	SQ YD	PAVEMENT PLANING, ASPHALT CONCRETE	4
										4,000			4,000	254	01001	4,000	SQ YD	PAVEMENT PLANING, ASPHALT CONCRETE, AS PER PLAN	4
							1,808					1,808		255	10151	1,808	SQ YD	FULL DEPTH PAVEMENT REMOVAL AND RIGID REPLACEMENT, CLASS MS, AS PER PLAN	20
							5,424					5,424		255	20000	5,424	FT	FULL DEPTH PAVEMENT SAWING	20
						55				13,061		13,116		407	10000	13,116	GALLON	TACK COAT	
						30				6,966		6,996		407	14000	6,996	GALLON	TACK COAT FOR INTERMEDIATE COURSE	
										14,665		14,665		408	10001	14,665	GALLON	PRIME COAT, AS PER PLAN	4
						31				7,256		7,287		442	10051	7,287	CU YD	ASPHALT CONCRETE SURFACE COURSE, 12.5 MM, TYPE B (446), AS PER PLAN	4
										14,512		14,512		442	10150	14,512	CU YD	ASPHALT CONCRETE INTERMEDIATE COURSE, 19MM, TYPE B (446)	
						61						61		442	20250	61	CU YD	ASPHALT CONCRETE INTERMEDIATE COURSE, 19MM, TYPE B (448)	
			550							1,054		1,604		617	10100	1,604	CU YD	COMPACTED AGGREGATE	4
										82,492		82,492		618	40100	82,492	FT	RUMBLE STRIPS, (ASPHALT CONCRETE)	
																		TRAFFIC CONTROL	
								354				354		621	00100	354	EACH	RPM	
342												342		621	54000	342	EACH	RAISED PAVEMENT MARKER REMOVED	4
			254	41								295		626	00100	295	EACH	BARRIER REFLECTOR	
								16.06				16.06		642	00104	16.06	MILE	EDGE LINE, 6", TYPE 1	
								8.03				8.03		642	00204	8.03	MILE	LANE LINE, 6", TYPE 1	
																		MAINTENANCE OF TRAFFIC	
		50										50		614	11110	50	HOUR	LAW ENFORCEMENT OFFICER WITH PATROL CAR FOR ASSISTANCE	7
		4										4		614	12410	4	EACH	SPEED ZONE AHEAD SYMBOL SIGN	7
	8											8		614	12460	8	EACH	WORK ZONE MARKING SIGN	6
		16										16		614	12470	16	EACH	WORK ZONE SPEED LIMIT SIGN	7
	8											8		614	12484	8	EACH	WORK ZONE INCREASED PENALTIES SIGN	6
	2											2		614	12500	2	EACH	REPLACEMENT SIGN	6
	50											50		614	12600	50	EACH	REPLACEMENT DRUM	6
	100											100		614	13000	100	CU YD	ASPHALT CONCRETE FOR MAINTAINING TRAFFIC	6
	24.09											24.09		614	20100	24.09	MILE	WORK ZONE LANE LINE, CLASS I, 642 PAINT	6
	48.18											48.18		614	22100	48.18	MILE	WORK ZONE EDGE LINE, CLASS I, 642 PAINT	6
	LUMP											LUMP		614	11001	LUMP		MAINTAINING TRAFFIC, AS PER PLAN	6
												4		619	16010	4	MONTH	FIELD OFFICE, TYPE B	
												LUMP		624	10000	LUMP		MOBILIZATION	
												LUMP		823	10000	LUMP		CONSTRUCTION LAYOUT STAKES	

CALCULATED RDA
CHECKED JPB

GENERAL SUMMARY

TUS-77-0.00

I:\PROJECTS\78245\Prod\Dgn\GG001.dgn 20-JUL-2012 8:29AM ramstutz

REF. NO.	PLAN SHEET NO.	STATION FROM	STATION TO	SIDE	202 PAVEMENT REMOVED SQ. YD.	202 GUARDRAIL REMOVED FT.	202 ANCHOR ASSEMBLY REMOVED TYPE A EACH	202 ANCHOR ASSEMBLY REMOVED TYPE T EACH	202 ANCHOR ASSEMBLY REMOVED TYPE E EACH	606 GUARDRAIL, TYPE 5 FT.	606 GUARDRAIL, BARRIER DESIGN, TYPE 5 FT.	606 ANCHOR ASSEMBLY TYPE E EA.	606 ANCHOR ASSEMBLY TYPE T EA.	606 ANCHOR ASSEMBLY TYPE B EA.	617 2" COMPACTED AGGREGATE LENGTH	617 2" COMPACTED AGGREGATE WIDTH	617 2" COMPACTED AGGREGATE CU. YD.	626 BARRIER REFLECTOR A EA.	COMMENTS
1-GR	13	1278+78.90 1278+40.87	10+96.75 10+96.75	RT	555.56	1212.5				1200		1			1250	4	30.86	13	Connect to existing BTA Type 1 thrie-beam transition section
2-GR	13	0+26 0+26	10+01 10+01	LT	433.33	912.5		1	1	912.5		1	1		975	4	24.07	11	
3-GR	13	16+74 16+74	23+24 23+24	LT	288.89	637.5		1		637.5			1		650	4	16.05	7	Connect to existing BTA Type 2 W-beam terminal connector
4-GR	13	18+81.75 18+81.75	24+19.25 24+19.25	RT	238.89	487.5			1	487.5		1			537.5	4	13.27	6	Connect to existing BTA Type 1 thrie-beam transition section
5-GR	13	31+38.73 31+38.73	32+51.23 32+51.23	LT	50	62.5			1	62.5		1			112.5	4	2.78	2	Connect to existing BTA Type 1 thrie-beam transition section
6-GR	13 & 14	43+43.66 43+43.66	51+19.07 51+19.07	RT	338.89	700	1			712.5		1			762.5	4	18.83	9	Connect to existing BTA Type A
7-GR	14	49+66 48+86.51	51+35.82 51+35.82	RT		125	1			225				1				4	Connect to existing BTA Type A For grading and installation details, see Std. Dwg. GR-6.1
8-GR	14	53+01.47 53+01.47	55+01.50 55+50.07	LT		162.5	1			225				1				4	Connect to existing BTA Type A For grading and installation details, see Std. Dwg. GR-6.1
9-GR	13 & 14	44+70 44+83.25	51+85.15 51+85.15	LT	316.67	700		1		700			1		712.5	4	17.59	8	Connect to existing BTA Type 2 W-beam terminal connector
10-GR	14	53+18.47 53+18.47	68+81.50 69+18.45	LT	711.11	1550	1			1550		1			1600	4	39.51	18	Connect to existing BTA Type A
11-GR	14	58+77.76 58+77.76	79+25 79+25	RT	911.11	1987.5		1	1	1987.5		1	1		2050	4	50.62	21	
12-GR	14 & 15	79+24.50 79+24.50	106+20.09 106+20.09	LT	1188.89	2612.5		1	1	2612.5		1	1		2675	4	66.05	28	
13-GR	15	101+14 101+14	115+39 115+39	RT	633.33	1362.5		1	1	1362.5		1	1		1425	4	35.19	15	
14-GR	15	113+25 113+25	118+25 118+25	LT	222.22	437.5		1	1	437.5		1	1		500	4	12.35	6	
15-GR	15	(No Work)		RT															
16-GR	15	135+61 135+51.73	148+00 148+00	RT	538.89	1162.5	1	1		1150		1	1		1212.5	4	29.94	13	
17-GR	15 & 16	135+50.30 135+50.30	160+41.79 160+41.79	LT	1127.78	2475		1	1	2475		1	1		2537.5	4	62.65	26	
18-GR	15 & 16	152+76 152+75	158+50 158+50	RT	255.56	537.5	1	1		512.5		1	1		575	4	14.2	7	
19-GR	16	163+50 163+50	168+00 168+00	LT	200	412.5	1	1		387.5		1	1		450	4	11.11	5	
20-GR	16	(No Work)		RT															
21-GR	16	178+44.45 178+44.45	200+05.49 200+05.49	LT	933.33	2087.5		1		2087.5			1		2100	4	51.85	22	Connect to existing BTA Type 2 W-beam terminal connector
22-GR	16	189+05.50 189+05.50	199+26.11 199+26.11	RT	466.67	1050				1000		1			1050	4	25.93	11	Connect to existing BTA Type A
23-GR	16	197+45 196+98.42	199+43.79 199+43.79	RT		200				225				1				4	Connect to existing BTA Type A
24-GR	16	200+82.82 200+82.82	204+81.28 204+81.28	RT	177.78	400				400					400	4	9.88	5	Connect to existing BTA Type 2 W-beam terminal connector and existing BTA Type A
SUB-TOTALS CARRIED TO SHEET 11					9588.90	21,275	7	12	8	21,350		15	12	3			532.73	245	

CALCULATED RDA
CHECKED JPB

GUARDRAIL SUB-SUMMARY

TUS-77-0.00

I:\PROJECTS\78245\Prod\Dgn\GQ001.dgn 20-JUL-2012 8:30AM ramstutz

REF. NO.	PLAN SHEET NO.	STATION FROM	STATION TO	SIDE	202 PAVEMENT REMOVED SQ. YD.	202 GUARDRAIL REMOVED FT.		202 ANCHOR ASSEMBLY REMOVED TYPE A EACH	202 ANCHOR ASSEMBLY REMOVED TYPE T EACH	202 ANCHOR ASSEMBLY REMOVED TYPE E EACH	606 GUARDRAIL, TYPE 5 FT.		606 GUARDRAIL, BARRIER DESIGN, TYPE 5 FT.	606 ANCHOR ASSEMBLY TYPE E EA.		606 ANCHOR ASSEMBLY TYPE T EA.	606 ANCHOR ASSEMBLY TYPE B EA.			617 2" COMPACTED AGGREGATE LENGTH	617 2" COMPACTED AGGREGATE WIDTH	617 2" COMPACTED AGGREGATE CU. YD.	626 BARRIER REFLECTOR A EA.		COMMENTS
		201+56.39	204+93.78		150	337.5																			
25-GR	16	201+56.39	204+93.78	LT							337.5									337.5	4	8.33	4		Connect to existing BTA Type 2 W-beam terminal connector and existing BTA Type A
		201+35.39	204+81.28	LT		362.5																			
26-GR	16	201+35.39	204+81.28	&							275		87.5							362.5	4	8.95	5		Connect to existing BTA Type 2 W-beam terminal connector at each end
				RT																					
27-GR	16	(No Work)		LT																					
28-GR	16	(No Work)		LT																					
29-GR	16	(No Work)		RT																					
SUB-TOTALS (FROM THIS SHEET)					150	700					612.5		87.5									17.28	9		
SUB-TOTALS (FROM SHEET 10)					9588.90	21,275		7	12	8	21,350			15		12	3					532.73	245		
QUANTITIES CARRIED TO GENERAL SUMMARY					9738.90	21,975		7	12	8	21,962.50		87.5	15		12	3					550.01	254		

CALCULATED RDA
CHECKED JPB

GUARDRAIL SUB-SUMMARY

TUS-77-0.00

I:\PROJECTS\78245\Prod\Dgn\GQ001.dgn 20-JUL-2012 8:31AM ramstutz

Sealing of concrete surfaces (epoxy-urethane) = 9.39′

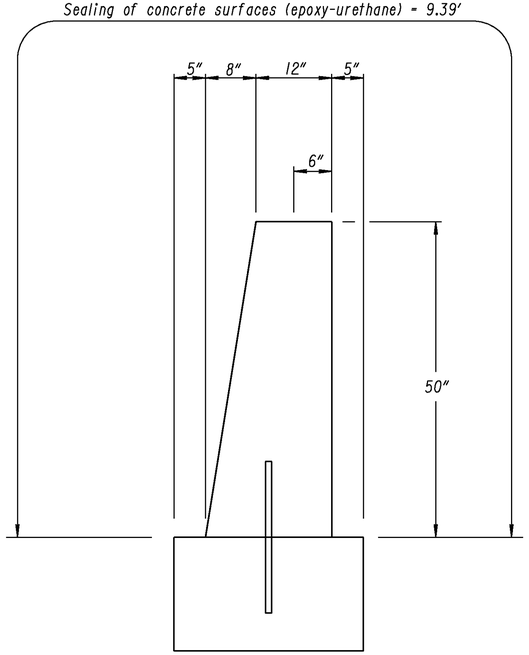

Existing Concrete Barrier, Type D

ITEM 512, SEALING OF CONCRETE SURFACES (EPOXY-URETHANE)

N.B. Sta. 11+13.40 to Sta. 16+63.40 = 550′ (50″ barrier) (perimeter: 9.39′)
N.B. Sta. 24+35.90 to Sta. 30+10.90 = 575′ (50″ barrier) (perimeter: 9.39′)
N.B. Sta. 118+00 to Sta. 125+00 = 700′ (50″ barrier) (perimeter: 9.39′)
N.B. Sta. 168+00 to Sta. 176+50 = 850′ (50″ barrier) (perimeter: 9.39′)
S.B. Sta. 23+22 to Sta. 31+22 = 800′ (50″ barrier) (perimeter: 9.39′)

Total Barrier Length = 3475′
Barrier Area = 3475′ x 9.39 ÷ 9 = 3625.58 Sq. Yd.
TOTAL = Use 3626 Sq. Yd. (Carried to General Summary)

ITEM 626, BARRIER REFLECTOR, TYPE B

N.B. Sta. 11+13.40 to Sta. 16+63.40 = 550′ ÷ 100 + 1 = 6.50 Each (Use 7 Each)
N.B. Sta. 24+35.90 to Sta. 30+10.90 = 575′ ÷ 100 + 1 = 6.75 Each (Use 7 Each)
N.B. Sta. 118+00 to Sta. 125+00 = 700′ ÷ 100 + 1 = 8 Each (Use 8 Each)
N.B. Sta. 168+00 to Sta. 176+50 = 850′ ÷ 100 + 1 = 9.5 Each (Use 10 Each)
S.B. Sta. 23+22 to Sta. 31+22 = 800′ ÷ 100 + 1 = 9 Each (Use 9 Each)

Total = 41 Each (Carried to General Summary)

CALCULATED RDA
CHECKED JPB

ESTIMATED QUANTITIES

TUS-77-0.00

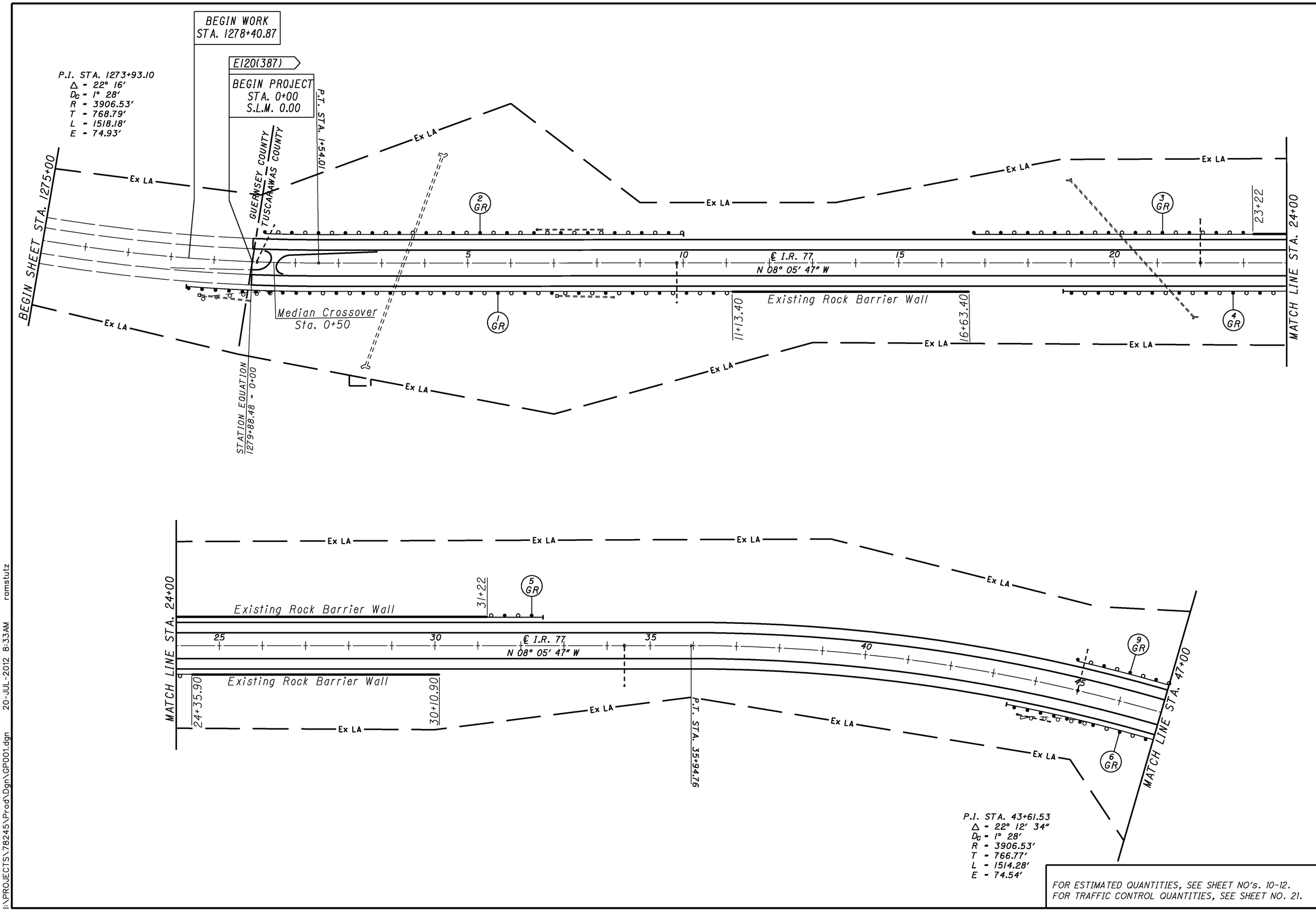

FOR ESTIMATED QUANTITIES, SEE SHEET NO's. 10-12.
FOR TRAFFIC CONTROL QUANTITIES, SEE SHEET NO. 21.

HORIZONTAL SCALE IN FEET
0 50 100 200

CALCULATED RDA
CHECKED JPB

PLAN SHEET
STA. 1275+00 TO STA. 47+00

TUS-77-0.00

I:\PROJECTS\78245\Prod\Dgn\GP001.dgn 20-JUL-2012 8:33AM ramstutz

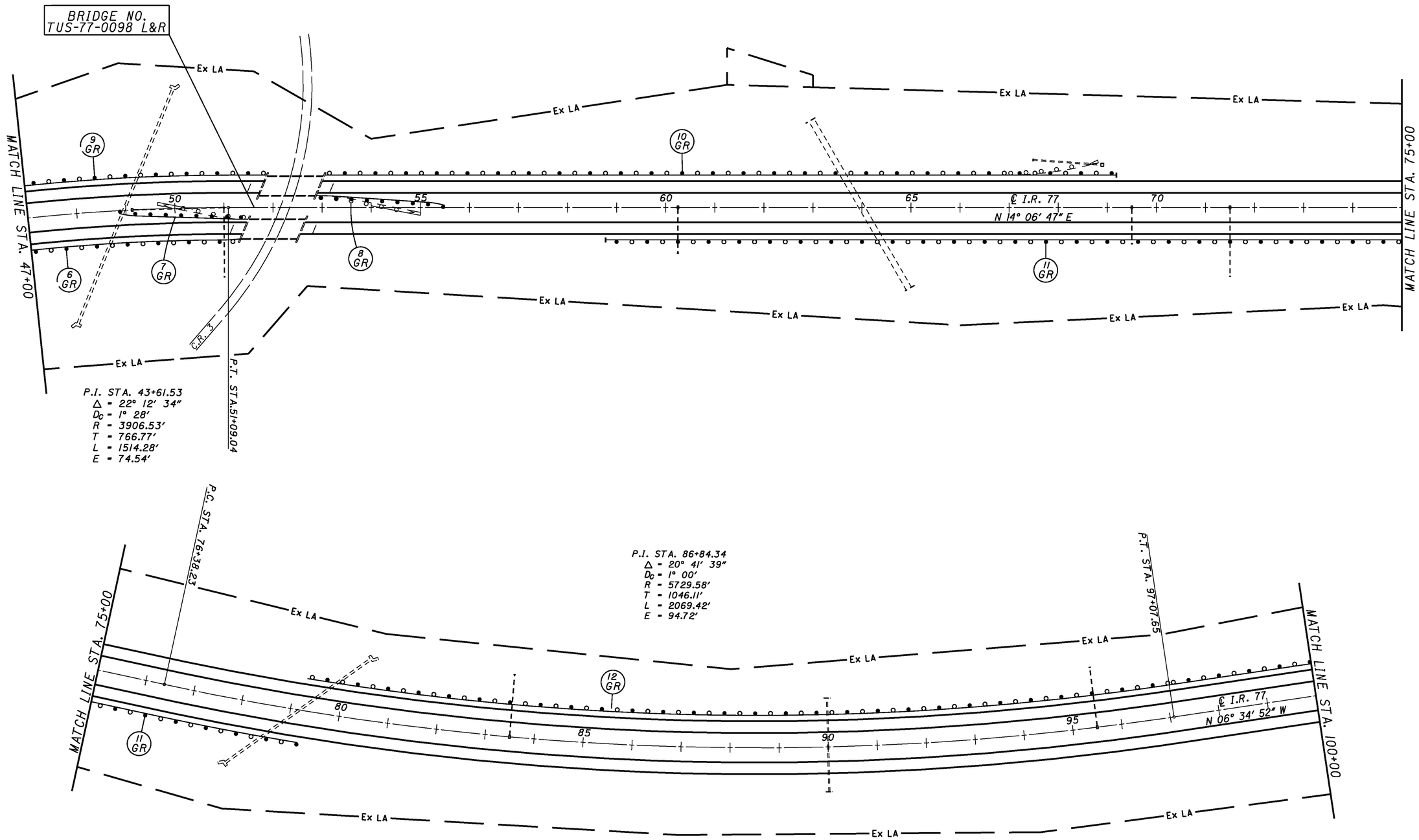

FOR ESTIMATED QUANTITIES, SEE SHEET NO's. 10-12.
FOR TRAFFIC CONTROL QUANTITIES, SEE SHEET NO. 21.

HORIZONTAL SCALE IN FEET
0 50 100 200

CALCULATED RDA
CHECKED JPB

PLAN SHEET
STA. 47+00 TO STA. 100+00

TUS-77-0.00

I:\PROJECTS\78245\Prod\Dgn\GP001.dgn 20-JUL-2012 8:34AM ramstutz

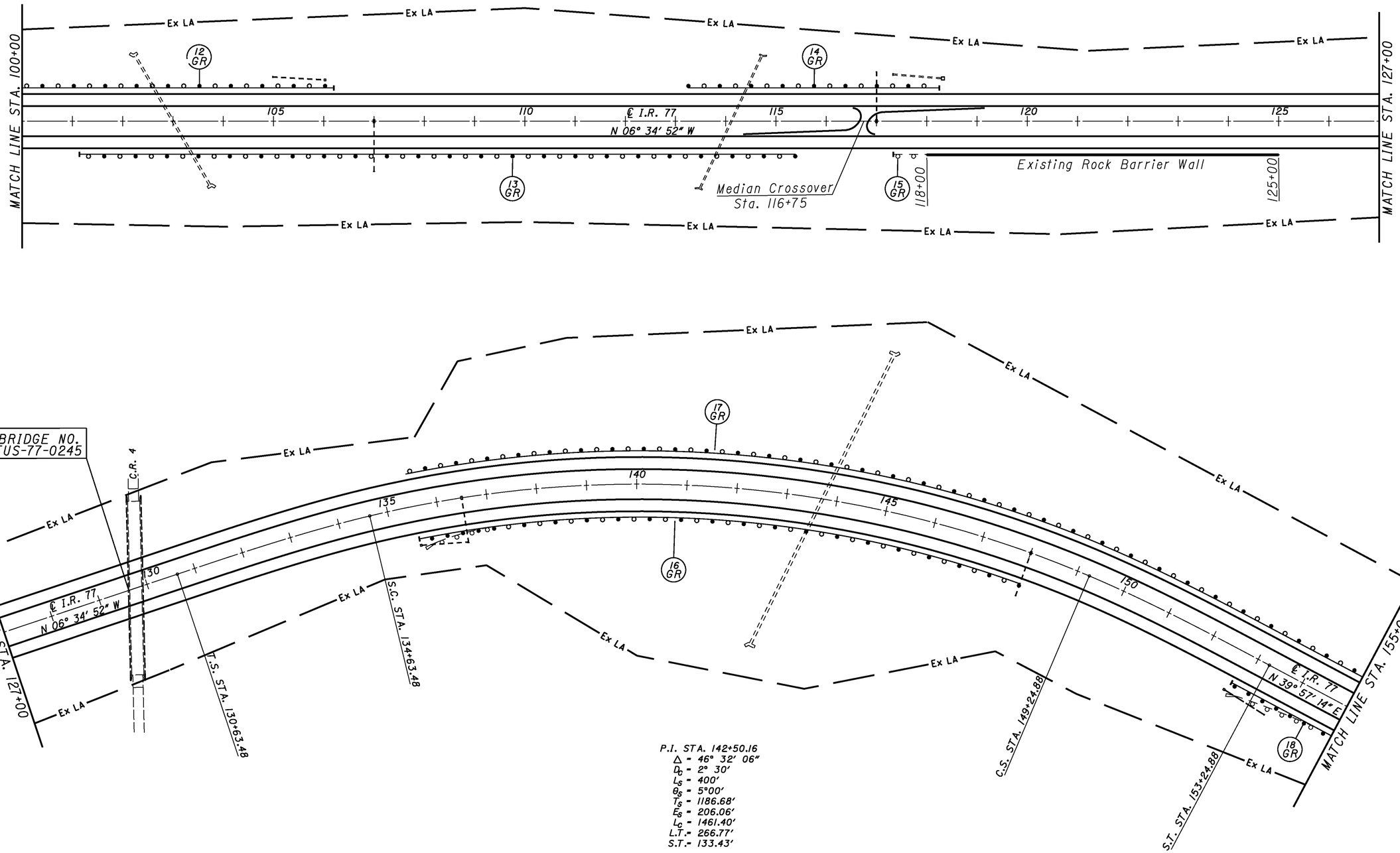

FOR ESTIMATED QUANTITIES, SEE SHEET NO's. 10-12.
FOR TRAFFIC CONTROL QUANTITIES, SEE SHEET NO. 21.

HORIZONTAL SCALE IN FEET
0 50 100 200

CALCULATED RDA
CHECKED JPB

PLAN SHEET
STA. 100+00 TO STA. 155+00

TUS-77-0.00

I:\PROJECTS\78245\Prod\Dgn\GP001.dgn 20-JUL-2012 8:35AM ramstutz

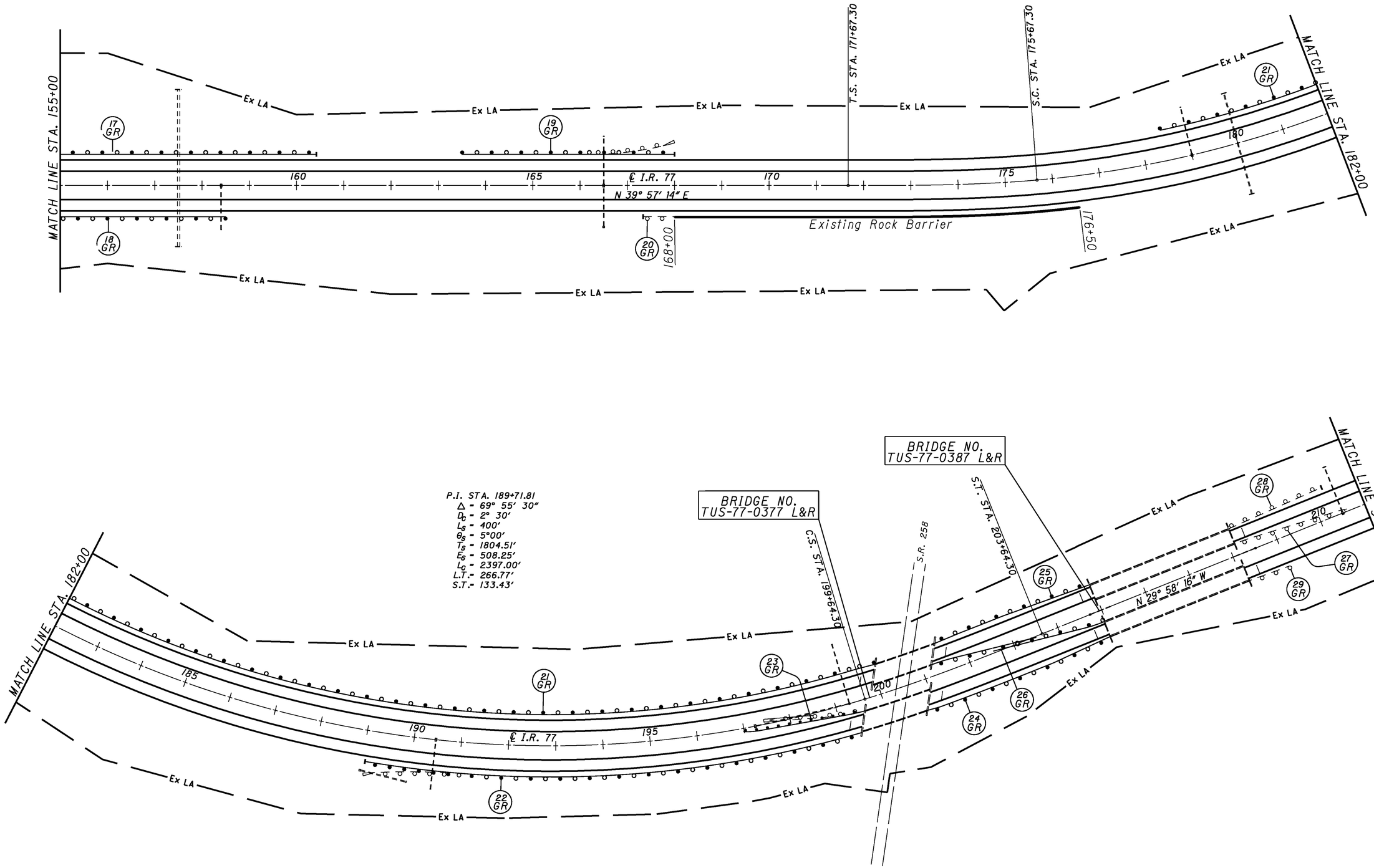

FOR ESTIMATED QUANTITIES, SEE SHEET NO's. 10-12.
FOR TRAFFIC CONTROL QUANTITIES, SEE SHEET NO. 21.

HORIZONTAL SCALE IN FEET
0 50 100 200

CALCULATED RDA
CHECKED JPB

PLAN SHEET
STA. 155+00 TO STA. 211+00

TUS-77-0.00

I:\PROJECTS\78245\Prod\Dgn\GP001.dgn 20-JUL-2012 8:36AM ramstutz

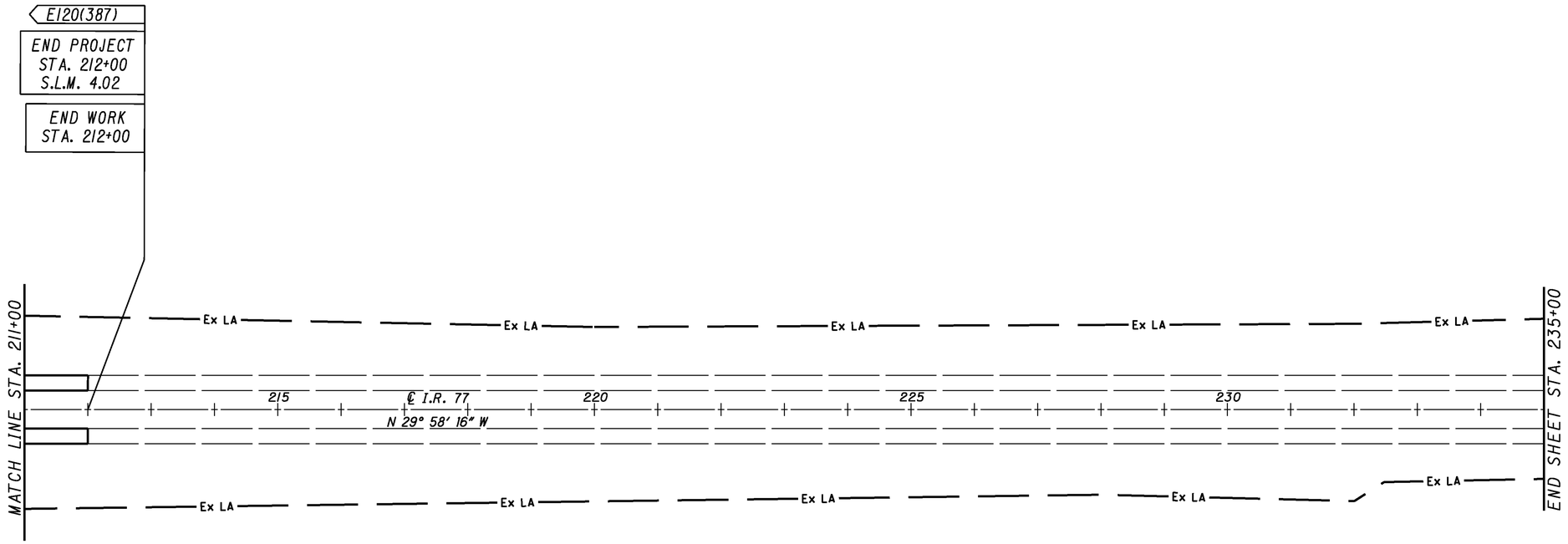

FOR TRAFFIC CONTROL QUANTITIES, SEE SHEET NO. 21.

0 50 100 200
HORIZONTAL SCALE IN FEET

CALCULATED RDA
CHECKED JPB

PLAN SHEET
STA. 211+00 TO STA. 235+00

TUS-77-0.00

I:\PROJECTS\78245\Prod\Dgn\GP001.dgn 20-JUL-2012 8:36AM ramstutz

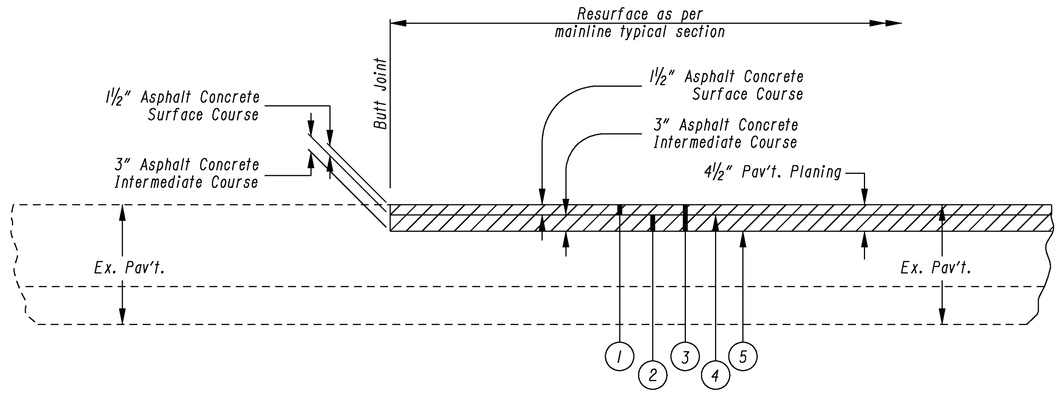

PAVEMENT DETAIL AT BEGINNING & END OF PROJECT

Pavement Planing

For Legend See Sheet No. 3

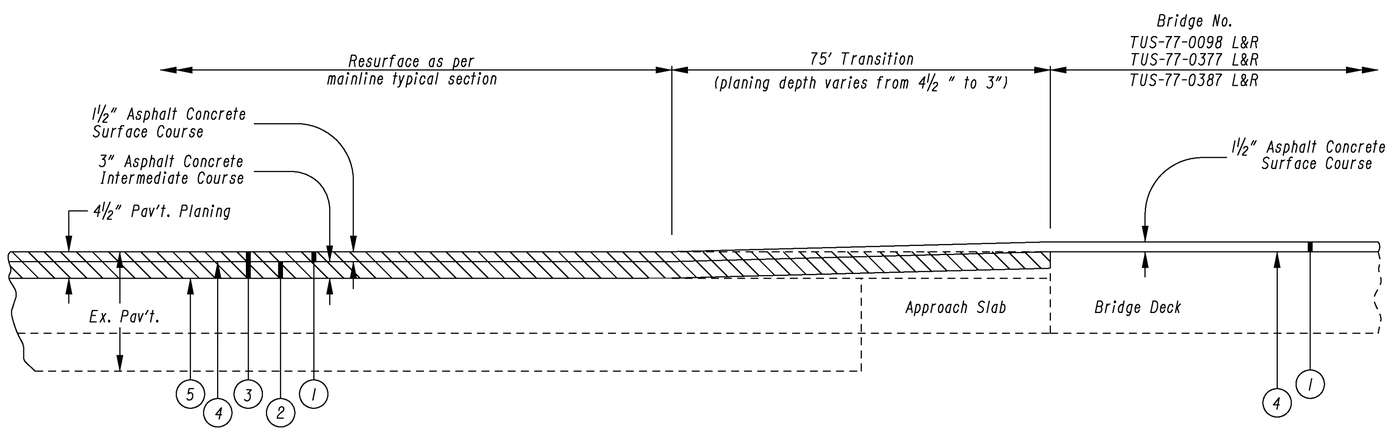

PAVEMENT DETAIL AT BRIDGES

CALCULATED RDA
CHECKED TES

PAVEMENT DETAILS

TUS-77-0.00

I:\PROJECTS\78245\Prod\Dgn\GM002.dgn 20-JUL-2012 8:38AM ramstutz

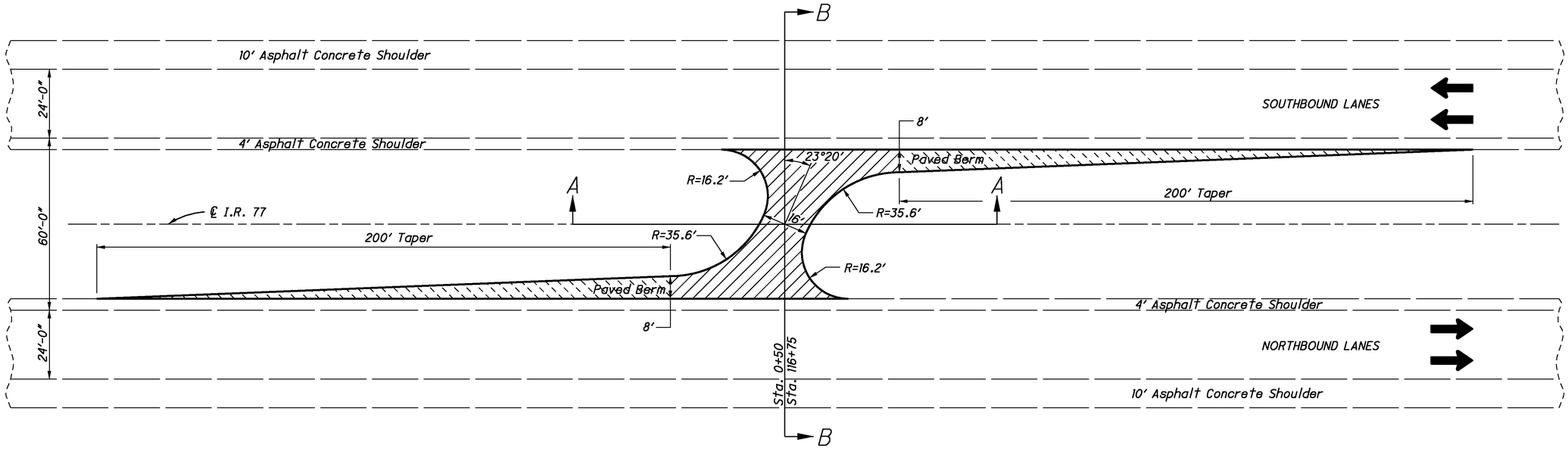

PLAN
Scale 1:200

CADD Generated Area		= 1720 Sq. Ft.
Tapers [200' x $\frac{(8' + 0')}{2}$]	= 800 Sq. Ft. x 2 Tapers	
		= 1600 Sq. Ft.
Total Median Cross-over Area		= 3320 Sq. Ft.
x 2 Locations		= 6640 Sq. Ft.

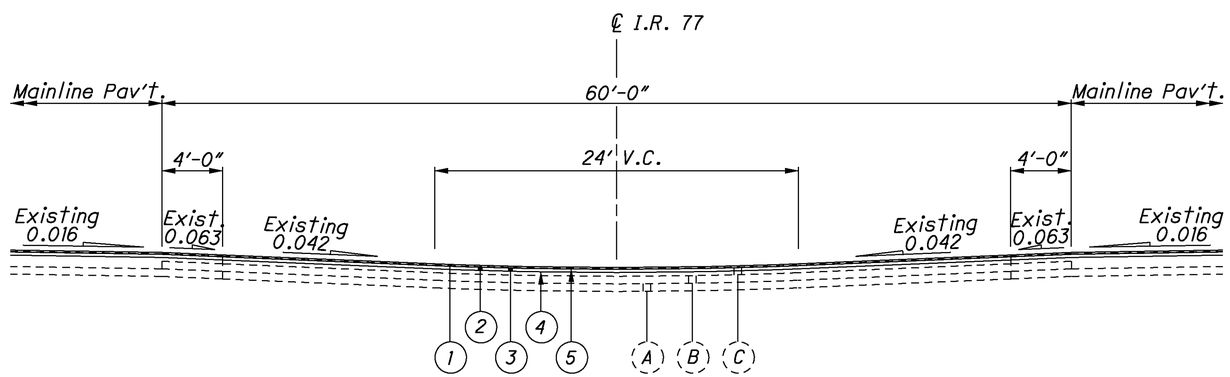

SECTION B-B
Scale 1:50

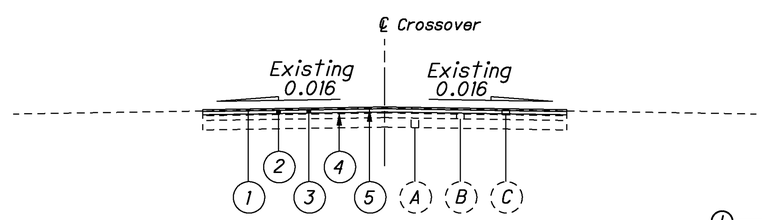

SECTION A-A
Scale 1:50

QUANTITIES

Item 254 - Pavement Planing, Asphalt Concrete 4 1/2" Nominal Depth
6640 Sq. Ft. ÷ 9 = 738 Sq. Yd.

Item 442 - Asphalt Concrete Surface Course, 12.5mm, Type B (446), As Per Plan
6640 Sq. Ft. x 1½" ÷ 12 ÷ 27 = 30.74 Cu. Yd.

Item 442 - Asphalt Concrete Intermediate Course, 19mm, Type B (448)
6640 Sq. Ft. x 3" ÷ 12 ÷ 27 = 61.48 Cu. Yd.

Item 407 - Tack Coat for Intermediate Course
6640 Sq. Ft ÷ 9 x 0.04 = 29.51 Gallon

Item 407 - Tack Coat
6640 Sq. Ft ÷ 9 x 0.075 = 55.33 Gallon

Quantities Carried to General Summary

EXISTING LEGEND

(A) EXISTING SUBBASE
(B) EXISTING AGGREGATE BASE
(C) EXISTING ASPHALT CONCRETE PAVEMENT

PROPOSED LEGEND

1. ITEM 442 - 1 ½" ASPHALT CONCRETE SURFACE COURSE, 12.5MM, TYPE B (446), PG70-22M, AS PER PLAN
2. ITEM 442 - 3" ASPHALT CONCRETE INTERMEDIATE COURSE, 19MM, TYPE B (448)
3. ITEM 254 - PAVEMENT PLANING, ASPHALT CONCRETE (4 1/2" NOMINAL DEPTH)
4. ITEM 407 - TACK COAT (APPLIED @ 0.075 GALS./SQ. YD.)
5. ITEM 407 - TACK COAT FOR INTERMEDIATE COURSE (APPLIED @ 0.04 GALS./SQ. YD.)

CALCULATED RDA
CHECKED JPB

MEDIAN CROSSOVER DETAILS

TUS-77-0.00

I:\PROJECTS\78245\Prod\Dgn\GM002.dgn 20-JUL-2012 8:39AM ramstutz

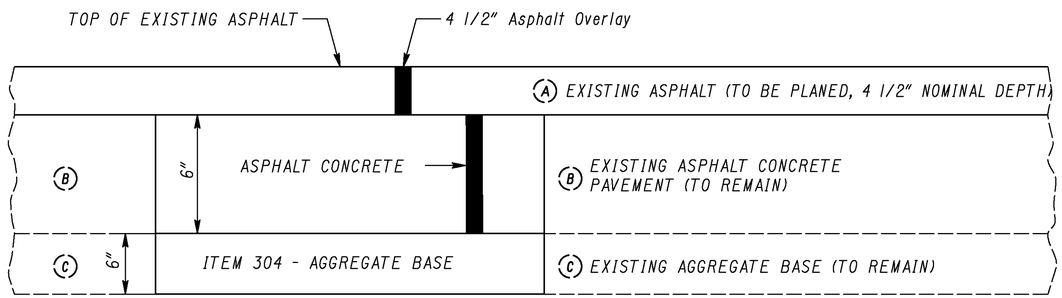

SHOULDER REPAIR TYPICAL

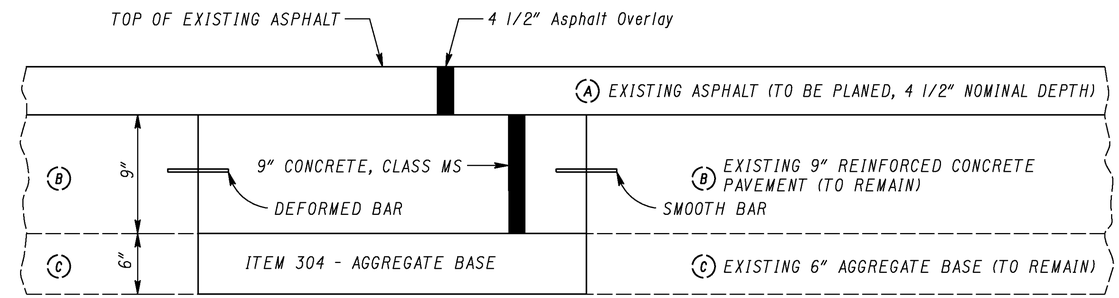

MAINLINE PAVEMENT REPAIR TYPICAL

FOR DETAILS NOT SHOWN SEE STANDARD CONSTRUCTION DRAWING BP-2.5
FOR TRANSVERSE JOINT REPAIR DETAILS AND BP-2.1 FOR LONGITUDINAL JOINT DETAILS

ITEM 253 - PAVEMENT REPAIR

This item shall be used for shoulder repair and shall meet the requirements of Item 253, Pavement Repair, and the above typical section.

The estimated quantities are to be considered approximate. A final field review will be performed by ODOT prior to construction and final locations will be given to the Contractor prior to construction.

This work consists of removing the existing asphalt concrete and the aggregate base courses; shaping and compacting the exposed material; placing Item 304 Aggregate Base; followed by Item 302 Asphalt Concrete Base.

The following estimated quantities have been provided for information only.

Item 302 - Asphalt Concrete Base	176 Cu. Yd.
Item 304 - Aggregate Base	176 Cu. Yd.

The following estimated quantities have been carried to the General Summary to be used as directed by the Engineer. Final payment for these items shall be for the accepted quantity completed in place.

Item 253 - Pavement Repair	1,055 Sq. Yd.

ITEM 605 - AGGREGATE DRAINS

This item shall be used to construct aggregate drains and shall meet the requirements of Item 605, Aggregate Drains.

The following estimated quantity has been carried to the General Summary to be used as directed by the Engineer. Final payment for these items shall be for the accepted quantity completed in place.

Item 605 - Aggregate Drains	200 Ft.

ITEM 255 - FULL DEPTH PAVEMENT REMOVAL AND RIGID REPLACEMENT, CLASS MS, AS PER PLAN

The estimated quantities are to be considered approximate. A final field review will be performed by ODOT prior to construction and final locations will be given to the Contractor prior to construction.

This work consists of removing the existing asphalt concrete, reinforced concrete, and the aggregate base courses; shaping and compacting the exposed material; placing Item 304 Aggregate Base; then installing dowel rods followed by concrete pavement, Class MS.

All other provisions of Standard Construction Drawings BP-2.1 and BP-2.5 apply.

The following estimated quantities have been provided for information only.

9" Concrete, Class MS	452 Cu. Yd.
Item 304 - Aggregate Base	301 Cu. Yd.
Item 509 - Epoxy Coated Reinforcing	30,819 Pounds
Item 510 - Dowel Holes with Nonshrink, Nonmetallic Grout	4,972 Each

The following estimated quantities have been carried to the General Summary to be used as directed by the Engineer. Final payment for these items shall be for the accepted quantity completed in place.

Item 255 - Full Depth Pavement Removal and Rigid Replacement, Class MS, As Per Plan	1,808 Sq. Yd.
Item 255 - Full Depth Pavement Sawing	5,424 Ft.

CALCULATED JPB
CHECKED RDA

MISCELLANEOUS DETAILS

TUS-77-0.00

I:\PROJECTS\78245\Prod\Dgn\BGM003.dgn 20-JUL-2012 8:41AM ramstutz

LOCATION	STATION FROM	STATION TO	SIDE 'Direction of Travel'	642 EDGE LINE, 6", TYPE 1 (YELLOW)	642 EDGE LINE, 6", TYPE 1 (WHITE)	642 LANE LINE, 6", TYPE 1							621 RPM	621 RPM	621 RPM 1 - WAY, WHITE					
	FROM	TO		FT.	FT.	FT.									EACH					
I.R. 77 NORTHBOUND																				
MAINLINE	*00+00*	*212+00*	*CTR*			*21,200*									*177*					
	00+00	*212+00*	*LT.*	*21,200*																
	00+00	*212+00*	*RT.*		*21,200*															
I.R. 77 SOUTHBOUND																				
MAINLINE	*00+00*	*212+00*	*CTR*			*21,200*									*177*					
	00+00	*212+00*	*LT.*	*21,200*																
	00+00	*212+00*	*RT.*		*21,200*															
SUBTOTALS				**42,400**	**42,400**	**42,400**									**354**					
TOTALS CARRIED TO GENERAL SUMMARY				**16.06 Mile**		**8.03 Mile**							**354**							

CALCULATED RDA
CHECKED JPB

TRAFFIC CONTROL ESTIMATED QUANTITIES

TUS-77-0.00

I:\PROJECTS\78245\Prod\Dgn\TQ001.dgn 20-JUL-2012 8:42AM ramstutz