# STATE OF OHIO
# DEPARTMENT OF TRANSPORTATION

# VAN-30-6.618(4.05)

## TULLY, UNION & PLEASANT TOWNSHIPS
## VAN WERT COUNTY

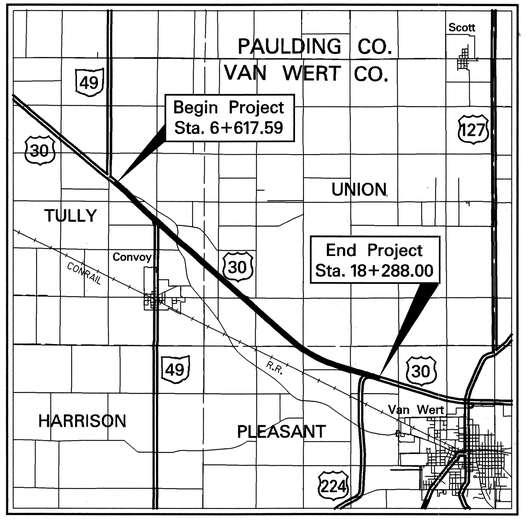


### LOCATION MAP

LATITUDE: N40°-57'-04.7" LONGITUDE: W84°-43'-24.2"

Scale in Kilometers
0 2 4 6 8

N

Portion to be improved
State & Federal Routes
Other Roads

### DESIGN DESIGNATION

| | | |
|---|---|---|
| Current A.D.T. (1997) | = | 8390 |
| Design Year A.D.T. (2017) | = | 13,420 |
| Design Hourly Volume (2017) | = | 939 |
| Directional Distribution | = | 51% |
| Trucks (24 Hour B & C) | = | 39% |
| Design Speed | = | 100 km/h |
| Legal Speed | = | 65 m.p.h. |

Design Functional Classification = Principal Arterial-Rural

### DESIGN EXCEPTIONS

| DESIGN FEATURE | Approval Date |
|---|---|
| Graded Shoulder Width | 02-03-95 |

UNDERGROUND UTILITIES
TWO WORKING DAYS BEFORE YOU DIG
Call... 800-362-2764 (Toll free)
OHIO UTILITIES PROTECTION SERVICE
NON-MEMBERS
MUST BE CALLED DIRECTLY

Plan Prepared By:

OHIO DEPARTMENT OF TRANSPORTATION
DISTRICT NO. 1
PRODUCTION DEPARTMENT

MICROFILMED
JAN 13 1999

### INDEX OF SHEETS


| | | | |
|---|---|---|---|
| TITLE SHEET | 1 | MISCELLANEOUS CALCULATIONS & TABLES | 82 |
| SCHEMATIC PLAN | 2-3 | PAVEMENT TRANSITION DETAILS | 83-87 |
| TYPICAL SECTIONS | 4-6 | AT-GRADE INTERSECTION DETAILS | 88 |
| GENERAL NOTES | 7-8 | SIDE APPROACH DETAILS | 89 |
| MAINTENANCE OF TRAFFIC | 9-11 | MEDIAN CROSSOVER DETAILS | 90 |
| DROPOFFS IN WORK ZONES | 12 | CENTER LINE MONUMENT TABLE | 91 |
| GENERAL SUMMARY | 13-15 | DRAINAGE, EARTHWORK & SEEDING TABLES | 92-93 |
| PAVEMENT TABLE | 16-18 | CATCH BASIN DETAILS | 94 |
| PAVEMENT CALCULATIONS | 19-22 | SHALLOW PIPE UNDERDRAINS | 95 |
| STORM WATER POLLUTION PLAN | 23-27 | PAVEMENT MARKINGS | 96-99 |
| PLAN SHEETS | 28-45 | SIGNING | 100-122 |
| CROSS SECTIONS | 46-81 | STRUCTURES OVER 6 METERS | 123-134 |


| SUPPLEMENTAL PRINTS OF STANDARD CONSTRUCTION DRAWINGS | | | | | | | | SUPPLEMENTAL SPECIFICATIONS | |
|---|---|---|---|---|---|---|---|---|---|
| BP-2.1M | 4-8-97 | GR-3.1M | 11-30-94 | RM-1.1M | 4-8-97 | TC-42.10M | 3-31-94 | 801 | 3-23-95 |
| BP-2.5M | 4-8-97 | GR-3.4 M | 1-3-96 | DM-1.1M | 6-30-95 | TC-42.20M | 3-31-94 | | |
| BP-3.1M | 10-28-94 | GR-4.2M | 4-21-95 | RM-4.2M | 6-30-95 | TC-51.12M | 3-31-94 | | |
| BP-9.1M | 12-18-96 | GR-4.3M | 11-30-94 | DM-4.3M | 6-30-95 | TC-61.10M | 3-31-94 | | |
| CB-3.3M | 7-12-95 | GR-4.4M | 11-30-94 | DM-4.4M | 6-30-95 | TC-65.10M | 11-1-95 | | |
| BP-9.2M | 12-18-96 | GR-5.1M | 4-21-95 | | | TC-65.11M | 11-1-95 | | |
| GR-1.1M | 11-30-94 | GR-5.3M | 11-30-94 | MT-95.30M | 4-25-94 | TC-65.12M | 11-1-95 | | |
| GR-1.2M | 1-3-96 | GR-6.1M | 1-3-96 | MT-95.40M | 4-25-94 | TC-72.20M | 9-1-93 | | |
| GR-1.3M | 11-30-94 | GR-6.2M | 1-3-96 | | | | | | |
| GR-2.1M | 11-30-94 | | | TC-41.10M | 3-31-94 | DS-1-94M | 12-15-94 | | |
| | | | | TC-41.20M | 7-1-94 | BR-1M | 12-15-94 | | |
| | | | | TC-41.50M | 7-1-94 | | | | |

metric units

### PROJECT DESCRIPTION

Remove existing asphalt wearing course. Repair failed joints and working mid-panel cracks and reseal. Resuface Weigh Station Parking Area. Repair mainline bridges, widen outside shoulders to 3 m and provide new edgedrains, guardrail & signing. Repair or replace drainage as needed.

### LIMITED ACCESS

This Improvement is especially designed for through traffic and has been declared a Limited Access Highway or Freeway by action of the Director in accordance with the provisions of Section 5511.02 of the Revised Code of Ohio.

### 1997 SPECIFICATIONS

The standard specifications of the State of Ohio, Department of Transportation, including changes and supplemental specifications listed in the proposal shall govern this improvement.

I hereby approve these plans and declare that the making of this improvement will not require the closing to traffic of the highway except as noted on Sheet 11, and that provisions for the maintenance and safety of traffic will be as set forth in the plans and estimates.

Under authority of Section 4511.21, Division (1) of the Revised Code of Ohio, the revised prima facie speed limits as indicated herein are determined to be reasonable and safe, and are hereby established for the duration of this project. The prima facie speed limit or limits hereby established shall become effective when appropriate signs giving notice thereof are erected.

Approved Norman R. Redick
Date 11/25/97 District Deputy Director

Approved
Date 9.30.97 Director, Department of Transportation

FEDERAL PROJECT No. NH-49-(102)

PID No. 15283

CONSTRUCTION PROJECT No.

RAILROAD INVOLEMENT NONE

VAN-30-6.618(4.05)(4.05)



VAN-30-6.618
98015 01-07-98
134PGS DIST. 01

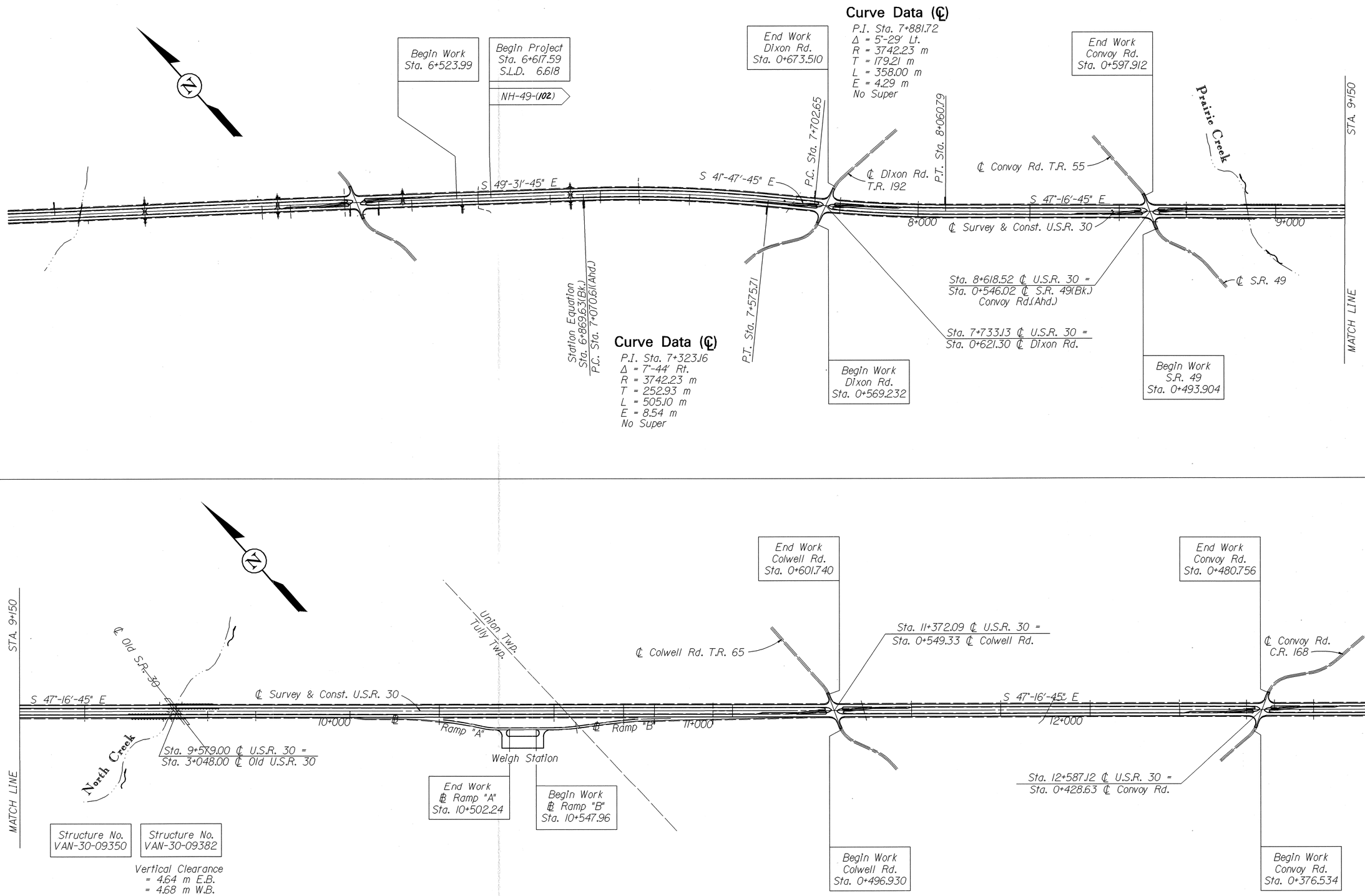


Scale in Meters
0 50 100
1:5000 Ratio

# SCHEMATIC PLAN

VAN-30-6.618(4.05)



DESIGN FILE : i:\pd\van30d\v30gsl.dgn
USERNAME : rhermon

DATE : 17-SEP-1997
TIME : 08:47

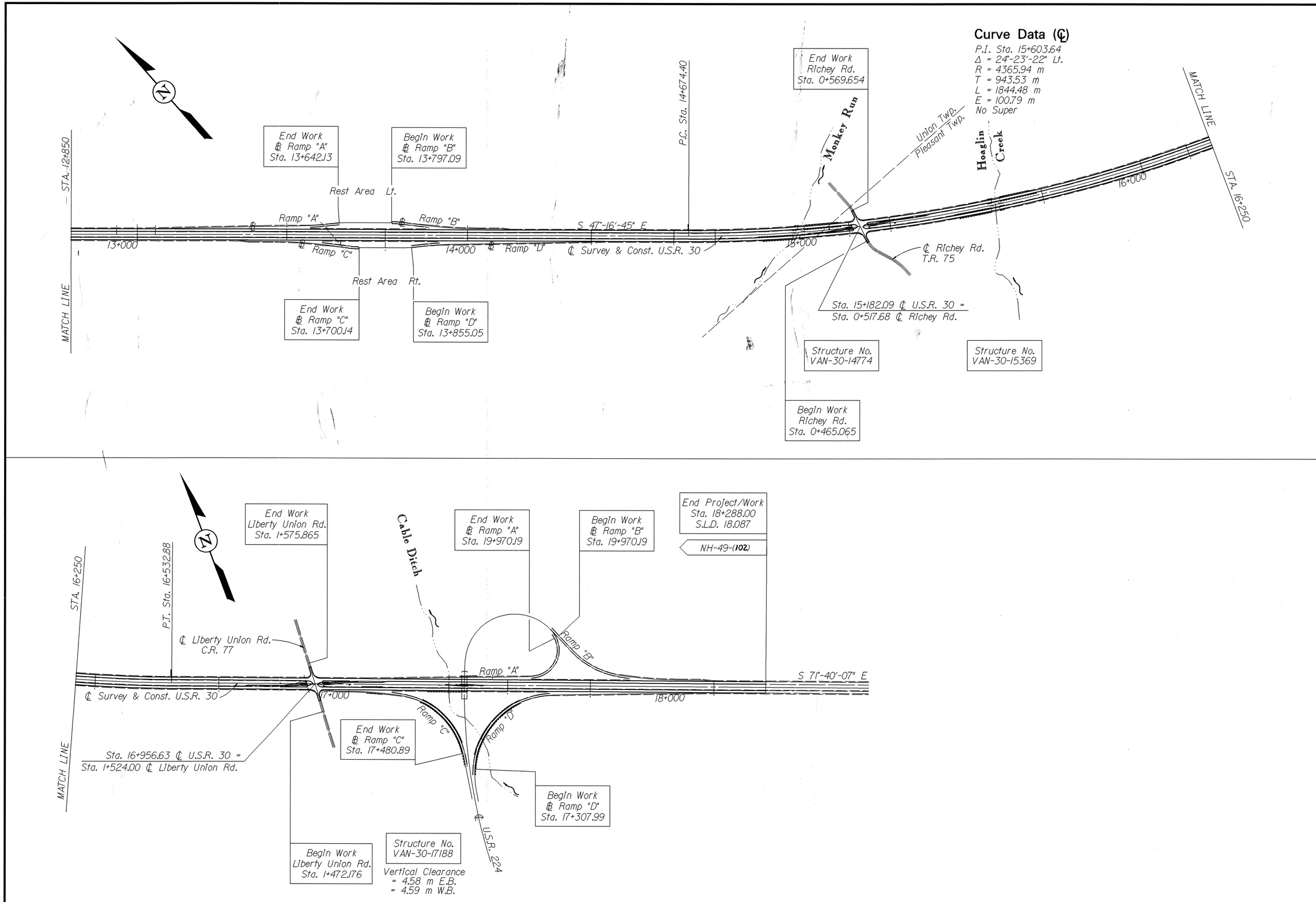


# SCHEMATIC PLAN

VAN-30-6.618(4.05)



DESIGN FILE : i:\pd\van30d\v30gs2.dgn
USERNAME : rhermon

DATE : 28-AUG-1997
TIME : 12:24

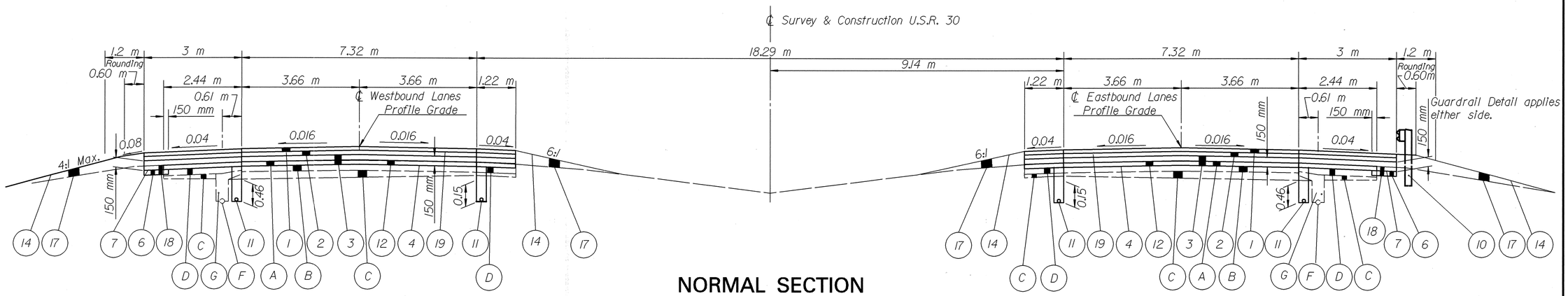


## NORMAL SECTION

**Applies @:**

Sta. 6+617.54 to Sta. 18+194.40= 11,576.86 m
Sta. Eq.: Sta. 6+869.63 = Sta. 7+070.61
Deduct for Trans. & Bridge No. VAN-30-09350 L&R
Sta. 9+441.45 to Sta. 9+690.23 = -248.78 m
Deduct for Trans. & Bridge No. VAN-30-14774 L&R
Sta. 14+868.44 to Sta. 15+129.98 = -261.54 m
Deduct for Trans. & Bridge No. VAN-30-15369 L&R
Sta. 15+454.75 to Sta. 15+720.19 = -265.44 m
Deduct for Trans. @ Bridge No. VAN-30-17188 L&R
Sta. 17+284.74 to Sta. 17+510.74 = -226.00 m
Total Length = 10,575.10 m

Note: Resurfacing Buildup on shoulders similar to resurfacing buildup on lanes

## EXISTING LEGEND

- (A) Asphalt Concrete
- (B) 230 mm Reinforced Portland Cement Concrete Pavement
- (C) Subbase
- (D) Bituminous Aggregate Base
- (E) Aggregate Base
- (F) 150 mm Pipe Underdrain

## PROPOSED LEGEND

- (1) Item 446 38 mm Asphalt Concrete Surface Course, Type 1H, as per plan
- (2) Item 446 45 mm Asphalt Concrete Intermediate Course Type 2, PG 64-28
- (3) Item 301 Bituminous Aggregate Base, PG 64-22 (Thickness as Shown)
- (4) Item 407 Tack Coat
- (6) Item 304 150 mm Aggregate Base
- (7) Item 408 Bituminous Prime Coat applied at a rate of 1.81 L/m$^2$
- (10) Item 606 Guardrail, Type 5
- (11) Item 605 100mm Shallow Pipe Underdrain
- (12) Item 254 Pavement Planing, Bituminous (Thickness 70mm Nominal)
- (14) Item 659 Seeding & Mulching
- (17) Item 203 Embankment
- (18) Item 203 Excavation, not Including Embankment Construction
- (19) Item 407 Tack Coat for Intermediate Course

# TYPICAL SECTIONS

VAN-30-6.618(4.05)



DESIGN FILE : i:\pd\van30d\v30gy.dgn
USERNAME : rhermon
DATE : 28-AUG-1997
TIME : 13:30

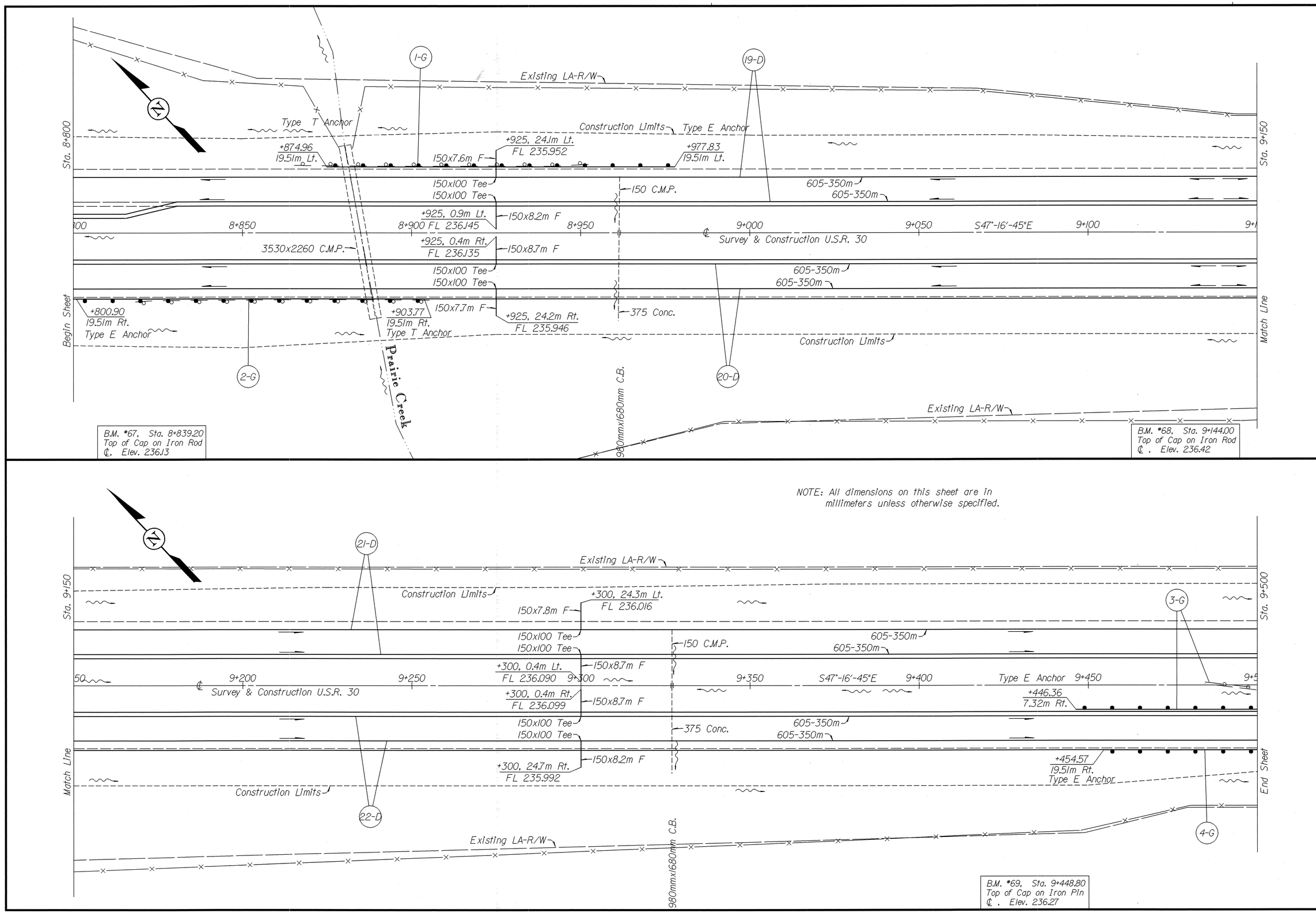


DESIGN FILE : i:\pd\van30d\v30gp4.dgn
USERNAME : rhermon

DATE : 29-AUG-1997
TIME : 15:57

# PLAN SHEET - U.S.R. 30
## Sta. 8+800 to Sta. 9+500

VAN-30-6.618(4.05)

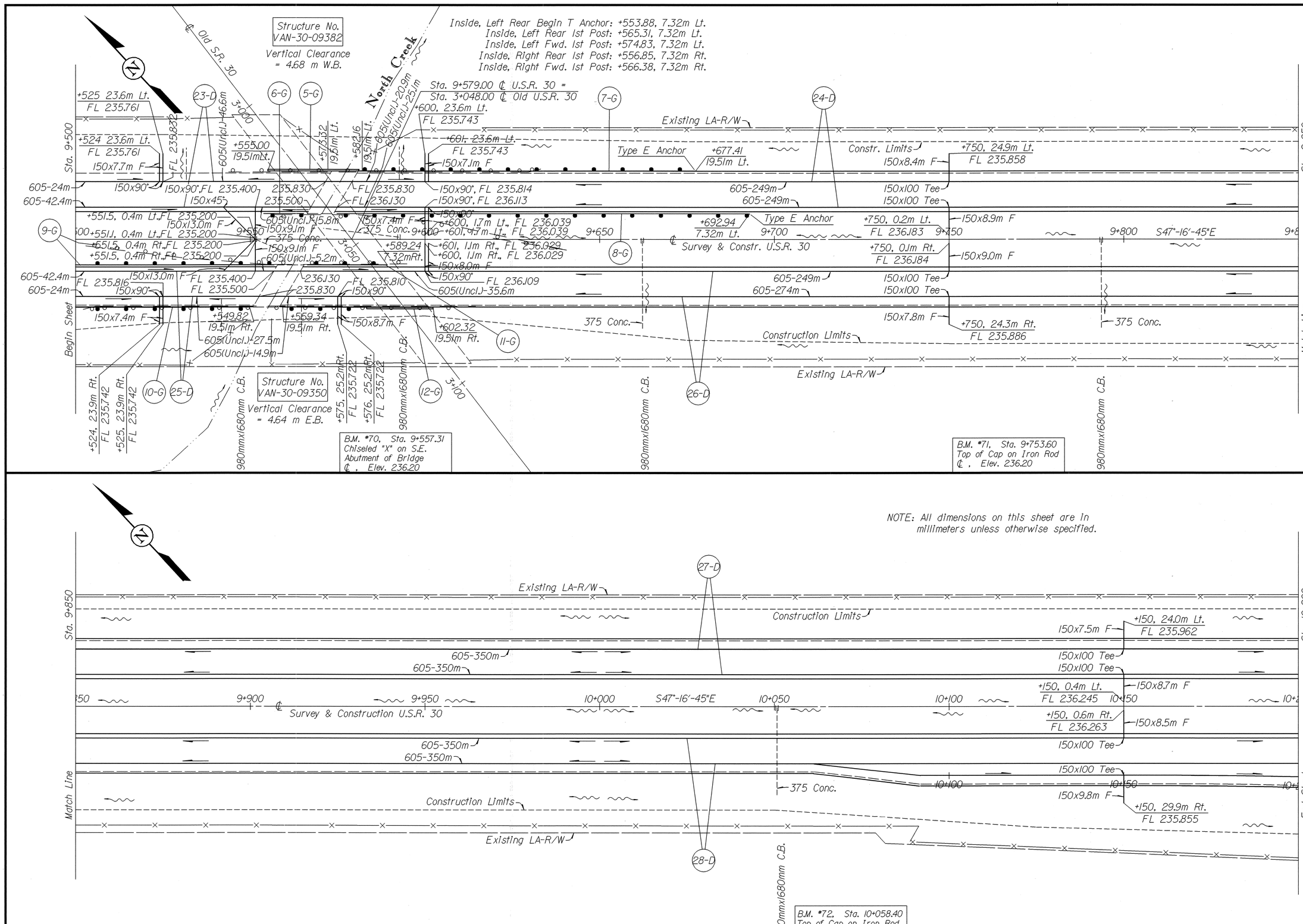


Scale in Meters
0 10 20
1:500 Ratio

PLAN SHEET - U.S.R. 30
Sta. 9+500 to Sta. 10+200

VAN-30-6.618(4.05)



DESIGN FILE : i:\pd\van30d\v30gp5.dgn
USERNAME : rhermon
DATE : 29-AUG-1997
TIME : 16:01

# PAVEMENT REPAIRS

| Location | Lane | Estimated No. of Removals | Length | Width | | 255 Full Depth Pavement Removal and Rigid Repl., Class C | 255 Full Depth Pavement Sawing |
|---|---|---|---|---|---|---|---|
| | | | m | m | | $m^2$ | m |
| Westbound U.S.R. 30 | | | | | | | |
| | Driving | 200 | 1.83 | 3.66 | | 1340 | 1464 |
| | Passing | 100 | 1.83 | 3.66 | | 670 | 732 |
| Sub-Total | | | | | | 2010 | 2196 |
| Eastbound U.S.R. 30 | | | | | | | |
| | Driving | 200 | 1.83 | 3.66 | | 1340 | 1464 |
| | Passing | 100 | 1.83 | 3.66 | | 670 | 732 |
| Sub-Total | | | | | | 2010 | 2196 |
| Totals | | | | | | 4020 | 4392 |

Quantities Carried to General Summary, Sheet 14.

Quantity Per Repair

255 Full Depth Pavement Sawing
(3.66+3.66) = 7.32 m

255 Full Depth Pavement Removal and Rigid Replacement, Class C
(1.83)(3.66) = 6.70 $m^2$

# MISCELLANEOUS CALCULATIONS

202 Raised Pavement Marker Removed For Storage = 1485 Each

618 Rumble Strips, Type 2 (Asphalt) = 46.7 Kilometers

659 Commercial Fertilizer
(0.1) (248,941) = 24 894 Kilogram

Quantities Above Carried to General Summary, Sheets 13 & 14.

659 Seeding & Mulching
(From Cross Sections) = 248 941 Square Meter

659 Water
(248,941) (5/1000) = 1245 Cubic Meter

Quantity Above Carried to "Watering Permanent Seeded Areas" General Note on Sheet 8.

# GUARDRAIL TABLE

| Reference No. | Sheet No. | Station From | Station To | Side | 202 Guardrail Removed | 202 Guardrail Removed, Barrier Design | | 606 Guardrail, Type 5 | 606 Guardrail, Barrier Design, Type 5 | 606 Anchor Assembly, Type A | 606 Anchor Assembly, Type E | 606 Anchor Assembly, Type T | 606 Bridge Terminal, Assembly, Type I | 606 Bridge Terminal, Assembly, Type 4 | | 622 Concrete Barrier, Type D | Special Impact Attenuator, Type I, Bi-Directional | 626 Barrier Reflector, Type A | 626 Barrier Reflector, Type B |
|---|---|---|---|---|---|---|---|---|---|---|---|---|---|---|---|---|---|---|---|
| | | | | | Meter | Meter | | Meter | Meter | Each | Each | Each | Each | Each | | Meter | Each | Each | Each |
| 1-G | 31 | 8+874.96 | 8+977.83 | Lt. | 87.63 | | | 83.82 | | | 1 | 1 | | | | | | 5 | |
| 2-G | 31 | 8+800.90 | 8+903.77 | Rt. | 87.63 | | | 83.82 | | | 1 | 1 | | | | | | 5 | |
| | | | | | | | | | | | | | | | | | | | |
| 3-G | 31 | 9+446.36 | 9+500 | Rt. | | 19.1 | | 38.4 | | | 1 | | | | | | | 2 | |
| 4-G | 31 | 9+454.57 | 9+500 | Rt. | | | | 30.19 | | | 1 | | | | | | | 2 | |
| | | | | | | | | | | | | | | | | | | | |
| 5-G | 32 | 9+543.32 | 9+573.32 | Lt. | 30.48 | | | | | | | | | | | 18.3 | | | 1 |
| 6-G | 32 | 9+553.88 | 9+565.31 | Lt. | 7.62 | | | 3.81 | | | | 1 | | 1 | | | | 1 | |
| 7-G | 32 | 9+582.16 | 9+677.41 | Lt. | 53.34 | | | 81.915 | | | 1 | | | 1 | | | | 4 | |
| 8-G | 32 | 9+574.83 | 9+692.94 | Lt. | 49.53 | 22.86 | | 102.87 | | | 1 | | | 1 | | | | 5 | |
| 9-G | 32 | 9+500 | 9+556.85 | Rt. | 53.34 | 3.76 | | 53.04 | | | | | | 1 | | | | 2 | |
| 10-G | 32 | 9+500 | 9+549.82 | Rt. | 53.34 | | | 46.01 | | | | | | 1 | | | | 2 | |
| 11-G | 32 | 9+566.38 | 9+589.24 | Rt. | 30.48 | | | 19.05 | | | | 1 | | 1 | | | | 2 | |
| 12-G | 32 | 9+559.34 | 9+602.32 | Rt. | 57.15 | | | 24.765 | | | | | 1 | 1 | | 18.9 | | 1 | 1 |
| | | | | | | | | | | | | | | | | | | | |
| 13-G | 39 | 14+987.61 | 14+999.04 | Lt. | 11.43 | | | 7.62 | | | | 1 | | 1 | | | | 1 | |
| 14-G | 39 | 14+980.57 | 14+992.00 | Lt. | 3.81 | | | 7.62 | | | | 1 | | 1 | | | | 1 | |
| 15-G | 39 | 15+021.90 | 15+100 | Lt. | 60.96 | | | 78.1 | | | | | | 1 | | | | 3 | |
| 16-G | 39 | 15+014.96 | 15+100 | Lt. | 38.10 | 22.86 | | 85.14 | | | | | | 1 | | | | 3 | |
| 17-G | 39 | 14+873.06 | 14+83.55 | Rt. | 38.10 | 22.86 | | 95.25 | | | 1 | | | 1 | | | | 5 | |
| 18-G | 39 | 14+892.69 | 14+976.51 | Rt. | 53.34 | | | 68.58 | | | 1 | | | 1 | | | | 4 | |
| 19-G | 39 | 15+006.41 | 15+017.84 | Rt. | 7.62 | | | 7.62 | | | | 1 | | 1 | | | | 1 | |
| 20-G | 39 | 14+999.37 | 15+010.811 | Rt. | 11.43 | | | 7.62 | | | | 1 | | 1 | | | | 1 | |
| | | | | | | | | | | | | | | | | | | | |
| 21-G | 40 | 15+100 | 15+117.15 | Lt. | | | | 1.91 | | | 1 | | | | | | | 2 | |
| 22-G | 40 | 15+100 | 15+125.35 | Lt. | | | | 10.11 | | | 1 | | | | | | | 2 | |
| 23-G | 40 | 15+566.15 | 15+577.58 | Lt. | 7.62 | | | 7.62 | | | | 1 | | 1 | | | | 1 | |
| 24-G | 40 | 15+564.00 | 15+575.43 | Lt. | 7.62 | | | 3.81 | | | | 1 | | 1 | | | | 1 | |
| 25-G | 40 | 15+604.25 | 15+691.88 | Lt. | 53.34 | | | 72.39 | | | 1 | | | 1 | | | | 5 | |
| 26-G | 40 | 15+602.10 | 15+712.59 | Lt. | 38.10 | 22.86 | | 95.25 | | | 1 | | | 1 | | | | 5 | |
| 27-G | 40 | 15+462.36 | 15+572.85 | Rt. | 38.10 | 22.86 | | 95.25 | | | 1 | | | 1 | | | | 5 | |
| 28-G | 40 | 15+475.45 | 15+570.70 | Rt. | 53.34 | | | 80.01 | | | 1 | | | 1 | | | | 4 | |
| 29-G | 40 | 15+599.52 | 15+610.95 | Rt. | 7.62 | | | 7.62 | | | | 1 | | 1 | | | | 1 | |
| 30-G | 40 | 15+597.37 | 15+608.80 | Rt. | 7.62 | | | 7.62 | | | | 1 | | 1 | | | | 1 | |
| | | | | | | | | | | | | | | | | | | | |
| 31-G | 42 | 17+094.31 | 17+155.27 | Rt. | 57.15 | | | 41.91 | | | 1 | 1 | | | | | | 3 | |
| 32-G | 42 | 17+109.85* | 17+155.57* | Rt. | 45.72 | | | 26.67 | | | 1 | 1 | | | | | | 2 | |
| | | | | | | | | | | | | | | | | | | | |
| 33-G | 43 | 17+385.40 | 17+434.13 | Lt. | 72.39 | | | 9.525 | | | 1 | | 1 | | | 24.6 | | 2 | 2 |
| 34-G | 43 | 17+386.68 | 17+453.43 | Lt. | | | | 15.24 | 38.10 | | | 1 | | | | | 1 | | |
| 35-G | 43 | 17+342.00 | 17+408.75 | Rt. | | | | 15.24 | 38.10 | | | 1 | | | | | 1 | | |
| 36-G | 43 | 17+288.885 | 17+406.00 | Rt. | 68.58 | | | 81.915 | | | 1 | | 1 | | | 20.6 | | 3 | 2 |
| 37-G | 43 | 17+274.91* | 17+446.36* | Lt. | 148.59 | | | 160.02 | | 1 | | 1 | | | | | | 6 | |
| 38-G | 43 | 17+271.69* | 17+450* | Rt. | 102.11 | | | 170.69 | | 1 | | | | | | | | 6 | |
| 39-G | 43 | 17+450* | 17+477.43* | Rt. | 27.43 | | | 27.43 | | | | | | | | | | 1 | |
| 40-G | 43 | 17+350.20# | 17+380# | Lt. | 33.38 | | | 22.18 | | 1 | | | | | | | | 1 | |
| 41-G | 43 | 17+309.14# | 17+380# | Rt. | 70.86 | | | 63.24 | | | | | | | | | | 3 | |
| 42-G | 43 | 17+380# | 17+530# | Lt. | 149.5 | | | 150 | | | | | | | | | | 5 | |
| 43-G | 43 | 17+380# | 17+530# | Rt. | 150.12 | | | 150 | | | | | | | | | | 5 | |
| | | | | | | | | | | | | | | | | | | | |
| 44-G | 44 | 17+530# | 17+559.75# | Lt. | | | | 25.94 | | | | 1 | | | | | | 1 | |
| 45-G | 44 | 17+530# | 17+560.60# | Rt. | | | | 26.79 | | | | 1 | | | | | | 1 | |
| | | | | | | | | | | | | | | | | | | | |
| Totals | | | | | 1874.52 | 137.16 | | 2293.62 | 76.20 | 4 | 18 | 20 | 3 | 23 | | 82.5 | 2 | 116 | 6 |

Carried to General Summary, Sheets 13 & 14.

* Ramp "C" Stationing
\# Ramp "D" Stationing

CALCULATED DJS
CHECKED

MISCELLANEOUS CALCULATIONS AND TABLES

VAN-30-6.618(4.05)



DESIGN FILE : i:\pd\van30d\v30grmc.dgn
USERNAME : rhermon
DATE : 03-SEP-1997
TIME : 10:36

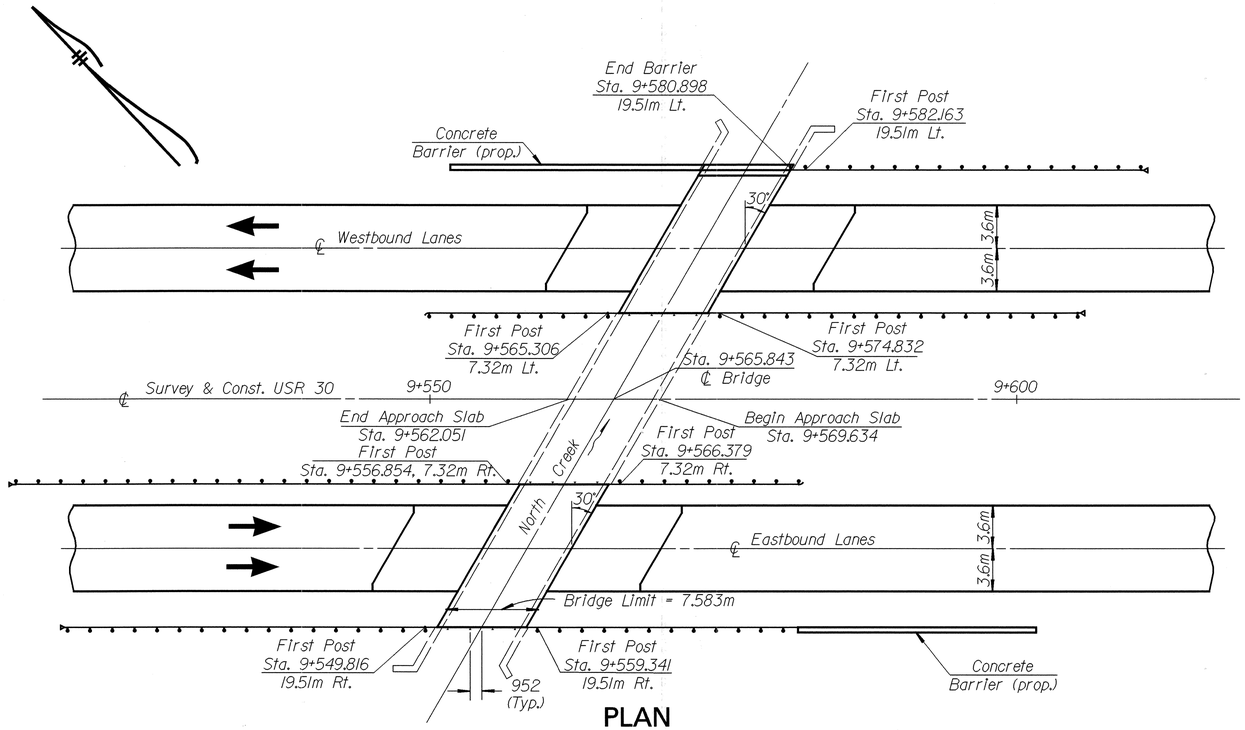


PLAN

## PROPOSED WORK

1.) Remove existing asphalt wearing course
2.) Patch and repair deck & abutment walls
3.) Remove 25mm of Existing Monolithic Concrete Using Hydrodemolition
4.) Micro-Silica Modified Concrete Overlay (51mm thick)
5.) Install Polymer Modified Asphalt Expansion Joint System
6.) Seal concrete surfaces (Epoxy)
7.) Widen left bridge and replace guardrail on left side of left bridge with reinforced concrete parapet
8.) New Steel Drip Strip

NOTE: All dimensions on this sheet are in millimeters unless otherwise specified.

## EXISTING STRUCTURE DATA

**TYPE:** Single span reinforced concrete slab with reinforced concrete abutments
**SPAN:** 6 710 ± face to face of abutments
**ROADWAY:** 12 192 ± f/f guardrail (Lt. & Rt.)
**LOADING:** MS18
**SKEW:** 30°-0' L.F.
**WEARING SURFACE:** Bituminous
**APPROACH SLAB:** AS-1-54M (7600 Long)
**ALIGNMENT:** Tangent
**STRUCTURE FILE NUMBER (RT):** 8100217
**STRUCTURE FILE NUMBER (LT):** 8100187
**BUILT:** 1968

## PROPOSED STRUCTURE

**ROADWAY:** 12 192 Guardrail Face to Parapet Toe
**WEARING SURFACE:** 51mm Micro-Silica Modified Concrete

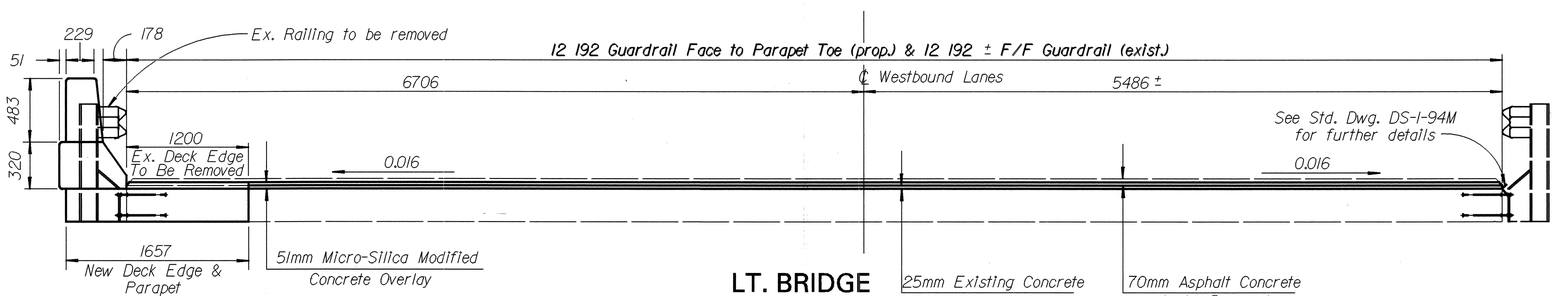


LT. BRIDGE

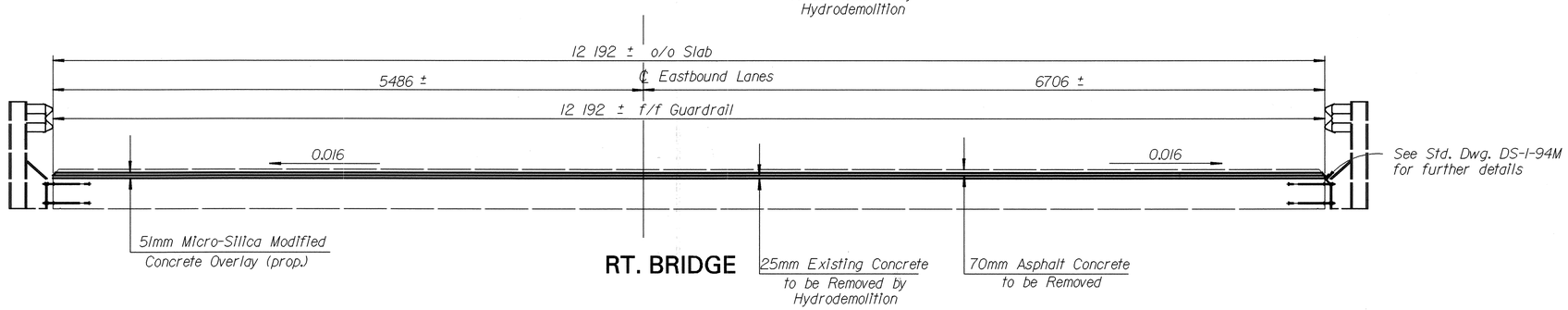


RT. BRIDGE

TRANSVERSE SECTIONS

DESIGN FILE : i:\pd\van30d\br058lsp.dgn
USERNAME : rhermon
DATE : 04-SEP-1997
TIME : 10:09

DESIGN AGENCY: District One Production Department

| DESIGNED | DRAWN | REVIEWED | DATE |
|---|---|---|---|
| DJS | DJS | RLS | 9/4/97 |
| CHECKED | REVISED | STRUCTURE FILE NUMBER | |
| JRC | | 8100187 Lt. 8100217 Rt. | |

GENERAL PLAN
BRIDGE NO. VAN-30-09350, Over North Creek

VAN-30-6.618(4.05)

1/5

123/134

## ESTIMATED QUANTITIES LT. STRUCTURE

| ABUT-MENTS | SUPER-STRUCTURE | ITEM | ITEM EXT. | TOTAL | UNIT | DESCRIPTION | SEE SHEET No. |
|---|---|---|---|---|---|---|---|
| | LUMP | 202 | 11202 | LUMP | LUMP | PORTIONS OF STRUCTURE REMOVED, OVER 6 METER SPAN | |
| | 83 | 202 | 23501 | 83 | SQ METER | WEARING COURSE REMOVED, AS PER PLAN | 124 |
| | 8 | 202 | 38500 | 8 | METER | BRIDGE RAILING REMOVED | |
| | 7 | 511 | 34400 | 7 | CU METER | CLASS S CONCRETE, SUPERSTRUCTURE | |
| 115 | 44 | SPECIAL | 51267502 | 159 | SQ METER | SEALING OF CONCRETE SURFACES(EPOXY)(SEE PROPOSAL NOTE) | |
| | 28 | SPECIAL | 51631300 | 28 | METER | POLYMER MODIFIED ASPHALT EXPANSION JOINT SYSTEM | 134 |
| | 7 | SPECIAL | 51822300 | 7 | METER | STEEL DRIP STRIP | 124 |
| 3 | 17 | 519 | 11100 | 20 | SQ METER | PATCHING CONCRETE STRUCTURE | |
| | 92 | SPECIAL | 51922020 | 92 | SQ METER | MICRO-SILICA MODIFIED CONCRETE OVERLAY, USING HYDRODEMOLITION (51mm THICK) (SEE PROPOSAL NOTE) | |
| | 2 | SPECIAL | 51922130 | 2 | CU METER | MICRO-SILICA MODIFIED CONCRETE OVERLAY (VARIABLE THICKNESS), MATERIAL ONLY (SEE PROPOSAL NOTE) | |
| | 4 | SPECIAL | 51922134 | 4 | SQ METER | HAND CHIPPING (SEE PROPOSAL NOTE) | |
| | 2 | SPECIAL | 51922200 | 2 | CU METER | FULL DEPTH REPAIR (MICRO-SILICA) (SEE PROPOSAL NOTE) | |
| | LUMP | SPECIAL | 51922300 | LUMP | LUMP | TEST SLAB (SEE PROPOSAL NOTE) | |

## ESTIMATED QUANTITIES RT. STRUCTURE

| ABUT-MENTS | SUPER-STRUCTURE | ITEM | ITEM EXT. | TOTAL | UNIT | DESCRIPTION | SEE SHEET No. |
|---|---|---|---|---|---|---|---|
| | LUMP | 202 | 11202 | LUMP | LUMP | PORTIONS OF STRUCTURE REMOVED, OVER 6 METER SPAN | |
| | 93 | 202 | 23501 | 93 | SQ METER | WEARING COURSE REMOVED, AS PER PLAN | 124 |
| 115 | 44 | SPECIAL | 51267502 | 159 | SQ METER | SEALING OF CONCRETE SURFACES(EPOXY)(SEE PROPOSAL NOTE) | |
| | 28 | SPECIAL | 51631300 | 28 | METER | POLYMER MODIFIED ASPHALT EXPANSION JOINT SYSTEM | 134 |
| | 19 | SPECIAL | 51822300 | 19 | METER | STEEL DRIP STRIP | 124 |
| 3 | 17 | 519 | 11100 | 17 | SQ METER | PATCHING CONCRETE STRUCTURE | |
| | 92 | SPECIAL | 51922020 | 92 | SQ METER | MICRO-SILICA MODIFIED CONCRETE OVERLAY, USING HYDRODEMOLITION (51mm THICK) (SEE PROPOSAL NOTE) | |
| | 2 | SPECIAL | 51922130 | 2 | CU METER | MICRO-SILICA MODIFIED CONCRETE OVERLAY (VARIABLE THICKNESS), MATERIAL ONLY (SEE PROPOSAL NOTE) | |
| | 4 | SPECIAL | 51922134 | 4 | SQ METER | HAND CHIPPING (SEE PROPOSAL NOTE) | |
| | 2 | SPECIAL | 51922200 | 2 | CU METER | FULL DEPTH REPAIR (MICRO-SILICA) (SEE PROPOSAL NOTE) | |
| | LUMP | SPECIAL | 51922300 | LUMP | LUMP | TEST SLAB (SEE PROPOSAL NOTE) | |

Note: All dimensions on this sheet are in millimeters unless otherwise specified.

### REINFORCING STEEL LIST

| MARK | NO. | LENGTH(MM) | SHAPE |
|---|---|---|---|
| | | PARAPETS | |
| X16M01 | 2 | 7383 | Bt. |
| X16M02 | 6 | 7433 | Str. |
| Y16M01 | 12 | 914 | Bt. |
| Y19M01 | 11 | 2285 | Bt. |
| Y19M02 | 22 | 1080 | Bt. |
| Y19M03 | 17 | 1290 | Bt. |
| | | DECK | |
| X22M02 | 54 | 1604 | Str. |
| X25M02 | 12 | 7417 | Str. |
| X25M03 | 12 | 8028 | Bt. |

### BENDING DIAGRAMS

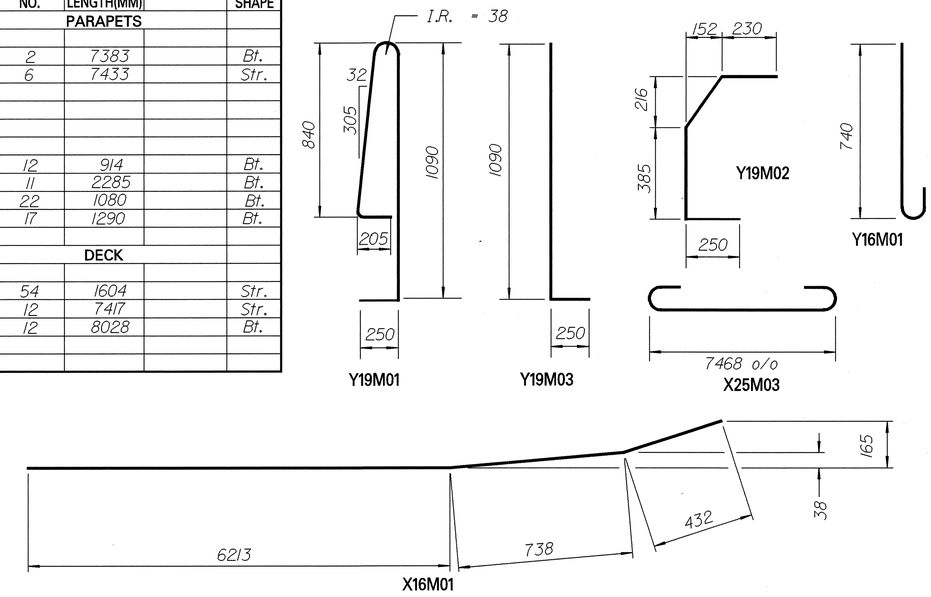


## GENERAL NOTES

**EXISTING STRUCTURE VERIFICATION**

Details and dimensions shown on these plans pertaining to the existing structure have been obtained from plans of the existing structure and from field observations and measurements. Consequently, they are indicative of the existing structure and the proposed work but they shall be considered tentative and approximate. The contractor is referred to CMS Sections 102.05, 105.02.

Contract bid prices shall be based upon a recognition of the uncertainties described above and upon a prebid examination of the existing structure by the contractor. However, all project work shall be based upon actual details and dimensions which have been verified by the contractor in the field.

Copies of the existing bridge plans are on file at the District 1 Office of the Ohio Department of Transportation in Lima, Ohio.

**ITEM 202 - WEARING COURSE REMOVED, AS PER PLAN**

The payment for the removal of any waterproofing encountered while removing the existing asphalt wearing surface shall be included under Item 202 - Wearing Course Removed, as per plan

**ITEM 519 - PATCHING CONCRETE STRUCTURE**

Due to the small number of areas to be patched an Engineer's quantity of 15 Sq. M. per structure shall be included in the estimated quantities. This quantity shall be used at the Engineer's discretion, and shall be paid for under Item 519, Patching Concrete Structure. Some of the areas to be patched might include the wingwalls and backwall. These areas were not detailed due to the uncertainties of future deterioration of the structure. Also included in this item will be a quantity of 3 Sq. M. to prepare the deteriorated deck edge for the steel drip strip, and 5 Sq. M. to repair the abutments.

**ITEM SPECIAL - SEALING CONCRETE SURFACES (EPOXY)**

Work to be performed on this item is to follow the completion of Item 519, Patching of Concrete Structures. The areas to be sealed are as follows: The exposed areas of the wingwalls and abutments also. Also seal bridge deck. See Proposal Note.

**ITEM 202 - PORTIONS OF STRUCTURE REMOVED**

The work to be performed on this Item shall consist of the removal of an area of concrete 510mm wide centered on the expansion joint at each abutment. The depth shall be 75mm as shown on Sheet 134. The work shall also include the removal of a 1200mm width of concrete from the north side of the left bridge deck.

Transverse steel shall remain exposed and the longitudinal steel shall be removed. Guardrail (north side of left bridge) will also be removed. This Item shall include all labor and equipment necessary to complete the described work. Payment for this Item will be a Lump Sum.

**ITEM SPECIAL - STEEL DRIP STRIP**

Work to be performed on this item is to follow Std. Dwg DS-1-94M.

DESIGN FILE : i:\pd\van30d\br058isn.dgn
USERNAME : rhermon
DATE : 04-SEP-1997
TIME : 11:07

DESIGN AGENCY: District One Production Department
DATE: 9/4/97
REVIEWED: RLS
STRUCTURE FILE NUMBER: 8100127 Lt. 8100217 Rt.
DRAWN: DJS
REVISED:
DESIGNED: DJS
CHECKED: JRC

GENERAL NOTES & ESTIMATED QUANTITIES
BRIDGE NO. VAN-30-09350

VAN-30-6.618(4.05)

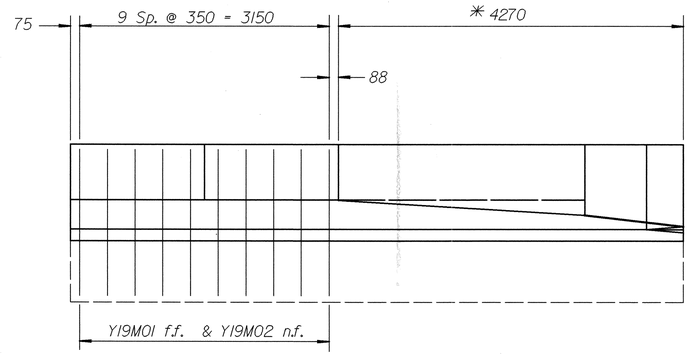


## LONGITUDINAL SECTION
VERTICAL STEEL IN DEFLECTOR PARAPET

**NOTES:**

For details of removing existing Guardrail and reconstruction of Proposed Safety Shape Parapet on Structure, see Sht.127.

Drawing not to scale.

Sections are shown viewing face of Parapets.

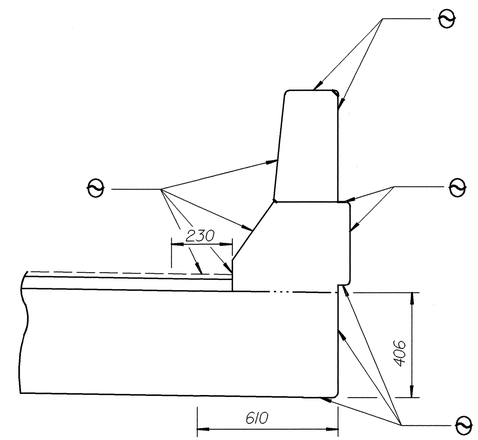


⊖ - Surfaces to be sealed (Epoxy)

## SECTION THRU DEFLECTION JOINT

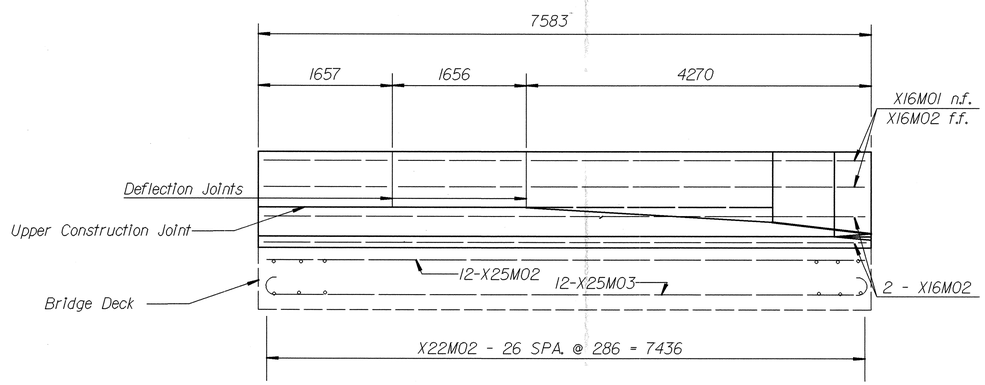


## LONGITUDINAL SECTION
HORIZONTAL STEEL IN DEFLECTOR PARAPET

* For additional details of 4270mm End Section, see sheet 126.

Note: All dimensions on this sheet are in millimeters unless otherwise specified.

### LEGEND

f.a. - Fwd. Abutment
r.a. - Rear Abutment
n.f. - Near Face
f.f. - Far Face
Rt. - Right Side
Lt. - Left Side

DESIGN FILE : i:\pd\van30d\br0581hv.dgn
USERNAME : rhermon
DATE : 04-SEP-1997
TIME : 11:00

DESIGN AGENCY: District One Production Department

| DESIGNED | DRAWN | REVIEWED | DATE |
|---|---|---|---|
| DJS | DJS | RLS | 9/4/97 |
| CHECKED | REVISED | STRUCTURE FILE NUMBER | |
| JRC | | 8100187 Lt. 8100217 Rt. | |

# PARAPET DETAILS
BRIDGE NO. VAN-30-09350

VAN-30-6.618(4.05)

3/5

125/134

Note: All dimensions on this sheet are in millimeters unless otherwise specified.

Note A: Seal 16mm Plate all around with Hypalon. Include with Item 606, Bridge Terminal Assembly Type I for payment. (see Std. Dwg. GR-3JM for additional details.)

**DESIGN SPECIFICATIONS:** See Std. Dwg. BR - IM

**DESIGN DATA FOR PARAPET END SECTION:** See Std. Dwg. BR - IM

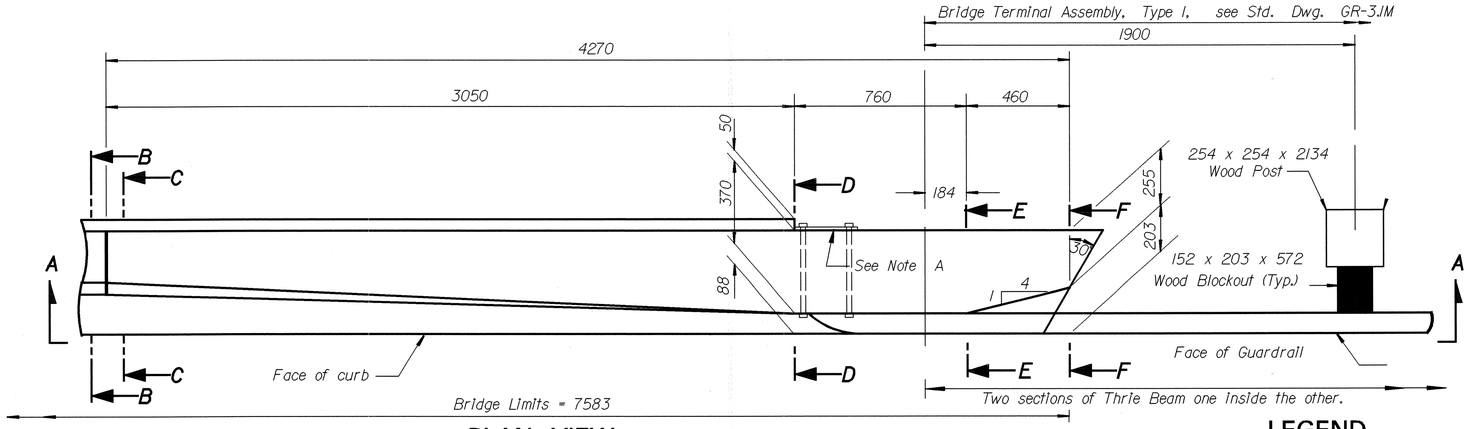


## PLAN VIEW

## LEGEND

n.f. ~ Near Face
f.f. ~ Far Face
# ~ Optional Construction Joint
## ~ Construction Joint
▬ ~ 51mm Micro-Silica Modified Concrete Overlay
* ~ 25mm Existing Concrete Removed By Hydrodemolition

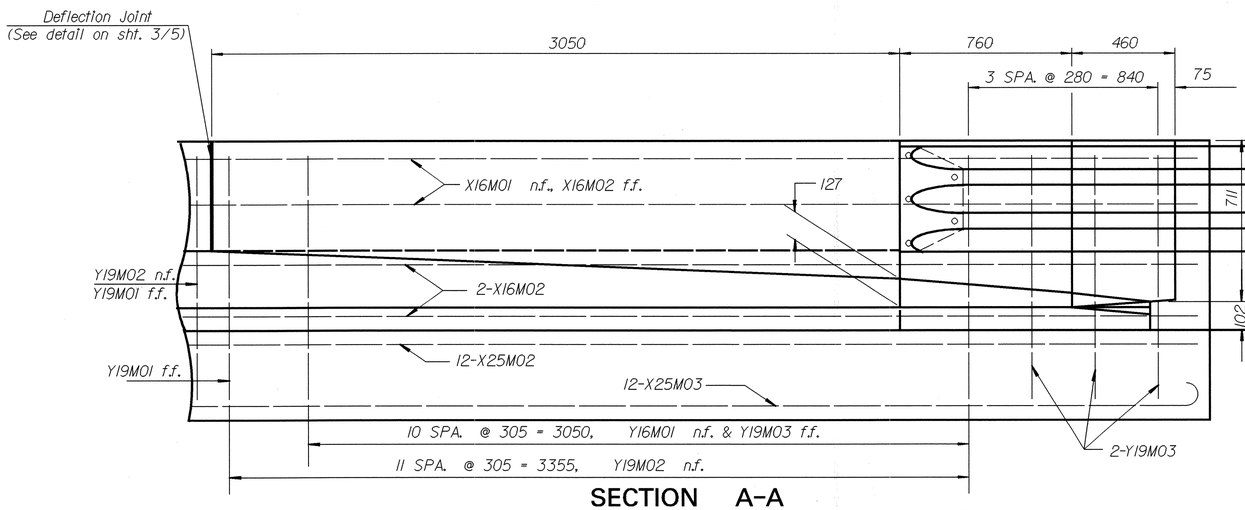


## SECTION A-A

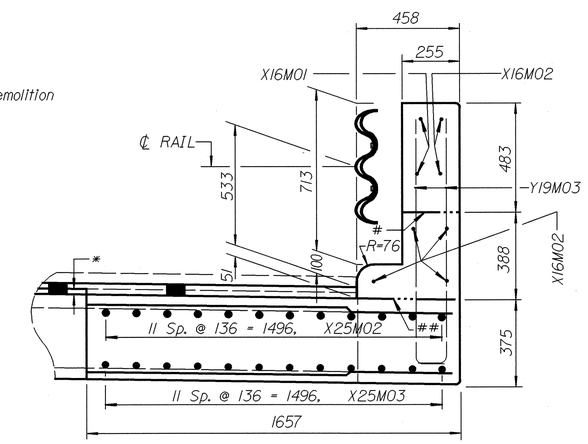


## SECTION F-F

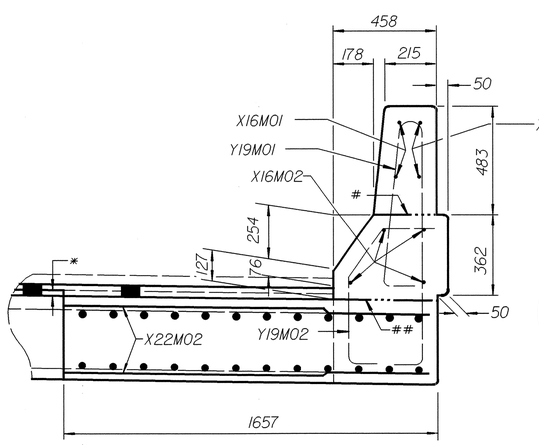


## SECTION B-B

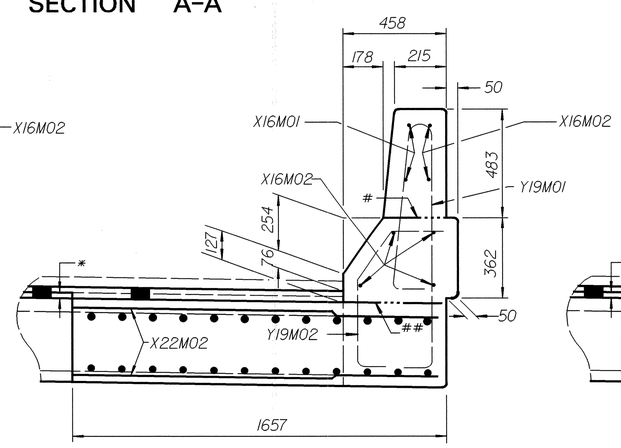


## SECTION C-C

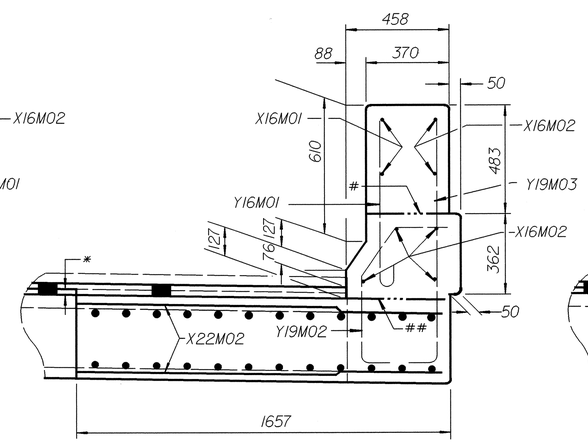


## SECTION D-D

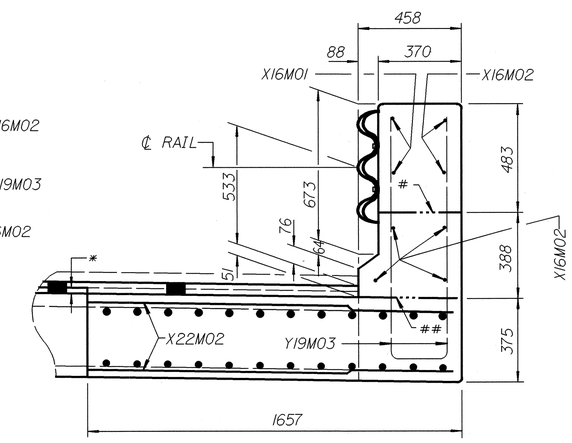


## SECTION E-E

DESIGN AGENCY: District One Production Department

| DESIGNED | DRAWN | REVIEWED | DATE |
|---|---|---|---|
| DJS | DJS | RLS | 9/4/97 |
| CHECKED | REVISED | STRUCTURE FILE NUMBER | |
| JRC | | 8100187 Lt. 8100217 Rt. | |

# DEFLECTOR PARAPET END SECTION

BRIDGE NO. VAN-30-09350

VAN-30-6.618(4.05)

4/5

126/134

DESIGN FILE : i:\pd\van30d\br058lpe.dgn
USERNAME : rhermon
DATE : 04-SEP-1997
TIME : 11:12

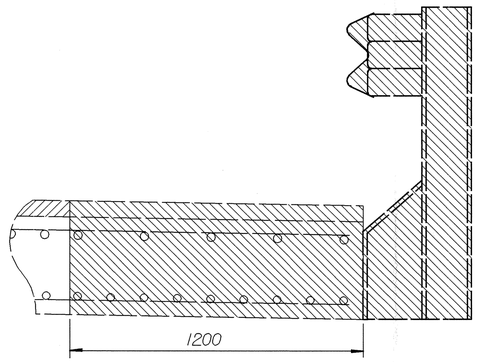


TYPICAL EXISTING SECTION

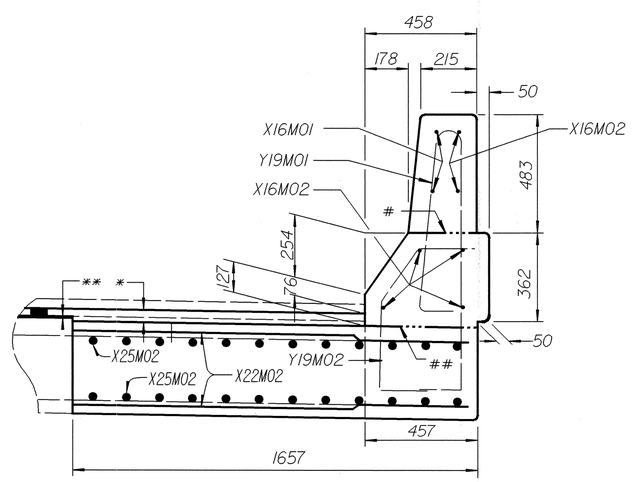


TYPICAL PROPOSED SECTION THROUGH SAFETY SHAPE PARAPET

## LEGEND

n.f. ~ Near Face
f.f. ~ Far Face
# ~ Optional Construction Joint
## ~ Construction Joint
▬ ~ 51mm Micro-Silica Modified Concrete Overlay
* ~ 25mm Existing Concrete Removed By Hydrodemolition
~ Portions of structure to be removed (202).
~ Wearing course removed, as per plan (202).

## NOTES

All bars shall maintain a 64mm minimum clearance from the outside edge of Parapet unless otherwise noted.

Drawings not to scale.

All dimensions on this sheet are in millimeters unless otherwise specified.

DESIGN FILE : i:\pd\van30d\br058lpp.dgn
USERNAME : rhermon

DATE : 04-SEP-1997
TIME : 11:33

DESIGN AGENCY
District One
Production Department

| DESIGNED | DRAWN | REVIEWED | DATE |
|---|---|---|---|
| DJS | DJS | RLS | 9/4/97 |
| CHECKED | REVISED | STRUCTURE FILE NUMBER | |
| JRC | | 810087 Lt. 810021 Rt. | |

PARAPET DETAILS
BRIDGE NO. VAN-30-09350

VAN-30-6.618(4.05)

5/5

127/134