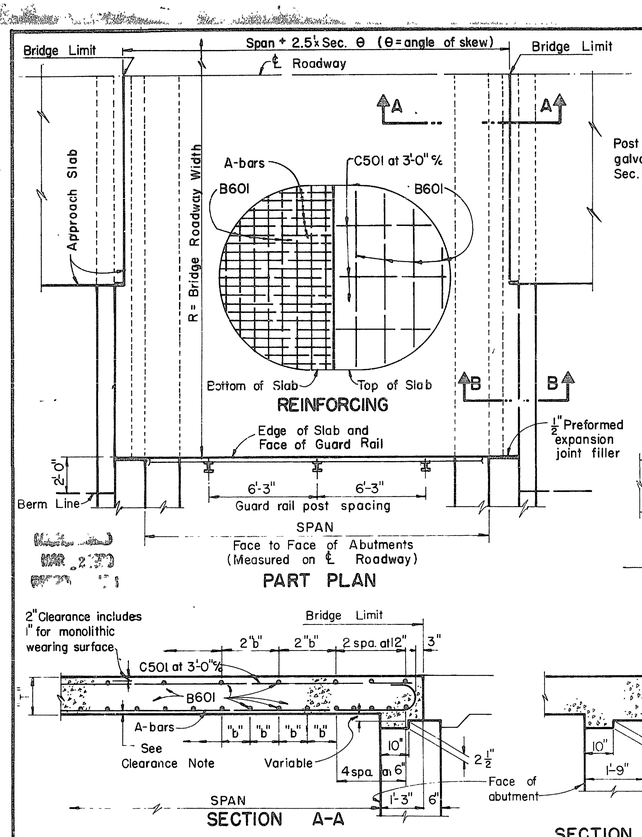

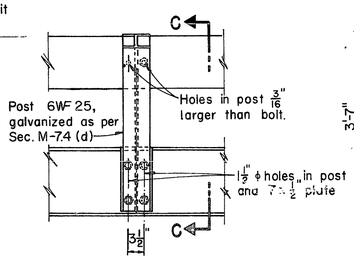

RAILING ELEVATION

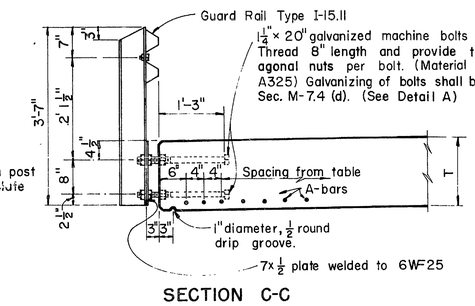

SECTION C-C

*Add 1 cu.yd. to product of R x cu.yds per ft. of width, to take into account edge beams.

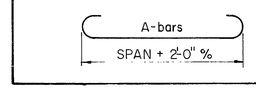

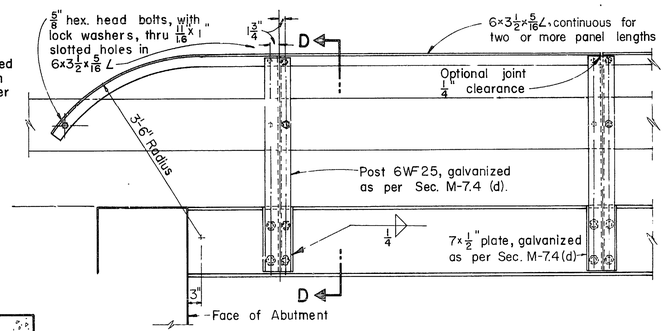

RAILING ELEVATION
(TOP HANDRAIL OPTIONAL)

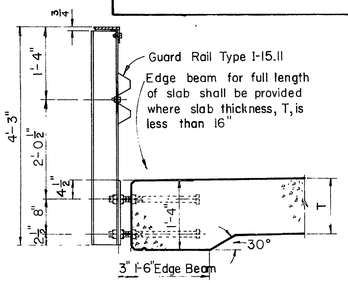

SECTION D-D
SHOWING DETAILS OF EDGE BEAM

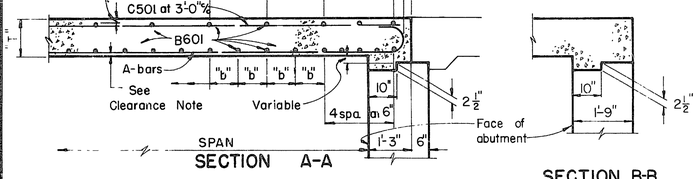

SECTION B-B

BRIDGE ROADWAY CROWN

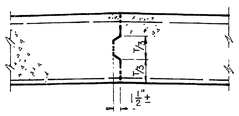

CONSTRUCTION JOINT
(See Note)

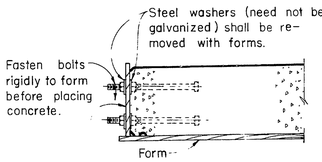

DETAIL A

GENERAL: This set of drawings (sheets No. 1 and 2) provides design and general construction details. The project plans for each structure shall show span length, roadway width, load frequency, skew, curve and superelevation (if any), elevations, wearing surface, estimated quantities, reinforcing steel list and other necessary information including details and special notes. Abutments shall be completely detailed for all bridges. For skewed bridges special details will be required.

DESIGN SPECIFICATIONS: These standard drawings conform to the requirements of "Design Specifications for Highway Structures", of the State of Ohio, Department of Highways, dated September 1, 1957, together with revisions thereof dated February 21, 1958, May 1, 1962 and December 20, 1963.

DESIGN UNIT STRESSES:

Concrete, Class "C", f_c = 1,333 psi
Class "E", f_c = 1,133 psi
Reinforcing Steel, ASTM A15, A16, A160, Deformed, Intermediate or Hard Grade f_s = 20,000 psi

SPAN-TO-HEIGHT LIMITATIONS: For an abutment height (H) from 9'-0" to 15'-0", any combination of span length to abutment height shown in the tables may be used. For an abutment height of 15'-6" or more the minimum recommended span in feet shall be equal to H plus 2 feet, where H is the abutment height in feet.

Generally it would be uneconomical to use a span less than the recommended minimum, and a different type structure should be considered. If a span less than the recommended minimum must be used, a special footing design is required.

SKEW: For skew of 35° or less, the A-bars shall be parallel to centerline of roadway and the B601 bars parallel to the abutment. B601 bars shall be lengthened and spacing shall be measured along centerline of roadway. For skew greater than 35° the design must be special with A-bars normal to the abutment and with a beam along each side to strengthen the edges of the slab. For any skew, the length and end height of the abutment wings shall be made to fit the roadway section and the topography at the site.

FOOTING TYPE: The selection of the type of footing to be used shall be in accordance with the following rules:

Footing on piles (See appropriate Section E-E)
Dimension "A", 9'-6" or less, use single row of piles
Dimension "A", greater than 9'-6", use two rows of piles
Footing on Earth (See appropriate Section E-E)
Dimension "A", 5'-0" to 16'-0", allowable foundation pressure 5000 psf
Footing on Bedrock (See appropriate Section E-E)
Dimension "A", 5'-0" to 16'-0", allowable foundation pressure 8000 psf

PILE TYPE AND SIZE shall be as specified on the project plans. The piles usually will be either cast-in-place reinforced concrete (generally 12" diameter) or steel H (generally 10BP42).

PILE CAPACITY shall be as specified on the project plans. The required capacity according to the formula in Sec S-18.05 of the "Construction and Material Specifications" generally will be the same as the design load listed in the table (but not less than 20 tons), except for steel H piles that are driven to firm contact with rock or other hard material. In this latter case the required formula capacity generally will be greater than the design load and will be dependent upon the relative magnitude of the design load and size of hammer, and upon the kind and relative depth of penetrated soil. See Sec. 107 of the "Design Specifications for Highway Structures." In case of a skewed bridge, the spacing and design load per pile shall not exceed that tabulated hereon.

HORIZONTAL RESTRAINT: The design of the abutment takes into account the horizontal restraint against movement provided by the deck slab. If such horizontal restraint is not provided, as in the case of a bridge with expansion provision on the bridge seats, a special abutment design is required. If a contraction or expansion joint is provided in the wall at or beyond the edge of deck slab, a special design of the abutment beyond such point is required.

POROUS BACKFILL shall extend from 6" below weepholes upward to the approach slab and to the surface of the earth shoulders. Backfill shall not be placed higher than one-third "H" prior to placing of deck slab.

BRIDGE SEATS: Deck slab seat and approach slab seat shall be straight (not crowned). For a superelevated bridge they shall be parallel to top of deck slab.

BRIDGES ON HORIZONTAL CURVES: The edges of deck shall generally be built straight. The deck shall be superelevated for its full width at the same rate as the approach pavement except that, in case of a superelevated section with stabilized shoulder of width greater than 6 feet, the deck slab on the high side shall fit the approach shoulder section.

MONOLITHIC WEARING SURFACE shall be 1". Concrete quantities have been computed on this basis. Tabulated values of "T" include the monolithic wearing surface.

REINFORCING STEEL: Bar size is indicated in the bar mark. The first digit where three digits are used and the first two digits where four are used, indicate the bar number. Thus, A601 is a No. 6 size bar and A1020 is a No. 10 size.

REINFORCING STEEL CON'T: B601 bars may be furnished in one length as shown, or in pairs of equal length, lapped 30 diameters at the centerline of roadway, or they may be furnished in pairs of different length in order to place the lap beyond a longitudinal construction joint at the centerline of roadway, at the option of the Contractor. Determination of the pay quantity shall be according to the number and length of bars shown hereon, unless otherwise called for on the project plans.

REINFORCING STEEL CLEARANCE from the surface of concrete for the bars in the bottom of the deck slab shall be 1¼" for No. 9 and No. 10 bars and 1" for smaller bars.

CONCRETE in the deck slab shall be Class "C" and in the walls and footings Class "E". Wall and footing concrete shall be listed separately in the Estimated Quantities.

DECK CONSTRUCTION JOINT: A longitudinal construction joint in the slab, preferably at or near the centerline of roadway, will be permitted.

CAMBER: To assure that the deck slab will conform with the profile of the highway after release of the falsework, the deck forms and falsework shall be cambered. The amount of camber shall be the deflection of the deck slab, plus deflection of falsework, plus or minus any curvature due to vertical curve on roadway profile.

Deflection of deck slab (inches) = 0.000018 S^3
S = span length in feet.

RAILING: The transition between the guard rail height on the bridge and on the approaches shall be made in a distance of 100 feet from each end of the bridge.

An upper handrail and longer posts shall be provided if called for on the project plans.

The guard rail and handrail (if any) shall be either galvanized or painted in accordance with Item S-15 of the Construction and Material Specifications, except that the type of protective coating shall conform to that of the guard rail on the approaches. The galvanized posts and anchor bolts shall not be painted.

SUPERSTRUCTURE DATA

LOAD FREQUENCY	SPAN Face to Face of Abutments	SLAB DATA: "T" in inches	REINFORCING: A-bars Mark	A-bars Spcg. inches	A-bars Length ft., in.	B601 Spcg. inches	B601 m_{Br}	B601 Length	C501 Length	APPROXIMATE QUANTITIES: Quantities per foot of width: Concrete Cu. Yds.	Reinforcing Lbs.	½" Pref. Exp. Joint Filler Sq. Ft.	GUARD RAIL: No. of Full Panels Ea. Side	Lin. Ft. Both Sides
CF = 30	10'-0"	9¼	A601	5¾	13'-4"	12	26			0.45*	85	10	1	
	11'-0"	9½	A602	5¼	14'-4"	12	28			0.49*	96	10	1	
	12'-0"	10	A603	5¼	15'-4"	12	29			0.54*	102	10	1	
	13'-0"	10¼	A604	4¾	16'-4"	12	31			0.58*	114	10	1	
	14'-0"	10½	A605	4½	17'-4"	11½	33			0.62*	125	10	2	
	15'-0"	11	A706	6	18'-8"	11½	35			0.68*	135	10	2	
	16'-0"	11¼	A707	5¾	19'-8"	11½	36			0.72*	145	10	2	
	17'-0"	11¾	A708	5½	20'-8"	11½	38			0.79*	156	10	2	
	18'-0"	12	A709	5¼	21'-8"	11½	39			0.84*	167	10	2	
	19'-0"	12½	A710	5¼	22'-8"	11½	41			0.90*	175	10	2	
	20'-0"	12¾	A711	5	23'-8"	11	44			0.96*	190	10	2	
	21'-0"	13¼	A712	4¾	24'-8"	11	44			1.03*	202	10	3	
	22'-0"	13½	A813	6	26'-2"	11	47			1.09*	219	10	3	
	24'-0"	14½	A814	5¾	28'-2"	10½	52			1.24	245	10	3	
	26'-0"	15½	A815	5¼	30'-2"	10	57			1.41	280	10	3	
	28'-0"	16½	A816	4¾	32'-2"	9½	63			1.60	323	11	4	
	30'-0"	17¾	A917	5¾	34'-6"	9½	67			1.83	357	11	4	
	32'-0"	18¾	A918	5¼	36'-6"	8½	77			2.04	412	12	4	
	34'-0"	19¾	A919	5	38'-6"	8½	82			2.27	450	13	5	
	36'-0"	21	A1020	6	40'-10"	8½	96			2.55	494	13	5	
CF = 130	10'-0"	10¼	A621	5	13'-4"	11	27			0.48*	93	10	1	
	11'-0"	10½	A622	4¾	14'-4"	11	29			0.53*	103	10	1	
	12'-0"	11	A723	6	15'-8"	10½	31			0.58*	116	10	1	
	13'-0"	11¼	A724	5¾	16'-8"	10½	33			0.62*	126	10	1	
	14'-0"	11¾	A725	5½	17'-8"	10½	35			0.68*	137	10	2	
	15'-0"	12	A726	5¼	18'-8"	10½	36			0.72*	147	10	2	
	16'-0"	12½	A727	5¼	19'-8	10½	38			0.79*	155	10	2	
	17'-0"	12¾	A728	5	20'-8"	10½	40			0.84*	168	10	2	
	18'-0"	13¼	A729	4¾	21'-8"	10½	41			0.91*	181	10	2	
	19'-0"	13¾	A830	6¼	23'-2"	10½	43			0.98	191	10	2	
	20'-0"	14	A831	6	24'-2"	10	47			1.03	207	10	2	
	21'-0"	14½	A832	5¾	25'-2"	10	48			1.11	221	10	3	
	22'-0"	14¾	A833	5½	26'-2"	10	50			1.17	236	10	3	
	24'-0"	15¾	A834	5¼	28'-2"	9½	56			1.32	266	10	3	
	26'-0"	16¾	A835	4¾	30'-2"	9	62			1.52	307	11	3	
	28'-0"	18¼	A936	5½	32'-6"	8½	69			1.76	355	12	4	
	30'-0"	19¼	A937	5¼	34'-6"	8½	74			1.98	391	12	4	
	32'-0"	20¼	A938	4¾	36'-6"	8	82			2.21	449	13	4	
	34'-0"	21½	A1039	5¾	38'-10"	7½	91			2.48	499	14	5	
	36'-0"	22¾	A1040	5½	40'-10"	7½	95			2.76	539	14	5	
CF = 400	10'-0"	11	A741	6	13'-8"	10	29			0.51*	104	10	1	
	11'-0"	11½	A742	5¾	14'-8"	10	30			0.56*	112	10	1	
	12'-0"	11¾	A743	5½	15'-8"	9½	33			0.60*	124	10	1	
	13'-0"	12¼	A744	5¼	16'-8"	9½	35			0.66*	136	10	1	
	14'-0"	12¾	A745	5	17'-8	9½	37			0.72*	148	10	2	
	15'-0"	13	A746	4¾	18'-8"	9½	38			0.77*	160	10	2	
	16'-0"	13½	A747	4¾	19'-8"	9½	41			0.84	170	10	2	
CF = 2000	10'-0"	11½	A751	5½	13'-8"	9½	29			0.52*	109	10	1	
	11'-0"	12	A752	5½	14'-8"	9½	31			0.58*	117	10	1	
	12'-0"	12¼	A753	5¼	15'-8"	9½	33			0.62*	128	10	1	
	13'-0"	12¾	A754	5¼	16'-8"	9½	35			0.68	136	10	1	
	14'-0"	13	A755	5	17'-8"	9½	37			0.73	141	10	2	
	15'-0"	13¼	A756	4¾	18'-8"	9½	38			0.78	160	10	2	
	16'-0"	13¾	A757	4¾	19'-8"	9½	41			0.85	170	10	2	
CF = 400 & CF = 2000	17'-0"	14	A861	6	21'-2"	9½	42			0.90	183	10	2	
	18'-0"	14¼	A862	5¾	22'-2"	9½	44			0.96	197	10	2	
	19'-0"	14¾	A863	5½	23'-2"	9½	46			1.03	211	10	2	
	20'-0"	15	A864	5¼	24'-2"	9	50			1.09	231	10	2	
	21'-0"	15½	A865	5¼	25'-2"	9	52			1.17	240	10	3	
	22'-0"	15¾	A866	5	26'-2"	9	54			1.24	257	10	3	
	24'-0"	16¾	A867	4¾	28'-2"	8½	61			1.42	291	11	3	
	26'-0"	18¼	A968	5½	30'-6"	8½	65			1.65	333	12	3	
	28'-0"	19½	A969	5¼	32'-6"	8	73			1.88	373	12	4	
	30'-0"	20½	A970	4¾	34'-6"	7½	81			2.11	430	13	4	
	32'-0"	21¾	A1071	5¾	36'-10"	7½	86			2.37	472	14	4	
	34'-0"	22¾	A1072	5½	38'-10"	7½	91			2.61	514	14	5	
	36'-0"	24	A1073	5	40'-10"	7	101			2.91	587	15	5	

Length = (R − 6 Sec θ), θ = angle of skew

Length = SPAN + 2'-0"

Length = 2 (SPAN + 2.5' x sec θ) θ = angle of skew

RAILING CON'T: The tabulated railing quantity is for the length of railing between the bridge limits. This quantity includes guard rail, handrail (if called for), posts, anchors, connections, galvanizing and painting. It also includes those curved portions of the handrail which project beyond the above stated limits.

ESTIMATED QUANTITIES: The estimated superstructure quantities shown on this Standard Drawing are only approximate and shall not be used on the project plans. The designer shall compute the abutment and superstructure quantities for each project.

REVISIONS

STATE OF OHIO
DEPARTMENT OF HIGHWAYS
DIVISION OF DESIGN AND CONSTRUCTION
BUREAU OF BRIDGES

STANDARD
SINGLE SPAN SLAB BRIDGE
WITHOUT CURBS AND WITH HIGHWAY GUARD RAIL
SPANS: 10' to 36' ABUTMENT HEIGHTS: 9' to 20'
LOAD FREQUENCY: CF=30, CF=130, CF=400, CF=2000

APPROVED: DATE: 8-25-64	C. H. Gilbertson ENGINEER OF BRIDGES			DRAWING NUMBER SB-1-64
PREPARED CPD	TRACED CAM	CHECKED NAA	REVIEWED BFG CDB HHH	SHEET NO 1 OF 2 SHEETS

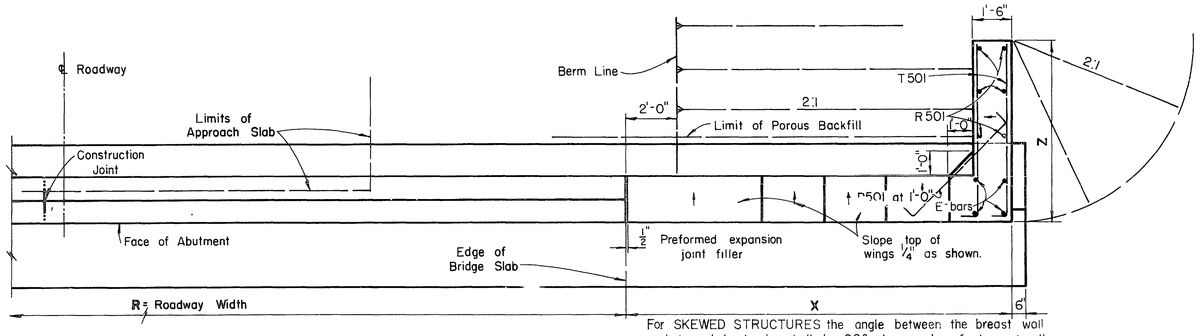

PARTIAL ABUTMENT PLAN

For SKEWED STRUCTURES the angle between the breast wall and turned back wing shall be 90° plus angle of skew at all corners.

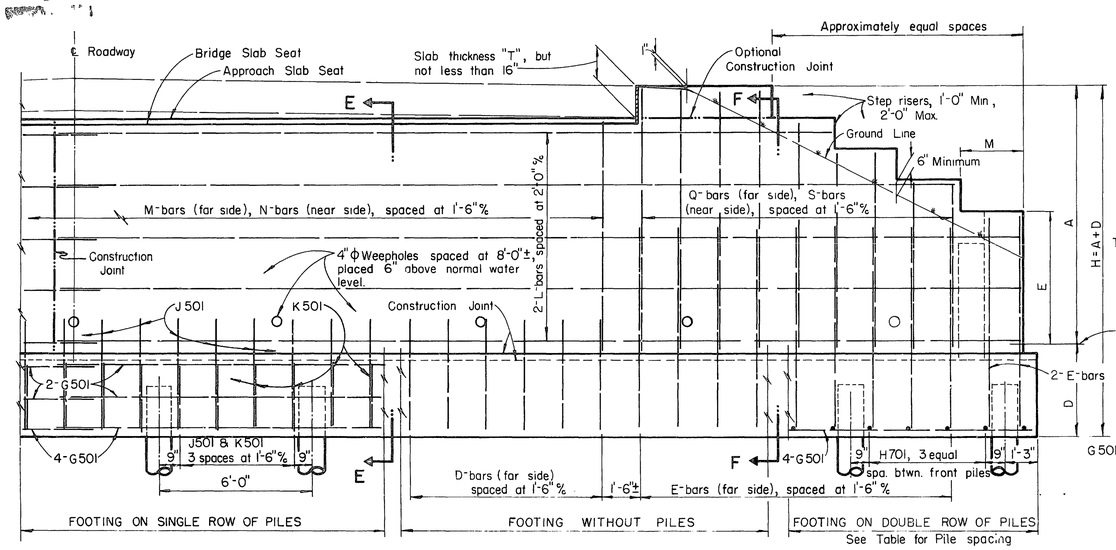

PARTIAL ELEVATION

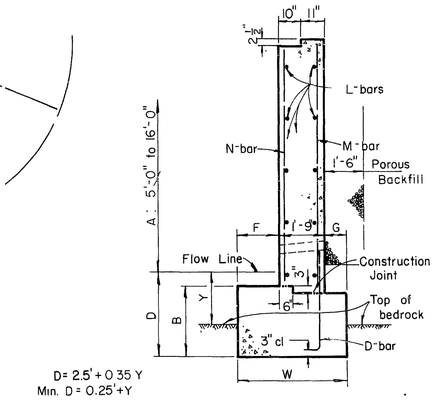

SECTION E-E (ON BEDROCK)

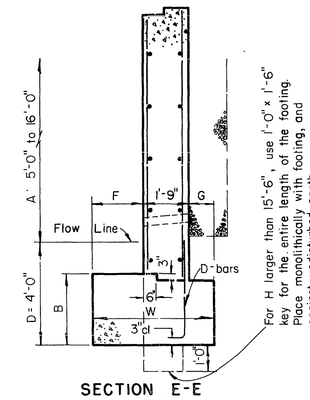

SECTION E-E (ON EARTH)

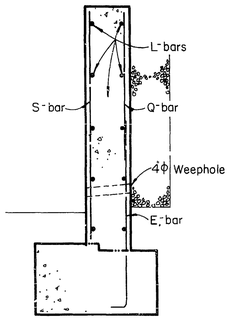

SECTION F-F

FOOTINGS WITHOUT PILES

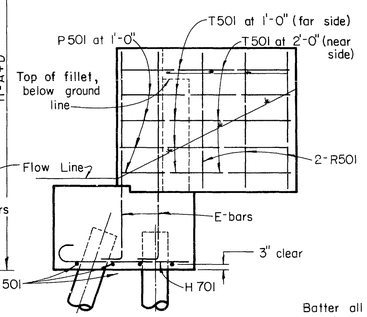

END VIEW

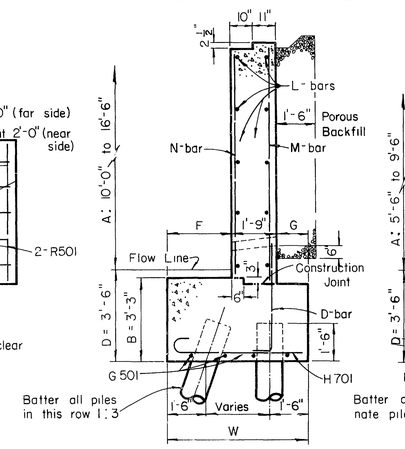

SECTION E-E

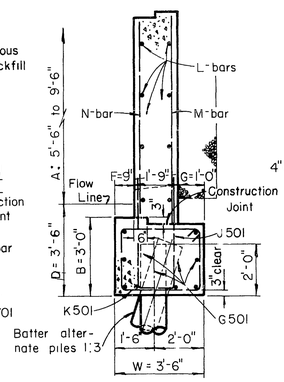

SECTION E-E

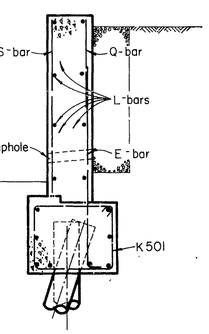

SECTION F-F

FOOTINGS WITH PILES

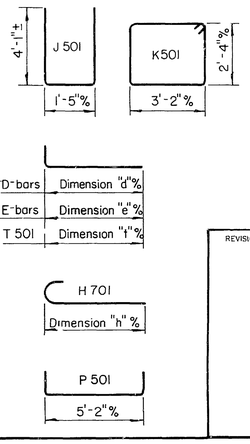

ABUTMENT DIMENSIONS

A	D	X	Z	E
5'-0"	See appropriate "SECTION E-E"	7'-6"	4'-6"	Dimension "E" = 0.5 (Z+M)+6"
5'-6"		8'-6"	4'-6"	
6'-0"		8'-6"	5'-6"	
6'-6"		9'-6"	5'-6"	
7'-0"		9'-6"	6'-6"	
7'-6"		10'-6"	6'-6"	
8'-0"		11'-6"	6'-6"	
8'-6"		12'-6"	6'-6"	
9'-0"		13'-6"	6'-6"	
9'-6"		14'-6"	6'-6"	
10'-0"		15'-0"	7'-0"	
10'-6"		16'-0"	7'-0"	
11'-0"		17'-0"	7'-0"	
11'-6"		18'-0"	7'-0"	
12'-0"		19'-0"	7'-0"	
12'-6"		19'-6"	7'-6"	
13'-0"		20'-6"	7'-6"	
13'-6"		21'-6"	7'-6"	
14'-0"		22'-6"	7'-6"	
14'-6"		23'-6"	7'-6"	
15'-0"		24'-3"	7'-9"	
15'-6"		25'-3"	7'-9"	
16'-0"		26'-3"	7'-9"	
16'-6"		27'-3"	7'-9"	

ABUTMENT DATA

H (A + D)	FOOTING DETAILS: FOOTINGS WITHOUT PILES: SEATED ON BEDROCK DIMENSIONS W	B	F	G	SEATED ON EARTH DIMENSIONS W	B	F	G	FOOTINGS WITH PILES: TYPE	DIMENSIONS W	F	G	PILE SPACING FRONT ROW	+ BACK ROW	PILE DESIGN LOAD -TONS
9'-0"	3'-3"	2'-6"	1'-0"	6"	3'-6"	2'-6"	1'-2"	7"	Footing on single row of piles	3'-6"	9"	1'-0"	6'-0"	—	27
9'-6"	3'-3"	2'-6"	1'-0"	6"	3'-9"	2'-6"	1'-4"	8"		3'-6"	9"	1'-0"	6'-0"	—	27
10'-0"	3'-3"	2'-6"	1'-0"	6"	3'-9"	2'-6"	1'-4"	8"		3'-6"	9"	1'-0"	6'-0"	—	27
10'-6"	3'-6"	2'-6"	1'-2"	7"	4'-0"	2'-6"	1'-6"	9"		3'-6"	9"	1'-0"	6'-0"	—	27
11'-0"	3'-6"	2'-6"	1'-2"	7"	4'-0"	2'-6"	1'-6"	9"		3'-6"	9"	1'-0"	6'-0"	—	27
11'-6"	3'-9"	2'-6"	1'-4"	8"	4'-3"	2'-6"	1'-8"	10"		3'-6"	9"	1'-0"	6'-0"	—	27
12'-0"	3'-9"	2'-6"	1'-4"	8"	4'-3"	2'-6"	1'-8"	10"		3'-6"	9"	1'-0"	6'-0"	—	27
12'-6"	4'-0"	2'-6"	1'-6"	9"	4'-6"	2'-6"	1'-10"	11"		3'-6"	9"	1'-0"	6'-0"	—	27
13'-0"	4'-0"	2'-6"	1'-6"	9"	4'-6"	2'-6"	1'-10"	11"		3'-6"	9"	1'-0"	6'-0"	—	27
13'-6"	4'-3"	2'-9"	1'-8"	10"	4'-9"	2'-9"	2'-0"	1'-0"	Footing on double row of piles	5'-6"	2'-6"	1'-3"	6'-0"	9'-0"	25
14'-0"	4'-3"	2'-9"	1'-8"	10"	4'-9"	2'-9"	2'-0"	1'-0"		5'-6"	2'-6"	1'-3"	6'-0"	9'-0"	25
14'-6"	4'-6"	2'-9"	1'-10"	11"	5'-0"	3'-0"	2'-2"	1'-1"		5'-9"	2'-8"	1'-4"	6'-0"	9'-0"	25
15'-0"	4'-6"	2'-9"	1'-10"	11"	5'-0"	3'-0"	2'-2"	1'-1"		6'-0"	2'-10"	1'-5"	5'-9"	8'-7½"	25
15'-6"	4'-9"	3'-0"	2'-0"	1'-0"	5'-3"	3'-0"	2'-4"	1'-2"		6'-0"	2'-10"	1'-5"	5'-6"	8'-3"	25
16'-0"	4'-9"	3'-0"	2'-0"	1'-0"	5'-3"	3'-0"	2'-4"	1'-2"		6'-0"	2'-10"	1'-5"	5'-0"	7'-6"	21
16'-6"	5'-0"	3'-3"	2'-2"	1'-1"	5'-6"	3'-3"	2'-6"	1'-3"		6'-3"	3'-0"	1'-6"	4'-9"	7'-1½"	21
17'-0"	5'-0"	3'-3"	2'-2"	1'-1"	5'-6"	3'-3"	2'-6"	1'-3"		6'-3"	3'-0"	1'-6"	4'-6"	6'-9"	21
17'-6"	5'-3"	3'-3"	2'-4"	1'-2"	5'-9"	3'-6"	2'-8"	1'-4"		6'-3"	3'-0"	1'-6"	4'-3"	8'-6"	21
18'-0"	5'-6"	3'-3"	2'-6"	1'-3"	6'-0"	3'-6"	2'-10"	1'-5"		6'-3"	3'-0"	1'-6"	4'-3"	8'-6"	21
18'-6"	5'-6"	3'-6"	2'-6"	1'-3"	6'-3"	3'-9"	3'-0"	1'-6"		6'-6"	3'-2"	1'-7"	4'-0"	8'-0"	20
19'-0"	5'-6"	3'-6"	2'-6"	1'-3	6'-3"	3'-9"	3'-0"	1'-6"		6'-6"	3'-2"	1'-7"	3'-9	7'-6"	20
19'-6"	5'-9"	3'-9"	2'-8"	1'-4"	6'-6"	4'-0"	3'-2"	1'-7"		6'-9"	3'-4"	1'-8"	3'-6"	7'-0"	20
20'-0"	6'-0"	3'-9"	2'-10"	1'-5"	6'-9"	4'-0"	3'-4"	1'-8"		6'-9"	3'-4"	1'-8"	3'-3"	6'-6"	20

H (A + D)	REINFORCING: FOOTING: D-bars Bent Size	Dim "d"	E-bars Bent Size	Dim "e"	G501 Straight Bent Number	H 701 Bent Dim. "h"	Length	J501 Bent L'gth	K501 Bent L'gth	BREASTWALL: L-bars St. Size	M-bars Straight Size	N-bars Straight Size	WINGWALL: P501 Bent Length	Q-bars Straight Size	R501 St. No	S-bars Straight Size	T501 Bent Dim "t"	H (A + D)
9'-0"	5	B + 1'-1"	5	Dimension "e" = D+E-5"	32 required for two footings (Single row of piles)	—	—	Length = 9'-4"	Length = 11'-5"	#5 bars	5	5	Length = 6'-2"	5	24 required for two abutments	#5 bars	Dimension "t" = Z-4"	9'-0"
9'-6"	5	B + 1'-1"	5			—	—				5	5		5				9'-6"
10'-0"	5	B + 1'-1"	5			—	—				5	5		5				10'-0"
10'-6"	5	B + 1'-1"	5			—	—				5	5		5				10'-6"
11'-0"	5	B + 1'-1"	5			—	—				5	5		5				11'-0"
11'-6"	5	B + 1'-1"	5			—	—				5	5		5				11'-6"
12'-0"	5	B + 1'-1"	5			—	—				5	5		5				12'-0"
12'-6"	5	B + 1'-1"	5			—	—				5	5		5				12'-6"
13'-0"	5	B + 1'-1"	5			—	—				5	5		5				13'-0"
13'-6"	5	B + 1'-1"	6		16 required for two footings (Double row of piles)	5'-0"	5'-0"				5	5		5				13'-6"
14'-0"	5	B + 1'-1"	6			5'-0"	5'-10"				5	5		5				14'-0"
14'-6"	5	B + 1'-1"	6			5'-3"	6'-1"				5	5		5				14'-6"
15'-0"	5	B + 1'-1"	7			5'-6"	6'-4"				5	5		5				15'-0"
15'-6"	5	B + 1'-1"	7			5'-6"	6'-4"				5	5		5				15'-6"
16'-0"	5	B + 1'-1"	7			5'-6"	6'-4"				5	5		5				16'-0"
16'-6"	6	B + 1'-5"	8			5'-9"	6'-7"				5	6		5				16'-6"
17'-0"	6	B + 1'-5"	9			5'-9"	6'-7"				5	6		5				17'-0"
17'-6"	6	B + 1'-5"	8			5'-9"	6'-7"				5	6		5				17'-6"
18'-0"	7	B + 1'-8"	9			5'-9"	6'-7"				5	5		5				18'-0"
18'-6"	7	B + 1'-8"	9			6'-0"	6'-10"				6	7		5				18'-6"
19'-0"	8	B + 2'-0"	10			6'-0"	6'-10"				6	8		6				19'-0"
19'-6"	8	B + 2'-0"	10			6'-3"	7'-1"				6	8		6				19'-6"
20'-0"	8	B + 2'-0"	10			6'-3"	7'-1"				6	8		6				20'-0"

† Refers to footing on a double row of piles.

REVISIONS

STATE OF OHIO
DEPARTMENT OF HIGHWAYS
DIVISION OF DESIGN AND CONSTRUCTION
BUREAU OF BRIDGES

STANDARD

SINGLE SPAN SLAB BRIDGE

WITHOUT CURBS AND WITH HIGHWAY GUARD RAIL
SPANS: 10' to 36' ABUTMENT HEIGHTS: 9' to 20'
LOAD FREQUENCY: CF=30, CF=130, CF=400, CF=2000

APPROVED C. H. Alberter
ENGINEER OF BRIDGES
DATE: 8-25-64

DRAWING NUMBER SB-1-64

PREPARED	TRACED	CHECKED	REVIEWED	SHEET NO 2 OF 2 SHEETS
CPD	JTK	NAA	BFG CDB MHH	