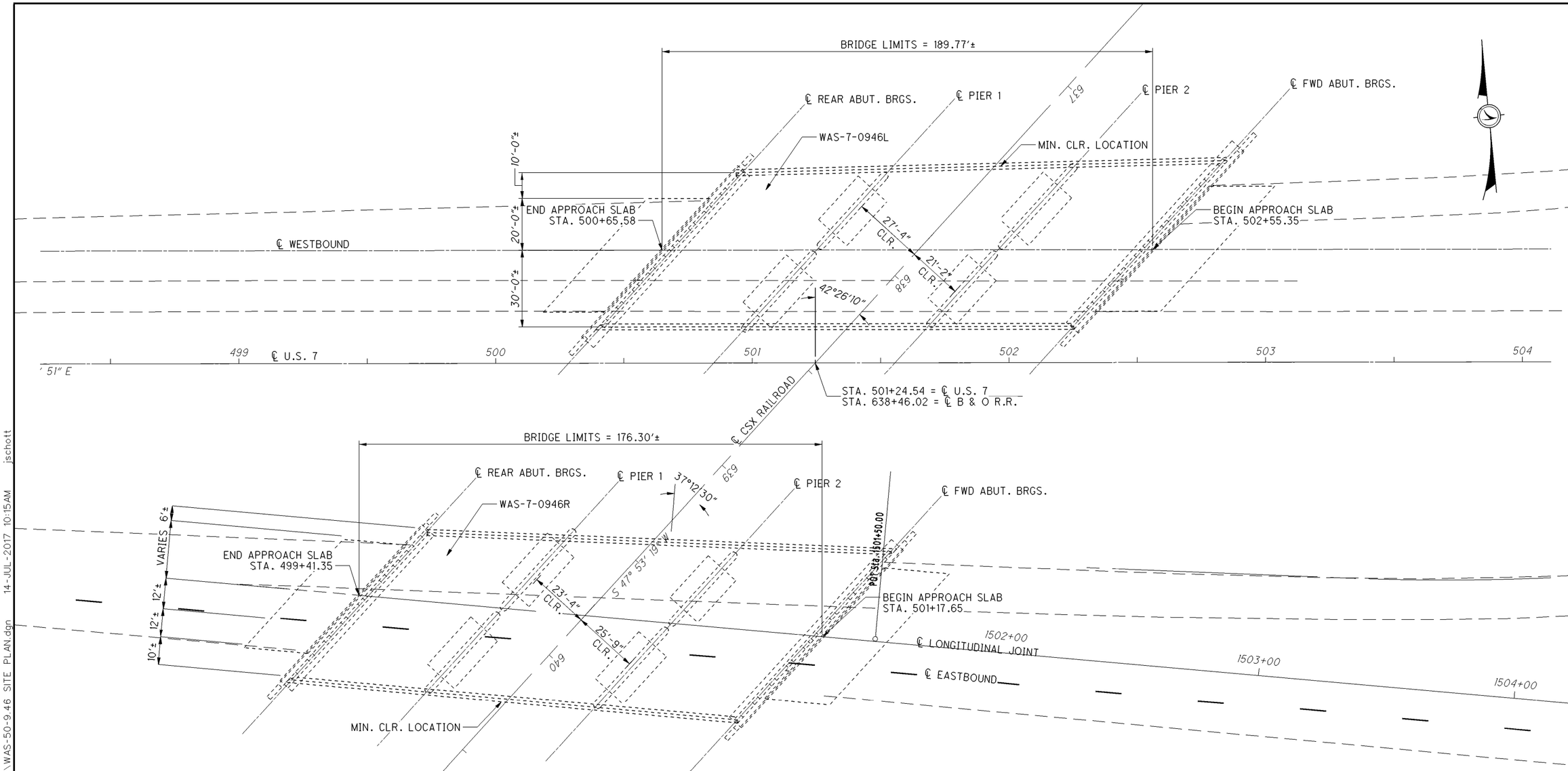

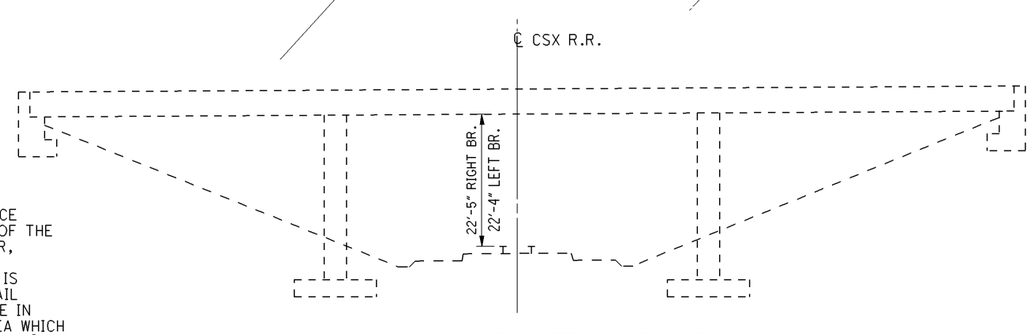

MINIMUM ACTUAL VERTICAL CLEARANCES

NOT TO SCALE

NOTE:
- STANDARD HORIZONTAL CLEARANCE IS MEASURED FROM CENTERLINE OF THE TRACK TO THE FACE OF THE PIER, PERPENDICULAR TO THE TRACK.
- STANDARD VERTICAL CLEARANCE IS MEASURED FROM TOP OF HIGH RAIL TO LOWEST POINT ON STRUCTURE IN THE HORIZONTAL CLEARANCE AREA WHICH EXTENDS 6'-0" EITHER SIDE OF THE ℄ TRACK.
- DURING THE PERFORMANCE OF THE WORK, TEMPORARY CONSTRUCTION CLEARANCES OF 22'-0" VERTICALLY ABOVE THE TOP OF RAIL AND 13'-0" HORIZONTALLY FROM THE CENTERLINE OF A TRACK SHALL BE MAINTAINED TO ANY FORM WORK, FALSE WORK OR OTHER TEMPORARY CONSTRUCTION.

EXISTING STRUCTURE

WAS-7-0946L	WAS-7-0946R
TYPE: STEEL BEAM - CONTINOUS STEEL BEAM WITH REINFORCED CONCRETE DECK AND SUBSTRUCTURE SPAN: 56'-6", 70'-8", 56'-6: c/c BEARINGS ROADAWAY: 40'-0" f/f PARAPETS PLUS TAPER SKEW: 42°26'10" LEFT FORWARD LOADING: CF 2000 (57) WEARING SURFACE: 1" MONOLITHIC CONCRETE APPROACH SLABS: AS-1-54 (25' LONG) ALIGNMENT: TANGENT	TYPE: STEEL BEAM - CONTINOUS STEEL BEAM WITH REINFORCED CONCRETE DECK AND SUBSTRUCTURE SPAN: 52'-6", 65'-8", 52'-6: c/c BEARINGS ROADAWAY: 40'-0" f/f PARAPETS PLUS TAPER SKEW: 37°12'30" LEFT FORWARD LOADING: CF 2000 (57) WEARING SURFACE: 1" MONOLITHIC CONCRETE APPROACH SLABS: AS-1-54 (25' LONG) ALIGNMENT: TANGENT

DESIGN AGENCY
PLANNING AND ENGINEERING DEPT.
DISTRICT 10
MARIETTA, OHIO

DESIGNED	DRAWN	REVIEWED	DATE
JMS	JMS	WAB	4-17
CHECKED	REVISED	STRUCTURE FILE NUMBER 8401400 L 8401500 R	

SITE PLAN

Bridge No. Was-7-0946 L & R
Over CSX Railroad

WAS-7-9.76 L&R AND VARIOUS
PID No. 84164

I:\project\WAS_7_9.76_PID_84164\Design\WAS-50-9.46 L&R\WAS-50-9.46 SITE PLAN.dgn 14-JUL-2017 10:15AM jschott

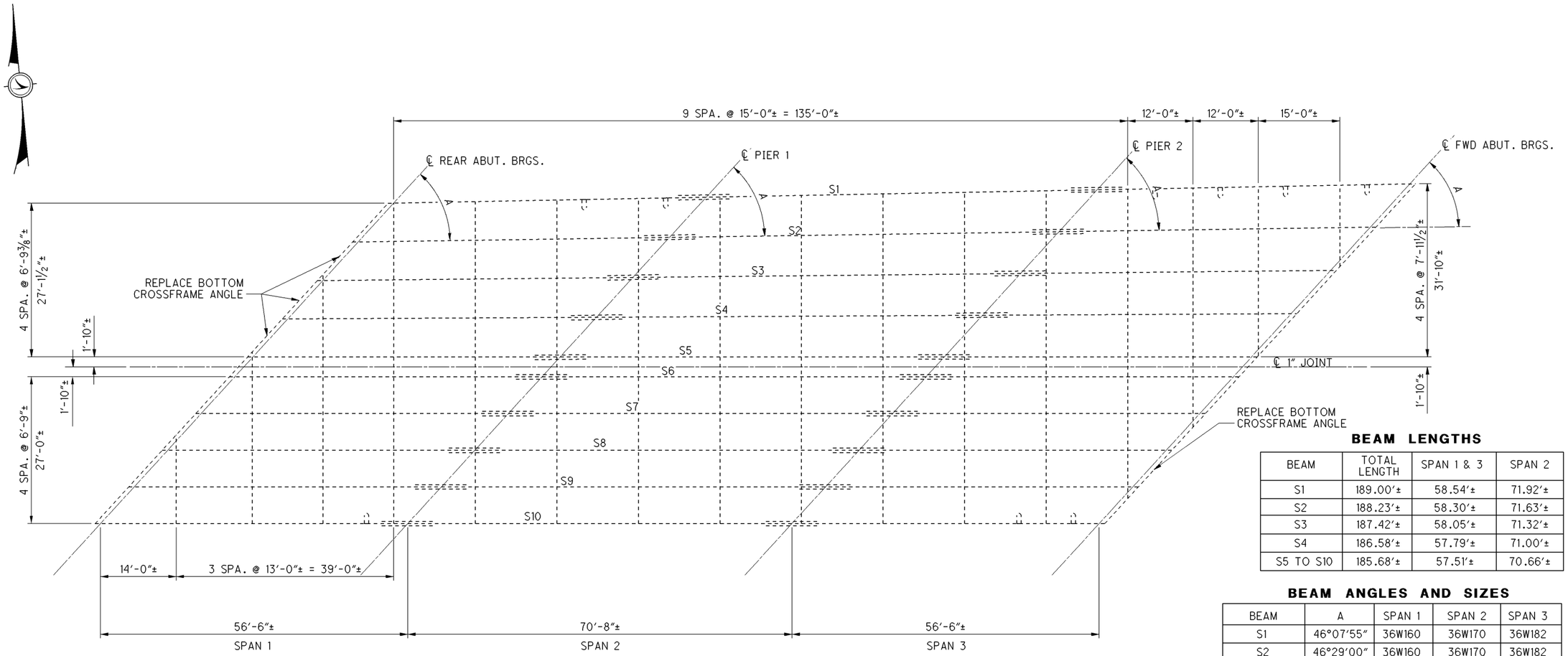

FRAMING PLAN

BEAM LENGTHS

BEAM	TOTAL LENGTH	SPAN 1 & 3	SPAN 2
S1	189.00'±	58.54'±	71.92'±
S2	188.23'±	58.30'±	71.63'±
S3	187.42'±	58.05'±	71.32'±
S4	186.58'±	57.79'±	71.00'±
S5 TO S10	185.68'±	57.51'±	70.66'±

BEAM ANGLES AND SIZES

BEAM	A	SPAN 1	SPAN 2	SPAN 3
S1	46°07'55"	36W160	36W170	36W182
S2	46°29'00"	36W160	36W170	36W182
S3	46°50'22"	36W160	36W170	36W182
S4	47°11'58"	36W160	36W170	36W170
S5 TO S10	47°33'50"	36W150	36W160	36W150

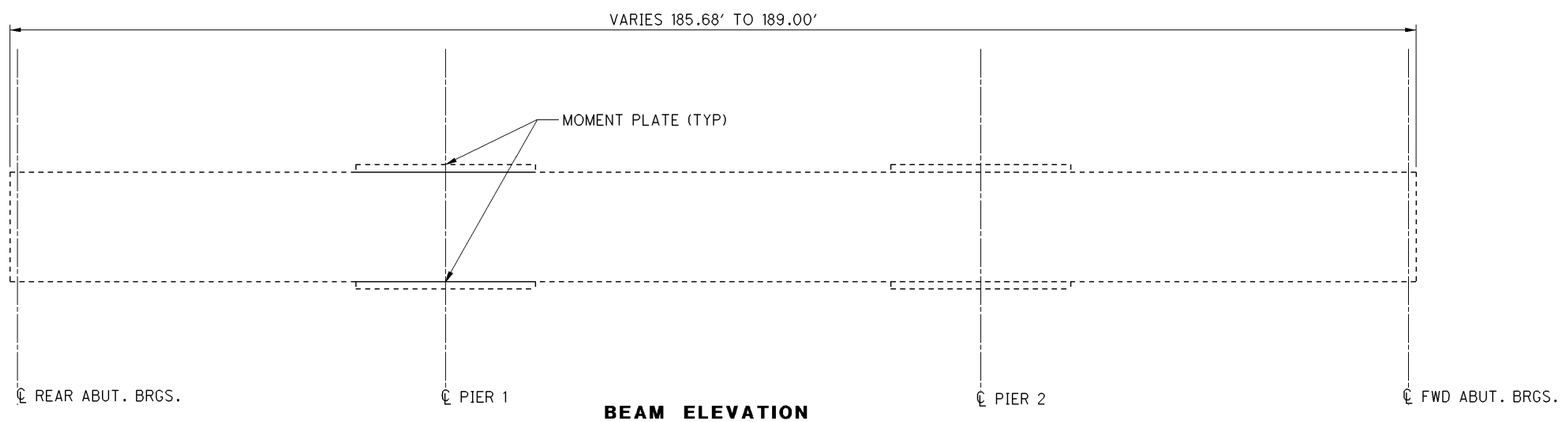

BEAM ELEVATION

DESIGN AGENCY
PLANNING AND ENGINEERING DEPT.
DISTRICT 10
MARIETTA, OHIO

DESIGNED	DRAWN	REVIEWED	DATE
JMS	JMS	WAB	4-17
CHECKED	REVISED	STRUCTURE FILE NUMBER	
		8401470	

FRAMING PLAN
Bridge No. Was-7-0946L
Over CSX Railroad

WAS-7-9.76 L&R
AND VARIOUS
PID No. 84164

I:\project\WAS_7_9.76_PID_84164\Design\WAS-50-9.46 L&R\WAS-50-9.46 FRAMING PLAN.dgn 14-JUL-2017 10:16AM jschott

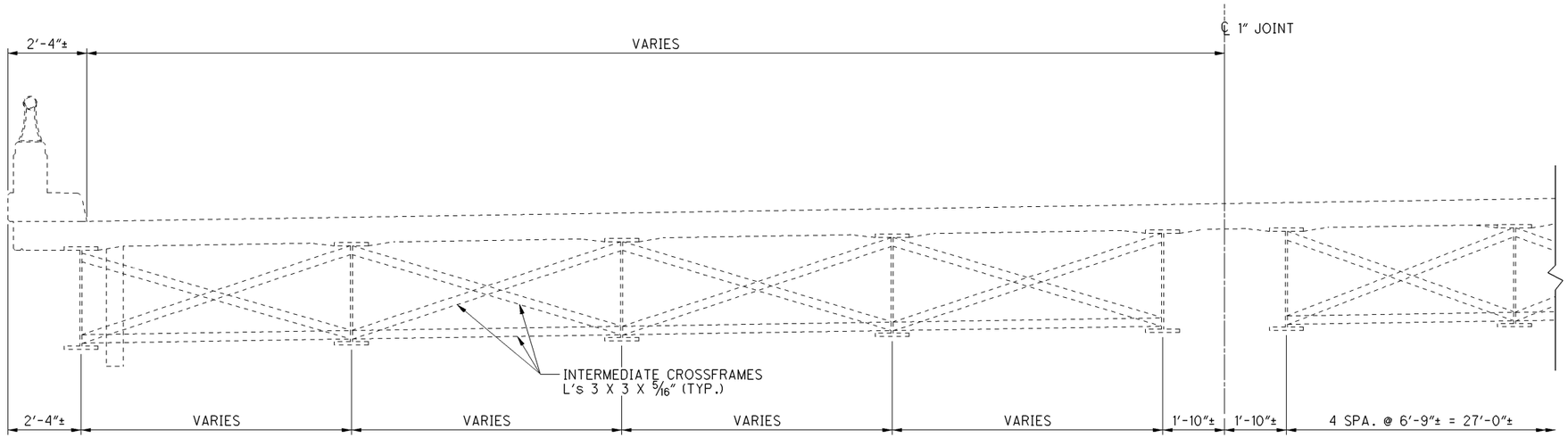

HALF TRANSVERSE

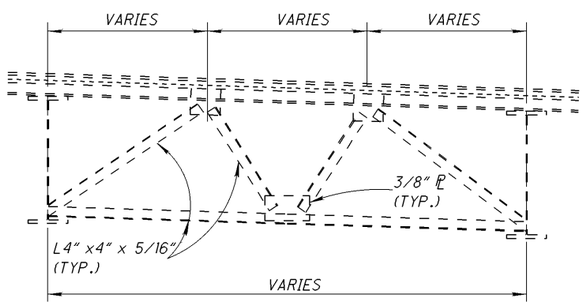

END CROSSFRAMES

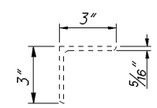

L 3" X 3" X 5/16"

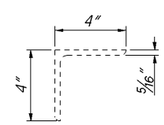

L 4" X 4" X 5/16"

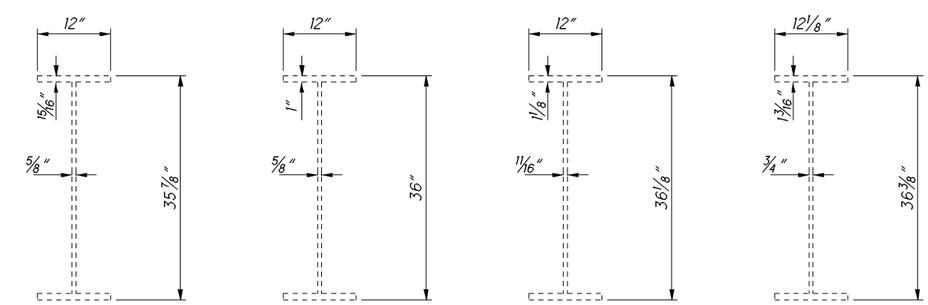

W36X150 ***W36X160*** ***W36X170*** ***W36X182***

WAS-7-9.46 L								
ESTIMATED QUANTITIES (PARTICIPATION 01/NHS/BR)					SFN 8401470			
ITEM	ITEM EXT.	GRAND TOTAL	UNIT	DESCRIPTION	ABUT.	PIERS	SUPER.	GNRL
513	10200	225	LB	STRUCTURAL STEEL MEMBER, LEVEL UF			225	
514	00050	20349	SQ. FT.	SURFACE PREPARATION OF EXISTING STRUCTURAL STEEL			20349	
514	00056	20349	SQ. FT.	FIELD PAINTING OF EXISTING STRUCTURAL STEEL, PRIME COAT			20349	
514	00060	20349	SQ. FT.	FIELD PAINTING STRUCTURAL STEEL, INTERMEDIATE COAT			20349	
514	00066	20349	SQ. FT.	FIELD PAINTING STRUCTURAL STEEL, FINISH COAT			20349	
514	00504	32	MN HR	GRINDING FINS, TEARS, SLIVERS ON EXISTING STRUCTURAL STEEL			32	
514	10000	19	EACH	FINAL INSPECTION REPAIR			19	

CALCULATIONS

W36X150
12 X 57.51' X 8.718'. = 6,016.46 SQ. FT.

W36X160
((1 X 58.54') + (1 X 58.30') +
(1 X 58.05') + (1 X 57.79') +
(6 X 70.66')) X 8.729' = 5,731.81 SQ. FT.

W36X170
((1 X 71.92') + (1 X 71.63') +
(1 X 71.32') + (1 X 71.00') +
(1 X 57.79')) X 8.718'
= 2996.02 SQ. FT.

W36X182
((1 X 58.54') + (1 X 58.30') +
(1 X 58.05')) X 8.771' = 1533.96 SQ. FT.

SUBTOTAL = 16,279 SQ. FT.

CROSSFRAMES
16,279 SQ. FT. X 25% = 4,070 SQ. FT.

TOTAL = 20,349 SQ. FT.

ITEM 513 - STRUCTURAL STEEL, LEVEL UF

A709 GRADE 50

27.5' X (2.40 SQ. IN./144) = 0.458 CU. FT.
0.458 CU. FT. X 490 LBS/CU. FT. = 225 LBS

DESIGN AGENCY
PLANNING AND ENGINEERING DEPT.
DISTRICT 10
MARIETTA, OHIO

DESIGNED	DRAWN	REVIEWED	DATE
JMS	JMS	WAB	4-17
CHECKED	REVISED	STRUCTURE FILE NUMBER	
		8401470	

TRANSVERSE SECTION
WAS-7-0946L
Over CSX Railroad

WAS-7-9.76 L&R
AND VARIOUS
PID No. 84164

I:\project\WAS_7_9.76_PID_84164\Design\WAS-50-9.46 L&R\WAS-50-9.46 TRANSVERSE.dgn 14-JUL-2017 10:17AM jschott

MICROFILMED
JAN 22 1988

FED. RD. DIVISION	STATE	PROJECT	TYPE FUNDS
2	OHIO		

569

WAS-50-4.33
WAS-7-11.39

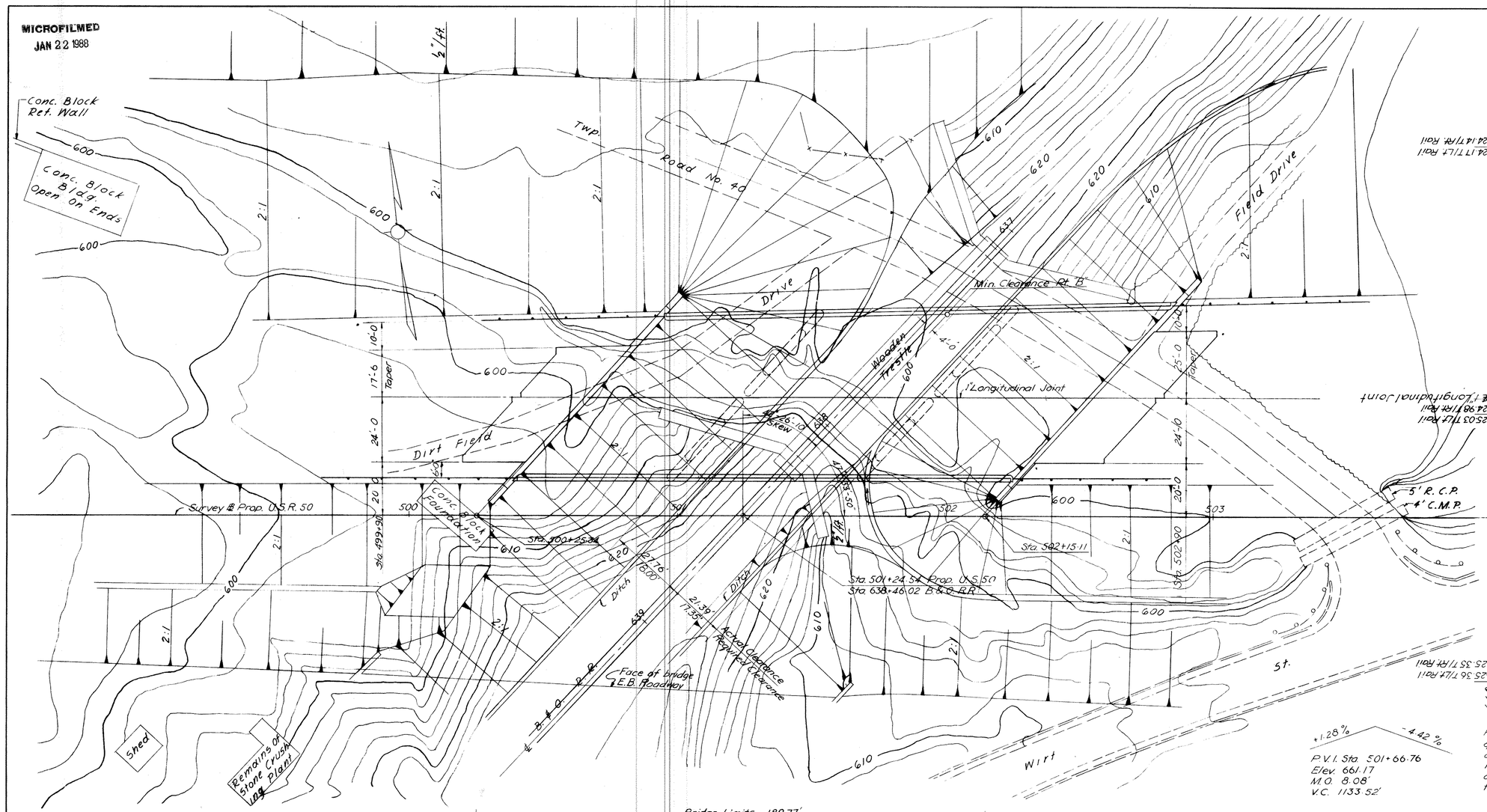

Foundation Soundings: Foundation design and foundation quantities are based on a study of soil sampling sounding and rod sounding made at the site. This sounding information may be inspected in the office of the Bureau of Bridges in Columbus or in the division office, but the State does not guarantee the accuracy thereof.

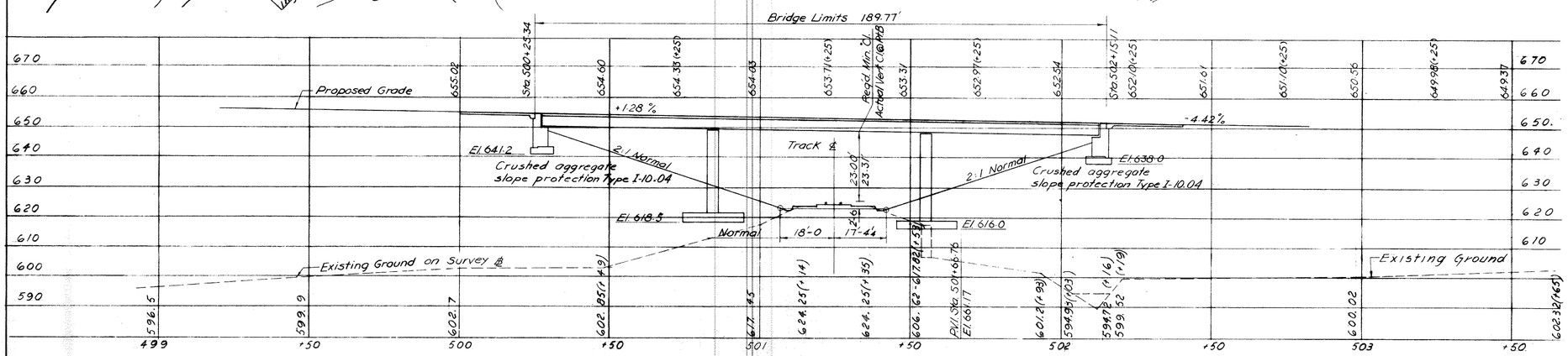

PROPOSED STRUCTURE

Type: Continuous steel beam with reinforced concrete deck and substructure
Spans: 56'-6, 70'-8, 56'-6 c/c bearings
Roadway: 40'-0 f/f parapets plus taper
Load Frequency: CF 2000 (57)
Wearing Surface: 1" Monolithic Concrete
Approach Slabs: AS-1-54 Modified (25'-0 long)
Alignment: Tangent
Skew: 42°-26'-10" LF
Traffic:

YULE, STICKLEN, JORDAN & McNEE
ENGINEERS
COLUMBUS OHIO

SITE PLAN

BRIDGE NO. WAS-50-0946 L
OVER B&O RR

SCALE: 1"=20'
WASHINGTON CO.

STA. 500+25.34
STA. 502+15.11

DESIGNED	DRAWN	TRACED	CHECKED	REVIEWED	DATE	REVISED
JCL	LCT	LCT	JCL	RBY	10-2-62	

MICROFILMED
JAN 22 1988

FED. RD. DIVISION	STATE	PROJECT	TYPE FUNDS
2	OHIO		

570

WAS-50-4.33
WAS-7-11.39

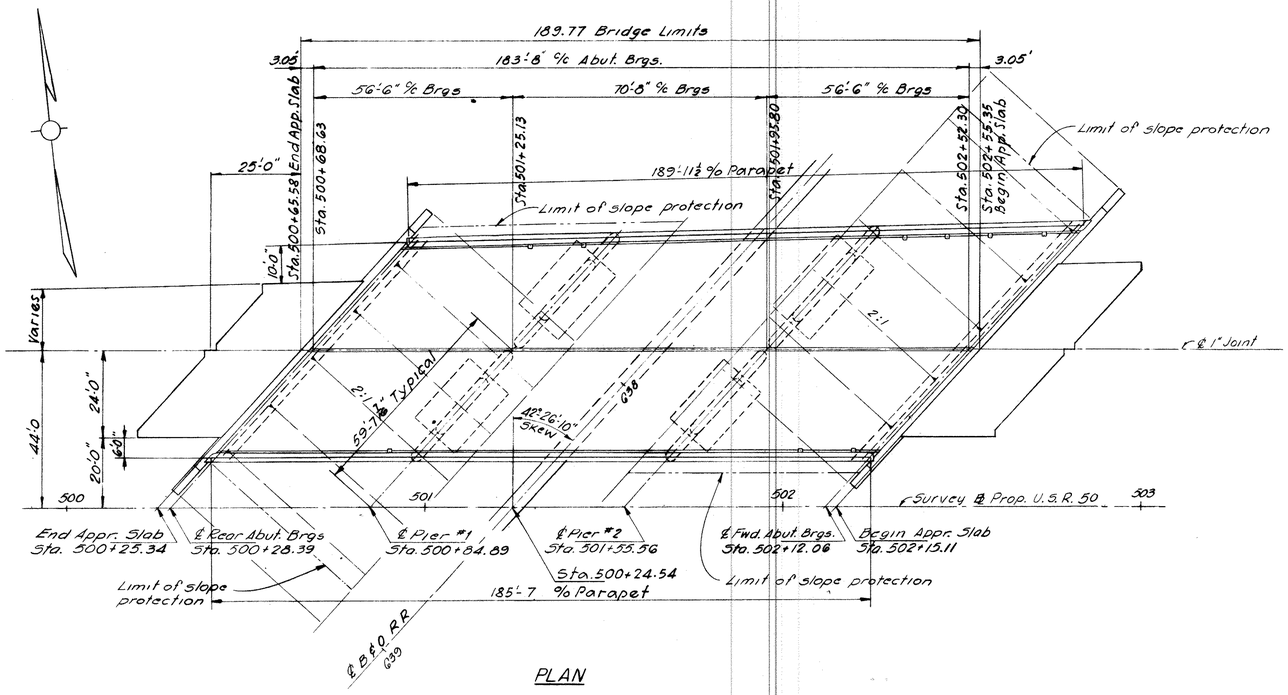

PLAN

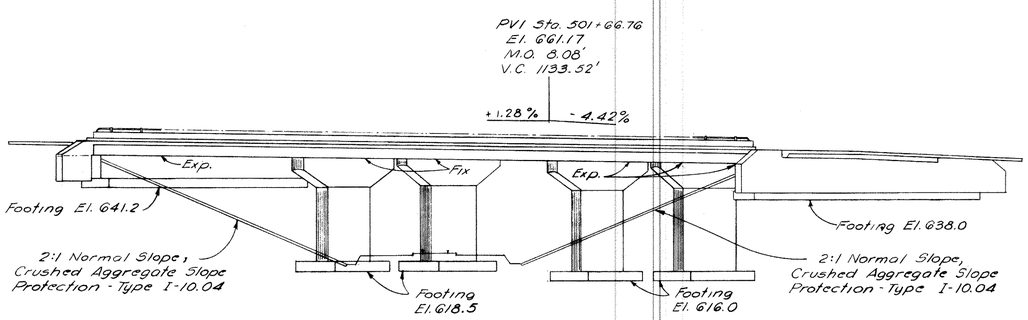

ELEVATION

GENERAL NOTES

REFERENCE: Reference shall be made to Standard Drawings AR-1-57 revised 4-2-62 (Type A), CSB-2-56 Sheet Nos. 2 and 3 revised 2-2-59, RB-1-55 revised 2-2-59 and Supplemental Specification S-407 adopted 4-19-62

DESIGN SPECIFICATIONS: This Structure conforms to the requirements of "Design Specifications for Highway Structures" of the State of Ohio, Department of Highways, dated 9-1-57 together with current revisions thereof.

EXCAVATION QUANTITY includes the removal of fill material required for the construction of the abutments and piers.

PROCEDURE: The embankment shall be placed and compacted in accordance with the instructions shown on sheet number 17, up to the finished spill-thru slope and to the level of the subgrade for a distance of 200 feet back of the abutments. The existing railroad trestle shall be removed and new embankment completed in accordance with the instructions shown on sheet number 18. Excavation for the abutments and piers may not be made for a period of 60 days after the completion of the embankments.

FOUNDATION BEARING PRESSURE: Abutments and piers are designed for a maximum bearing pressure of 2.5 tons per square foot.

WELDING of structural steel shall be Class 'A' except as otherwise shown. Welds shown as field welds may, at the option of the contractor, be made in the shop.

SHOP PAINTING STEEL: The surface preparation of all steel, requiring shop painting as per the Plans and Specifications, shall be accomplished by blast cleaning or power tool cleaning, except as noted in the Specifications regarding the use of Chromate Primers.

CONCRETE DECK PLACING: In order to facilitate water curing of the concrete of the deck slab, the placing of concrete shall progress upgrade. The slab may be placed in sections, between transverse construction joints which are parallel to transverse reinforcing steel and are located near the center of any span.

MACHINE FINISH: The portion of concrete bridge deck to the right of the longitudinal joint shall be finished by the use of a finishing machine. That portion of concrete bridge deck to the left of the longitudinal joint may, at the option of the contractor, be finished by the use of a finishing machine.

CONSTRUCTION CLEARANCE: Construction clearance of 20 ft. vertically above the top of railroad rails and 8 ft. horizontally from the center of the tracks shall be maintained at all times.

SHEETING AND BRACING: Before construction is started, eight sets of prints showing details of the sheeting and bracing to be used for excavation adjacent to the railroad tracks shall be submitted to the Director for approval by the Department of Highways and by the Railroad Company.

ALIGNING RAILROAD TRACKS: After the Contractor has completed all excavation and backfill adjacent to the railroad tracks in compliance with Sec. E-2.04 and E-2.08 of the Construction and Material Specifications, subject to the supervision of the Railroad Company, nothing in Sec. E-2.04, E-2.08 or G-8.07 of the Specifications shall be construed to hold the Contractor liable for aligning and resurfacing the railroad tracks.

SHEET LEAD shall conform to the requirements of ASTM Designation B-29 without restriction to the Common Desilverized type.

WELDED STUD SHEAR CONNECTORS (4"x¾") shall be placed in pairs at 12 inch centers for the full length of the beams and conform to Supplemental Specification No. S-407, adopted April 19, 1962

RAILROAD FORCE ACCOUNT WORK
by the
Baltimore and Ohio Railroad Company
1. Preliminary Engineering
2. Engineering Inspection
3. Western Union Pole Line Changes
4. Signal Work
5. Removal and Replacement of Track at Bridge.
6. Lime, Surface, Maintain Track on New Fill

YULE, STICKLEN, JORDAN & McNEE
ENGINEERS
COLUMBUS OHIO

GENERAL PLAN

BRIDGE NO. WAS-50-0946 L
OVER B&O RR

STA. 500+25.34
STA. 502+15.11

WASHINGTON CO.

DESIGNED	DRAWN	TRACED	CHECKED	REVIEWED	DATE	REVISED
J.C.L.	H.G.	H.G	J.C.L.	RBY	10-2-62	

MICROFILMED
JAN 22 1998

FED. RD. DIVISION	STATE	PROJECT	TYPE FUNDS
2	OHIO		

571

WAS-50-4.33
WAS-7-11.39

REINFORCING STEEL LIST

Mark	No.	Length	Weight	Shp
Rear Abutment				
A501	20	23'-9	495	S
A502	76	4'-5	350	B
A503	9	6'-4	60	S
A504	9	9'-3	87	B
A505	61	5'-11	377	S
A506	19	5'-10	116	S
A507	19	8'-9	173	B
A508	41	13'-11	595	B
A509	1 Series of 5	20'-10 to 15'-10	96	B
A510	15	13'-9	215	B
A511	28	6'-8	195	S
A512	28	9'-7	280	B
A513	7	10'-11	80	S
A514	10	13'-3	138	B
A515	1 Series of 6	22'-8 to 16'-4	122	B
A516	12	20'-3	254	S
A517	10	29'-0	303	S
A518	13	18'-0	244	S
A519	15	30'-0	469	S
A520	1 Series of 4	28'-0 to 19'-0	98	S
A521	1 Series of 3	28'-0 to 22'-0	78	S
A522	1	7'-3	8	S
A523	1	12'-9	13	S
A524	2	9'-6	20	S
A525	8	4'-10	40	S
A526	12	21'-3	266	S
A527	10	25'-0	261	S
A528	7	8'-9	64	S
A529	1	26'-6	28	S
A530	1	18'-8	20	S
A531	1 Series of 4	15'-0 to 20'-0	73	S
A532	1 Series of 3	16'-8 to 20'-0	57	S
A533	2	5'-6	12	S
Forward Abutment				
B501	20	25'-4	529	S
B502	80	4'-5	369	B
B503	16	9'-11	165	B

Bending Diagram

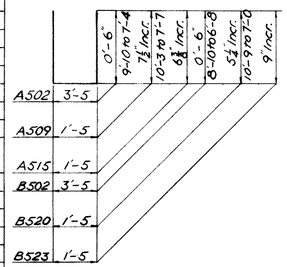

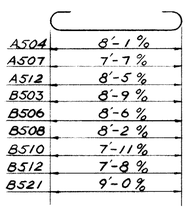

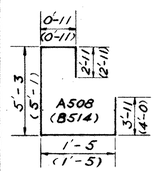

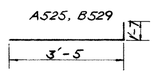

Mark	No.	Length	Weight	Shp
B504	16	6'-11	115	S
B505	66	5'-11	407	S
B506	8	9'-8	81	B
B507	8	6'-8	56	S
B508	7	9'-4	68	B
B509	7	6'-4	46	S
B510	7	9'-1	66	B
B511	7	6'-1	44	S
B512	8	8'-10	74	B
B513	8	5'-10	49	S
B514	43	13'-10	620	B
B515	15	13'-7	211	B
B516	15	10'-0	156	S
B517	9	12'-4	116	B
B518	1	12'-1	13	B
B519	1	9'-8	11	S
B520	1 Series of 6	18'-10 to 14'-6	104	B
B521	14	10'-2	149	B
B522	14	7'-2	105	S
B523	1 Series of 6	22'-8 to 15'-2	118	B
B524	12	24'-3	304	S
B525	12	21'-3	266	S
B526	10	32'-3	336	S
B527	10	25'-6	266	S
B528	11	18'-0	207	S
B529	8	4'-10	40	B
B530	8	30'-0	250	S
B531	1	8'-6	9	S
B532	1 Series of 4	34'-3 to 25'-0	123	S
B533	1 Series of 3	34'-3 to 28'-1	98	S
B534	2	9'-9	20	S
B535	8	25'-0	209	S
B536	3	8'-9	27	S
B537	1	10'-10	12	S
B538	1 Series of 4	18'-0 to 26'-0	92	S
B539	1 Series of 3	20'-8 to 26'-0	73	S

Bending Diagram

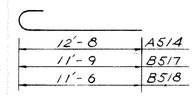

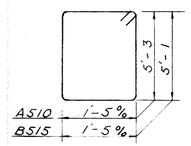

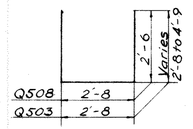

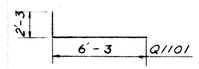

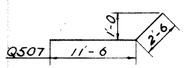

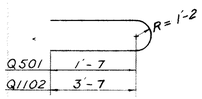

Mark	No.	Length	Weight	Shp
Piers				
Q501	102	6'-9	718	B
Q502	20	14'-9	308	S
Q503	176	7'-9 to 11'-10	1797	B
Q504	2	14'-8	31	S
Q505	2	29'-3	61	S
Q506	4	20'-2	84	S
Q507	16	14'-0	234	B
Q508	44	7'-5	340	B
Q509	8	3'-2	26	S
Q510	44	12'-7	578	S
Q511	4	14'-0	58	S
Q512	4	27'-6	114	S
Q513	8	19'-4	162	S
Q514	2	19'-0	40	S
Q515	4	17'-6	73	S
Q516	4	21'-6	90	S
Q517	22	17'-2	394	S
Q601	26	24'-8	963	S
Q602	52	22'-8	1770	S
Q603	24	26'-8	961	S
Q701	54	13'-8	1508	S
Q801	142	14'-8	5561	S
Q802	28	15'-0	1121	S
Q803	34	28'-0	2542	S
Q901	28	26'-9	2547	S
Q902	74	15'-0	3774	S
Q903	24	27'-9	2264	S
Q904	24	29'-3	2387	S
Q1101	212	8'-2	9199	B
Q1102	8	10'-9	458	B
Q1103	20	22'-6	2391	S
Q1104	40	21'-5	4552	S
Q1105	20	23'-11	2541	S

Bending Diagram

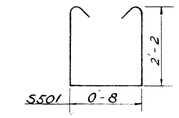

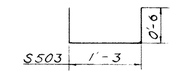

Mark	No.	Length	Weight	Shape
Replacement Bars				
RE501	1	5'-7		S
RE601	4	5'-11		S
RE701	2	6'-3		S
RE801	1	6'-6		S
RE901	1	6'-10		S
RE1101	1	7'-7		S

Mark	No.	Length	Weight	Shp
Superstructure				
S501	268	5'-7	1561	B
S502	257	1'-9	469	S
S503	514	2'-0	1206	B
S601	441	28'-9	19043	S
S602	385	28'-6	16481	S
S603	96	30'-0	4326	S
S604	1 Series of 235	30'-9 to 34'-7	11530	S
S605	1 Series of 30	30'-2 to 9'-0	883	S
S606	6	22'-3	201	S
S607	25	15'-0	563	S
S608	1 Series of 35	34'-9 to 10'-0	1176	S
S609	2	25'-6	77	S
S610	236	30'-6	10811	S
S611	2 Series of 30	30'-3 to 9'-0	1769	S
S612	25	13'-0	488	S
S701	1 Series of 235	30'-9 to 34'-7	15691	S
S702	1 Series of 30	30'-2 to 9'-0	1201	S
S703	6	22'-3	273	S
S704	25	15'-0	767	S
S705	1 Series of 35	34'-9 to 10'-0	1601	S
S706	2	25'-6	104	S
S707	236	30'-6	14713	S
S708	2 Series of 30	30'-3 to 9'-0	2407	S
S709	25	13'-0	664	S
S801	535	4'-3	6071	S
Railing				
R501	8	9'-8	*	S
R502	40	16'-8	*	S
R503	8	9'-2	*	S
R504	40	16'-4	*	S

BAR SIZE is indicated in the bar mark. The first digit where three digits are used, and the first two digits where four are used, indicate the bar size number. For example, A701 is a No. 7 size bar and A1101 is a No. 11 size.

* Included with railing for payment.

ESTIMATED QUANTITIES

Item	Total	Unit	Description	Superstructure	Rear Abutment	Rear Pier	Forward Pier	Forward Abut.	General
E-2		Lump Sum	Cofferdams, Cribs and Sheeting						Lump Sum
E-2	1059	Cu. Yds.	Unclassified Excavation		215	330	299	215	
1-10	1,124	Sq. Yds.	Crushed aggregate slope protection (Type 1-10.04)		600			524	
S-1	162	Cu. Yds.	Class "E" Concrete - Pier footings			82	80		
S-1	355	Cu. Yds.	Class "C" Concrete - Superstructure	355					
S-1	277	Cu. Yds.	Class "E" Concrete - Piers above footing			132	145		
S-1	331	Cu. Yds.	Class "E" Concrete - Abutments		160			171	
S-3	174	Lin. ft.	Waterproofing, Premolded Sealing Strip, as per plan	154	10			10	
S-4	175,223	Lbs.	Reinforcing Steel	114,076	5687	24,678	24,778	6004	
S-7	369,506	Lbs.	Structural Steel	369,506					
S-8	369,506	Lbs.	Field painting of structural steel	369,506					
S-9	65	Sq. ft.	1" Preformed Expansion Joint Filler		32			33	
S-14	375.52	Lin. ft.	Railing (aluminum rail, supports and concrete parapet)	375.52					
S-29	62	Cu. Yds.	Porous backfill		32			30	
S-29	9	Each	Scuppers	9					
S-407	3778 *	Each	Welded Stud Shear Connectors	3778					
Special	355	Each	Water-reducing, Set-retarding admixture †	355					
			† See Proposal Note * No Fed. Participation						

YULE, STICKLEN, JORDAN & McNEE
ENGINEERS
COLUMBUS OHIO

REINFORCING STEEL LIST
ESTIMATED QUANTITIES
BRIDGE NO. WAS-50-0946 L
OVER B&O RR
STA. 500 +25.34
WASHINGTON CO. STA. 502 +15.11

DESIGNED	DRAWN	TRACED	CHECKED	REVIEWED	DATE	REVISED
J.C.L.	H.G.	L.C.T.	C.P.T.	RBY	10-2-62	1-14-63 R.E.C.

NO. PB163 K&E CO.

MICROFILMED
JAN 22 1988

FED. RD. DIVISION	STATE	PROJECT	TYPE FUNDS
2	OHIO		

572

WAS-50-4.33
WAS-7-11.39

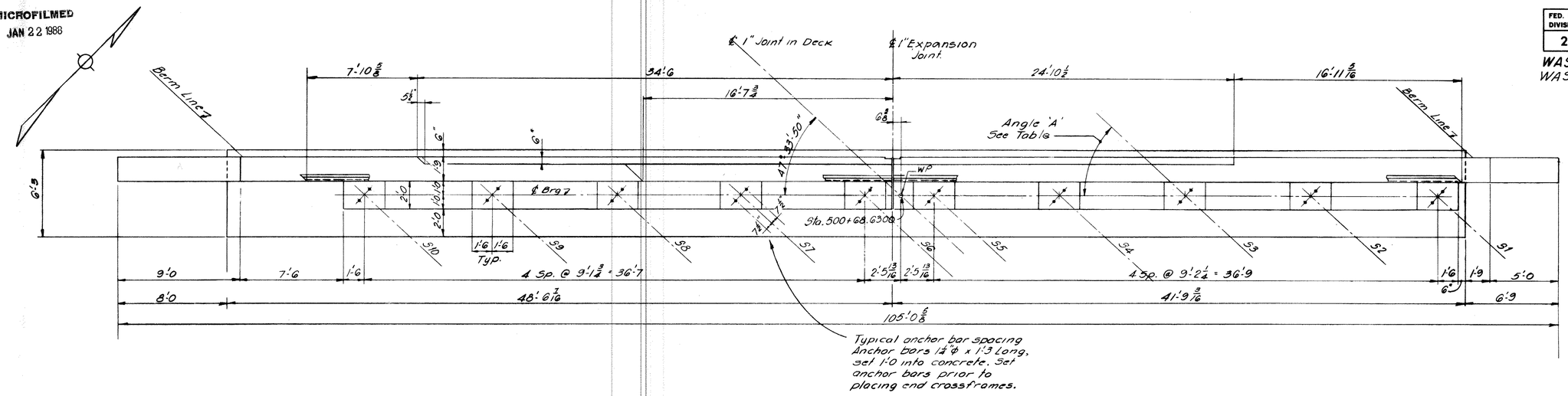

PLAN

Beam	Angle 'A'
S1	46°-07'-55"
S2	46°-29'-00"
S3	46°-50'-22"
S4	47°-11'-50"
S5 To S10	47°-33'-50"

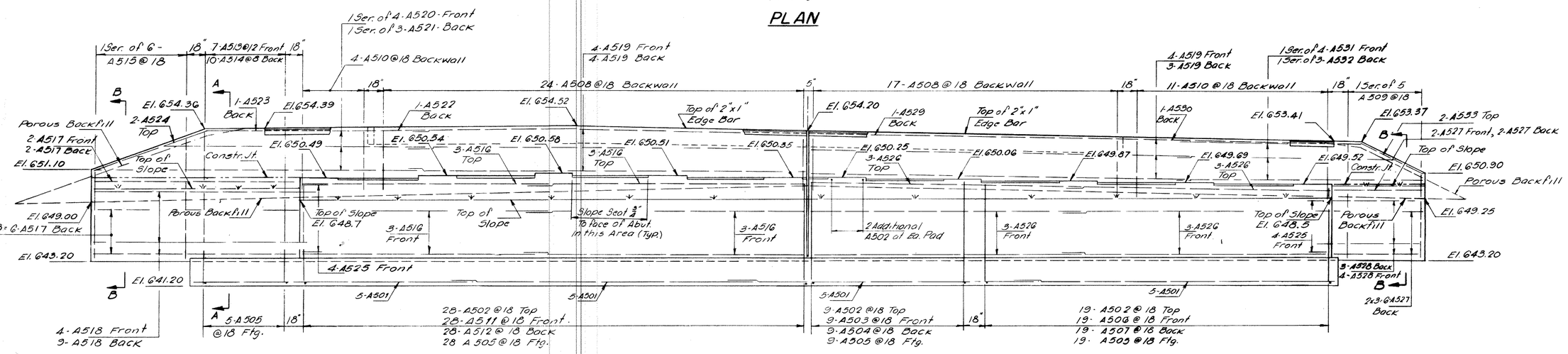

ELEVATION

BRIDGE SEAT REINFORCING: Special care shall be taken in placing reinforcing steel in the vicinity of the bridge seat so as to avoid interference with the drilling of the anchor bar holes.
POROUS BACKFILL shall extend upward to the approach slab and to the surface of the earth shoulders, and outward to the surface of the embankment slopes. Excavation therefor, in excess of that required for construction of the abutment shall be considered as paid for in the bid price per cu.yd. paid for porous backfill.

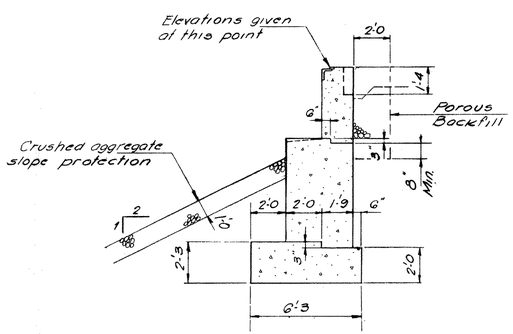

ABUTMENT SECTION
MASONRY

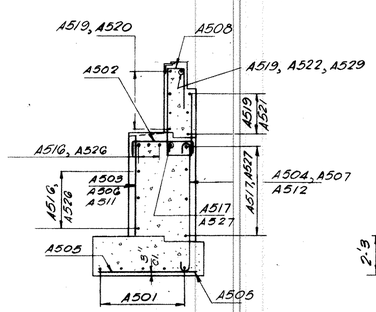

ABUTMENT SECTION
REINFORCING

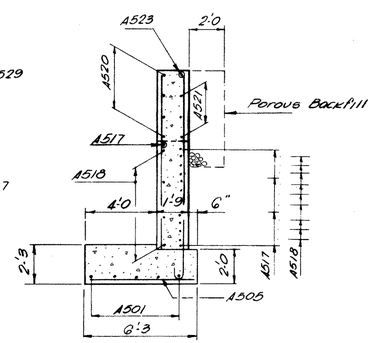

SECTION A-A

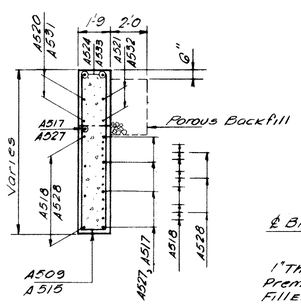

SECTION B-B

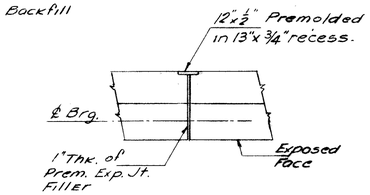

1" EXP. JOINT DETAIL

YULE, STICKLEN, JORDAN & McNEE
ENGINEERS
COLUMBUS OHIO

REAR ABUTMENT

BRIDGE NO. WAS-50-0946 L
OVER B&O RR

WASHINGTON CO.

STA. 500+25.34
STA. 502+15.11

DESIGNED	DRAWN	TRACED	CHECKED	REVIEWED	DATE	REVISED
C.H.W.	H.G.	H.G.	C.H.W.	RBY.	10-2-62	

MICROFILMED
JAN 22 1988

FED. RD. DIVISION	STATE	PROJECT	TYPE FUNDS
2	OHIO		

573

WAS-50-4.33
WAS-7-1.139

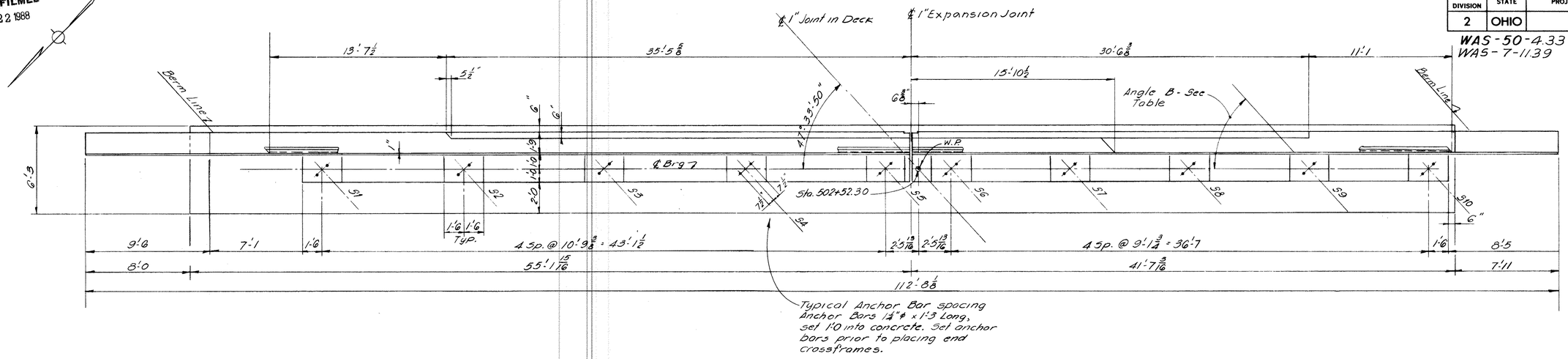

PLAN

Beam	Angle B
S1	46°07'55"
S2	40°29'00"
S3	46°50'22"
S4	47°11'58"
S5 to S10	47°33'50

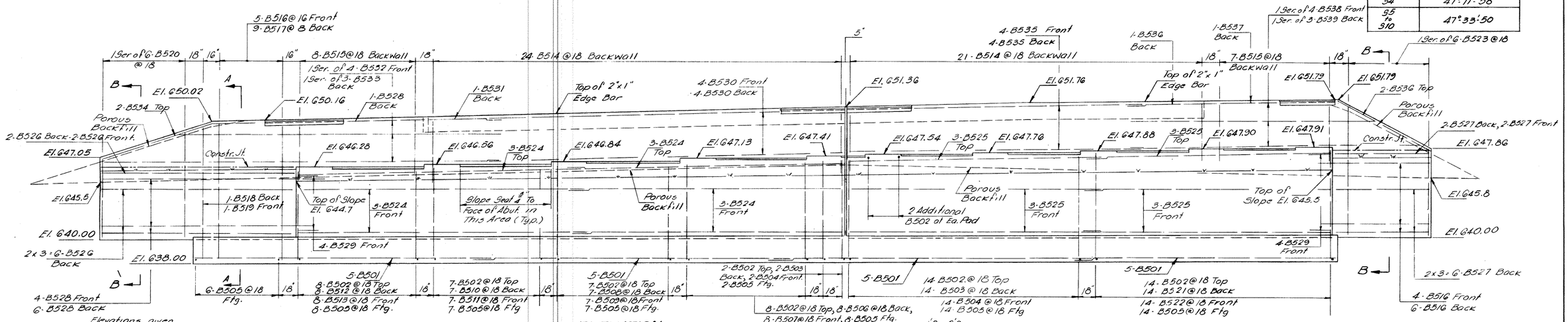

ELEVATION

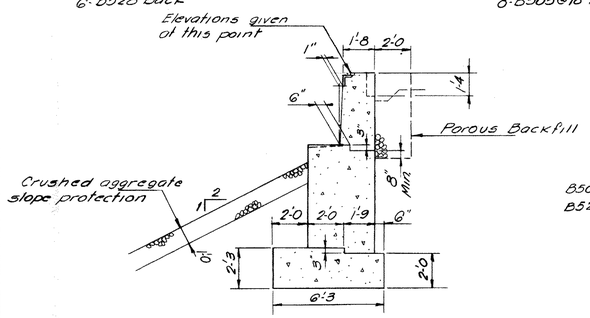

ABUTMENT SECTION
MASONRY

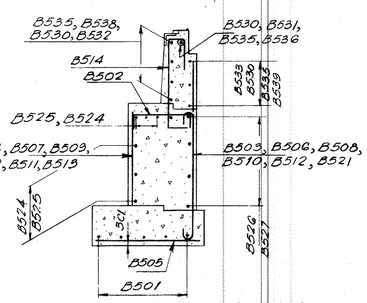

ABUTMENT SECTION
REINFORCING

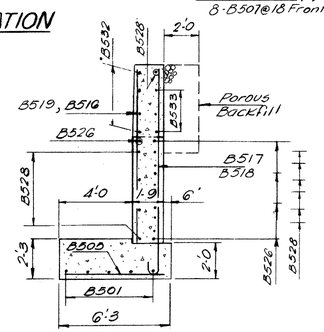

SECTION A-A

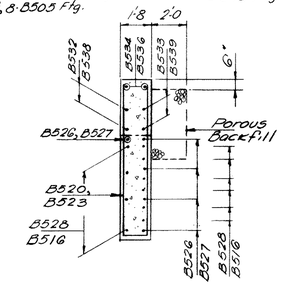

SECTION B-B

For Notes see Sheet No. 572
For Detail of 1" Expansion Joint see Sht. No. 572

YULE, STICKLEN, JORDAN & McNEE
ENGINEERS
COLUMBUS OHIO

FORWARD ABUTMENT

BRIDGE NO. WAS-50-0946 L
OVER B&O RR

WASHINGTON CO.
STA. 500+25.34
STA. 502+15.11

DESIGNED	DRAWN	TRACED	CHECKED	REVIEWED	DATE	REVISED
C.H.W.	H.G.	H.G.	C.H.W.	RBY	10-2-62	

MICROFILMED
JAN 22 1988

FED. RD. DIVISION	STATE	PROJECT	TYPE FUNDS
2	OHIO		

574

WAS - 50 - 4.33
WAS - 7 - 11.39

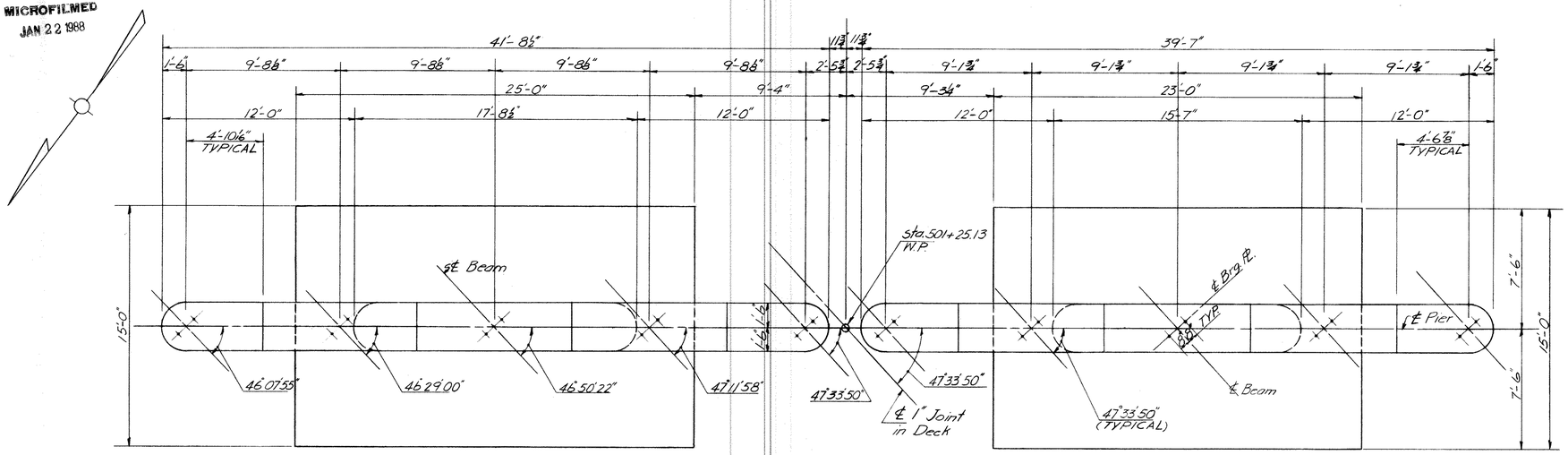

PLAN

NOTE:
Reinforcing Steel in Bridge Seats shall be so placed that it will not interfere with Anchor Bars.

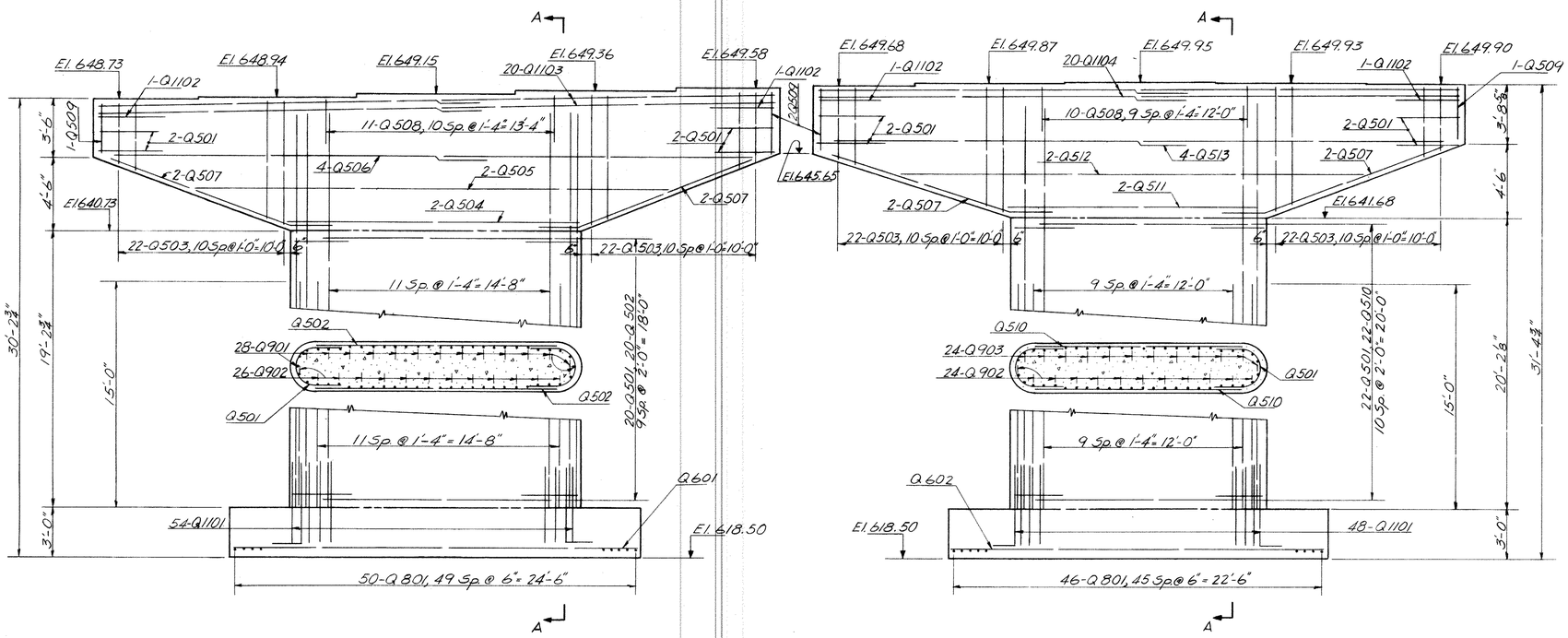

ELEVATION

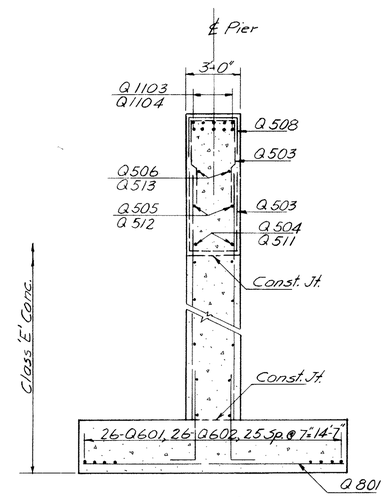

SECTION A-A

YULE, STICKLEN, JORDAN & McNEE
ENGINEERS
COLUMBUS OHIO

REAR PIER

BRIDGE NO. WAS-50-0946 L
OVER B&O RR

STA. 500+25.34
STA. 502+15.11

WASHINGTON CO.

DESIGNED	DRAWN	TRACED	CHECKED	REVIEWED	DATE	REVISED
C.P.T.	A.B.	A.B.	C.P.T.	RBY	10-2-62	

NO. PB163 K&E CO.

MICROFILMED
JAN 22 1988

FED. RD. DIVISION	STATE	PROJECT	TYPE FUNDS
2	OHIO		

575

WAS-50-4.33
WAS-7-11.39

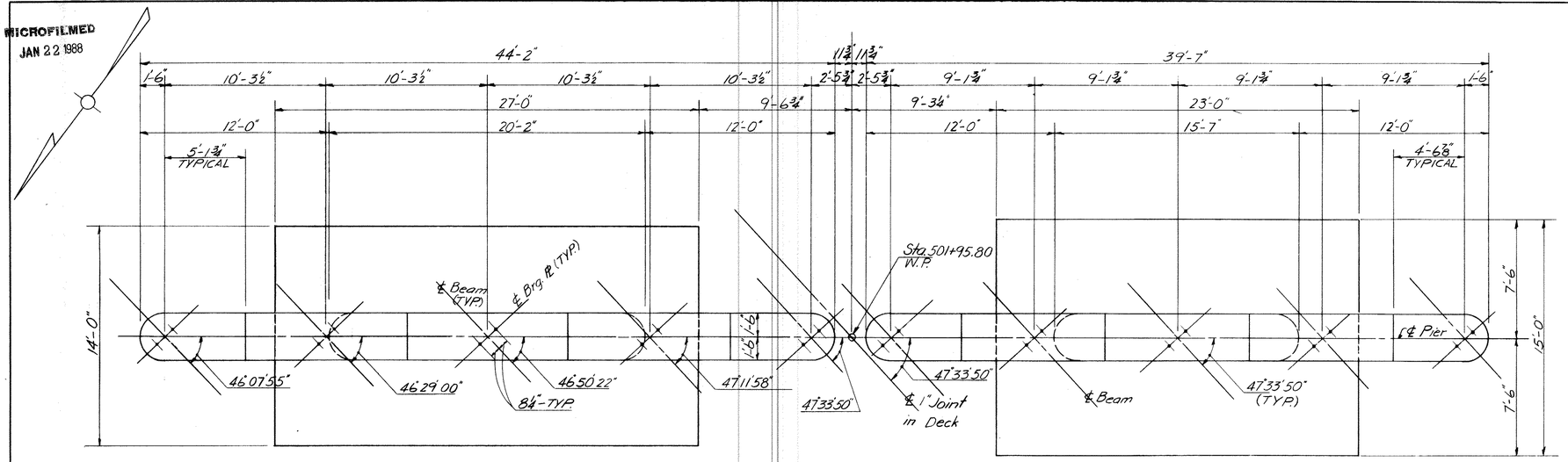

PLAN

NOTE:
Reinforcing Steel in Bridge Seats shall be so placed that it will not interfere with Anchor Bars.

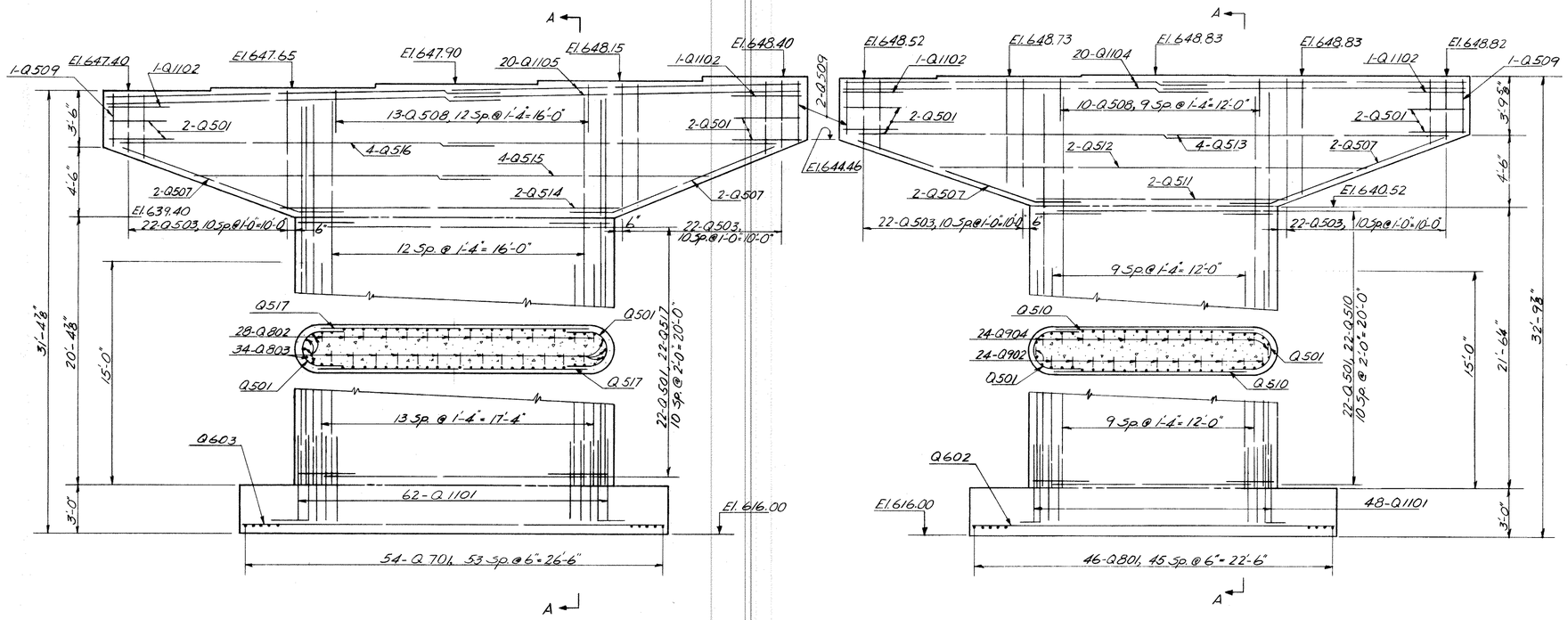

ELEVATION

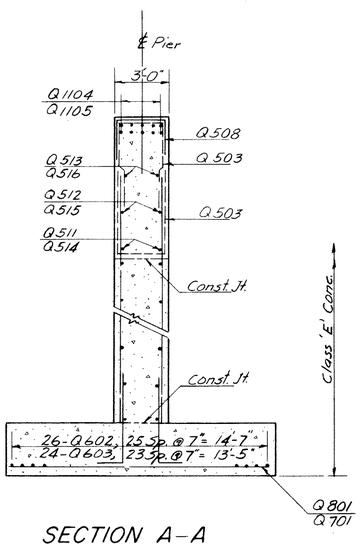

SECTION A–A

YULE, STICKLEN, JORDAN & McNEE
ENGINEERS
COLUMBUS OHIO

FORWARD PIER
BRIDGE NO. WAS-50-0946 L
OVER B&O RR
STA. 500+25.34
STA. 502+15.11
WASHINGTON CO.

DESIGNED	DRAWN	TRACED	CHECKED	REVIEWED	DATE	REVISED
C.P.T.	A.B.	A.B.	C.P.T.	RBY	10-2-62	

NO. P8183 K&E CO.

MICROFILMED
JAN 22 1988

FED. RD. DIVISION	STATE	PROJECT	TYPE FUNDS
2	OHIO		

576

WAS-50-4.33
WAS-7-11.39

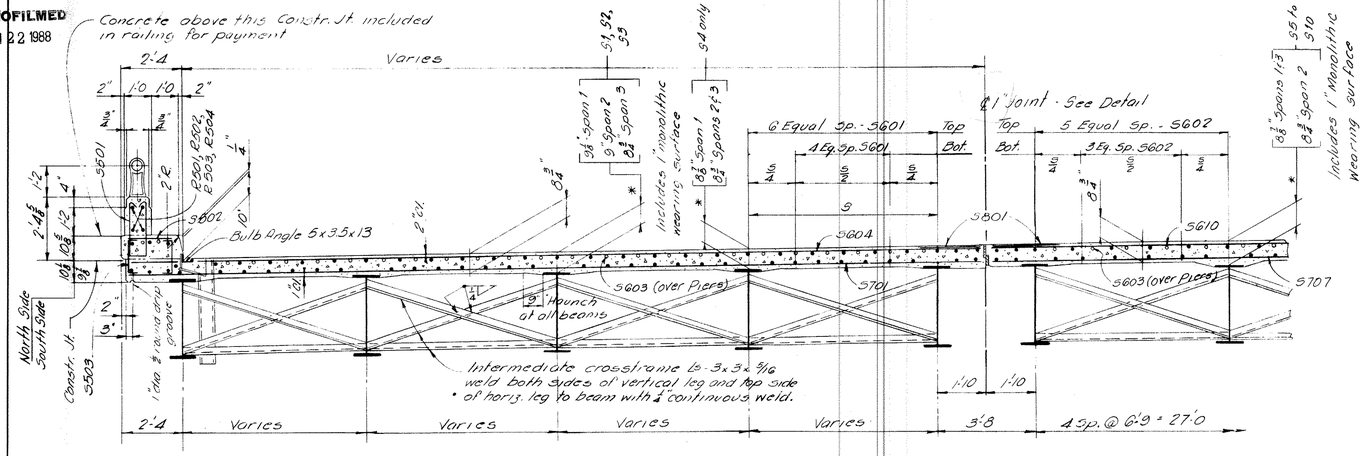

HALF TRANSVERSE SECTION

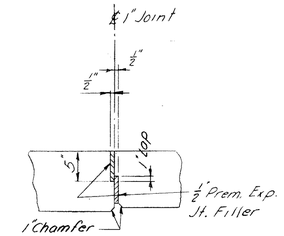

1" LONGITUDINAL JOINT DETAIL

* This is a nominal dimension. The quantity of deck concrete to be paid for shall be based on this dimension even though deviation may be necessary because the top flange of the beam may not have the exact camber or conformation required to place it parallel to the finished grade.

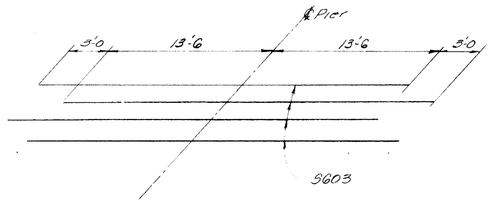

DIAGRAM OF S603 BARS OVER PIERS

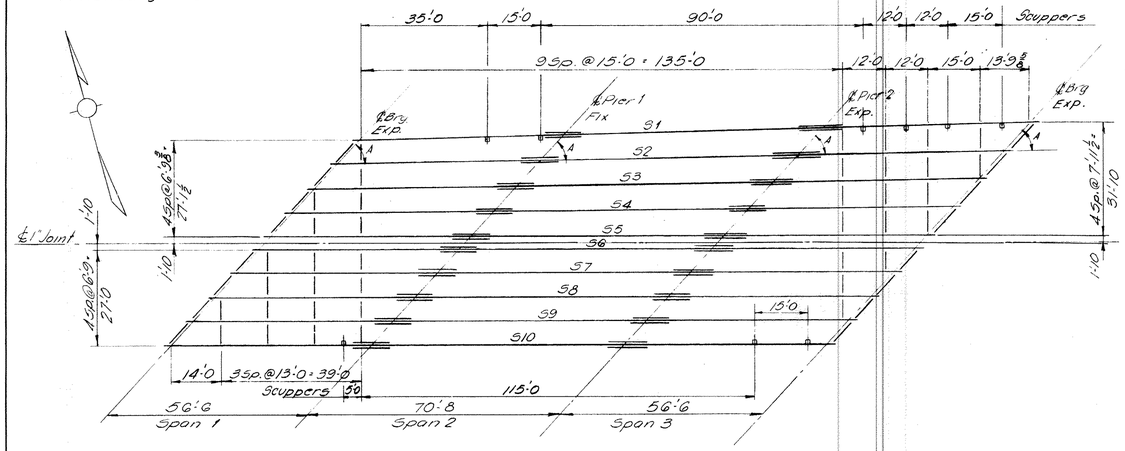

STEEL FRAMING PLAN

DEFLECTIONS & CAMBERS

SPAN 1	S1	S2	S3	S4	S5	S6	S7	S8	S9	S10
Deflection due to weight of steel	.05	.05	.05	.05	.05	.05	.05	.05	.05	.05
Deflection due to remaining dead load	.28	.26	.25	.25	.20	.20	.26	.26	.26	.27
Convexity required for Vertical Curve	.25	.25	.25	.24	.24	.24	.24	.24	.24	.24
Sum of deflection and convexity	.58	.56	.55	.54	.49	.49	.55	.55	.55	.56
Required Camber	0	0	0	0	0	0	0	0	0	0

SPAN 2	S1	S2	S3	S4	S5	S6	S7	S8	S9	S10
Deflection due to weight of steel	.08	.07	.07	.07	.07	.07	.07	.07	.07	.07
Deflection due to remaining dead load	.36	.36	.33	.34	.27	.25	.33	.33	.33	.34
Convexity required for Vertical Curve	.39	.39	.39	.38	.38	.38	.38	.38	.38	.38
Sum of deflection and convexity	.83	.82	.79	.79	.72	.70	.78	.78	.78	.79
Required Camber	13/16	13/16	13/16	13/16	13/16	13/16	13/16	13/16	13/16	13/16

SPAN 3	S1	S2	S3	S4	S5	S6	S7	S8	S9	S10
Deflection due to weight of steel	.06	.05	.05	.05	.05	.05	.05	.05	.05	.05
Deflection due to remaining dead load	.26	.27	.26	.27	.23	.20	.26	.26	.26	.27
Convexity required for Vertical Curve	.25	.25	.25	.24	.24	.24	.24	.24	.24	.24
Sum of deflection and convexity	.57	.57	.56	.56	.52	.49	.55	.55	.55	.55
Required Camber	0	0	0	0	0	0	0	0	0	0

Dimensions shown in above tabulation are in inches
Place mill camber up where required camber is 0.

BEAM ANGLES & SIZES

Beam	A	Span 1	Span 2	Span 3
S1	46°-07'-55"	36WF160	36WF170	36WF182
S2	46°-23'-00"	36WF160	36WF170	36WF182
S3	46°-50'-22	36WF160	36WF170	36WF182
S4	47°-11'-58"	36WF160	36WF170	36WF170
S5 to S10	47°-33'-50	36WF150	36WF160	36WF150

MOMENT PLATES

Beam	Pier 1		Pier 2	
	Top 10½ x 9/16	Bot. 13½ x 9/16	Top 10½ x 9/16	Bot. 13½ x 9/16
S1 to S3	30'-0		35'-0	
	Top 10½ x ½	Bot. 13½ x 9/16	Top 10½ x ½	Bot. 13½ x 9/16
S4 to S10	29'-0		29'-0	

BEAM LENGTHS

Beam	Length ℄ Brg to ℄ Brg	Spans 1 & 3 ℄ Brg. to ℄ Pier	Span 2 ℄ Pier 1 to ℄ Pier 2
S1	188.022'	57.840'	72.342'
S2	186.924'	57.502'	71.920'
S3	185.829'	57.165'	71.499'
S4	184.746'	56.832'	71.082'
S5 to S10	183.667'	56.500	70.667'

All field splices for beams shall include top and bottom moment plates, as tabulated above. For detail of end cross frames, beam cut-off at backwall, and end dam at rear Abut. see Standard Drawing No. CSB-2-56 Sheet No. 2 revised 2-2-59.
For gutter and scupper details, welding of top and bottom moment plates, and bearing plate and anchor bolt details see Standard Drawing No. CSB-2-56 Sheet No. 3 revised 2-2-59.
For aluminum railing posts see Standard Drawing No. AR-1-57 revised 4-2-62
BEAM BUTT WELDS in webs of beams may have convex reinforcement in accordance with Sec.-7.22. Finishing flush by grinding is not required.
For Detail of end dam at forward Abut. See Sht. No. 550

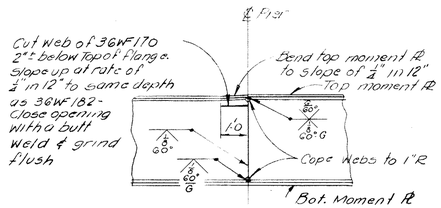

FIELD SPLICE
36 WF 170 TO 36 WF 182

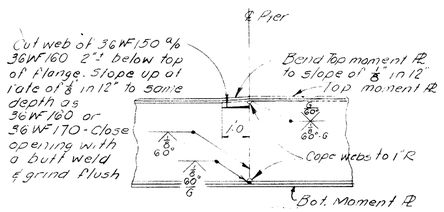

FIELD SPLICE
36 WF 150 TO 36 WF 160
36 WF 160 TO 36 WF 170

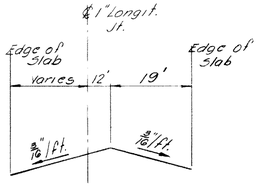

BRIDGE ROADWAY CROWN

DECK SLAB HAUNCH: The haunch in the deck slab adjacent to the top of steel beams, which is shown as 9" wide, may vary from this dimension between the limits of 6" and 12", except that the maximum slope shall not exceed 3" per foot. Payment for deck slab concrete shall be based on the 9" width.

CONTINUOUS BEAM SPLICES: If beams having the same nominal depth differ by more than ⅛", the depth of the smaller depth beam shall be increased by splitting the web longitudinally at a distance of 1½" below the bottom of the top flange and for a distance sufficient to allow the flange to be bent up at a slope of not more than ⅜" per foot, after which the split in the web shall be completely welded with full depth penetration and ground flush

YULE, STICKLEN, JORDAN & McNEE
ENGINEERS
COLUMBUS OHIO

SUPERSTRUCTURE

BRIDGE NO. WAS-50-0946 L
OVER B&O RR
STA. 500+25.34
WASHINGTON CO. STA. 502+15.11

DESIGNED	DRAWN	TRACED	CHECKED	REVIEWED	DATE	REVISED
W.H.T.	H.G.	H.G.	J.M.	RBY	10-2-62	

MICROFILMED
JAN 22 1988

FED. RD. DIVISION	STATE	PROJECT	TYPE FUNDS
2	OHIO		

577

WAS-50-4.33
WAS-7-11.39

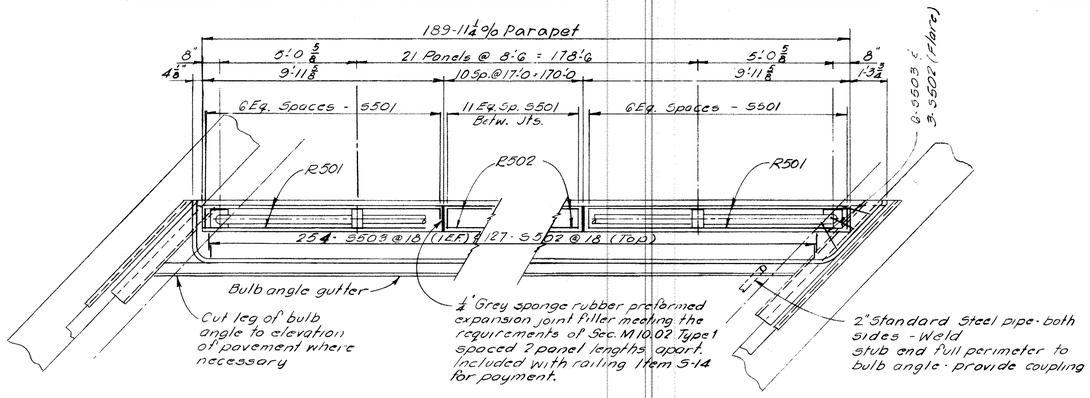

PLAN - NORTH PARAPET

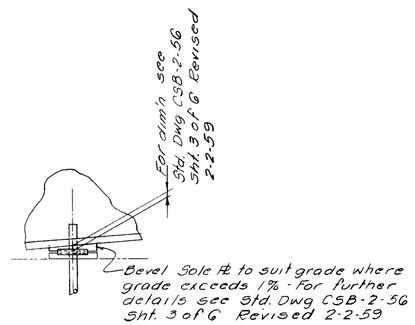

SOLE PLATE DETAIL

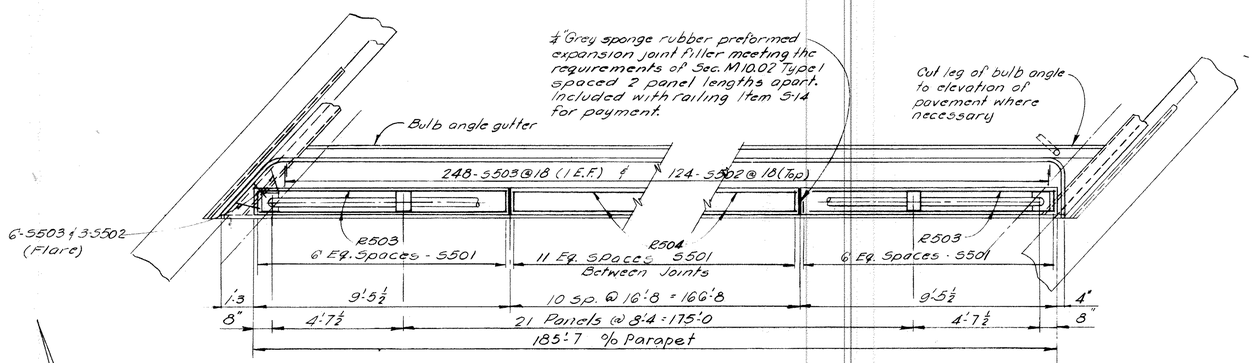

PLAN - SOUTH PARAPET

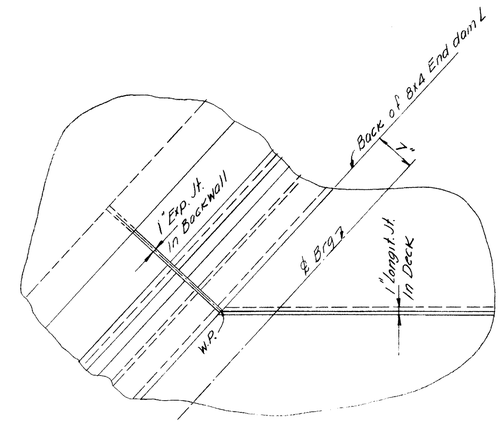

PART PLAN AT ABUTMENTS

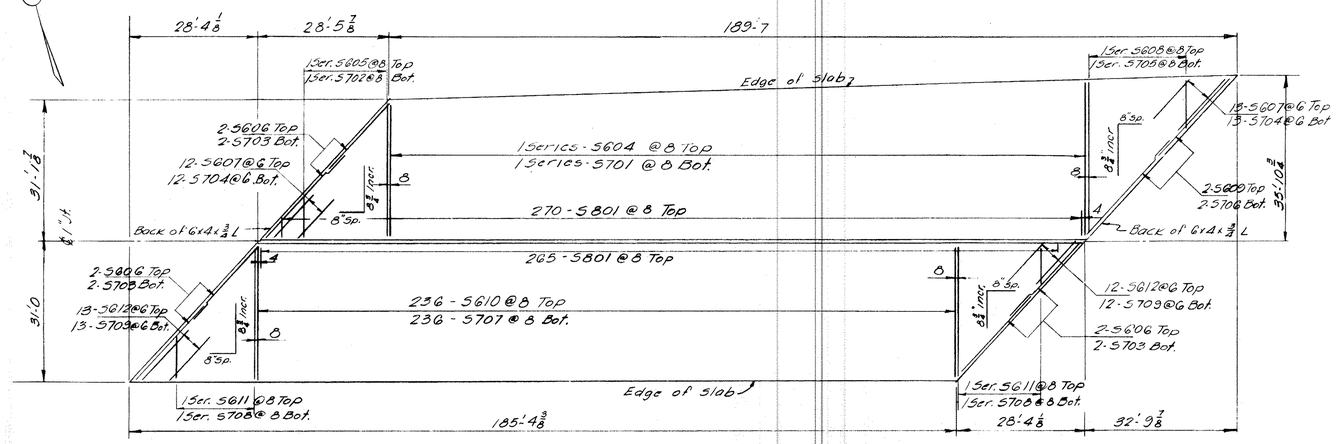

PLAN - DECK SLAB

YULE, STICKLEN, JORDAN & McNEE
ENGINEERS
COLUMBUS OHIO

SUPERSTRUCTURE DETAILS

BRIDGE NO. WAS-50-0946 L
OVER B&O RR

WASHINGTON CO.

STA. 500+25.34
STA. 502+15.11

DESIGNED	DRAWN	TRACED	CHECKED	REVIEWED	DATE	REVISED
H.G.	H.G.	H.G.	J.M.	RBY	10-2-62	