FED. RD. DIVISION	STATE	PROJECT	FISCAL YEAR
2	OHIO	J-181(4)	

41
46

WAS-76-12.42
3.4± MILES NORTH OF BARLOW
WASHINGTON COUNTY

FULL SIZE #53

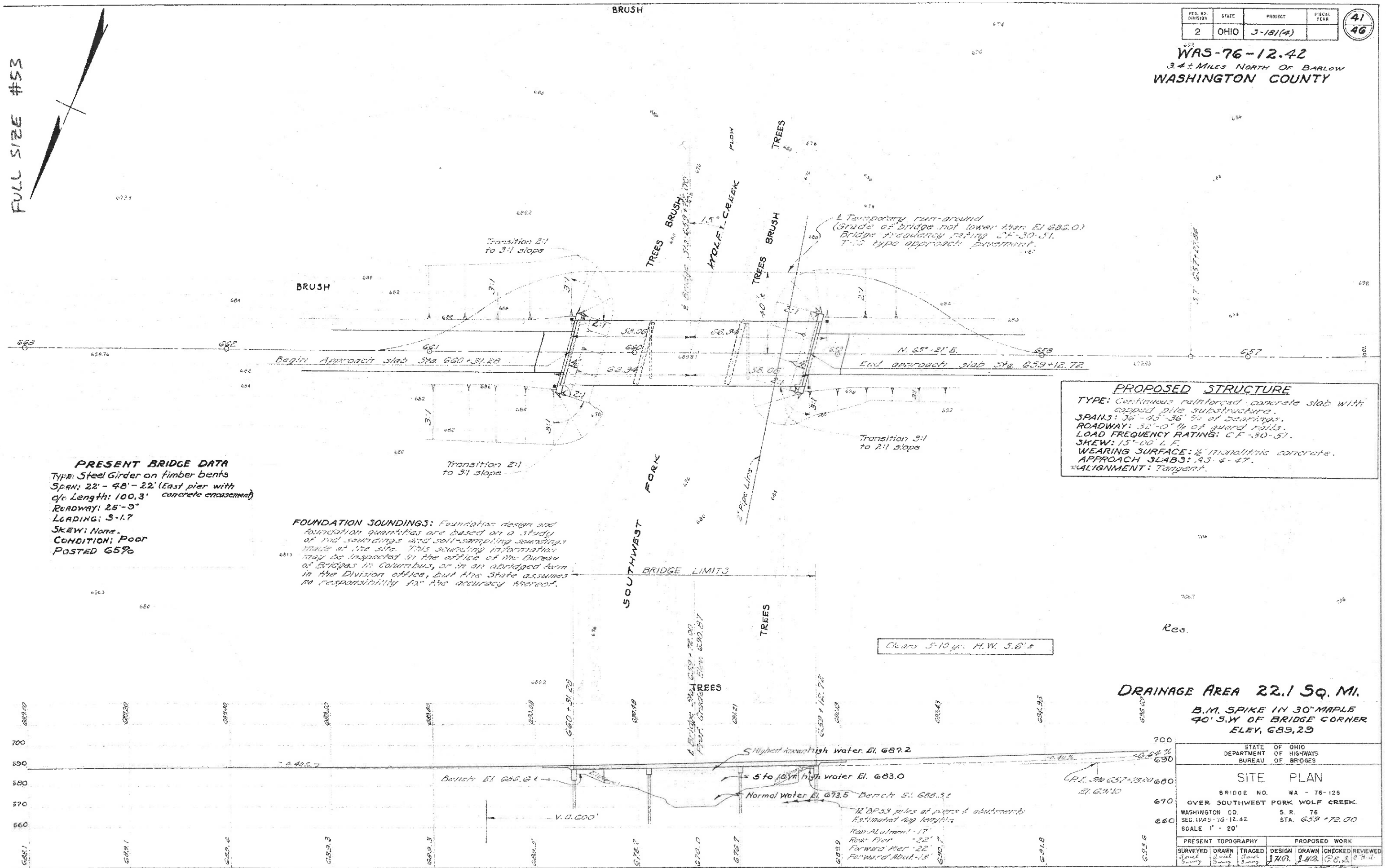

PROPOSED STRUCTURE

TYPE: Continuous reinforced concrete slab with capped pile substructure.
SPANS: 36'-45'-36' ℄ of bearings.
ROADWAY: 32'-0" ℄ of guard rails.
LOAD FREQUENCY RATING: CF-30-51.
SKEW: 15°-00' L.F.
WEARING SURFACE: ½" monolithic concrete.
APPROACH SLABS: AS-6-47.
ALIGNMENT: Tangent.

PRESENT BRIDGE DATA

Type: Steel Girder on timber bents
Span: 22'-48'-22' (East pier with concrete encasement)
c/c Length: 100.3'
Roadway: 25'-9"
Loading: S-1.7
Skew: None.
Condition: Poor
Posted 65%

FOUNDATION SOUNDINGS: Foundation design and foundation quantities are based on a study of rod soundings and soil-sampling soundings made at the site. This sounding information may be inspected in the office of the Bureau of Bridges in Columbus, or in an abridged form in the Division office, but the State assumes no responsibility for the accuracy thereof.

DRAINAGE AREA 22.1 SQ. MI.

B.M. SPIKE IN 30" MAPLE
40' S.W. OF BRIDGE CORNER
ELEV. 689.29

STATE OF OHIO
DEPARTMENT OF HIGHWAYS
BUREAU OF BRIDGES

SITE PLAN

BRIDGE NO. WA - 76 - 125
OVER SOUTHWEST FORK WOLF CREEK.
WASHINGTON CO. S. R. 76
SEC. WAS-76-12.42 STA. 659+72.00
SCALE 1" - 20'

PRESENT TOPOGRAPHY			PROPOSED WORK			
SURVEYED	DRAWN	TRACED	DESIGN	DRAWN	CHECKED	REVIEWED
Fence Survey	Fence Survey	Fence Survey	J.H.B.	J.H.B.	G.E.S.	G.R.H.

BPG G.R.H. 1-27-54

FED. RD DIVISION	STATE	PROJECT	TYPE FUNDS
2	OHIO	S-18.1 (4)	

42
46

WASHINGTON COUNTY
WAS-76-12.42

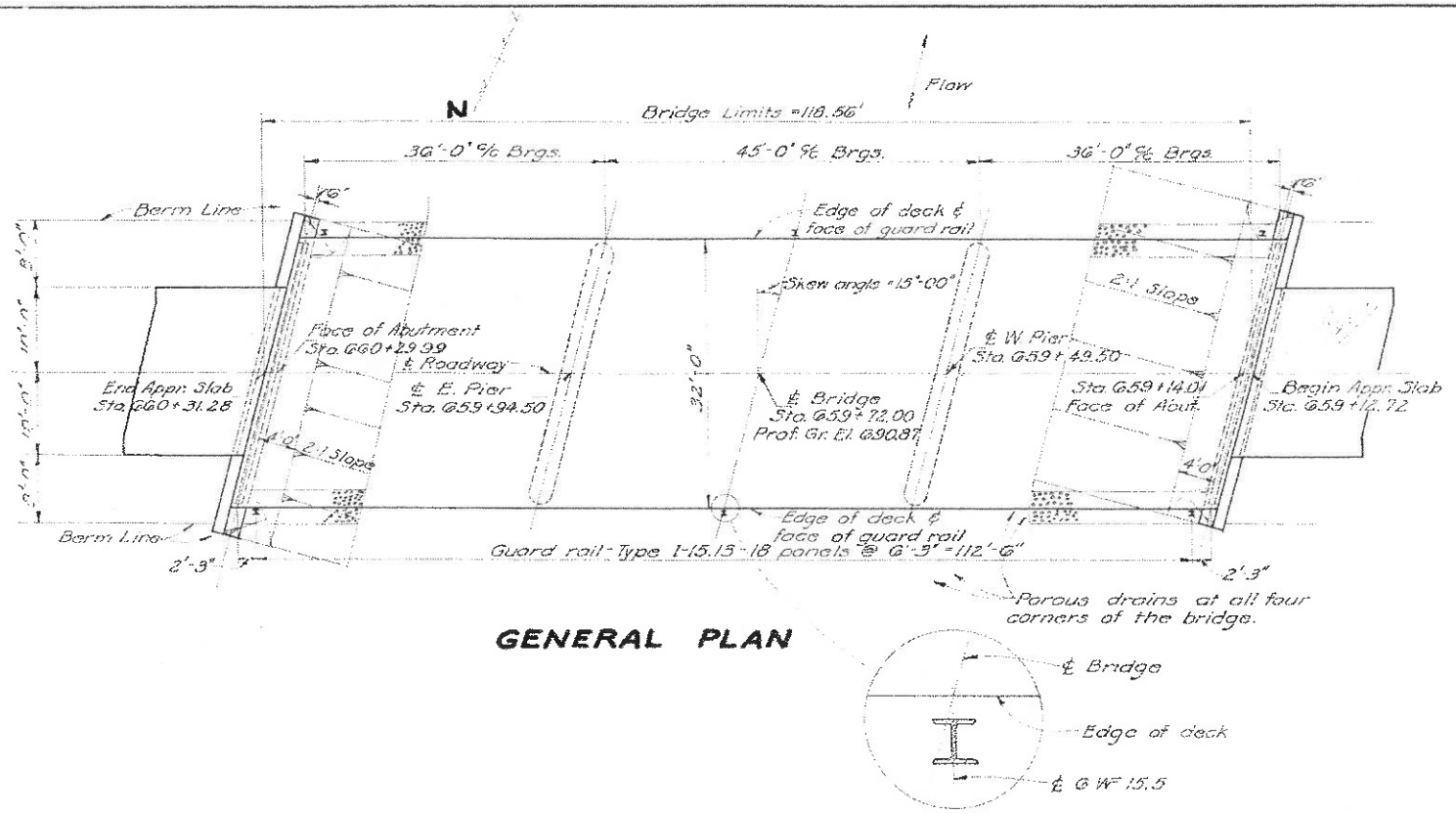

GENERAL PLAN

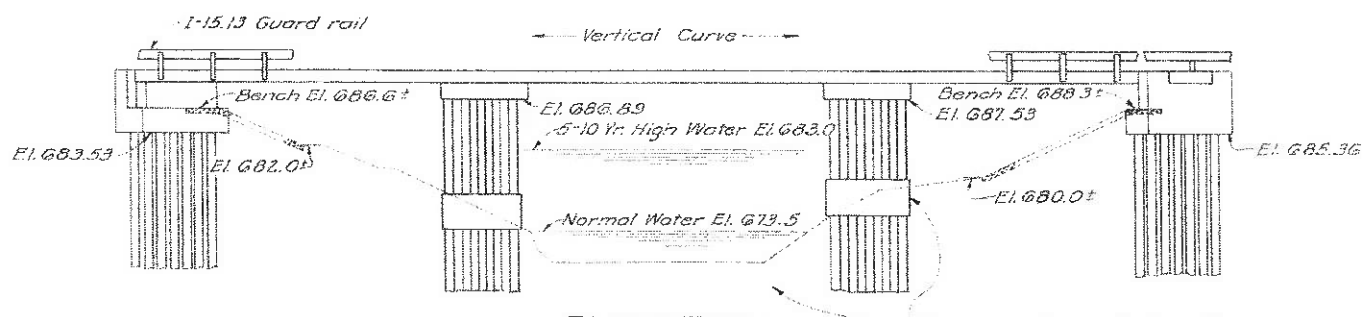

ELEVATION
(Approach Slabs not shown

GENERAL NOTES

REFERENCE shall be made to Standard Drawings A-1-54, P-1-54 and CS-1-54, all dated 7-1-54.

TEMPORARY RUN-AROUND BRIDGE AND APPROACHES: Bridge frequency rating, CF-30-51, T-10 surface course on approaches, included in roadway quantities for payment.

REMOVAL OF EXISTING STRUCTURE - When no longer needed to maintain traffic the existing structure shall be removed. The steel beams shall be removed by the Contractor and piled by the roadside to become the property of the State. The bridge floor and bridge railing will be taken up by State forces and removed from the project by them. The State agrees to perform such removal in two days and shall be notified by the Contractor three days in advance. The remainder of the removed materials shall become the property of the Contractor. The existing substructure shall be removed to at least 6" below proposed ground surface and to whatever extent is necessary to avoid interference with the new construction, including pile driving.

PILES shall be driven with a steam hammer of not less than 7000'# energy per blow, to firm contact with shale which shall be considered as attained when the capacity according to the formula in Sec. S-18.05 is at least 50 tons per pile if a 7000'# hammer is used, or 40 tons if a 15,000'# hammer is used and if the length of penetration is approximately equal to the depth to shale according to the bridge foundation investigation report. If the energy rating of the hammer is between these values, the required formula capacity shall be determined by interpolation. (The design load is 27 tons per pile for the pier piles and 30 tons for the abutment piles.)

POROUS DRAINS, extending from face of abutment to Elev. 682.0± at the East abutment and to Elev. 680.0± at the West Abutment, shall be placed on and flush with embankment slopes at all four corners of the bridge. The drains shall be four feet wide and one foot thick. They shall be centered under edge of deck. They shall be composed of No. 1 or No. 12 gravel, stone or slag. Construction procedure shall conform essentially to Item I-9. Trench excavation shall be included for payment with the price per cu. yd. bid for "Porous drains on embankment slopes."

SURFACE FINISH OF CONCRETE: Fascia of deck slab shall receive a rubbed surface finish. All other exposed surfaces shall be governed by the provisions of Item S-4.

ESTIMATED QUANTITIES

Item	Total	Unit	Description	Abuts.	Piers	Supers	Gen'l		
E-1	180	Cu. Yd.	Unclassified excavation	180					
S-1	207	Cu. Yd.	Class "C" concrete, superstructure and pier caps		12	195			
S-	39	Cu. Yd.	Class "E" concrete, abutments	39					
S-3	50948	Lbs.	Reinforcing steel	4509	2789	43543	113		
S-14	237.12	Lin. Ft.	Railing, Type 1-15.13 with galvanized steel posts			237.12			
S-15	Lump	Sum	Temporary run-around bridge and approaches				Lump		
S-16	Lump	Sum	First test pile				Lump		
S-19	680	Lin. Ft.	Steel piling, 12 BP 53	240	440				
S-24	Lump	Sum	Removal of existing structure				Lump		
S-29	20	Cu. Yd.	Porous backfill	20					
S-29	12	Cu. Yd.	Porous drains on embankment slopes				12		

STATE OF OHIO
DEPARTMENT OF HIGHWAYS
BUREAU OF BRIDGES AND RAILROAD CROSSINGS

GENERAL PLAN & ELEVATION
NOTES & QUANTITIES
BRIDGE NO. WA-76-125
OVER SOUTH FORK OF WOLF CREEK

WASHINGTON COUNTY STA. 659+72.00
SEC. WAS-76-12.42

DESIGNED	DRAWN	TRACED	CHECKED	REVIEWED	DATE	REVISED
L.J.E.	L.J.E.	J.D.J.	N.E.Y.	BFG	7-23-54	

FED. RD. DIVISION	STATE	PROJECT	TYPE FUNDS
2	OHIO	S-181(4)	

43
46

WASHINGTON COUNTY
WAS-76-12.42

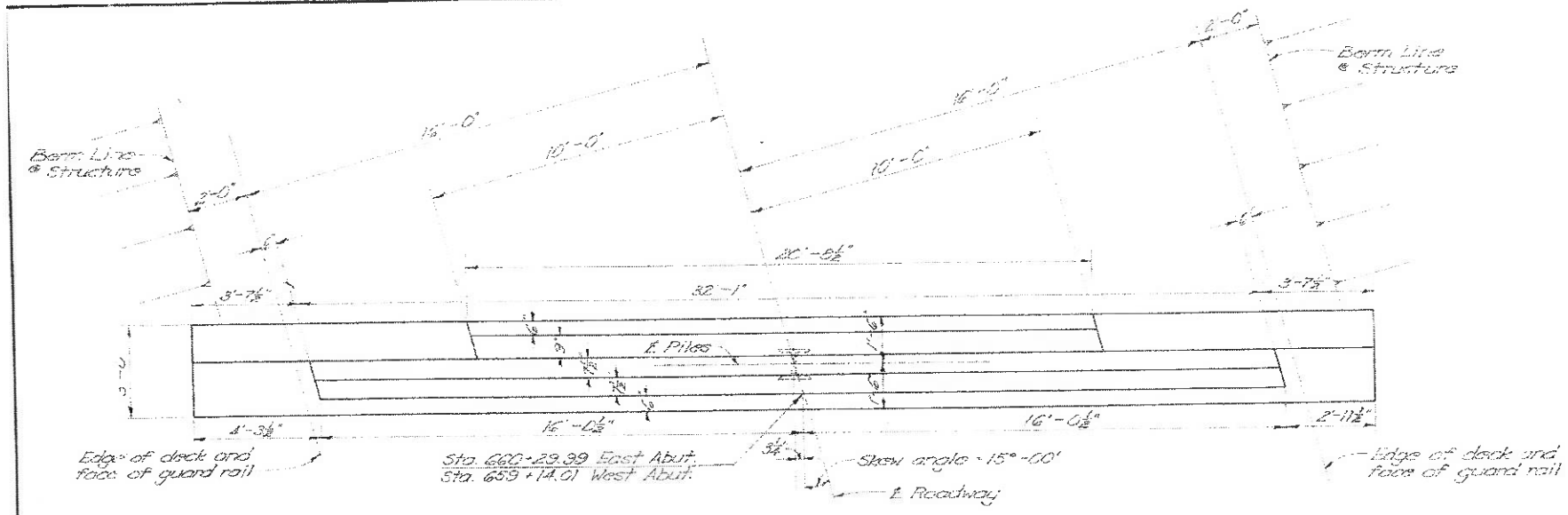

ABUTMENT PLAN

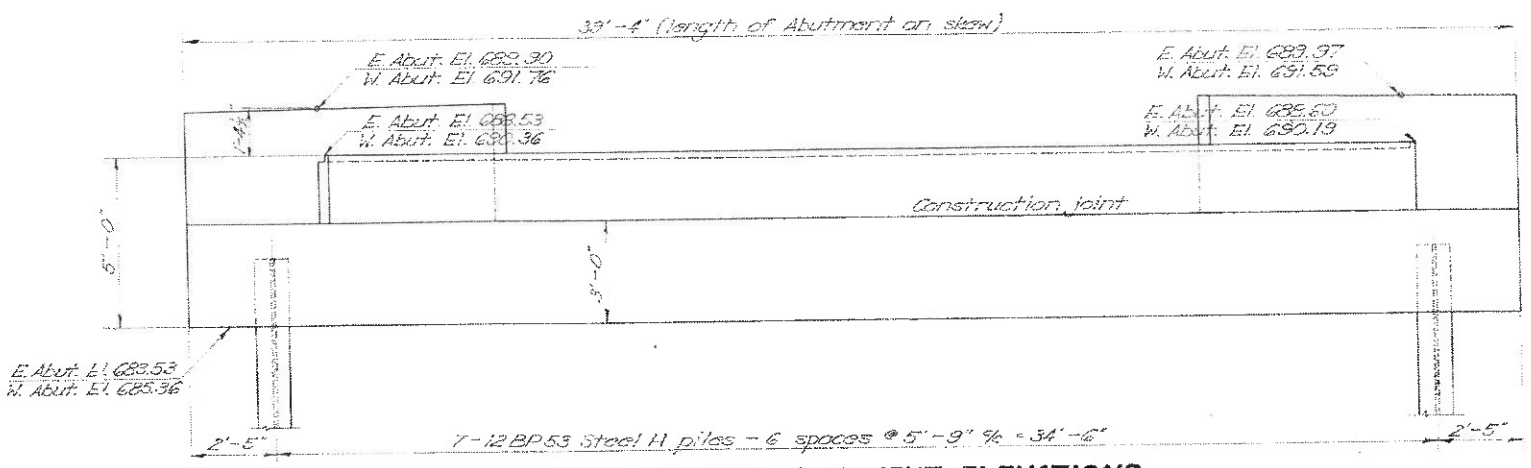

VIEW SHOWING ABUTMENT ELEVATIONS

Use above views in conjunction with Std. Dwg. A-1-54 for Abutment details.

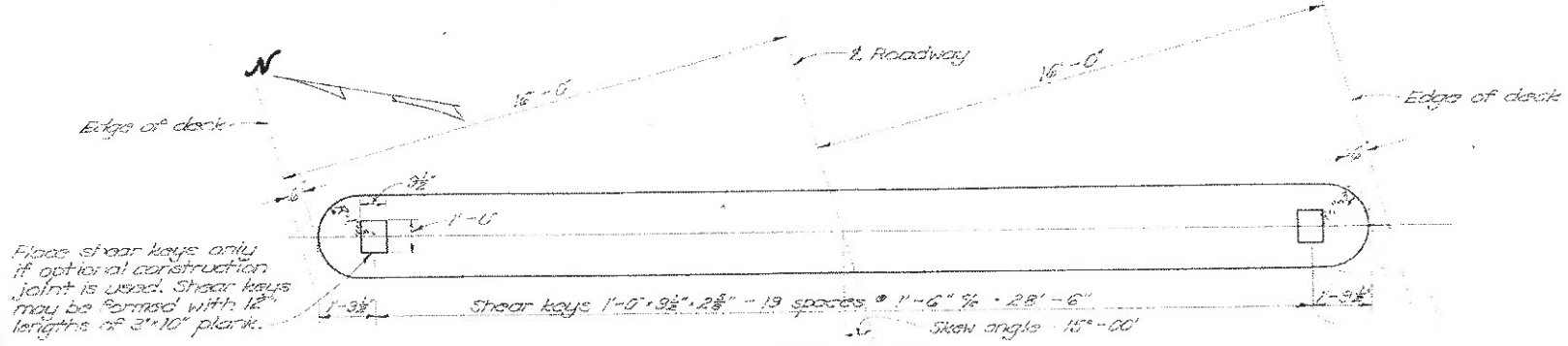

PIER PLAN

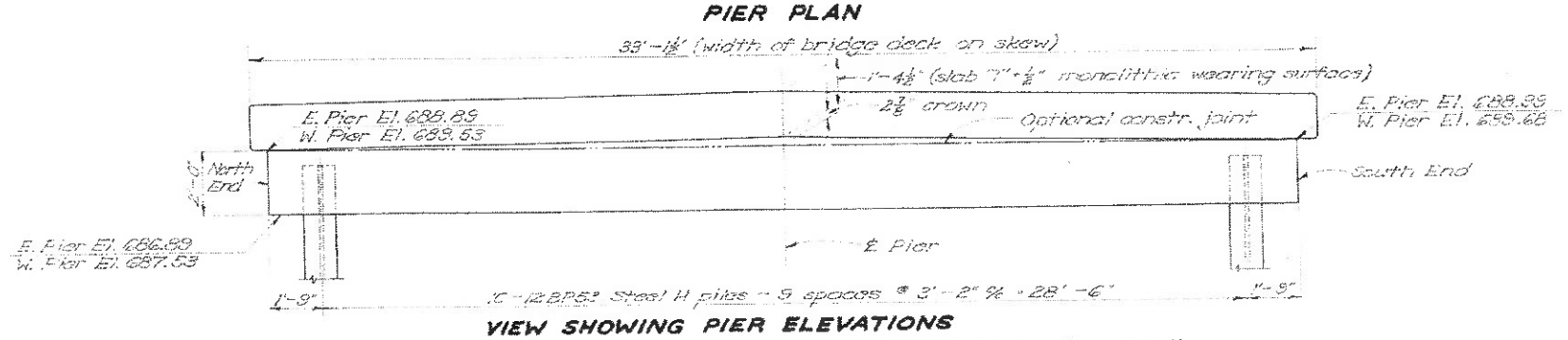

VIEW SHOWING PIER ELEVATIONS

Use above views in conjunction with Std. Dwg. P-1-54 for Pier details.

REINFORCING STEEL LIST

Mark	No.	Length	Weight	Shp
Superstructure				
A910	33	41'-4	13,070	S
B910	30	29'-1"	2,966	B
C910	30	25'-6"	2,601	B
D910	15	26'-0"	1,326	S
E910	15	18'-10"	960	S
F1010	62	25'-2"	7,782	S
G1010	30	15'-7"	2,011	S
H1010	30	10'-8"	1,377	S
J1604	32	25'-0"	1,202	S
K601	16	20'-1"	483	S
M601	126	32'-8"	6,183	S
N601	75	32'-6"	3,523	S
Abutments				
R1001	16	17'-6"	1,205	S
R901	16	20'-3"	886	S
R501	16	20'-3"	338	S
R502	116	6'-7"	795	B
R503	8	16'-8"	133	S
R504	24	5'-4"	133	S
R505	40	7'-11"	380	B
R506	8	9'-0"	75	S
R507	16	5'-1"	85	S
R508	18	7'-4"	122	B
R509	16	8'-5"	141	B
R401	56	5'-5"	205	B
Piers				
P1001	8	32'-6"	1,119	S
P901	8	29'-6"	808	S
P501	4	25'-6"	123	S
P502	48	8'-0"	401	B
P503	8	6'-6"	54	B
P401	80	5'-5"	290	B
Replacement bars				
RE10	1	7'-2	31	S
RE9	2	6'-10	46	S
RE8	1	6'-6"	17	S
RE6	1	5'-11"	9	S
RE5	1	5'-7"	6	S
RE4	1	5'-3"	4	S

Bending Diagrams

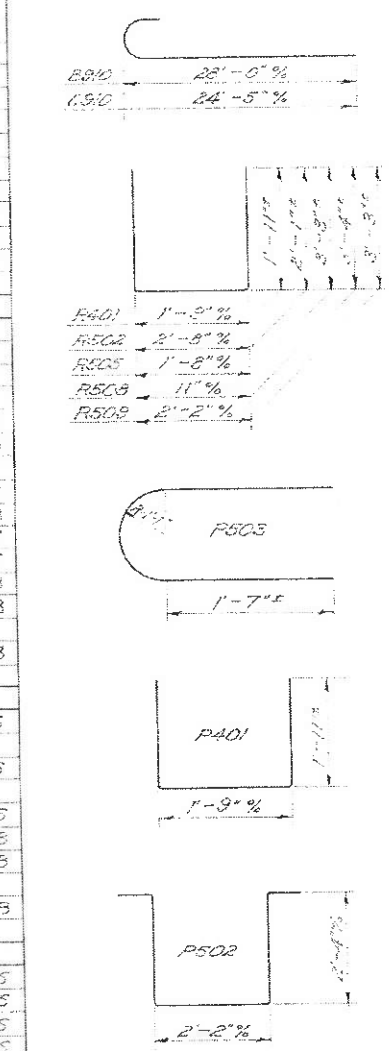

STATE OF OHIO
DEPARTMENT OF HIGHWAYS
BUREAU OF BRIDGES AND RAILROAD CROSSINGS

ABUTMENT and PIER DETAILS and REINFORCING STEEL LIST

BRIDGE No. WA-76-125
over SOUTH FORK of WOLF CREEK

Washington County
Sec. WAS-76-12.42 Sta. 659+72.00

DESIGNED	DRAWN	TRACED	CHECKED	REVIEWED	DATE	REVISED
L.J.E.	L.J.E.		N.E.Y.	BFG	7-27-54	

LOAD FREQUENCY	SPANS	NUMBER, SPACING, AND DESIGN LOAD (IN TONS) OF PILES FOR ONE NON-SKEWED ABUTMENT						CONCRETE AND REINFORCING STEEL IN TWO NON-SKEWED ABUTMENTS											
		24' R'dw'y. 5 Piles @6'-3"	28' R'dw'y. 6 Piles @5'-10"	32' R'dw'y. 6 Piles @6'-7"	36' R'dw'y. 7 Piles @6'-2"	40' R'dw'y. 7 Piles @6'-10"	44' R'dw'y. 8 Piles @6'-5"	24' R'dw'y Reinf. Steel Lbs.	24' R'dw'y Concrete Cu. Yds.	28' R'dw'y Reinf. Steel Lbs.	28' R'dw'y Concrete Cu. Yds.	32' R'dw'y Reinf. Steel Lbs	32' R'dw'y Concrete Cu. Yds.	36' R'dw'y Reinf. Steel Lbs.	36' R'dw'y Concrete Cu. Yds.	40' R'dw'y Reinf. Steel Lbs	40' R'dw'y Concrete Cu. Yds.	44' R'dw'y Reinf. Steel Lbs.	44' R'dw'y Concrete Cu. Yds.
CF = 30	16'-20' - 16'	19	17	19	18	20	19	3390	29	3930	32	4230	36	4750	41	5060	44	5640	49
	18'-22.5'-18'	19	18	20	19	21	20		29		32		37		41		45		49
	20'-25' - 20'	20	19	21	20	22	21		29		33		37		41		45		49
	22'-27.5'-22'	21	20	22	21	23	22		29		33		37		41		45		49
	24'-30' - 24'	22	21	23	22	24	23		29		33		37		41		45		49
	26'-32.5'-26'	23	22	25	23	26	24		29		33		37		42		45		50
	28'-35' - 28'	24	23	26	24	27	25		29		33		37		42		46		50
	30'-37.5'-30'	25	24	27	25	28	26		29		33		38		42		46		50
	32'-40' - 32'	27	25	28	27	30	28		29		33		38		42		46		50
	34'-42.5'-34'	28	26	29	28	31	29		30		34		38		42		46		51
	36'-45' - 36'	29	27	31	29	32	30		30		34		38		43		46		51
	38'-47.5'-38'	31	28	32	30	33	31		30		34		38		43		47		51
	40'-50' - 40'	32	30	34	32	35	33		30		34		39		43		47		52
	42'-52.5'-42'	34	32	36	33	37	35		30		35		39		44		48		52
	44'-55' - 44'	35	33	37	35	38	36		31		35		39		44		48		52
CF = 130	16'-20' - 16'	19	18	20	18	20	19	3390	29	3930	32	4230	37	4750	41	5060	45	5640	49
	18'-22.5'-18'	20	18	21	19	22	20		29		33		37		41		45		49
	20'-25' - 20'	21	19	22	20	23	21		29		33		37		41		45		49
	22'-27.5'-22'	22	20	23	21	24	22		29		33		37		41		45		50
	24'-30' - 24'	23	21	24	22	25	23		29		33		37		42		45		50
	26'-32.5'-26'	24	22	25	23	26	24		29		33		37		42		46		50
	28'-35' - 28'	25	23	26	25	27	26		29		34		38		42		46		50
	30'-37.5'-30'	26	24	27	26	28	27		29		34		38		42		46		51
	32'-40' - 32'	27	26	29	27	30	28		30		34		38		42		46		51
	34'-42.5'-34'	28	27	30	28	31	29		30		34		38		43		47		51
	36'-45' - 36'	30	28	31	29	32	31		30		34		38		43		47		51
	38'-47.5'-38'	31	29	33	31	34	32		30		34		39		43		47		52
	40'-50' - 40'	33	31	34	32	36	34		30		35		39		44		48		52
	42'-52.5'-42'	34	32	36	34	38	35		31		35		39		44		48		52
	44'-55' - 44'	35	33	37	35	39	36		31		35		39		44		48		53
CF = 400	16'-20' - 16'	19	18	20	19	21	19	3390	29	3930	33	4230	37	4750	41	5060	45	5640	49
	18'-22.5'-18'	20	19	21	20	22	21		29		33		37		41		45		49
	20'-25' - 20'	21	20	22	21	23	22		29		33		37		42		45		50
	22'-27.5'-22'	22	21	23	22	24	23		29		33		37		42		45		50
	24'-30' - 24'	23	22	24	23	25	24		29		34		37		42		46		50
	26'-32.5'-26'	24	23	25	24	26	25		29		34		38		42		46		50
	28'-35' - 28'	25	24	27	25	28	26		30		34		38		42		46		51
	30'-37.5'-30'	26	25	28	26	29	27		30		34		38		42		46		51
	32'-40' - 32'	28	26	30	28	31	29		30		34		38		43		47		51
	34'-42.5'-34'	29	27	31	29	32	30		30		34		38		43		47		51
	36'-45' - 36'	30	28	32	30	33	31		30		34		39		43		47		52
	38'-47.5'-38'	32	30	33	31	35	33		30		34		39		43		47		52
	40'-50' - 40'	33	31	35	33	37	34		31		35		39		44		48		52
	42'-52.5'-42'	35	33	37	35	38	36		31		35		39		44		48		53
	44'-55' - 44'	37	35	39	37	41	38		31		35		40		44		48		53
CF = 2000	16'-20' - 16'	19	18	20	19	21	20	3390	29	3930	33	4230	37	4750	41	5060	45	5640	49
	18'-22.5'-18'	20	19	21	20	22	21		29		33		37		41		45		50
	20'-25' - 20'	21	20	22	21	23	22		29		33		37		42		45		50
	22'-27.5'-22'	22	21	23	22	24	23		29		34		37		42		46		50
	24'-30' - 24'	23	22	24	23	25	24		29		34		38		42		46		50
	26'-32.5'-26'	24	23	26	24	27	25		29		34		38		42		46		50
	28'-35' - 28'	25	24	27	25	28	26		30		34		38		42		46		51
	30'-37.5'-30'	26	25	28	26	29	27		30		34		38		42		46		51
	32'-40' - 32'	28	26	30	28	31	29		30		34		38		43		47		51
	34'-42.5'-34'	29	27	31	29	32	30		30		34		38		43		47		51
	36'-45' - 36'	30	28	32	30	33	31		30		34		39		43		47		52
	38'-47.5'-38'	32	30	33	31	35	33		30		35		39		43		47		52
	40'-50' - 40'	33	31	35	33	37	34		31		35		39		44		48		52
	42'-52.5'-42'	35	33	37	35	38	36		31		35		40		44		48		53
	44'-55' - 44'	37	35	39	37	41	38		31		35		40		44		48		53

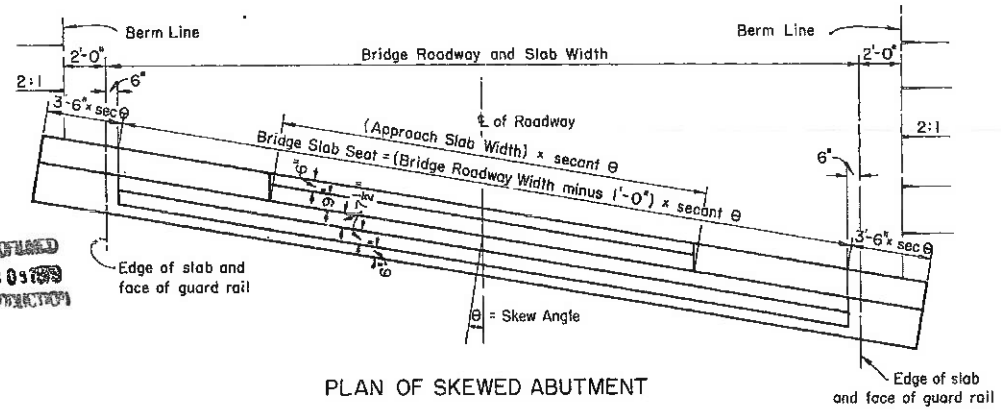

PLAN OF SKEWED ABUTMENT

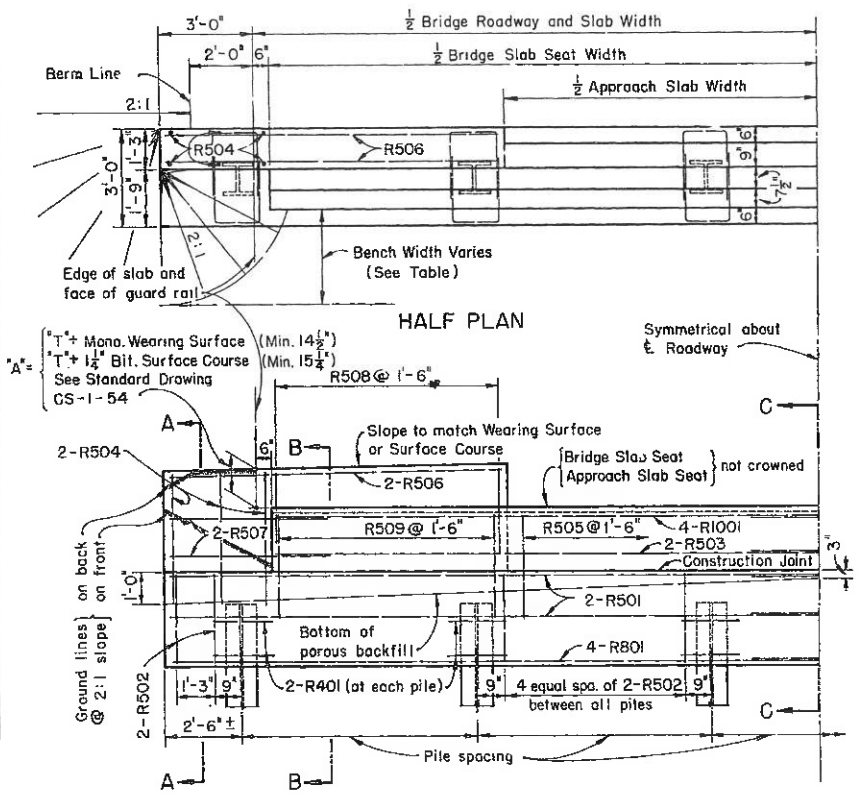

"A"	BENCH WIDTH
14½" thru 16"	3'-0"
16¼" thru 17½"	3'-3"
17¾" thru 19"	3'-6"
19¼" thru 20½"	3'-9"
20¾" thru 22"	4'-0"
22¼" thru 23½"	4'-3"
23¾" thru 24¾"	4'-6"

GENERAL: This drawing provides design and general construction details and is intended to be used with Standard Drawing CS-1-54. The project plans for each structure will show span lengths; roadway width; skew; elevations; type, size and required capacity of piles; estimated quantities; reinforcing steel list; and other necessary notes and details.

DESIGN SPECIFICATIONS: This standard drawing conforms to the "Design Specifications for Highway Structures" of the State of Ohio, Department of Highways, dated October 1, 1951, together with revisions dated July 15, 1952 and April 1, 1954.

EXPANSION: If the sum of the spans is greater than 200 feet, provision for expansion is required, and this drawing should not be used.

PILE TYPE AND SIZE: The piles usually will be specified on the project plans as cast-in-place reinforced concrete or steel H. The type and size generally will be the same as for the pier piles if the piers are of the type shown on Standard Drawing P-1-54. If the type of pier is different from that shown on Standard Drawing P-1-54, the abutment piles, if of the steel H type, generally will be specified as 12BP53, and if of the cast-in-place concrete type, as 12" diameter if the sum of the spans is less than 100 feet, and as 14" diameter if more than 100 feet.

PILE SPACING: In case of skew, the number of piles shall be the same as shown but the tabulated spacing dimension shall be multiplied by the secant of θ (the angle of skew)

PILE CAPACITY shall be as specified on the project plans. The required capacity according to the formula in Sec. S-18.05 of the "Construction and Material Specifications", generally will be the same as the design load listed in the table, except for steel H piles that are to be driven to firm contact with rock or other hard material, in which case the required formula capacity generally will be greater than the design load and will be dependent upon the relative magnitude of the design load and size of hammer, and upon the kind and relative depth of the penetrated soil.

EARTH EMBANKMENT shall be placed up to the elevation of the earth bench, after which the excavation shall be made for the abutment and the piles driven.

CONCRETE shall be Class "E" and payment will be made on this basis, but Class "C" concrete may be used for any or all parts of the abutments.

REINFORCING STEEL: For a skewed abutment the tabulated length of the R1001, R801, R501, R503, R506 and R507 bars will be multiplied by the secant of θ (the angle of skew). The number of the R505, R508 and R509 bars and the length of the R506 bars will be determined for each individual bridge. The R1001, R801, R501 and R503 bars, at the option of the Contractor, may be furnished in two lengths as indicated hereon, with a 30-diameter lap, or as single bars of equal net length, except where such length would be greater than 52'-0"; and the determination of pay quantity shall be based on two lapped lengths unless otherwise called for on the project plans. The clearance from the face of the concrete to the reinforcing steel shall be 2".

POROUS BACKFILL shall extend upward to the approach slab and to the surface of the earth shoulders, and outward to the surface of the embankment slopes. Excavation therefor, in excess of that required for construction of the footing shall be considered as paid for in the bid price per cu. yd. paid for porous backfill.

EXCAVATION QUANTITY includes the removal of embankment material between the bottom of the abutment footing and the top of the earth bench.

CONCRETE QUANTITY: For skewed bridges the concrete quantity as tabulated will be multiplied by the secant of θ (the angle of skew).

BAR SIZE is indicated in the bar mark. The first digit where three digits are used and the first two digits where four are used, indicate the bar size number. For example, R801 is a No. 8 size bar and R1001 is a No. 10 size.

REINFORCING STEEL FOR TWO NON-SKEWED ABUTMENTS

BRIDGE ROADWAY WIDTH	R1001 Straight 16 Required	R801 Straight 16 Required	R501 Straight 16 Required	R502 Bent 6'-7" Long	R503 Straight 8 Required	R504 Straight 5'-4" Long	R505 Bent 7'-11" Long	R506 Straight 8 Required	R507 Straight 16 Required	R508 Bent 7'-4" Long	R509 Bent 8'-5" Long	R401 Bent 5'-5" Long
	Length	Length	Length	Number	Length	Number	Number	Length	Length	Number	Number	Number
24'	12'-11"	16'-1"	15'-7"	96	12'-1"	24	*	*	4'-11"	*	*	40
28'	14'-11"	18'-1"	17'-7"	116	14'-1"	24	*	*	4'-11"	*	*	48
32'	16'-11"	20'-1"	19'-7"	116	16'-1"	24	*	*	4'-11"	*	*	48
36'	18'-11"	22'-1"	21'-7"	136	18'-1"	24	*	*	4'-11"	*	*	56
40'	20'-11"	24'-1"	23'-7"	136	20'-1"	24	*	*	4'-11"	*	*	56
44'	22'-11"	26'-1"	25'-7"	156	22'-1"	24	*	*	4'-11"	*	*	64

* See Notes for explanation of length or number.

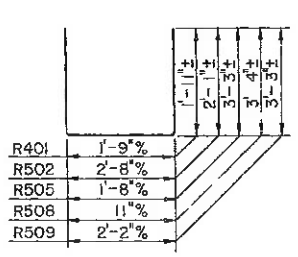

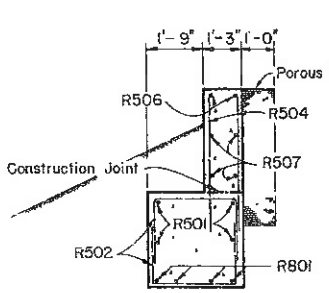

SECTION A-A

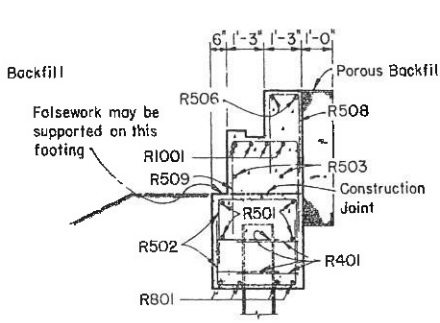

SECTION B-B

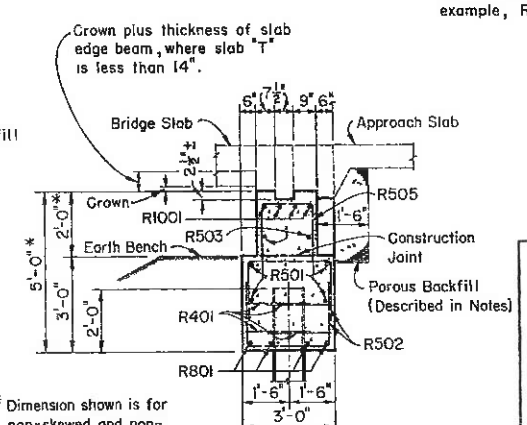

* Dimension shown is for non-skewed and non-superelevated bridge

SECTION C-C

REVISIONS

STATE OF OHIO
DEPARTMENT OF HIGHWAYS
DIVISION OF DESIGN AND CONSTRUCTION
BUREAU OF BRIDGES

STANDARD
CAPPED PILE ABUTMENTS
FOR CONTINUOUS SLAB BRIDGES
WITHOUT CURBS
MIDDLE SPAN 20 FEET TO 55 FEET
LOAD FREQUENCY
CF = 30, CF = 130, CF = 400, CF = 2000

APPROVED: Richard Dist
ENGINEER OF BRIDGES
DATE: 7-1-54

PREPARED BY	TRACED	CHECKED	REVIEWED	DRAWING NUMBER
CEJ LJE RAB CFB JCM WHR	CEJ	FMR	OSD BTG CHA AJF DHO	A-1-54

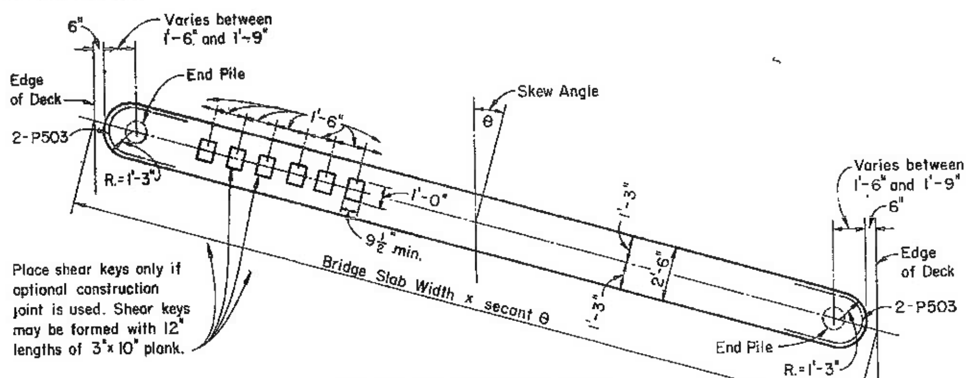

PLAN OF SKEWED PIER

MICROFILMED

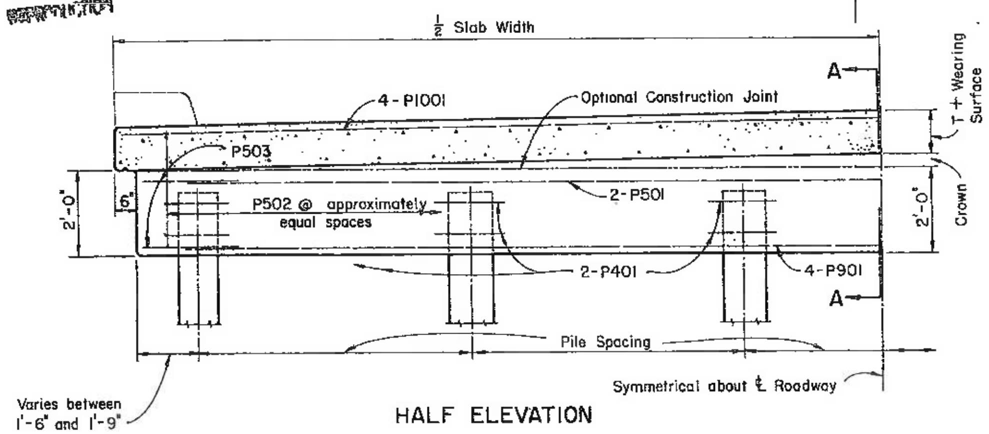

HALF ELEVATION

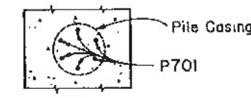

SECTION C-C

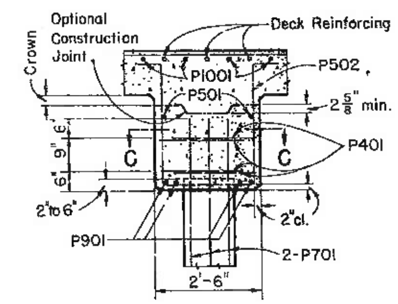

SECTION A-A

SHOWING CAST-IN-PLACE CONCRETE PILES

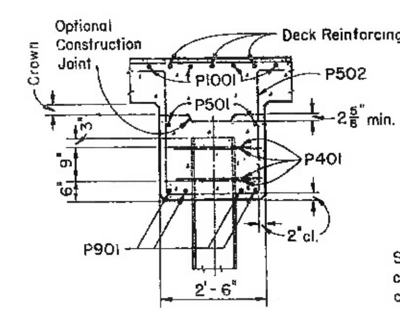

SECTION A-A

SHOWING STEEL H PILES

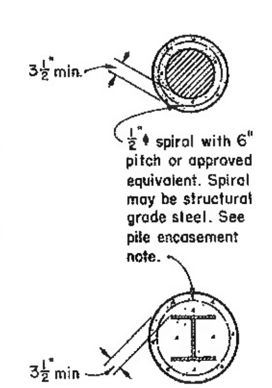

SECTION B-B

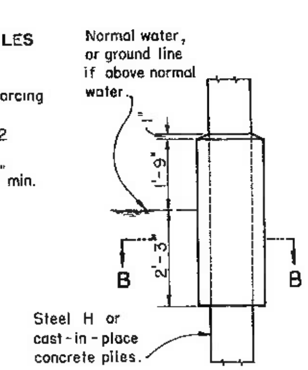

DETAIL OF PILE ENCASEMENT

GENERAL: This drawing provides design and general construction details and is intended to be used with Standard Drawings CS-1-54 and CS-2-54. The project plans for each structure will show spans; roadway width; skew; elevations; type, size and capacity of piles; estimated quantities; reinforcing steel list; and other necessary notes and details.

The pier design shown on this drawing should not be used if:
a. Sloped embankment would cause appreciable horizontal force against the pile bent. In such case, a pier of different type, in which battered piles may be incorporated, should be used.
b. Rock or other firm material would prevent driving piles at least ten feet below stream bed.
c. The length of piles, from ground to bottom of cap, would exceed fifteen feet.

DESIGN SPECIFICATIONS: This standard drawing conforms to the "Design Specifications for Highway Structures" of the State of Ohio, Department of Highways, dated October 1, 1951, together with revisions dated July 15, 1952 and April 1, 1954.

PILE SIZE: Cast-in-place reinforced concrete piles shall be 14" diameter if the piles are exposed above the concrete encasement, and 12" diameter if the encasement extends to the bottom of the pier cap. Steel H piles shall be 12BP53.

PILE SPACING: In case of skew, the number of piles shall be the same as shown but the tabulated spacing dimension shall be multiplied by the secant of θ (the angle of skew).

PILE CAPACITY shall be as specified on the project plans. The required capacity according to the formula in Sec. S-18.05 of the "Construction and Material Specifications", generally will be the same as the design load listed in the table, except for steel H piles that are to be driven to firm contact with rock or other hard material, in which case the required formula capacity generally will be greater than the design load and will be dependent upon the relative magnitude of the design load and size of hammer, and upon the kind and relative depth of the penetrated soil.

PILE CASINGS: The casings of cast-in-place concrete piles shall be of the type that is left in place and is designed to resist both direct compression and bending. The portion above the circular concrete encasement shall be of uniform diameter (not tapered) and shall have a thickness of metal not less than No. 7 gauge.

PILE ENCASEMENT, as shown hereon, shall be provided for each pier pile. If the distance from the bottom of the pier cap to normal water elevation, or ground line if above normal water, is less than approximately 6 feet, the encasement shall be extended to the bottom of the concrete cap for all the piles in that pier, if so specified on the project plans. It shall consist of Class "C" or "E" concrete and may be placed in water as per Sec. S-1.18, care being taken to remove all dirt between the piles and the forms. Metal forms, if used, may be left in place if the exposed portion is painted or galvanized. Corrugated metal may be used. Metal forms with irregular deformations, such as oil drums, will not be permitted. If metal forms meeting the requirements of Sec. M-6.4(a) are left in place, no spiral reinforcement in the concrete will be required.

PILE PAINTING: The exposed portion of the piles, above the encasement, shall be painted in accordance with Item S-8, applying two coats as per Secs. M-9.9, M-9.20 or M-9.21 and two coats as per Sec. M-9.12. Metal forms, left in place on the encasement, unless galvanized, shall be similarly painted.

PAYMENT FOR PILES, per lin ft., includes payment for the encasement (concrete, reinforcement, forms, painting, galvanizing and excavating) and the pile painting. The elevation of cut-off, as per Sec S-18.13, shall be considered as 4" above the bottom of the concrete cap for cast-in-place concrete piles and 1'-6" for steel H piles.

FALSEWORK SUPPORT: The pier cap shall not be used to support falsework for the deck slab.

REINFORCING STEEL: The P1001, P901, and P501 bars, at the option of the Contractor, may be furnished in one length as shown, or in pairs lapped 30 diameters at or near the centerline of the roadway. Determination of the pay quantity will be according to the number and length of bars as shown hereon, unless otherwise called for on the project plans.

HORIZONTAL CONSTRUCTION JOINT between the top of pier cap and bottom of slab will be permitted if keys, as shown, are provided at the top of the cap. If such a joint is not provided, the concrete in the slab and cap shall be placed in a continuous operation.

CONCRETE shall be Class "C".

PIER CAP CONCRETE QUANTITY will be added to the quantity of superstructure concrete when listed on the project plans.

BAR SIZE is indicated in the bar mark. The first digit where three digits are used and the first two digits where four are used, indicate the bar size number. For example P901 is a No. 9 size bar and P1001 is a No. 10 size.

NUMBER, SPACING AND DESIGN LOAD (IN TONS) OF PILES FOR ONE NON-SKEWED PIER

SPANS (IN FEET)

LOAD FREQUENCY	SLAB WIDTH	16-20-16 No.	Spcg.	Load	18-22.5-18 No	Spcg	Load	20-25-20 No.	Spcg.	Load	22-27.5-22 No.	Spcg.	Load	24-30-24 No	Spcg	Load	26-32.5-26 No	Spcg	Load	28-35-28 No	Spcg	Load
CF = 30	24'	5	5'-0"	18	5	5'-0"	20	5	5'-0"	22	5	5'-0"	24	5	5'-0"	26	5	5'-0"	28	5	5'-0"	30
	28'	5	6'-0"	21	5	6'-0"	24	5	6'-0"	26	5	6'-0"	29	5	6'-0"	31	5	6'-0"	34	5	6'-0"	36
	32'	6	5'-7"	19	6	5'-7"	22	6	5'-7"	25	6	5'-7"	27	6	5'-7"	29	6	5'-7"	31	6	5'-7"	34
	34'	6	6'-0"	21	6	6'-0"	24	6	6'-0"	26	6	6'-0"	29	6	6'-0"	31	6	6'-0"	34	6	6'-0"	36
	36'	6	6'-4"	22	6	6'-4"	25	6	6'-4"	28	6	6'-4"	30	6	6'-4"	33	6	6'-4"	36	6	6'-4"	38
	40'	7	6'-0"	21	7	6'-0"	24	7	6'-0"	26	7	6'-0"	29	7	6'-0"	31	7	6'-0"	34	7	6'-0"	36
	44'	8	5'-8"	20	8	5'-8"	22	8	5'-8"	25	8	5'-8"	27	8	5'-8"	30	8	5'-8"	32	8	5'-8"	34
CF = 130	24'	5	5'-0"	18	5	5'-0"	20	5	5'-0"	23	5	5'-0"	25	5	5'-0"	27	5	5'-0"	29	5	5'-0"	32
	28'	5	6'-0"	22	5	6'-0"	25	5	6'-0"	27	5	6'-0"	30	5	6'-0"	33	5	6'-0"	35	5	6'-0"	38
	32'	6	5'-7"	21	6	5'-7"	23	6	5'-7"	25	6	5'-7"	28	6	5'-7"	30	6	5'-7"	33	6	5'-7"	35
	34'	6	6'-0"	22	6	6'-0"	25	6	6'-0"	27	6	6'-0"	30	6	6'-0"	33	6	6'-0"	35	6	6'-0"	38
	36'	6	6'-4"	23	6	6'-4"	26	6	6'-4"	29	6	6'-4"	31	6	6'-4"	34	6	6'-4"	37	7	5'-4"	34
	40'	7	6'-0"	22	7	6'-0"	25	7	6'-0"	27	7	6'-0"	30	7	6'-0"	33	7	6'-0"	35	7	6'-0"	38
	44'	8	5'-8"	21	8	5'-8"	23	8	5'-8"	26	8	5'-8"	28	8	5'-8"	30	8	5'-8"	33	8	5'-8"	36
CF = 400	24'	5	5'-0"	19	5	5'-0"	21	5	5'-0"	24	5	5'-0"	26	5	5'-0"	28	5	5'-0"	31	5	5'-0"	33
	28'	5	6'-0"	23	5	6'-0"	26	5	6'-0"	28	5	6'-0"	31	5	6'-0"	34	5	6'-0"	37	6	4'-9"	32
	32'	6	5'-7"	21	6	5'-7"	24	6	5'-7"	27	6	5'-7"	29	6	5'-7"	31	6	5'-7"	34	6	5'-7"	37
	34'	6	6'-0"	23	6	6'-0"	26	6	6'-0"	28	6	6'-0"	31	6	6'-0"	34	6	6'-0"	37	7	5'-0"	33
	36'	6	6'-4"	24	6	6'-4"	27	6	6'-4"	30	6	6'-4"	32	6	6'-4"	35	6	6'-4"	39	7	5'-4"	35
	40'	7	6'-0"	23	7	6'-0"	26	7	6'-0"	28	7	6'-0"	31	7	6'-0"	34	7	6'-0"	37	8	5'-1"	34
	44'	8	5'-8"	22	8	5'-8"	24	8	5'-8"	27	8	5'-8"	29	8	5'-8"	32	8	5'-8"	35	8	5'-8"	37
CF = 2000	24'	5	5'-0"	19	5	5'-0"	21	5	5'-0"	24	5	5'-0"	26	5	5'-0"	29	5	5'-0"	31	5	5'-0"	33
	28'	5	6'-0"	23	5	6'-0"	26	5	6'-0"	28	5	6'-0"	31	5	6'-0"	34	5	6'-0"	37	6	4'-9"	32
	32'	6	5'-7"	22	6	5'-7"	24	6	5'-7"	27	6	5'-7"	29	6	5'-7"	32	6	5'-7"	34	6	5'-7"	37
	34'	6	6'-0"	23	6	6'-0"	26	6	6'-0"	28	6	6'-0"	31	6	6'-0"	34	6	6'-0"	37	7	5'-0"	33
	36'	6	6'-4"	24	6	6'-4"	27	6	6'-4"	30	6	6'-4"	33	6	6'-4"	36	6	6'-4"	39	7	5'-4"	35
	40'	7	6'-0"	23	7	6'-0"	26	7	6'-0"	28	7	6'-0"	31	7	6'-0"	34	7	6'-0"	37	8	5'-1"	34
	44'	8	5'-8"	22	8	5'-8"	24	8	5'-8"	27	8	5'-8"	30	8	5'-8"	32	8	5'-8"	35	8	5'-8"	37

LOAD FREQUENCY	SLAB WIDTH	30-37.5-30 No.	Spcg	Load	32-40-32 No.	Spcg.	Load	34-42.5-34 No	Spcg.	Load	36-45-36 No	Spcg	Load	38-47.5-38 No	Spcg	Load	40-50-40 No	Spcg	Load	42-52.5-42 No.	Spcg.	Load	44-55-44 No.	Spcg.	Load
CF = 30	24'	5	5'-0"	33	5	5'-0"	35	5	5'-0"	38	6	4'-0"	33	6	4'-0"	36	6	4'-0"	39	6	4'-0"	43	6	4'-0"	46
	28'	6	4'-9"	32	6	4'-9"	34	6	4'-9"	36	7	4'-0"	33	7	4'-0"	36	7	4'-0"	39	7	4'-0"	43	7	4'-0"	46
	32'	6	5'-7"	37	7	4'-8"	33	7	4'-8"	36	7	4'-8"	39	8	4'-0"	36	8	4'-0"	39	8	4'-0"	43	8	4'-0"	46
	34'	7	5'-0"	33	7	5'-0"	35	7	5'-0"	38	7	5'-0"	41	8	4'-3"	38	8	4'-3"	42	8	4'-3"	45	8	4'-3"	49
	36'	7	5'-4"	35	7	5'-4"	38	8	4'-6"	35	8	4'-6"	38	8	4'-6"	41	9	4'-0"	39	9	4'-0"	43	9	4'-0"	46
	40'	8	5'-1"	34	8	5'-1"	37	8	5'-1"	39	8	5'-1"	43	9	4'-6"	41	9	4'-6"	44	10	4'-0"	43	10	4'-0"	46
	44'	8	5'-8"	37	8	5'-8"	40	9	5'-0"	38	9	5'-0"	41	10	4'-5"	40	10	4'-5"	43	11	4'-0"	43	11	4'-0"	46
CF = 130	24'	5	5'-0"	34	5	5'-0"	37	6	4'-0"	32	6	4'-0"	34	6	4'-0"	38	6	4'-0"	41	6	4'-0"	44	6	4'-0"	48
	28'	6	4'-9"	33	6	4'-9"	35	6	4'-9"	38	7	4'-0"	34	7	4'-0"	38	7	4'-0"	41	7	4'-0"	44	7	4'-0"	48
	32'	6	5'-7"	38	7	4'-8"	34	7	4'-8"	37	8	4'-0"	34	8	4'-0"	38	8	4'-0"	41	8	4'-0"	44	8	4'-0"	48
	34'	7	5'-0"	34	7	5'-0"	37	7	5'-0"	40	8	4'-3"	37	8	4'-3"	40	8	4'-3"	43	8	4'-3"	47	8	4'-3"	51
	36'	7	5'-4"	37	7	5'-4"	39	8	4'-6"	36	8	4'-6"	39	9	4'-0"	38	9	4'-0"	41	9	4'-0"	44	9	4'-0"	48
	40'	8	5'-1"	36	8	5'-1"	38	8	5'-1"	41	9	4'-6"	39	9	4'-6"	42	10	4'-0"	41	10	4'-0"	44	10	4'-0"	48
	44'	8	5'-8"	39	9	5'-0"	37	9	5'-0"	40	9	5'-0"	43	10	4'-5"	41	10	4'-5"	45	11	4'-0"	44	11	4'-0"	48
CF = 400	24'	5	5'-0"	36	5	5'-0"	39	6	4'-0"	34	6	4'-0"	36	6	4'-0"	39	6	4'-0"	43	6	4'-0"	46	6	4'-0"	50
	28'	6	4'-9"	34	6	4'-9"	37	7	4'-0"	34	7	4'-0"	36	7	4'-0"	39	7	4'-0"	43	7	4'-0"	46	7	4'-0"	50
	32'	7	4'-8"	33	7	4'-8"	36	7	4'-8"	39	8	4'-0"	36	8	4'-0"	39	8	4'-0"	43	8	4'-0"	46	8	4'-0"	50
	34'	7	5'-0"	36	7	5'-0"	39	7	5'-0"	42	8	4'-3"	38	8	4'-3"	41	8	4'-3"	45	8	4'-3"	49	8	4'-3"	53
	36'	7	5'-4"	38	7	5'-4"	42	8	4'-6"	39	8	4'-6"	41	9	4'-0"	39	9	4'-0"	43	9	4'-0"	46	9	4'-0"	50
	40'	8	5'-1"	37	8	5'-1"	40	8	5'-1"	43	9	4'-6"	41	9	4'-6"	44	10	4'-0"	43	10	4'-0"	46	10	4'-0"	50
	44'	8	5'-8"	40	9	5'-0"	39	9	5'-0"	42	10	4'-5"	40	10	4'-5"	43	11	4'-0"	43	11	4'-0"	46	11	4'-0"	50
CF = 2000	24'	5	5'-0"	36	5	5'-0"	39	6	4'-0"	34	6	4'-0"	36	6	4'-0"	39	6	4'-0"	43	6	4'-0"	46	6	4'-0"	50
	28'	6	4'-9"	34	6	4'-9"	37	7	4'-0"	34	7	4'-0"	36	7	4'-0"	39	7	4'-0"	43	7	4'-0"	46	7	4'-0"	50
	32'	7	4'-8"	33	7	4'-8"	36	7	4'-8"	39	8	4'-0"	36	8	4'-0"	39	8	4'-0"	43	8	4'-0"	46	8	4'-0"	50
	34'	7	5'-0"	36	7	5'-0"	39	7	5'-0"	42	8	4'-3"	38	8	4'-3"	41	8	4'-3"	45	8	4'-3"	49	8	4'-3"	53
	36'	7	5'-4"	38	7	5'-4"	42	8	4'-6"	39	8	4'-6"	41	9	4'-0"	39	9	4'-0"	43	9	4'-0"	46	9	4'-0"	50
	40'	8	5'-1"	37	8	5'-1"	40	8	5'-1"	43	9	4'-6"	41	9	4'-6"	44	10	4'-0"	43	10	4'-0"	46	10	4'-0"	50
	44'	8	5'-8"	40	9	5'-0"	39	9	5'-0"	42	10	4'-5"	40	10	4'-5"	43	11	4'-0"	43	11	4'-0"	46	11	4'-0"	50

DATA FOR ONE NON-SKEWED PIER

Slab Width	REINFORCING STEEL: P1001 Straight 4 req'd. Length *	P901 Straight 4 req'd. Length *	P701 Straight 4'-0" Number	P501 Straight 2 req'd. Length *	P502 Bt. 8'-0" or 9'-0" Number	P503 Bent 6'-6" Number	P401 Bent 5'-5" Number	CONCRETE QUANTITY Add to Deck Concrete Cu. Yds.
24'	23'-6"	20'-6"	6 x Number of Piles	20'-6"	18	4 Required	4 x Number of Piles	4.2
28'	27'-6"	24'-6"		24'-6"	20			4.9
32'	31'-6"	28'-6"		28'-6"	24			5.6
34'	33'-6"	30'-6"		30'-6"	26			6.0
36'	35'-6"	32'-6"		32'-6"	28			6.4
40'	39'-6"	36'-6"		36'-6"	30			7.1
44'	43'-6"	40'-6"		40'-6"	34			7.9

* For skewed piers multiply tabulated length by secant of skew angle.

"Q" dimension = 2'-10"% for bridges with deck slab over 16" thick and for bridges having 14" thick edge beam on deck slab

"Q" dimension = 2'-4"% for bridges with deck slab 16" thick or less and without 14" edge beam on deck slab.

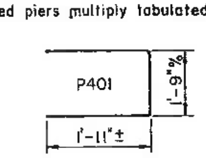

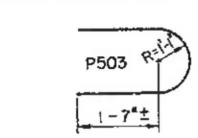

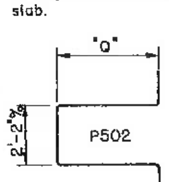

REVISIONS

STATE OF OHIO
DEPARTMENT OF HIGHWAYS
DIVISION OF DESIGN AND CONSTRUCTION
BUREAU OF BRIDGES

STANDARD

CAPPED PILE PIERS
FOR CONTINUOUS CONCRETE SLAB BRIDGES

LOAD FREQUENCY:
CF = 30, CF = 130, CF = 400, CF = 2000

APPROVED: [signature] ENGINEER OF BRIDGES
DATE: 7-1-54

PREPARED	TRACED	CHECKED	REVIEWED
LJE CFB JGM WHR	GEJ	DHS	GSD BFG GHA AJF DHO

DRAWING NUMBER P-1-54

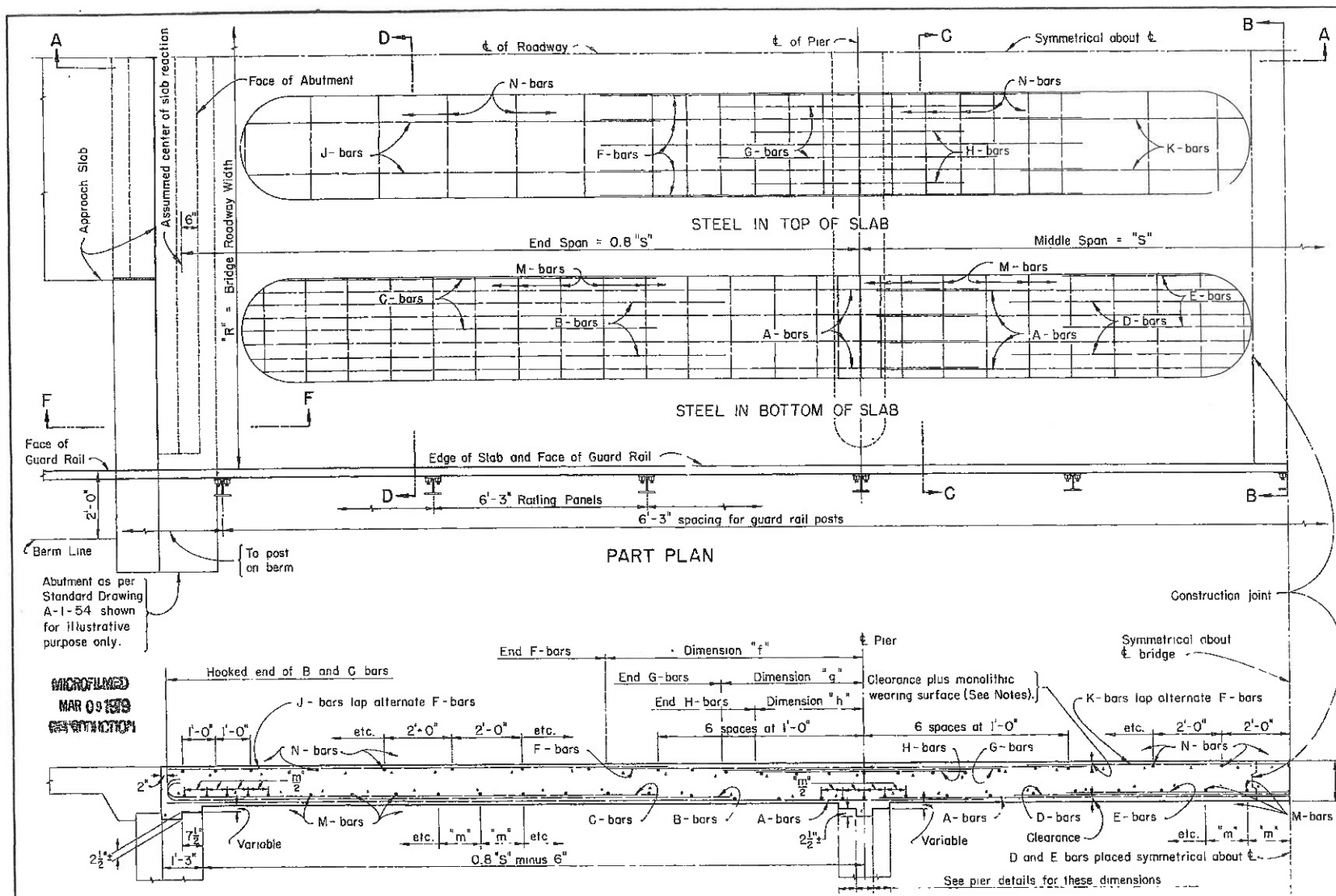

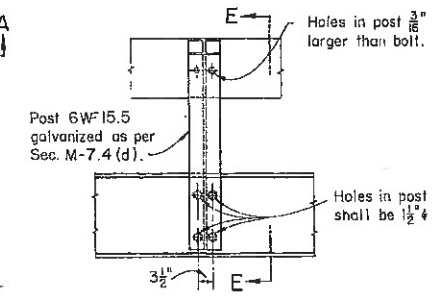

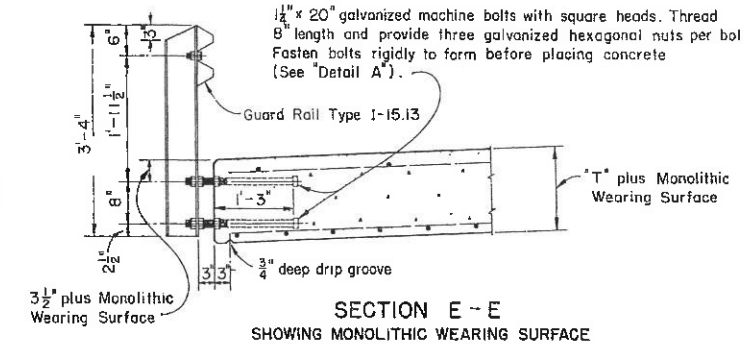

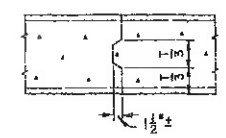

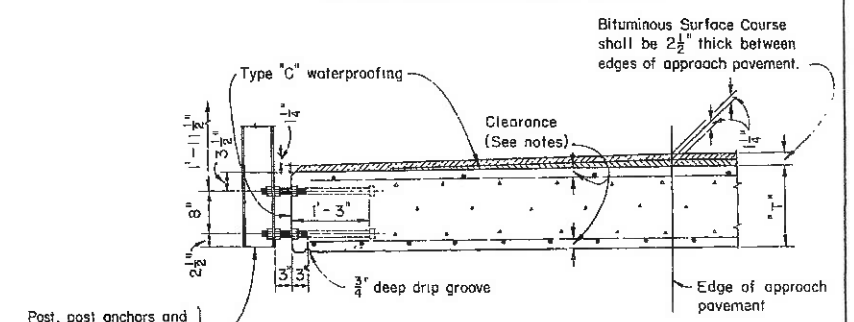

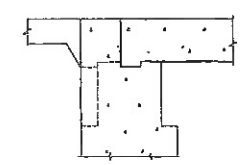

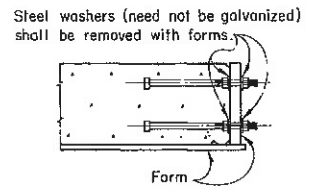

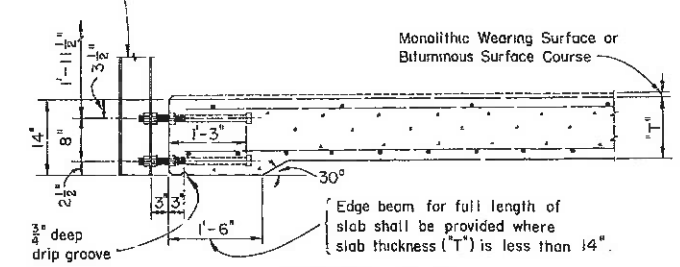

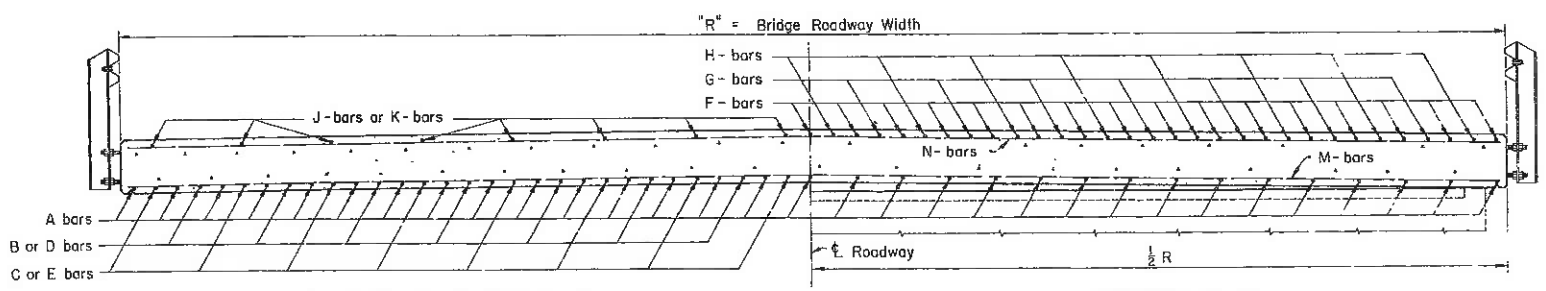

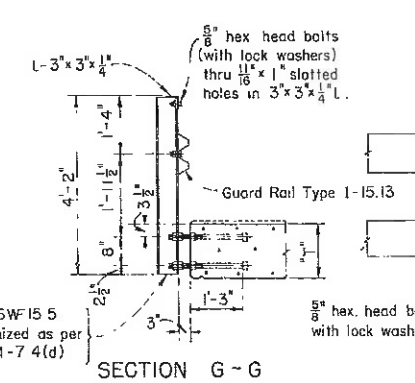

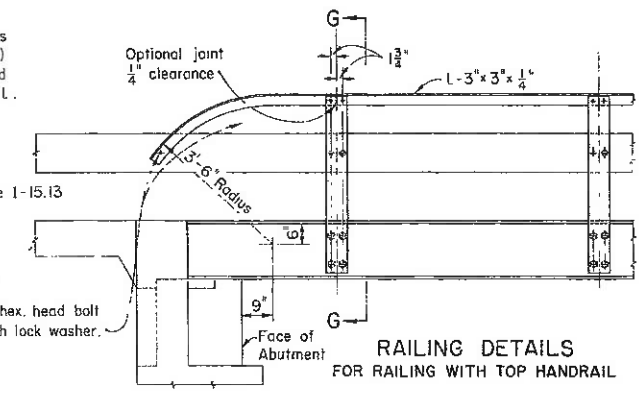

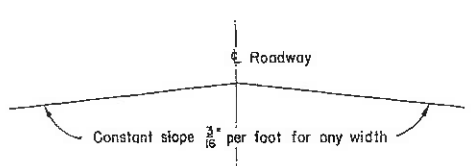

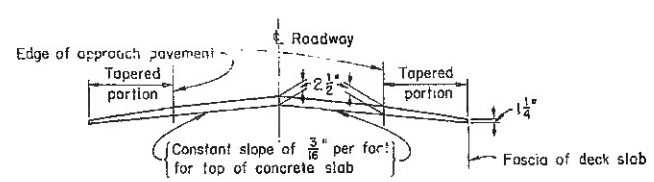

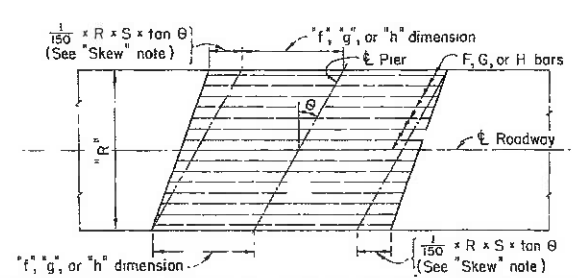

REVISIONS

STATE OF OHIO
DEPARTMENT OF HIGHWAYS
DIVISION OF DESIGN AND CONSTRUCTION
BUREAU OF BRIDGES

STANDARD

CONTINUOUS SLAB BRIDGE

WITHOUT CURBS AND WITH HIGHWAY GUARD RAIL.
MIDDLE SPAN 20 FEET TO 55 FEET
LOAD FREQUENCY:
CF = 30, CF = 130, CF = 400, CF = 2000

APPROVED: DATE: 7-1-54 ENGINEER OF BRIDGES				DRAWING NUMBER CS-1-54
PREPARED	TRACED	CHECKED	REVIEWED	SHEET NO. 1 OF 2 SHEETS
RHL CEJ CFS JGM WHR	CEJ	CW MPB FHR	OSD BFS GHA AJF DHO	

MICROFILMED MAR 09 1979 RECONSTRUCTION

SLAB DATA

A, B, C, D, and E bars

Load Frequency	Spans	"T"* in Inch.	A-bars Mark	A-bars Spcg. In.	A-bars Lgth Ft.-In.	B-bars Mark	B-bars Spcg. In.	B-bars Lgth. Ft.-In.	B-bars dim."b" Ft.-In.	C-bars Mark	C-bars Spcg In.	C-bars Lgth. Ft.-In.	C-bars dim."c" Ft.-In.	D-bars Mark	D-bars Spcg. In.	D-bars Lgth. Ft.-In.
CF = 30	16'-20'-16'	9	A 700	14½	19-3	B 700	29	15-0	14-2	C 700	29	13-4	12-6	D 700	29	14-8
CF = 30	18'-22.5'-18'	9½	A 701	13½	21-5	B 701	27	16-5	15-7	C 701	27	14-2	13-4	D 701	27	16-0
CF = 30	20'-25'-20'	10¼	A 702	13½	23-7	B 702	27	17-5	16-7	C 702	27	15-5	14-7	D 702	27	17-0
CF = 30	22'-27.5'-22'	10¾	A 703	12½	25-9	B 703	25	18-10	18-0	C 703	25	16-8	15-10	D 703	25	17-10
CF = 30	24'-30'-24'	11½	A 804	15½	28-1	B 804	31	20-8	19-7	C 804	31	18-4	17-3	D 804	31	19-6
CF = 30	26'-32.5'-26'	12	A 805	14	30-3	B 805	28	21-10	20-9	C 805	28	19-3	18-2	D 805	28	20-10
CF = 30	28'-35'-28'	12¾	A 806	13	32-5	B 806	26	23-3	22-2	C 806	26	20-1	19-0	D 806	26	20-10
CF = 30	30'-37.5'-30'	13½	A 807	12	34-7	B 807	24	24-4	23-3	C 807	24	21-4	20-3	D 807	24	22-0
CF = 30	32'-40'-32'	14¼	A 908	14	37-0	B 908	28	26-5	25-4	C 908	28	23-2	22-1	D 908	28	23-10
CF = 30	34'-42.5'-34'	15	A 909	13	39-2	B 909	26	27-7	26-6	C 909	26	24-2	23-1	D 909	26	24-10
CF = 30	36'-45'-36'	16	A 910	12½	41-4	B 910	25	29-1	28-0	C 910	25	25-6	24-5	D 910	25	26-0
CF = 30	38'-47.5'-38'	17¼	A 911	12½	43-6	B 911	25	30-2	29-1	C 911	25	26-9	25-8	D 911	25	27-6
CF = 30	40'-50'-40'	18½	A 912	12	45-8	B 912	24	31-8	30-7	C 912	24	27-8	26-7	D 912	24	28-0
CF = 30	42'-52.5'-42'	20	A1013	14½	48-0	B1013	29	33-4	32-1	C1013	29	29-8	28-5	D1013	29	29-6
CF = 30	44'-55'-44'	21	A1014	14	50-2	B1014	28	34-10	33-7	C1014	28	30-11	29-8	D1014	28	30-10
CF = 130	16'-20'-16'	10	A 720	13	19-3	B 720	26	15-3	14-5	C 720	26	13-8	12-10	D 720	26	15-6
CF = 130	18'-22.5'-18'	10½	A 721	12	21-5	B 721	24	16-8	15-10	C 721	24	14-5	13-7	D 721	24	16-6
CF = 130	20'-25'-20'	11¼	A 822	15	23-9	B 822	30	18-1	17-0	C 822	30	15-10	14-9	D 822	30	17-10
CF = 130	22'-27.5'-22'	11¾	A 823	14	25-11	B 823	28	19-7	18-6	C 823	28	17-1	16-0	D 823	28	18-2
CF = 130	24'-30'-24'	12½	A 824	13½	28-1	B 824	27	21-0	19-11	C 824	27	18-4	17-3	D 824	27	19-6
CF = 130	26'-32.5'-26'	13	A 825	12½	30-3	B 825	25	22-2	21-1	C 825	25	19-3	18-2	D 825	25	20-10
CF = 130	28'-35'-28'	14	A 926	14½	32-8	B 926	29	23-6	22-5	C 926	29	20-9	19-8	D 926	29	22-0
CF = 130	30'-37.5'-30'	14¾	A 927	13½	34-10	B 927	27	24-11	23-10	C 927	27	21-11	20-10	D 927	27	23-4
CF = 130	32'-40'-32'	15½	A 928	12½	37-0	B 928	25	26-5	25-4	C 928	25	23-7	22-6	D 928	25	24-0
CF = 130	34'-42.5'-34'	16¼	A1029	14½	39-4	B1029	29	28-3	27-0	C1029	29	24-8	23-5	D1029	29	25-2
CF = 130	36'-45'-36'	17¼	A1030	14	41-6	B1030	28	29-7	28-4	C1030	28	25-8	24-5	D1030	28	26-0
CF = 130	38'-47.5'-38'	18½	A1031	14	43-8	B1031	28	30-9	29-6	C1031	28	27-3	26-0	D1031	28	27-6
CF = 130	40'-50'-40'	19¾	A1032	13½	45-10	B1032	27	32-4	31-1	C1032	27	28-4	27-1	D1032	27	29-0
CF = 130	42'-52.5'-42'	21	A1033	13	48-0	B1033	26	33-9	32-6	C1033	26	29-7	28-4	D1033	26	30-6
CF = 130	44'-55'-44'	22¼	A1034	12½	50-2	B1034	25	35-4	34-1	C1034	25	30-11	29-8	D1034	25	31-10
CF = 400	16'-20'-16'	10¾	A 740	11½	19-3	B 740	23	15-4	14-6	C 740	23	13-8	12-10	D 740	23	15-10
CF = 400	18'-22.5'-18'	11½	A 841	14½	21-7	B 841	29	17-1	16-0	C 841	29	15-0	13-11	D 841	29	17-4
CF = 400	20'-25'-20'	12	A 842	13	23-9	B 842	26	18-4	17-3	C 842	26	16-1	15-0	D 842	26	17-8
CF = 400	22'-27.5'-22'	12½	A 843	12½	25-11	B 843	25	19-7	18-6	C 843	25	17-1	16-0	D 843	25	18-8
CF = 400	24'-30'-24'	13¼	A 844	12	28-1	B 844	24	21-0	19-11	C 844	24	18-4	17-3	D 844	24	19-6
CF = 400	26'-32.5'-26'	14¼	A 945	14	30-6	B 945	28	22-5	21-4	C 945	28	19-10	18-9	D 945	28	21-4
CF = 400	28'-35'-28'	15	A 946	13	32-8	B 946	26	23-6	22-5	C 946	26	20-9	19-8	D 946	26	22-0
CF = 400	30'-37.5'-30'	15¾	A 947	12	34-10	B 947	24	24-11	23-10	C 947	24	21-11	20-10	D 947	24	23-4
CF = 400	32'-40'-32'	17	A1048	14½	37-2	B1048	29	27-1	25-10	C1048	29	24-0	22-9	D1048	29	24-4
CF = 400	34'-42.5'-34'	17¾	A1049	13½	39-4	B1049	27	28-4	27-1	C1049	27	24-9	23-6	D1049	27	25-10
CF = 400	36'-45'-36'	18½	A1050	13	41-6	B1050	26	29-9	28-6	C1050	26	26-1	24-10	D1050	26	26-0
CF = 400	38'-47.5'-38'	19½	A1051	12½	43-8	B1051	25	29-7	28-4	C1051	25	25-10	24-7	D1051	25	28-6
CF = 400	40'-50'-40'	21	A1052	12	45-10	B1052	24	32-4	31-1	C1052	24	28-4	27-1	D1052	24	29-0
CF = 400	42'-52.5'-42'	22¼	A1053	12	48-0	B1053	24	34-2	32-11	C1053	24	30-3	29-0	D1053	24	31-6
CF = 400	44'-55'-44'	23½	A1154	14	50-4	B1154	28	35-11	34-6	C1154	28	31-1	29-8	D1154	28	32-6
CF = 2000	16'-20'-16'	11¼	A 860	14	19-5	B 860	28	15-11	14-10	C 860	28	14-1	13-0	D 860	28	15-8
CF = 2000	18'-22.5'-18'	11¾	A 861	13½	21-7	B 861	27	17-3	16-2	C 861	27	15-8	14-7	D 861	27	16-10
CF = 2000	20'-25'-20'	12¼	A 862	13	23-9	B 862	26	18-1	17-0	C 862	26	16-1	15-0	D 862	26	17-4
CF = 2000	22'-27.5'-22'	13	A 863	12½	25-11	B 863	25	19-7	18-6	C 863	25	16-6	15-5	D 863	25	14-8
CF = 2000	24'-30'-24'	13¾	A 864	12	28-1	B 864	24	21-0	19-11	C 864	24	18-4	17-3	D 864	24	19-6
CF = 2000	26'-32.5'-26'	14½	A 965	14	30-6	B 965	28	22-5	21-4	C 965	28	19-10	18-9	D 965	28	21-4
CF = 2000	28'-35'-28'	15	A 966	13	32-8	B 966	26	23-10	22-9	C 966	26	21-1	20-0	D 966	26	22-0
CF = 2000	30'-37.5'-30'	15¾	A 967	12	34-10	B 967	24	24-11	23-10	C 967	24	21-11	20-10	D 967	24	23-4
CF = 2000	32'-40'-32'	17	A1068	14½	37-2	B1068	29	27-1	25-10	C1068	29	24-0	22-9	D1068	29	24-4
CF = 2000	34'-42.5'-34'	17¾	A1069	13½	39-4	B1069	27	28-4	27-1	C1069	27	24-9	23-6	D1069	27	25-10
CF = 2000	36'-45'-36'	18½	A1070	13	41-6	B1070	26	29-9	28-6	C1070	26	26-1	24-10	D1070	26	26-0
CF = 2000	38'-47.5'-38'	19½	A1071	12½	43-8	B1071	25	29-7	28-4	C1071	25	25-10	24-7	D1071	25	28-6
CF = 2000	40'-50'-40'	21	A1072	12	45-10	B1072	24	32-4	31-1	C1072	24	28-4	27-1	D1072	24	29-0
CF = 2000	42'-52.5'-42'	22¼	A1073	12	48-0	B1073	24	34-2	32-11	C1073	24	30-3	29-0	D1073	24	31-6
CF = 2000	44'-55'-44'	23½	A1174	14	50-4	B1174	28	35-11	34-6	C1174	28	31-1	29-8	D1174	28	32-6

E bars; F, G, and H bars

Load Frequency	Spans	E-bars Mark	E-bars Spcg. In.	E-bars Lgth. Ft-In.	F-bars Mark	F-bars Spcg. In.	F-bars Lgth. Ft.-In.	F-bars dim."f" Ft.-In.	G-bars Mark	G-bars Spcg. In.	G-bars Lgth Ft.-In	G-bars dim "g" Ft.-In.
CF = 30	16'-20'-16'	E 700	29	10-8	F 700	12½	12-6	6-6	G 700	25	7-0	3-6
CF = 30	18'-22.5'-18'	E 701	27	12-0	F 801	15	13-9	7-1	G 601	30	7-10	3-11
CF = 30	20'-25'-20'	E 702	27	13-0	F 802	14	16-1	8-5	G 802	28	8-7	4-5
CF = 30	22'-27.5'-22'	E 703	25	14-6	F 803	12½	18-6	9-11	G 803	25	8-11	4-9
CF = 30	24'-30'-24'	E 804	31	15-4	F 804	12	18-8	9-9	G 804	24	9-5	5-0
CF = 30	26'-32.5'-26'	E 805	28	15-8	F 905	14	20-10	10-9	G 905	28	10-8	5-6
CF = 30	28'-35'-28'	E 806	26	15-10	F 906	12½	21-9	11-5	G 906	25	11-3	5-10
CF = 30	30'-37.5'-30'	E 807	24	16-10	F 907	12	23-5	12-1	G 907	24	12-1	6-5
CF = 30	32'-40'-32'	E 908	28	17-10	F1008	14½	[illegible]	[illegible]	G1008	29	12-9	6-7
CF = 30	34'-42.5'-34'	E 909	26	18-6	F1009	13½	25-2	12-9	G1009	27	13-2	6-9
CF = 30	36'-45'-36'	E 910	25	18-10	F1010	12½	26-7	13-6	G1010	25	13-0	6-9
CF = 30	38'-47.5'-38'	E 911	25	19-10	F1011	11½	27-0	13-9	G1011	23	13-11	7-1
CF = 30	40'-50'-40'	E 912	24	21-0	F1112	13	28-9	14-9	G1112	26	14-6	7-6
CF = 30	42'-52.5'-42'	E1013	29	22-2	F1113	12½	29-10	15-4	G1113	25	14-10	7-5
CF = 30	44'-55'-44'	E1014	28	23-0	F1114	11½	31-1	16-0	G1114	23	15-6	7-9
CF = 130	16'-20'-16'	E 720	26	11-0	F 820	15	14-0	7-1	G 820	30	7-7	3-8
CF = 130	18'-22.5'-18'	E 721	24	12-0	F 821	13½	15-9	8-5	G 821	27	8-1	4-2
CF = 130	20'-25'-20'	E 822	30	13-4	F 822	12½	17-1	9-5	G 822	25	8-4	4-2
CF = 130	22'-27.5'-22'	E 823	28	14-4	F 923	14½	19-0	10-2	G 823	29	10-9	6-1
CF = 130	24'-30'-24'	E 824	27	15-10	F 924	13½	21-3	11-3	G 924	27	10-6	5-7
CF = 130	26'-32.5'-26'	E 825	25	15-8	F 925	12½	23-0	12-0	G 925	25	11-0	5-10
CF = 130	28'-35'-28'	E 926	29	16-4	F 926	12	23-10	12-5	G 926	24	11-7	6-2
CF = 130	30'-37.5'-30'	E 927	27	17-4	F1027	14½	26-8	14-1	G1027	29	12-5	6-7
CF = 130	32'-40'-32'	E 928	25	17-2	F1028	13½	26-4	13-4	G1028	27	12-9	6-6
CF = 130	34'-42.5'-34'	E1029	29	18-10	F1029	12½	26-9	13-7	G1029	25	12-11	6-9
CF = 130	36'-45'-36'	E1030	28	18-10	F1130	14	28-8	14-6	G1130	28	13-3	6-10
CF = 130	38'-47.5'-38'	E1031	28	20-10	F1131	13	28-10	14-8	G1131	26	13-8	7-1
CF = 130	40'-50'-40'	E1032	27	22-0	F1132	12	30-3	15-6	G1132	24	14-9	7-6
CF = 130	42'-52.5'-42'	E1033	26	22-2	F1133	11½	31-4	16-0	G1133	23	15-4	7-8
CF = 130	44'-55'-44'	E1034	25	23-0	F1134	10½	32-2	16-6	G1134	21	15-8	8-0
CF = 400	16'-20'-16'	E 740	23	11-0	F 840	13½	16-2	8-1	G 840	27	7-10	3-11
CF = 400	18'-22.5'-18'	E 841	29	12-4	F 841	12½	16-2	8-8	G 841	25	7-10	3-11
CF = 400	20'-25'-20'	E 842	26	13-10	F 942	14	18-10	10-2	G 942	28	9-4	4-11
CF = 400	22'-27.5'-22'	E 843	25	14-10	F 943	13	21-9	11-10	G 943	26	9-11	5-3
CF = 400	24'-30'-24'	E 844	24	15-10	F 944	12½	22-6	11-10	G 944	25	10-6	5-7
CF = 400	26'-32.5'-26'	E 945	28	16-10	F 945	12	24-0	12-8	G 945	24	11-0	5-10
CF = 400	28'-35'-28'	E 946	26	16-4	F1046	14	26-7	14-0	G1046	28	11-11	6-4
CF = 400	30'-37.5'-30'	E 947	24	18-2	F1047	13½	27-2	14-2	G1047	27	12-11	7-0
CF = 400	32'-40'-32'	E1048	29	18-8	F1048	13	27-5	14-1	G1048	26	12-5	6-6
CF = 400	34'-42.5'-34'	E1049	27	18-4	F1049	12	28-4	14-5	G1049	24	13-3	6-9
CF = 400	36'-45'-36'	E1050	26	19-10	F1150	13½	29-8	15-1	G1150	27	14-1	7-5
CF = 400	38'-47.5'-38'	E1051	25	20-10	F1151	12½	30-10	15-8	G1151	25	14-2	7-4
CF = 400	40'-50'-40'	E1052	24	21-0	F1152	11½	32-0	16-6	G1152	23	14-6	7-6
CF = 400	42'-52.5'-42'	E1053	24	23-2	F1153	10½	32-8	16-10	G1153	21	15-1	7-8
CF = 400	44'-55'-44'	E1154	28	24-2	F1154	10	34-1	17-7	G1154	20	16-0	8-0
CF = 2000	16'-20'-16'	E 860	28	10-10	F 860	13	17-7	8-6	G 860	26	8-2	4-1
CF = 2000	18'-22.5'-18'	E 861	27	13-2	F 861	12	17-1	9-4	G 861	24	8-1	3-11
CF = 2000	20'-25'-20'	E 862	26	13-10	F 962	14	20-4	10-11	G 962	28	9-1	4-8
CF = 2000	22'-27.5'-22'	E 863	25	14-4	F 963	13	21-6	11-7	G 963	26	9-11	5-3
CF = 2000	24'-30'-24'	E 864	24	15-10	F 964	12½	23-4	12-5	G 964	25	10-5	5-6
CF = 2000	26'-32.5'-26'	E 965	28	16-10	F 965	12	24-8	13-0	G 965	24	11-0	5-10
CF = 2000	28'-35'-28'	E 966	26	17-2	F1066	14	26-7	14-0	G1066	28	12-3	6-8
CF = 2000	30'-37.5'-30'	E 967	24	18-2	F1067	13½	27-2	14-2	G1067	27	12-11	7-0
CF = 2000	32'-40'-32'	E1068	29	18-8	F1068	13	27-5	14-1	G1068	26	12-5	6-6
CF = 2000	34'-42.5'-34'	E1069	27	18-4	F1069	12	28-4	14-5	G1069	24	13-3	6-9
CF = 2000	36'-45'-36'	E1070	26	19-10	F1170	13½	29-8	15-1	G1170	27	14-1	7-5
CF = 2000	38'-47.5'-38'	E1071	25	20-10	F1171	12½	30-10	15-8	G1171	25	14-2	7-4
CF = 2000	40'-50'-40'	E1072	24	21-0	F1172	11½	[illegible]	16-6	G1172	23	14-6	7-6
CF = 2000	42'-52.5'-42'	E1073	24	23-2	F1173	10½	32-8	16-10	G1173	21	15-1	7-8
CF = 2000	44'-55'-44'	E1174	28	24-2	F1174	10	34-1	17-7	G1174	20	16-0	8-0

H bars; J, K, M and N bars

Load Frequency	Spans	H-bars Mark	H-bars Spcg. In	H-bars Lgth. Ft-In.	H-bars dim."h" Ft.-In.	J-bars J-601 Spcg. In.	J-bars J-601 Lgth. Ft.-In.	K-bars K-601 Spcg. In.	K-bars K-601 Lgth. Ft.-In.	M-bars Mark	M-bars No	M-bars Sp."m" In.	M-bars Lgth.	N-bars N-601 No	N-bars N-601 Lgth.
CF = 30	16'-20'-16'	H 700	25	5-0	2-6	25	12-0	25	11-10	M 601	48	16	Length = (R − 6") × secant of skew angle	41	Length = (R − 6") × secant of skew angle
CF = 30	18'-22.5'-18'	H 801	30	5-2	2-7	30	13-5	30	13-0	M 601	52	16		44	
CF = 30	20'-25'-20'	H 802	28	5-4	2-8	28	14-1	28	13-6	M 601	57	16		47	
CF = 30	22'-27.5'-22'	H 803	25	5-6	2-9	25	14-7	25	14-2	M 601	61	16		50	
CF = 30	24'-30'-24'	H 804	24	5-11	3-0	24	16-9	24	16-0	M 601	67	16		54	
CF = 30	26'-32.5'-26'	H 905	28	6-10	3-7	28	17-9	28	16-2	M 601	75	15		57	
CF = 30	28'-35'-28'	H 906	25	6-8	3-8	25	19-1	25	18-2	M 601	87	14		60	
CF = 30	30'-37.5'-30'	H 907	24	7-3	3-10	24	20-5	24	18-8	M 601	91	14		63	
CF = 30	32'-40'-32'	H1008	29	7-10	4-0	29	21-11	29	19-6	M 601	104	13		67	
CF = 30	34'-42.5'-34'	H1009	27	7-9	3-10	27	23-9	27	21-6	M 601	119	12		70	
CF = 30	36'-45'-36'	H1010	25	8-1	4-3	25	25-0	25	22-8	M 601	126	12		73	
CF = 30	38'-47.5'-38'	H1011	23	8-6	4-3	23	26-9	23	24-10	M 601	132	12		76	
CF = 30	40'-50'-40'	H1112	26	9-0	4-6	26	27-9	26	25-10	M 601	139	12		80	
CF = 30	42'-52.5'-42'	H1113	25	10-0	5-0	25	29-2	25	27-4	M 601	145	12		83	
CF = 30	44'-55'-44'	H1114	23	10-0	5-0	23	30-6	23	28-8	M 601	152	12		86	
CF = 130	16'-20'-16'	H 820	30	5-4	2-8	30	11-5	30	10-0	M 601	52	14		41	
CF = 130	18'-22.5'-18'	H 821	27	5-2	2-7	27	12-1	27	11-8	M 601	58	14		44	
CF = 130	20'-25'-20'	H 822	25	5-4	2-8	25	13-1	25	13-6	M 601	64	14		47	
CF = 130	22'-27.5'-22'	H 823	29	6-0	3-0	29	14-4	29	13-8	M 601	74	13		50	
CF = 130	24'-30'-24'	H 924	27	6-7	3-5	27	15-3	27	13-10	M 601	80	13		54	
CF = 130	26'-32.5'-26'	H 925	25	6-10	3-7	25	16-6	25	14-4	M 601	87	13		57	
CF = 130	28'-35'-28'	H 926	24	7-0	3-8	24	18-1	24	16-0	M 601	100	12		60	
CF = 130	30'-37.5'-30'	H1027	29	7-11	4-4	29	18-5	29	16-2	M 601	106	12		63	
CF = 130	32'-40'-32'	H1028	27	7-7	4-0	27	21-2	27	17-10	M 701	87	16		67	
CF = 130	34'-42.5'-34'	H1029	25	8-2	4-4	25	22-11	25	20-0	M 701	97	15		70	
CF = 130	36'-45'-36'	H1130	28	8-6	4-3	28	24-0	28	20-6	M 701	101	15		73	
CF = 130	38'-47.5'-38'	H1131	26	8-3	4-3	26	25-10	26	23-0	M 701	107	15		76	
CF = 130	40'-50'-40'	H1132	24	8-9	4-6	24	27-0	24	24-4	M 701	113	15		80	
CF = 130	42'-52.5'-42'	H1133	23	10-0	5-0	23	28-6	23	25-8	M 701	126	14		83	
CF = 130	44'-55'-44'	H1134	21	10-0	5-0	21	30-0	21	27-6	M 701	130	14		86	
CF = 400	16'-20'-16'	H 840	27	5-4	2-8	27	10-5	27	7-8	M 601	61	12		41	
CF = 400	18'-22.5'-18'	H 841	25	5-2	2-7	25	11-10	25	11-4	M 601	67	12		44	
CF = 400	20'-25'-20'	H 942	28	5-10	2-11	28	12-4	28	11-6	M 601	74	12		47	
CF = 400	22'-27.5'-22'	H 943	26	6-0	3-0	26	12-8	26	11-6	M 601	80	12		50	
CF = 400	24'-30'-24'	H 944	25	6-7	3-5	25	14-8	25	12-6	M 601	87	12		54	
CF = 400	26'-32.5'-26'	H 945	24	6-10	3-7	24	15-10	24	13-8	M 601	93	12		57	
CF = 400	28'-35'-28'	H1046	28	7-4	3-10	28	16-6	28	13-8	M 701	81	15		60	
CF = 400	30'-37.5'-30'	H1047	27	7-4	4-0	27	18-4	27	15-4	M 701	91	14		63	
CF = 400	32'-40'-32'	H1048	26	7-4	3-10	26	20-5	26	17-2	M 701	97	14		67	
CF = 400	34'-42.5'-34'	H1049	24	7-8	3-10	24	22-1	24	18-6	M 701	103	14		70	
CF = 400	36'-45'-36'	H1150	27	8-6	4-3	27	23-5	27	19-8	M 701	116	13		73	
CF = 400	38'-47.5'-38'	H1151	25	8-6	4-3	25	24-10	25	21-0	M 701	122	13		76	
CF = 400	40'-50'-40'	H1152	23	8-9	4-6	23	26-0	23	22-10	M 701	127	13		80	
CF = 400	42'-52.5'-42'	H1153	21	9-8	4-10	21	27-8	21	24-8	M 701	133	13		83	
CF = 400	44'-55'-44'	H1154	20	10-8	5-4	20	28-11	20	25-10	M 701	139	13		86	
CF = 2000	16'-20'-16'	H 860	26	5-4	2-8	26	10-0	26	5-8	M 701	48	16		41	
CF = 2000	18'-22.5'-18'	H 861	24	4-11	2-4	24	11-2	24	10-10	M 701	52	16		44	
CF = 2000	20'-25'-20'	H 962	28	6-4	3-2	28	11-7	28	10-0	M 701	57	16		47	
CF = 2000	22'-27.5'-22'	H 963	26	6-8	3-4	26	12-11	26	11-6	M 701	61	16		50	
CF = 2000	24'-30'-24'	H 964	25	6-7	3-5	25	14-1	25	12-0	M 701	67	16		54	
CF = 2000	26'-32.5'-26'	H 965	24	6-10	3-7	24	15-6	24	13-0	M 701	71	16		57	
CF = 2000	28'-35'-28'	H1066	28	7-4	3-10	28	16-6	28	13-8	M 701	81	15		60	
CF = 2000	30'-37.5'-30'	H1067	27	7-4	4-0	27	18-4	27	15-4	M 701	91	14		63	
CF = 2000	32'-40'-32'	H1068	26	7-4	3-10	26	20-5	26	17-2	M 701	97	14		67	
CF = 2000	34'-42.5'-34'	H1069	24	7-8	3-10	24	22-1	24	18-6	M 701	103	14		70	
CF = 2000	36'-45'-36'	H1170	27	8-6	4-3	27	23-5	27	19-8	M 701	116	13		73	
CF = 2000	38'-47.5'-38'	H1171	25	8-6	4-3	25	24-10	25	21-0	M 701	122	13		76	
CF = 2000	40'-50'-40'	H1172	23	8-9	4-6	23	26-0	23	22-10	M 701	127	13		80	
CF = 2000	42'-52.5'-42'	H1173	21	9-8	4-10	21	27-8	21	24-8	M 701	133	13		83	
CF = 2000	44'-55'-44'	H1174	20	10-8	5-4	20	28-11	20	25-10	M 701	139	13		86	

* Dimension "T" does not include monolithic wearing surface

MAR 09 1979

QUANTITIES PER FOOT OF WIDTH / GUARD RAIL

Load Frequency	Spans	Concrete (Cu.Yd.) Mono. Wearing Surface	Concrete (Cu.Yd.) Separate Surface Course	Bitum. Surface Course (Cu Yd.) ⊕2½" Thick.	Bitum. Surface Course (Cu Yd.) 1⅞" Av★ Thick.	Type "C" Water-proofing Sq. Yds.	Reinf. Steel Lbs.	Guard Rail No. of Full Panels Ea. Side	Guard Rail Lin Ft. Both Sides
CF = 30	16'-20'-16'	1.62	1.54	0.41	0.31	5.9	398	8	107
CF = 30	18'-22.5'-18'	1.90	1.81	0.46	0.35	6.7	450	9	120
CF = 30	20'-25'-20'	2.26	2.15	0.51	0.38	7.4	504	10	133
CF = 30	22'-27.5'-22'	2.58	2.47	0.56	0.42	8.1	582	11	146
CF = 30	24'-30'-24'	2.99	2.87	0.61	0.46	8.8	652	12	159
CF = 30	26'-32.5'-26'	3.37	3.24	0.66	0.50	9.6	752	13	172
CF = 30	28'-35'-28'	3.83	3.69	0.71	0.54	10.3	856	14	185
CF = 30	30'-37.5'-30'	4.33	4.16	0.76	0.57	11.0	954	15	198
CF = 30	32'-40'-32'	4.85	4.69	0.81	0.61	11.7	1078	16	211
CF = 30	34'-42.5'-34'	5.41	5.24	0.86	0.65	12.4	1201	17	224
CF = 30	36'-45'-36'	6.09	5.90	0.91	0.69	13.2	1315	18	237
CF = 30	38'-47.5'-38'	6.90	6.71	0.96	0.72	13.9	1408	19	250
CF = 30	40'-50'-40'	7.76	7.56	1.01	0.76	14.6	1533	20	263
CF = 30	42'-52.5'-42'	8.78	8.57	1.06	0.80	15.4	1670	21	276
CF = 30	44'-55'-44'	9.64	9.42	1.11	0.84	16.0	1814	22	289
CF = 130	16'-20'-16'	1.83	1.70	0.41	0.31	5.9	433	8	107
CF = 130	18'-22.5'-18'	2.13	1.99	0.46	0.35	6.7	507	9	120
CF = 130	20'-25'-20'	2.51	2.36	0.51	0.38	7.4	577	10	133
CF = 130	22'-27.5'-22'	2.87	2.70	0.56	0.42	8.1	669	11	146
CF = 130	24'-30'-24'	3.30	3.12	0.61	0.46	8.8	750	12	159
CF = 130	26'-32.5'-26'	3.70	3.50	0.66	0.50	9.6	847	13	172
CF = 130	28'-35'-28'	4.26	4.05	0.71	0.54	10.3	960	14	185
CF = 130	30'-37.5'-30'	4.79	4.56	0.76	0.57	11.0	1070	15	198
CF = 130	32'-40'-32'	5.34	5.10	0.81	0.61	11.7	1192	16	211
CF = 130	34'-42.5'-34'	5.93	5.67	0.86	0.65	12.4	1352	17	224
CF = 130	36'-45'-36'	6.63	6.36	0.91	0.69	13.2	1470	18	237
CF = 130	38'-47.5'-38'	7.48	7.19	0.96	0.72	13.9	1564	19	250
CF = 130	40'-50'-40'	8.37	8.07	1.01	0.76	14.6	1715	20	263
CF = 130	42'-52.5'-42'	9.31	9.00	1.06	0.80	15.4	1864	21	276
CF = 130	44'-55'-44'	10.31	9.97	1.11	0.84	16.0	2027	22	289
CF = 400	16'-20'-16'	1.99	1.83	0.41	0.31	5.9	496	8	107
CF = 400	18'-22.5'-18'	2.36	2.18	0.46	0.35	6.7	558	9	120
CF = 400	20'-25'-20'	2.72	2.51	0.51	0.38	7.4	660	10	133
CF = 400	22'-27.5'-22'	3.09	2.87	0.56	0.42	8.1	745	11	146
CF = 400	24'-30'-24'	3.55	3.30	0.61	0.46	8.8	824	12	159
CF = 400	26'-32.5'-26'	4.10	3.83	0.66	0.50	9.6	929	13	172
CF = 400	28'-35'-28'	4.62	4.33	0.71	0.54	10.3	1059	14	185
CF = 400	30'-37.5'-30'	5.17	4.86	0.76	0.57	11.0	1187	15	198
CF = 400	32'-40'-32'	5.91	5.59	0.81	0.61	11.7	1296	16	211
CF = 400	34'-42.5'-34'	6.53	6.19	0.86	0.65	12.4	1440	17	224
CF = 400	36'-45'-36'	7.18	6.82	0.91	0.69	13.2	1587	18	237
CF = 400	38'-47.5'-38'	7.96	7.57	0.96	0.72	13.9	1721	19	250
CF = 400	40'-50'-40'	8.98	8.57	1.01	0.76	14.6	1886	20	263
CF = 400	42'-52.5'-42'	9.95	9.53	1.06	0.80	15.4	2028	21	276
CF = 400	44'-55'-44'	10.98	10.53	1.11	0.84	16.0	2214	22	289
CF = 2000	16'-20'-16'	2.07	1.91	0.41	0.31	5.9	533	8	107
CF = 2000	18'-22.5'-18'	2.41	2.23	0.46	0.35	6.7	594	9	120
CF = 2000	20'-25'-20'	2.77	2.56	0.51	0.38	7.4	673	10	133
CF = 2000	22'-27.5'-22'	3.20	2.98	0.56	0.42	8.1	743	11	146
CF = 2000	24'-30'-24'	3.67	3.42	0.61	0.46	8.8	834	12	159
CF = 2000	26'-32.5'-26'	4.16	3.90	0.66	0.50	9.6	938	13	172
CF = 2000	28'-35'-28'	4.62	4.33	0.71	0.54	10.3	1063	14	185
CF = 2000	30'-37.5'-30'	5.17	4.86	0.76	0.57	11.0	1187	15	198
CF = 2000	32'-40'-32'	5.91	5.59	0.81	0.61	11.7	1296	16	211
CF = 2000	34'-42.5'-34'	6.53	6.19	0.86	0.65	12.4	1440	17	224
CF = 2000	36'-45'-36'	7.18	6.82	0.91	0.69	13.2	1587	18	237
CF = 2000	38'-47.5'-38'	7.96	7.57	0.96	0.72	13.9	1721	19	250
CF = 2000	40'-50'-40'	8.98	8.57	1.01	0.76	14.6	1886	20	263
CF = 2000	42'-52.5'-42'	9.95	9.53	1.06	0.80	15.4	2028	21	276
CF = 2000	44'-55'-44'	10.98	10.53	1.11	0.84	16.0	2214	22	289

★ Average thickness of tapered portion.
⊕ Thickness for width of approach pavement.

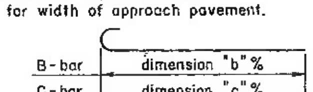

BAR SIZE is indicated in the bar mark. The first digit where three digits are used and the first two digits where four are used, indicate the bar size number For example, A700 is a No 7 size bar and A1014 is a No 10 size

GENERAL: This drawing provides design and general construction details. The project plans for each structure will show spans, roadway width, skew, elevations, wearing surface, substructure details, estimated quantities, reinforcing steel list and other necessary details and special notes.

DESIGN SPECIFICATIONS: This standard drawing conforms to the requirements of "Design Specifications for Highway Structures" of the State of Ohio, Department of Highways, dated October 1, 1951, together with revisions thereof dated July 15, 1952 and April 1, 1954

ADDITIONAL INTERIOR SPANS, similar to middle span, may be incorporated into the structure without change in slab thickness or area of reinforcing steel. In case of added spans, the project plans will show revised details and estimated quantities.

EXPANSION: Where the sum of all the span lengths exceeds 200 feet, provision shall be made for expansion.

SKEW: For bridges with skew, longitudinal bars shall be placed parallel to centerline of roadway and transverse bars parallel to piers and abutments For skews of 10° or less, longitudinal reinforcement as shown for non-skewed bridges may be used. For skews from 10° to 30°, "F", "G", and "H" bars shall be lengthened and "K" bars shortened an amount equal to 1/150 × R × S × tan. θ. "F", "G", and "H" bars shall be placed as shown in Placement Diagram. (For skew greater than 30° another type of bridge should be used.)

"R" = Width of slab in feet
"S" = Length of middle span in feet
"θ" = Skew angle

SUPERELEVATION: For bridges on curves the concrete slab shall be superelevated for full width of deck at the same rate as the approach pavement The bituminous surface course shall have a taper outside the approach pavement width, similar to the taper shown for non-superelevated bridges

MONOLITHIC WEARING SURFACE shall be 1/2" for Load Frequency of CF = 30, 3/4" for CF = 130, and 1" for CF = 400 and CF = 2000 Concrete quantities have been computed on this basis.

RAILING: Transition between guard rail height on bridge and on approaches shall be made in a distance of 100 feet from each end of bridge

An upper hand rail and longer posts shall be provided if called for on the project plans.

Guard rail and hand rail shall be painted white in accordance with section I-15.07 of the Construction and Material Specifications.

Galvanized posts and anchor bolts shall not be painted.

Tabulated railing quantity is for the length of railing within the overall length of slab. The price per lineal foot of railing includes payment for guard rail, hand rail (if called for), posts, anchors, connections, galvanizing and painting

CONCRETE shall be class "C"

CONSTRUCTION JOINTS: One construction joint in bridge slab shall be placed on transverse centerline of middle span or 1'-0"± off transverse centerline if necessary to miss railing posts and transverse reinforcing bars One longitudinal joint will be permitted, on centerline of roadway

REINFORCING STEEL CLEARANCE from face of concrete shall be 1½" for #11 bars, 1¼" for #9 and #10 bars and 1" for all smaller bars (The above clearances do not include monolithic wearing surface). Where two bars of different size are lapped, the clearance requirement for the larger bar shall also apply to the smaller bar

REINFORCING STEEL: The "M" bars and "N" bars may be furnished in pairs of equal length, lapped thirty diameters at the centerline of roadway, or they may be furnished in pairs of different length in order to place the lap beyond a longitudinal construction joint at the centerline of roadway, at the option of the contractor Determination of the pay quantity will be according to the number and length of bars as shown hereon unless otherwise called for on the project plans

CAMBER of 1/800 of the span shall be provided (in addition to any required for conformance with the profile of the highway) to allow for dead load deflection, except that cambers of less than 1/2" need not be provided

TYPE "C" WATERPROOFING QUANTITY as determined from the table shall have added to it the number of sq. yds. on fascia of slab

REVISIONS	STATE OF OHIO DEPARTMENT OF HIGHWAYS DIVISION OF DESIGN AND CONSTRUCTION BUREAU OF BRIDGES
	STANDARD CONTINUOUS SLAB BRIDGE WITHOUT CURBS AND WITH HIGHWAY GUARD RAIL MIDDLE SPAN 20 FEET TO 55 FEET LOAD FREQUENCY: CF = 30, CF = 130, CF = 400, CF = 2000

APPROVED: [signature] ENGINEER OF BRIDGES DATE: 7-1-54				DRAWING NUMBER CS-1-54
PREPARED RHL CEJ GFB JCM WHR	TRACED CEJ	CHECKED CW MPB FHR	REVIEWED CSD BFG CHA AJF DHO	SHEET NO. 2 OF 2 SHEETS