OHIO DEPARTMENT OF TRANSPORTATION

metric units

LOCATION MAP

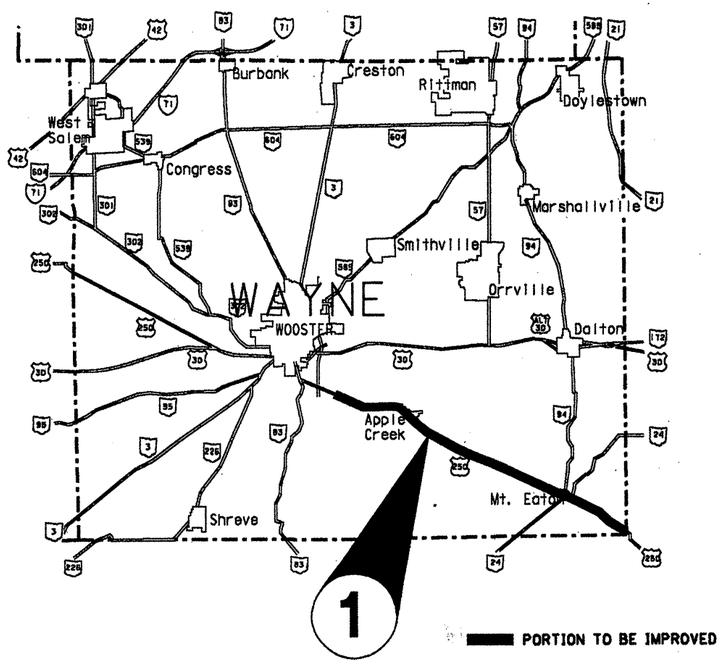

81° 54' 38" W. LONGITUDE 40° 46' 11" N. LATITUDE

N

PART	COUNTY	ROUTE	SECTIONS	PROJECT TERMINI straight line kilometer BEGIN	END	NET LENGTH kilometer	CITY	VILLAGE
A	WAYNE	US250	(22.531-42.744)	22.531a	47.749	25.218		Apple Creek Mount Eaton

Straight Line Kilometers have been converted from mileage - (references in the field are in miles)

INDEX OF SHEETS:

1 - TITLE SHEET
2,3,4 - GENERAL SUMMARY
5 - STRAIGHT LINE DIAGRAM
5 - PAVEMENT DATA
6 - TYPICAL SECTIONS
6 - SHOULDER DATA
7-9 - GENERAL NOTES
10 - MAILBOX FACILITIES
11-16 - GENERAL NOTES
17 - BRIDGE TREATMENT
18-20 - ESTIMATED QUANTITIES
21-24 - STRUCTURE REPAIR WAY-250-26667
25 - STRUCTURE REPAIR WAY-250-281019
26-44 - GUARDRAIL DETAIL
45 - LONG SPAN ACROSS CULVERT
46 - PAVEMENT MARKING INFORMATION
46a-46b - GENERAL NOTES - EPOXY PAVEMENT MARKINGS
47 - PAVEMENT MARKING TYPICAL DETAILS
48 - FLAGGER CLOSING 1 LANE OF A TWO LANE HIGHWAY FOR PAVING OPERATIONS

PROJECT DESCRIPTION: This project will include resurfacing with an intermediate and a surface course of asphalt concrete, pavement planning where necessary, minor pavement widening, pavement repair and pavement markings, upgrade of guardrail where nessary and various strucutre work as detailed in the plan.

1995 SPECIFICATIONS

THE STANDARD 1995 SPECIFICATIONS OF THE STATE OF OHIO DEPARTMENT OF TRANSPORTATION, INCLUDING CHANGES AND SUPPLEMENTAL SPECIFICATIONS LISTED IN THE PLANS AND THE PROPOSAL SHALL GOVERN THESE IMPROVEMENTS

I HEREBY APPROVE THESE PLANS AND DECLARE THAT THE MAKING OF THESE IMPROVEMENTS WILL REQUIRE THE CLOSING OF THE HIGHWAY ON PARTS NO. NONE AND THAT DETOURS WILL BE PROVIDED BY STATE FORCES. THE CLOSING TO TRAFFIC OF THE HIGHWAYS WILL NOT BE REQUIRED ON PARTS NO. 1 AND PROVISIONS FOR THE MAINTENANCE AND SAFETY OF TRAFFIC WILL BE AS INDICATED IN THE PROPOSAL.

APPROVED DATE 1-24-97 Mary Ellen Kimberlin PE, PS
DISTRICT DEPUTY DIRECTOR OF TRANSPORTATION

APPROVED DATE _____ _____
DIRECTOR, DEPARTMENT OF TRANSPORTATION

TWO WORKING DAYS BEFORE YOU DIG
call 800-362-2764
TOLL FREE
OHIO UTILITIES PROTECTION SERVICE
NON-MEMBERS MUST BE CALLED DIRECTLY

PLANS PREPARED BY:
DISTRICT THREE PRODUCTION DEPARTMENT

STANDARD DRAWINGS		STANDARD DRAWINGS		STANDARD DRAWINGS	
BP-3.1M	10-28-94	GR-4.2M	04-21-95	MT-105.11M	04-25-94
BP-4.1M	10-28-94	MT-96.11M	01-30-95	TC-41.20M	07-01-94
BP-7.1M	10-28-94	MT-96.20M	01-30-95	TC-65.10M	11-01-95
GR-1.1M	11-30-94	MT-96.25M	01-30-95	TC-65.12M	11-01-95
GR-1.2M	01-03-96	MT-97.10M	04-25-94	TC-71.10M	09-01-93
GR-1.3M	11-30-94	MT-99.10M	01-30-95		
GR-2.1M	11-30-94	MT-99.20M	01-30-95	AS-1-81M	10-25-94
GR-3.4M	01-03-96	MT-101.20M	03-01-96	PCB-91M	03-20-95
GR-4.1M	11-30-94	MT-105.10M	04-25-94	RM-4.2M	06-30-95

SUPPLEMENTAL SPECIFICATIONS	
SS-802	03-23-95

DEPARTMENT OF TRANSPORTATION
FEDERAL HIGHWAY ADMINISTRATION

APPROVED:

_____ _____
DIVISION ADMINISTRATOR DATE

FEDERAL PROJECT NO. NH 47 0

PID NO. 16140

CONSTRUCTION PROJECT NO.

RAILROAD INVOLVEMENT NONE

WAY-US250-22.531a

FILE NAME = I:\DGN\OPS\ 1997\W250.DGN

GENERAL SUMMARY

metric units

CALC BY CVH
CHK'D By MJS

SHEET NUMBER 5	6			9	10	18	19	20			46			ITEM	ITEM EXT.	TOTAL	UNIT	DESCRIPTION	REF. SHEET
																		ROADWAY	
				17										202	30000	17	SQUARE METER	WALK REMOVED	9
				37										202	32000	37	METER	CURB REMOVED	9
						68								202	22901	68	SQUARE METER	APPROACH SLAB REMOVED, AS PER PLAN	11
						3303.27								202	38000	3303.27	METER	GUARDRAIL REMOVED	
						62								202	42000	62	EACH	ANCHOR ASSEMBLY REMOVED, TYPE A	12
						3								202	42508	3	EACH	ANCHOR ASSEMBLY REMOVED FOR STORAGE	12
											894			202	54100	894	EACH	RAISED PAVEMENT MARKER REMOVED FOR STORAGE	
						889								203	20001	889	CUBIC METER	EMBANKMENT, AS PER PLAN	12
						112								203	50000	112	SQUARE METER	SUBGRADE COMPACTION	
	45094													203	60100	45094	METER	LINEAR GRADING	7
					56									203	60700	56	EACH	GRADING MAILBOX APPROACHES	10
						4693.92								606	13000	4693.92	METER	GUARDRAIL, TYPE 5	
						30.48								606	13020	30.48	METER	GUARDRAIL, TYPE 5 WITH DOUBLE RAILS	45
						186.69								606	17000	186.69	METER	RAISING TYPE 5 GUARDRAIL	13
							1499							606	18500	1499	EACH	GUARDRAIL POST, 2.75 METER	13
							1							606	20000	1	EACH	FLARED END SECTION	
							28							606	25000	28	EACH	ANCHOR ASSEMBLY, TYPE A	
							53							606	26500	53	EACH	ANCHOR ASSEMBLY, TYPE T	
							1							606	27801	1	EACH	ANCHOR ASSEMBLY REBUILT, TYPE A, AS PER PLAN	13
							11							606	35140	11	EACH	BRIDGE TERMINAL ASSEMBLY, TYPE 4	
							1							606	35141	1	EACH	BRIDGE TERMINAL ASSEMBLY, TYPE 4, AS PER PLAN	13
								5535						SPECIAL	60650000	5535	METER	RESHAPING BERM	15
				6										608	50001	6	EACH	CURB RAMP, TYPE 1, AS PER PLAN	9
					33									SPECIAL	69050100	33	EACH	MAILBOX SUPPORT SYSTEM, SINGLE	10
					39									SPECIAL	69050200	39	EACH	MAILBOX SUPPORT SYSTEM, DOUBLE	10
																		DRAINAGE	
51														604	09000	51	EACH	CATCH BASIN ADJUSTED TO GRADE	7
20														604	09910	20	EACH	CATCH BASIN FRAME AND GRATE, TYPE DR	9
2														604	34500	2	EACH	MANHOLE ADJUSTED TO GRADE	7
8														638	10800	8	EACH	VALVE BOX ADJUSTED TO GRADE	7

GENERAL SUMMARY

WAY-250-22.531a

GENERAL SUMMARY

metric units

CALC BY CVH
CHK'D By MJS

SHEET NUMBER 5	6	7	8	10	18	19	20					46			ITEM	ITEM EXT.	TOTAL	UNIT	DESCRIPTION	REF. SHEET
																			PAVEMENT	
			900												253	02000	900	CUBIC METER	PAVEMENT REPAIR	8
26447					1903										254	01000	28350	SQUARE METER	PAVEMENT PLANING, BITUMINOUS	7
	4317														301	10002	4317	CUBIC METER	BITUMINOUS AGGREGATE BASE, AC-20	
5254															448	14000	5254	CUBIC METER	ASPHALT CONCRETE INTERMEDIATE COURSE, TYPE 1, AC-20	
8050															448	16000	8050	CUBIC METER	ASPHALT CONCRETE SURFACE COURSE, TYPE 1, AC-20	
799															SPECIAL	44817010	799	CUBIC METER	ASPHALT CONCRETE WITH GILSONITE, SURFACE COURSE, TYPE I	
138273															407	10000	138273	LITER	TACK COAT	7
	39957														408	10000	39957	LITER	BITUMINOUS PRIME COAT	
						112									611	10000	112	SQUARE METER	REINFORCED CONCRETE APPROACH SLAB (T=305 MM)	
	23832														617	20000	23832	SQUARE METER	SHOULDER PREPARATION	
	2121			85											617	98300	2206	METRIC TON	SHOULDER RECONDITIONING, MISC.: COMPACTED AGGREGATE	8
																			MAINTENANCE OF TRAFFIC	
		50													404	35000	50	CUBIC METER	BITUMINOUS CONCRETE FOR MAINTAINING TRAFFIC	7
		64													614	12460	64	EACH	WORK ZONE MARKING SIGN	7
						338									614	12800	338	EACH	TEMPORARY RAISED PAVEMENT MARKER	
						12									614	13202	12	EACH	BARRIER REFLECTOR, TYPE A2	
						21									614	13302	21	EACH	BARRIER REFLECTOR, TYPE B2	
						23									614	13350	23	EACH	OBJECT MARKER	
							0.10								614	21000	0.10	KILOMETER	TEMPORARY CENTER LINE, CLASS I	15
												52.80			614	21500	52.80	KILOMETER	TEMPORARY CENTER LINE, CLASS II, 642 PAINT	
							0.05								614	22000	0.05	KILOMETER	TEMPORARY EDGE LINE, CLASS I	15
							7								614	26000	7	METER	TEMPORARY STOP LINE, CLASS I	15
							78								622	40020	78	METER	PORTABLE CONCRETE BARRIER, 813 MM	
							54								622	40040	54	METER	PORTABLE CONCRETE BARRIER, 813 MM, BRIDGE MOUNTED	
																			TRAFFIC CONTROL	
												894			621	00200	894	EACH	RAISED PAVEMENT MARKER, INSTALLATION ONLY	8
												189			644	00500	189	METER	STOP LINE	
												316			644	00600	316	METER	CROSSWALK LINE	
												2			644	01100	2	EACH	SCHOOL SYMBOL MARKING, 1800 MM	
												2			644	01110	2	EACH	SCHOOL SYMBOL MARKING, 2500 MM	
												47.58			SPECIAL	69080000	47.58	KILOMETER	PAVEMENT MARKING, MISC.: EDGE LINE, EPOXY	46a,46b
												25.22			SPECIAL	69080000	25.22	KILOMETER	PAVEMENT MARKING, MISC.: CENTER LINE, EPOXY	46a,46b
						12	225								802	00100	237	EACH	BARRIER REFLECTOR, TYPE A	

GENERAL SUMMARY

WAY-250-22.531a

614 13000 SPEC. 644 40000

GENERAL SUMMARY

metric units

SHEET NUMBER														ITEM	ITEM EXT.	TOTAL	UNIT	DESCRIPTION	REF. SHEET
21	26																		
																		STRUCTURE WAY-250-26667 (SLK) SFN 8504776	
2														202	11300	2	CUBIC METER	PORTIONS OF STRUCTURE REMOVED	12
231														509	15820	231	KILOGRAM	EPOXY COATED REINFORCING STEEL, GRADE 400	
56														510	10001	56	EACH	DOWEL HOLES WITH NONSHRINK, NONMETALLIC GROUT, AS PER PLAN	12
																		STRUCTURE WAY-250-28019 (SLK) SFN 8504814	
	22													SPECIAL	53001300	22	METER	STRUCTURE, MISC.: JOINT SEALING	14
														614	11000	LUMP		MAINTAINING TRAFFIC	16 ~~9,14,15~~
														624	10000	LUMP		MOBILIZATION	

CALC BY CWH
CHK'D BY MNS

GENERAL SUMMARY

WAY-250-22.531a

Straight Line Kilometers have been converted from mileage - (references in the field are in miles)

metric units

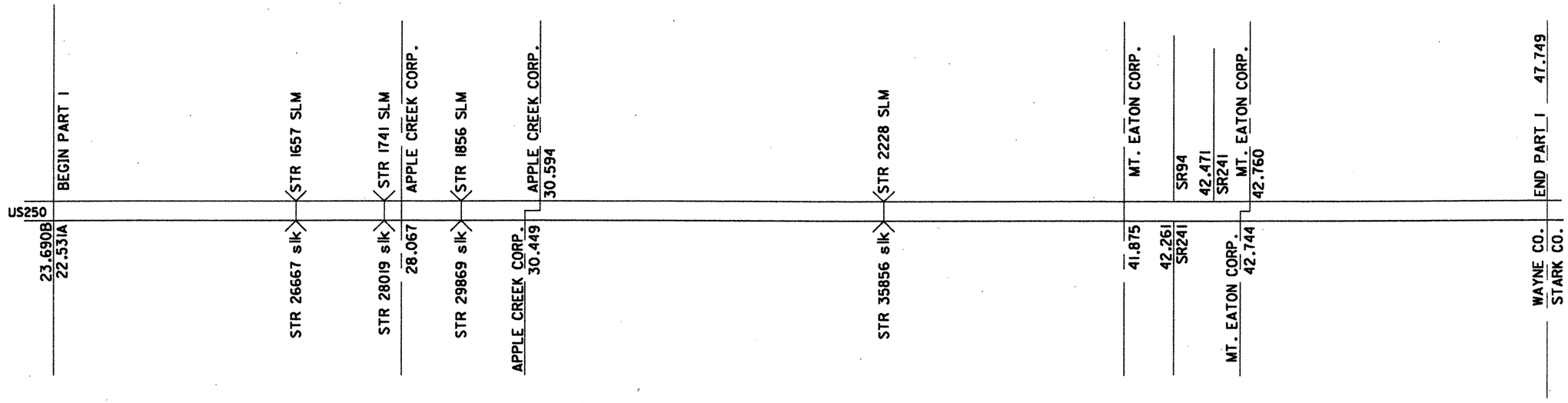

* SEE TYPICALS ON "SHOULDER DATA" SHEET

USE BUTT JOINTS THROUGHOUT PROJECT

PAVEMENT DATA

PART	ROUTE	LOG POINT TO LOG POINT Straight Line kilometer	LENGTH kilometer	LENGTH meter	WIDTH METER AVG.	* TYPICAL	EXISTING TYPE PAVEMENT	PAVEMENT AREA square meter	407 TACK COAT @ 0.36 L/m² liter	448 ASPHALT CONCRETE INTERMEDIATE COURSE, TYPE I, AC-20 THICK AVG. mm	448 ASPHALT CONCRETE INTERMEDIATE COURSE, TYPE I, AC-20 m³	407 TACK COAT @ 0.14 L/m² liter	448 ASPHALT CONCRETE SURFACE COURSE, TYPE I, AC-20 THICK AVG. mm	448 ASPHALT CONCRETE SURFACE COURSE, TYPE I, AC-20 m³	SPECIAL ASPHALT CONCRETE WITH GILSONITE, SURFACE COURSE, TYPE I THICK AVG. mm	SPECIAL ASPHALT CONCRETE WITH GILSONITE, SURFACE COURSE, TYPE I m³	254 PAVEMENT PLANING, BITUMINOUS m²	604 CATCH BASIN ADJUSTED TO GRADE each	604 MANHOLE ADJUSTED TO GRADE each	638 VALVE BOX ADJUSTED TO GRADE each
A	US250	22.531 - 28.067	5.536	5536	10.36	1	404	57353	20647	19	1090	8029	32	1835						
		28.067 - 28.357	0.290	290	9.45	2	404	2741	987	19	52	384	32	88						
		28.357 - 29.242	0.885	885	9.45	3	404	8363	3011	19	159	1171			32	268	8363			
		29.242 - 29.435	0.193	193	12.19	3	404	2353	847	19	45	329			32	75	2353			
		29.435 - 29.853	0.418	418	9.45	3	404	3950	1422	19	75	553			32	126	3950			
		29.853 - 36.178	6.325	6325	10.97	1	404	69385	24979	19	1318	9714	32	2220						
		36.178 - 41.779	5.601	5601	10.97	1	404	61443	22119	19	1167	8602	32	1966						
		41.779 - 41.811	0.032	32	9.45	4	404	302	109	19	6	42			32	10	302			
		41.811 - 42.261	0.450	450	9.45	3	404	4253	1531	19	81	595			32	136	4253			
		42.261 - 42.648	0.387	387	11.58	3	404	4481	1613	19	85	627			32	143	4481			
		42.648 - 42.664	0.016	16	11.28	2	404	180	65	19	3	25	32	6						
		42.664 - 42.760	0.096	96	10.97	1	404	1053	379	19	20	147	32	346						
		42.760 - 47.749	4.989	4989	10.97	1	404	54729	19702	19	1040	7662	32	1751						
							EXTRA AREA FOR INTERS., DRIVES & MB	5965	2147		113	835		150		41	2745			
		TOTAL PART A	25.218	25218				276551	99558		5254	38715		8050		799	26447	51	2	8

CALCULATED CVH
CHECKED MJS

PLAN NO.

PAVEMENT DATA

WAY-US250-22.531a

Straight Line Kilometers have been converted from mileage - (references in the field are in miles)

SHOULDER DATA

metric units

TYPICAL 1

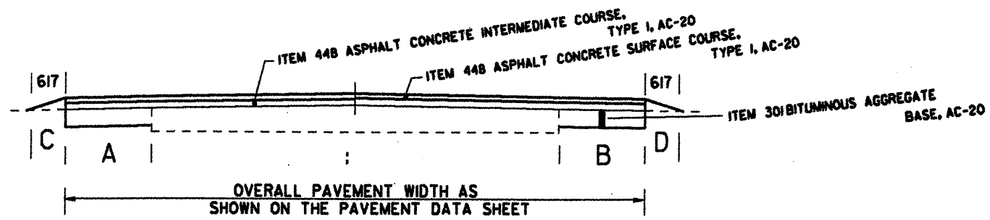

TYPICAL 2

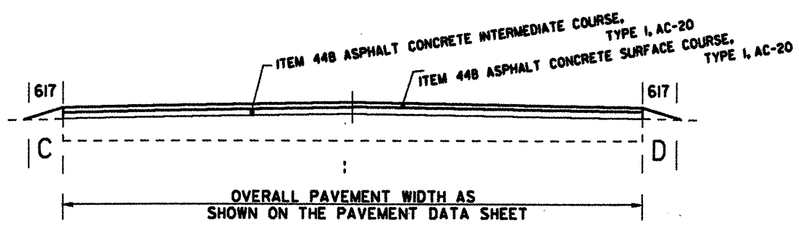

TYPICAL 3

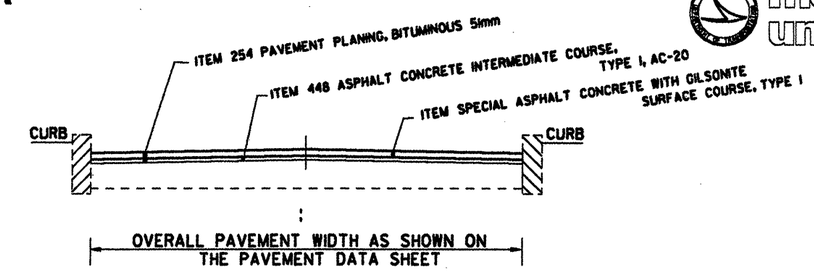

TYPICAL 4

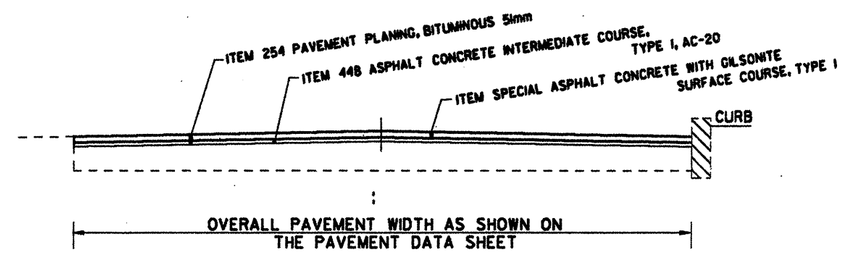

SHOULDER DATA

PART	ROUTE	LOG POINT TO LOG POINT (straight line kilometer)	LENGTH km	LENGTH m	TYPICAL	PAVED SHOULDER PROPOSED WIDTH m (avg.) A	PAVED SHOULDER PROPOSED WIDTH m (avg.) B	PAVED SHOULDER AREA m²/2	203 LINEAR GRADING DEPTH mm (avg.)	203 LINEAR GRADING m	402 ASPHALT CONCRETE AVG. THICK mm	402 ASPHALT CONCRETE m²/4	301 BITUMINOUS AGGREGATE BASE, AC-20 AVG. THICK mm	301 BITUMINOUS AGGREGATE BASE, AC-20 m²/4	AGGREGATE SHOULDER PROPOSED WIDTH m (avg.) C	AGGREGATE SHOULDER PROPOSED WIDTH m (avg.) D	AGGR. SHOULDER AREA m²/2	617 SHOULDER PREPARATION m²/2	617 SHOULDER RECONDITIONING, MISC.: COMPACTED AGGREGATE 1780 kg/m²/4 50 mm AVG. THICKNESS metric ton		408 PRIME Bit. Matl. @ 1.8 L / m² liter	
A	US250	22.531 - 28.067	5.536	5536	1	0.61	0.61	6754	100	11072			100	675	0.30	0.30	3322	3322	296		5980	
		28.067 - 28.357	0.290	290	2										0.30	0.30	174	174	15			
		28.357 - 29.242	0.885	885	3																	
		29.242 - 29.435	0.193	193	3																	
		29.435 - 29.853	0.418	418	3																	
		29.853 - 36.178	6.325	6325	1	1.22	1.22	15433	100	12650			100	1543	0.46	0.46	5819	5819	518		10474	
		36.178 - 41.779	5.601	5601	1	0.91	0.91	10194	100	11202			100	1019	0.61	0.61	6833	6833	608		12299	
		41.779 - 41.811	0.032	32	4																	
		41.811 - 42.261	0.450	450	3																	
		42.261 - 42.648	0.387	387	3																	
		42.648 - 42.664	0.016	16	2										0.61	0.61	20	20	2		36	
		42.664 - 42.760	0.096	96	1	0.61	0.61	117	100	192			100	12	0.61	0.61	117	117	10		211	
		42.760 - 47.749	4.989	4989	1	1.07	1.07	10676	100	9978			100	1068	0.61	0.61	6087	6087	542		10957	
															EXTRA AREA FOR DRIVES (SEE GENERAL NOTE)			1460	130			
		TOTAL PART A	25.218	25218				43174		45094				4317				23832	2121		39957	

CALCULATED CVH
checked MJS

PLAN NO.

SHOULDER

SHOULDER DATA

WAY-US250-22.531a

ITEM 614, WORK ZONE MARKING SIGN

THE FOLLOWING ESTIMATED QUANTITY HAS BEEN CARRIED TO THE GENERAL SUMMARY FOR USE AS DIRECTED BY THE ENGINEER FOR TEMPORARY WORK ZONE MARKING SIGNS PER THE REQUIREMENTS OF THE STANDARD CONSTRUCTION DRAWINGS:

ITEM 614, WORK ZONE MARKING SIGN:
PART A - 64 each

ITEM 404, BITUMINOUS CONCRETE FOR MAINTAINING TRAFFIC

THE FOLLOWING ESTIMATED QUANTITY HAS BEEN CARRIED TO THE GENERAL SUMMARY TO CONSTRUCT A TEMPORARY ASPHALT WEDGE FROM THE EXISTING PAVEMENT TO THE PLANED SURFACE AT BUTT JOINTS AND OTHER LOCATIONS THAT RESULT IN A DROP-OFF IN EXCESS OF 38mm, AS DIRECTED BY THE ENGINEER. THIS QUANTITY SHALL ALSO BE USED AT PLANED SURFACES WHERE A TEMPORARY ASPHALT WEDGE IS NEEDED AROUND CASTINGS, AS DIRECTED BY THE ENGINEER.

50 m^3 ITEM 404, BITUMINOUS CONCRETE FOR MAINTAINING TRAFFIC

ITEM 448, ASPHALT CONCRETE SURFACE COURSE, TYPE I, AC-20

IN ADDITION TO ITEM 401.12, THE FEATHERED OR BUTT JOINT SHALL BE UNIFORMLY COATED WITH A 150mm WIDE BAND OF A.C..THE COST OF THIS WORK SHALL BE INCLUDED IN THE UNIT PRICE BID FOR THIS ITEM.

BUTT JOINTS

BUTT JOINTS SHALL NOT BE CUT AND LEFT OPEN TO TRAFFIC FOR A TIME PERIOD LONGER THAN THREE (3) DAYS. IF CUT IS NOT PAVED WITHIN THREE (3) DAYS, IT SHALL BE FILLED IN WITH A TEMPORARY ASPHALT CONCRETE WEDGE, OF SUFFICIENT LENGTH, AS DIRECTED BY THE ENGINEER.

CONSTRUCTION "BUMP" (OW-62) AND "ADVISORY SPEED" (OW-143) SIGNS SHALL BE ERECTED AND MAINTAINED DURING THE PERIOD THAT THE CUT FOR THE BUTT JOINT IS LEFT OPEN.

ITEM 604, CASTINGS ADJUSTED TO GRADE

ANY UNIT OF THIS ITEM MAY BE NONPERFORMED IF SO DIRECTED BY THE ENGINEER AND THE SURFACE SHALL BE FEATHERED TO MEET THE EXISTING CASTING OR INLET IN A MANNER ACCEPTABLE TO THE ENGINEER. ALL ADJUSTING RINGS SHALL HAVE THE ENGINEERS APPROVAL BEFORE USING.

UNDER ITEM 604.03, ADJUSTING TO GRADE, PARAGRAPH (A), THE CASTING TO BE ADJUSTED MAY OR MAY NOT HAVE AN EXISTING FRAME. THE WORK SHALL CONSIST OF ADJUSTING THE EXISTING CASTING OR GRATE TO THE SATISFACTION OF THE ENGINEER. THE CONTRACTOR IS REMINDED TO FIELD CHECK ALL ADJUSTMENT TO GRADE ITEMS PRIOR TO BIDDING, AS NO ADDITIONAL COMPENSATION WILL BE GRANTED FOR LABOR AND MATERIAL REQUIRED TO SATISFACTORILY ADJUST CASTINGS WITHOUT FRAMES.

INTERSECTIONS AND DRIVES

RURAL-INTERSECTIONS SHALL BE PAVED TO THE END OF THE RADII OR AS DIRECTED BY THE ENGINEER. (TO PROVIDE A SMOOTH TRANSISTION BETWEEN THE TWO HIGHWAYS, AND TO ELIMINATE WATER POCKETS)

URBAN-INTERSECTIONS SHALL BE PAVED TO THE BACK OF CROSSWALKS OR AS DIRECTED BY THE ENGINEER. (TO PROVIDE A SMOOTH TRANSISTION BETWEEN THE TWO HIGHWAYS, AND TO ELIMINATE WATER POCKETS)

EXISTING PAVED DRIVES SHALL BE PAVED SO AS TO PROVIDE A SMOOTH TRANSITION BETWEEN THE HIGHWAY AND THE DRIVE, (DISTANCE FROM EDGE OF ROADWAY MAY VARY - AT EACH DRIVE) AS DIRECTED BY THE ENGINEER.

EXISTING AGGREGATE DRIVES SHALL BE PAVED WITH AN APRON THE WIDTH OF THE 617 BERM OR .6 m MINIMUM. THE SLOPE OF THIS APRON SHALL BE THE SAME AS THE ADJACENT PAVEMENT SLOPE OR AS DIRECTED BY THE ENGINEER. ITEM 617 AGGREGATE SHALL BE PLACED ADJACENT TO THIS APRON TO PROVIDE A SMOOTH TRANSITION FROM THE APRON TO THE EXISTING DRIVE, (WIDTH OF THIS 617 APPLICATION MAY VARY.) AS DIRECTED BY THE ENGINEER. AN ADDITIONAL QUANTITY HAS BEEN ESTIMATED TO COMPLETE THIS WORK AND IS SHOWN ON THE "SHOULDER DATA" SHEET.

ANY HAZARD OR UNSAFE CONDITION RESULTING FROM THE ABOVE WORK MUST BE CORRECTED IMMEDIATELY, AS DIRECTED BY THE ENGINEER. THE CONTRACTOR IS REMINDED OF SECTIONS 104.04, 107.07 & 614.02 (a): PUBLIC CONVENIENCE AND SAFETY.

ITEM 203 LINEAR GRADING

THIS WORK SHALL CONSIST OF PREPARING A SUBGRADE FOR THE SHOULDER PAVING BY EXCAVATING THE EXISTING SHOULDER MATERIAL, AS DESCRIBED IN THE "TRENCH FOR WIDENING" NOTE, TO THE DEPTH SHOWN IN THE PLANS OR AS DIRECTED BY THE ENGINEER. THIS OPERATION SHALL INCORPORATE TRIMMING THE EDGE OF THE EXISTING PAVEMENT TO A LINE ESTABLISHED BY THE ENGINEER TO FACILITATE THE WIDENING WITHIN THE OVERALL PAVEMENT WIDTHS SHOWN. COMPACTION SHALL BE CARRIED OUT BY MEANS OF A TRENCH ROLLER, 401.11. AREAS GRADED IN EXCESS OF THE DEPTHS REQUIRED SHALL BE BACKFILLED TO THE DESIRED GRADE USING 617 AGGREGATE AT THE CONTRACTORS EXPENSE. THE EXCAVATED MATERIAL SHALL BE USED TO BACKUP THE SHOULDER WHERE NECESSARY AS DIRECTED BY THE ENGINEER (THIS MATERIAL SHALL BE GRADED AND COMPACTED). THE EXCAVATED MATERIAL NOT REQUIRED FOR BACKUP SHALL BE DISPOSED OF, AS DIRECTED BY THE ENGINEER.

TRENCH FOR WIDENING

TRENCH EXCAVATION FOR BASE AND BERM WIDENING SHALL BE PREFORMED ONLY ON ONE SIDE OF THE PAVEMENT AT A TIME. THE OPEN TRENCH SHALL BE ADEQUATELY MAINTAINED AND PROTECTED AT ALL TIMES WITH DRUMS OR BARRICADES.

PLACEMENT OF THE PROPOSED BASE MATERIAL SHALL FOLLOW AS CLOSELY AS POSSIBLE BEHIND THE EXCAVATION. THE LENGTH OF WIDENING TRENCH WHICH IS OPEN AT ANY ONE TIME SHALL BE HELD TO A MINIMUM AND SHALL AT ALL TIMES BE SUBJECT TO APPROVAL BY THE ENGINEER.

PAVEMENT CONTROL

AN AUTOMATIC SCREED CONTROL, HAVING A 9.1m MINIMUM SKI-ARM, SHALL BE USED FOR PLACING THE INTERMEDIATE COURSE AND SURFACE COURSE ON EXISTING PAVEMENT WIDTHS OF 6.1 m AND OVER.

SPECIAL ATTENTION SHALL BE GIVEN TO SUPER-ELEVATED CURVES. THE SUPER-ELEVATION SHALL BE MAINTAINED AND/OR RESTORED, IF NECESSARY, AS DIRECTED BY THE ENGINEER.

ITEM 254, PAVEMENT PLANING, BITUMINOUS

THE INTENT OF THE PLANING IS TO MILL 51mm MINIMUM DEPTH AT THE CENTERLINE AND/OR EDGE OF PAVEMENT AND 6mm MINIMUM DEPTH IN BOTTOM OF WHEEL RUTS. THE PAVEMENT SLOPE MAY VARY BETWEEN 16mm AND 33mm per meter, CONTINUOUS FOR PAVEMENT WIDTH. THE MILLING DEPTH SHALL BE CONTROLLED FROM THE CENTER LINE OR EDGE OF PAVEMENT, TO PRODUCE THE LEAST AMOUNT OF MILLING IN CONFORMANCE WITH ABOVE LIMITS. FIELD WORK NECESSARY FOR PROPER CONTROL WITHIN PLAN INTENT SHALL BE THE RESPONSIBILITY OF THE CONTRACTOR.

AN AUTOMATIC MILLING HEAD PROFILE CONTROL HAVING A MINIMUM 9m SKI-ARM SHALL BE USED DURING PLANING OPERATION.

ABOVE CONDITIONS DO NOT APPLY TO PLANING PERFORMED IN AREAS AS DIRECTED BY THE ENGINEER TO ELIMINATE ADVERSE SURFACE DISTORTION, OR TO PROVIDE A SATISFACTORY GRADE AT CASTINGS. THESE AREAS INCLUDE MATERIAL DISPLACED BY RUTTING OR SHOVING ASPHALT, SURFACE PATCHES, CONCRETE PATCHING, TRANSVERSE BUMPS, PAVEMENT AT RAILROADS, CASTINGS, ETC. PLANING OF THESE AREAS SHALL BE PERFORMED THROUGHOUT THE PROJECT PRIOR TO PAVING. AREAS TO BE PLANED WILL BE DESIGNATED BY THE ENGINEER.

THE PROGRESSION OF THE PLANING SHALL PROCEED IN SUCH A MANNER THAT NORMAL TRAFFIC WILL NOT BE REQUIRED TO RUN OVER THE PLANED ROADWAY SURFACE MORE THAN TWENTY-ONE (21) CALENDAR DAYS. THE 21 CALENDAR DAYS SHALL BE CONSIDERED AN INTERIM COMPLETION DATE (SECTION 108) AND FOR EACH CALENDAR DAY BEYOND THE 21 DAYS THAT THE ROADWAY REMAINS EXPOSED TO THE PLANED SURFACE, THE CONTRACTOR WILL BE ASSESSED LIQUIDATED DAMAGES AS PER 108.07. PLANED AREAS THAT CREATE A LONGITUDINAL JOINT THAT IS BETWEEN TRAVELED LANES SHALL BE COMPLETED IN SUCH A MANNER SO AS TO REMOVE THE JOINT BEFORE THE END OF EACH DAYS WORK AND BEFORE THIS JOINT IS EXPOSED TO TRAFFIC THE CONTRACTOR SHALL ERECT OW-171 (UNEVEN PAVEMENT), THIS SIGN SHALL REMAIN ONLY WHEN THE CONDTION EXISTS.

ITEM 407, TACK COAT

AS PER 407.05 THE APPLICATION RATES SHALL BE 0.36 l/m^2 PRIOR TO THE LEVELING COURSE AND SHALL BE 0.14 l/m^2 PRIOR TO THE SURFACE COURSE FOR ESTIMATING PURPOSES ONLY.THE RATE OF APPLICATION SHALL BE SUBJECT TO ADJUSTMENT AS DIRECTED BY THE ENGINEER. A COMPLETE PAVEMENT SURFACE COVERAGE SHALL BE REQUIRED. AREAS OF TACK STRIPPED BY CONSTRUCTION EQUIPMENT OR TRAFFIC SHALL BE RECOATED PRIOR TO PLACING ASPHALT CONCRETE. ALL COST AS DESCRIBED ABOVE SHALL BE INCLUDED IN THE UNIT PRICE BID PER LITER FOR ITEM 407, TACK COAT.

metric units

CALCULATED CVH
CHECKED MJS

PLAN NO.

GENERAL NOTES

WAY-US250-22.531a

ITEM 253. PAVEMENT REPAIR

THIS ITEM OF WORK SHALL CONSIST OF THE REMOVAL OF THE EXISTING PAVEMENT OR PAVED BERM WHICH MAY BE ASPHALT, BRICK, CONCRETE, OR A COMBINATION OF EACH, IN AREAS OF EXISTING PAVEMENT FAILURE.

THE ENGINEER SHALL DESIGNATE THE LOCATIONS AND LIMITS OF THE AREAS TO BE REPAIRED. PAVEMENT REPAIR SHALL BE PERFORMED AFTER PAVEMENT PLANING. THE REPAIR AREAS SHALL BE ROUGHLY RECTANGULAR IN SHAPE AND CUT OR SAWED TO A NEAT LINE. THE PAVEMENT SHALL BE REMOVED WITHIN THE DESIGNATED AREAS BY METHODS WHICH WILL NOT DAMAGE THE ADJACENT PAVEMENT. THE DEPTH OF REMOVAL, AS DIRECTED BY THE ENGINEER, SHALL BE SUFFICIENT TO REMOVE ALL DETERIORATED PAVEMENT (ESTIMATED DEPTH MAY VARY FROM 50mm to 305mm). THE MATERIALS SO REMOVED SHALL BE DISPOSED OF IN ACCORDANCE WITH 203.05.

REPLACEMENT MATERIAL SHALL BE 402 OR 301 MATERIAL AND SHALL BE PLACED AND COMPACTED TO FINISH FLUSH WITH THE ADJACENT PAVEMENT SURFACE. THE REPAIR AREAS SHALL BE PAINTED WITH BITUMINOUS MATERIAL (SIDES AND BOTTOM). ALL COMPACTION SHALL BE ACHIEVED BY MECHANICAL METHODS TO THE SATISFACTION OF THE ENGINEER. MAXIMUM LIFT THICKNESS SHALL BE 76mm.

PAYMENT SHALL INCLUDE ALL LABOR, EQUIPMENT AND MATERIALS NECESSARY TO COMPLETE THE PAVEMENT REPAIR. THE FOLLOWING ESTIMATED QUANTITY IS PROVIDED IN THE GENERAL SUMMARY TO BE USED AS DIRECTED BY THE ENGINEER. PAYMENT WILL BE MADE AT THE UNIT BID PRICE PER cubic meter,(BY TICKET WEIGHT CONVERSION), OF ITEM 253, PAVEMENT REPAIR.

900 m^3 - PART A

ROUTINE MAINTENANCE

BETWEEN THE TIME THAT BIDS ARE TAKEN AND THE START OF CONSTRUCTION, THE MAINTAINING AGENCY MAY ENTER UPON THE PROJECT AND PERFORM ROUTINE MAINTENANCE SUCH AS CRACK SEALING, PATCHING, AND BERM AND SHOULDER REPAIR. THE EFFECTS, IF ANY, OF THE PERFORMANCE OF ROUTINE MAINTENANCE SHALL BE CONSIDERED AS INHERENT IN WORK OF THE CHARACTER PROVIDED FOR IN THE PLAN AND THE RESULTING CONDITIONS SHALL NOT BE CONSIDERED AS DIFFERING MATERIALLY FROM THOSE EXISTING AT THE TIME BIDS WERE TAKEN.

PROGRESSION OF WORK

WIDENING SHALL BE DONE PRIOR TO RESURFACING. GUARDRAIL WORK SHALL BE DONE AFTER WIDENING, RESURFACING, EMBANKMENT AND BERM WORK SO AS TO ESTABLISH PROPER GRADES FROM WHICH TO CONSTRUCT THE RAIL.

RAISED PAVEMENT MARKER CASTINGS SUPPLIED BY THE DEPARTMENT

THE DEPARTMENT SHALL SUPPLY TO THE CONTRACTOR RPM CASTINGS OR LOW PROFILE RPM CASTINGS WITH TWO WAY YELLOW/YELLOW REFLECTORS IN THE QUANTITIES SHOWN HEREIN. PAY ITEMS FOR THE DEPARTMENT SUPPLIED MATERIALS SHALL BE INDICATED AS "INSTALLATION ONLY." ALL OTHER MATERIALS ARE TO BE CONTRACTOR FURNISHED. THE QUANTITY AND TYPE OF DEPARTMENT SUPPLIED MATERIALS ARE SHOWN ELSEWHERE IN THE PLAN.

THE CONTRACTOR WILL BE INFORMED AT THE PRE-CONSTRUCTION CONFERENCE FOR THE LOCATION OF THE DEPARTMENT SUPPLIED MATERIAL. THE CONTRACTOR SHALL PICK UP DEPARTMENT SUPPLIED RPM MATERIALS AT THE SPECIFIED LOCATION(S) FOR TRANSPORT TO THE WORK SITE OR TO THE CONTRACTOR'S STORAGE FACILITY. AN AUTHORIZATION FOR PICK UP FORM WILL BE FURNISHED BY THE DISTRICT CONSTRUCTION ADMINISTRATOR TO THE CONTRACTOR AT THE PRE-CONSTRUCTION CONFERENCE. THE CONTRACTOR SHALL NOTIFY THE DISTRICT AND/OR THE PARTIES LISTED ON THE AUTHORIZATION FORM (DEPENDENT ON THE STORAGE LOCATIONS OF THE MATERIALS) IN WRITING AT LEAST FIVE (5) CALENDAR DAYS PRIOR TO PICK UP OF DEPARTMENT SUPPLIED MATERIALS. THE CONTRACTOR SHALL STORE THEM WITHOUT DAMAGE OR CONTAMINATION WITH FOREIGN MATTER. A DEDUCTION IN THE AMOUNT OF THE ACTUAL COST TO THE DEPARTMENT SHALL BE MADE FOR MATERIALS DAMAGED BY THE CONTRACTOR OR FOR LOW PROFILE CASTINGS RECEIVED BY THE CONTRACTOR WHICH WERE NOT INSTALLED AND WERE NOT RETURNED TO THE DEPARTMENT.

RETURN OF NON PERFORMED RAISED PAVEMENT MARKER MATERIALS

RAISED PAVEMENT MARKERS THAT ARE NON PERFORMED SHALL BE SORTED BY PRISMATIC RETRO REFLECTOR COLOR AND CAREFULLY PACKED INTO APPROVED CONTAINERS FOR SHIPMENT BY THE CONTRACTOR TO A LOCATION(S) (IN COLUMBUS AND/OR WITHIN THE DISTRICT) AS SPECIFIED AT THE PRE-CONSTRUCTION CONFERENCE. PRISMATIC RETRO REFLECTOR COLORS OR LOW PROFILE CASTINGS SHALL NOT BE MIXED WITHIN ANY ONE CONTAINER. THE CONTRACTOR SHALL CLEARLY MARK, ON THE OUTSIDE OF EACH CONTAINER, THE COLOR OF THE PRISMATIC RETRO REFLECTOR,

FINAL ACCEPTANCE

RAISED PAVEMENT MARKER MATERIALS WHICH ARE UNACCEPTABLE, OR BECOME UNACCEPTABLE PRIOR TO FINAL ACCEPTANCE AS DETERMINED BY THE ENGINEER, FOR CAUSES SUCH AS, BUT NOT LIMITED TO, IMPROPER INSTALLATION, EPOXY NOT HARDENING OR LOSS OF ADHESION TO THE PAVEMENT OR BETWEEN THE LOW PROFILE CASTING AND THE PRISMATIC RETRO-REFLECTOR, LOSS OR IMPROPER REFLECTING PRISMATIC RETRO-REFLECTORS SHALL BE REPLACED BY THE CONTRACTOR WITH RPM MATERIALS CONFORMING TO THESE SPECIFICATIONS AND REQUIREMENTS AT HIS EXPENSE WITHOUT DELAY. THE CONTRACTOR WILL NOT RECEIVE PAYMENT FOR UNACCEPTABLE WORK WHICH IS NON PERFORMED

metric units

ITEM 617. SHOULDER RECONDITIONING, MISC.: COMPACTED AGGREGATE

THIS ITEM OF WORK SHALL CONFORM TO ITEM 617 IN THE CONSTRUCTION AND MATERIALS SPECIFICATIONS BOOK WITH EXCEPTION OF 617.03 (MATERIALS) AND 617.06 (METHOD OF MEASUREMENT).

THE MATERIAL ON THIS PROJECT SHALL BE THE BITUMINOUS ASPHALT GRINDINGS RESULTING FROM ITEM 254. THE GRINDINGS USED FOR THIS ITEM SHALL BE PLACED AND COMPACTED AS DESCRIBED IN 617.05 WITH SPECIAL CARE TO CREATE PROPER COMPACTION. 100% OF THIS MATERIAL SHALL PASS A 32mm SIEVE AS JUDGED BY THE ENGINEER. THE CONTRACTOR SHALL TAKE SPECIAL CARE TO MEET THE TYPICAL SECTIONS SHOWN IN THE PLANS AND AS DIRECTED BY THE ENGINEER.

SINCE THE BITUMINOUS ASPHALT GRINDINGS FROM THIS JOB WILL NOT BE A LARGE ENOUGH QUANTITY TO RECONDITION THE AGGREGATE SHOULDERS, THE CONTRACTOR WILL NEED TO SUPPLY THE ADDITIONAL QUANTITY FROM AN APPROVED RAP (RECYCLED ASPHALT PAVEMENT) PILE OR SUPPLY ITEM 617 COMPACTED AGGREGATE, TYPE A AS SPECIFIED IN THE SPECIFICATIONS BOOK.

THE MATERIAL ON THIS PROJECT WILL BE PAID FOR BY THE metric ton. THE CONTRACTOR SHALL BE RESPONSIBLE FOR RECORDING THE GROSS, TARE, AND NET WEIGHT OF EACH TRUCK LOAD OF MATERIAL TO THE NEAREST 45 kg IN TRIPLICATE ON PLANT TICKET FORMS APPROVED BY THE DIRECTOR. THE CONTRACTOR SHALL PROVIDE A TARE WEIGHT FOR EACH TRUCK AT THE BEGINNING OF EACH DAY'S OPERATION. ONE COPY OF THE WEIGHT TICKET SHALL ACCOMPANY EACH LOAD DELIVERED TO THE PROJECT AND SHALL BE PRESENTED TO THE ENGINEER.

PAYMENT FOR ALL THE ABOVE SHALL BE INCLUDED IN THE PRICE BID PER metric ton OF 617 SHOULDER RECONDITIONING, MISC.:COMPACTED AGGREGATE.

COORDINATION OF ASPHALT PLANING/PAVING OPERATIONS WITH THE DISTRICT 3 ELECTRICAL LOOP DETECTOR MAINTENANCE CONTRACTOR

THE CONTRACTOR SHALL NOTIFY THE LOCAL AGENCIES TO DETERMINE IF LOOP DETECTORS EXIST IN THE PAVEMENT AT INTERSECTIONS WHICH ARE BEING PLANED.

IF THERE ARE LOOP DETECTORS PRESENT, IT WILL BE NECESSARY FOR THE CONTRACTOR TO COORDINATE WITH THE LOOP DETECTOR MAINTENANCE (LDM) CONTRACTOR. THE INTENT IS TO REPLACE LOOP DETECTORS DAMAGED OR REMOVED BY ASPHALT PLANING OPERATIONS AT INTERSECTIONS THAT HAVE LOOP DETECTORS.

THE NAME AND TELEPHONE NUMBER OF THE LDM CONTRACTOR WILL BE PROVIDED AT THE PRECONSTRUCTION MEETING, IF NEEDED.

THE CONTRACTOR SHALL NOTIFY THE DISTRICT TRAFFIC ENGINEER AND THE LDM CONTRACTOR A MINIMUM OF TWENTY-ONE (21) DAYS PRIOR TO THE COMPLETION OF THE ASPHALT PLANING AT INTERSECTIONS THAT HAVE LOOP DETECTORS.

THE CONTRACTOR SHALL SCHEDULE THE LDM CONTRACTOR THREE (3) CONSECUTIVE WORK DAYS TO PERFORM THE LOOP DETECTOR REPLACEMENT WORK. THE THREE (3) DAY PERIODS BEGIN ON THE NEXT WORKING DAY FOLLOWING THE DAY PAVEMENT PLANING IS COMPLETED FOR EACH INTERSECTION. THE LDM CONTRACTOR SHALL BE ALLOWED THREE (3) CONSECUTIVE NONCONCURRENT WORK DAYS FOR EACH INTERSECTION TO COMPLETE THE LOOP DETECTOR REPLACEMENT WORK BEFORE RESURFACING AT THE INTERSECTION CAN BEGIN. THE CONTRACTOR SHALL COOPERATE AS PER 105.07 OF THE CONSTRUCTION AND MATERIAL SPECIFICATIONS.

ITEM 608 CURB RAMP, TYPE 1, AS PER PLAN

AT THE FOLLOWING LOCATIONS, CURB RAMPS, TYPE 1, AS PER PLAN SHALL BE INSTALLED ON

N.E. CORNER OF US 250 AND CANTON ST.	1 EACH
N.W. CORNER OF US 250 AND CANTON ST.	1 EACH
S.E. CORNER OF US 250 AND CANTON ST.	1 EACH
S.W. CORNER OF US 250 AND CANTON ST.	1 EACH
N.E. CORNER OF US 250 AND SR 94	1 EACH
S.E. CORNER OF US 250 AND SR 94	1 EACH
TOTAL	6 EACH

THE REMOVAL OF THE EXISTING SIDEWALK AND CURB SHALL BE PAID FOR SEPERATELY. IF ADDITIONAL SIDEWALK AND/OR CURB IS REMOVED, THEN THE REPLACEMENT WILL BE INCLUDED WITH THE COST OF ITEM 608 CURB RAMP, TYPE 1, AS PER PLAN. SEEDING AND MULCHING IS ALSO INCLUDED IN THE COST OF ITEM 608 CURB RAMP, TYPE 1, AS PER PLAN, IF NEEDED. ALL MATERIAL, EQUIPMENT, AND LABOR REQUIRED FOR THE INSTALLATION OF THESE CURB RAMPS SHALL BE PAID FOR UNDER THE UNIT BID PRICE BID OF ITEM 608 CURB RAMP, TYPE 1, AS PER PLAN.

ITEM 202 WALK REMOVED

AT THE FOLLOWING LOCATIONS, WALK SHALL BE REMOVED IN ORDER TO INSTALL CURB RAMPS.

N.E. CORNER OF US 250 AND CANTON ST.	$3.9m^2$
N.W. CORNER OF US 250 AND CANTON ST.	$1.4m^2$
S.E. CORNER OF US 250 AND CANTON ST.	$2.8m^2$
S.W. CORNER OF US 250 AND CANTON ST.	$1.6m^2$
N.E. CORNER OF US 250 AND SR 94	$4.6m^2$
S.E. CORNER OF US 250 AND SR 94	$2.4m^2$
TOTAL	$17.0m^2$

THE REMOVAL OF THE EXISTING WALK SHALL BE PAID FOR UNDER THE UNIT BID PRICE PER SQUARE METER OF ITEM 202 WALK REMOVED.

ITEM 202 CURB REMOVED

AT THE FOLLOWING LOCATIONS, CURB SHALL BE REMOVED IN ORDER TO INSTALL CURB RAMPS.

N.E. CORNER OF US 250 AND CANTON ST.	4.0m
N.W. CORNER OF US 250 AND CANTON ST.	2.4m
S.E. CORNER OF US 250 AND CANTON ST.	3.7m
S.W. CORNER OF US 250 AND CANTON ST.	2.4m
N.E. CORNER OF US 250 AND SUGAR ST.	4.6m
N.W. CORNER OF US 250 AND SUGAR ST.	3.7m
S.E. CORNER OF US 250 AND SUGAR ST.	4.0m
S.W. CORNER OF US 250 AND SUGAR ST.	3.7m
N.E. CORNER OF US 250 AND SR 94	4.9m
S.E. CORNER OF US 250 AND SR 94	3.7m
TOTAL	37.0m

THE REMOVAL OF THE EXISTING CURB SHALL BE PAID FOR UNDER THE UNIT BID PRICE PER METER OF ITEM 202 CURB REMOVED.

UNDERGROUND UTILITIES:

EXTREME CAUTION SHOULD BE EXERCISED IN AREAS WITH UNDERGROUND WATER LINES, DRAINS, CABLES, SEWERS OR OTHER UTILITIES.

THE CONTRACTOR IS FULLY RESPONSIBLE FOR ALL DAMAGE INFLICTED ON UNDERGROUND UTILITIES IN THE EXECUTION OF THIS CONTRACT.

THE FOLLOWING IS A LIST OF UTLITIES WHICH MAY BE INVOLVED. THE OHIO DEPT. OF TRANSPORTATION DOES NOT GUARANTEE THE COMPLETENESS OF THIS LIST.

AT&T
MR. CARL JACKSON
ENGINEERING SUPERVISOR
15821 COUNTY ROAD 15
BLUFFTON, OHIO 45817
(419) 859-2196

THE EAST OHIO GAS CO., GSO DIV.
MR. RON REVLOCK
7015 FREEDOM AVE., N.W.
NORTH CANTON, OHIO 44720
(330) 497-5136

COLUMBIA GAS OF OHIO, INC.
MR. MARK S. HILL
OPERATIONS ENGINEER
204 HIGHLAND AVE.
CAMBRIDGE, OHIO 43725
(614) 439-1306

COLUMBIA GAS TRANSMISSION CORP.
MR. EDWARD J. HASS
PROPERTY PROTECTION/RELOCATION AGENT
P.O. BOX 758
3151 LINCOLN WAY WEST
WOOSTER, OHIO 44691
(330) 287-6634

NORTHEAST OHIO NATURAL GAS
MR. GARRY O. HURLES
9081 USR 250
STRASBURG, OHIO 44680

M.B. OPERATING CO.
MR. DONALD P. BENDETTA
MR. RICH SPONAUGLE
104 SIXTH ST. SW
CANTON, OHIO 44702
(330) 456-2454

HOLMES-WAYNE ELECTRIC CO-OP, INC.
MR. SAMUEL RIGGLE, JR.
GENERAL MANAGER
P.O. BOX 112
MILLERSBURG, OHIO 44654
(330) 674-1055

AEP (OHIO POWER COMPANY)
MR. STANLEY E. WILSON
PUBLIC PROJECT COORDINATOR
1 RIVERSIDE PLAZA-METAL FORGE
COLUMBUS, OHIO 43215
(614) 223-1579

GTE
1121 TUSCARAWAS AVE. N.W.
NEW PHILADELPHIA, OHIO 44663

VILLAGE OF APPLE CREEK
MAYOR ALAN H. MILLER
P.O. BOX 208
APPLE CREEK, OHIO 44606
(330) 698-5462

VILLAGE OF MT. EATON
MAYOR ELTON LEHMAN
P.O. BOX 100
MT. EATON, OHIO 44659

BELDEN & BLAKE
5200 STONEHAM RD.
N. CANTON, OHIO 44706
(330) 499-1660

ASHLAND PETROLEUM COMPANY
MR. ROGER L. SWICK, COOROSION TECH.
245 MILL ST.
P.O. BOX 3104
LEXINGTON, OHIO 44904
(419) 884-0800

ITEM 604, CATCH BASIN FRAME AND GRATE, TYPE DR

EXISTING CATCH BASINS SHALL BE MODIFIED BY REPLACING THE EXISTING FRAMES AND GRATES WITH A FRAME AND GRATE WHICH IS BICYCLE SAFE. THE FRAME AND GRATE SHALL BE NEENAH NO. R-3576 OR APPROVED EQUAL, 914mm X 508mm. THE FOLLOWING ESTIMATED QUANTITIES HAVE BEEN INCLUDED IN THE GENERAL SUMMARY FOR USE AS DIRECTED BY THE ENGINEER FOR REPLACEMENT OF EXISTING CATCH BASIN FRAMES AND GRATES WITH A FRAME AND GRATE WHICH IS BICYCLE SAFE.

ITEM 604, CATCH BASIN FRAME AND GRATE, TYPE DR 20 EACH

metric units

CALCULATED CVH checked MJS

PLAN NO.

GENERAL NOTES

WAY-US250-22.531a

ITEM SPECIAL, MAILBOX SUPPORT

THIS ITEM OF WORK SHALL CONSIST OF THE REMOVAL OF EXISTING NON-STANDARD MAILBOX SUPPORTS AND FURNISHING AND ERECTING MAILBOX SUPPORTS AND ANY ASSOCIATED HARDWARE IN ACCORDANCE WITH THE DETAILS SHOWN, AND ATTACHING AN OWNER SUPPLIED MAILBOX, AT LOCATIONS DETERMINED BY THE ENGINEER.

IN ABSENCE OF A NEW BOX SUPPLIED BY THE OWNER THE CONTRACTOR SHALL SALVAGE THE EXISTING BOX AND PLACE IT ON THE NEW SUPPORT. DUE CARE SHALL BE EXERCISED IN SUCH AN OPERATION, THE CONTRACTOR SHALL BE RESPONSIBLE FOR REPAIRING OR REPLACING ANY BOX DAMAGED BY IMPROPER HANDLING, AS JUDGED AND DIRECTED BY THE ENGINEER.

THE BOX SHALL BE SECURELY AND NEATLY ATTACHED BY THE CONTRACTOR TO THE NEW SUPPORT. THE CONTRACTOR SHALL SUPPLY ALL NECESSARY ATTACHMENT HARDWARE (NUTS, BOLTS, PLATES, SPACERS AND WASHERS) AS NECESSARY TO ACCOMODATE THE COMPLETE INSTALLATION. SUPPORT HARDWARE SHALL ACCOMODATE EITHER A SINGLE OR A DOUBLE MAILBOX INSTALLATION, AND NO MORE THAN TWO MAILBOXES MAY BE MOUNTED ON A SINGLE POST. [HARDWARE SHALL BE COMMERCIAL GRADE GALVANIZED STEEL]

SATISFACTORY SUPPORTS ARE AS FOLLOWS: [MAXIMUM 100mm x 100mm SQUARE or 115mm DIA. ROUND TIMBER], [MAXIMUM 50mm I.D. STANDARD STRENGTH STEEL PIPE]

POSTS SHALL BE SET AS PER THE FIRST PARAGRAPH OF 606.03, AND SHALL IN NO INSTANCE BE ENCASED IN CONCRETE.

THE CONTRACTOR SHALL BE RESPONSIBLE FOR COORDINATING WORK WITH THE LOCAL POST MASTER AND THE PROPERTY OWNERS.

GROUP MAILBOX SUPPORTS SHALL BE PLACED ON 1.0m CENTERS AND THE TURNOUT LENGTHENED TO ACCOMODATE THE GROUPING.

WHERE GUARDRAIL EXISTS, MAILBOXES AND THEIR SUPPORTS SHALL BE PLACED BEHIND THE GUARDRAIL. SUPPORTS MUST STILL MEET THE BREAKAWAY REQUIREMENTS LISTED ABOVE.

THE FOLLOWING ESTIMATED QUANTITIES HAVE BEEN CARRIED TO THE GENERAL SUMMARY TO BE USED AS DESCRIBED ABOVE.

ITEM SPECIAL-MAILBOX SUPPORT SYSTEM, SINGLE
33 EACH

ITEM SPECIAL-MAILBOX SUPPORT SYSTEM, DOUBLE
39 EACH

MAILBOXES

EXISTING AGGREGATE MAILBOX APPROACHES SHALL BE PAVED WITH 19mm OF INTERMEDIATE COURSE AND 25mm OF SURFACE COURSE. THEY SHALL CONFORM AS MUCH AS PRACTICAL TO STANDARD DRAWING BP-4.1M OR AS DIRECTED BY THE ENGINEER.

GRADING SHALL BE PERFORMED IN THESE AREAS TO OBTAIN A BASE WHICH WILL ALLOW THE FINISHED GRADE TO BE FLUSH WITH ADJACENT PAVEMENT. A QUANTITY OF 617 SHOULDER RECONDITIONING,MISC.: COMPACTED AGGREGATE HAS BEEN PROVIDED FOR AREAS WHERE THE SHOULDER IS LOW PRIOR TO GRADING AND/OR LOW AREAS CAUSED BY THE REMOVAL OF UNSUITABLE MATERIAL. QUANTITIES TO PERFORM THIS WORK HAVE BEEN INCLUDED IN THE GENERAL SUMMARY AND ARE ESTIMATED AS FOLLOWS.

ITEM 203, GRADING MAILBOX APPROACHES:
56 each

ITEM 617, SHOULDER RECONDITIONING, MISC.: COMPACTED AGGREGATE
85 metric ton

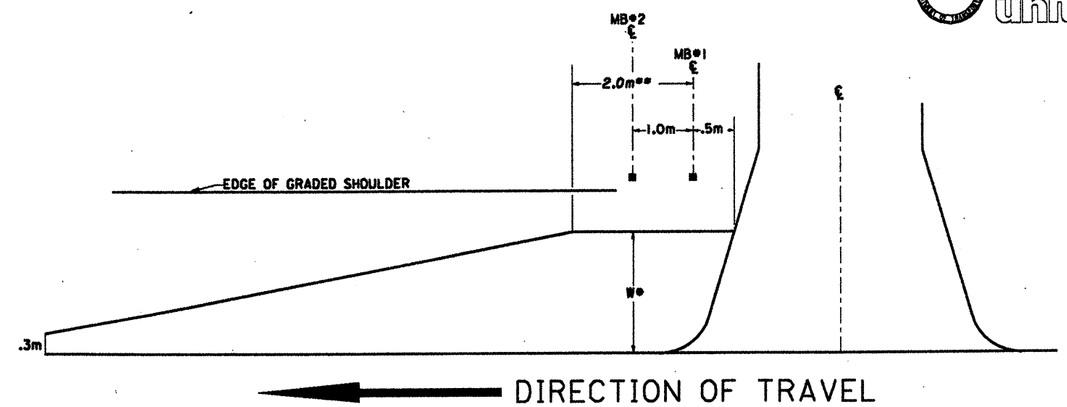

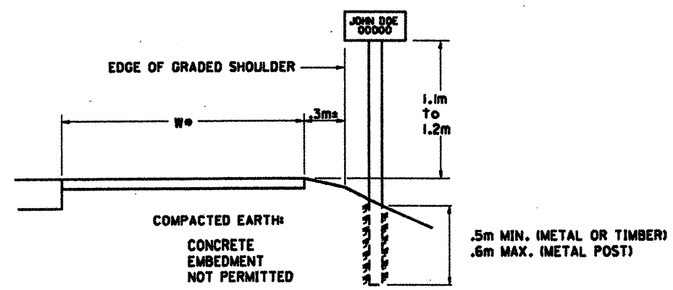

* WHERE MAILBOX POSTS ARE BEHIND GUARDRAIL, TURNOUT SHALL EXTEND TO FACE OF GUARDRAIL. WHERE NO GUARDRAIL IS REQUIRED, TURNOUT WIDTH SHALL BE 1.8m MINIMUM, EXCEPT WHERE FIELD CONDITIONS WILL NOT PERMIT.

** ADD 1.0m FOR EACH ADDITIONAL MAILBOX

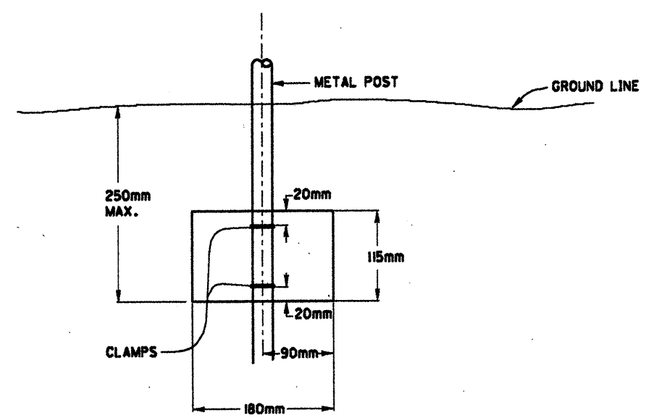

ANTI-TWIST PLATE

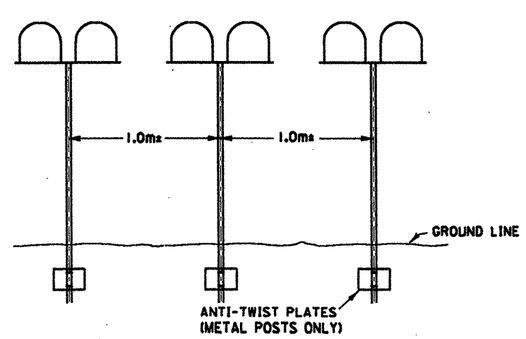

GROUP MAILBOX INSTALLATION

metric units

calculated CVH
checked MJS

PLAN NO.

MAILBOX FACILITIES

WAY-US250-22.531a

10
48

EXISTING STRUCTURE VERIFICATION:

DETAILS AND DIMENSIONS SHOWN ON THESE PLANS PERTAINING TO THE EXISTING STRUCTURE HAVE BEEN OBTAINED FROM PLANS OF THE EXISTING STRUCTURE AND FROM FIELD OBSERVATIONS AND MEASUREMENTS. CONSEQUENTLY, THEY ARE INDICATIVE OF THE EXISTING STRUCTURE AND THE PROPOSED WORK BUT THEY SHALL BE CONSIDERED TENTATIVE AND APPROXIMATE. THE CONTRACTOR IS REFERRED TO C.M.S. SECTIONS 102.05, 105.02 AND 513.02. THE ORIGINAL CONSTRUCTION PLANS OF THE EXISTING BRIDGE ARE AVAILABLE UPON REQUEST AT THE DISTRICT 3 OFFICE OF THE OHIO DEPARTMENT OF TRANSPORTATION, ASHLAND, OHIO.

CONTRACT BID PRICES SHALL BE BASED UPON A RECOGNITION OF THE UNCERTAINTIES DESCRIBED ABOVE AND UPON A PRE-BID EXAMINATION OF THE EXISTING STRUCTURE BY THE CONTRACTOR. HOWEVER, ALL PROJECT WORK SHALL BE BASED ON ACTUAL DETAILS AND DIMENSIONS WHICH HAVE BEEN VERIFIED BY THE CONTRACTOR IN THE FIELD.

DESIGN SPECIFICATIONS:

THIS STRUCTURE CONFORMS TO "STANDARD SPECIFICATIONS FOR HIGHWAY BRIDGES" ADOPTED BY THE AMERICAN ASSOCIATION OF STATE HIGHWAY AND TRANSPORTATION OFFICIALS, 1992, INCLUDING THE 1993, 1994, AND 1995 INTERIM SPECIFICATIONS, AND THE ODOT BRIDGE DESIGN MANUAL.

DESIGN DATA:

CONCRETE CLASS C - COMPRESSIVE STRENGTH 27.5 MPa

REINFORCING STEEL - ASTM A615M, A616M, A617M - GRADE 400 MINIMUM
YIELD STRENGTH 400 MPa

PLACING ASPHALT CONCRETE FEATHERING ON APPROACHES TO BRIDGES:

SPECIAL CARE SHALL BE TAKEN, WHEN PLACING THE ASPHALT CONCRETE FEATHERING TO EFFECT A SMOOTH TRANSITION FROM THE EXISTING APPROACH PAVEMENT TO THE BRIDGE DECK OR APPROACH SLAB. THE CONTRACTOR'S ATTENTION IS CALLED TO SECTION 404.16 OF THE C.M.S. AND TO STANDARD DRAWING BP-3.1M FOR THE REQUIRED TOLERANCES.

LOCATIONS OF GUARDRAIL:

THE GUARDRAIL PROTECTION PROVIDED IN THIS PLAN SHALL BE LOCATED IN THE FIELD TO ASSURE THAT THE INSTALLATION WILL AFFORD THE MAXIMUM PROTECTION FOR TRAFFIC. THIS LOCATION SHALL BE POSITIONED AS FAR AS POSSIBLE FROM THE EDGE OF PAVEMENT WHILE MAINTAINING PROPER GRADE IN FRONT OF GUARDRAIL AS PER STANDARDS.

GUARDRAIL POSTS OVER CULVERTS SHALL BE POSITIONED SO THAT INTERFERENCE OR DAMAGE TO THE CULVERT IS AVOIDED.

GUARDRAIL REPLACEMENT:

NO HAZARD SHALL BE LEFT UNPROTECTED EXCEPT FOR THE ACTUAL TIME NECESSARY TO REMOVE, GRADE, AND REINSTALL GUARDRAIL IN A CONTINUOUS OPERATION. THE REMOVAL OF ALL GUARDRAIL SHALL AT ALL TIMES BE AS DIRECTED BY THE ENGINEER. NO GUARDRAIL SHALL BE REMOVED UNTIL THE REPLACEMENT MATERIAL IS ON THE SITE, READY FOR INSTALLATION. FAILURE TO COMPLY WITH THIS REQUIREMENT SHALL BE DEEMED SUFFICIENT CAUSE TO ORDER WORK SUSPENDED ON THIS PROJECT UNTIL SUCH TIME THAT THE ENGINEER IS ASSURED OF SAID COMPLIANCE.

ITEM 202 - APPROACH SLAB REMOVED, AS PER PLAN:

THIS ITEM SHALL BE USED TO REMOVE THE EXISTING APPROACH SLABS WITH ASPHALT OVERLAY AT STRUCTURE WAY-250-26667 S.L.K. (WAY-250-1657 S.L.M.) AND TO REMOVE ANY ADDITIONAL MATERIAL BOTH BELOW AND NEXT TO THE EXISTING APPROACH SLABS NECESSARY FOR THE INSTALLATION OF THE PROPOSED APPROACH SLABS. THE REMOVAL OF ADDITIONAL MATERIAL IS INCIDENTAL TO THIS ITEM AND WILL NOT BE PAID FOR SEPARATELY. ANY POROUS BACKFILL THAT WAS REMOVED BEYOND THE AREA NECESSARY FOR THE PROPOSED APPROACH SLABS SHALL BE REPLACED BY THE CONTRACTOR. THE REPLACEMENT OF POROUS BACKFILL SHALL BE INCIDENTAL TO THIS ITEM.

PAYMENT FOR ALL OF THE ABOVE SHALL BE AT THE UNIT PRICE BID PER SQUARE METER FOR ITEM 202 - APPROACH SLAB REMOVED, AS PER PLAN WHICH SHALL INCLUDE ALL LABOR, EQUIPMENT, MATERIALS, AND INCIDENTALS NECESSARY TO COMPLETE THE ABOVE WORK.

ITEM 202 - PORTIONS OF STRUCTURE REMOVED:

THIS ITEM OF WORK SHALL BE USED TO REMOVE PORTIONS OF THE EXISTING ABUTMENTS AS SHOWN IN THE PLANS ON STRUCTURE WAY-250-26667 S.L.K. (WAY-250-1657 S.L.M.).

THE REMOVAL LINES SHALL BE SAWCUT 25 mm DEEP.

THE CONCRETE SHALL BE REMOVED BY A HYDRAULIC SPLITTING METHOD. A LINE OF HOLES SHALL BE DRILLED ALONG THE REMOVAL LINE AND A HYDRAULIC SPLITTER USED AS PER MANUFACTURER'S RECOMMENDATIONS. SIXTEEN (16) kg AND SEVEN (7) kg JACKHAMMERS SHALL BE USED FOR THE FINAL FINISH WORK. A HOE RAM, CONCRETE CRUSHER, OR OTHER SIMILAR DEVICES SHALL NOT BE PERMITTED TO DO ANY OF THE WORK. CONCRETE SHALL BE REMOVED IN A MANNER THAT PREVENTS CUTTING, ELONGATING, OR DAMAGING OF THE EXISTING REINFORCING STEEL TO BE PRESERVED. IF THE EXISTING REINFORCING STEEL DESIGNATED FOR PRESERVATION IS DAMAGED DURING REMOVAL OPERATIONS, DOWELED REINFORCING STEEL SHALL BE ADDED AT THE CONTRACTOR'S EXPENSE.

PAYMENT FOR ALL OF THE ABOVE SHALL BE AT THE UNIT PRICE BID PER CUBIC METER FOR ITEM 202 - PORTIONS OF STRUCTURE REMOVED WHICH SHALL INCLUDE ALL LABOR, EQUIPMENT, MATERIALS, AND INCIDENTALS NECESSARY TO COMPLETE THE ABOVE WORK.

ITEM 202 - ANCHOR ASSEMBLY REMOVED, TYPE A:

THIS ITEM SHALL BE USED AT LOCATIONS INDICATED IN THE PLAN.

THIS ITEM SHALL INCLUDE THE REMOVAL OF THE EXISTING TYPE A ANCHOR ASSEMBLY INCLUDING ALL POSTS, HARDWARE, RAIL ELEMENT, AND CONCRETE ANCHORS. ALL ITEMS REMOVED BECOME PROPERTY OF THE CONTRACTOR AND SHALL BE PROPERLY DISPOSED OF.

THE EXISTING CONCRETE ANCHOR AND CONCRETE ENCASED POSTS SHALL BE REMOVED ENTIRELY. ALL HOLES REMAINING SHALL BE FILLED WITH GRANULAR MATERIAL OR EXCESS MATERIAL RESULTING FROM GUARDRAIL CONSTRUCTION. ALL FILL MATERIAL SHALL BE THOROUGHLY COMPACTED AND LEVELED AS DIRECTED BY THE ENGINEER.

PAYMENT FOR ALL OF THE ABOVE SHALL BE AT THE UNIT PRICE BID PER EACH FOR ITEM 202 - ANCHOR ASSEMBLY REMOVED, TYPE A WHICH SHALL INCLUDE ALL LABOR, EQUIPMENT, MATERIALS, AND INCIDENTALS NECESSARY TO COMPLETE THE ABOVE WORK.

ITEM 202 - ANCHOR ASSEMBLY REMOVED FOR STORAGE:

ALL PARTS OF TYPE E ANCHOR ASSEMBLY DESIGNATED BY THE ENGINEER FOR SALVAGE SHALL BE STORED AS DIRECTED BY THE ENGINEER FOR REMOVAL BY STATE FORCES. ALL MATERIAL NOT CONSIDERED SALVAGEABLE SHALL BE DISPOSED OF BY THE CONTRACTOR IN ACCORDANCE WITH 202.02.

PAYMENT FOR ALL OF THE ABOVE SHALL BE AT THE UNIT PRICE BID PER EACH FOR ITEM 202 - ANCHOR ASSEMBLY REMOVED FOR STORAGE WHICH SHALL INCLUDE ALL LABOR, EQUIPMENT, MATERIALS, AND INCIDENTALS NECESSARY TO COMPLETE THE ABOVE WORK.

ITEM 203 - EMBANKMENT, AS PER PLAN:

AT SPECIFIED LOCATIONS AND LOCATIONS AS DIRECTED BY THE ENGINEER, EMBANKMENT SHALL BE PLACED AS TO PROVIDE A SUITABLE AREA TO CONSTRUCT THE GUARDRAIL.

AREAS WHERE EMBANKMENT MATERIALS ARE TO BE PLACED SHALL BE SCALPED. THE REQUIREMENTS FOR MOISTURE, DENSITY CONTROL AND BENCHING SHALL BE WAIVED. THE DEPTH OF LAYERS IN WHICH THE EMBANKMENTS ARE PLACED AND THE METHOD OF COMPACTION SHALL BE DETERMINED BY THE ENGINEER. AFTER THE EMBANKMENT HAS BEEN PLACED, THE AREAS SHALL BE FERTILIZED, SEEDED, MULCHED, AND WATERED AS PER ITEM 659. THE COST SHALL BE INCLUDED IN THIS ITEM FOR PAYMENT. THE METHOD OF MEASUREMENT FOR EMBANKMENT MATERIAL SHALL BE THE NUMBER OF CUBIC METERS MEASURED BY LOOSE VOLUME IN THE CARRIER AT THE WORK SITE, IN LIEU OF THE REQUIREMENTS OF 203.15, AND PAYMENT FOR ACCEPTED QUANTITIES WILL BE MADE AT THE CONTRACT UNIT BID PRICE PER CUBIC METER FOR ITEM 203 - EMBANKMENT, AS PER PLAN AND SHALL INCLUDE ALL WORK DESCRIBED ABOVE AND AT ALL TIMES BE AS DIRECTED BY THE ENGINEER.

ITEM 510 - DOWEL HOLES WITH NONSHRINK, NONMETALLIC GROUT, AS PER PLAN:

ALL DOWEL HOLES SHALL BE CORE DRILLED AND GROUTED WITH AN EPOXY MORTAR.

PAYMENT FOR ALL OF THE ABOVE SHALL BE AT THE UNIT PRICE BID PER EACH FOR ITEM 510 - DOWEL HOLES WITH NONSHRINK, NONMETALLIC GROUT, AS PER PLAN WHICH SHALL INCLUDE ALL LABOR, EQUIPMENT, MATERIALS AND INCIDENTALS NECESSARY TO COMPLETE THE ABOVE WORK.

ITEM 606 - RAISING TYPE 5 GUARDRAIL:

WHERE DESIGNATED IN THE PLAN, THE EXISTING TYPE 5 GUARDRAIL SHALL BE RAISED ON THE EXISTING WOOD POSTS AS PER STANDARD DRAWING GR-2. IM SO AS TO OBTAIN THE STANDARD 685 mm HEIGHT. THE RAIL SHALL BE REATTACHED TO THE POSTS USING NEW POST BOLTS.

THE RAIL SHALL BE DISMANTLED ONLY TO THE EXTENT NECESSARY TO FIELD BORE NEW BOLT HOLES IN THE WOOD POSTS, AND TO RECONNECT THE RAIL AND BLOCK TO EXISTING POSTS.

THE EXISTING TYPE "A" ANCHOR ASSEMBLIES THAT ARE TO REMAIN SHALL NOT BE ADJUSTED. THE LAST RAIL ELEMENT SHALL BE TRANSITIONED TO MEET THESE ASSEMBLIES.

PAYMENT FOR ALL OF THE ABOVE SHALL BE AT THE UNIT PRICE BID PER METER FOR ITEM 606 - RAISING TYPE 5 GUARDRAIL WHICH SHALL INCLUDE ALL LABOR, EQUIPMENT, MATERIALS, AND INCIDENTALS NECESSARY TO COMPLETE THE ABOVE WORK.

ITEM 606 - GUARDRAIL POST, 2.75 METER:

PAYMENT FOR ITEM 606 - GUARDRAIL POST, 2.75 METER SHALL INCLUDE COSTS OVER AND ABOVE THE PRICE BID FOR ITEM 606 - GUARDRAIL, TYPE 5 FOR UTILIZING 2.75 METER GUARDRAIL POSTS IN PLACE OF NORMAL LENGTH (1.83 METER) POSTS AT LOCATIONS SPECIFIED IN THE PLAN OR AS DIRECTED BY THE ENGINEER. 2.75 METER GUARDRAIL POSTS SHALL BE INSTALLED WITH A MINIMUM EMBEDMENT DEPTH OF 2.0 METERS.

ITEM 606 - ANCHOR ASSEMBLY REBUILT, TYPE A, AS PER PLAN:

THIS ITEM SHALL CONSIST OF REMOVING ALL ELEMENTS OF THE EXISTING ANCHOR ASSEMBLY, EXCEPT THE 0.9 METER DIAMETER CONCRETE ANCHOR. THE CONCRETE ENCASED POSTS SHALL BE COMPLETELY REMOVED INCLUDING ALL CONCRETE. THE RESULTING HOLES SHALL BE BACKFILLED AND COMPACTED. THE NEW ANCHOR ASSEMBLY SHALL BE CONSTRUCTED AS PER STANDARD DRAWING GR-4. IM.

PAYMENT FOR ALL OF THE ABOVE SHALL BE AT THE UNIT PRICE BID PER EACH FOR ITEM 606 - ANCHOR ASSEMBLY REBUILT, TYPE A, AS PER PLAN WHICH SHALL INCLUDE ALL LABOR, EQUIPMENT, MATERIALS, AND INCIDENTALS NECESSARY TO COMPLETE THE ABOVE WORK.

ITEM 606 - BRIDGE TERMINAL ASSEMBLY, TYPE 4, AS PER PLAN:

THIS ITEM SHALL BE USED AS PER DETAILS IN THE PLAN.

PAYMENT FOR ALL OF THE ABOVE SHALL BE AT THE UNIT PRICE BID PER EACH FOR ITEM 606 - BRIDGE TERMINAL ASSEMBLY, TYPE 4, AS PER PLAN WHICH SHALL INCLUDE ALL LABOR, EQUIPMENT, MATERIALS, AND INCIDENTALS NECESSARY TO COMPLETE THE ABOVE WORK.

ITEM SPECIAL - STRUCTURE, MISC.: JOINT SEALING:

I. DESCRIPTION

THIS ITEM SHALL CONSIST OF FURNISHING THE NECESSARY LABOR, MATERIALS, AND EQUIPMENT NEEDED FOR SURFACE PREPARATION, MIXING AND PLACING THE SEAL ON TO THE CONSTRUCTION JOINT FORMED ALONG NEW PATCHES AND EXISTING UNSEALED OVERLAY JOINTS.

II. MATERIAL

THE JOINT SEAL SHALL BE FURNISHED BY ONE OF THE FOLLOWING:

MANUFACTURER	SEALER DESIGNATION
FORSROC INC. 2 SUMMIT PARK DRIVE SUITE 300 INDEPENDENCE, OH 44131 (216) 642-9342	NITOBOND ULV
SIKA CORPORATION 1300 GRANGER ROAD BROOKLYN HEIGHTS, OH 44131 (216) 749-7225	SIKADUR 35 HI-MOD LV
POLY-CARB 33095 BAINBRIDGE ROAD SOLON, OH 44139 (216) 248-1223	MARK - 135 SAFE-T-SEAL

THE MATERIAL MANUFACTURER SHALL PROVIDE BEFORE APPLICATION A CHART SHOWING AMBIENT TEMPERATURE VERSES OPEN TIME (LIQUID STATE), INITIAL STATE (GEL) AND FINAL CURE (SOLID STATE).

THE SAND USED TO COVER THE EPOXY SHALL BE BEST 620 SILICA SAND AVAILABLE FROM:

WALTER C. BEST
P.O. BOX 87
CHARDON, OH 44024
(216) 285-3132

OR AN APPROVED ALTERNATE.

III. PLACEMENT

A) APPLICATION

THE JOINT SEAL SHALL BE POURED INTO THE JOINT WITH A NARROW NOZZLE CONTAINER. AS THE JOINT SEAL PENETRATES INTO THE JOINT, THE SEAL SHALL BE REAPPLIED. TO ENHANCE THE PENETRATION OF THE JOINT SEAL, A SQUEEGEE SHALL BE WORKED BACK AND FORTH ACROSS THE JOINT. ALL SEALING MATERIAL SHALL BE WITHIN A 100 mm WIDE AREA, 50 mm ON EITHER SIDE OF THE JOINT. ANY MATERIAL OUTSIDE OF THE AREA SHALL BE REMOVED TO THE ENGINEER'S SATISFACTION AT NO COST TO THE STATE.

THE SEALED AREAS OF THE BRIDGE DECK SHALL HAVE SAND BROADCAST AFTER 45 MINUTES, BUT BEFORE THE EPOXY HAS PASSED FROM THE OPEN TIME (LIQUID STATE) TO THE GEL STATE. THE SAND SHALL SATURATE THE SEAL AT A RATE OF 2 kg OF SAND PER SQUARE METER. THE SAND SHALL HAVE A MAXIMUM MOISTURE CONTENT OF 0.5 OF THE PERCENT ABSORPTION WHEN TESTED IN ACCORDANCE TO A CALIFORNIA TEST 226.

B) PLACEMENT LIMITATIONS

1) THE EPOXY SHALL BE PLACED AT AN AMBIENT TEMPERATURE DEFINED AS DECK SURFACE TEMPERATURE SUCH THAT THE OPEN TIME (LIQUID STATE) IS GREATER THAN ONE HOUR AND FINAL CURE IS LESS THAN SIX HOURS.

2) JOINT SEAL SHALL NOT BE PLACED WITHIN 48 HOURS AFTER A RAIN OR WHEN RAIN IS FORECAST WITHIN 12 HOURS. JOINT SEAL SHALL NOT BE APPLIED WHEN THE DECK SURFACE TEMPERATURE IS LESS THAN 3°C ABOVE THE DEW POINT OR WHEN THE RELATIVE HUMIDITY IS GREATER THAN 85%. JOINT SEAL SHALL NOT BE APPLIED TO WET OR DAMP SURFACES.

3) PLACEMENT SHALL NOT START UNTIL ATMOSPHERIC TEMPERATURE IS WITHIN 8°C OF THE PROJECTED MAXIMUM ATMOSPHERIC TEMPERATURE FOR THE DAY.

4) THE EPOXY SHALL BE PLACED WHEN THE DECK SURFACE TEMPERATURE IS BELOW 41°C.

C) CURE

THE CONTRACTOR MAY CONTROL CURE TIME BY VARYING THE SIZE AND SHAPE OF MIXING CONTAINER, AMOUNT MIXED AT ONE TIME, THE TEMPERATURE OF RESIN AND HARDENER AND THE TYPE OF HARDENER USED.

(NOTE CONTINUED)

ITEM SPECIAL - STRUCTURE, MISC.: JOINT SEALING (CONTINUED):

D) CURE TIME TEST

THE CONTRACTOR SHALL MAKE 100 GRAM SAMPLES FOR CURE TIME TESTS FOR EACH BATCH OF EPOXY MIX. THE TIME TO INITIAL CURE (GEL STATE) AND FINAL CURE (SOLID STATE) SHALL BE RECORDED FOR EACH CURE TIME TEST. THESE TESTS SHALL BE USED TO VERIFY THE MANUFACTURER'S CHART AND TO ADJUST EACH EPOXY APPLICATION FOR FIELD CONDITIONS.

TRAFFIC AND EQUIPMENT SHALL NOT BE PERMITTED ON THE TREATED DECK UNTIL IT IS TACK FREE, A MINIMUM OF SIX HOURS HAVE ELAPSED SINCE TREATMENT AND SAND COVER ADHERES SUFFICIENTLY TO RESIST BRUSHING BY HAND OR ONE HOUR BEYOND THE TIME THE EPOXY HAS PASSED FROM INITIAL STATE (GEL) TO FINAL CURE (SOLID STATE).

IV. EQUIPMENT

THE CONTRACTOR SHALL PROVIDE THE ENGINEER THE FOLLOWING TEST EQUIPMENT IN GOOD WORKING CONDITION FOR THE DURATION OF THE PROJECT. IF NO TEST EQUIPMENT IS AVAILABLE NO WORK SHALL BE PERFORMED.

1) ONE (1) SLING PSYCHROMETER INCLUDING PSYCHROMETRIC TABLES USED TO CALCULATE RELATIVE HUMIDITY AND DEW POINT TEMPERATURES.

2) ONE (1) PORTABLE INFRARED THERMOMETER AVAILABLE FROM:

MODEL: RAYNGER ST SERIES (-18° TO 400°C)

MANUFACTURER: RAYTEK INC.
1201 SHAFFFER ROAD
P.O. BOX 1820
SANTA CRUZ, CA 95061-1820
(800) 227-8074

OR AN APPROVED ALTERNATE.

V. METHOD OF MEASUREMENT

THE QUANTITY SHALL BE THE ACTUAL LENGTH IN METER OF JOINT SEALING, COMPLETE, IN PLACE AND ACCEPTED.

VI. BASIS OF PAYMENT

PAYMENT FOR ALL OF THE ABOVE SHALL BE AT THE UNIT CONTRACT PRICE BID PER METER FOR ITEM SPECIAL - STRUCTURE MISC.: JOINT SEALING WHICH SHALL INCLUDE ALL LABOR, EQUIPMENT, MATERIALS, AND INCIDENTALS NECESSARY TO COMPLETE THE ABOVE WORK.

ITEM SPECIAL - RESHAPING BERM:

BERMS AND SHOULDERS AT LOCATIONS WHERE EXISTING GUARDRAIL IS REMOVED OR WHERE GUARDRAIL IS TO BE BUILT, SHALL BE RESHAPED AS DIRECTED BY THE ENGINEER TO INSURE A SMOOTH SURFACE FREE OF IRREGULARITIES. EXCESS MATERIAL RESULTING SHALL BE USED ELSEWHERE FOR THIS ITEM IF SO DIRECTED OR DISPOSED OF. IF EXTRA MATERIAL IS REQUIRED IT SHALL BE PAID FOR WITH ITEM 203 - EMBANKMENT, AS PER PLAN. THIS WORK SHALL NOT BE STARTED UNTIL AFTER THE RESURFACING AND BERM WORK HAS BEEN COMPLETED.

THE AREA IN FRONT OF THE GUARDRAIL SHALL BE GRADED AND RESHAPED TO PROVIDE AN AREA THAT HAS A SLOPE OF 10:1 MAX.

THE ABOVE WORK SHALL BE PAID FOR WITH ITEM SPECIAL - RESHAPING BERM WITH THE EXCEPTION OF ANY EXTRA MATERIAL REQUIRED TO MEET THE SLOPE REQUIREMENTS WHICH SHALL BE PAID BY ITEM 203 - EMBANKMENT, AS PER PLAN.

ITEM 614 - TEMPORARY CENTER LINE, CLASS I:
ITEM 614 - TEMPORARY EDGE LINE, CLASS I:
ITEM 614 - TEMPORARY STOP LINE, CLASS I:

THE CONTRACTOR SHALL BE REQUIRED TO INSTALL VARIOUS TYPES OF PAVEMENT MARKINGS ACCORDING TO THE FOLLOWING CRITERIA CONTINGENT UPON THE SEQUENCE OF CONSTRUCTION. TEMPORARY PAVEMENT MARKINGS SHALL BE 740.05 TYPE C PREFORMED MATERIAL OR 642 PAINT APPLIED USING THE FOLLOWING CRITERIA: ALL TEMPORARY MARKINGS INSTALLED ON THE FINISHED ASPHALT SURFACE SHALL BE 740.05, TYPE C PREFORMED MATERIAL. PAINT MAY BE USED FOR TEMPORARY MARKINGS INSTALLED ON PAVEMENT THAT WILL BE RESURFACED IN THE PROJECT.

PAYMENT FOR ALL OF THE ABOVE SHALL BE AT THE UNIT PRICE BID PER KILOMETER OR METER FOR THE ABOVE ITEMS WHICH SHALL INCLUDE ALL LABOR, EQUIPMENT, MATERIALS AND INCIDENTALS NECESSARY TO COMPLETE THE ABOVE WORK.

MAINTENANCE OF TRAFFIC:

FOR STRUCTURE WAY-250-26667 S.L.K. (WAY-250-1657 S.L.M.):

TWO WAY, ONE LANE TRAFFIC WITH TRAFFIC SIGNALS SHALL BE MAINTAINED FOR MINIMUM PERIODS OF TIME AS DIRECTED BY THE ENGINEER.

THE LOCATION OF THE TRANSITION TAPER AND THE ADVANCE WARNING SIGNS SHOULD BE ADJUSTED TO PROVIDE FOR ADEQUATE SIGHT DISTANCE FOR THE EXISTING VERTICAL AND HORIZONTAL ROADWAY ALIGNMENT.

THE SPACING BETWEEN PROPOSED SIGNS SHOULD BE ADJUSTED TO NOT CONFLICT WITH AND TO PROVIDE A MINIMUM OF 61 m CLEARANCE TO EXISTING SIGNS.

SIGNALS MUST BE LOCATED SO AS TO BE VISIBLE BY DRIVEWAY TRAFFIC.

THE CONTRACTOR SHALL COVER ALL EXISTING SIGNS WHICH CONFLICT WITH THE TRAFFIC CONTROL PHASES SHOWN IN THE PLANS PER 614.03.

THE EXISTING CONFLICTING PAVEMENT MARKINGS AND REFLECTORS FROM THE RAISED PAVEMENT MARKERS (RPMS) SHALL BE REMOVED AND THE APPROPRIATE COLOR TEMPORARY EDGE LINES SHALL BE APPLIED ALONG THE TAPER. TEMPORARY PAVEMENT MARKINGS WHICH WOULD CONFLICT WITH FINAL TRAFFIC LANES SHALL BE REMOVABLE (740.05 TYPE C) TAPE UNLESS THE AREA WILL BE RESURFACED IN THE NEXT WORK PHASE. AFTER COMPLETION OF THE WORK, TEMPORARY MARKINGS SHALL BE REMOVED IN ACCORDANCE WITH 641.10 AND THE ORIGINAL MARKINGS AND RAISED PAVEMENT MARKER REFLECTORS SHALL BE RESTORED. SEE SHEET 23 FOR DETAILS OF TEMPORARY MARKINGS AND TEMPORARY RAISED PAVEMENT MARKERS.

NO EQUIPMENT OR MATERIAL SHALL BE LOCATED OTHER THAN BEHIND THE PORTABLE CONCRETE BARRIER.

AT ALL OTHER LOCATIONS:

TWO WAY TRAFFIC SHALL BE MAINTAINED AT ALL TIMES, DURING WORKING HOURS ONE LANE MAY BE CLOSED USING FLAGGERS AS PER STANDARD DRAWING MT-97.10M.

ALL WORK AND TRAFFIC CONTROL DEVICES SHALL BE IN ACCORDANCE WITH ITEM 614 AND OTHER APPLICABLE PORTIONS OF THE CONSTRUCTION AND MATERIAL SPECIFICATIONS AS WELL AS IN ACCORDANCE WITH PART 7 OF OMUTCD. PAYMENT FOR ALL LABOR, EQUIPMENT AND MATERIALS TO PROVIDE THIS METHOD OF TRAFFIC CONTROL SHALL BE INCLUDED IN THE LUMP SUM BID FOR ITEM 614 - MAINTAINING TRAFFIC, UNLESS SEPARATELY ITEMIZED IN THE PLAN.

metric units

BRIDGE TREATMENT

BRIDGE DECK DATA								ROADWAY DATA		
PART	COUNTY, ROUTE, BRIDGE NO.	STRUCTURE TYPE	LENGTH (BRIDGE LIMITS)	WIDTH	BRIDGE DECK AREA	SKEW	EXISTING WEARING SURFACE	EXISTING PAVEMENT WIDTH	EXISTING APPROACH SLAB WIDTH	EXISTING APPROACH SLAB LENGTH
			mm	mm	square meter			mm	mm	mm
A	● WAY-250-26667 (SLK) WAY-250-1657 (SLM)	3 SPAN CONCRETE SLAB	16 459	12 192	201	0°	CONCRETE	10 360	7163	4572
A	● WAY-250-28019 (SLK) WAY-250-1741 (SLM)	SINGLE SPAN STEEL BEAM	21 946	12 192	268	30° RF	CONCRETE	10 360	12 192	4572
A	●● WAY-250-29869 (SLK) WAY-250-1856 (SLM)	3 SPAN CONCRETE SLAB	24 384	12 344	301	15° LF	CONCRETE	10 970		
A	●●● WAY-250-35824 (SLK) WAY-250-2226 (SLM)	3 SIDED CONCRETE BOX	5181	13 411	69	31° RF	ASPHALT	10 970		

● PLANE 30 m ON BOTH APPROACHES. OMIT RESURFACING ON THE BRIDGE DECK AND APPROACH SLABS, BUTT JOINT AT APPROACH SLABS. (SEE DETAILS IN THE PLAN FOR ADDITIONAL WORK)

●● PLANE 30 m ON BOTH APPROACHES. OMIT RESURFACING ON THE BRIDGE DECK, BUTT JOINT AT BRIDGE. (SEE DETAILS IN THE PLAN FOR ADDITIONAL WORK)

●●● PAVE OVER (FULL WIDTH).

DESIGN FILE: d:\users\nconley\dgn\bridge\1996\way250\equan.dgn
WORKSTATION: nconley DATE: 23 JAN 97

DESIGN AGENCY: DISTRICT THREE
DESIGNED NRC | DRAWN NRC | REVIEWED RON | DATE 1-97
CHECKED | REVISED | STRUCTURAL FILE NUMBER
BRIDGE TREATMENT
WAY-250-22.53/a

metric units

PART	LOCATION	202 APPROACH SLAB REMOVED, AS PER PLAN	202 GUARDRAIL REMOVED	202 ANCHOR ASSEMBLY REMOVED, TYPE A	202 ANCHOR ASSEMBLY REMOVED FOR STORAGE		203 EMBANKMENT, AS PER PLAN	203 SUBGRADE COMPACTION		254 PAVEMENT PLANING, BITUMINOUS			606 GUARDRAIL, TYPE 5	606 GUARDRAIL, TYPE 5 WITH DOUBLE RAILS	606 RAISING TYPE 5 GUARDRAIL
		square meter	meter	each	each		cubic meter	square meter		square meter			meter	meter	meter
A	WAY-250-26667 S.L.K. WAY-250-1657 S.L.M.	68	45.72	3				112		622			68.58		
A	WAY-250-28019 S.L.K. WAY-250-1741 S.L.M.		57.15	2			3			622			180.975		
A	WAY-250-29869 S.L.K. WAY-250-1856 S.L.M.		80.01	4						659			137.16		
A	WAY-250-30.980 S.L.K. WAY-250-19.25 S.L.M.		53.34	4			92						106.68	15.24	
A	WAY-250-33.297 S.L.K. WAY-250-20.69 S.L.M.		72.39	4			81						108.585		
A	WAY-250-33.651 S.L.K. WAY-250-20.91 S.L.M.		34.29	1			16						45.72		
A	WAY-250-35824 S.L.K. WAY-250-2226 S.L.M.				3								41.91		95.25
A	WAY-250-36.162 S.L.K. WAY-250-22.47 S.L.M.		30.48	2			39						87.63	15.24	
A	WAY-250-36.854 S.L.K. WAY-250-22.90 S.L.M.		91.44	4			93						125.73		
A	WAY-250-39.027 S.L.K. WAY-250-24.25 S.L.M.		224.79	4			100						280.035		
A	WAY-250-40.218 S.L.K. WAY-250-24.99 S.L.M.		106.68	3			32						142.875		
A	WAY-250-40.475 S.L.K. WAY-250-25.15 S.L.M.		114.3	4			28						163.83		
A	WAY-250-41.779 S.L.K. WAY-250-25.96 S.L.M.		3.81	4									62.865		91.44
A	WAY-250-43.082 S.L.K. WAY-250-26.77 S.L.M.		281.94	4			97						384.81		
A	WAY-250-44.498 S.L.K. WAY-250-27.65 S.L.M.		201.93	2			39						243.84		
A	WAY-250-44.997 S.L.K. WAY-250-27.96 S.L.M.		777.24	6			46						1019.175		
A	WAY-250-45.979 S.L.K. WAY-250-28.57 S.L.M.		312.42	3			108						485.775		
A	WAY-250-46.623 S.L.K. WAY-250-28.97 S.L.M.		815.34	8			115						1007.745		
	TOTAL	68	3303.27	62	3		889	112		1903			4693.92	30.48	186.69

DESIGN AGENCY: DISTRICT THREE

DESIGNED NRC | DRAWN NRC | REVIEWED RDW | DATE 1-97 | CHECKED | REVISED | STRUCTURAL FILE NUMBER

ESTIMATED QUANTITIES

WAY-250-22.531a

DESIGN FILE: d:\users\nconley\dgn\bridge\1996\way250\equan.dgn
WORKSTATION: nconley DATE: 23 JAN 97

PART	LOCATION	606 GUARDRAIL POST, 2.75 METER	606 FLARED END SECTION	606 ANCHOR ASSEMBLY, TYPE A	606 ANCHOR ASSEMBLY, TYPE T	606 ANCHOR ASSEMBLY REBUILT, TYPE A, AS PER PLAN	606 BRIDGE TERMINAL ASSEMBLY, TYPE 4	606 BRIDGE TERMINAL ASSEMBLY, TYPE 4, AS PER PLAN		611 REINFORCED CONCRETE APPROACH SLAB (T=305 mm)		614 TEMPORARY RAISED PAVEMENT MARKER	614 BARRIER REFLECTOR, TYPE A2	614 BARRIER REFLECTOR, TYPE B2	614 OBJECT MARKER
		each	each	each	each	each	each	each		square meter		each	each	each	each
A	WAY-250-26667 S.L.K. WAY-250-1657 S.L.M.			1	3		4			112		338	12	21	23
A	WAY-250-28019 S.L.K. WAY-250-1741 S.L.M.		1	1	4		3	1							
A	WAY-250-29869 S.L.K. WAY-250-1856 S.L.M.			1	3		4								
A	WAY-250-30.980 S.L.K. WAY-250-19.25 S.L.M.			4											
A	WAY-250-33.297 S.L.K. WAY-250-20.69 S.L.M.	47		3	1										
A	WAY-250-33.651 S.L.K. WAY-250-20.91 S.L.M.			1	1										
A	WAY-250-35824 S.L.K. WAY-250-2226 S.L.M.			2	1										
A	WAY-250-36.162 S.L.K. WAY-250-22.47 S.L.M.			2	2										
A	WAY-250-36.854 S.L.K. WAY-250-22.90 S.L.M.			2	2										
A	WAY-250-39.027 S.L.K. WAY-250-24.25 S.L.M.	134		2	4										
A	WAY-250-40.218 S.L.K. WAY-250-24.99 S.L.M.	71		2	1	1									
A	WAY-250-40.475 S.L.K. WAY-250-25.15 S.L.M.	80		2	2										
A	WAY-250-41.779 S.L.K. WAY-250-25.96 S.L.M.			1	4										
A	WAY-250-43.082 S.L.K. WAY-250-26.77 S.L.M.	185		1	5										
A	WAY-250-44.498 S.L.K. WAY-250-27.65 S.L.M.	123			2										
A	WAY-250-44.997 S.L.K. WAY-250-27.96 S.L.M.	115		1	7										
A	WAY-250-45.979 S.L.K. WAY-250-28.57 S.L.M.	237		1	4										
A	WAY-250-46.623 S.L.K. WAY-250-28.97 S.L.M.	507		1	7										
	TOTAL	1499	1	28	53	1	11	1		112		338	12	21	23

metric units

DESIGN AGENCY: DISTRICT THREE

DESIGNED NRC | DRAWN NRC | REVIEWED RDW | DATE 1-97

CHECKED EHZ | REVISED | STRUCTURAL FILE NUMBER

ESTIMATED QUANTITIES

WAY-250-22.53/a

DESIGN FILE: d:\users\nconley\dgn\bridge\1996\way250\equan.dgn
WORKSTATION: nconley DATE: 27 JAN 97

PART	LOCATION	614 TEMPORARY CENTER LINE, CLASS I	614 TEMPORARY EDGE LINE, CLASS I	614 TEMPORARY STOP LINE, CLASS I		622 PORTABLE CONCRETE BARRIER, 813 mm	622 PORTABLE CONCRETE BARRIER, 813 mm, BRIDGE MOUNTED		802 BARRIER REFLECTOR, TYPE A		SPECIAL RESHAPING BERM				
		kilometer	kilometer	meter		meter	meter		each		meter				
A	WAY-250-26667 S.L.K. WAY-250-1657 S.L.M.	0.10	0.05	7		78	54		7		89				
A	WAY-250-28019 S.L.K. WAY-250-1741 S.L.M.								11		206				
A	WAY-250-29869 S.L.K. WAY-250-1856 S.L.M.								9		157				
A	WAY-250-30.980 S.L.K. WAY-250-19.25 S.L.M.								8		186				
A	WAY-250-33.297 S.L.K. WAY-250-20.69 S.L.M.								7		160				
A	WAY-250-33.651 S.L.K. WAY-250-20.91 S.L.M.								3		66				
A	WAY-250-35824 S.L.K. WAY-250-2226 S.L.M.								7		157				
A	WAY-250-36.162 S.L.K. WAY-250-22.47 S.L.M.								7		142				
A	WAY-250-36.854 S.L.K. WAY-250-22.90 S.L.M.								8		165				
A	WAY-250-39.027 S.L.K. WAY-250-24.25 S.L.M.								13		327				
A	WAY-250-40.218 S.L.K. WAY-250-24.99 S.L.M.								8		194				
A	WAY-250-40.475 S.L.K. WAY-250-25.15 S.L.M.								9		203				
A	WAY-250-41.779 S.L.K. WAY-250-25.96 S.L.M.								8		178				
A	WAY-250-43.082 S.L.K. WAY-250-26.77 S.L.M.								16		421				
A	WAY-250-44.498 S.L.K. WAY-250-27.65 S.L.M.								10		252				
A	WAY-250-44.997 S.L.K. WAY-250-27.96 S.L.M.								37		1063				
A	WAY-250-45.979 S.L.K. WAY-250-28.57 S.L.M.								20		517				
A	WAY-250-46.623 S.L.K. WAY-250-28.97 S.L.M.								37		1052				
	TOTAL	0.10	0.05	7		78	54		225		5535				

metric units

DESIGN AGENCY: DISTRICT THREE

REVIEWED: RDN DATE: 1-97 STRUCTURAL FILE NUMBER

DRAWN: NRC REVISED

DESIGNED: NRC CHECKED

ESTIMATED QUANTITIES

WAY-250-22.531a

20/48

DESIGN FILE: d:\users\nconley\dgn\bridge\1996\way250\equan.dgn
WORKSTATION: nconley DATE: 23 JAN 97

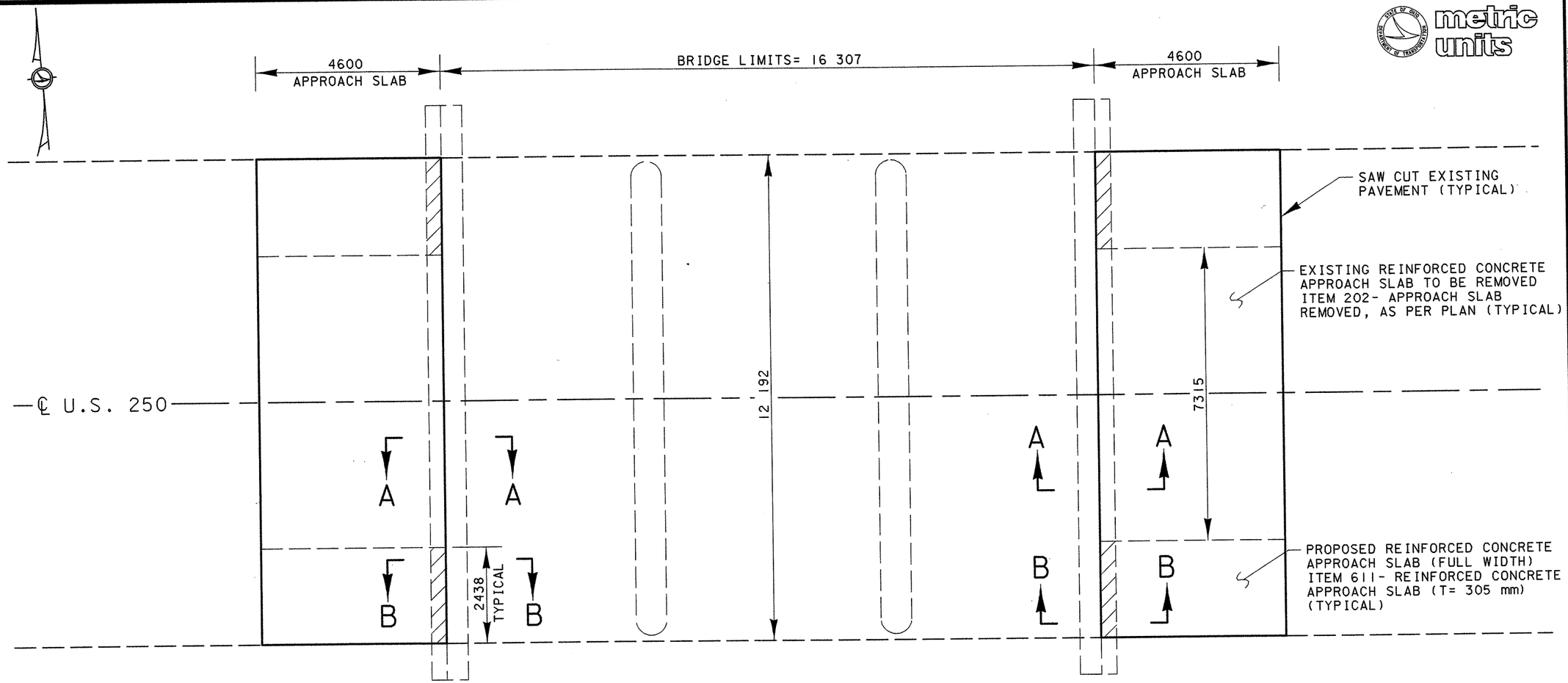

ITEM 202- PORTIONS OF STRUCTURE REMOVED

PLAN VIEW

ITEM	QUANTITY	UNIT	DESCRIPTION
202	2*	cubic meter	PORTIONS OF STRUCTURE REMOVED
202	68	square meter	APPROACH SLAB REMOVED, AS PER PLAN
203	112	square meter	SUBGRADE COMPACTION
509	231*	kilogram	EPOXY COATED REINFORCING STEEL, GRADE 400
510	56*	each	DOWEL HOLES WITH NONSHRINK, NONMETALLIC GROUT, AS PER PLAN
611	112	square meter	REINFORCED CONCRETE APPROACH SLAB (T= 305 mm)

*QUANTITY CARRIED TO GENERAL SUMMARY SHEET, SHEET NO. 4

ALL OTHER QUANTITIES CARRIED TO ESTIMATED QUANTITIES SHEETS, SHEETS NOS. 18 & 19

NOTES:

1) THE EXISTING BRIDGE RAIL AND GUARDRAIL IS NOT SHOWN SEE SHEET 26 FOR ADDITIONAL WORK.

2) BOTH EXISTING CONCRETE APPROACH SLABS SHALL BE REMOVED AND REPLACED WITH NEW FULL WIDTH CONCRETE APPROACH SLABS

3) REMOVAL OF EXISTING MATERIAL ADJACENT TO AND BELOW THE EXISTING APPROACH SLABS IS INCIDENTAL TO ITEM 202- APPROACH SLAB REMOVED, AS PER PLAN

4) SAW CUTTING OF THE EXISTING PAVEMENT IS INCIDENTAL TO ITEM 202- APPROACH SLAB REMOVED, AS PER PLAN

5) FOR SECTIONS A-A AND B-B, SEE SHEET NO. 22

ALL DIMENSIONS ARE IN MILLIMETERS, UNLESS NOTED OTHERWISE

DESIGN FILE:1996\WAY250\MISC.DGN

DESIGN AGENCY: DISTRICT THREE

DESIGNED EJG 12-96 | DRAWN EJG | REVIEWED RDW | DATE 1-97

CHECKED NRC | REVISED | STRUCTURAL FILE NUMBER 8504776

APPROACH SLAB DETAILS AND DECK PATCHING

WAY-250-26667 S.L.K. WAY-250-1657 S.L.M.

WAY-250-22.531a

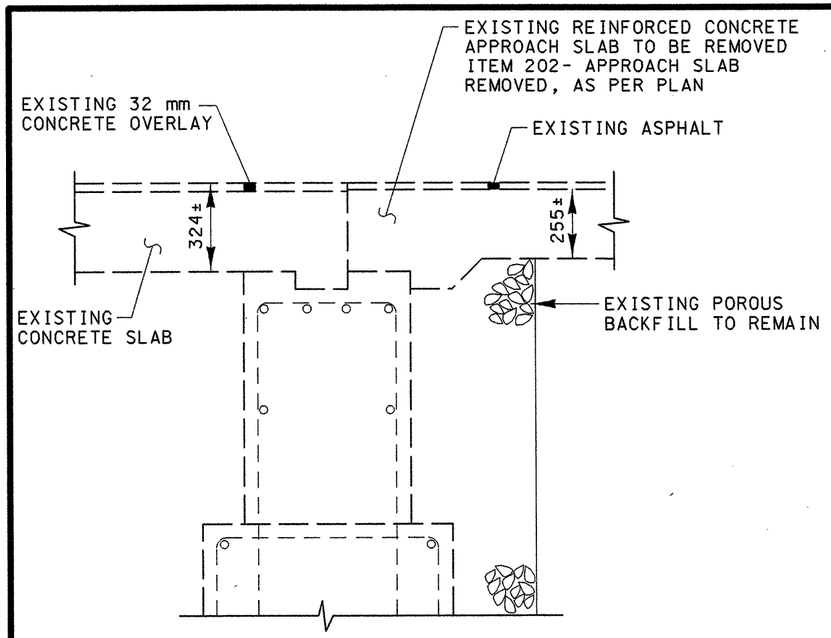

EXISTING SECTION A-A

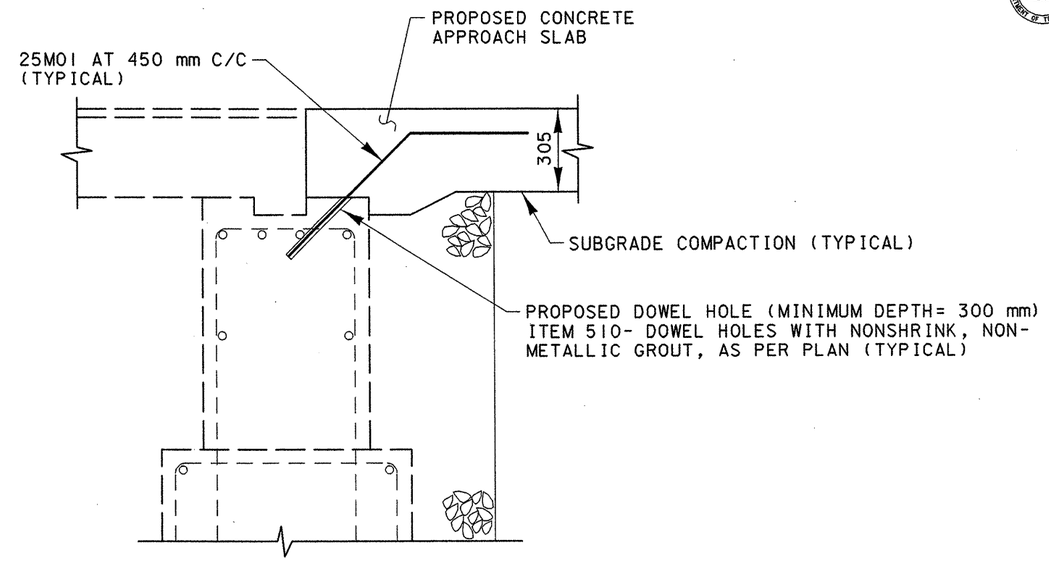

PROPOSED SECTION A-A

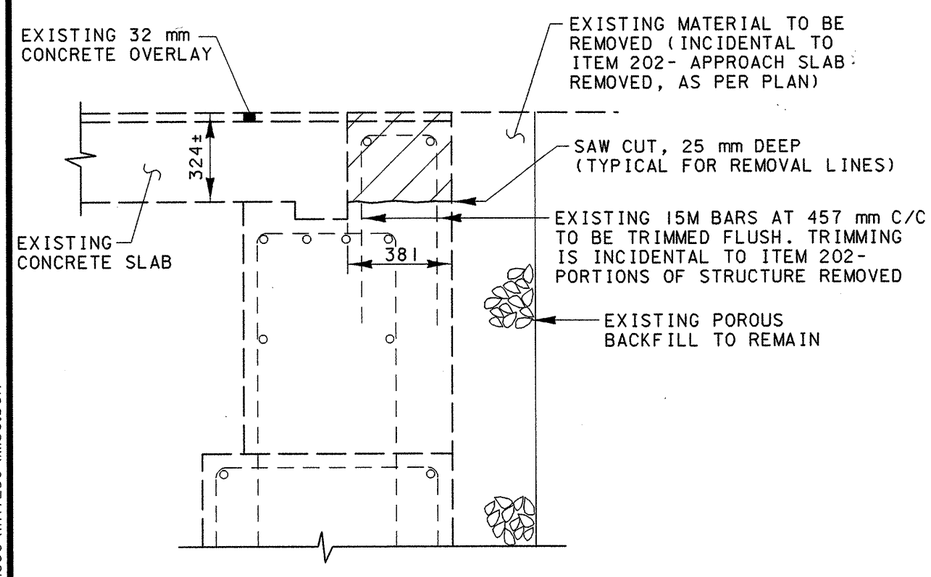

EXISTING SECTION B-B

ITEM 202- PORTIONS OF STRUCTURE REMOVED

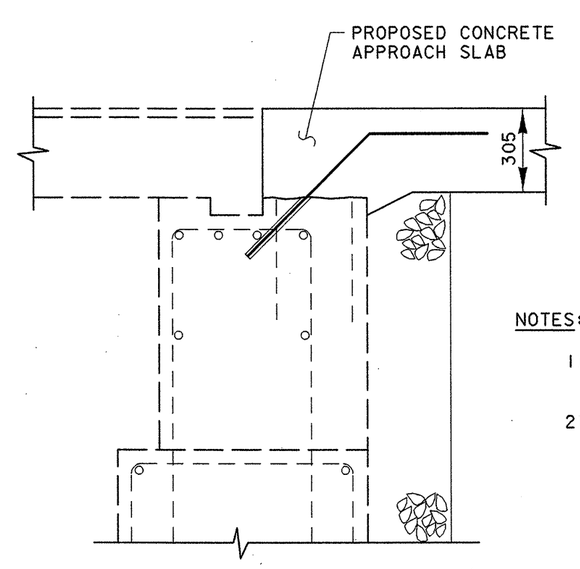

PROPOSED SECTION B-B

ITEM 509 - EPOXY COATED REINFORCING STEEL, GRADE 400

REBAR DATA			QUANTITIES	
MARK	LENGTH (mm)	SHAPE	NUMBER	WEIGHT(kg)
25M01	1050	B	56	231

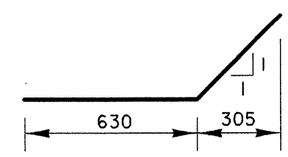

25M01

NOTES:

1) SEE STANDARD DRAWING AS-1-81M FOR APPROACH SLAB DETAILS

2) SAW CUTTING THE REMOVAL LINES IS INCIDENTAL TO ITEM 202 - PORTIONS OF STRUCTURE REMOVED

ALL DIMENSIONS ARE IN MILLIMETERS, UNLESS NOTED OTHERWISE

metric units

DESIGN AGENCY: DISTRICT THREE

DESIGNED EJG 12-96 | DRAWN EJG | REVIEWED RDW | DATE 1-97

CHECKED NRC | REVISED | STRUCTURAL FILE NUMBER 8504776

APPROACH SLAB DETAILS

WAY-250-26667 S.L.K. WAY-250-1657 S.L.M.

WAY-250-22.531a

22/48

DESIGN FILE:1996\WAY250\MISC.DGN

SIGNAL TIMING

A TWO PHASE CONTROLLER WITH CABINET CAPABLE OF BEING SET WITH THE FOLLOWING SPLITS SHALL BE FURNISHED

CYCLE LENGTH: 100 SECONDS

	GREEN	AMBER	RED
PHASE A	35	5	10
PHASE B	35	5	10

THE ABOVE TIMING MAY BE CHANGED WITH THE APPROVAL OF THE ENGINEER

metric units

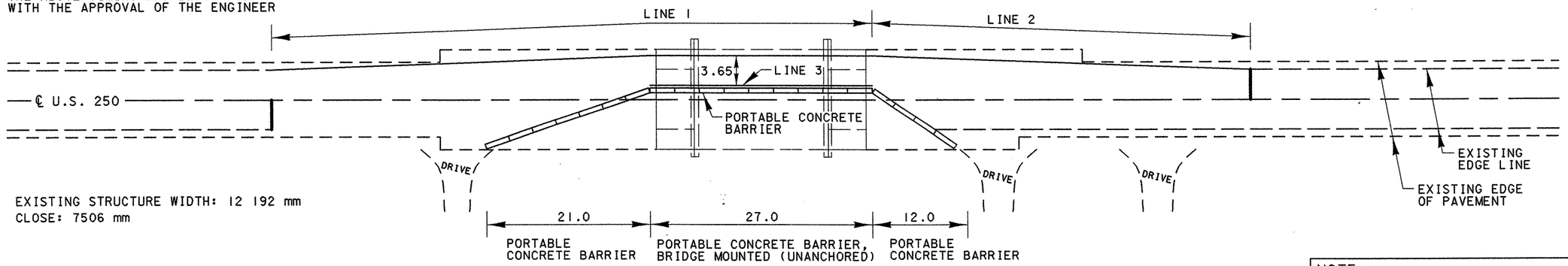

EXISTING STRUCTURE WIDTH: 12 192 mm
CLOSE: 7506 mm

PHASE A

NOTE:
FOR DETAILS NOT SHOWN SEE STANDARD DRAWINGS MT-96.11M, MT-96.20M, & MT-96.25M

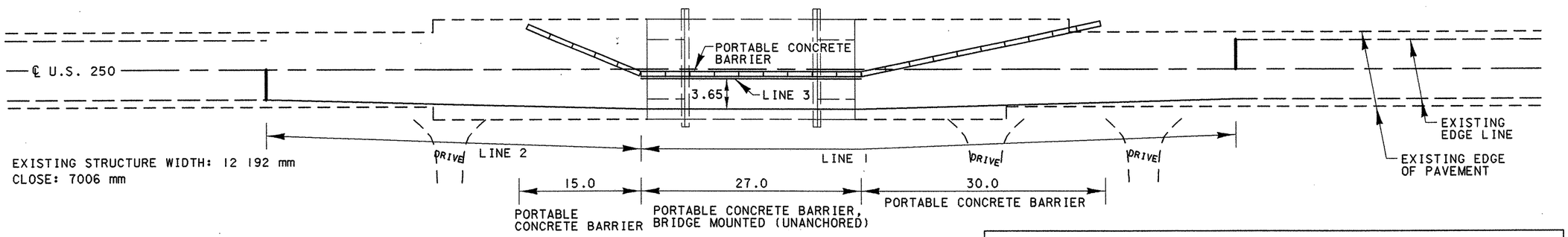

EXISTING STRUCTURE WIDTH: 12 192 mm
CLOSE: 7006 mm

NOTE: FOR TYPICAL SECTION VIEW, SEE SHEET NO. 24

PHASE B

ITEM	QUANTITY (PHASE A)	QUANTITY (PHASE B)	TOTAL	UNIT	DESCRIPTION
614	169	169	338	each	TEMPORARY RAISED PAVEMENT MARKER
614	6	6	12	each	BARRIER REFLECTOR, TYPE A2
614	10	11	21	each	BARRIER REFLECTOR, TYPE B2
614	11	12	23	each	OBJECT MARKER
614	0.10		0.10	kilometer	TEMPORARY CENTER LINE, CLASS I
614	0.02	0.03	0.05	kilometer	TEMPORARY EDGE LINE, CLASS I
614	7		7	meter	TEMPORARY STOP LINE, CLASS I
622	33	45	78	meter	PORTABLE CONCRETE BARRIER, 813 MM
622	27	27	54	meter	PORTABLE CONCRETE BARRIER, 813 MM, BRIDGE MOUNTED

ALL QUANTITIES CARRIED TO ESTIMATED QUANTITIES SHEETS, SHEET NOS. 19 & 20

TEMPORARY RAISED PAVEMENT MARKERS (TYPE A)

		SPACING	QUANTITY (WHITE)	QUANTITY (YELLOW)
PHASE A	LINE 1= 73.0 m	1.5 m	50	50
	LINE 2= 46.0 m	1.5 m	31	
	LINE 3= 27.0 m	1.5 m	19	19
PHASE B	LINE 1= 73.0 m	1.5 m	50	50
	LINE 2= 46.0 m	1.5 m	31	
	LINE 3= 27.0 m	1.5 m	19	19
		TOTAL	200	138

ALL DIMENSIONS ARE IN METERS, UNLESS NOTED OTHERWISE

DESIGN AGENCY: DISTRICT THREE
DATE: 1-97
REVIEWED: RDW
STRUCTURAL FILE NUMBER: 8504776
DRAWN: EJG
REVISED:
DESIGNED: EJG
CHECKED: NRC

MAINTENANCE OF TRAFFIC
WAY-250-26667 S.L.K. WAY-250-1657 S.L.M.

WAY-250-22.531a

DESIGN FILE:1996\WAY250\MISC.DGN

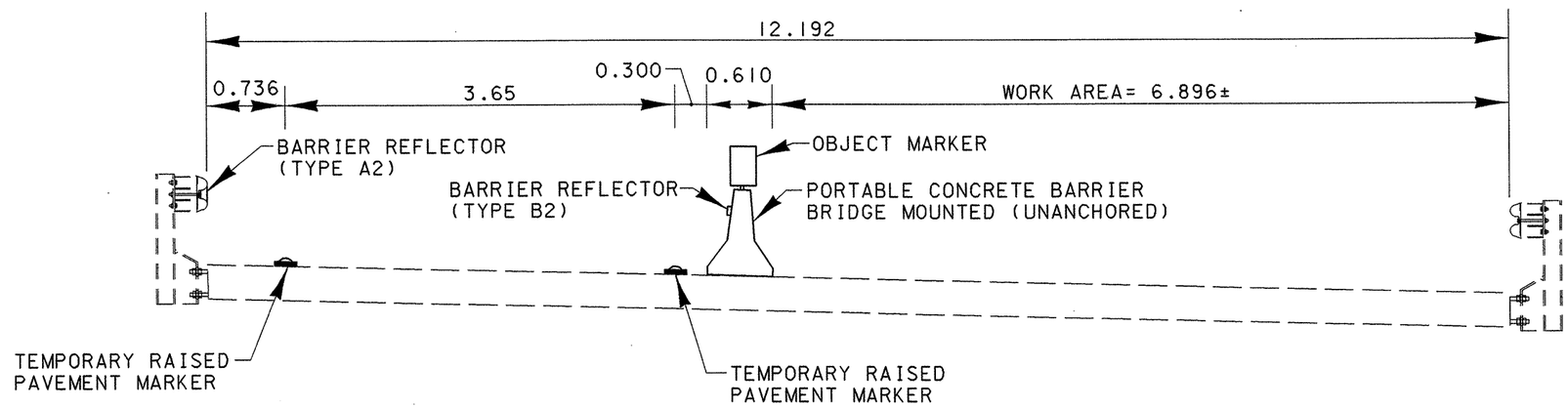

TYPICAL SECTION ON BRIDGE
(PHASE A SHOWN)

ALL DIMENSIONS ARE IN METERS,
UNLESS NOTED OTHERWISE

DESIGN FILE:1996\WAY250\MISC.DGN

metric units

DESIGN AGENCY: DISTRICT THREE

DESIGNED EJG 12-96 | DRAWN EJG | REVIEWED RDN | DATE 1-97
CHECKED NRC | REVISED | STRUCTURAL FILE NUMBER 8504776

MAINTENANCE OF TRAFFIC
WAY-250-26667 S.L.K. WAY-250-1657 S.L.M.

WAY-250-22.531a

24/48

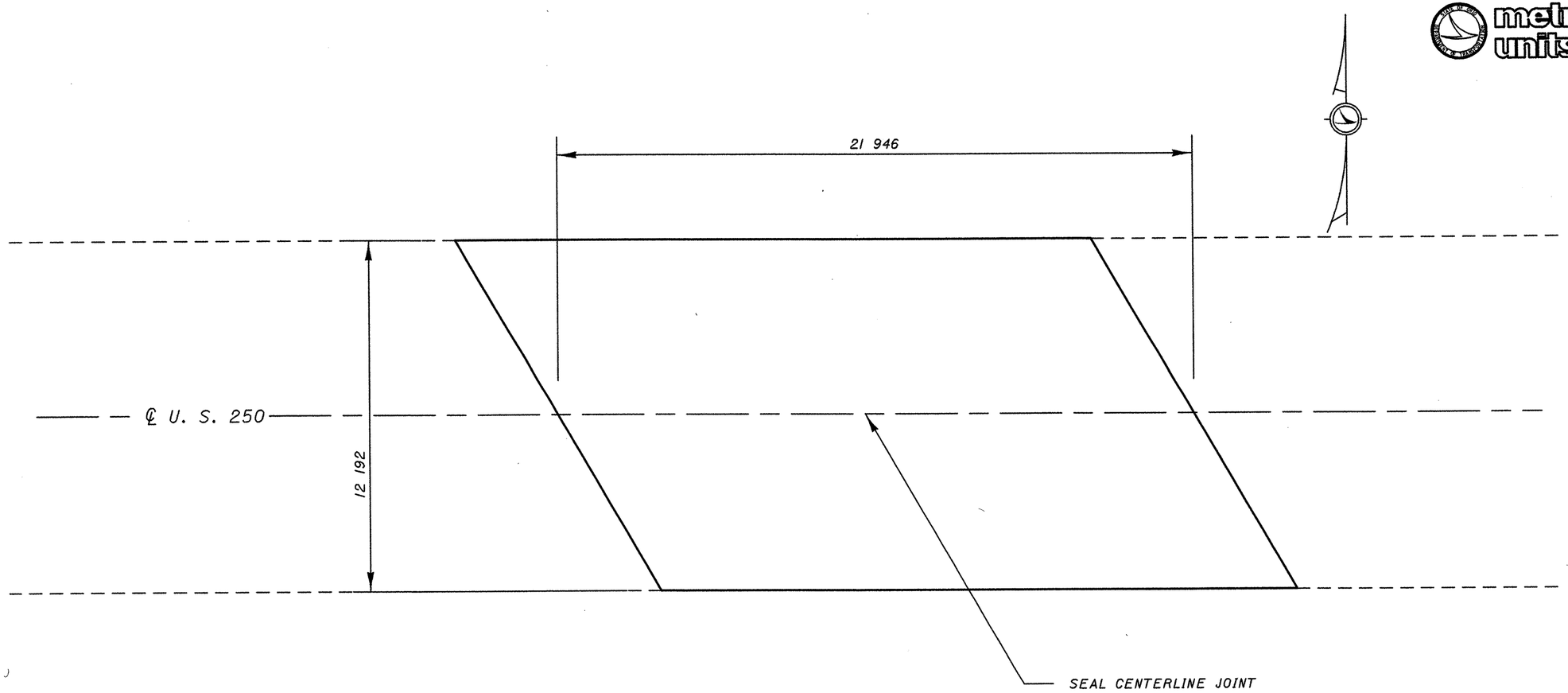

SEE SHEET 27 FOR ADDITIONAL WORK.

ESTIMATED QUANTITIES			
ITEM	QUANTITY	UNIT	DESCRIPTION
SPECIAL	22	meter	STRUCTURE, MISC.: JOINT SEALING

QUANTITY IS CARRIED TO GENERAL SUMMARY SHEET, SHEET NO. 4

ALL DIMENSIONS ARE IN MILLIMETERS, UNLESS NOTED OTHERWISE

DESIGN FILE: d:\users\nconley\dgn\bridge\1996\way250\misc.dgn
WORKSTATION: nconley DATE: 23 JAN 97

DESIGN AGENCY: DISTRICT THREE

DESIGNED	DRAWN	REVIEWED	DATE
NRC	NRC	RDW	1-97
CHECKED	REVISED	STRUCTURAL FILE NUMBER	
		8504814	

GENERAL PLAN

WAY-250-28019 S.L.K. WAY-250-1741 S.L.M.

WAY-250-22.531a

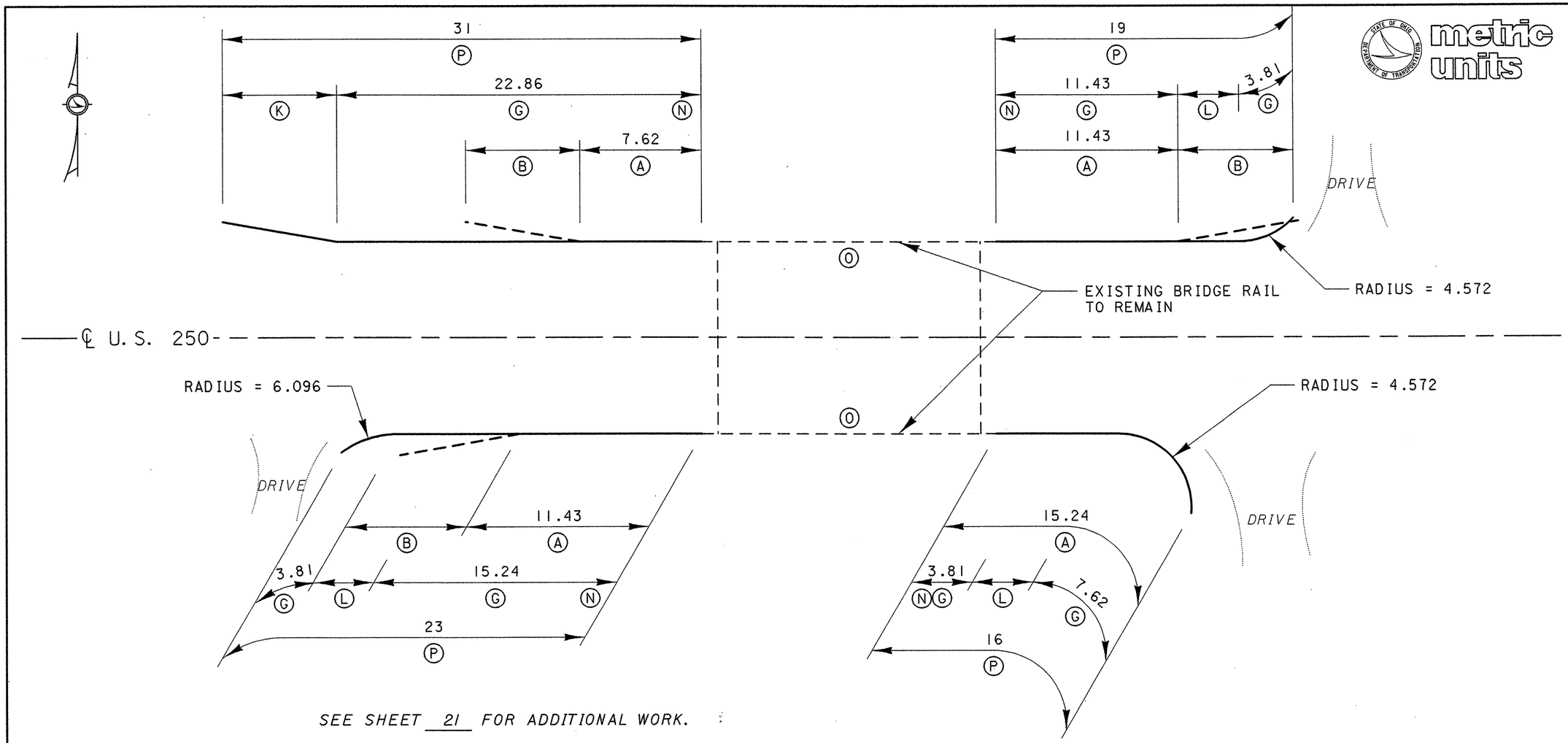

SEE SHEET 21 FOR ADDITIONAL WORK.

LOCATION	ITEM	DESCRIPTION	UNIT	QUANTITY		TOTAL QUANTITY
				LEFT	RIGHT	
A	202	GUARDRAIL REMOVED	meter	19.05	26.67	45.72
B	202	ANCHOR ASSEMBLY REMOVED, TYPE A	each	2	1	3
G	606	GUARDRAIL, TYPE 5	meter	38.1	30.48	68.58
K	606	ANCHOR ASSEMBLY, TYPE A	each	1		1
L	606	ANCHOR ASSEMBLY, TYPE T	each	1	2	3
N	606	BRIDGE TERMINAL ASSEMBLY, TYPE 4	each	2	2	4
O	802	BARRIER REFLECTOR, TYPE A	each	4	3	7
P	SPECIAL	RESHAPING BERM	meter	50	39	89

ALL QUANTITIES ARE CARRIED TO ESTIMATED QUANTITIES SHEET, SHEET NOS. 18, 19 & 20

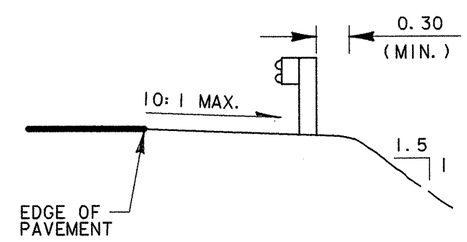

TYPICAL SECTION

ALL DIMENSIONS ARE IN METERS, UNLESS NOTED OTHERWISE

DESIGN FILE: d:\users\noonley\dgn\bridge\1996\way250\grdrl.dgn
WORKSTATION: noonley DATE: 23 JAN 97

DESIGN AGENCY: DISTRICT THREE
DESIGNED MB | DRAWN BMB | REVIEWED RDN | DATE 1-97
CHECKED | REVISED | STRUCTURAL FILE NUMBER 8504776

GUARDRAIL DETAIL
WAY-250-26667 S.L.K. WAY-250-1657 S.L.M.

WAY-250-22.53/a

26/48

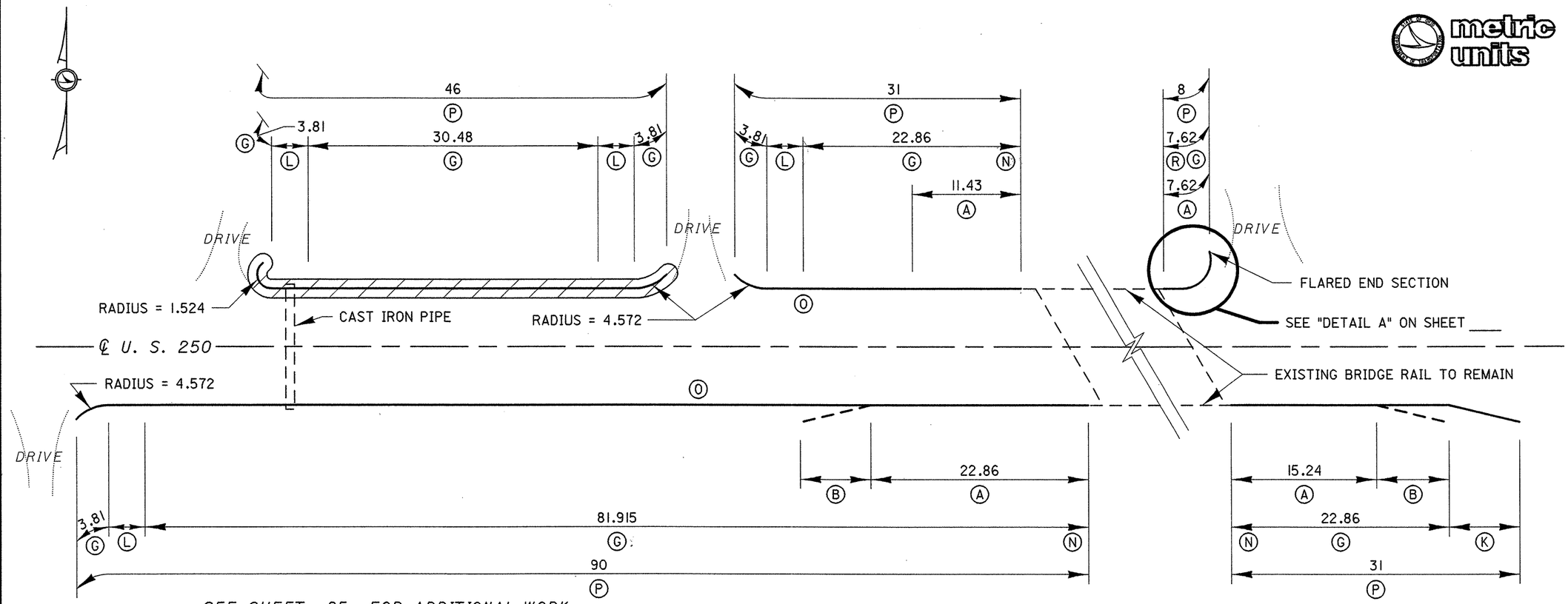

SEE SHEET 25 FOR ADDITIONAL WORK.

LOCATION	ITEM	DESCRIPTION	UNIT	QUANTITY		TOTAL QUANTITY
				LEFT	RIGHT	
A	202	GUARDRAIL REMOVED	meter	19.05	38.1	57.15
B	202	ANCHOR ASSEMBLY REMOVED, TYPE A	each		2	2
	203	EMBANKMENT, AS PER PLAN	cubic meter	3		3
G	606	GUARDRAIL, TYPE 5	meter	72.39	108.585	180.975
	606	FLARED END SECTION	each	1		1
K	606	ANCHOR ASSEMBLY, TYPE A	each		1	1
L	606	ANCHOR ASSEMBLY, TYPE T	each	3	1	4
N	606	BRIDGE TERMINAL ASSEMBLY, TYPE 4	each	1	2	3
R	606	BRIDGE TERMINAL ASSEMBLY, TYPE 4, AS PER PLAN	each	1		1
O	802	BARRIER REFLECTOR, TYPE A	each	5	6	11
P	SPECIAL	RESHAPING BERM	meter	85	121	206

ALL QUANTITIES ARE CARRIED TO ESTIMATED QUANTITIES SHEET, SHEET NOS. 18, 19 & 20

ITEM 203 - EMBANKMENT, AS PER PLAN

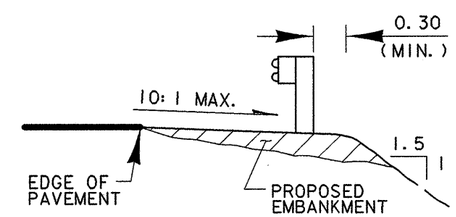

TYPICAL SECTION

ALL DIMENSIONS ARE IN METERS, UNLESS NOTED OTHERWISE

DESIGN FILE: d:\users\nconley\dgn\bridge\1996\way250\grail.dgn
WORKSTATION: nconley DATE: 23 JAN 97

DESIGN AGENCY: DISTRICT THREE
DESIGNED MB | DRAWN NRC | REVIEWED RON | DATE 1-97
CHECKED | REVISED | STRUCTURAL FILE NUMBER 8504814

GUARDRAIL DETAIL
WAY-250-28019 S.L.K. WAY-250-1741 S.L.M.

WAY-250-22.531a

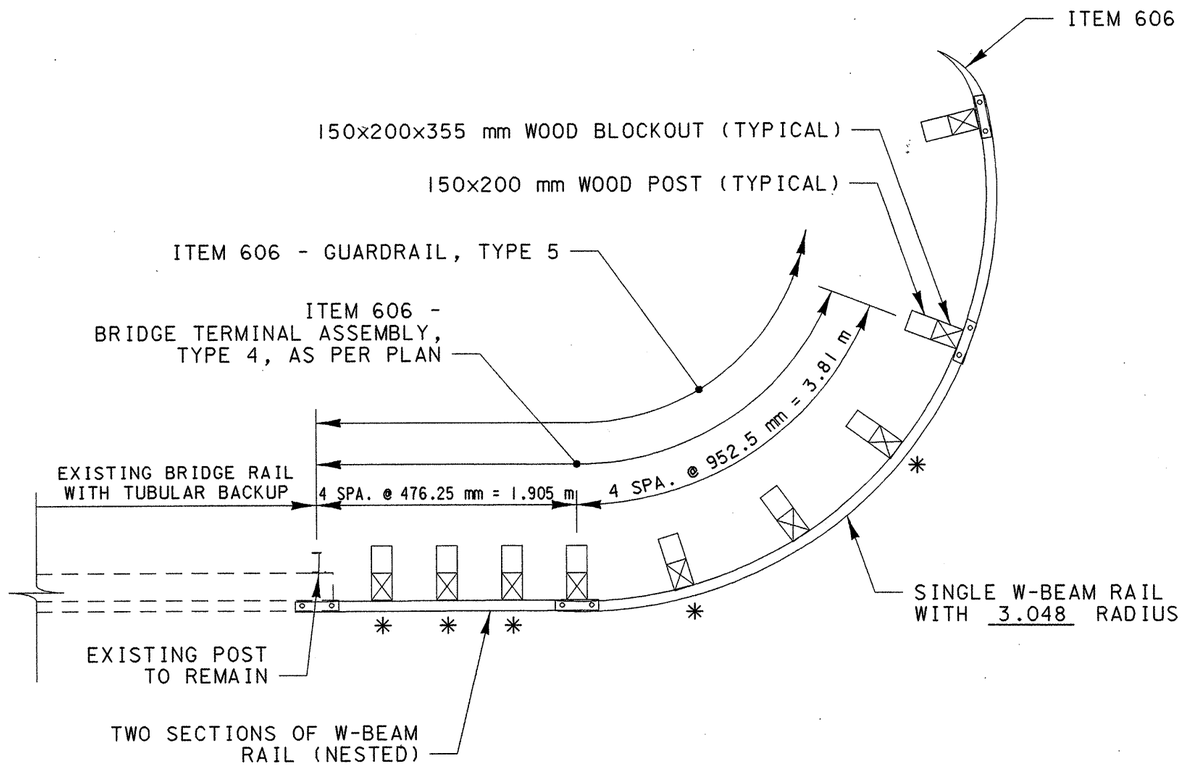

* GUARDRAIL NOT ATTACHED TO POSTS.
BLOCKOUT FASTENED TO POST WITH
STANDARD POST BOLT

NOTES

POSTS: POSTS MAY BE SET IN DRILLED HOLES OR DRIVEN TO GRADE.

DETAILS: FOR OTHER DETAILS NOT SHOWN SEE GR-1.1m, GR-1.2m, GR-2.1m, AND GR-3.4m.

PAYMENT: PAYMENT FOR ITEM 606 - EACH, BRIDGE TERMINAL ASSEMBLY, TYPE 4, AS PER PLAN SHALL INCLUDE THE EXTRA COST, IN EXCESS OF NORMAL GUARDRAIL COSTS, FOR ADDITIONAL POSTS AND OTHER HARDWARE.

DETAIL A

ALL DIMENSIONS ARE IN METERS, UNLESS NOTED OTHERWISE

DESIGN FILE: d:\users\nconley\dgn\bridge\1996\way250\grail.dgn
WORKSTATION: nconley DATE: 23 JAN 97

metric units

DESIGN AGENCY: DISTRICT THREE

DESIGNED	DRAWN	REVIEWED	DATE
DM	CAD	RON	1-97
CHECKED	REVISED	STRUCTURAL FILE NUMBER	
		8504814	

GUARDRAIL DETAIL

WAY-250-2801/9 S.L.K. WAY-250-1741 S.L.M.

WAY-250-22.53/a

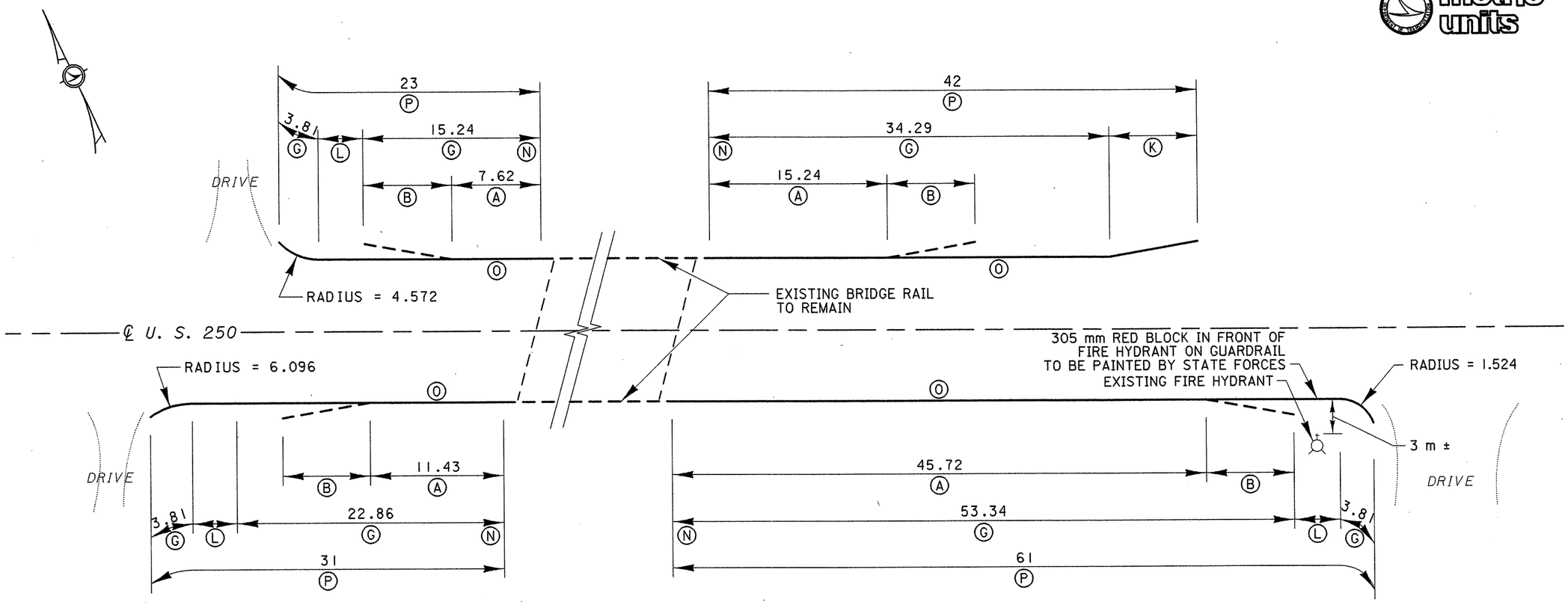

LOCATION	ITEM	DESCRIPTION	UNIT	QUANTITY		TOTAL QUANTITY
				LEFT	RIGHT	
A	202	GUARDRAIL REMOVED	meter	22.86	57.15	80.01
B	202	ANCHOR ASSEMBLY REMOVED, TYPE A	each	2	2	4
G	606	GUARDRAIL, TYPE 5	meter	53.34	83.82	137.16
K	606	ANCHOR ASSEMBLY, TYPE A	each	1		1
L	606	ANCHOR ASSEMBLY, TYPE T	each	1	2	3
N	606	BRIDGE TERMINAL ASSEMBLY, TYPE 4	each	2	2	4
O	802	BARRIER REFLECTOR, TYPE A	each	4	5	9
P	SPECIAL	RESHAPING BERM	meter	65	92	157

ALL QUANTITIES ARE CARRIED TO ESTIMATED QUANTITIES SHEET, SHEET NOS. 18, 19 & 20

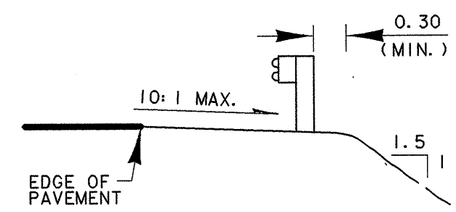

TYPICAL SECTION

ALL DIMENSIONS ARE IN METERS, UNLESS NOTED OTHERWISE

DESIGN FILE: d:\users\nconley\dgn\bridge\1996\way250\grail.dgn
WORKSTATION: nconley DATE: 23 JAN 97

DESIGN AGENCY: DISTRICT THREE

DESIGNED MB | CHECKED | DRAWN NRC | REVISED | REVIEWED RDW | DATE 1-97 | STRUCTURAL FILE NUMBER 8504830

GUARDRAIL DETAIL

WAY-250-29869 SL.K. WAY-250-1856 S.L.M.

WAY-250-22.531a

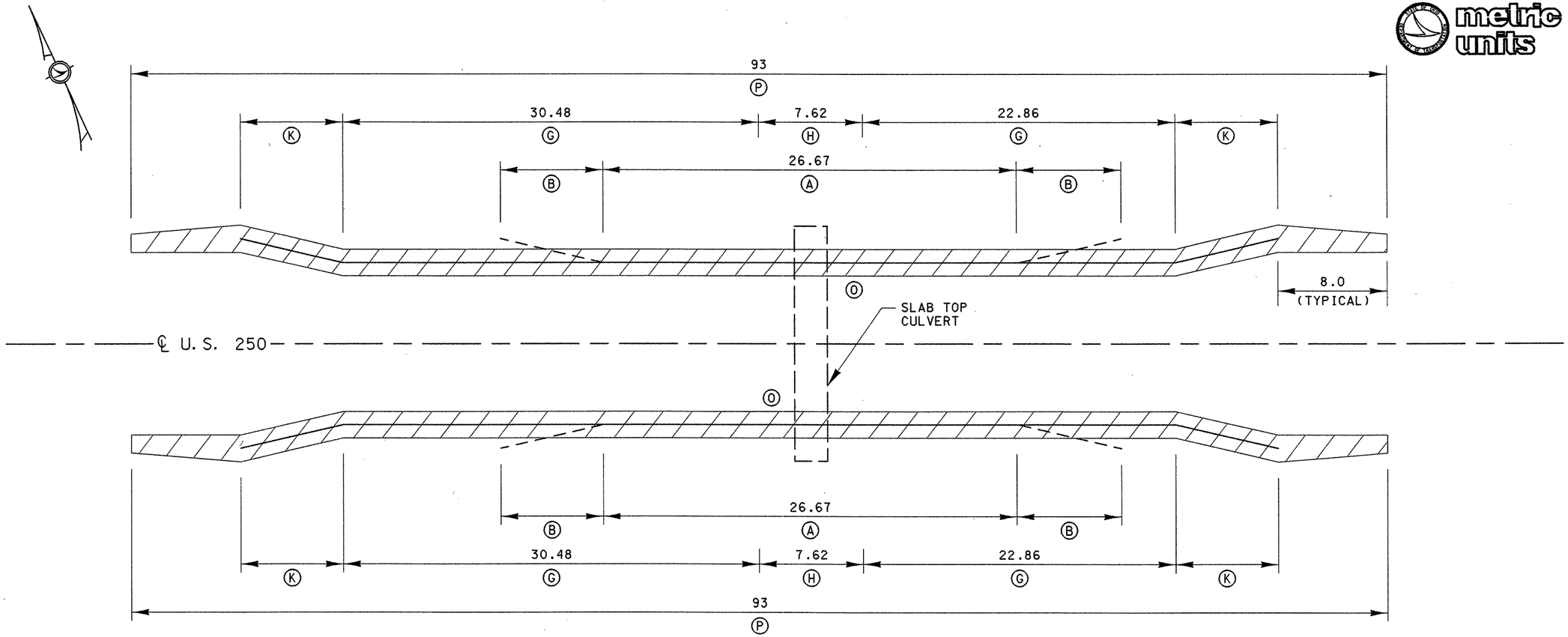

SEE SHEET 45 FOR ITEM 606 - GUARDRAIL, TYPE 5 WITH DOUBLE RAILS DETAILS.

LOCATION	ITEM	DESCRIPTION	UNIT	QUANTITY		TOTAL QUANTITY
				LEFT	RIGHT	
Ⓐ	202	GUARDRAIL REMOVED	meter	26.67	26.67	53.34
Ⓑ	202	ANCHOR ASSEMBLY REMOVED, TYPE A	each	2	2	4
	203	EMBANKMENT, AS PER PLAN	cubic meter	46	46	92
Ⓖ	606	GUARDRAIL, TYPE 5	meter	53.34	53.34	106.68
Ⓗ	606	GUARDRAIL, TYPE 5 WITH DOUBLE RAILS	meter	7.62	7.62	15.24
Ⓚ	606	ANCHOR ASSEMBLY, TYPE A	each	2	2	4
Ⓞ	802	BARRIER REFLECTOR, TYPE A	each	4	4	8
Ⓟ	SPECIAL	RESHAPING BERM	meter	93	93	186

ALL QUANTITIES ARE CARRIED TO ESTIMATED QUANTITIES SHEET, SHEET NOS. 18, 19 & 20

ITEM 203 - EMBANKMENT, AS PER PLAN

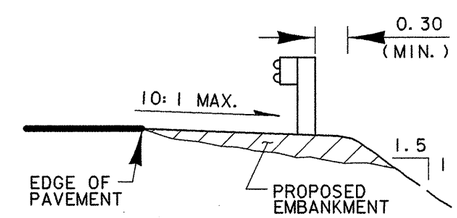

TYPICAL SECTION

ALL DIMENSIONS ARE IN METERS, UNLESS NOTED OTHERWISE

DESIGN FILE: d:\users\nconley\dgn\bridge\1996\way250\grail.dgn
WORKSTATION: nconley
DATE: 23 JAN 97

DESIGN AGENCY: DISTRICT THREE
DESIGNED: MB | DRAWN: CAD | REVIEWED: RDN | DATE: 1-97
CHECKED: | REVISED: | STRUCTURAL FILE NUMBER:

GUARDRAIL DETAIL

WAY-250-30.980 S.L.K. WAY-250-19.25 S.L.M.

WAY-250-22.531a

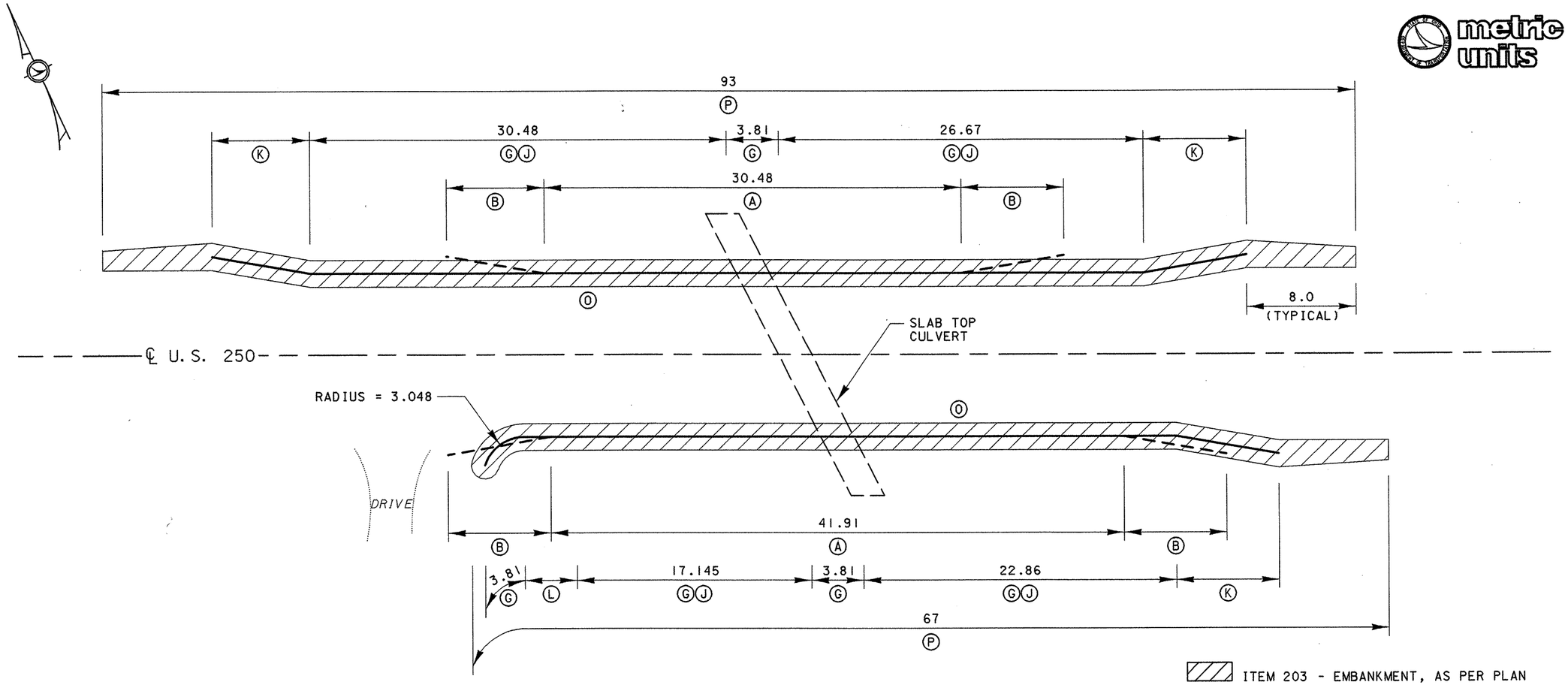

LOCATION	ITEM	DESCRIPTION	UNIT	QUANTITY		TOTAL QUANTITY
				LEFT	RIGHT	
A	202	GUARDRAIL REMOVED	meter	30.48	41.91	72.39
B	202	ANCHOR ASSEMBLY REMOVED, TYPE A	each	2	2	4
	203	EMBANKMENT, AS PER PLAN	cubic meter	46	35	81
G	606	GUARDRAIL, TYPE 5	meter	60.96	47.625	108.585
J	606	GUARDRAIL POST, 2.75 METER	each	28	19	47
K	606	ANCHOR ASSEMBLY, TYPE A	each	2	1	3
L	606	ANCHOR ASSEMBLY, TYPE T	each		1	1
O	802	BARRIER REFLECTOR, TYPE A	each	4	3	7
P	SPECIAL	RESHAPING BERM	meter	93	67	160

ALL QUANTITIES ARE CARRIED TO ESTIMATED QUANTITIES SHEET, SHEET NOS. 18, 19 & 20

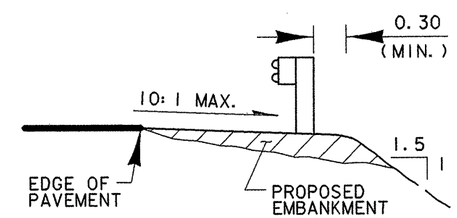

TYPICAL SECTION

ALL DIMENSIONS ARE IN METERS, UNLESS NOTED OTHERWISE

DESIGN FILE: d:\users\nconley\dgn\bridge\1996\way250\grail.dgn
WORKSTATION: nconley DATE: 23 JAN 97

DESIGN AGENCY: DISTRICT THREE

DESIGNED WB | DRAWN CAD | REVIEWED RDW | DATE 1-97

CHECKED | REVISED | STRUCTURAL FILE NUMBER

GUARDRAIL DETAIL

WAY-250-33.297 S.L.K. WAY-250-20.69 S.L.M.

WAY-250-22.53/a

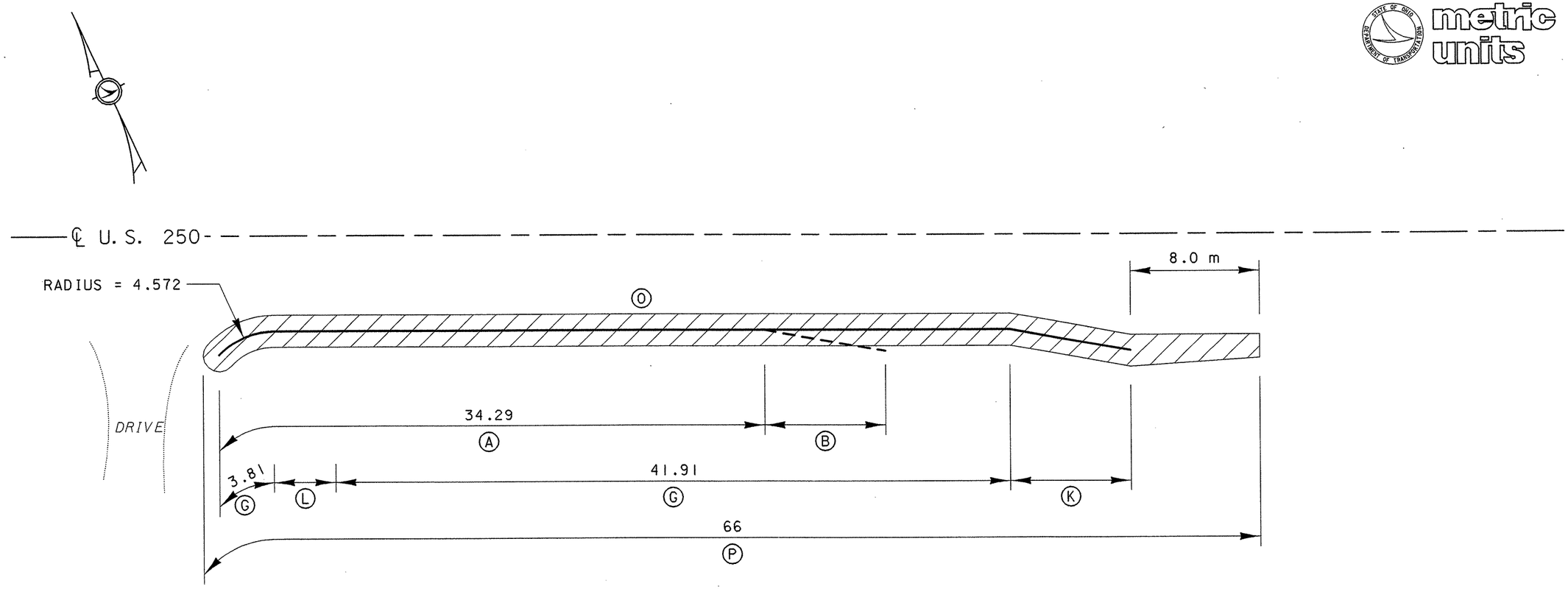

ITEM 203 - EMBANKMENT, AS PER PLAN

LOCATION	ITEM	DESCRIPTION	UNIT	QUANTITY LEFT	QUANTITY RIGHT	TOTAL QUANTITY
A	202	GUARDRAIL REMOVED	meter		34.29	34.29
B	202	ANCHOR ASSEMBLY REMOVED, TYPE A	each		1	1
	203	EMBANKMENT, AS PER PLAN	cubic meter		16	16
G	606	GUARDRAIL, TYPE 5	meter		45.72	45.72
K	606	ANCHOR ASSEMBLY, TYPE A	each		1	1
L	606	ANCHOR ASSEMBLY, TYPE T	each		1	1
O	802	BARRIER REFLECTOR, TYPE A	each		3	3
P	SPECIAL	RESHAPING BERM	meter		66	66

ALL QUANTITIES ARE CARRIED TO ESTIMATED QUANTITIES SHEET, SHEET NOS. 18, 19 & 20

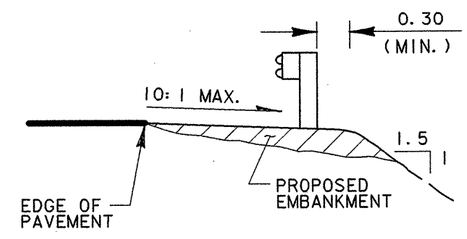

TYPICAL SECTION

ALL DIMENSIONS ARE IN METERS, UNLESS NOTED OTHERWISE

DESIGN FILE: d:\users\nconley\dgn\bridge\1996\way250\grdrail.dgn
WORKSTATION: nconley DATE: 23 JAN 97

DESIGN AGENCY: DISTRICT THREE
DESIGNED MB | DRAWN BMB | REVIEWED RDW | DATE 1-97
CHECKED | REVISED | STRUCTURAL FILE NUMBER

GUARDRAIL DETAIL
WAY-250-33.651 S.L.K. WAY-250-20.91 S.L.M.

WAY-250-22.53/a

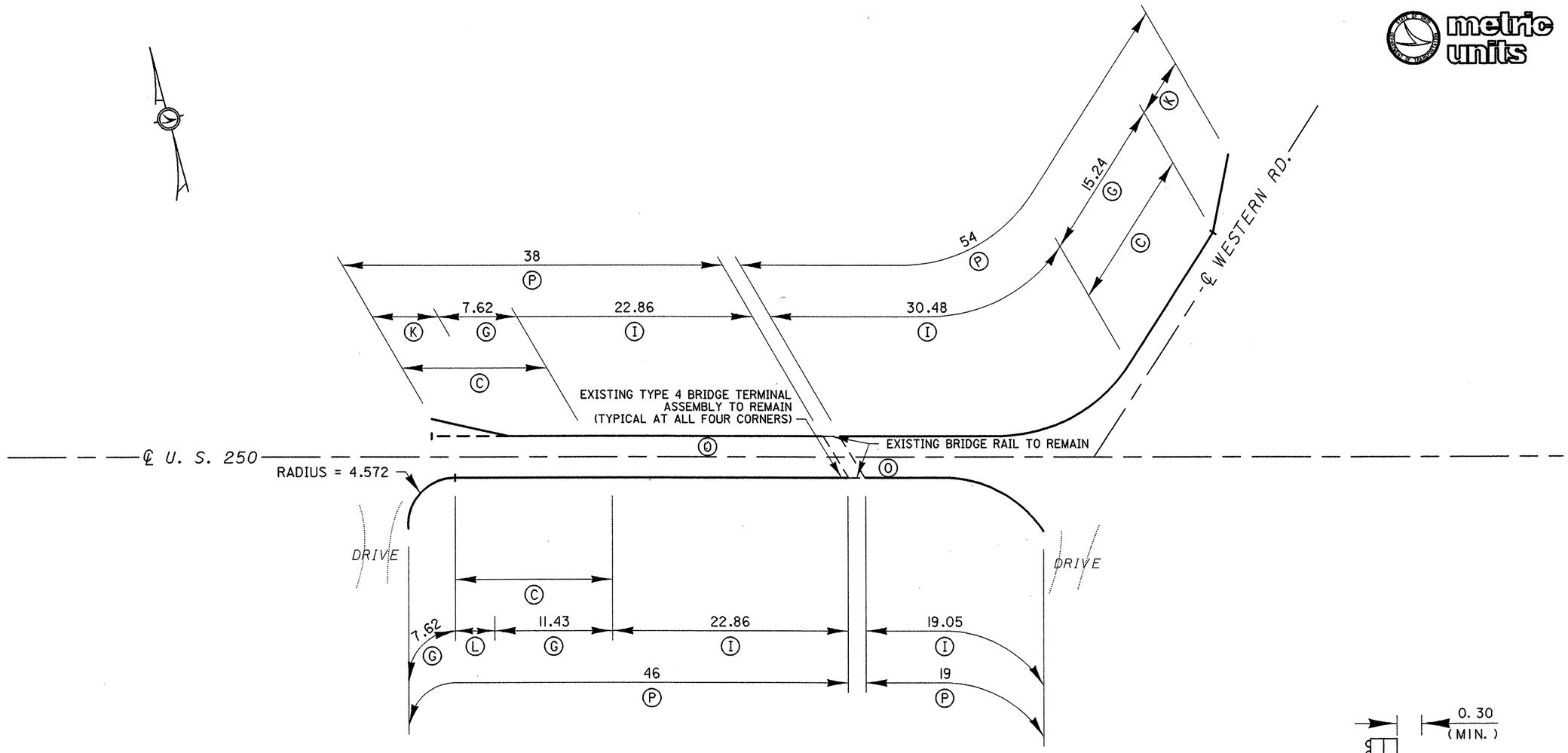

LOCATION	ITEM	DESCRIPTION	UNIT	QUANTITY		TOTAL QUANTITY
				LEFT	RIGHT	
C	202	ANCHOR ASSEMBLY REMOVED FOR STORAGE	each	2	1	3
G	606	GUARDRAIL, TYPE 5	meter	22.86	19.05	41.91
I	606	RAISING TYPE 5 GUARDRAIL	meter	53.34	41.91	95.25
K	606	ANCHOR ASSEMBLY, TYPE A	each	2		2
L	606	ANCHOR ASSEMBLY, TYPE T	each		1	1
O	802	BARRIER REFLECTOR, TYPE A	each	4	3	7
P	SPECIAL	RESHAPING BERM	meter	92	65	157

ALL QUANTITIES ARE CARRIED TO ESTIMATED QUANTITIES SHEET, SHEET NOS. 18, 19 & 20

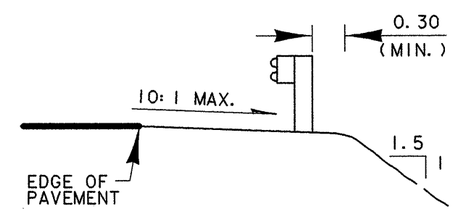

TYPICAL SECTION

ALL DIMENSIONS ARE IN METERS, UNLESS NOTED OTHERWISE

metric units

DESIGN AGENCY: DISTRICT THREE

DATE: 1-97 REVIEWED: RDW

STRUCTURAL FILE NUMBER: 8504873

DRAWN: NRC REVISED:

DESIGNED: MB CHECKED: EJB

GUARDRAIL DETAIL

WAY-250-35824 S.L.K. WAY-250-2226 S.L.M.

WAY-250-22.531a

33/48

DESIGN FILE: d:\users\nconley\dgn\bridge\1996\way250\grdll.dgn
WORKSTATION: nconley DATE: 23 JAN 97

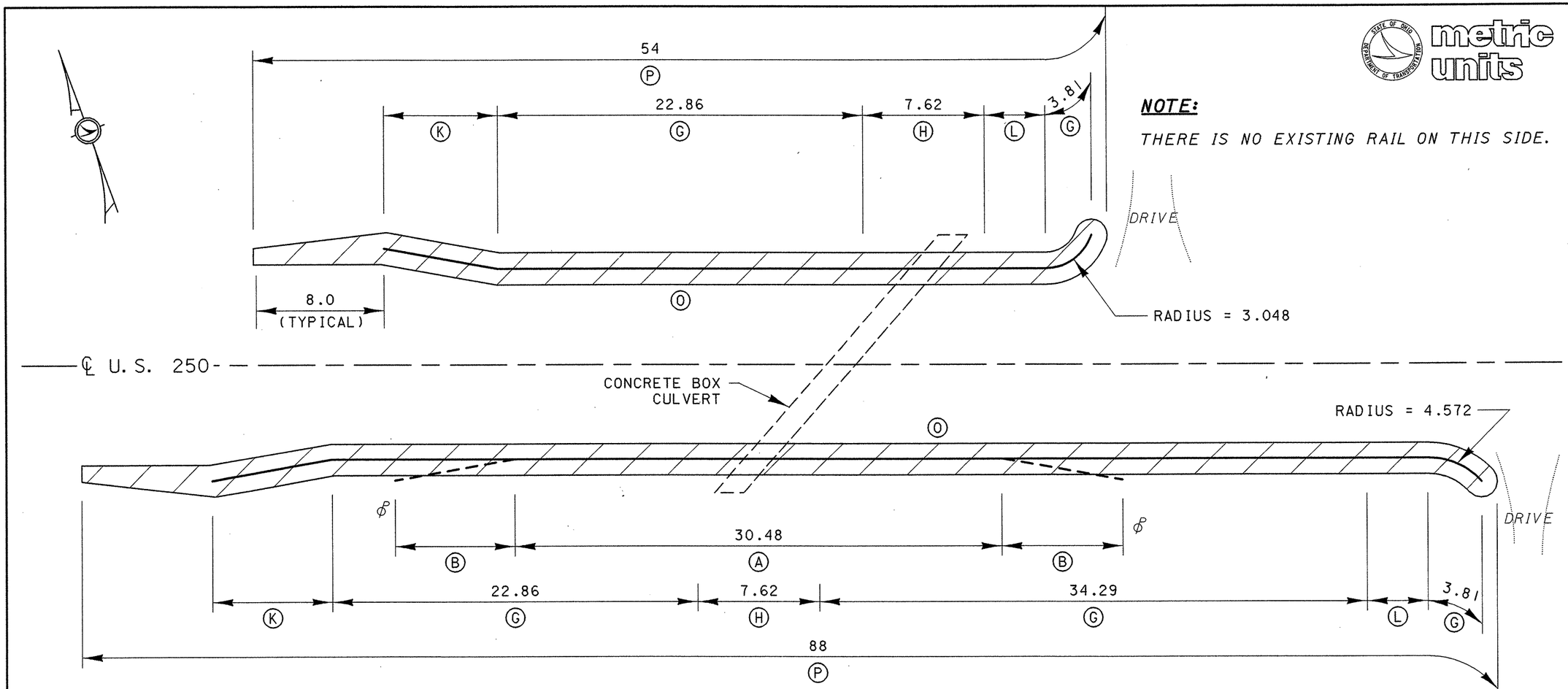

NOTE:

THERE IS NO EXISTING RAIL ON THIS SIDE.

SEE SHEET 45 FOR ITEM 606 - GUARDRAIL, TYPE 5 WITH DOUBLE RAILS DETAILS.

ITEM 203 - EMBANKMENT, AS PER PLAN

LOCATION	ITEM	DESCRIPTION	UNIT	QUANTITY LEFT	QUANTITY RIGHT	TOTAL QUANTITY
A	202	GUARDRAIL REMOVED	meter		30.48	30.48
B	202	ANCHOR ASSEMBLY REMOVED, TYPE A	each		2	2
	203	EMBANKMENT, AS PER PLAN	cubic meter	8	31	39
G	606	GUARDRAIL, TYPE 5	meter	26.67	60.96	87.63
H	606	GUARDRAIL, TYPE 5 WITH DOUBLE RAILS	meter	7.62	7.62	15.24
K	606	ANCHOR ASSEMBLY, TYPE A	each	1	1	2
L	606	ANCHOR ASSEMBLY, TYPE T	each	1	1	2
O	802	BARRIER REFLECTOR, TYPE A	each	3	4	7
P	SPECIAL	RESHAPING BERM	meter	54	88	142

ALL QUANTITIES ARE CARRIED TO ESTIMATED QUANTITIES SHEET, SHEET NOS. 18, 19 & 20

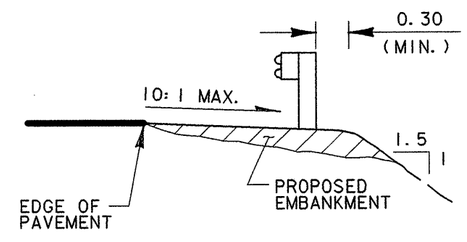

TYPICAL SECTION

ALL DIMENSIONS ARE IN METERS, UNLESS NOTED OTHERWISE

metric units

DESIGN AGENCY: DISTRICT THREE

DESIGNED MB | DRAWN CAD | REVIEWED RON | DATE 1-97

CHECKED | REVISED | STRUCTURAL FILE NUMBER

GUARDRAIL DETAIL

WAY-250-36.162 S.L.K. WAY-250-22.47 S.L.M.

WAY-250-22.530

34/48

DESIGN FILE: d:\users\nconley\dgn\bridge\1996\way250\grail.dgn
WORKSTATION: nconley DATE: 23 JAN 97

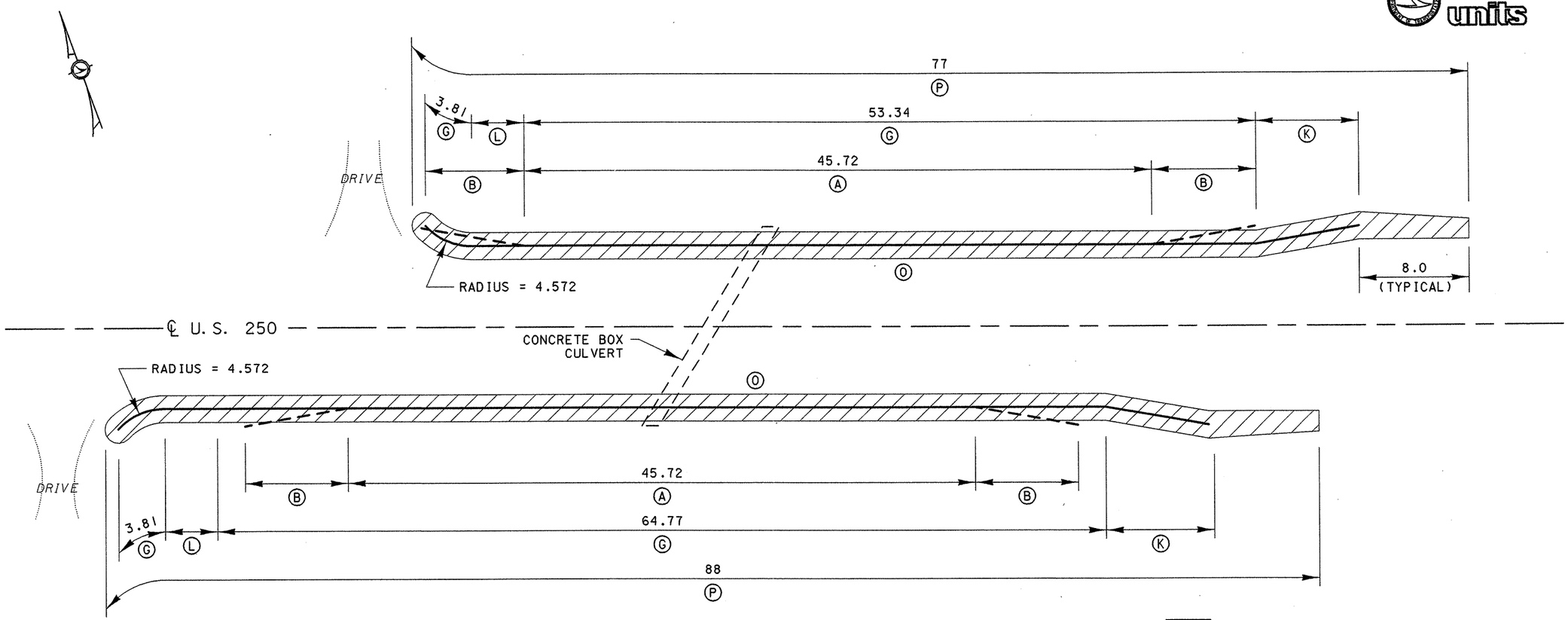

ITEM 203 - EMBANKMENT, AS PER PLAN

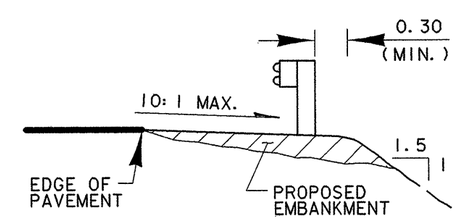

TYPICAL SECTION

LOCATION	ITEM	DESCRIPTION	UNIT	QUANTITY		TOTAL QUANTITY
				LEFT	RIGHT	
(A)	202	GUARDRAIL REMOVED	meter	45.72	45.72	91.44
(B)	202	ANCHOR ASSEMBLY REMOVED, TYPE A	each	2	2	4
	203	EMBANKMENT, AS PER PLAN	cubic meter	39	54	93
(G)	606	GUARDRAIL, TYPE 5	meter	57.15	68.58	125.73
(K)	606	ANCHOR ASSEMBLY, TYPE A	each	1	1	2
(L)	606	ANCHOR ASSEMBLY, TYPE T	each	1	1	2
(O)	802	BARRIER REFLECTOR, TYPE A	each	4	4	8
(P)	SPECIAL	RESHAPING BERM	meter	77	88	165

ALL QUANTITIES ARE CARRIED TO ESTIMATED QUANTITIES SHEET, SHEET NOS. 18, 19 & 20

ALL DIMENSIONS ARE IN METERS, UNLESS NOTED OTHERWISE

metric units

DESIGN AGENCY: DISTRICT THREE

DESIGNED: MB | CHECKED | DRAWN: CAD | REVISED | REVIEWED: RDW | DATE: 1-97 | STRUCTURAL FILE NUMBER

GUARDRAIL DETAIL

WAY-250-36.854 S.L.K. WAY-250-22.90 S.L.M.

WAY-250-22.53/a

35/48

DESIGN FILE: d:\users\nconley\dgn\bridge\1996\way250\grdl.dgn
WORKSTATION: nconley DATE: 23 JAN 97

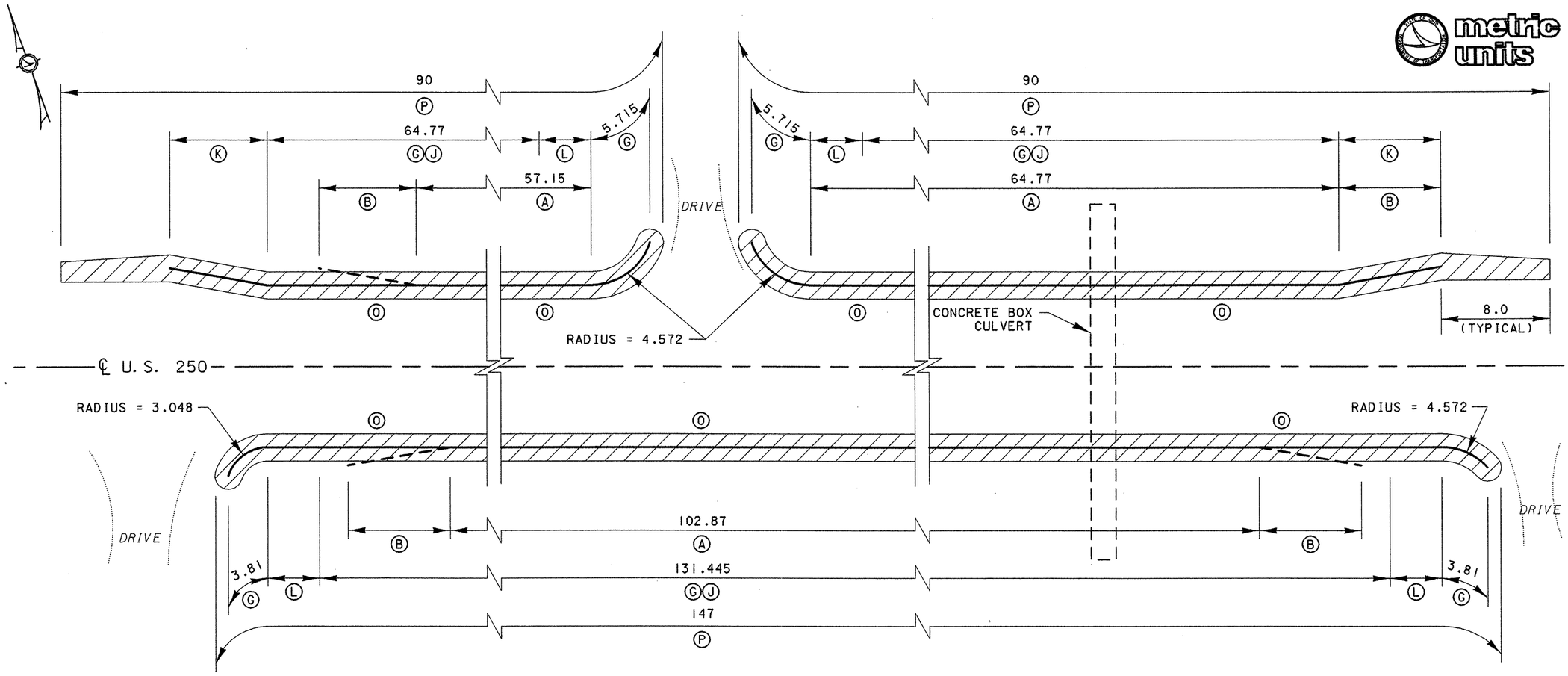

LOCATION	ITEM	DESCRIPTION	UNIT	QUANTITY LEFT	QUANTITY RIGHT	TOTAL QUANTITY
Ⓐ	202	GUARDRAIL REMOVED	meter	121.92	102.87	224.79
Ⓑ	202	ANCHOR ASSEMBLY REMOVED, TYPE A	each	2	2	4
	203	EMBANKMENT, AS PER PLAN	cubic meter	54	46	100
Ⓖ	606	GUARDRAIL, TYPE 5	meter	140.97	139.065	280.035
Ⓙ	606	GUARDRAIL POST, 2.75 METER	each	66	68	134
Ⓚ	606	ANCHOR ASSEMBLY, TYPE A	each	2		2
Ⓛ	606	ANCHOR ASSEMBLY, TYPE T	each	2	2	4
Ⓞ	802	BARRIER REFLECTOR, TYPE A	each	7	6	13
Ⓟ	SPECIAL	RESHAPING BERM	meter	180	147	327

ALL QUANTITIES ARE CARRIED TO ESTIMATED QUANTITIES SHEET, SHEET NOS. 18, 19 & 20

ITEM 203 - EMBANKMENT, AS PER PLAN

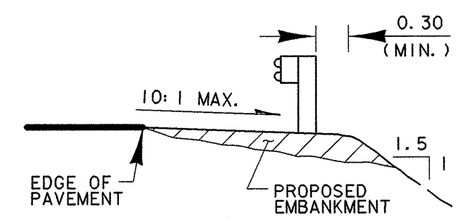

TYPICAL SECTION

ALL DIMENSIONS ARE IN METERS, UNLESS NOTED OTHERWISE

metric units

DESIGN AGENCY: DISTRICT THREE

DESIGNED MB | DRAWN CAD | REVISED | CHECKED | REVIEWED RDN | DATE 1-97 | STRUCTURAL FILE NUMBER

GUARDRAIL DETAIL

WAY-250-39.027 S.L.K. WAY-250-24.25 S.L.M.

WAY-250-22.531a

36/48

DESIGN FILE: d:\users\nconley\dgn\bridge\1996\way250\grail.dgn
WORKSTATION: nconley DATE: 23 JAN 97

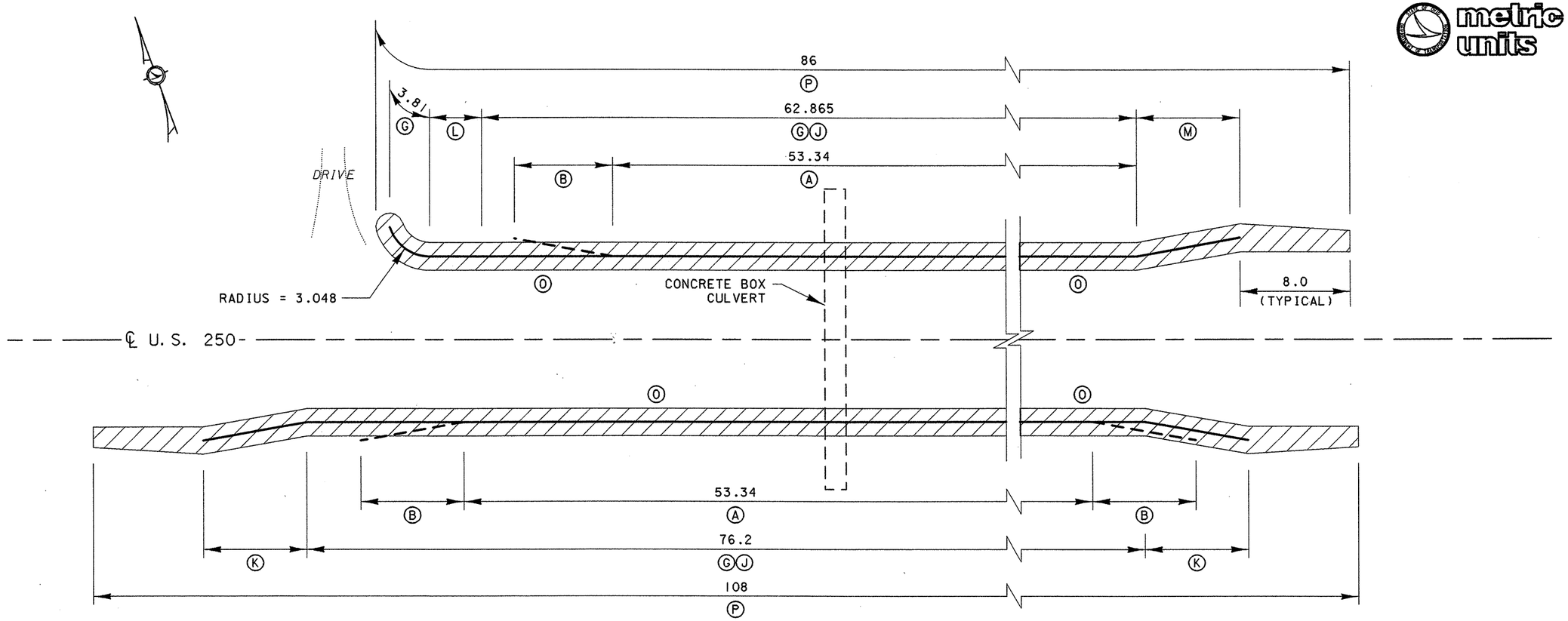

LOCATION	ITEM	DESCRIPTION	UNIT	QUANTITY		TOTAL QUANTITY
				LEFT	RIGHT	
Ⓐ	202	GUARDRAIL REMOVED	meter	53.34	53.34	106.68
Ⓑ	202	ANCHOR ASSEMBLY REMOVED, TYPE A	each	1	2	3
	203	EMBANKMENT, AS PER PLAN	cubic meter	16	16	32
Ⓖ	606	GUARDRAIL, TYPE 5	meter	66.675	76.2	142.875
Ⓙ	606	GUARDRAIL POST, 2.75 METER	each	32	39	71
Ⓚ	606	ANCHOR ASSEMBLY, TYPE A	each		2	2
Ⓛ	606	ANCHOR ASSEMBLY, TYPE T	each	1		1
Ⓜ	606	ANCHOR ASSEMBLY REBUILT, TYPE A, AS PER PLAN	each	1		1
Ⓞ	802	BARRIER REFLECTOR, TYPE A	each	4	4	8
Ⓟ	SPECIAL	RESHAPING BERM	meter	86	108	194

ALL QUANTITIES ARE CARRIED TO ESTIMATED QUANTITIES SHEET, SHEET NOS. 18, 19 & 20

ITEM 203 - EMBANKMENT, AS PER PLAN

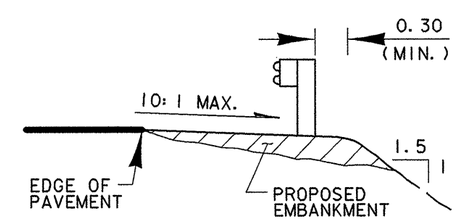

TYPICAL SECTION

ALL DIMENSIONS ARE IN METERS, UNLESS NOTED OTHERWISE

DESIGN FILE: d:\users\nconley\dgn\bridge\1996\way250\grail.dgn
WORKSTATION: nconley
DATE: 27 JAN 97

DESIGN AGENCY: DISTRICT THREE
DESIGNED MB | DRAWN CAD | REVIEWED RDW | DATE 1-97
CHECKED | REVISED | STRUCTURAL FILE NUMBER

GUARDRAIL DETAIL

WAY-250-40.218 S.L.K. WAY-250-24.99 S.L.M.

WAY-250-22.531a

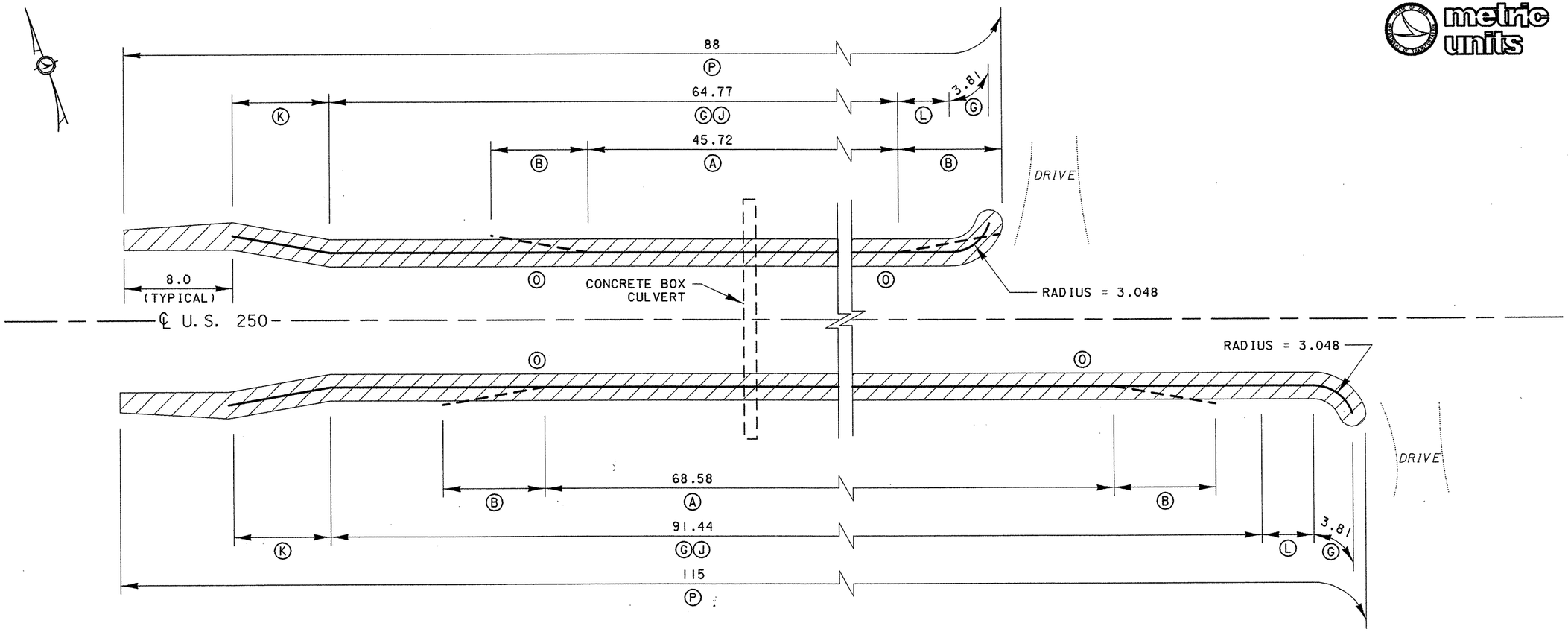

LOCATION	ITEM	DESCRIPTION	UNIT	QUANTITY		TOTAL QUANTITY
				LEFT	RIGHT	
A	202	GUARDRAIL REMOVED	meter	45.72	68.58	114.3
B	202	ANCHOR ASSEMBLY REMOVED, TYPE A	each	2	2	4
	203	EMBANKMENT, AS PER PLAN	cubic meter	12	16	28
G	606	GUARDRAIL, TYPE 5	meter	68.58	95.25	163.83
J	606	GUARDRAIL POST, 2.75 METER	each	33	47	80
K	606	ANCHOR ASSEMBLY, TYPE A	each	1	1	2
L	606	ANCHOR ASSEMBLY, TYPE T	each	1	1	2
O	802	BARRIER REFLECTOR, TYPE A	each	4	5	9
P	SPECIAL	RESHAPING BERM	meter	88	115	203

ALL QUANTITIES ARE CARRIED TO ESTIMATED QUANTITIES SHEET, SHEET NOS. 18, 19 & 20

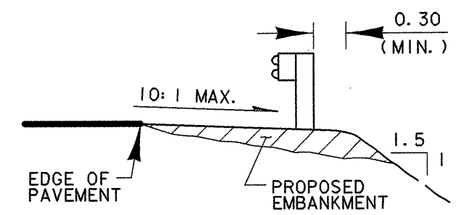

TYPICAL SECTION

ALL DIMENSIONS ARE IN METERS, UNLESS NOTED OTHERWISE

DESIGN FILE: d:\users\nconley\dgn\bridge\1996\way250\grail.dgn
WORKSTATION: nconley DATE: 23 JAN 97

DESIGN AGENCY: DISTRICT THREE
DESIGNED MB | CHECKED | DRAWN CAD | REVIEWED RDN | DATE 1-97 | REVISED | STRUCTURAL FILE NUMBER

GUARDRAIL DETAIL

WAY-250-40.475 S.L.K. WAY-250-25.15 S.L.M.

WAY-250-22.531a

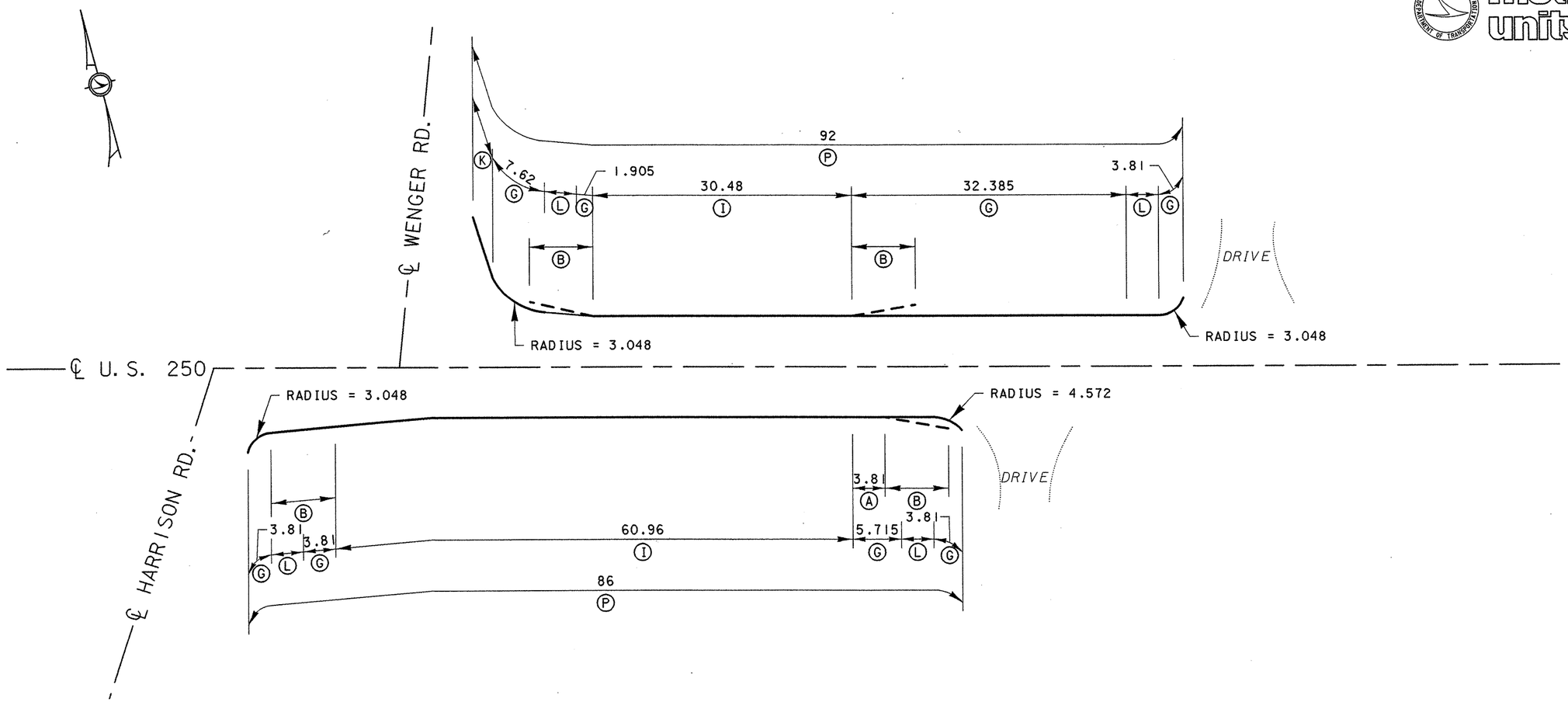

LOCATION	ITEM	DESCRIPTION	UNIT	QUANTITY		TOTAL QUANTITY
				LEFT	RIGHT	
Ⓐ	202	GUARDRAIL REMOVED	meter		3.81	3.81
Ⓑ	202	ANCHOR ASSEMBLY REMOVED, TYPE A	each	2	2	4
Ⓖ	606	GUARDRAIL, TYPE 5	meter	45.72	17.145	62.865
Ⓘ	606	RAISING TYPE 5 GUARDRAIL	meter	30.48	60.96	91.44
Ⓚ	606	ANCHOR ASSEMBLY, TYPE A	each	1		1
Ⓛ	606	ANCHOR ASSEMBLY, TYPE T	each	2	2	4
Ⓞ	802	BARRIER REFLECTOR, TYPE A	each	4	4	8
Ⓟ	SPECIAL	RESHAPING BERM	meter	92	86	178

ALL QUANTITIES ARE CARRIED TO ESTIMATED QUANTITIES SHEET, SHEET NOS. 18, 19 & 20

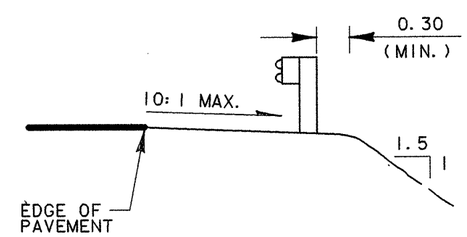

TYPICAL SECTION

ALL DIMENSIONS ARE IN METERS, UNLESS NOTED OTHERWISE

metric units

DESIGN AGENCY: DISTRICT THREE

DESIGNED MB | DRAWN CAD | REVIEWED RDN 1-97 DATE | CHECKED | REVISED | STRUCTURAL FILE NUMBER

GUARDRAIL DETAIL

WAY-250-41.779 S.L.K. WAY-250-25.96 S.L.M.

WAY-250-22.53/a

39/48

DESIGN FILE: d:\users\nconley\dgn\bridge\1996\way250\gradl.dgn
WORKSTATION: nconley DATE: 23 JAN 97

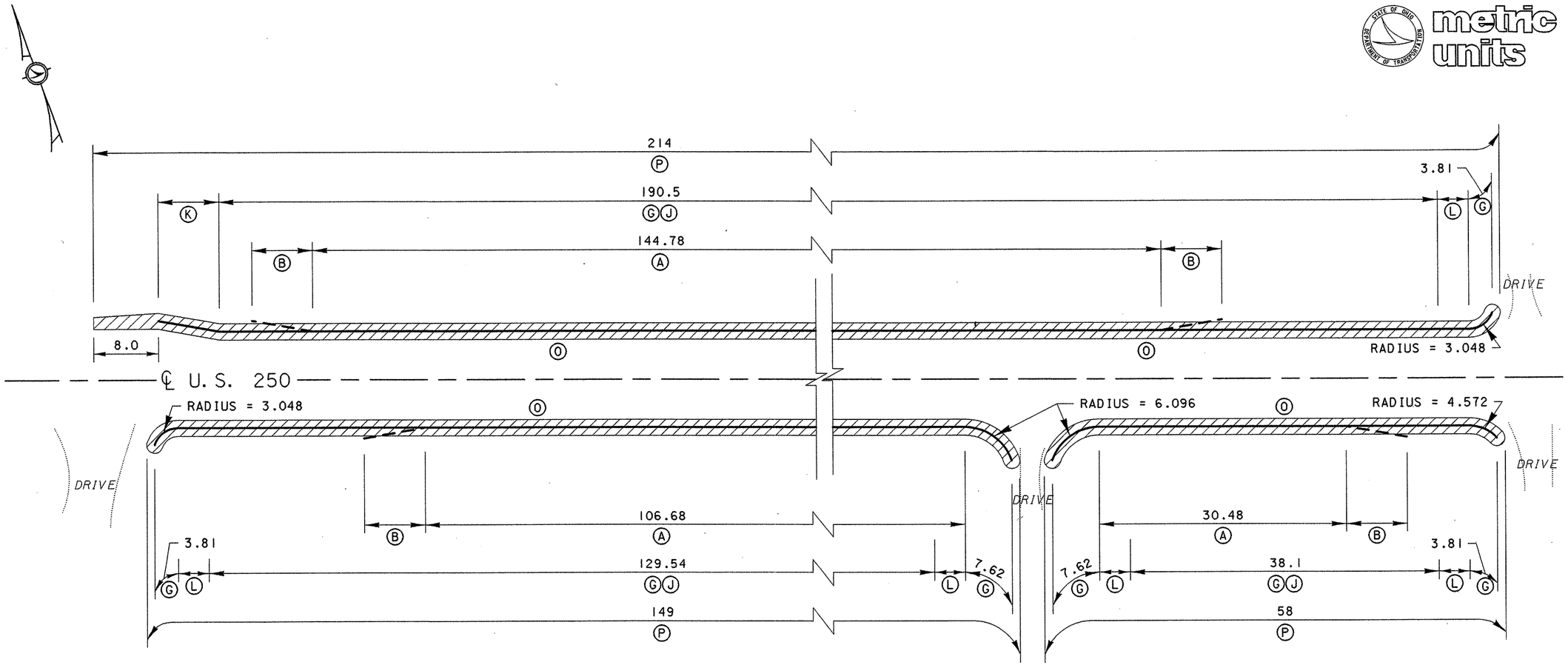

ITEM 203 - EMBANKMENT, AS PER PLAN

LOCATION	ITEM	DESCRIPTION	UNIT	QUANTITY LEFT	QUANTITY RIGHT	TOTAL QUANTITY
A	202	GUARDRAIL REMOVED	meter	144.78	137.16	281.94
B	202	ANCHOR ASSEMBLY REMOVED, TYPE A	each	2	2	4
	203	EMBANKMENT, AS PER PLAN	cubic meter	50	47	97
G	606	GUARDRAIL, TYPE 5	meter	194.31	190.5	384.81
J	606	GUARDRAIL POST, 2.75 METER	each	99	86	185
K	606	ANCHOR ASSEMBLY, TYPE A	each	1		1
L	606	ANCHOR ASSEMBLY, TYPE T	each	1	4	5
O	802	BARRIER REFLECTOR, TYPE A	each	8	8	16
P	SPECIAL	RESHAPING BERM	meter	214	207	421

ALL QUANTITIES ARE CARRIED TO ESTIMATED QUANTITIES SHEET, SHEET NOS. 18, 19 & 20

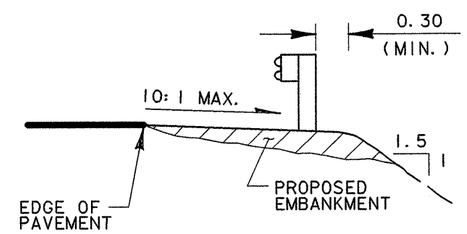

TYPICAL SECTION

ALL DIMENSIONS ARE IN METERS, UNLESS NOTED OTHERWISE

DESIGN FILE: d:\users\nconley\dgn\bridge\1996\way250\grdll.dgn
WORKSTATION: nconley DATE: 23 JAN 97

DESIGN AGENCY: DISTRICT THREE
DESIGNED MB | CHECKED | DRAWN CAD | REVISED | REVIEWED RDN | DATE 1-97 | STRUCTURAL FILE NUMBER

GUARDRAIL DETAIL
WAY-250-43.082 S.L.K. WAY-250-26.77 S.L.M.

WAY-250-22.53/a

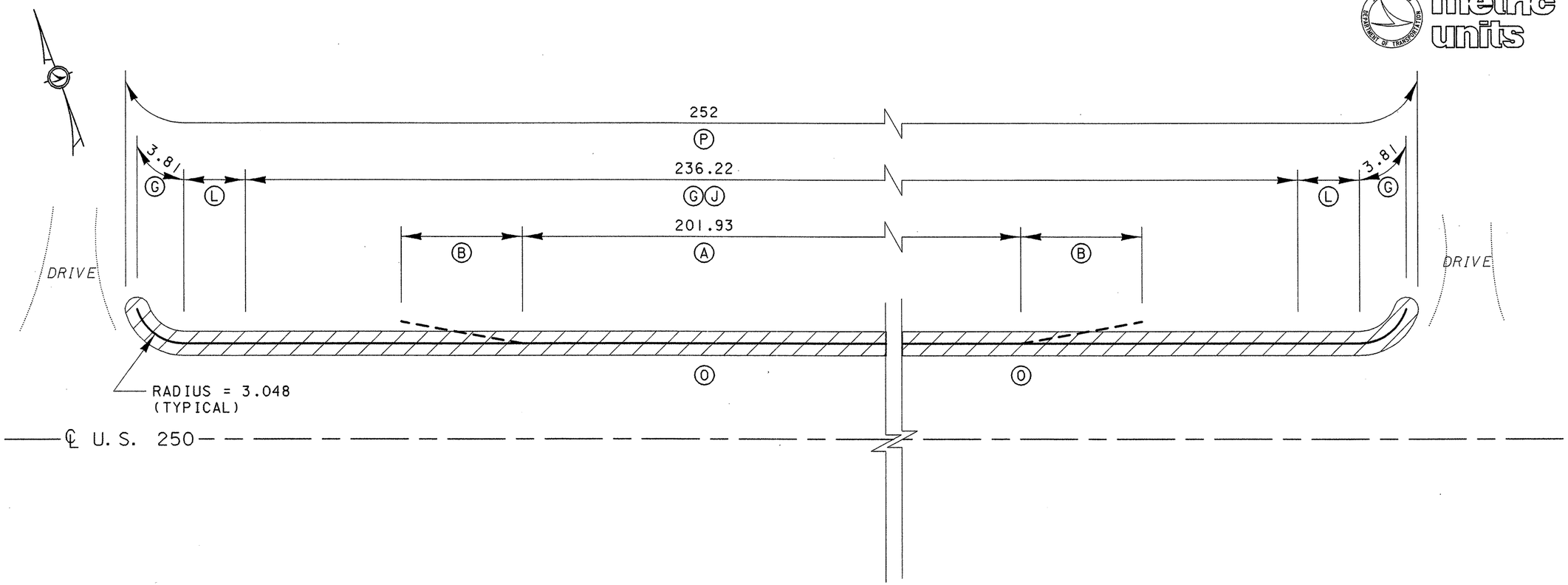

ITEM 203 - EMBANKMENT, AS PER PLAN

LOCATION	ITEM	DESCRIPTION	UNIT	QUANTITY		TOTAL QUANTITY
				LEFT	RIGHT	
A	202	GUARDRAIL REMOVED	meter	201.93		201.93
B	202	ANCHOR ASSEMBLY REMOVED, TYPE A	each	2		2
	203	EMBANKMENT, AS PER PLAN	cubic meter	39		39
G	606	GUARDRAIL, TYPE 5	meter	243.84		243.84
J	606	GUARDRAIL POST, 2.75 METER	each	123		123
L	606	ANCHOR ASSEMBLY, TYPE T	each	2		2
O	802	BARRIER REFLECTOR, TYPE A	each	10		10
P	SPECIAL	RESHAPING BERM	meter	252		252

ALL QUANTITIES ARE CARRIED TO ESTIMATED QUANTITIES SHEET, SHEET NOS. 18, 19 & 20

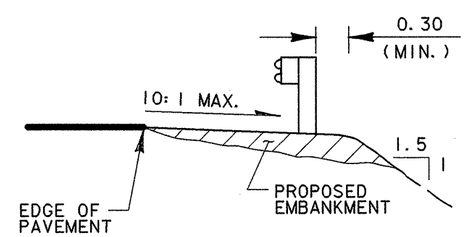

TYPICAL SECTION

ALL DIMENSIONS ARE IN METERS, UNLESS NOTED OTHERWISE

metric units

DESIGN AGENCY: DISTRICT THREE

DATE REVIEWED: 1-27 RDW — STRUCTURAL FILE NUMBER

DRAWN: CAD — REVISED

DESIGNED: MB — CHECKED: EAL

GUARDRAIL DETAIL

WAY-250-44.498 S.L.K. WAY-250-27.65 S.L.M.

WAY-250-22.531a

41/48

DESIGN FILE: d:\users\nconley\dgn\bridge\1996\way250\grail.dgn
WORKSTATION: nconley DATE: 23 JAN 97

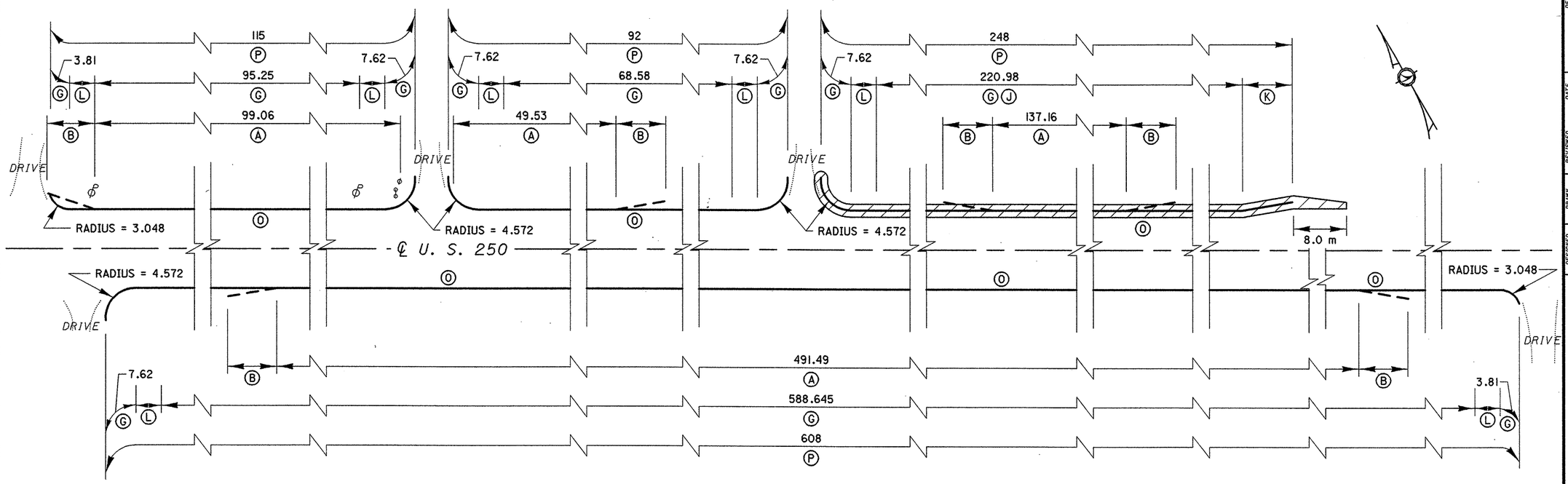

ITEM 203 - EMBANKMENT, AS PER PLAN

LOCATION	ITEM	DESCRIPTION	UNIT	QUANTITY		TOTAL QUANTITY
				LEFT	RIGHT	
A	202	GUARDRAIL REMOVED	meter	285.75	491.49	777.24
B	202	ANCHOR ASSEMBLY REMOVED, TYPE A	each	4	2	6
	203	EMBANKMENT, AS PER PLAN	cubic meter	46		46
G	606	GUARDRAIL, TYPE 5	meter	419.1	600.075	1019.175
J	606	GUARDRAIL POST, 2.75 METER	each	115		115
K	606	ANCHOR ASSEMBLY, TYPE A	each	1		1
L	606	ANCHOR ASSEMBLY, TYPE T	each	5	2	7
O	802	BARRIER REFLECTOR, TYPE A	each	16	21	37
P	SPECIAL	RESHAPING BERM	meter	455	608	1063

ALL QUANTITIES ARE CARRIED TO ESTIMATED QUANTITIES SHEET, SHEET NOS. 18, 19 & 20

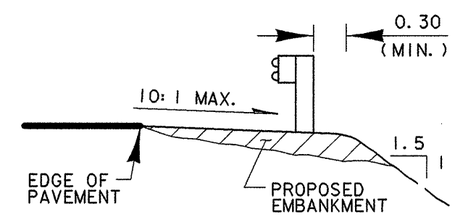

TYPICAL SECTION

ALL DIMENSIONS ARE IN METERS, UNLESS NOTED OTHERWISE

DESIGN FILE: d:\users\nconley\dgn\bridge\1996\way250\grail.dgn
WORKSTATION: nconley DATE: 23 JAN 97

DESIGN AGENCY: DISTRICT THREE
DESIGNED: MB | CHECKED: | DRAWN: NRC | REVISED: | REVIEWED: RDW | DATE: 1-97 | STRUCTURAL FILE NUMBER:

GUARDRAIL DETAIL
WAY-250-44.997 S.L.K. WAY-250-27.96 S.L.M.

WAY-250-22.531a

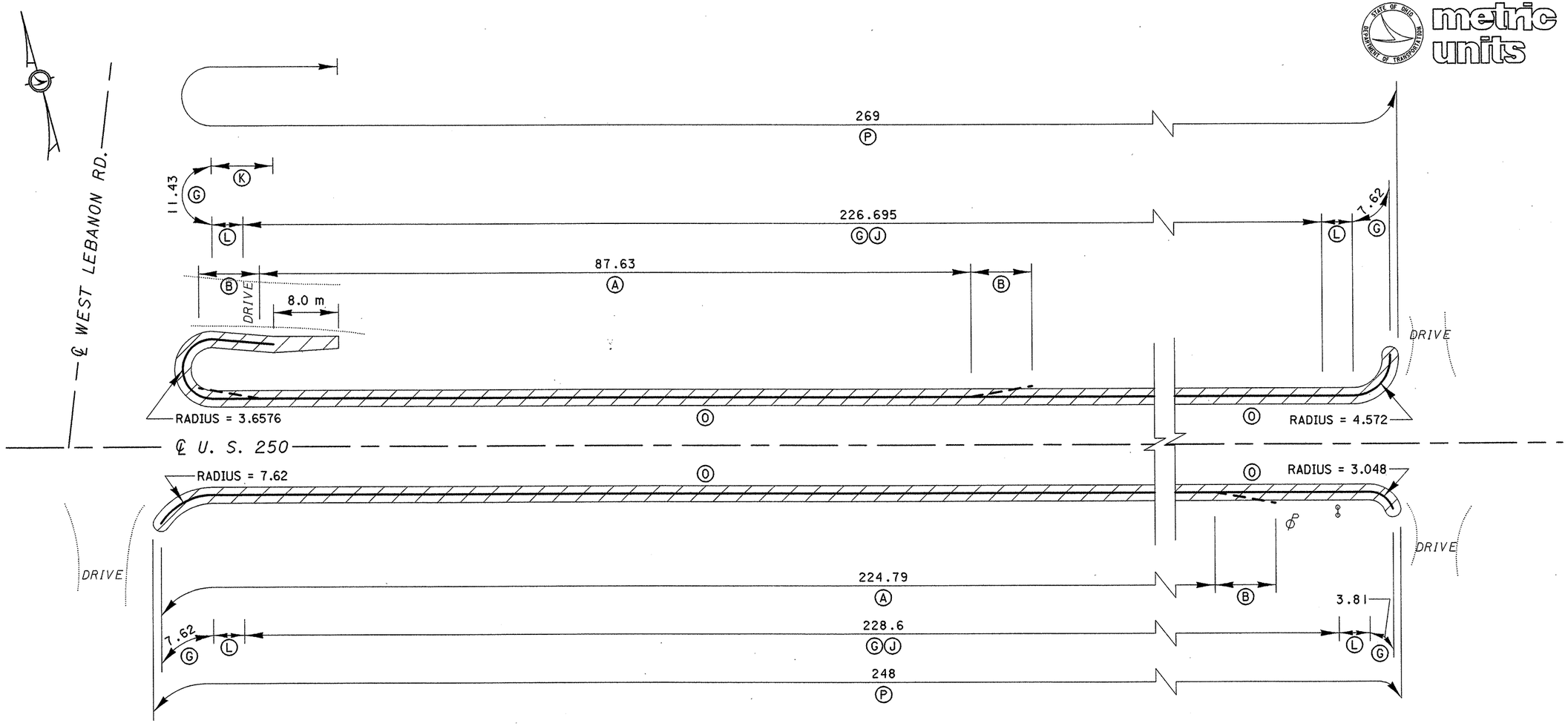

LOCATION	ITEM	DESCRIPTION	UNIT	QUANTITY LEFT	QUANTITY RIGHT	TOTAL QUANTITY
Ⓐ	202	GUARDRAIL REMOVED	meter	87.63	224.79	312.42
Ⓑ	202	ANCHOR ASSEMBLY REMOVED, TYPE A	each	2	1	3
	203	EMBANKMENT, AS PER PLAN	cubic meter	54	54	108
Ⓖ	606	GUARDRAIL, TYPE 5	meter	245.745	240.03	485.775
Ⓙ	606	GUARDRAIL POST, 2.75 METER	each	118	119	237
Ⓚ	606	ANCHOR ASSEMBLY, TYPE A	each	1		1
Ⓛ	606	ANCHOR ASSEMBLY, TYPE T	each	2	2	4
Ⓞ	802	BARRIER REFLECTOR, TYPE A	each	10	10	20
Ⓟ	SPECIAL	RESHAPING BERM	meter	269	248	517

ALL QUANTITIES ARE CARRIED TO ESTIMATED QUANTITY SHEET, SHEET NOS. 18, 19 & 20

ITEM 203 - EMBANKMENT, AS PER PLAN

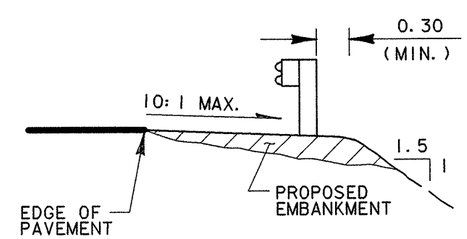

TYPICAL SECTION

ALL DIMENSIONS ARE IN METERS, UNLESS NOTED OTHERWISE

DESIGN AGENCY: DISTRICT THREE

DATE REVIEWED: 1-97 STRUCTURAL FILE NUMBER: RDW

DRAWN: CAD REVISED:

DESIGNED: MB CHECKED:

GUARDRAIL DETAIL

WAY-250-45.979 S.L.K. WAY-250-28.57 S.L.M.

WAY-250-22.530

DESIGN FILE: d:\users\nconley\dgn\bridge\1996\way250\grdll.dgn
WORKSTATION: nconley DATE: 23 JAN 97

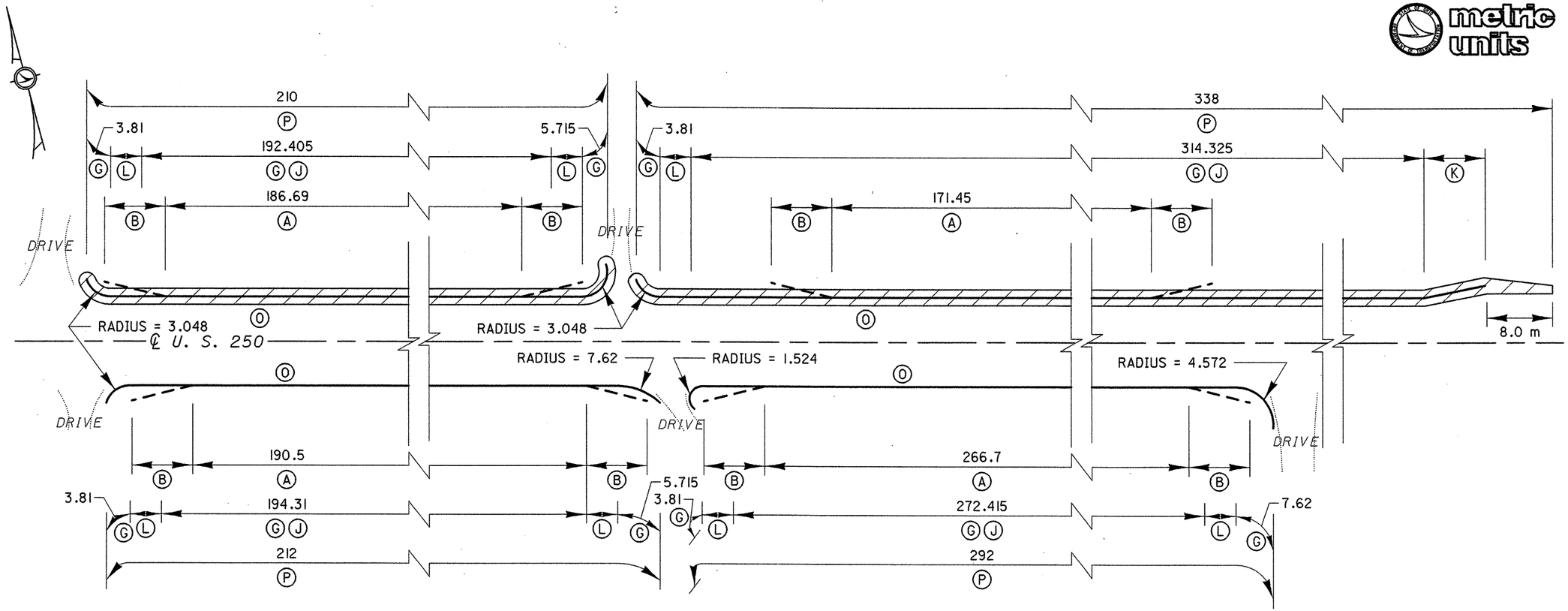

ITEM 203 - EMBANKMENT, AS PER PLAN

LOCATION	ITEM	DESCRIPTION	UNIT	QUANTITY		TOTAL QUANTITY
				LEFT	RIGHT	
A	202	GUARDRAIL REMOVED	meter	358.14	457.2	815.34
B	202	ANCHOR ASSEMBLY REMOVED, TYPE A	each	4	4	8
	203	EMBANKMENT, AS PER PLAN	cubic meter	115		115
G	606	GUARDRAIL, TYPE 5	meter	520.065	487.68	1007.745
J	606	GUARDRAIL POST, 2.75 METER	each	264	243	507
K	606	ANCHOR ASSEMBLY, TYPE A	each	1		1
L	606	ANCHOR ASSEMBLY, TYPE T	each	3	4	7
O	802	BARRIER REFLECTOR, TYPE A	each	19	18	37
P	SPECIAL	RESHAPING BERM	meter	548	504	1052

ALL QUANTITIES ARE CARRIED TO ESTIMATED QUANTITIES SHEET, SHEET NOS. 18, 19 & 20

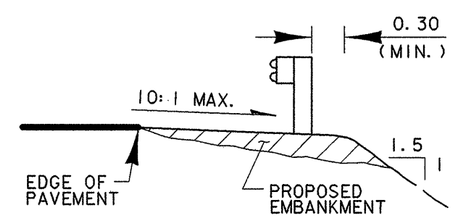

TYPICAL SECTION

ALL DIMENSIONS ARE IN METERS, UNLESS NOTED OTHERWISE

DESIGN AGENCY: DISTRICT THREE

DESIGNED: MB | CHECKED: | DRAWN: NRC | REVISED: | REVIEWED: RDN | DATE: 1-97 | STRUCTURAL FILE NUMBER:

GUARDRAIL DETAIL

WAY-250-46.623 S.L.K. WAY-250-28.97 S.L.M.

WAY-250-22.531a

44/48

DESIGN FILE: d:\users\nconley\dgn\bridge\1996\way250\grdl.dgn
WORKSTATION: nconley DATE: 23 JAN 97

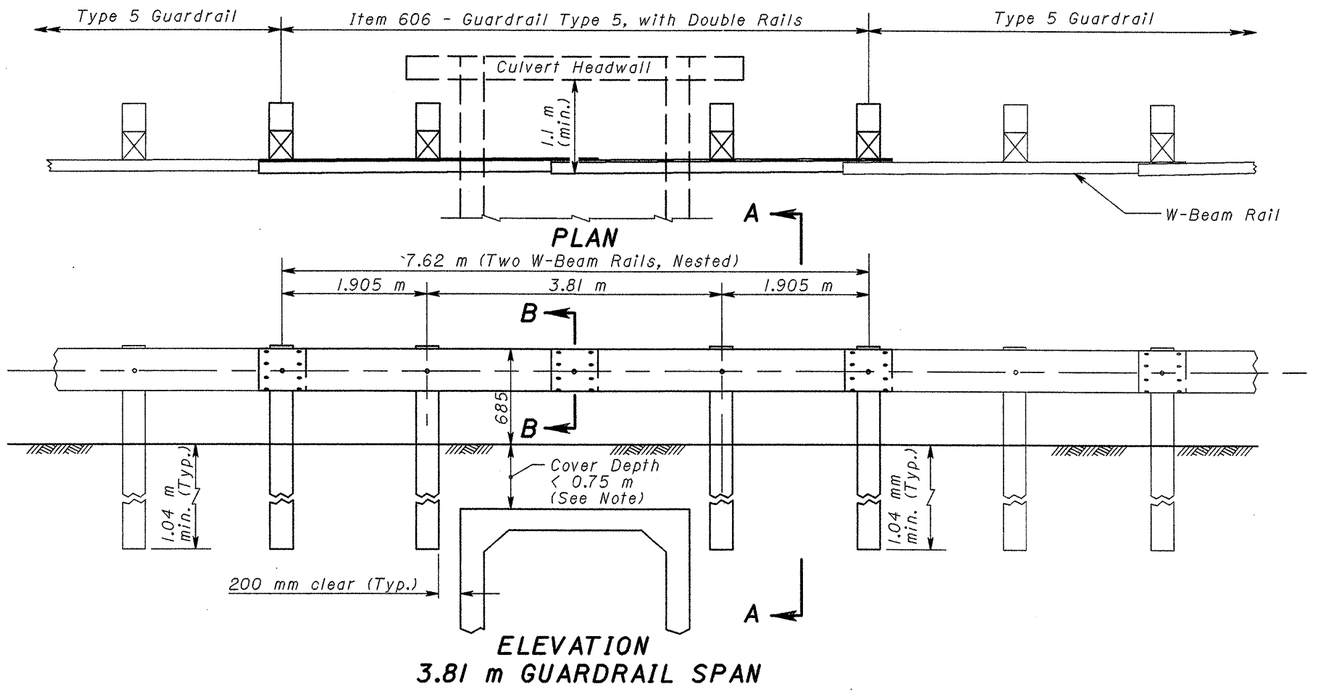

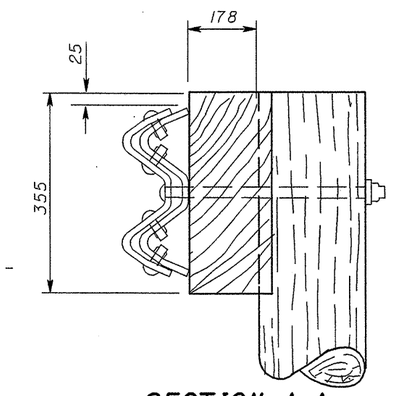

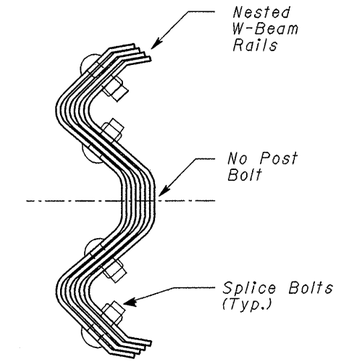

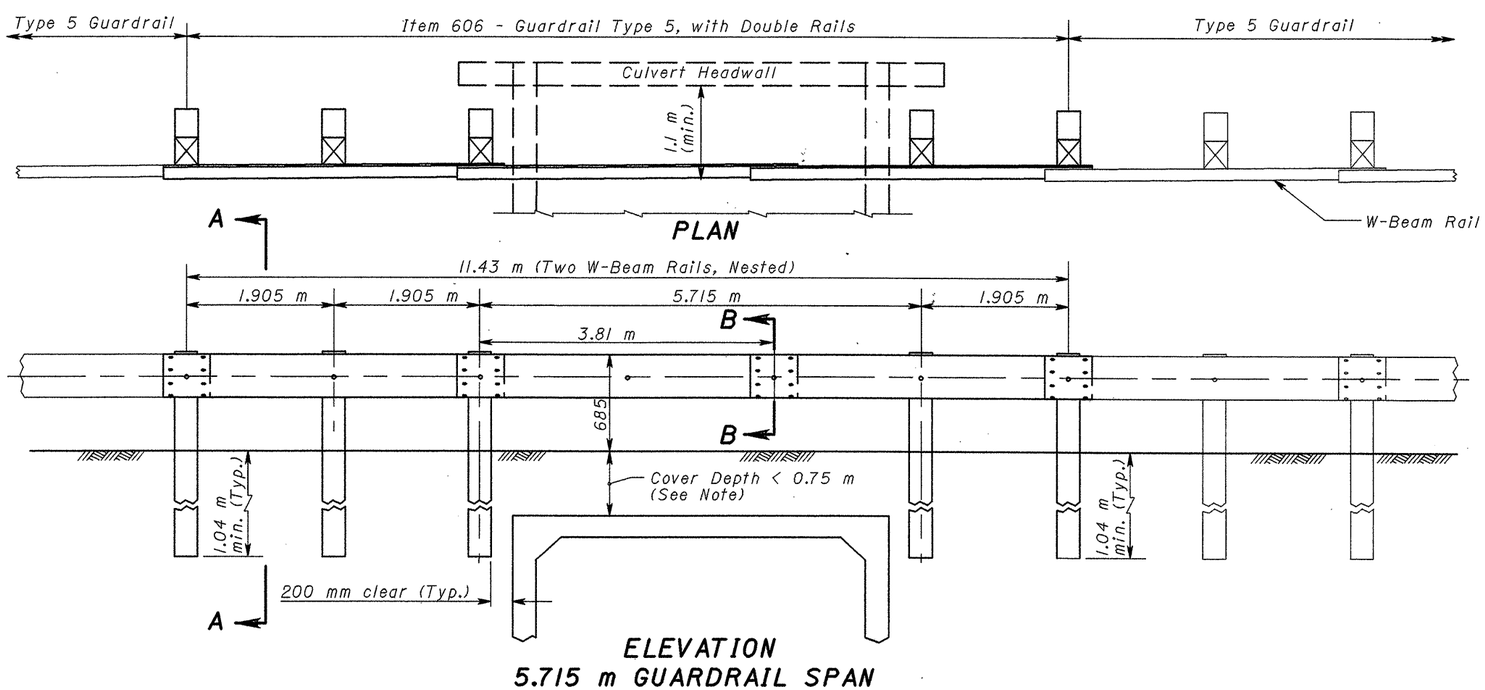

NOTES

PAYMENT: Item 606, Guardrail, Type 5 with Double Rails shall be in meters for the length specified in the plans and shall include the double rail elements, posts, and the other hardware, materials and labor required to construct the guardrail as shown.

COVER DEPTH: This depth is measured at the locations of the missing posts. For cover depths greater than or equal to 0.75 meter, see Standard Constr. Dwg. GR-1.2M.

MATERIALS: All posts, spacer blocks, rails, and hardware shall comply with Item 606, Guardrail Type 5 as detailed on GR-2.1M.

DETAILS: For other details not shown, see GR-1.1M, GR-1.2M and GR-2.1M.

All dimensions are in millimeters unless otherwise noted.

metric units

CALCULATED 3-5-96 CHECKED

LONG SPAN ACROSS CULVERT

WAY-250-22.53/a

45/48

AUXILIARY & LONG LINE MARKINGS

metric units

PART	ROUTE	FROM S.L.K.	FROM	TO S.L.K.	TO	202 RAISED PAVEMENT MARKER REMOVED FOR STORAGE each	LANE WIDTH m	SPECIAL, EPOXY EDGE LINE HIGHWAY kilometers km	EDGE LINE TOTAL (PAY QUANT.) km	LANE LINE km	CENTER LINE SOLID LINE EQUIVALENT km	CENTER LINE TOTAL (PAY QUANT.) km	644 AUXILIARY MARKINGS (740.04) CHANNELIZING LINE 200mm m	STOP LINE 600mm m	CROSSWALK LINE 300mm m	TRANSVERSE LINE 600mm m	RAILROAD SYMBOL MARKING each	SCHOOL SYMBOL MARKING 1800mm each	SCHOOL SYMBOL MARKING 2500mm each	PARKING LOT STALL MARKING m	LANE ARROW TURN LEFT each	LANE ARROW TURN RIGHT each	LANE ARROW THRU each	LANE ARROW COMBINATION each	WORD ON PAVEMENT "ONLY" 1800mm each	WORD ON PAVEMENT "ONLY" 2500mm each	HANDICAP SYMBOL MARKING each	SPECIAL AIR SPEED ZONE MARKING each	614 TEMPORARY CENTER LINE, CLASS II, 642 PAINT km	TEMPORARY LANE LINE, CLASS II, 642 PAINT km
A	US250	22.531a	14.00 MILE MARKER	47.749	STARK COUNTY LINE	894	*	23.79	47.58		29.98	25.22		189	316			2	2										52.80	

* LANE WIDTH IS 3.51m FROM SLK 22.531 TO APPLE CREEK

LANE WIDTH IS 3.66m FROM APPLE CREEK TO SLK 47.749

RAISED PAVEMENT MARKERS

LOCATION PART	ROUTE	s.l.k. SECTION FROM	TO	DETAIL	RPM	621 RAISED PAVEMENT MARKER, INSTALLATION ONLY each	PRISMATIC RETRO REFLECTOR each	RAISED PAVEMENT MARKER CASTING, INSTALLATION ONLY each	PRISMATIC RETRO-REFLECTOR TYPES ONE - WAY WHITE	ONE - WAY YELLOW	TWO - WAY YELLOW/YELLOW	TWO - WAY WHITE/RED	TWO - WAY YELLOW/RED	REMARKS
A	US 250	22.531a	28.067	GAP	177	177					177			CONTINUOUS ROUTE TREATMENT
		30.449	35.084	GAP	190	190					190			CONTINUOUS ROUTE TREATMENT
		35.084	36.146	15	87	87					87			REVERSE CURVE
		36.146	41.875	GAP	235	235					235			CONTINUOUS ROUTE TREATMENT
		42.744	47.749	GAP	205	205					205			CONTINUOUS ROUTE TREATMENT
		TOTAL PART A			894	894					894			

DETAIL	
1	MULTILANE UNDIVIDED
1	TYPICAL SPACING
2	TAPERED ACCEL LANE
3	DECELERATION LANE
4	PARALLEL ACEL LANE
5	MULTILANE DIVIDED/ EXPRESSWAY
6	STOP APPROACH
7	1 LANE APPR. W/LT. TURN LANE
8	THRU APPROACH
9	2 LANE APPR. W/LT TURN LANE
10	4 LANE DIVIDED TO 2 LANE TRANSITION
11	4 LANE UNDIVIDED TO 2 LANE TRANSITION
12	TWO LANE NARROW BRIDGE
13	TWO WAY LEFT TURN LANE
14	ONE LANE BRIDGE
15	HORIZONTAL CURVE
16	HORIZONTAL CURVE ALT.
17	STOP APPROACH ALT.
GAP	CENTERLINE AT 80' TYP.

CALCULATED CVH
CHECKED MJS

PLAN NO.

PAVEMENT MARKING INFORMATION

WAY-US250-22.531a

ITEM SPECIAL - PAVEMENT MARKING, MISC: EPOXY

DESCRIPTION
This work shall consist of furnishing and applying epoxy pavement markings in accordance with 641.740 and the additional requirements described herein.

EQUIPMENT
Equipment for applying the epoxy pavement marking shall be capable of mixing the components in proportions recommended by the manufacturer and applying glass beads at the time of the line placement. The marking equipment used shall be capable of applying epoxy material at the specified thickness. The Contractor shall provide a calibrated measuring device acceptable to the Engineer to measure the epoxy resin in the striper tanks.

In general, the application equipment shall be mobile, truck mounted and self contained pavement marking machine, specifically designed to spray the epoxy binder and reflective glass spheres in continuous and skip line patterns. The applicating equipment shall be maneuverable to the extent that straight lines can be followed and normal curves can be made in a true arc.

The mobile applicator shall include the following features:

1. The mobile applicator shall provide individual material reservoirs, or space, for the storage of Part A and Part B of the binder.

2. The applicator shall be equipped with heating equipment of sufficient capacity to maintain the individual binder components at the manufacturer's recommended temperature and produce the required amount of heat at the mixing head & gun tip and maintain those temperatures with the tolerances recommended by the binder manufacturer for the spray application.

3. The applicator shall be equipped with adequate individual tanks for the storage and dispensing of Size I and Size II glass spheres and black aggregate.

4. The applicator shall be equipped with individual dispensers for the simultaneous application of Size I and Size II glass spheres respectively. Each dispenser shall be capable of applying spheres at a minimum rate of 2.40 kilogram/liter of the binder. The applied combined total for both sizes of the beads should be a minimum of 3.00 kilograms/liter - 5.44 to 5.90 kilograms of each size.

5. The applicator shall be equipped with individual metering devices or pressure gauges, on the proportioning pumps (one indicator per pump) as well as stroke counters to monitor gallon usage. All such devices shall be visible to the Engineer.

6. The applicator shall be equipped with all the necessary spray equipment mixers, compressors and other appurtenances to allow for the placement of reflectorized pavement marking systems in a simultaneous sequence of operations.

7. Each application equipment must have a minimum of a 0.6 meter long static mixer unit as manufactured by Kenics Company or equal for proper mixing of the two components.

8. Each mobile applicator must be equipped with a completely enclosed flush and purge system to clean the lines and the guns without expelling any of the solution into the environment.

Epoxy marking material shall be applied only when the surface is clean and dry and when the pavement and air temperature are above 10°C. (For applications at temperatures below 10°C, the epoxy manufacturer must be contacted for approval.) The contractor shall transfer the entire contents of each material container to the striper tanks. The material shall be thoroughly mixed at all times during application. Epoxy marking material, plus resin, shall be applied uniformly to the surface to be marked at the following rate.

(Thickness of 0.5mm)

Liter per kilometer of line	Width of Line (mm)				
	100	150	200	300	600
Solid Line	2.35	77.63	103.51	155.26	310.52
Dashed Line	12.94	20.00	25.88	40.00	79.98

Thinning shall not be permitted.

Glass beads shall be applied to the uncured epoxy material in sufficient quantity so that the beads completely fill the epoxy film from the film-pavement interface to the top surface of the film to the extent that there are loose beads on the surface of the uncured line. The rate of application shall not be less than 3kilogram of glass beads per liter of epoxy material applied. If the epoxy marking does not dry to a no-tracking condition consistently and shows a cyclical soft spot, the Contractor shall cease marking application until the problem is corrected.

CERTIFICATE OF COMPLIANCE: The material manufacturer shall furnish a notarized certification that the material complies with the provisions of this specification. It shall not be inferred that the provisions of a certification of compliance waives state inspection, sampling, or testing.

LABORATORY SAMPLES: Promptly after execution of the contract, the contractor shall notify the Engineer of the sources of material he expects to use. The material manufacturer shall furnish samples of the epoxy materials as may be required by the Engineer, a minimum of ten days before the date of intended use of these materials.

INFRARED SPECTRA: A copy of the infrared spectra of each component on each lot number shall be applied by the manufacturer along with the certification papers. This infrared spectra will be on record with the Department to serve as a quality control measure for the future supply of this system to the State.

QUALIFYING A MANUFACTURER: The manufacturer must have expertise reinforced with history in this particular field to qualify such as:

a. Must have completed and passed the service test in accordance with Supplement 1047.
b. Verifiable installations
c. Ample production capacity
d. Proper facility
e. Compliance with EPA regulations
f. A verifiable quality control program

QUALIFYING A CONTRACTOR: In order for an installer of such pavement marking material to be approved, the following document must be submitted:

A certificate from a pre-approved manufacturer of such Epoxy marking materials, certifying that such a contractor has functional, appropriate equipment to install the Epoxy pavement marking material stated with the technology in this specification and he has and continues to be successful at performing this type of work.

METHOD OF MEASUREMENT: In addition to the requirements of 641.12, the following shall apply:

The Contractor must submit certified documents from the manufacturer of amount of liters and kilograms of beads shipped for the particular project.

In the field the Contractor shall furnish a calibrated measuring device to be used to measure the quantity of materials used such as stroke counters mounted on the dispensing pumps. Stroke counter reading must be taken at the beginning and end of each day by the State authorized inspector. Caution must be taken while re-circulating the material to turn off the stroke counter on the pump. (Using the "dipping the tank" method is not sufficient.)

The rate of application of materials shall be verified by comparing the amount of materials used with the computed amount needed for each section. Where short sections are involved and it is not practical or feasible to determine the quantities used on the each and every short section, such sections may, by agreement between the Engineer and Contractor, be grouped together to verify the quantities used.

PERFORMANCE REQUIREMENTS: The system shall provide effective delineation on concrete as well as asphalt pavement for the specified period and provide the following initial Retroreflectivity Requirements:

	Specific Luminance (mcd/ m /lx) Mirolux-12
White line, symbols and legends	2700 min.
Yellow line	1885 min.

EPOXY MATERIAL: Material supplied shall be a two part epoxy system capable of being applied at ambient temperature down to 10°C. The material shall be capable of retaining reflective glass beads of the drop-on type or spray-on type.

Epoxy shall comply to the following requirements:

1. The epoxy shall be formulated as a Long Life Pavement Marking System free of any peroxides, and/or TMPTA (Tri-methylol propane tri-acrylate) and other such multi-functional monomers. The epoxy should be designed to provide simple volumetric mixing ratio of its components (such as 2:1).

2. Viscosity: The viscosity of the Part A White shall be 19,000-20,000 cP and Part A Yellow shall be 25,000-26,000 mPa • s and the viscosity of the Part B shall be 1,950-2,050 mPa • s. At the point of application the viscosity shall be within 10% of each other.

3. Weight: The weight of Part A shall be White 1.42 kg/liter ±0.02 kg/liter and Yellow 1.53 kg/liter ±0.02 kg/liter. The weight of Part B shall be 1.15 kg/liter ±0.02 kg/liter.

4. Epoxide Number: The epoxide number of the epoxy resin shall be 0.51 ±0.05 as determined by ASTM D-1652 for both white and yellow Component A on a pigment free basis.

metric units

CALCULATED CVH
CHECKED MJS

PLAN NO.

GENERAL NOTES

WAY-US250-22.531a

5. Amine Number: The amine number of the curing agent (Component B) shall be 375 ± 50 as per ASTM D-2074.

6. Toxicity: Upon heating to application temperature, the material shall not exude fumes which are toxic or injurious to persons or property. Upon curing the materials should be completely inert with all components fully reacted and environmentally safe.

7. Drying Time (Laboratory): The pavement marking material, when mixed in the proper ratio and applied at the appropriately prescribed wet film thickness at 24°C ± 2°C and with the proper saturation of glass spheres, shall exhibit no tracking time when tested according to ASTM D-711 as follows:
   a. 40-45 minutes.

8. Drying Time (Field): The pavement marking material shall have a setting time to a no-tracking condition of not more than 35 minutes at 24°C ± 2°C. The line must be protected from tracking during the setting period by one or more of the following methods: (1) coning off the wet line from traffic, (2) use of convoy of moving vehicles to prevent traffic crossing the wet line, and (3) saturation of the line with glass beads to prevent tracking.

9. Curing : The pavement marking material shall shall be capable of fully curing under the constant surface temperature condition 8°C or above.

10. Adhesion to Pavement (Concrete and Asphalt): The cured pavement marking materials, when tested according to ACI Method 503, shall have such a higher degree of adhesion to the specified concrete (compressive strength, 27,580 kPa minimum) or asphalt surface such that there shall be a 100% failure in the substrate in the performance of the test. The prepared specimens shall be conditioned at room temperature (24°C ± 2°C) for a minimum of 24 hours and a maximum of 72 hours prior to the performance of the indicated test.

11. Hardness: The pavement marking materials, when tested according to ASTM D-224-75, shall have a Shore D Hardness of between 70 and 90. Samples shall be allowed to cure at room temperature (24°C ± 2°C) for a minimum of 24 hours and a maximum of 72 hours prior to performing the indicated test.

12. Tensile Strength: When tested according to ASTM D-638, the epoxy pavement marking materials shall have a tensile strength of not less than 34,480 kPa. The Type IV specimens shall be cast in a suitable mold and pulled at a rate of 6mm per minute, by suitable dynamic testing machine. The samples shall be allowed to cure at room temperature (24°C ± 2°C) for a minimum of 24 hours and a maximum of 72 hours prior to performing the indicated test.

13. Compressive Resistance: When tested according to ASTM D-695, the Catalyzed epoxy pavement marking materials shall have a compressive strength of not less than 27,580 kPa. The cast sample shall be conditioned at room temperature (24°C ± 2°C) for a minimum of 72 hours before performing the indicated test. The rate of compression for these samples shall be no more than 6mm per minute.

14. Abrasion Resistance: The abrasion resistance shall be evaluated on a Taber Abrader with a 1,000 gram load and CS-17 wheels. The duration of the test shall be 1,000 cycles. The wear index shall be calculated based on ASTM test method C-501 and the wear index for a catalyzed material shall not be more than a 100 mg. The test shall be run on cured samples of materials which have been applied at a film thickness of 0.5 ± 0.01 mm to code S-16 stainless steel plates. The samples shall be allowed to cure at 24°C ± 2°C for a minimum of 24 hours and a maximum of 72 hours prior to performing the indicated test.

15. Impact Strength:
   a. Sample preparation: Properly mixed material shall be applied on a minimum of 28 days old clean concrete and shall be allowed to cure for 72 hours at 24°C ± 2°C. Film thickness of the material shall be at the appropriately prescribed thickness.

   b. Testing: At a temperature of 24°C ± 2°C, a two pound round steel ball shall be dropped from a height of 1.22 m on the cured sample. No cracking or chipping of the material shall take place.

16. Color: The mixed epoxy compound, both white and yellow, must be applied to sets of 75 x 150mm aluminum panels at 0.5 ± 0.03 mm in thickness, one set with no glass spheres and one set with glass spheres as specified in this specification section 633.03.04 paragraph b (must ensure 50/50 distribution of size I and size II spheres for this will impact the results of the test), and expose the prepared samples in a Q.U.V. Environmental Testing Chamber, as described in ASTM G-53, and they shall conform to the following requirements in alternating cycles. (The test shall be conducted for 75 hours at 50°C, 4 hours humidity and 4 hours UV, in alternating cycles. The prepared panels shall be cured at 25°C for 72 hours prior to exposure). The color of white epoxy material shall not be darker than the Federal Standard No. 595A-17855. The color of the yellow epoxy polymer material shall be reasonably close to Federal Standard No. 595A-13415.

17. Accelerated Life-Cycle Aging Test: The material must not show any evidence of blistering, bubbling, or delaminating when submitted to test method ATR-931. (Independent test laboratories such as PSI, can be contacted to perform ATR-931. PSI, Cleveland Office, (216)-447-1335, Contact- Mr. Jim McCue.)

In addition to the requirements of 740.10, the following shall apply:

Inspection shall be done at the project site. Random samples shall be obtained from material delivered to the project site, or at other locations designed by the laboratory.

Glass bead for the epoxy marking material shall conform to the following:

The glass spheres shall have the following gradation when tested in accordance with ASTM D-1214.

Size I	
Sieve Size	% Retained
10	0
12	0-5
14	5-20
16	40-80
18	10-40
20	0-5
pan	0-2

Size 2	
Sieve Size	% Retained
20	0-5
30	5-20
50	30-75
80	9-32
pan	0-10

REFLECTIVE MEDIA: The drop-on glass beads shall be smooth, clear, free from any air inclusions and scratches that might affect their functions as a retro-reflective media, and shall have the characteristics listed below. Glass beads shall be dropped in a double drop system with the large gradation (Size I) first and the regular gradation (Size II) second in the same pass of the equipment. The beads shall be applied in equal amounts by weight. The combined application if both sizes shall be at a minimum rate of 3.0 kg/liter with each size ranging between 1.44-1.56 kg/liter and beads shall conform to the following requirements:

ROUNDNESS % BY WEIGHT: Not more than 20% of the glass spheres shall be irregular or fused spheroids, and at least 80% of the spheres shall be true spheres. Size I spheres shall be tested for roundness according to procedural directives of the Material Program. Size II spheres shall be tested in accordance with ASTM D1155.

Index of Refraction: The refractive index of the spheres shall be a minimum of 1.50 as determined by the liquid immersion method at 25°C. The silica content of glass spheres shall not be less than 60%.

The glass spheres, Size I, shall be coated with a saline-type adherence coating to enhance its embedment in, and adherence to the applied binder film. The coated beads shall emit a yellow-green florescence when tested by the Dansyl Chloride test procedure. The Size II glass spheres shall be treated with a moisture-proof coating. Both types of glass beads shall show no tendency to absorb moisture in storage and shall remain free of closures and lumps. They shall flow freely from dispensing equipment at any time when surface and atmosphere conditions are satisfactory for marking operations. The moisture-resistance of the glass spheres shall be determined on the basis of the following test:

Place 0.91 kilograms of spheres in a washed cotton bag, having a thread count of 50 per 6.5 sq.cm. (warp and woof) and immerse the bag in a container of water for 30 seconds. Remove the bag and force the excess water from the sample by squeezing the bag. Suspend and allow to drain for two hours at room temperature (22°-23°C). Then mix the sample in the bag shaking thoroughly. Transfer a sample slowly to clean, dry glass funnel having a stem 100mm in length, with a 10mm inside diameter stem entrance opening and a minimum exit opening of 6mm. The entire sample shall flow freely through the funnel without stoppage. When first introduced to the funnel, if the spheres clog, it is permissible to tap the funnel to initiate flow.

BASIS OF PAYMENT:
Payment for accepted quantities complete in place will be made at the contract prices, or prices adjusted in accordance with 641.11 for:

ITEM	UNIT	DESCRIPTION
Special	Kilometer	Pavement Marking, Misc.: Edge Line, Epoxy
Special	Kilometer	Pavement Marking, Misc.: Center Line, Epoxy

metric units

calculated CVH
checked MJS

PLAN NO.

GENERAL NOTES

WAY-US250-22.531a

46b
48

FREEWAY & EXPRESSWAY MAINLINE MARKINGS

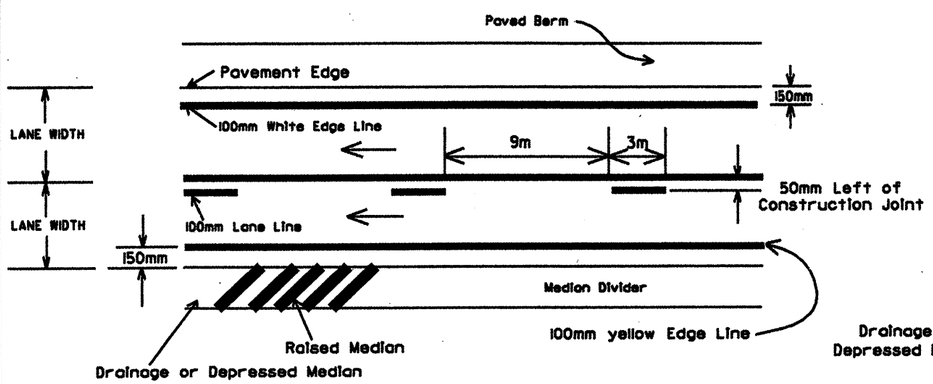

MULTILANE DIVIDED & UNDIVIDED HIGHWAY MARKINGS

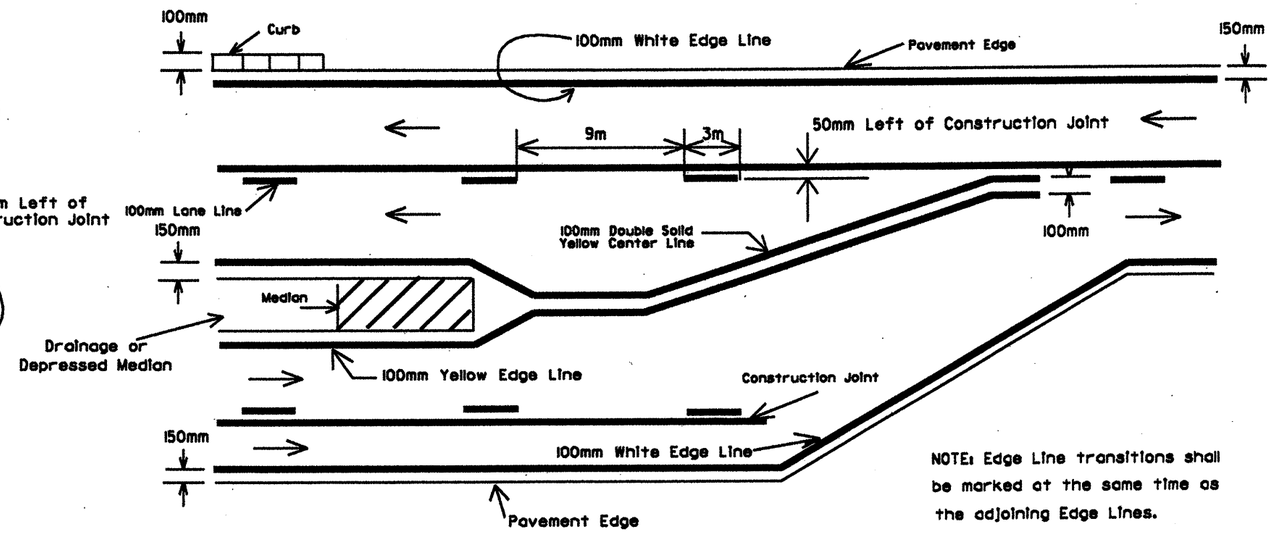

NOTE: Edge Line transitions shall be marked at the same time as the adjoining Edge Lines.

TWO LANE MARKINGS

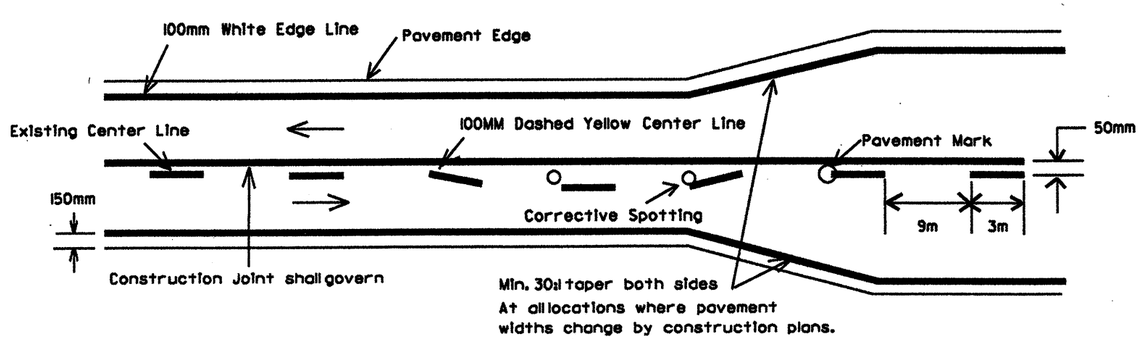

NOTES:

1. The distance from the pavement edge to the nearside edge of the edgeline may be increased with the approval of the Engineer in order to maintain uniform lane width.
2. See TC-72.20M for entrance and exit ramp markings.
3. The cycle length for dashed lines shall be 12 Meters plus or minus 150 mm. The minimum length of dash shall be sufficiently long to maintain a 3:1 ratio between length of gap and length of dash.

CALCULATED CVH
CHECKED MJS

PAVEMENT MARKING TYPICAL DETAILS

WAY-US250-22.531a

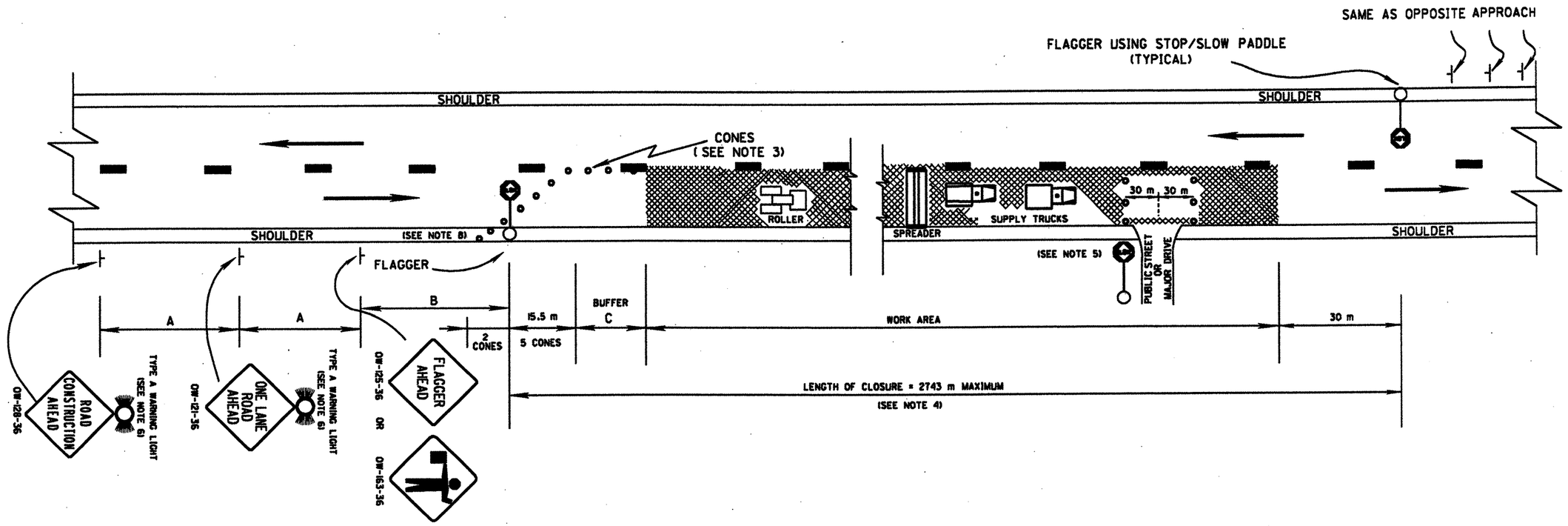

GENERAL NOTES:

1. THE LOCATION OF THE ADVANCE WARNING SIGNS SHOULD BE ADJUSTED TO PROVIDE FOR ADEQUATE SIGHT DISTANCE FOR THE EXISTING VERTICAL AND HORIZONTAL ROADWAY ALIGNMENT.

2. FLAGGERS, ONE FOR EACH DIRECTION, SHALL BE USED TO CONTROL TRAFFIC CONTINUOUSLY FOR AS LONG AS A ONE LANE OPERATION IS IN EFFECT. THE FLAGGERS SHALL BE ABLE TO COMMUNICATE WITH EACH OTHER AT ALL TIMES.

3. CONES ON THE TAPERS SHALL BE SPACED AT 3 m CENTER TO CENTER. CONES IN THE BUFFER SHALL BE SPACED AT 12 m CENTER TO CENTER. CONES SHALL HAVE A MINIMUM HEIGHT OF 0.7 m AND SHALL BE SAFELY STABILIZED TO PREVENT THEM FROM BLOWING OVER. CLOSURES AT NIGHT SHALL USE DRUMS RATHER THAN CONES.

4. IT IS REQUIRED THAT THE LENGTH OF CLOSURE BE KEPT TO A MINIMUM AT ALL TIMES, AS DIRECTED BY THE ENGINEER.

   WHEN THE AMBIENT TEMPERATURE EXCEEDS 27° C, THE ENGINEER MAY INCREASE THE MAXIMUM ALLOWABLE LENGTH OF CLOSURE TO ALLOW FOR SUFFICIENT COOLING OF NEW PAVEMENT.

   THE ENGINEER MAY SHORTEN THE MAXIMUM ALLOWABLE LENGTH OF CLOSURE TO RELIEVE EXCESSIVE TRAFFIC BACKUPS OR TO IMPROVE TRAFFIC OPERATION.

4. CONT. ALL TRAFFIC CONTROL SIGNS, CONES (OR DRUMS), AND THE FLAGGER SHALL BE MOVED FORWARD AS A GROUP BEFORE THE CLOSURE REACHES THE MAXIMUM ALLOWABLE LENGTH. ONLY ONE SIDE OF THE ROAD SHALL BE CLOSED AT ANY TIME.

5. WITHIN THE LENGTH OF CLOSURE, PROVISION SHALL BE MADE TO CONTROL TRAFFIC ENTERING FROM INTERSECTING STREETS AND MAJOR DRIVES AS NECESSARY TO PREVENT WRONG WAY MOVEMENTS AND TO KEEP VEHICLES OFF OF NEW PAVEMENT NOT READY FOR TRAFFIC. AS A MINIMUM, THE CONTRACTOR SHALL:

   A) PROVIDE AN ADDITIONAL FLAGGER AT EVERY PUBLIC STREET INTERSECTION AND MAJOR DRIVEWAY OR -
   B) PLACE A ROW OF 3 CONES ACROSS THE CLOSED LANE APPROXIMATELY 30 m ON EACH SIDE OF THE INTERSECTION OR DRIVEWAY.

   ROWS OF CONES MAY BE MOVED OFF THE ROAD TO ALLOW PASSAGE OF ROLLERS, PAVING SPREADER OR SUPPLY TRUCKS BUT SHALL BE MOVED BACK ONTO THE ROAD WHEN THE ACTIVITY HAS PASSED.

6. THE TYPE A FLASHING WARNING LIGHTS ARE REQUIRED ON THE OW-128 AND THE OW-121 SIGNS WHENEVER A NIGHT LANE CLOSURE IS NECESSARY.

7. ADEQUATE AREA ILLUMINATION OF EACH FLAGGER STATION SHALL BE PROVIDED AT NIGHT BY USING 150 WATT MINIMUM HIGH PRESSURE SODIUM LUMINAIRES OR 250 WATT MINIMUM MERCURY LUMINAIRES. LUMINAIRES SHALL BE LOCATED ADJACENT TO ONE FLAGGER STATION FOR EACH DIRECTION OF TRAFFIC.

8. TWO (2) CONES REQUIRED ON PAVED SHOULDER.

MINIMUM DISTANCE (METERS)	A MINIMUM	B RANGE	C MINIMUM
URBAN	61	61 TO 107	30
RURAL	152	152 TO 305	61

ALL WORK AND TRAFFIC CONTROL DEVICES SHALL BE IN ACCORDANCE WITH 614 AND OTHER APPLICABLE PORTIONS OF THE C & M SPECIFICATIONS AS WELL AS IN ACCORDANCE WITH PART 7 OF OMUTCD. PAYMENT FOR ALL LABOR, EQUIPMENT AND MATERIALS TO PROVIDE THIS METHOD OF TRAFFIC CONTROL SHALL BE INCLUDED IN THE LUMP SUM BID FOR 614 MAINTAINING TRAFFIC, UNLESS SEPARATELY ITEMIZED IN THE PLAN.

REVISED BY: DATE:

209711M

PLAN INSERT SHEET WCC

metric units

calculated CVH
checked MJS

PLAN NO.

FLAGGER CLOSING 1 LANE OF A 2 LANE HIGHWAY FOR PAVING OPERATIONS

WAY-US250-22.531a

48/48