WAY - US-250-14.45
110547 PID - 83391
Dist 3 10/20/2011

Contract Proposal available @www.contracts.dot state.oh.us/home

DESIGN FILE: I:\projects\83391\roadway\83391G1
WORKSTATION: sjuzwik DATE: 7/22/2011

LOCATION MAP

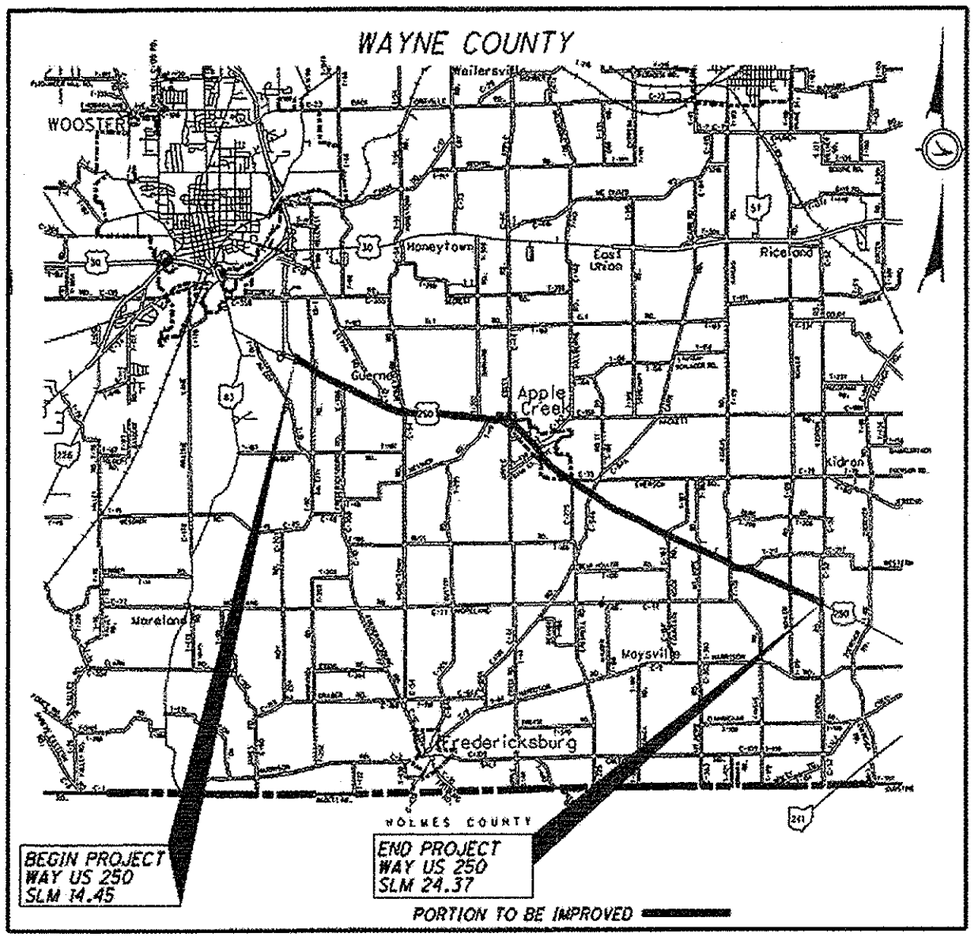

LATITUDE: N 40° 44' 32" LONGITUDE: W 81° 49' 37"

STATE OF OHIO
DEPARTMENT OF TRANSPORTATION

WAY-250-14.45

WOOSTER TOWNSHIP
FRANKLIN TOWNSHIP
EAST UNION TOWNSHIP
SALT CREEK TOWNSHIP
PAINT TOWNSHIP
VILLAGE OF APPLE CREEK
WAYNE COUNTY

INDEX OF SHEETS:

1	-	TITLE SHEET
2	-	SCHEMATIC AND DESIGN DESIGNATION
3-4	-	TYPICAL SECTIONS
5-7	-	GENERAL NOTES
8-9	-	GENERAL SUMMARY
10-11	-	PAVEMENT AND SHOULDER DETAILS
12	-	GUARDRAIL NOTES
13	-	GUARDRAIL SUB SUMMARY
14-24	-	GUARDRAIL DETAILS
26	-	MAILBOX DETAILS
27-28	-	CURB RAMP DETAILS
29-30	-	LOOP DETECTOR DETAILS
31	-	PAVEMENT MARKINGS AND RPMS
32-37	-	STRUCTURES
25	-	NOT USED

PROJECT DESCRIPTION

THIS PROJECT WILL INCLUDE PLANING AND PAVING ROADWAY, PAVEMENT REPAIR, SHOULDER PLANING, SHOULDER WIDENING, RESURFACING THE SHOULDER WITH ASPHALT CONCRETE, CURB RAMPS, MISC. GUARDRAIL WORK, STRUCTURE SEALING AND PAVEMENT MARKINGS.

PROJECT EARTH DISTURBED AREA = N/A (MAINTENANCE PROJECT)
ESTIMATED CONTRACTOR EARTH DISTURBED AREA = N/A (MAINTENANCE PROJECT)
NOTICE OF INTENT EARTH DISTURBED AREA = N/A (MAINTENANCE PROJECT)

2010 SPECIFICATIONS

THE STANDARD SPECIFICATIONS OF THE STATE OF OHIO, DEPARTMENT OF TRANSPORTATION, INCLUDING CHANGES AND SUPPLEMENTAL SPECIFICATIONS LISTED IN THE PROPOSAL SHALL GOVERN THIS IMPROVEMENT.

I HEREBY APPROVE THESE PLANS AND DECLARE THAT THE MAKING OF THIS IMPROVEMENT WILL NOT REQUIRE THE CLOSING TO TRAFFIC OF THE HIGHWAY AND THAT PROVISIONS FOR THE MAINTENANCE AND SAFETY OF TRAFFIC WILL BE AS SET FORTH IN THE PLAN AND PROPOSAL.

APPROVED [signature]
DATE 7-25-11 DISTRICT DEPUTY DIRECTOR

APPROVED [signature]
DATE 8-1-11 DIRECTOR, DEPARTMENT OF TRANSPORTATION

PLAN PREPARED BY:

ODOT DISTRICT THREE PLANNING & ENGINEERING DEPT.

UNDERGROUND UTILITIES
CONTACT BOTH SERVICES
CALL TWO WORKING DAYS
BEFORE YOU DIG
CALL
1-800-362-2764
(TOLL FREE)
OHIO UTILITIES PROTECTION SERVICE
NON-MEMBERS
MUST BE CALLED DIRECTLY
OIL & GAS PRODUCERS PROTECTIVE SERVICE CALL: 1-800-925-0988

ROADWAY ENGINEERS SEAL:

STATE OF OHIO
DAVID C. MOLLENSHOTT
E-50210
REGISTERED
PROFESSIONAL ENGINEER

SIGNED: [signature]
DATE: 7/22/11

STRUCTURAL ENGINEERS SEAL:

STATE OF OHIO
AHAD D. BARATY
E-53234
REGISTERED
PROFESSIONAL ENGINEER

SIGNED: [signature]
DATE: 7/22/11

STANDARD CONSTRUCTION DRAWINGS					SUPPLEMENTAL SPECIFICATIONS	
BP-3.1	10/19/07	RM-1.1	07/15/11		800	07/15/11
BP-4.1	07/16/04	AL-30.11	10/16/09		832	05/5/09
BP-5.1	07/28/00					
BP-7.1	10/15/10	TC-41.20	01/19/01			
		TC-42.20	01/21/11			
DM-4.3	04/17/09	TC-52.10	01/19/07			
DM-4.4	04/17/09	TC-52.20	01/19/07			
		TC-71.10	01/21/11			
GR-1.1	07/16/04	TC-73.10	01/19/01		SPECIAL PROVISIONS	
GR-2.1	01/16/04	TC-82.10	01/21/11			
GR-2.2	01/20/06	MT-97.10	10/15/10			
GR-2.3	04/18/03	MT-97.11	10/15/10			
GR-3.1	10/16/09	MT-99.20	01/16/09			
GR-3.4	10/16/09	MT-101.90	01/16/09			
GR-4.1	01/21/11	MT-105.10	10/16/09			
GR-4.2	01/19/07	MT-101.90	1/16/09			

FEDERAL PROJECT NO. E080221
PID NO. 83391
CONSTRUCTION PROJECT NO.
RAILROAD IMPROVEMENT NONE
WAY-250-14.45
1/37

BEGIN PROJECT 14.45

	SELBY RD.
14.60	
OIL CITY RD.	14.92
14.99	PLEASANT RIDGE RD.
FREDRICKSBURG RD.	15.48
16.15	SYLVAN RD.
HONEYTOWN RD.	16.57
17.28	BRIDGE
17.80	BARNARD RD.
MESSNER RD.	17.95
18.10	BRIDGE
ENTER APPLE CREEK	18.13
18.17	FINLEY ST.
APPLE CREEK RD.	18.32
18.36	CHURCH ST.

CONTINUED

CONTINUED

	WAY 250	
		CEMETERY ST.
18.65		
RICHENBAUGH AVE.		18.66
		GRANGE ST.
18.73		
		CLAY ST.
18.82		
		HIGH ST.
18.90		
BANK ST.		19.03
		VILLARD AVE.
19.09		
		HUNTER ST.
19.19		
19.26		BRIDGE
		APPLE RIDGE RD.
19.38		
		EYMAN DR.
19.45		
LEAVE APPLE CREEK		19.66
		LEAVE APPLE CREEK
19.74		
19.75		EMERSON RD.
CRISWELL RD.		19.77
CARR RD.		20.15
		OBERLY DR.
20.67		
FOUNTAIN NOOK RD.		21.55
MT. HOPE RD.		22.15
		RIO GRANDE DR.
22.48		
KANSAS RD.		22.72
23.01		BRIDGE
		WESTERN RD.
22.98		
KOHLER RD.		23.80
KIDRON RD.		24.37

END PROJECT 24.37

DESIGN DESIGNATION (WAY-250-14.45 TO 20.15)

CURRENT ADT (2012)	7,250
DESIGN YEAR ADT (2024)	7,910
DESIGN HOURLY VOLUME (2024)	790
DIRECTIONAL DISTRIBUTION	0.52
TRUCKS (24 HOUR B&C)	0.17
DESIGN SPEED	55 MPH
LEGAL SPEED	55 MPH
DESIGN FUNCTIONAL CLASSIFICATION:	
PRINCIPAL ARTERIAL - OTHER (RURAL)	
NHS PROJECT	YES

DESIGN EXCEPTIONS

NONE

DESIGN DESIGNATION (WAY-250-20.15 TO 24.37)

CURRENT ADT (2012)	5,470
DESIGN YEAR ADT (2024)	5,950
DESIGN HOURLY VOLUME (2024)	600
DIRECTIONAL DISTRIBUTION	0.54
TRUCKS (24 HOUR B&C)	0.24
DESIGN SPEED	55 MPH
LEGAL SPEED	55 MPH
DESIGN FUNCTIONAL CLASSIFICATION:	
PRINCIPAL ARTERIAL - OTHER (RURAL)	
NHS PROJECT	YES

DESIGN EXCEPTIONS

NONE

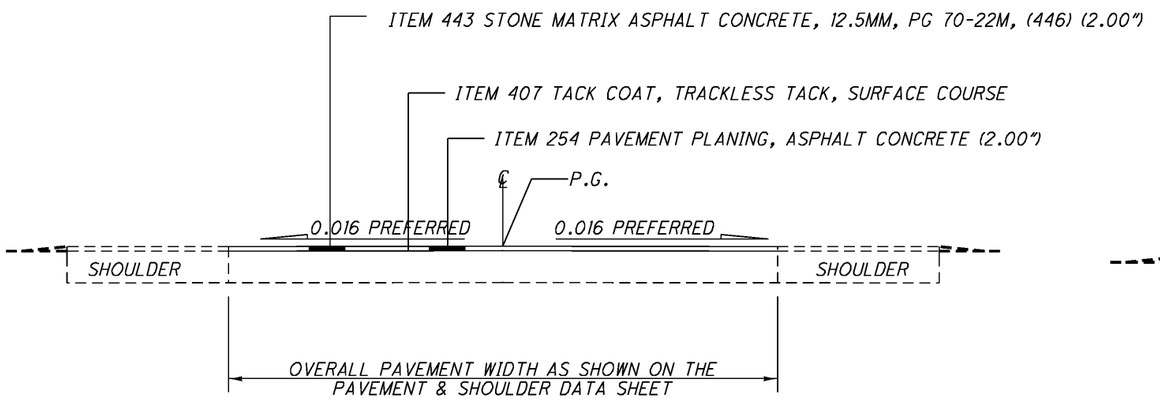

TYPICAL 1

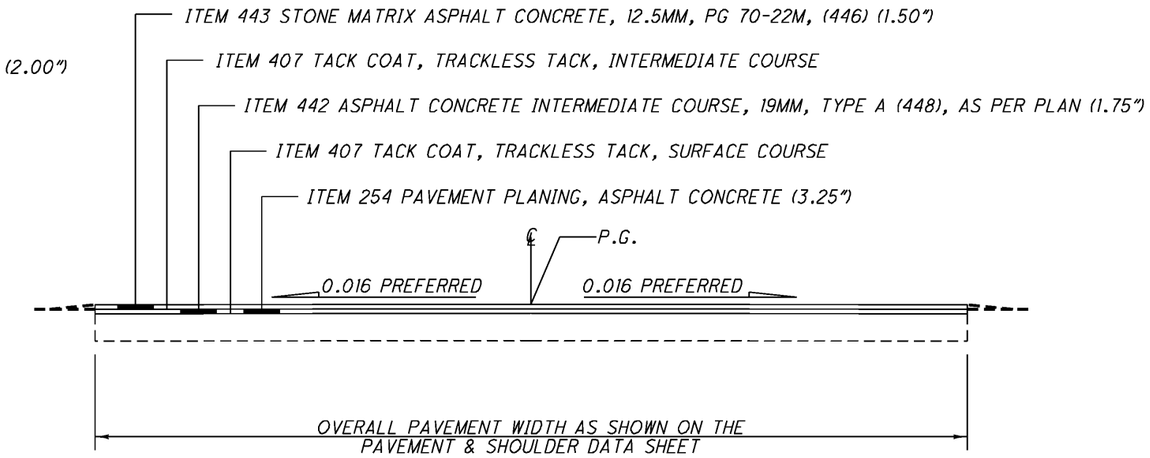

TYPICAL 2

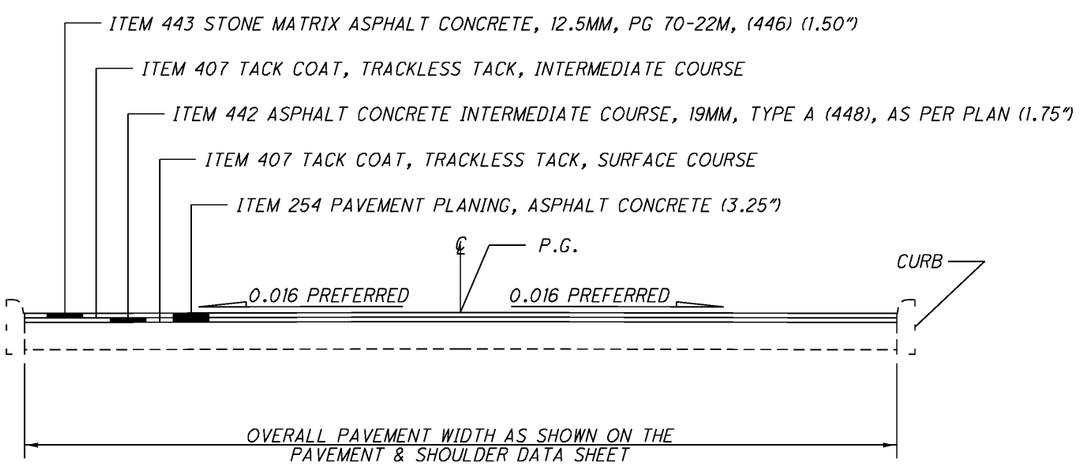

TYPICAL 3

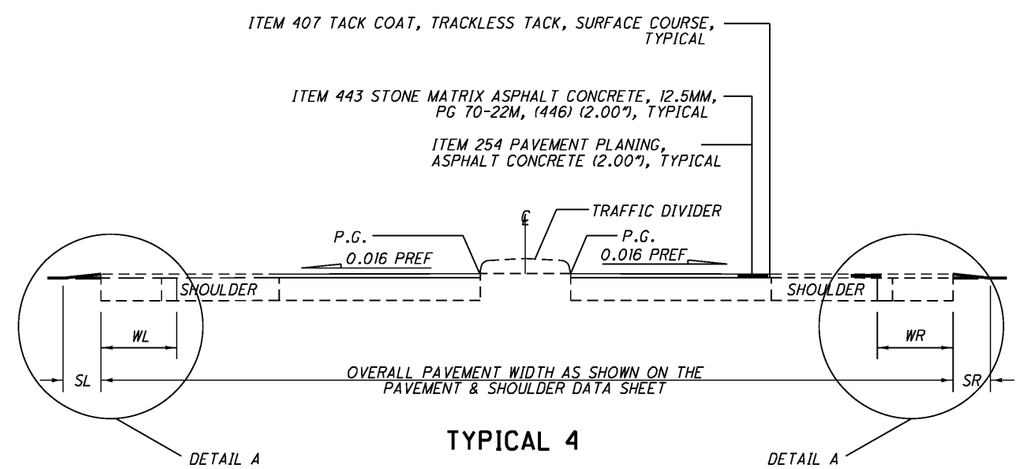

TYPICAL 4

CALCULATED CVH
CHECKED DV

TYPICAL SECTIONS

WAY-250-14.45

DESIGN FILE: I:\projects\83391\roadway\83391GY001.dgn
WORKSTATION: sjuzwik
DATE: 7/22/2011

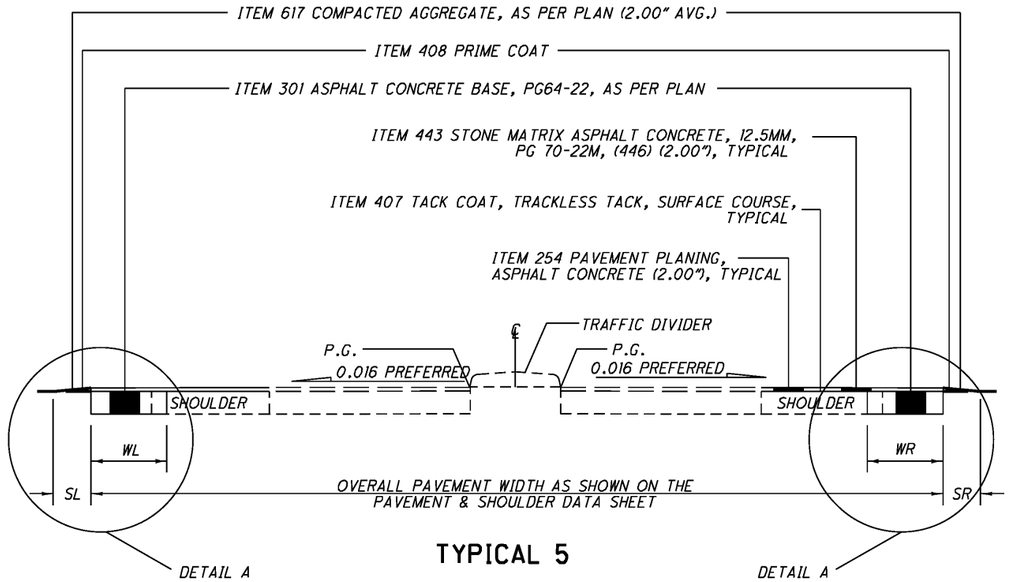

TYPICAL 5

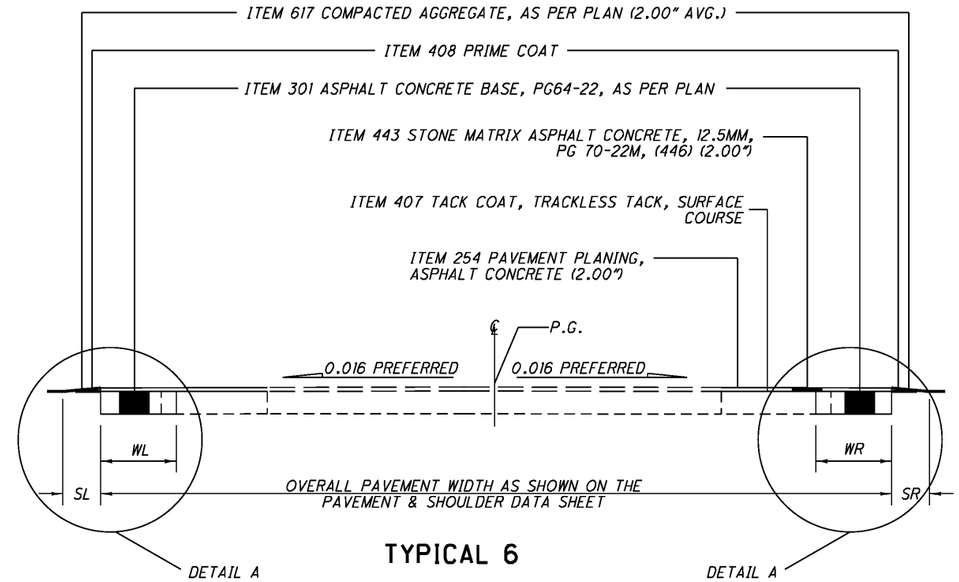

TYPICAL 6

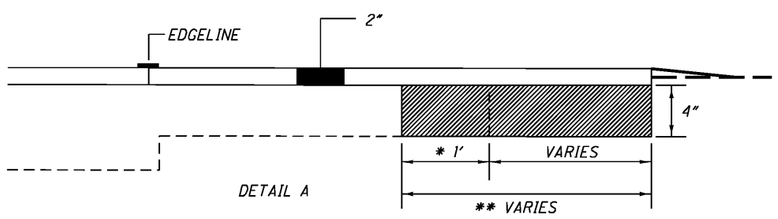

* CUT 1 FT INTO EXISTING SOUND SHOULDER

** SEE SHOULDER DATA SHEET

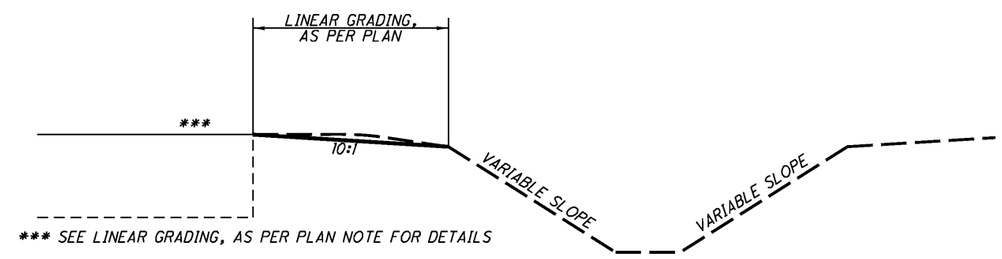

*** SEE LINEAR GRADING, AS PER PLAN NOTE FOR DETAILS

LINEAR GRADING, AS PER PLAN DETAIL

CALCULATED CVH
CHECKED DV

TYPICAL SECTIONS

WAY-250-14.45

DESIGN FILE: I:\projects\83391\roadway\83391GY001.dgn
WORKSTATION: sjuzwik
DATE: 7/22/2011

GENERAL

PROGRESSION OF WORK

WIDENING SHALL BE DONE PRIOR TO RESURFACING. GUARDRAIL SHALL BE REMOVED PRIOR TO ANY EMBANKMENT WORK AT THE GUARDRAIL RUN UNLESS HAND TAMPING IS SPECIFIED. GUARDRAIL WORK SHALL BE DONE AFTER WIDENING, RESURFACING, AND BERM WORK SO AS TO ESTABLISH PROPER GRADES FROM WHICH TO CONSTRUCT THE RAIL. HAZZARDS PROTECTED BY GUARDRAIL SHALL NOT BE LEFT UNPROTECTED LONGER THAN ONE CONSTRUCTION DAY (8 HOURS).

ROUTINE MAINTENANCE

BETWEEN THE TIME THAT BIDS ARE TAKEN AND THE START OF CONSTRUCTION, THE MAINTAINING AGENCY MAY ENTER UPON THE PROJECT AND PERFORM ROUTINE MAINTENANCE SUCH AS CRACK SEALING, PATCHING, AND BERM AND SHOULDER REPAIR. THE EFFECTS, IF ANY, OF THE PERFORMANCE OF ROUTINE MAINTENANCE SHALL BE CONSIDERED AS INHERENT IN WORK OF THE CHARACTER PROVIDED FOR IN THE PLAN AND THE RESULTING CONDITIONS SHALL NOT BE CONSIDERED AS DIFFERING MATERIALLY FROM THOSE EXISTING AT THE TIME BIDS WERE TAKEN.

UTILITIES

LISTED BELOW ARE ALL UTILITIES LOCATED WITHIN THE PROJECT CONSTRUCTION LIMITS TOGETHER WITH THEIR RESPECTIVE OWNERS.

THE LOCATION OF THE UNDERGROUND UTILITIES SHOWN ON THE PLANS ARE AS OBTAINED FROM THE OWNERS AS REQUIRED BY SECTION 153.64 O.R.C.

AMERICAN ELECTRIC POWER
301 CLEVELAND AVENUE SW
CANTON, OHIO 44701
330-438-7061

HOLMES-WAYNE ELECTRIC CO-OP
6060 ST RTE 83
MILLERSBURG, OHIO 44654
330-674-1055

DOMINION EAST OHIO (GAS)
320 SPRINGSIDE DR., STE. 320
AKRON, OHIO 44333
330-664-2409

GATHERCO INC. (GAS)
300 TRACY BRIDGE RD
ORVILLE, OH 44667
330-498-9553

NORTHEAST OHIO NAT. GAS CORP
9081 US-250 NW
STRASBURG, OHIO 44680
330-878-5589

CLEAR PICTURE INC. (CABLE)
P.O. BOX 917
WOOSTER, OHIO 44691
330-345-5110, EXT 226, 202

OH DEPT OF TRANSPORTATION, DIST 03
908 NORTH CLARK STREET
ASHLAND, OH 44805
419-281-0513

VILLAGE OF APPLE CREEK (UTIL)
62 EAST MAIN STREET
APPLE CREEK, OHIO 44606
330-698-5462

CITY OF ORRVILLE (UTIL)
207 NORTH MAIN STREET
ORVILLE, OH 44667
330-684-5012

CITY OF WOOSTER (UTIL)
538 NORTH MARKET STREET
WOOSTER, OHIO 44691
330-263-5234

THE AFOREMENTIONED UTILITY COMPANIES AND AGENCIES HAVE VARIOUS FACILITIES IN THE AREA THAT WILL REMAIN IN PLACE DURING CONSTRUCTION.

EXTREME CAUTION SHOULD BE EXERCISED IN AREAS WITH UTILITIES. SECTIONS 105.07 AND 107.16 OF THE DEPARTMENT OF TRANSPORTATION CONSTRUCTION AND MATERIALS SPECIFICATIONS REQUIRE, AMONG OTHER THINGS, THAT THE CONTRACTOR COOPERATE WITH ALL UTILITIES LOCATED WITHIN THE LIMITS OF THIS CONSTRUCTION PROJECT AND TAKE RESPONSIBILITY FOR THE PROTECTION OF THE UTILITY PROPERTY AND SERVICES.

ROADWAY

ITEM 209 - LINEAR GRADING

THE CONTRACTOR IS REQUIRED TO PERFORM LINEAR GRADING ON THE GRADED SHOULDER. IT IS ANTICIPATED THAT THERE ARE AREAS WHERE THE GRADED SHOULDER IS AT A HIGHER ELEVATION THAN THE ADJACENT PROPOSED PAVEMENT. A 10:1 SLOPE SHALL BE ESTABLISHED, OR AS DIRECTED BY THE ENGINEER, WHEN PERFORMING ITEM 209 LINEAR GRADING. THE INTENT IS TO PROVIDE AN UNOBSTRUCTED AND POSITIVE FLOW OF STORM WATER FROM THE PAVEMENT TO THE DITCH. THE LINEAR GRADING SHALL BE PERFORMED AFTER THE INTERMEDIATE COURSE HAS BEEN COMPLETED AND BEFORE THE SURFACE COURSE IS PLACED. ALL LABOR AND EQUIPMENT NECESSARY TO PERFORM THE ABOVE WORK SHALL BE INCLUDED IN THE UNIT PRICE BID PER MILE FOR ITEM 209 LINEAR GRADING.

ITEM 604 - MONUMENT BOX ADJUSTED TO GRADE

THE MONUMENT BOX TO BE ADJUSTED MAY OR MAY NOT HAVE AN EXISTING ADJUSTABLE FRAME. THE WORK SHALL CONSIST OF ADJUSTING THE EXISTING MONUMENT BOX TO THE SATISFACTION OF THE ENGINEER. THE CONTRACTOR IS REMINDED TO FIELD CHECK ALL ADJUSTMENT TO GRADE ITEMS PRIOR TO BIDDING, AS NO ADDITIONAL COMPENSATION WILL BE GRANTED FOR LABOR AND MATERIALS REQUIRED TO SATISFACTORILY ADJUST CASTINGS WITHOUT ADJUSTABLE FRAMES.

THERE ARE 5 MONUMENT BOXES LOCATED AT THE FOLLING SLM LOCATIONS: 14.559, 14.589, 14.706, 14.801, 22.967.

AN ESTIMATED TOTAL OF 5 EACH ITEM 604 MONUMENT BOX ADJUSTED TO GRADE HAS BEEN CARRIED TO THE GENERAL SUMMARY.

PAVEMENT

ITEM 253. PAVEMENT REPAIR, AS PER PLAN
ITEM 253. PAVEMENT REPAIR, MISC.: PARTIAL DEPTH

THESE ITEMS OF WORK SHALL CONSIST OF THE REMOVAL OF THE EXISTING PAVEMENT OR PAVED BERM WHICH MAY BE ASPHALT, BRICK, CONCRETE, OR A COMBINATION OF EACH, IN AREAS OF EXISTING PAVEMENT FAILURE. CORING HAS BEEN PERFORMED TO HELP DETERMINE THE COMPONENTS THAT MAY BE ENCOUNTERED DURING THIS ITEM OF WORK. THE PAVEMENT CORING INFORMATION IS SHOWN ON PLAN SHEET 7.

THE ENGINEER SHALL DESIGNATE THE LOCATIONS AND LIMITS OF THE AREAS TO BE REPAIRED. PAVEMENT REPAIR SHALL BE PERFORMED AFTER PAVEMENT PLANING AND BEFORE PLACEMENT OF THE INTERMEDIATE AND/OR SURFACE COURSE. PAVEMENT REPAIR EAST OF APPLE CREEK SHALL BE PERFORMED BEFORE PAVEMENT PLANING. THE REPAIR AREAS SHALL BE SAW CUT AND EXCAVATED TO PROVIDE STRAIGHT AND VERTICAL SURFACES AROUND THE PERIMETER OF THE REPAIR AREA. PAVEMENT PLANING MAY BE USED AS AN ALTERNATIVE TO SAW CUTTING AND EXCAVATING. THE PAVEMENT SHALL BE REMOVED WITHIN THE DESIGNATED AREAS BY METHODS WHICH WILL NOT DAMAGE ADJACENT PAVEMENT. THE DEPTH OF REMOVAL SHALL BE SUFFICIENT TO REMOVE ALL DETERIORATED PAVEMENT WITH A MAXIMUM DEPTH OF 9", BASED ON THE PAVEMENT DESIGN AND AN AVERAGE DEPTH OF 3" AND AN AVERAGE WIDTH OF 4 FT FOR ESTIMATING PURPOSES. THE MATERIALS REMOVED SHALL BE DISPOSED OF IN ACCORDANCE WITH 105.16 AND 105.17.

PAVEMENT MILLING AND FILLING, EAST OF APPLE CREEK, SHALL BE COMPLETED ON THE SAME DAY AT EACH SECTION.

THE CONTRACTOR SHALL BE CAPABLE OF PERFORMING PAVEMENT REPAIRS 2 FEET WIDE.

REPLACEMENT MATERIAL SHALL BE ITEM 301 OR ITEM 448 TYPE 2 MATERIAL AND SHALL BE PLACED AND COMPACTED TO FINISH FLUSH WITH THE ADJACENT PAVEMENT SURFACE. ITEM 301 ASPHALT CONCRETE, PG64-22 CAN BE USED WHEN THE DEPTH OF THE REPAIR IS BETWEEN 3" AND 6" WITH A MAXIMUM PAVEMENT LIFT OF 6". ITEM 448 TYPE 2 CAN BE USED WHEN THE DEPTH OF THE REPAIR IS BETWEEN 0" AND 5" WITH A MAXIMUM PAVEMENT LIFT OF 3". THE CONTRACTOR HAS THE OPTION OF USING EITHER ITEM 301 OR ITEM 448 TYPE 2 MATERIAL WHEN THE PAVEMENT REPAIR IS BETWEEN 3" AND 5" DEEP. ITEM 448 TYPE 2 MATERIAL SHALL BE PG64-22 FOR MEDIUM MIX DESIGN PAVEMENTS AND PG64-28 FOR HEAVY MIX DESIGN PAVEMENTS. ALL EXISTING PAVEMENT AREAS WHICH WILL BE IN CONTACT WITH THE PAVEMENT REPAIR SHALL BE CLEANED AND COATED PER CMS 401.14, USING AN ASPHALT MATERIAL COMPLYING WITH 407.02. ALL COMPACTION SHALL BE ACHIEVED BY MECHANICAL METHODS TO THE SATISFACTION OF THE ENGINEER.

PAYMENT SHALL INCLUDE ALL LABOR, EQUIPMENT, AND MATERIALS NECESSARY TO COMPLETE THE PAVEMENT REPAIR. FOR PAYMENT PURPOSES ITEM 253 PAVEMENT REPAIR, MISC.: PARTIAL DEPTH IS TO BE A MAXIMUM OF 6" DEEP. THE AVERAGE DEPTH OF PAVEMENT REPAIRS IS 3". IT HAS BEEN ESTIMATED THERE ARE ABOUT 100 REPAIRS TO BE MADE. ABOUT HALF OF THE REPAIRS ARE 60 TO 500 FEET LONG AND 2 TO 6 FEET WIDE. ABOUT 20 OF THE REPAIRS ARE 4 TO 12 FEET LONG AND 10 TO 36 FEET WIDE. PAYMENT WILL BE MADE AT THE UNIT BID PRICE PER CUBIC YARD, (BY TICKET WEIGHT CONVERSION), OF ITEM 253 PAVEMENT REPAIR, MISC.: PARTIAL DEPTH. THE FOLLOWING ESTIMATED QUANTITIES ARE PROVIDED IN THE GENERAL SUMMARY TO BE USED AS DIRECTED BY THE ENGINEER:

US 250 ITEM 253 PAVEMENT REPAIR, MISC.: PARTIAL DEPTH 1200 CU. YD.

ITEM 254 PATCHING PLANED SURFACE

AN ESTIMATED QUANTITY OF ITEM 254, PATCHING PLANED SURFACE HAS BEEN SET UP TO BE USED AS DIRECTED BY THE ENGINEER AS DESCRIBED IN CMS 254.04. THE LIMIT OF THE PATCHING DEPTH IS 0 TO 2 IN.

PAVEMENT

ITEM 254, PAVEMENT PLANING, ASPHALT CONCRETE

THE INTENT OF THE PLANING IS TO MILL 2 INCHES AT THE EDGE OF PAVEMENT AT NON-CURBED AREAS. THE PAVEMENT SLOPE SHALL BE 0.016 PREFERRED AND 0.010 MINIMUM, CONTINUOUS BETWEEN THE CROWN AND THE PROPOSED EDGELINE/SHOULDER. THE MILLING DEPTH SHALL BE CONTROLLED FROM THE EDGE OF PAVEMENT IN CONFORMANCE WITH THE ABOVE GUIDELINES.

SPECIAL ATTENTION SHALL BE GIVEN TO SUPERELEVATED CURVES. THE SUPERELEVATION SHALL BE MAINTAINED AND/OR RESTORED, IF NECESSARY, AS DIRECTED BY THE ENGINEER. IF THERE IS NO INFORMATION IN THE PLANS TO CHANGE THE SUPERELEVATION, THE INTENT IS TO MAINTAIN THE EXISTING SUPERELEVATION.

THE CONTRACTOR SHALL MAINTAIN POSITIVE DRAINAGE TO ALL CATCH BASINS AND INLETS.

THE PROGRESSION OF THE PLANING SHALL PROCEED IN SUCH A MANNER THAT NORMAL TRAFFIC WILL NOT BE REQUIRED TO RUN OVER THE PLANED ROADWAY SURFACE MORE THAN FOURTEEN (14) CALENDAR DAYS. THE 14 CALENDAR DAYS SHALL BE CONSIDERED AN INTERIM COMPLETION DATE (SECTION 108), AND FOR EACH CALENDAR DAY BEYOND THE 14 DAYS THAT THE ROADWAY REMAINS EXPOSED TO THE PLANED SURFACE, THE CONTRACTOR WILL BE ASSESSED A DISINCENTIVE OF $1,300 A DAY.

PAYMENT SHALL INCLUDE ALL LABOR, EQUIPMENT, AND MATERIALS NECESSARY TO COMPLETE THE PAVEMENT PLANING, ASPHALT CONCRETE. PAYMENT WILL BE MADE AT THE UNIT BID PRICE PER SQUARE YARD OF PAVEMENT PLANING, ASPHALT CONCRETE. NO ADDITIONAL COMPENSATION WILL BE GRANTED FOR UNEXPECTED VOLUMES OF ASPHALT GRINDINGS.

ITEM 254, PAVEMENT PLANING, ASPHALT CONCRETE (CURBED SECTION) (IN VILLAGE OF APPLE CREEK)

THE INTENT OF THE PLANING IS TO MILL THE SPECIFIED DEPTH AT THE EDGE OF PAVEMENT ALONG THE CURB CONTINGENT ON THE FOLLOWING: THE PAVEMENT SLOPE SHALL BE CONTINUOUS BETWEEN THE CROWN AND THE CURB WHILE TRYING TO ACHIEVE THE TYPICAL CROSS SLOPE OF 0.016. THE MAXIMUM CROSS SLOPE SHALL BE 0.02 WHILE THE MINIMUM CROSS SLOPE SHALL BE 0.01. THE CROWN OF THE PAVEMENT SHALL BE LOCATED BETWEEN THE TRAVELED LANES, OR AS DIRECTED BY THE ENGINEER. THE MILLING DEPTH SHALL BE CONTROLLED FROM THE CURB, TO PRODUCE A CROSS SLOPE IN CONFORMANCE WITH THE ABOVE GUIDELINES.

SPECIAL ATTENTION SHALL BE GIVEN TO SUPERELEVATED CURVES. THE SUPERELEVATION SHALL BE MAINTAINED AND/OR RESTORED, IF NECESSARY, AS DIRECTED BY THE ENGINEER. IF THERE IS NO INFORMATION IN THE PLANS TO CHANGE THE SUPERELEVATION, THE INTENT IS TO MAINTAIN THE EXISTING SUPERELEVATION.

THE CONTRACTOR SHALL MAINTAIN POSITIVE DRAINAGE TO ALL CATCH BASINS AND INLETS.

THE PROGRESSION OF THE PLANING SHALL PROCEED IN SUCH A MANNER THAT NORMAL TRAFFIC WILL NOT BE REQUIRED TO RUN OVER THE PLANED ROADWAY SURFACE MORE THAN FOURTEEN (14) CALENDAR DAYS. THE 14 CALENDAR DAYS SHALL BE CONSIDERED AN INTERIM COMPLETION DATE (SECTION 108) AND FOR EACH CALENDAR DAY BEYOND THE 14 DAYS THAT THE ROADWAY REMAINS EXPOSED TO THE PLANED SURFACE, THE CONTRACTOR WILL BE ASSESSED A DISINCENTIVE OF $1,300 A DAY.

PAYMENT SHALL INCLUDE ALL LABOR, EQUIPMENT, AND MATERIALS NECESSARY TO COMPLETE THE PAVEMENT PLANING, ASPHALT CONCRETE. PAYMENT WILL BE MADE AT THE UNIT BID PRICE PER SQUARE YARD OF PAVEMENT PLANING, ASPHALT CONCRETE.

PAVEMENT

ITEM 407 - TACK COAT, TRACKLESS TACK, INTERMEDIATE COURSE
ITEM 407 - TACK COAT, TRACKLESS TACK, SURFACE COURSE

DESCRIPTION: THIS WORK CONSISTS OF PREPARING AND TREATING A PAVED SURFACE WITH NTSS-1HM TRACKLESS TACK PRODUCED BY BLACKLIDGE EMULSIONS, INC. MEET ALL REQUIREMENTS OF CONSTRUCTION AND MATERIAL SPECIFICATIONS ITEM 407 TACK COAT EXCEPT AS NOTED BELOW.

MATERIAL: CONFORM TO THE FOLLOWING TYPICAL PHYSICAL PROPERTIES:

PARAMETER	TEST METHOD	MIN.	MAX.
SAYBOLT FUROL VISCOSITY, SFS @ 25°C	ASTM D88	15	100
STORAGE STABILITY, 24 HRS, %	ASTM D244	--	1
STORAGE STABILITY, 5 DAYS, %	ASTM D244	--	5
RESIDUE BY DISTILLATION, %	ASTM D244	50	--
OIL DISTILLATE, %	ASTM D244	--	1
SIEVE TEST, %	ASTM D244	--	0.3
TEST ON RESIDUE			
PENETRATION, @ 25°C,	ASTM D5	--	20
SOFTENING POINT RANGE DEG C	ASTM D36	65	--
SOLUBILITY, %	ASTM D2042	97.5	--
ORIGINAL BINDER DSR @ 82°C G*/SIN Δ,10 RAD/SEC	AASHTO T111	1	--

NOTE: PRODUCT SHOULD NOT CONTAIN FILLER SUCH AS CLAY, ETC.
KEEP FROM FREEZING.
SUPPLY CERTIFIED TEST DATA TO THE ENGINEER SHOWING THE MATERIAL SUPPLIED WAS TESTED FOR AND MEETS THE ABOVE PROPERTIES.

EQUIPMENT: ALL REQUIREMENTS OF 407.03 SHALL APPLY. SEE MANUFACTURER'S REPRESENTATIVE FOR CORRECT DISTRIBUTOR SETTINGS. THOROUGHLY CLEAN ALL EQUIPMENT IF CATIONIC EMULSION WAS PREVIOUSLY USED.

WEATHER LIMITATIONS: ALL REQUIREMENTS OF 407.04 APPLY.

PREPARATION OF SURFACE: ALL REQUIREMENTS OF 407.05 APPLY.

APPLICATION OF ASPHALT MATERIAL: UNIFORMLY APPLY THE ASPHALT MATERIAL WITH A DISTRIBUTOR PER THE REQUIREMENTS OF 407.06 EXCEPT AS NOTED.

IF PRODUCT IS STORED FOR AN EXTENDED PERIOD OF TIME, PRIOR TO APPLICATION, AGITATE OR GENTLY CIRCULATE THE MATERIAL.

ALL NOZZLES AND SPRAY PATTERNS SHALL BE IDENTICAL TO ONE ANOTHER ALONG THE DISTRIBUTOR SPRAY BAR. THE ANGLE OF THE NOZZLE SHOULD BE PLACED AT A 15 TO 30 DEGREE ANGLE TO THE SPRAY BAR AXIS TO MAXIMIZE OVERLAP OR AS RECOMMENDED BY THE NOZZLE MANUFACTURER. CONTACT THE MANUFACTURER'S REPRESENTATIVE FOR REQUIRED SPRAY NOZZLE SIZE, AND DISTRIBUTOR AND NOZZLE SETTINGS.

APPLY AT A RATE OF 0.04 TO 0.08 GALLONS PER SQUARE YARD. RECOMMENDED APPLICATION TEMPERATURE IS 160°F TO 180°F. DO NOT EXCEED 180°F.

DILUTION IS NOT ALLOWED.

THE ENGINEER AND MANUFACTURER'S REPRESENTATIVE WILL APPROVE RATE OF APPLICATION, TEMPERATURE, DISTRIBUTOR SETTINGS, AND AREAS TO BE TREATED BEFORE APPLICATION OF THE TACK COAT. THE ENGINEER WILL DETERMINE THE ACTUAL APPLICATION IN GALLONS PER SQUARE YARD BY A CHECK ON THE PROJECT.

THE APPLICATION IS CONSIDERED SATISFACTORY WHEN THE MATERIAL IS APPLIED UNIFORMLY WITH NO VISIBLE EVIDENCE OF STREAKING OR RIDGING AND THE APPLICATION RATE IS ±10% OF THE SPECIFIED RATE.

METHOD OF MEASUREMENT: ALL REQUIREMENTS OF 407.07 APPLY.

BASIS OF PAYMENT: ALL REQUIREMENTS OF 407.08 APPLY. THE DEPARTMENT WILL PAY FOR ACCEPTED QUANTITIES AT THE CONTRACT UNIT PRICE AS FOLLOWS:

ITEM	UNIT	DESCRIPTION
407	GALLON	TACK COAT, TRACKLESS TACK, INTERMEDIATE COURSE
407	GALLON	TACK COAT, TRACKLESS TACK, SURFACE CORSE

PAVEMENT

INTERSECTIONS AND DRIVES

INTERSECTIONS SHALL BE PLANED AND PAVED AS PER THE TABLE OR AS DIRECTED BY THE ENGINEER. (TO PROVIDE A SMOOTH TRANSITION BETWEEN THE TWO HIGHWAYS, AND TO ELIMINATE WATER POCKETS).

EXISTING PAVED DRIVES SHALL BE PAVED AN AVERAGE OF 2 FEET SO AS TO PROVIDE A SMOOTH TRANSITION BETWEEN THE HIGHWAY AND THE DRIVE, (DISTANCE FROM EDGE OF ROADWAY MAY VARY AT EACH DRIVE) AS DIRECTED BY THE ENGINEER.

EXISTING AGGREGATE DRIVES SHALL BE PAVED WITH AN APRON AN AVERAGE WIDTH OF 4 FT. THE SLOPE OF THIS APRON SHALL BE THE SAME AS THE ADJACENT PAVEMENT SLOPE OR AS DIRECTED BY THE ENGINEER. ANY GRADING NEEDED TO PAVE THE APRON SHALL BE INCLUDED IN THE RELATED ASPHALT ITEM FOR PAYMENT. ITEM 617 COMPACTED AGGREGATE, AS PER PLAN SHALL BE PLACED ADJACENT TO THIS APRON TO PROVIDE A SMOOTH TRANSITION FROM THE APRON TO THE EXISTING DRIVE, (WIDTH OF THIS 617 APPLICATION MAY VARY) AS DIRECTED BY THE ENGINEER. AN ADDITIONAL QUANTITY OF ITEM 617 HAS BEEN ESTIMATED TO COMPLETE THIS WORK AND IS SHOWN AS AN EXTRA AREA ON THE PAVEMENT & SHOULDER DATA SHEET.

ANY HAZARD OR UNSAFE CONDITION RESULTING FROM THE ABOVE WORK MUST BE CORRECTED IMMEDIATELY. THE CONTRACTOR IS REMINDED OF SECTIONS 105.01, 107.07 & 614.02A OF THE CONSTRUCTION AND MATERIALS SPECIFICATIONS.

PAVEMENT

PAVEMENT CORING INFORMATION

County	Route	SLM	Asphalt	Concrete	Brick	Wheel Track Location	Direction	Year Cored
WAY	250	14.88	12.5	0	3	Outside	EB	2010
WAY	250	14.88	12.2	0	3	Inside	EB	2010
WAY	250	14.88	8.7	0	0	Shoulder	EB	2010
WAY	250	16.00	11.5	0	3	Outside	EB	2010
WAY	250	16.00	10.2	0	3	Inside	EB	2010
WAY	250	16.00	7.8	0	0	Shoulder	EB	2010
WAY	250	17.47	10.9	0	3	Outside	EB	2010
WAY	250	17.47	10.7	0	3	Inside	EB	2010
WAY	250	17.47	7.7	0	0	Shoulder	EB	2010
WAY	250	18.18	13.0	0	0	Mid	EB	2007
WAY	250	18.26	10.5	6	3	Mid	WB	2007
WAY	250	18.33	7.5	6	3	Mid	EB	2007
WAY	250	18.41	4.0	6	3	Mid	WB	2007
WAY	250	18.48	4.5	6	3	Mid	EB	2007
WAY	250	18.56	4.0	6	3	Mid	WB	2007
WAY	250	18.63	5.0	6	3	Mid	EB	2007
WAY	250	18.71	4.5	6	3	Mid	WB	2007
WAY	250	18.79	5.5	6	3	Mid	EB	2007
WAY	250	18.86	6.5	6	3	Mid	WB	2007
WAY	250	18.94	4.5	6	3	Mid	EB	2007
WAY	250	19.01	6.0	6	3	Mid	WB	2007
WAY	250	19.09	4.5	6	3	Mid	EB	2007
WAY	250	19.16	5.0	6	3	Mid	WB	2007
WAY	250	19.24	5.0	6	3	Mid	EB	2007
WAY	250	19.28	6.0	6	3	Mid	WB	2007
WAY	250	19.65	7.8	0	3	Outside	EB	2010
WAY	250	19.65	13.5	0	0	Inside	EB	2010
WAY	250	21.12	9.2	0	3	Outside	EB	2010
WAY	250	21.12	14.1	0	0	Inside	EB	2010
WAY	250	22.52	11.1	7	0	Outside	EB	2010
WAY	250	22.52	12.7	6	0	Inside	EB	2010
WAY	250	23.99	10.5	0	0	Outside	EB	2010
WAY	250	23.99	11.0	0	0	Inside	EB	2010

TRAFFIC CONTROL

ITEM 644 PARKING LOT STALL MARKING

8' PARKING LINES PERPENDICULAR TO THE CURB WITH 2' LINES PERPENDICULAR TO THE END OF THE PARKING LINES SHALL BE INSTALLED AS FOLLOWS:

LT SLM 18.899 TO 18.911 (22' SPACE + 22' SPACE + 22' SPACE)
RT SLM 18.899 TO 18.910 (20' SPACE + 22' SPACE + 20' SPACE)
RT SLM 18.935 TO 18.951 (20' SPACE + 22' SPACE + 22' SPACE + 20' SPACE)
RT SLM 18.952 TO 18.965 (22' SPACE + 22' SPACE + 22' SPACE)
LT SLM 18.959 TO 18.959 (22' SPACE)
LT SLM 18.980 TO 18.991 (OPEN 30' + FIVE 22' SPACES)

PARKING LINE SHALL BE NO CLOSER THAN 30' TO EDGE OF PAVEMENT OF INTERSECTION SIDE STREET.

PARKING LINE SHALL BE NO CLOSER THAN 20' TO EDGE OF ALLEY.

PARKING LINE SHALL BE NO CLOSER THAN 15' TO EDGE OF DRIVEWAY.

MAINTENANCE OF TRAFFIC

BUTT JOINTS

BUTT JOINTS SHALL NOT BE CUT AND LEFT OPEN TO TRAFFIC. THEY SHALL BE FILLED IN WITH A TEMPORARY ASPHALT CONCRETE WEDGE USING ITEM 614 ASPHALT CONCRETE FOR MAINTAINING TRAFFIC.

CONSTRUCTION "BUMP" (W8-1-36) AND "ADVISORY SPEED" (W13-1-24) SIGNS SHALL BE ERECTED AND MAINTAINED DURING THE PERIOD THE BUTT JOINT IS LEFT OPEN. THESE SIGNS SHALL BE PAID FOR UNDER THE LUMP SUM ITEM FOR ITEM 614 MAINTAINING TRAFFIC.

ITEM 614, ASPHALT CONCRETE FOR MAINTAINING TRAFFIC

THE FOLLOWING ESTIMATED QUANTITY HAS BEEN CARRIED TO THE GENERAL SUMMARY TO CONSTRUCT A TEMPORARY ASPHALT WEDGE FROM THE EXISTING PAVEMENT TO THE PLANED SURFACE AT BUTT JOINTS AND OTHER LOCATIONS THAT RESULT IN A DROP-OFF IN EXCESS OF 1.5 INCHES. THIS QUANTITY SHALL ALSO BE USED AT PLANED SURFACES WHERE A TEMPORARY ASPHALT WEDGE IS NEEDED AROUND CASTINGS. BEFORE RESURFACING OF THE PAVEMENT, THE TEMPORARY WEDGE SHALL BE REMOVED AND THE COST SHALL BE CONSIDERED INCIDENTAL TO ITEM 614 ASPHALT CONCRETE FOR MAINTAINING TRAFFIC.

ITEM 614, ASPHALT CONCRETE FOR MAINTAINING TRAFFIC 100 CU YD

ITEM 614, MAINTAINING TRAFFIC (LANES OPEN DURING HOLIDAYS OR SPECIAL EVENTS)

NO WORK SHALL BE PERFORMED AND ALL EXISTING LANES SHALL BE OPEN TO TRAFFIC DURING THE FOLLOWING DESIGNATED HOLIDAYS OR EVENTS:

CHRISTMAS	FOURTH OF JULY
NEW YEARS	LABOR DAY
MEMORIAL DAY	THANKSGIVING

THE PERIOD OF TIME THAT THE LANES ARE TO BE OPEN DEPENDS ON THE DAY OF THE WEEK ON WHICH THE HOLIDAY OR EVENT FALLS. THE FOLLOWING SCHEDULE SHALL BE USED TO DETERMINE THIS PERIOD:

DAY OF THE WEEK	TIME ALL LANES MUST BE OPEN TO TRAFFIC
SUNDAY	12:00N FRIDAY THROUGH 6:00 AM MONDAY
MONDAY	12:00N FRIDAY THROUGH 6:00 AM TUESDAY
TUESDAY	12:00N MONDAY THROUGH 6:00 AM WEDNESDAY
WEDNESDAY	12:00N TUESDAY THROUGH 6:00 AM THURSDAY
THURSDAY	12:00N WEDNESDAY THROUGH 6:00 AM MONDAY
FRIDAY	12:00N THURSDAY THROUGH 6:00 AM MONDAY
SATURDAY	12:00N FRIDAY THROUGH 6:00 AM MONDAY

THE CONTRACTOR SHALL NOT PERFORM ANY WORK IN THE VILLAGE OF APPLE CREEK JULY 27-28, 2012, DUE TO THE JOHNNY APPLESEED DAYS FESTIVAL.

SHOULD THE CONTRACTOR FAIL TO MEET ANY OF THESE REQUIREMENTS, THE CONTRACTOR SHALL BE ASSESSED LIQUIDATED DAMAGES IN ACCORDANCE WITH CMS 108.07.

ITEM 614, WORK ZONE MARKING SIGN

THE FOLLOWING ESTIMATED QUANTITY HAS BEEN CARRIED TO THE GENERAL SUMMARY FOR USE AS DIRECTED BY THE ENGINEER FOR TEMPORARY WORK ZONE MARKING SIGNS PER THE REQUIREMENTS OF THE CONSTRUCTION AND MATERIALS SPECIFICATIONS, 614.04.

WORK ZONE MARKING SIGN: (W8-H13-36) NO EDGE LINE	= 30 EACH
WORK ZONE MARKING SIGN: (R4-1-24) DO NOT PASS	= 27 EACH
WORK ZONE MARKING SIGN: (R4-2-24) PASS WITH CARE	= 20 EACH
TOTAL	= 77 EACH

SHEET NUMBER 5	10	11 *	13	26	27	28	100% STATE * BUGGY LANES	80% FED-20% STATE	ITEM	ITEM EXT.	TOTAL	UNIT	DESCRIPTION	REF. SHT.
FED STATE	FED STATE	100% STATE	FED STATE	FED STATE	FED STATE	FED STATE								
													ROADWAY	
					548	427		975	202	30000	975	SQ FT	WALK REMOVED	
						11		11	202	32000	11	FT	CURB REMOVED	
			268.75					268.75	202	38000	268.75	FT	GUARDRAIL REMOVED	
			100					100	202	38200	100	FT	GUARDRAIL REMOVED FOR REUSE	
			62.50					62.50	202	38201	62.50	FT	GUARDRAIL REMOVED FOR REUSE, AS PER PLAN	12
			19					19	202	42040	19	EACH	ANCHOR ASSEMBLY REMOVED, TYPE T	
			1					1	202	42810	1	EACH	ANCHOR ASSEMBLY REMOVED FOR REUSE, TYPE E	
			1					1	202	47000	1	EACH	BRIDGE TERMINAL ASSEMBLY REMOVED	
		1145					1145		203	10000	1,145	CU YD	EXCAVATION	
			37					37	203	20001	37	CU YD	EMBANKMENT, AS PER PLAN	12
		10301					10301		204	10000	10,301	SQ YD	SUBGRADE COMPACTION	
	10.18	7.32					7.32	10.18	209	60500	17.50	MILE	LINEAR GRADING	
				10				10	209	80000	10	EACH	GRADING MAILBOX APPROACHES	
5								5	604	39500	5	EACH	MONUMENT BOX ADJUSTED TO GRADE	
			25					25	606	13000	25	FT	GUARDRAIL, TYPE 5	
			50					50	606	13040	50	FT	GUARDRAIL NESTED, TYPE 5 WITH TUBULAR BACKUP	
			100					100	606	16500	100	FT	GUARDRAIL REBUILT, TYPE 5	
			62.50					62.50	606	16501	62.50	FT	GUARDRAIL REBUILT, TYPE 5, AS PER PLAN	12
			200					200	606	17301	200	FT	GUARDRAIL TYPE 5, 25' LONG SPAN, AS PER PLAN	
			36					36	606	18501	36	EACH	GUARDRAIL POST, 9 FEET, AS PER PLAN	12
			19					19	606	26500	19	EACH	ANCHOR ASSEMBLY, TYPE T	
			1					1	606	27850	1	EACH	ANCHOR ASSEMBLY REBUILT, TYPE E	
			5					5	606	35140	5	EACH	BRIDGE TERMINAL ASSEMBLY, TYPE 4	
			1					1	606	98100	1	EACH	GUARDRAIL, MISC.: RAIL ELEMENT (TO BE NESTED)	
					570	427		997	608	10000	997	SQ FT	4" CONCRETE WALK	
					176	80		256	608	53020	256	SQ FT	DETECTABLE WARNING	
						6		6	609	26000	6	FT	CURB, TYPE 6	
				70				70	SPECIAL	69050100	70	EACH	MAILBOX SUPPORT SYSTEM, SINGLE	26
				34				34	SPECIAL	69050200	34	EACH	MAILBOX SUPPORT SYSTEM, DOUBLE	26
													PAVEMENT	
1200								1200	253	90000	1,200	CU YD	PAVEMENT REPAIR, MISC.: PARTIAL DEPTH	5
	128637	30059					30059	128637	254	01000	158,696	SQ YD	PAVEMENT PLANING, ASPHALT CONCRETE (2.00")	
	23804							23804	254	01000	23,804	SQ YD	PAVEMENT PLANING, ASPHALT CONCRETE (3.25")	
	1503	301					301	1503	254	01600	1,804	SQ YD	PATCHING PLANED SURFACE	
		1145					1145		301	46000	1,145	CU YD	ASPHALT CONCRETE BASE, PG64-22	
	877							877	407	20000	877	GALLON	TACK COAT, TRACKLESS TACK, INTERMEDIATE COURSE	
	12020	2750					2750	12020	407	20100	14,770	GALLON	TACK COAT, TRACKLESS TACK, SURFACE COURSE	
	4778	3436					3436	4778	408	10000	8,214	GALLON	PRIME COAT	
	1065							1065	442	20200	1,065	CU YD	ASPHALT CONCRETE INTERMEDIATE COURSE, 19 MM, TYPE A (448)	
	8042	1671					1671	8042	443	10000	9,713	CU YD	STONE MATRIX ASPHALT CONCRETE, 12.5 MM, PG70-22M (446)	
	332	475		20			475	332	617	10100	807	CU YD	COMPACTED AGGREGATE	
	11944	8593					8593	11944	617	20000	20,537	SQ YD	SHOULDER PREPARATION	

CALCD SCJ CHECKED ADB

GENERAL SUMMARY

WAY-250-14.55

SHEET NUMBER 7 FED STATE	13	27 FED STATE	28 FED STATE	30 FED STATE	31 FED STATE	80% FED-20% STATE	ITEM	ITEM EXT.	TOTAL	UNIT	DESCRIPTION	REF. SHT.
											TRAFFIC CONTROL	
					650	650	621	00100	650	EACH	RPM	
					650	650	621	54000	650	EACH	RAISED PAVEMENT MARKER REMOVED	
	77					77	626	00100	77	EACH	BARRIER REFLECTOR	
				9		9	632	26500	9	EACH	DETECTOR LOOP	
				1		1	632	27009	1	EACH	LOOP DETECTOR UNIT, DELAY AND EXTENSION TYPE, AS PER PLAN	29
				140		140	632	65300	140	FT	LOOP DETECTOR LEAD-IN CABLE, 2 CONDUCTOR, NO. 14 AWG	
					17.82	17.82	642	00100	17.82	MILE	EDGE LINE, TYPE 1	
					10.16	10.16	642	00300	10.16	MILE	CENTER LINE, TYPE 1	
					615	615	644	00500	615	FT	STOP LINE	
		318	254			572	644	00600	572	FT	CROSSWALK LINE	
					4	4	644	01110	4	EACH	SCHOOL SYMBOL MARKING, 96"	
					270	270	644	01200	270	FT	PARKING LOT STALL MARKING	
											MAINTENANCE OF TRAFFIC	
77						77	614	12460	77	EACH	WORK ZONE MARKING SIGN	
100						100	614	13000	100	CU YD	ASPHALT CONCRETE FOR MAINTAINING TRAFFIC	
					0.36	0.36	614	20500	0.36	MILE	WORK ZONE LANE LINE, CLASS II, 642 PAINT	
					21.49	21.49	614	21500	21.49	FT	WORK ZONE CENTER LINE, CLASS II, 642 PAINT	
											STRUCTURES	
											WAY-250-1815 (SFN 8504814)	32
											WAY-250-2301 (SFN 8504873)	32
							614	11000	LUMP		MAINTAINING TRAFFIC	
							619	16010	4	MONTH	FIELD OFFICE, TYPE B	
							624	10000	LUMP		MOBILIZATION	

CALCD CHECKED CHECKED ADD

GENERAL SUMMARY

WAY-250-14.55

COUNTY	ROUTE	LOG POINT TO LOG POINT (STRAIGHT LINE MILEAGE)		LENGTH MILE	LENGTH FEET	WIDTH FEET AVG.	TYPICAL	PAVEMENT AREA SQ YD	254 PAVEMENT PLANING, ASPHALT CONCRETE (2.00") SQ.YD	254 PAVEMENT PLANING, ASPHALT CONCRETE (3.25")	254 PATCHING PLANED SURFACE SQ.YD	407 TACK COAT, TRACKLESS TACK SURFACE COURSE (.08 G/SY) GALLON	407 TACK COAT, TRACKLESS TACK INTERMEDIATE COURSE GALLON	443 STONE MATRIX ASPHALT CONCRETE, 12.5 MM, PG 70-22M (446) INCH	443 CU.YD.	442 ASPHALT CONCRETE INTERMEDIATE COURSE, 19 MM, TYPE A (448) INCH (AVG)	442 CU.YD.	AGGREGATE SHOULDER PROPOSED WIDTH SL FT	AGGREGATE SHOULDER PROPOSED WIDTH SR FT	AGGREGATE SHOULDER AREA SQ YD	209 LINEAR GRADING MILE	408 PRIME COAT @ 0.40 GAL/SY GALLON	617 COMPACTED AGGREGATE, AS PER PLAN 1 INCHES AVG. THICKNESS CU YD	617 SHOULDER PREPARATION SQ.YD
WAY	250 EB	14.45	14.50	0.05	264	28.0	4	821	821		8	66		2.0	46									
WAY	250 EB	14.50	14.60	0.10	528	24.0	4	1,408	1,408		14	113		2.0	78									
WAY	250 WB	14.45	14.50	0.05	264	24.0	4	704	704		7	56		2.0	39									
WAY	250 WB	14.50	14.60	0.10	528	32.0	4	1,877	1,877		19	150		2.0	104									
WAY	250	14.60	14.68	0.08	422	40.0	1	1,876	1,876		19	150		2.0	104									
WAY	250	14.68	18.11	3.43	18110	24.0	1	48,293	48,293		483	3,863		2.0	2,683									
WAY	250	18.11	18.32	0.21	1109	31.0	2	3,820		3,820	38	306	153	1.5	159	1.75	186							
WAY	250	18.32	18.87	0.55	2904	31.0	3	10,003		10,003	100	800	400	1.5	417	1.75	486							
WAY	250	18.87	18.99	0.12	634	40.0	3	2,818		2,818	28	225	113	1.5	117	1.75	137							
WAY	250	18.99	19.28	0.29	1531	31.0	3	5,273		5,273	53	422	211	1.5	220	1.75	256							
WAY	250	19.28	24.37	5.09	26875	24.0	1	71,667	71,667		717	5,733		2.0	3,981			2.0	2.0	11,944	10.18	4,778	332	11,944
	EXTRA AREA FOR INTERSECTIONS , SIDE ROADS							3387	1695	1692	16.95	136		2.0	94									
	EXTRA AREA FOR ASPHALT PAVED DRIVES							549	351	198														
	EXTRA AREA FOR CONCRETE DRIVES							58	58															
	EXTRA AREA FOR AGGREGATE DRIVES							891	891															
	EXTRA AREA FOR EX, PR MAILBOX APPROACHES							180	180															
	BRIDGE DEDUCTION FOR STRUCTURES (17.31, 18.15, 19.29)							(1184)	(1184)															
	TOTALS			10.07	53170				128,637	23,804	1,503	12,020	877		8,042		1,065						10.18	4,778	332	11,944

CALCULATED CVH
CHECKED ADB

PAVEMENT DATA

WAY-250-14.45

DESIGN FILE: i:\projects\83391\roadway\83391GQ001.dgn
WORKSTATION: juzwik
DATE: 7/22/2011
MODEL NAME: Design

COUNTY	ROUTE	LOG POINT TO LOG POINT		LENGTH		TYPICAL	PROPOSED PAVED SHOULDER WIDTH	PAVED SHOULDER WIDENING WIDTH		PAVED SHOULDER WIDENING AREA	203 EXCAVATION		204 SUBGRADE COMPACTION	301 ASPHALT CONCRETE BASE, PG64-22		209 LINEAR GRADING	254 PAVEMENT PLANING, ASPHALT CONCRETE (2.00")	254 PATCHING PLANED SURFACES	407 TACK COAT, TRACKLESS TACK SURFACE COURSE (.08 G/SY)	443 STONE MATRIX ASPHALT CONCRETE, 12.5MM, PG70-22M, (446)		AGGREGATE SHOULDER PROPOSED WIDTH		AGGREGATE SHOULDER AREA	408 PRIME COAT @ 0.40 GAL/SY	617 COMPACTED AGGREGATE, AS PER PLAN 2 INCHES AVG. THICKNESS	617 SHOULDER PREPARATION
								WL	WR													SL	SR				
		STRAIGHT LINE MILEAGE		MILE	FEET			FT	FT	SQ YD	INCH	CU.YD.	SQ YD	INCH	CU.YD.	MILE	SQ YD	SQ YD	GAL	INCH	CU.YD.	FT	FT	SQ YD	GALLON	CU YD	SQ.YD
WAY	250 EB	14.45	14.50	0.05	264	5	7.0		4.0	117	4.0	13	117	4.0	13	0.05	205	2	19	2.0	11		2.0	59	23	3	59
WAY	250 EB	14.50	14.57	0.07	370	5	7.0		2.0	82	4.0	9	82	4.0	9	0.07	288	3	26	2.0	16		2.0	82	33	5	82
WAY	250 EB	14.57	14.61	0.04	211	5	7.0		7.0	164	4.0	18	164	4.0	18	0.04	164	2	15	2.0	9		2.0	47	19	3	47
WAY	250 EB	14.61	14.71	0.10	528	6	7.0		2.0	117	4.0	13	117	4.0	13	0.10	411	4	38	2.0	23		2.0	117	47	7	117
WAY	250 EB	14.71	14.73	0.02	106	6	7.0		7.0	82	4.0	9	82	4.0	9	0.02	82	1	8	2.0	5		2.0	24	9	1	24
WAY	250 EB	14.73	15.58	0.85	4488	6	7.0		2.0	997	4.0	111	997	4.0	111	0.85	3,491	35	319	2.0	194		2.0	997	399	55	997
WAY	250 EB	15.58	15.63	0.05	264	6	7.0		7.0	205	4.0	23	205	4.0	23	0.05	205	2	19	2.0	11		2.0	59	23	3	59
WAY	250 EB	15.63	15.66	0.03	158	6	7.0		2.0	35	4.0	4	35	4.0	4	0.03	123	1	11	2.0	7		2.0	35	14	2	35
WAY	250 EB	15.66	15.74	0.08	422	6	7.0		7.0	328	4.0	36	328	4.0	36	0.08	328	3	30	2.0	18		2.0	94	38	5	94
WAY	250 EB	15.74	16.21	0.47	2482	6	7.0		2.0	552	4.0	61	552	4.0	61	0.47	1,930	19	176	2.0	107		2.0	552	221	31	552
WAY	250 EB	16.21	16.32	0.11	581	6	7.0		7.0	452	4.0	50	452	4.0	50	0.11	452	5	41	2.0	25		2.0	129	52	7	129
WAY	250 EB	16.32	16.40	0.08	422	6	7.0		2.0	94	4.0	10	94	4.0	10	0.08	328	3	30	2.0	18		2.0	94	38	5	94
WAY	250 EB	16.40	16.42	0.02	106	6	7.0		7.0	82	4.0	9	82	4.0	9	0.02	82	1	8	2.0	5		2.0	24	9	1	24
WAY	250 EB	16.42	16.59	0.17	898	6	7.0		2.0	200	4.0	22	200	4.0	22	0.17	698	7	64	2.0	39		2.0	200	80	11	200
WAY	250 EB	16.59	16.61	0.02	106	6	7.0		7.0	82	4.0	9	82	4.0	9	0.02	82	1	8	2.0	5		2.0	24	9	1	24
WAY	250 EB	16.61	16.69	0.08	422	6	7.0		2.0	94	4.0	10	94	4.0	10	0.08	328	3	30	2.0	18		2.0	94	38	5	94
WAY	250 EB	16.69	16.71	0.02	106	6	7.0		7.0	82	4.0	9	82	4.0	9	0.02	82	1	8	2.0	5		2.0	24	9	1	24
WAY	250 EB	16.71	18.11	1.4	7392	6	7.0		2.0	1,643	4.0	183	1,643	4.0	183	1.40	5,749	57	526	2.0	319		2.0	1,643	657	91	1,643
WAY	250 WB	14.45	14.48	0.03	158	5	7.0	3.0		53	4.0	6	53	4.0	6	0.03	123	1	11	2.0	7	2.0		35	14	2	35
WAY	250 WB	14.48	14.50	0.02	106	5	7.0	2.0		24	4.0	3	24	4.0	3	0.02	82	1	8	2.0	5	2.0		24	9	1	24
WAY	250 WB	14.50	14.61	0.11	581	5	7.0	4.0		258	4.0	29	258	4.0	29	0.11	452	5	41	2.0	25	2.0		129	52	7	129
WAY	250 WB	14.61	14.72	0.11	581	6	7.0	7.0		452	4.0	50	452	4.0	50	0.11	452	5	41	2.0	25	2.0		129	52	7	129
WAY	250 WB	14.72	14.88	0.16	845	6	7.0	2.0		188	4.0	21	188	4.0	21	0.16	657	7	60	2.0	37	2.0		188	75	10	188
WAY	250 WB	14.88	14.91	0.03	158	6	7.0	7.0		123	4.0	14	123	4.0	14	0.03	123	1	11	2.0	7	2.0		35	14	2	35
WAY	250 WB	14.91	15.47	0.56	2957	6	7.0	2.0		657	4.0	73	657	4.0	73	0.56	2,300	23	210	2.0	128	2.0		657	263	37	657
WAY	250 WB	15.47	15.48	0.01	53	6	7.0	7.0		41	4.0	5	41	4.0	5	0.01	41	0	4	2.0	2	2.0		12	5	1	12
WAY	250 WB	15.48	17.94	2.46	12989	6	7.0	2.0		2,886	4.0	321	2,886	4.0	321	2.46	10,103	101	924	2.0	561	2.0		2,886	1,155	160	2,886
WAY	250 WB	17.94	17.96	0.02	106	6	7.0	3.0		35	4.0	4	35	4.0	4	0.02	82	1	8	2.0	5	2.0		24	9	1	24
WAY	250 WB	17.96	18.11	0.15	792	6	7.0	2.0		176	4.0	20	176	4.0	20	0.15	616	6	56	2.0	34	2.0		176	70	10	176
TOTAL	**(100% STATE-BUGGY LANES)**			**7.32**	**38652**							**1145**	**10301**		**1145**	**7.32**	**30059**	**301**	**2750**		**1671**			**8593**	**3436**	**475**	**8593**

CALCULATED CVH CHECKED ADB

SHOULDER DATA FOR WIDENING

WAY-250-14.45

DESIGN FILE: ii:\projects\83391\roadway\83391GQ001.dgn MODELNAME: Design
WORKSTATION: jjuzwik DATE: 7/22/2011

ITEM 203 - EMBANKMENT, AS PER PLAN

AT SPECIFIED LOCATIONS AND LOCATIONS AS DIRECTED BY THE ENGINEER, EMBANKMENT SHALL BE PLACED AS TO PROVIDE A SUITABLE AREA TO CONSTRUCT GUARDRAIL AND TO PROVIDE STRUCTURAL INTEGRITY OF THE ROADWAY SHOULDER.

EMBANKMENT MATERIAL SHALL BE LIMITED TO CMS ITEM 304 LIMESTONE.

AREAS WHERE EMBANKMENT MATERIAL IS TO BE PLACED SHALL BE SCALPED. THE REQUIREMENTS FOR BENCHING SHALL BE WAIVED. THE DEPTH OF LAYERS IN WHICH THE EMBANKMENT IS PLACED SHALL BE LIMITED TO EIGHT (8) INCHES IN THICKNESS. THE METHOD OF COMPACTION AND EQUIPMENT USED SHALL BE SUFFICIENT TO COMPACT 95% OF STANDARD PROCTOR TO THE SATISFACTION OF THE ENGINEER.

THE METHOD OF MEASUREMENT FOR EMBANKMENT MATERIAL SHALL BE BY THE NUMBER OF CUBIC YARDS CONVERTED BY TICKET WEIGHT IN THE CARRIER AT THE WORK SITE, IN LIEU OF THE REQUIREMENTS OF 203.09. PAYMENT FOR ACCEPTED QUANTITIES WILL BE MADE AT THE CONTRACT UNIT BID PRICE PER CUBIC YARD FOR ITEM 203 - EMBANKMENT, AS PER PLAN AND SHALL INCLUDE ALL WORK DESCRIBED ABOVE.

CONNECTING GUARDRAIL TO EXISTING RAIL

IN LOCATIONS WHERE TYPE 5 GUARDRAIL, TERMINAL ASSEMBLIES, ETC. ARE TO BE CONNECTED TO EXISTING RAIL SOME MODIFICATIONS MAY BE REQUIRED, INCLUDING EXTRA POSTS, DRILLING HOLES AND POSSIBLY PARTIAL SECTIONS OF ADDITIONAL RAIL ELEMENTS. THE COST OF THIS ADDITIONAL WORK SHALL BE INCLUDED IN THE UNIT BID PRICE FOR TYPE 5 GUARDRAIL. IF ADDITIONAL PORTIONS OF RAIL ELEMENT ARE USED THE LINEAL MEASUREMENT OF THIS ADDITIONAL PORTION SHALL BE ADDED FOR PAYMENT.

CONNECTION BETWEEN EXISTING AND PROPOSED GUARDRAIL

WHEN IT IS NECESSARY TO SPLICE PROPOSED GUARDRAIL TO EXISTING GUARDRAIL, ONLY THE EXISTING GUARDRAIL SHALL BE CUT, DRILLED, OR PUNCHED. THE CONNECTION SHALL BE MADE USING A "W-BEAM RAIL SPLICE" AS SHOWN ON STANDARD CONSTRUCTION DRAWING GR-1.1. PAYMENT SHALL BE INCLUDED IN THE CONTRACT PRICE FOR THE RESPECTIVE GUARDRAIL ITEMS.

LOCATIONS OF GUARDRAIL

THE GUARDRAIL PROTECTION PROVIDED IN THIS PLAN SHALL BE LOCATED IN THE FIELD TO ASSURE THAT THE INSTALLATION WILL AFFORD THE MAXIMUM PROTECTION FOR TRAFFIC. THIS LOCATION SHALL BE POSITIONED AS FAR AS POSSIBLE FROM THE EDGE OF PAVEMENT WHILE MAINTAINING PROPER GRADE IN FRONT OF GUARDRAIL AS PER STANDARD DRAWINGS AND PLAN DETAILS.

SUGGESTED SEQUENCE OF GUARDRAIL WORK

1. GUARDRAIL WORK IS TO BEGIN AFTER THE LINEAR GRADING IS COMPLETED AND THE 617 MATERIAL IS PLACED.
2. REMOVE THE GUARDRAIL.
3. PERFORM THE RESHAPING UNDER GUARDRAIL INCLUDING COMPLETING THE EMBANKMENT, AS PER PLAN.
4. REBUILD/CONSTRUCT THE GUARDRAIL RUN.
5. INSTALL BARRIER REFLECTORS.

ITEM 202 - ANCHOR ASSEMBLY REMOVED FOR REUSE, TYPE E-98

THIS ITEM CONSISTS OF REMOVING AN EXISTING ANCHOR ASSEMBLY, AND SALVAGING FOR REUSE AT A LOCATION SHOWN ON THE PLANS. THE RESULTING HOLES SHALL BE BACKFILLED AND COMPACTED. ELEMENTS THAT ARE NOT SALVAGEABLE SHALL BE DISPOSED OF PER 202.02.

ITEM 606 - GUARDRAIL, MISC.: GUARDRAIL RAIL ELEMENT

THIS ITEM SHALL BE USED IN CONJUNCTION WITH ITEMS 606 - GUARDRAIL, MISC.: ADJUST HEIGHT, EXISTING TYPE 5 GUARDRAIL, AND ITEM 606 - GUARDRAIL REBUILT, TYPE 5, AND AS DIRECTED BY THE ENGINEER. IT SHALL CONSIST OF REPLACING EXISTING GUARDRAIL RAIL ELEMENTS DEEMED BY THE ENGINEER TO BE INSUFFICIENT. THE RAIL ELEMENTS SHALL BE OF THE SAME TYPE, AND SIZE OF THE EXISTING GUARDRAIL RUN. THEY SHALL BE PLACED IN ACCORDANCE WITH STANDARD CONSTRUCTION DRAWING GR-1.1.

ITEM 606 - GUARDRAIL REBUILT, TYPE 5, AS PER PLAN

GUARDRAIL REMOVED FOR REUSE SHALL BE REBUILT USING 9 FT. POSTS.

ITEM 606 - GUARDRAIL POST, 9 FEET, AS PER PLAN

GUARDRAIL POSTS INDICATED SHALL BE 9 FEET LONG AND SHALL INCLUDE 9' BREAKAWAY POSTS WHERE 6' BREAKAWAY POSTS ARE SHOWN IN STD-DWG GR-2.3.

ITEM 606 - GUARDRAIL , TYPE 5, 25' LONG SPAN, AS PER PLAN

ADDITIONAL NESTED RAIL SECTIONS AND TUBULAR BACKUP SHALL BE PLACED ON THE POSTS WITH THE TOP OF THE RAIL AT GROUND LEVEL TO PREVENT EROSION.

ITEM 202 - GUARDRAIL REMOVED FOR REUSE, AS PER PLAN

THIS ITEM SHALL CONSIST OF THE REMOVAL OF THE EXISTING GUARDRAIL AS PER 202.09. THE RAIL ELEMENT SHALL BE STORED BY THE CONTRACTOR FOR REUSE, AS SHOWN BELOW.

THE EXISTING RAIL ELEMENT SHALL BE PLACED ON THE GROUND ADJACENT TO NEW GUARDRAIL POST. THE RAIL ELEMENT MAY REQUIRE TO BE FASTENED TO THE POST TO FACILITATE PLACEMENT OF EMBANKMENT. THE CONTRACTOR MAY DETERMINE THIS METHOD OF FASTENING. THE ITEMS DESCRIBED ABOVE AND SHOWN BELOW (NOT INCLUDING NEW RAIL, 9 FOOT POSTS, AND EMBANKMENT) SHALL BE PAID FOR UNDER THE UNIT BID PRICE FOR ITEM 202 - GUARDRAIL REMOVED FOR REUSE, AS PER PLAN.

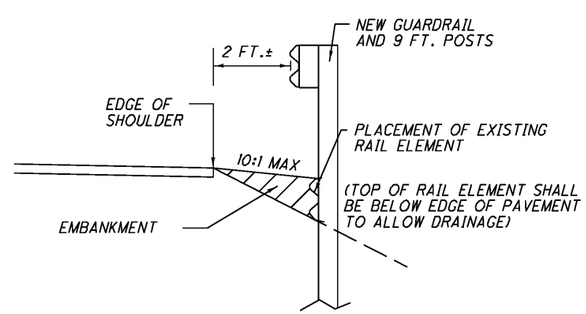

CALCULATED EAS CHECKED ADB

GUARDRAIL NOTES

WAY-250-14.45

DESIGN FILE: I:\projects\83391\roadway\83391gr002.dgn
WORKSTATION: sjuzwik DATE: 7/22/2011

CALC BY: SCJ
CHK'D BY: ADB

GUARDRAIL QUANTITIES

BEGIN SLM	END SLM		SIDE	FROM SHEET NUMBER	GUARDRAIL REMOVED	GUARDRAIL REMOVED FOR REUSE	ANCHOR ASSEMBLY REMOVED, TYPE T	ANCHOR ASSEMBLY REMOVED FOR REUSE, TYPE E	GUARDRAIL REMOVED FOR REUSE, AS PER PLAN		BRIDGE TERMINAL ASSEMBLY REMOVED	EMBANKMENT, AS PER PLAN	GUARDRAIL, TYPE 5	GUARDRAIL REBUILT, TYPE 5	GUARDRAIL, TYPE 5, 25' LONG SPAN, AS PER PLAN	GUARDRAIL, TYPE 5, 25' LONG SPAN	GUARDRAIL REBUILT, TYPE 5, AS PER PLAN	GUARDRAIL, MISC.: RAIL ELEMENT (TO BE NESTED)	GUARDRAIL NESTED, TYPE 5, WITH TUBULAR BACKUP	GUARDRAIL POST, 9 FEET, AS PER PLAN	ANCHOR ASSEMBLY REBUILT, TYPE E	ANCHOR ASSEMBLY, TYPE T		BRIDGE TERMINAL ASSEMBLY, TYPE 4	BARRIER REFLECTOR, TYPE A2 (WHITE)		
					202	202	202	202	202		202	203	606	606	606	606	606	606	606	606	606	606		606	626		
					FT	FT	EACH	EACH	FT		EACH	CU YD	FT	FT	FT	FT	FT	EACH	FT	EACH	EACH	EACH		EACH	EACH		
US-250																											
17.29	17.32		BOTH	**14**			3	1				7									1	3			7		
18.10	18.11		North	**15**		25	2					10		25								2			3		
18.10	18.18		BOTH	**16**	18.75	50	3				1	5	25.00	50								3		1	9		
19.27	19.34		BOTH	**17**			3															3			9		
19.45	20.00		BOTH	**18**	200							6			200	200				36					9		
21.39	21.45		BOTH	**19**			1															1			9		
21.63	21.67		South	**20**		12.5	1					2		12.5								1			4		
22.97	23.01		BOTH	**21**			2															2			8		
23.19	23.24		BOTH	**22**	50		2												50			2		4	7		
23.62	23.68		BOTH	**23**		12.5	2		62.5			7		12.5			62.5					2			8		
24.32	24.37		South	**24**														1							4		
TOTALS CARRIED TO GENERAL SUMMARY					268.75	100	19	1	62.5		1	37	25	100	200	200	62.5	1	50	36	1	19		5	77		

WAY-250-14.45

7/22/11 12:00 AM I:\projects\83391\83391gc003.xls CAD-scj

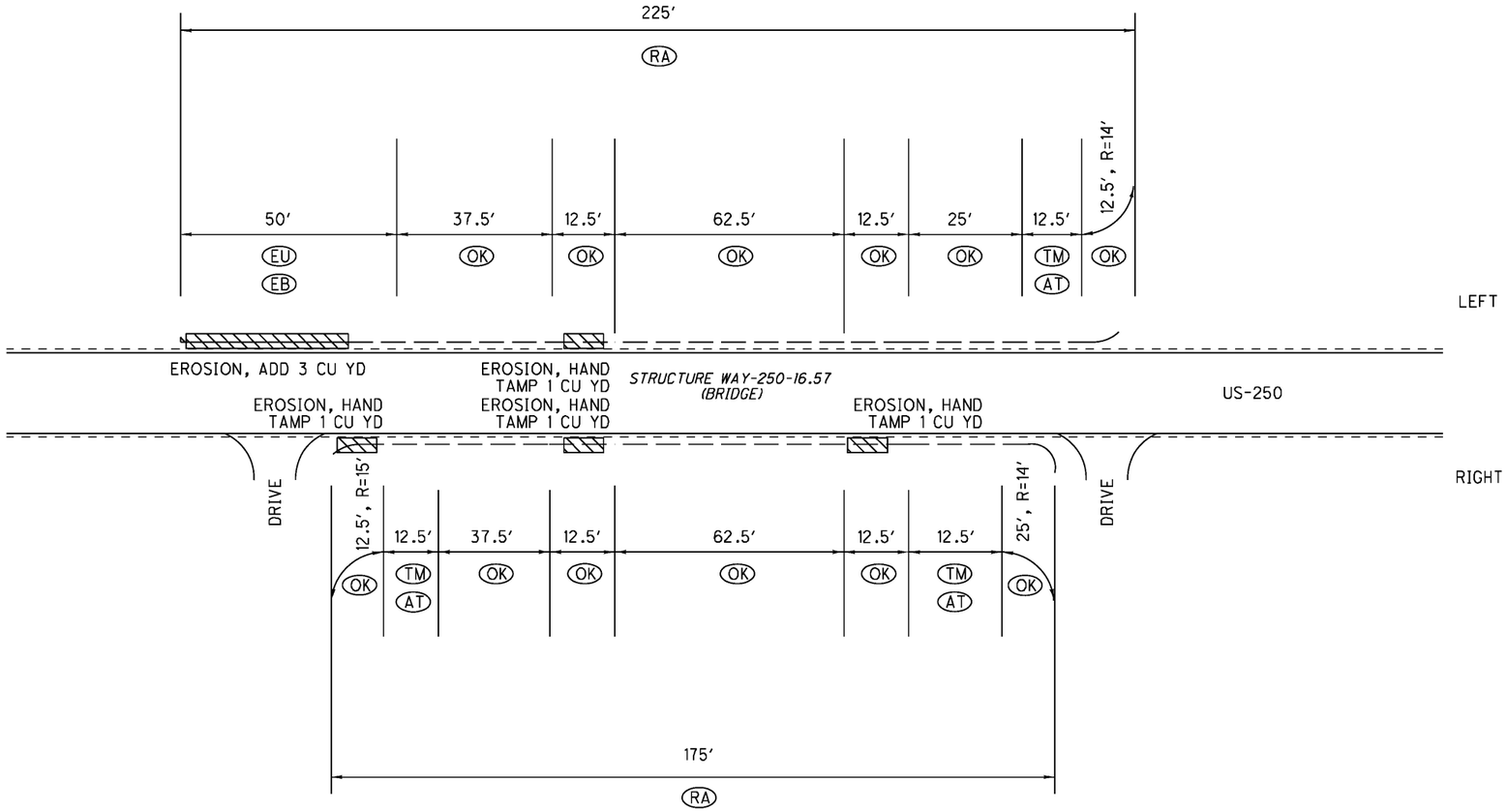

LOCATION	ITEM	DESCRIPTION	UNIT	LEFT	RIGHT	TOTAL
TM	202	ANCHOR ASSEMBLY REMOVED, TYPE T	EACH	1	2	3
EU	202	ANCHOR ASSEMBLY REMOVED FOR REUSE, TYPE E	EACH	1		1
AT	606	ANCHOR ASSEMBLY, TYPE T	EACH	1	2	3
EB	606	ANCHOR ASSEMBLY REBUILT, TYPE E	EACH	1		1
OK		LEAVE EX GR AS IS (SEE ABOVE FOR LOCATION)				
RA	626	BARRIER REFLECTOR	EACH	4	3	7
	203	EMBANKMENT, AS PER PLAN	CU YD	4	3	7

ALL QUANTITIES CARRIED TO GUARDRAIL SUMMARY SHEET.

TYPICAL SECTION "TYPE 5"

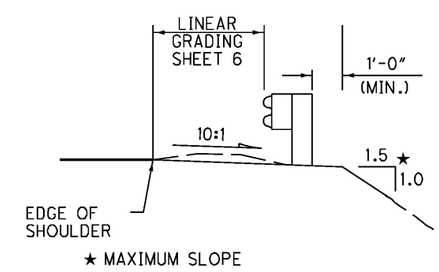

TYPICAL SECTION "E-98"

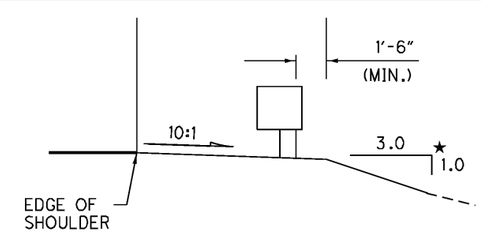

NOT TO SCALE

CALCULATED SCJ
CHECKED ADB

GUARDRAIL DETAIL (SLM 17.29-SLM 17.32)

WAY-250-14.45

DESIGN FILE: I:\projects\83391\roadway\83391gr000.dgn
WORKSTATION: sjuzwik DATE: 7/22/2011

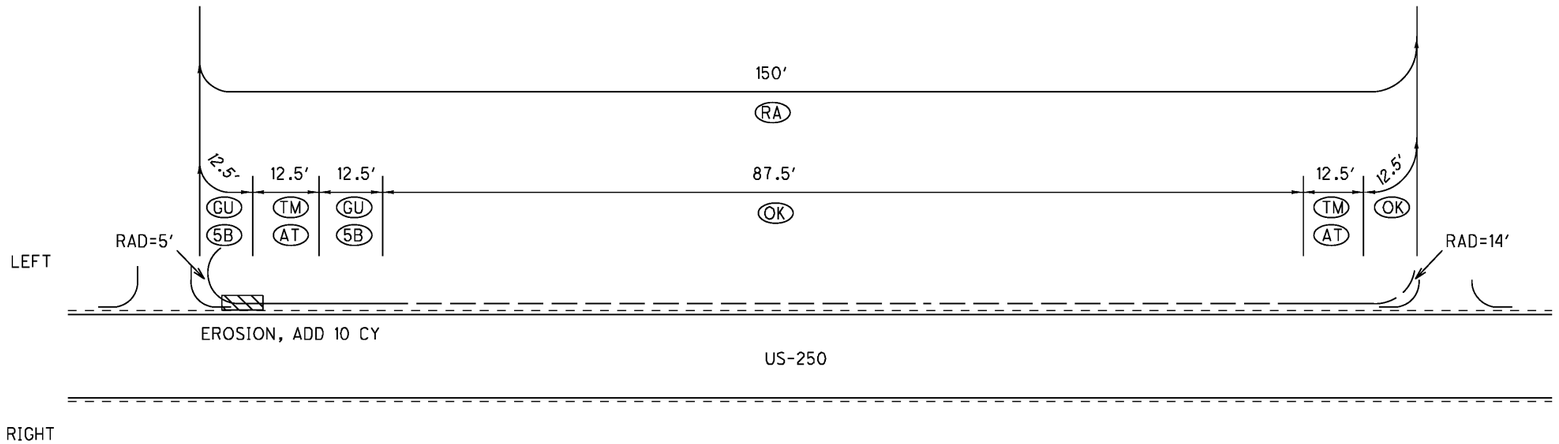

LOCATION	ITEM	DESCRIPTION	UNIT	LEFT	RIGHT	TOTAL
TM	202	ANCHOR ASSEMBLY REMOVED, TYPE T	EACH	2		2
GU	202	GUARDRAIL REMOVED FOR REUSE	FT	25		25
AT	606	ANCHOR ASSEMBLY, TYPE T	EACH	2		2
5B	606	GUARDRAIL REBUILT, TYPE 5	FT	25		25
RA	626	BARRIER REFLECTOR	EACH	3		3
	203	EMBANKMENT, AS PER PLAN	CU YD	10		10

ALL QUANTITIES CARRIED TO GUARDRAIL SUMMARY SHEET.

TYPICAL SECTION "TYPE 5"

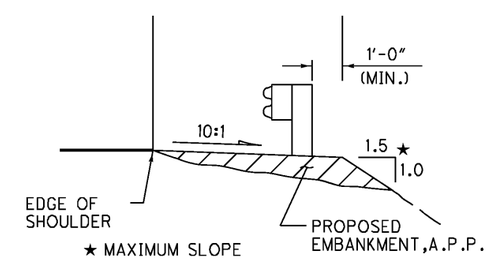

TYPICAL SECTION "TYPE 5"

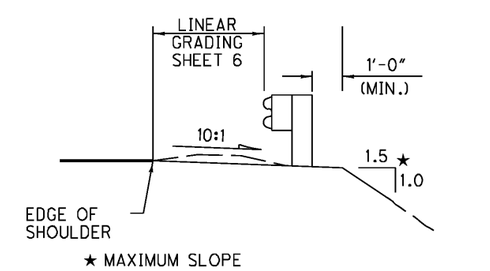

DESIGN FILE: I:\projects\83391\roadway\83391gr000.dgn
WORKSTATION: sjuzwik DATE: 7/22/2011

NOT TO SCALE

CALCULATED SCJ CHECKED ADB

GUARDRAIL DETAIL (SLM 18.10-SLM 18.11)

WAY-250-14.45

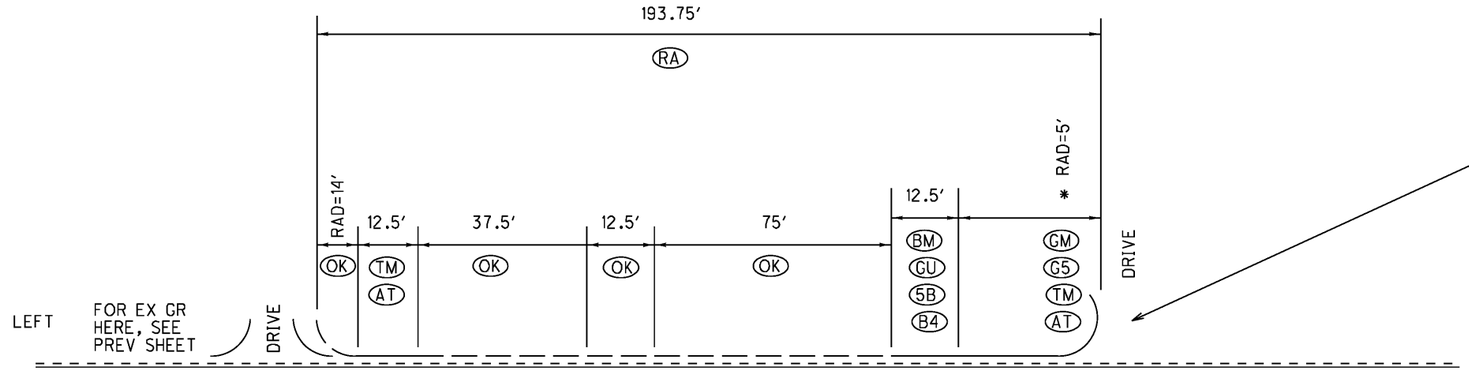

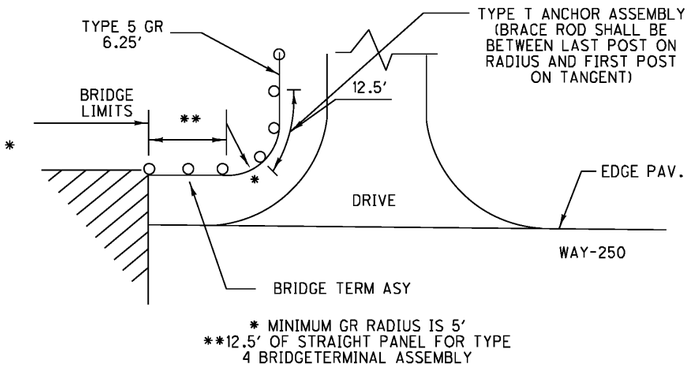

STRUCTURE WAY-250-18.15

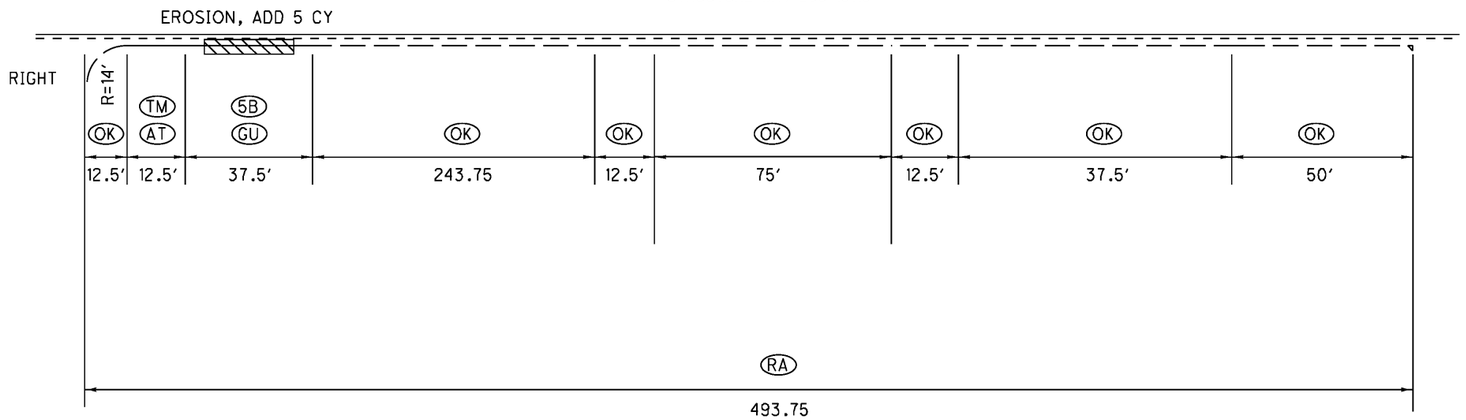

LOCATION	ITEM	DESCRIPTION	UNIT	LEFT	RIGHT	TOTAL
GM	202	GUARDRAIL REMOVED	FT	18.75		18.75
GU	202	GUARDRAIL REMOVED FOR REUSE	FT	12.5	37.5	50
TM	202	ANCHOR ASSEMBLY REMOVED, TYPE T	EACH	2	1	3
AT	606	ANCHOR ASSEMBLY, TYPE T	EACH	2	1	3
G5	606	GUARDRAIL, TYPE 5	FT	25		25
5B	606	GUARDRAIL REBUILT, TYPE 5	FT	12.5	37.5	50
BM	606	BRIDGE TERMINAL ASSEMBLY REMOVED	EACH	1		1
B4	606	BRIDGE TERMINAL ASSEMBLY, TYPE 4	EACH	1		1
OK		LEAVE EX GR AS IS (SEE ABOVE FOR LOCATION)				
RA	626	BARRIER REFLECTOR	EACH	3	6	9
▨	203	EMBANKMENT, AS PER PLAN	CU YD		5	5

ALL QUANTITIES CARRIED TO GUARDRAIL SUMMARY SHEET.

TYPICAL SECTION "TYPE 5"

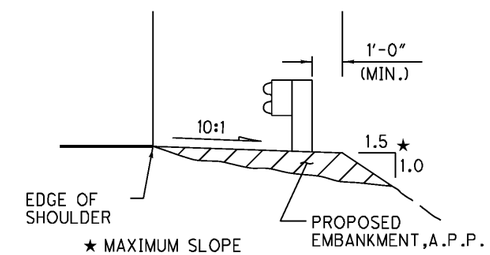

TYPICAL SECTION "TYPE 5"

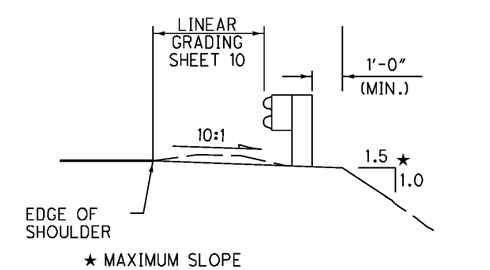

NOT TO SCALE

CALCULATED SCJ
CHECKED ADB

GUARDRAIL DETAIL (SLM 18.14-SLM 18.18)

WAY-250-14.45

DESIGN FILE: I:\projects\83391\roadway\83391gr000.dgn
WORKSTATION: sjuzwik DATE: 7/22/2011

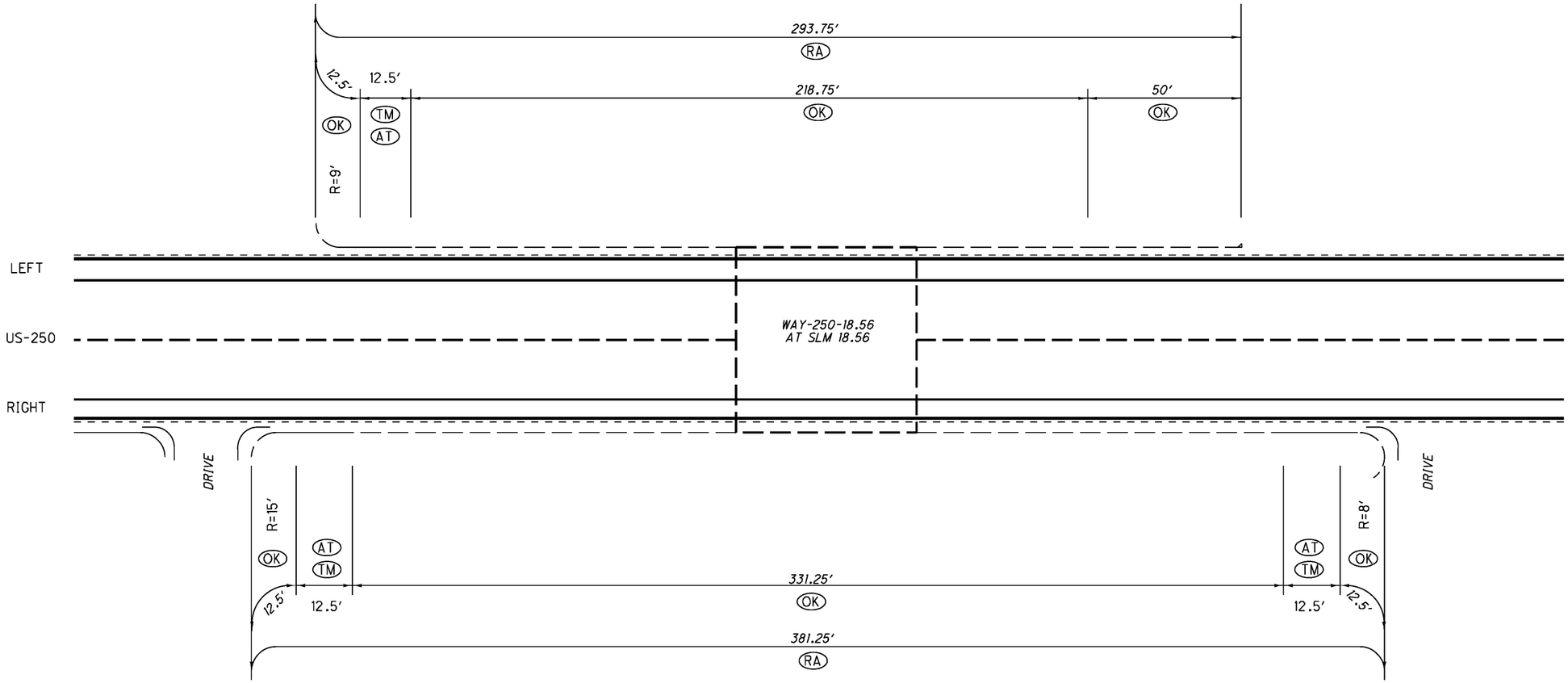

LOCATION	ITEM	DESCRIPTION	UNIT	LEFT	RIGHT	TOTAL
TM	202	ANCHOR ASSEMBLY REMOVED, TYPE T	EACH	1	2	3
AT	606	ANCHOR ASSEMBLY, TYPE T	EACH	1	2	3
RA	626	BARRIER REFLECTOR	EACH	4	5	9

ALL QUANTITIES CARRIED TO GUARDRAIL SUMMARY SHEET.

TYPICAL SECTION "E-98"

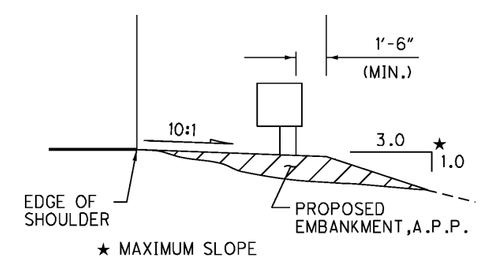

TYPICAL SECTION "TYPE 5"

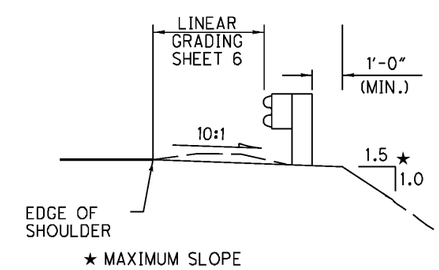

NOT TO SCALE

CALCULATED SCJ
CHECKED ADB

GUARDRAIL DETAIL (SLM 19.27-SLM 19.34)

WAY-250-14.45

DESIGN FILE: I:\projects\83391\roadway\83391gr000.dgn
WORKSTATION: sjuzwik DATE: 7/22/2011

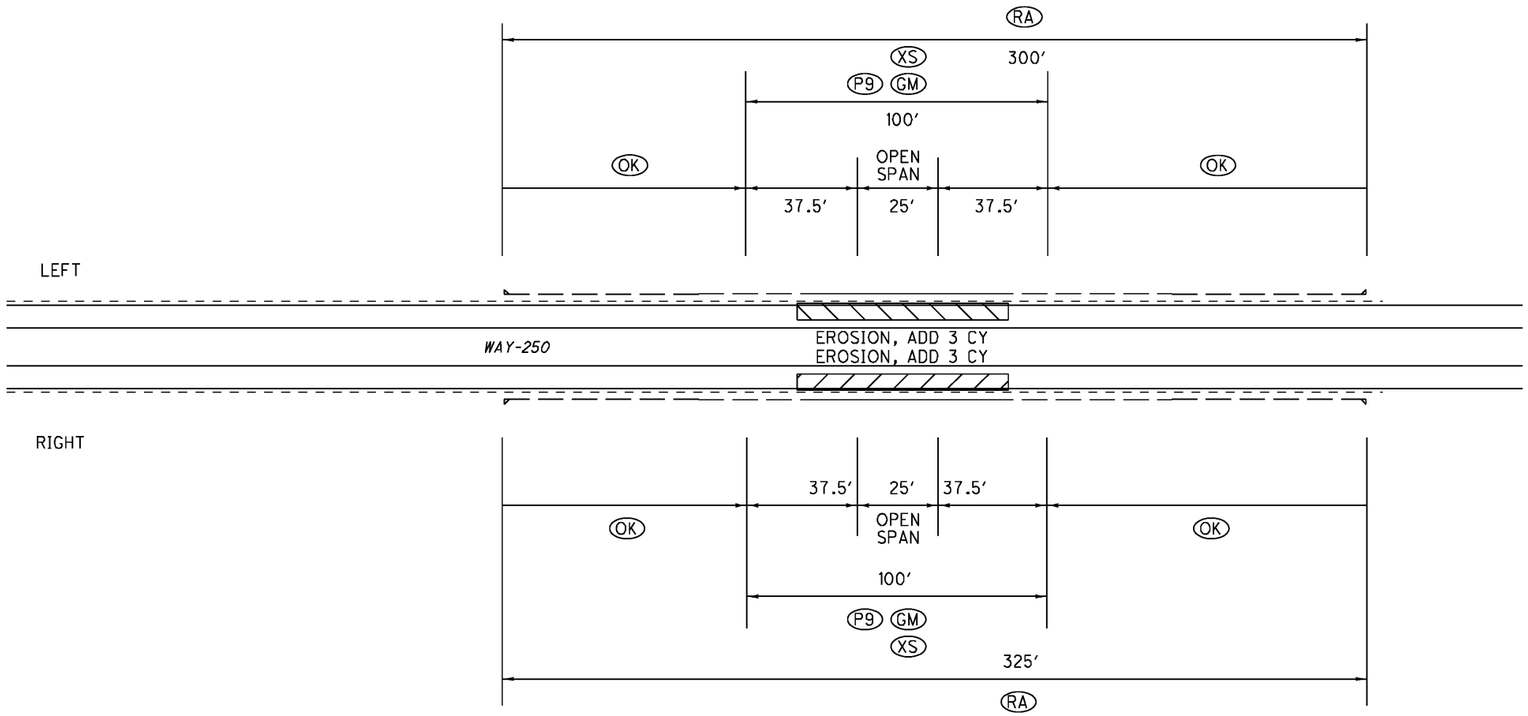

LOCATION	ITEM	DESCRIPTION	UNIT	LEFT	RIGHT	TOTAL
GM	202	GUARDRAIL REMOVED	FT	100	100	200
XS	606	GUARDRAIL, TYPE 5, 25' LONG SPAN, AS PER PLAN	FT	100	100	200
P9	606	GUARDRAIL POST, 9 FEET, AS PER PLAN	EACH	18	18	36
RA	626	BARRIER REFLECTOR	EACH	4	5	9
OR	203	EMBANKMENT, AS PER PLAN	CU YD	3	3	6

ALL QUANTITIES CARRIED TO GUARDRAIL SUMMARY SHEET.

TYPICAL SECTION "TYPE 5"

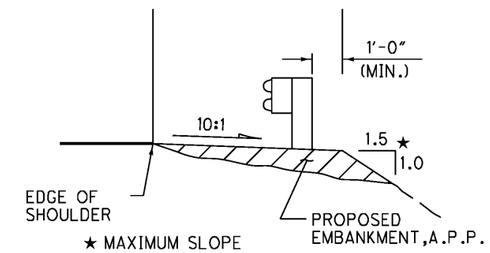

TYPICAL SECTION "TYPE 5"

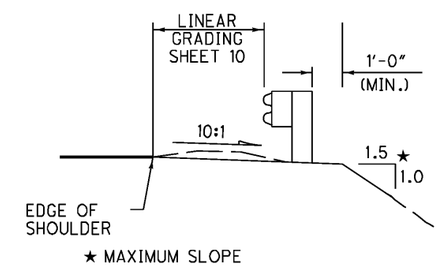

GUARDRAIL, TYPE 5, LONG SPAN, A.P.P.

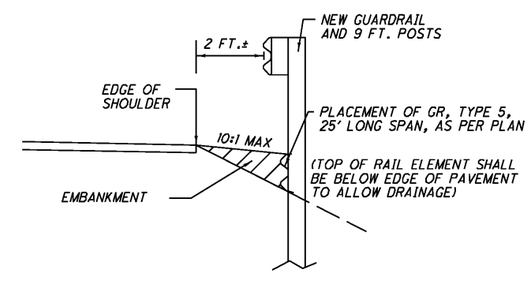

NOT TO SCALE

CALCULATED SCJ CHECKED ADB

GUARDRAIL DETAIL (SLM 19.95-SLM 20.00)

WAY-250-14.45

DESIGN FILE: I:\projects\83391\roadway\83391gr000.dgn
WORKSTATION: sjuzwik DATE: 7/22/2011

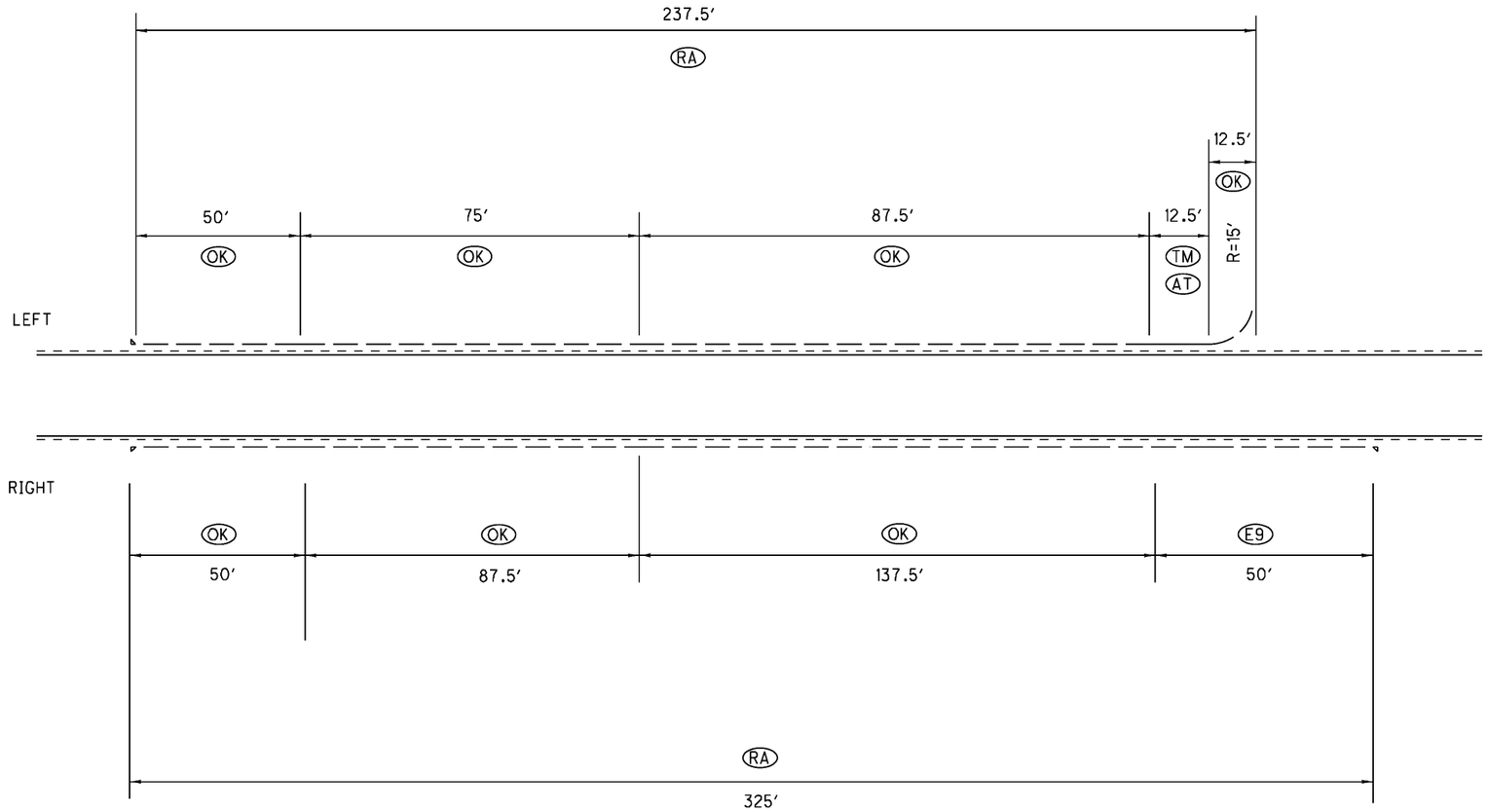

LOCATION	ITEM	DESCRIPTION	UNIT	LEFT	RIGHT	TOTAL
TM	202	ANCHOR ASSEMBLY REMOVED, TYPE T	EACH	1		1
AT	606	ANCHOR ASSEMBLY, TYPE T	EACH	1		1
OK		LEAVE EX GR AS IS (SEE ABOVE FOR LOCATION)				
RA	626	BARRIER REFLECTOR	EACH	4	5	9

ALL QUANTITIES
CARRIED TO GUARDRAIL
SUMMARY SHEET.

DESIGN FILE: I:\projects\83391\roadway\83391gr000.dgn
WORKSTATION: sjuzwik DATE: 7/22/2011

NOT TO SCALE

CALCULATED SCJ CHECKED ADB

GUARDRAIL DETAIL (SLM 21.39-SLM 21.45)

WAY-250-14.45

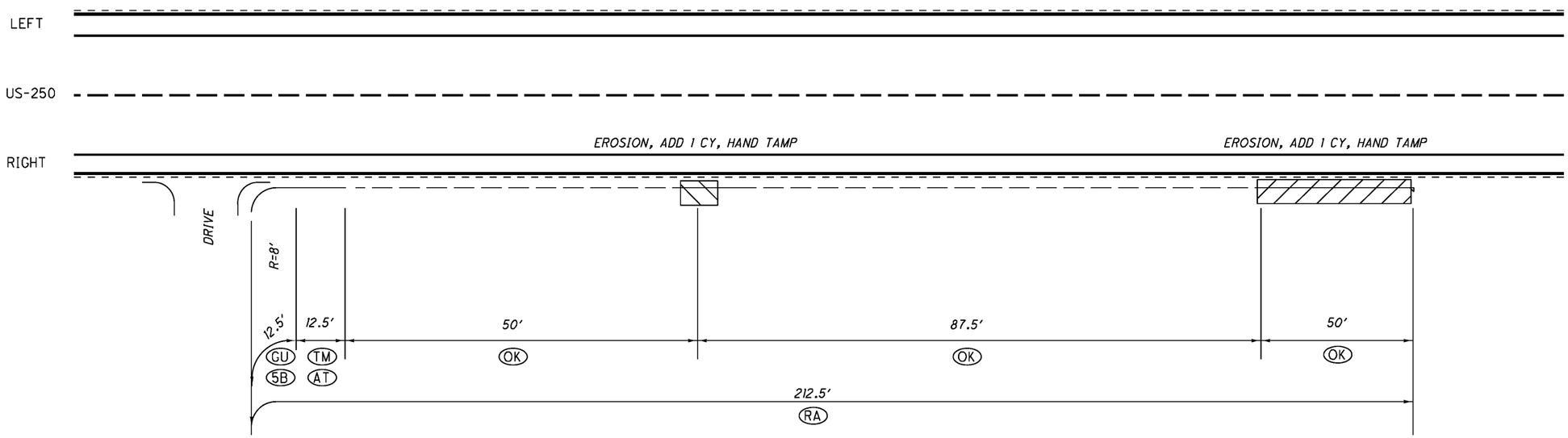

LOCATION	ITEM	DESCRIPTION	UNIT	LEFT	RIGHT	TOTAL
GU	202	GUARDRAIL REMOVED FOR REUSE	FT		12.5	12.5
TM	202	ANCHOR ASSEMBLY REMOVED, TYPE T	EACH		1	1
AT	606	ANCHOR ASSEMBLY, TYPE T	EACH		1	1
5B	606	GUARDRAIL REBUILT, TYPE 5	FT		12.5	12.5
RA	626	BARRIER REFLECTOR	EACH		4	4
	203	EMBANKMENT, AS PER PLAN	CU YD		2	2

ALL QUANTITIES CARRIED TO GUARDRAIL SUMMARY SHEET.

TYPICAL SECTION "E-98"

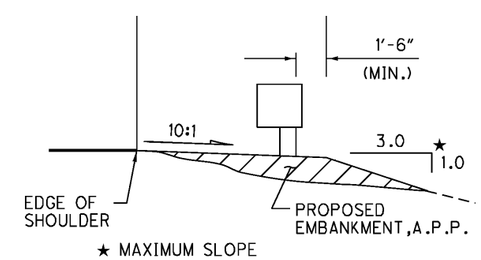

TYPICAL SECTION "TYPE 5"

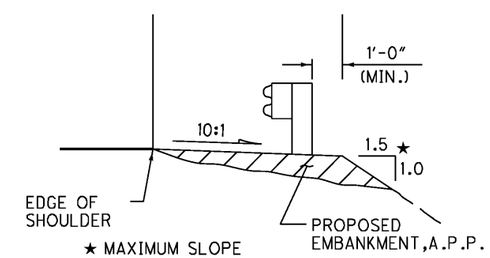

NOT TO SCALE

CALCULATED SCJ
CHECKED ADB

GUARDRAIL DETAIL (SLM 21.63-SLM 21.67)

WAY-250-14.45

DESIGN FILE: I:\projects\83391\roadway\83391gr000.dgn
WORKSTATION: sjuzwik DATE: 7/22/2011

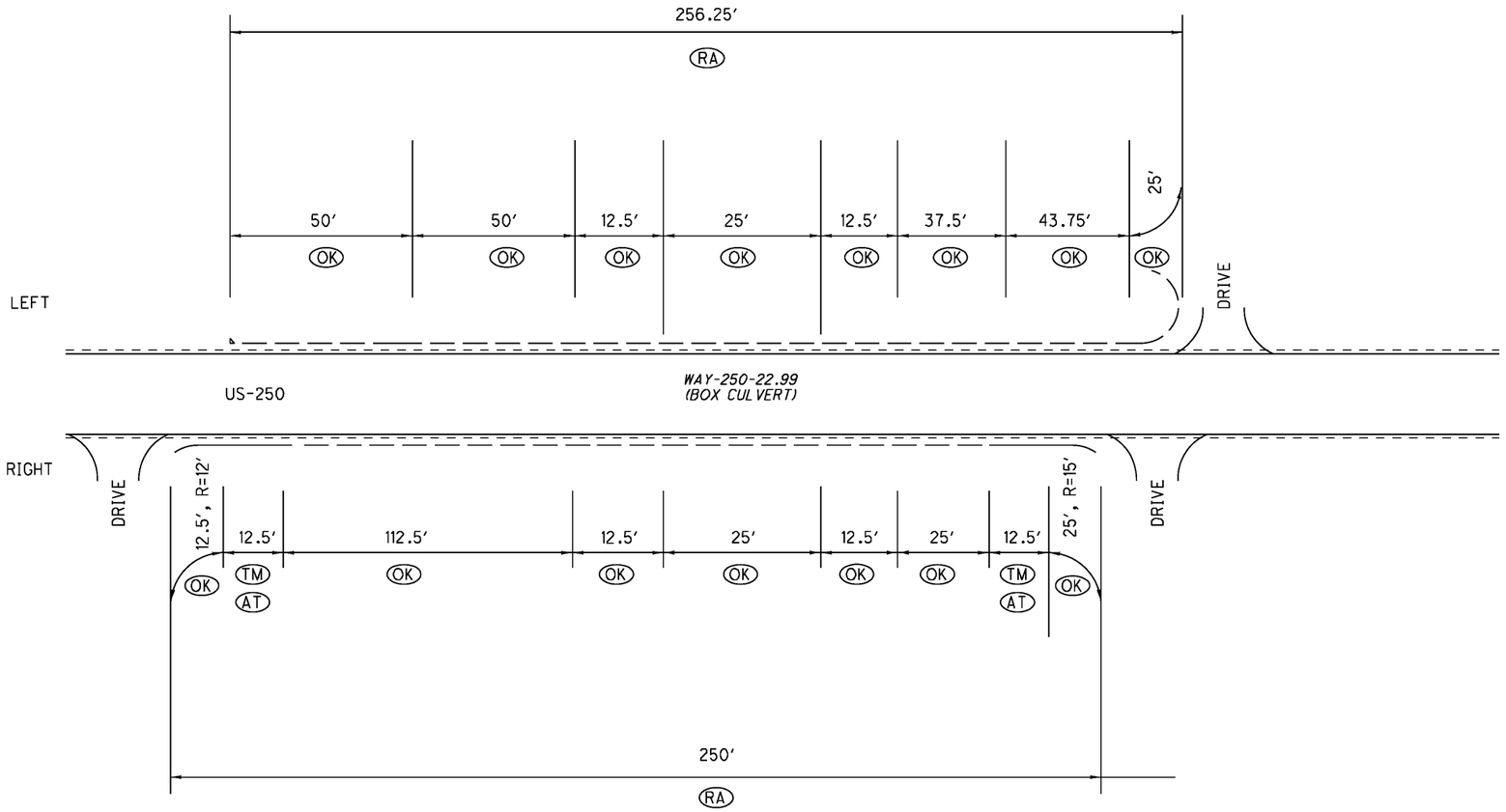

LOCATION	ITEM	DESCRIPTION	UNIT	LEFT	RIGHT	TOTAL
TM	202	ANCHOR ASSEMBLY REMOVED, TYPE T	EACH		2	2
AT	606	ANCHOR ASSEMBLY, TYPE T	EACH		2	2
OK		LEAVE EX GR AS IS (SEE ABOVE FOR LOCATION)				
RA	626	BARRIER REFLECTOR	EACH	4	4	8

ALL QUANTITIES CARRIED TO GUARDRAIL SUMMARY SHEET.

TYPICAL SECTION "TYPE 5"

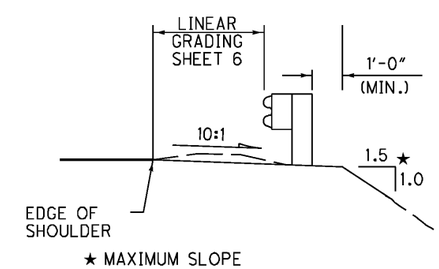

TYPICAL SECTION "E-98"

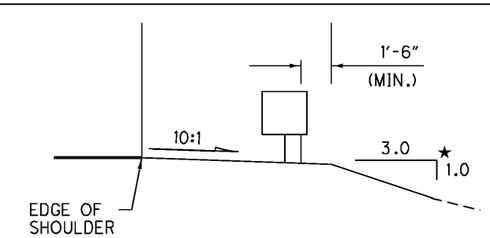

NOT TO SCALE

CALCULATED SCJ
CHECKED ADB

GUARDRAIL DETAIL (SLM 22.97-SLM 23.01)

WAY-250-14.45

DESIGN FILE: I:\projects\83391\roadway\83391gr000.dgn
WORKSTATION: sjuzwik DATE: 7/22/2011

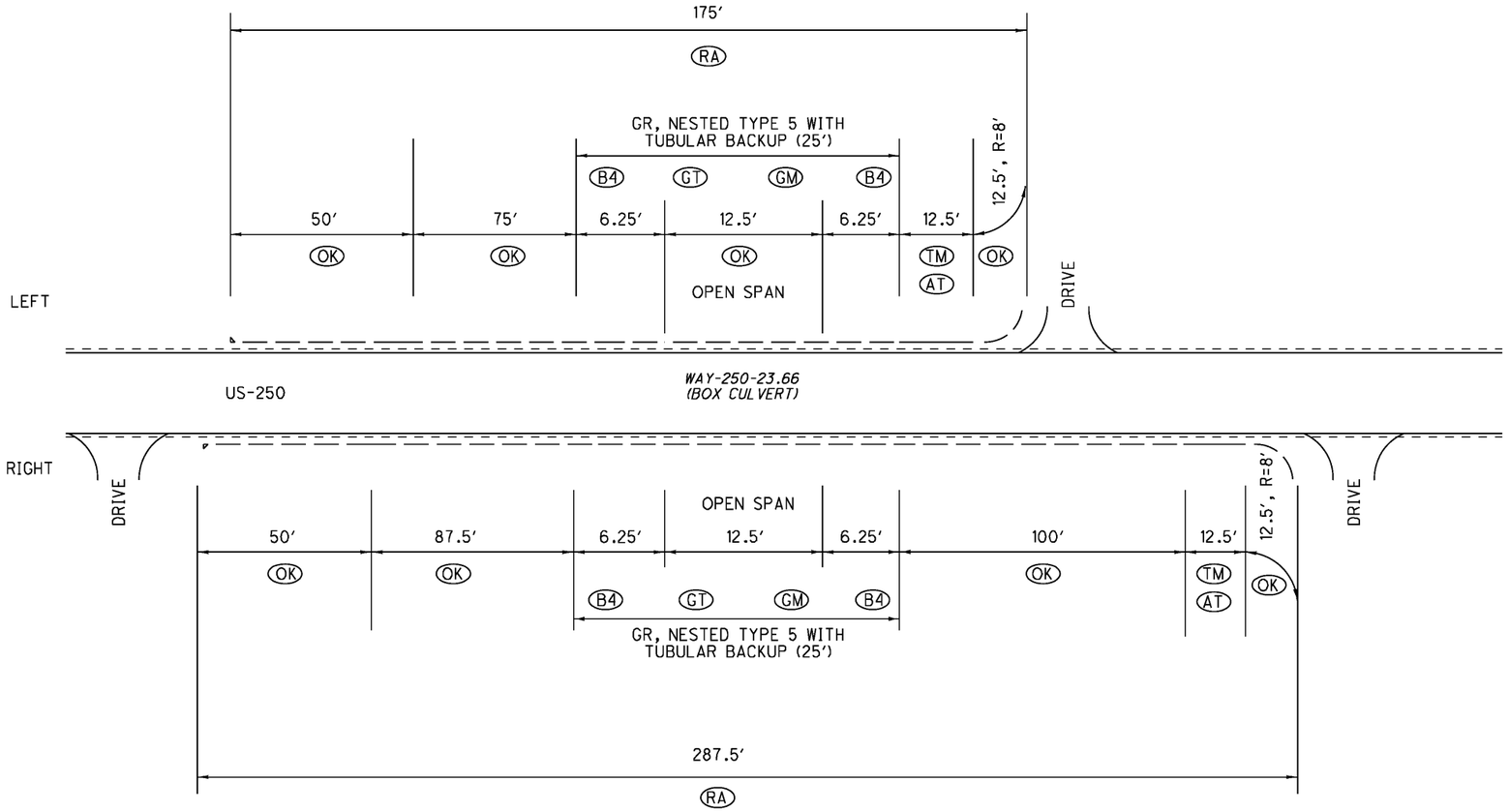

LOCATION	ITEM	DESCRIPTION	UNIT	LEFT	RIGHT	TOTAL
TM	202	ANCHOR ASSEMBLY REMOVED, TYPE T	EACH	1	1	2
AT	606	ANCHOR ASSEMBLY, TYPE T	EACH	1	1	2
GT	606	GUARDRAIL, NESTED TYPE 5 WITH TUBULAR BACKUP	FT	25	25	50
B4	606	BRIDGE TERMINAL ASSEMBLY, TYPE 4	EACH	2	2	4
GM	202	GUARDRAIL REMOVED	FT	25	25	50
RA	626	BARRIER REFLECTOR	EACH	3	4	7

ALL QUANTITIES
CARRIED TO GUARDRAIL
SUMMARY SHEET.

DESIGN FILE: I:\projects\83391\roadway\83391gr000.dgn
WORKSTATION: sjuzwik DATE: 7/22/2011

NOT TO SCALE

CALCULATED SCJ CHECKED ADB

GUARDRAIL DETAIL (SLM 23.19-SLM 23.24)

WAY-250-14.45

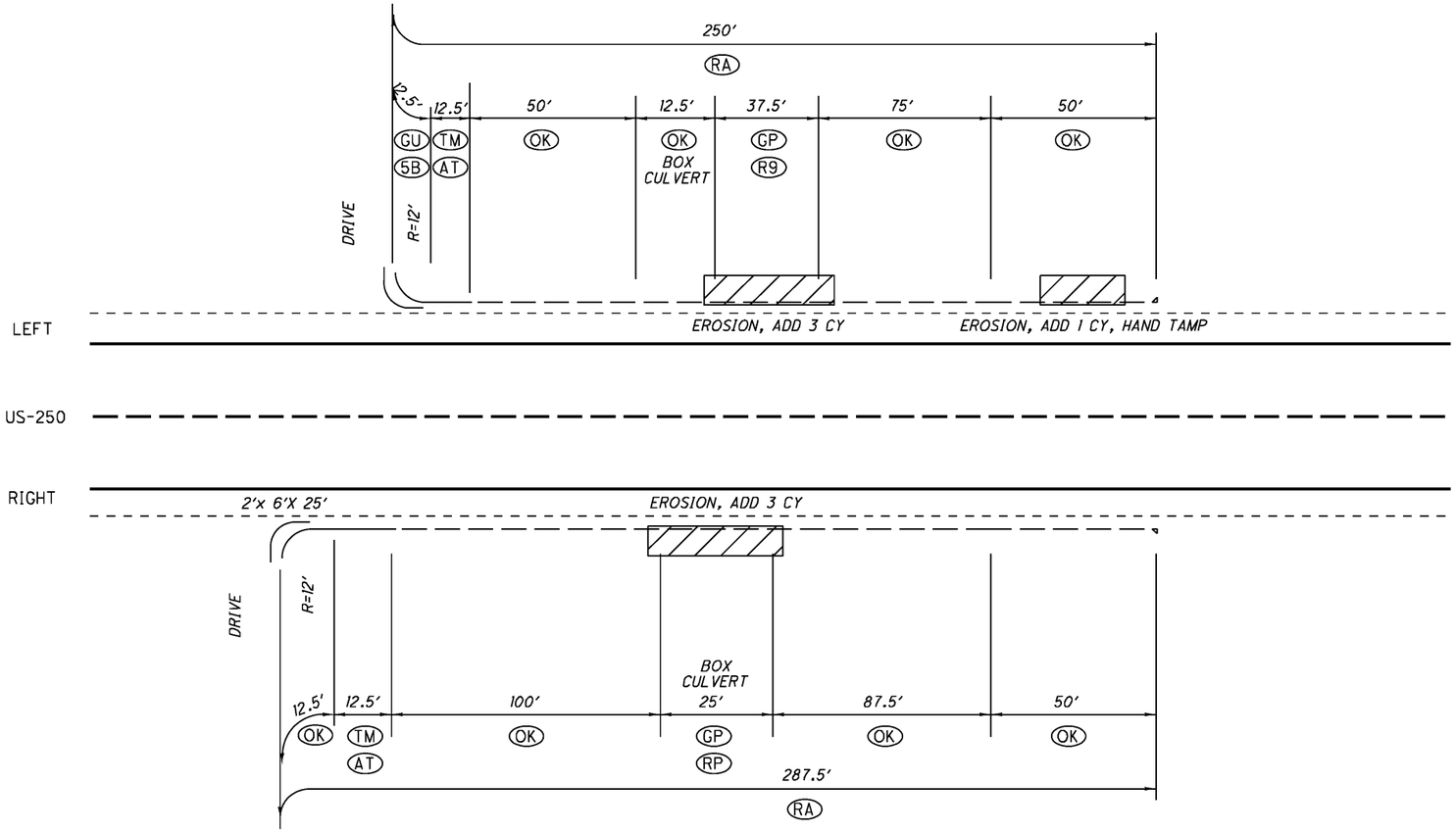

LOCATION	ITEM	DESCRIPTION	UNIT	LEFT	RIGHT	TOTAL
GP	202	GUARDRAIL REMOVED FOR REUSE, AS PER PLAN	FT	37.5	25	62.5
R9	606	GUARDRAIL REBUILT, TYPE 5, USING 9' POSTS	FT	37.5	25	62.5
GU	202	GUARDRAIL REMOVED FOR REUSE	FT	12.5		12.5
TM	202	ANCHOR ASSEMBLY REMOVED, TYPE T	EACH	1	1	2
AT	606	ANCHOR ASSEMBLY, TYPE T	EACH	1	1	2
5B	606	GUARDRAIL REBUILT, TYPE 5	FT	12.5		12.5
OK		LEAVE EX GR AS IS (SEE ABOVE FOR LOCATION)				
RA	626	BARRIER REFLECTOR	EACH	4	4	8
▨	203	EMBANKMENT, AS PER PLAN	CU YD	4	3	7

ALL QUANTITIES CARRIED TO GUARDRAIL SUMMARY SHEET.

GUARDRAIL REMOVED FOR REUSE, A.P.P.

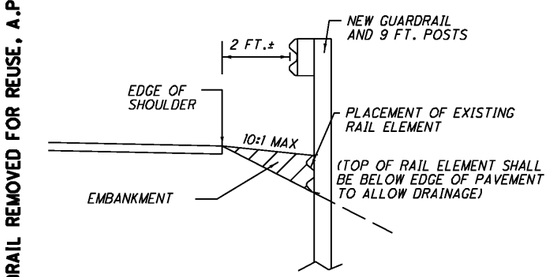

TYPICAL SECTION "TYPE 5"

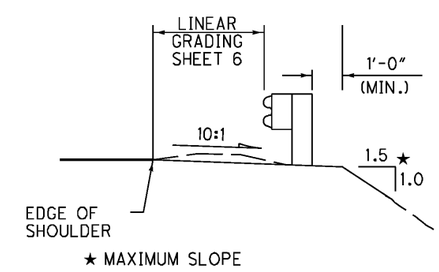

TYPICAL SECTION "E-98"

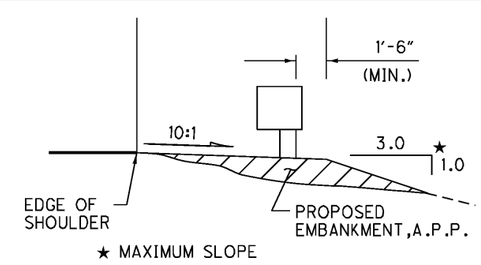

NOT TO SCALE

CALCULATED SCJ
CHECKED ADB

GUARDRAIL DETAIL (SLM 23.62-SLM 23.68)

WAY-250-14.45

DESIGN FILE: I:\projects\83391\roadway\83391gr000.dgn
WORKSTATION: sjuzwik DATE: 7/22/2011

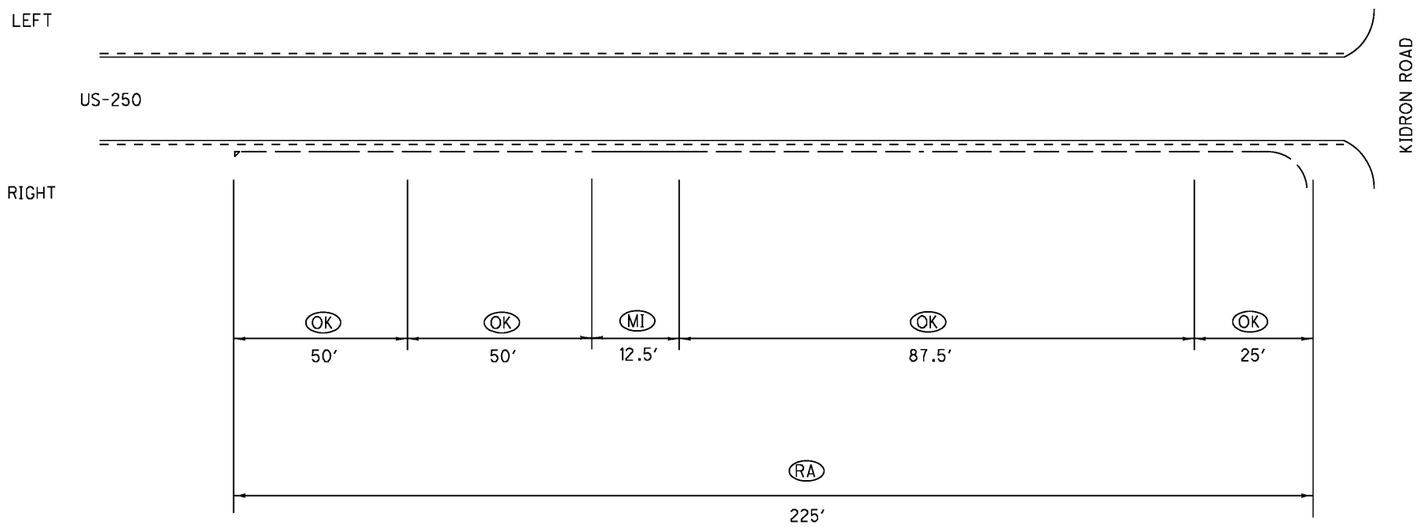

LOCATION	ITEM	DESCRIPTION	UNIT	LEFT	RIGHT	TOTAL
MI	606	GUARDRAIL, MISC.: RAIL ELEMENT (TO BE NESTED WITH EXISTING RAIL)	EACH		1	1
RA	626	BARRIER REFLECTOR	EACH		4	4

ALL QUANTITIES CARRIED TO GUARDRAIL SUMMARY SHEET.

TYPICAL SECTION "TYPE 5"

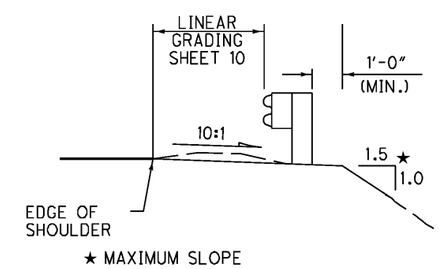

NOT TO SCALE

CALCULATED SCJ
CHECKED ADB

GUARDRAIL DETAIL (SLM 24.32-SLM 24.37)

WAY-250-14.45

DESIGN FILE: I:\projects\83391\roadway\83391gr000.dgn
WORKSTATION: sjuzwik DATE: 7/22/2011

ITEM SPECIAL, MAILBOX SUPPORT SYSTEM

THIS ITEM OF WORK SHALL CONSIST OF THE REMOVAL OF EXISTING NON-STANDARD MAILBOX SUPPORTS AND FURNISHING AND ERECTING MAILBOX SUPPORTS AND ANY ASSOCIATED HARDWARE IN ACCORDANCE WITH THE DETAILS SHOWN, AND ATTACHING AN OWNER SUPPLIED MAILBOX, AT LOCATIONS DETERMINED BY THE ENGINEER.

IN ABSENCE OF A NEW BOX SUPPLIED BY THE OWNER THE CONTRACTOR SHALL SALVAGE THE EXISTING BOX AND PLACE IT ON THE NEW SUPPORT. DUE CARE SHALL BE EXERCISED IN SUCH AN OPERATION, THE CONTRACTOR SHALL BE RESPONSIBLE FOR REPAIRING OR REPLACING ANY BOX DAMAGED BY IMPROPER HANDLING, AS JUDGED AND DIRECTED BY THE ENGINEER.

THE BOX SHALL BE SECURELY AND NEATLY ATTACHED BY THE CONTRACTOR TO THE NEW SUPPORT. THE CONTRACTOR SHALL SUPPLY ALL NECESSARY ATTACHMENT HARDWARE (NUTS, BOLTS, PLATES, SPACERS AND WASHERS) AS NECESSARY TO ACCOMMODATE THE COMPLETE INSTALLATION. SUPPORT HARDWARE SHALL ACCOMMODATE EITHER A SINGLE OR A DOUBLE MAILBOX INSTALLATION, AND NO MORE THAN TWO MAILBOXES MAY BE MOUNTED ON A SINGLE POST. [HARDWARE SHALL BE COMMERCIAL GRADE GALVANIZED STEEL.]

WOOD POSTS SHALL BE NOMINAL 4 IN. x 4 IN. (S4S) OR 4½IN. DIAMETER ROUND, AND CONFORM TO 710.14. STEEL POSTS SHALL BE NOMINAL PIPE SIZE 2 IN. I.D., AND CONFORM TO AASHTO M 181.

POSTS SHALL BE SET AS PER THE FIRST PARAGRAPH OF 606.03, AND SHALL IN NO INSTANCE BE ENCASED IN CONCRETE.

THE CONTRACTOR SHALL BE RESPONSIBLE FOR COORDINATING WORK WITH THE LOCAL POST MASTER AND NOTIFYING THE PROPERTY OWNERS PRIOR TO WORK.

GROUP MAILBOX SUPPORTS SHALL BE PLACED ON 3 FT. CENTERS AND THE TURNOUT LENGTHENED TO ACCOMMODATE THE GROUPING.

WHERE GUARDRAIL EXISTS, MAILBOXES AND THEIR SUPPORTS SHALL BE PLACED BEHIND THE GUARDRAIL. SUPPORTS MUST STILL MEET THE BREAKAWAY REQUIREMENTS LISTED ABOVE.

THE FOLLOWING ESTIMATED QUANTITIES HAVE BEEN CARRIED TO THE GENERAL SUMMARY TO BE USED AS DESCRIBED ABOVE.

ITEM SPECIAL-MAILBOX SUPPORT SYSTEM, SINGLE
- U.S. 250 (W OF APPLE CREEK--REMOVE, RESET FOR SHLDR WIDENING) 60 EACH

ITEM SPECIAL-MAILBOX SUPPORT SYSTEM, DOUBLE
- U.S. 250 (W OF APPLE CREEK--REMOVE, RESET FOR SHLDR WIDENING) 29 EACH

ITEM SPECIAL-MAILBOX SUPPORT SYSTEM, SINGLE
- U.S. 250 10 EACH

ITEM SPECIAL-MAILBOX SUPPORT SYSTEM, SINGLE
- U.S. 250 5 EACH

MAILBOX APPROACHES

THE MAILBOX APPROACHES SHALL BE PAVED WITH 1.50" ITEM 442 INTERMEDIATE COURSE AND 1.00" ITEM 442 SURFACE COURSE. THEY SHALL CONFORM AS MUCH AS PRACTICAL TO STANDARD DRAWING BP-4.1 OR AS DIRECTED BY THE ENGINEER.

GRADING SHALL BE PERFORMED IN THESE AREAS TO OBTAIN A BASE WHICH WILL ALLOW THE FINISHED GRADE TO BE FLUSH WITH ADJACENT PAVEMENT. A QUANTITY OF ITEM 617 COMPACTED AGGREGATE, AS PER PLAN HAS BEEN PROVIDED FOR AREAS WHERE THE SHOULDER IS LOW PRIOR TO GRADING AND/OR LOW AREAS CAUSED BY THE REMOVAL OF UNSUITABLE MATERIAL. QUANTITIES TO PERFORM THIS WORK HAVE BEEN INCLUDED IN THE GENERAL SUMMARY AND ARE ESTIMATED AS FOLLOWS.

ITEM 209 - GRADING MAILBOX APPROACHES: - - - - - - -
- S.R. 4 10 EACH

ITEM 617 - COMPACTED AGGREGATE
- S.R. 4 20 CU YD

LOCATIONS OF MAILBOX SUPPORT SYSTEM TO BE REPLACED

ADDRESSES AND/OR LOCATIONS OF MAILBOX SUPPORT SYSTEM TO BE REPLACED:

#??? US-250 - SLM 18.27, SOUTH SIDE, 1 SINGLE, 1 DOUBLE
#377 US-250 - SLM 18.58, SOUTH SIDE, 1 SINGLE, 1 DOUBLE
#364 US-250 - SLM 18.59, NORTH SIDE, 1 SINGLE
#349 US-250 - SLM 18.60, SOUTH SIDE, 1 SINGLE
#136 US-250 - SLM 18.80, NORTH SIDE, 1 SINGLE
#135 US-250 - SLM 18.81, SOUTH SIDE, 1 SINGLE
#??? US-250 - SLM 19.55, NORTH SIDE, 1 SINGLE
#728 US-250 - SLM 19.63, SOUTH SIDE, 1 SINGLE
#733 US-250 - SLM 19.63, NORTH SIDE, 1 DOUBLE
#??? US-250 - SLM 20.05, SOUTH SIDE, 1 SINGLE
#8787 US-250 - SLM 20.23, SOUTH SIDE, 1 SINGLE
#8911 US-250 - SLM 20.35, SOUTH SIDE, 1 DOUBLE
#???? US-250 - SLM 21.98, SOUTH SIDE, 1 SINGLE
#???? US-250 - SLM 23.28, SOUTH SIDE, 1 DOUBLE
#12182 US-250 - SLM 23.47, SOUTH SIDE, 1 SINGLE

FOR DETAILS NOT SHOWN SEE STANDARD DRAWING BP-4.1

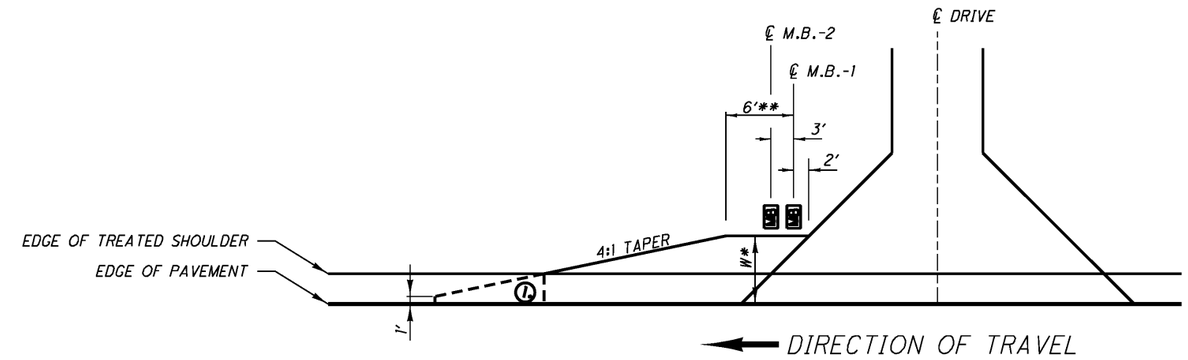

(1) END MAILBOX TURNOUT AT EDGE OF ASPHALT CONCRETE SHOULDER OR 1' FROM EDGE OF PAVEMENT IF TREATED SHOULDER IS AGGREGATE.

W* NOTES
1) WHERE EXISTING STANDARD MAILBOX POSTS ARE BEHIND GUARDRAIL AND ARE TO REMAIN IN PLACE, TURNOUT WIDTH SHALL EXTEND TO FACE OF GUARDRAIL.
2) WHERE NO GUARDRAIL IS REQUIRED, TURNOUT WIDTH SHALL BE 6 FT MAXIMUM OR TO FACE OF EXISTING STANDARD MAILBOX IF IT IS LESS THAN 6 FT.
3) IF THE MAILBOX SUPPORT IS SPECIFIED TO BE REMOVED AND REERECTED OR REPLACED, WHERE GUARDRAIL IS REQUIRED, TURNOUT WIDTH SHALL EXTEND TO FACE OF GUARDRAIL AND MAILBOX SHALL BE INSTALLED BEHIND THE GUARDRAIL.
4) IF THE MAILBOX SUPPORT IS SPECIFIED TO BE REMOVED AND REERECTED OR REPLACED, WHERE NO GUARDRAIL IS REQUIRED, TURNOUT WIDTH SHALL BE 6 FT. MAXIMUM.

** NOTE
1) 6 FT FOR SINGLE MAILBOX SUPPORT, ADD 3 FT. FOR EACH ADDITIONAL MAILBOX.

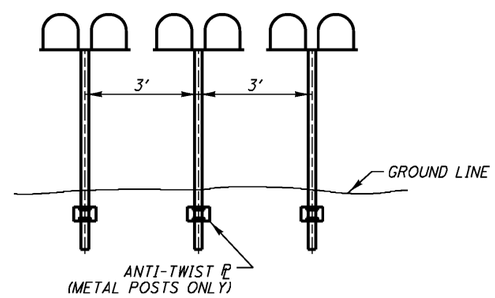

GROUP MAILBOX INSTALLATION

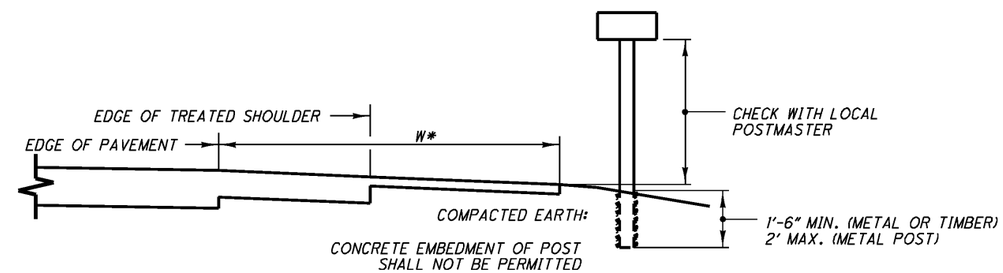

CROSS SECTION / ELEVATION VIEW

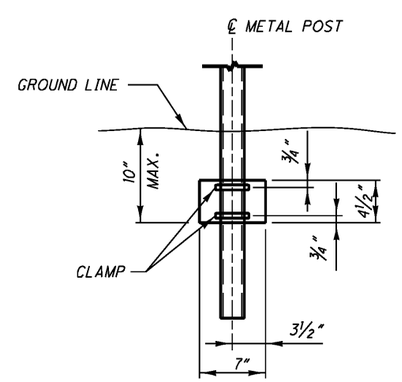

ANTI-TWIST PLATE

CALCULATED SCJ
CHECKED ADB

MAILBOX FACILITIES

WAY-250-14.45

DESIGN FILE: I:\projects\83391\roadway\83391gm001.dgn
WORKSTATION: sjuzwik DATE: 7/25/2011

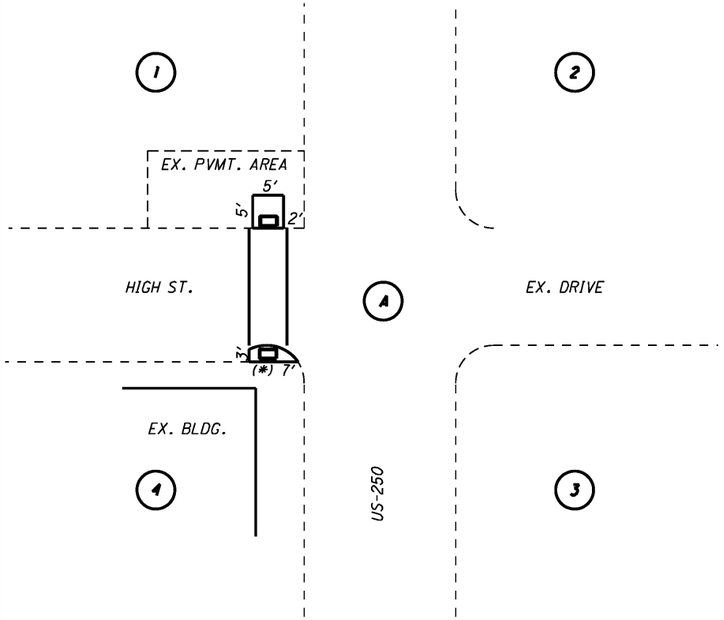

NOTES:
1. PROVIDE TRUNCATED DOMES (DETECTABLE WARNINGS) IN PROP. SIDEWALK.
2. THERE IS A MANHOLE (*) NEAR THE PROP. SIDEWALK THAT SHALL NOT BE DISTURBED.

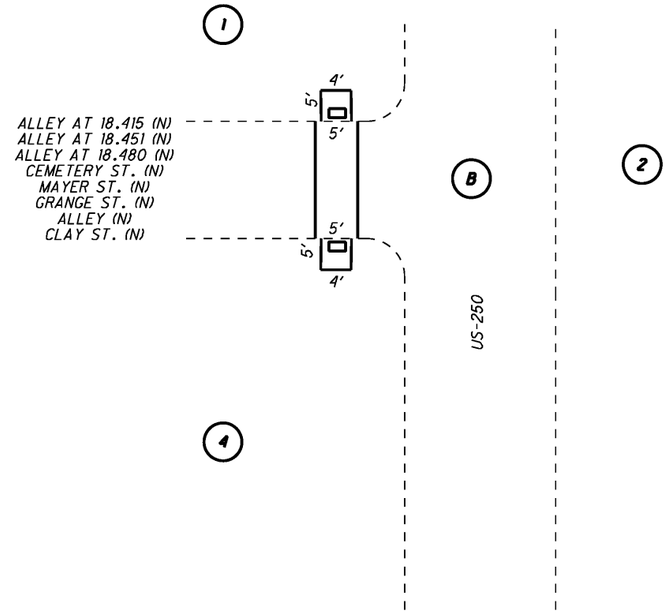

NOTES:
1. PROVIDE TRUNCATED DOMES (DETECTABLE WARNINGS) IN PROP. SIDEWALK.
2. SPACE BETWEEN CROSSWALK LINES TO BE 6 FEET.
3. THERE IS NO CURB AT THESE LOCATIONS.
4. EX. CONCRETE TO BE REMOVED TO NEAREST JOINT.
5. CROSSWALKS NOT TO BE INSTALLED IN ALLEYS.

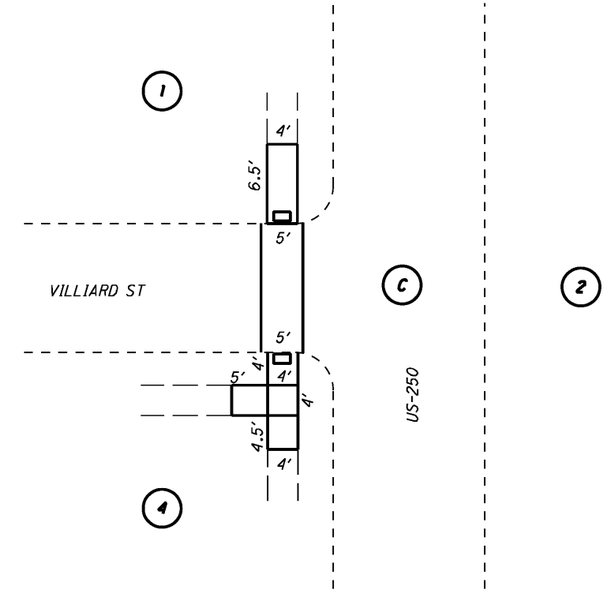

NOTES:
1. PROVIDE TRUNCATED DOMES (DETECTABLE WARNINGS) IN PROP. SIDEWALK.
2. SPACE BETWEEN CROSSWALK LINES TO BE 6 FEET.
3. THERE IS NO CURB AT EX. SIDEWALK.
4. EX. CONCRETE TO BE REMOVED TO NEAREST JOINT.

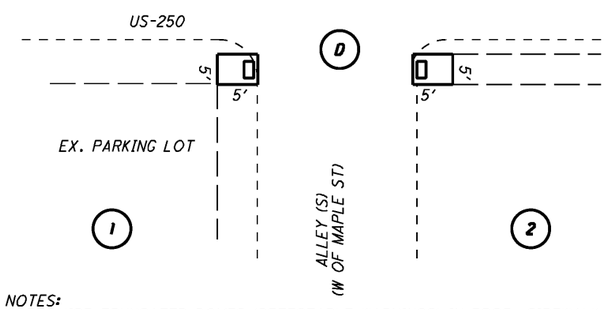

NOTES:
1. PROVIDE TRUNCATED DOMES (DETECTABLE WARNINGS) IN PROP. SIDEWALK.
2. SPACE BETWEEN CROSSWALK LINES TO BE 6 FEET.
3. THERE IS NO CURB AT EX. SIDEWALK.
4. EX. CONCRETE TO BE REMOVED TO NEAREST JOINT.

LOCATION (INTERSECTION-QUADRANT)	ITEM	DESCRIPTION	QUANTITY	UNIT
A-1	202	WALK REMOVED	25	SQ FT
A-1	608	4" CONCRETE WALK	25	SQ FT
A-1	608	DETECTABLE WARNING	8	SQ FT
A-4	202	WALK REMOVED	25	SQ FT
A-4	608	4" CONCRETE WALK	25	SQ FT
A-4	608	DETECTABLE WARNING	8	SQ FT
B-1	202	WALK REMOVED	160	SQ FT
B-1	608	4" CONCRETE WALK	189	SQ FT
B-1	608	DETECTABLE WARNING	64	SQ FT
B-4	202	WALK REMOVED	160	SQ FT
B-4	608	4" CONCRETE WALK	184	SQ FT
B-4	608	DETECTABLE WARNING	64	SQ FT
C-1	202	WALK REMOVED	26	SQ FT
C-1	608	4" CONCRETE WALK	30	SQ FT
C-1	608	DETECTABLE WARNING	8	SQ FT
C-4	202	WALK REMOVED	70	SQ FT
C-4	608	4" CONCRETE WALK	72	SQ FT
C-4	608	DETECTABLE WARNING	8	SQ FT
D-1	202	WALK REMOVED	25	SQ FT
D-1	608	4" CONCRETE WALK	25	SQ FT
D-1	608	DETECTABLE WARNING	8	SQ FT
D-2	202	WALK REMOVED	25	SQ FT
D-2	608	4" CONCRETE WALK	25	SQ FT
D-2	608	DETECTABLE WARNING	8	SQ FT
TOTALS (BELOW) CARRIED TO GEN SUM				
WALK REMOVED =548 SF, 4" CONC WALK =570 SQ FT, DETECTABLE WARNING =176 SQ FT				

LOCATION (INTERSECTION-QUADRANT)	ITEM	DESCRIPTION	QUANTITY	UNIT
A-1 TO A-4	644	CROSSWALK LINE	114	FT
B-1 TO B-3	644	CROSSWALK LINE	160	FT
C-1 TO C-3	644	CROSSWALK LINE	44	FT
TOTAL CARRIED TO GEN SUM			318	FT

CALCULATED CVH
CHECKED ADB

CURB RAMP DETAILS

WAY-250-14.45

DESIGN FILE: I:\projects\83391\roadway\83391cr000.dgn
WORKSTATION: sjuzwik DATE: 7/25/2011

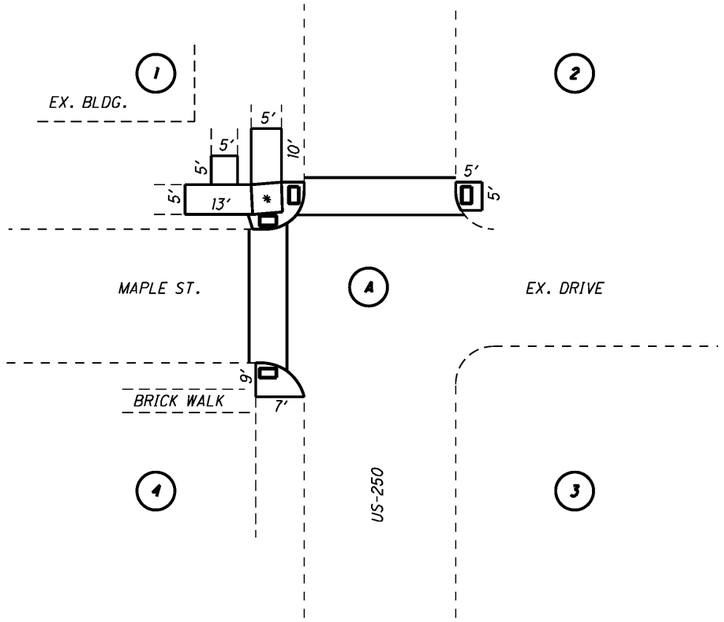

NOTES:
1. PROVIDE TRUNCATED DOMES (DETECTABLE WARNINGS) IN PROP. SIDEWALK.
2. THE ASTERISK (*) INDICATES A LEVEL LANDING AREA (QUADRANT 1).
3. IN QUADRANT 1, SLOPE OF NEW WALK SHALL BE ADJUSTED TO MEET LANDING AREA.
4. IN QUADRANT 2, 11 FT. OF CURB IS TO BE REMOVED, WITH 6' OF NEW TAPERED CURB.
5. SPACE BETWEEN CROSSWALK LINES SHALL BE 6 FT.
6. EX. WALK REMOVED SHALL BE TO NEAREST JOINT.

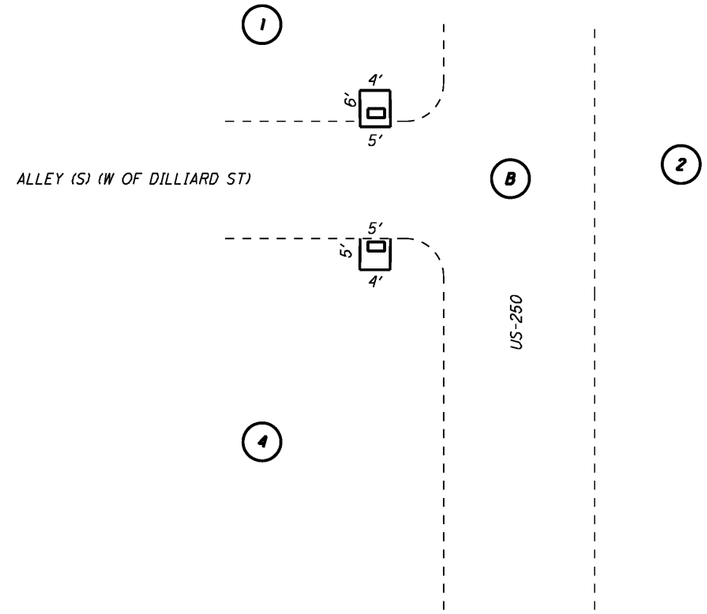

NOTES:
1. PROVIDE TRUNCATED DOMES (DETECTABLE WARNINGS) IN PROP. SIDEWALK.
2. SPACE BETWEEN CROSSWALK LINES TO BE 6 FEET.
3. THERE IS NO CURB AT EX. SIDEWALK.
4. EX. CONCRETE TO BE REMOVED TO NEAREST JOINT.
5. CROSSWALKS NOT TO BE INSTALLED IN ALLEYS.

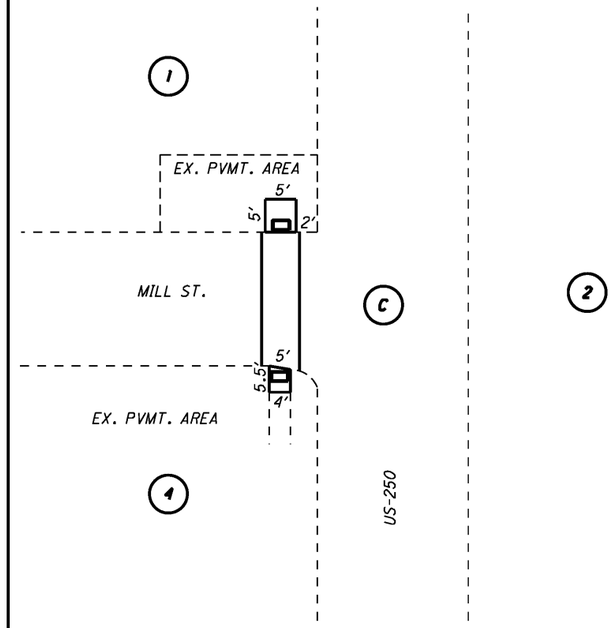

NOTES:
1. PROVIDE TRUNCATED DOMES (DETECTABLE WARNINGS) IN PROP. SIDEWALK.
2. SPACE BETWEEN CROSSWALK LINES TO BE 6 FEET.
3. THERE IS NO CURB AT EX. SIDEWALK.
4. EX. CONCRETE TO BE REMOVED TO NEAREST JOINT.

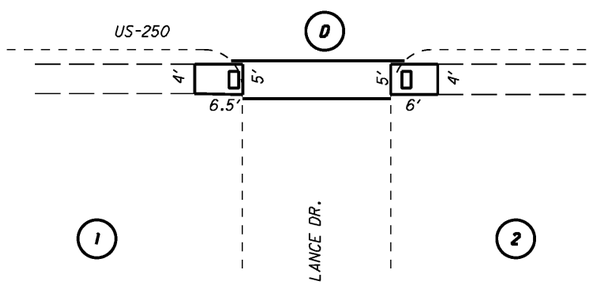

NOTES:
1. PROVIDE TRUNCATED DOMES (DETECTABLE WARNINGS) IN PROP. SIDEWALK.
2. SPACE BETWEEN CROSSWALK LINES TO BE 6 FEET.
3. THERE IS NO CURB AT EX. SIDEWALK.
4. EX. CONCRETE TO BE REMOVED TO NEAREST JOINT.

LOCATION (INTERSECTION-QUADRANT)	ITEM	DESCRIPTION	QUANTITY	UNIT
A-1	202	WALK REMOVED	207	SQ FT
A-1	608	4" CONCRETE WALK	207	SQ FT
A-1	608	DETECTABLE WARNING	16	SQ FT
A-2,4	202	WALK REMOVED	60	SQ FT
A-2,4	608	4" CONCRETE WALK	60	SQ FT
A-2,4	608	DETECTABLE WARNING	16	SQ FT
B-1	202	WALK REMOVED	27	SQ FT
B-1	608	4" CONCRETE WALK	27	SQ FT
B-1	608	DETECTABLE WARNING	8	SQ FT
B-4	202	WALK REMOVED	23	SQ FT
B-4	608	4" CONCRETE WALK	23	SQ FT
B-4	608	DETECTABLE WARNING	8	SQ FT
C-1	202	WALK REMOVED	25	SQ FT
C-1	608	4" CONCRETE WALK	25	SQ FT
C-1	608	DETECTABLE WARNING	8	SQ FT
C-4	202	WALK REMOVED	25	SQ FT
C-4	608	4" CONCRETE WALK	25	SQ FT
C-4	608	DETECTABLE WARNING	8	SQ FT
D-1	202	WALK REMOVED	30	SQ FT
D-1	608	4" CONCRETE WALK	30	SQ FT
D-1	608	DETECTABLE WARNING	8	SQ FT
D-2	202	WALK REMOVED	30	SQ FT
D-2	608	4" CONCRETE WALK	30	SQ FT
D-2	608	DETECTABLE WARNING	8	SQ FT
TOTALS (BELOW) CARRIED TO GEN SUM				
WALK REMOVED =427 SF, 4" CONC WALK =427 SQ FT, DETECTABLE WARNING =80 SQ FT				

LOCATION (INTERSECTION-QUADRANT)	ITEM	DESCRIPTION	QUANTITY	UNIT
A-1 TO A-2	644	CROSSWALK LINE	70	FT
A-1 TO A-4	644	CROSSWALK LINE	80	FT
A-2	202	CURB REMOVED	11 *	FT
A-2	609	CURB, TYPE 6	6 *	FT
C-1 TO C-4	644	CROSSWALK LINE	64	FT
D-1 TO D-2	644	CROSSWALK LINE	40	FT
* = NOT IN TOTAL (CARRIED DIRECTLY TO GEN SUM)				
TOTAL CARRIED TO GEN SUM		CROSSWALK LINE	254	FT

CALCULATED CVH
CHECKED ADB

CURB RAMP DETAILS

WAY-250-14.45

DESIGN FILE: I:\projects\83391\roadway\83391cr000.dgn
WORKSTATION: sjuzwik DATE: 7/25/2011

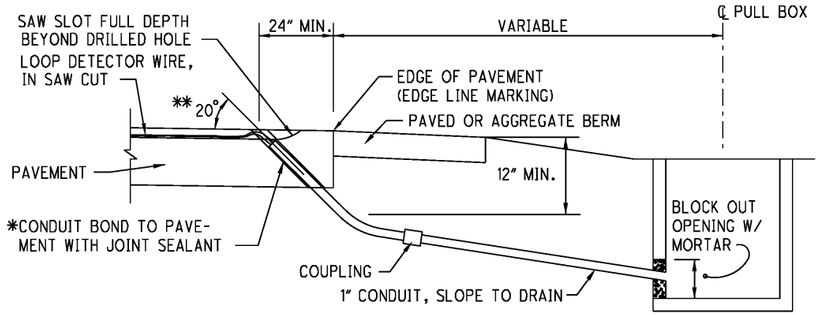

DRILLED HOLE LOCATION DETAIL WITH PAVED OR AGGREGATE BERM

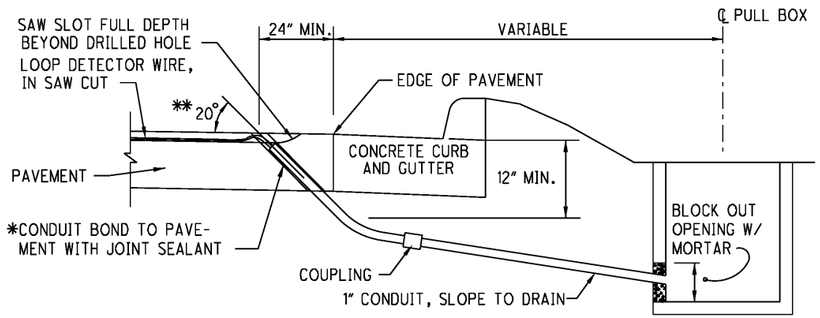

DRILLED HOLE LOCATION DETAIL WITH CONCRETE CURB AND GUTTER

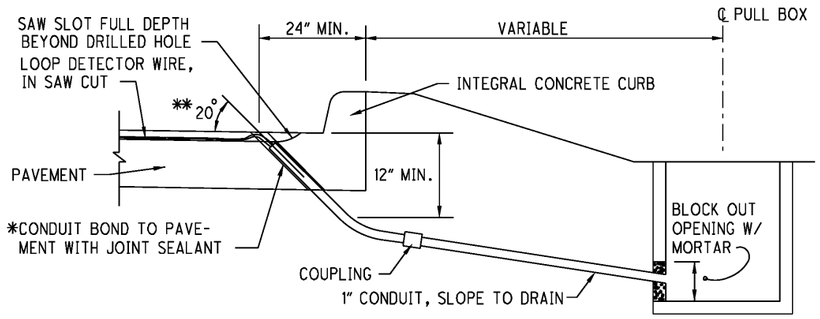

DRILLED HOLE LOCATION DETAIL WITH INTEGRAL CONCRETE CURB

** CONDUIT SHALL BE 1" DIAMETER 725.04.*

*** THE RANGE OF THIS ANGLE SHALL BE FROM 15 TO 30 DEGREES.*

NOTE: SEE STANDARD DRAWING TC-82.10 FOR ADDITIONAL NOTES AND DETAILS

ITEM 632- DETECTOR LOOP, AS PER PLAN, IN RESURFACED AREAS

AN ESTIMATED QUANTITY OF ITEM 632, DETECTOR LOOP, AS PER PLAN, HAS BEEN PROVIDED FOR THE PURPOSE OF REPLACING DAMAGED DETECTOR LOOPS AND/OR UPGRADING DETECTOR LOOPS TO IMPROVE MOTORCYCLE DETECTION. IT IS IMPERATIVE THAT REPLACEMENT OF DETECTOR LOOPS BE INSTALLED AND FULLY FUNCTIONAL IN THE SHORTEST POSSIBLE TIME. THE CONTRACTOR SHALL HAVE REPLACEMENT DETECTOR LOOPS INSTALLED AND FULLY FUNCTIONAL WITHIN 7 CALENDAR DAYS OF DESTRUCTION OF THE EXISTING DETECTOR LOOPS.

THE CONTRACTOR SHALL NOTIFY MATT BLANKENSHIP, ODOT DISTRICT 3 ROADWAY SERVICES MANAGER, (PHONE 419-207-7045) 5 WORKING DAYS IN ADVANCE OF ANY PLANING OPERATIONS OR PAVEMENT REPAIR WORK. THIS NOTIFICATION IS NEEDED FOR DISTRICT 3 TO SCHEDULE TEMPORARY SIGNAL TIMING MODIFICATIONS FOR THE TIME PERIOD WHEN THE DETECTOR LOOPS ARE OUT OF OPERATION. THE CONTRACTOR SHALL THEN RENOTIFY MR. BLANKENSHIP WITHIN 2 WORKING DAYS AFTER THE NEW DETECTOR LOOPS ARE REPLACED SO THAT HE CAN RESCHEDULE DISTRICT CREWS TO RESTORE SIGNAL TIMINGS TO THE ORIGINAL SETTINGS. IN ADDITION, THE CONTRACTOR SHALL ALSO NOTIFY RICHARD RONEY, ODOT DISTRICT 3 PRODUCTION DEPT. (PHONE 419-207-7064) WHEN THE NEW LOOPS ARE INSTALLED.

FAILURE TO COMPLY WITH THE ABOVE STATED REQUIREMENTS WILL RESULT IN THE ASSESSMENT OF A DISINCENTIVE FEE OF $500.00 PER DAY TO THE CONTRACTOR FOR EACH CALENDAR DAY BEYOND THE SPECIFIED LIMIT.

THE NEW DETECTOR LOOPS SHALL BE PLACED PER THE PLAN DETAILS AFTER THE PLANING AND PAVEMENT REPAIR OPERATIONS ARE COMPLETED WITHIN THE AFFECTED AREAS. THE DETECTOR LOOPS SHALL NOT BE CUT INTO THE SURFACE COURSE.

IN ADDITION TO THE REQUIREMENTS OF CMS 632.11, THE CONTRACTOR SHALL PROVIDE A POSITIVE AND EFFECTIVE MEANS FOR REMOVAL OF SOLID RESIDUE RESULTING FROM THE DRY SAW BLADE CUTTING OF LOOP DETECTOR SLOTS IN THE PAVEMENT. THE RESIDUE SHALL BE REMOVED BY VACUUM OR OTHER EFFECTIVE MEANS, BEFORE IT IS BLOWN BY TRAFFIC ACTION OR WIND. RESIDUE FROM DRY CUTTING SHALL NOT BE REMOVED BY COMPRESSED AIR. AS AN ALTERNATE, THE CONTRACTOR MAY USE WET CUTTING.

LOOP DETECTOR WIRE TO LEAD-IN CABLE SPLICES WITHIN EPOXY ENCAPSULATED SPLICE ENCLOSURES SHALL BE JOINED BY AN APPROVED CONNECTOR AND SOLDERED PER CMS 632.23 & 725.15. ALL COSTS ASSOCIATED WITH THE SOLDERED SPLICE CONNECTION AND EPOXY SPLICE KIT SHALL BE INCLUDED WITH THE DETECTOR LOOP.

IF THE PULL BOX IS NOT SPECIFIED IN THE PLANS, THE SPLICE SHALL BE MADE IN THE FIRST ENTERED POLE OR PEDESTAL, EXCEPT WHERE THE CONTROLLER CABINET IS MOUNTED ON THE POLE OR PEDESTAL, IN WHICH CASE THE LOOP WIRES SHALL BE ROUTED DIRECTLY INTO THE CABINET UNLESS SPECIFIED DIFFERENTLY IN THE PLANS. LOOP DETECTOR WIRE ROUTED THROUGH CONDUIT, PULL BOXES, POLES, AND PEDESTALS SHALL BE TWISTED PER CMS 632.23.

FURNISH ALL MATERIALS ACCORDING TO THE DEPARTMENT'S QUALIFIED PRODUCTS LIST (QPL).

SEE DETAILS ON THIS SHEET FOR ADDITIONAL REQUIREMENTS.

PAYMENT FOR ALL OF THE ABOVE SHALL BE INCLUDED IN THE UNIT PRICE BID PER EACH FOR ITEM 632, DETECTOR LOOP, AS PER PLAN, IN RESURFACED AREAS.

ITEM 632- LOOP DETECTOR UNIT, DELAY AND EXTENSION TYPE, AS PER PLAN

IN ADDITION TO THE REQUIREMENTS OF CMS 632, 732.07, PART A, NEMA TS-1, AND 732.08, LOOP DETECTOR UNITS SHALL HAVE THE FOLLOWING REQUIREMENTS OR FEATURES:

1) THE OUTPUT DEVICE SHALL BE AN ELECTROMECHANICAL RELAY AND ALL CONTACTS SHALL BE INCLUDED IN THE WIRING HARNESS.
2) THE UNIT SHALL BE SELF TUNING.
3) THE UNIT'S ELECTRICAL CONNECTION PLUGS OR WIRING HARNESS SHALL ALLOW READY REPLACEMENT WITH SINGLE CHANNEL AMPLIFIERS AS DESCRIBED IN CMS 732.07.

IN ADDITION TO THE REQUIREMENTS LISTED ABOVE, THE DETECTOR UNIT SHALL BE A SINGLE CHANNEL UNIT AND HAVE EASILY ADJUSTABLE TIMERS INCORPORATED IN THE UNIT THAT ARE CAPABLE OF BOTH EXTEND CALL AND DELAY CALL OUTPUTS. THESE ADJUSTMENTS SHALL BE SEPARATE AND CONTROLLABLE BY CALIBRATED SWITCHES OR KNOBS ON THE OUTSIDE OF THE DETECTOR UNIT. THE EXTEND CALL TIMER SHALL BE CAPABLE OF HOLDING THE CALL OF A VEHICLE FOR A PERIOD OF TIME BEGINNING AT THE INSTANT THE VEHICLE LEAVES THE DETECTION AREA. THE DELAY CALL TIMER SHALL BE SUCH THAT IT DOES NOT ISSUE AN OUTPUT UNTIL THE DETECTION ZONE HAS BEEN OCCUPIED FOR A PERIOD OF TIME THAT HAS BEEN SET ON THE ADJUSTABLE TIMER. WHEN TIMES ARE SET ON BOTH THE DELAY AND EXTEND TIMERS, THE UNIT SHALL BE DESIGNED TO INHIBIT THE EXTEND FUNCTION UNTIL THE DELAY TIME HAS BEEN MET. WHEN THE LOOP BECOMES UNOCCUPIED, THE DELAY OUTPUT IS REMOVED. WHEN THE VEHICLE GAP EXCEEDS THE EXTEND TIME, THE ENTIRE DELAY-EXTEND OPERATION BECOMES EFFECTIVELY RESET FOR THE NEXT CYCLE - DELAY TO TIME OUT, ETC.

WORK SHALL INCLUDE ALL CONTROLLER / CABINET MODICATIONS AND CONNECTIONS NEEDED TO INSTALL THE LOOP DETECTOR UNIT AND TO MAKE IT FULLY OPERATIONAL.

PAYMENT FOR ITEM 632 - LOOP DETECTOR UNIT, DELAY AND EXTENSION TYPE, AS PER PLAN SHALL BE MADE AT THE CONTRACT UNIT PRICE BID PER EACH AND SHALL INCLUDE ALL LABOR, EQUIPMENT, AND MATERIALS.

DETECTOR LOOP INSTALLATION DETAILS AND TRAFFIC SIGNAL GENERAL NOTES

WAY-250-14.45

REVISED 2-10-11

DESIGN FILE: I:\projects\83391\roadway\83391cd001.dgn
WORKSTATION: sjuzwik DATE: 7/25/2011

TRAFFIC SIGNAL QUANTITIES

QTY.	UNIT	DESCRIPTION
632	1	EACH	LOOP DETECTOR UNIT, DELAY AND EXTENSION TYPE, AS PER PLAN
632	140	FT	LOOP DETECTOR LEAD-IN CABLE, 2 CONDUCTOR, NO. 14 AWG
632	9	EACH	DETECTOR LOOP

WORK DESCRIPTION

1) INSTALL NEW DETECTOR LOOPS AS SHOWN.
2) INSTALL NEW LEAD-IN CABLES FOR DETECTOR LOOP L-8.
3) INSTALL NEW LOOP DETECTOR UNIT IN CONTROLLER CABINET FOR LOOP L-8.

DETECTOR CHART

DETECTOR	SIZE (FT)	MODE	DELAY * (SEC.)	NUMBER OF TURNS	ASSOCIATED CONTROLLER PHASE	DETECTOR UNIT NO.	COMMENTS
L-1	6.4X10.8	PULSE		4	2	1	NEW ADD LOOP SEE DETAIL
L-2	6.4X10.8	PULSE		4	2	2	NEW ADD LOOP SEE DETAIL
L-3	6.4X10.8	PRESENCE		4	2	3	NEW ADD LOOP SEE DETAIL
L-4	6.4X10.8	PRESENCE		4	6	4	NEW ADD LOOP SEE DETAIL
L-5	6.4X10.8	PULSE		4	6	5	NEW ADD LOOP SEE DETAIL
L-6	6.4X10.8	PULSE		4	6	6	NEW ADD LOOP SEE DETAIL
L-7	6X30	PRESENCE	8	3+3	4	7	NEW POWERHEAD
L-8	6X20	PRESENCE	8	4	4	9	NEW POWERHEAD
L-9	6.4X10.8	PRESENCE	5	4	4	8	NEW ADD LOOP SEE DETAIL
DZ-10	6X12X20	PRESENCE	8	-	8	-	EXIST. CAMERA DET. ZONE
DZ-11	5X20	PRESENCE	8	-	8	-	EXIST. CAMERA DET. ZONE

* INHIBIT DELAY DURING ASSOC. PHASE GREEN INTERVAL

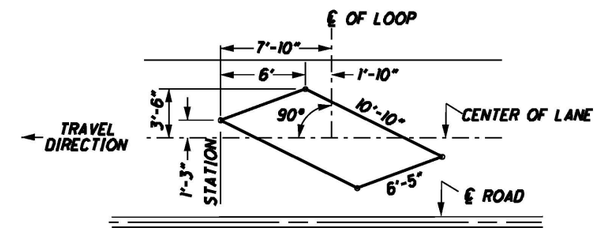

ANGULAR DESIGN DETECTION (ADD) LOOP DETAIL (NOT TO SCALE)

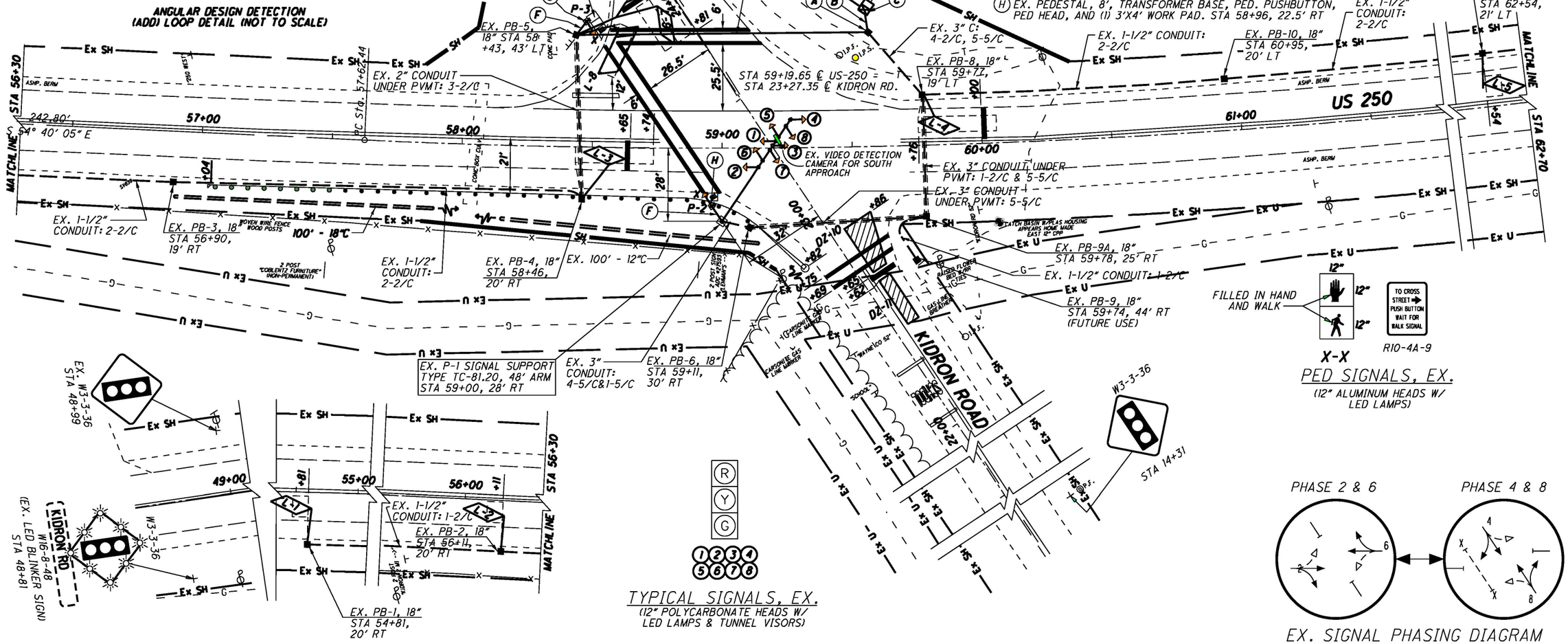

(A) EX. PB-7, 24", STA 59+57, 44' LT
(B) EX. 3" CONDUIT, 725.05: 6-5/C & 9-2/C
(C) EX. CONTROLLER GROUND MOUNTED WITH UPS AND CONC WORK PAD. STA 59+56, 53' LT
(D) EX. 1-1/2" CONDUIT, 725.04 WITH 1-2/C #6 AWG
(E) EX. WOOD POLE, CLASS 5, 35' W/ POWER SERVICE, BYPASS METER BASE, 1-1/2" RISER, & WORKPAD. STA 59+32, 69' LT
(F) EX. 1-1/2" CONDUIT, 725.05 WITH 1-5/C SIGNAL CABLE.
(G) EX. PEDESTAL, 8', TRANSFORMER BASE, PED. PUSHBUTTON, PED HEAD, AND (3) 3'X4' WORK PADS. STA 58+47, 48' LT
(H) EX. PEDESTAL, 8', TRANSFORMER BASE, PED. PUSHBUTTON, PED HEAD, AND (1) 3'X4' WORK PAD. STA 58+96, 22.5' RT

SCALE IN FEET: 0 30 60

DETECTOR LOOP REPLACEMENT PLAN US 250 & KIDRON RD. INTERSECTION

WAY-250-14.45

30/37

DESIGN FILE:i:\projects\83391\roadway\83391cp001.dgn
WORKSTATION:bjuzwik
DATE:7/25/2011

AUXILIARY & LONG LINE MARKINGS

COUNTY	ROUTE	STATION / SLM FROM	STATION / SLM TO	HIGHWAY MILES	614 WORK ZONE LANE LINE, CLASS II, 642 PAINT	614 WORK ZONE CENTER LINE, CLASS II, 642 PAINT	614 WORK ZONE CHANNELIZING LINE, CLASS I, 642 PAINT	614 WORK ZONE STOP LINE, CLASS I, 642 PAINT	642, TYPE 1 EDGE LINE TOTAL (PAY QUANTITY) (WHITE)	642, TYPE 1 EDGE LINE TOTAL (PAY QUANTITY) (YELLOW)	642, TYPE 1 LANE LINE	642, TYPE 1 CENTER LINE SOLID LINE EQUIVALENT	642, TYPE 1 CENTER LINE TOTAL (PAY QUANTITY)
					MILE	MILE	FT	FT	MILE	MILE	MILE	MILE	MILE
WAY	US 250	14.45	14.61	0.16	0.32	0.64			0.32	0.32	0.32		0.32
		14.61	14.69	0.08	0.04	0.32			0.16		0.04		0.16
		14.69	18.11	3.42		6.84			6.84				3.42
	(Curbed)	18.11	18.90	0.79		2.37							0.79
(Downtown)	(Curbed)	18.90	19.03	0.13		0.39							0.13
	(Curbed)	19.03	19.28	0.25		0.75							0.25
		19.28	24.37	5.09		10.18			10.18				5.09
			TOTAL	9.92	0.36	21.49			17.50	0.32	0.36	14.97	10.16

COUNTY	ROUTE	644 AUXILIARY MARKINGS (740.04) CHANNELIZING LINE 8"	STOP LINE 24"	CROSSWALK LINE (see curb ramp shts) 12"	TRANSVERSE/ DIAGONAL LINE (WHITE) 24"	TRANSVERSE/ DIAGONAL LINE (YELLOW) 24"	ISLAND MARKING	RAILROAD SYMBOL MARKING	SCHOOL SYMBOL MARKING 72 INCH	SCHOOL SYMBOL MARKING 96 INCH	PARKING LOT STALL MARKING (See Gen Notes)	LANE ARROW LEFT	LANE ARROW RIGHT	LANE ARROW THROUGH	LANE ARROW COMBINATION	WORD ON PAVEMENT "ONLY" 72 INCH	WORD ON PAVEMENT "ONLY" 96 INCH	DOTTED LINE, 4"	HANDICAP SYMBOL MARKING	SPECIAL AIR SPEED ZONE MARKING
		FT	FT	FT	FT	FT	SQ FT	EACH	EACH		FT	EACH				EACH		FT	EACH	EACH
WAY	US 250																			
			105																	
	(Curbed)		135				(at 18.78, 18.88)---->			2										
(Downtown)	(Curbed)		30								270									
	(Curbed)		90																	
			255				(at 20.24, 20.79)---->			2										
			615							4	270									

RAISED PAVEMENT MARKERS

ROUTE	COUNTY	STATION/SLM FROM	STATION/SLM TO	DETAIL	621 RAISED PAVEMENT MARKER REMOVED	621 RPM	PRISMATIC RETRO-REFLECTOR TYPES ONE-WAY WHITE	TWO-WAY YELLOW / YELLOW	TWO-WAY WHITE / RED	TWO-WAY YELLOW / RED	TWO-WAY BLUE / BLUE	REMARKS
					EACH	EACH	EACH					
WAY	US 250	14.45	14.69	5	32	32		32				MULTILANE DIVIDED/EXPRESSWAY
		14.69	14.83	15	18	18		18				HORIZONTAL CURVE (40 FT SPACING)
		14.83	14.93	GAP	7	7		7				CONTINUOUS ROUTE TREATMENT
		14.93	15.11	15	24	24		24				HORIZONTAL CURVE (40 FT SPACING)
		15.11	16.46	GAP	89	89		89				CONTINUOUS ROUTE TREATMENT
		16.46	16.54	15	11	11		11				HORIZONTAL CURVE (40 FT SPACING)
		16.54	18.17	GAP	108	108		108				CONTINUOUS ROUTE TREATMENT
		19.30	22.82	GAP	232	232		232				CONTINUOUS ROUTE TREATMENT
		22.82	23.23	15	54	54		54				HORIZONTAL CURVE (40 FT SPACING)
		23.23	24.37	GAP	75	75		75				CONTINUOUS ROUTE TREATMENT
			TOTAL		650	650						

DETAIL	DESCRIPTION
1	MULTILANE UNDIVIDED TYPICAL SPACING
2	TAPERED ACCEL. LANE
3	DECELERATION LANE
4	PARALLEL ACCEL LANE
5	MULTILANE DIVIDED/EXPRESSWAY
6	STOP APPROACH
7	2 LANE APPR. WITH TURN LANE
8	THROUGH APPROACH
9	3 LANE APPR. WITH TURN LANE
10	3 LANE DIVIDED TO 2 LANE TRANSITION
11	3 LANE UNDIVIDED TO 2 LANE TRANSITION
12	TWO LNAE NARROW BRIDGE
13	TWO WAY LEFT TURN LANE
14	ONE LANE BRIDGE
15	HORIZONTAL CURVE
16	HORIZONTAL CURVE ALT.
17	STOP APPROACH ALT.
18	FIRE HYDRANT
GAP	CENTER LINE AT 80 FT. TYP.

NOTES

1) THRU LANES SHALL BE STRIPED AT 12' WIDTHS.

2) FOR ALL WORK ZONE MARKINGS, THE 642 PAINT USED SHALL BE TYPE 1.

CALCULATED SCJ
CHECKED ADB

PAVEMENT MARKING DATA

WAY-250-14.45

DESIGN FILE: I:\projects\83391\roadway\83391TS001.dgn
WORKSTATION: juzwik
MODEL NAME: Design
DATE: 7/25/2011

WAY-250-1815 SFN 8504814

ITEM	EXTENSION	QUANTITY	UNIT	DESCRIPTION	REFERENCE SHEET
202	98200	92	FT	REMOVAL MISC.: COMPRESSION SEAL GLAND	33
512	10100	106	SQ YD	SEALING OF CONCRETE SURFACES (EPOXY-URETHANE)	
512	10300	455	SQ YD	SEALING CONCRETE BRIDGE DECKS WITH HMWM RESIN	
512	74000	106	SQ YD	REMOVAL OF EXISTING COATINGS FROM CONCRETE SURFACES	
516	31000	92	FT	JOINT SEALER	

WAY-250-2301 SFN 8504873

ITEM	EXTENSION	QUANTITY	UNIT	DESCRIPTION	REFERENCE SHEET
512	10100	76	SQ YD	SEALING OF CONCRETE SURFACES (EPOXY-URETHANE)	
512	74000	76	SQ YD	REMOVAL OF EXISTING COATINGS FROM CONCRETE SURFACES	

EXISTING STRUCTURE VERIFICATION:

DETAILS AND DIMENSIONS SHOWN ON THESE PLANS PERTAINING TO THE EXISTING STRUCTURES HAVE BEEN OBTAINED FROM PLANS OF THE EXISTING STRUCTURES AND FROM FIELD OBSERVATION AND MEASUREMENTS. CONSEQUENTLY, THEY ARE INDICATIVE OF THE EXISTING STRUCTURES AND THE PROPOSED WORK BUT THEY SHALL BE CONSIDERED TENTATIVE AND APPROXIMATE. THE CONTRACTOR IS REFERRED TO CMS SECTIONS 102.05 AND 105.02.

BASE CONTRACT BID PRICES UPON A RECOGNITION OF THE UNCERTAINTIES DESCRIBED ABOVE AND UPON A PREBID EXAMINATION OF THE EXISTING STRUCTURES. HOWEVER, THE DEPARTMENT WILL PAY FOR ALL PROJECT WORK BASED UPON ACTUAL DETAILS AND DIMENSIONS THAT HAVE BEEN VERIFIED BY THE CONTRACTOR IN THE FIELD.

DESIGN SPECIFICATIONS:

THIS STRUCTURE CONFORMS TO "STANDARD SPECIFICATION FOR HIGHWAY BRIDGES" ADOPTED BY THE AMERICAN ASSOCIATION OF STATE HIGHWAY AND TRANSPORTATION OFFICIALS, 2002, INCLUDING THE 2003, 2004, 2005 AND 2006 SPECIFICATIONS AND THE ODOT BRIDGE DESIGN MANUAL.

DECK PROTECTION METHOD:

SEALING DECK WITH HMWM RESIN

PLACING ASPHALT CONCRETE ON APPROACHES TO BRIDGES:

SPECIAL CARE SHALL BE TAKEN WHEN PLACING THE ASPHALT CONCRETE BUTT JOINT TO EFFECT A SMOOTH TRANSITION FROM THE EXISTING APPROACH PAVEMENT TO THE BRIDGE DECK. THE CONTRACTOR'S ATTENTION IS CALLED TO STANDARD DRAWING BP-3.1 FOR REQUIRED TOLERANCES.

EXISTING PLANS:

THE ORIGINAL CONSTRUCTION PLANS OF THE EXISTING BRIDGES ARE AVAILABLE UPON REQUEST AT THE DISTRICT 3 OFFICE OF THE OHIO DEPARTMENT OF TRANSPORTATION, ASHLAND, OH.

STRUCTURE #	PLAN NAME	DATE
WAY-250-1815	WAY-250-17.40	1985
WAY-250-2301	WAY-250-22.27	1993

ITEM 202 - REMOVAL MISC.: COMPRESSION SEAL GLAND:

THIS ITEM SHALL BE USED TO REMOVE THE COMPRESSION SEAL GLAND BETWEEN THE APPROACH SLAB AND THE BACKWALL.

PAYMENT FOR ALL OF THE ABOVE SHALL BE AT THE UNIT PRICE BID PER FOOT FOR THE ABOVE ITEM, WHICH WILL INCLUDE ALL LABOR, EQUIPMENT, MATERIALS AND INCIDENTALS NECESSARY TO COMPLETE THE ABOVE WORK.

ITEM 614 - MAINTAINING TRAFFIC FOR STRUCTURE WAY-250-1815:
ITEM 614 - MAINTAINING TRAFFIC FOR STRUCTURE WAY-250-2301:

TWO WAY TRAFFIC ON THESE STRUCTURES SHALL BE MAINTAINED AT ALL TIMES EXCEPT THAT THROUGH TRAFFIC ON THESE STRUCTURES MAY HAVE A LANE CLOSURE DURING NORMAL WORKING HOURS USING FLAGGERS AS SHOWN ON STANDARD DRAWING MT-97.10.

ALL WORK AND TRAFFIC CONTROL DEVICES SHALL BE IN ACCORDANCE WITH CMS 614 AND OTHER APPLICABLE PORTIONS OF THE SPECIFICATIONS, AS WELL AS THE OHIO MANUAL OF UNIFORM TRAFFIC CONTROL DEVICES. PAYMENT FOR ALL LABOR, EQUIPMENT AND MATERIALS SHALL BE INCLUDED IN THE LUMP SUM CONTRACT PRICE FOR 614, MAINTAINING TRAFFIC, UNLESS SEPARATELY ITEMIZED IN THE PLAN.

	BRIDGE DECK DATA							ROADWAY DATA		
COUNTY, ROUTE, BRIDGE NO.	LOCATION	STRUCTURE TYPE	LENGTH (BRIDGE DECK)	WIDTH	BRIDGE DECK AREA	SKEW	EXISTING WEARING SURFACE	EXISTING PAVEMENT WIDTH	EXISTING APPROACH SLAB WIDTH	EXISTING APPROACH SLAB LENGTH
			FT.	FT.	SQ.YD.			FT.	FT.	FT.
+ WAY-250-1731	OVER BRANCH OF APPLE CREEK	3- SPAN CONCRETE SLAB	53'-6"±	40'-0"±	238	0°	CONCRETE		40	15
* WAY-250-1815	OVER APPLE CREEK	SINGLE SPAN STEEL BEAM	72'-4"±	40'-0"±	322	30° RF	CONCRETE		40	15
++ WAY-250-1929	OVER SPRING RUN CREEK	3- SPAN CONCRETE SLAB	79'-7"±	40'-6"±	358	15° LF	CONCRETE			
** WAY-250-2301	OVER LITTLE SUGAR CREEK	3-SIDED CONCRETE STRUCTURE				31° RF	ASPHALT			

\+ BUTT JOINT AT APPROACH SLABS. OMIT RESURFACING ON THE APPROACH SLABS AND BRIDGE DECK. (NO STRUCTURE WORK. SEE ROADWAY PLANS FOR PLANING AND PAVING QUANTITIES.)

++ BUTT JOINT AT BRIDGE DECK. OMIT RESURFACING ON THE BRIDGE DECK. (NO STRUCTURE WORK. SEE ROADWAY PLANS FOR PLANING AND PAVING QUANTITIES.)

* BUTT JOINT AT APPROACH SLABS. OMIT RESURFACING ON THE APPROACH SLABS AND BRIDGE DECK. (SEE DETAILS IN THE PLAN FOR STRUCTURE WORK. SEE ROADWAY PLANS FOR PLANING AND PAVING QUANTITIES.)

** PLANE AND PAVE OVER STRUCTURE. (SEE DETAILS IN PLAN FOR STRUCTURE WORK). (SEE ROADWAY PLANS FOR PLANING AND PAVING QUANTITIES.)

DESIGN AGENCY
ODOT DISTRICT THREE
OFFICE OF
PLANNING AND ENGINEERING

DESIGNED DCM | CHECKED CAL | DRAWN DCM | REVISED | REVIEWED DJV | DATE 5/11

BRIDGE TREATMENT

WAY-250-14.45

34/37

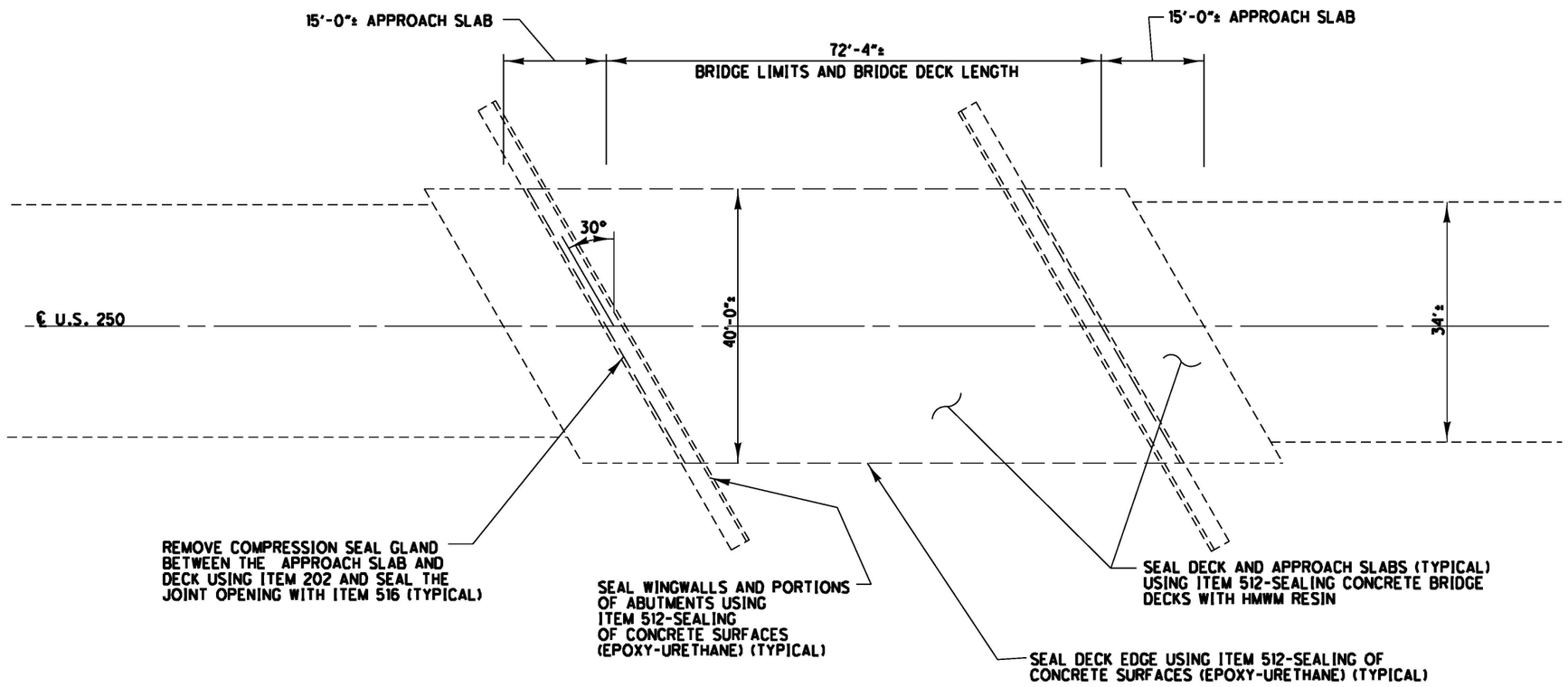

PLAN VIEW

ITEM	QUANTITY	UNIT	DESCRIPTION
202	92	FT	REMOVAL MISC.: COMPRESSION SEAL GLAND
512	106	SQ YD	SEALING OF CONCRETE SURFACES (EPOXY-URETHANE)
512	455	SQ YD	SEALING CONCRETE BRIDGE DECKS WITH HMWM RESIN
512	106	SQ YD	REMOVAL OF EXISTING COATINGS FROM CONCRETE SURFACES
516	92	FT	JOINT SEALER

ALL QUANTITIES CARRIED TO STRUCTURE SUMMARY SHEET

NOTES:

1) SEE SHEET 2/2 FOR SEALING OF CONCRETE SURFACES DETAILS.

DESIGN FILE: ii:\projects\83391\structures\WAY-250-1815.dgn
WORKSTATION: sjuzwik
DATE: 7/25/2011
MODEL NAME: Design

DESIGN AGENCY
ODOT DISTRICT THREE
OFFICE OF
PLANNING AND ENGINEERING

DESIGNED	DRAWN	REVIEWED	DATE
DCM	DCM	DJV	5/11
CHECKED	REVISED	STRUCTURE FILE NUMBER	
CAL		8504814	

PLAN VIEW
WAY-250-1815 OVER APPLE CREEK

WAY-250-14.45

1/2

35/37

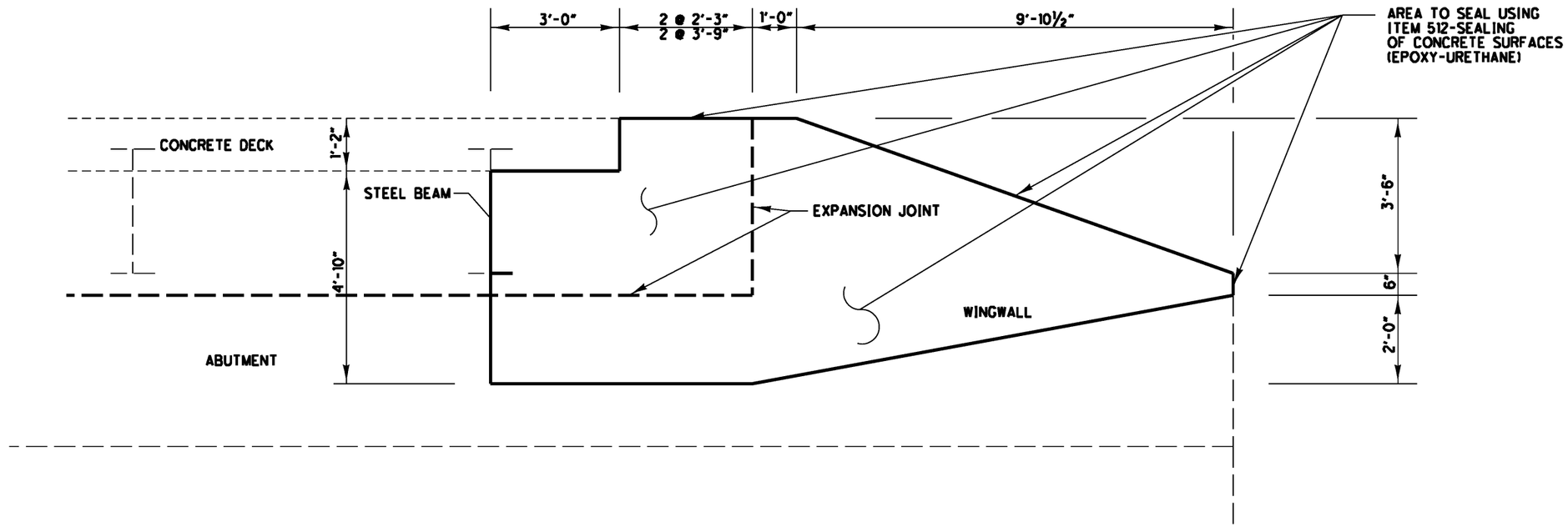

TYPICAL ABUTMENT/WINGWALL
SEALING DETAIL
(WINGWALL WIDTH = 2'-6"±)

ITEM	QUANTITY	UNIT	DESCRIPTION
512	106	SQ YD	SEALING OF CONCRETE SURFACES (EPOXY-URETHANE)
512	106	SQ YD	REMOVAL OF EXISTING COATINGS FROM CONCRETE SURFACES

ALL QUANTITIES CARRIED TO SHEET 1/2.

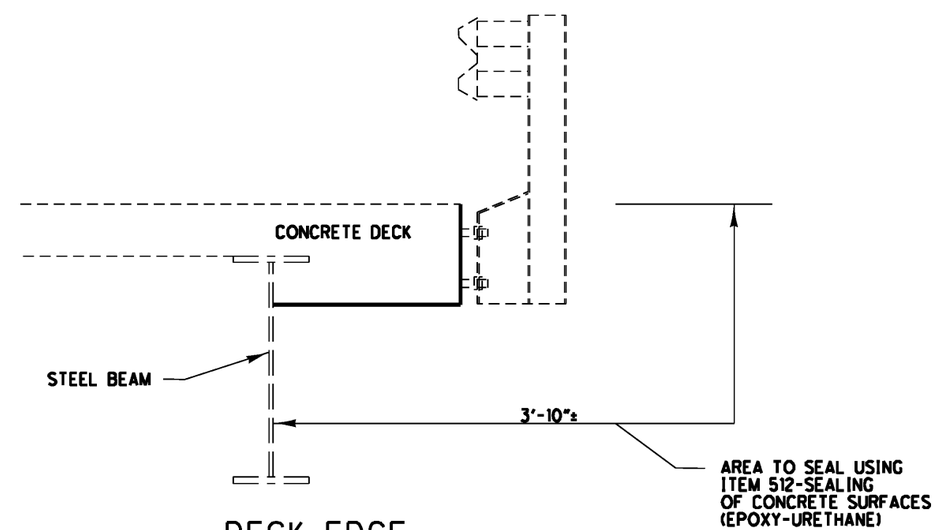

DECK EDGE
SEALING DETAIL
(SEALING LENGTH =67-8"±)

DESIGN FILE: ii:\projects\83391\structures\WAY-250-1815.dgn
WORKSTATION: juzwik
DATE: 7/25/2011
MODELNAME: Design

DESIGN AGENCY
ODOT DISTRICT THREE
OFFICE OF
PLANNING AND ENGINEERING

DESIGNED	DRAWN	REVIEWED	DATE
DCM	DCM	DJW	5/11
CHECKED	REVISED	STRUCTURE FILE NUMBER	
CAL		8504814	

SEALING DETAILS
WAY-250-1815 OVER APPLE CREEK

WAY-250-14.45

2/2

36
37

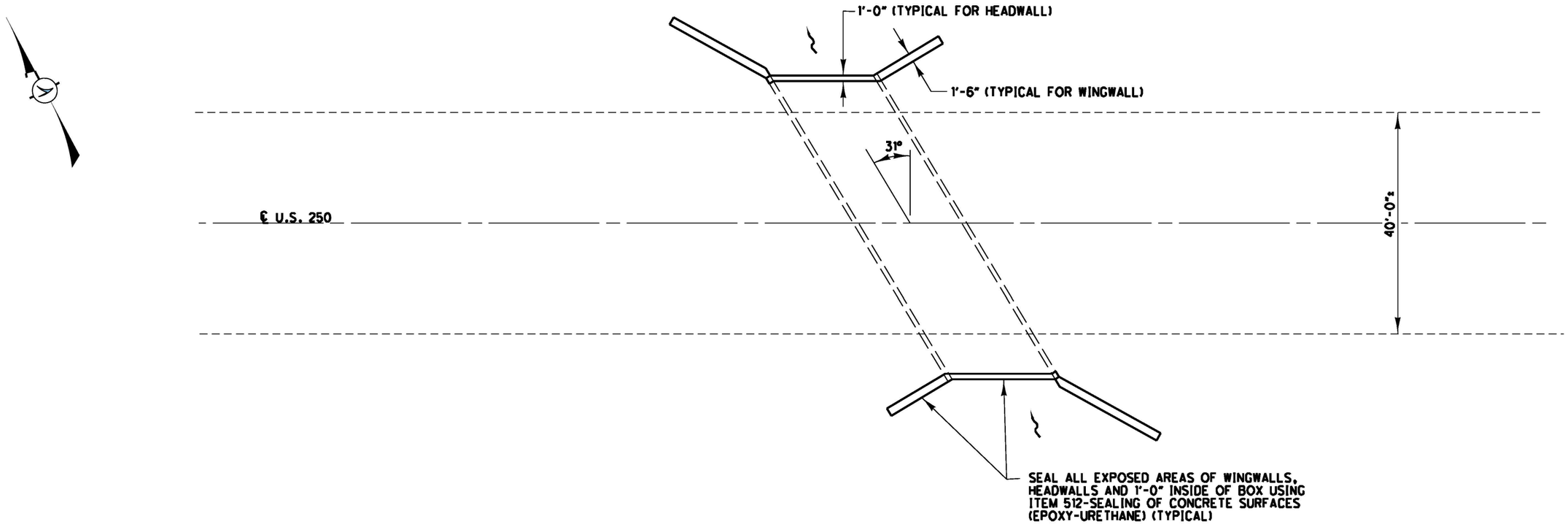

PLAN VIEW

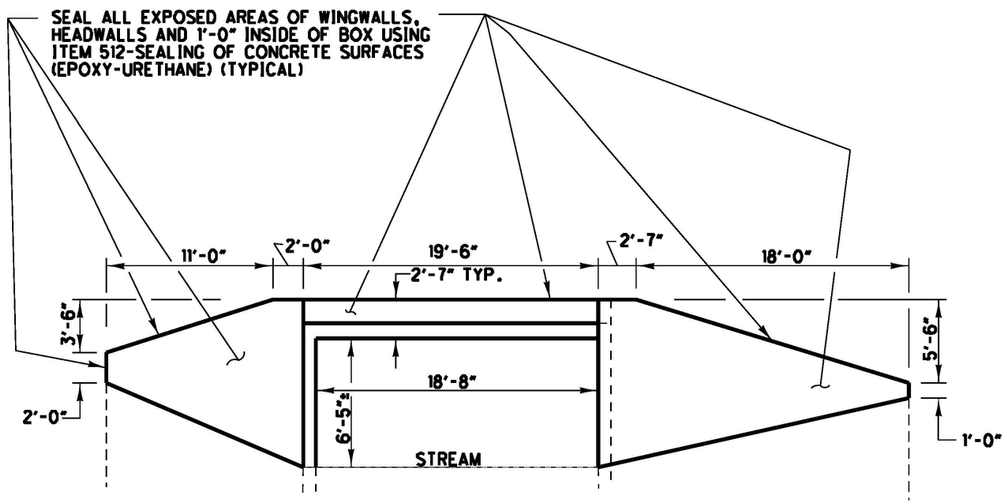

OUTLET ELEVATION
(WINGWALL WIDTH = 1'-6"±)
(HEADWALL WIDTH = 1'-0"±)

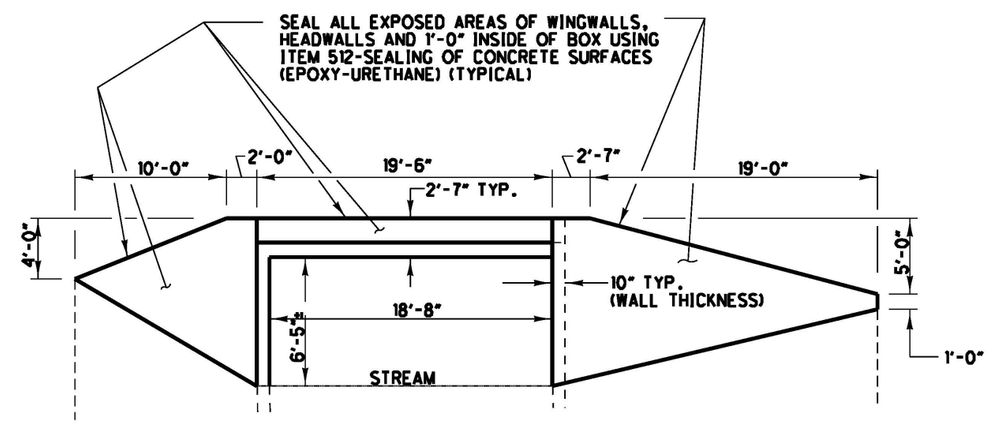

INLET ELEVATION
(WINGWALL WIDTH = 1'-6"±)
(HEADWALL WIDTH = 1'-0"±)

ITEM	QUANTITY	UNIT	DESCRIPTION
512	76	SQ YD	SEALING OF CONCRETE SURFACES (EPOXY-URETHANE)
512	76	SQ YD	REMOVAL OF EXISTING COATINGS FROM CONCRETE SURFACES

ALL QUANTITIES CARRIED TO STRUCTURE SUMMARY SHEET

DESIGN AGENCY
ODOT DISTRICT THREE
OFFICE OF
PLANNING AND ENGINEERING

DESIGNED DCM | CHECKED CAL | DRAWN DCM | REVISED | REVIEWED DJV | DATE 5/11 | STRUCTURE FILE NUMBER 8504873

PLAN VIEW
WAY-250-2301 OVER LITTLE SUGAR CREEK

WAY-250-14.45

1/1

37/37

DESIGN FILE: H:\projects\83391\structures\WAY-250-2301.dgn
WORKSTATION: juzwik
DATE: 7/25/2011
MODELNAME: Design