STATE OF OHIO
DEPARTMENT OF TRANSPORTATION

WAY-250-14.60

VILLAGE OF APPLE CREEK
VILLAGE OF MOUNT EATON

PAINT TOWNSHIP
SALT CREEK TOWNSHIP
EAST UNION TOWNSHIP
FRANKLIN TOWNSHIP

WAYNE COUNTY

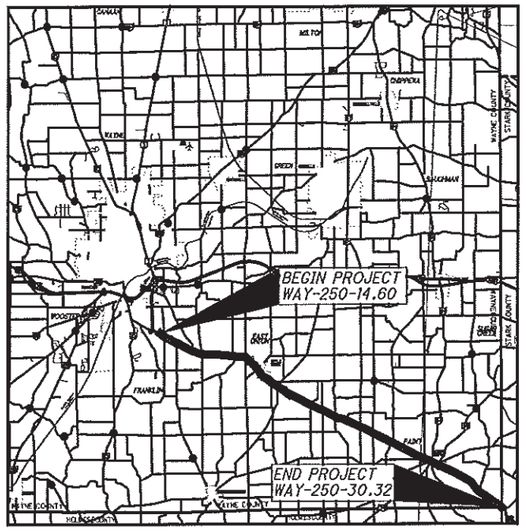

LOCATION MAP

LATITUDE: 40° 46' 12" N LONGITUDE: 81° 54' 38" W

SCALE IN MILES

0 3 6 9 12

N

PORTION TO BE IMPROVED
INTERSTATE HIGHWAY
FEDERAL ROUTES
STATE ROUTES
COUNTY & TOWNSHIP ROADS
OTHER ROADS

DESIGN DESIGNATION

SEE SHEET 3

DESIGN EXCEPTIONS

NONE REQUIRED

INDEX OF SHEETS:

TITLE SHEET	1
SCHEMATIC PLAN	2
DESIGN DESIGNATIONS	3
TYPICAL SECTIONS	4
GENERAL NOTES	5-7A
GENERAL SUMMARY	8
PAVEMENT AND SHOULDER DATA	9
PAVEMENT MARKINGS AND RPMS	10
APPLE CREEK PARKING STALL DETAILS	11
GUARDRAIL DETAILS	12-13
STRUCTURE NOTES AND QUANTITIES	14
STRUCTURE DETAILS	
WAY-250-1713	15
WAY-250-1815	16

PROJECT DESCRIPTION

THIS PROJECT INCLUDES RESURFACING OF THE MAINLINE PAVEMENT, RESURFACING OF BUGGY LANES, PAVEMENT REPAIRS, MINOR STRUCTURE WORK, GUARDRAIL REPAIRS, AND PAVEMENT MARKINGS.

EARTH DISTURBED AREAS

PROJECT EARTH DISTURBED AREA: N/A ACRES (MAINTENANCE PROJECT)
ESTIMATED CONTRACTOR EARTH DISTRUBED AREA: N/A ACRES (MAINTENANCE PROJECT)
NOTICE OF INTENT EARTH DISTURBED AREA: N/A ACRES (MAINTENANCE PROJECT)

2016 SPECIFICATIONS

THE STANDARD SPECIFICATIONS OF THE STATE OF OHIO, DEPARTMENT OF TRANSPORTATION, INCLUDING SUPPLEMENTAL SPECIFICATIONS LISTED IN THE PLANS AND CHANGES LISTED IN THE PROPOSAL SHALL GOVERN THIS IMPROVEMENT.

I HEREBY APPROVE THESE PLANS AND DECLARE THAT THE MAKING OF THIS IMPROVEMENT WILL NOT REQUIRE THE CLOSING TO TRAFFIC OF THE HIGHWAY AND THAT PROVISIONS FOR THE MAINTENANCE AND SAFETY OF TRAFFIC WILL BE AS SET FORTH ON THE PLANS AND ESTIMATES.

APPROVED _____
DATE 1/3/18 HOWARD HUEBNER
DISTRICT DEPUTY DIRECTOR

APPROVED _____
DATE 2-5-18 JERRY WRAY, DIRECTOR
DEPARTMENT OF TRANSPORTATION

FEDERAL PROJECT NO. E170792

PID NO. 103544

CONSTRUCTION PROJECT NO.

RAILROAD INVOLVEMENT NONE

WAY-250-14.60

1/16

PLANS PREPARED BY:
OHIO DEPARTMENT OF TRANSPORTATION
DISTRICT THREE ENGINEERING

ENGINEERS SEAL

STATE OF OHIO
DUSTIN J. VOUSDEN
E-69285
REGISTERED PROFESSIONAL ENGINEER

SIGNED: _____
DATE: 1/5/18

STANDARD CONSTRUCTION DRAWINGS						SUPPLEMENTAL SPECIFICATIONS	
BP-3.1	7/18/14	MT-96.26	7/19/13	TC-71.10	1/20/17	800-2016	1/19/2018
BP-4.1	7/19/13	MT-97.10	7/18/14	TC-82.10	7/17/15	821	4/20/12
		MT-97.12	1/20/17			830	1/17/14
DM-1.2	1/18/13	MT-99.20	7/21/17			832	1/17/14
DM-4.3	1/15/16	MT-101.70	1/17/14				
DM-4.4	1/15/16	MT-101.90	7/21/17				
		MT-105.10	7/19/13				
RM-1.1	7/18/14						
RM-4.2	4/18/14	TC-41.20	10/18/13				
		TC-42.20	10/18/13				
AS-1-15	7/17/15	TC-52.10	10/18/13				
		TC-52.20	7/21/17				
MT-95.31	7/21/17	TC-61.30	1/20/17				
MT-95.32	7/21/17	TC-64.10	1/20/17				
MT-96.11	1/20/17	TC-65.10	1/17/14				
MT-96.20	7/15/16	TC-65.11	7/21/17				

UNDERGROUND UTILITIES

CONTACT BOTH SERVICES TWO WORKING DAYS BEFORE YOU DIG.

OHIO Utilities Protection SERVICE
Call Before You Dig
1-800-362-2764
(Non-members must be called directly)

OIL & GAS PRODUCERS UNDERGROUND PROTECTION SERVICE
1-800-925-0988

WAY - US 250-14.60
180237 PID - 103544
Dist 3 4/5/2018

Contract Proposal Available @ www.contracts.dot.state.oh.us/home

I:\ProjectData\103544\Design\Roadway\S

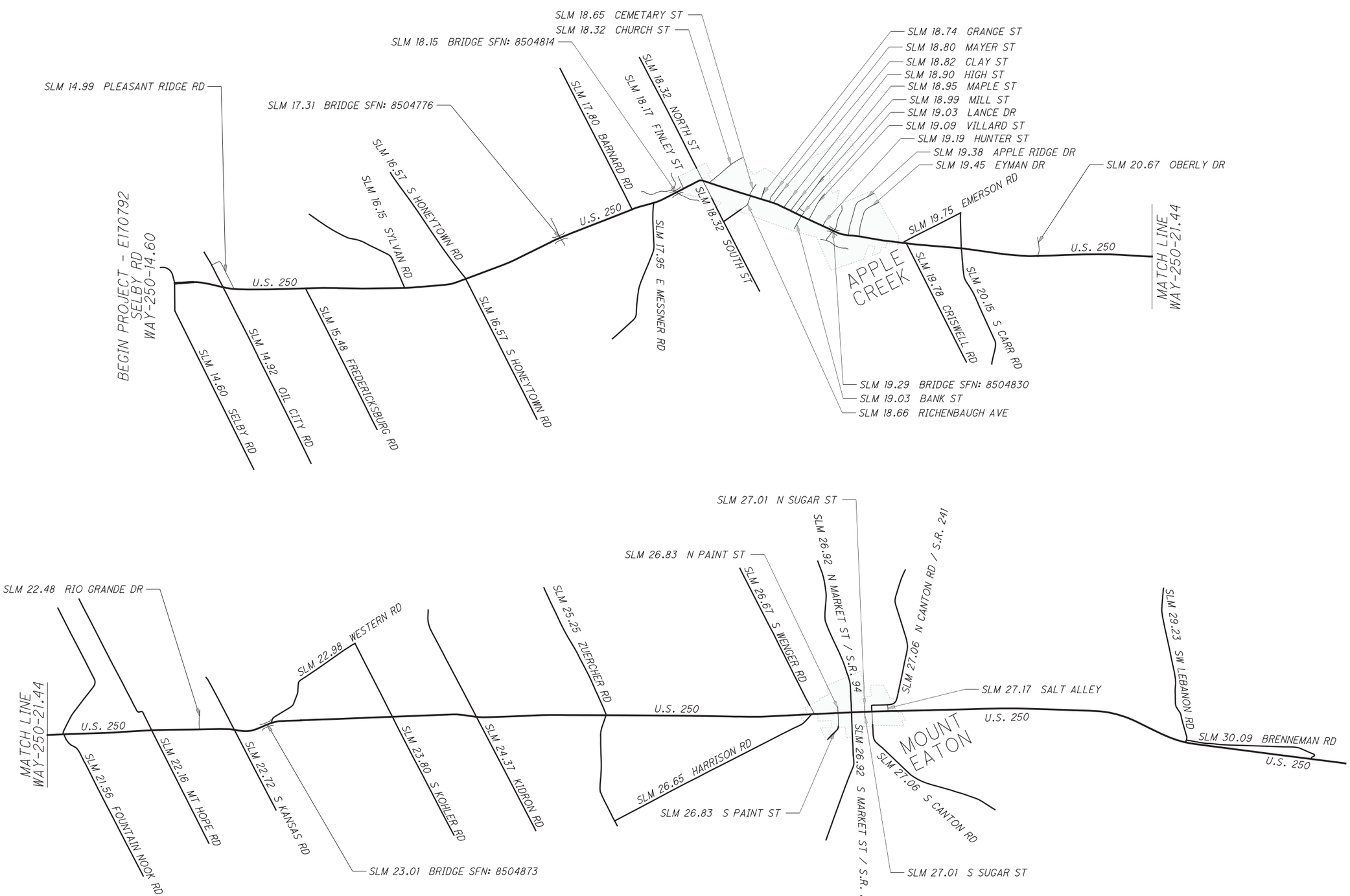

HORIZONTAL SCALE IN MILES
0 .17 .33 .67

CALCULATED JNC
CHECKED KCK

SCHEMATIC PLAN

WAY-250-14.60

I:\Project Data\103544\Design\Roadway\Sheets\103544_GB001.dgn

DESIGN DESIGNATION	WAY - 250 - 14.60 - 15.48	WAY - 250 - 15.48 - 16.15	WAY - 250 - 16.15 - 18.32	WAY - 250 - 18.32 - 18.82	WAY - 250 - 18.82 - 18.99
CURRENT YEAR ADT (2018)	6,900	6,900	6,900	6,900	6,900
DESIGN YEAR ADT (2030)	7,000	7,000	7,000	7,000	7,000
DESIGN HOURLY VOLUME (2030)	700	630	700	700	700
DIRECTIONAL DISTRIBUTION	57%	51%	51%	51%	51%
TRUCKS (24 HOUR B&C)	17%	17%	17%	19%	17%
Td	17%	10%	9%	9%	9%
NHS PROJECT	YES	YES	YES	YES	YES
DESIGN FUNCTIONAL CLASSIFICATION	OTHER PRINCIPAL ARTERIAL	OTHER PRINCIPAL ARTERIAL	OTHER PRINCIPAL ARTERIAL	OTHER PRINCIPAL ARTERIAL	OTHER PRINCIPAL ARTERIAL

DESIGN DESIGNATION	WAY - 250 - 18.99 - 19.03	WAY - 250 - 19.03 - 19.19	WAY - 250 - 19.19 - 19.77	WAY - 250 - 19.77 - 20.15	WAY - 250 - 20.15 - 26.57
CURRENT YEAR ADT (2018)	7,000	6,400	6,400	7,300	6,500
DESIGN YEAR ADT (2030)	7,200	7,200	7,200	7,300	7,300
DESIGN HOURLY VOLUME (2030)	720	720	720	730	730
DIRECTIONAL DISTRIBUTION	58%	58%	58%	52%	54%
TRUCKS (24 HOUR B&C)	17%	18%	18%	13%	14%
Td	9%	10%	10%	7%	7%
NHS PROJECT	YES	YES	YES	YES	YES
DESIGN FUNCTIONAL CLASSIFICATION	OTHER PRINCIPAL ARTERIAL	OTHER PRINCIPAL ARTERIAL	OTHER PRINCIPAL ARTERIAL	OTHER PRINCIPAL ARTERIAL	OTHER PRINCIPAL ARTERIAL

DESIGN DESIGNATION	WAY - 250 - 26.57 - 26.92	WAY - 250 - 26.92 - 27.06	WAY - 250 - 27.06 - 30.32
CURRENT YEAR ADT (2018)	5,600	8,000	5,500
DESIGN YEAR ADT (2030)	6,200	9,500	6,300
DESIGN HOURLY VOLUME (2030)	620	950	570
DIRECTIONAL DISTRIBUTION	51%	53%	51%
TRUCKS (24 HOUR B&C)	15%	12%	15%
Td	8%	6%	9%
NHS PROJECT	YES	YES	YES
DESIGN FUNCTIONAL CLASSIFICATION	OTHER PRINCIPAL ARTERIAL	OTHER PRINCIPAL ARTERIAL	OTHER PRINCIPAL ARTERIAL

SPEED LIMITS

ROUTE AND LOCATION	MPH
WAY - 250 - 14.60 - 15.69	45
WAY - 250 - 15.69 - 18.13	55
WAY - 250 - 18.13 - 19.75	35
WAY - 250 - 19.75 - 20.15	45
WAY - 250 - 20.15 - 26.55	55
WAY - 250 - 26.55 - 27.22	35
WAY - 251 - 27.22 - 30.32	55

CALCULATED JNC
CHECKED KCK

DESIGN DESIGNATIONS

WAY-250-14.60

I:\ProjectData\103544\Design\Roadway\Sheets\103544_GB001.dgn

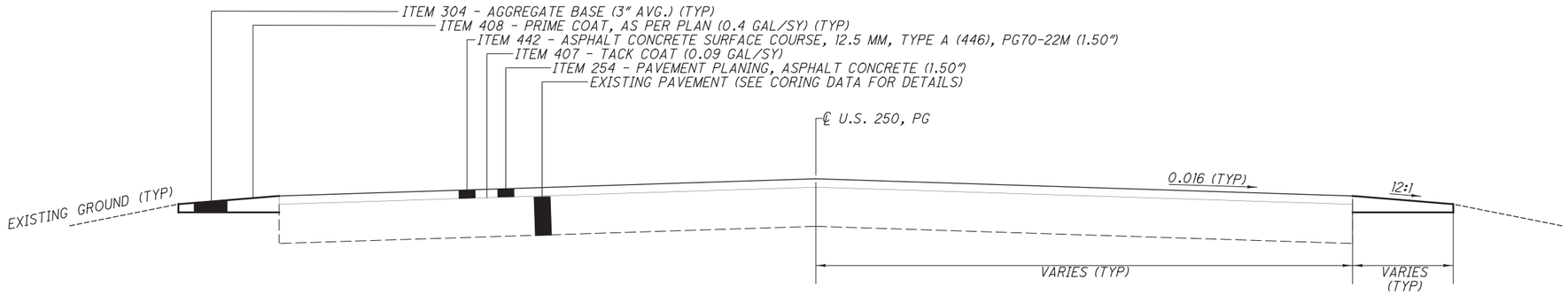

TYPICAL SECTION 1

APPLIES: WAY-250-(14.60-18.32)
WIDTHS AS LISTED ON PAVEMENT AND SHOULDER DATA SHEET
NOTE: VERTICALLY EXAGGERATED 2:1

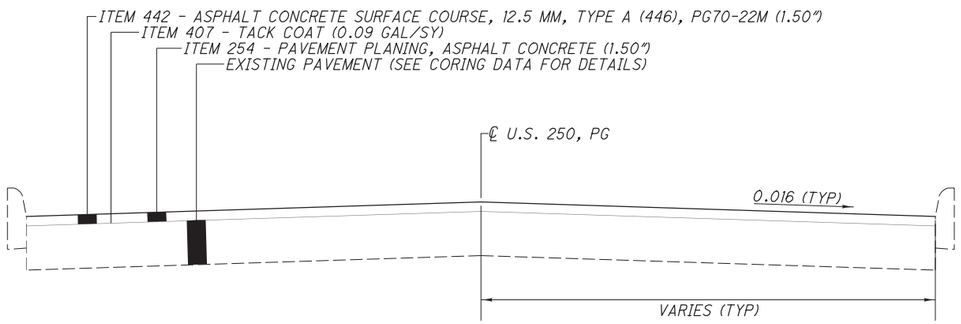

TYPICAL SECTION 2

APPLIES: WAY-250-(18.32-19.31)
WIDTHS AS LISTED ON PAVEMENT AND SHOULDER DATA SHEET
NOTE: VERTICALLY EXAGGERATED 2:1

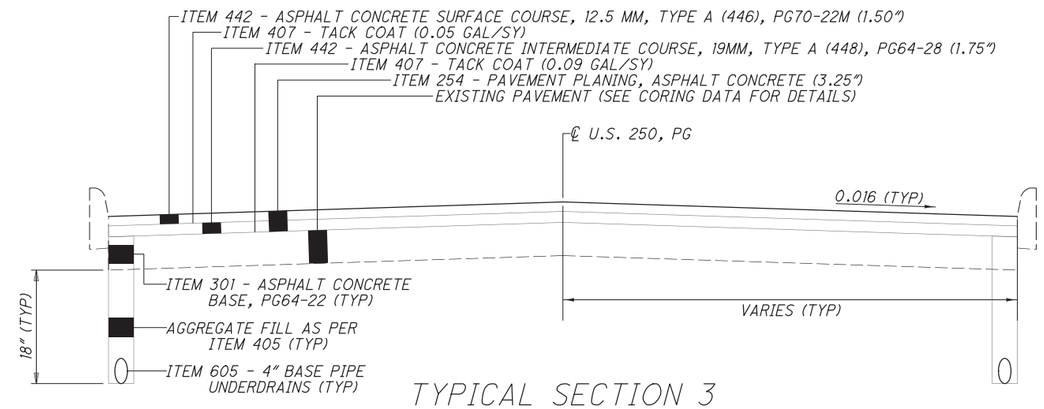

TYPICAL SECTION 3

APPLIES: WAY-250-(26.65-27.18) AND WAY-241-2.68-2.90
WIDTHS AS LISTED ON PAVEMENT AND SHOULDER DATA SHEET
NOTE: VERTICALLY EXAGGERATED 2:1
SEE "ITEM 605 - 4" BASE PIPE UNDERDRAINS" NOTE FOR INSTALLATION DETAILS

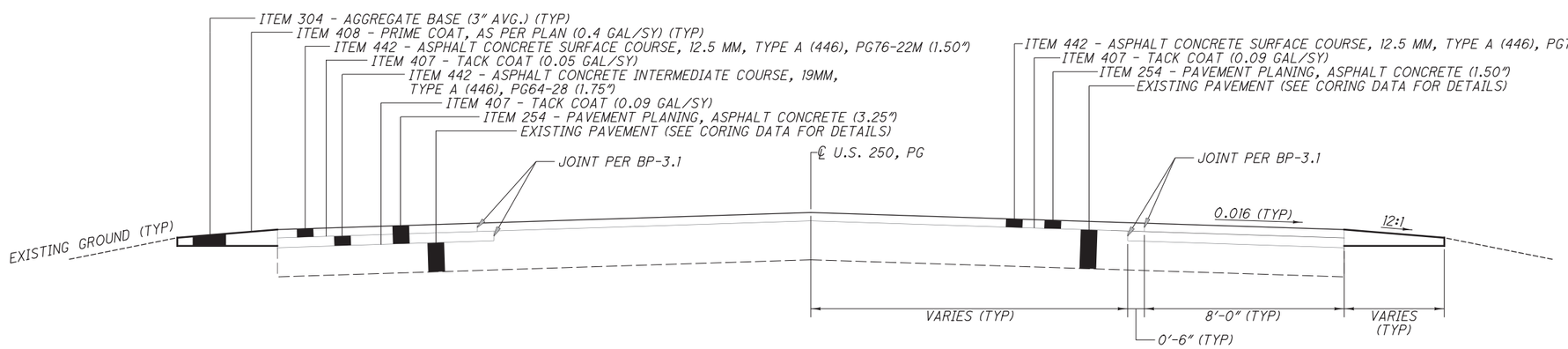

TYPICAL SECTION 4

APPLIES: WAY-250-(19.31-26.65)/(27.18-30.32)
WIDTHS AS LISTED ON PAVEMENT AND SHOULDER DATA SHEET
NOTE: VERTICALLY EXAGGERATED 2:1

TYPICAL SECTIONS

WAY-250-14.60

I:\ProjectData\03544\Design\Roadway\Sheets\03544_GY001.dgn

UTILITIES

LISTED BELOW ARE ALL UTILITIES LOCATED WITHIN THE PROJECT CONSTRUCTION LIMITS TOGETHER WITH THEIR RESPECTIVE OWNERS.

THE LOCATION OF THE UNDERGROUND UTILITIES SHOWN ON THE PLANS ARE AS OBTAINED FROM THE OWNERS AS REQUIRED BY SECTION 153.64 O.R.C.

GAS
DIVERSIFIED RESOURCES OHIO INC
37 W BROAD STREET, SUITE 1100
COLUMBUS, OH 43215
614.228.0326

CABLE
MASSILON CABLE TELEVISION
P.O. BOX 917
WOOSTER, OH 44691
330.345.5110

GAS
DOMINION
320 SPRINGSIDE DRIVE, SUITE 320
AKRON, OH 44333
800.362.7557

TOWNSHIP
EAST UNION TOWNSHIP
4337 S KANSAS ROAD
APPLE CREEK, OH 44606
330.698.0103

COMMUNICATION
FRONTIER COM
83 TOWNSEND AVENUE
NORWALK, OH 44857
419.744.3613

GAS
KINDER MORGAN
605 WESTLAKE DRIVE
ASHLAND, OH 44805
714.560.4967

GAS
ENERVEST
1748 SALTWELL RD
DOVER, OH 44622
330.602.5551

GAS
KNOX ENERGY
11872 WORTHINGTON ROAD
PATASKALA, OH 43062
740.927.6731

ELECTRIC
AEP OHIO
500 MAPLE STREET
WOOSTER, OH 44691
330.202.3047

COMMUNICATION
CENTURYLINK
175 ASHLAND ROAD, P.O. BOX 3555
MANSFIELD, OH 44907
419.755.7956

CABLE
CHARTER COMMUNICATIONS
5520 WHIPPLE AVENUE NW
NORTH CANTON, OH 44720
330.494.9200

GAS
COLUMBIA GAS OF OHIO
780 FRY ROAD
MIDDLEBURG HEIGHTS, OH 44130
440.891.2428

GAS
DOMINION
4725 SOUTHWAY STREET SW
CANTON, OH 44706
330.266.2049

CITY
VILLAGE OF MOUNT EATON
15910 EAST MAIN STREET
MT. EATON, OH 44659
330.359.5452

GAS
ASPIRE ENERGY
300 TRACY BIRDGE ROAD
ORRVILLE, OH 44667
330.682.7726

ELECTRIC
HOLMES-WAYNE ELECTRIC COOP
6060 S.R. 83 (P.O. BOX 112)
MILLERSBURG, OH 44654
330-674.1055

GAS
MARATHON PIPELINE
539 SOUTH MAIN STREET
FINDLAY, OH 45840
419.884.0800

GAS
NORTHEAST OHIO NATURAL GAS
9081 STATE ROUTE 250
STRASBURG, OH 44680
330.878.5589

TRAFFIC
ODOT DISTRICT THREE
906 CLARK AVENUE
ASHLAND, OH 44805
419.207.7045

GAS
ROVER PIPELINE
1300 MAIN STREET
HOUSTON, TX 77002
501.322.9622

CITY
VILLAGE OF APPLE CREEK
63 E MAIN STREET
APPLE CREEK, OH 44606
330.698.5462

GAS
TRANSCANADA
P.O. BOX 85
LAKEVILLE, OH 44638
419.827.2620

THE AFOREMENTIONED UTILITY COMPANIES AND AGENCIES HAVE VARIOUS FACILITIES IN THE AREA THAT WILL REMAIN IN PLACE DURING CONSTRUCTION.

EXTREME CAUTION SHOULD BE EXERCISED IN AREAS WITH UTILITIES. SECTIONS 105.07 AND 107.16 OF THE DEPARTMENT OF TRANSPORTATION CONSTRUCTION AND MATERIALS SPECIFICATIONS REQUIRE, AMONG OTHER THINGS, THAT THE CONTRACTOR COOPERATE WITH ALL UTILITIES LOCATED WITHIN THE LIMITS OF THIS CONSTRUCTION PROJECT AND TAKE RESPONSIBILITY FOR THE PROTECTION OF THE UTILITY PROPERTY AND SERVICES.

CONSTRUCTION NOTIFICATION

THE CONTRACTOR SHALL ADVISE THE PROJECT ENGINEER A MINIMUM OF FOURTEEN (14) DAYS PRIOR TO THE FOLLOWING: THE START OF CONSTRUCTION ACTIVITIES, LANE RESTRICTIONS, LANE CLOSURES, AND OR ROAD CLOSURES. THE PROJECT ENGINEER WILL FORWARD THIS INFORMATION TO THE FOLLOWING:

DISTRICT PUBLIC INFORMATION OFFICE (PIO) BY EMAIL AT D03.PIO@DOT.OHIO.GOV

DISTRICT PERMIT SECTION BY FAX AT (614) 887-4318 OR EMAIL AT LOUIS.TUMBLIN@DOT.OHIO.GOV

CENTRAL OFFICE SPECIAL HAUL PERMITS SECTION BY FAX AT (614) 728-4099 OR EMAIL AT HAULING.PERMITS@DOT.OHIO.GOV

THE PIO WILL, IN TURN, NOTIFY THE PUBLIC, THE LOCAL EMERGENCY SERVICES, AFFECTED SCHOOLS AND BUSINESSES, AND ANY OTHER IMPACTED LOCAL PUBLIC AGENCY OF ANY OF THE ABOVE MENTIONED ITEMS, VIA MEDIA SOURCES.

EXISTING PLANS

EXISTING PLANS MAY BE INSPECTED IN THE ODOT DISTRICT 3 OFFICE IN ASHLAND, TITLED AND DATED AS FOLLOWS:

TITLE	DATE
WAY-250-24.47	2012
WAY-250-14.45	2011
D03 DECK OVERLAY FY2010	2010
WAY-250-19.31	2009
WAY-250-24.42	2008
D03-RM-FY2005(B)	2004

ROUTINE MAINTENANCE

BETWEEN THE TIME THAT BIDS ARE TAKEN AND THE START OF CONSTRUCTION, THE MAINTAINING AGENCY MAY ENTER UPON THE PROJECT AND PERFORM ROUTINE MAINTENANCE SUCH AS CRACK SEALING, PATCHING, AND BERM AND SHOULDER REPAIR. THE EFFECTS, IF ANY, OF THE PERFORMANCE OF ROUTINE MAINTENANCE SHALL BE CONSIDERED AS INHERENT IN WORK OF THE CHARACTER PROVIDED FOR IN THE PLAN AND THE RESULTING CONDITIONS SHALL NOT BE CONSIDERED AS DIFFERING MATERIALLY FROM THOSE EXISTING AT THE TIME BIDS WERE TAKEN.

PART WIDTH CONSTRUCTION

BECAUSE OF THE NECESSITY TO BUILD THIS PROJECT UNDER TRAFFIC AND TO CONSTRUC THE FULL PAVEMENT WIDTH IN STAGES, EXERCISE CARE TO PREVENT THE CONSTRUCTION OF A BUTT JOINT IN THE BASE COURSES. LAP LONGITUDINAL JOINTS AS SHOWN ON SCD BP-3.1.

PROFILE AND ALIGNMENT

PLACE THE PROPOSED ASPHALT CONCRETE OVERLAY TO FOLLOW THE ALIGNMENT AND PROFILE OF THE EXISTING PAVEMENT. (PREVIOUS CONSTRUCTION PLANS SHOWING THE ORIGINAL ALIGNMENT AND PROFILE, ARE AVAILABLE FOR INSPECTION AT THE ODOT DISTRICT 3 OFFICE). PLACE THE PROPOSED ASPHALT CONCRETE OVERLAY AS SHOWN ON THE TYPICAL SECTIONS.

WORK LIMITS

THE WORK LIMITS SHOWN ON THESE PLANS ARE FOR PHYSICAL CONSTRUCTION ONLY. PROVIDE THE INSTALLATION AND OPERATION OF ALL WORK ZONE TRAFFIC CONTROL AND WORK ZONE TRAFFIC CONTROL DEVICES REQUIRED BY THESE PLANS WHETHER INSIDE OR OUTSIDE THESE WORK LIMITS.

STOP BAR PLACEMENT DETAILS

AT NORMAL STOP CONTROLLED INTERSECTIONS, THE STOP BAR SHOULD BE PLACED 4 FEET FROM THE EDGE LINE OF THE INTERSECTING ROADWAY IN ORDER TO ACHIEVE MAXIMUM INTERSECTION SIGHT DISTANCE. WHERE AMISH BUGGY LANES ARE PRESENT, THIS DISTANCE SHOULD BE INCREASED TO ENSURE NO ENCROACHMENT OF STOPPED VEHICLES ON THE BUGGY LANE.

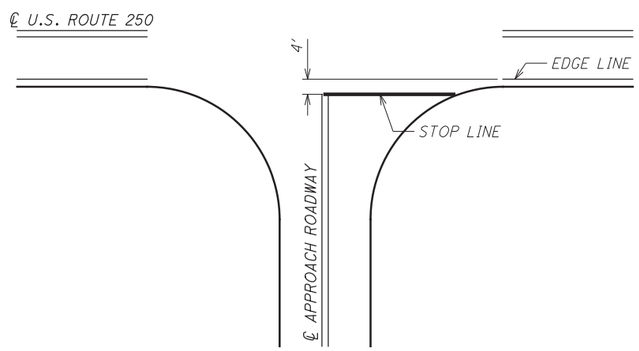

PAVEMENT CORING INFORMATION

COUNTY	ROUTE	SLM	LOCATION	ASPHALT	CONCRETE	BRICK
WAY	250	23.90	JOINT	5.00	0.00	0.00
WAY	250	23.90	MBL	5.00	0.00	0.00
WAY	250	23.90	MBL	6.50	0.00	0.00
WAY	250	23.90	RMVWP	7.00	0.00	0.00
WAY	250	25.00	JOINT	7.50	0.00	0.00
WAY	250	25.00	MBL	3.00	0.00	0.00
WAY	250	25.00	RMVWP	9.00	0.00	0.00
WAY	250	26.10	MBL	5.00	0.00	0.00
WAY	250	26.10	RMVWP	7.00	0.00	0.00
WAY	250	27.50	MBL	2.50	0.00	0.00
WAY	250	27.50	RMVWP	5.00	0.00	0.00
WAY	250	28.00	JOINT	9.00	0.00	0.00
WAY	250	28.00	MBL	7.50	0.00	0.00
WAY	250	29.00	MBL	5.00	0.00	0.00
WAY	250	29.00	RMVWP	5.50	0.00	0.00
WAY	250	30.10	MBL	7.00	0.00	0.00
WAY	250	30.10	RMVWP	5.00	0.00	0.00

KEY: JOINT = JOINT BETWEEN MAINLINE AND BUGGY LANE
MBL = MID BUGGY LANE
RMVWP = RIGHT MOTOR VEHICLE WHEEL PATH

BUTT JOINTS

BUTT JOINTS SHALL NOT BE CUT AND LEFT OPEN TO TRAFFIC. THEY SHALL BE FILLED IN WITH A TEMPORARY ASPHALT CONCRETE WEDGE USING ITEM 614 ASPHALT CONCRETE FOR MAINTAINING TRAFFIC.

CONSTRUCTION "BUMP" (W8-1-36) AND "ADVISORY SPEED" (W13-1-24) SIGNS SHALL BE ERECTED AND MAINTAINED DURING THE PERIOD THE BUTT JOINT IS LEFT OPEN. THESE SIGNS SHALL BE PAID FOR UNDER THE LUMP SUM ITEM FOR ITEM 614 MAINTAINING TRAFFIC.

ITEM 614 - ASPHALT CONCRETE FOR MAINTAINING TRAFFIC

THE FOLLOWING ESTIMATED QUANTITY HAS BEEN CARRIED TO THE GENERAL SUMMARY TO CONSTRUCT A TEMPORARY ASPHALT WEDGE FROM THE EXISTING PAVEMENT TO THE PLANED SURFACE AT BUTT JOINTS AND OTHER LOCATIONS THAT RESULT IN A DROP-OFF. THIS QUANTITY SHALL ALSO BE USED AT PLANED SURFACES WHERE A TEMPORARY ASPHALT WEDGE IS NEEDED AROUND CASTINGS. BEFORE RESURFACING OF THE PAVEMENT, THE TEMPORARY WEDGE SHALL BE REMOVED AND THE COST SHALL BE CONSIDERED INCIDENTAL TO ITEM 614 - ASPHALT CONCRETE FOR MAINTAINING TRAFFIC.

ITEM 614 - ASPHALT CONCRETE FOR MAINTAINING TRAFFIC

01/SAE/OT	12	CU YD
02/NHS<PV	13	CU YD
TOTAL	25	CU YD

INTERSECTIONS AND DRIVES

RURAL-INTERSECTIONS SHALL BE PLANED AND PAVED TO THE END OF THE RADII OR AS DIRECTED BY THE ENGINEER. (TO PROVIDE A SMOOTH TRANSITION BETWEEN THE TWO HIGHWAYS, AND TO ELIMINATE WATER POCKETS).

URBAN-INTERSECTIONS SHALL BE PLANED AND PAVED TO THE BACK OF CROSSWALKS OR AS DIRECTED BY THE ENGINEER. (TO PROVIDE A SMOOTH TRANSITION BETWEEN THE TWO HIGHWAYS, AND TO ELIMINATE WATER POCKETS).

EXISTING PAVED DRIVES SHALL BE PAVED SO AS TO PROVIDE A SMOOTH TRANSITION BETWEEN THE HIGHWAY AND THE DRIVE, (DISTANCE FROM EDGE OF ROADWAY MAY VARY AT EACH DRIVE) AS DIRECTED BY THE ENGINEER.

EXISTING AGGREGATE DRIVES SHALL BE PAVED WITH AN APRON AN AVERAGE WIDTH OF 4 FT. THE SLOPE OF THIS APRON SHALL BE THE SAME AS THE ADJACENT PAVEMENT SLOPE OR AS DIRECTED BY THE ENGINEER. ANY GRADING NEEDED TO PAVE THE APRON SHALL BE INCLUDED IN THE RELATED ASPHALT ITEM FOR PAYMENT. ITEM 304 COMPACTED AGGREGATE SHALL BE PLACED ADJACENT TO THIS APRON TO PROVIDE A SMOOTH TRANSITION FROM THE APRON TO THE EXISTING DRIVE, (WIDTH OF THIS 304 APPLICATION MAY VARY) AS DIRECTED BY THE ENGINEER. AN ADDITIONAL QUANTITY OF ITEM 304 HAS BEEN ESTIMATED TO COMPLETE THIS WORK AND IS SHOWN AS AN EXTRA AREA ON THE PAVEMENT & SHOULDER DATA SHEET.

ANY HAZARD OR UNSAFE CONDITION RESULTING FROM THE ABOVE WORK MUST BE CORRECTED IMMEDIATELY. THE CONTRACTOR IS REMINDED OF SECTIONS 105.01, 107.07 & 614.02A OF THE CONSTRUCTION AND MATERIALS SPECIFICATIONS.

THE PAVING DIMENSIONS FOR THE INTERSECTIONS ARE SHOWN IN THE CHART ON THE NEXT SHEET.

I:\ProjectData\103544\Design\Roadway\Sheets\103544_GN001.dgn

INTERSECTIONS AND DRIVES (CONT.)

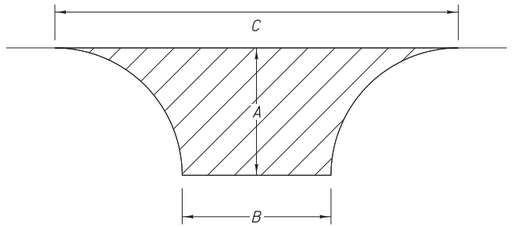

PLAN SPLIT	INTERSECTION NAME	SIDE	SLM	A (ft.)	B (ft.)	C (ft.)	Area (sy)
02/NHS/PV	SELBY RD	RIGHT	14.61	26	20	61	97
02/NHS/PV	SELBY RD	LEFT	14.61	23	22	63	91
02/NHS/PV	OIL CITY RD	RIGHT	14.92	17	39	55	84
02/NHS/PV	OIL CITY RD	LEFT	14.92	20	43	69	115
02/NHS/PV	PLEASANT RIDGE RD	LEFT	14.99	22	22	53	79
02/NHS/PV	FREDERICKSBURG RD	RIGHT	15.48	36	30	87	196
02/NHS/PV	SYLVAN RD	LEFT	16.15	18	25	58	72
02/NHS/PV	S. HONEYTOWN RD	RIGHT	16.57	21	23	45	71
02/NHS/PV	S. HONEYTOWN RD	LEFT	16.57	25	29	67	116
02/NHS/PV	BARNARD RD	LEFT	17.80	23	21	48	77
02/NHS/PV	E. MESSNER RD	RIGHT	17.95	32	38	92	199
02/NHS/PV	FINLEY ST	LEFT	18.17	0	0	0	0
02/NHS/PV	SOUTH ST	RIGHT	18.32	0	0	0	0
02/NHS/PV	NORTH ST	LEFT	18.32	50	34	127	361
02/NHS/PV	HIGH ST	LEFT	18.90	25	46	61	142
02/NHS/PV	CHURCH ST	LEFT	18.37	0	0	0	0
02/NHS/PV	CEMETERY ST	LEFT	18.54	0	0	0	0
02/NHS/PV	RICHENBAUGH AVE	RIGHT	18.66	0	0	0	0
02/NHS/PV	GRANGE ST	LEFT	18.74	0	0	0	0
02/NHS/PV	MAYER ST	LEFT	18.80	0	0	0	0
02/NHS/PV	CLAY ST	LEFT	18.82	0	0	0	0
02/NHS/PV	HIGH ST	LEFT	18.90	0	0	0	0
02/NHS/PV	MAPLE ST	LEFT	18.95	0	0	0	0
02/NHS/PV	MILL ST	LEFT	18.99	12	20	38	35
02/NHS/PV	LANCE DR	LEFT	19.03	0	0	0	0
02/NHS/PV	BANK ST	RIGHT	19.03	0	0	0	0
02/NHS/PV	VILLARD ST	LEFT	19.09	0	0	0	0
02/NHS/PV	HUNTER ST	LEFT	19.19	0	0	0	0
01/SAE/OT	APPLE RIDGE DR	LEFT	19.38	0	0	0	0
01/SAE/OT	EYMAN DR	LEFT	19.45	0	0	0	0
01/SAE/OT	EMERSON RD	LEFT	19.75	72	28	120	469
01/SAE/OT	CRISWELL RD	RIGHT	19.76	62	24	92	321
01/SAE/OT	S. CARR RD	RIGHT	20.15	52	26	90	273
01/SAE/OT	S. CARR RD	LEFT	20.15	52	24	80	247
01/SAE/OT	OBERLY DR	LEFT	20.67	30	24	74	136
01/SAE/OT	FOUNTAIN NOOK RD	RIGHT	21.55	44	27	95	243
01/SAE/OT	FOUNTAIN NOOK RD	LEFT	21.56	16	22	40	50
01/SAE/OT	MT HOPE RD	RIGHT	22.16	30	26	74	140
01/SAE/OT	MT HOPE RD	LEFT	22.16	17	22	38	52
01/SAE/OT	RIO GRANDE DR	LEFT	22.48	20	22	50	70
01/SAE/OT	S. KANSAS RD	RIGHT	22.72	36	26	68	160
01/SAE/OT	S. KANSAS RD	LEFT	22.72	28	30	74	139
01/SAE/OT	WESTERN RD	LEFT	22.98	20	27	78	98
01/SAE/OT	KOHLER RD	RIGHT	23.80	55	26	98	306
01/SAE/OT	KOHLER RD	LEFT	23.80	30	26	80	147
01/SAE/OT	KIDRON RD	RIGHT	24.37	50	26	94	270
01/SAE/OT	KIDRON RD	LEFT	24.37	115	30	156	920
01/SAE/OT	ZUERCHER RD	RIGHT	25.25	20	30	80	104
01/SAE/OT	ZUERCHER RD	LEFT	25.25	22	20	50	73
01/SAE/OT	HARRISON RD	RIGHT	26.65	16	30	64	73
02/NHS/PV	S. WENGERD RD	LEFT	26.67	16	20	38	46
02/NHS/PV	W. CHESTNUT ST	LEFT	26.75	15	18	42	43
02/NHS/PV	WEST ALLEY	LEFT	26.78	12	9	21	17
02/NHS/PV	PAINT ST	RIGHT	26.82	16	14	24	31
02/NHS/PV	PAINT ST	LEFT	26.82	12	16	28	27
02/NHS/PV	SR 241	RIGHT	26.92	0	0	0	0
02/NHS/PV	SR 94	LEFT	26.92	30	68	68	227
02/NHS/PV	SUGAR ST	RIGHT	27.01	14	24	52	52
02/NHS/PV	SUGAR ST	LEFT	27.01	50	26	46	181
02/NHS/PV	SR 241	LEFT	27.06	0	0	0	0
02/NHS/PV	CANTON ST	RIGHT	27.06	15	36	74	81
02/NHS/PV	SALT ALLEY	LEFT	27.17	16	24	40	52
01/SAE/OT	SW. LEBANON RD	LEFT	29.23	24	36	94	148
01/SAE/OT	BRENNEMAN RD	LEFT	30.09	14	28	58	59
01/SAE/OT	SUBTOTAL						4498
02/NHS/PV	SUBTOTAL						2492
	TOTAL INTERSECTION AREA						**6990**

ITEM 408 - PRIME COAT, AS PER PLAN

THE CONTRACTOR SHALL APPLY ONE COAT OF MC-70 (AS PER SECTION 702) AT A RATE OF 0.40 GAL/SY TO THE COMPLETED AGGREGATE BASE SHOULDER (ITEM 304) AS DIRECTED BY THE ENGINEER. THE CONTRACTOR SHALL PROVIDE A SHIELD TO PREVENT THE SPRAYING OR DRIFTING OF LIQUID BITUMINOUS MATERIAL ONTO THE EDGE OF PAVEMENT OR EDGE LINE. THE ATTENTION OF THE CONTRACTOR IS DIRECTED TO 107.10 OF THE SPECIFICATIONS.

ITEM 251 - PARTIAL DEPTH PAVEMENT REPAIR (442)
ITEM 253 - PAVEMENT REPAIR

THESE ITEMS OF WORK SHALL CONSIST OF THE REMOVAL OF THE EXISTING PAVEMENT OR PAVED BERM WHICH MAY BE ASPHALT, BRICK, CONCRETE, OR A COMBINATION OF EACH, IN AREAS OF EXISTING PAVEMENT FAILURE. CORING HAS BEEN PERFORMED TO HELP DETERMINE THE COMPONENTS THAT MAY BE ENCOUNTERED DURING THIS ITEM OF WORK. THE PAVEMENT CORING INFORMATION IS LOCATED UNDER THE CORING DATA NOTE.

PAVEMENT REPAIR SHALL BE PERFORMED AFTER PAVEMENT PLANING AND BEFORE PLACEMENT OF THE INTERMEDIATE AND/OR SURFACE COURSE. THE DEPTH OF REMOVAL SHALL BE SUFFICIENT TO REMOVE ALL DETERIORATED PAVEMENT WITH A MAXIMUM DEPTH OF 2", BASED ON THE PAVEMENT DESIGN AND AN AVERAGE DEPTH OF 4" AND AN AVERAGE WIDTH OF 4 FT FOR ESTIMATING PURPOSES.

THE CONTRACTOR SHALL BE CAPABLE OF PERFORMING PAVEMENT REPAIRS 2 FEET WIDE.

REPLACEMENT MATERIAL SHALL BE ITEM 442 19MM MATERIAL AND SHALL BE PLACED AND COMPACTED TO FINISH FLUSH WITH THE ADJACENT PAVEMENT SURFACE. ITEM 301 ASPHALT CONCRETE CAN BE USED WHEN THE DEPTH OF THE REPAIR IS BETWEEN 3" AND 12" WITH A MAXIMUM PAVEMENT LIFT OF 6". ITEM 442 19MM CAN BE USED WHEN THE DEPTH OF THE REPAIR IS BETWEEN 1.5" AND 3". ITEM 301 SHALL USE PG64-22 ASPHALT BINDER AND ITEM 442 19MM SHALL USE PG64-28 BINDER.

PAYMENT SHALL INCLUDE ALL LABOR, EQUIPMENT, AND MATERIALS NECESSARY TO COMPLETE THE PAVEMENT REPAIR. FOR PAYMENT PURPOSES ITEM 251 PARTIAL DEPTH PAVEMENT REPAIR (442) IS TO BE A MAXIMUM OF 4" DEEP AND ITEM 253 PAVEMENT REPAIR IS FOR DEPTHS GREATER THAN 4". PAYMENT WILL BE MADE AT THE UNIT BID PRICE PER CUBIC YARD, (BY TICKET WEIGHT CONVERSION), OF ITEM 251 - PARTIAL DEPTH PAVEMENT REPAIR (442) OR ITEM 253 - PAVEMENT REPAIR. THE FOLLOWING ESTIMATED QUANTITIES ARE PROVIDED IN THE GENERAL SUMMARY TO BE USED AS DIRECTED BY THE ENGINEER:

FOR INFORMATIONAL PUROPOSES ONLY, IT IS ESTIMATED THAT 85% OF THE TOTAL PAVEMENT REPAIRS ARE CONSIDERED LONGITUDINAL REPAIRS AND 15% OF THE TOTAL PAVEMENT REPAIRS ARE CONSIDERED TRANSVERSE.

US 250 ITEM 251 - PARTIAL DEPTH PAVEMENT REPAIR (442)

01/SAE/OT	500	CU YD
02/NHS/PV	600	CU YD
TOTAL	1100	CU YD

US 250 ITEM 253 - PAVEMENT REPAIR

02/NHS/PV	25	CU YD
TOTAL	25	CU YD

ITEM 254 - PAVEMENT PLANING, ASPHALT CONCRETE

THE INTENT OF THE PLANING IS TO MILL 1.50 INCHES OR 3.25 INCHES (AS SHOWN ON TYPICAL SECTIONS) AT THE CENTER OF PAVEMENT, AND 3.25 INCHES AT A WIDTH OF 8'-6" FROM THE EDGE OF SHOULDER IN AREAS DESIGNATED AS BUGGY LANES. THE PAVEMENT SLOPE SHALL BE 0.010 MINIMUM AND 0.016 PREFERRED, CONTINUOUS BETWEEN THE CROWN AND THE PROPOSED EDGELINE/SHOULDER. THE MILLING DEPTH SHALL BE CONTROLLED FROM THE CENTER OF PAVEMENT IN CONFORMANCE WITH THE ABOVE GUIDELINES. WITHIN CURBED SECTIONS, CONTROL THE MILLING DEPTH FROM THE EDGE OF PAVEMENT AT THE CURB.

SPECIAL ATTENTION SHALL BE GIVEN TO SUPERELEVATED CURVES. THE SUPERELEVATION SHALL BE MAINTAINED AND/OR RESTORED, IF NECESSARY, AS DIRECTED BY THE ENGINEER. IF THERE IS NO INFORMATION IN THE PLANS TO CHANGE THE SUPERELEVATION, THE INTENT IS TO MAINTAIN THE EXISTING SUPERELEVATION.

THE CONTRACTOR SHALL MAINTAIN POSITIVE DRAINAGE TO ALL CATCH BASINS AND INLETS.

THE PROGRESSION OF THE PLANING SHALL PROCEED IN SUCH A MANNER THAT NORMAL TRAFFIC WILL NOT BE REQUIRED TO RUN OVER THE PLANED ROADWAY SURFACE MORE THAN TEN (10) CALENDAR DAYS. FOR EACH CALENDAR DAY BEYOND THE 10 DAYS THAT THE ROADWAY REMAINS EXPOSED TO THE PLANED SURFACE, THE CONTRACTOR WILL BE ASSESSED A DISINCENTIVE FEE OF $1000 PER DAY.

BUGGY LANES PLANED TO A DEPTH OF 3.25" SHALL HAVE THE INTERMEDIATE COURSE PLACED BY THE END OF THE SAME WORK DAY ON WHICH PLANING TAKES PLACE. THE THE CONTRACTOR WILL BE ASSESSED A DISINCENTIVE FEE OF $1000 PER DAY FOR EACH DAY THE INTERMEDIATE COURSE IS NOT COMPLETED BY THE END OF THE SHIFT. IF, DURING THE WORKING SHIFT, THE MILLED BASE PAVEMENT IS DAMAGED BY EXPOSURE TO TRAFFIC (INCLUDING BUGGY TRAFFIC), THE CONTRACTOR SHALL BE RESPONSIBLE FOR FULL DEPTH PAVEMENT REPAIRS AT NO COST TO THE DEPARTMENT.

PAYMENT SHALL INCLUDE ALL LABOR, EQUIPMENT, AND MATERIALS NECESSARY TO COMPLETE THE PAVEMENT PLANING, ASPHALT CONCRETE. PAYMENT WILL BE MADE AT THE UNIT BID PRICE PER SQUARE YARD OF ITEM 254 - PAVEMENT PLANING, ASPHALT CONCRETE.

ITEM 442 - ASPHALT CONCRETE SURFACE COURSE, 12.5 MM, TYPE A (446)

ALL OPEN TRANSVERSE JOINTS SHALL BE TAPERED TO MEET EXISTING PAVEMENT BEFORE INTRODUCING TRAFFIC. A "BUMP" SIGN (W-8-1-36) SHALL BE ERECTED AT ANY TRANSVERSE JOINT LEFT OPEN OVER NIGHT, INCLUDING A SPEED ADVISORY SIGN. THESE SIGNS SHALL BE REMOVED IMMEDIATELY AFTER JOINT HAS BEEN CLOSED. PLACEMENT OF SIGNS SHALL BE INCLUDED IN THE UNIT PRICE BID FOR ITEM 614 MAINTAINING TRAFFIC.

CARE SHALL BE TAKEN TO MATCH EXISTING PAVEMENT ELEVATIONS AT EXISTING PAVED BERMS, DRIVES, INTERSECTIONS, ETC.

ITEM 254 - PATCHING PLANED SURFACE

AN ESTIMATED QUANTITY OF ITEM 254 - PATCHING PLANED SURFACE HAS BEEN SET UP TO BE USED AS DIRECTED BY THE ENGINEER AS DESCRIBED IN CMS 254.04. THE LIMIT OF THE PATCHING DEPTH IS 0 TO 2 IN.

ITEM 209 - LINEAR GRADING

THE CONTRACTOR IS REQUIRED TO PERFORM LINEAR GRADING ON THE GRADED SHOULDER. IT IS ANTICIPATED THAT THERE ARE AREAS WHERE THE GRADED SHOULDER IS AT A HIGHER ELEVATION THAN THE ADJACENT PROPOSED PAVEMENT. A 10:1 SLOPE SHALL BE ESTABLISHED, OR AS DIRECTED BY THE ENGINEER, WHEN PERFORMING ITEM 209 LINEAR GRADING. THE INTENT IS TO PROVIDE AN UNOBSTRUCTED AND POSITIVE FLOW OF STORM WATER FROM THE PAVEMENT TO THE DITCH. THE LINEAR GRADING SHALL BE PERFORMED AFTER THE INTERMEDIATE COURSE HAS BEEN COMPLETED AND BEFORE THE SURFACE COURSE IS PLACED. ALL LABOR AND EQUIPMENT NECESSARY TO PERFORM THE ABOVE WORK SHALL BE INCLUDED IN THE UNIT PRICE BID PER MILE FOR ITEM 209 - LINEAR GRADING.

ITEM 618 - CENTERLINE, RUMBLE STRIPE, ASPHALT CONCRETE

APPLY ITEM 618 - CENTERLINE, RUMBLE STRIPE, ASPHALT CONCRETE TO ALL ASPHALT CONCRETE SURFACE COURSE EXCEPT BETWEEN SLM 18.12 AND SLM 19.74 (VILLAGE OF APPLE CREEK) AND BETWEEN SLM 26.56 AND SLM 27.22 (VILLIAGE OF MT. EATON).

446 DENSITY ACCEPTANCE WITH FLAGGER CLOSING OF A 2-LANE HIGHWAY FOR PAVING OPERATIONS

THIS PLAN NOTE APPLIES ONLY TO A FLAGGER CLOSURE OF ONE LANE OF A 2-LANE HIGHWAY DURING PAVING OPERATIONS WHEN USING STANDARD CONSTRUCTION DRAWING MT-97.11 OR MT-97.12, AND ALLOWS A PAVING OPERATION TO PROCEED CONCURRENTLY WITH THE MARKING AND CUTTING OF CORES REQUIRED FOR 446 DENSITY ACCEPTANCE.

IN ALL CASES THE CONTRACTOR SHOULD LENGTHEN THEIR LANE CLOSURES TO THE MAXIMUM PERMISSIBLE LENGTH DETAILED IN THE ABOVE REFERENCED STANDARD CONSTRUCTION DRAWINGS TO ALLOW THE ENGINEER ADEQUATE TIME TO MARK THE REQUIRED CORE LOCATIONS AND FOR CORE CUTTING OPERATIONS.

THE CONTRACTOR WILL PROVIDE TO THE ENGINEER THE PLANNED QUANTITY THAT WILL BE PLACED FOR THE DAY'S PRODUCTION. EACH DAY'S PRODUCTION WILL BE CONSIDERED ONE LOT AND INCLUDES SHOULDERS. TEN CORES WILL BE OBTAINED BY THE CONTRACTOR FOR EACH LOT AT RANDOM LOCATIONS DETERMINED BY THE ENGINEER. THE ENGINEER WILL DIVIDE A LOT INTO FIVE EQUAL SUBLOTS AND CALCULATE TWO RANDOM CORE LOCATIONS IN EACH SUBLOT AS DESCRIBED IN C&MS 446.05.

THE ENGINEER WILL MARK THE CORE LOCATIONS AFTER THE PAVING OPERATION (INCLUDING THE FINISH ROLLER) HAS COMPLETELY PASSED THE RANDOMLY SELECTED CORE LOCATION. THE CONTRACTOR SHOULD DETERMINE WHEN IT IS APPROPIATE TO START THE CORE DRILL OPERATION AND BEGIN CUTTING CORES WHEN THE NEWLY PLACED PAVEMENT SURFACE TEMPERATURE IS LESS THAN 140°F. IT IS THE CONTRACTOR'S RESPONSIBILITY TO MAINTAIN THE LANE CLOSURE DURING ALL PAVING, CORE MARKING, AND CORING OPERATIONS PER THE REQUIREMENTS OF THE STANDARD CONSTRUCTION DRAWING USED FOR THE PAVING OPERATION.

SEQUENCE OF CONSTRUCTION

THE INTENT IS TO MINIMIZE TRAFFIC BACKUPS, REDUCE TRAFFIC CONTROL REQUIREMENTS, AND PERFORM THE WORK AS QUICKLY AS POSSIBLE. AT EACH CONTROLLED LOCATION, THE SEQUENCE OF CONSTRUCTION SHALL BE AS FOLLOWS:

1. PERFORM 1.5" PLANING (WHERE APPLICABLE).
2. PERFORM 3.25" PLANING (WHERE APPLICABLE). DO NOT PERMIT A LONGITUDINAL DROP OFF OF MORE THAN 2" IN ANY LOCATION.
3. PATCH PLANED SURFACES.
4. PERFORM PAVEMENT REPAIRS.
5. TACK COAT AND PLACE THE INTERMEDIATE COURSE (WHERE APPLICABLE).
6. TACK COAT AND PLACE THE SURFACE COURSE.
7. PLACE RUMBLE STRIPS, FINAL PAVEMENT MARKINGS, AND RAISED PAVEMENT MARKERS.
8. COMPLETE ALL REMAINING ITEMS OF WORK.

ON BUGGY LANE SECTIONS, STEPS 2, 3, 4, AND 5 SHALL OCCUR ON THE SAME WORK DAY.

CALCULATED JNC
CHECKED KCK

GENERAL NOTES

WAY-250-14.60

I:\ProjectData\103544\Design\Roadway\Sheets\103544_GN001.dgn

ITEM 614 - WORK ZONE MARKING SIGN

THE FOLLOWING ESTIMATED QUANTITY HAS BEEN CARRIED TO THE GENERAL SUMMARY FOR USE AS DIRECTED BY THE ENGINEER FOR TEMPORARY WORK ZONE MARKING SIGNS PER THE REQUIREMENTS OF THE CONSTRUCTION AND MATERIALS SPECIFICATIONS, 614.04.

WORK ZONE MARKING SIGN: (W8-H12A-36) NO EDGE LINE	02/NHS/PV	41	EACH
WORK ZONE MARKING SIGN: (R4-1-24) DO NOT PASS	02/NHS/PV	76	EACH
WORK ZONE MARKING SIGN: (R4-3-24) PASS WITH CARE	02/NHS/PV	76	EACH
	TOTAL TO GEN SUM	193	EACH

ITEM 614 - MAINTAINING TRAFFIC LANE CLOSURE/REDUCTION REQUIRED

LENGTH AND DURATION OF LANE CLOSURES AND RESTRICTIONS SHALL BE AT THE APPROVAL OF THE ENGINEER. IT IS THE INTENT TO MINIMIZE THE IMPACT TO THE TRAVELING PUBLIC. LANE CLOSURES OR RESTRICTIONS OVER SEGMENTS OF THE PROJECT IN WHICH NO WORK IS ANTICIPATED WITHIN A REASONABLE TIME FRAME, AS DETERMINED BY THE ENGINEER, SHALL NOT BE PERMITTED. THE LEVEL OF UTILIZATION OF MAINTENANCE OF TRAFFIC DEVICES SHALL BE COMMENSURATE WITH THE WORK IN PROGRESS.

ITEM 614 - MAINTAINING TRAFFIC (LANES OPEN DURING HOLIDAYS OR SPECIAL EVENTS)

NO WORK SHALL BE PERFORMED AND ALL EXISTING LANES SHALL BE OPEN TO TRAFFIC DURING THE FOLLOWING DESIGNATED HOLIDAYS OR EVENTS:

CHRISTMAS	FOURTH OF JULY	MT. EATON FIREMAN'S FESTIVAL
NEW YEARS	LABOR DAY	JOHNNY APPLESEED DAYS
MEMORIAL DAY	THANKSGIVING	

THE PERIOD OF TIME THAT THE LANES ARE TO BE OPEN DEPENDS ON THE DAY OF THE WEEK ON WHICH THE HOLIDAY OR EVENT FALLS. THE FOLLOWING SCHEDULE SHALL BE USED TO DETERMINE THIS PERIOD:

DAY OF THE WEEK	TIME ALL LANES MUST BE OPEN TO TRAFFIC
SUNDAY	12:00N FRIDAY THROUGH 6:00 AM MONDAY
MONDAY	12:00N FRIDAY THROUGH 6:00 AM TUESDAY
TUESDAY	12:00N MONDAY THROUGH 6:00 AM WEDNESDAY
WEDNESDAY	12:00N TUESDAY THROUGH 6:00 AM THURSDAY
THURSDAY	12:00N WEDNESDAY THROUGH 6:00 AM MONDAY
FRIDAY	12:00N THURSDAY THROUGH 6:00 AM MONDAY
SATURDAY	12:00N FRIDAY THROUGH 6:00 AM MONDAY

SHOULD THE CONTRACTOR FAIL TO MEET ANY OF THESE REQUIREMENTS, THE CONTRACTOR SHALL BE ASSESSED A DISINCENTIVE FEE OF $50 PER MINUTE.

ITEM 611 - CASTINGS ADJUSTED TO GRADE
ITEM 638 - WATER WORK, MISC.: WATER VALVE ADJUSTED TO GRADE

THE CASTING TO BE ADJUSTED MAY OR MAY NOT HAVE AN EXISTING FRAME. THE WORK SHALL CONSIST OF ADJUSTING THE EXISTING CASTING TO THE SATISFACTION OF THE ENGINEER. IT IS NOT INTENDED TO PLACE NEW FRAMES WHERE NONE CURRENTLY EXIST. THE CONTRACTOR IS REMINDED TO FIELD CHECK ALL ADJUSTMENT TO GRADE ITEMS PRIOR TO BIDDING, AS NO ADDITIONAL COMPENSATION WILL BE GRANTED FOR LABOR AND MATERIALS REQUIRED TO SATISFACTORILY ADJUST CASTINGS WITHOUT FRAMES.

02/NHS/PV

CATCH BASIN ADJUSTED TO GRADE	38	EACH
INLET ADJUSTED TO GRADE	10	EACH
MANHOLE ADJUSTED TO GRADE	1	EACH
SPECIAL - GAS VALVE BOX ADJUSTED TO GRADE	4	EACH
WATER WORK, MISC.: WATER VALVE ADJUSTED TO GRADE	3	EACH

COORDINATION OF WORK BETWEEN CONTRACTORS

THE CONTRACTOR SHOULD BE AWARE THAT THERE MAY BE OTHER WORK BEING PERFORMED BY SEPARATE CONTRACTS. WAY-241-0.00 IS A RESURFACING PROJECT AND WAY-250-28.84 IS A JACK AND BORE CULVERT REPLACEMENT. THEY ARE SCHEDULED TO BEGIN WORK IN THE 2018 CONSTRUCTION SEASON. ALSO, THE CONTRACTOR IS ADVISED TO COORDINATE WORK WITH THE ROVER PIPELINE, LLC PROJECT THAT MAY HAVE WORK IN THE AREA CONCURRENTLY WITH THIS PROJECT. COORDINATION OF WORK IS THE RESPONSIBILITY OF THE CONTRACTOR.

ITEM 623 - MONUMENT BOX ADJUSTED TO GRADE

ALL WORK RELATED TO ADJUSTING MONUMENT BOXES TO GRADE WILL BE IN ACCORDANCE TO SECTIONS 623.04 AND 623.05 OF THE 2016 ODOT CONSTRUCTION AND MATERIALS SPECIFICATIONS.

THE MONUMENT BOX TO BE ADJUSTED MAY OR MAY NOT HAVE AN EXISTING ADJUSTABLE FRAME. THE WORK SHALL CONSIST OF ADJUSTING THE EXISTING MONUMENT BOX TO THE SATISFACTION OF THE ENGINEER. THE CONTRACTOR IS REMINDED TO FIELD CHECK ALL ADJUSTMENT TO GRADE ITEMS PRIOR TO BIDDING, AS NO ADDITIONAL COMPENSATION WILL BE GRANTED FOR LABOR AND MATERIALS REQUIRED TO SATISFACTORILY ADJUST CASTINGS WITHOUT ADJUSTABLE FRAMES.

LISTED BELOW ARE THE APPROXIMATE SLMS OF KNOWN MONUMENTS IN THE PAVEMENT:

14.60	14.71	14.80
14.86	14.90	15.01
22.97		

TOTAL CARRIED TO GENERAL SUMMARY:
02/NHS/PV
ITEM 623 - MONUMENT BOX ADJUSTED TO GRADE 7 EACH

ITEM SPECIAL, MAILBOX SUPPORT SYSTEM

THIS ITEM OF WORK SHALL CONSIST OF THE REMOVAL OF EXISTING NON-STANDARD MAILBOX SUPPORTS AND FURNISHING AND ERECTING MAILBOX SUPPORTS AND ANY ASSOCIATED HARDWARE IN ACCORDANCE WITH THE DETAILS SHOWN, AND ATTACHING AN OWNER SUPPLIED MAILBOX, AT LOCATIONS DETERMINED BY THE ENGINEER.

IN ABSENCE OF A NEW BOX SUPPLIED BY THE OWNER THE CONTRACTOR SHALL SALVAGE THE EXISTING BOX AND PLACE IT ON THE NEW SUPPORT. DUE CARE SHALL BE EXERCISED IN SUCH AN OPERATION, THE CONTRACTOR SHALL BE RESPONSIBLE FOR REPAIRING OR REPLACING ANY BOX DAMAGED BY IMPROPER HANDLING, AS JUDGED AND DIRECTED BY THE ENGINEER.

THE BOX SHALL BE SECURELY AND NEATLY ATTACHED BY THE CONTRACTOR TO THE NEW SUPPORT. THE CONTRACTOR SHALL SUPPLY ALL NECESSARY ATTACHMENT HARDWARE (NUTS, BOLTS, PLATES, SPACERS AND WASHERS) AS NECESSARY TO ACCOMMODATE THE COMPLETE INSTALLATION. SUPPORT HARDWARE SHALL ACCOMMODATE EITHER A SINGLE OR A DOUBLE MAILBOX INSTALLATION, AND NO MORE THAN TWO MAILBOXES MAY BE MOUNTED ON A SINGLE POST. [HARDWARE SHALL BE COMMERCIAL GRADE GALVANIZED STEEL.]

WOOD POSTS SHALL BE NOMINAL 4 IN. x 4 IN. (S4S) OR 4½IN. DIAMETER ROUND, AND CONFORM TO 710.14. STEEL POSTS SHALL BE NOMINAL PIPE SIZE 2 IN. I.D., AND CONFORM TO AASHTO M 181.

POSTS SHALL BE SET AS PER THE FIRST PARAGRAPH OF 606.03, AND SHALL IN NO INSTANCE BE ENCASED IN CONCRETE.

THE CONTRACTOR SHALL BE RESPONSIBLE FOR COORDINATING WORK WITH THE LOCAL POST MASTER AND NOTIFYING THE PROPERTY OWNERS PRIOR TO WORK.

GROUP MAILBOX SUPPORTS SHALL BE PLACED ON 3 FT. CENTERS.

WHERE GUARDRAIL EXISTS, MAILBOXES AND THEIR SUPPORTS SHALL BE PLACED BEHIND THE GUARDRAIL. SUPPORTS MUST STILL MEET THE BREAKAWAY REQUIREMENTS LISTED ABOVE.

FOR DETAILS NOT SHOWN SEE STANDARD DRAWING BP-4.1

THE FOLLOWING ESTIMATED QUANTITIES HAVE BEEN CARRIED TO THE GENERAL SUMMARY TO BE USED AS DESCRIBED ABOVE.

02/NHS/PV

ITEM SPECIAL - MAILBOX SUPPORT SYSTEM, SINGLE	12 EACH
ITEM SPECIAL - MAILBOX SUPPORT SYSTEM, DOUBLE	2 EACH

LOCATIONS OF MAILBOX SUPPORT SYSTEM TO BE REPLACED

ADDRESSES AND/OR LOCATIONS OF MAILBOX SUPPORT SYSTEM TO BE REPLACED:

ADDRESS	SLM	TYPE
3689 U.S. ROUTE 250	WAY-250-15.64	SINGLE
3701 U.S. ROUTE 250	WAY-250-15.65	SINGLE
4481 U.S. ROUTE 250	WAY-250-16.22	SINGLE
5791 U.S. ROUTE 250	WAY-250-17.25	SINGLE
176 DOVER RD (U.S. 250)	WAY-250-19.06	SINGLE
8610 U.S. ROUTE 250	WAY-250-19.98	SINGLE
8703 U.S. ROUTE 250	WAY-250-20.28	SINGLE
8911 U.S. ROUTE 250	WAY-250-20.30	SINGLE
9650 U.S. ROUTE 250	WAY-250-21.01	SINGLE
10496 U.S. ROUTE 250	WAY-250-21.83	SINGLE
11414 U.S. ROUTE 250	WAY-250-22.70	DOUBLE
12309 U.S. ROUTE 250	WAY-250-23.53	DOUBLE
13938 U.S. ROUTE 250	WAY-250-25.04	SINGLE
15121 U.S. ROUTE 250	WAY-250-30.31	SINGLE

MAILBOX APPROACHES

THE EXISTING MAILBOX APPROACHES SHALL BE PAVED WITH THE SAME TREATMENT AS THE SURROUND PAVEMENT. NO PROPOSED MAILBOX APPROACHES ARE TO BE INCLUDED IN THIS PROJECT.

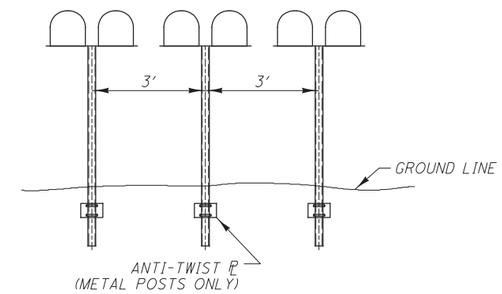

GROUP MAILBOX INSTALLATION

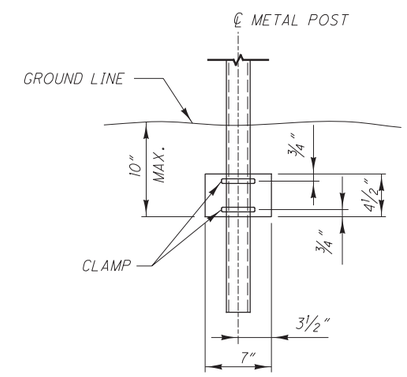

ANTI-TWIST PLATE

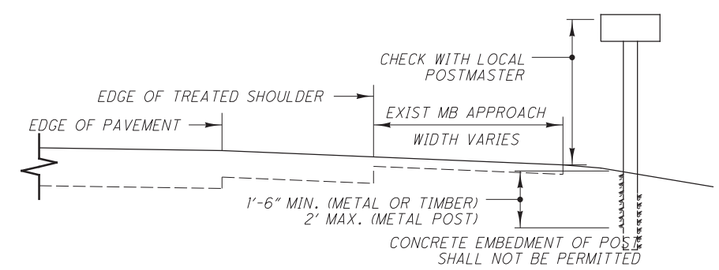

CROSS SECTION / ELEVATION VIEW

CALCULATED JNC
CHECKED KCK

GENERAL NOTES

WAY-250-14.60

I:\ProjectData\103544\Design\Roadway\Sheets\103544_GN001.dgn

ITEM 614 - LAW ENFORCEMENT OFFICER WITH PATROL CAR FOR ASSISTANCE DURING CONSTRUCTION OPERATIONS

IN ADDITION TO THE REQUIREMENTS OF CMS 614 AND THE LATEST EDITION OF THE OHIO MANUAL OF UNIFORM TRAFFIC CONTROL DEVICES (OMUTCD), A UNIFORMED LAW ENFORCEMENT OFFICER (AND OFFICIAL PATROL CAR WITH MOUNTED EMERGENCY FLASHING LIGHTS) SHALL BE PROVIDED FOR CONTROLLING TRAFFIC FOR THE FOLLOWING TASKS AS DIRECTED BY THE ENGINEER:

FOR LANE CLOSURES: DURING INITIAL SET-UP PERIODS, TEAR DOWN PERIODS, SUBSTANTIAL SHIFTS OF A CLOSURE POINT OR WHEN NEW LANE CLOSURE ARRANGEMENTS ARE INITIATED.

DURING THE ENTIRE ADVANCE PREPARATION AND CLOSURE SEQUENCE WHERE COMPLETE BLOCKAGE OF TRAFFIC IS REQUIRED.

DURING A TRAFFIC SIGNAL INSTALLATION.

LAW ENFORCEMENT OFFICERS (LEO'S) SHOULD NOT BE USED WHERE THE OMUTCD INTENDS THAT FLAGGERS BE USED. THE LEO'S ARE CONSIDERED TO BE EMPLOYED BY THE CONTRACTOR AND THE CONTRACTOR SHALL BE RESPONSIBLE FOR THEIR ACTIONS. ALTHOUGH THEY ARE EMPLOYED BY THE CONTRACTOR, THE PROJECT ENGINEER SHALL HAVE CONTROL OVER THEIR PLACEMENT. THE OFFICIAL PATROL CAR SHALL BE A PUBLIC SAFETY VEHICLE AS REQUIRED BY THE OHIO REVISED CODE. THE CONTRACTOR SHALL PROVIDE THE LEO WITH A TWO WAY COMMUNICATION DEVICE WHICH SHALL BE RETURNED TO THE CONTRACTOR AT THE END OF HIS/HER SHIFT.

LEO'S SHOULD NOT FORGO THEIR TRAFFIC CONTROL RESPONSIBILITIES TO APPREHEND MOTORISTS FOR ROUTINE TRAFFIC VIOLATIONS. HOWEVER, IF A MOTORIST'S ACTIONS ARE CONSIDERED TO BE RECKLESS, THEN PURSUIT OF THE MOTORIST IS APPROPRIATE.

THE CONTRACTOR SHALL MAKE ARRANGEMENTS FOR THESE SERVICES AND PROVIDE 72 HOURS ADVANCE NOTICE AS REQUIRED BY THE HIGHWAY PATROL LISTED BELOW:

OHIO STATE HIGHWAY PATROL
WAYNE COUNTY POST
1786 DOVER ROAD
WOOSTER, OH 44691
PH 330.264.0575

LAW ENFORCEMENT OFFICERS WITH PATROL CAR REQUIRED BY THE TRAFFIC MAINTENANCE TASKS ABOVE SHALL BE PAID FOR ON A UNIT PRICE (HOURLY) BASIS UNDER ITEM 614 - LAW ENFORCEMENT OFFICER WITH PATROL CAR FOR ASSISTANCE. THE FOLLOWING ESTIMATED QUANTITY HAS BEEN CARRIED TO THE GENERAL SUMMARY:

ITEM 614 - LAW ENFORCEMENT OFFICER WITH PATROL CAR FOR ASSISTANCE
40 HOURS

THE HOURS PAID SHALL INCLUDE MINIMUM SHOW-UP TIME REQUIRED BY THE LAW ENFORCEMENT AGENCY INVOLVED.

IF THE CONTRACTOR WISHES TO UTILIZE LEO'S FOR FLAGGING AND TRAFFIC CONTROL OTHER THAN FOR THAT REQUIRED IN THESE PLANS, THEY MAY DO SO AT THEIR OWN EXPENSE.

REVIEW OF DRAINAGE FACILITIES

BEFORE ANY WORK IS STARTED ON THE PROJECT AND AGAIN BEFORE FINAL ACCEPTANCE BY THE STATE, REPRESENTATIVES OF THE STATE AND THE CONTRACTOR, ALONG WITH LOCAL REPRESENTATIVES, SHALL MAKE AN INSPECTION OF ALL EXISTING SEWERS WHICH ARE TO REMAIN IN SERVICE AND WHICH MAY BE AFFECTED BY THE WORK. THE CONDITION OF THE EXISTING CONDUITS AND THEIR APPURTENANCE SHALL BE DETERMINED FROM FIELD OBSERVATIONS. RECORDS OF THE INSPECTION SHALL BE KEPT IN WRITING ALONG WITH PHOTOS BY THE STATE.

ALL NEW CONDUITS, INLETS, CATCH BASINS, AND MANHOLES CONSTRUCTED AS A PART OF THE PROJECT SHALL BE FREE OF ALL FOREIGN MATTER AND IN A CLEAN CONDITION BEFORE THE PROJECT WILL BE ACCEPTED BY THE STATE.

ALL EXISTING SEWERS INSPECTED INITIALLY BY THE ABOVE MENTIONED PARTIES SHALL BE MAINTAINED AND LEFT IN A CONDITION REASONABLY COMPARABLE TO THAT DETERMINED BY THE ORIGINAL INSPECTION. ANY CHANGE IN THE CONDITION RESULTING FROM THE CONTRACTOR'S OPERATIONS SHALL BE CORRECTED BY THE CONTRACTOR TO THE SATISFACTION OF THE ENGINEER.

PAYMENT FOR ALL OPERATIONS DESCRIBED ABOVE SHALL BE INCLUDED IN THE CONTRACT PRICE FOR THE PERTINENT 611 CONDUIT ITEMS.

CONNECTION BETWEEN EXISTING AND PROPOSED GUARDRAIL

WHEN IT IS NECESSARY TO SPLICE PROPOSED GUARDRAIL TO EXISTING GUARDRAIL, ONLY THE EXISTING GUARDRAIL SHALL BE CUT, DRILLED, OR PUNCHED. THE CONNECTION SHALL BE MADE USING A W-BEAM, BEAM SPLICE AS SHOWN IN AASHTO M 180-12, EXCEPT THE BEAM WASHERS ARE NOT TO BE USED. PAYMENT SHALL BE INCLUDED IN THE CONTRACT PRICE FOR THE RESPECTIVE GUARDRAIL ITEMS.

ITEM 203 - EMBANKMENT, AS PER PLAN

AT SPECIFIED LOCATIONS AND LOCATIONS AS DIRECTED BY THE ENGINEER, EMBANKMENT SHALL BE PLACED AS TO PROVIDE A SUITABLE AREA TO CONSTRUCT GUARDRAIL AND TO PROVIDE STRUCTURAL INTEGRITY OF THE ROADWAY SHOULDER.

AREAS WHERE EMBANKMENT MATERIAL IS TO BE PLACED SHALL BE SCALPED. THE REQUIREMENTS FOR BENCHING SHALL BE WAIVED. THE DEPTH OF LAYERS IN WHICH THE EMBANKMENT IS PLACED SHALL BE LIMITED TO EIGHT (8) INCHES IN THICKNESS. THE METHOD OF COMPACTION AND EQUIPMENT USED SHALL BE SUFFICIENT TO PROVIDE A MINIMUM OF 60 PERCENT OF RELATIVE COMPACTION.

AFTER THE EMBANKMENT HAS BEEN PLACED, THE AREAS SHALL BE FERTILIZED, SEEDED, MULCHED, AND WATERED AS PER ITEM 659. THE COST SHALL BE INCLUDED IN THIS ITEM FOR PAYMENT.

THE METHOD OF MEASUREMENT FOR EMBANKMENT MATERIAL SHALL BE BY THE NUMBER OF CUBIC YARDS MEASURED BY LOOSE VOLUME IN THE CARRIER AT THE WORK SITE, IN LIEU OF THE REQUIREMENTS OF 203.09. PAYMENT FOR ACCEPTED QUANTITIES WILL BE MADE AT THE CONTRACT UNIT BID PRICE PER CUBIC YARD FOR ITEM 203 - EMBANKMENT, AS PER PLAN AND SHALL INCLUDE ALL WORK DESCRIBED ABOVE.

LOCATIONS OF GUARDRAIL

THE GUARDRAIL PROTECTION PROVIDED IN THIS PLAN SHALL BE LOCATED IN THE FIELD TO ASSURE THAT THE INSTALLATION WILL AFFORD THE MAXIMUM PROTECTION FOR TRAFFIC. THIS LOCATION SHALL BE POSITIONED AS FAR AS POSSIBLE FROM THE EDGE OF PAVEMENT WHILE MAINTAINING PROPER GRADE IN FRONT OF GUARDRAIL AS PER STANDARD DRAWINGS AND PLAN DETAILS.

ITEM 202 - ANCHOR ASSEMBLY REMOVED, TYPE A

THIS ITEM SHALL INCLUDE THE REMOVAL OF THE EXISTING TYPE A, ANCHOR ASSEMBLY INCLUDING ALL POSTS, HARDWARE, RAIL ELEMENTS, AND CONCRETE ANCHORS. ALL ITEMS REMOVED SHALL BECOME THE PROPERTY OF THE CONTRACTOR AND SHALLBE PROPERLY DISPOSED OF.

THE EXISTING CONCRETE ANCHOR AND CONCRETE AT POSTS SHALL BE REMOVED ENTIRELY. ALL HOLES REMAINING AFTER REMOVAL SHALL BE FILLED WITH GRANULAR MATERIAL OR EXCESS MATERIAL RESULTING FROM GUARDRAIL CONSTRUCTION. ALL FILL MATERIAL SHALL BE THOROUGHLY COMPACTED AND LEVELED, AS DIRECTED BY THE ENGINEER.

PAYMENT FOR ALL OF THE ABOVE SHALL BE INCLUDED IN THE UNIT BID PRICE FOR ITEM 202, ANCHOR ASSEMBLY REMOVED, TYPE A.

ITEM 605 - 4" BASE PIPE UNDERDRAINS

INSTALL ITEM 405 - 4" BASE PIPE UNDERDRAINS ADJACENT TO STATE ROUTE 241 IN MOUNT EATON. THESE SHALL RUN ON EACH EDGE OF PAVEMENT AS DETAILED IN TYPICAL SECTION 3, EXTENDING FROM THE EXISTING CATCH BASINS JUST SOUTH OF US ROUTE 250, WHERE THE UNDERDRAINS SHALL DRAIN INTO, FOR A LENGTH OF 200 LINEAR FEET TO THE SOUTH FOLLOWING THE CURB LINE.

FILL THE VOID WITH MATERIAL IN ACCORDANCE TO CMS 405. THE BASE LAYER OF PAVEMENT SHALL BE ITEM 301, ASPHALT CONCRETE BASE, PG64-22, USING A THICKNESS EQUAL TO THE EXISTING PAVEMENT AFTER PLANING. SLOPE THE PIPES TO DRAIN NORTH INTO THE EXISTING CATCH BASINS AS DESCRIBED ABOVE.

ALL EQUIPMENT, MATERIALS, LABOR, AND INCIDENTALS NEEDED TO PERFORM THE ABOVE LISTED WORK SHALL BE PAID FOR PER LINEAR FOOT OF ITEM 405 - 4" BASE PIPE UNDERDRAINS.

A QUANTITY OF 400 FEET OF ITEM 605 - 4" BASE PIPE UNDERDRAINS IS CARRIED TO THE GENERAL SUMMARY.

SHEET NUM.										PART.				ITEM	ITEM EXT	GRAND TOTAL	UNIT	DESCRIPTION	SEE SHEET NO.
5	6	7	7A	9	10	13	14			01/SAE/OT	02/NHS/PV	03/NHS/BR	04/SAE/OT						
																		ROADWAY	
						75					12.5		62.5	202	38000	75	FT	GUARDRAIL REMOVED	
						1							1	202	42000	1	EACH	ANCHOR ASSEMBLY REMOVED, TYPE A	
						1					1			202	42040	1	EACH	ANCHOR ASSEMBLY REMOVED, TYPE T	
						143					143			203	20001	143	CY	EMBANKMENT, AS PER PLAN	7A
				28.32						20.96	7.36			209	60500	28.32	MILE	LINEAR GRADING	
						2					1		1	606	26100	2	EACH	ANCHOR ASSEMBLY, TYPE E	
		7									7			623	39500	7	EACH	MONUMENT BOX ADJUSTED TO GRADE	
		12									12			SPECIAL	69050100	12	EACH	MAILBOX SUPPORT SYSTEM, SINGLE	7
		2									2			SPECIAL	69050200	2	EACH	MAILBOX SUPPORT SYSTEM, DOUBLE	7
																		DRAINAGE	
			400								400			605	06000	400	FT	4" BASE PIPE UNDERDRAINS	
		38									38			611	98630	38	EACH	CATCH BASIN ADJUSTED TO GRADE	
		10									10			611	99150	10	EACH	INLET ADJUSTED TO GRADE	
		1									1			611	99654	1	EACH	MANHOLE ADJUSTED TO GRADE	
		4									4			SPECIAL	61199700	4	EACH	GAS VALVE BOX ADJUSTED TO GRADE	7
																		PAVEMENT	
	1,100									500	600			251	01030	1,100	CY	PARTIAL DEPTH PAVEMENT REPAIR (442)	
	25										25			253	02000	25	CY	PAVEMENT REPAIR	
				321,473						110,773	210,700			254	01000	321,473	SY	PAVEMENT PLANING, ASPHALT CONCRETE(1.50" - 3.25")	9
				2,774						2,052	722			304	20000	2,774	CY	AGGREGATE BASE	
				34,904						15,206	19,698			407	10000	34,904	GAL	TACK COAT	
				13,296						9,840	3,456			408	10001	13,296	GAL	PRIME COAT, AS PER PLAN	6
				8,791							8,791			442	10000	8,791	CY	ASPHALT CONCRETE SURFACE COURSE, 12.5 MM, TYPE A (446), PG70-22M	
				4,363						4,363				442	10000	4,363	CY	ASPHALT CONCRETE SURFACE COURSE, 12.5 MM, TYPE A (446), PG76-22M	
				5,388						5,388				442	10100	5,388	CY	ASPHALT CONCRETE INTERMEDIATE COURSE, 19 MM, TYPE A (446), PG64-28	
				703							703			442	20200	703	CY	ASPHALT CONCRETE INTERMEDIATE COURSE, 19 MM, TYPE A (448), PG64-28	
																		WATER WORK	
		3									3			638	98000	3	EACH	WATER WORK, MISC.:WATER VALVE ADJUSTED TO GRADE	7
																		TRAFFIC CONTROL	
					13.39						13.39			618	43000	13.39	MILE	CENTER LINE, RUMBLE STRIPE (ASPHALT CONCRETE)	
					1,183						1,183			621	00100	1,183	EACH	RPM	
					1,163						1,163			621	54000	1,163	EACH	RAISED PAVEMENT MARKER REMOVED	
						75					75			614	13312	75	EACH	BARRIER REFLECTOR, TYPE 2, BIDIRECTIONAL	
					31.58						31.58			642	00094	31.58	MILE	EDGE LINE, 6" (WHITE)	
					15.25						15.25			642	00290	15.25	MILE	CENTER LINE	
					1,028						1,028			644	00500	1,028	FT	STOP LINE	
					826						826			644	00600	826	FT	CROSSWALK LINE	
					55						55			644	00700	55	FT	TRANSVERSE/DIAGONAL LINE	
					4						4			644	01100	4	EACH	SCHOOL SYMBOL MARKING, 72"	
					1,079						1,079			644	01200	1,079	FT	PARKING LOT STALL MARKING	
					0.1						0.1			646	10010	0.1	MILE	EDGE LINE, 6"(WHITE)	
					0.05						0.05			646	10200	0.05	MILE	CENTER LINE	
																		STRUCTURE REPAIR (WAY-250-1731 SFN 8504776)	
							80					80		202	98200	80	FT	REMOVAL MISC.: JOINT SEALER	14
							80					80		516	31000	80	FT	JOINT SEALER	
							480					480		519	11100	480	SF	PATCHING CONCRETE STRUCTURE	
																		STRUCTURE REPAIR (WAY-250-1815 SFN 8504814)	
							10					10		202	11301	10	CY	PORTIONS OF STRUCTURE REMOVED, AS PER PLAN	14
							93					93		202	98200	93	FT	REMOVAL MISC.: JOINT SEALER	14
							6					6		511	34410	6	CY	CLASS QC2 CONCRETE, SUPERSTRUCTURE (APPROACH SLAB REPAIR)	
							4					4		511	34410	4	CY	CLASS QC2 CONCRETE, SUPERSTRUCTURE (BRIDGE DECK REPAIR)	
							186					186		516	31000	186	FT	JOINT SEALER	
																		MAINTENANCE OF TRAFFIC	
		193									193			614	12460	193	EACH	WORK ZONE MARKING SIGN	
25										12	13			614	13000	25	CY	ASPHALT CONCRETE FOR MAINTAINING TRAFFIC	
					31.58						31.58			614	21550	31.58	MILE	WORK ZONE CENTER LINE, CLASS III, 642 PAINT	
					1,028						1,028			614	26610	1,028	FT	WORK ZONE STOP LINE, CLASS III, 642 PAINT	
			40								40			614	11110	40	HOUR	LAW ENFORCEMENT OFFICER WITH PATROL CAR FOR ASSISTANCE	
																		INCIDENTALS	
										LS	LS	LS	LS	614	11000	LS		MAINTAINING TRAFFIC	
											3			619	16010	3	MNTH	FIELD OFFICE, TYPE B	
										LS	LS	LS	LS	623	10000	LS		CONSTRUCTION LAYOUT STAKES AND SURVEYING	
										LS	LS	LS	LS	624	10000	LS		MOBILIZATION	

CALCULATED JNC
CHECKED KCK

GENERAL SUMMARY

WAY-250-14.60

H:\ProjectData\103544\Design\Roadway\Sheets\103544_GG001.dgn

COUNTY	ROUTE	LOG POINT	TO LOG POINT	LENGTH MILE	LENGTH FEET	AVERAGE WIDTH LEFT SHOULDER	AVERAGE WIDTH MAINLINE (BETWEEN EDGE LINES)	AVERAGE WIDTH RIGHT SHOULDER	*TYPICAL-NUMBER (SEE SHEET 4 FOR TYPICALS)	PAVEMENT AREA LEFT SHOULDER	PAVEMENT AREA MAINLINE (BETWEEN EDGE LINES)	PAVEMENT AREA RIGHT SHOULDER
		SLM				FT	FT	FT		SY	SY	SY
WAY	250	14.60	14.61	0.01	53	6	48	6	1	35	283	35
WAY	250	14.61	17.29	2.68	14150	2	24	2	1	3144	37733	3144
WAY	250	17.29	17.31	0.02	106	SUSPEND AND RESUME OVER STRUCTURE						
WAY	250	17.31	18.13	0.82	4330	2	24	2	1	962	11547	962
WAY	250	18.13	18.15	0.02	106	SUSPEND AND RESUME OVER STRUCTURE						
WAY	250	18.15	18.32	0.17	898	2	24	2	1	200	2395	200
WAY	250	18.32	18.88	0.56	2957		30		2		9857	
WAY	250	18.88	18.99	0.11	581		40		2		2582	
WAY	250	18.99	19.25	0.26	1373		30		2		4577	
WAY	250	19.25	19.28	0.03	158		22		2		386	
WAY	250	19.28	19.29	0.01	53	SUSPEND AND RESUME OVER STRUCTURE						
WAY	250	19.29	19.31	0.02	106		22		2		259	
WAY	250	19.31	23.00	3.69	19483	8	18	8	4	17318	38966	17318
WAY	250	23.00	23.01	0.01	53	8	30	8	4	47	177	47
WAY	250	23.01	23.18	0.17	898	8	18	8	4	798	1796	798
WAY	250	23.18	26.65	3.47	18322	8	20	8	4	16286	40716	16286
WAY	250	26.65	26.70	0.05	264	8	26	8	3	235	763	235
WAY	250	26.70	26.92	0.22	1162	8	20	8	3	1033	2582	1033
WAY	250	26.92	27.06	0.14	739	8	34	8	3	657	2792	657
WAY	250	27.06	27.18	0.12	634	8	18	8	3	564	1268	564
WAY	250	27.18	30.32	3.14	16579	8	18	8	4	14737	33158	14737
WAY	250	EXTRA AREA FOR INTERSECTIONS										
WAY	250	EXTRA AREA FOR DRIVES AND MAILBOX APPROACHES										
WAY	250	EXTRA AREA FOR INTERSECTIONS										
WAY	250	EXTRA AREA FOR DRIVES AND MAILBOX APPROACHES										
WAY	250	SUBTOTAL		PLAN SPLIT 01/SAE/OT								
WAY	250	SUBTOTAL		PLAN SPLIT 02/NHS/PV								
WAY	241	2.68	2.72	0.04	186		28		3		579	
WAY	241	2.87	2.9	0.03	183.5		29		3		591	
WAY	241	SUBTOTAL		PLAN SPLIT 02/NHS/PV								
TOTAL TO GEN SUM				PLAN SPLIT 01/SAE/OT								
TOTAL TO GEN SUM				PLAN SPLIT 02/NHS/PV								

COUNTY	ROUTE	PLAN SPLIT 01/SAE/OT - SAFETY FUNDED BUGGY LANE TREATMENT 254 PAVEMENT PLANING, ASPHALT CONCRETE		407 TACK COAT 0.05	407 TACK COAT 0.09	442 ASPHALT CONCRETE INTERMEDIATE COURSE, 19MM, TYPE A (446), PG64-28		442 ASPHALT CONCRETE SURFACE COURSE, 12.5MM, TYPE A (446), PG76-22M		209 LINEAR GRADING	304 AGG. BASE 3.00	408 PRIME COAT 0.40
		INCH	SY	GAL/SY	GAL/SY	INCH	CY	INCH	CY	MILE	INCHES	GAL/SY
WAY	250											
WAY	250											
WAY	250											
WAY	250											
WAY	250											
WAY	250											
WAY	250											
WAY	250											
WAY	250											
WAY	250											
WAY	250											
WAY	250	3.25	36802	1732	3313	1.75	1789	1.50	1444	7.38	722	3464
WAY	250	3.25	101	5	10	1.75	5	1.50	4	0.02	2	10
WAY	250											
WAY	250	3.25	1697	80	153	1.75	83	1.50	67	0.34	34	160
WAY	250	3.25	34609	1629	3115	1.75	1683	1.50	1358	6.94	679	3258
WAY	250											
WAY	250											
WAY	250											
WAY	250											
WAY	250											
WAY	250	3.25	4498	225	405	1.75	219	1.50	188			
WAY	250	3.25	1750	88	158	1.75	86	1.50	73			
WAY	250											
WAY	250											
WAY	250		110773	5233	9973		5388		4363	20.96	2052	9840
WAY	250											
WAY	241											
WAY	241											
WAY	241											
TOTAL TO GEN SUM			110773	5233	9973		5388		4363	20.96	2052	9840
TOTAL TO GEN SUM												

COUNTY	ROUTE	PLAN SPLIT 02/NHS/PV - MAINLINE TREATMENT 254 PAVEMENT PLANING, ASPHALT CONCRETE		407 TACK COAT 0.05	407 TACK COAT 0.09	442 ASPHALT CONCRETE INTERMEDIATE COURSE, 19MM, TYPE A (448), PG64-28		442 ASPHALT CONCRETE SURFACE COURSE, 12.5MM, TYPE A (446), PG70-22M		209 LINEAR GRADING	304 AGG. BASE 3.00	408 PRIME COAT 0.40	AGGREGATE SHOULDER PROPOSED WIDTH SL	AGGREGATE SHOULDER PROPOSED WIDTH SR	AGGREGATE SHOULDER PROPOSED AREA
		INCH	SY	GAL/SY	GAL/SY	INCH	CY	INCH	CY	MILE	CY	GAL	FT	FT	SY
WAY	250	1.50	353		32			1.50	15	0.02	2	10	2	2	24
WAY	250	1.50	44021		3962			1.50	1835	5.36	525	2516	2	2	6289
WAY	250														
WAY	250	1.50	13471		1213			1.50	562	1.64	161	770	2	2	1925
WAY	250														
WAY	250	1.50	2795		252			1.50	117	0.34	34	160	2	2	400
WAY	250	1.50	9857		888			1.50	411						
WAY	250	1.50	2582		233			1.50	108						
WAY	250	1.50	4577		412			1.50	191						
WAY	250	1.50	386		35			1.50	17						
WAY	250														
WAY	250	1.50	259		24			1.50	11						
WAY	250	1.50	38966		3507			1.50	1624				2	2	8660
WAY	250	1.50	177		16			1.50	8				2	2	24
WAY	250														
WAY	250	1.50	1796		162			1.50	75				2	2	400
WAY	250	1.50	40716		3665			1.50	1697				2	2	8144
WAY	250	3.25	1233	62	111	1.75	60	1.50	52						
WAY	250	3.25	4648	233	419	1.75	226	1.50	194						
WAY	250	3.25	4106	206	370	1.75	200	1.50	172						
WAY	250														
WAY	250	3.25	2396	120	216	1.75	117	1.50	100						
WAY	250	1.50	33158		2985			1.50	1382				2	2	7369
WAY	250														
WAY	250	1.50	1735		157			1.50	73						
WAY	250	1.50	1451		131			1.50	61						
WAY	250	3.25	757	38	69	1.75	37	1.50	32						
WAY	250	3.25	90	5	9	1.75	5	1.50	4						
WAY	250														
WAY	250		209530	664	18868		645		8741	7.36	722	3456			
WAY	241	3.25	579	29	53	1.75	29	1.50	25						
WAY	241	3.25	591	30	54	1.75	29	1.50	25						
WAY	241		1170	59	107		58		50						
TOTAL TO GEN SUM			210700	723	18975		703		8791	7.36	722	3456			
TOTAL TO GEN SUM															

CALCULATED JNC
CHECKED KCK

PAVEMENT AND SHOULDER DATA

WAY-250-14.60

I:\ProjectData\103544\Design\Roadway\Sheets\103544_G001.dgn

AUXILIARY & LONG LINE MARKINGS

PLAN SPLIT	COUNTY	ROUTE	STATION / SLM FROM	STATION / SLM TO	HIGHWAY MILES	614 WORK ZONE CENTER LINE, CLASS III, 642 PAINT	614 WORK ZONE STOP LINE, CLASS III, 642 PAINT		618 CENTER LINE, RUMBLE STRIPE (ASPHALT CONCRETE)		642, TYPE 1 EDGE LINE, 6" (WHITE)	642, TYPE 1 CENTER LINE (SOLID LINE EQUIVALENT)	642, TYPE 1 CENTER LINE (TOTAL PAY QUANTITY)		644 AUXILIARY MARKINGS (704.04) STOP LINE	644 CROSSWALK LINE	644 SCHOOL SYMBOL MARKING (72 INCH)	644 TRANSVERSE/DIAGONAL LINE	644 PARKING LOT STALL MARKING - (SEE DETAIL ON SHEET 11)		646 EDGE LINE, 6" (WHITE)	646 CENTER LINE (SOLID LINE EQUIVALENT)	646 CENTER LINE (TOTAL PAY QUANTITY)	
						MILE	FT		MILE		MILE	MILE	MILE		FT	FT	EACH	FT	FT		MILE	MILE	MILE	
02/NHS/PV	WAY	250	14.60	30.32	15.72	31.44	988		13.39		31.44	22.49	15.18		988	826	4	55	1,079		0.10	0.05	0.05	
02/NHS/PV	WAY	241	2.68	2.72	0.04	0.08	28				0.08	0.08	0.04		28									
02/NHS/PV	WAY	241	2.87	2.90	0.03	0.06	12				0.06	0.06	0.03		12									
TOTALS					15.72	31.58	1,028		13.39		31.58		15.25		1,028	826	4	55	1,079		0.10		0.05	

RAISED PAVEMENT MARKERS

PLAN SPLIT	COUNTY	ROUTE	STATION/SLM FROM	STATION/SLM TO	DETAIL	621 RAISED PAVEMENT MARKER REMOVED	621 RPM	PRISMATIC RETRO-REFLECTOR TYPES ONE-WAY WHITE	TWO-WAY YELLOW / YELLOW	TWO-WAY BLUE / BLUE	REMARKS
						EACH	EACH	EACH			
02/NHS/PV	WAY	250	14.60	14.69	GAP	6	6		6		CONTINUOUS ROUTE TREATMENT
			14.69	14.83	15	18	18		18		HORIZONTAL CURVE (40 FT SPACING)
			14.83	14.93	GAP	7	7		7		CONTINUOUS ROUTE TREATMENT
			14.93	15.11	15	24	24		24		HORIZONTAL CURVE (40 FT SPACING)
			15.11	16.46	GAP	89	89		89		CONTINUOUS ROUTE TREATMENT
			16.46	16.54	15	11	11		11		HORIZONTAL CURVE (40 FT SPACING)
			16.54	18.17	GAP	108	108		108		CONTINUOUS ROUTE TREATMENT
			18.17	19.75	18		18			18	FIRE HYDRANTS IN THE VILLAGE OF APPLE CREEK
			19.75	22.78	GAP	200	200		200		CONTINUOUS ROUTE TREATMENT
			22.82	23.23	15	54	54		54		HORIZONTAL CURVE (40 FT SPACING)
			22.86	24.21	GAP	89	89		89		CONTINUOUS ROUTE TREATMENT
			24.21	24.53	6	85	85	64	21		STOP APPROACHES AT KIDRON RD
			24.53	26.76	GAP	147	147		147		CONTINUOUS ROUTE TREATMENT
			26.76	27.22	6	121	121	90	31		OVERLAPPING APPROACHES BETWEEN SLM 26.92 AND SLM 27.06
			26.92	27.16	18		2			2	FIRE HYDRANTS IN THE VILLAGE OF MT. EATON
			27.22	30.32	GAP	205	205		205		CONTINUOUS ROUTE TREATMENT
TOTAL CARRIED TO GENERAL SUMMARY						1,163	1,183				

DETAIL	DESCRIPTION
1	MULTILANE UNDIVIDED TYPICAL SPACING
2	TAPERED ACCEL. LANE
3	DECELERATION LANE
4	PARALLEL ACCEL LANE
5	MULTILANE DIVIDED/EXPRESSWAY
6	STOP APPROACH
7	2 LANE APPR. WITH TURN LANE
8	THROUGH APPROACH
9	3 LANE APPR. WITH TURN LANE
10	3 LANE DIVIDED TO 2 LANE TRANSITION
11	3 LANE UNDIVIDED TO 2 LANE TRANSITION
12	TWO LNAE NARROW BRIDGE
13	TWO WAY LEFT TURN LANE
14	ONE LANE BRIDGE
15	HORIZONTAL CURVE
16	HORIZONTAL CURVE ALT.
18	FIRE HYDRANT
GAP	CENTER LINE AT 80 FT. TYP.

NOTES:

1) STRIPE ALL THROUGH LANES TO MATCH EXISTING WIDTHS ACCORDING TO C&MS 641.08.A.

2) USE ITEM 642 PAINT TYPE I FOR ALL WORK ZONE MARKINGS.

3) USE 646 MARKINGS ON CONCRETE BRIDGE DECKS.

4) THOUGH NONE WERE FOUND AT THE TIME OF PLAN COMPLETION, INSTALL ONE BLUE RPM IN FRONT OF ALL FIRE HYDRANTS FOUND WITHIN THE PROJECT LIMITS.

CALCULATED JNC
CHECKED KCK

PAVEMENT MARKINGS AND RPMS

WAY-250-14.60

I:\ProjectData\03544\Design\Roadway\Sheets\03544_GS001.dgn

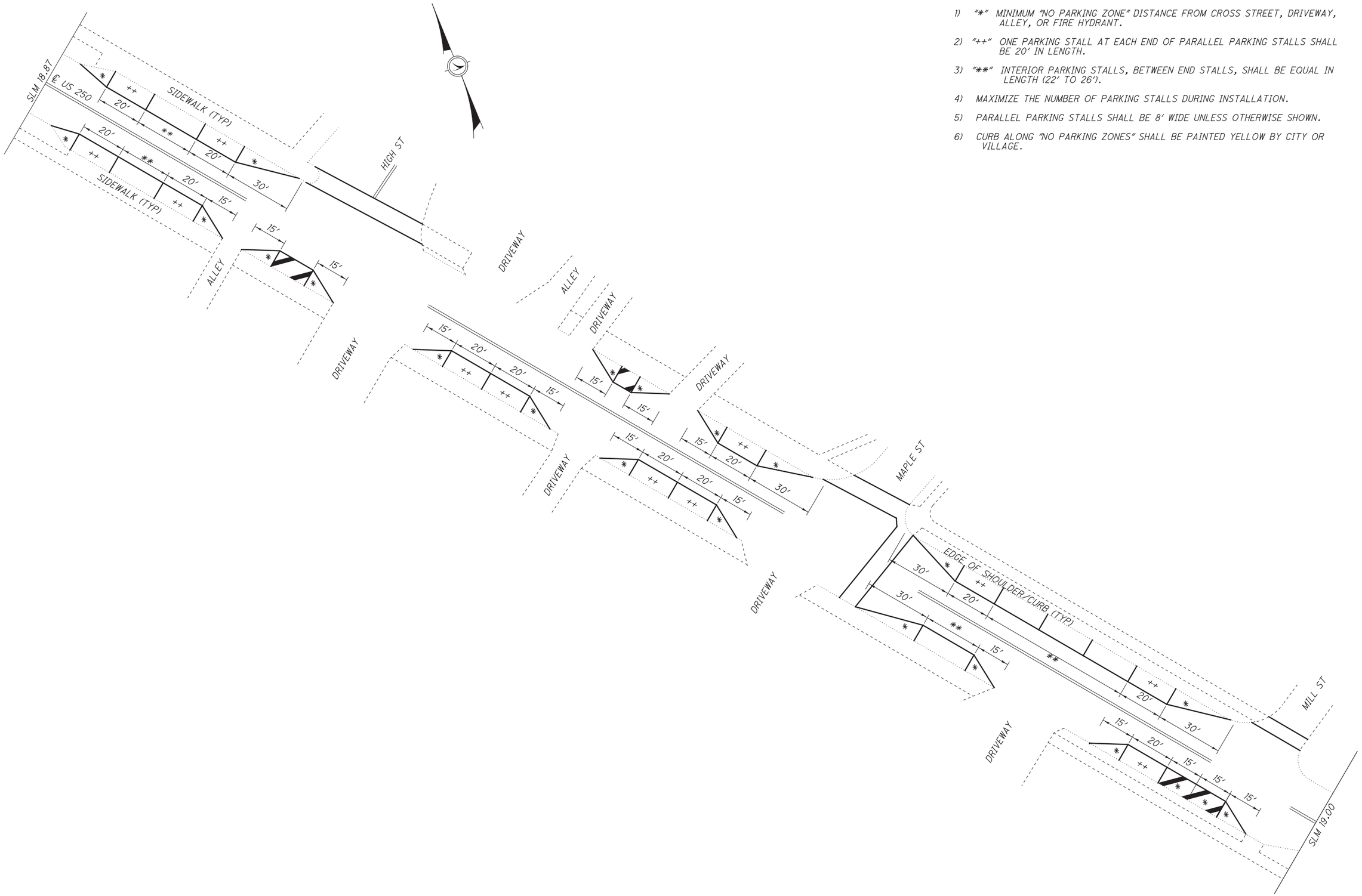

LEGEND & NOTES

1) "*" MINIMUM "NO PARKING ZONE" DISTANCE FROM CROSS STREET, DRIVEWAY, ALLEY, OR FIRE HYDRANT.

2) "++" ONE PARKING STALL AT EACH END OF PARALLEL PARKING STALLS SHALL BE 20′ IN LENGTH.

3) "**" INTERIOR PARKING STALLS, BETWEEN END STALLS, SHALL BE EQUAL IN LENGTH (22′ TO 26′).

4) MAXIMIZE THE NUMBER OF PARKING STALLS DURING INSTALLATION.

5) PARALLEL PARKING STALLS SHALL BE 8′ WIDE UNLESS OTHERWISE SHOWN.

6) CURB ALONG "NO PARKING ZONES" SHALL BE PAINTED YELLOW BY CITY OR VILLAGE.

CALCULATED JNC
CHECKED KCK

APPLE CREEK PARKING STALL DETAILS

WAY-250-14.60

I:\ProjectData\103544\Design\Roadway\Sheets\103544_TD001.dgn

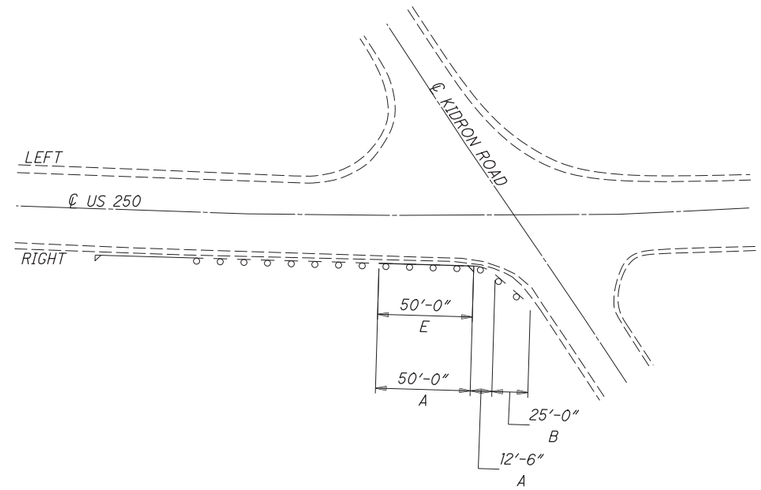

ESTIMATED QUANTITIES: SLM 24.20

LABEL	ITEM	QUANTITY			UNIT	DESCRIPTION
		LEFT	RIGHT	TOTAL		
A	202		62.5	62.5	FT	GUARDRAIL REMOVED
B	202		1.00	1.00	EA	ANCHOR ASSEMBLY REMOVED, TYPE A
E	606		1.00	1.00	EA	AHCHOR ASSEMBLY, TYPE E
	626		4	4	EA	BARRIER REFLECTOR

ALL QUANTITIES CARRIED TO GUARDRAIL SUBSUMMARY

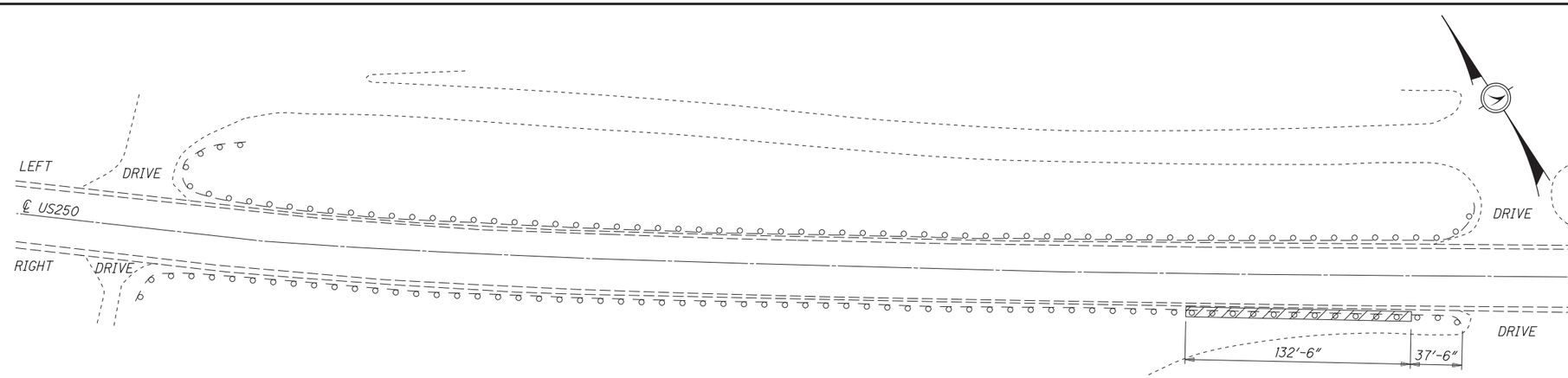

ESTIMATED QUANTITIES: SLM 29.20

LABEL	ITEM	QUANTITY			UNIT	DESCRIPTION
		LEFT	RIGHT	TOTAL		
	203		15	15	CY	EMBANKMENT, AS PER PLAN
	626	12	12	24	EA	BARRIER REFLECTOR

ALL QUANTITIES CARRIED TO GUARDRAIL SUBSUMMARY

CALCULATED KCK
CHECKED DJV

GUARDRAIL DETAILS
GUARDRAIL AT SLM 24.20 AND SLM 29.20

WAY-250-14.60

I:\ProjectData\103544\Design\Roadway\Sheets\103544_GR001.dgn

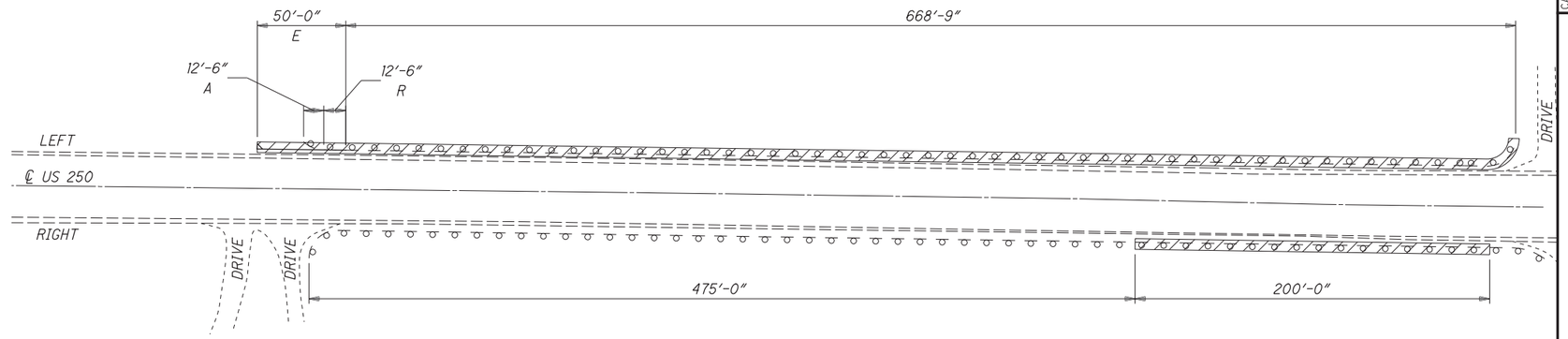

ESTIMATED QUANTITIES: SLM 29.72

LABEL	ITEM	QUANTITY			UNIT	DESCRIPTION
		LEFT	RIGHT	TOTAL		
A	202	12.50		12.50	FT	GUARDRAIL REMOVED
R	202	1		1	EA	ANCHOR ASSEMBLY REMOVED, TYPE T
E	606	1		1	EA	AHCHOR ASSEMBLY, TYPE E
	203	80	23	103	CY	EMBANKMENT, AS PER PLAN
	626	10	10	20	EA	BARRIER REFLECTOR

ALL QUANTITIES CARRIED TO GUARDRAIL SUBSUMMARY

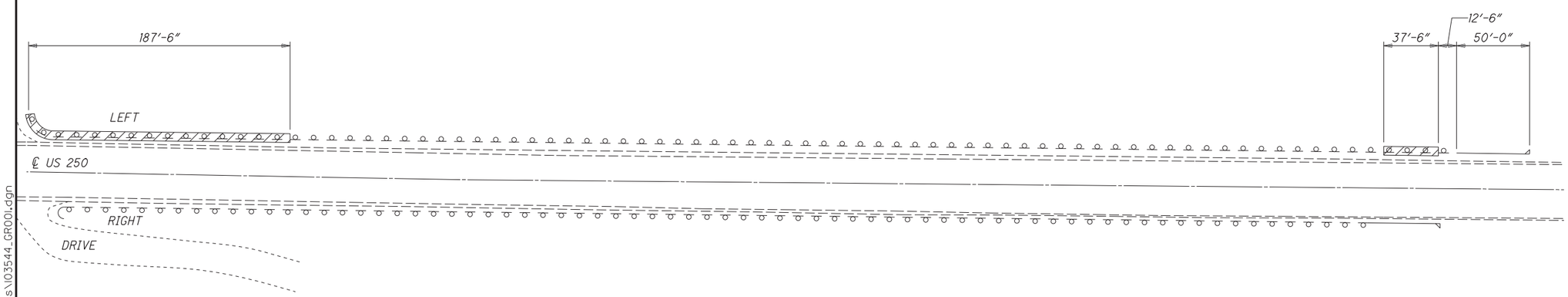

ESTIMATED QUANTITIES: SLM 29.90

LABEL	ITEM	QUANTITY			UNIT	DESCRIPTION
		LEFT	RIGHT	TOTAL		
	203	25		25	CY	EMBANKMENT, AS PER PLAN
	626	14	13	27	EA	BARRIER REFLECTOR

ALL QUANTITIES CARRIED TO GUARDRAIL SUBSUMMARY

GUARDRAIL SUBSUMMARY

ITEM	EXTENSION	QUANTITY FROM GUARDRAIL AT SLM:				TOTAL QUANTITY	UNIT	DESCRIPTION
		24.20	29.20	29.72	29.90			
202	38000	62.50		12.50		75.00	FT	GUARDRAIL REMOVED
202	42000	1				1	EA	ANCHOR ASSEMBLY REMOVED, TYPE A
202	42040			1		1	EA	ANCHOR ASSEMBLY REMOVED, TYPE T
203	20001		15	103	25	143	CY	EMBANKMENT, AS PER PLAN
606	26100	1		1		2	EA	AHCHOR ASSEMBLY, TYPE E
626	00100	4	24	20	27	75	EA	BARRIER REFLECTOR

ALL QUANTITIES CARRIED TO GENERAL SUMMARY

CALCULATED KCK
CHECKED DJV

GUARDRAIL DETAILS
GUARDRAIL AT SLM 29.72 AND SLM 29.90

WAY-250-14.60

I:\ProjectData\03544\Design\Roadway\Sheets\03544_GR001.dgn

DESIGN SPECIFICATIONS

DESIGN SPECIFICATIONS: THIS STRUCTURE CONFORMS TO "STANDARD SPECIFICATIONS FOR HIGHWAY BRIDGES" ADOPTED BY THE AMERICAN ASSOCIATION OF STATE HIGHWAY AND TRANSPORTATION OFFICIALS, 2002, INCLUDING THE 2003-2007 INTERIM SPECIFICATIONS AND THE ODOT BRIDGE DESIGN MANUAL.

DESIGN DATA

CONCRETE CLASS QC1 - COMPRESSIVE STRENGTH 4,500 PSI
CONCRETE CLASS QC2 - COMPRESSIVE STRENGTH 4,500 PSI
REINFORCING STEEL - ASTM A615 OR A998, GRADE 60, MINIMUM YIELD STRENGTH 60,000 PSI

EXISTING PLANS

THE FOLLOWING EXISTING PLANS MAY BE INSPECTED IN THE ODOT DISTRICT 3 OFFICE IN ASHLAND, OHIO:

STRUCTURE NUMBER:	PLAN NAME:	DATE:
WAY-250-1731	D03 DECK OVERLAY FY2010	2010
	WAY-250-22.531a	1997
	WAY-250-16.57	1955
WAY-250-1815	WAY-250-14.45	2011
	WAY-250-22.27	1993
	WAY-250-17.40	1985

EXISTING STRUCTURE VERIFICATION

DETAILS AND DIMENSIONS SHOWN ON THESE PLANS PERTAINING TO THE EXISTING STRUCTURES HAVE BEEN OBTAINED FROM PLANS OF THE EXISTING STRUCTURES AND FROM FIELD OBSERVATIONS AND MEASUREMENTS. CONSEQUENTLY, THEY ARE INDICATIVE OF THE EXISTING STRUCTURES AND THE PROPOSED WORK BUT THEY SHALL BE CONSIDERED TENTATIVE AND APPROXIMATE. THE CONTRACTOR IS REFERRED TO CMS SECTIONS 102.05 AND 105.02.

BASE CONTRACT BID PRICES UPON A RECOGNITION OF THE UNCERTAINTIES DESCRIBED ABOVE AND UPON A PREBID EXAMINATION OF THE EXISTING STRUCTURES. HOWEVER, THE DEPARTMENT WILL PAY FOR ALL PROJECT WORK BASED UPON ACTUAL DETAILS AND DIMENSIONS WHICH HAVE BEEN VERIFIED IN THE FIELD.

IN-STREAM WORK RESTRICTION

THE CONTRACTOR SHALL TAKE ALL PRECAUTIONS TO AVOID CONSTRUCTION IN AND/OR LIMIT DEMOLITION DEBRIS FROM ENTERING STREAMS OR WETLANDS. ANY MATERIAL THAT DOES FALL INTO STREAMS OR WETLANDS SHALL BE REMOVED AS SOON AS POSSIBLE.

ALL PROJECTS INVOLVING JURISDICTIONAL WATERS OF THE UNITED STATES STREAMS, RIVERS, NON-ISOLATED WETLANDS) AND/OR ISOLATED WETLANDS ARE SUBJECT TO REGULATION UNDER SECTIONS 404 AND 401 OF THE CLEAN WATER ACT, AND POSSIBLY OHIO EPA ISOLATED WETLAND LAW. IT IS ANTICIPATED THAT NO IN-STREAM WORK, OR WORK UNDER THE STREAM'S ORDINARY HIGH WATER MARK (OHWM) WILL BE NEEDED. THEREFORE NO WATERWAY PERMITS HAVE BEEN GRANTED AND NO IN-STREAM WORK IS ALLOWED.

SHOULD WORK (EITHER TEMPORARY OR PERMANENT) IN THE STREAM BE NEEDED; IT WILL REQUIRE A PERMIT AND AUTHORIZATION BY THE UNITED STATES ARMY CORPS OF ENGINEERS (USACE). THE CONTRACTOR SHALL NOT UTILIZE FILLS BELOW OHWM UNTIL SUCH ACTIVITY IS AUTHORIZED BY THE USACE. DETAILS OF THIS REQUIREMENT ARE DESCRIBED IN ODOT'S SUPPLEMENTAL SPECIFICATION 832.09.

USACE DEFINITION OF OHWM - THE ORDINARY HIGH WATER MARK IS THE LINE ON THE SHORES ESTABLISHED BY THE FLUCTUATIONS OF WATER AND INDICATED BY PHYSICAL CHARACTERISTICS SUCH AS A CLEAR, NATURAL LINE IMPRESSED ON THE BANK; SHELVING; CHANGES IN THE CHARACTER OF THE SOIL; DESTRUCTION OF TERRESTRIAL VEGETATION; THE PRESENCE OF LITTER AND DEBRIS; OR THE APPROPRIATE MEANS THAT CONSIDER THE CHARACTERISTICS OF THE SURROUNDING AREAS.

ACCOMMODATING BRIDGE RAILING REMOVAL AND RE-ERECTION

TO ACCOMMODATE THE PLANNED WORK, THE EXISTING BRIDGE RAILING MAY BE REMOVED DURING CONSTRUCTION AT THE CONTRACTOR'S DISCRETION. IF THE RAILING IS REMOVED, ENSURE ALL PERTINENT MAINTENANCE OF TRAFFIC MEASURES ARE IMPLEMENTED INCLUDING THE USE OF PORTABLE CONCRETE BARRIER WITHIN THE WORK ZONE FOR THE STRUCTURE. ONLY REMOVE THE GUARDRAIL WITH THE PRIOR APPROVAL OF THE ENGINEER. THE GUARDRAIL MAY ONLY BE REMOVED WHILE WORK IS BEING PERFORMED; REINSTALL ALL GUARDRAIL WHEN WORKERS ARE NOT PRESENT. UPON COMPLETION OF THE WORK, REINSTALL THE GUARDRAIL.

ALL COSTS INCLUDING LABOR, MATERIALS, EQUIPMENT, AND INCIDENTALS NEEDED FOR THE ABOVE DESCRIBED WORK WILL BE PAID FOR INCIDENTAL TO THE ITEMS OF WORK THAT THE GUARDRAIL IS REMOVED TO PERFORM.

ITEM 202 - PORTIONS OF STRUCTURE REMOVED, AS PER PLAN

THIS ITEM SHALL INCLUDE THE ELEMENTS INDICATED IN THE PLANS AND GENERAL NOTES. ITEMS TO BE REMOVED INCLUDE ALL EXISTING MATERIALS BEING REPLACED BY NEW CONSTRUCTION AND MISCELLANEOUS ITEMS THAT ARE NOT SHOWN TO BE INCORPORATED INTO THE FINAL CONSTRUCTION AND ARE DIRECTED TO BE REMOVED BY THE ENGINEER. THE USE OF EXPLOSIVES, HEADACHE BALLS AND/OR HOE-RAMS WILL NOT BE PERMITTED. THE METHOD OF REMOVAL SHALL BE APPROVED BY THE ENGINEER. PERFORM ALL WORK IN A MANNER THAT WILL NOT CUT, ELONGATE OR DAMAGE THE EXISTING REINFORCING STEEL TO BE PRESERVED. THE WEIGHT OF THE HAMMERS SHALL NOT BE MORE THAN 60 POUNDS. DO NOT PLACE PNEUMATIC HAMMERS IN DIRECT CONTACT WITH REINFORCING STEEL THAT IS TO BE RETAINED IN THE REBUILT STRUCTURE. SUBMIT CONSTRUCTION PLANS ACCORDING TO CMS 501.05.

CUT LINE CONSTRUCTION JOINT PREPARATION: SAW CUT BOUNDARIES OF PROPOSED CONCRETE REMOVALS 1 INCH DEEP. REMOVE CONCRETE TO A ROUGH SURFACE. LEAVE THE EXISTING REINFORCING STEEL, IF REQUIRED IN THE PLANS, IN PLACE. PRIOR TO CONCRETE PLACEMENT, ABRASIVELY CLEAN JOINT SURFACES AND EXISTING EXPOSED REINFORCEMENT TO REMOVE LOOSE AND DISINTEGRATED CONCRETE AND LOOSE RUST. THOROUGHLY CLEAN THE JOINT SURFACE AND EXPOSED REINFORCEMENT OF ALL DIRT, DUST, RUST OR OTHER FOREIGN MATERIAL BY THE USE OF WATER, AIR UNDER PRESSURE, OR OTHER METHODS THAT PRODUCE SATISFACTORY RESULTS. EXISTING REINFORCING STEEL DOES NOT HAVE TO HAVE A BRIGHT STEEL FINISH, BUT REMOVE ALL PACK AND LOOSE RUST. THOROUGHLY DRENCH EXISTING CONCRETE SURFACES WITH CLEAN WATER AND ALLOW TO DRY TO A DAMP CONDITION BEFORE PLACING CONCRETE.

PAYMENT FOR ALL OF THE ABOVE SHALL BE AT THE UNIT PRICE BID PER CUBIC YARD FOR THE ABOVE ITEMS WHICH SHALL INCLUDE ALL LABOR, EQUIPMENT, MATERIALS AND INCIDENTALS NECESSARY TO COMPLETE THE ABOVE WORK.

ITEM 202 - REMOVAL, MISC.: JOINT SEALER

REMOVE THE EXISTING JOINT SEALER IN ITS ENTIRETY AS SPECIFIED ON THE DETAILED DRAWINGS INCLUDED IN THIS PLAN.

ITEM 614 - MAINTAINING TRAFFIC FOR STRUCTURE WAY-250-1731 AND WAY-250-1815

TWO WAY TRAFFIC SHALL BE MAINTAINED AT ALL TIMES EXCEPT THAT THROUGH TRAFFIC ON THESE STRUCTURES MAY HAVE A LANE CLOSURE USING PORTABLE CONCRETE BARRIER AND SIGNALIZED CLOSURE AS PER STANDARD CONSTRUCTION DRAWING MT-96.11.

ALL WORK AND TRAFFIC CONTROL DEVICES SHALL BE IN ACCORDANCE WITH CMS 614 AND OTHER APPLICABLE PORTIONS OF THE SPECIFICATIONS, AS WELL AS THE OHIO MANUAL OF UNIFORM TRAFFIC CONTROL DEVICES. PAYMENT FOR ALL LABOR, EQUIPMENT AND MATERIALS SHALL BE INCLUDED IN THE LUMP SUM CONTRACT PRICE FOR ITEM 614, MAINTAINING TRAFFIC, UNLESS SEPARATELY ITEMIZED IN THE PLAN.

PLACEMENT OF ADJACENT CONCRETE POURS

DO NOT PLACE ADJACENT CONCRETE POURS SIMULTANEOUSLY. ALLOW SUFFICIENT TIME FOR THE FIRST POUR TO CURE TO THE POINT FORMS CAN BE STRIPPED WITHOUT DETRIMENT TO THE POUR BEFORE PLACING THE SECOND POUR. ALL CONSTRUCTION JOINTS NOT SPECIFICALLY LABELED IN THE PLANS AS OPTIONAL ARE TO BE PERFORMED AS DETAILED ABOVE. SHOULD THE CONTRACTOR FAIL TO PERFORM THE CONSTRUCTION JOINT AS DESCRIBED, THE ENGINEER WILL DIRECT THE CONTRACTOR TO REMOVE THE INADEQUATELY PLACED CONCRETE AND REPLACE IT AS DESCRIBED ABOVE AT NO COST TO THE DEPARTMENT. PAYMENT WILL NOT BE MADE FOR INADEQUATELY PLACED CONCRETE NOT REPLACED.

ALL LABOR, MATERIAL, EQUIPMENT, AND INCIDENTALS NEEDED TO PERFORM THE DESCRIBED WORK IS TO BE CONSIDERED INCIDENTAL TO THE RESPECTIVE CONCRETE ITEM AND WILL BE PAID FOR UNDER THAT CONTRACT BID PRICE.

EXISTING REINFORCING STEEL

EXISTING REINFORCING STEEL, WHEN SHOWN, IS DETAILED FOR REPRESENTATION PURPOSES ONLY. IT IS NOT DETAILED TO SCALE. WHEN PERFORMING ALL REPAIR OR PATCHING WORK, TAKE UTMOST CARE TO NOT DAMAGE THE EXISTING REINFORCING STEEL. SHOULD THE EXISTING REINFORCING STEEL BE DAMAGED IN THE COURSE OF PERFORMING THE WORK, REPLACE THE DAMAGED STEEL AT NO COST TO THE DEPARTMENT. COAT ALL EXPOSED REINFORCING STEEL WITH AN APPROVED EPOXY COATING MATERIAL AND ALLOW SUFFICIENT CURING TIME PRIOR TO PLACING NEW CONCRETE. COST FOR THE ABOVE WORK WILL BE CONSIDERED INCIDENTAL TO THE APPROPRIATE REPAIR OR PATCHING ITEM.

REFERENCES MADE TO STANDARD BRIDGE DRAWING(S)

STANDARD BRIDGE DRAWING(S) AS-1-15 DATED 7/17/15

STRUCTURE SUMMARY

ITEM	QUANTITY			UNIT	DESCRIPTION
	WAY-250-1731	WAY-250-1815	TOTAL		
202	80	93	173	FT	REMOVAL, MISC.: JOINT SEALER
202		10	10	CY	PORTIONS OF STRUCTURE REMOVED, AS PER PLAN
511		4	4	CY	CLASS QC2 CONCRETE, SUPERSTRUCTURE (BRIDGE DECK REPAIR)
511		6	6	CY	CLASS QC2 CONCRETE, SUPERSTRUCTURE (APPROACH SLAB REPAIR)
516	80	186	266	FT	JOINT SEALER
519	480		480	SF	PATCHING CONCRETE STRUCTURE

ALL QUANTITIES CARRIED TO GENERAL SUMMARY

CALCULATED JNC
CHECKED KCK

STRUCTURE NOTES AND QUANTITIES

WAY-250-14.60

i:\ProjectData\103544\Design\Structures\GENERAL SHEETS\Sheets\103544_SN001.dgn

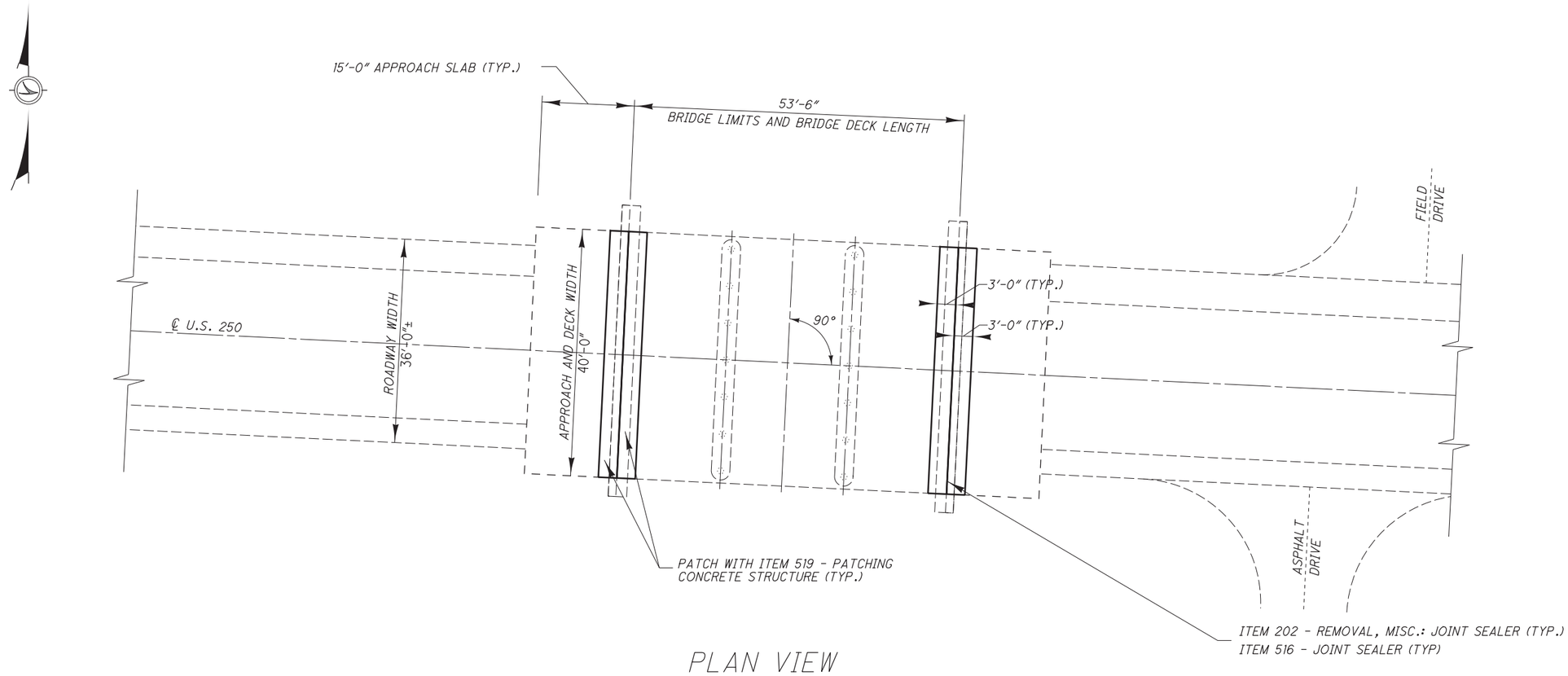

PLAN VIEW

NOTES

PERFORM ALL JOINT SEALING AFTER ALL REPAIR WORK HAS BEEN COMPLETED.

USE EXTREME CARE WHEN PERFORMING ALL ITEMS THAT REQUIRE ANY REMOVAL OF THE EXISTING STRUCTURE AS TO NOT DAMAGE ANY EXISTING REINFORCING STEEL; THE REINFORCING STEEL IS TO REMAIN IN PLACE AND NOT BE REMOVED IN THE REMOVAL PROCESS. CLEAN EXPOSED REINFORCING STEEL AS PER ITEM 848 WHERE APPLICABLE AND DEEMED NECESSARY BY THE ENGINEER. SHOULD ANY REINFORCING STEEL BE DAMAGED AS A RESULT OF ANY WORK PERFORMED, REPAIR OR REPLACE THE DAMAGED AREA AS DIRECTED. COAT ALL EXISTING EXPOSED AND NEW REINFORCING STEEL WITH AN APPROVED EPOXY MATERIAL PRIOR TO PLACING ANY ENCAPSULATING MATERIAL.

WAY-250-17.31 SFN: 8504776 (03/NHS/BR)

ITEM	EXTENSION	QUANTITY	UNIT	DESCRIPTION
202	98200	80	FT	REMOVAL, MISC.: JOINT SEALER
519	11100	480	SF	PATCHING CONCRETE STRUCTURE
516	31000	80	FT	JOINT SEALER

ALL QUANTITIES CARRIED TO STRUCTURE SUBSUMMARY

ODOT DISTRICT THREE
OFFICE OF PLANNING
AND ENGINEERING
ASHLAND, OHIO

DESIGNED	DRAWN	REVIEWED	DATE
JNC	JNC	DJV	11/2017
CHECKED	REVISED	STRUCTURE FILE NUMBER	
KCK	---	8504776	

STRUCTURE DETAILS
STRUTURE WAY-250-1731
OVER BRANCH OF APPLE CREEK

WAY-250-14.60
PID No. 103544

i:\ProjectData\103544\Design\Structures\WAY250_173IC\Sheets\250_173IC_SG001.dgn

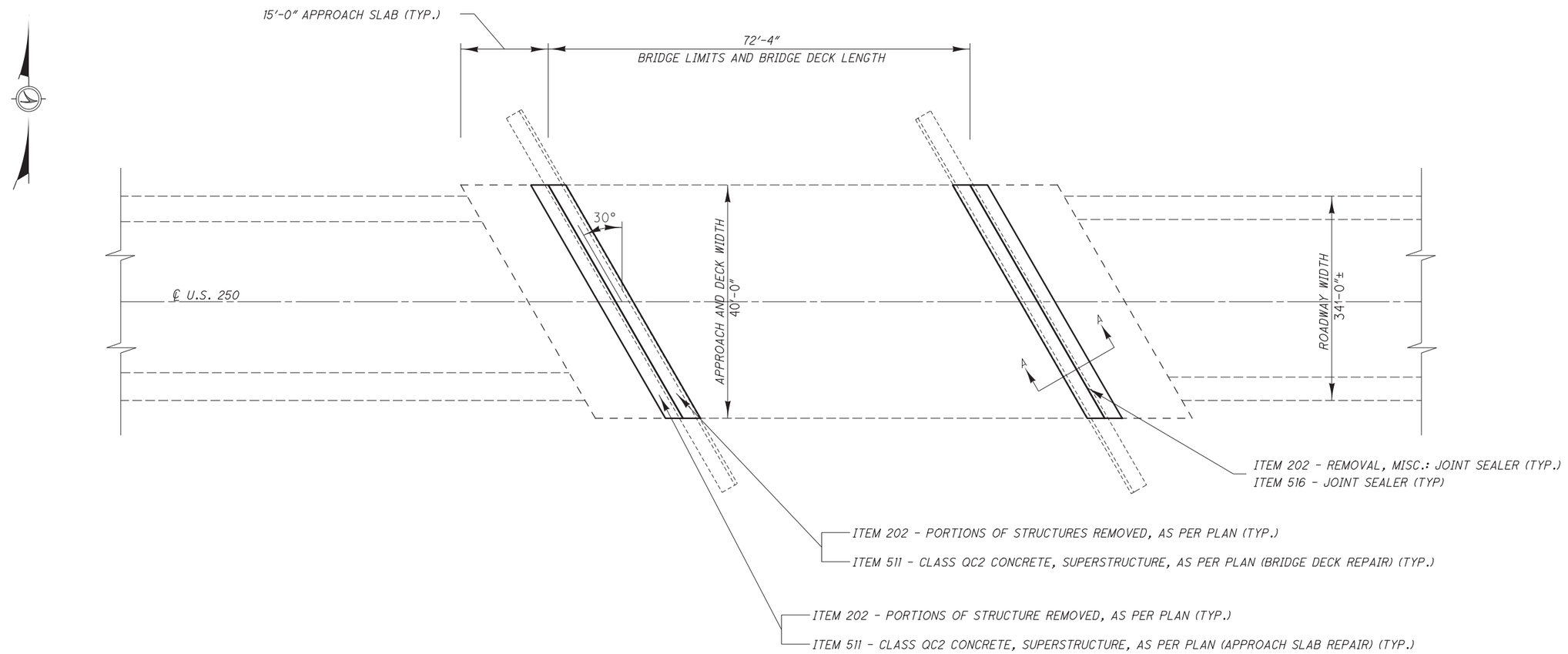

PLAN VIEW

NOTES

PERFORM ALL JOINT SEALING AFTER ALL REPAIR WORK HAS BEEN COMPLETED.

USE EXTREME CARE WHEN PERFORMING ALL ITEMS THAT REQUIRE ANY REMOVAL OF THE EXISTING STRUCTURE AS TO NOT DAMAGE ANY EXISTING REINFORCING STEEL; THE REINFORCING STEEL IS TO REMAIN IN PLACE AND NOT BE REMOVED IN THE REMOVAL PROCESS. CLEAN EXPOSED REINFORCING STEEL AS PER ITEM 848 WHERE APPLICABLE AND DEEMED NECESSARY BY THE ENGINEER. SHOULD ANY REINFORCING STEEL BE DAMAGED AS A RESULT OF ANY WORK PERFORMED, REPAIR OR REPLACE THE DAMAGED AREA AS DIRECTED. COAT ALL EXISTING EXPOSED AND NEW REINFORCING STEEL WITH AN APPROVED EPOXY MATERIAL PRIOR TO PLACING ANY ENCAPSULATING MATERIAL.

WAY-250-18.15 SFN: 8504814 (03/NHS/BR)

ITEM	EXTENSION	QUANTITY	UNIT	DESCRIPTION
202	11301	10	CY	PORTIONS OF STRUCTURE REMOVED, AS PER PLAN
202	98200	93	FT	REMOVAL, MISC.: JOINT SEALER
511	21521	4	CY	CLASS QC2 CONCRETE, SUPERSTRUCTURE (BRIDGE DECK REPAIR)
511	21521	6	CY	CLASS QC2 CONCRETE, SUPERSTRUCTURE (APPROACH SLAB REPAIR)
516	31000	186	FT	JOINT SEALER

ALL QUANTITIES CARRIED TO STRUCTURE SUBSUMMARY

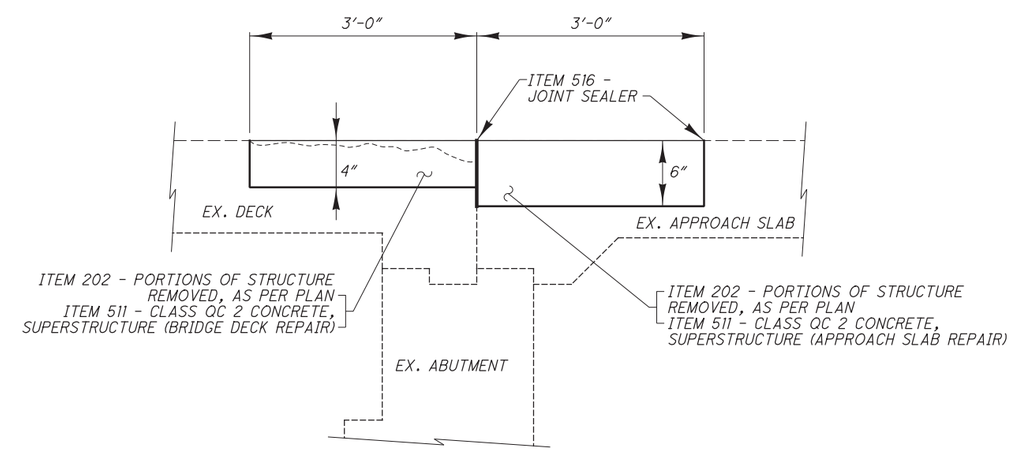

SECTION A-A

ODOT DISTRICT THREE
OFFICE OF PLANNING
AND ENGINEERING
ASHLAND, OHIO

DESIGNED	DRAWN	REVIEWED	DATE
JNC	JNC	DJV	11/2017
CHECKED	REVISED	STRUCTURE FILE NUMBER	
KCK	---	8504814	

STRUCTURE DETAILS
STRUCTURE WAY-250-1815
OVER APPLE CREEK

WAY-250-14.60
PID No. 103544

1/1

16/16

i:\ProjectData\103544\Design\Structures\WAY250_1815C\Sheets\250_1815C_SG001.dgn