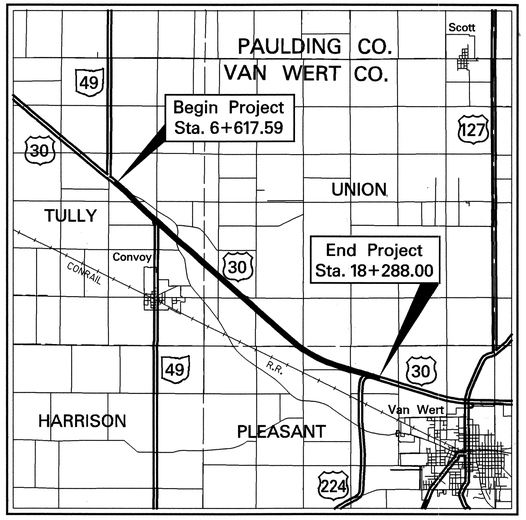

LOCATION MAP

LATITUDE: N40°-57'-04.7" LONGITUDE: W84°-43'-24.2"

Scale in Kilometers
0 2 4 6 8

N

Portion to be improved
State & Federal Routes
Other Roads

DESIGN DESIGNATION

Current A.D.T. (1997)	=	8390
Design Year A.D.T. (2017)	=	13,420
Design Hourly Volume (2017)	=	939
Directional Distribution	=	51%
Trucks (24 Hour B & C)	=	39%
Design Speed	=	100 km/h
Legal Speed	=	65 m.p.h.

Design Functional Classification = Principal Arterial-Rural

DESIGN EXCEPTIONS

DESIGN FEATURE	Approval Date
Graded Shoulder Width	02-03-95

UNDERGROUND UTILITIES

ODOT TWO WORKING DAYS BEFORE YOU DIG ODOT

Call... 800-362-2764 (Toll free)

OHIO UTILITIES PROTECTION SERVICE

NON-MEMBERS MUST BE CALLED DIRECTLY

Plan Prepared By:

OHIO DEPARTMENT OF TRANSPORTATION
DISTRICT NO. 1
PRODUCTION DEPARTMENT

STATE OF OHIO
DEPARTMENT OF TRANSPORTATION

VAN-30-6.618(4.05)

TULLY, UNION & PLEASANT TOWNSHIPS
VAN WERT COUNTY

MICROFILMED
JAN 13 1999

INDEX OF SHEETS

TITLE SHEET	1	MISCELLANEOUS CALCULATIONS & TABLES	82
SCHEMATIC PLAN	2-3	PAVEMENT TRANSITION DETAILS	83-87
TYPICAL SECTIONS	4-6	AT-GRADE INTERSECTION DETAILS	88
GENERAL NOTES	7-8	SIDE APPROACH DETAILS	89
MAINTENANCE OF TRAFFIC	9-11	MEDIAN CROSSOVER DETAILS	90
DROPOFFS IN WORK ZONES	12	CENTER LINE MONUMENT TABLE	91
GENERAL SUMMARY	13-15	DRAINAGE, EARTHWORK & SEEDING TABLES	92-93
PAVEMENT TABLE	16-18	CATCH BASIN DETAILS	94
PAVEMENT CALCULATIONS	19-22	SHALLOW PIPE UNDERDRAINS	95
STORM WATER POLLUTION PLAN	23-27	PAVEMENT MARKINGS	96-99
PLAN SHEETS	28-45	SIGNING	100-122
CROSS SECTIONS	46-81	STRUCTURES OVER 6 METERS	123-134

SUPPLEMENTAL PRINTS OF STANDARD CONSTRUCTION DRAWINGS								SUPPLEMENTAL SPECIFICATIONS	
BP-2.1M	4-8-97	GR-3.1M	11-30-94	RM-1.1M	4-8-97	TC-42.10M	3-31-94	801	3-23-95
BP-2.5M	4-8-97	GR-3.4 M	1-3-96	DM-1.1M	6-30-95	TC-42.20M	3-31-94		
BP-3.1M	10-28-94	GR-4.2M	4-21-95	RM-4.2M	6-30-95	TC-51.12M	3-31-94		
BP-9.1M	12-18-96	GR-4.3M	11-30-94	DM-4.3M	6-30-95	TC-61.10M	3-31-94		
CB-3.3M	7-12-95	GR-4.4M	11-30-94	DM-4.4M	6-30-95	TC-65.10M	11-1-95		
BP-9.2M	12-18-96	GR-5.1M	4-21-95			TC-65.11M	11-1-95		
GR-1.1M	11-30-94	GR-5.3M	11-30-94	MT-95.30M	4-25-94	TC-65.12M	11-1-95		
GR-1.2M	1-3-96	GR-6.1M	1-3-96	MT-95.40M	4-25-94	TC-72.20M	9-1-93		
GR-1.3M	11-30-94	GR-6.2M	1-3-96						
GR-2.1M	11-30-94			TC-41.10M	3-31-94	DS-1-94M	12-15-94		
				TC-41.20M	7-1-94	BR-1M	12-15-94		
				TC-41.50M	7-1-94				

metric units

PROJECT DESCRIPTION

Remove existing asphalt wearing course. Repair failed joints and working mid-panel cracks and reseal. Resuface Weigh Station Parking Area. Repair mainline bridges, widen outside shoulders to 3 m and provide new edgedrains, guardrail & signing. Repair or replace drainage as needed.

LIMITED ACCESS

This Improvement is especially designed for through traffic and has been declared a Limited Access Highway or Freeway by action of the Director in accordance with the provisions of Section 5511.02 of the Revised Code of Ohio.

1997 SPECIFICATIONS

The standard specifications of the State of Ohio, Department of Transportation, including changes and supplemental specifications listed in the proposal shall govern this improvement.

I hereby approve these plans and declare that the making of this improvement will not require the closing to traffic of the highway except as noted on Sheet 11 , and that provisions for the maintenance and safety of traffic will be as set forth in the plans and estimates.

Under authority of Section 4511.21, Division (1) of the Revised Code of Ohio, the revised prima facie speed limits as indicated herein are determined to be reasonable and safe, and are hereby established for the duration of this project. The prima facie speed limit or limits hereby established shall become effective when appropriate signs giving notice thereof are erected.

Approved Norman R. Redick
Date 11/25/97 District Deputy Director

Approved
Date 9.30.97 Director, Department of Transportation

FEDERAL PROJECT No. NH-49-(102)
PID No. 15283
CONSTRUCTION PROJECT No.
RAILROAD INVOLEMENT NONE
VAN-30-6.618(4.05)(4.05)
1 / 134

VAN-30-6.618
98015
134PGS
01-07-98
DIST. 01

DESIGN FILE : i:\pd\van30d\v30gsl.dgn
USERNAME : rhermon

DATE : 17-SEP-1997
TIME : 08:47

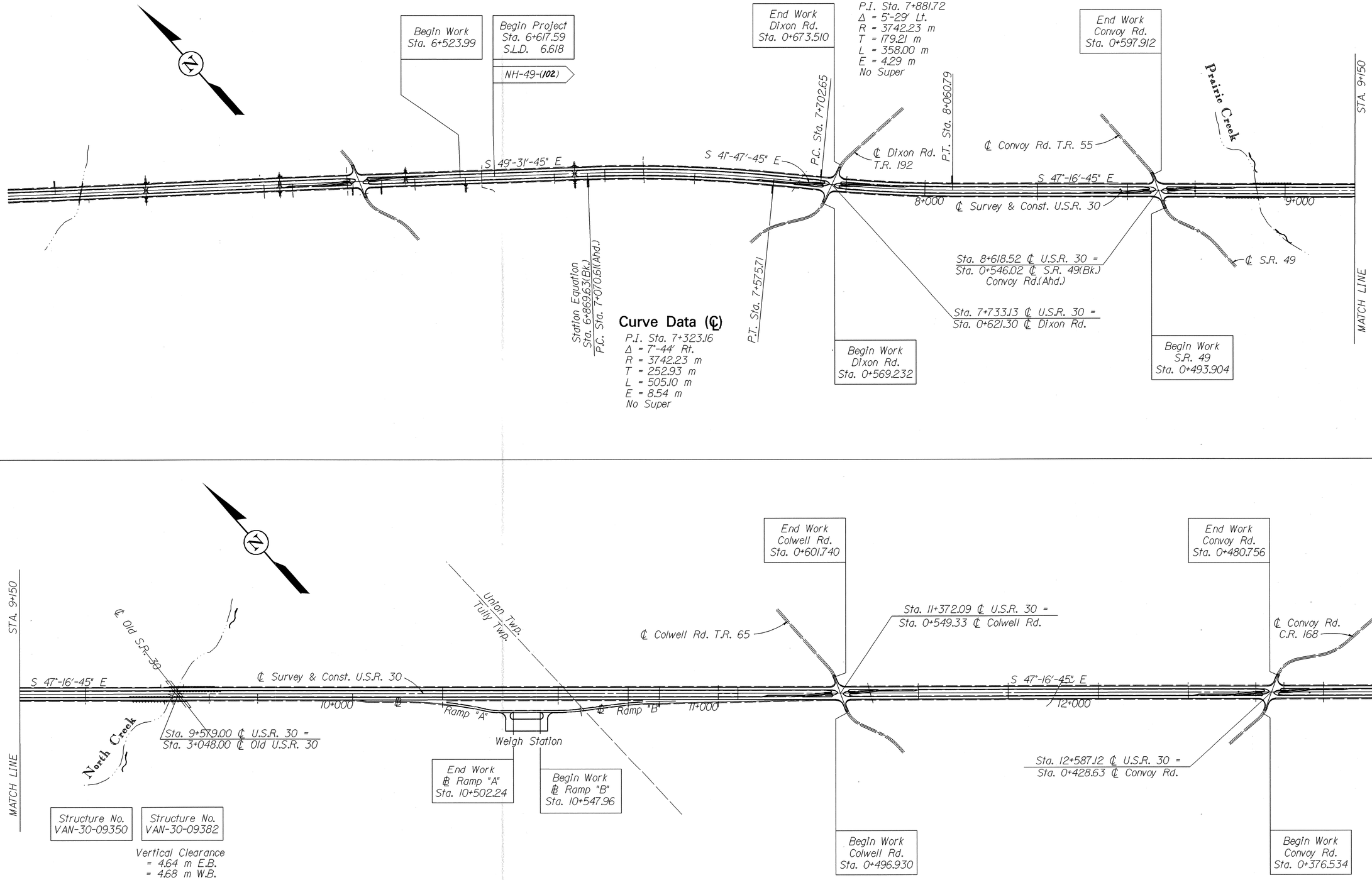

Scale in Meters
0 50 100
1:5000 Ratio

SCHEMATIC PLAN

VAN-30-6.618(4.05)

DATE : 28-AUG-1997
TIME : 12:24

DESIGN FILE : i:\pd\van30d\v30gs2.dgn
USERNAME : rhermon

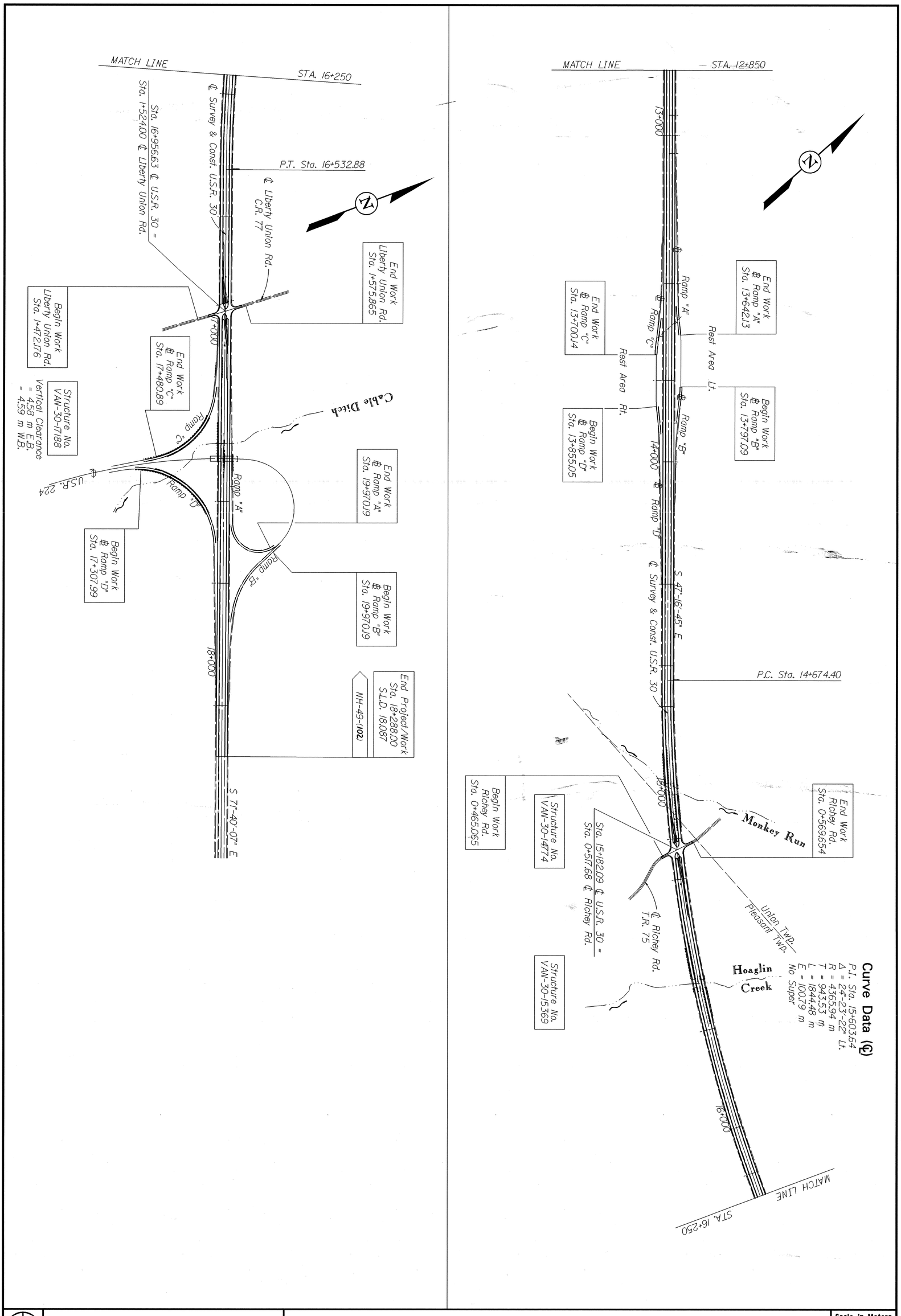

3/134	VAN-30-6.618(4.05)	SCHEMATIC PLAN	Scale in Meters 0 50 100 1:5000 Ratio

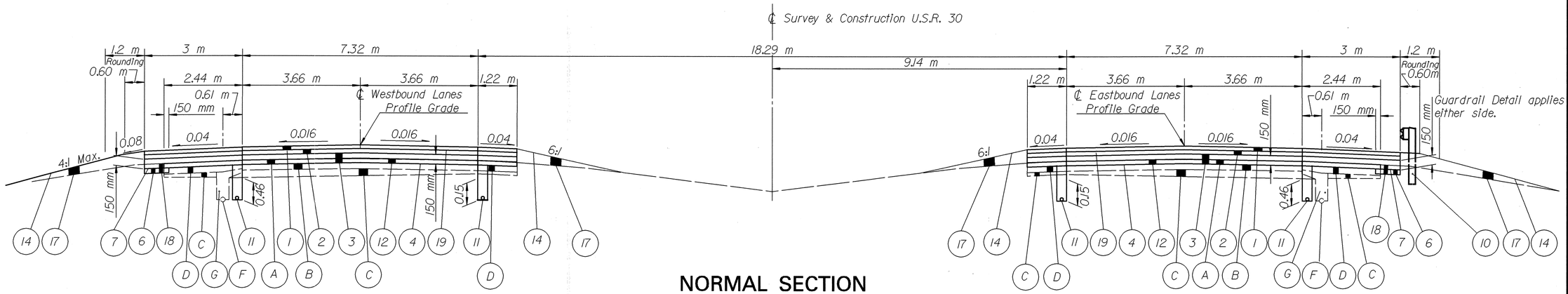

NORMAL SECTION

Applies @:

Sta. 6+617.54 to Sta. 18+194.40= 11,576.86 m
Sta. Eq.: Sta. 6+869.63 = Sta. 7+070.61
Deduct for Trans. & Bridge No. VAN-30-09350 L&R
Sta. 9+441.45 to Sta. 9+690.23 = -248.78 m
Deduct for Trans. & Bridge No. VAN-30-14774 L&R
Sta. 14+868.44 to Sta. 15+129.98 = -261.54 m
Deduct for Trans. & Bridge No. VAN-30-15369 L&R
Sta. 15+454.75 to Sta. 15+720.19 = -265.44 m
Deduct for Trans. @ Bridge No. VAN-30-17188 L&R
Sta. 17+284.74 to Sta. 17+510.74 = -226.00 m
Total Length = 10,575.10 m

Note: Resurfacing Buildup on shoulders similar to resurfacing buildup on lanes

EXISTING LEGEND

- (A) Asphalt Concrete
- (B) 230 mm Reinforced Portland Cement Concrete Pavement
- (C) Subbase
- (D) Bituminous Aggregate Base
- (E) Aggregate Base
- (F) 150 mm Pipe Underdrain

PROPOSED LEGEND

- (1) Item 446 38 mm Asphalt Concrete Surface Course, Type IH, as per plan
- (2) Item 446 45 mm Asphalt Concrete Intermediate Course Type 2, PG 64-28
- (3) Item 301 Bituminous Aggregate Base, PG 64-22 (Thickness as Shown)
- (4) Item 407 Tack Coat
- (6) Item 304 150 mm Aggregate Base
- (7) Item 408 Bituminous Prime Coat applied at a rate of 1.81 L/m^2
- (10) Item 606 Guardrail, Type 5
- (11) Item 605 100mm Shallow Pipe Underdrain
- (12) Item 254 Pavement Planing, Bituminous (Thickness 70mm Nominal)
- (14) Item 659 Seeding & Mulching
- (17) Item 203 Embankment
- (18) Item 203 Excavation, not Including Embankment Construction
- (19) Item 407 Tack Coat for Intermediate Course

TYPICAL SECTIONS

VAN-30-6.618(4.05)

DESIGN FILE : i:\pd\van30d\v30gy.dgn
USERNAME : rhermon
DATE : 28-AUG-1997
TIME : 13:30

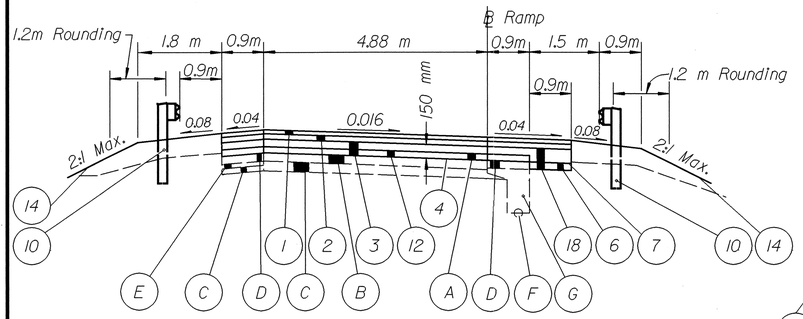

NORMAL RAMP

Applies @:

Weigh Station, Ramp "A"
Sta. 10+362.44 to Sta. 10+502.24 = 139.80 m

Weigh Station, Ramp "B"
Sta. 10+687.76 to Sta. 10+758.46 = 70.70 m

Rest Area Ramp "A"
Sta. 13+559.03 to Sta. 13+642.13 = 83.10 m

Rest Area Ramp "B"
Sta. 13+797.09 to Sta. 13+907.09 = 110.00 m

Rest Area Ramp "C"
Sta. 13+590.14 to Sta. 13+700.14 = 110.00 m

Rest Area Ramp "D"
Sta. 13+855.05 to Sta. 13+941.55 = 86.50 m

Total Length = 600.10 m

Note: Resurfacing Buildup on shoulders similar to resurfacing buildup on lanes

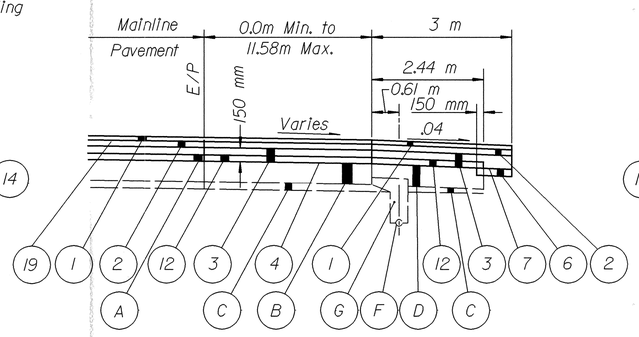

SPEED CHANGE LANE

Applies @:

Weigh Station, Ramp "A"
Sta. 10+061.41 to Sta. 10+305.25 = 243.84 m
Weigh Station, Ramp "B"
Sta. 10+835.64 to Sta. 10+972.80 (Ramp "B") = 137.16 m
Sta. 10+972.80 to Sta. 11+338.56 = 365.76 m
Rest Area, Ramp "A"
Sta. 13+045.44 to Sta. 13+559.03 = 513.59 m
Rest Area, Ramp "B"
Sta. 13+907.09 to Sta. 14+150.93 = 243.84 m
Rest Area, Ramp "C"
Sta. 13+346.30 to Sta. 13+590.14 = 243.84 m
Rest Area, Ramp "D"
Sta. 13+941.55 to Sta. 14+451.18 = 509.63 m
U.S.R. 224, Ramp "A"
Sta. 17+110.35 to Sta. 17+594.28 = 483.93 m
U.S.R. 224, Ramp "B"
Sta. 17+857.01 to Sta. 18+131.33 = 274.32 m
U.S.R. 224, Ramp "C"
Sta. 16+984.98 to Sta. 17+182.74 = 197.76 m
U.S.R. 224, Ramp "D"
Sta. 17+653.46 to Sta. 18+153.52 = 500.06 m

Total Length = 3,713.73 m

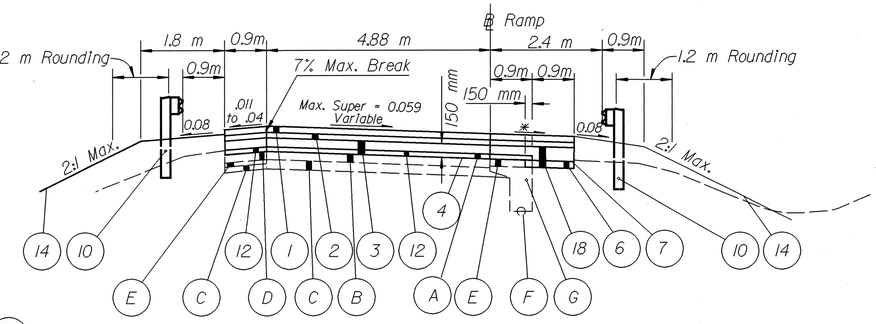

SUPERELEVATED RAMP

Applies @:

Weigh Station, Ramp "A"
Sta. 10+304.74 to Sta. 10+317.70 = 12.96 m
Weigh Station, Ramp "B"
Sta. 10+758.46 to Sta. 10+835.64 = 77.18 m

Total Length = 90.14 m

* *0.04 or Rate of Super if Greater*

Note: All stationing given for the "Speed Change Lane" section is relative to U.S.R. 30 unless otherwise noted.

EXISTING LEGEND

- (B) *230 mm Reinforced Portland Cement Concrete Pavement*
- (C) *Subbase*
- (D) *Bituminous Aggregate Base*
- (E) *Aggregate Base*
- (F) *150 mm Pipe Underdrain*
- (G) *No. 8 Aggregate*

PROPOSED LEGEND

- (1) *Item 446 38 mm Asphalt Concrete Surface Course, Type 1H, as per plan*
- (2) *Item 446 45 mm Asphalt Concrete Intermediate Course Type 2, PG 64-28*
- (3) *Item 301 Bituminous Aggregate Base, PG 64-22 (Thickness as Shown)*
- (4) *Item 407 Tack Coat*
- (6) *Item 304 150 mm Aggregate Base*
- (7) *Item 408 Bituminous Prime Coat applied at a rate of 1.81 L/m²*
- (10) *Item 606 Guardrail, Type 5*
- (12) *Item 254 Pavement Planing, Bituminous (Thickness 70 mm Nominal)*
- (14) *Item 659 Seeding & Mulching*
- (18) *Item 203 Excavation, not Including Embankment Construction*
- (19) *Item 407 Tack Coat for Intermediate Course*

DESIGN FILE : i:\pd\van30d\v30gy.dgn
USERNAME : rhermon
DATE : 28-AUG-1997
TIME : 13:57

TYPICAL SECTIONS

VAN-30-6.618(4.05)

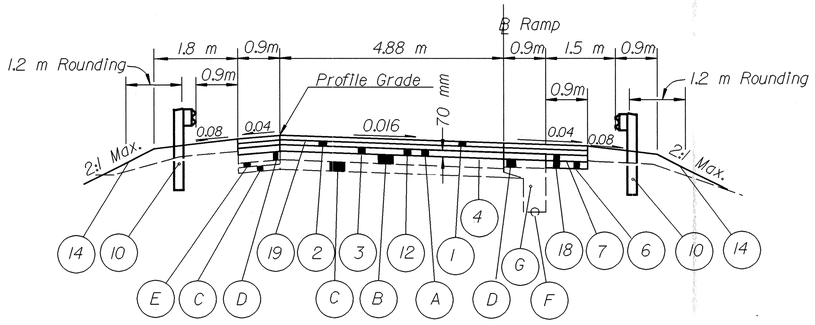

NORMAL RAMP

Applies @:

U.S.R. 224, Ramp "B"
Sta. 20+015.79 to Sta. 20+030.54 = 14.75 m

Total Length = 14.75 m

Note: Resurfacing Buildup on shoulders similar to resurfacing buildup on lanes

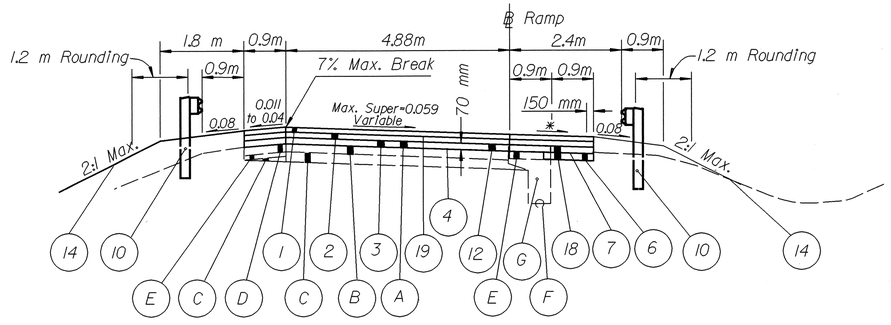

SUPERELEVATED RAMP

* 0.04 or Rate of Super If Greater

Applies @:

U.S.R. 224, Ramp "A"
Sta. 20+015.79 to Sta. 20+074.84 = 59.05 m
U.S.R. 224, Ramp "B"
Sta. 20+030.54 to Sta. 20+173.94 = 143.40 m
U.S.R. 224, Ramp "C"
Sta. 17+230.74 to Sta. 17+435.29 = 204.55 m
U.S.R. 224, Ramp "D"
Sta. 17+353.59 to Sta. 17+605.46 = 251.87 m

Total Length = 658.87 m

EXISTING LEGEND

A	Asphalt Concrete
B	230 mm Reinforced Portland Cement Concrete Pavement
C	Subbase
D	Bituminous Aggregate Base
E	Aggregate Base
F	150 mm Pipe Underdrain
G	No. 8 Aggregate

PROPOSED LEGEND

1	Item 446	38 mm Asphalt Concrete Surface Course, Type 1H, as per plan
2	Item 446	45 mm Asphalt Concrete Intermediate Course Type 2, PG 64-28
3	Item 301	Bituminous Aggregate Base, PG 64-22 (Thickness as Shown)
4	Item 407	Tack Coat
6	Item 304	150 mm Aggregate Base
7	Item 408	Bituminous Prime Coat applied at a rate of 1.81 L/m^2
10	Item 606	Guardrail, Type 5
12	Item 254	Pavement Planing, Bituminous (Thickness 70 mm Nominal)
14	Item 659	Seeding & Mulching
18	Item 203	Excavation, not Including Embankment Construction
19	Item 407	Tack Coat for Intermediate Course

TYPICAL SECTIONS

VAN-30-6.618(4.05)

6
134

DESIGN FILE : i:\pd\van30d\v30gy.dgn
USERNAME : rhermon
DATE : 28-AUG-1997
TIME : 14:07

DESIGN FILE : i:\pd\van30d\v30gn.dgn
USERNAME : rhermon
DATE : 28-AUG-1997
TIME : 14:16

ELEVATION DATUM

ALL ELEVATIONS ARE BASED ON U.S.G.S. DATUM.

ROUNDING

THE ROUNDING AT SLOPE BREAKPOINTS SHOWN ON THE TYPICAL SECTIONS, APPLY TO ALL CROSS-SECTIONS EVEN THOUGH OTHERWISE SHOWN ON THESE PLANS.

UTILITIES

LISTED BELOW ARE ALL UTILITIES LOCATED WITHIN THE PROJECT CONSTRUCTION LIMITS TOGETHER WITH THEIR RESPECTIVE OWNERS:

PIPELINE	ANR PIPELINE COMPANY P.O. BOX 68 S.R. 66 DEFIANCE, OHIO 43512 419-782-5146
TELEPHONE & ELECTRIC	OHIO DEPT. OF TRANSPORTATION 1885 N. McCULLOUGH P.O. BOX 40 LIMA, OHIO 45802-0040 419-222-9055

THE LOCATION OF THE UNDERGROUND UTILITIES SHOWN ON THE PLANS ARE AS OBTAINED FROM THE OWNERS AS REQUIRED BY SECTION 153.64 O.R.C.

CONTINGENCY QUANTITIES

THE CONTRACTOR SHALL NOT ORDER MATERIALS OR PERFORM WORK FOR ITEMS DESIGNATED BY PLAN NOTE TO BE USED "AS DIRECTED BY THE ENGINEER" UNLESS AUTHORIZED BY THE ENGINEER. THE ACTUAL WORK LOCATIONS AND QUANTITIES USED FOR SUCH ITEMS SHALL BE INCORPORATED INTO THE FINAL CHANGE ORDER GOVERNING COMPLETION OF THIS PROJECT.

WORK LIMITS

THE WORK LIMITS SHOWN ON THESE PLANS ARE FOR PHYSICAL CONSTRUCTION ONLY. THE INSTALLATION AND OPERATION OF ALL TEMPORARY TRAFFIC CONTROL AND TEMPORARY TRAFFIC DEVICES REQUIRED BY THESE PLANS SHALL BE PROVIDED BY THE CONTRACTOR WHETHER INSIDE OR OUTSIDE THESE WORK LIMITS.

ITEM 407, TACK COAT

THE RATE OF APPLICATION OF THE 407 TACK COAT SHALL BE SUBJECT TO ADJUSTMENT AS DIRECTED BY THE ENGINEER. PLAN QUANTITIES INDICATE AN AVERAGE APPLICATION RATE OF 0.340 LITERS PER SQUARE METER OF TACK COAT FOR ESTIMATING PURPOSES ONLY.

MANHOLES, CATCH BASINS AND INLETS REMOVED OR ABANDONED

ALL CASTINGS SHALL BE CAREFULLY REMOVED AND STORED WITHIN THE RIGHT-OF-WAY FOR SALVAGE BY STATE FORCES.

PAYMENT FOR ALL OF THE ABOVE SHALL BE INCLUDED IN THE CONTRACT PRICE FOR THE PERTINENT 202 ITEM.

STOPPING SIGHT DISTANCES

THE VERTICAL ALIGNMENT FOR THIS PROJECT HAS BEEN CHECKED AND THE STOPPING SIGHT DISTANCES EITHER MEET OR EXCEED THE MINIMUM DESIGN CRITERIA.

CONNECTION BETWEEN EXISTING AND PROPOSED GUARDRAIL

WHEN IT IS NECESSARY TO SPLICE PROPOSED GUARDRAIL TO EXISTING GUARDRAIL, ONLY THE EXISTING GUARDRAIL SHALL BE CUT, DRILLED, OR PUNCHED. THE CONNECTION SHALL BE MADE USING A "W-BEAM RAIL SPLICE" AS SHOWN ON STANDARD CONSTRUCTION DRAWING GR-1.1. PAYMENT SHALL BE INCLUDED IN THE CONTRACT PRICE FOR THE RESPECTIVE GUARDRAIL ITEMS.

TEMPORARY SOIL EROSION AND SEDIMENT CONTROL

THE FOLLOWING ESTIMATED QUANTITIES ARE TO BE USED AS DIRECTED BY THE ENGINEER, FOR TEMPORARY EROSION AND SEDIMENT CONTROL MEASURES:

207	TEMPORARY SEEDING AND MULCHING	= 49788 m^2
207	TEMPORARY SLOPE DRAINS	= 75 m
207	TEMPORARY BENCHES, DAMS AND SEDIMENT BASINS	= 200 m^3
207	TEMPORARY DIKES	= 75 m
207	FILTER FABRIC FENCE	= 6759 m
601	ROCK CHANNEL PROTECTION, TYPE C WITH FILTER	= 47 m^3
601	ROCK CHANNEL PROTECTION, TYPE C WITHOUT FILTER	= 40 m^3
659	COMMERCIAL FERTILIZER	= 2441 kg
659	REPAIR SEEDING AND MULCHING	= 12447 m^2
659	WATER	= 489 m^3

THE QUANTITIES ABOVE HAVE BEEN CARRIED TO THE TABLE ON THIS SHEET.

ITEM 606, ANCHOR ASSEMBLY, TYPE E

THIS ITEM SHALL CONSIST OF FURNISHING AND INSTALLING AN ET-2000, OPTION "B" GUARDRAIL END TERMINAL AS MANUFACTURED BY SYRO STEEL COMPANY, 1170 N. STATE STREET, GIRARD, OHIO 44420 (TELEPHONE: 216-545-4373).

THE LENGTH OF THE ET-2000 SYSTEM IS CONSIDERED TO BE 15.24 m, INCLUSIVE OF TWO 7.62 m LONG RAIL ELEMENTS. INSTALLATION SHALL BE IN ACCORDANCE WITH THE MANUFACTURER'S SPECIFICATIONS AND AT THE LOCATIONS SHOWN IN THE PLANS.

PAYMENT FOR THE ABOVE WORK SHALL BE MADE AT THE UNIT BID PRICE FOR ITEM 606, EACH, ANCHOR ASSEMBLY, TYPE E AND SHALL INCLUDE ALL LABOR, TOOLS, EQUIPMENT AND MATERIALS NECESSARY TO CONSTRUCT A COMPLETE AND FUNCTIONAL ANCHOR ASSEMBLY SYSTEM, INCLUDING ALL RELATED HARDWARE, NOT SEPARATELY SPECIFIED, AS REQUIRED BY THE MANUFACTURER.

GUARDRAIL REPLACEMENT

NO HAZARD SHALL BE LEFT UNPROTECTED EXCEPT FOR THE ACTUAL TIME NECESSARY TO REMOVE THE EXISTING GUARDRAIL, PREPARE THE SITE, AND INSTALL NEW GUARDRAIL IN A CONTINUOUS OPERATION. THE REMOVAL OF ALL GUARDRAIL SHALL AT ALL TIMES BE AS DIRECTED BY THE ENGINEER. NO GUARDRAIL SHALL BE REMOVED UNTIL THE REPLACEMENT MATERIAL IS ON THE SITE, READY FOR INSTALLATION. FAILURE TO COMPLY WITH THIS REQUIREMENT SHALL BE DEEMED SUFFICIENT CAUSE TO ORDER WORK SUSPENDED UNTIL SUCH TIME AS THE ENGINEER IS ASSURED OF COMPLIANCE.

INSTALLATION OF FOUNDATION TUBES

THE FOLLOWING METHOD SHALL BE USED FOR INSTALLATION OF ALL FOUNDATION TUBES REQUIRED FOR GUARDRAIL END TREATMENTS ON THIS PROJECT:
1) AUGER 200 mm DIAMETER HOLE AT THE LOCATION OF THE FOUNDATION TUBE TO A DEPTH OF 0.3 METERS LESS THAN THE LENGTH OF THE FOUNDATION TUBE
2) DRIVE THE FOUNDATION TUBE WITH SOIL PLATE TP GRADE. (NOTE: IF A GUARDRAIL POST IS USED IN THE DRIVING OPERATION, IT SHALL BE REMOVED AND DISCARDED.)
3) PERFORM ANY NECESSARY BACKFILLING OF THE HOLE IN ACCORDANCE WITH 606.03 AND INSERT THE REQUIRED GUARDRAIL POST.

ALL MATERIALS, LABOR AND EQUIOPMENT REQUIRED TO INSTALL THE FOUNDATION TUBES AS DESCRIBED ABOVE SHALL BE CONSIDERED INCIDENTAL TO THE PERTINENT GUARDRAIL END TREATMENT.

PART-WIDTH CONSTRUCTION

BECAUSE OF THE NECESSITY TO BUILD THIS PROJECT UNDER TRAFFIC AND CONSTRUCTING THE FULL PAVEMENT WIDTH IN STAGES, EXTREME CARE SHALL TAKEN TO PREVENT THE CONSTRUCTION OF A BUTT JOINT IN THE BASE COURSES. LONGITUDINAL JOINTS SHALL BE LAPPED AS SHOWN ON STANDARD CONSTRUCTION DRAWING BP-3.1M.

ITEM SPECIAL, IMPACT ATTENUATOR, TYPE 1 (BI-DIRECTIONAL)

THIS WORK SHALL CONSIST OF FURNISHING AND INSTALLING ONE OF THE FOLLOWING TYPES OF IMPACT ATTENUATOR SYSTEMS:

1. THE BREAKMASTER IMPACT ATTENUATING SYSTEM MANUFACTURED BY ENERGY-ABSORPTION SYSTEMS, INC., ONE EAST WACKER DRIVE, CHICAGO, ILLINOIS 60601 (TELEPHONE 312-467-6750).

2. THE C.A.T. IMPACT ATTENUATING SYSTEM MANUFACTURED BY SYRO STEEL COMPANY, 1170 N. STATE STREET, GIRARD, OHIO 44420 (TELEPHONE 216-545-4373).

THE ATTENUATOR SHALL BE DESIGNED FOR BI-DIRECTIONAL IMPACTS AND SHALL BE PLACED IN ACCORDANCE WITH THE MANUFACTURER'S SPECIFICATIONS AND AT THE LOCATIONS SHOWN ON THE PLANS.

THE NOSE OF THE ATTENUATOR SHALL BE MARKED WITH THREE, EVENLY SPACED, 100mm WIDE HORIZONTAL STRIPES OF WHITE REFLECTIVE MATERIAL MEETING THE REQUIREMENTS OF CMS 730.19.

PAYMENT FOR THE ABOVE WORK SHALL BE MADE AT THE CONTRACT PRICE FOR ITEM SPECIAL, EACH, IMPACT ATTENUATOR TYPE 1 (BI-DIRECTIONAL). THIS ITEM SHALL INCLUDE ALL LABOR, TOOLS, EQUIPMENT AND MATERIALS NECESSARY TO COMPLETE THIS ITEM IN PLACE, INCLUDING ALL RELATED HARDWARE, NOT SEPARATELY SPECIFIED, AS REQUIRED BY THE MANUFACTURER TO CONSTRUCT A COMPLETE AND FUNCTIONAL IMPACT ATTENUATOR SYSTEM.

PROFILE AND ALIGNMENT

THE PROPOSED PAVEMENT RESURFACING SHALL FOLLOW THE ALIGNMENT AND PROFILE OF THE EXISTING PAVEMENT. PREVIOUS CONSTRUCTION PLANS SHOWING THE ORIGINAL ALIGNMENT AND PROFILE, ARE AVAILABLE FOR INSPECTION AT THE ODOT DISTRICT ONE OFFICE. THE PROPOSED ASPHALT CONCRETE OVERLAY SHALL BE AS SHOWN ON THE TYPICAL SECTIONS.

ESTIMATED QUANTITIES

ITEM	QUANTITY	UNIT	DESCRIPTION
207	49788	Sq Meter	Temporary Seeding and Mulching
207	75	Meter	Temporary Slope Drain
207	200	Cu Meter	Temporary Benches, Dams, and Sediment Basins
207	75	Meter	Temporary Dikes
207	6759	Meter	Filter Fabric Fence
601	47	Cu Meter	Rock Channel Protection, Type C with Filter
601	40	Cu Meter	Rock Channel Protection, Type C without Filter
659	489	Cu Meter	Water
659	2441	Kilogram	Commercial Fertilizer
659	12447	Sq Meter	Repair Seeding and Mulching

Quantities Carried to General Summary, Sheet 13.

CALCULATED DJS CHECKED RLS

GENERAL NOTES

VAN-30-6.618(4.05)

DESIGN FILE : i:\pd\van30d\v30gn.dgn
USERNAME : rhermon

DATE : 25-SEP-1997
TIME : 08:50

CALCULATED DJS | CHECKED RLS

GENERAL NOTES

ITEM 659, SEEDING AND MULCHING

SEEDING AND MULCHING SHALL BE APPLIED TO ALL AREAS OF EXPOSED SOIL BETWEEN THE RIGHT OF WAY LINES, AND WITHIN THE CONSTRUCTION LIMITS FOR AREAS OUTSIDE THE RIGHT-OF-WAY LINES COVERED BY WORK AGREEMENT OR SLOPE EASEMENT. QUANTITY CALCULATIONS FOR ITEM 659, SEEDING AND MULCHING, ARE BASED ON THESE LIMITS.

THE FOLLOWING ESTIMATED QUANTITIY HAS BEEN CARRIED TO THE TABLE ON THIS SHEET:

659 SEEDING AND MULCHING = 248941 SQ METER

WATERING PERMANENT SEEDED AREAS

THE FOLLOWING ESTIMATED QUANTITIES ARE TO BE USED AS DIRECTED BY THE ENGINEER TO PROMOTE GROWTH AND TO CARE FOR THE PERMANENT SEEDED AREAS, AS PER 659.09:

659 WATER = 1245 CU METER

THE QUANTITY ABOVE HAS BEEN CARRIED TO THE TABLE ON THIS SHEET.

CROSSINGS AND CONNECTIONS TO EXISTING PIPES AND UTILITIES

WHERE PLANS PROVIDE FOR A PROPOSED CONDUIT TO BE CONNECTED TO, OR CROSS OVER OR UNDER AN EXISTING SEWER OR UNDERGROUND UTILITY, THE CONTRACTOR SHALL LOCATE THE EXISTING PIPES OR UTILITIES BOTH AS TO LINE AND GRADE BEFORE STARTING TO LAY THE PROPOSED CONDUIT.

IF IT IS DETERMINED THAT THE ELEVATION OF THE EXISTING CONDUIT, OR EXISTING APPURTENANCE TO BE CONNECTED, DIFFERS FROM THE PLAN ELEVATION OR RESULTS IN A CHANGE IN THE PLAN CONDUIT SLOPE, THE ENGINEER SHALL BE NOTIFIED BEFORE STARTING CONSTRUCTION OF ANY PORTION OF THE PROPOSED CONDUIT WHICH WILL BE AFFECTED BY THE VARIANCE IN THE EXISTING ELEVATIONS.

IF IT IS DETERMINED THAT THE PROPOSED CONDUIT WILL INTERSECT AN EXISTING SEWER OR UNDERGROUND UTILITY IF CONSTRUCTED AS SHOWN ON THE PLAN, THE ENGINEER SHALL BE NOTIFIED BEFORE STARTING CONSTRUCTION OF ANY PORTION OF THE PROPOSED CONDUIT WHICH WOULD BE AFFECTED BY THE INTERFERENCE WITH AN EXISTING FACILITY.

PAYMENT FOR ALL THE OPERATIONS DESCRIBED ABOVE SHALL BE INCLUDED IN THE CONTRACT PRICE FOR THE PERTINENT 603 CONDUIT ITEM.

PRECAST CATCH BASINS AND INLETS

IN THE EVENT THE CONTRACTOR ELECTS TO USE PRECAST BASINS AND INLETS THE CONTRACTOR SHALL BE RESPONSIBLE FOR DETERMINING WHETHER OR NOT THE BOTTOM OF THE PROPOSED PRECAST CATCH BASIN CAP WILL CLEAR THE PROPOSED CONDUITS IN THE CATCH BASIN OR INLET. SHOULD ADEQUATE CLEARANCE NOT EXIST THE CONTRACTOR SHALL PROVIDE CLEARANCE BY SAWING THE PRECAST TOP TO FIT OVER THE CONDUIT AT NO ADDITIONAL COST TO THE STATE.

RAISED PAVEMENT MARKERS BENEATH SURFACE

IT SHALL BE NOTED THAT DURING THE ASPHALT PLANING OPERATION, RAISED PAVEMENT MARKERS MAY BE ENCOUNTERED BENEATH THE SURFACE. IN THE EVENT THAT THESE MARKERS ARE STRUCK BY THE PLANING MACHINE THE STATE SHALL NOT BE RESPONSIBLE FOR ANY DAMAGE TO THE MACHINE OR ANY COST ASSOCIATED WITH REPAIRING THE MACHINE.

EROSION CONTROL

ITEM 601 IS PROVIDED IN THE PLANS FOR EROSION CONTROL. NEITHER ROCK NOR TURF OF A STABLE NATURE SHALL BE REMOVED IN ORDER TO PLACE THIS ITEM. THE ENGINEER SHALL CHECK AND NON-PERFORM QUANTITIES OR ADJUST LOCATIONS AND QUANTITIES OF THIS ITEM WHERE INDICATED BY FIELD CONDITIONS DURING CONSTRUCTION. IN ADDITION, THIS ITEM SHALL MEET THE REQUIREMENTS OF 108.04.

UNDERDRAIN OUTLETS

THE MATERIAL USED TO OUTLET THE PROPOSED 150mm PIPE UNDERDRAINS SHALL BE ITEM 603 150mm CONDUIT TYPE F. A PRECAST CONCRETE PAD SHALL BE USED AT THE UNDERDRAIN OUTLETS. INCLUDED BELOW ARE CONTINGENCY QUANTITIES OF THE 150mm.TYPE F CONDUIT TO CONNECT THE EXISTING UNDERDRAINS TO THE PROPOSED UNDERDRAINS AND PRECAST REINFORCED CONCRETE OUTLETS AS DIRECTED BY THE ENGINEER.

603 150mm CONDUIT TYPE F = 100 METER

604 PRECAST REINFORCED CONCRETE OUTLET = 10 EACH

THE COST OF THIS MATERIAL AND THE LABOR TO INSTALL IT SHALL BE INCLUDED IN THE PRICE BID ITEM 603 CONDUIT TYPE F OR ITEM 604 PRECAST REINFORCED CONCRETE OUTLETS.

THE ESTIMATED QUANTITIES ABOVE HAVE BEEN CARRIED TO THE TABLE ON THIS SHEET.

FARM DRAINS

ALL FARM DRAINS, WHICH ARE ENCOUNTERED DURING CONSTRUCTION, SHALL BE PROVIDED WITH UNOBSTRUCTED OUTLETS. EXISTING COLLECTORS WHICH ARE LOCATED BELOW THE ROADWAY DITCH ELEVATIONS, AND WHICH CROSS THE ROADWAY, SHALL BE REPLACED WITHIN THE CONSTRUCTION LIMITS BY ITEM 603 CONDUIT, TYPE F, ONE COMMERCIAL SIZE LARGER THAN THE EXISTING CONDUIT.

EXISTING COLLECTORS AND ISOLATED FARM DRAINS, WHICH ARE ENCOUNTERED ABOVE THE ELEVATION OF THE ROADWAY DITCHES, SHALL BE OUTLETTED INTO THE ROADWAY DITCH BY 603 TYPE F CONDUIT. THE OPTIMUM OUTLET ELEVATION SHALL BE 300MM ABOVE THE FLOWLINE ELEVATION OF THE DITCH. LATERAL FIELD TILES WHICH CROSS THE ROADWAY SHALL BE INTERCEPTED BY 603, TYPE F CONDUIT, AND CARRIED IN A LONGITUDINAL DIRECTION TO AN ADEQUATE OUTLET OR ROADWAY CROSSING.

THE LOCATION, TYPE, SIZE AND GRADE OF REQUIRED REPLACEMENTS SHALL BE DETERMINED BY THE ENGINEER AND PAYMENT SHALL BE MADE ON FINAL MEASUREMENTS.

EROSION CONTROL PADS AND ANIMAL GUARDS SHALL BE PROVIDED AT THE OUTLET END OF ALL FARM DRAINS AS PER STANDARD CONSTRUCTION DRAWING DM-1.1M, EXCEPT WHEN THEY OUTLET INTO A DRAINAGE STRUCTURE. PAYMENT FOR THE EROSION CONTROL PADS AND ANIMAL GUARDS AND ANY NECESSARY BENDS OR BRANCHES SHALL BE INCLUDED FOR PAYMENT IN THE PERTINENT CONDUIT ITEM.

THE FOLLOWING ESTIMATED QUANTITIES HAVE BEEN CARRIED TO THE TABLE ON THIS SHEET:

603 150 mm CONDUIT, TYPE B = 30 METER
603 200 mm CONDUIT, TYPE F = 30 METER
603 250 mm CONDUIT, TYPE E = 30 METER
603 300 mm CONDUIT, TYPE F = 30 METER

PROPOSED OUTLET CONNECTION

ALL PIPE CONNECTIONS SHALL BE MADE WITH A MASONRY COLLAR AS PER STANDARD DRAWING DM-1.1M.

ITEM SPECIAL PIPE CLEANOUT

AT SPECIFIC LOCATIONS SHOWN IN THESE PLANS WHERE EXISTING CONDUITS ARE TO REMAIN IN PLACE AND BE USED TO OUTLET EXISTING OR PROPOSED CATCH BASINS, THE CONTRACTOR SHALL THOROUGHLY CLEAN ALL DEBRIS AND SILT FROM THE EXISTING CONDUIT IN A MANNER THAT WILL NOT DAMAGE THE EXISTING CONDUIT. EXISTING CATCH BASINS TO REMAIN AT THESE LOCATIONS SHOULD ALSO BE CLEANED OF DEBRIS, CATTAILS, ETC. ALL COSTS ASSOCIATED WITH THE ABOVE DESCRIBED WORK SHALL BE INCLUDED IN THE UNIT PRICE BID PER METER ITEM SPECIAL - PIPE CLEANOUT. ANY DAMAGE TO THE EXISTING CONDUITS SHALL BE REPAIRED BY THE CONTRACTOR AT NO COST TO THE STATE.

REMOVAL OF TREES AND STUMPS

ALL TREES AND STUMPS SPECIFICALLY MARKED FOR REMOVAL WITHIN THE CONSTRUCTION LIMITS SHALL BE REMOVED UNDER LUMP SUM BID FOT ITEM 201, CLEARING AND GRUBBING. THE FOLLOWING IS AN APPROXIMATE ESTIMATE OF THE NUMBER OF TREES AND STUMPS TO BE REMOVED :

SIZES	NO. TREES	NO. STUMPS	TOTAL
	NONE	NONE	

EXISTING PAVEMENT THICKNESS

ALTHOUGH THE TYPICAL SECTIONS SHOW AN EXISTING THICKNESS OF 230 mm OF REINFORCED PORTLAND CEMENT CONCRETE PAVEMENT, DUE TO PAVEMENT REPAIRS ON PREVIOUS PROJECTS, THE ACTUAL THICKNESS MAY BE GREATER THAN 230 mm IN LOCATIONS. MANY OF THE PREVIOUS PAVEMENT REPAIRS WERE UNDERCUT BENEATH THE ADJACENT CONRETE PAVEMENT. BY INCLUSION OF THIS NOTE, THE CONTRACTOR IS NOTIFIED OF THE PRESENCE OF THESE PREVIOUS REPAIRS AND RESPONSIBLE FOR ANY ADDITIONAL EXPENSES INCURRED AS A RESULT OF THESE EXISTING PAVEMENT REPAIRS.

ITEM 446 ASPHALT CONCRETE SURFACE COURSE TYPE 1H, AS PER PLAN

THIS ITEM SHALL MEET ALL REGUIREMENTS OF SPECS 401,441 AND 446 WITH THE FOLLOWING EXCEPTION:

1) NO RECYCLED ASPHALT PAVEMENT SHALL BE USED IN THE SURFACE COURSE.

ALL COSTS ASSOCIATED WITH THE EQUIPMENT, LABOR AND MATERIALS NECESSARY FOR SUPPLYING AND PLACING THIS ITEM SHALL BE INCLUDED IN THE PRICE BID PER CUBIC METER FOR ITEM 446 ASPHALT CONCRETE SURFACE COURSE TYPE 1H, AS PER PLAN.

ESTIMATED QUANTITIES

ITEM	QUANTITY	UNIT	DESCRIPTION
603	30	Meter	150mm Conduit, Type B
603	100	Meter	150mm Conduit, Type F
603	30	Meter	200mm Conduit, Type F
603	30	Meter	250mm Conduit, Type E
603	30	Meter	300mm Conduit, Type F
604	10	Each	Precast Reinforced Concrete Outlet
659	248941	Sq Meter	Seeding and Mulching
659	1245	Cu Meter	Water

Quantities Carried to General Summary, Sheet 13.

MAINTENANCE OF TRAFFIC NOTES

TRAFFIC MAINTENANCE

THE CONTRACTOR SHALL MAINTAIN TRAFFIC AT ALL TIMES IN ACCORDANCE WITH THE REQUIREMENTS OF SPEC. 614, THE MAINTENANCE OF TRAFFIC NOTES, THE MT STANDARD DRAWINGS AND DETAILS SHOWN IN THESE PLANS. TRAFFIC ON U.S.R 30 SHALL BE MAINTAINED IN ONE LANE AT ALL TIMES BY CLOSING THE LANE IN WHICH WORK IS TO BE PERFORMED IN ACCORDANCE WITH APPROPRIATE STD. DWGS. A MINIMUM OF ONE LANE SHALL REMAIN OPEN TO TRAFFIC ON EACH SIDE OF U.S.R. 30 AT ALL TIMES. ALL SIGNS, DRUMS AND OTHER DEVICES REQUIRED TO MAINTAIN TRAFFIC AS SHOWN BY THESE PLANS SHALL BE FURNISHED, ERECTED AND MAINTAINED BY THE CONTRACTOR. THE CONTRACTOR SHALL DESIGNATE TO THE ENGINEER, A PERSON RESPONSIBLE FOR MAINTAINANCE OF TRAFFIC CONTROL DURING NON-WORK HOURS WHO SHALL BE AVAILABLE WITHIN THIRTY (30) MINUTES AT ANY TIME AFTER NOTIFICATION.

UNDER NO CIRCUMSTANCES SHALL THE CONTRACTOR BE PERMITTED TO DIRECTLY TRANSPORT OR OPERATE ANY EQUIPMENT ACROSS THE OPEN LANES OF U.S.R. 30. NO TRAFFIC WILL BE ALLOWED TO DRIVE ON PAVEMENT THAT HAS BEEN PLANED AND NOT RESURFACED.

THERE SHALL NOT BE MORE THAN ONE PROPOSED COURSE PLACED ON EXISTING PAVEMENT OR SHOULDERS BEFORE ADJACENT COURSES ARE PLACED.

THE CONTRACTOR SHALL ALLOW ACCESS TO PRIVATE RESIDENCES AND FIELD DRIVES.

PAYMENT FOR PROVIDING WATCHMAN, FURNISHING, ERECTING, MAINTAINING AND REMOVING SIGNS, BARRICADES, CONES , MARKERS, ALL PORTABLE CONCRETE BARRIER AND APPLICABLE END TREATMENTS, ALL TEMPORARY PAVEMENT MARKINGS, TEMPORARY RAISED PAVEMENT MARKERS, ETC… SHALL BE INCLUDED IN THE LUMP SUM BID FOR ITEM 614 MAINTAINING TRAFFIC AS PER PLAN. THE CONTRACTOR SHALL ALSO FURNISH, INSTALL MAINTAIN, AND REMOVE ALL ADDITIONAL SIGNS OR TRAFFIC CONTROL DEVICES DEEMED NECESSARY BY THE ENGINEER WITH ALL ASSOCIATED COSTS INCLUDED IN THE LUMP SUM PRICE BID ITEM 614 MAINTAINING TRAFFIC AS PER PLAN.

ALTERNATE METHODS

IF THE CONTRACTOR SO ELECTS, HE MAY SUBMIT ALTERNATE METHODS FOR MAINTENANCE OF TRAFFIC PROVIDED THE INTENT OF THE ABOVE PROVISIONS ARE FOLLOWED AND NO ADDITIONAL INCONVENIENCE TO THE TRAVELLING PUBLIC RESULTS THERE FROM. NO ALTERNATE PLAN SHALL BE PLACED INTO EFFECT UNTIL APPROVAL HAS BEEN GRANTED, IN WRITING, BY THE DIRECTOR OF TRANSPORTATION.

SEQUENCE OF OPERATIONS AT AT-GRADE INTERSECTIONS

THE CONTRACTOR SHALL CONDUCT HIS PLANING AND RESURFACING OPERATIONS IN SUCH A MANNER AS TO MINIMIZE THE IMPACT ON THE TRAVELLING PUBLIC. THERE SHALL BE NO MORE THAN AN 80 mm DIFFERENCE BETWEEN THE TOP OF THE SURFACES OF ADJACENT LANES AT THE AT-GRADE INTERSECTIONS AT ANY TIME. THE INTERSECTION SHALL NOT BE CLOSED TO TRAFFIC FOR MORE THAN 10 CALENDAR DAYS, DURING WHICH TIME THE 301 AND 446 INTERMEDIATE COURSES SHALL BE PLACED.

NO MORE THAN ONE AT-GRADE INTERSECTION MAY BE CLOSED AT A TIME. THE CONTRACTOR SHALL BE RESPONSIBLE FOR THE DEPLOYMENT, IMPLEMENTATION AND SUBSEQUENT REMOVAL OF TRAFFIC CONTROL DEVICES REQUIRED TO CLOSE EACH AT-GRADE INTERSECTION. ALL LABOR, EQUIPMENT, MATERIALS AND INCIDENTALS REQUIRED FOR THE CLOSING OF EACH AT-GRADE INTERSECTION SHALL BE INCLUDED IN THE LUMP SUM BID FOR ITEM 614, MAINTAINING TRAFFIC.

FOLLOWING COMPLETION OF ALL RESURFACING OPERATIONS WITH 446 INTERMEDIATE COURSE, ALL LANES AND RAMPS SHALL BE OPENED TO TRAFFIC EXCEPT FOR CLOSURES OF PORTIONS OF A LANE OR RAMP FOR RESURFACING. THE 446 SURFACE COURSE SHALL BE PLACED OVER THE ENTIRE PROJECT.

PAVEMENT MARKING

PRIOR TO PLACEMENT OF ANY TEMPORARY PAVEMENT MARKINGS, THE CONTRACTOR SHALL COMPLETELY OBLITERATE, AS PER 641.10, ALL EXISTING PAVEMENT MARKINGS THAT WOULD CREATE CONFUSION OR CONFLICT WITH THE TEMPORARY PAVEMENT MARKINGS. PAYMENT FOR THIS COMPLETE REMOVAL SHALL BE INCLUDED IN THE LUMP SUM PRICE FOR ITEM 614 MAINTAINING TRAFFIC AS PER PLAN.

MOVEMENT OF DRUMS

THE ROW OF DRUMS ALONG A CLOSED LANE SHALL BE MOVED OUT OF THE OPEN LANE ONTO THE NEW PAVEMENT AS SOON AS PAVING OPERATIONS PERMIT.

PORTABLE CONCRETE BARRIER 813mm

THIS STANDARD TYPE OF P.C.B. SHALL BE FURNISHED AND INSTALLED AS PER STD. DWG. RM-4.2M. ALL BARRIERS SHALL USE CONNECTING PIN AND STEEL ROD CONNECTOR METHOD OF CONNECTING THE SECTIONS TOGETHER. NO TONGUE AND GROOVE CONNECTIONS SHALL BE PERMITTED.

ALL PCB SHALL BE CONSIDERED INCIDENTAL TO THE COST OF THE PROJECT AND FURNISHING,INSTALLING, MAINTAINING AND SUBSEQUENTLY REMOVING ALL PCB SHALL BE INCLUDED IN THE LUMP SUM PRICE BID ITEM 614 MAINTAINING TRAFFIC AS PER PLAN. ALL PCB SHALL BE IN GOOD SHAPE, FREE OF CRACKS, SPALLING OR ANY OTHER DAMAGE OR DETERIORATION. PCB SHALL BE USED AT LOCATIONS DETAILED ON SHT 10 AND AT ANY OTHER LOCATIONS REQUIRED BY THE DROPOFF IN WORK ZONES SHEET INCLUDED IN THESE PLANS.

ITEM 614 BARRIER REFLECTOR & OBJECT MARKER

BARRIER REFLECTORS & OBJECT MARKERS SHALL BE INSTALLED ON ALL PORTABLE CONCRETE BARRIER USED FOR TRAFFIC CONTROL. BARRIER REFLECTORS, OBJECT MARKERS AND THEIR INSTALLATION SHALL CONFORM TO THE PROPOSAL AND SHALL BE SPACED AT 25 METERS. BASIS OF PAYMENT SHALL BE INCLUDED IN THE LUMP SUM PRICE BID ITEM 614 MAINTAINING TRAFFIC AS PER PLAN AND SHALL INCLUDE ALL LABOR, EQUIPMENT, HARDWARE AND INCIDENTALS REQUIRED TO PERFORM THE WORK.

DUST CONTROL

THE CONTRACTOR SHALL FURNISH AND APPLY WATER AND CALCIUM CHLORIDE FOR DUST CONTROL AS DIRECTED BY THE ENGINEER. THE FOLLOWING CONTINGENCY QUANTITIES HAVE BEEN INCLUDED FOR DUST CONTROL PURPOSES:

616	WATER	= 10 CUBIC METER
616	CALCIUM CHLORIDE	= 1 METRIC TON

ITEM SPECIAL - REPLACEMENT SIGN & DRUM

FLAT SHEET SIGNS FURNISHED BY THE CONTRACTOR IN ACCORDANCE WITH THE REQUIREMENTS OF THE PLAN, SPECIFICATIONS AND PROPOSAL WHICH BECOME DAMAGED BY TRAFFIC FOR REASONS BEYOND THE CONTROL OF THE CONTRACTOR SHALL BE REPLACED IN KIND WHEN ORDERED BY THE ENGINEER AND PAID FOR UNDER 'ITEM SPECIAL - REPLACEMENT SIGN.' PAYMENT FOR THE NEW SIGNS SHALL BE MADE AT THE PRICE BID PER SQUARE METER FOR 'ITEM SPECIAL - REPLACEMENT SIGN,' AND SHALL INCLUDE THE COST OF REMOVING AND DISPOSING OF THE DAMAGED SIGNS, HARDWARE, SUPPORTS, ETC. REPLACEMENT SIGNS SHALL BE NEW, BUT OTHER MATERIALS MAY BE USED SUBJECT TO APPROVAL OF THE ENGINEER.

SPECIAL REPLACEMENT SIGN = 43 SQUARE METER

DRUMS FURNISHED BY THE CONTRACTOR IN ACCORDANCE WITH THE REQUIREMENTS OF THE PLAN, SPECIFICATIONS AND PROPOSAL WHICH BECOME DAMAGED BY TRAFFIC FOR REASONS BEYOND THE CONTROL OF THE CONTRACTOR SHALL BE REPLACED IN KIND WHEN ORDERED BY THE ENGINEER AND PAID FOR UNDER 'ITEM SPECIAL - REPLACEMENT DRUM'. PAYMENT FOR THE NEW DRUM SHALL INCLUDE THE COST OF REMOVING AND DISPOSING OF THE DAMAGED DRUM AND PROVIDING AND MAINTAINING NEW DRUMS IN ACCORDANCE WITH THE CONTRACT REQUIREMENTS FOR THE ORIGINAL DRUMS.

SPECIAL REPLACEMENT DRUM = 230 EACH

SHOULDER MAINTENANCE

TRAFFIC CONTROL OPERATIONS REQUIRE THE PARTIAL UTILIZATION OF THE SHOULDERS FOR TRAFFIC LANES AT BRIDGES. IT SHALL BE THE RESPONSIBILITY OF THE CONTRACTOR TO ASSURE THAT THE SHOULDERS ARE MAINTAINED IN ACCEPTABLE CONDITION FOR THEIR SAFE USE AS A TRAFFIC LANE. A QUANTITY OF 235 CUBIC METERS OF ITEM 301 BITUMINOUS AGGREGATE BASE AND A QUANTITY OF 235 CUBIC METERS OF ITEM 203 EXCAVATION IS INCLUDED IN THE GENERAL SUMMARY TO RECONSTRUCT THE EXISTING SHOULDERS FOR A WIDTH OF 1 METER PRIOR TO THE UTILIZATION OF THE SHOULDER FOR MAINTENANCE OF TRAFFIC PURPOSES IN THE AREAS OF PCB WORK ZONE PROTECTION (SEE SHT 10 FOR LOCATIONS). USE OF THESE QUANTITIES IS TO BE AS DIRECTED BY THE ENGINEER. AN ADDITIONAL QUANTITY OF 10 CUBIC METERS OF ITEM 301 HAS BEEN INCLUDED IN THE GENERAL SUMMARY FOR ANY REQUIRED REPAIRS, TO BE USED AS DIRECTED BY THE ENGINEER.

301 BITUMINOUS AGGREGATE BASE = 245 CUBIC METER

203 EXCAVATION NOT INCLUDING EMBANKMENT CONSTRUCTION = 235 CUBIC METER

PORTABLE CONCRETE BARRIER END TREATMENT

THE CONTRACTOR SHALL PROTECT THE ENDS OF ANY PORTABLE CONCRETE BARRIER WITH EITHER A TAPERED END SECTION OR A TEMPORARY IMPACT ATTENUATOR AS DETAILED ON SHEET 10 AND AS SPECIFIED IN THE STANDARD DRAWINGS.

SHOULD THE CONTRACTOR ELECT TO USE TEMPORARY IMPACT ATTENUATORS, THIS WORK SHALL CONSIST OF FURNISHING QUADGUARD TEMPORARY IMPACT ATTENUATORS, MODEL QZ2406Y. THIS SHALL INCLUDE ALL RELATED HARDWARE AS REQUIRED BY THE MANUFACTURER TO CONSTRUCT A COMPLETE AND FUNCTIONAL QUADGUARD TEMPORARY IMPACT ATTENUATOR SYSTEM. THE ATTENUATORS SHALL BE PLACED IN ACCORDANCE WITH THE MANUFACTURER'S SPECIFICATIONS AND AT THE LOCATIONS SHOWN ON THE PLANS. THE IMPACT ATTENUATOR SHALL BE MANUFACTURED BY THE ENERGY ABSORPTION SYSTEMS, INC., ONE EAST WACKER DRIVE, CHICAGO, ILLINOIS 60601: TELEPHONE (312) 467-6750.

FOR ANY TEMPORARY INSTALLATION, THE NOSE COVER SHALL MEET THE REQUIREMENTS OF STANDARD DRAWING MT-95.81. THE CONTRACTOR SHALL BE RESPONSIBLE FOR INSPECTION, REPAIRING, AND OTHERWISE RESTORING THE IMPACT ATTENUATOR IN ACCORDANCE WITH THE MANUFACTURER'S MAINTENANCE INSTRUCTIONS WHILE IT IS IN USE ON THE PROJECT. SUCH REPAIRS SHALL BE PERFORMED WITHIN 12 HOURS OF THE INCIDENT WHICH CAUSED DAMAGE TO THE PROJECT. IN ADDITION TO ANY EXTRA UNITS SUPPLIED FOR THIS PROJECT, THE CONTRACTOR SHALL BE RESPONSIBLE FOR SUPPLYING ALL NECESSARY MATERIALS, LABOR, AND EQUIPMENT REQUIRED TO PERFORM THE ABOVE DESCRIBED RESTORATION OF THE ATTENUATOR.

PAYMENT FOR THE ABOVE WORK SHALL INCLUDE FURNISHING, INSTALLING MAINTAINING, REMOVING AND RE-ERECTING, REMOVAL FROM THE PROJECT UPON COMPLETION, RESTORATION AFTER EACH VEHICLE IMPACT OF THE TEMPORARY IMPACT ATTENUATOR, INCLUDING ALL LABOR, TOOLS, EQUIPMENT AND MISCELLANEOUS HARDWARE AND MATERIALS NECESSARY TO COMPLETE THESE ITEMS OF WORK.

PAYMENT FOR ALL ABOVE WORK SHALL BE INCLUDED IN THE LUMP SUM PRICE BID FOR ITEM 614 MAINTAINING TRAFFIC AS PER PLAN.

ESTIMATED QUANTITIES

ITEM	QUANTITY	UNIT	DESCRIPTION
203	235	CUBIC METER	EXCAVATION NOT INCLUDING EMBANKMENT CONSTRUCTION
301	245	CUBIC METER	BITUMINOUS AGGREGATE BASE
616	10	CUBIC METER	WATER
616	1	METRIC TON	CALCIUM CHLORIDE
SPECIAL	43	SQUARE METER	REPLACEMENT SIGN
SPECIAL	230	EACH	REPLACEMENT DRUM

QUANTITIES CARRIED TO GENERAL SUMMARY, SHEET 15.

CALCULATED BDC CHECKED DJS

MAINTENANCE OF TRAFFIC NOTES

VAN-30-6.618(4.05)

9 / 134

DESIGN FILE : i:\pd\van30d\v30mnl.dgn
USERNAME : rhermon

DATE : 18-SEP-1997
TIME : 07:44

MAINTENANCE OF TRAFFIC NOTES

ITEM 614 - LAW ENFORCEMENT OFFICER WITH PATROL CAR

IN ADDITION TO THE REQUIREMENTS OF 614 AND THE LATEST EDITION OF THE OHIO MANUAL OF UNIFORM TRAFFIC CONTROL DEVICES (OMUTCD), A UNIFORMED LAW ENFORCEMENT OFFICER (AND OFFICIAL PATROL CAR WITH WORKING TOP MOUNTED EMERGENCY FLASHING LIGHTS) SHALL BE PROVIDED FOR CONTROLLING TRAFFIC FOR THE FOLLOWING TASK:

FOR LANE CLOSURES: DURING INITIAL SET-UP PERIODS, TEAR DOWN PERIODS, SUBSTANTIAL SHIFTS OF A CLOSURE POINT OR WHEN NEW LANE CLOSURE ARRANGEMENTS ARE INITIATED.

LAW ENFORCEMENT OFFICERS (L.E.O.'S) SHOULD NOT BE USED WHERE THE OMUTCD INTENDS THAT FLAGGERS BE USED. THE LEO'S ARE CONSIDERED TO BE EMPLOYED BY THE CONTRACTOR AND THE CONTRACTOR SHALL BE RESPONSIBLE FOR THEIR ACTIONS. ALTHOUGH THEY ARE EMPLOYED BY THE CONTRACTOR, THE PROJECT ENGINEER SHALL HAVE CONTROL OVER THEIR PLACEMENT. THE OFFICIAL PATROL CAR SHALL BE A PUBLIC SAFETY VEHICLE AS REQUIRED BY THE OHIO REVISED CODE. THE CONTRACTOR SHALL MAKE ARRANGEMENTS FOR THESE SERVICES WITH:

OHIO STATE HIGHWAY PATROL
1230 OLD U.S.R. 30
VAN WERT, OH 45891
(419) 238-3055

LAW ENFORCEMENT OFFICERS WITH PATROL CAR REQUIRED BY THE TRAFFIC MAINTENANCE TASKS ABOVE SHALL BE PAID FOR ON A UNIT PRICE (HOURLY) BASIS UNDER ITEM 614-LAW ENFORCEMENT OFFICER WITH PATROL CAR. THE FOLLOWING ESTIMATED QUANTITIES HAVE BEEN CARRIED TO THE GENERAL SUMMARY. THE HOURS PAID SHALL INCLUDE MINIMUM SHOW-UP REQUIRED BY THE LAW ENFORCEMENT AGENCY INVOLVED.

614 LAW ENFORCEMENT OFFICER WITH PATROL CAR - 100 HOUR

IF THE CONTRACTOR WISHES TO UTILIZE LEO'S FOR FLAGGING AND TRAFFIC CONTROL OTHER THAN FOR THAT REQUIRED IN THESE PLANS, HE MAY DO SO AT HIS OWN EXPENSE. PAYMENT FOR THE EXCESS ABOVE THE CONTRACT REQUIREMENTS WILL BE INCLUDED UNDER ITEM 614 MAINTAINING TRAFFIC.

614 WORK ZONE SPEED LIMIT SIGN

THE CONTRACTOR SHALL FURNISH, INSTALL, MAINTAIN, COVER DURING SUSPENSION OF WORK, AND REMOVE WORK ZONE SPEED LIMIT SIGNS AND SUPPORTS (R-10-48) (55 MPH) WITHIN THE WORK LIMITS IN ACCORDANCE WITH THE FOLLOWING REQUIREMENTS.

THE CONTRACTOR SHALL COVER OR REMOVE ANY EXISTING SPEED LIMIT OR MINIMUM SPEED SIGNS WITHIN THE REDUCED SPEED ZONE. THESE SIGNS SHALL BE RESTORED DURING SUSPENSION OR TERMINATION OF THE REDUCED SPEED LIMIT. THE EXPENSE OF COVERING OR REMOVAL AND RESTORATION OF EXISTING SPEED LIMIT OR MINIMUM SPEED SIGNS IS INCIDENTAL TO THE PAY ITEM FOR THE WORK ZONE SPEED LIMIT SIGNS.

THE WORK ZONE SPEED LIMIT SIGNS MAY BE ERECTED AND COVERED PRIOR TO STARTING WORK OR MAY BE ERECTED UNCOVERED NO MORE THAN 4 HOURS BEFORE THE ACTUAL START OF WORK. THE SIGNS SHALL BE REMOVED OR COVERED NO MORE THAN 4 HOURS FOLLOWING RESTORATION OF ALL LANES TO TRAFFIC WITH NO RESTRICTIONS AS DIRECTED BY THE ENGINEER.

THE CONTRACTOR SHALL ERECT A WORK ZONE SPEED LIMIT SIGN IN ADVANCE OF ANY LANE RESTRICTION EXPECTED TO LAST AT LEAST 30 CONSECUTIVE CALENDAR DAYS OR AS DIRECTED BY THE ENGINEER. THE SIGNS SHALL BE MOUNTED ON BOTH SIDES OF DIVIDED HIGHWAYS, 150 METERS IN ADVANCE OF THE LANE REDUCTION TAPER. THE SIGN SHALL BE MOUNTED ON THE RIGHT SIDE, 75 METERS IN ADVANCE OF THE LANE REDUCTION TAPER ON UNDIVIDED HIGHWAYS. THE SIGN SHALL BE REPEATED, ON THE SIDE NEAREST TRAFFIC, EVERY 1600 METERS FOR 55 MPH ZONES AND 800 METERS FOR 45 MPH ZONES. THESE SIGNS SHALL ALSO BE ERECTED IMMEDIATELY AFTER EACH OPEN ENTRANCE RAMP WITHIN THE ZONE. A SIGN TO INDICATE THE RESUMPTION OF THE STATUTORY SPEED LIMIT SHALL BE ERECTED AT THE END OF ANY REDUCED SPEED ZONE. THIS SIGN SHALL BE AN R-8A.

THE CONTRACTOR MAY USE SIGNS AND SUPPORTS IN USED BUT GOOD CONDITION PROVIDED THE SIGNS MEET CURRENT ODOT SPECIFICATIONS AND ALL REQUIREMENTS OF CMS 614.03. WORK ZONE SPEED LIMIT SIGNS SHALL BE MOUNTED ON TWO (2) ITEM 630 GROUND MOUNTED SUPPORTS, NO. 4 POSTS.

WORK ZONE SPEED LIMIT SIGN AND SUPPORTS WILL BE MEASURED AS THE NUMBER OF SIGN INSTALLATIONS, INCLUDING THE SIGN AND NECESSARY SUPPORTS. IF A SIGN AND SUPPORT COMBINATION IS REMOVED AND REERECTED AT ANOTHER LOCATION WITHIN THE PROJECT DUE TO CHANGES IN THE SPEED ZONE DIRECTED BY THE ENGINEER, IT SHALL BE CONSIDERED ANOTHER UNIT.

614 WORK ZONE SPEED LIMIT SIGN (CONT.)

PAYMENT FOR ACCEPTED QUANTITIES, COMPLETE, IN PLACE WILL BE MADE AT THE CONTRACT UNIT PRICE. PAYMENT SHALL BE FULL COMPENSATION FOR ALL MATERIALS, LABOR, INCIDENTALS AND EQUIPMENT FOR FURNISHING, ERECTION, MAINTENANCE, COVERING DURING SUSPENSION OF WORK AND REMOVAL OF THE SIGNS AND SUPPORTS.

614 WORK ZONE SPEED LIMIT SIGN - 60 EACH

DOUBLE FINES IN WORK ZONES SIGN

R-180-48 SIGNS SHALL BE FURNISHED, ERECTED, AND MAINTAINED IN GOOD CONDITION AND/OR REPLACED AS NECESSARY AND SUBSEQUENTLY REMOVED BY THE CONTRACTOR. SIGNS SHALL BE MOUNTED AT THE APPROPRIATE OFFSETS AND ELEVATIONS AS PRESCRIBED BY THE OHIO MANUAL OF UNIFORM TRAFFIC CONTROL DEVICES. THEY SHALL BE MAINTAINED ON SUPPORTS MEETING CURRENT SAFETY CRITERIA.

THE SIGNS SHALL BE COVERED OR REMOVED WHEN THE CONSTRUCTION ZONE IS DISCONTINUED FOR 30 DAYS OR MORE.

THE SIGNS SHALL BE DUAL MOUNTED. THE FIRST SIGFN SHALL BE PLACED BETWEEN THE "ROAD CONSTRUCTION AHEAD" (OW-128) SIGN AND THE NEXT SIGN IN THE SEQUENCE. SIGNS SHALL BE ERECTED ON EACH ENTRANCE RAMP AND EVERY THREE KILOMETERS THROUGH THE CONSTRUCTION WORK LIMITS.

THE CONTRACTOR MAY USE SIGNS AND SUPPORTS IN USED BUT GOOD CONDITION PROVIDED THE SIGNS MEET CURRENT ODOT SPECIFICATIONS. SIGN FACES SHALL BE REFLECTORIZED WITH TYPE G SHEETING COMPLYING WITH THE REQUIREMENTS OF 730J9 AND U.S. DEPARTMENT OF TRANSPORTATION SUPPLEMENTAL SPECIFICATION FOR TYPE III-C SHEETING, FP-85

DOUBLE FINES IN WORK ZONES SIGNS AND SUPPORTS WILL BE MEASURED AS THE NUMBER OF SIGN INSTALLATIONS, INCLUDING THE SIGN AND NECESSARY SUPPORTS. IF A SIGN AND SUPPORT COMBINATION IS REMOVED AND REERECTED AT ANOTHER LOCATION AS DIRECTED BY THE ENGINEER, IT SHALL BE CONSIDERED ANOTHER UNIT.

PAYMENT FOR ACCEPTED QUANTITIES, COMPLETE, IN PLACE WILL BE MADE AT THE CONTRACT UNIT PRICE. PAYMENT SHALL BE FULL COMPENSATION FOR ALL MATERIALS, LABOR, INCIDENTALS AND EQUIPMENT FOR FURNISHING, ERECTING, MAINTAINING, COVERING DURING SUSPENSION OF WORK, AND REMOVAL OF THE SIGN AND SUPPORT.

ITEM 614-DOUBLE FINES IN WORK ZONE SIGNS 20 EACH

PCB LAYOUT

Bridge No.	Side	Station	B	C
09350	Rt.		9+550	9+566
	Rt.		9+550	9+566
	Lt.		9+581	9+565
	Lt.		9+581	9+565
14774	Rt.		14+978	15+006
	Rt.		14+978	15+006
	Lt.		15+020	14+992
	Lt.		15+020	14+992
15369	Rt.		15+572	15+598
	Rt.		15+572	15+598
	Lt.		15+603	15+575
	Lt.		15+603	15+575

PCB WORK ZONE PROTECTION WITH TAPERED END SECTION

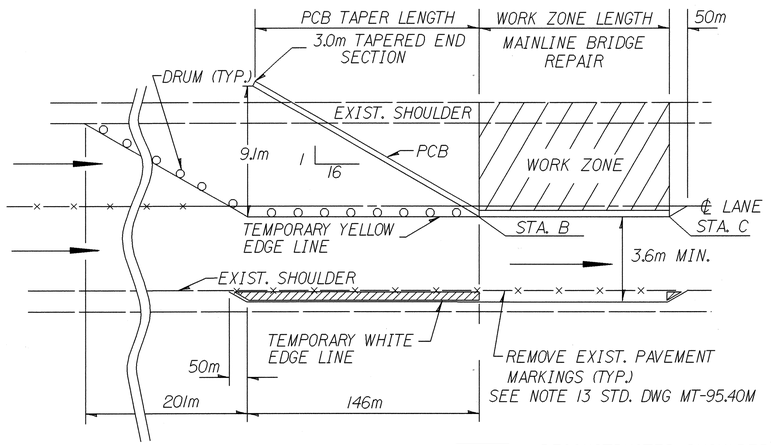

- RECONSTRUCTED SHOULDER (100 mm ITEM 301)

LEFT LANE CLOSURE SHOWN. SAME DETAILS APPLY TO RIGHT LANE CLOSURE. FOR ADDITIONAL DETAILS SEE STD. DWG. MT-95.40M

PCB WORK ZONE PROTECTION WITH TEMPORARY IMPACT ATTENUATOR

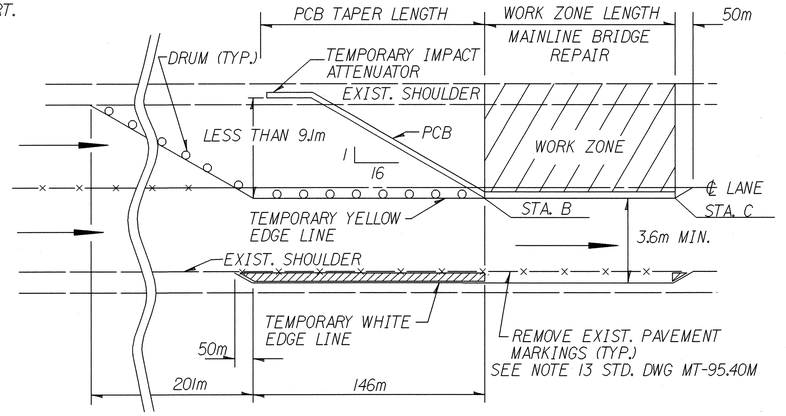

LEFT LANE CLOSURE SHOWN. SAME DETAILS APPLY TO RIGHT LANE CLOSURE. FOR ADDITIONAL DETAILS SEE STD. DWG. MT-95.40M

- RECONSTRUCTED SHOULDER (100 mm ITEM 301)

ESTIMATED QUANTITIES

ITEM	QUANTITY	UNIT	DESCRIPTION
614	100	HOUR	LAW ENFORCEMENT OFFICER WITH PATROL CAR
614	60	EACH	WORK ZONE SPEED LIMIT SIGN

CALCULATED BDC
CHECKED DJS

MAINTENANCE OF TRAFFIC NOTES AND DETAILS

VAN-30-6.618(4.05)

10
134

DESIGN FILE : i:\pd\van30d\v30mnl.dgn
USERNAME : rherman
DATE : 25-SEP-1997
TIME : 10:43

MAINTENANCE OF TRAFFIC NOTES

DESIGNATED LOCAL DETOUR ROUTE

IN ADDITION TO THE OFFICIAL, SIGNED DETOUR ROUTE, A LOCAL ROUTE HAS BEEN DETERMINED TO BE THE SECONDARY, UNSIGNED DETOUR ROUTE OR "DESIGNATED LOCAL DETOUR ROUTE". THIS ROUTE IS SHOWN ON THIS SHEET. DURING THE TIME THAT TRAFFIC IS DETOURED, THE CONTRACTOR SHALL MAINTAIN THIS ROUTE IN A CONDITION WHICH IS REASONABLY SMOOTH AND FREE FROM HOLES, RUTS, RIDGES, BUMPS, DUST AND STANDING WATER. ONCE THE DETOUR IS REMOVED AND TRAFFIC RETURNED TO ITS NORMAL PATTERN, THE DESIGNATED LOCAL DETOUR ROUTE SHALL BE RESTORED TO A CONDITION THAT IS EQUIVALENT TO THAT WHICH EXISTED PRIOR TO ITS USE FOR THIS PURPOSE. ALL SUCH WORK SHALL BE PERFORMED WHEN AND AS DIRECTED BY THE ENGINEER.

THE FOLLOWING ESTIMATED QUANTITIES ARE PROVIDED FOR USE AS DIRECTED BY THE ENGINEER TO MAINTAIN AND SUBSEQUENTLY RESTORE THE DESIGNATED LOCAL DETOUR ROUTE.

301 BITUMINOUS AGGREGATE BASE, PG 64-22	*= 17*	*CUBIC METER*
448 ASPHALT CONCRETE SURFACE COURSE, TYPE 1, PG 64-22	*= 112*	*CUBIC METER*
407 TACK COAT	*= 500*	*LITER*
617 COMPACTED AGGREGATE, TYPE A	*= 7.5*	*CUBIC METER*
617 WATER	*= 5.7*	*CUBIC METER*

DETOUR LIMITATION

DUE TO RESURFACING AND RECONSTRUCTION OF THE S.R. 49/U.S.R. 30 AT-GRADE INTERSECTION, TRAFFIC SHALL BE DETOURED FOR A MAXIMUM OF 10 DAYS, AS SHOWN ON THE DETOUR MAP. STATE FORCES WILL COVER THE APPROPRIATE EXISTING SIGNS (OUTSIDE THE PROJECT WORK LIMITS) AT THE DETOUR LOCATIONS. IT SHALL BE THE CONTRACTOR'S RESPONSIBILITY TO PROVIDE APPROPRIATE DETOUR SIGNS, AS DESCRIBED IN SPEC. 108.07 OF THE CMS FOR EACH CALENDAR DAY THAT THE AT-GRADE INTERSECTION IS CLOSED TO TRAFFIC BEYOND THE SPECIFIED LIMIT.

S.R. 49 & U.S.R. 30 AT-GRADE DETOUR

THE S.R. 49 AND U.S.R. 30 AT-GRADE INTERSECTION DETOUR DETAILED ON THIS SHEET IS INTENDED FOR S.R. 49 THROUGH TRAFFIC AND TRAFFIC TURNING EITHER OFF OF U.S.R. 30 ONTO S.R. 49 OR ONTO U.S.R. 30 FROM S.R. 49. AT NO TIME SHALL THROUGH MAINLINE U.S.R. 30 TRAFFIC BE DETOURED UNLESS DIRECTED BY THE ENGINEER.

THE CONTRACTOR SHALL NOTIFY THE DISTRICT 1 ROADWAY SERVICES ADMINISTRATOR 14 CALENDAR DAYS IN ADVANCE OF CLOSING THE INTERSECTION TO ALLOW FOR THE DETOUR TO BE SET UP AND THE PUBLIC TO BE NOTIFIED.

ESTIMATED QUANTITIES

ITEM	QUANTITY	UNIT	DESCRIPTION
301	17	CUBIC METER	BITUMINOUS AGGREGATE BASE, PG 64-22
446	112	CUBIC METER	ASPHALT CONCRETE SURFACE COURSE, TYPE 1, PG 64-22
407	500	LITER	TACK COAT
617	8	CUBIC METER	COMPACTED AGGREGATE, TYPE A
617	6	CUBIC METER	WATER

QUANTITIES CARRIED TO GENERAL SUMMARY, SHEETS 14.

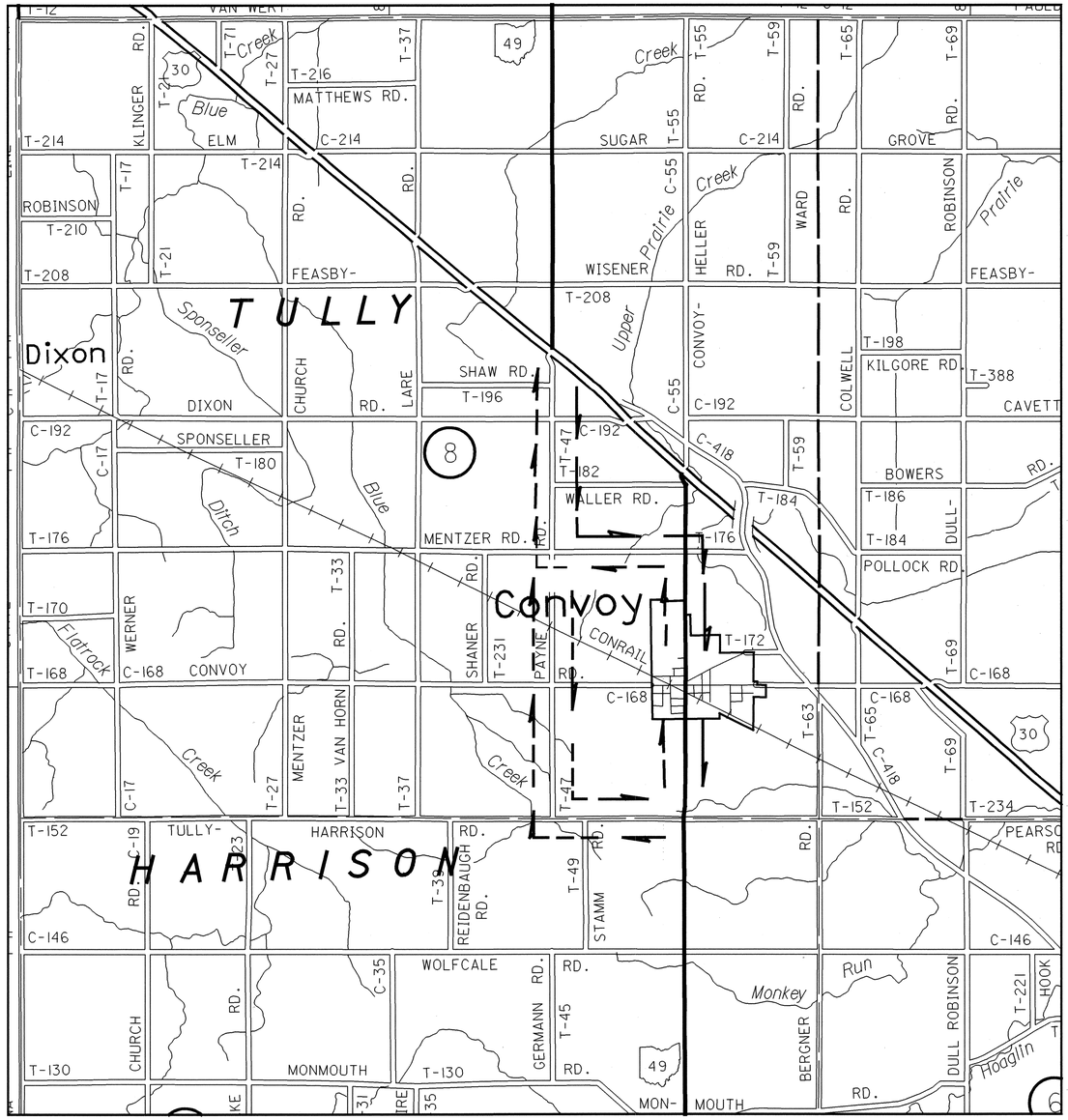

S.R. 49 & U.S.R. 30 AT-GRADE INTERSECTION DETOUR MAP

0 2 4 6 8 10

SCALE IN KILOMETERS

- *Southbound S.R. 49 Detour*
- *Northbound S.R. 49 Detour*
- *Southbound Local Detour*
- *Northbound Local Detour*

CALCULATED BDC CHECKED DJS

MAINTENANCE OF TRAFFIC

VAN-30-6.618(4.05)

11 / 134

DESIGN FILE : i:\pd\van30d\v30mnl.dgn
USERNAME : rhermon

DATE : 18-SEP-1997
TIME : 07:46

GENERAL NOTES

1. It is intended that this drawing be used for treatment of drop-offs that develop during construction operations, and that are not otherwise provided for in the construction plans. Where the plans do not provide specific items for labor, equipment, or materials to implement the drop-off treatments specified hereon, they shall be included for payment in the lump sum bid for Item 614 - Maintaining Traffic.
2. While the need for certain advisory signing is noted hereon, it is not intended that this be indicative of all signing that may be required to advise or warn motorists, and all requirements of the Ohio Manual of Uniform Traffic Control Devices (OMUTCD) must be fulfilled.
3. In urban or otherwise heavily developed areas where pedestrians and/or bicyclists may be present in significant numbers, additional signing and protective measures other than those shown hereon may be required.
4. The drop-off treatment selected for use at any given location shall be as appropriate for the prevailing conditions at the site.
5. Where concrete barrier is specified, it shall be in accordance with Standard Construction Drawing MC-9.2M and Item 622.
6. When drums are specified for a dropoff condition, a minimum number of four drums shall be used. Spacing shall be as indicated in the plans or as specified in the OMUTCD.
7. When OW-15I (Low Shoulder) signs or OW-17I (Uneven Lanes) and OWP-17I signs are required, they shall be placed 230 meters in advance of the condition, on all intersecting entrance ramps within the limits of the condition and immediately beyond all intersecting roadways within the limits of the condition. When the dropoff condition extends more than 800 meters, additional signs should be erected at intervals of 1.6 kilometer or less.
8. For locations, such as at ramps, lane shifts, lane closures, etc., where traffic is required to negotiate any difference in elevation between pavements, a 3:1 slope treatment similar to the Optional Wedge Treatment shall be provided.
9. Portable concrete barrier shall be placed on the same level as the traffic surface and shall not encroach on lane width(s) designated as the minimum required for traffic use. Where drums are used, and their presence would reduce traveled lane widths to less than 3.0 m, drums may be placed on the opposite level from that of traffic provided the dropoff depth does not exceed 127 mm and approval is granted by the Project Engineer.
10. Pavement Repairs (or similar work):
    a. Lengths greater than 20 meters - utilize appropriate treatment from Condition I.
    b. Lengths of 20 meters or less - repairs shall be effected in accordance with 255.08. Drums may be used as a separator adjacent to the traveled lane.

OPTIONAL WEDGE TREATMENT
(MILLING OR RESURFACING)

1. This treatment may be used when permitted for Condition I only.
2. OW-17I and OWP-17I signs required.

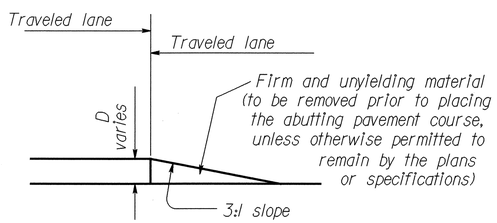

CONDITION I
DROPOFFS BETWEEN TRAVELED LANES

1. These treatments are to be used for resurfacing, pavement planing, excavation, etc. between or within traveled lanes.

D (mm)	Treatment
≤38	Erect OW-17I and OWP-17I signs.
>38-76	1) Lane closure utilizing drums * as shown below OR 2) Optional Wedge Treatment
>76-127	Lane closure utilizing drums as shown below.
>127	Lane closure utilizing portable concrete barrier as shown below.

* Cones may be used for daytime only conditions.

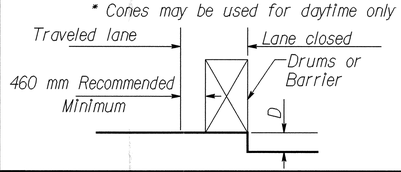

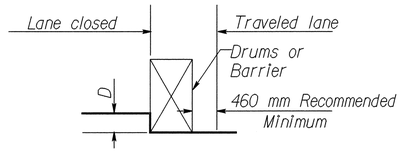

CONDITION II
DROPOFFS WITHIN GRADED SHOULDER AREA

1. The treatments indicated below are for use in conjunction with resurfacing, planing, or excavations within the graded shoulder area.
2. The graded shoulder area is that flat or gradually sloping area between the edge of a normally traveled lane and the more steeply sloping ditch foreslope or embankment slope. Its surface may be soil or turf, and/or it may be inclusive of a "treated" area (improved with aggregates, asphaltic materials, or concrete). For the purposes herein, its maximum width shall be considered to be 3.6 meters.

D (mm)	Treatment
≤38	1) If edgelines are present, no treatment necessary OR 2) Erect OW-17I and OWP-17I signs.
>38-127	1) If min. lane width * requirements can be met, maintain lanes utilizing drums as shown below OR 2) If min. lane width * requirements cannot be met, close adjacent lane utilizing drums OR 3) Optional Shoulder Treatment.
>76-305 Daylight only	If min. lane width * requirements can be met, maintain lanes utilizing drums as shown below.
>76-610	1) If min. lane width * requirements can be met, maintain lanes utilizing portable concrete barrier as shown below. OR 2) If min. lane width * requirements cannot be met, close adjacent lane utilizing drums.
>610	Lane closure utilizing portable concrete barrier as shown below.

* Minimum lane widths shall be 3.0 meters unless otherwise specified in the plans.

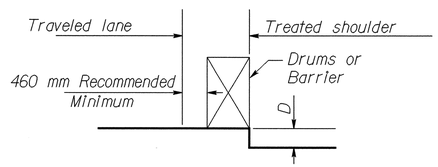

OPTIONAL SHOULDER TREATMENT

1. This treatment may not be used within a bituminous shoulder where a hot longitudinal joint per 40I.15 is required.
2. OW-15I signs required.

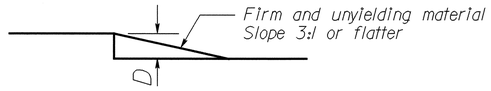

CONDITION III
DROPOFFS BEYOND GRADED SHOULDER OR BACK OF CURB

1. See Note 2 under Condition II.
2. Use Chart A or B below, as applicable.

CHART A

USE FOR: 1. Uncurbed Facilities.
2. Curbed Facilities, where:
   a. Curbs are less than 150 mm in height.
   b. Curbs are 150 mm or greater in height and the legal speed is 70 km/h or greater.

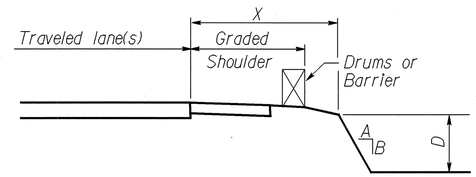

X (m)	D (mm)	A/B	Treatment Required	
			Day	Night
0-1.2	Any	Any	(a)	(a)
1.2-9.1	Any	3:1 or Flatter	None	None
1.2-3.6	≤76	Steeper than 3:1	None	None
1.2-3.6	>76-≤305	Steeper than 3:1	Drums	Drums
1.2-3.6	>305	Steeper than 3:1	Drums	Barrier
>3.6-6.1	≤305	Steeper than 3:1	None	None
>3.6-6.1	>305-≤610	Steeper than 3:1	Drums	Drums
>3.6-6.1	>610	Steeper than 3:1	Drums	Barrier
>6.1-9.1	≤610	Steeper than 3:1	None	Drums
>6.1-9.1	>610	Steeper than 3:1	Drums	Barrier
>9.1	Any	Any	None	None

(a) Use treatment specified under Condition II.

CHART B

USE FOR: Curbed facilities, where the curb is 150 mm or greater in height and the legal speed less than 70 km/h.

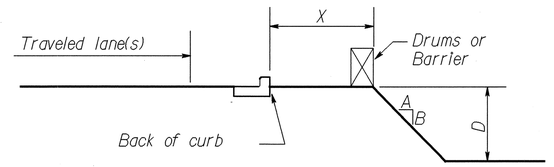

X (m)	D (mm)	A/B	Treatment Required	
			Day	Night
0-3.0	<305	Any	None	Drums
0-3.0	>305	Any	Drums	Drums
>3.0	Any	Any	None	None

METRIC

STATE OF OHIO
DEPARTMENT OF TRANSPORTATION
BUREAU OF LOCATION AND DESIGN

DROPOFFS IN WORK ZONES

DESIGNED	DRAWN	TRACED	CHECKED	REVIEWED	DATE	REVISED
						1/94

DESIGN FILE : i:\pd\van30a\dropoffm.dgn
USERNAME : rhermon
DATE : 05-SEP-1997
TIME : 10:33

SHEET No.														ITEM	ITEM EXT.	TOTAL	UNIT	DESCRIPTION	SEE SHEET No.
7	8	9	10	11	18	27	82	89	93			98	104						
																		ROADWAY	
														201	11000	LUMP		CLEARING AND GRUBBING	
									24					202	35100	24	METER	PIPE REMOVED, 600 MM AND UNDER	
							1874.52							202	38000	1874.52	METER	GUARDRAIL REMOVED	
							137.16							202	38300	137.16	METER	GUARDRAIL REMOVED, BARRIER DESIGN	
							1485							202	54100	1485	EACH	RAISED PAVEMENT MARKER REMOVED FOR STORAGE	
									2					202	58100	2	EACH	CATCH BASIN REMOVED	
									8					202	58500	8	EACH	CATCH BASIN ABANDONED	
									129					SPECIAL	20270100	129	METER	PIPE CLEANOUT	8
		235						1	1598					203	12000	1834	CU METER	EXCAVATION NOT INCLUDING EMBANKMENT CONSTRUCTION	
									25303					203	20000	25303	CU METER	EMBANKMENT	
							2293.62							606	13000	2293.62	METER	GUARDRAIL, TYPE 5	
							76.20							606	15500	76.20	METER	GUARDRAIL, BARRIER DESIGN, TYPE 5	
							4							606	25000	4	EACH	ANCHOR ASSEMBLY, TYPE A	
							18							606	26100	18	EACH	ANCHOR ASSEMBLY, TYPE E	
							20							606	26500	20	EACH	ANCHOR ASSEMBLY, TYPE T	
							3							606	35000	3	EACH	BRIDGE TERMINAL ASSEMBLY, TYPE 1	
							23							606	35140	23	EACH	BRIDGE TERMINAL ASSEMBLY, TYPE 4	
							83							622	24000	83	METER	CONCRETE BARRIER, TYPE D	
							2							SPECIAL	69010360	2	EACH	IMPACT ATTENUATOR, TYPE 1, BI-DIRECTIONAL	7
																		EROSION CONTROL	
49788														207	10000	49788	SQ METER	TEMPORARY SEEDING AND MULCHING	
6759						12386								207	30000	19145	METER	FILTER FABRIC FENCE	
75														207	40000	75	METER	TEMPORARY SLOPE DRAIN	
200														207	50000	200	CU METER	TEMPORARY BENCHES, DAMS AND SEDIMENT BASINS	
75														207	55000	75	METER	TEMPORARY DIKES	
						773								207	70000	773	EACH	STRAW OR HAY BALES	
47														601	32200	47	CU METER	ROCK CHANNEL PROTECTION, TYPE C WITH FILTER	
40														601	34200	40	CU METER	ROCK CHANNEL PROTECTION, TYPE C WITHOUT FILTER	
	248941													659	10000	248941	SQ METER	SEEDING AND MULCHING	
12447														659	14000	12447	SQ METER	REPAIR SEEDING AND MULCHING	
2441							24894							659	20000	27335	KILOGRAM	COMMERCIAL FERTILIZER	
489	1245													659	35000	1734	CU METER	WATER	
																		DRAINAGE	
	30													603	00900	30	METER	150 MM CONDUIT, TYPE B	
									5					603	01100	5	METER	150 MM CONDUIT, TYPE C	
	100								2191					603	01500	2291	METER	150 MM CONDUIT, TYPE F	
									2					603	02000	2	METER	200 MM CONDUIT, TYPE C	
	30													603	02600	30	METER	200 MM CONDUIT, TYPE F	
	30													603	03600	30	METER	250 MM CONDUIT, TYPE E	
	30													603	05200	30	METER	300 MM CONDUIT, TYPE F	
									242					603	06100	242	METER	375 MM CONDUIT, TYPE C	
									73					603	07600	73	METER	450 MM CONDUIT, TYPE C	
									8					604	02804	8	EACH	CATCH BASIN, NO. 8 WITHOUT APRON	
									1					604	09000	1	EACH	CATCH BASIN ADJUSTED TO GRADE	
	10								205					604	36600	215	EACH	PRECAST REINFORCED CONCRETE OUTLET	
									42578					605	05100	42578	METER	100 MM SHALLOW PIPE UNDERDRAIN	
									3775					605	05200	3775	METER	100 MM UNCLASSIFIED PIPE UNDERDRAIN	
																		(Continued)	

DESIGN FILE : i:\pd\van30d\v30gg.dgn
USERNAME : rhermon

DATE : 28-AUG-1997
TIME : 15:37

CALCULATED N.N
CHECKED D.S

GENERAL SUMMARY

VAN-30-6.618(4.05)

SHEET No.														ITEM	ITEM EXT.	TOTAL	UNIT	DESCRIPTION	SEE SHEET No.
7	8	9	10	11	18	27	82	89	93			98	104						
																		PAVEMENT	
					300974			1						254	01000	300975	SQ METER	VARIABLE PAVEMENT PLANING, BITUMINOUS	
							4020							255	10000	4020	SQ METER	FULL DEPTH PAVEMENT REMOVAL AND RIGID REPLACEMENT, CLASS C	
							4392							255	20000	4392	METER	FULL DEPTH PAVEMENT SAWING	
					44460			2						301	46000	44462	CU METER	BITUMINOUS AGGREGATE BASE, PG 64-22	
					5437									304	20000	5437	CU METER	AGGREGATE BASE	
					95819									407	10000	95819	LITER	TACK COAT	
					101368									407	14000	101368	LITER	TACK COAT FOR INTERMEDIATE COURSE	
					85980			121						408	10000	86101	LITER	BITUMINOUS PRIME COAT	
					14610			2						446	46040	14612	CU METER	ASPHALT CONCRETE INTERMEDIATE COURSE, TYPE 2, PG 64-28	
					12470			3						446	50001	12473	CU METER	ASPHALT CONCRETE SURFACE COURSE, TYPE IH, AS PER PLAN	8
							46.7							618	40600	46.7	KILOMETER	RUMBLE STRIPS, TYPE 2 (ASPHALT)	
																		TRAFFIC CONTROL	
												233		620	10300	233	EACH	DELINEATOR, TYPE C, POST MOUNTED	
												33		620	15300	33	EACH	DELINEATOR, TYPE D, POST MOUNTED	
												1483		621	00100	1483	EACH	RAISED PAVEMENT MARKER	
													1	625	32000	1	EACH	GROUND ROD	
							116							626	00100	116	EACH	BARRIER REFLECTOR, TYPE A	
							6							626	00200	6	EACH	BARRIER REFLECTOR, TYPE B	
													898	630	02100	898	METER	GROUND MOUNTED SUPPORT, NO. 2 POST	
													490	630	03100	490	METER	GROUND MOUNTED SUPPORT, NO. 3 POST	
													37	630	06400	37	METER	GROUND MOUNTED SUPPORT, SI00X11.5 BEAM	
													82	630	06500	82	METER	GROUND MOUNTED SUPPORT, W150X13.5 BEAM	
													45	630	07000	45	METER	GROUND MOUNTED SUPPORT, W200X26.6 BEAM	
													16	630	07500	16	METER	GROUND MOUNTED SUPPORT, W250X32.7BEAM	
													119	630	07600	119	METER	GROUND MOUNTED SUPPORT, S250X17.9 BEAM	
													44	630	09000	44	EACH	BREAKAWAY BEAM CONNECTION	
													6	630	75000	6	EACH	SIGN ATTACHMENT ASSEMBLY	
													150	630	80102	150	SQ METER	SIGN, FLAT SHEET, TYPE G	
													145	630	80204	145	SQ METER	SIGN, EXTRUSHEET, TYPE G	
													46	630	84500	46	EACH	GROUND MOUNTED BEAM SUPPORT FOUNDATION	
													144	630	84900	144	EACH	REMOVAL OF GROUND MOUNTED SIGN AND DISPOSAL	
													7	630	85100	7	EACH	REMOVAL OF GROUND MOUNTED SIGN AND REERECTION	
													24	630	85400	24	EACH	REMOVAL OF GROUND MOUNTED MAJOR SIGN AND DISPOSAL	
													201	630	86002	201	EACH	REMOVAL OF GROUND MOUNTED POST SUPPORT AND DISPOSAL	
													44	630	86102	44	EACH	REMOVAL OF GROUND MOUNTED BEAM SUPPORT AND DISPOSAL	
													1	631	84000	1	EACH	SIGN SERVICE	
													1	631	84300	1	EACH	SIGN WIRED	
												54.43		642	00090	54.43	KILOMETER	EDGE LINE	
												23.63		642	00190	24.21	KILOMETER	LANE LINE	
												2.11		642	00290	0.27	KILOMETER	CENTER LINE	
												1944		642	00390	1369	METER	CHANNELIZING LINE	
												83		642	00490	83	METER	STOP LINE	
												2470		642	00690	2470	METER	TRANSVERSE LINE	
												264		642	00910	264	SQ METER	ISLAND MARKING	
																		(Continued)	

CALCULATED N.V. CHECKED D.S

GENERAL SUMMARY

VAN-30-6.618(4.05)

DESIGN FILE : i:\pd\van30d\v30gg.dgn
USERNAME : rhermon

DATE : 17-SEP-1997
TIME : 09:07

SHEET No.														ITEM	ITEM EXT.	TOTAL	UNIT	DESCRIPTION	SEE SHEET No.
7	8	9	10	11	18	27	82	89	93			98	104						
																		STRUCTURES OVER 6 METERS	
																		FOR STRUCTURE No. VAN-30-09350	124
																		FOR STRUCTURE No. VAN-30-14774	130
																		FOR STRUCTURE No. VAN-30-15369	133
																		MAINTENANCE OF TRAFFIC	
		245		17										301	46000	262	CU METER	BITUMINOUS AGGREGATE BASE, PG 64-22	
				500										407	10000	500	LITER	TACK COAT	
				112										448	47020	112	CU METER	ASPHALT CONCRETE SURFACE COURSE, TYPE I, PG 64-22	
			100											614	11100	100	HOUR	LAW ENFORCEMENT OFFICER WITH PATROL CAR	
			60											614	12470	60	EACH	WORK ZONE SPEED LIMIT SIGN	
		20												614	12480	20	EACH	DOUBLED FINES IN WORK ZONE SIGN	9
		43												SPECIAL	61412500	43	SQ METER	REPLACEMENT SIGN	9
		230												SPECIAL	61412600	230	EACH	REPLACEMEN DRUM	
		10												616	10000	10	CU METER	WATER	
		1												616	20000	1	METRIC TON	CALCIUM CHLORIDE	
				8										617	10100	8	CU METER	COMPACTED AGGREGATE, TYPE A	
				6										617	25000	6	CU METER	WATER	
														614	11001		LUMP	MAINTAINING TRAFFIC, AS PER PLAN	9
														619	16020	10	MONTH	FIELD OFFICE, TYPE C	
														SPECIAL	61925010		LUMP	COMPUTER EQUIPMENT FOR TYPE B OR C OFFICE (SEE PROPOSAL NOTE)	
														623	10000		LUMP	CONSTRUCTION LAYOUT STAKES	
														624	10000		LUMP	MOBILIZATION	

CALCULATED NJV CHECKED DJS

GENERAL SUMMARY

VAN-30-6.618(4.05)

DESIGN FILE : i:\pd\van30d\v30gg.dgn
USERNAME : rhermon
DATE : 17-SEP-1997
TIME : 09:09

STATION		Length		254			301	304			407	407	408	446	446							
				70mm Pavement Planing, Bitumlnous	Pavement Planing, Bitumlnous (Var. Thickness)		Bituminous Aggregate Base, PG 64-22	150mm Aggregate Base			Tack Coat for Intermediate Course	Tack Coat	Bituminous Prime Coat	38mm Asphalt Concrete, Surface Course, Type 1H as per plan	45mm Asphalt Concrete, Intermediate Course, Type 2, PG 64-28						
FROM	TO	m		m^2	m^2		m^3	m^3			L	L	L	m^3	m^3							
U.S.R. 30 (EASTBND&WESTBND)																						
Sta. 6+523.99	Sta. 6+617.59	93.60																				
Mainline					1370.30		133.61				465.90	465.90		52.07	60.29							
Shoulders					685.15		77.02	19.94			268.59	223.41	240.57	30.02	34.76							
Sta. 18+194.40	Sta. 18+288.00	93.60																				
Mainline					1370.30																	
Shoulders					685.15																	
U.S.R. 30 (EASTBOUND)																						
Sta. 6+617.59	Sta. 18+288.00																					
Mainline		10434.07		75692.24			11456.61				26968.31	26968.31		2902.34	3436.98							
Inside Shoulder		8960.47		10817.58			1639.77				3716.80	3716.80		415.41	491.93							
Outside Shoulder		8236.02		19867.51			3706.21	877.14			8400.74	6412.57	10584.11	938.91	1111.86							
Speed Change Lane Shoulders		2198.05		5363.24			989.12	234.09			2242.01	1711.40	2824.71	250.58	290.14							
Left Turn Lanes							1185.96	1185.96			2688.18		14310.58	300.44	355.79							
Speed Change Lanes		2198.05		12726.71			1909.01				4327.08	4327.08		483.62	572.70							
Weigh Station, Ramp "A"																						
Sta. 10+304.74	Sta. 10+362.44	57.70																				
Mainline				281.38			42.41				95.67	95.67		10.70	12.66							
Shoulders				103.86			23.37	9.09			52.97	32.37	109.66	5.92	7.01							
Weigh Station, Ramp "A"																						
Sta. 10+362.44	Sta. 10+502.24	139.80																				
Mainline					682.22		29.28				231.96	231.96		24.73	25.47							
Shoulders					251.64		16.20	22.02			128.34	78.48	265.69	13.03	14.09							
Weigh Station, Ramp "B"																						
Sta. 10+547.96	Sta. 10+687.76	139.80																				
Mainline					682.22		29.28				231.96	231.96		24.72	25.47							
Shoulders					251.64		16.20	22.02			128.34	78.43	265.69	13.68	14.09							
Weigh Station, Ramp "B"																						
Sta. 10+687.76	Sta. 10+835.64	147.88																				
Mainline				721.65			108.25				245.36	245.36		27.42	32.47							
Shoulders				266.18			59.89	22.27			135.75	82.96	281.05	15.17	17.97							
Rest Area, Ramp "C"																						
Sta. 13+590.14	Sta. 13+700.14	110.00																				
Mainline					536.80		23.96				182.51	182.51		19.53	20.27							
Shoulders					198.00		13.26	17.33			100.98	61.71	537.57	10.81	11.39							
Rest Area, Ramp "D"																						
Sta. 13+855.05	Sta. 13+941.055	86.50																				
Mainline					422.12		18.74				143.52	143.52		15.36	16.19							
Shoulders					155.70		10.37	13.62			79.41	48.53	164.39	8.50	8.96							
Sub Total				125840.35	7291.24		21488.52	2423.48			50834.38	45338.93	29584.02	5562.96	6560.49							

DESIGN FILE : i:\pd\van30d\v30gc2.dgn
USERNAME : rhermon

DATE : 17-SEP-1997
TIME : 08:38

CALCULATED KAWE
CHECKED DJS

PAVEMENT TABLE

VAN-30-6.618(4.05)

STATION		Length		254			301	304			407	407	408	446	446							
				70mm Pavement Planing, Bituminous	Pavement Planing, Bituminous (Var. Thickness)		Bituminous Aggregate Base, PG 64-22	150mm Aggregate Base			Tack Coat (Interm.)	Tack Coat	Bituminous Prime Coat	38mm Asphalt Concrete, Surface Course, Type 1H as per plan	45mm Asphalt Concrete, Intermediate Course, Type 2, PG 64-28							
FROM	TO	m		m^2	m^2		m^3	m^3			L	L	L	m^3	m^3							
U.S.R. 30 (WESTBOUND)																						
Sta. 6+617.59	Sta. 18+288.00																					
Mainline		10442.47		75753.73			11465.83				25989.22	25989.22		2904.68	3439.75							
Inside Shoulder		8920.87		10765.98			1632.52				3700.38		19699.70	413.57	489.76							
Outside Shoulder		8926.79		21552.98			4017.06	950.70			9105.33	6950.40	11471.82	1017.65	1205.12							
Speed Change Lane Shoulders		1515.68		3698.26			682.06	161.42			1545.99	1180.11	1947.80	172.79	204.62							
Left Turn Lanes							1220.52	1220.52			2766.51		14727.57	309.20	366.16							
Speed Change Lanes		1515.68		8775.79			1316.37				2983.77	2983.77		333.48	394.91							
Rest Area, Ramp "A"																						
Sta. 13+559.03	Sta. 13+642.13	83.10			405.53		18.01				137.88	137.88		14.75	15.57							
Mainline					149.58		9.96	13.09			76.29	46.62	157.93	8.16	8.61							
Shoulders																						
Rest Area, Ramp "B"																						
Sta. 13+797.09	Sta. 13+907.09	110.00																				
Mainline					536.80		23.96				182.51	182.51		19.52	20.59							
Shoulders					198.00		13.26	17.33			100.98	61.71	537.57	11.17	11.39							
U.S.R. 30 (EASTBND&WESTBND)																						
U.S.R. 224 Ramps																						
Ramp "A"																						
Sta. 20+015.79	Sta. 20+074.84	59.05																				
Ramp "B"																						
Sta. 20+015.79	Sta. 20+173.94	158.15																				
Ramp "C"																						
Sta. 17+230.74	Sta. 17+435.29	204.55																				
Ramp "D"																						
Sta. 17+353.59	Sta. 17+605.46	251.87																				
	Total	673.62																				
Mainline				3287.27			230.11				1117.67	1117.67		124.92	147.93							
Shoulders				1212.52			127.31	105.88			618.38	377.90	1280.22	69.11	81.85							
U.S.R. 224 Ramps (Transition #1)																						
Ramp "A"																						
Sta. 19+965.99	Sta. 20+015.79	49.80																				
Ramp "B"																						
Sta. 19+980.74	Sta. 20+030.54	49.80																				
Ramp "C"																						
Sta. 17+435.29	Sta. 17+485.09	49.80																				
Ramp "D"																						
Sta. 17+303.79	Sta. 17+353.59	49.80																				
	Total	199.20																				
Mainline				972.10			14.05				330.51	330.51		34.73	59.61							
Shoulders				358.56			7.78	31.37			182.87	111.75	378.58	19.21	29.96							
Sub Total				126337.19	1289.91		20778.80	2500.31			48838.29	394703.05	50201.19	5452.94	6475.83							

CALCULATED KAWE
CHECKED DJS

PAVEMENT TABLE

VAN-30-6.618(4.05)

17
134

DESIGN FILE : i:\pd\van30d\v30gc2.dgn
USERNAME : rhermon

DATE : 17-SEP-1997
TIME : 08:39

STATION		Length		254			301	304			407	407	408	446	446							
				70mm Pavement Planing, Bituminous	Pavement Planing, Bituminous (Var. Thickness)		Bituminous Aggregate Base, PG 64-22	150mm Aggregate Base			Tack Coat (Interm.)	Tack Coat	Bituminous Prime Coat	38mm Asphalt Concrete, Surface Course, Type IH as per plan	45mm Asphalt Concrete, Intermediate Course, Type 2, PG 64-28							
FROM	TO	m		m^2	m^2		m^3	m^3			L	L	L	m^3	m^3							
U.S.R. 224 Ramps (Transition #2)																						
Ramp "A"																						
Sta. 20+074.84	Sta. 20+122.84	48.0																				
Ramp "B"																						
Sta. 20+173.94	Sta. 20+221.94	48.0																				
Ramp "C"																						
Sta. 17+182.74	Sta. 17+230.74	48.0																				
Ramp "D"																						
Sta. 17+605.46	Sta. 17+653.46	48.0																				
	Total	192.0																				
Mainline				936.96			103.07				318.57	318.57		29.98	42.16							
Shoulders				345.60			57.02	30.24			176.26	107.71	364.90	19.70	23.33							
Cross-Overs:					127.18		19.08				43.24	43.24	4.83									
Sub Total				1282.56	127.18		179.17	30.24			538.07	469.52	369.73	49.68	65.49							

CALCULATED K.AWE
CHECKED DJS

PAVEMENT TABLE

VAN-30-6.618(4.05)

17a
134

DESIGN FILE : i:\pd\van30d\v30gc2.dgn
USERNAME : rhermon

DATE : 17-SEP-1997
TIME : 15:15

STATION		Length		254			301	304			407	407	408	446	446							
				70mm Pavement Planing, Bituminous	Pavement Planing, Bituminous (Var. Thickness)		Bituminous Aggregate Base, PG 64-22	150mm Aggregate Base			Tack Coat (Intermed.)	Tack Coat	Bituminous Prime Coat	38mm Asphalt Concrete, Surface Course, Type 1H as per plan	45mm Asphalt Concrete, Intermediate Course, Type 2, PG 64-28							
FROM	TO	m		m^2	m^2		m^3	m^3			L	L	L	m^3	m^3							
U.S.R. 30 (EASTBND&WESTBND)																						
Sta. 9+437.25	Sta. 9+562.05	124.80																				
Mainline				1827.07			87.84				621.20	621.20		76.42	71.43							
Shoulders				913.53			50.64	26.58			358.12	297.88	320.76	41.18	44.06							
Sta. 9+569.63	Sta. 9+690.23	124.80																				
Mainline				1827.07			87.84				621.20	621.20		76.42	71.43							
Shoulders				913.53			50.64	26.58			358.12	297.88	320.76	41.18	44.06							
Sta. 14+868.44	Sta. 14+989.04	124.80																				
Mainline				1827.07			87.84				621.20	621.20		76.42	71.43							
Shoulders				913.53			50.64	26.58			358.12	297.88	320.76	41.18	44.06							
Sta. 15+009.38	Sta. 15+129.98	124.80																				
Mainline				1827.07			87.84				621.20	621.20	320.76	76.42	71.43							
Shoulders				913.53			50.64	26.58			358.12	297.88		41.18	44.06							
Sta. 15+454.75	Sta. 15+575.35	124.80																				
Mainline				1827.07			87.84				621.20	621.20		76.42	71.43							
Shoulders				913.53			50.64	26.58			358.12	297.88	320.76	41.18	44.06							
Sta. 15+599.59	Sta. 15+720.19	124.80																				
Mainline				1827.07			87.84				621.20	621.20		76.42	71.43							
Shoulders				913.53			50.64	26.58			358.12	297.88	320.76	41.18	44.06							
Sta. 17+284.74	Sta. 17+510.74	226.00																				
Mainline				3308.64			175.68				1124.94	1124.94		125.73	170.85							
Shoulders				1654.32			101.28	48.14			324.27	269.71	580.87	72.48	98.50							
Cross-Over Road Transitions					3036.24		256.38				1355.99	1355.99		147.34	161.92							
Pavement Build-Up @ At-Grade																						
Intersections							649.34	275.09			1471.84	848.29	3319.47	164.50	194.80							
Pavement Removal @ At-Grade																						
Intersections and Existing																						
Left-Turn Lanes				4362.48																		
Weigh Station	Parking Lot										1427.03	1427.03		188.87	188.87							
Subtotal This Sheet				25769.04	3036.24		2013.56	482.71			11579.99	10540.44	5824.54	1404.52	1507.88							
Subtotal Sheet 16				125840.35	7291.24		21488.52	2423.48			50833.38	45338.93	29584.02	5562.93	6560.49							
Subtotal Sheet 17				126337.19	1289.91		20778.8	2500.31			48838.29	39470.05	50201.19	5452.94	6475.83							
Subtotal Sheet 17a				1282.56	127.18		179.17	30.24			538.07	469.52	369.73	49.68	65.49							
TOTALS Carried to General Summary, Sheet 14				289229	11745		44460	5437			101368	95819	85980	12470	14610							
				300 974																		

CALCULATED KAWE
CHECKED DJS

PAVEMENT TABLE

VAN-30-6.618(4.05)

18
134

DESIGN FILE : i:\pd\van30d\v30ge2.dgn
USERNAME : rhermon

DATE : 29-AUG-1997
TIME : 11:05

U.S. 30 mainline (Eastbound and Westbound):

Transition @ Sta.6+523.99(VAN) to Sta.6+617.59(VAN)= 93.60 m

254 Pavement Planing, Bituminous, Variable Thickness:
(7.32)(93.60)(2) = 1370.30 m^2

301 Bituminous Aggregate Base, PG 64-22:
(Thick. as shown):
(0.150+0.045)(1/2)(7.32)(93.60)(2) = 133.61 m^3

407 Tack Coat:(7.32)(93.60)(.340)(2) = 465.90 L

407 Tack Coat (Interm.):(7.32)(93.60)(.340)(2) = 465.90 L

446 38mm Asphalt Concrete, Surface Course:
(0.038)(7.32)(93.60)(2) = 52.07 m^3

446 45mm Asphalt Concrete, Intermediate Course:
(0.045)(7.32)(93.60)(2) = 60.29 m^3

Shoulders:

254 Pavement Planing, Bituminous, Variable Thickness:
(3.66)(93.60)(2) = 685.15 m^2

301 Bituminous Aggregate Base, PG 64-22:
(4.22)(0.150+0.045)(1/2)(93.60)(2) = 77.02 m^3

304 150mm Aggregate Base:(0.710)(0.150)(93.60)(2) = 19.94 m^3

407 Tack Coat:(3.51)(93.60)(.340)(2) = 223.41 L

407 Tack Coat (Interm.):(4.22)(93.60)(.340)(2) = 268.59 L

408 Prime Coat:(0.71)(93.60)(1.81)(2) = 240.57L

446 38mm Asphalt Conc., Surface Course:
(93.60)(4.22)(0.038)(2) = 30.02 m^3

446 45mm Asphalt Conc., Intermediate Course:
(93.60)(4.22)(0.045)(2) = 34.76 m^3

Trans. @ Sta.18+194.40(VAN) to Sta.18+288.00(VAN) = 93.60 m

Mainline:

254 Variable Pavement Planing, Bituminous:
(7.32)(93.60)(2) = 1370.30 m^2

Shoulders:

254 Variable Pavement Planing, Bituminous:
(3.66)(93.60)(2) = 685.15 m^2

U.S. 30 mainline (Eastbound):
Sta. 6+617.59(VAN) to Sta. 18+288.00(VAN) =11670.41 m

Deduct for Structures: VAN-30-09350 = -257.18 m
VAN-30-14774 = -269.94 m
VAN-30-15369 = -273.84 m
VAN-30-17188 = -234.40 m
Sta. Equation:Sta.6+869.63(Bk.)=Sta.7+070.61(Ahd.)= -200.98 m
Total Length =10434.07 m

Mainline:

254 70mm Pavement Planing, Bituminous:
(7.32)(10434.07)-(7.32x93.6) =75692.24 m^2

301 Bituminous Aggregate Base,
PG 64-22 (Thick. as shown):
(10434.07)(7.32)(0.150) =11456.61 m^3

407 Tack Coat:(10434.07)(7.32)(0.340) =25968.31 L

407 Tack Coat (Interm.):(10434.07)(7.32)(0.340) =25968.31 L

446 38mm Asphalt Conc., Surface Course
(10434.07)(7.32)(0.038) = 2902.34 m^3

446 45mm Asphalt Conc., Intermediate Course
(10434.07)(7.32)(0.045) = 3436.98 m^3

Inside Shoulders:

Deduct for left turn lane:
Sta. 7+521.33 to Sta. 7+706.33 = -253.60 m
Sta. 8+406.72 to Sta. 8+591.72 = -253.60 m
Sta. 11+160.29 to Sta. 11+345.29 = -253.60 m
Sta. 12+375.32 to Sta. 12+560.32 = -253.60 m
Sta. 14+970.29 to Sta. 15+155.29 = -253.60 m
Sta. 16+744.83 to Sta. 16+929.83 = -253.60 m
Total Length = 8960.47 m

254 70mm Pavement Planing:
(1.22)(8960.47)-(1.22x93.60) =10817.58 m^2

301 Bituminous Aggregate Base, PG 64-22:
(1.22)(8960.47)(0.150) = 1639.77 m^3

407 Tack Coat:(1.22)(8960.47)(0.340) = 3716.80 L

407 Tack Coat (Interm.):(1.22)(8960.47)(.340) = 3716.80 L

446 38mm Asphalt Conc., Surface Course:
(1.22)(8960.47)(0.038) = 415.41 m^3

446 45mm Asphalt Conc., Intermediate Course:
(1.22)(8960.47)(0.045) = 491.93 m^3

Outside Shoulders:

Deduct for speed change lanes:
Sta. 10+061.41 to Sta. 10+305.25 = -243.84 m
Sta. 10+835.64 to Sta. 11+338056 = -502.92 m
Sta. 13+346.30 to Sta. 13+590.14 = -243.84 m
Sta. 13+941.55 to Sta. 14+451.18 = -509.63 m
Sta. 16+984.98 to Sta. 17+182.74 = -197.76 m
Sta. 17+653.46 to Sta. 18+153.52 = -500.06 m
Total Length = 8236.02 m

Sta. 6+617.59 to 18+288.00 (Continued):

254 70mm Pavement Planing:
(2.44)(8236.02)-(2.44x93.60) =19867.51m ^{2}

301 Bituminous Aggregate Base, PG 64-22:
(3.00)(8236.02)(0.150) = 3706.21 m^3

304 150mm Aggregate Base:(0.71)(8236.02)(0.150) = 877.14 m^3

407 Tack Coat:(2.29)(8236.02)(.34) = 6412.57 L

407 Tack Coat (Interm.):(3.00)(8236.02)(.34) = 8400.74 L

408 Prime Coat:(0.71)(8236.02)(1.81) = 10584.11 L

446 38mm Asphalt Conc., Surface Course:
(3.00)(8236.02)(0.038) = 938.91 m^3

446 45mm Asphalt Conc., Intermediate Course:
(3.00)(8236.02)(0.045) = 1111.86 m^3

Speed Change Lane, Shoulders:
Length=243.84+502.92+243.84+509.63+197.76+500.06= 2198.05 m

254 70mm Pavement Planing:
(2.44)(2198.05) = 5363.24 m^2

301 Bituminous Aggregate Base, PG 64-22:
(3.00)(2198.05)(0.150) = 989.12 m^3

304 150mm Aggregate Base:
(0.71)(2198.05)(0.150) = 234.09 m^3

407 Tack Coat:(2.29)(2198.05)(.34) = 1711.4 L

407 Tack Coat (Interm.):(3.00)(2198.05)(.34) = 2242.01 L

408 Prime Coat:(0.71)(2198.05)(1.81) = 2824.71 L

446 38mm Asphalt Conc., Surface Course:
(3.00)(2198.05)(0.038) = 250.58 m^3

446 45mm Asphalt Conc., Intermediate Course:
(3.00)(2198.05)(0.045) = 290.14 m^3

Left Turn Lanes:
Area = (1356.13m^2 x 5) +(1125.75 x 1) = 7906.4 m^2

301 Bituminous Aggregate Base, PG 64-22:
(7906.40)(0.150) = 1185.96 m^3

304 150mm Aggregate Base:
(7906.40)(0.150) = 1185.96 m^3

408 Prime Coat:
(7906.40)(1.81) =14310.58 L

446 38mm Asphalt Conc., Surface Course:
(7906.40)(0.038) = 300.44 m^3

446 45mm Asphalt Conc., Intermediate Course:
(7906.40)(0.045) = 355.79 m^3

407 Tack Coat (Interm.):(7906.40)(.34) = 2688.18 L

Speed Change Lanes: = 2198.05 m

254 70mm Pavement Planing:
(0.00+11.58)/2(2198.05) =12726.71 m_2

301 Bituminous Aggregate Base, PG 64-22:
(0.00+11.58)(0.150)/2(2198.05) = 1909.01 m_3

407 Tack Coat:(11.58)/2(2198.05)(0.340) = 4327.08 L

407 Tack Coat (Interm.):(11.58)/2(2198.05)(0.340) = 4327.08 L

446 38mm Asphalt Conc., Surface Course:
(0.00+11.58)/2(2198.05)(0.038) = 483.62 m^3

446 45mm Asphalt Conc., Intermediate Course:
(0.00+11.58)/2(2198.05)(0.045) = 572.70 m^3

Weigh Station, Ramp "A":
Sta. 10+304.74 to 10+362.44 = 57.70m

Mainline:

254 70mm Pavement Planing:
(4.88)(57.7) = 281.38 m^2

301 Bituminous Aggregate Base, PG 64-22:
(57.70)(0.150)(4.88) = 42.21 m^3

407 Tack Coat:(4.88)(57.70)(0.340) = 95.67 L

407 Tack Coat (Interm.):(4.88)(57.70)(0.340) = 95.67 L

446 38mm Asphalt Conc., Surface Course:
(4.88)(57.70)(0.038) = 10.70 m^3

446 45mm Asphalt Conc., Intermediate Course:
(4.88)(57.70)(0.045) = 12.66 m^3

Shoulders:

254 70mm Pavement Planing:
(1.80)(57.70) = 103.86 m^2

301 Bituminous Aggregate Base, PG 64-22:
(2.70)(57.70)(0.150) = 23.37 m^3

304 150mm Aggregate Base:
(1.05)(57.70)(0.150) = 9.09 m^3

407 Tack Coat:(1.65)(57.70)(.34) = 32.37 L

407 Tack Coat (Interm.): (2.70)(57.70)(.34) = 52.97 L

408 Prime Coat:
(1.05)(57.70)(1.81) = 109.66 L

446 38mm Asphalt Conc., Surface Course:
(2.70)(57.70)(0.038) = 5.92 m^3

446 45mm Asphalt Conc., Intermediate Course:
(2.70)(57.70)(0.045) = 7.01 m^3

Weigh Station, Ramp "A":
Sta. 10+362..44 to 10+502.24 = 139.80 m

Mainline:

254 Variable Pavement Planing, Bituminous:
(4.88)(139.80) = 682.22 m^2

301 Bituminous Aggregate Base, PG 64-22:
(4.88)((0.150+0.050)/2)(60.00) = 29.28 m^3

446 Asphalt Conc., Intermediate Course:
(4.88)[((0.025+0.095)/2)(42.0)+(0.045)
(60.00)] = 25.47 m^3

446 Asphalt Conc., Surface Course:
(4.88)[((0.000+0.063)/2)(37.8)+(0.038)
(102.00)] = 24.73 m^3

407 Tack Coat:
(139.80)(4.88)(0.340) = 231.96 L

407 Tack Coat (Interm.)
(139.80)(4.88)(0.340) = 231.96 L

Shoulders:

254 Variable Pavement Planing, Bituminous:
(1.80)(139.80) = 251.64 m^2

301 Bituminous Aggregate Base, PG 64-22:
(2.70)((0.150+0.050)/2)(60.0) = 16.20 m^3

304 150mm Aggregate Base:
(1.05)(139.80)(0.150) = 22.02 m^3

446 Asphalt Conc., Interm. course (Thick. as shown):
(2.70)[((0.025+0.095)/2)(42.0)+(0.045)
(60.00)] = 14.09 m^3

446 Asphalt Conc., Surface Course (Thick. as shown)
(2.70)[((0.000+0.063)/2)(37.8)+(0.038)
(102.0)] = 13.03 m^3

408 Prime Coat:
(1.81)(139.80)(1.05) = 265.69 L

407 Tack Coat:
(1.65)(139.80)(0.340) = 78.48 L

407 Tack Coat (Interm.)
(2.70)(139.80)(0.340) = 128.34 L

Weigh Station, Ramp "B":
Sta. 10+547.96 to 10+687.76 = 139.80 m

Mainline:

254 Variable Pavement Planing, Bituminous:
(4.88)(139.80) = 682.22 m^2

301 Bituminous Aggregate Base, PG 64-22:
(4.88)((0.150+0.050)/2)(60.00) = 29.28 m^3

446 Asphalt Conc., Interm. Course (Thick. as shown):
(4.88)[((0.025+0.095)/2)(42.0)+(0.045)
(60.00)] = 25.47 m^3

446 Asphalt Conc., Surface Course (Thick. as shown)
(4.88)[((0.000+0.063)/2)(37.8)+(0.038)
(102.0)] = 24.72 m^3

407 Tack Coat:
(139.80)(4.88)(0.340) = 231.96 L

407 Tack Coat (Interm.)
(4.88)(139.80)(0.340) = 231.96 L

Shoulders:

254 Variable Pavement Planing, Bituminous:
(1.80)(139.80) = 251.64 m^2

301 Bituminous Aggregate Base, PG 64-22:
(2.70)((0.150+0.050)/2)(60.0) = 16.20 m^3

304 150mm Aggregate Base:
(1.05)(139.80)(0.150) = 22.02 m^3

446 Asphalt Conc., Interm. Course (Thick. as shown):
(2.70)[((0.025+0.095)/2)(42.0)+(0.045)
(60.00)] = 14.09 m^3

446 Asphalt Conc., Surface Course (Thick. as shown)
(2.70)[((0.000+0.063)/2)(37.80)+(0.038)
(102.0)] = 13.68 m^3

408 Prime Coat:
(1.81)(139.80)(1.05) = 265.69 L

407 Tack Coat:
(1.65)(139.80)(0.340) = 78.43 L

407 Tack Coat (Interm.):
(2.70)(139.80)(0.340) = 128.34 L

Weigh Station, Ramp "B":
Sta. 10+687.76 to 10+835.64 = 147.88 m

Mainline:

254 70mm Pavement Planing, Bituminous:
(4.88)(147088) = 721.65 m^2

301 Bituminous Aggregate Base, PG 64-22:
(4.88)(0.150)(147.88) = 108.25 m^3

407 Tack Coat:
(147.88)(4.88)(0.340) = 245.36 L

446 38mm Asphalt Conc., Surface Course:
(147.88)(0.038)(4.88) = 27.42 m^3

446 45mm Asphalt Conc., Interm. Course:
(147.88)(0.045)(4.88) = 32.47 m^3

407 Tack Coat (Interm.):
(147.88)(4.88)(0.340) =245.36 L

DESIGN FILE : i:\pd\van30d\v30gcl.dgn
USERNAME : rhermon

DATE : 29-AUG-1997
TIME : 13:39

CALCULATED KAWE
CHECKED DJS

PAVEMENT CALCULATIONS

VAN-30-6.618(4.05)

19
134

Weigh Station, Ramp "B";Sta.10+687.76 to 10+835.64 (Continued)

Shoulders:

254 70mm Pavement Planing:
(1.80)(147.88) = 266.18 m^2

301 Bituminous Aggregate Base, PG 64-22:
(2.70)(147.88)(0.150) = 59.89 m^3

304 150mm Aggregate Base:
(1.05)(77.18)(0.150)+(0.150+0.168)/2(0.9)(70.70) = 22.27 m^3

408 Prime Coat:
(1.05)(147.88)(1.81) = 281.05 L

446 38mm Asphalt Conc., Surface Course:
(2.70)(147.88)(0.038) = 15.17 m^3

446 45mm Asphalt Conc., Intermediate Course:
(2.70)(147.88)(0.045) = 17.97 m^3

407 Tack Coat :
(1.65)(147.88)(0.340) = 82.96 L

407 Tack Coat (Interm.):
(2.70)(147.88)(0.340) = 135.75 L

Rest Area, Ramp "C":
Sta. 13+590.14 to 13+700.14 = 110.00 m

Mainline:

254 Variable Pavement Planing, Bituminous:
(110.00)(4.88) = 536.80 m^2

301 Bituminous Aggregate Base, PG 64-22:
(4.88)(0.050+0.150)/2(49.10) = 23.96 m^3

446 Asphalt Conc., Interm. Course (Thick. as shown):
[((0.025+0.095)/2)(33.50)+(0.045)(49.10)](4.88) = 20.27 m^3

446 Asphalt Conc., Surface Course (Thick. as shown):
[(27.4)(0.000+0.057)/2+(82.6)(0.038)](4.88) = 19.53 m^3

407 Tack Coat:
(110.00)(4.88)(0.340) = 182.51 L

407 Tack Coat (Interm.):
(110.0)(4.88)(0.340) = 182.51 L

Shoulders:

254 Pavement Planing, Bituminous, Variable Thickness:
(110.00)(1.80) = 198.00 m^2

301 Bituminous Aggregate Base, PG 64-22:
(Thick. as shown):
[(2.70)(0.050+0.150)/2](49.10) = 13.26 m^3

304 150mm Aggregate Base:
(110.00)(1.05)(0.150) = 17.33 m^3

446 Asphalt Conc., Interm. Course (Thick. as shown):
(2.70)[((0.025+0.095)/2)(33.50)+(0.045)(49.10)] = 11.39 m^3

446 Asphalt Conc., Surface Course (Thick. as shown):
(2.70)[(27.4)(0.000+0.063)/2+(82.6)(0.038)]= 10.81 m^3

408 Prime Coat:
(110.00)(2.70)(1.81) = 537.57 L

407 Tack Coat :
(1.65)(110.0)(0.340) = 61.71 L

407 Tack Coat (Interm.) :
(2.70)(110.0)(0.340) = 100.98 L

Rest Area, Ramp "D":
Sta. 13+855.05 to 13+941.55 = 86.50 m

Mainline:

254 Pavement Planing, Bituminous, Variable Thickness:
(86.50)(4.88) = 422.12 m^2

301 Bituminous Aggregate Base, PG 64-22:
[(4.88)(0.050+0.150)/2](38.40) = 18.74 m^3

446 Asphalt Conc., Interm. Course (Thick. as shown):
[((0.025+0.095)/2)(26.50)+(0.045)(38.40)](4.88) = 16.19 m^3

446 Asphalt Conc., Surface Course (Thick. as shown):
[(21.6)(0.000+0.063)/2+(64.9)(0.038)](4.88)= 15.36 m^3

407 Tack Coat:
(86.50)(4.88)(0.340) = 143.52 L

407 Tack Coat (Interm.) ;
(86.50)(4.88)(0.340) = 143.52 L

Shoulders:

254 Variable Pavement Planing, Bituminous:
(86.50)(1.80) = 155.70 m^2

301 Bituminous Aggregate Base, PG 64-22
(Thick. as shown):
[(2.70)(0.050+0.150)/2](38.40) = 10.37 m^3

304 150mm Aggregate Base:
(86.50)(1.05)(0.150) = 13.62 m^3

402 Asphalt Conc., PG 64-22 (Thick. as shown):
(2.70)[((0.025+0.095)/2)(26.50)+(0.045)(38.40)] = 8.96 m^3

404 Asphalt Conc., PG 64-22 (Thick. as shown):
(2.70)[(21.6)(0.000+0.063)/2+(64.9)(0.038)]= 8.5 m^3

408 Prime Coat:
(86.50)(1.05)(1.81) = 164.39 L

407 Tack Coat:
(86.50)(1.65)(0.340) = 48.53 L

407 Tack Coat (Interm.) ;
(86.50)(2.70)(0.340) = 79.41 L

U.S. 30 mainline (Westbound):
Sta. 6+617.59(VAN) to Sta. 18+288.00(VAN) = 11670.41 m

Deduct for Structures: VAN-30-09350 = -257.18 m
VAN-30-14774 = -269.94 m
VAN-30-15369 = -273.84 m
VAN-30-17188 = -226.00 m
Sta. Equation:Sta.6+869.63(Bk.)=Sta.7+070.61(Ahd.)= -200.98 m
Total Length = 10442.47 m

Mainline:

254 70mm Pavement Planing, Bituminous:
(7.32)(10442.47)-(7.32x93.6,trans. deduct) =75753.73 m^2

301 Bituminous Aggregate Base,
PG 64-22 (Thick. as shown):
(10442.47)(7.32)(0.150) =11465.83 m^3

407 Tack Coat:
(10442.47)(7.32)(0.340) =25989.22 L

446 38mm Asphalt Conc., Surface Course
(10442.47)(7.32)(0.038) = 2904.68 m^3

446 45mm Asphalt Conc., Intermediate Course
(10442.47)(7.32)(0.045) = 3439.75 m^3

407 Tack Coat (Interm.):
(10442.47)(7.32)(0.340) =25989.22 L

Inside Shoulders:

Deduct for left turn lane:
Sta. 7+691.33 to Sta. 7+944.93 = -253.60 m
Sta. 8+645.32 to Sta. 8+898.92 = -253.60 m
Sta. 11+330.29 to Sta. 11+583.89 = -253.60 m
Sta. 12+613.92 to Sta. 12+867.52 = -253.60 m
Sta. 15+140.29 to Sta. 15+393.89 = -253.60 m
Sta. 16+983.43 to Sta. 17+237.03 = -253.60 m
Total Length = 8920.87 m

254 70mm Pavement Planing:
(1.22)(8920.87)-(1.22x93.60,Trans. deduct) =10765.98 m^2

301 Bituminous Aggregate Base, PG 64-22:
(1.22)(8920.87)(0.150) = 1632.52 m^3

408 Prime Coat:
(1.22)(8920.87)(1.81) =19699.07 L

446 38mm Asphalt Conc., Surface Course:
(1.22)(8920.87)(0.038) = 413.57 m^3

446 45mm Asphalt Conc., Intermediate Course:
(1.22)(8920.87)(0.045) = 489.76 m^3

407 Tack Coat (Interm.):
(8920.87)(1.22)(0.340) = 3700.38 L

Outside Shoulders:

Deduct for speed change lanes:
Sta. 13+045.44 to Sta. 13+559.03 = -513.59 m
Sta. 13+907.09 to Sta. 14+150.93 = -243.84 m
Sta. 17+110.35 to Sta. 17+594.28 = -483.93 m
Sta. 17+857.01 to Sta. 18+131.33 = -274.32 m
Total Length = 8926.79m

254 70mm Pavement Planing:
(8926.79)(2.44)-(2.44x93.60) =21552.98 m^2

301 Bituminous Aggregate Base, PG 64-22:
(8926.79)(0.150)(3.0) = 4017.06 m^3

304 150mm Aggregate Base:
(8926.79)(0.71)(0.150) = 950.70 m^3

408 Prime Coat:
(8926.79)(0.71)(1.81) = 11471.82 L

446 38mm Asphalt Conc., Surface Course:
(8926.79)(3.0)(0.038) = 1017.65 m^3

446 45mm Asphalt Conc., Surface Course:
(8926.79)(3.0)(0.045) = 1205.12 m^3

407 Tack Coat:
(8926.79)(2.29)(0.340) = 6950.40 L

407 Tack Coat (Interm.):
(8926.79)(3.00)(0.340) = 9105.33 L

Speed Change Lane Shoulders:

Length=(513.59m+243.84m+483.93m+274.32m) = 1515.68 m

254 70mm Pavement Planing:
(1515.68)(2.44) = 3698.26 m^2

301 Bituminous Aggregate Base, PG 64-22:
(1515.68)(0.150)(3.0) = 682.06 m^3

304 150mm Aggregate Base:
(1515.68)(0.71)(0.150) = 161.42 m^3

408 Prime Coat:
(1515.68)(.71)(1.81) = 1947.80 L

446 38mm Asphalt Conc., Surface Course:
(1515.68)(3.0)(0.038) = 172.79 m^3

446 45mm Asphalt Conc., Surface Course:
(1515.68)(3.0)(0.045) = 204.62 m

407 Tack Coat:
(1515.68)(2.29)(0.340) = 1180.11 L

407 Tack Coat:
(1515.68)(3.00)(0.340) = 1545.99 L

Sta. 6+617.59(VAN) to Sta. 18+288.00(VAN) (Continued)

Left Turn Lanes:
Area = (1356.13m^2 x 6) = 8136.78 m^2

301 Aggregate Base Bituminous, PG 64-22:
(8136.78)(0.150) = 1220.52 m^3

304 150mm Aggregate Base:
(8136.78)(0.150) = 1220.52 m^3

408 Prime Coat:
(8136.78)(1.81) =14727.57 L

446 38mm Asphalt Conc., Surface Course:
(8136.78)(0.038) = 309.20 m^3

446 45mm Asphalt Conc., Intermediate Course:
(8136.78)(0.045) = 366.16 m^3

407 Tack Coat (Interm.):(8136.78)(0.340) = 2766.50 L

Speed Change Lanes: = 1515.68 m

254 70mm Pavement Planing:
(0.00+11.58)/2(1515.68) = 8775.79 m^2

301 Aggregate Base Bituminous, PG 64-22:
[(0.150)(0.00+11.58)/2](1515.68) = 1316.37 m^3

407 Tack Coat:
[(0.00+11.58)/2](1515.68)(0.340) = 2983.77 L

446 38mm Asphalt Conc., Surface Course:
[(0.00+11.58)/2](1515.68)(0.038) = 333.48 m^3

446 45mm Asphalt Conc., Intermediate Course:
[(0.00+11.58)/2](1515.68)(0.045) = 394.91 m^3

407 Tack Coat (Interm.):
(1515.68)(0 + 11.58/2)(0.340) = 2983.77 L

Rest Area, Ramp "A":
Sta. 13+559+.03 to 13+642.13 = 83.10 m

Mainline:

254 Variable Pavement Planing, Bituminous:
(83.10)(4.88) = 405.53 m^2

301 Bituminous Aggregate Base, PG 64-22:
[(4.88)(0.050+0.150)/2](36.90) = 18.01 m^3

446 Asphalt Conc., Interm. Course (Thick. as shown):
[((0.025+0.095)/2)(25.50)+(0.045)(36.90)](4.88) = 15.57 m^3

446 Asphalt Conc., Surface Course (Thick. as shown):
[(20.7)(0.000+0.063)/2+(62.4)(0.038)](4.88)= 14.75 m^3

407 Tack Coat:(83.10)(4.88)(0.340) = 137.88 L

407 Tack Coat (Interm.):(83.10)(4.88)(0.340) = 137.88 L

Shoulders:

254 Variable Pavement Planing, Bituminous:
(83.10)(1.80) = 149.58 m^2

301 Bituminous Aggregate Base, PG 64-22(Thick. as shown):
[(2.70)(0.050+0.150)/2](36.90) = 9.96 m^3

304 150mm Aggregate Base:
(83.10)(1.05)(0.150) = 13.09 m^3

446 Asphalt Conc., Interm. Course (Thick. as shown):
[(2.70)[((0.025+0.095)/2](25.50)+(0.045)(36.90)] = 8.61 m^3

446 Asphalt Conc., Surface Course (Thick. as shown):
(2.70)[(20.7)(0.000+0.063)/2+(62.4)(0.038)]= 8.16 m^3

408 Prime Coat:
(83.10)(1.05)(1.81) = 157.93 L

407 Tack Coat:(83.10)(1.65)(0.340) = 46.62 L

407 Tack Coat (Interm.):(83.10)(2.70)(0.340) = 76.29 L

Rest Area, Ramp "B":
Sta. 13+797.09 to 13+907.09 = 110.00 m

Mainline:

254 Variable Pavement Planing, Bituminous:
(110.00)(4.88) = 536.80 m^2

301 Bituminous Aggregate Base, PG 64-22:
[(4.88)(0.050+0.150)/2](49.10) = 23.96 m^3

446 Asphalt Conc., Interm. Course (Thick. as shown):
[((0.025+0.095)/2)(33.50)+(0.045)(49.10)](4.88) = 20.59 m^3

446 Asphalt Conc., Surface Course (Thick. as shown):
[(27.4)(0.000+0.063)/2+(82.6)(0.038)](4.88)= 19.52 m^3

407 Tack Coat:
(110.00)(4.88)(0.340) = 182.51 L

407 Tack Coat (Interm.):(110.00)(4.88)(0.340) = 182.51 L

Shoulders:

254 Variable Pavement Planing, Bituminous:
(110.00)(1.80) = 198.00 m^2

301 Bituminous Aggregate Base,PG 64-22(Thick. as shown):
[(2.70)(0.050+0.150)/2](49.10) = 13.26 m^3

304 150mm Aggregate Base:
(110.00)(1.05)(0.150) = 17.33 m^3

446 Asphalt Conc., Interm. Course (Thick. as shown):
(2.70)[((0.025+0.095)/2)(33.50)+(0.045)(49.10)] = 11.39 m^3

446 Asphalt Conc., Surface Course (Thick. as shown):
(2.70)[(27.4)(0.000+0.063)/2+(86.2)(0.038)]= 11.17 m^3

408 Prime Coat:
(110.00)(2.70)(1.81) = 537.57 L

407 Tack Coat:
(110.00)(1.65)(0.340) = 61.71 L

407 Tack Coat (Interm.):
(110.00)(2.70)(0.340) = 100.98 L

CALCULATED KAWE CHECKED DJS

PAVEMENT CALCULATIONS

VAN-30-6.618(4.05)

20
134

DESIGN FILE : i:\pd\van30d\v30gcl.dgn
USERNAME : rhermon

DATE : 29-AUG-1997
TIME : 13:40

U.S. 30 (Eastbound and Westbound):

U.S. 224 Ramps:
Ramp "A": Sta. 20+015.79 to Sta. 20+074.84 = 59.05 m
Ramp "B": Sta. 20+015.79 to Sta. 20+173.94 = 158.15 m
Ramp "C": Sta. 17+230.74 to Sta. 17+435.29 = 204.55 m
Ramp "D": Sta. 17+353.59 to Sta. 17+605.46 = 251.87 m
Total Length = 673.62 m

Mainline:
254 70mm Pavement Planing, Bituminous:
(673.62)(4.88) = 3287.27 m^2
301 Bituminous Aggregate Base, PG 64-22:
(4.88)(673.62)(0.070) = 230.11 m^3
407 Tack Coat: (673.62)(4.88)(0.340) = 1117.67 L
446 38mm Asphalt Conc., Surface Course:
(673.62)(0.038)(4.88) = 124.92 m^3
446 45mm Asphalt Conc., Interm. Course:
(673.62)(0.045)(4.88) = 147.93 m^3
407 Tack Coat (Intermed.) :(673.62)(4.88)(0.340) = 1117.67 L

Shoulders:
254 70mm Pavement Planing:
(673.62)(1.80) = 1212.52 m^2
301 Bituminous Aggregate Base, PG 64-22:
(673.62)(2.70)(0.070) = 127.31 m^3
304 150mm Aggregate Base:
(658.87)(1.05)(.150)+[(0.150+0.168)/2](0.9)(14.75) = 105.88 m^3
408 Prime Coat:
(673.62)(1.05)(1.81) = 1280.22 L
446 38mm Asphalt Conc., Surface Course:
(673.62)(2.70)(0.038) = 69.11 m^3
446 45mm Asphalt Conc., Intermediate Course:
(673.62)(2.70)(0.045) = 81.85 m^3
407 Tack Coat: (673.62)(1.65)(0.340) = 377.90 L
407 Tack Coat (Intermed.) :(673.62)(2.70)(0.340) = 618.38 L

Transitions at U.S. 224 Ramps: (Transition *1)
Ramp "A": Sta. 19+965.99 to Sta. 20+015.79 = 49.80 m
Ramp "B": Sta. 19+980.74 to Sta. 20+030.54 = 49.80 m
Ramp "C": Sta. 17+435.29 to Sta. 17+485.09 = 49.80 m
Ramp "D": Sta. 17+303.79 to Sta. 17+353.59 = 49.80 m
Total Length = 199.20 m

Mainline:
254 70mm Pavement Planing, Bituminous:
(199.20)(4.88) = 972.10 m^2
301 Bituminous Aggregate Base, PG 64-22:
[((0.050+0.070)/2)(12.0)(4.88)](4) = 14.05 m^3
446 Asphalt Conc., Interm. Course (Thick. as shown):
[((0.038+0.095)/2)(37.8)+(0.045)(12.0)](4.88)(4) = 59.61 m^3
407 Tack Coat: (199.20)(4.88)(0.340) = 330.51 L
446 38mm Asphalt Conc., Surface Course:
(4.88)[(.038+.032)/2(37.8) + (.038)(12)](4.0) = 34.73 m^3
407 Tack Coat (Intermed.) :(199.20)(4.88)(0.340) = 330.51 L

Shoulders:
254 70mm Pavement Planing, Bituminous:
(199.20)(1.80) = 358.56 m^2
301 Bituminous Aggregate Base, PG 64-22 (Thick. as shown):
[(12.0)((0.050+0.070)/2)(2.70)](4) = 7.78 m^3
304 150mm Aggregate Base:
(199.20)(1.05)(0.150) = 31.37 m^3
446 Asphalt Conc., Interm. Course (Thick. as shown):
(4.0)[((0.038+0.095)/2)(33.6)+(0.045)(12.0)](2.70) = 29.96 m^3
408 Prime Coat:
(182.40)(1.05)(1.81) = 378.58 L
446 38mm Asphalt Conc., Surface Course:
(2.70)[(.038 +.032)/2(37.8) + (.038)(12)](4) = 19.21 m^3
407 Tack Coat (Intermed.) :(199.20)(2.70)(0.340) = 182.87 L
407 Tack Coat: (199.20)(1.65)(0.340) = 111.75 L

Transitions at U.S. 224 Ramps: (Transition *2)
Ramp "A": Sta. 20+074.84 to Sta. 20+122.84 = 48.00 m
Ramp "B": Sta. 20+173.94 to Sta. 20+221.94 = 48.00 m
Ramp "C": Sta. 17+230.74 to Sta. 17+182.74 = 48.00 m
Ramp "D": Sta. 17+605.46 to Sta. 17+653.46 = 48.00 m
Total Length = 192.00 m

Mainline:
254 70mm Pavement Planing, Bituminous:
(192.00)(4.88) = 936.96 m^2
301 Bituminous Aggregate Base, PG 64-22:
[(0.070+0.150)/2](192.0)(4.88) = 103.07 m^3
446 Asphalt Conc., Interm. Course (Thick. as shown):
(192.00)(0.045)(4.88) = 42.16 m^3
407 Tack Coat (Intermed.) :(192.00)(4.88)(0.340) = 318.57 L

Transitions at U.S.224 Ramps (Continued)

Mainline:
407 Tack Coat:
(192.00)(4.88)(0.340) = 318.57 L
446 38mm Asphalt Conc., Surface Course:
(192.00)(4.88)(0.038) = 29.98 m^3

Shoulders:
254 70mm Pavement Planing, Bituminous:
(192.00)(1.80) = 345.60 m^2
301 Bituminous Aggregate Base, PG 64-22 (Thickness as shown):
(192.00)(0.070+0.150)/2(2.70) = 57.02 m^3
304 150mm Aggregate Base:
(192.00)(1.05)(0.150) = 30.24 m^3
446 Asphalt Conc., Interm. Course (Thick. as shown):
(192.00)(0.045)(2.70) = 23.33 m^3
408 Prime Coat:
(192.00)(1.05)(1.81) = 364.90 L
446 38mm Asphalt Conc., Surface Course:
(192.00)(2.70)(0.038) = 19.70 m^3
407 Tack Coat:
(192.00)(1.65)(0.340) = 107.71 L
407 Tack Coat (Intermed.) :(192.00)(2.70)(0.340) = 176.26 L

Cross-Overs:
Area= [(7.924)(4.88)+2 [(7.62^2)-((3.14)(7.62^2)/4)]](2) = 127.18 m^2

254 38mm Pavement Planing, Bituminous:
(127.18) = 127.18 m^2
301 Bituminous Aggregate Base, PG 64-22 (Thickness as shown):
(127.18)(0.125) = 19.08 m^3
407 Tack Coat:
(127.18)(0.340) = 43.24 L
446 38mm Asphalt Conc., Surface Course:
(127.18)(0.038) = 4.83 m^3
407 Tack Coat (Intermed.) :(127.18)(0.340) = 43.24 L

Transition at Sta. 9+437.25 to Sta. 9+562.05 = 124.80 m

Mainline:
254 70mm Pavement Planing, Bituminous:
(124.80)(7.32)(2) = 1827.07 m^2
301 Bituminous Aggregate Base, PG 64-22:
(7.32)(0.050+0.150)/2(60.00)(2) = 87.84 m^3
446 Asphalt Conc., Interm. Course (Thick. as shown):
(7.32)[(60.0)(0.045)+(42.0)[(0.025+0.095)](2) = 76.42 m^3
446 Asphalt Conc., Surface Course (Thick. as shown)
(7.32)[(22.80)(0.025+0.063)/2+(102.00)(0.038)](2) = 71.43 m^3
407 Tack Coat:
(0.340)(124.80)(7.32)(2) = 621.2 L
407 Tack Coat (Intermed.) :(0.340)(124.80)(7.32)(2) = 621.2 L

Shoulders:
254 70mm Pavement Planing, Bituminous:
(124.80)(7.32)(2) = 1827.07 m^2
301 Bituminous Aggregate Base, PG 64-22:
[(4.22)((0.050+0.150)/2)(60.0)](2) = 50.64 m^3
304 150mm Aggregate Base:
[(0.71)(124.80)(0.150)](2) = 26.58 m^3
446 Asphalt Conc., Interm. Course (Thick. as shown):
(4.22)[((0.025+0.095)/2)(42.0)+(0.045)(60.00)](2) = 44.06 m^3
446 Asphalt Conc., Surface Course (Thick. as shown)
(4.22)[(22.80)(0.025+0.063)/2+(0.038)(102.0)](2) = 41.18 m^3
408 Prime Coat:
[(.71)(124.80)(1.81)](2) = 320.76 L
407 Tack Coat: (0.340)(124.80)(3.51)(2) = 297.88 L

407 Tack Coat (Intermed.) :(0.340)(124.80)(4.22)(2) = 358.12 L

Transition at Sta. 9+569.63 to Sta. 9+690.23 = 120.60 m

Mainline:
254 70mm Pavement Planing, Bituminous:
(124.80)(7.32)(2) = 1827.07 m^2
301 Bituminous Aggregate Base, PG 64-22:
(7.32)(0.050+0.150)/2(60.00)(2) = 87.84 m^3
446 Asphalt Conc., Interm. Course (Thick. as shown):
(7.32)[(60.0)(0.045)+(42.0)[(0.025+0.095)](2) = 76.42 m^3
446 Asphalt Conc., Surface Course (Thick. as shown)
(7.32)[(22.80)(0.025+0.063)/2+(102.00)(0.038)](2) = 71.43 m^3
407 Tack Coat:
(0.340)(124.80)(7.32)(2) = 621.2 L
407 Tack Coat (Intermed.) :(0.340)(124.80)(7.32)(2) = 621.2 L

Shoulders:
254 70mm Pavement Planing, Bituminous:
[(3.66)(124.80)](2) = 913.53 m^2
301 Bituminous Aggregate Base, PG 64-22:
[(4.22)((0.050+0.150)/2)(60.0)](2) = 50.64 m^3
304 150mm Aggregate Base:
[(0.71)(124.80)(0.150)](2) = 26.58 m^3
446 Asphalt Conc., Interm. Course (Thick. as shown):
(4.22)[((0.025+0.095)/2)(42.0)+(0.045)(60.00)](2) = 44.06 m^3
446 Asphalt Conc., Surface Course (Thick. as shown)
(4.22)[(22.80)(0.025+0.063)/2+(0.038)(102.0)](2) = 41.18 m^3
408 Prime Coat:
[(.71)(124.80)(1.81)](2) = 320.76 L
407 Tack Coat: (0.340)(124.80)(3.51)(2) = 297.88 L

407 Tack Coat (Intermed.) :(0.340)(124.80)(4.22)(2) = 358.12 L

Sta. 9+569.63 to Sta. 9+694.43 (Continued)

Shoulders:
254 70mm Pavement Planing, Bituminous:
[(3.66)(124.80)](2) = 913.53 m^2
301 Bituminous Aggregate Base, PG 64-22:
[(4.22)((0.050+0.150)/2)(60.0)](2) = 50.64 m^3
304 150mm Aggregate Base:
[(0.71)(124.80)(0.150)](2) = 26.58 m^3
446 Asphalt Conc., Interm. Course (Thick. as shown):
(4.22)[((0.025+0.095)/2)(42.0)+(0.045)(60.00)](2) = 44.06 m^3
446 Asphalt Conc., Surface Course (Thick. as shown)
(4.22)[(22.80)(0.025+0.063)/2+(0.038)(102.0)](2) = 41.18 m^3
408 Prime Coat:
[(.71)(124.80)(1.81)](2) = 320.76 L
407 Tack Coat: (0.340)(124.80)(3.51)(2) = 297.88 L

407 Tack Coat (Intermed.) :(0.340)(124.80)(4.22)(2) = 358.12 L

Transition at Sta. 14+864.24 to Sta. 14+989.04 = 124.80 m

Mainline:
254 70mm Pavement Planing, Bituminous:
(124.80)(7.32)(2) = 1827.07 m^2
301 Bituminous Aggregate Base, PG 64-22:
(7.32)(0.050+0.150)/2(60.00)(2) = 87.84 m^3
446 Asphalt Conc., Interm. Course (Thick. as shown):
(7.32)[(60.0)(0.045)+(42.0)[(0.025+0.095)](2) = 76.42 m^3
446 Asphalt Conc., Surface Course (Thick. as shown)
(7.32)[(22.80)(0.025+0.063)/2+(102.00)(0.038)](2) = 71.43 m^3
407 Tack Coat:
(0.340)(124.80)(7.32)(2) = 621.2 L
407 Tack Coat (Intermed.) :(0.340)(124.80)(7.32)(2) = 621.2 L

Shoulders:
254 70mm Pavement Planing, Bituminous:
[(3.66)(124.80)](2) = 913.53 m^2
301 Bituminous Aggregate Base, PG 64-22:
[(4.22)((0.050+0.150)/2)(60.0)](2) = 50.64 m^3
304 150mm Aggregate Base:
[(0.71)(124.80)(0.150)](2) = 26.58 m^3
446 Asphalt Conc., Interm. Course (Thick. as shown):
(4.22)[((0.025+0.095)/2)(42.0)+(0.045)(60.00)](2) = 44.06 m^3
446 Asphalt Conc., Surface Course (Thick. as shown)
(4.22)[(22.80)(0.025+0.063)/2+(0.038)(102.0)](2) = 41.18 m^3
408 Prime Coat:
[(.71)(124.80)(1.81)](2) = 320.76 L
407 Tack Coat: (0.340)(124.80)(3.51)(2) = 297.88 L

407 Tack Coat (Intermed.) :(0.340)(124.80)(4.22)(2) = 358.12 L

Transition at Sta. 15+009.38 to Sta. 15+134.18 = 124.80 m

Mainline:
254 70mm Pavement Planing, Bituminous:
(124.80)(7.32)(2) = 1827.07 m^2
301 Bituminous Aggregate Base, PG 64-22:
(7.32)(0.050+0.150)/2(60.00)(2) = 87.84 m^3
446 Asphalt Conc., Interm. Course (Thick. as shown):
(7.32)[(60.0)(0.045)+(42.0)[(0.025+0.095)](2) = 76.42 m^3
446 Asphalt Conc., Surface Course (Thick. as shown)
(7.32)[(22.80)(0.025+0.063)/2+(102.00)(0.038)](2) = 71.43 m^3
407 Tack Coat:
(0.340)(124.80)(7.32)(2) = 621.2 L
407 Tack Coat (Intermed.) :(0.340)(124.80)(7.32)(2) = 621.2 L

Shoulders:
254 70mm Pavement Planing, Bituminous:
[(3.66)(124.80)](2) = 913.53 m^2
301 Bituminous Aggregate Base, PG 64-22:
[(4.22)((0.050+0.150)/2)(60.0)](2) = 50.64 m^3
304 150mm Aggregate Base:
[(0.71)(124.80)(0.150)](2) = 26.58 m^3
446 Asphalt Conc., Interm. Course (Thick. as shown):
(4.22)[((0.025+0.095)/2)(42.0)+(0.045)(60.00)](2) = 44.06 m^3
446 Asphalt Conc., Surface Course (Thick. as shown)
(4.22)[(22.80)(0.025+0.063)/2+(0.038)(102.0)](2) = 41.18 m^3
408 Prime Coat:
[(.71)(124.80)(1.81)](2) = 320.76 L
407 Tack Coat: (0.340)(124.80)(3.51)(2) = 297.88 L

407 Tack Coat (Intermed.) :(0.340)(124.80)(4.22)(2) = 358.12 L

CALCULATED KAWE
CHECKED DJS

PAVEMENT CALCULATIONS

VAN-30-6.618(4.05)

DESIGN FILE : i:\pd\van30d\v30gcl.dgn
USERNAME : rhermon

DATE : 29-AUG-1997
TIME : 13:40

Transition at Sta. 15+450.55 to Sta. 15+575.35 = 124.80 m

Mainline:

254 70mm Pavement Planing, Bituminous:
(124.80)(7.32)(2) = 1827.07 m^2

301 Bituminous Aggregate Base, PG 64-22:
(7.32)(0.050+0.150)/2(60.00)(2) = 87.84 m^3

446 Asphalt Conc., Interm. Course (Thick. as shown):
(7.32)[(60.0)(0.045)+(42.0)[(0.025+0.095)](2) = 76.42 m^3

446 Asphalt Conc., Surface Course (Thick. as shown)
(7.32)[(22.80)(0.025+0.063)/2+(102.00)(0.038)](2) = 71.43 m^3

407 Tack Coat:
(0.340)(124.80)(7.32)(2) = 621.2 L

407 Tack Coat (Intermed.) :(0.340)(124.80)(7.32)(2) = 621.2 L

Shoulders:

254 70mm Pavement Planing, Bituminous:
[(3.66)(124.80)](2) = 913.53 m^2

301 Bituminous Aggregate Base, PG 64-22:
[(4.22)((0.050+0.150)/2)(60.0)](2) = 50.64 m^3

304 150mm Aggregate Base:
[(0.71)(124.80)(0.150)](2) = 26.58 m^3

446 Asphalt Conc., Interm. Course (Thick. as shown):
(4.22)[((0.025+0.095)/2)(42.0)+(0.045)(60.00)](2) = 44.06 m^3

446 Asphalt Conc., Surface Course (Thick. as shown)
(4.22)[(22.80)(0.025+0.063)/2+(0.038)(102.0)](2) = 41.18 m^3

408 Prime Coat:
[(.71)(124.80)(1.81)](2) = 320.76 L

407 Tack Coat: (0.340)(124.80)(3.51)(2) = 297.88 L

407 Tack Coat (Intermed.) :(0.340)(124.80)(4.22)(2) = 358.12 L

Transition at Sta. 15+599.59 to Sta. 15+724.39 = 124.80 m

Mainline:

254 70mm Pavement Planing, Bituminous:
(124.80)(7.32)(2) = 1827.07 m^2

301 Bituminous Aggregate Base, PG 64-22:
(7.32)(0.050+0.150)/2(60.00)(2) = 87.84 m^3

446 Asphalt Conc., Interm. Course (Thick. as shown):
(7.32)[(60.0)(0.045)+(42.0)[(0.025+0.095)](2) = 76.42 m^3

446 Asphalt Conc., Surface Course (Thick. as shown)
(7.32)[(22.80)(0.025+0.063)/2+(102.00)(0.038)](2) = 71.43 m^3

407 Tack Coat:
(0.340)(124.80)(7.32)(2) = 621.2 L

407 Tack Coat (Intermed.) :(0.340)(124.80)(7.32)(2) = 621.2 L

Shoulders:

254 70mm Pavement Planing, Bituminous:
[(3.66)(124.80)](2) = 913.53 m^2

301 Bituminous Aggregate Base, PG 64-22:
[(4.22)((0.050+0.150)/2)(60.0)](2) = 50.64 m^3

304 150mm Aggregate Base:
[(0.71)(124.80)(0.150)](2) = 26.58 m^3

446 Asphalt Conc., Interm. Course (Thick. as shown):
(4.22)[((0.025+0.095)/2)(42.0)+(0.045)(60.00)](2) = 44.06 m^3

446 Asphalt Conc., Surface Course (Thick. as shown)
(4.22)[(22.80)(0.025+0.063)/2+(0.038)(102.0)](2) = 41.18 m^3

408 Prime Coat: [(.71)(124.80)(1.81)](2) = 320.76 L

407 Tack Coat: (0.340)(124.80)(3.51)(2) = 297.88 L

407 Tack Coat (Intermed.) :(0.340)(124.80)(4.22)(2) = 358.12 L

Transition at Sta. 17+284.74 to Sta. 17+510.74 = 226.00 m

Mainline:

254 70mm Pavement Planing, Bituminous:
(226.00)(7.32)(2) = 3308.64 m^2

301 Bituminous Aggregate Base, PG 64-22:
[(7.32)(0.050+0.150)/2](60.00x2)(2) = 175.68 m^3

446 Asphalt Conc., Interm. Course (Thick. as shown):
(7.32)[(83.0x2)(0.045)+(30x2)(0.045+0.095)/2](2) = 170.85 m^3

407 Tack Coat:
(0.340)(226.00)(7.32)(2) = 1124.94 L

446 38mm Asphalt Conc., Surface Course:
(226.00)(7.32)(0.038)(2) = 125.73 m^3

407 Tack Coat (Intermed.)(0.340)(226.00)(7.32)(2) = 1124.94 L

Sta.17+284.74 to 17+510.74 (Continued)

Shoulders:

254 70mm Pavement Planing, Bituminous:
(226.00)(3.66)(2) = 1654.32 m^2

301 Bituminous Aggregate Base, PG 64-22:
(Thick. as shown):
(4.22)((0.050+0.150)/2)(60.0x2)(2) = 101.28 m^3

304 150mm Aggregate Base:
(226.00)(0.71)(0.150)(2) = 48.14 m^3

446 Asphalt Conc., Interm. Course (Thick. as shown):
(4.22)[((0.045+0.095)(30.0x2)+(0.045)(83.0x2)](2) = 98.50 m^3

408 Prime Coat:
(226.00)(0.71)(1.81)(2) = 580.87 L

446 38mm Asphalt Conc., Surface Course:
(226.00)(4.22)(0.038)(2) = 72.48 m^3

407 Tack Coat: (0.340)(226.00)(3.51) = 269.71 L

407 Tack Coat (Intermed.) : (0.340)(226.00)(4.22) = 324.27 L

Cross-over Road Transitions:

254 Variable Thick, Pavement Planing, Bituminous:
(12)(253.02) = 3036.24 m^2

301 Bituminous Aggregate Base, PG 64-22:
(12)[(0.050+0.150)/2](213.65) = 256.38 m^3

446 Asphalt Conc., Interm. Course (Thick. as shown):
[([(0.025+0.095)/2](64.65))+(0.045)(213.65)](12) = 161.92 m^3

446 Asphalt Conc., Surface Course (Thick. as shown):
[(213.65)(0.038)+(64.65)(0.038)+(54.05)(0.063/2)](12) = 147.34 m^3

407 Tack Coat:
(12)[(213.65+64.65+54.05)(0.340)] = 1355.99 L

407 Tack Coat (Intermed.) :
(12)[(213.65+64.65+54.05)(0.340)] = 1355.99 L

Pavement Build-up @ At-Grade Intersections:

Area= (721.49)(6 intersections) = 4328.94 m^2

301 Bituminous Aggregate Base, PG 64-22:
(Thick. as shown):
(4328.94)(0.150) = 649.34 m^3

304 150mm Aggregate Base:
[4328.94 - (6)(415.83)](0.150) = 275.09 m^3

407 Tack Coat:
(415.83)(6)(0.340) = 848.29 L

408 Prime Coat:
[4328.94 - (6)(415.83)](1.81) = 3319.47 L

446 38mm Asphalt Conc., Surface Course:
(4328.94)(0.038) = 164.50 m^3

446 45mm Asphalt Conc., Surface Course:
(4328.94)(0.045) = 194.80 m^3

407 Tack Coat (Intermed.) :(4328.94)(0.340) = 1471.84 L

Pavement Removal @ At-Grade Intersections and Existing Left Turn Lanes:

254 70mm Pavement Planing, Bituminous:
[(2)(0.5)(75)(3.67)+(2)(0.5)(15)(2.4)+415.83](6 intersections) = 4362.48 m^2

U.S. 30 mainline (Eastbound and Westbound):

203 Excavation, not including Embankment Construction:

Sta. 6+523.99 to Sta. 6+529.55	=	5.56 m
(5.56)(0.71)(0.22)(2)	=	1.74 m^3
Sta. 6+529.55 to Sta. 6+548.45	=	18.90 m
(18.90)(0.71)(0.22)	=	2.95 m^3
Sta. 6+548.45 to Sta. 6+824.34	=	275.89 m
(275.89)(0.71)(0.22)	=	86.19 m^3
Sta. 6+824.34 to Sta. 6+824.95	=	0.61 m
(0.61)(0.71)(0.22)	=	0.10 m^3
Sta. 6+843.85 to Sta. 6+844.46	=	0.61 m
(0.61)(0.71)(0.22)	=	0.10 m^3
Sta. 6+844.46 to Sta. 9+562.05	=	2717.59 m
(2717.59)(0.71)(0.22)(2)	=	848.98 m^3
Sta. 9+569.63 to Sta. 14+989.04	=	5419.40 m
(5419.40)(0.71)(0.22)(2)	=	1693.02 m^3
Sta. 15+009.38 to Sta. 15+575.35	=	565.97 m
(565.97)(0.71)(0.22)(2)	=	176.81 m^3
Sta. 15+599.59 to Sta. 18+288.00	=	2688.41 m
(2688.41)(0.71)(0.22)(2)	=	839.86 m^3
Total	=	3649.73 m^3

Weigh Station Parking Lot :

Area = 4197.15 m^2

407 Tack Coat:
(0.340)(4197.15) = 1427.03 L

446 Asphalt Conc., Interm. Course (Thick. as shown):
(4197.15)(0.045) = 188.87 m^3

446 38mm Asphalt Conc., Surface Course:
(4197.15)(0.045) = 188.87 m^3

407 Tack Coat (Intermed.) :
(0.340)(4197.15) = 1427.03 L

CALCULATED KAWE
CHECKED DJS

PAVEMENT CALCULATIONS

VAN-30-6.618(4.05)

DATE : 29-AUG-1997
TIME : 14:32

DESIGN FILE : I:\pd\van30d\v30de.dgn
USERNAME : rhermon

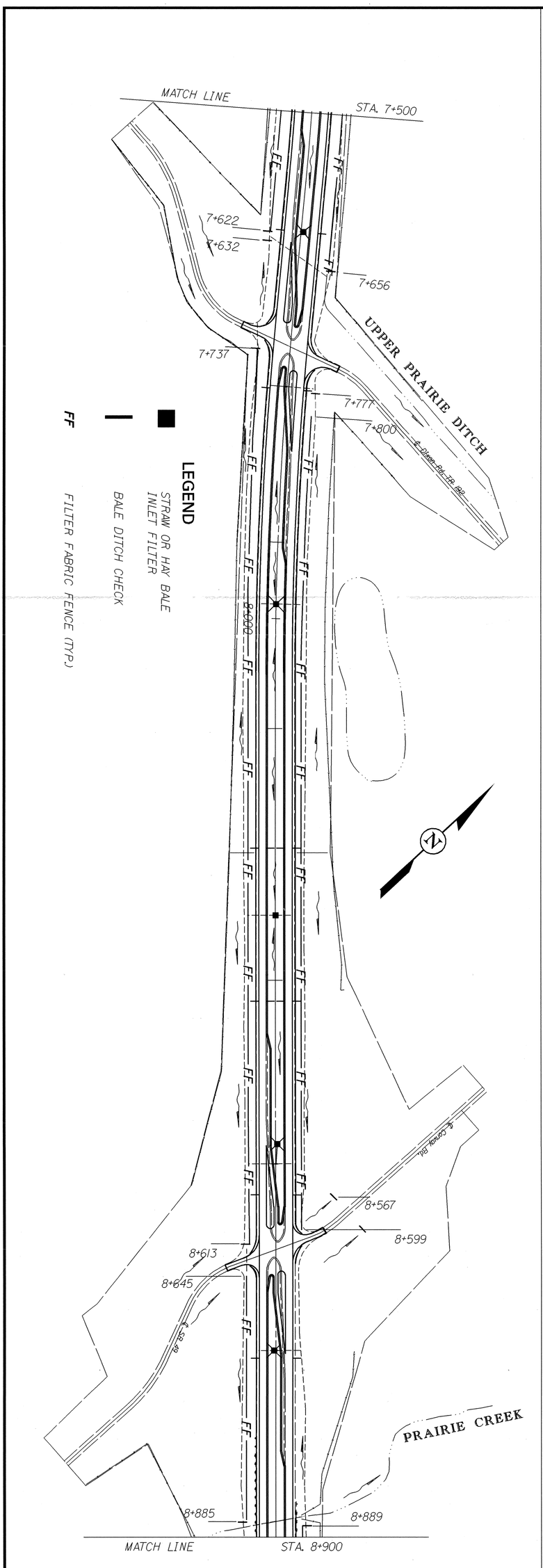

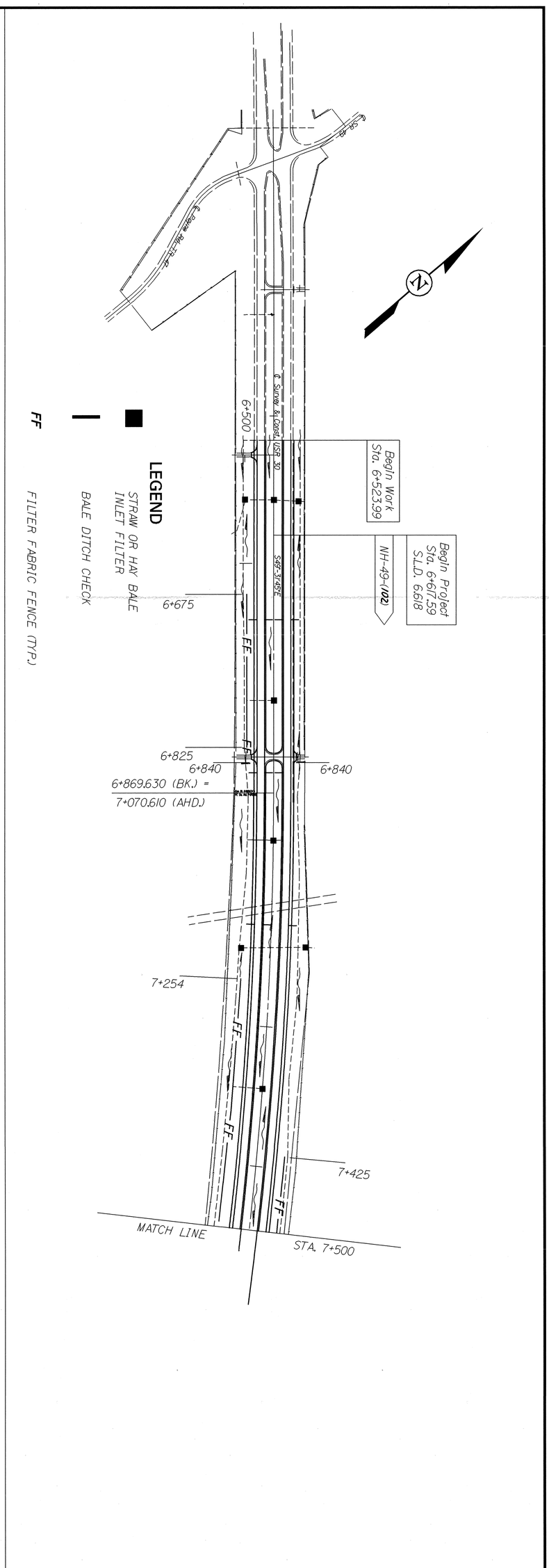

134 / 23	VAN-30-6.618(4.05)	STORM WATER POLLUTION PREVENTION PLAN Sta. 6+500 to Sta. 8+900	CALCULATED EJS CHECKED KM	Scale in Meters 0 25 50 1:2000 Ratio

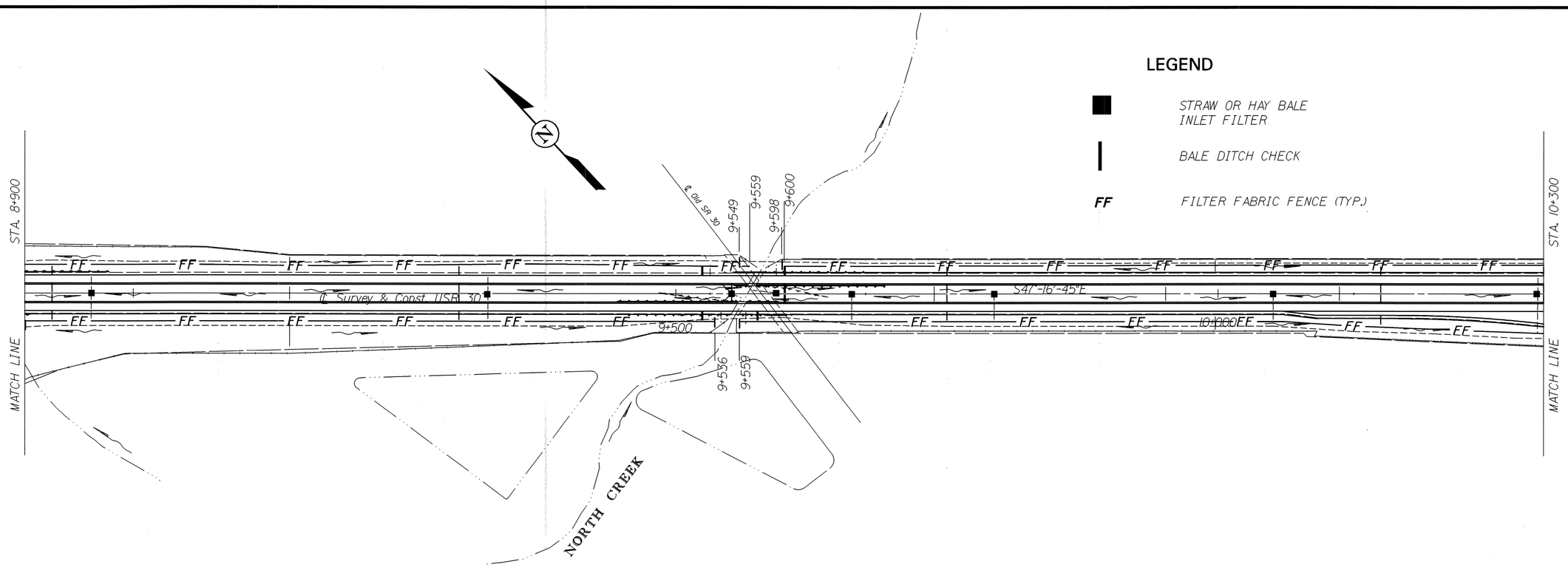

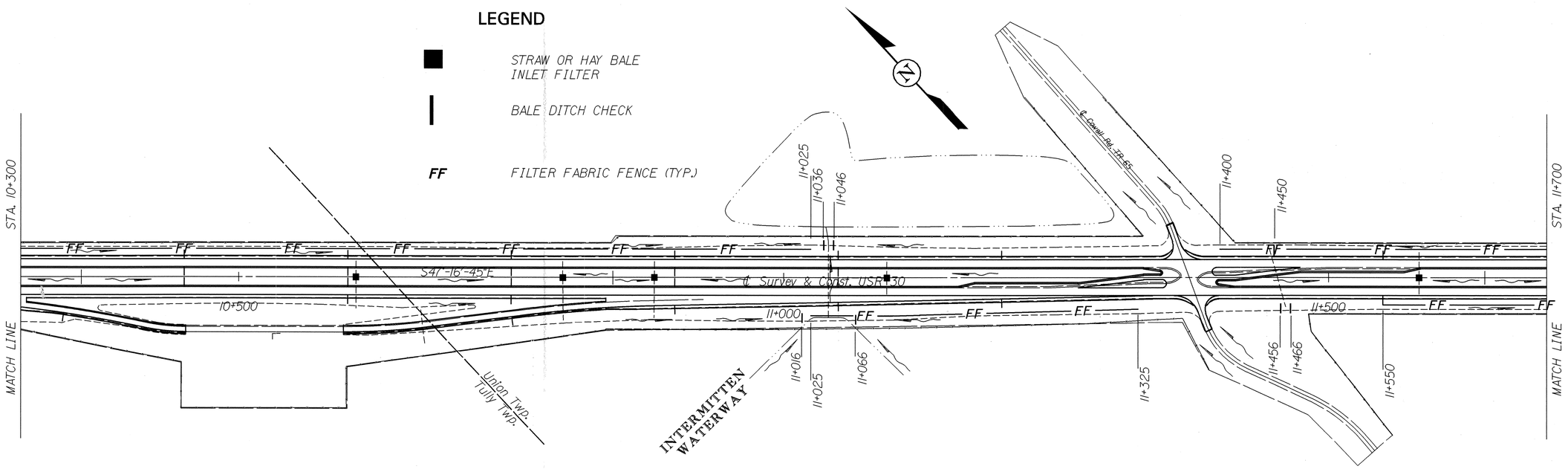

STORM WATER POLLUTION PREVENTION PLAN
Sta. 8+900 to Sta. 11+700

VAN-30-6.618(4.05)

Scale in Meters
0 25 50
1:2000 Ratio

CALCULATED E.J.S
CHECKED K.M

24
134

DESIGN FILE : i:\pd\van30d\v30de.dgn
USERNAME : rhermon
DATE : 29-AUG-1997
TIME : 14:32

DATE : 29-AUG-1997
TIME : 14:33

DESIGN FILE : i:\pd\van30d\v30de.dgn
USERNAME : rhermon

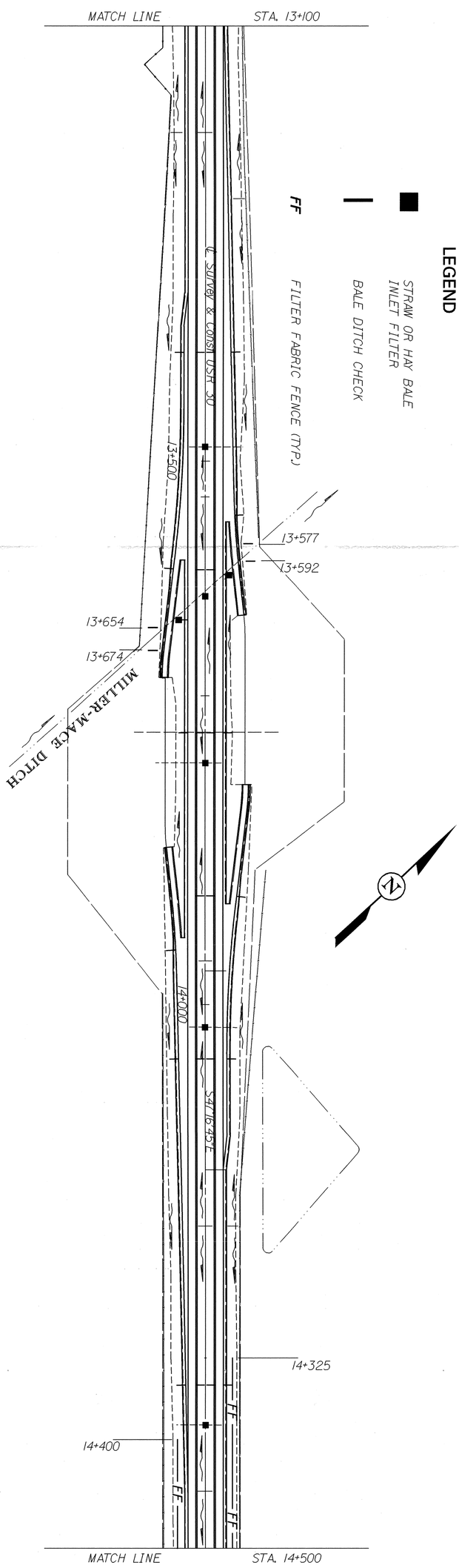

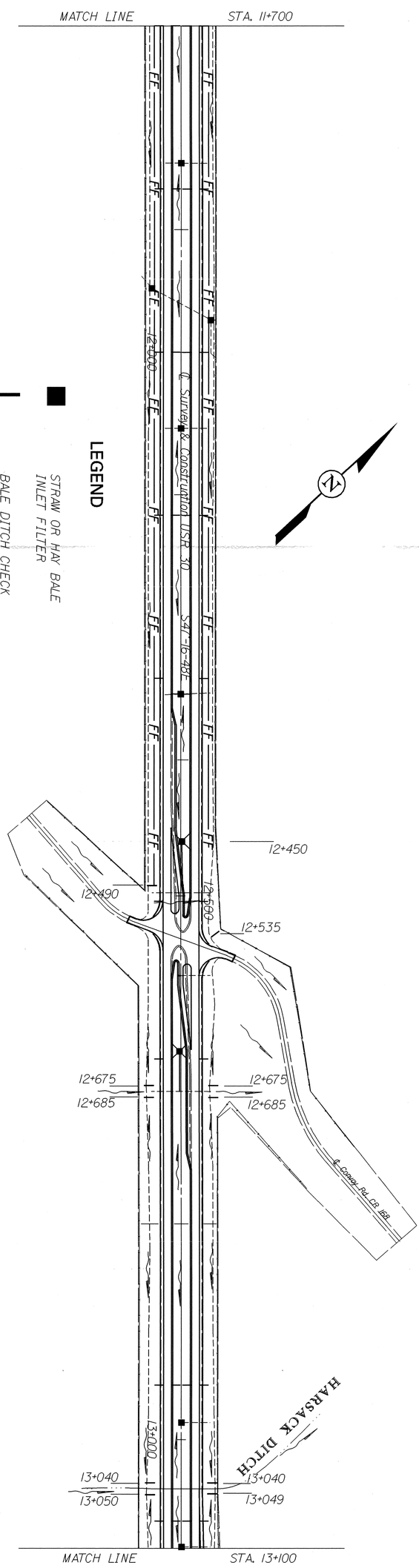

25/134	VAN-30-6.618(4.05)	STORM WATER POLLUTION PREVENTION PLAN Sta. 11+700 to Sta. 14+500	CALCULATED EJS CHECKED KM	Scale in Meters 0 25 50 1:2000 Ratio

DATE : 29-AUG-1997
TIME : 14:33

DESIGN FILE : i:\pd\van30d\v30de.dgn
USERNAME : rhermon

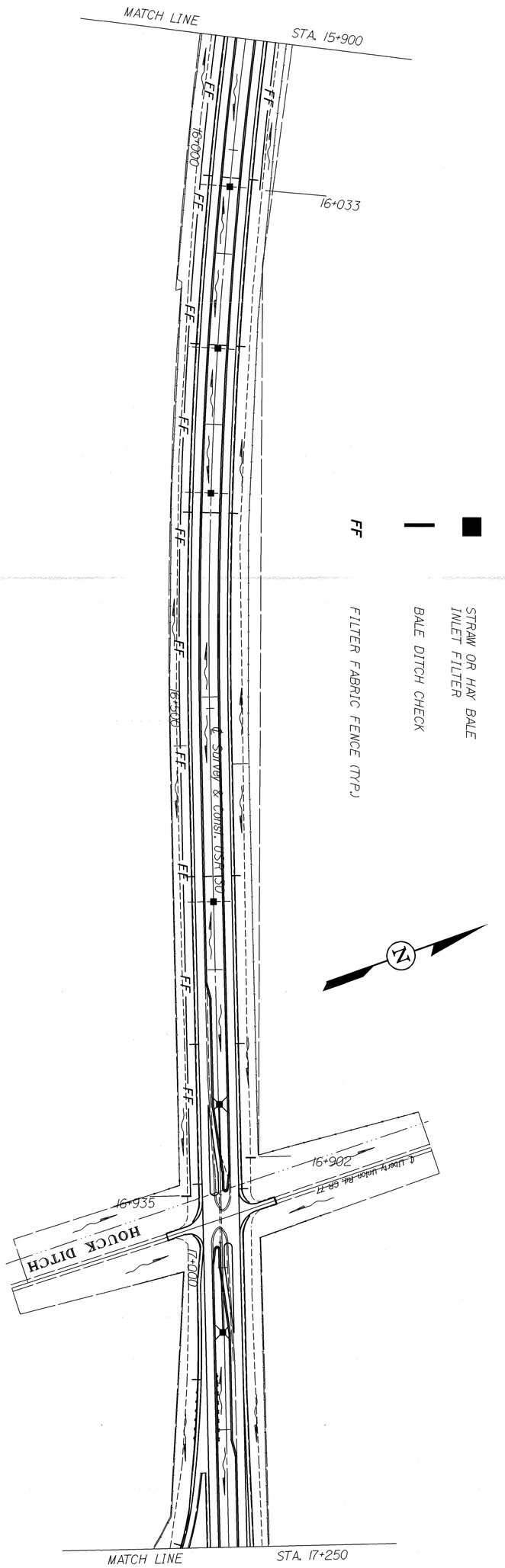

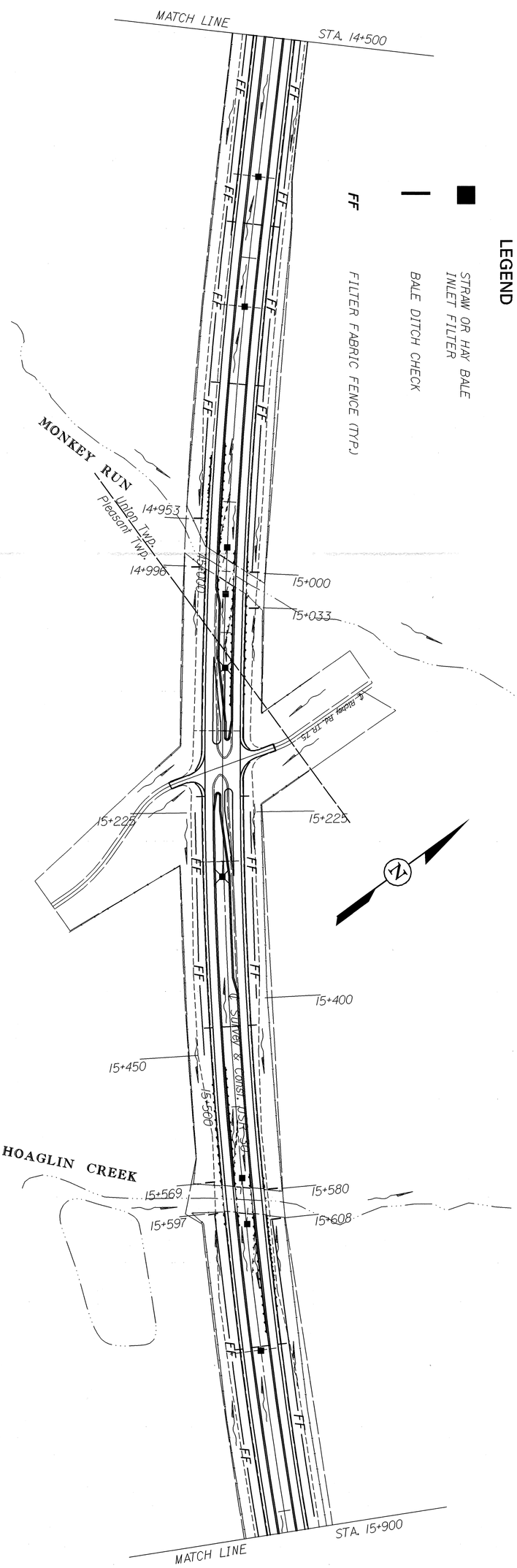

26 / 134	VAN-30-6.618(4.05)	STORM WATER POLLUTION PREVENTION PLAN Sta. 14+500 to Sta. 17+250	CALCULATED EJS CHECKED KM	Scale in Meters 0 25 50 1:2000 Ratio

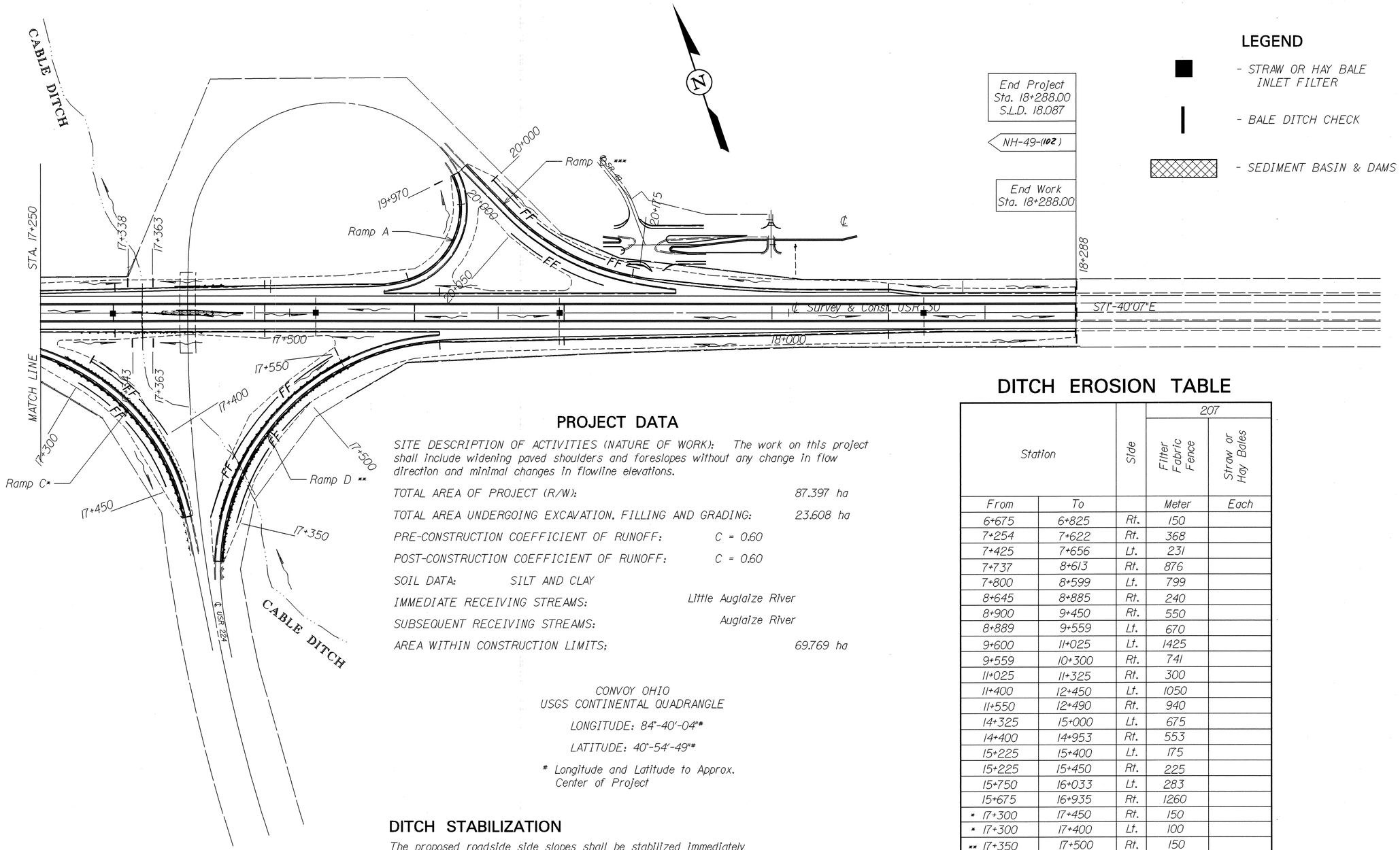

LEGEND

- STRAW OR HAY BALE INLET FILTER
- BALE DITCH CHECK
- SEDIMENT BASIN & DAMS

PROJECT DATA

SITE DESCRIPTION OF ACTIVITIES (NATURE OF WORK): The work on this project shall include widening paved shoulders and foreslopes without any change in flow direction and minimal changes in flowline elevations.

TOTAL AREA OF PROJECT (R/W): 87.397 ha

TOTAL AREA UNDERGOING EXCAVATION, FILLING AND GRADING: 23.608 ha

PRE-CONSTRUCTION COEFFICIENT OF RUNOFF: C = 0.60

POST-CONSTRUCTION COEFFICIENT OF RUNOFF: C = 0.60

SOIL DATA: SILT AND CLAY

IMMEDIATE RECEIVING STREAMS: Little Auglaize River

SUBSEQUENT RECEIVING STREAMS: Auglaize River

AREA WITHIN CONSTRUCTION LIMITS: 69.769 ha

CONVOY OHIO
USGS CONTINENTAL QUADRANGLE

LONGITUDE: 84°-40'-04"*

LATITUDE: 40°-54'-49"*

* Longitude and Latitude to Approx. Center of Project

DITCH STABILIZATION

The proposed roadside side slopes shall be stabilized immediately following any shoulder construction. The stablization shall be either seeding or erosion control, whichever operation is applicable.

For Further Details, See Std. Dwgs. DM-4.3M & DM-4.4M

For Further Notes and Quantities, See "Temporary Soil Erosion and Sediment Control" General Note on Sheet 7.

DITCH EROSION TABLE

Station		Side	207	
			Filter Fabric Fence	Straw or Hay Bales
From	To		Meter	Each
6+675	6+825	Rt.	150	
7+254	7+622	Rt.	368	
7+425	7+656	Lt.	231	
7+737	8+613	Rt.	876	
7+800	8+599	Lt.	799	
8+645	8+885	Rt.	240	
8+900	9+450	Rt.	550	
8+889	9+559	Lt.	670	
9+600	11+025	Lt.	1425	
9+559	10+300	Rt.	741	
11+025	11+325	Rt.	300	
11+400	12+450	Lt.	1050	
11+550	12+490	Rt.	940	
14+325	15+000	Lt.	675	
14+400	14+953	Rt.	553	
15+225	15+400	Lt.	175	
15+225	15+450	Rt.	225	
15+750	16+033	Lt.	283	
15+675	16+935	Rt.	1260	
* 17+300	17+450	Rt.	150	
* 17+300	17+400	Lt.	100	
** 17+350	17+500	Rt.	150	
** 17+350	17+550	Lt.	200	
*** 20+000	20+175	Lt.	175	
*** 20+050	20+150	Rt.	100	
DITCH CHECKS				285
INLET FILTERS				488
TOTAL			12 386	773

Quantities Carried to General Summary on Sheet 13.

Scale in Meters 0 25 50 1:2000 Ratio

CALCULATED EJS CHECKED KM

STORM WATER POLLUTION PREVENTION PLAN
Sta. 17+250 to Sta. 18+288

VAN-30-6.618(4.05)

27
134

DESIGN FILE : i:\pd\van30d\v30de.dgn
USERNAME : rhermon
DATE : 29-AUG-1997
TIME : 14:34

DESIGN FILE : i:\pd\van30d\v30gpl.dgn
USERNAME : rhermon
DATE : 29-AUG-1997
TIME : 15:49

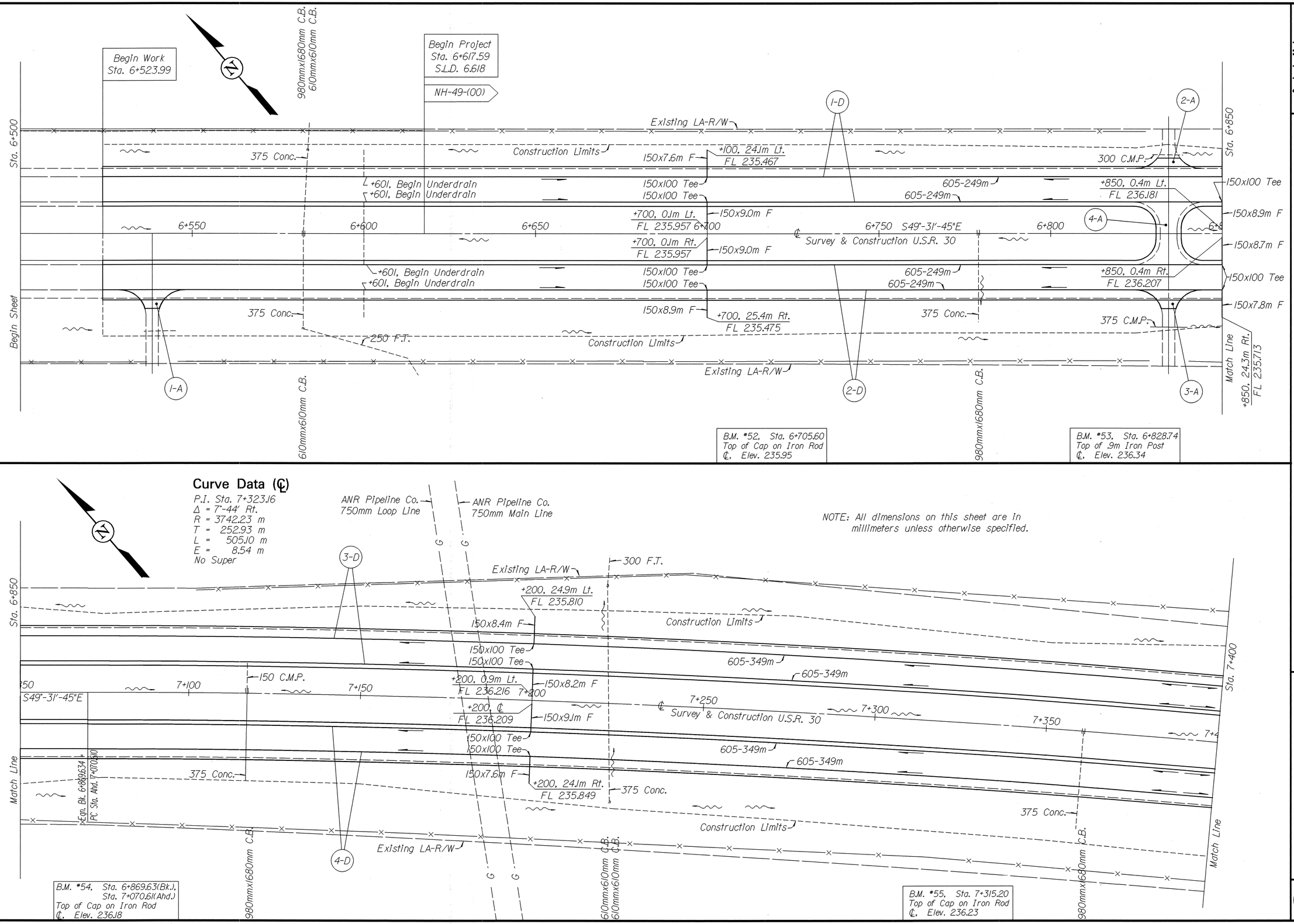

Scale in Meters
0 10 20
1:500 Ratio

PLAN SHEET – U.S.R. 30
Sta. 6+500 to Sta. 7+400

VAN-30-6.618(4.05)

28
134

DESIGN FILE : i:\pd\van30d\v30gp2.dgn
USERNAME : rhermon
DATE : 29-AUG-1997
TIME : 15:54

* Masonry Collar, as per DM-1.1M

No. 8 C.B., w/o Apron Sta. 7+620.0, 2.0m Lt.

Existing LA-R/W

Construction Limits

Sta. 7+400

5-D

6-D

7-D

+620, 24.3m Lt.
FL 235.802
150x7.8m F
150x100 Tee
FL 235.881

+620.4, 2.4m Lt.
FL 235.200

605-220m
605-312m

605(Uncl.)-130m
605(Uncl.)-85m

150x45°
FL 235.846

+619.6, 2.4m Lt.
FL 235.200
150x10.1m F
375x3.4m C
375x45°
* 375 Conc. (202)
150x10.7m F
150x45°

605(Uncl.)-84m

FL 235.860

S41°-47'-45"E

7+450 ℄ Survey & Construction U.S.R. 30 7+500 7+550 7+600 7+650 7+700

605-312m
605-220m

+619.6, 1.6m Lt.
FL 235.200
150x100 Tee
FL 235.852
150x10.7m F
605(Uncl.)-130m

150x7.8m F
+620, 24.3m Rt.
FL 235.774

1200 Conc.

+620.4, 1.6m Lt.
FL 235.400

Begin Sheet

Construction Limits

Existing LA-R/W

PT Sta. 7+575.706

980mmx680mm C.B. Removed (202)

Begin Work Dixon Rd. Sta. 0+563.232

1050 Conc.

Sta. 7+733.13 ℄ U.S.R. 30 = Sta. 0+621.30 ℄ Dixon Rd.

PC Sta. 7+702.652

Sta. 7+750

0+650

℄ Dixon Rd., T.R. 192

0+600

Match Line

Curve Data (℄)

P.I. Sta. 7+323.16
Δ = 7°-44' Rt.
R = 3742.23 m
T = 252.93 m
L = 505.10 m
E = 8.54 m
No Super

B.M. #56, Sta. 7+575.71
Top of Cap on Iron Rod
℄, Elev. 235.95

B.M. #57, Sta. 7+620.00
Chiseled mark on Catch Basin Grate
℄, Elev. 235.57

B.M. #58, Sta. 7+702.65
Top of Cap on Iron Rod
℄, Elev. 236.09

NOTE: All dimensions on this sheet are in millimeters unless otherwise specified.

End Work Dixon Rd. Sta. 0+673.50

+775, 23.9m Rt.
FL 235.815

Existing LA-R/W

8-D

Construction Limits

Sta. 7+750

150x7.4m F

375 Conc.

150x100 Tee
FL 235.890

605(Uncl.)-200m

FL 236.190
150x45°
150x12.9m F
150x45°

605-150m
605-105m

PT Sta. 8+060.792

Sta. 8+100

Curve Data (℄)

P.I. Sta. 7+881.72
Δ = 5°-29' Lt.
R = 3742.23 m
T = 179.21 m
L = 358.00 m
E = 4.29 m
No Super

FL 236.160

7+800 7+850 7+900 7+950 8+000 8+050

605(Uncl.)-222m

℄ Survey & Construction U.S.R. 30

+985.4, 0.4m Lt. FL 235.200
+985.4, 0.4m Rt., FL 235.200
+986.2, 0.4m Lt., FL 235.200
+986.2, 0.4m Rt., FL 235.200

S47°-16'-45"E

(202) 375x3.0m C

150 C.M.P.
FL 235.862
150x100 Tee

150x12.9m F
150x45°
150 C.M.P.

605(Uncl.)-223m
605(Uncl.)-200m

150x8.0m F
+775, 24.5m Rt.
FL 235.782

Match Line

C.B. 980mmx680mm Abandoned & Connect Thru

Construction Limits

Existing LA-R/W

End Sheet

9-D

10-D

980mmx680mm C.B.

B.M. #59, Sta. 7+769.66
Top of .9m Iron Post
40.5m Rt., Elev. 235.77

B.M. #60, Sta. 7+772.40
Chiseled mark on Catch Basin Grate
℄, Elev. 235.87

B.M. #61, Sta. 7+924.80
Top of Cap on Iron Rod
℄, Elev. 236.17

B.M. #62, Sta. 8+060.79
Top of Cap on Iron Rod
℄, Elev. 236.20

Scale in Meters
0 10 20
1:500 Ratio

PLAN SHEET – U.S.R. 30
Sta. 7+400 to Sta. 8+100

VAN-30-6.618(4.05)

29
134

DESIGN FILE : i:\pd\van30d\v30gp3.dgn
USERNAME : rhermon
DATE : 29-AUG-1997
TIME : 15:55

Existing LA-R/W

Sta. 8+100

Construction Limits

11-D

Sta. 8+450

150x7.8m F
+225, 24.3m Lt.
FL 235.926

150x100 Tee
150x100 Tee

150 C.M.P.

605-350m
605-350m

150x7.6m F
+375, 24.1m Lt.
FL 235.746

150x100 Tee
150x100 Tee

+225, 0.4m Lt.
150x8.7m F

8+150
S47°-16'-45"E
8+200 FL 236.104
8+250
8+300
8+350 FL 235.904
8+400

Survey & Construction U.S.R. 30

+225, 0.1m Rt.
FL 236.095
150x9.0m F

+375, 0.1m Lt.
150x9.0m F

+375, 0.4m Rt.
FL 235.911
150x8.7m F

150x100 Tee
150x100 Tee

605-350m
605-350m

150x100 Tee
150x100 Tee

Begin Sheet

150x7.7m F
+225, 24.2m Rt.
FL 235.954

375 Conc.

150x7.8m F
+375, 24.3m Rt.
FL 235.737

Match Line

Construction Limits

12-D

Existing LA-R/W

980mmx1680mm C.B.

B.M. *63, Sta. 8+229.60
Top of Cap on Iron Rod
℄. Elev. 236.05

Scale in Meters
0 10 20
1:500 Ratio

PLAN SHEET – U.S.R. 30
Sta. 8+100 to Sta. 8+800

VAN-30-6.618(4.05)

30
134

NOTE: All dimensions on this sheet are in millimeters unless otherwise specified.

No. 8 C.B. w/o Apron
Sta. 8+515.00, 1.7m Lt.

980mmx1680mm C.B.
(Abandoned & Connect Thru)

End Work
Convoy Rd.
Sta. 0+597.912

13-D

14-D

Sta. 8+450

Constr. Limits

+515.4, 2.1m Lt.
FL 235.000

+565, 24.1m Lt.
FL 235.543

150x7.6m F

150x100 Tee

605-350m
605-58m

FL 236.192
150x45°
150x45°
150x10.5m F
200 C.M.P.

605(Uncl.)-70m

FL 235.480

+514.6, 2.1m Lt., FL 235.000
8+500
S47°-16'-45"E
150x10.2m F
150x45°
+514.6, 1.3m Lt.
FL 235.000
605-58m
605-350m

150x10.5m F
200x400 Tee
200x1.5m C
(202) 8+550
450x19.4mC
450x1.5m C
150x45°
FL 235.419
150x10.2m F

8+600

FL 235.480

Match Line

+515.4, 1.3m Lt.
FL 235.000

450 Conc.

150x7.6m F

150x100 Tee

+565, 24.1m Rt.
FL 235.540

750 Conc.

Construction Limits

℄ S.R. 49

* Masonry Collar,
as per DM-1.1M

Sta. 8+618.52 ℄ U.S.R. 30 =
Sta. 0+546.02 ℄ S.R 49 (Bk.)
Convoy Rd. (Ahd.)

℄ Convoy Rd.

+717.8, 1.3m Rt.
FL 235.400

+725, 23.5m Lt.
FL 235.706

15-D

375 Conc.

150x7.0m F

150x100 Tee

Sta. 8+800

+717, 1.3m Rt.
FL 235.400

605-75m

150x45°
150x10.5m F
375x3.5m C
150x1.5m C
150x10.5m F
150x45°
150x100 Tee

8+650
8+700
8+750
℄ Survey & Constr. U.S.R. 30

FL 235.540
605(Uncl.)-66m
FL 235.540
605(Uncl.)-66m

150x45°, FL 235.514
150x8.6m F
(202)
150x10.5m F
150x45°
FL 235.514

605-75m

+717, 2.1m Rt.
FL 235.400

150 C.M.P.

150x7.9m F
+725, 24.4m Rt.
FL 235.690

End Sheet

+717.8, 2.1m Rt.
FL 235.400

16-D

17-D

18-D

Begin Work
S.R. 49
Sta. 0+493.904

No. 8 C.B. w/o Apron
Sta. 8+717.40, 1.7m Rt.

980mmx1680mm C.B.
(Abandoned & Connect Thru)

B.M. *64, Sta. 8+534.40
Chiseled mark in Catch
Basin Grate
℄. Elev. 235.45

B.M. *65, Sta. 8+643.82
Top of Cap on Iron Rod
℄. Elev. 236.19

B.M. *66, Sta. 8+739.23
Top of Lid on Monument
Assembly
144.2m Rt., Elev. 236.18

DESIGN FILE : i:\pd\van30d\v30gp4.dgn
USERNAME : rhermon
DATE : 29-AUG-1997
TIME : 15:57

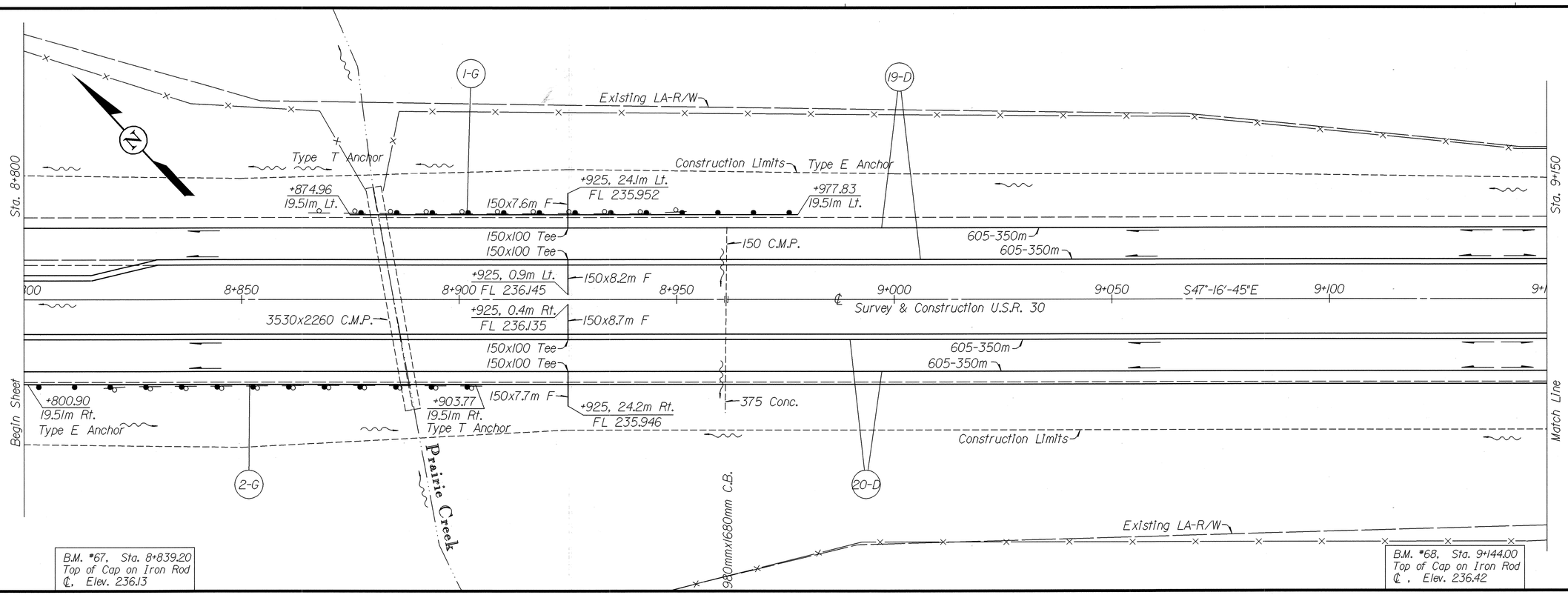

NOTE: All dimensions on this sheet are in millimeters unless otherwise specified.

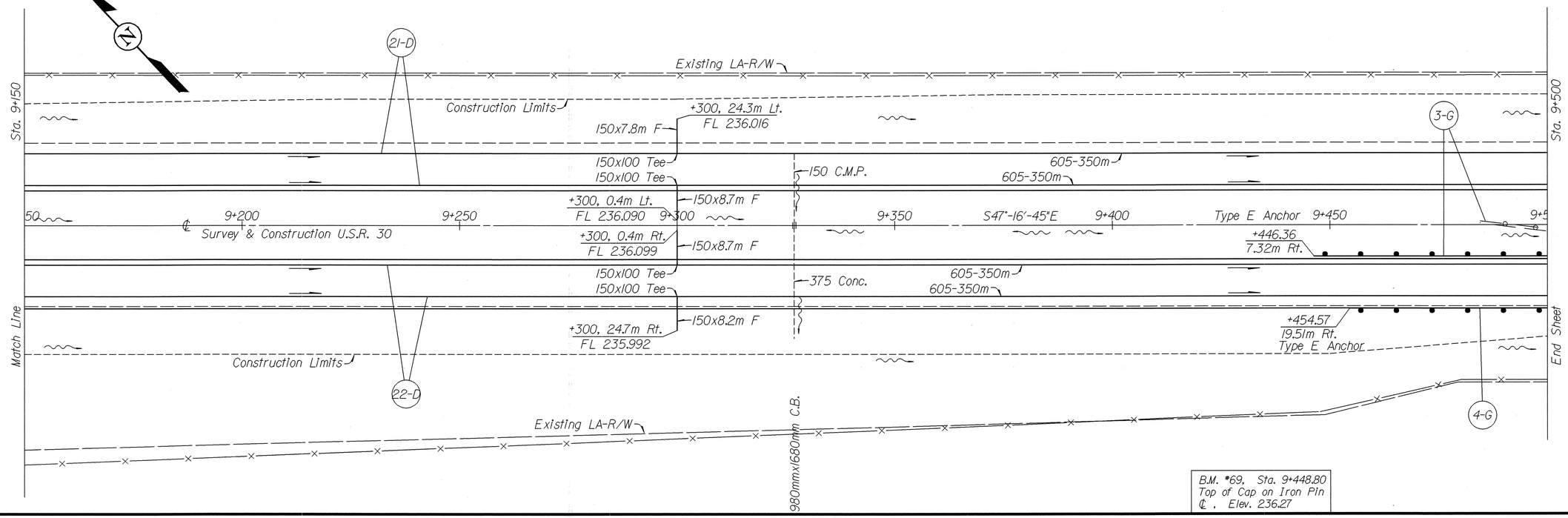

Scale in Meters
0 10 20
1:500 Ratio

PLAN SHEET – U.S.R. 30
Sta. 8+800 to Sta. 9+500

VAN-30-6.618(4.05)

DESIGN FILE : i:\pd\van30d\v30gp5.dgn
USERNAME : rhermon
DATE : 29-AUG-1997
TIME : 16:01

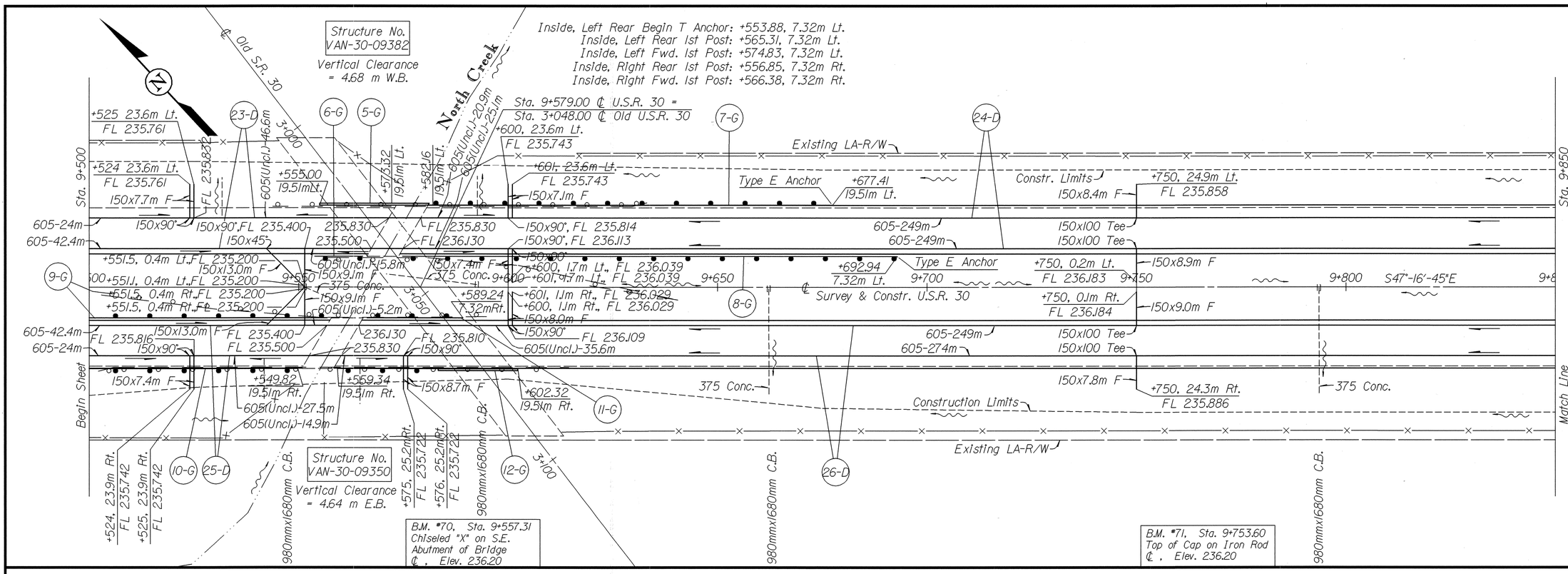

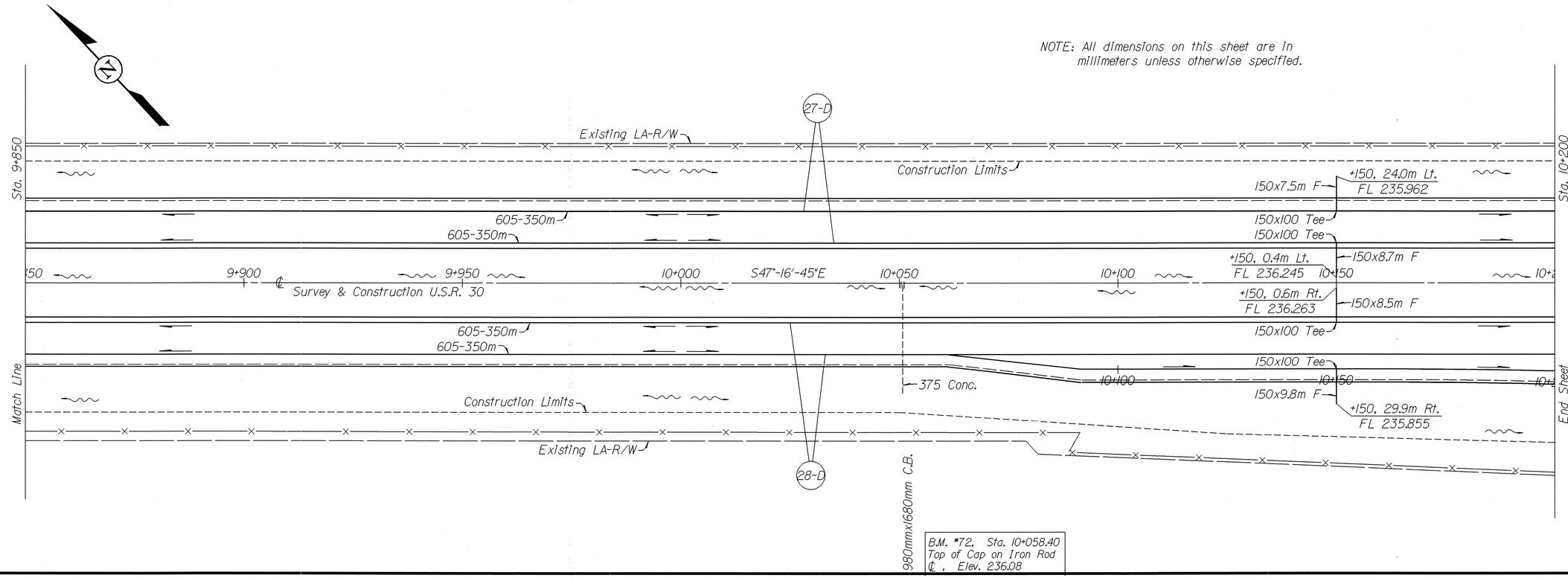

Scale in Meters
0 10 20
1:500 Ratio

PLAN SHEET - U.S.R. 30
Sta. 9+500 to Sta. 10+200

VAN-30-6.618(4.05)

32
134

B.M. #73, Sta. 10+363.20
Top of Cap on Iron Rod
℄ , Elev. 236.04

Scale in Meters
0 10 20
1:500 Ratio

Existing LA-R/W
Construction Limits
Sta. 10+200
Sta. 10+550
29-D
+300, 24.1m Lt.
FL 235.780
150x7.6m F
150 C.M.P.
150x100 Tee
605-350m
150x9.1m F
+300, ℄
10+300 FL 235.869
+300, 0.5m Rt.
FL 235.857
150x8.6m F
10+250
10+350
10+400
10+450
10+500
S47°-16'-45"E
Survey & Construction U.S.R. 30
+450, 24.1m Lt.
FL 235.601
+450, 0.3m Lt.
FL 235.896
+450, 0.3m Rt.
FL 235.896
150x8.8m F
+305.3, Begin Underdrain
605-244.7m
375 Conc.
605-253.3m
Begin Sheet
Match Line
Ramp "A"
150x8.9m F
+340, 8.9m Rt.
FL 235.461
30-D
31-D
End Work
℄ Ramp "A"
Sta. 10+502.24
Begin Work
℄ Ramp "B"
Sta. 10+547.96
For Weigh Station Details See Sht. 90

Curve Data
Weigh Sta. Ramp "A"
P.I. Sta. 10+290.716
Δ = 12°-12'-41" Rt.
R = 1164.251 m
T = 124.540 m
L = 248.136 m
E = 6.642 m
e_{max} = No Super

980mmx1680mm C.B.

Curve Data
Weigh Sta. Ramp "A"
P.I. Sta. 10+434.273
Δ = 12°-12'-41" Lt. L = 38.977 m
R = 182.880 m E = 1.043 m
T = 19.563 m e_{max} = 0.059

NOTE: All dimensions on this sheet are in millimeters unless otherwise specified.

Union Twp.
Tully Twp.
32-D
Existing LA-R/W
Sta. 10+550
Sta. 10+900
+600, 25.0m Lt.
FL 235.304
150x8.5m F
150x100 Tee
150 C.M.P.
605-350m
+600, 0.3m Lt.
FL 235.368
+600, 0.4m Rt.
FL 235.369
150x8.8m F
150x8.7m F
10+600
10+650
10+700
10+750
10+800
10+850
S47°-16'-45"E
Survey & Construction U.S.R. 30
+750, 25.2m Lt.
FL 234.958
+750, 0.4m Lt.
FL 235.396
+750, 0.3m Lt.
FL 235.395
150x8.7m F
150x9.4m F
+900, 24.5m Lt.
FL 234.950
150x8.0m F
150x8.4m F
+900, 0.7m Lt.
FL 235.309
+900, 0.3m Lt.
FL 235.312
375 C.M.P.
605-200m
605(Uncl.)-86.9m
+836.9, FL 235.040
FL 235.023
Match Line
33-D
+600, 25.0m Rt.
FL 235.319
150x8.5m F
Construction Limits
+750, 25.4m Rt.
FL 234.934
150x8.9m F
605-301.8m
Ramp "B"
150x6.8m F
+750, 6.8m Rt.
FL 235.073
34-D
375 Conc.
End Sheet
+900, 8.9m Rt.
FL 234.681

Curve Data
Weigh Sta. Ramp "B"
P.I. Sta. 10+634.893
Δ = 7°-14'-27" Lt. L = 73.567 m
R = 582.125 m E = 4.164 m
T = 36.832 m e_{max} = 0.059

Curve Data
Weigh Sta. Ramp "B"
P.I. Sta. 10+819.895
Δ = 6°-02'-50" Rt.
R = 1164.251 m
T = 61.497 m
L = 122.880 m
E = 1.623 m
e_{max} = No Super

980mmx1680mm C.B.

B.M. #74, Sta. 10+561.32
Chiseled "X" in N.W. Cor.
Conc. Base for Light
℄43.3m Rt., Elev. 235.60

B.M. #75, Sta. 10+668.00
Top of Cap on Iron Rod
℄ , Elev. 235.60

Weigh Station

DESIGN FILE : i:\pd\van30d\v30gp6.dgn
USERNAME : rhermon
DATE : 02-SEP-1997
TIME : 08:06

PLAN SHEET – U.S.R. 30
Sta. 10+200 to Sta. 10+900

VAN-30-6.618(4.05)

33
134

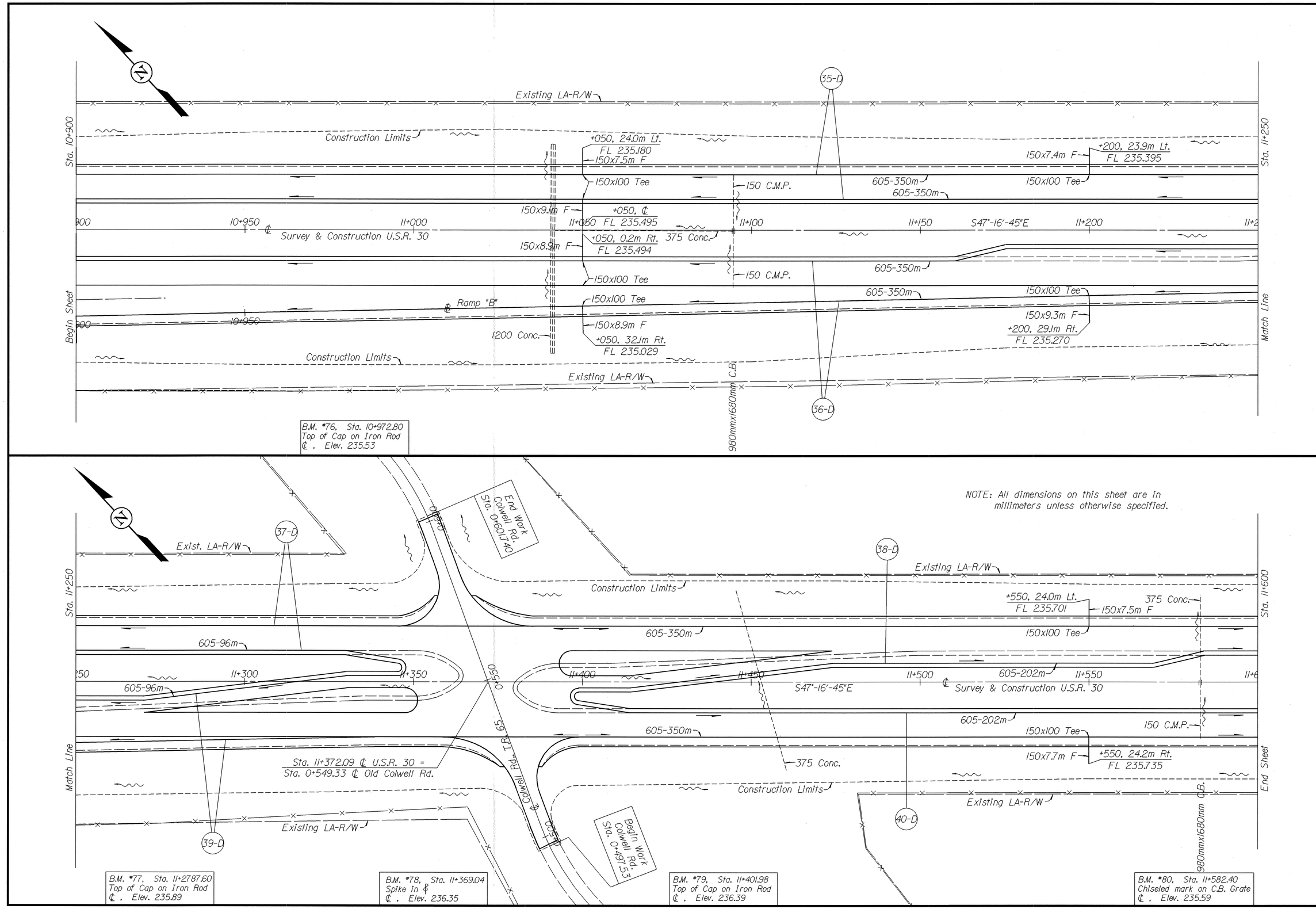

Scale in Meters
0 10 20
1:500 Ratio

PLAN SHEET - U.S.R. 30
Sta. 10+900 to Sta. 11+600

VAN-30-6.618(4.05)

DESIGN FILE : i:\pd\van30d\v30gp7.dgn
USERNAME : rhermon
DATE : 02-SEP-1997
TIME : 08:08

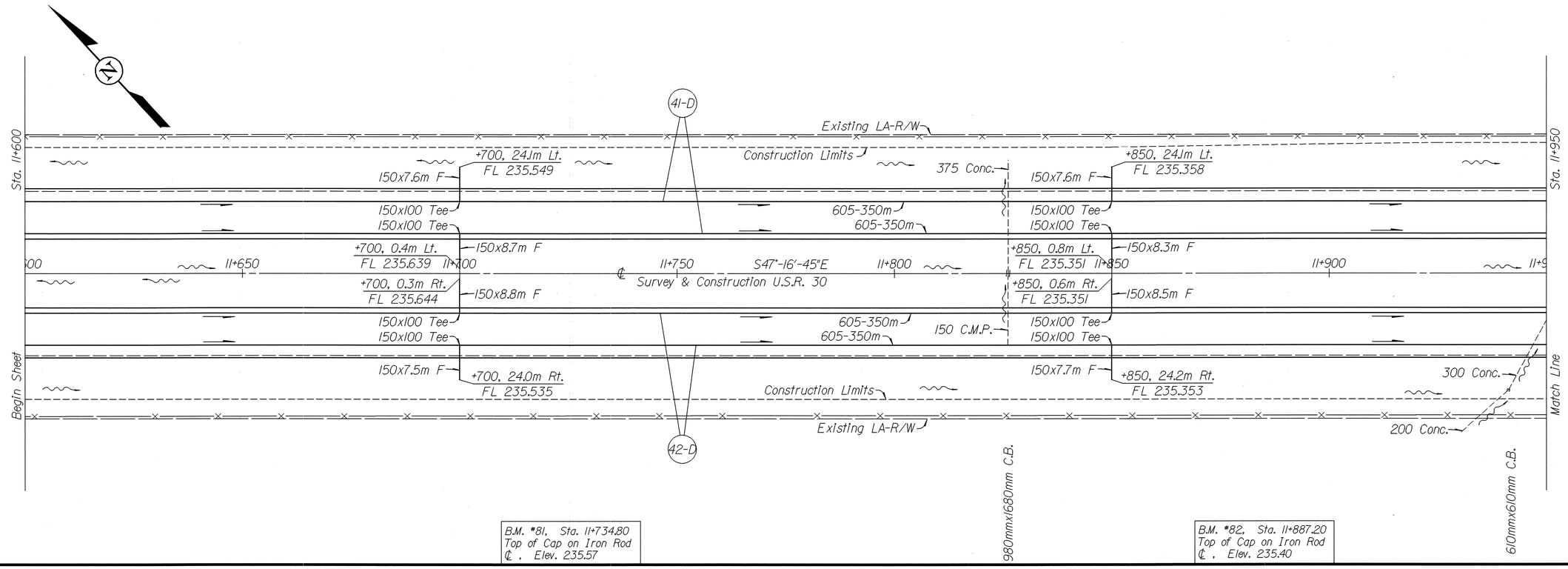

NOTE: All dimensions on this sheet are in millimeters unless otherwise specified.

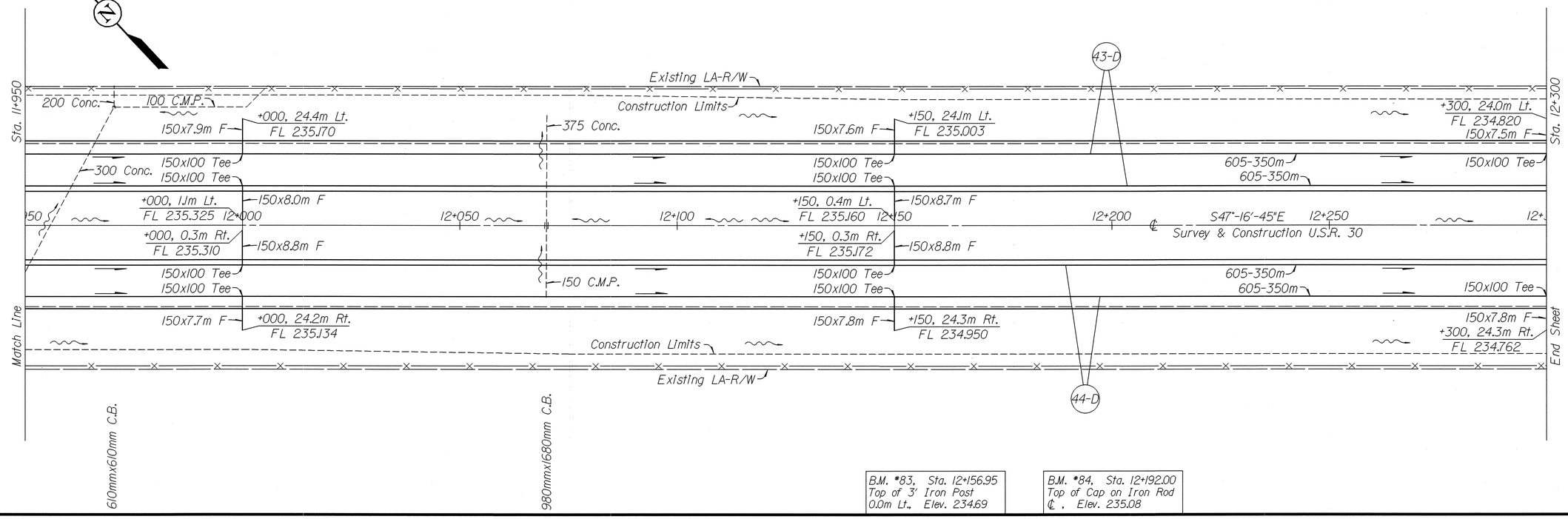

Scale in Meters
0 10 20
1:500 Ratio

PLAN SHEET – U.S.R. 30
Sta. 11+600 to Sta. 12+300

VAN-30-6.618(4.05)

35
134

DESIGN FILE : i:\pd\van30d\v30gp8.dgn
USERNAME : rhermon
DATE : 02-SEP-1997
TIME : 08:10

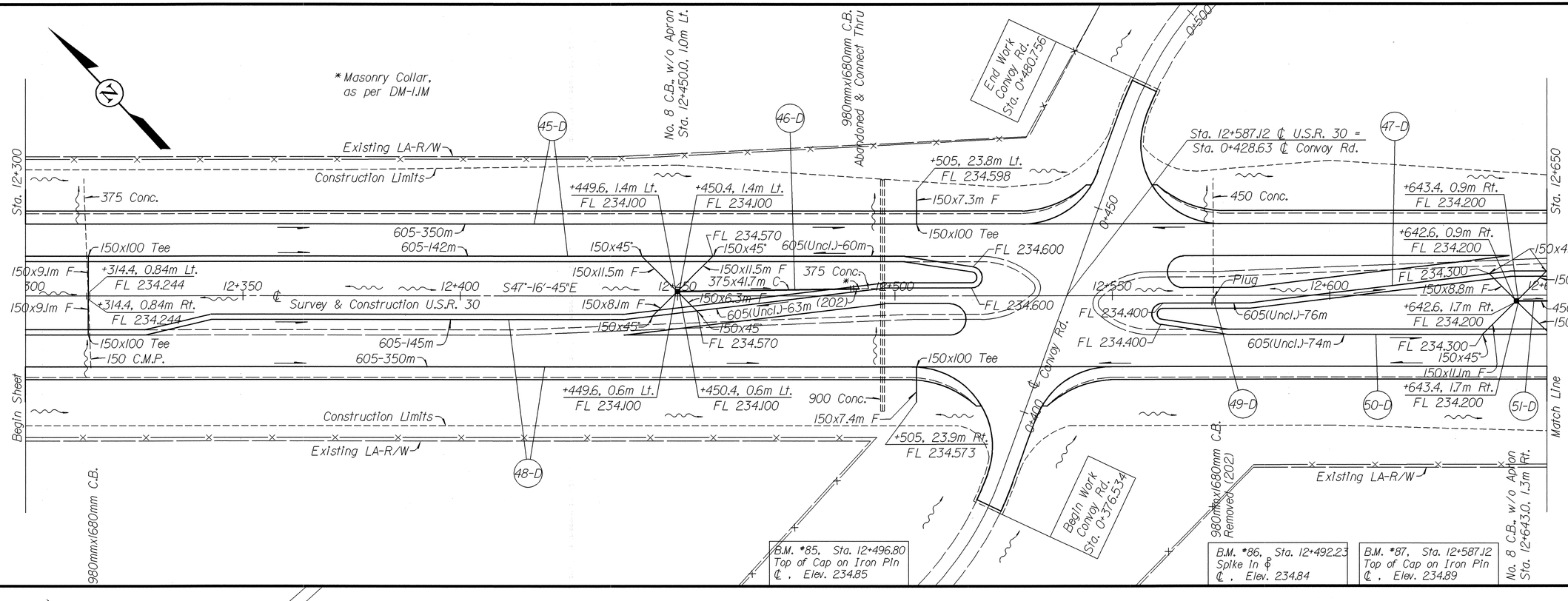

NOTE: All dimensions on this sheet are in millimeters unless otherwise specified.

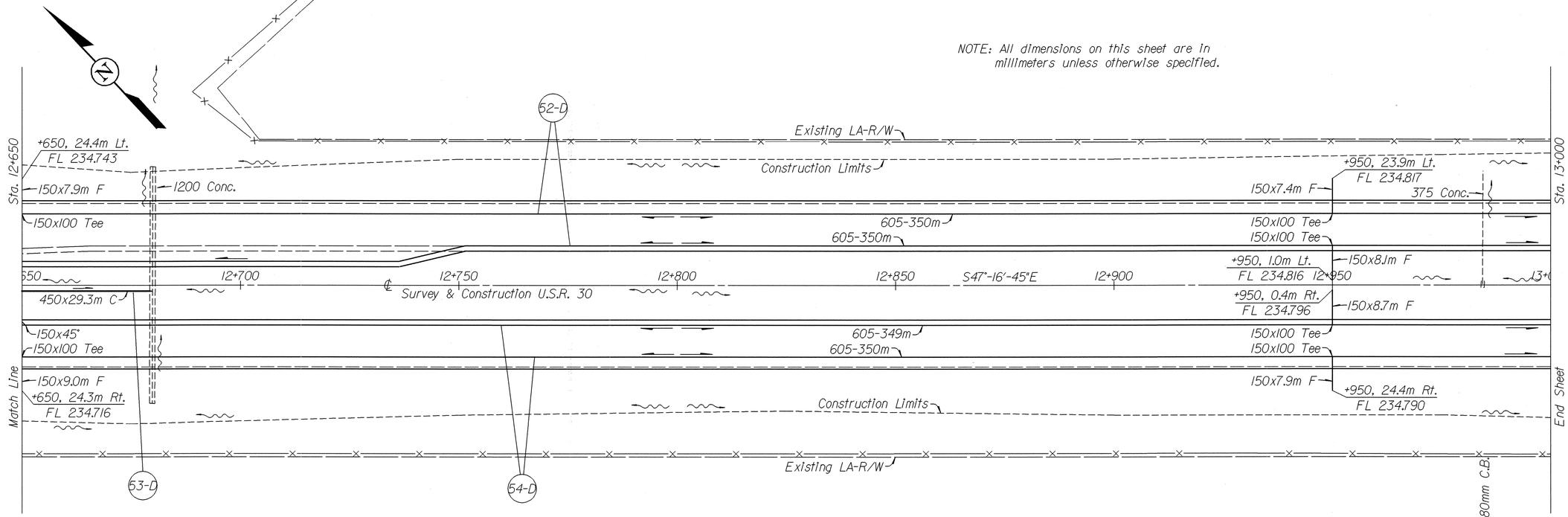

Scale in Meters 0 10 20 — 1:500 Ratio

PLAN SHEET – U.S.R. 30
Sta. 12+300 to Sta. 13+000

VAN-30-6.618(4.05)

36
134

DESIGN FILE : i:\pd\van30d\v30gp9.dgn
USERNAME : rhermon
DATE : 02-SEP-1997
TIME : 08:13

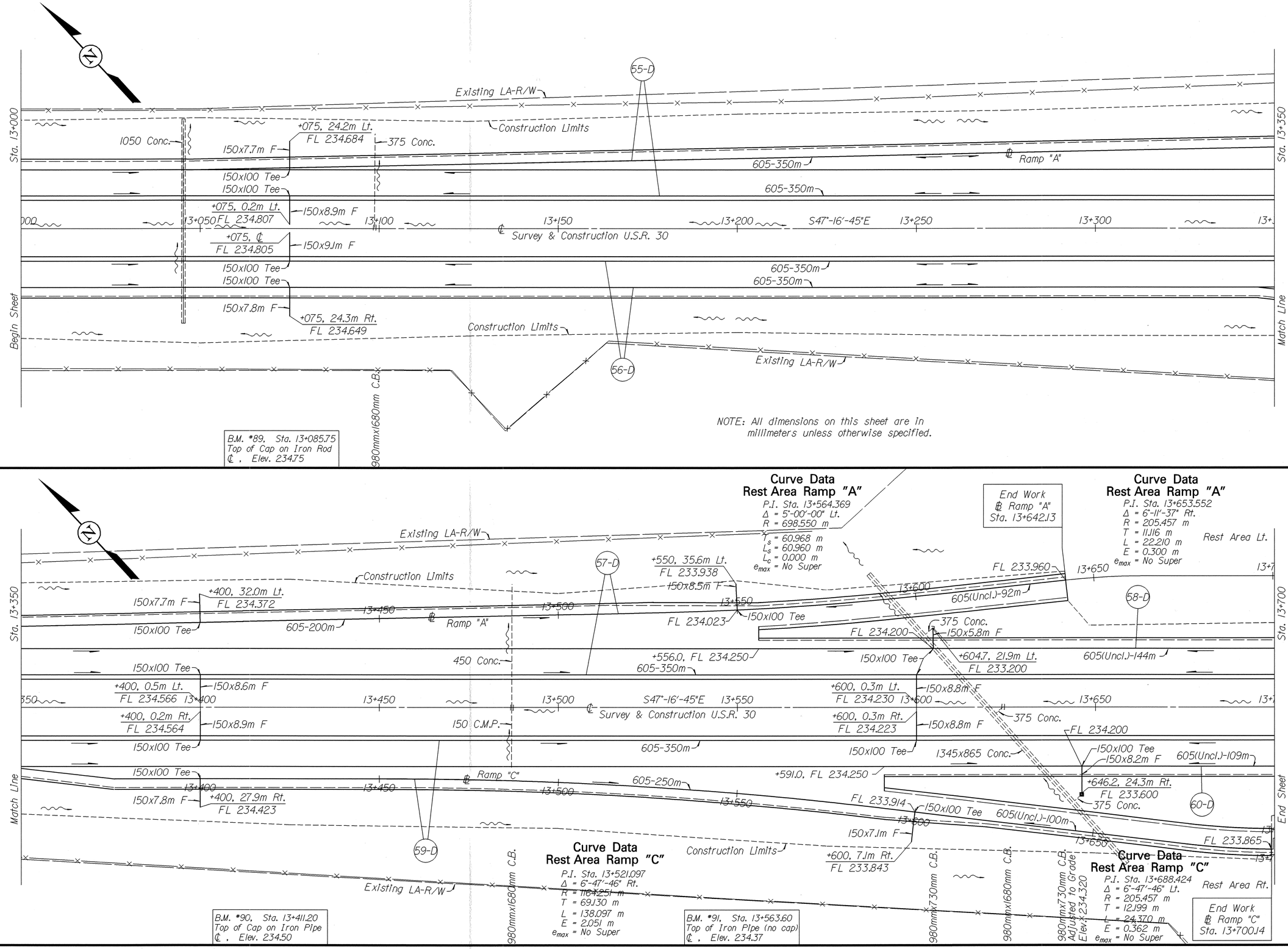
Existing LA-R/W
Construction Limits
55-D
Sta. 13+000
Sta. 13+350
1050 Conc.
150x7.7m F
+075, 24.2m Lt.
FL 234.684
375 Conc.
150x100 Tee
150x100 Tee
+075, 0.2m Lt.
FL 234.807
150x8.9m F
+075, ℄
FL 234.805
150x9.1m F
150x100 Tee
150x100 Tee
150x7.8m F
+075, 24.3m Rt.
FL 234.649
605-350m
℄ Ramp "A"
13+050
13+100
13+150
13+200
13+250
13+300
S47°-16'-45"E
℄ Survey & Construction U.S.R. 30
Begin Sheet
Match Line
56-D
980mmx1680mm C.B.
Existing LA-R/W
B.M. #89, Sta. 13+085.75
Top of Cap on Iron Rod
℄ , Elev. 234.75
NOTE: All dimensions on this sheet are in millimeters unless specified.
Curve Data
Rest Area Ramp "A"
P.I. Sta. 13+564.369
Δ = 5°-00'-00" Lt.
R = 698.550 m
T_s = 60.968 m
L_s = 60.960 m
L_c = 0.000 m
e_{max} = No Super
End Work
℄ Ramp "A"
Sta. 13+642.13
Curve Data
Rest Area Ramp "A"
P.I. Sta. 13+653.552
Δ = 6°-11'-37" Rt.
R = 205.457 m
T = 11.116 m
L = 22.210 m
E = 0.300 m
e_{max} = No Super
Rest Area Lt.
57-D
+550, 35.6m Lt.
FL 233.938
150x8.5m F
FL 234.023
150x100 Tee
FL 233.960
605(Uncl.)-92m
58-D
375 Conc.
FL 234.200
150x5.8m F
605(Uncl.)-144m
+556.0, FL 234.250
605-350m
+604.7, 21.9m Lt.
FL 233.200
+600, 0.3m Lt.
FL 234.230
+600, 0.3m Rt.
FL 234.223
150x8.8m F
150x8.8m F
375 Conc.
FL 234.200
1345x865 Conc.
150x100 Tee
150x8.2m F
605(Uncl.)-109m
+646.2, 24.3m Rt.
FL 233.600
375 Conc.
60-D
+591.0, FL 234.250
605-250m
FL 233.914
150x100 Tee
605(Uncl.)-100m
150x7.1m F
+600, 7.1m Rt.
FL 233.843
FL 233.865
End Sheet
450 Conc.
150 C.M.P.
605-350m
Ramp "C"
59-D
Construction Limits
Existing LA-R/W
980mmx730mm C.B.
980mmx1680mm C.B.
980mmx730mm C.B.
980mmx1680mm C.B.
980mmx730mm C.B.
Adjusted to Grade
Elev. 234.320
B.M. #90, Sta. 13+411.20
Top of Cap on Iron Pipe
℄ , Elev. 234.50
Curve Data
Rest Area Ramp "C"
P.I. Sta. 13+521.097
Δ = 6°-47'-46" Rt.
R = 116.425 m
T = 69.130 m
L = 138.097 m
E = 2.051 m
e_{max} = No Super
B.M. #91, Sta. 13+563.60
Top of Iron Pipe (no cap)
℄ , Elev. 234.37
Curve Data
Rest Area Ramp "C"
P.I. Sta. 13+688.424
Δ = 6°-47'-46" Lt.
R = 205.457 m
T = 12.199 m
L = 24.370 m
E = 0.362 m
e_{max} = No Super
Rest Area Rt.
End Work
℄ Ramp "C"
Sta. 13+700.14
Scale in Meters
0 10 20
1:500 Ratio
PLAN SHEET – U.S.R. 30
Sta. 13+000 to Sta. 13+700
VAN-30-6.618(4.05)
37
134
DESIGN FILE : i:\pd\van30d\v30gpl0.dgn
USERNAME : rhermon
DATE : 02-SEP-1997
TIME : 08:29

DESIGN FILE : i:\pd\van30d\v30gpll.dgn
USERNAME : rhermon
DATE : 02-SEP-1997
TIME : 08:31

Scale in Meters 0 10 20 — 1:500 Ratio

Begin Work ℄ Ramp "B" Sta. 13+797.09

Rest Area Lt.

Curve Data
Rest Area Ramp "B"
P.I. Sta. 13+808.805
Δ = 6°-47'-46" Rt.
R = 205.457 m
T = 12.199 m
L = 24.370 m
E = 0.362 m
e_{max} = No Super

Curve Data
Rest Area Ramp "B"
P.I. Sta. 13+976.133
Δ = 6°-47'-46" Lt.
R = 1164.251 m
T = 69.130 m
L = 138.097 m
E = 2.051 m
e_{max} = No Super

FL 234.300 — 13+800 — 605(Uncl.)-103m — 13+850 — 13+798 — Construction Limits — Existing LA-R/W — 62-D — 61-D — 13+900 — 13+950 — 14+000 — 375 Conc. — Sta. 13+700 — Sta. 14+050 — E — T

+750, 26.4m Lt. FL 234.239 — 150x9.9m F — 150x100 Tee — FL 234.338 — 150x100 Tee

150x7.2m F — +900, 7.2m Lt. FL 234.205 — 150x100 Tee — FL 234.277 — 605-150m — ℄ Ramp "B" — +907.4, FL 234.620 — 605(Uncl.)-207m — 605-350m — 150x100 Tee

+050, 28.5m Lt. FL 234.504 — 150x8.2m F — 150x100 Tee

+750, 0.5m Lt. FL 234.347 — 150x8.6m F — 150 C.M.P. — +900, 1.0m Lt. FL 234.625 — 150x8.1m F — S47°-16'-45"E — +050, 1.2m Lt. FL 234.724 — 150x7.9m F

+750, 0.1m Rt. FL 234.353 — 150x9.0m F — ℄ Survey & Construction U.S.R. 30 — +900, ℄ FL 234.620 — 150x9.1m F — +050, 0.4m Lt. FL 234.705 — 150x9.5m F

150x100 Tee — FL 234.338 — 150x100 Tee — 605-350m — 605(Uncl.)-239m — +938.5, FL 234.620 — 150 C.M.P. — 150x100 Tee

Begin Sheet — 150x8.4m F — +750, 24.9m Rt. FL 234.249 — Construction Limits — 375 Conc. — 63-D — FL 234.330 — 605(Uncl.)-95m — 150x100 Tee — FL 234.306 — ℄ Ramp "D" — 605-100m — 150x100 Tee — Match Line

150x12.8m F — +950, 40.0m Rt. FL 234.177 — 150x7.9m F — 64-D — Existing LA-R/W — +050, 32.5m Rt. FL 234.408

Ohio Dept. of Transportation Telephone & Electric Lines

Rest Area Rt.

980mmx1680mm C.B.

Curve Data
Rest Area Ramp "D"
P.I. Sta. 13+843.985
Δ = 6°-11'-37" Lt.
R = 205.457 m
T = 11.116 m
L = 22.210 m
E = 0.300 m
e_{max} = No Super

Begin Work ℄ Ramp "D" Sta. 13+855.05

Curve Data
Rest Area Ramp "D"
P.I. Sta. 13+933.778
Δ = 5°-00'-00" Rt.
R = 698.550 m
T_s = 60.968 m
L_s = 60.960 m
L_c = 0.000 m
e_{max} = No Super

B.M. *92, Sta. 13+716.00
Top of Cap on Iron Rod
℄ , Elev. 234.48

B.M. *93, Sta. 14+020.80
Chiseled Mark on grate of Catch Basin
℄ , Elev. 234.47

NOTE: All dimensions on this sheet are in millimeters unless otherwise specified.

Sta. 14+050 — Existing LA-R/W — 65-D — Construction Limits — +350, 23.9m Lt. FL 234.599 — Sta. 14+400

Ramp "B" — 14+100 — 150x7.4m F — 605-350m — 150x100 Tee — 150 C.M.P.

14+100 — ℄ Survey & Construction U.S.R. 30 — 14+150 — 14+200 — 14+250 — S47°-16'-45"E — 14+300 — 14+350 — +350, 0.5m Lt. FL 234.647 — 150x8.6m F

+350, 0.2m Rt. FL 234.637 — 150x8.9m F — 605-350m — 150x100 Tee

Match Line — ℄ Ramp "D" — 605-350m — 150x100 Tee — 150x7.7m F — 375 Conc. — End Sheet

+350, 25.6m Rt. FL 234.581 — Construction Limits — Existing LA-R/W — 66-D

980mmx1680mm C.B.

B.M. *94, Sta. 14+051.28
Top of Cap on Iron Pipe
℄ , Elev. 234.64

B.M. *95, Sta. 14+145.46
Chiseled "X" on Conc. Base for Overhead Light 26.8m Rt. Elev. 235.47

B.M. *96, Sta. 14+325.60
Top of Cap on Iron Rod
℄ , Elev. 234.74

PLAN SHEET – U.S.R. 30
Sta. 13+700 to Sta. 14+400

VAN-30-6.618(4.05)

DESIGN FILE : i:\pd\van30d\v30gpl2.dgn
USERNAME : rhermon

DATE : 02-SEP-1997
TIME : 08:34

Curve Data (℄)

P.I. Sta. 15+603.64
Δ = 24°-23'-22" Lt.
R = 4365.94 m
T = 943.53 m
L = 1844.48 m
E = 100.79 m
No Super

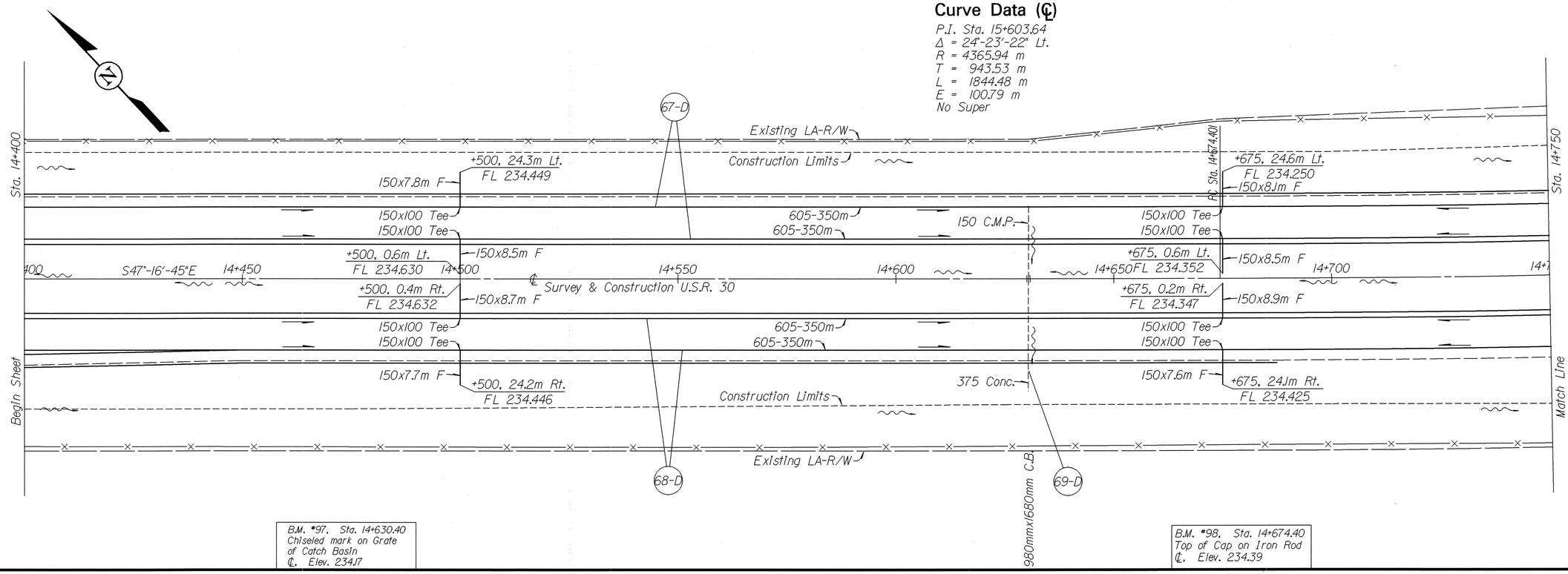

B.M. #97. Sta. 14+630.40
Chiseled mark on Grate of Catch Basin
℄. Elev. 234.17

B.M. #98, Sta. 14+674.40
Top of Cap on Iron Rod
℄. Elev. 234.39

NOTE: All dimensions on this sheet are in millimeters unless otherwise specified.

Curve Data (℄)

P.I. Sta. 15+603.64
Δ = 24°-23'-22" Lt.
R = 4365.94 m
T = 943.53 m
L = 1844.48 m
E = 100.79 m
No Super

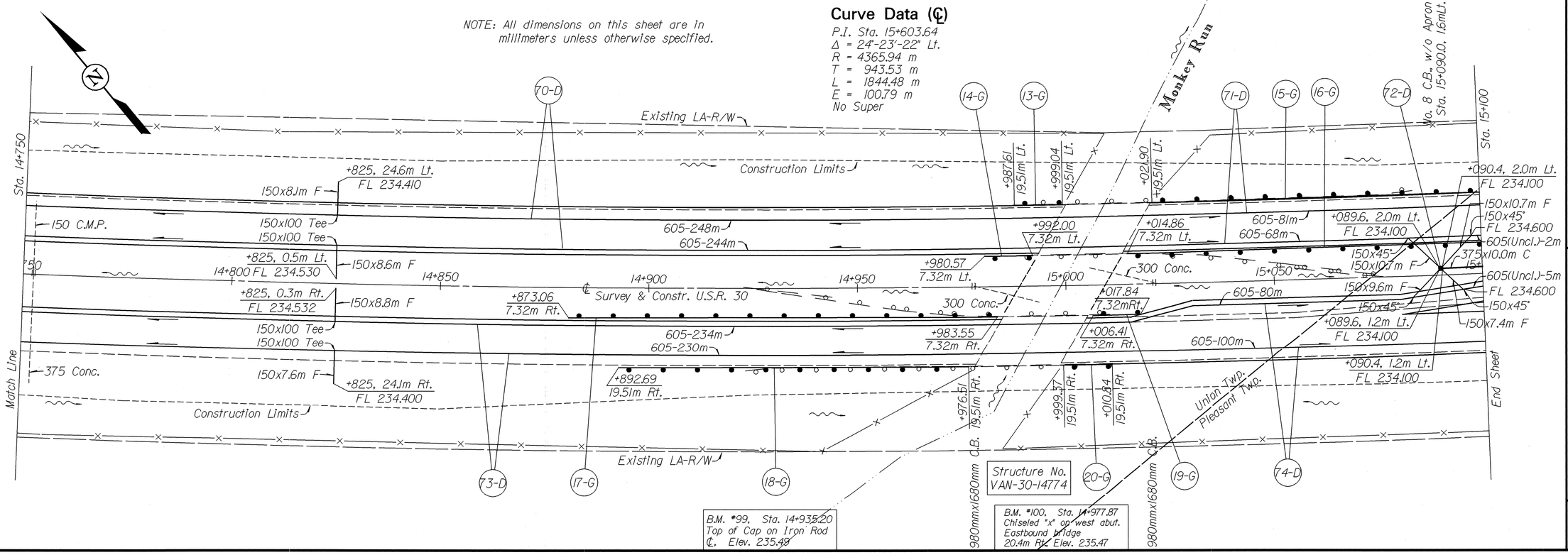

B.M. #99, Sta. 14+935.20
Top of Cap on Iron Rod
℄. Elev. 235.49

B.M. #100. Sta. 14+977.87
Chiseled "x" on west abut.
Eastbound bridge
20.4m Rt. Elev. 235.47

Scale in Meters
0 10 20
1:500 Ratio

PLAN SHEET - U.S.R. 30
Sta. 14+400 to Sta. 15+100

VAN-30-6.618(4.05)

39
134

DESIGN FILE : i:\pd\van30d\v30gpl3.dgn
USERNAME : rhermon
DATE : 02-SEP-1997
TIME : 10:44

Curve Data (℄)

P.I. Sta. 15+603.64
Δ = 24°-23'-22" Lt.
R = 4365.94 m
T = 943.53 m
L = 1844.48 m
E = 100.79 m
No Super

* Masonry Collar, as per DM-1.1M

End Work Richey Rd. Sta. 0+569.654

Begin Work Richey Rd. Sta. 0+465.065

Richey Rd. T.R. 75

0+550

0+600

Sta. 15+100

Sta. 15+450

Sta. 15+182.09 ℄ U.S.R. 30 = Sta. 0+517.68 ℄ Richey Rd.

Existing LA-R/W

Construction Limits

Type E Anchor

+117.15 19.5m Lt.

+125.35 7.32m Lt.

605(Uncl.)-56m

375x48.9m C

375x1.5m C

605(Uncl.)-56m

150x1.5m C

150x375 Tee

150 C.M.P. FL 234.700

FL 234.700

150 (202)

375 Conc.

Begin Sheet

Exist. LA-R/W

980mmx1680mm C.B. Abandoned and Connect Thru

+210, 24.5m Lt. FL 234.163

150x8.0m F

150x100 Tee

+284.6, 1.2m Rt. FL 233.450

150x9.2m F

150x45°, FL 234.100

150 C.M.P.

150x10.1m F

150x45°

+285.4, 1.2m Rt. FL 233.450

605-350m

605(Uncl.)-158m

150x1.5m C

15+200

15+250

15+300

15+350

15+400

FL 234.600

605(Uncl.)-70m

150x450 Tee

450x14.3m C

450x1.5m C

150x10.7m F

150x45°

150x10.6m F

450 Conc.

150x45°, FL 234.100

150x100 Tee

150x9.0m F

+210, 25.5m Rt. FL 234.147

+284.6, 2.0mRt. FL 233.450

+285.4, 2.0m Rt. FL 233.450

Construction Limits

Survey & Construction U.S.R. 30

+425, 24.3m Lt. FL 234.400

150x7.8m F

150x100 Tee

+425, 0.5m Lt. FL 234.520

150x8.6m F

+425, 0.2m Rt. FL 234.530

150x8.9m F

150x100 Tee

150x7.7m F

+425, 24.2m Rt. FL 234.371

Match Line

Existing LA-R/W

980mmx1680mm C.B. Abandoned and Connect Thru

No. 8 C.B. w/ 0.16m Apron Sta. 15+285.0, 16m Rt.

B.M. #101. Sta. 15+240.00
Top of Cap on Iron Rod
℄. Elev. 234.49

77-D 75-D 76-D 21-G 22-G 78-D 79-D 80-D

Curve Data (℄)

P.I. Sta. 15+603.64
Δ = 24°-23'-22" Lt.
R = 4365.94 m
T = 943.53 m
L = 1844.48 m
E = 100.79 m
No Super

NOTE: All dimensions on this sheet are in millimeters unless otherwise specified.

Hoaglin Creek

Sta. 15+450

Sta. 15+800

Construction Limits

Existing LA-R/W

+566.15 19.5m Lt.

+577.58 19.5m Lt.

+604.25 19.5m Lt.

+691.88 19.5m Lt.

605-128m

605-127m

+575.43 7.32m Lt.

+602.10 7.32m Lt.

605-198m

605-199m

+712.59 7.32m Lt.

+725, 24.5m Lt. FL 234.242

150x8.0m F

150x100 Tee

+564.00, 7.32m Lt.

+725, 1.7m Lt.

150x7.4m F

150 C.M.P. 15+750

15+500

15+550

15+600

15+650

15+700 FL 234.257

300 Conc.

300 Conc.

+462.36 7.32mRt.

+610.95 7.32m Rt.

Survey & Construction U.S.R. 30

+725, 1.7m Rt. FL 234.248

150x7.4m F

605-124m

605-123m

+572.85 7.32m Rt.

+599.52 7.32m Rt.

605-202m

605-203m

150x100 Tee

Match Line

+475.45 19.5m Rt.

+570.70 19.5m Rt.

+597.37 19.5m Rt.

+608.80 19.5m Rt.

150x7.6m F

+725, 24.1m Rt. FL 234.213

375 Conc.

End Sheet

Construction Limits

Existing LA-R/W

980mmx1680mm C.B.

980mmx1680mm C.B.

980mmx1680mm C.B.

Structure No. VAN-30-15369

B.M. #102. Sta. 15+544.80
Top of Cap on Iron Rod
℄. Elev. 234.98

B.M. #103. Sta. 15+600.88
Chiseled "x" on east abut.
Westbound bridge
20.1m Lt. Elev. 235.46

B.M. #104. Sta. 15+789.55
Top of 3' Iron Post
℄. Elev. 234.82

81-D 24-G 23-G 25-G 26-G 82-D 27-G 83-D 28-G 30-G 29-G 84-D

Scale in Meters 0 10 20 1:500 Ratio

PLAN SHEET - U.S.R. 30
Sta. 15+100 to Sta. 15+800

VAN-30-6.618(4.05)

40
134

DESIGN FILE : i:\pd\van30d\v30gpl4.dgn
USERNAME : rhermon
DATE : 02-SEP-1997
TIME : 10:46

Curve Data (℄)

P.I. Sta. 15+603.64
Δ = 24°-23'-22" Lt.
R = 4365.94 m
T = 943.53 m
L = 1844.48 m
E = 100.79 m
No Super

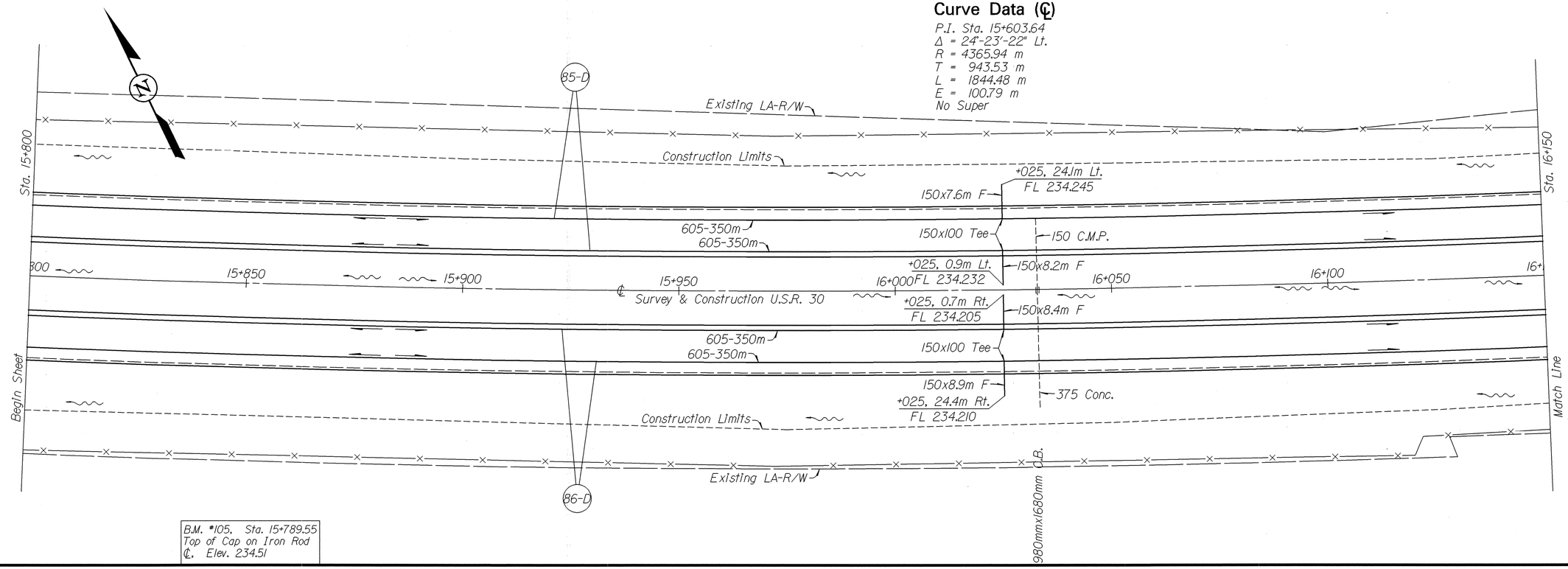

B.M. #105, Sta. 15+789.55
Top of Cap on Iron Rod
℄, Elev. 234.51

Curve Data (℄)

P.I. Sta. 15+603.64
Δ = 24°-23'-22" Lt.
R = 4365.94 m
T = 943.53 m
L = 1844.48 m
E = 100.79 m
No Super

NOTE: All dimensions on this sheet are in millimeters unless otherwise specified.

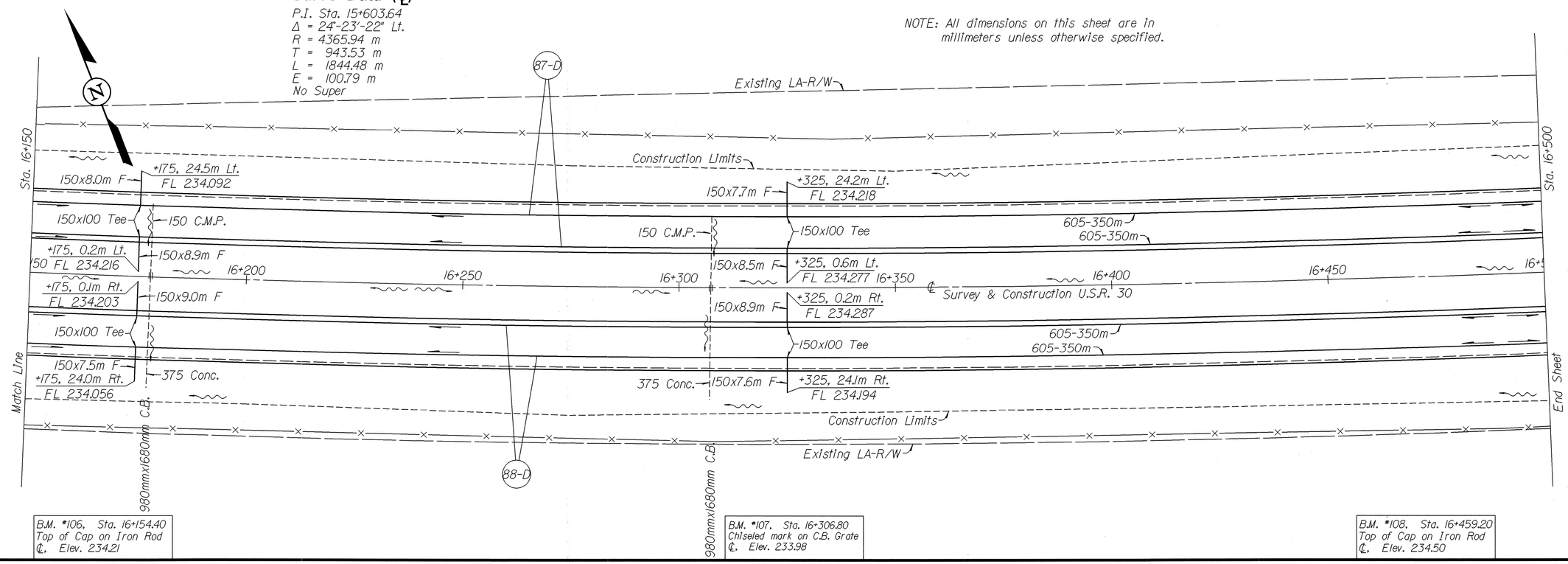

B.M. #106, Sta. 16+154.40
Top of Cap on Iron Rod
℄, Elev. 234.21

B.M. #107, Sta. 16+306.80
Chiseled mark on C.B. Grate
℄, Elev. 233.98

B.M. #108, Sta. 16+459.20
Top of Cap on Iron Rod
℄, Elev. 234.50

Scale in Meters
0 10 20
1:500 Ratio

PLAN SHEET - U.S.R. 30
Sta. 15+800 to Sta. 16+500

VAN-30-6.618(4.05)

41
134

DESIGN FILE : i:\pd\van30d\v30gpl5.dgn
USERNAME : rhermon
DATE : 02-SEP-1997
TIME : 10:52

Scale in Meters 0 10 20 1:500 Ratio

PLAN SHEET – U.S.R. 30
Sta. 16+500 to Sta. 17+200

VAN-30-6.618(4.05)

42
134

89-D

90-D

Existing LA-R/W

Construction Limits

Sta. 16+500

Sta. 16+850

PT Sta. 16+532.876

Begin Sheet

Match Line

150x7.6m F
+650, 24.1m Lt.
FL 234.220

150x100 Tee
150x100 Tee

150 C.M.P.

605-350m
605-346m

150x7.7m F
+800, 24.2m Lt.
FL 234.047

150x100 Tee

150x45°

150x6.0m F

+650, 0.5m Lt.
FL 234.309

150x8.6m F

16+550 ℄ 16+600 16+650 16+700 S71°-40'-07"E 16+750 16+800

Survey & Construction U.S.R. 30

+650, 0.2m Rt.
FL 234.321

150x8.9m F

150x3.5m F

150x45°

150x100 Tee
150x100 Tee

605-347m
605-350m

150x100 Tee

+650, 23.9m Rt.
FL 234.247

150x7.4m F

375 Conc.

150x7.6m F
+800, 24.1m Rt.
FL 234.018

960mmx1680mm C.B.

B.M. #109, Sta. 16+532.88
Top of Cap on Iron Rod
℄, Elev. 234.51

B.M. #110, Sta. 16+764.00
Top of Cap on Iron Rod
℄, Elev. 234.32

NOTE: All dimensions on this sheet are in millimeters unless otherwise specified.

* Masonry Collar, as per DM-1.1M

91-D

92-D

93-D

94-D

95-D

96-D

31-G

32-G

End Work
Liberty Union Rd.
Sta. 1+575.865

No. 8 C.B. w/o Apron
Sta. 16+854.0, 0.9m Lt.

+853.6, 1.3m Lt.
FL 233.600

+854.4, 1.3m Lt.
FL 233.600

+930, 24.4m Lt.
FL 233.894

150x7.9m F

Sta. 16+956.64 ℄ U.S.R. 30 =
Sta. 1+524.00 ℄ Liberty Union Rd.

Existing LA-R/W

Construction Limits

Sta. 17+200

Ramp "A"

Sta. 16+850

1+550

1+500

Liberty Union Rd. ℄

FL 234.170
150x45°

605(Uncl.)-68m

150x100 Tee
FL 234.200
FL 234.200

605-350m

+057.6, 0.7m Rt.
FL 233.600

+058.4, 0.7m Rt.
FL 233.600

150x45°

605-136m

150x5.7m F
150x5.7m F

150x11.7m F
375x48.1m C

16+900 16+950 17+000 17+050 17+100 17+150 S71°-40'-07"E

150x8.2m F
375x15°

(202)

150x45°

375 Conc.

150x45°, FL 234.060

150x9.4m F

℄ Survey & Constr. U.S.R. 30

+058.4, 1.5m Rt. +094.31
FL 233.600 7.32m Rt.

+155.27
7.32m Rt.

FL 234.170

605(Uncl.)-68m

1200 Conc.

(202)

FL 234.100

605(Uncl.)-69m

375x81.7m C

150x45°

605(Uncl.)-67m

FL 234.100

FL 234.060

150x45°

150x11.4m F

Type E Anchor

605-134m

Type T Anchor

605-17m

+853.6, 0.5m Lt.
FL 233.600

Match Line

150x100 Tee

+057.6, 1.5m Rt., FL 233.600

605-351m

+183.2, Begin Underdrain

+854.4, 0.5m Lt.
FL 233.600

150x7.9m F
+925, 24.4m Rt.
FL 233.854

17+050

150x100 Tee

17+100

Ramp "C"

+100, 29.8m Rt.
FL 233.909

+109.85
3.00m Rt.

17+150

+155.57
3.00m Rt.

Construction Limits

150x8.4m F

End Sheet

Exist. LA-R/W

Existing LA-R/W

980mmx1680mm C.B.
Abandoned &
Connect Thru

Begin Work
Liberty Union Rd.
Sta. 1+471.276

980mmx1680mm C.B.
Abandoned &
Connect Thru

No. 8 C.B. w/o Apron
Sta. 17+058.0, 1.1m Rt.

B.M. #111, Sta. 16+892.02
Spike In ϕ
35.7 Lt., Elev. 234.37

B.M. #112, Sta. 17+068.80
Top of Cap on Iron Rod
℄, Elev. 234.17

B.M. #113, Sta. 17+145.00
Chiseled "x" In Base of
Overhead Sign
28.7m Rt., Elev. 233.89

DESIGN FILE : i:\pd\van30d\v30gpl6.dgn
USERNAME : rhermon
DATE : 02-SEP-1997
TIME : 10:56

Structure No.
VAN-30-17188

Vertical Clearance
= 4.58 m E.B.
= 4.59 m W.B.

Existing LA-R/W
Construction Limits
980mmx1680mm C.B.
Sta. 17+200
Begin Sheet
Sta. 17+550
End Sheet
S71°-40'-07"E
℄ Survey & Construction U.S.R. 30
℄ U.S.R. 224
Cable Ditch
Ramp "A"
Ramp "C"
Ramp "D"
Constr. Limits
Match Line
Exist. LA-R/W
97-D
98-D
99-D
100-D
101-D
102-D
34-G
35-G
36-G
37-G
38-G
39-G
40-G
41-G
42-G
43-G

+325, 28.6m Lt.
FL 233.819
150x7.7m F
150x100 Tee
+323.3, 0.1m Rt., FL 233.060
150x7.6m F
+323.3, 0.9m Rt.
FL 233.060
150x8.6m F
+288.89
19.51m Rt.
150x7.3m F
+325, 23.8m Rt.
FL 233.873
1200 Conc.
+250, 7.5m Rt.
FL 234.277
150x7.5m F
+271.49
7.14m Lt.
+271.69
2.86m Rt.
605-253m
+385.40
25.70m Lt.
605-350m
+386.68
2.28m Lt.
+355.63, ℄
+404.95
2.28m Rt.
+385.40
19.51m Rt.
+406.00
19.51m Rt.
+410.00
26.29m Lt.
+434.13
27.08m Lt.
+475, 31.8m Lt.
FL 233.894
150x7.7m F
300 Conc.
20+244
20+200
+405.68
2.28m Lt.
+408.75
2.28m Rt.
+439.80, ℄
+453.43, ℄
+475, 0.5m Lt.
FL 234.136
150x8.6m F
+475, ℄
FL 234.142
150x9.1m F
150 C.M.P.
375 Conc.
+475, 24.0m Rt.
FL 233.986
+446.36
6.68m Rt.
605-157m
+450, 5.0m Rt.
FL 236.624
150x5.0m F
605-80m
+350.20
6.68m Lt.
Type A Anchor
Type A or E Anchor
+309.14, 2.4m Rt.
Connect to Ex.
605-28m
+477.43, 2.4m Rt.
Connect to Ex.
Begin Work
℄ Ramp "D"
Sta. 17+307.99
End Work
℄ Ramp "C"
Sta. 17+480.89

NOTE: All dimensions on this sheet are in millimeters unless otherwise specified.

Curve Data for U.S.R 224

Δ = 13°-00'-00" Rt.
R_1 = 1746.376 m
R_2 = 145.530 m
L_s = 60.959 m
P = 0.974 m
$Δ_1$ = 18°-52'-30" Rt.
$Δ_2$ = 127°-59'-48" Rt.
T_1 = 290.285 m
T_2 = 298.358 m
e_1 = No Super
e_2 = 0.083

Curve Data for U.S.R 224, Ramp "C"

Δ = 9°-30'-00" Rt.
R_1 = 1164.251 m
R_2 = 218.298 m
L_s = 60.960 m
P = 0.567 m
$Δ_1$ = 6°-47'-45" Rt.
$Δ_2$ = 52°-31'-50" Rt.
T_1 = 69.127 m
T_2 = 107.725 m
e_1 = 0.059
e_2 = 0.059

Curve Data for U.S.R 224, Ramp "D"

Δ = 100°-03'-17" Rt.
R = 232.849 m
L_s = 76.200 m
L_c = 330.421 m
$Θ_s$ = 9°-22'-30" Rt.
LT. = 50.871 m
S.T. = 25.465 m
T_s = 199.945 m
E = 74.066 m
e_{max} = 0.059

B.M. #114, Sta. 17+352.26
Chiseled "x" In 48" Conc. Pipe
9.4m Rt., Elev. 233.90

B.M. #115, Sta. 17+526.00
Chiseled mark on
Catch Basin Grate
℄, Elev. 234.01

Scale in Meters
0 10 20
1:500 Ratio

PLAN SHEET - U.S.R. 30
Sta. 17+200 to Sta. 17+550

VAN-30-6.618(4.05)

DESIGN FILE : I:\pd\van30d\v30gpl7.dgn
USERNAME : rhermon

DATE : 02-SEP-1997
TIME : 10:59

U.S.R. 224

19+950

19+950

Begin Work
℄ Ramp "B"
Sta. 19+970.19

End Work
℄ Ramp "A"
Sta. 19+970.19

20+000

20+000

Existing LA-R/W

Construction Limits

20+050

605-200m

605-263m

20+100

℄ Ramp "B"

104
-D

103
-D

Construction Limits

+100, 7.4m Rt.
FL 234.349

150x7.4m F

150x100 Tee

20+100

Construction Limits

Sta. 17+550

20+150

℄ Ramp "A"

+650, 29.0m Lt.
FL 234.178

105
-D

Construction Limits

150x12.5m F

+595, FL 234.320

605(Uncl.)-55m

150x100 Tee

FL 234.304

605-237m

+887, End Underdrain

Sta. 17+900

150x100 Tee

605-350m

150 C.M.P.

150x100 Tee

+625, 0.4m Lt.

150x8.7m F

150x8.7m F

+775, 0.4m Lt.

650

17+600 FL 234.291

17+650

17+700

S71°-40'-07"E

17+750

FL 234.390 17+800

17+850

℄ Survey & Construction U.S.R. 30

+625, 0.4m Rt.
FL 234.290

150x8.7m F

150x8.4m F

+775, 0.7m Rt.
FL 234.409

Begin Sheet

150x100 Tee

605-350m

150x100 Tee

605-100m

+650, End Underdrain

106
-D

605-355m

℄ Ramp "D"

150x100 Tee

17+700

17+750

17+788

150x100 Tee

17+650

150x7.5m F

150x8.2m F

375 Conc.

+775, 32.6m Rt.
FL 234.190

44-G

+559.75
6.68m Lt.

17+600

Construction Limits

End Sheet

+650, 7.5m Rt.
FL 234.065

Existing LA-R/W

107
-D

+560.60
2.4m Rt.

17+550

Match Line
Sta. 17+530

45-G

980mmx1680mm C.B.

B.M. #116, Sta. 17+678.40
Top of Cap on Driven Rod
Inside Monument Assy.
℄, Elev. 234.14

NOTE: All dimensions on this sheet are in millimeters unless otherwise specified.

Curve Data for U.S.R 224, Ramp "A"

Δ = 103°-27'-48" Rt.		S.T. = 20.637 m	
R = 75.929 m		T_s = 96.252 m	
L_s = 60.959 m		E = 46.666 m	
L_c = 137.110 m		e_{max} = 0.059	
Θ_s = 23°-00'-00" Rt.			
L.T. = 40.988 m			

Curve Data for U.S.R 224, Ramp "B"

Δ = 11°-15'-00" Lt.		Δ_2 = 6°-47'-45" Lt.	
R_1 = 232.849 m		T_1 = 58.806 m	
R_2 = 1164.251 m		T_2 = 69.127 m	
L_s = 76.200 m		e_1 = 0.059	
P = 0.830 m		e_2 = 0.059	
Δ_1 = 28°-20'-51" Lt.			

Scale in Meters
0 10 20
1:500 Ratio

PLAN SHEET - U.S.R. 30
Sta. 17+550 to Sta. 17+900

VAN-30-6.618(4.05)

44
134

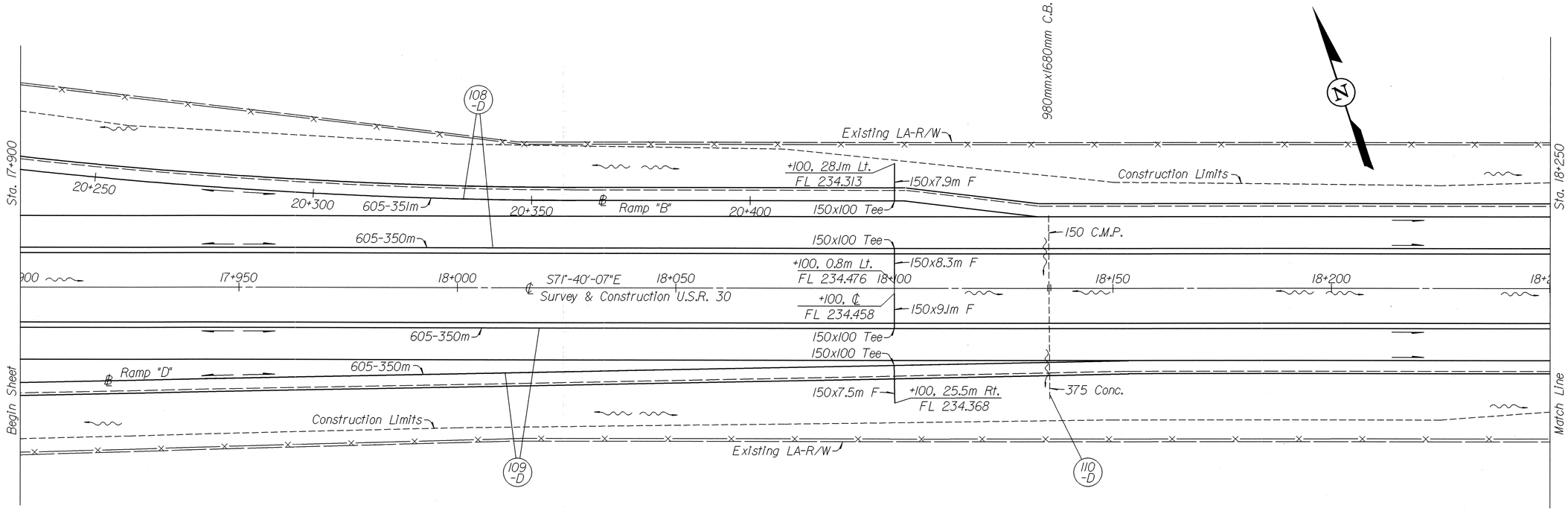

B.M. #117, Sta. 18+135.60
Chiseled mark on Catch Basin Grate
℄, Elev. 234.26

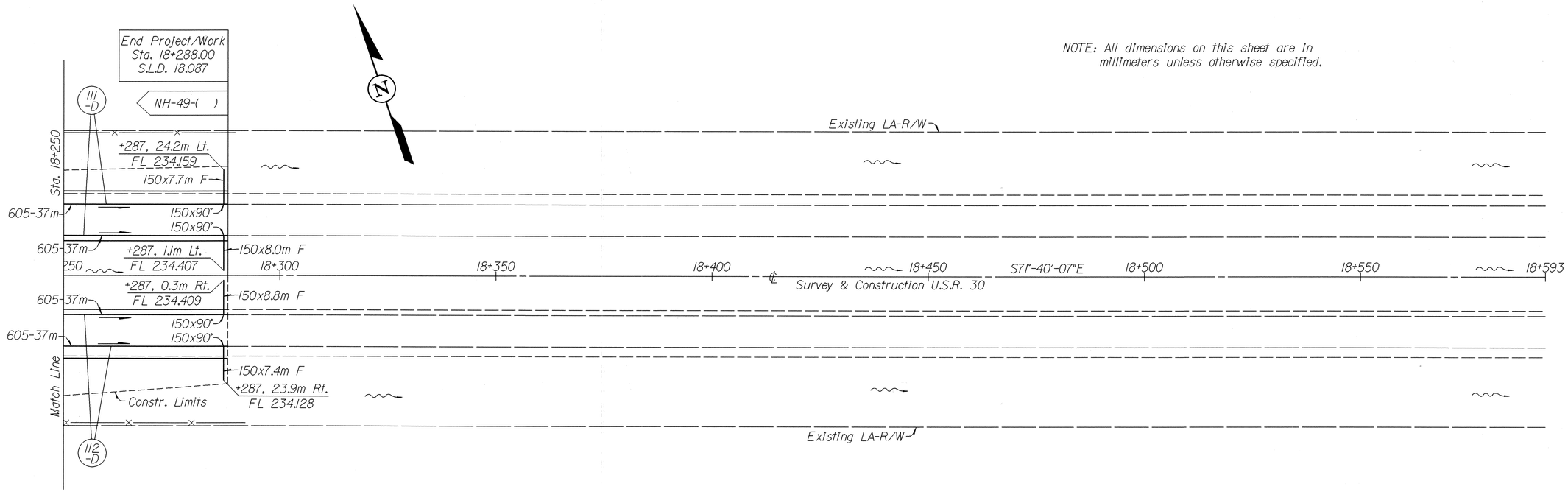

B.M. #118, Sta. 18+288.00
Top of Cap on Iron Rod
℄, Elev. 234.37

NOTE: All dimensions on this sheet are in millimeters unless otherwise specified.

Scale in Meters
0 10 20
1:500 Ratio

PLAN SHEET - U.S.R. 30
Sta. 17+900 to Sta. 18+593

VAN-30-6.618(4.05)

45
134

DESIGN FILE : i:\pd\van30d\v30gpl8.dgn
USERNAME : rhermon
DATE : 02-SEP-1997
TIME : 11:01

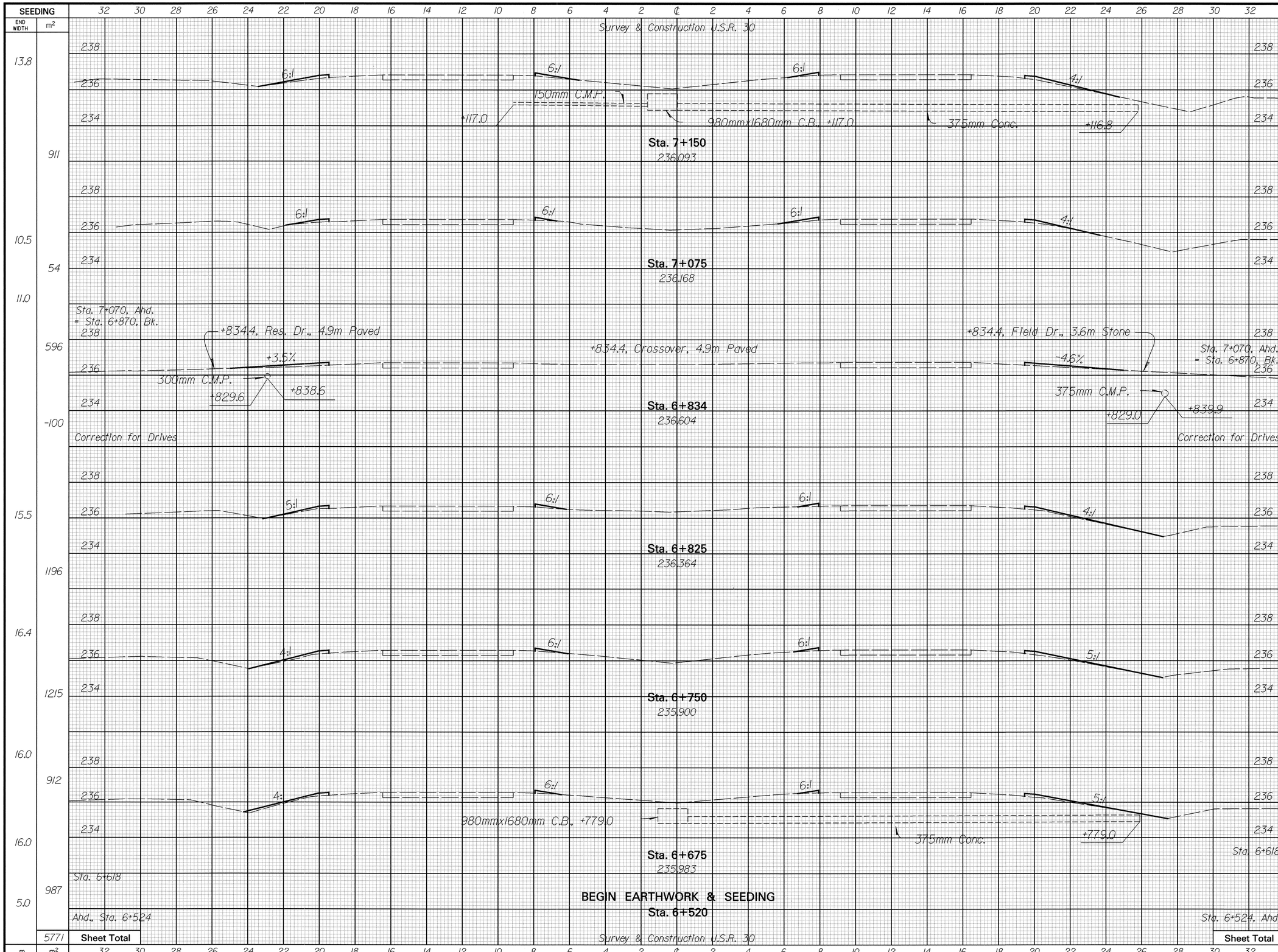

Scale in Meters 0 2 4 1:100 Ratio

CALCULATED NJV
CHECKED DJS

CROSS SECTIONS – U.S.R. 30
Sta. 6+675 to Sta. 7+150

VAN-30-6.618(4.05)

DESIGN FILE : i:\pd\van30d\v30gxl.dgn
USERNAME : rhermon
DATE : 05-SEP-1997
TIME : 12:07

Survey & Construction U.S.R. 30

SEEDING END WIDTH	SEEDING m²
25.8	1973
26.8	1800
21.2	1583
21.0	1515
19.4	1245
13.8	
	8116 Sheet Total

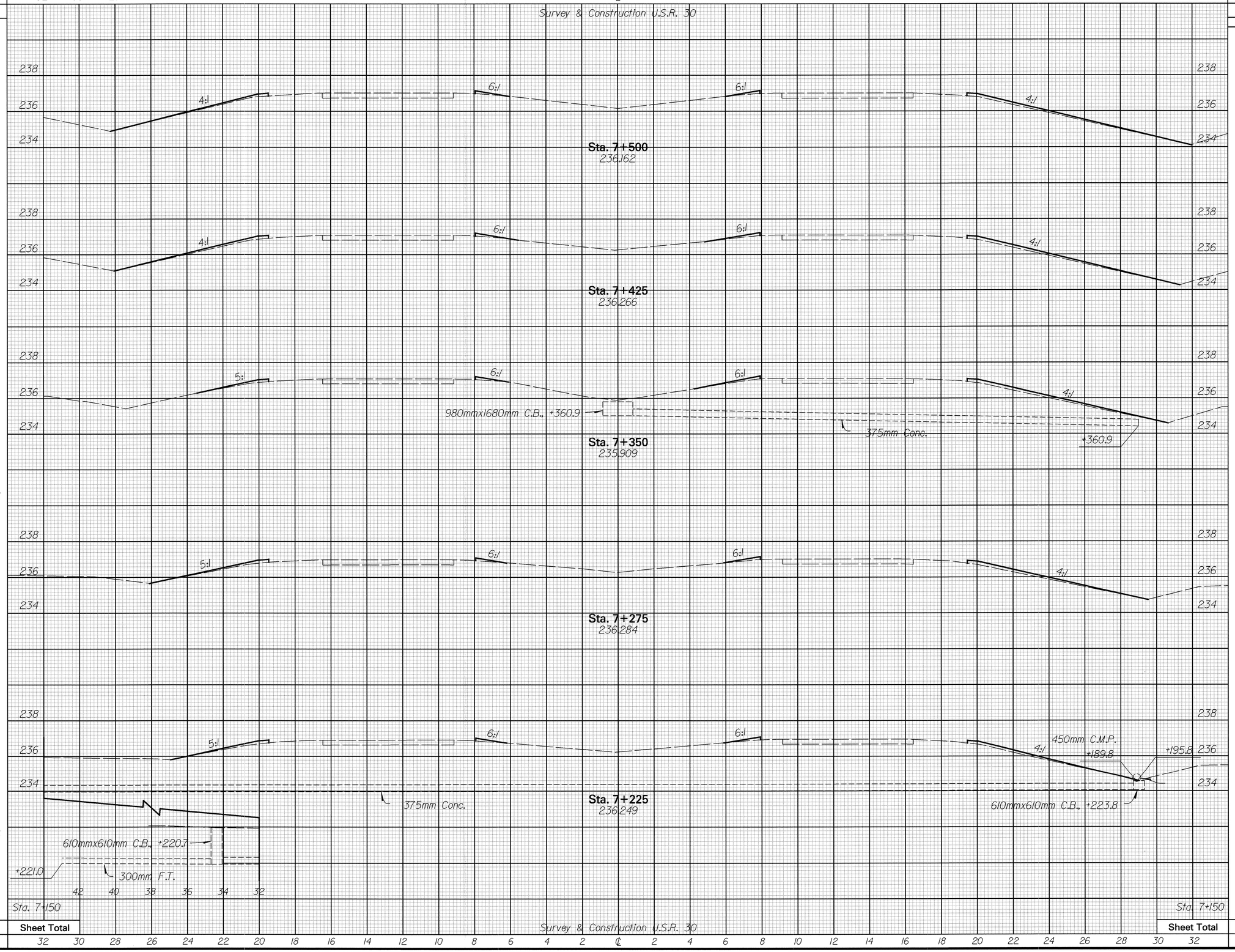

Survey & Construction U.S.R. 30

EARTHWORK	END AREA		VOLUME	
	CUT	FILL	CUT	FILL
Sta. 7+500	0	1.8	0	143
Sta. 7+425	0	2.0	0	146
Sta. 7+350	0	1.9	0	139
Sta. 7+275	0	1.8	0	128
Sta. 7+225	0	1.6	0	105
Sta. 7+150	0	1.2		
Sheet Total			0	661
	m²	m²	m³	m³

Scale in Meters 0 2 4 1:100 Ratio

CALCULATED N.V CHECKED D.S

CROSS SECTIONS – U.S.R. 30
Sta. 7+225 to Sta. 7+500

VAN-30-6.618(4.05)

47
134

DESIGN FILE : i:\pd\van30d\v30gx1.dgn
USERNAME : rhermon

DATE : 05-SEP-1997
TIME : 14:18

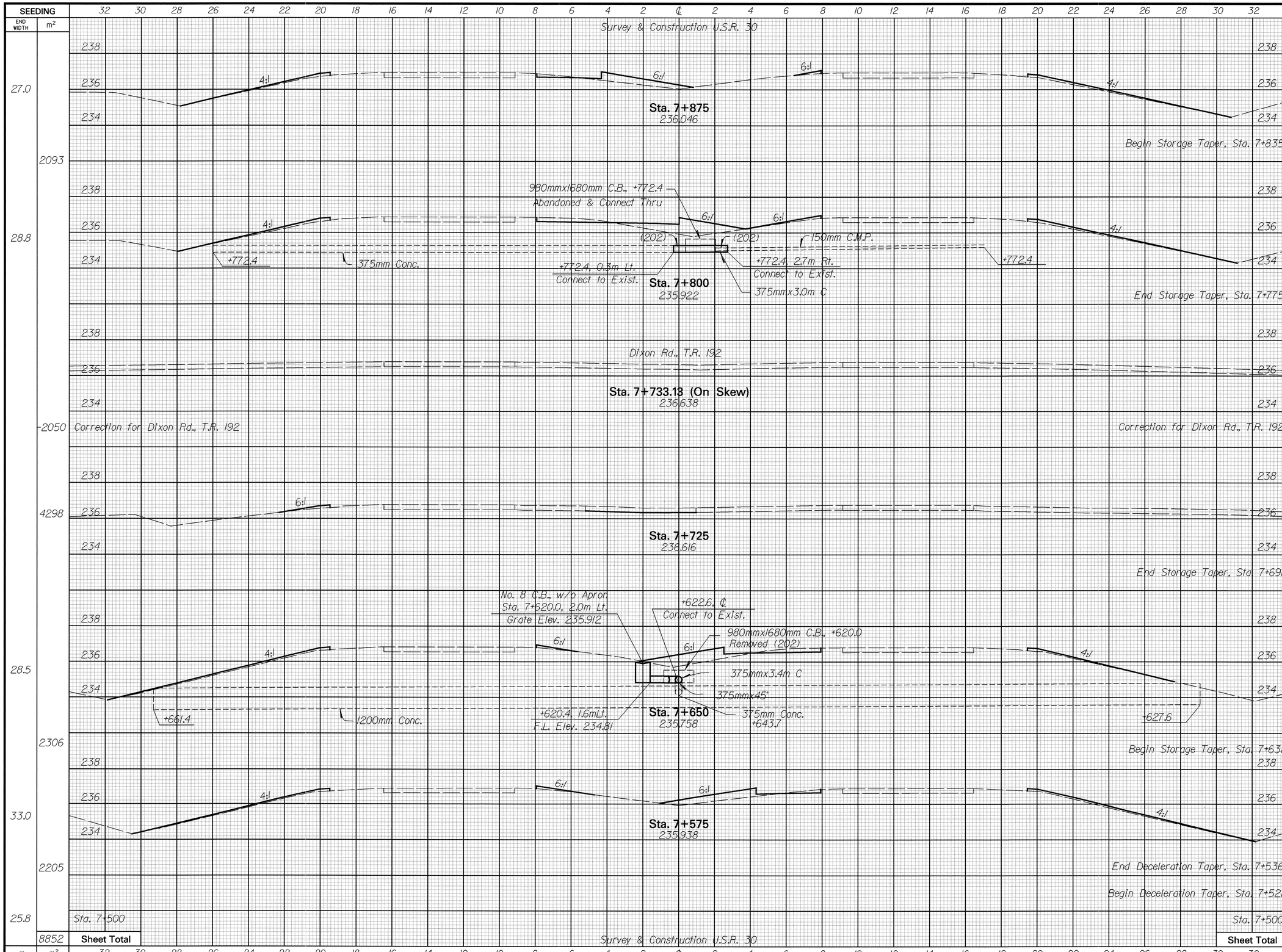

Station	Sheet Total	End Area Cut	End Area Fill	Volume Cut	Volume Fill
Sta. 7+875	27.0	0.2	3.2		
				8	128
Begin Storage Taper, Sta. 7+835	2093	0.2	3.2		
				16	142
	28.8	0.7	4.9		
				18	124
End Storage Taper, Sta. 7+775		0.7	5.0		
	-2050			-20	-225
				55	420
Sta. 7+725	4298				
End Storage Taper, Sta. 7+691		0.6	5.0		
				25	189
	28.5	0.6	4.2		
				8	74
Begin Storage Taper, Sta. 7+631	2306	0.2	3.6		
				11	202
	33.0	0.2	3.6		
				8	140
End Deceleration Taper, Sta. 7+536	2205	0.2	3.6		
				2	41
Begin Deceleration Taper, Sta. 7+521		0	1.8		
				0	38
Sta. 7+500	25.8	0	1.8		
Sheet Total	8852			131	1273

Scale in Meters 0 2 4 1:100 Ratio

CALCULATED NJV CHECKED DJS

CROSS SECTIONS – U.S.R. 30
Sta. 7+575 to Sta. 7+875

VAN-30-6.618(4.05)

DESIGN FILE : i:\pd\van30d\v30gx2.dgn
USERNAME : rhermon
DATE : 05-SEP-1997
TIME : 15:41

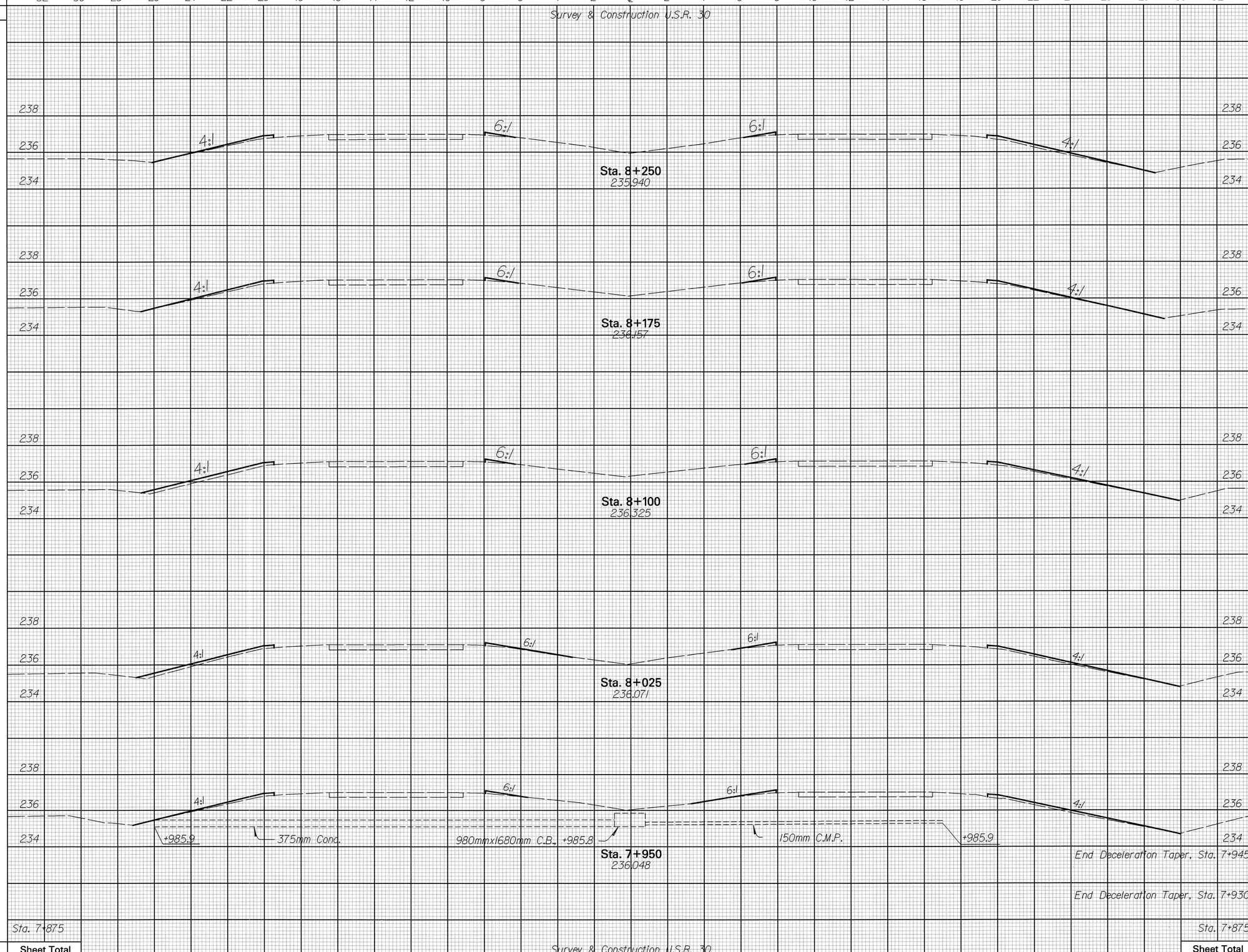

SEEDING END WIDTH (m)	SEEDING m²	EARTHWORK END AREA CUT (m²)	EARTHWORK END AREA FILL (m²)	EARTHWORK VOLUME CUT (m³)	EARTHWORK VOLUME FILL (m³)
19.8		0	1.6		
	1538			0	113
21.2		0	1.4		
	1620			0	135
22.0		0	2.2		
	1785			0	173
25.6		0	2.4		
	1928			0	184
25.8		0	2.2		
				2	41
	1980	0.2	3.2		
				11	176
27.0		0.2	3.2		
	8851			13	822

Scale in Meters 0 2 4 1:100 Ratio

CALCULATED NJV CHECKED DJS

CROSS SECTIONS – U.S.R. 30
Sta. 7+950 to Sta. 8+250

VAN-30-6.618(4.05)

DESIGN FILE : i:\pd\van30d\v30gx2.dgn
USERNAME : rhermon
DATE : 08-SEP-1997
TIME : 13:07

DESIGN FILE : i:\pd\van30d\v30gx2.dgn
USERNAME : rhermon

DATE : 08-SEP-1997
TIME : 14:19

Survey & Construction U.S.R. 30

SEEDING END WIDTH (m)	SEEDING m²	Station	Offset (m)	Elevation	Remarks
23.2	1699	Sta. 9+000	0	236.109	
22.1	1691	Sta. 8+925	0	236.095	+961.5; 150mm C.M.P.; 980mmx1680mm C.B., +961.4; 375mm Conc.; +961.1
23.0	1834	Sta. 8+850	0	236.139	+880.4; 3530x2250mm C.M.P.; +889.4; Begin Deceleration Taper, Sta. 8+830; End Deceleration Taper, Sta. 8+815
25.9	1740	Sta. 8+775	0	236.042	+717.4, 1.3m Rt., F.L. Elev. 234.92; 980mmx1680mm C.B., +717.4 Abandoned and Connect Thru; No. 8 C.B., w/o Apron, Sta. 8+717.40, 1.7m Rt., Grate Elev. 235.860; Begin Storage Taper, Sta. 8+721
20.5	6964	Sta. 8+700	0	235.711	+717.3; 375mm Conc.; 375mmx3.5m C; 150mmx1.5m C; 150mm C.M.P.; +717.4; +717.4, 1.8mLt., Connect to Exist.; +717.4, 3.2mRt., Connect to Exist.; +717.4, 2.1m Rt., F.L. Elev. 234.92

Sheet Total 6964 m²

Survey & Construction U.S.R. 30

EARTHWORK END AREA CUT (m²)	EARTHWORK END AREA FILL (m²)	VOLUME CUT (m³)	VOLUME FILL (m³)
0	1.4	0	124
0	1.9	0	165
0	2.5	0	50
0	2.5	2	40
0.3	2.8	12	112
0.3	2.8	16	157
0.3	3.0	9	76
0.6	4.2		
Sheet Total		39	724

Scale in Meters 0 2 4 1:100 Ratio

CALCULATED N.V
CHECKED D.S

CROSS SECTIONS - U.S.R. 30
Sta. 8+700 to Sta. 9+000

VAN-30-6.618(4.05)

51
134

DESIGN FILE : i:\pd\van30d\v30gx2.dgn
USERNAME : rthermon

DATE : 08-SEP-1997
TIME : 13:08

Survey & Construction U.S.R. 30

SEEDING END WIDTH	SEEDING m²	Station	Elev.	Description
20.5		Sta. 8+700	238 / 236 / 234	Sta. 8+700
				End Storage Taper, Sta. 8+661
		Sta. 8+625	236.518	
	-1100		238 / 236 / 234	Correction for Convoy Rd., S.R. 49
				Convoy Rd.
				S.R. 49
		Sta. 8+618.52	236.520	
	3300		238 / 236 / 234	750mm Conc. +617.7 +639.6
				No. 8 C.B., w/o Apron Sta. 8+515.00, 17m Lt. Grate Elev. 236.670
				450mmx19.4m C
				980mmx1680mm C.B., +534.4, Abandoned and Connect Thru
				200mmx450mm Tee
23.5			238 / 236 / 234	200mm C.M.P. +534.4
				200mmx1.5m C
				450mmx1.5m C
				End Storage Taper, Sta. 8+576
				+534.4, 1.8mLt. Connect to Exist.
	1733	Sta. 8+550	235.642	+534.4, 1.2mRt. Connect to Exist.
				450mm Conc. +534.5
				+515.4, 1.7mLt. F.L. Elev. 234.84
				+534.4, 0.3m Lt. F.L. Elev. 234.65
				Begin Storage Taper, Sta. 8+516
22.7			238 / 236 / 234	
	1601	Sta. 8+475	235.663	
				End Deceleration Taper, Sta. 8+422
			238 / 236 / 234	
				Begin Deceleration Taper, Sta. 8+407
20.0		Sta. 8+400	235.835	
	1481		238 / 236 / 234	
19.5				+290.9 150mm C.M.P. 980mmx1680mm C.B., +290.8 375mm Conc. +290.7
	1474	Sta. 8+325	235.837	
19.8		Sta. 8+250		Sta. 8+250
	8489	Sheet Total		Sheet Total

Survey & Construction U.S.R. 30

EARTHWORK	END AREA CUT m²	END AREA FILL m²	VOLUME CUT m³	VOLUME FILL m³
	0.6	4.2		
			25	209
	0.7	6.5		
			-15	-400
			60	553
	0.7	6.5		
			18	159
	0.7	5.7		
			17	151
	0.3	3.2		
			24	301
	0.2	3.2		
			2	35
	0	1.5		
			0	119
	0	1.4		
			0	113
	0	1.6		
			131	1240
	Sheet Total			

Scale in Meters 0 2 4 — 1:100 Ratio

CALCULATED N.N
CHECKED D.S

CROSS SECTIONS - U.S.R. 30
Sta. 8+325 to Sta. 8+625

VAN-30-6.618(4.05)

50
134

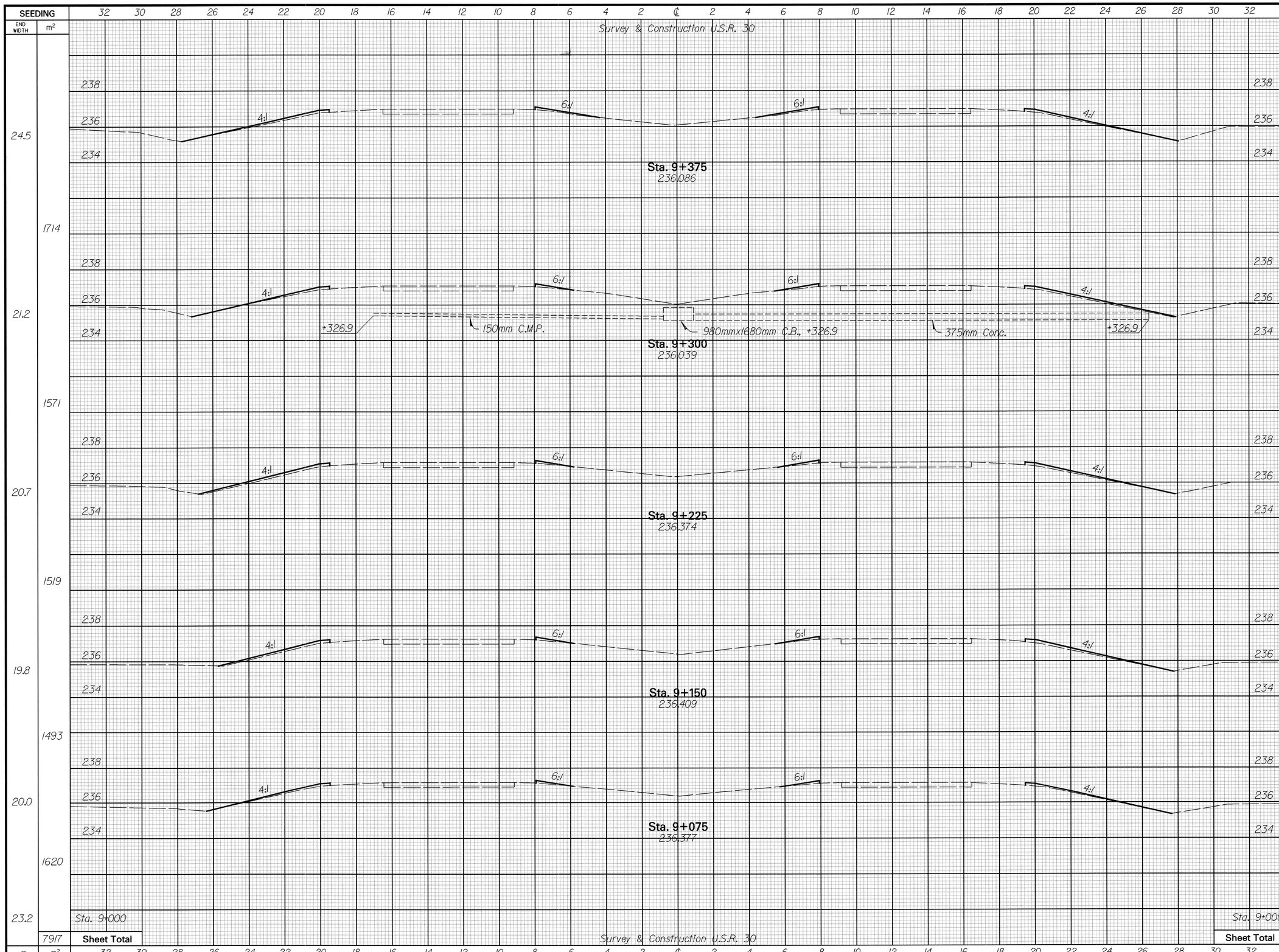

m	m²	Sheet Total	m²	m²	m³	m³
24.5			0	1.8		
	1714				0	124
21.2			0	1.5		
	1571				0	124
20.7			0	1.8		
	1519				0	131
19.8			0	1.7		
	1493				0	113
20.0			0	1.3		
	1620				0	101
23.2			0	1.4		
	7917				0	593

EARTHWORK

END AREA CUT	END AREA FILL	VOLUME CUT	VOLUME FILL
0	1.8		
		0	124
0	1.5		
		0	124
0	1.8		
		0	131
0	1.7		
		0	113
0	1.3		
		0	101
0	1.4		
		0	593

Scale in Meters 0 2 4 1:100 Ratio

CALCULATED NJV CHECKED DJS

CROSS SECTIONS – U.S.R. 30
Sta. 9+075 to Sta. 9+375

VAN-30-6.618(4.05)

DESIGN FILE : i:\pd\van30d\v30gx2.dgn
USERNAME : rhermon
DATE : 08-SEP-1997
TIME : 15:26

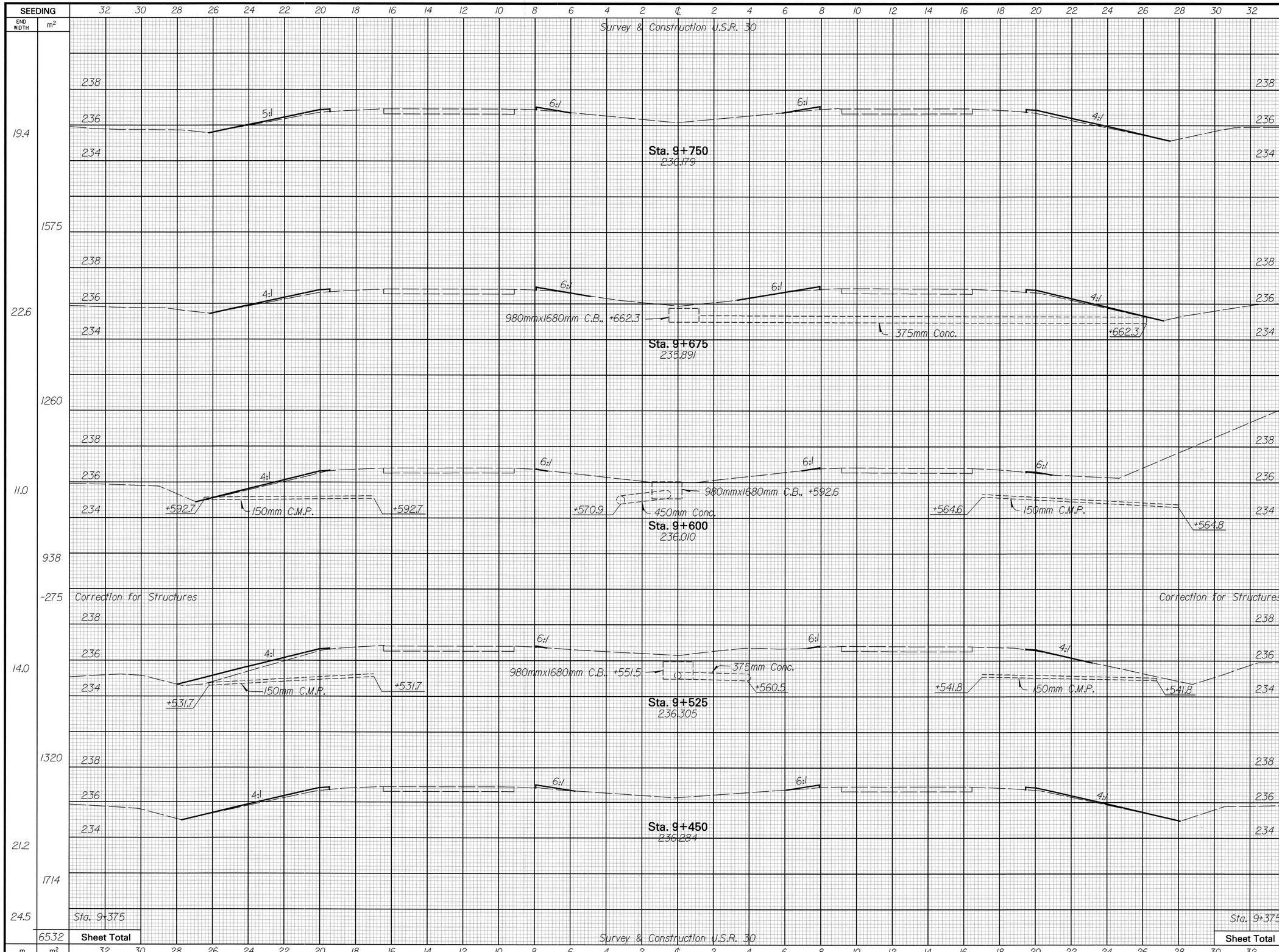

Station	Seeding	Earthwork End Area Cut	Earthwork End Area Fill	Earthwork Volume Cut	Earthwork Volume Fill
Sta. 9+750	19.4	0	1.5		
	1575			0	105
Sta. 9+675	22.6	0	1.3		
	1260			0	79
Sta. 9+600	11.0	0	0.8		
	938			0	113
Correction for Structures	-275			0	-55
Sta. 9+525	14.0	0	2.2		
	1320			0	143
Sta. 9+450	21.2	0	1.6		
	1714			0	128
Sta. 9+375	24.5	0	1.8		
Sheet Total	6532			0	513
	m²	m²	m²	m³	m³

Scale in Meters 0 2 4 1:100 Ratio

CALCULATED NJV
CHECKED DJS

CROSS SECTIONS – U.S.R. 30
Sta. 9+450 to Sta. 9+750

VAN-30-6.618(4.05)

DESIGN FILE : i:\pd\van30d\v30gx3.dgn
USERNAME : rhermon
DATE : 09-SEP-1997
TIME : 07:56

Survey & Construction U.S.R. 30

℄ Ramp "A"

Sta. 10+125
236.220

980mmx1680mm C.B. +050.8

375mm Conc.

+050.8

Sta. 10+050
236.087

Sta. 9+975
236.336

980mmx1680mm C.B. +793.6

375mm Conc.

+793.7

Sta. 9+900
236.276

Sta. 9+825
236.130

Survey & Construction U.S.R. 30

SEEDING END WIDTH (m)	SEEDING m²		EARTHWORK END AREA CUT (m²)	EARTHWORK END AREA FILL (m²)	EARTHWORK VOLUME CUT (m³)	EARTHWORK VOLUME FILL (m³)
21.5	1650	Sta. 10+125	0	3.0	0	176
22.5	1646	Sta. 10+050	0	1.7	0	131
21.4	1568	Sta. 9+975	0	1.8	0	131
20.4	1515	Sta. 9+900	0	1.7	0	128
20.0	1478	Sta. 9+825	0	1.7	0	120
19.4	7857	Sta. 9+750	0	1.5	0	686
		Sheet Total				

DESIGN FILE : i:\pd\van30d\v30gx3.dgn
USERNAME : rhermon

DATE : 09-SEP-1997
TIME : 08:28

Scale in Meters 0 2 4 1:100 Ratio

CALCULATED N.N
CHECKED D.S

CROSS SECTIONS – U.S.R. 30
Sta. 9+825 to Sta. 10+125

VAN-30-6.618(4.05)

54
134

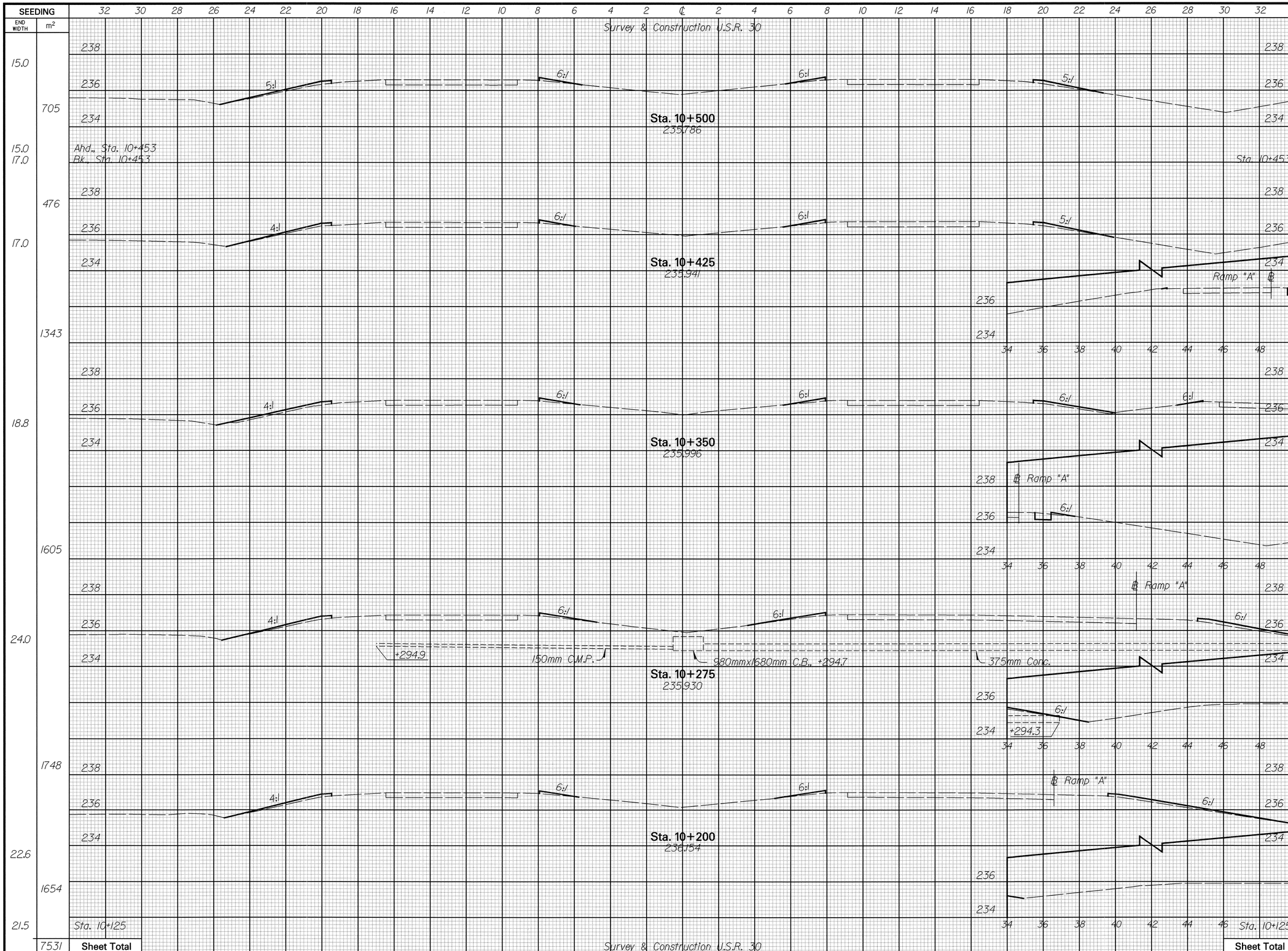

Scale in Meters 0 2 4 1:100 Ratio

CALCULATED NJV
CHECKED DJS

CROSS SECTIONS – U.S.R. 30
Sta. 10+200 to Sta. 10+500

VAN-30-6.618(4.05)

DESIGN FILE : i:\pd\van30d\v30gx3.dgn
USERNAME : rhermon
DATE : 09-SEP-1997
TIME : 10:44

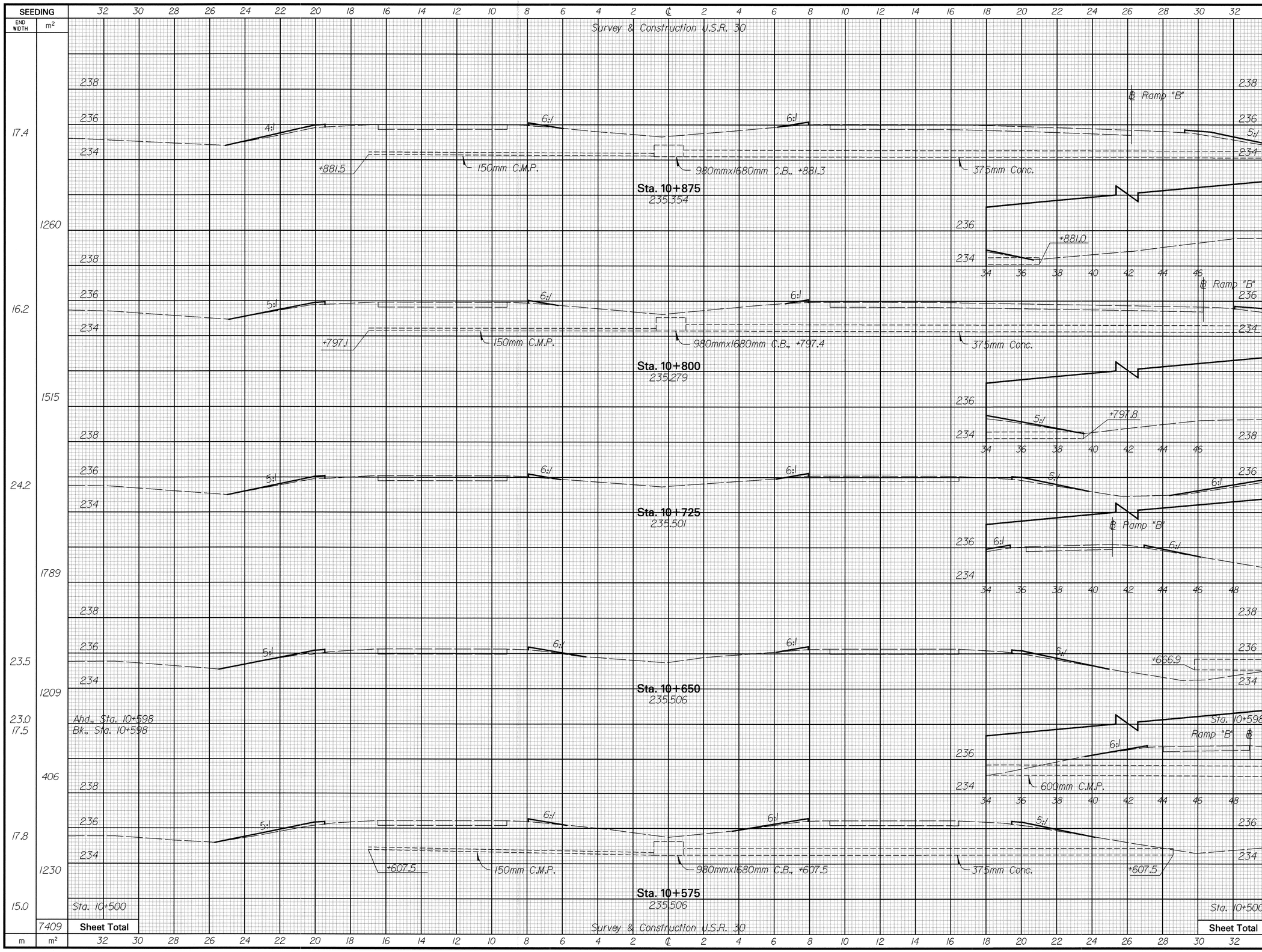

SEEDING END WIDTH	SEEDING m²	EARTHWORK END AREA CUT	EARTHWORK END AREA FILL	EARTHWORK VOLUME CUT	EARTHWORK VOLUME FILL
17.4		0	1.7		
	1260			0	116
16.2		0	1.4		
	1515			0	128
24.2		0	2.0		
	1789			0	131
23.5		0	1.5		
	1209			0	73
23.0		0	1.3		
17.5					
	406			0	31
17.8		0	1.4		
	1230			0	101
15.0		0	1.3		
	7409			0	580
m	m²	m²	m²	m³	m³

Scale in Meters 0 2 4 1:100 Ratio

CALCULATED NJV
CHECKED DJS

CROSS SECTIONS – U.S.R. 30
Sta. 10+575 to Sta. 10+875

VAN-30-6.618(4.05)

DESIGN FILE : i:\pd\van30d\v30gx3.dgn
USERNAME : rhermon
DATE : 09-SEP-1997
TIME : 13:37

DESIGN FILE : i:\pd\van30d\v30gx3.dgn
USERNAME : rhermon
DATE : 09-SEP-1997
TIME : 14:29

SEEDING END WIDTH	SEEDING m²
23.4	1770
23.8	1886
26.5	1909
24.4	1718
21.4	1455
17.4	
m	87.38 m² Sheet Total

Survey & Construction U.S.R. 30

Sta. 11+250
235.812

End Deceleration Taper, Sta. 11+175

Sta. 11+175
235.620

Begin Deceleration Taper, Sta. 11+160

150mm C.M.P.
+094.7
980mmx1680mm C.B., +094.6
375mm Conc.
150mm C.M.P.
+094.6

Sta. 11+100
235.287

+041.8
375mm Conc.
+041.3
1200mm Conc.

Sta. 11+025
235.557

+041.1

℄ Ramp "B"

Sta. 10+950
235.459

Sta. 10+875

Survey & Construction U.S.R. 30

EARTHWORK	END AREA		VOLUME	
	CUT	FILL	CUT	FILL
	0.5	2.4		
			30	206
	0.3	3.1		
			2	44
	0	2.8		
			0	168
	0	2.8		
			0	199
	0	2.5		
			0	158
	0	1.7		
			0	128
	0	1.7		
Sheet Total			32	903
	m²	m²	m³	m³

Scale in Meters 0 2 4 1:100 Ratio

CALCULATED N.JV CHECKED D.JS

CROSS SECTIONS – U.S.R. 30
Sta. 10+950 to Sta. 11+250

VAN-30-6.618(4.05)

57
134

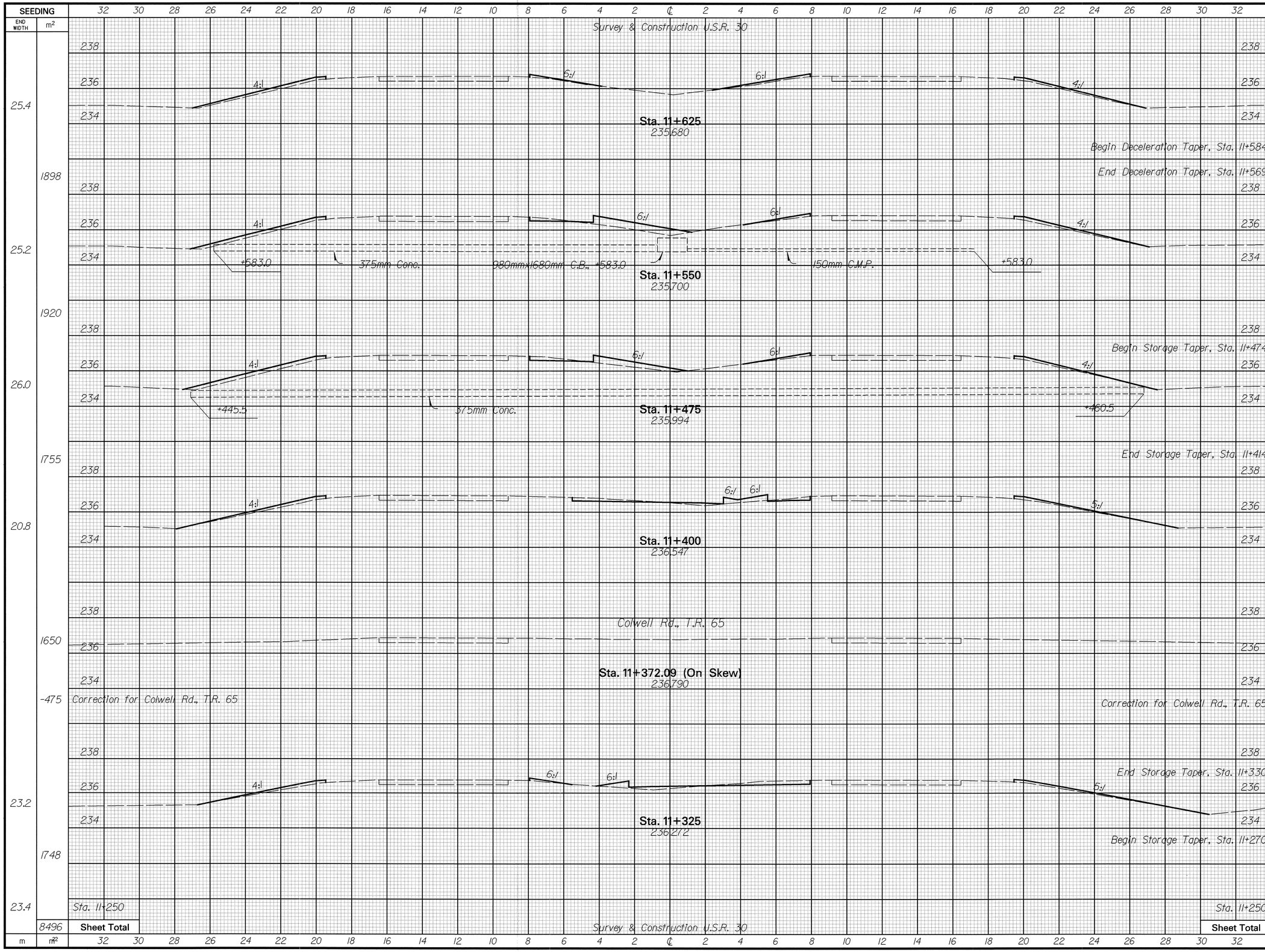

EARTHWORK	END AREA CUT	END AREA FILL	VOLUME CUT	VOLUME FILL
	0	2.4		
			0	98
Begin Deceleration Taper, Sta. 11+584	0	2.4		
			4	48
End Deceleration Taper, Sta. 11+569	0.5	4.0		
			8	81
	0.3	4.5		
			27	323
Begin Storage Taper, Sta. 11+474	0.4	4.0		
			33	210
End Storage Taper, Sta. 11+414	0.7	3.0		
			11	38
	0.9	2.4		
			56	175
			-10	-75
End Storage Taper, Sta. 11+330	0.7	2.6		
			36	150
Begin Storage Taper, Sta. 11+270	0.5	2.4		
			10	48
Sta. 11+250	0.5	2.4		
Sheet Total			175	1096
	m²	m²	m³	m³

Scale in Meters 0 2 4 1:100 Ratio

CALCULATED NJV CHECKED DJS

CROSS SECTIONS - U.S.R. 30
Sta. 11+325 to Sta. 11+625

VAN-30-6.618(4.05)

DESIGN FILE : i:\pd\van30d\v30gx4.dgn
USERNAME : rhermon
DATE : 09-SEP-1997
TIME : 16:02

SEEDING			EARTHWORK			
END WIDTH	m²		END AREA		VOLUME	
			CUT	FILL	CUT	FILL
23.0	1665	Sta. 12+000 235.279	0	2.0	0	143
21.4	1830	Sta. 11+925 235.420	0	1.8	0	143
27.4	2010	Sta. 11+850 235.273	0	2.0	0	154
26.2	1789	Sta. 11+775 235.402	0	2.1	0	158
21.5	1759	Sta. 11+700 235.606	0	2.1	0	169
25.4		Sta. 11+625	0	2.4		
	9053	Sheet Total			0	767
m	m²		m²	m²	m³	m³

Survey & Construction U.S.R. 30

610mmx610mm C.B., +970.5 — 100mm C.M.P. — 200mm Conc. — 300mm Conc. — 610mmx610mm C.B., +941.2 — 200mm Conc. — +930.0

980mmx1680mm C.B., +826.2 — 375mm Conc. — 150mm C.M.P. — +826.1

Survey & Construction U.S.R. 30

DESIGN FILE : i:\pd\van30d\v30gx4.dgn
USERNAME : rhermon

DATE : 10-SEP-1997
TIME : 08:36

Scale in Meters 0 2 4 — 1:100 Ratio

CALCULATED N.JV CHECKED DJS

CROSS SECTIONS – U.S.R. 30
Sta. 11+700 to Sta. 12+000

VAN-30-6.618(4.05)

59
134

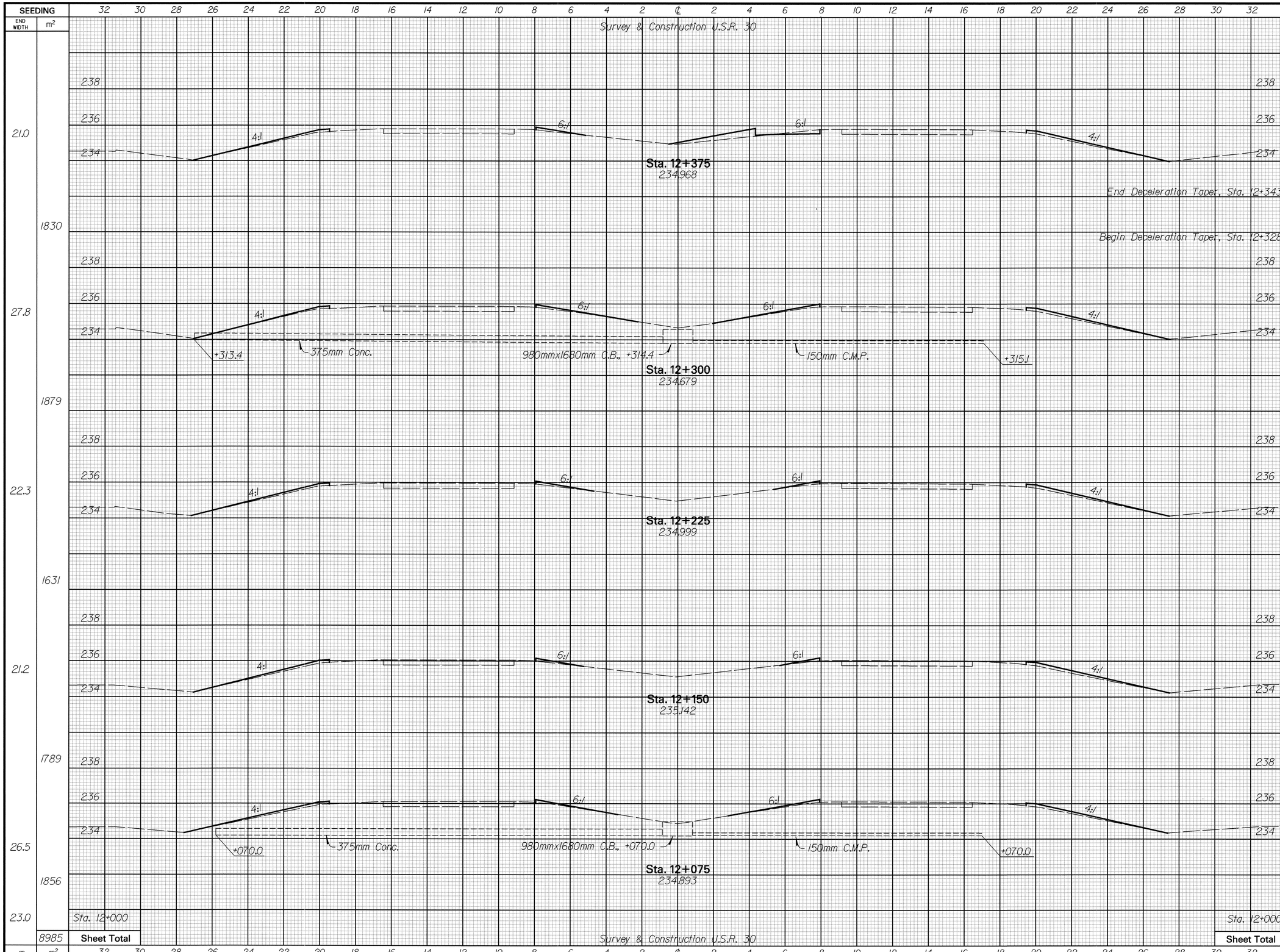

EARTHWORK			
END AREA		VOLUME	
CUT	FILL	CUT	FILL
0.3	2.6		
		10	83
0.3	2.6		
		2	33
0	1.8		
		0	50
0	1.8		
		0	135
0	1.8		
		0	135
0	1.8		
		0	143
0	2.0		
		0	150
0	2.0		
		12	729
m²	m²	m³	m³

Scale in Meters 0 2 4 1:100 Ratio

CALCULATED NJV
CHECKED DJS

CROSS SECTIONS – U.S.R. 30
Sta. 12+075 to Sta. 12+375

VAN-30-6.618(4.05)

DESIGN FILE : i:\pd\van30d\v30gx4.dgn
USERNAME : rhermon
DATE : 10-SEP-1997
TIME : 08:50

Survey & Construction U.S.R. 30

SEEDING END WIDTH	SEEDING m²	32 30 28 26 24 22 20 18 16 14 12 10 8 6 4 2 ℄ 2 4 6 8 10 12 14 16 18 20 22 24 26 28 30 32
		236 / 234 — 4:1 — 6:1 — 6:1 — 4:1 — Begin Deceleration Taper, Sta. 12+751
23.0		Sta. 12+750 235.029
		No. 8 C.B., w/o Apron Sta. 12+643.0, 1.3m Rt. Grate elev. 234.87
		+643.4, 1.3m Rt. F.L. Elev. 233.88
	1819	236 / 234 — 4:1 — 6:1 — 6:1 — 4:1 — End Deceleration Taper, Sta. 12+736
		450mmx36.3m C — Sta. 12+675 234.865 — +680.0 — 1200mm Conc. — +679.8
25.5		+679.3, 1.3m Rt. F.L. Elev. 233.48 Tie into Culvert
		980mmx1680mm C.B., +573.3 Removed (202)
	1931	236 / 234 — 4:1 — 6:1 — 6:1 — 4:1 — Begin Storage Taper, Sta. 12+597
26.0		+573.2 — 450mm Conc. — Sta. 12+600 234.941
		236 / 234 — Convoy Rd., C.R. 168 — End Storage Taper, Sta. 12+582
		Sta. 12+539.51 (On Skew) 235.504
	-1025	Correction for Convoy Rd., C.R. 168 — Correction for Convoy Rd., C.R. 168
		980mmx1680mm C.B., +490.2 Abandoned & Connect Thru
	3930	236 / 234 — 4:1 — 375mmx41.7m C — 375mm Conc. — (202) — +496.7 — 900mm Conc. — +497.1
		+491.7, 1.66m Lt. Connect to Exist. — Sta. 12+525 235.264
		No. 8 C.B., w/o Apron Sta. 12+450.0, 1.0m Lt. Grate elev. 234.80
26.4		236 / 234 — 6:1 — 6:1 — 4:1 — 4:1 — 375mmx41.7m C
		+450.4, 1.0m Lt. F.L. Elev. 234.00 — Sta. 12+450 234.908
	1778	Begin Storage Taper, Sta. 12+438
21.0		Sta. 12+375 — Sta. 12+375
	8433	Sheet Total — Sheet Total

Survey & Construction U.S.R. 30

EARTHWORK	END AREA		VOLUME	
	CUT	FILL	CUT	FILL
Begin Deceleration Taper, Sta. 12+751	0	2.4		
End Deceleration Taper, Sta. 12+736	0.2	3.5	2	44
			12	220
	0.2	3.7		
			35	324
Begin Storage Taper, Sta. 12+597	0.7	4.6		
			11	72
End Storage Taper, Sta. 12+582	0.7	5.0		
Correction for Convoy Rd., C.R. 168			-10	-250
			50	420
End Storage Taper, Sta. 12+498	0.5	5.0		
			24	216
	0.5	4.0		
			5	42
Begin Storage Taper, Sta. 12+438	0.4	3.0		
			22	176
Sta. 12+375	0.3	2.6		
Sheet Total			151	1264
	m²	m²	m³	m³

Scale in Meters 0 2 4 — 1:100 Ratio

CALCULATED NJV CHECKED DJS

CROSS SECTIONS – U.S.R. 30
Sta. 12+450 to Sta. 12+750

VAN-30-6.618(4.05)

61 / 134

DESIGN FILE : i:\pd\van30d\v30gx4.dgn
USERNAME : rhermon

DATE : 10-SEP-1997
TIME : 09:31

DESIGN FILE : i:\pd\van30d\v30gx4.dgn
USERNAME : rhermon
DATE : 10-SEP-1997
TIME : 10:28

Survey & Construction U.S.R. 30

SEEDING END WIDTH	SEEDING m²	Station	EARTHWORK END AREA CUT	EARTHWORK END AREA FILL	EARTHWORK VOLUME CUT	EARTHWORK VOLUME FILL
21.5	1718	Sta. 13+125	0	1.6	0	158
24.3	1800	Sta. 13+050	0	2.6	0	176
23.7	1736	Sta. 12+975	0	2.1	0	135
22.6	1691	Sta. 12+900	0	1.5	0	135
22.5	1706	Sta. 12+825	0	2.1	0	167
23.0		Sta. 12+750	0	2.4		
	8651	Sheet Total			0	771
m	m²		m²	m²	m³	m³

Sta. 13+125
234.664
980mmx1680mm C.B., +098.8
+098.9
375mm Conc.
4:1
6:1
6:1
4:1

Sta. 13+050
234.934
1050mm Conc.
+045.3
+045.3
4:1
6:1
6:1
4:1

Sta. 12+975
234.550
980mmx680mm C.B., +984.3
+984.5
375mm Conc.
4:1
6:1
6:1
4:1

Sta. 12+900
234.917
4:1
6:1
6:1
4:1

Sta. 12+825
235.012
4:1
6:1
6:1
4:1

Survey & Construction U.S.R. 30

Scale in Meters 0 2 4
1:100 Ratio

CALCULATED N.V
CHECKED D.S

CROSS SECTIONS – U.S.R. 30
Sta. 12+825 to Sta. 13+125

VAN-30-6.618(4.05)

62
134

DESIGN FILE : i:\pd\van30d\v30gx5.dgn
USERNAME : rhermon

DATE : 10-SEP-1997
TIME : 13:34

Survey & Construction U.S.R. 30

SEEDING END WIDTH (m)	SEEDING m²	Station	EARTHWORK END AREA CUT (m²)	EARTHWORK END AREA FILL (m²)	EARTHWORK VOLUME CUT (m³)	EARTHWORK VOLUME FILL (m³)
17.0	1440	Sta. 13+500 234246	0	1.0	0	113
21.4	1575	Sta. 13+425 234467	0	2.0	0	143
20.6	1541	Sta. 13+350 234.716	0	1.8	0	158
20.5	1519	Sta. 13+275 234.827	0	2.4	0	184
20.0	1556	Sta. 13+200 234939	0	2.5	0	154
21.5		Sta. 13+125	0	1.6		
	7631	Sheet Total			0	752
m	m²		m²	m²	m³	m³

℄ Ramp "A"
℄ Ramp "C"
450mm Conc.
980mmx1680mm C.B., +487.0
150mm C.M.P.
+487.0
+487.1
6:1
4:1
232
234
236

Scale in Meters 0 2 4 1:100 Ratio

CALCULATED N.J.V. CHECKED D.J.S.

CROSS SECTIONS - U.S.R. 30
Sta. 13+200 to Sta. 13+500

VAN-30-6.618(4.05)

63
134

DESIGN FILE : i:\pd\van30d\v30gx5.dgn
USERNAME : rhermon

DATE : 11-SEP-1997
TIME : 10:55

SEEDING			EARTHWORK			
			END AREA		VOLUME	
END WIDTH	m²		CUT	FILL	CUT	FILL
20.8	408	Ramp "B" Sta. 13+855 Ahd., Sta. 13+855 Bk., Sta. 13+855	0.5	1.5	10	29
20.0						
19.0			0.5	1.4		
			0.2	1.4		
	1044	Ramp "B" Sta. 13+800 Ahd., Sta. 13+797 Bk., Sta. 13+797			12	75
17.0			0.2	1.2		
13.2			0	1.2		
13.6	965	Ramp "A" Sta. 13+725	0	1.3	0	90
13.0	333	Ramp "C" Sta. 13+700 Ahd., Sta. 13+700 Bk., Sta. 13+700	0	1.3	0	33
18.0			0.3	1.3		
19.8	945	Ramp "A" Sta. 13+650	0.3	3.0	15	108
19.5	157	Ramp "C" Sta. 13+642 Ahd., Sta. 13+642 Bk., Sta. 13+642	0.3	2.5	2	22
22.5			0.5	2.5		
17.5	1340	Ramp "A" Ramp "C" Sta. 13+590 Ahd., Sta. 13+590 Bk., Sta. 13+590	0.5	1.4	26	101
			0.2	1.4		
	1294	Sta. 13+575	0.3	1.2	4	20
		Sta. 13+559 Ahd., Sta. 13+559 Bk., Sta. 13+559	0.3	1.1	5	18
			0	1.1		
17.0		Sta. 13+500	0	1.0	0	62
	6486	Sheet Total			74	558
m	m²		m²	m²	m³	m³

Survey & Construction U.S.R. 30

Sta. 13+875 234.574

Sta. 13+800 234.333

Sta. 13+725 234.454

Sta. 13+650 234.345

Sta. 13+575 234.336

Ramp "B" Sta. 13+855 Ahd., Sta. 13+855 Bk., Sta. 13+855
Ramp "B" Sta. 13+800 Ahd., Sta. 13+797 Bk., Sta. 13+797
Ramp "A" Sta. 13+725 Ahd., Sta. 13+700 Bk., Sta. 13+700
Ramp "A" Sta. 13+650 Ahd., Sta. 13+642 Bk., Sta. 13+642
Ramp "A" Sta. 13+590 Ahd., Sta. 13+590 Bk., Sta. 13+590
Ramp "A" Sta. 13+575 Sta. 13+559 Ahd., Sta. 13+559 Bk., Sta. 13+559
Sta. 13+500

Ramp "D" Sta. 13+855 Ahd., Sta. 13+855 Bk., Sta. 13+855
Ramp "D" Sta. 13+800 Ahd., Sta. 13+797 Bk., Sta. 13+797
Ramp "C" Sta. 13+725 Ahd., Sta. 13+700 Bk., Sta. 13+700
Ramp "C" Sta. 13+642 Ahd., Sta. 13+642 Bk., Sta. 13+642
Ramp "C" Sta. 13+590 Ahd., Sta. 13+590 Bk., Sta. 13+590
Ramp "C" Sta. 13+559 Ahd., Sta. 13+559 Bk., Sta. 13+559
Sta. 13+500

+777.9 150mm C.M.P.
980mmx1680mm C.B., +777.9
375mm Conc.
980mmx680mm C.B., +624.3
375mm Conc.
+662.2
1345x865mm Conc.
+602.6
+604.6
1345x865mm Conc.
375mm Conc.
730mmx980mm C.B., +604.7 Adjusted To Grade
+586.7
C.B. Adjusted to Grade Sta. 13+646.2, 24.7m Rt. Grate Elev. 234.320
150mm C.M.P.
375mm Conc.
+646.2
730mmx980mm C.B., +646.2
+644.2
+777.7
+658.8

Scale in Meters 0 2 4 1:100 Ratio

CALCULATED NJV CHECKED DJS

CROSS SECTIONS – U.S.R. 30
Sta. 13+575 to Sta. 13+875

VAN-30-6.618(4.05)

64
134

DESIGN FILE : i:\pd\van30d\v30gx5.dgn
USERNAME : rhermon

DATE : 11-SEP-1997
TIME : 11:15

Survey & Construction U.S.R. 30

SEEDING END WIDTH	SEEDING m²	Station	Sta. 14+250	Sta. 14+175	Sta. 14+100	Sta. 14+025	Sta. 13+950	Sta. 13+875
		Elevation	234.890	235.039	234.888	234.510	234.788	
19.0								
	1395							
18.2								
	1395							
19.0								
	1373							
17.6								
	1178							
13.8								
	1298							
20.8								
	6639 Sheet Total							

Left: 4:1 cut slope, 6:1 back slope. Right: 6:1 front slope, 4:1 cut slope.

Sta. 14+025: +021.1; 450mm Conc.; 980mmx1680mm C.B., +020.9; 150mm C.M.P.; +020.7

EARTHWORK	END AREA CUT	END AREA FILL	VOLUME CUT	VOLUME FILL
Sta. 14+250	0	2.5		
			0	188
Sta. 14+175	0	2.5		
			0	165
Sta. 14+100	0	1.9		
			0	154
Sta. 14+025	0	2.2		
			0	143
Sta. 13+950				
Sta. 13+941, Ahd.	0	1.2		
Sta. 13+941, Bk.	0.3	1.2		
			10	44
Sta. 13+907, Ahd.	0.3	1.4		
Sta. 13+907, Bk.	0.5	1.4		
			16	46
Sta. 13+875	0.5	1.5		
Sheet Total			26	740
	m²	m²	m³	m³

Scale in Meters: 0 2 4 — 1:100 Ratio

CALCULATED NJV
CHECKED DJS

CROSS SECTIONS – U.S.R. 30
Sta. 13+950 to Sta. 14+250

VAN-30-6.618(4.05)

65
134

DESIGN FILE : i:\pd\van30d\v30gx5.dgn
USERNAME : rhermon

DATE : 11-SEP-1997
TIME : 13:22

SEEDING END WIDTH	SEEDING m²	EARTHWORK END AREA CUT	EARTHWORK END AREA FILL	EARTHWORK VOLUME CUT	EARTHWORK VOLUME FILL
19.0	1418	0	1.4	0	105
18.8	1410	0	1.4	0	105
18.8	1478	0	1.4	0	131
20.6	1530	0	2.1	0	169
20.2	1470	0	2.4	0	184
19.0		0	2.5		
	7306 Sheet Total			0	694
m	m²	m²	m²	m³	m³

Survey & Construction U.S.R. 30

Sta. 14+250

Sta. 14+325
234.771

Sta. 14+400
234.492

Sta. 14+475
234.654

Sta. 14+550
234.494

Sta. 14+625
234.147

+630.5 150mm C.M.P. 980mmx1680mm C.B., +630.5 375mm Conc. Pipe Cleanout +630.4

+386.8 150mm C.M.P. 980mmx1680mm C.B., +386.7 375mm Conc. +386.6

Scale in Meters 0 2 4 1:100 Ratio

CALCULATED NJV CHECKED DJS

CROSS SECTIONS – U.S.R. 30
Sta. 14+325 to Sta. 14+625

VAN-30-6.618(4.05)

66
134

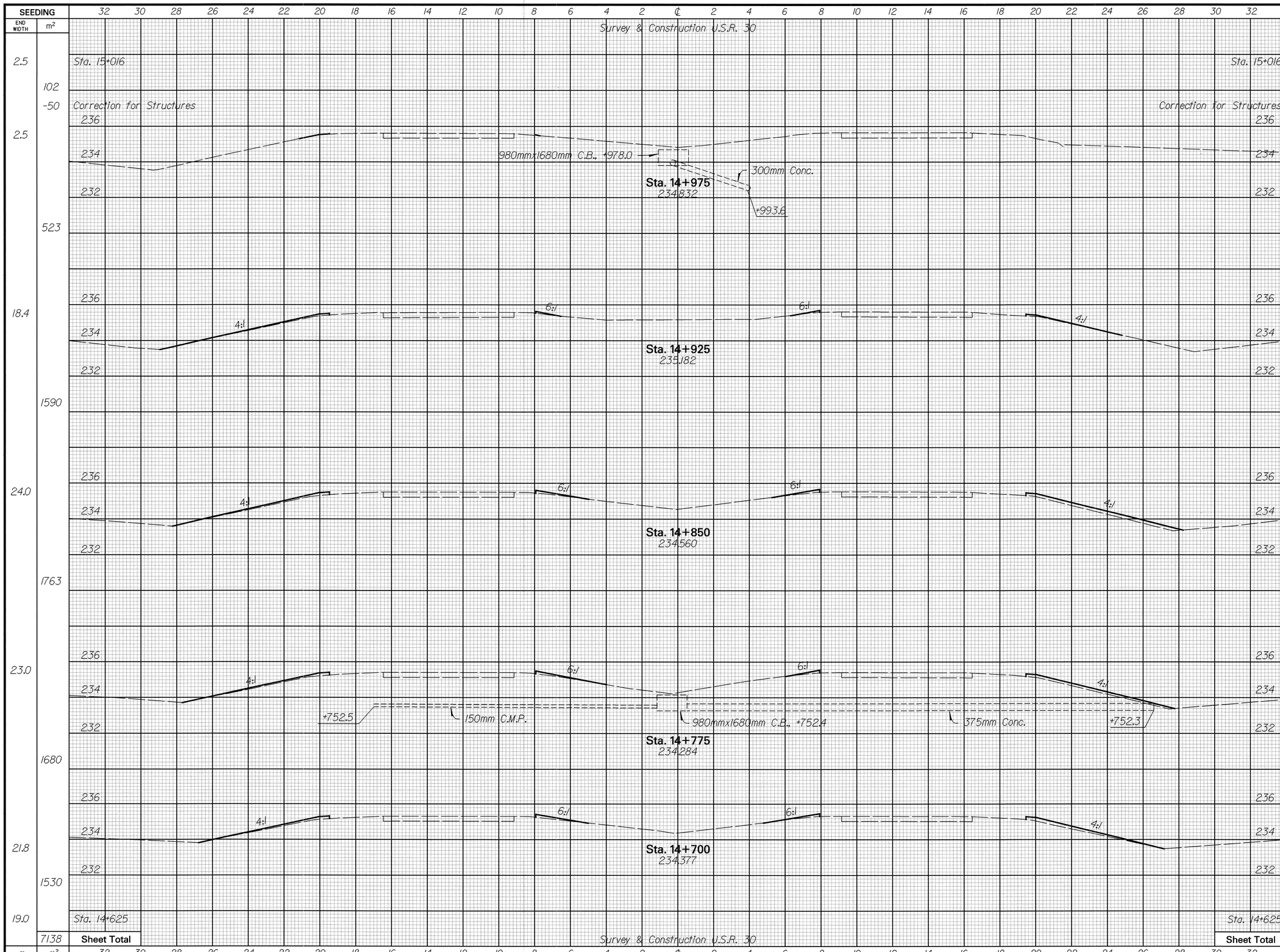

Station	Sheet Total	EARTHWORK END AREA CUT	EARTHWORK END AREA FILL	VOLUME CUT	VOLUME FILL
Sta. 15+016		0	0.1		
	102			0	4
	-50			0	-3
	523	0	0.1		
				0	20
	1590	0	0.7		
				0	116
	1763	0	2.4		
				0	165
	1680	0	2.0		
				0	139
	1530	0	1.7		
				0	116
Sta. 14+625		0	1.4		
Sheet Total				0	557
		m²	m²	m³	m³

Scale in Meters 0 2 4 1:100 Ratio

CALCULATED NJV
CHECKED DJS

CROSS SECTIONS - U.S.R. 30
Sta. 14+700 to Sta. 15+000

VAN-30-6.618(4.05)

DESIGN FILE : i:\pd\van30d\v30gx5.dgn
USERNAME : rhermon
DATE : 11-SEP-1997
TIME : 13:42

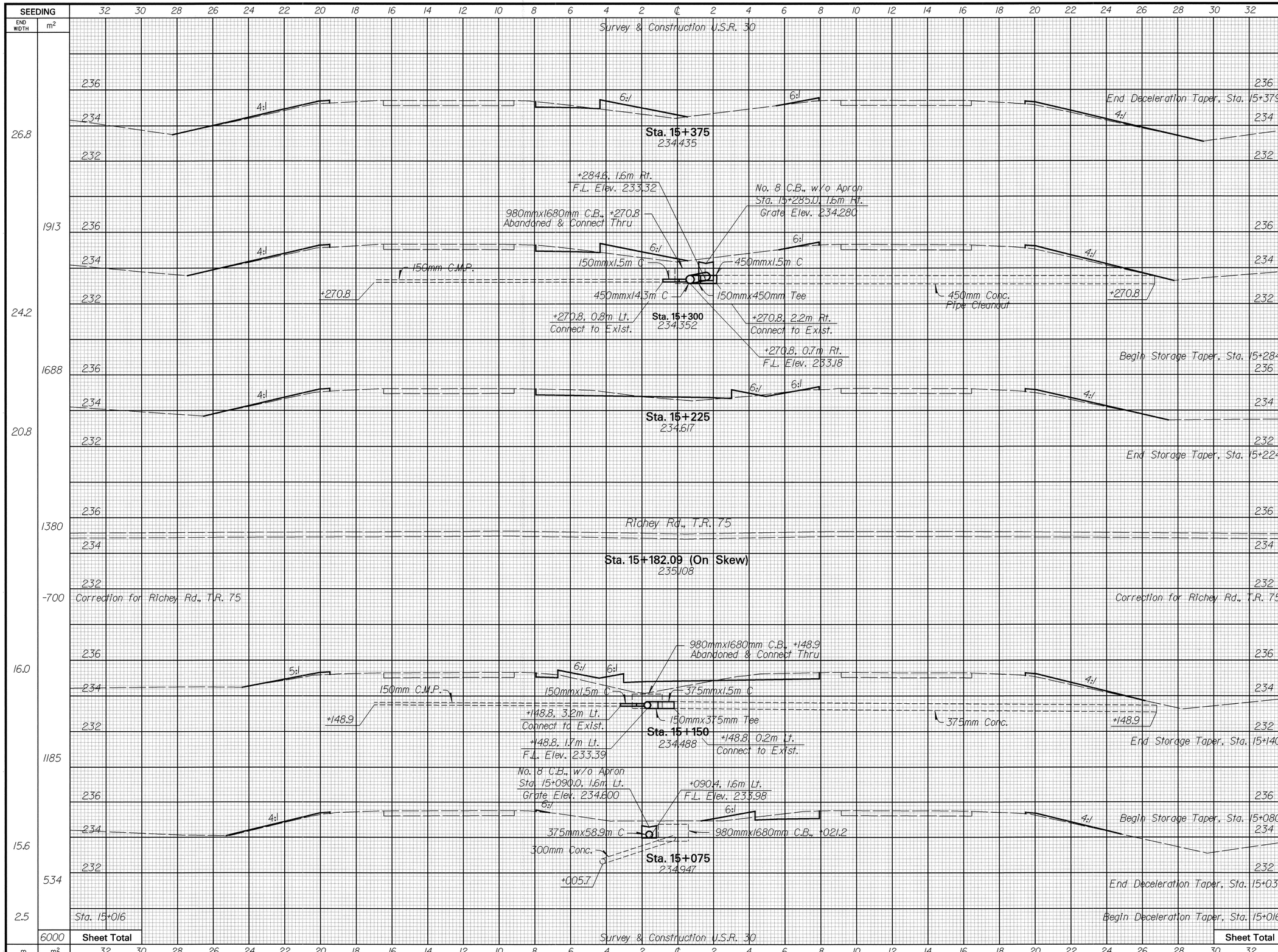

SEEDING END WIDTH (m)	SEEDING m²	EARTHWORK END AREA CUT (m²)	EARTHWORK END AREA FILL (m²)	EARTHWORK VOLUME CUT (m³)	EARTHWORK VOLUME FILL (m³)
26.8		0.4	3.2		
				40	245
	1913				
		0.6	3.0		
24.2				10	48
	1688	0.6	3.0		
				57	150
20.8					
		1.3	2.0		
	1380			104	229
	-700			-25	-150
16.0		1.5	4.2		
				15	39
	1185	1.5	3.5		
				78	132
		1.1	0.9		
15.6				51	42
	534	1.0	0.8		
				8	14
2.5		0	0.1		
	6000			338	749

Scale in Meters 0 2 4 1:100 Ratio

CALCULATED NJV CHECKED DJS

CROSS SECTIONS - U.S.R. 30
Sta. 15+075 to Sta. 15+375

VAN-30-6.618(4.05)

DESIGN FILE : i:\pd\van30d\v30gx6.dgn
USERNAME : rhermon
DATE : 11-SEP-1997
TIME : 15:36

DESIGN FILE : i:\pd\van30d\v30gx6.dgn
USERNAME : rhermon
DATE : 12-SEP-1997
TIME : 08:11

SEEDING END WIDTH	SEEDING m²	Survey & Construction U.S.R. 30	EARTHWORK END AREA CUT	EARTHWORK END AREA FILL	EARTHWORK VOLUME CUT	EARTHWORK VOLUME FILL
		32 30 28 26 24 22 20 18 16 14 12 10 8 6 4 2 ℄ 2 4 6 8 10 12 14 16 18 20 22 24 26 28 30 32				
26.4	1583	4:1 6:1 6:1 4:1 +728.4 150mm C.M.P. 980mmx1680mm C.B., +728.3 375mm Conc. +728.3 **Sta. 15+750** 234.061	0	1.7	0	113
15.8	780	6:1 6:1 4:1 **Sta. 15+675** 234.601	0	1.3	0	49
5.0	424	300mm Conc. 980mmx1680mm C.B., +609.8 +594.4 **Sta. 15+600** 235.309	0	0	0	8
	-150	Correction for Structures			0	-6
6.3	1001	980mmx1680mm C.B., +566.7 4:1 300mm Conc. +581.6 **Sta. 15+525** 235.115	0	0.2	0	71
20.4	1770	4:1 6:1 6:1 4:1 **Sta. 15+450** 234.601	0	1.7	0	95
			Sta. 15+394	0	1.7	3	37
26.8		Sta. 15+375	End Deceleration Taper, Sta. 15+379	0.4	3.2		
	5408	**Sheet Total**	**Sheet Total**			3	367
m	m²	32 30 28 26 24 22 20 18 16 14 12 10 8 6 4 2 ℄ 2 4 6 8 10 12 14 16 18 20 22 24 26 28 30 32	m²	m²	m³	m³

Scale in Meters 0 2 4 1:100 Ratio

CALCULATED NJV CHECKED DJS

CROSS SECTIONS – U.S.R. 30
Sta. 15+450 to Sta. 15+750

VAN-30-6.618(4.05)

69
134

DESIGN FILE : i:\pd\van30dv\v30gx6.dgn
USERNAME : rhermon

DATE : 12-SEP-1997
TIME : 08:28

Survey & Construction U.S.R. 30

SEEDING END WIDTH	SEEDING m²	Sta.	EARTHWORK END AREA CUT m²	EARTHWORK END AREA FILL m²	EARTHWORK VOLUME CUT m³	EARTHWORK VOLUME FILL m³
		32 30 28 26 24 22 20 18 16 14 12 10 8 6 4 2 ℄ 2 4 6 8 10 12 14 16 18 20 22 24 26 28 30 32				
20.0	1613	Sta. 16+125 234.295	0	1.4	0	116
23.0	1789	Sta. 16+050 234.149	0	1.7	0	124
24.7	1890	Sta. 15+975 234.300	0	1.6	0	154
25.7	1913	Sta. 15+900 234.420	0	2.5	0	161
25.3	1939	Sta. 15+825 234.480	0	1.8	0	131
26.4		Sta. 15+750	0	1.7		
	9144	Sheet Total			0	686
m	m²		m²	m²	m³	m³

Survey & Construction U.S.R. 30

Scale in Meters 0 2 4 1:100 Ratio

CALCULATED N.J.V. CHECKED D.J.S.

CROSS SECTIONS – U.S.R. 30
Sta. 15+825 to Sta. 16+125

VAN-30-6.618(4.05)

70
134

DESIGN FILE : i:\pd\van30d\v30gx6.dgn
USERNAME : rhermon

DATE : 12-SEP-1997
TIME : 09:22

Survey & Construction U.S.R. 30

SEEDING END WIDTH (m)	SEEDING m²	Station	EARTHWORK END AREA CUT (m²)	EARTHWORK END AREA FILL (m²)	EARTHWORK VOLUME CUT (m³)	EARTHWORK VOLUME FILL (m³)
19.5	1470	Sta. 16+500	0	2.0	0	150
19.7	1470	Sta. 16+425	0	2.0	0	150
19.5	1474	Sta. 16+350	0	2.0	0	154
19.8	1508	Sta. 16+275	0	2.1	0	154
20.4	1515	Sta. 16+200	0	2.0	0	128
20.0		Sta. 16+125	0	1.4		
	7437 Sheet Total				0 Sheet Total	736
m	m²		m²	m²	m³	m³

Sta. 16+500
234.531

Sta. 16+425
234.465

Sta. 16+350
234.297

Sta. 16+275
234.249

Sta. 16+200
234.191

+307.5 150mm C.M.P. 980mmx1680mm C.B., +307.4 375mm Conc. +307.1

+178.0 150mm C.M.P. 980mmx1680mm C.B., +177.8 375mm Conc. +177.6

Survey & Construction U.S.R. 30

Scale in Meters 0 2 4 1:100 Ratio

CALCULATED N.V CHECKED D.S

CROSS SECTIONS – U.S.R. 30
Sta. 16+200 to Sta. 16+500

VAN-30-6.618(4.05)

71
134

SEEDING END WIDTH	SEEDING m²
22.0	1628
21.4	1523
19.2	1425
18.8	1425
19.2	1451
19.5	
	7452 Sheet Total

Survey & Construction U.S.R. 30

980mmx1680mm C.B., +900.6
Abandoned & Connect Thru

375mm Conc.

375mmx15°

+923.9

+928.7

+901.2, 1.6m Lt.
Connect to Exist.

Sta. 16+875
234.129

375mmx48.Jm C

+932.7
375mm Conc.

1200mm Conc.

+939.6

Begin Storage Taper, Sta. 16+855

No. 8 C.B., w/o Apron
Sta. 16+854.4, 0.9m Lt.
Grate Elev. 234.11

+854.4, 0.9m Lt.
F.L. Elev. 233.50

375mmx48.Jm C

Sta. 16+800
234.205

End Deceleration Taper, Sta. 16+760

Begin Deceleration Taper, Sta. 16+745

Sta. 16+725
234.256

+672.9

150mm C.M.P.

980mmx1680mm C.B., +672.9

375mm Conc.

+672.7

Sta. 16+650
234.298

Sta. 16+575
234.413

Sta. 16+500

Survey & Construction U.S.R. 30

EARTHWORK	END AREA		VOLUME	
	CUT	FILL	CUT	FILL
	0.5	4.1		
			9	71
	0.4	3.0		
			19	157
	0.3	2.7		
			12	104
	0.3	2.5		
			2	29
	0	1.4		
			0	28
	0	1.4		
			0	109
	0	1.5		
			0	124
	0	1.8		
			0	143
Sta. 16+500	0	2.0		
Sheet Total			42	765
	m²	m²	m³	m³

Scale in Meters 0 2 4 1:100 Ratio

CALCULATED NJV CHECKED DJS

CROSS SECTIONS – U.S.R. 30
Sta. 16+575 to Sta. 16+875

VAN-30-6.618(4.05)

72
134

DESIGN FILE : i:\pd\van30d\v30gx6.dgn
USERNAME : rhermon

DATE : 12-SEP-1997
TIME : 12:45

CROSS SECTIONS – U.S.R. 30
Sta. 16+950 to Sta. 17+250

VAN-30-6.618(4.05)

Scale in Meters 0 1 2 4 — 1:100 Ratio

CALCULATED N.V. CHECKED D.S.

DESIGN FILE : i:\pd\van30d\v30gx7.dgn
USERNAME : rhermon

DATE : 12-SEP-1997
TIME : 15:07

Survey & Construction U.S.R. 30

SEEDING END WIDTH (m)	SEEDING m²	EARTHWORK END AREA CUT (m²)	EARTHWORK END AREA FILL (m²)	EARTHWORK VOLUME CUT (m³)	EARTHWORK VOLUME FILL (m³)
16.2					
32.6	1578	Ahd. 0 / Bk. 0.2	1.4 / 4.5	12	204
20.0		Sta. 17+190, Ahd. 0.2 / Sta. 17+190, Bk. 0	2.3 / 2.3		
18.0				0	47
	263	Begin Deceleration Taper, Sta. 17+168	0	2.0	
17.0				2	36
	1425	End Deceleration Taper, Sta. 17+153	0.3	2.8	
				16	148
21.0			0.3	2.8	
	1519			41	248
19.5			0.8	3.8	
				21	101
	3113	End Storage Taper, Sta. 16+999	0.8	4.0	
				55	357
	-1025			-10	-190
		End Storage Taper, Sta. 16+915	0.5	4.5	
				20	172
22.0		Sta. 16+875	0.5	4.1	
	6873	Sheet Total		157	1123

Sta. 17+250
233.974

Sta. 17+175
234.182

Sta. 17+100
234.210

Sta. 17+025
234.209

Sta. 16+956.64 (On Skew)
234.808

For Quantities Ahd.
See Ramp "C" X-Sections

℄ Ramp "C"

No. 8 C.B., w/o Apron
Sta. 17+058.0, 11'Rt.
Grate Elev. 234.160
375mmx81.7m C
+057.6, 11.1mRt.
F.L. Elev. 233.50

980mmx1680mm C.B., +977.8
Abandoned & Connect Thru
375mmx81.7m C
375mm Conc.
+977.8
+976.3, 1.5mRt.
Connect to Exist.

Liberty Union Rd., C.R. 77
Correction for Liberty Rd., C.R. 77

Survey & Construction U.S.R. 30

Survey & Construction U.S.R. 30

For Quantities Ahd., See Ramp "A" X-Sections

For Quantities Bk., See Ramp "D" X-Sections

Sta. 17+625
234.299

Ahd., Sta. 17+590
Bk., Sta. 17+590

Sta. 17+590, Ahd.
Sta. 17+590, Bk.

℄ Ramp "A"

+526.0

150mm C.M.P.

980mmx1680mm C.B., +526.1

375mm Conc.

+526.1

Sta. 17+550
234.077

℄ Ramp "A"

+480.8

300mm Conc.

+480.8

Sta. 17+475
234.142

Sta. 17+400
234.701

980mmx1680mm C.B., +323.3

+351.9

450mm Conc.

+352.5

+352.4

Sta. 17+325
233.787

Sta. 17+250

Survey & Construction U.S.R. 30

SEEDING END WIDTH	SEEDING m²	EARTHWORK END AREA CUT	EARTHWORK END AREA FILL	EARTHWORK VOLUME CUT	EARTHWORK VOLUME FILL
21.5		0.2	3.0		
	709			7	75
19.0		0.2	1.3		
17.0		0	1.3		
	740			0	60
20.0		0	1.7		
	1530			0	143
20.8		0	2.1		
	1328			0	139
14.6		0	1.6		
	1253			0	135
18.8		0	2.0		
	1313			0	128
16.2		0	1.4		
	6873 Sheet Total	Sheet Total		7	680
m	m²	m²	m²	m³	m³

Scale in Meters 0 2 4 1:100 Ratio

CALCULATED AJV CHECKED DJS

DESIGN FILE : i:\pd\van30d\v30gx7.dgn
USERNAME : rhermon

DATE : 15-SEP-1997
TIME : 08:53

CROSS SECTIONS - U.S.R. 30
Sta. 17+325 to Sta. 17+625

VAN-30-6.618(4.05)

74
134

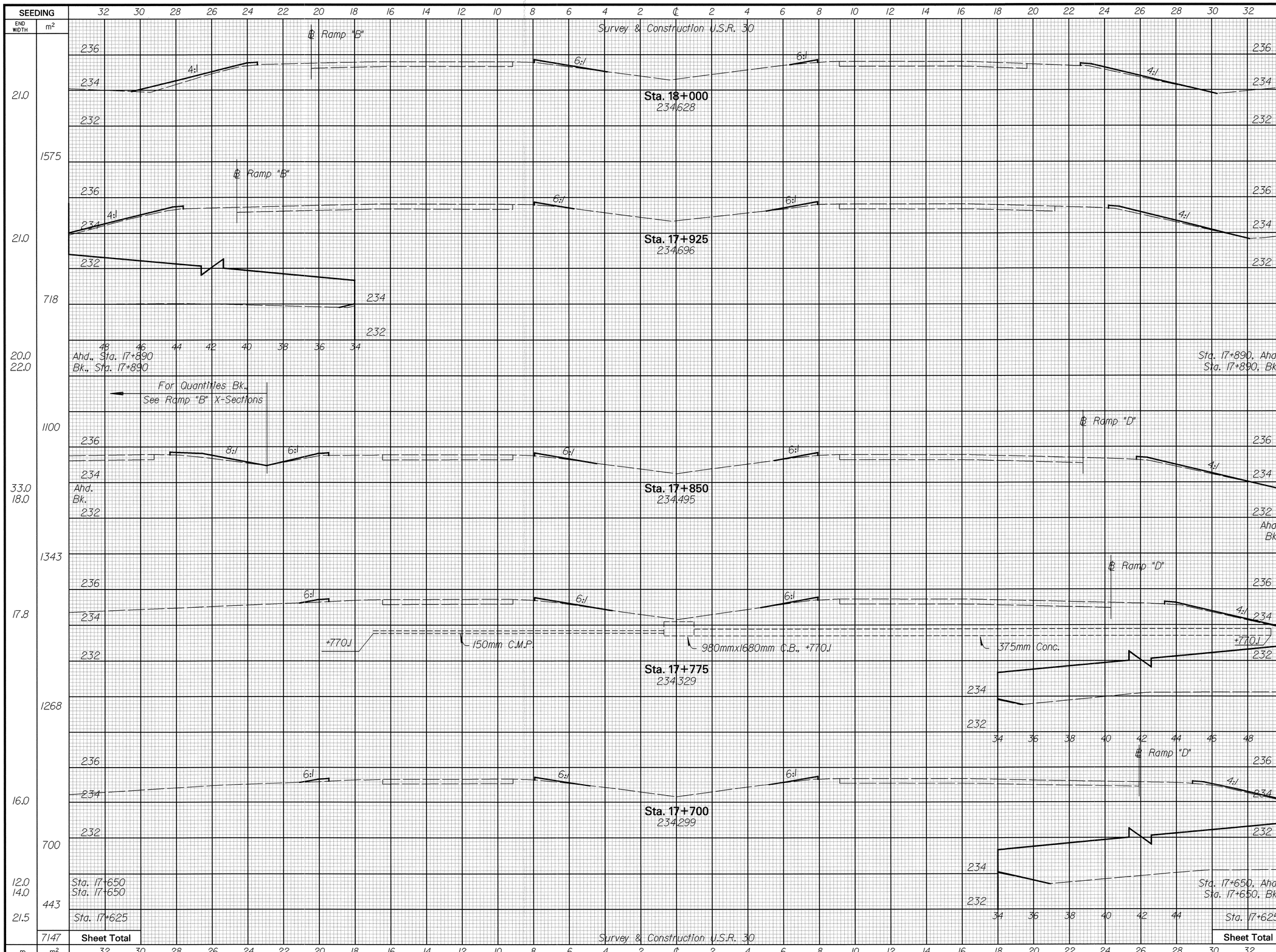

Station	Seeding	Earthwork End Area Cut	Earthwork End Area Fill	Volume Cut	Volume Fill
21.0		0	2.2		
	1575			0	150
21.0		0	1.8		
				0	58
	718				
20.0		0	1.5		
22.0		0.2	1.5		
	1100			8	104
33.0		0.2	3.7		
18.0		0	1.2		
	1343			0	86
17.8		0	1.1		
	1268			0	83
16.0		0	1.1		
	700			0	58
12.0		0	1.2		
14.0		0.2	1.2		
	443			5	53
21.5		0.2	3.0		
	7147			13	592
		m²	m²	m³	m³

Scale in Meters 0 2 4 1:100 Ratio

CALCULATED NJV CHECKED DJS

CROSS SECTIONS – U.S.R. 30
Sta. 17+700 to Sta. 18+000

VAN-30-6.618(4.05)

DESIGN FILE : i:\pd\van30d\v30gx7.dgn
USERNAME : rhermon
DATE : 15-SEP-1997
TIME : 11:26

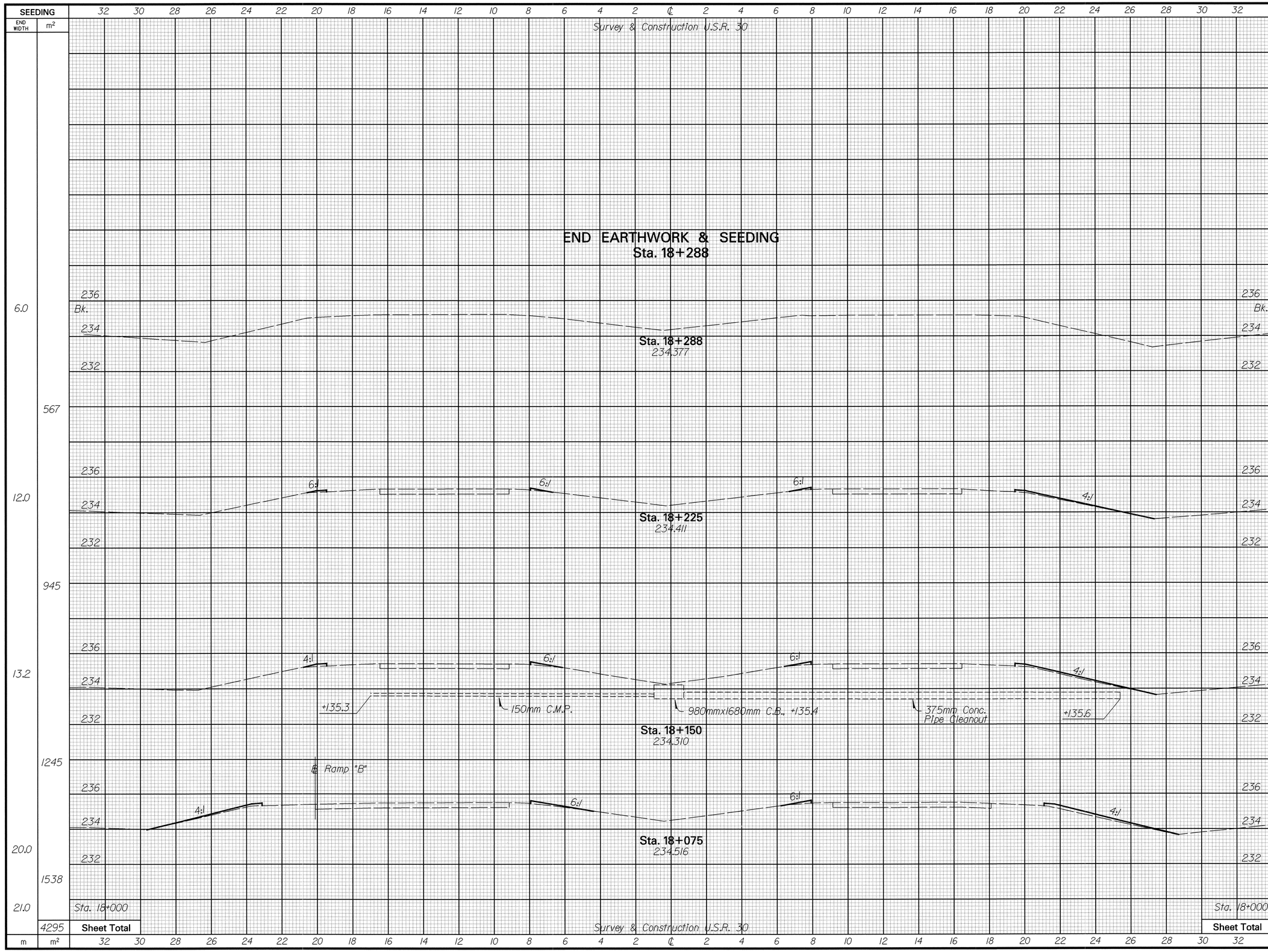

m	m²	Sheet Total	Sta. 18+000	Sheet Total
6.0			0	0
	567			0
12.0			0	0.7
	945			0
13.2			0	0.9
	1245			0
20.0			0	1.5
	1538			0
21.0			0	2.2
	4295			0

m²	m²	m³	m³
		0	311

EARTHWORK

END AREA CUT	END AREA FILL	VOLUME CUT	VOLUME FILL
0	0		
		0	22
0	0.7		
		0	60
0	0.9		
		0	90
0	1.5		
		0	139
0	2.2		

Scale in Meters 0 2 4 1:100 Ratio

CALCULATED NJV CHECKED DJS

CROSS SECTIONS – U.S.R. 30
Sta. 18+075 to Sta. 18+288

VAN-30-6.618(4.05)

DESIGN FILE : i:\pd\van30d\v30gx7.dgn
USERNAME : rhermon
DATE : 15-SEP-1997
TIME : 13:57

DESIGN FILE : i:\pd\van30d\v30gx7.dgn
USERNAME : rhermon

DATE : 16-SEP-1997
TIME : 13:14

SEEDING			EARTHWORK			
END WIDTH	m^2		END AREA		VOLUME	
			CUT	FILL	CUT	FILL
		Ramp "B"				
		END EARTHWORK & SEEDING Sta. 20+106				
		For Quantities See U.S.R. 30 X-Sections				
		For Quantities Ahd., See U.S.R. 30 X-Sections				
		238				
10.0		Bk.	0.2	2.0		
		236				
		234				
		6:1 5:1 4:1				
		Sta. 20+106 235.403				
	678				11	109
14.2		238	0.2	1.9		
		236				
		4:1 4:1				
		234				
		Sta. 20+050 235.455				
	700				13	80
13.8		238	0.3	1.3		
		236				
		4:1 4:1				
		234				
		Sta. 20+000 235.601				
	252				9	20
		238				
		℄ Ramp "B"				
		236				
3.0		Ahd.	0.3	0		
		234				
		Sta. 19+970 235.769				
		BEGIN EARTHWORK & SEEDING Sta. 19+970				
		Ramp "B"				
	1630	Sheet Total			33	209
m	m^2	32 30 28 26 24 22 20 18 16 14 12 10 8 6 4 2 ℄ 2 4 6 8 10 12 14 16 18 20 22 24 26 28 30 32	m^2	m^2	m^3	m^3

Scale in Meters 0 2 4 1:100 Ratio

CALCULATED N.V. CHECKED D.S.

CROSS SECTIONS - Ramp "A"
Sta. 19+970 to Sta. 20+106

VAN-30-6.618(4.05)

77
134

SEEDING			EARTHWORK			
END WIDTH	m²		END AREA CUT	END AREA FILL	VOLUME CUT	VOLUME FILL
		32 30 28 26 24 22 20 18 16 14 12 10 8 6 4 2 ℄ 2 4 6 8 10 12 14 16 18 20 22 24 26 28 30 32				
		Ramp "B"				
		END EARTHWORK & SEEDING Sta. 20+182				
		For Quantities And, See U.S.R. 30 X-Sections — *For Quantities See U.S.R. 30 X-Sections*				
		238 / 236 / 234				
15.0		4:1 — 8:1 — 6:1	0.2	2.5		
		Sta. 20+182 *235.717*				
	557				8	98
		238 / Bk. 236 / 234	0.3	3.6		
19.8		4:1 — 4:1				
	990	**Sta. 20+150** *235.717*			15	180
19.8		238 / 236 / 234	0.3	3.6		
		4:1 — 4:1				
	990	**Sta. 20+100** *235.772*			15	180
19.8		238 / 236 / 234	0.3	3.6		
		4:1 — 4:1				
	945	**Sta. 20+050** *235.836*			15	148
18.0		238 / 236 / 234	0.3	2.3		
		4:1 — 4:1				
	315	**Sta. 20+000** *236.001*			8	35
3.0		238 / Ahd. 236 / 234 — ℄ Ramp "A"	0.2	0		
		Sta. 19+970 *236.339*				
		BEGIN EARTHWORK & SEEDING Sta. 19+970				
		Ramp "B"				
	3797	Sheet Total			61	641
m	m²	32 30 28 26 24 22 20 18 16 14 12 10 8 6 4 2 ℄ 2 4 6 8 10 12 14 16 18 20 22 24 26 28 30 32	m²	m²	m³	m³

Scale in Meters 0 2 4 1:100 Ratio

CALCULATED N.V CHECKED D.S

CROSS SECTIONS – Ramp "B"
Sta. 19+970 to Sta. 20+182

VAN-30-6.618(4.05)

78
134

DESIGN FILE : i:\pd\van30d\v30gx7.dgn
USERNAME : rhermon

DATE : 16-SEP-1997
TIME : 10:50

SEEDING				EARTHWORK			
END WIDTH	m²			END AREA		VOLUME	
				CUT	FILL	CUT	FILL
3.0		Bk.		0.3	0		
	270					9	9
14.4				0.3	0.6		
	948					15	115
23.5				0.3	4.0		
	1208					15	193
24.8				0.3	3.7		
	1185					15	128
22.6				0.3	1.4		
	938					12	72
16.5		Ahd.		0.2	1.6		
	4549	Sheet Total				66	517
m	m²			m²	m²	m³	m³

Ramp "C"

END EARTHWORK & SEEDING
Sta. 17+481

℄ U.S.R. 224

238 / 236 / 234

Sta. 17+481
238.827

4:1 / 2:1

Sta. 17+450
238.833

2:1 / 2:1

Sta. 17+400
238.199

3:1 / 3:1

Sta. 17+350
237.114

4:1 / 4:1

Sta. 17+300
235.965

For Quantities
See U.S.R. 30 X-Sections

4:1 / 4:1 / 4:1

Sta. 17+252
235.331
For Quantities Bk.,
See U.S.R. 30 X-Sections

BEGIN EARTHWORK & SEEDING
Sta. 17+252
Ramp "C"

32 30 28 26 24 22 20 18 16 14 12 10 8 6 4 2 ℄ 2 4 6 8 10 12 14 16 18 20 22 24 26 28 30 32

Scale in Meters 0 2 4
1:100 Ratio

CALCULATED NJV
CHECKED DJS

CROSS SECTIONS – Ramp "C"
Sta. 17+252 to Sta. 17+481

VAN-30-6.618(4.05)

79
134

DESIGN FILE : i:\pd\van30d\v30gx7.dgn
USERNAME : rhermon
DATE : 16-SEP-1997
TIME : 10:50

DESIGN FILE : i:\pd\van30d\v30gx7.dgn
USERNAME : rhermon

DATE : 16-SEP-1997
TIME : 10:51

SEEDING				EARTHWORK			
END WIDTH	m²			END AREA		VOLUME	
				CUT	FILL	CUT	FILL
28.4	1285	238 / 236 / 234	Sta. 17+450 237.647	0.3	2.6	15	185
23.0	1088	238 / 236 / 234	Sta. 17+400 238.263	0.3	4.8	15	170
20.5	494	238 / 236 / 234	Sta. 17+350 238.486	0.3	2.0	13	42
3.0	Ahd.	238 / 236 / 234	Sta. 17+308 238.196	Ahd.	0		
m	2867 m²	Sheet Total		Sheet Total		43 m³	397 m³

Ramp "D"

℄ Ramp "C"

℄ U.S.R. 224

3:1 2:1 2:1

3:1 2:1

BEGIN EARTHWORK & SEEDING
Sta. 17+308

Scale in Meters 0 2 4
1:100 Ratio

CALCULATED N.V
CHECKED D.S

CROSS SECTIONS - Ramp "D"
Sta. 17+308 to Sta. 17+450

VAN-30-6.618(4.05)

80
134

DESIGN FILE : i:\pd\van30d\v30gx7.dgn
USERNAME : rhermon

DATE : 16-SEP-1997
TIME : 10:52

CROSS SECTIONS - Ramp "D"
Sta. 17+500 to Sta. 17+625

VAN-30-6.618(4.05)

Scale in Meters 0 2 4 1:100 Ratio

CALCULATED NJV CHECKED DJS

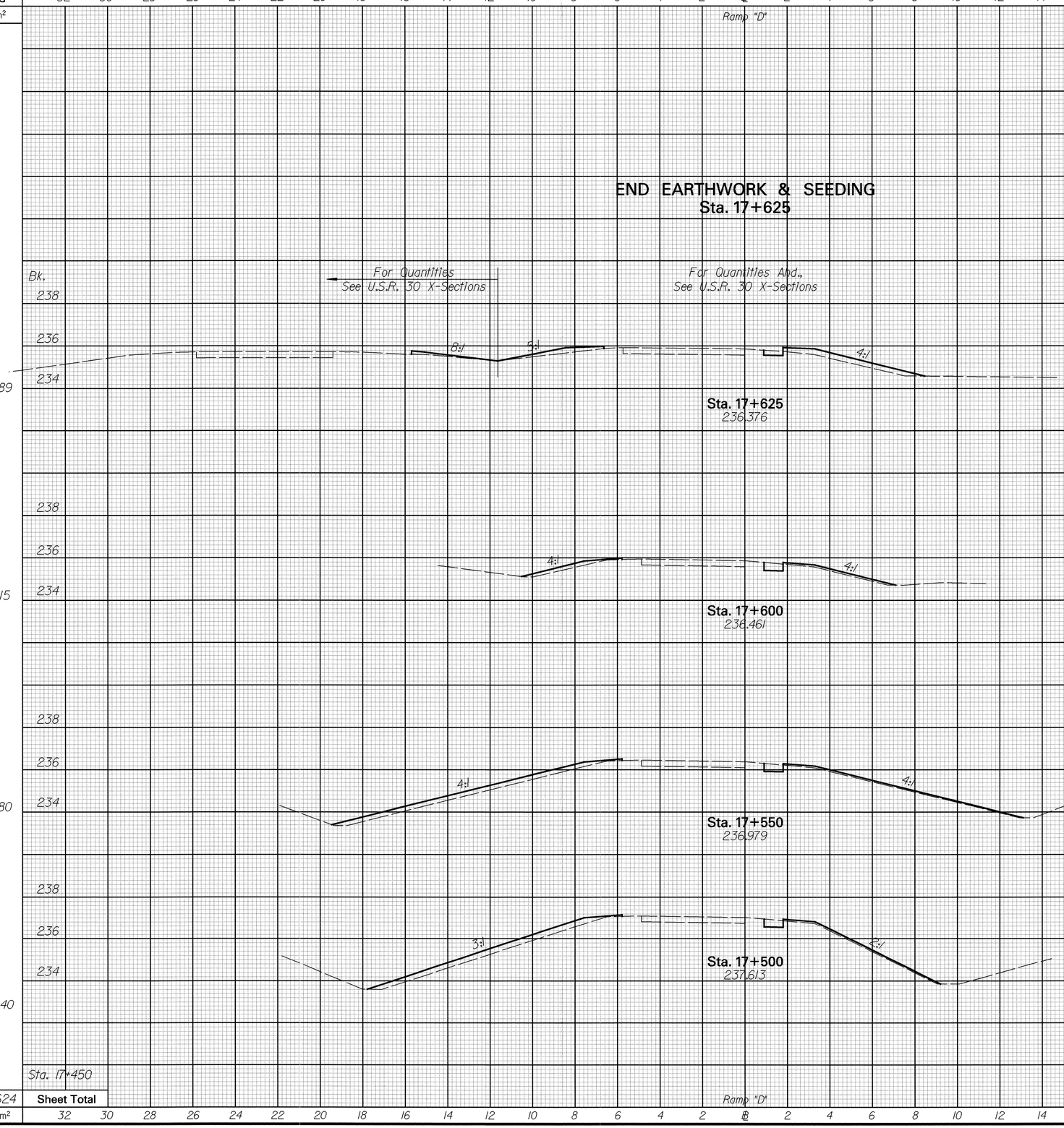

SEEDING END WIDTH (m)	SEEDING m²	EARTHWORK END AREA CUT (m²)	EARTHWORK END AREA FILL (m²)	EARTHWORK VOLUME CUT (m³)	EARTHWORK VOLUME FILL (m³)
		Bk.			
12.5		0.2	2.2		
	289			6	40
10.6		0.3	1.0		
	915			15	113
26.0		0.3	3.5		
	1180			15	175
21.2		0.3	3.5		
	1240			15	153
28.4		Sta. 17+450			
	3624	0.3	2.6	51	481
m	m²	Sheet Total		m³	m³

81
134

PAVEMENT REPAIRS

Location		Lane	Estimated No. of Removals	Length	Width		255	
							Full Depth Pavement Removal and Rigid Repl., Class C	Full Depth Pavement Sawing
				m	m		m^2	m
Westbound U.S.R. 30								
		Driving	200	1.83	3.66		1340	1464
		Passing	100	1.83	3.66		670	732
Sub-Total							2010	2196
Eastbound U.S.R. 30								
		Driving	200	1.83	3.66		1340	1464
		Passing	100	1.83	3.66		670	732
Sub-Total							2010	2196
Totals							4020	4392

Quantities Carried to General Summary, Sheet 14.

Quantity Per Repair

255 Full Depth Pavement Sawing
(3.66+3.66) = 7.32 m

255 Full Depth Pavement Removal and Rigid Replacement, Class C
(1.83)(3.66) = 6.70 m^2

MISCELLANEOUS CALCULATIONS

202 Raised Pavement Marker Removed For Storage = 1485 Each

618 Rumble Strips, Type 2 (Asphalt) = 46.7 Kilometers

659 Commercial Fertilizer
(0.1) (248,941) = 24 894 Kilogram

Quantities Above Carried to General Summary, Sheets 13 & 14.

659 Seeding & Mulching
(From Cross Sections) = 248 941 Square Meter

659 Water
(248,941) (5/1000) = 1245 Cubic Meter

Quantity Above Carried to "Watering Permanent Seeded Areas" General Note on Sheet 8.

GUARDRAIL TABLE

Reference No.	Sheet No.	Station		Side	202			606								622	Special	626	626
					Guardrail Removed	Guardrail Removed, Barrier Design		Guardrail, Type 5	Guardrail, Barrier Design, Type 5	Anchor Assembly, Type A	Anchor Assembly, Type E	Anchor Assembly, Type T	Bridge Terminal Assembly, Type I	Bridge Terminal Assembly, Type 4		Concrete Barrier, Type D	Impact Attenuator, Type I, Bi-Directional	Barrier Reflector, Type A	Barrier Reflector, Type B
		From	To		Meter	Meter		Meter	Meter	Each	Each	Each	Each	Each		Meter	Each	Each	Each
1-G	31	8+874.96	8+977.83	Lt.	87.63			83.82			1	1						5	
2-G	31	8+800.90	8+903.77	Rt.	87.63			83.82			1	1						5	
3-G	31	9+446.36	9+500	Rt.		19.1		38.4			1							2	
4-G	31	9+454.57	9+500	Rt.				30.19			1							2	
5-G	32	9+543.32	9+573.32	Lt.	30.48											18.3			1
6-G	32	9+553.88	9+565.31	Lt.	7.62			3.81				1		1				1	
7-G	32	9+582.16	9+677.41	Lt.	53.34			81.915			1			1				4	
8-G	32	9+574.83	9+692.94	Lt.	49.53	22.86		102.87			1			1				5	
9-G	32	9+500	9+556.85	Rt.	53.34	3.76		53.04						1				2	
10-G	32	9+500	9+549.82	Rt.	53.34			46.01						1				2	
11-G	32	9+566.38	9+589.24	Rt.	30.48			19.05				1		1				2	
12-G	32	9+559.34	9+602.32	Rt.	57.15			24.765					1	1		18.9		1	1
13-G	39	14+987.61	14+999.04	Lt.	11.43			7.62				1		1				1	
14-G	39	14+980.57	14+992.00	Lt.	3.81			7.62				1		1				1	
15-G	39	15+021.90	15+100	Lt.	60.96			78.1						1				3	
16-G	39	15+014.96	15+100	Lt.	38.10	22.86		85.14						1				3	
17-G	39	14+873.06	14+83.55	Rt.	38.10	22.86		95.25			1			1				5	
18-G	39	14+892.69	14+976.51	Rt.	53.34			68.58			1			1				4	
19-G	39	15+006.41	15+017.84	Rt.	7.62			7.62				1		1				1	
20-G	39	14+999.37	15+010.811	Rt.	11.43			7.62				1		1				1	
21-G	40	15+100	15+117.15	Lt.				1.91			1							2	
22-G	40	15+100	15+125.35	Lt.				10.11			1							2	
23-G	40	15+566.15	15+577.58	Lt.	7.62			7.62				1		1				1	
24-G	40	15+564.00	15+575.43	Lt.	7.62			3.81				1		1				1	
25-G	40	15+604.25	15+691.88	Lt.	53.34			72.39			1			1				5	
26-G	40	15+602.10	15+712.59	Lt.	38.10	22.86		95.25			1			1				5	
27-G	40	15+462.36	15+572.85	Rt.	38.10	22.86		95.25			1			1				5	
28-G	40	15+475.45	15+570.70	Rt.	53.34			80.01			1			1				4	
29-G	40	15+599.52	15+610.95	Rt.	7.62			7.62				1		1				1	
30-G	40	15+597.37	15+608.80	Rt.	7.62			7.62				1		1				1	
31-G	42	17+094.31	17+155.27	Rt.	57.15			41.91			1	1						3	
32-G	42	17+109.85*	17+155.57*	Rt.	45.72			26.67			1	1						2	
33-G	43	17+385.40	17+434.13	Lt.	72.39			9.525			1		1			24.6		2	2
34-G	43	17+386.68	17+453.43	Lt.				15.24	38.10			1					1		
35-G	43	17+342.00	17+408.75	Rt.				15.24	38.10			1					1		
36-G	43	17+288.885	17+406.00	Rt.	68.58			81.915			1		1			20.6		3	2
37-G	43	17+274.91*	17+446.36*	Lt.	148.59			160.02		1		1						6	
38-G	43	17+271.69*	17+450*	Rt.	102.11			170.69		1								6	
39-G	43	17+450*	17+477.43*	Rt.	27.43			27.43										1	
40-G	43	17+350.20#	17+380#	Lt.	33.38			22.18		1								1	
41-G	43	17+309.14#	17+380#	Rt.	70.86			63.24										3	
42-G	43	17+380#	17+530#	Lt.	149.5			150										5	
43-G	43	17+380#	17+530#	Rt.	150.12			150										5	
44-G	44	17+530#	17+559.75#	Lt.				25.94				1						1	
45-G	44	17+530#	17+560.60#	Rt.				26.79				1						1	
Totals					1874.52	137.16		2293.62	76.20	4	18	20	3	23		82.5	2	116	6

Carried to General Summary, Sheets 13 & 14.

* Ramp "C" Stationing
\# Ramp "D" Stationing

DESIGN FILE : i:\pd\van30d\v30grmc.dgn
USERNAME : rhermon

DATE : 03-SEP-1997
TIME : 10:36

CALCULATED DJS CHECKED

MISCELLANEOUS CALCULATIONS AND TABLES

VAN-30-6.618(4.05)

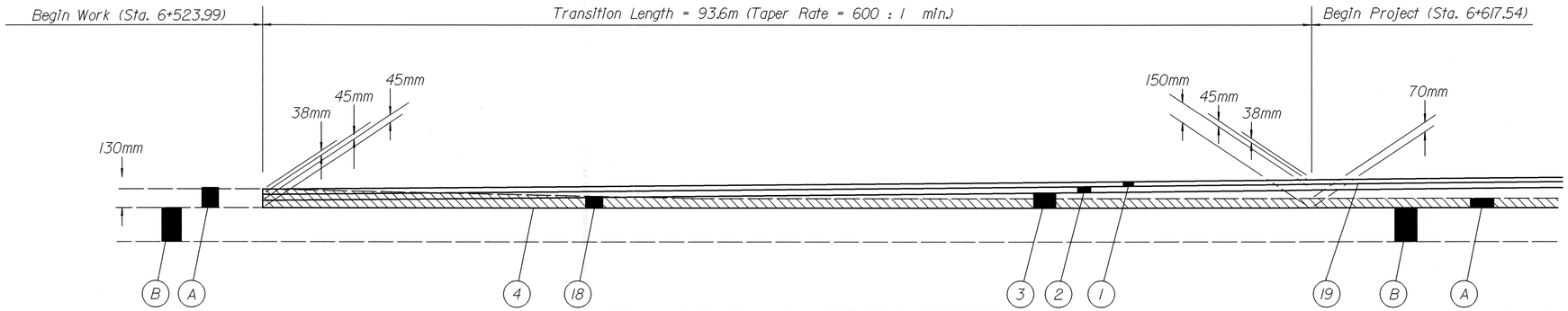

TRANSITION @: BEGIN WORK

EXISTING LEGEND

- (A) Asphalt Concrete
- (B) Reinforced Portland Cement Concrete Pavement
- (D) Bituminous Aggregate Base

PROPOSED LEGEND

(1)	Item 446	38mm Asphalt Concrete Surface Course, Type 1H as per plan
(2)	Item 446	45mm Asphalt Concrete Intermediate Course Type 2, PG 64-28
(3)	Item 301	Bituminous Aggregate Base, PG 64-22 (Thickness as shown)
(4)	Item 407	Tack Coat
(18)	Item 254	Pavement Planing, Bituminous (Thickness as Shown)
(19)	Item 407	Tack Coat for Intermediate Course

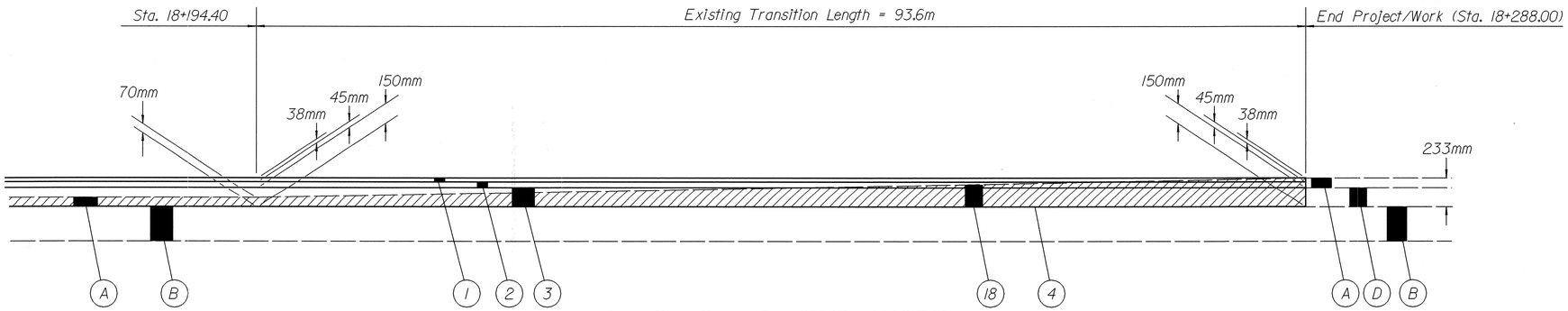

TRANSITION @: END WORK

TRANSITION DETAILS

VAN-30-6.618(4.05)

83
134

DESIGN FILE : i:\pd\van30d\v30gm2.dgn
USERNAME : rhermon

DATE : 03-SEP-1997
TIME : 10:44

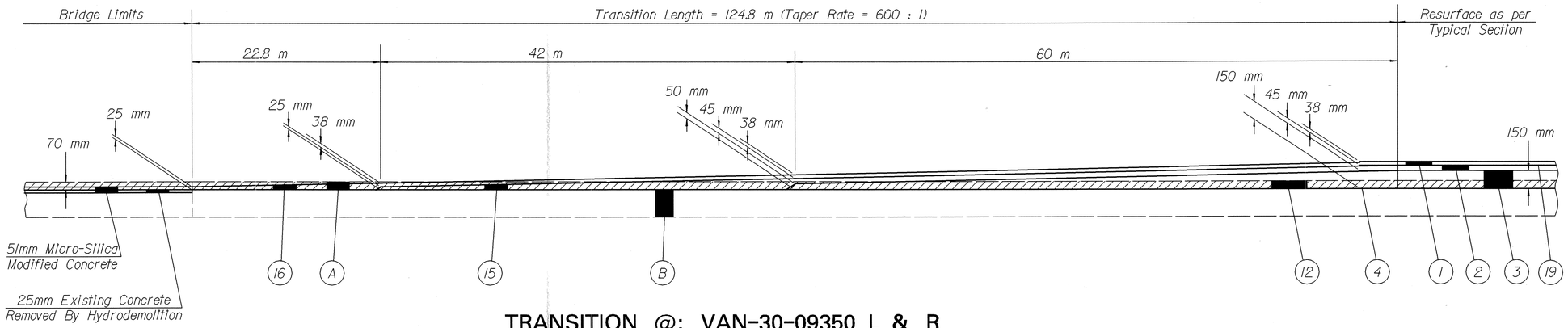

TRANSITION @: VAN-30-09350 L & R
VAN-30-14774 L & R
VAN-30-15369 L & R

Sta. 9+437.25 to Sta. 9+562.05 = 124.80 m
Sta. 9+569.63 to Sta. 9+694.43 = 124.80 m
Sta. 14+864.24 to Sta. 14+989.04 = 124.80 m
Sta. 15+009.38 to Sta. 15+134.18 = 124.80 m
Sta. 15+450.55 to Sta. 15+575.35 = 124.80 m
Sta. 15+599.59 to Sta. 15+724.39 = 124.80 m

Total Length = 748.80 m

EXISTING LEGEND

- (A) Asphalt Concrete
- (B) Reinforced Portland Cement Concrete Pavement
- (C) Subbase
- (D) Bituminous Aggregate Base

PROPOSED LEGEND

- (1) Item 446 38 mm Asphalt Concrete Surface Course, Type IH, as per plan
- (2) Item 446 45 mm Asphalt Concrete Intermediate Course Type 2, PG 64-28
- (3) Item 301 Bituminous Aggregate Base, PG 64-22 (Thickness as shown)
- (4) Item 407 Tack Coat
- (12) Item 254 Pavement Planing, Bituminous (Thickness 70 mm Nominal)
- (15) Item 446 Asphalt Concrete Intermediate Course Type 2, PG 64-28 (Thickness as Shown)
- (16) Item 446 Asphalt Concrete Surface Course, Type IH (Thickness as Shown), as per plan
- (19) Item 407 Tack Coat for Intermediate Course

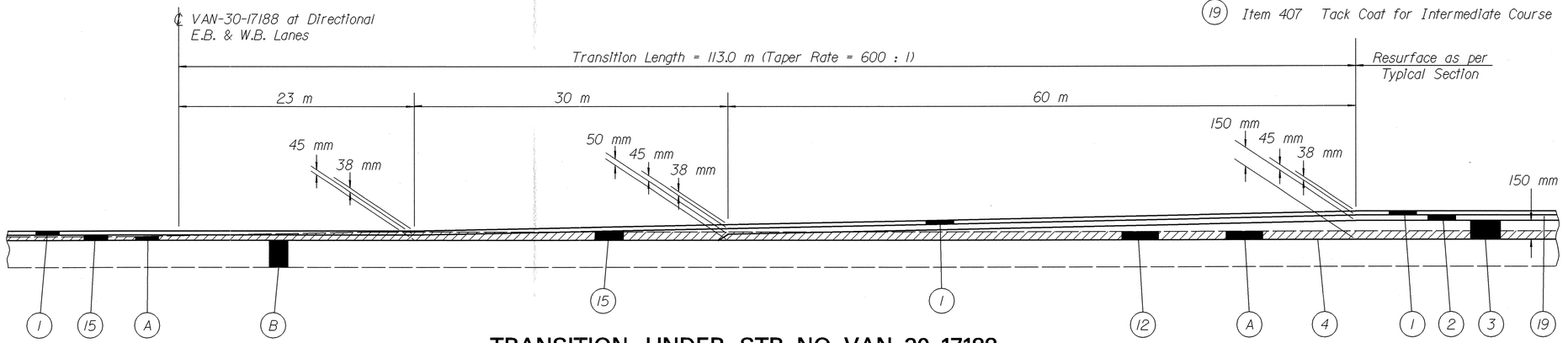

TRANSITION UNDER STR. NO. VAN-30-17188

Sta. 17+284.74 to Sta. 17+510.74 = 226.00 m

Total Length = 226.00 m

TRANSITION DETAILS

VAN-30-6.618(4.05)

84
134

DESIGN FILE : i:\pd\van30d\v30gm3.dgn
USERNAME : rhermon

DATE : 03-SEP-1997
TIME : 10:51

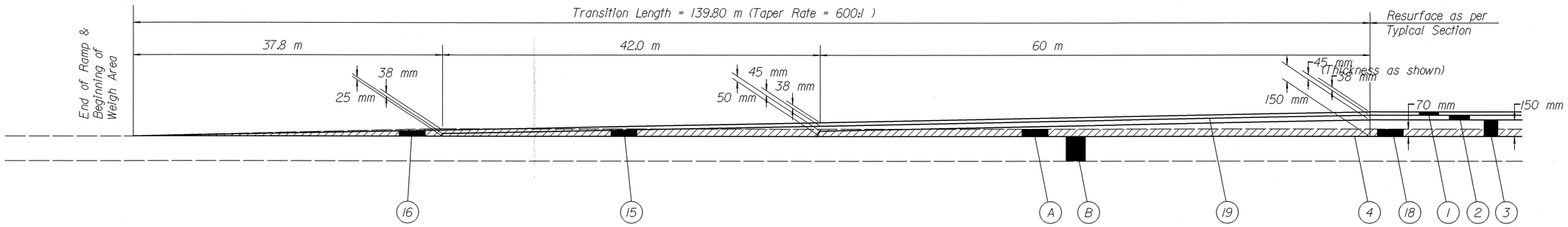

EXISTING LEGEND

- (A) Asphalt Concrete
- (B) Reinforced Portland Cement Concrete Pavement
- (C) Subbase
- (D) Bituminous Aggregate Base

TRANSITION @: WEIGH STATION ENTRANCE & EXIT RAMPS

Ramp "A" : Sta. 10+362.44 to Sta. 10+502.24 = 139.80 m
Ramp "B" : Sta. 10+547.96 to Sta. 10+687.76 = 139.80 m
Total Length = 279.60 m

PROPOSED LEGEND

(1)	Item 446	38 mm Asphalt Concrete Surface Course, Type IH, as per plan
(2)	Item 446	45 mm Asphalt Concrete Intermediate Course Type 2, PG 64-28
(3)	Item 301	Bituminous Aggregate Base, PG 64-22 (Thickness as shown)
(4)	Item 407	Tack Coat
(8)	Item 254	Pavement Planing, Bituminous (Thickness 38 mm Nominal)
(18)	Item 254	Pavement Planing, Bituminous (Thickness as shown)
(15)	Item 446	Asphalt Concrete Intermediate Course Type 2, PG 64-28 (Thickness as Shown)
(16)	Item 446	Asphalt Concrete Surface Course, Type IH (Thickness as Shown), as per plan
(19)	Item 407	Tack Coat for Intermediate Course

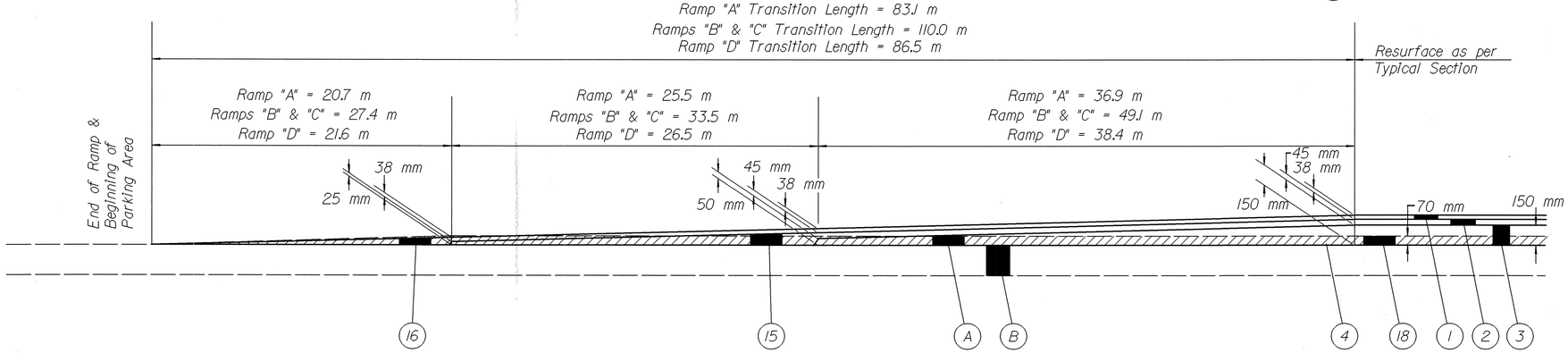

TRANSITION @: REST AREA ENTRANCE & EXIT RAMPS

Ramp "A" : Sta. 13+559.03 to Sta. 13+642.13 = 83.10 m
Ramp "B" : Sta. 13+797.09 to Sta. 13+907.09 = 110.00 m
Ramp "C" : Sta. 13+590.14 to Sta. 13+700.14 = 110.00 m
Ramp "D" : Sta. 13+855.05 to Sta. 13+941.55 = 86.50 m
Total Length = 389.60 m

DESIGN FILE : i:\pd\van30d\v30gm4.dgn
USERNAME : rhermon
DATE : 03-SEP-1997
TIME : 11:05

TRANSITION DETAILS

VAN-30-6.618(4.05)

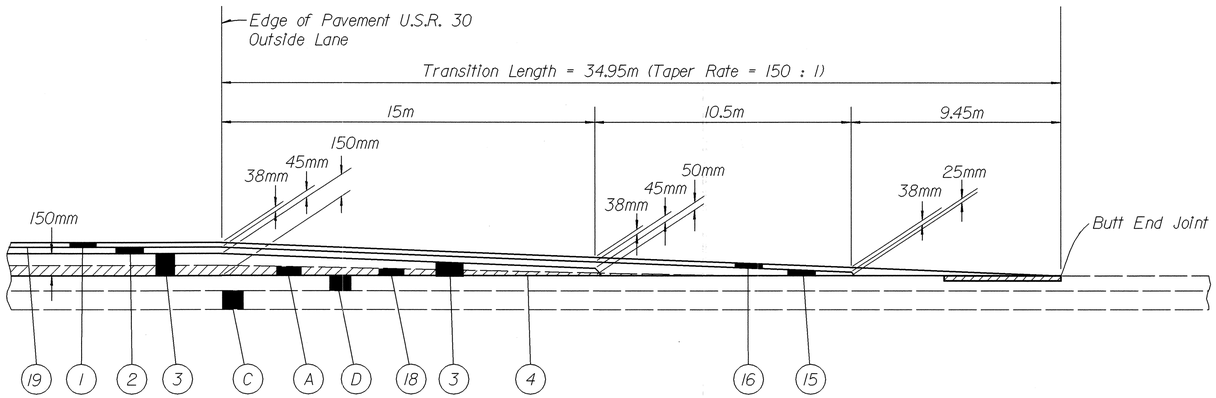

SECTION A-A

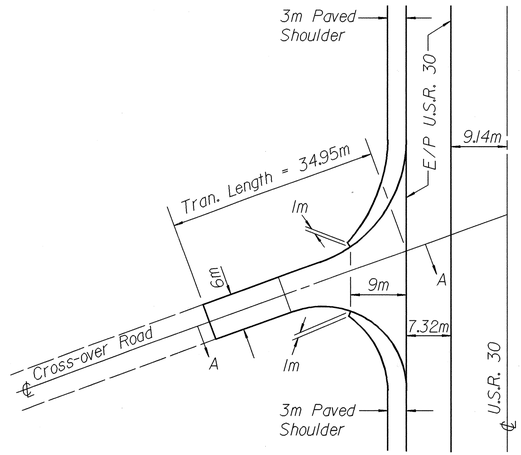

PLAN VIEW

TRANSITION DETAILS FOR AT-GRADE INTERSECTIONS

EXISTING LEGEND

- (A) Asphalt Concrete
- (B) Reinforced Portland Cement Concrete Pavement
- (C) Subbase
- (D) Bituminous Aggregate Base

PROPOSED LEGEND

(1)	Item 446	38 mm Asphalt Concrete Surface Course, Type 1H, as per plan
(2)	Item 446	45 mm Asphalt Concrete Intermediate Course Type 2, PG 64-28
(3)	Item 301	Bituminous Aggregate Base, PG 64-22 (Thickness as shown)
(4)	Item 407	Tack Coat
(15)	Item 446	Asphalt Concrete Intermediate Course Type 2, PG 64-28 (Thickness as Shown)
(16)	Item 446	Asphalt Concrete Surface Course, Type 1H (Thickness as Shown), as per plan
(18)	Item 254	Pavement Planing, Bituminous (Thickness as Shown)
(19)	Item 407	Tack Coat for Intermediate Course

DESIGN FILE : i:\pd\van30d\v30gm5.dgn
USERNAME : rhermon
DATE : 03-SEP-1997
TIME : 11:31

TRANSITION DETAILS

VAN-30-6.618(4.05)

86
134

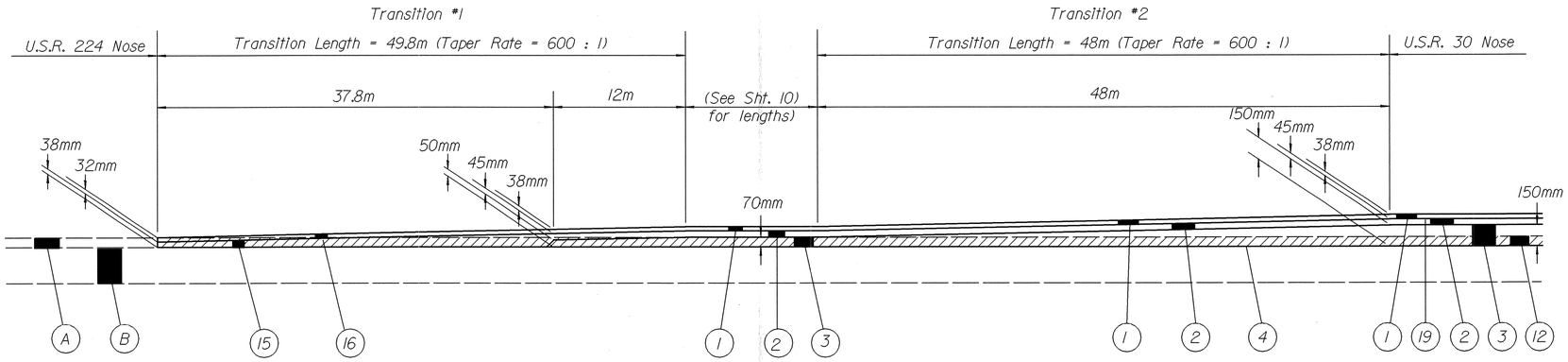

TRANSITION @: U.S.R. 224 ENTRANCE & EXIT RAMPS (Eastbound & Westbound)

Transition #1

Ramp "A"	Sta. 19+965.99 to Sta. 20+015.79	=	49.80m
Ramp "B"	Sta. 19+980.74 to Sta. 20+030.54	=	49.80m
Ramp "C"	Sta. 17+435.29 to Sta 17+485.09	=	49.80m
Ramp "D"	Sta. 17+303.79 to Sta. 17+353.59	=	49.80m
	Total Length	=	199.20m

Transition #2

Ramp "A"	Sta. 20+074.84 to Sta. 20+122.84	=	48.00m
Ramp "B"	Sta. 20+173.94 to Sta. 20+221.94	=	48.00m
Ramp "C"	Sta. 17+230.74 to Sta. 17+182.74	=	48.00m
Ramp "D"	Sta. 17+605.46 to Sta. 17+653.46	=	48.00m
	Total Length	=	192.00m

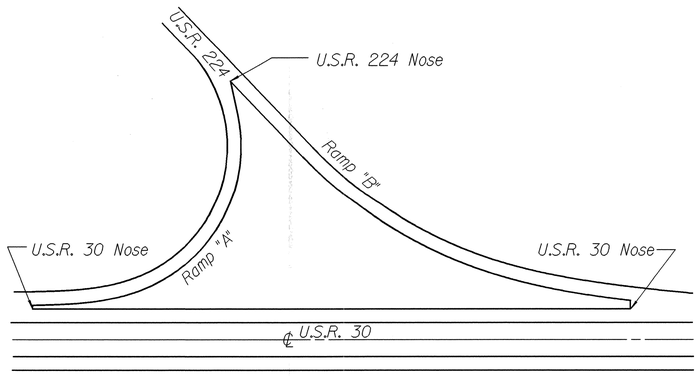

PLAN VIEW, U.S.R. 224 RAMPS

PROPOSED LEGEND

1	Item 446	38 mm Asphalt Concrete Surface Course, Type 1H, as per plan
2	Item 446	45 mm Asphalt Concrete Intermediate Course Type 2, PG 64-28
3	Item 301	Bituminous Aggregate Base, PG 64-22 (Thickness as shown)
4	Item 407	Tack Coat
8	Item 254	Pavement Planing, Bituminous (Thickness 38mm Nominal)
12	Item 254	Pavement Planing, Bituminous (Thickness 70mm Nominal)
15	Item 446	Asphalt Concrete Intermediate Course Type 2, PG 64-28 (Thickness as Shown)
16	Item 446	Asphalt Concrete Surface Course, Type 1H (Thickness as Shown), as per plan
19	Item 407	Tack Coat for Intermediate Course

EXISTING LEGEND

A	Asphalt Concrete
B	Reinforced Portland Cement Concrete Pavement

TRANSITION DETAILS

VAN-30-6.618(4.05)

87
134

DESIGN FILE : i:\pd\van30d\v30gm6.dgn
USERNAME : rhermon
DATE : 17-SEP-1997
TIME : 09:11

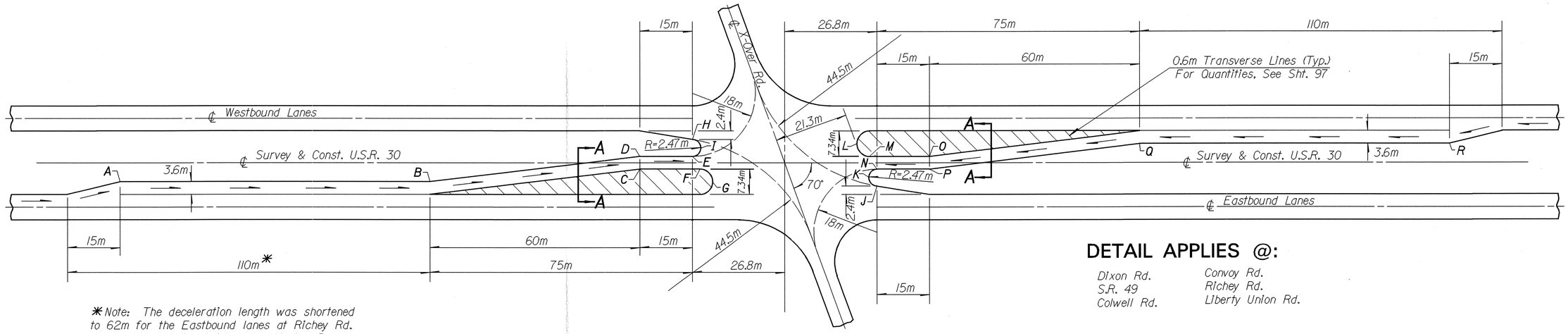

*Note: The deceleration length was shortened to 62m for the Eastbound lanes at Richey Rd. due to the mainline bridge over Monkey Run.

The 70° skew is reversed for Dixon Rd. and Convoy Rd.

DETAIL APPLIES @:

Dixon Rd.
S.R. 49
Colwell Rd.
Convoy Rd.
Richey Rd.
Liberty Union Rd.

PROPOSED LEGEND

(1) Item 446 38 mm Asphalt Concrete Surface Course, Type 1H, as per plan
(2) Item 446 45 mm Asphalt Concrete Intermediate Course Type 2, PG 64-28
(3) Item 301 Bituminous Aggregate Base, PG 64-22 (Thickness as shown)
(6) Item 304 150mm Aggregate Base
(7) Item 408 Bituminous Prime Coat applied at a rate of 1.81 L/Sq. m
(8) Item 407 Tack Coat for Intermediate Course

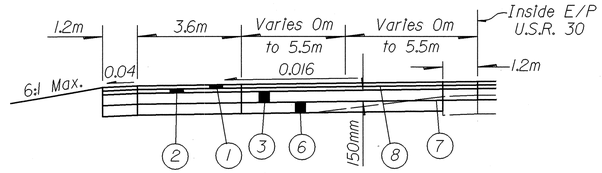

SECTION A-A

Applies @: All At-Grade Intersections

PAVEMENT ELEVATION TABLE

INTERSECTION	ELEVATION																	
	A	B	C	D	E	F	G	H	I	J	K	L	M	N	O	P	Q	R
Dixon Rd.	237.053	236.916	236.805	236.747	236.749	236.806	236.865	236.904	236.738	236.910	236.785	236.906	236.854	236.796	236.874	236.816	237.007	237.092
Convoy Rd. & S.R. 49	236.844	236.731	236.653	236.595	236.592	236.649	236.711	236.745	236.581	236.776	236.636	236.759	236.704	236.647	236.719	236.661	236.851	236.994
Colwell Rd.	236.516	236.729	236.834	236.776	236.812	236.875	236.940	236.928	236.801	237.062	236.902	237.016	236.966	236.913	236.967	236.909	236.973	236.846
Convoy Rd.	235.924	235.832	235.698	235.640	235.642	235.699	235.758	235.780	235.631	235.789	235.645	235.775	235.722	235.657	235.742	235.684	235.896	236.071
Richey Rd.	235.702	235.615	235.404	235.346	235.302	235.353	235.400	235.439	235.291	235.354	235.223	235.354	235.294	235.235	235.286	235.228	235.399	235.509
Liberty Union Rd.	235.238	235.134	234.993	234.935	234.915	234.967	235.024	235.082	234.903	235.088	234.927	235.049	234.995	234.939	235.016	234.958	235.148	235.224

DESIGN FILE : i:\pd\van30d\v30gml.dgn
USERNAME : rhermon
DATE : 03-SEP-1997
TIME : 13:27

INTERSECTION DETAILS

VAN-30-6.618(4.05)

88
134

SIDE APPROACH DETAILS

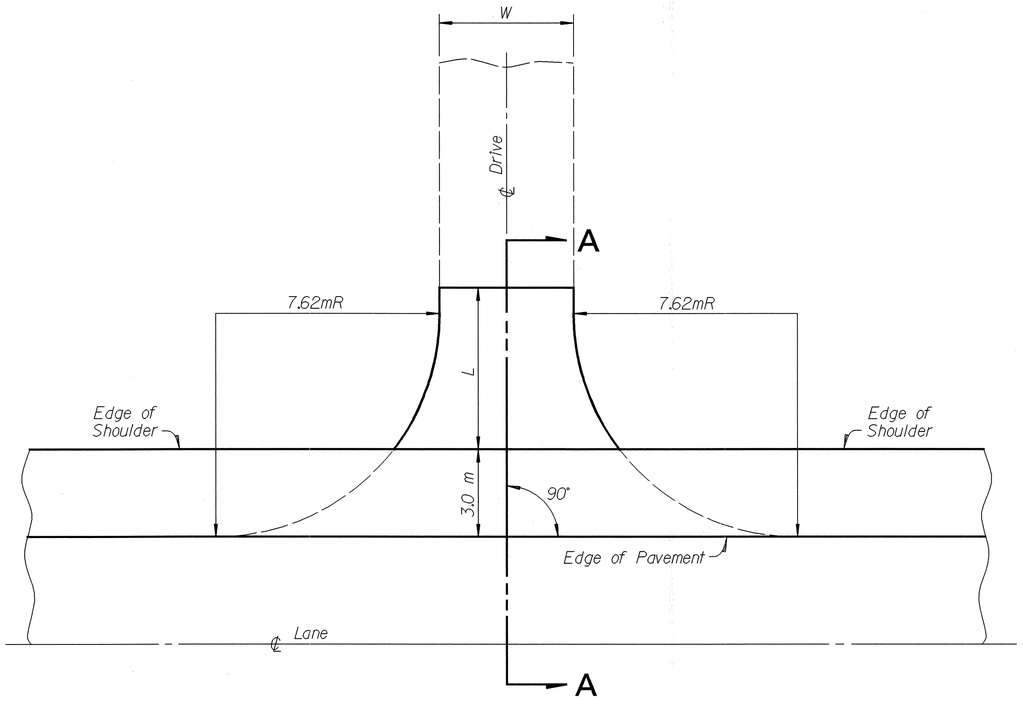

SIDE APPROACHES "A"

Reference No.	Sheet No.	Station	Side	Type	Length (L)	Pavement Width (W)	203 Excavation Not Including Embankment Construction	254 Pavement Planing, Bituminous	301 Bituminous Aggregate Base, PG64-22 (Var. Th.)	446 Asphalt Concrete, Interm. Course Type 2, PG64-28 (Variable Th.)	446 Asphalt Concrete, Surface Course Type IH (Variable Th.)	408 Bituminous Prime Coat
					Meter	Meter	m^3	m^3	m^3	m^3	m^3	L
1-A	28	6+539.0	Rt.	Field	5.5	3.66	0.1	0.07	0.72	0.70	0.78	36.44
2-A	28	6+834.4	Lt.	Res.	5.5	4.88	0.1	0.10	0.96	0.94	1.06	48.58
3-A	28	6+834.4	Rt.	Field	5.5	3.66	0.1	0.07	0.72	0.70	0.78	36.44
						Totals	0.3	0.24	2.40	2.34	2.62	121.46

Quantities Carried to General Summary, Sheets 13 & 14.

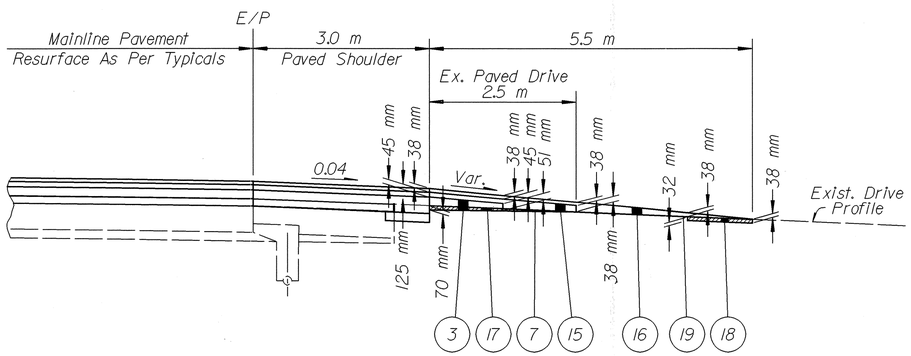

SECTION A-A

PROPOSED LEGEND

(3) Item 301 Bituminous Aggregate Base, PG64-22 (Thickness as Shown)

(7) Item 408 Bituminous Prime Coat, applied at a rate of 1.81 L per Sq. Meter

(15) Item 446 Asphalt Concrete, Intermediate Course, Type 2, PG64-28 (Thickness as Shown)

(16) Item 446 Asphalt Concrete, Surface Course, Type IH (Thickness as Shown)

(17) Item 254 Pavement Planing, Bituminous (Thickness as Shown)

(18) Item 203 Excavation Not Including Embankment Construction

(19) Item 407 Tack Coat for Intermediate Course

CALCULATED DJS CHECKED

SIDE APPROACH DETAILS & TABLE

VAN-30-6.618(4.05)

DESIGN FILE : i:\pd\van30d\v30dd.dgn
USERNAME : rhermon
DATE : 03-SEP-1997
TIME : 13:37

NOTE: All dimensions are in meters unless otherwise specified.
Lengths (L) and Widths (W) are shown on Table.

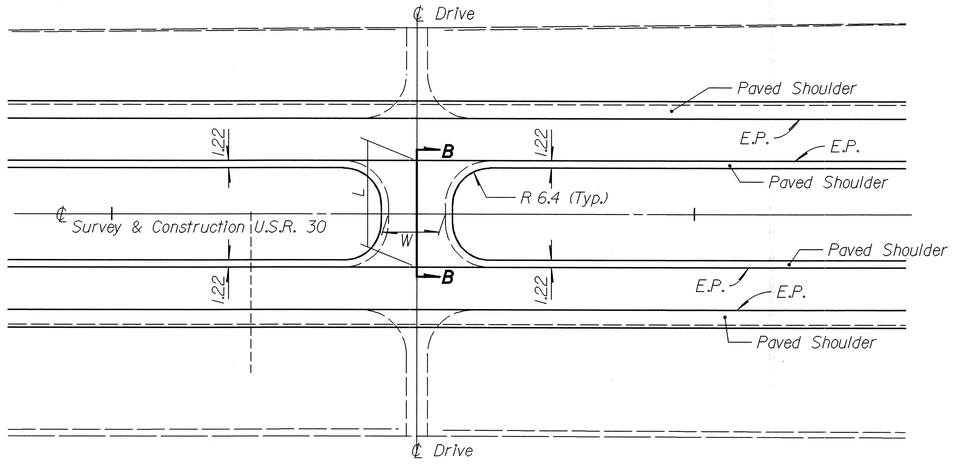

MEDIAN CROSSOVER DETAILS

CROSSOVERS				
Ref. No.	Sheet No.	Station (℄)	Length (L)	Pavement Width (W)
			Meter	Meter
4-A	28	6+834.4	15.8	4.88

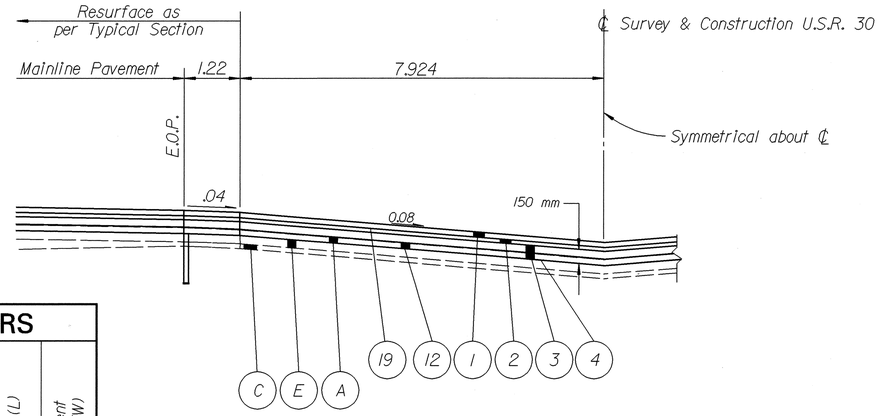

SECTION B-B

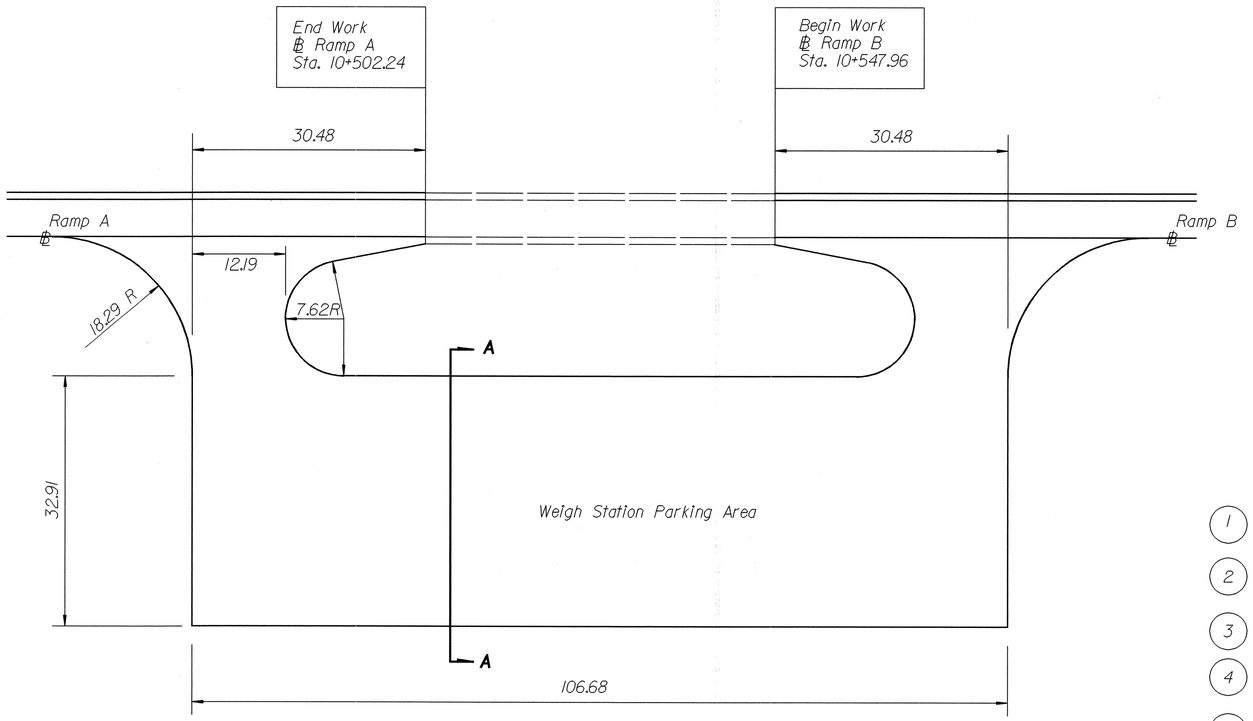

WEIGH STATION DETAILS

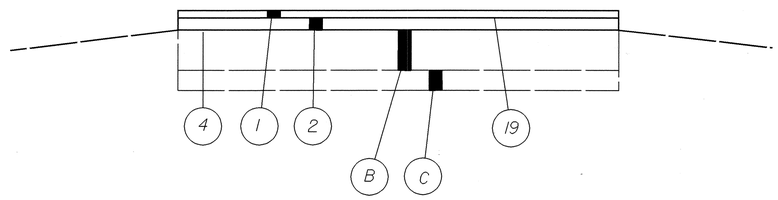

SECTION A-A

PROPOSED LEGEND

1	Item 446	38 mm Asphalt Concrete Surface Course, Type 1H
2	Item 446	45 mm Asphalt Concrete Intermediate Course Type 2, PG 64-28
3	Item 301	Bituminous Aggregate Base, PG 64-22 (Thickness as Shown)
4	Item 407	Tack Coat
12	Item 254	Pavement Planing, Bituminous (Thickness 70 mm Nominal)
19	Item 407	Tack Coat for Intermediate Course

EXISTING LEGEND

A	Asphalt Concrete
B	230 mm Reinforced Portland Cement Concrete Pavement
C	Subbase
E	Aggregate Base

WEIGH STATION & MEDIAN CROSSOVER DETAILS

VAN-30-6.618(4.05)

DESIGN FILE : i:\pd\van30d\v30gmdr.dgn
USERNAME : rhermon
DATE : 03-SEP-1997
TIME : 14:01

DESIGN FILE : i:\pd\van30d\v30mm.dgn
USERNAME : rhermon

DATE : 03-SEP-1997
TIME : 14:02

CALCULATED REP
CHECKED DJS

CENTERLINE MONUMENT TABLE

Existing Centerline Monuments are at the following stations to a tolerance of ±0.01 meter.

℄ R/W Station	Offset	Description
P.O.T. 6+705.60 U.S.R. 30	℄	CAPPED IRON ROD
STA. EQ. 6+869.63 (BK)/7+070.61 (AHD) U.S.R. 30	℄	CAPPED IRON ROD
P.O.T. 7+315.20 U.S.R. 30	℄	CAPPED IRON ROD
P.T. 7+575.71 U.S.R. 30	℄	CAPPED IRON ROD
P.C. 7+702.65 U.S.R. 30	℄	CAPPED IRON ROD
P.O.C. 7+924.80 U.S.R. 30	℄	CAPPED IRON ROD
P.T. 8+060.79 U.S.R. 30	℄	CAPPED IRON ROD
P.O.T. 8+229.60 U.S.R. 30	℄	CAPPED IRON ROD
8+643.82/3+048.00 U.S.R. 30/S.R. 49	℄	CAPPED IRON ROD
P.O.T. 8+839.20 U.S.R. 30	℄	CAPPED IRON ROD
P.O.T. 9+144.00 U.S.R. 30	℄	CAPPED IRON ROD
P.O.T. 9+448.80 U.S.R. 30	℄	CAPPED IRON ROD
P.O.T. 9+579.00 U.S.R. 30	℄	CHISELED "X" IN BRIDGE DECK
P.O.T. 9+753.60 U.S.R. 30	℄	CAPPED IRON ROD
P.O.T. 10+058.40 U.S.R. 30	℄	CAPPED IRON ROD
P.O.T. 10+363.20 U.S.R. 30	℄	CAPPED IRON ROD
P.O.T. 10+668.00 U.S.R. 30	℄	CAPPED IRON ROD
P.O.T. 10+972.80 U.S.R. 30	℄	CAPPED IRON ROD
P.O.T. 11+277.60 U.S.R. 30	℄	CAPPED IRON ROD
P.O.T. 11+401.98 U.S.R. 30	℄	CAPPED IRON ROD
P.O.T. 11+734.80 U.S.R. 30	℄	CAPPED IRON ROD
P.O.T. 11+887.20 U.S.R. 30	℄	CAPPED IRON ROD
P.O.T. 12+192.00 U.S.R. 30	℄	CAPPED IRON ROD
P.O.T. 12+496.80 U.S.R. 30	℄	CAPPED IRON ROD
12+587.12/1+524.00 U.S.R. 30/C.R. 168	℄	CAPPED IRON ROD
P.O.T. 12+801.60 U.S.R. 30	℄	CAPPED IRON ROD
13+085.75/1+524.00 U.S.R. 30/DULL ROBINSON	℄	CAPPED IRON ROD
P.O.T. 13+411.20 U.S.R. 30	℄	CAPPED IRON ROD
P.O.T. 13+563.60 U.S.R. 30	℄	PIPE WITH NO CAP
P.O.T. 13+716.00 U.S.R. 30	℄	CAPPED IRON ROD
P.O.T. 14+325.60 U.S.R. 30	℄	CAPPED IRON ROD
P.O.T. 14+630.40 U.S.R. 30	℄	CAPPED IRON ROD
P.C. 14+674.40 U.S.R. 30	℄	CAPPED IRON ROD
P.O.C. 14+935.20 U.S.R. 30	℄	CAPPED IRON ROD
P.O.C. 15+240.00 U.S.R. 30	℄	CAPPED IRON ROD
P.O.C. 15+544.80 U.S.R. 30	℄	CAPPED IRON ROD
P.O.C. 15+849.60 U.S.R. 30	℄	CAPPED IRON ROD
P.O.C. 16+154.40 U.S.R. 30	℄	CAPPED IRON ROD
P.O.C. 16+459.20 U.S.R. 30	℄	CAPPED IRON ROD
P.T. 16+532.88 U.S.R. 30	℄	CAPPED IRON ROD
P.O.T. 16+764.00 U.S.R. 30	℄	CAPPED IRON ROD
16+956.63/1+524.00 U.S.R. 30/LIBERTY UNION	℄	BENCH MARK SPIKE
P.O.T. 17+068.80 U.S.R. 30	℄	CAPPED IRON ROD
P.O.T. 17+397.74 U.S.R. 30	℄	CHISELED "X" IN CENTER OF OVERHEAD
P.O.T. 17+678.40 U.S.R. 30	℄	CAPPED IRON ROD
P.O.T. 17+983.20 U.S.R. 30	℄	CAPPED IRON ROD
P.O.T. 18+288.00 U.S.R. 30	℄	CAPPED IRON ROD

VAN-30-6.618(4.05)

DRAINAGE TABLE

Reference No.	Sheet No.	Station From	Station To	Side	202 Pipe Removed 0.6 m & Under	202 Catch Basin Removed	202 Catch Basin Abandoned	Special Pipe Cleanout	603 Conduit (Meter) Type C 150	603 C 200	603 C 375	603 C 450	603 Type F* 150	604 Catch Basin No. 8 Without Apron	604 Catch Basin Adjusted to Grade	604 Precast Reinforced Concrete Outlet	605 100 mm Shallow Pipe Underdrain	605 100 mm Unclassified Pipe Underdrain	Bends & Branches
					Meter	Each	Each	Meter						Each	Each	Each	Meter	Meter	
1-D	28	6+601	6+850	Lt.									25.5			3	498		3
2-D	28	6+601	6+850	Rt.									34.4			4	498		4
3-D	28	6+850	6+869.6BK	Lt.													40		
	28	7+070.6AH	7+400										16.6			2	658		2
4-D	28	6+850	6+869.6BK	Rt.													40		
	28	7+070.6AH	7+400										16.7			2	658		2
5-D	29	7+400	7+750	Lt.									28.0			1	433	215	3
6-D	29	7+620	7+623	Lt.	2.6	1					3.4			1					1
7-D	29	7+400	7+750	Rt.									29.2			1	433	214	3
8-D	29	7+750	8+100	Lt.									33.2			1	105	422	3
9-D	29	7+772		Rt.	3.0		1				3.0								
10-D	29	7+750	8+100	Rt.									33.8			1	105	423	3
11-D	30	8+100	8+450	Lt.									33.1			4	700		4
12-D	30	8+100	8+450	Rt.									33.2			4	700		4
13-D	30	8+450	8+800	Lt.									35.6			2	408	70	4
14-D	30	8+515	8+535	Lt.	3.0		1			1.5		20.9		1					1
15-D	30	8+645	8+800	Lt.									18.8				75	66	2
16-D	30	8+450	8+800	Rt.									35.1			2	408	70	4
17-D	30	8+717		Rt.	5.0		1		1.5		3.5			1					
18-D	30	8+645	8+800	Rt.									21.0				75	66	2
19-D	31	8+800	9+150	Lt.									15.8			2	700		2
20-D	31	8+800	9+150	Rt.									16.4			2	700		2
21-D	31	9+150	9+500	Lt.									16.5			2	700		2
22-D	31	9+150	9+500	Rt.									16.9			2	700		2
23-D	32	9+500	9+571.6	Lt.									37.5			2	66.4	62.4	4
24-D	32	9+574.9	9+850	Lt.									46.3			6	498	46	6
25-D	32	9+500	9+556.8	Rt.									36.9			2	66.4	32.7	4
26-D	32	9+560.1	9+850	Rt.									50.2			6	523	50.5	6
27-D	32	9+850	10+200	Lt.									16.2			2	700		2
28-D	32	9+850	10+200	Rt.									18.3			2	700		2
29-D	33	10+200	10+550	Lt.									33.1			4	700		4
30-D	33	10+200	10+550	Rt.									17.4			2	594.7		2
31-D	33	10+200	10+450	Rt.									8.9			1	253.3		1
32-D	33	10+550	10+900	Lt.									51.1			6	700		6
33-D	33	10+550	10+900	Rt.									44.9			5	550	86.9	5
34-D	33	10+600	10+900	Rt.									15.7			2	301.8		2
35-D	34	10+900	11+250	Lt.									24.0			3	700		3
36-D	34	10+900	11+250	Rt.									27.1			3	700		3
37-D	34	11+250	11+600	Lt.									7.5			1	446		1
38-D	34	11+398	11+600	Lt.													202		
39-D	34	11+250	11+600	Rt.									7.7			1	446		1
40-D	34	11+398	11+600	Rt.													202		

(Continued)

* 707.33, 707.41 Non-Perforated, 707.42 or 707.45

Reference No.	Sheet No.	Station From	Station To	Side	202 Pipe Removed 0.6 m & Under	202 Catch Basin Removed	202 Catch Basin Abandoned	Special Pipe Cleanout	603 Conduit (Meter) Type C 150	603 C 200	603 C 375	603 C 450	603 Type F* 150	604 Catch Basin No. 8 Without Apron	604 Catch Basin Adjusted to Grade	604 Precast Reinforced Concrete Outlet	605 100 mm Shallow Pipe Underdrain	605 100 mm Unclassified Pipe Underdrain	Bends & Branches
					Meter	Each	Each	Meter						Each	Each	Each	Meter	Meter	
41-D	35	11+600	11+950	Lt.									32.2			4	700		4
42-D	35	11+600	11+950	Rt.									32.5			4	700		4
43-D	35	11+950	12+300	Lt.									39.7			5	700		5
44-D	35	11+950	12+300	Rt.									40.9			5	700		5
45-D	36	12+300	12+650	Lt.									39.4			1	492	60	4
46-D	36	12+450	12+492	Lt.	1.5		1				41.7			1					
47-D	36	12+561	12+650	Lt.									18.5					76	2
48-D	36	12+300	12+650	Rt.									30.9			1	495	63	4
49-D	36	12+581		Rt.		1													
50-D	36	12+561	12+650	Rt.									22.2					74	1
51-D	36	12+643	12+650	Rt.								7.0		1					
52-D	36	12+650	13+000	Lt.									23.4			3	700		3
53-D	36	12+650	12+679	Rt.								29.3							
54-D	36	12+650	13+000	Rt.									24.4			3	699		4
55-D	37	13+000	13+350	Lt.									16.6			2	700		2
56-D	37	13+000	13+350	Rt.									16.9			2	700		2
57-D	37	13+350	13+700	Lt.									33.0			4	550	92	4
58-D	37	13+556	13+700	Lt.									5.8					144	1
59-D	37	13+350	13+700	Rt.									32.6			4	600	100	4
60-D	37	13+591	13+700	Rt.									8.2		1			109	1
61-D	38	13+700	14+050	Lt.									34.5			4	350	207	4
62-D	38	13+797.1	14+050	Lt.									15.4			2	150	103	2
63-D	38	13+700	14+050	Rt.									36.0			4	350	239	4
64-D	38	13+855.1	14+050	Rt.									20.7			2	100	95	2
65-D	38	14+050	14+400	Lt.									16.0			2	700		2
66-D	38	14+050	14+400	Rt.									16.6			2	700		2
67-D	39	14+400	14+750	Lt.									32.9			4	700		4
68-D	39	14+400	14+750	Rt.									32.9			4	700		4
69-D	39	14+631		Rt.				43											
70-D	39	14+750	14+948	Lt.									16.7			2	492		2
71-D	39	15+015	15+100	Lt.									21.4				149	2	2
72-D	39	15+090	15+100	Lt.								10.0			1				
73-D	39	14+750	14+984	Rt.									16.4			2	464		2
74-D	39	15+000	15+100	Rt.									17.0				180	5	2
75-D	40	15+100	15+149	Lt.	3.0		1			1.5		50.4							1
76-D	40	15+100	15+450	Lt.									15.8			2	350	56	2
77-D	40	15+208	15+450	Lt.									27.9			1	158	70	3
78-D	40	15+100	15+450	Rt.									16.7			2	350	56	2
79-D	40	15+270	15+285	Rt.	3.0		1	43	1.5			15.8							1
80-D	40	15+208	15+450	Rt.									30.2			1	158	70	3
81-D	40	15+450	15+578	Lt.													255		
82-D	40	15+601	15+800	Lt.									15.4			2	397		2
83-D	40	15+450	15+574	Rt.													247		
84-D	40	15+597	15+800	Rt.									15.0			2	405		2
Subtotals					21.1	2	6	86	4.5	1.5	112.0	73.0	1717.3	6	1	159	32074.6	3445.5	

Carried to Drainage Table, Sheet 93.

Bends & Branches

151 ~ 150x100 Tee
1 ~ 450x150 Tee
1 ~ 400x200 Tee
2 ~ 375x150 Tee
34 ~ 150x45°
14 ~ 150x90°

CALCULATED N.JV CHECKED DJS

DRAINAGE TABLE

VAN-30-6.618(4.05)

DESIGN FILE : i:\pdv\van30d\v30udt.dgn
USERNAME : rhermon

DATE : 03-SEP-1997
TIME : 14:04

DRAINAGE TABLE (Cont.)

Reference No.	Sheet No.	Station From	Station To	Side	202 Pipe Removed 0.6 m & Under	202 Catch Basin Removed	202 Catch Basin Abandoned	Special Pipe Cleanout	603 Conduit (Meter) Type C 150	603 Conduit (Meter) Type C 200	603 Conduit (Meter) Type C 375	603 Conduit (Meter) Type C 450	603 Conduit (Meter) Type F* 150	604 Catch Basin No. 8 Without Apron	604 Catch Basin Adjusted to Grade	604 Precast Reinforced Concrete Outlet	605 100 mm Shallow Pipe Underdrain	605 100 mm Unclassified Pipe Underdrain	Bends & Branches
					Meter	Each	Each	Meter						Each	Each	Each	Meter	Meter	
85-D	41	15+800	16+150	Lt.									15.8			2	700		2
86-D	41	15+800	16+150	Rt.									17.3			2	700		2
87-D	41	16+150	16+500	Lt.									33.1			4	700		4
88-D	41	16+150	16+500	Rt.									33.0			4	700		4
89-D	42	16+500	16+850	Lt.									29.9			3	696		4
90-D	42	16+500	16+850	Rt.									27.4			3	697		4
91-D	42	16+854	16+902	Lt.	1.5		1				48.1			1					1
92-D	42	16+850	17+200	Lt.									25.3			1	350	68	2
93-D	42	16+983	17+200	Lt.									17.7				136	69	2
94-D	42	16+850	17+200	Rt.									30.2			2	351	70	3
95-D	42	16+976	17+058	Rt.	1.5		1				81.7			1					
96-D	42	16+983	17+200	Rt.									22.8				151	67	2
97-D	43	17+200	17+550	Lt.									33.6			3	700		4
98-D	43	17+200	17+550	Rt.									32.5			3	700		4
99-D	43	17+200(C)	17+453(C)	Rt.									7.5			1	253		1
100-D	43	17+453(C)	17+481(C)	Rt.													28		
101-D	43	17+308(D)	17+388(D)	Rt.													80		
102-D	43	17+388(D)	17+545(D)	Rt.									5.0			1	157		1
103-D	44	19+970(A)	20+170(A)	Lt.									7.4			1	200		1
104-D	44	19+970(B)	20+233(B)	Lt.									7.7			1	263		1
105-D	44	17+550	17+900	Lt.									29.9			3	587	55	3
106-D	44	17+550	17+900	Rt.									17.1			2	450		2
107-D	44	17+545(D)	17+900	Rt.									15.7			2	355		2
108-D	45	17+900	18+250	Lt.									16.2			2	701		2
109-D	45	17+900	18+250	Rt.									16.6			2	700		2
110-D	45	18+135		Rt.				43											
111-D	45	18+250	18+287	Lt.									15.7			2	74		2
112-D	45	18+250	18+287	Rt.									16.2			2	74		2
Subtotals This Sheet					3.0		2	43			129.8		473.6	2		46	10503	329	
Subtotals Sheet 92					21.1	2	6	86	4.5	1.5	112.0	73.0	1717.3	6	1	159	32074.6	3445.5	
Totals Carried to General Summary, Sheet 13.					24	2	8	129	5	2	242	73	2191	8	1	205	42578	3775	

* 707.33, 707.41 Non-Perforated, 707.42 or 707.45

Bends & Branches

44 ~ 150x100 Tees
8 ~ 150x45°
4 ~ 150x90°
1 ~ 375x15°

SEEDING

Sheet No.	659 Seeding and Mulching	Sheet No.	659 Seeding and Mulching	Sheet No.	659 Seeding and Mulching
	Square Meter		Square Meter		Square Meter
46	5771	58	8496	70	9144
47	8116	59	9053	71	7437
48	8852	60	8985	72	7452
49	8851	61	8433	73	6873
50	8489	62	8651	74	6873
51	6964	63	7631	75	7147
52	7917	64	6486	76	4295
53	6532	65	6639	77	1630
54	7857	66	7306	78	3797
55	7531	67	7138	79	4549
56	7409	68	6000	80	2867
57	8738	69	5408	81	3624
				Totals	248941

Carried to "Item 659, Seeding and Mulching" General Note, Sheet 8.

EARTHWORK

Sheet No.	203 Excavation Not Including Embankment Construction	203 Embankment	Sheet No.	203 Excavation Not Including Embankment Construction	203 Embankment	Sheet No.	203 Excavation Not Including Embankment Construction	203 Embankment
	Cubic Meter	Cubic Meter		Cubic Meter	Cubic Meter		Cubic Meter	Cubic Meter
46	0	403	58	175	1096	70	0	686
47	0	661	59	0	767	71	0	736
48	131	1273	60	12	729	72	42	765
49	13	822	61	151	1264	73	157	1123
50	131	1240	62	0	771	74	7	680
51	39	724	63	0	752	75	13	592
52	0	593	64	74	558	76	0	311
53	0	513	65	26	740	77	33	209
54	0	686	66	0	694	78	61	641
55	0	723	67	0	557	79	66	517
56	0	580	68	338	749	80	43	397
57	32	903	69	3	367	81	51	481
						Totals	1598	25303

Carried to General Summary, Sheet 13

CALCULATED N.V CHECKED D.S

DRAINAGE, EARTHWORK & SEEDING TABLES

VAN-30-6.618(4.05)

93
134

DESIGN FILE : i:\pd\van30d\v30udt.dgn
USERNAME : rhermon

DATE : 03-SEP-1997
TIME : 14:04

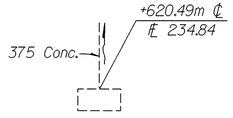

C.B. Removed (202)
980mmx1680mm C.B., Gr. El. 235.54
Sta. 7+620.0, ℄

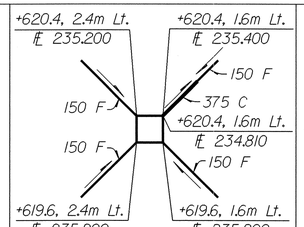

No. 8 C.B. w/o Apron, Gr. El. 235.912
Sta. 7+620.0, 2.0m Lt.

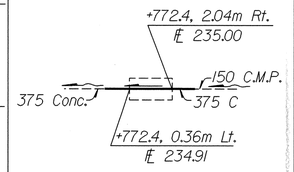

C.B. Abandoned & Connect Thru
980mmx1680mm C.B., Gr. El. 235.66
Sta. 7+772.4, 1.2m Rt.

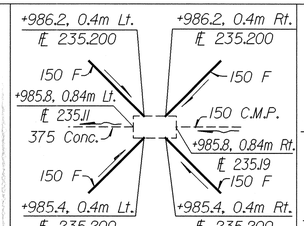

980mmx1680mm C.B., Gr. El. 235.86
Sta. 7+985.8, ℄

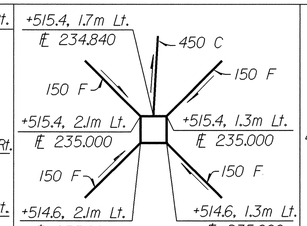

No. 8 C.B. w/o Apron, Gr. El. 235.670
Sta. 8+515.0, 1.7m Lt.

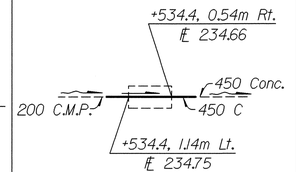

C.B. Abandoned & Connect Thru
980mmx1680mm C.B., Gr. El. 235.47
Sta. 8+534.4, 0.3m Lt.

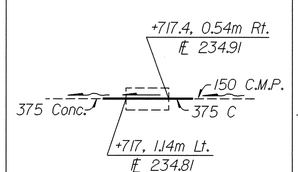

C.B. Abandoned & Connect Thru
980mmx1680mm C.B., Gr. El. 235.57
Sta. 8+717.4, 0.3m Lt.

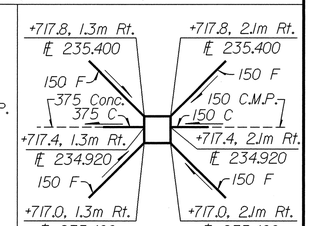

No. 8 C.B. w/o Apron, Gr. El. 235.860
Sta. 8+717.4, 1.7m Rt.

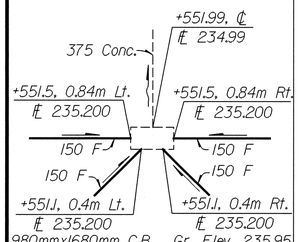

980mmx1680mm C.B., Gr. El. 235.95
Sta. 9+551.5, ℄

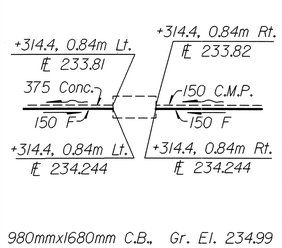

980mmx1680mm C.B., Gr. El. 234.99
Sta. 12+314.4, ℄

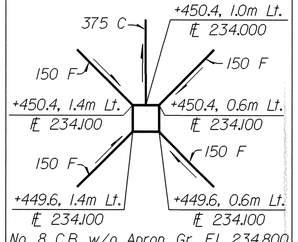

No. 8 C.B. w/o Apron, Gr. El. 234.800
Sta. 12+450.0, 1.0m Lt.

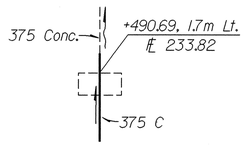

C.B. Abandoned & Connect Thru
980mmx1680mm C.B., Gr. El. 234.51
Sta. 12+490.2, 1.7m Lt.

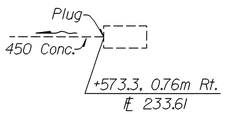

C.B. Removed (202)
980mmx1680mm C.B., Gr. El. 234.43
Sta. 12+573.3, 1.6m Rt.

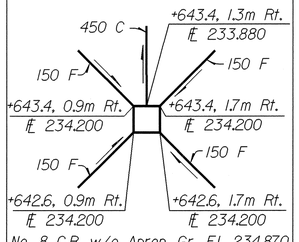

No. 8 C.B. w/o Apron, Gr. El. 234.870
Sta. 12+643.0, 1.3m Rt.

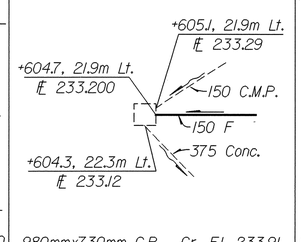

980mmx730mm C.B., Gr. El. 233.91
Sta. 13+604.7, 22.3m Lt.

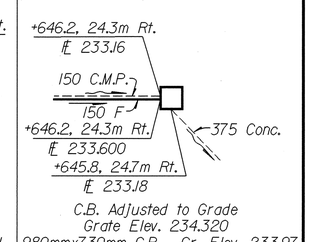

C.B. Adjusted to Grade
Grate Elev. 234.320
980mmx730mm C.B., Gr. Elev. 233.97
Sta. 13+646.2, 24.7m Rt.

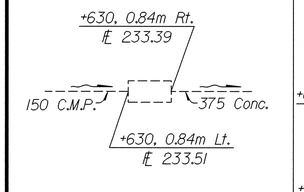

Item Special Pipe Cleanout
980mmx1680mm C.B., Gr. El. 234.15
Sta. 14+630.5, ℄

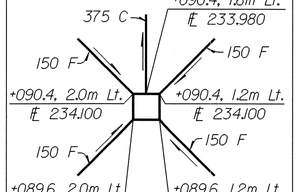

No. 8 C.B. w/o Apron, Gr. El. 234.600
Sta. 15+090.0, 1.6m Lt.

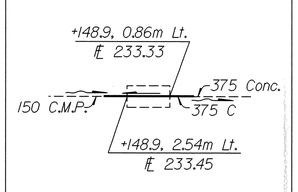

C.B. Abandoned & Connect Thru
980mmx1680mm C.B., Gr. El. 234.12
Sta. 15+148.9, 1.7m Lt.

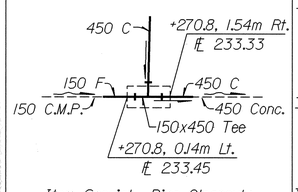

Item Special Pipe Cleanout
C.B. Abandoned & Connect Thru
980mmx1680mm C.B., Gr. El. 233.99
Sta. 15+270.8, 0.7m Rt.

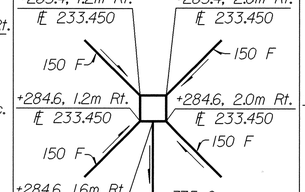

No. 8 C.B. w/o Apron, Gr. El. 234.280
Sta. 15+285.0, 1.6m Rt.

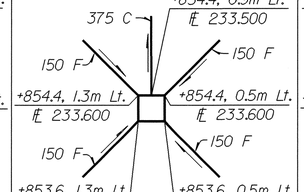

No. 8 C.B. w/o Apron, Gr. El. 234.110
Sta. 16+854.0, 0.9m Lt.

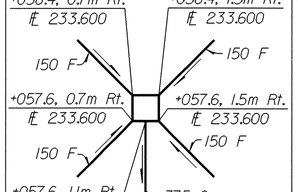

No. 8 C.B. w/o Apron, Gr. El. 234.160
Sta. 17+058.0, 1.1m Rt.

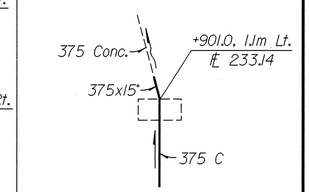

C.B. Abandoned & Connect Thru
980mmx1680mm C.B., Gr. El. 233.83
Sta. 16+900.6, 1.1m Lt.

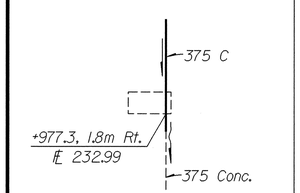

C.B. Abandoned & Connect Thru
980mmx1680mm C.B., Gr. El. 233.80
Sta. 16+977.8, 1.5m Rt.

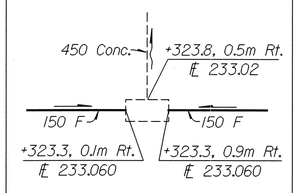

980mmx1680mm C.B., Gr. El. 233.78
Sta. 17+323.3, 0.5m Rt.

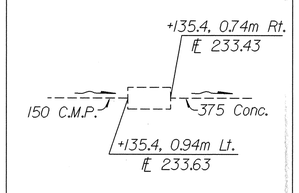

Item Special Pipe Cleanout
980mmx1680mm C.B., Gr. El. 234.24
Sta. 18+135.4, 0.1m Lt.

CALCULATED BJD
CHECKED DJS

CATCH BASIN DETAILS

VAN-30-6.618(4.05)

94
134

DESIGN FILE : i:\pd\van30d\v30cbdt.dgn
USERNAME : rhermon
DATE : 03-SEP-1997
TIME : 14:07

ITEM 604 - PRECAST REINFORCED CONCRETE OUTLET

The Concrete outlet shall meet the requirements of Item 604 in the Construction & Materials Specifications. Payment shall be made on an Each basis. Payment shall include the cost of the Sod & Wire Cloth.

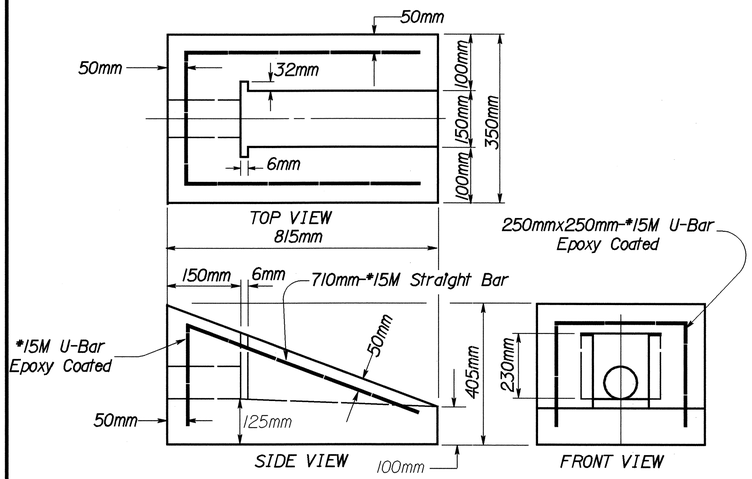

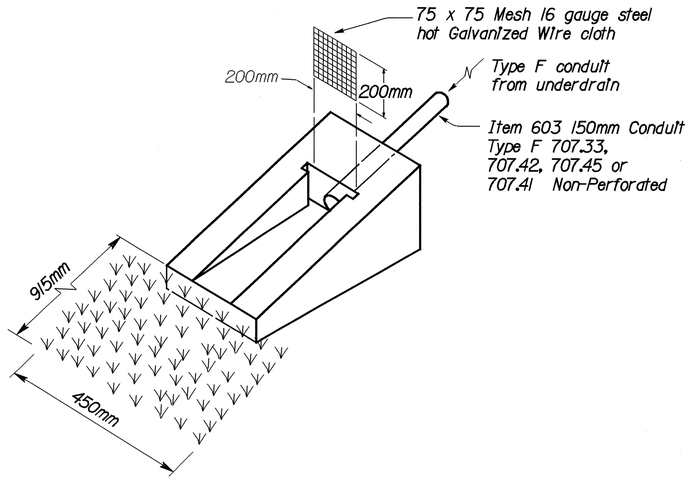

NOTE: The Sod shall be in accordance with Item 660 and staked at each corner approximately 76mm in from the edge.

OUTLET DETAILS

Item 603 150mm Conduit Type F 707.33, 707.42, 707.45 or 707.41 Non-Perforated

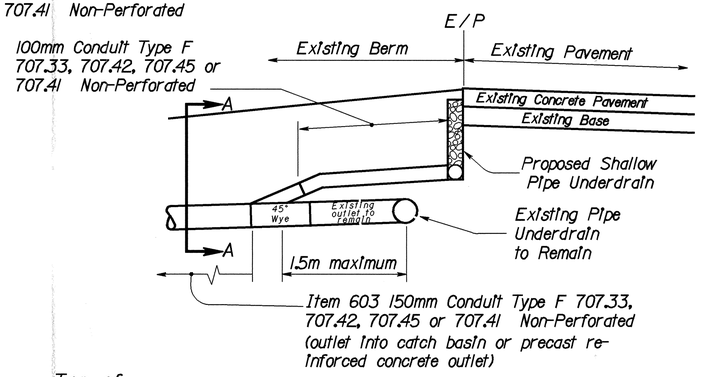

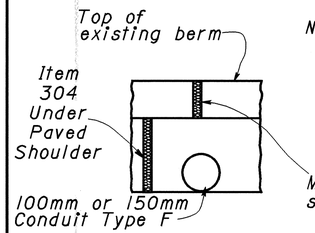

SECTION A-A

NOTE: The cost of the 100mm conduit Type F and necessary pipe bends and branches needed to connect the existing and proposed underdrains be included with the cost of the 150mm conduit Type F beyond the existing underdrain.

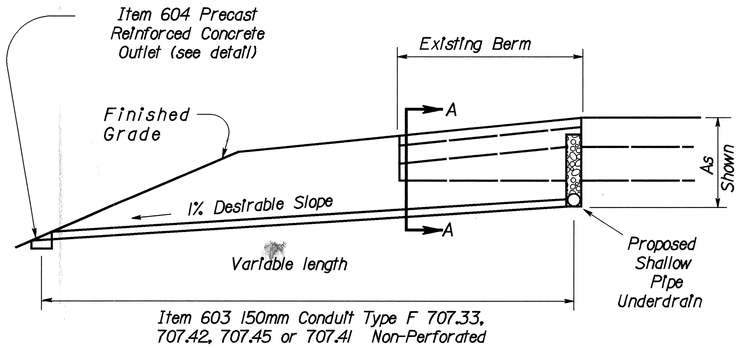

NOTE: For underdrain outlets into catch basins the above Type F Conduit shall be used between the underdrain & catch basin.

PIPE UNDERDRAIN DETAIL

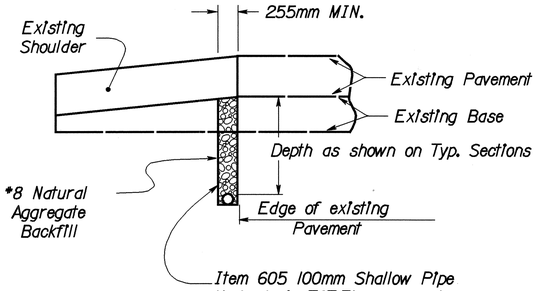

DESCRIPTION : THIS ITEM SHALL CONSIST OF FURNISHING AND INSTALLING A PIPE UNDERDRAIN SYSTEM IN ACCORDANCE WITH THE SPECIFICATIONS, DETAILS AS SHOWN ON THE PLANS, AND AS DIRECTED BY THE ENGINEER.

MATERIALS : THE UNDERDRAIN SHALL BE A PIPE UNDERDRAIN SYSTEM PER ITEM 605. THE OUTLETS FOR THE UNDERDRAIN SYSTEM SHALL BE CONSTRUCTED AS SOON AS POSSIBLE AFTER PLACEMENT OF THE UNDERDRAIN TO DRAIN THE SUBBASE AND SUBGRADE. ALL PIPE BENDS AND BRANCHES NEEDED TO CONNECT THE PROPOSED UNDERDRAIN TO THE PROPOSED OUTLET OR TO AN EXISTING UNDERDRAIN SHALL BE MANUFACTURED FITTINGS.

METHOD OF MEASUREMENT : COMPLETED AND ACCEPTED UNDERDRAINS WILL BE MEASURED BY THE LINEAR METER IN PLACE.

BASIS OF PAYMENT : WORK COMPLETED AND ACCEPTED UNDER THIS ITEM AND MEASURED WILL BE PAID FOR AT THE CONTRACT UNIT PRICE BID PER LINEAR METER FOR ITEM 605 100mm SHALLOW PIPE UNDERDRAIN 707.31, AS PER PLAN. THE PRICE SHALL BE FULL COMPENSATION FOR EXCAVATION AND BACKFILL; FOR FURNISHING MATERIALS, INCLUDING MATERIAL FOR OUTLET FITTINGS, FOR ALL LABOR, TOOLS, EQUIPMENT, AND INCIDENTIALS NECESSARY TO COMPLETE THE WORK.

CALCULATED DJS
CHECKED KM
2-5-93

ITEM 605 - 100mm SHALLOW PIPE UNDERDRAIN, 707.31, AS PER PLAN

VAN-30-6.618(4.05)

95
134

DESIGN FILE : i:\pd\van30d\undrain.dgn
USERNAME : rhermon
DATE : 03-SEP-1997
TIME : 14:08

ITEM 642 TRAFFIC ZONE PAVEMENT MARKING

100mm EDGE LINE

Location		Station	Linear Meter White	Linear Meter Yellow
U.S. 30	E.B.	6+618 to 7+698	1080	
		6+618 to 7+521		903
		7+521 to 7+711		191*
		7+744 to 8+605	861	
		7+755 to 7+770		23*
		7+770 to 8+407		637
		8+407 to 8+592		186*
		8+645 to 8+660		23*
		8+645 to 11+359	2714	
		8+660 to 11+160		2500
		11+160 to 11+346		186*
		11+399 to 11+414		23*
		11+399 to 12+504	1105	
		11+414 to 12+328		914
		12+328 to 12+518		191*
		12+550 to 15+168	2618	
		12+562 to 12+577		23*
		12+577 to 15+016		2439
		15+016 to 15+155		141*
		15+209 to 15+224		23*
		15+209 to 16+942	1733	
		15+224 to 16+745		1521
		16+745 to 16+930		186*
		16+983 to 16+999		23*
		16+999 to 18+288		1289
		17+243 to 17+832	589	
		18+154 to 18+288	134	
U.S. 30	W.B.	6+618 to 7+722	1104	
		6+618 to 7+696		1078
		7+696 to 7+711		23*
		7+753 to 7+945		191*
		7+769 to 8+592	823	
		7+945 to 8+577		632
		8+577 to 8+592		23*
		8+632 to 11+345	2713	
		8+645 to 8+830		186*
		8+830 to 11+330		2500
		11+330 to 11+346		23*
		11+385 to 12+529	1144	
		11+399 to 11+584		186*
		11+584 to 12+502		918
		12+502 to 12+518		23*
		12+562 to 12+751		191*
		12+575 to 15+155	2580	
		12+751 to 15+140		2389
		15+140 to 15+155		23*
		15+195 to 16+932	1737	
		15+209 to 15+394		186*
		15+394 to 16+915		1521
		16+915 to 16+930		23*
		16+971 to 17+110	139	
		16+983 to 17+168		186*
		17+168 to 18+288		1120
		17+432 to 17+828	396	
		18+132 to 18+288	156	
Ramps	E.B.	10+061 to 10+454	392	149
		10+598 to 11+339	741	375
		13+346 to 13+701	355	81
		13+855 to 14+451	596	230
		16+984 to 17+481(Ramp C)	497	268
		(Ramp D)17+316 to 18+154	838	471
	W.B.	13+045 to 13+643	598	231
		13+797 to 14+151	354	80
		17+110 to 19+971(Ramp A)	638	272
		(Ramp B)19+971 to 18+132	495	221

(Continued)

100mm EDGE LINE (Cont.)

Location		Station	Linear Meter White	Linear Meter Yellow
S.R. 49	Lt.	0+494 to 0+510		16
		0+510 to 8+605(M.L.)		32*
	Rt.	0+494 to 0+509		15
		0+509 to 8+645(M.L.)		24*
T.R. 192 Dixon Rd.	Lt.	0+569 to 0+576		7
		0+576 to 7+698(M.L.)		35*
	Rt.	0+569 to 0+592		23
		0+592 to 7+744(M.L.)		24*
	Lt.	7+722(M.L.) to 0+651		24*
		0+651 to 0+673		22
	Rt.	7+769 to 0+666		35*
		0+666 to 0+673		7
T.R. 55 Convoy Rd.	Lt.	8+592(M.L.) to 0+583		24*
		0+583 to 0+598		15
	Rt.	8+632(M.L.) to 0+582		32*
		0+582 to 0+598		16
T.R. 65 Colwell Rd.	Lt.	0+497 to 0+514		17
		0+514 to 11+359(M.L.)		32*
	Rt.	0+497 to 0+513		16
		0+513 to 11+399(M.L.)		24*
	Lt.	11+345(M.L.) to 0+584		24*
		0+584 to 0+601		17
	Rt.	11+385(M.L.) to 0+584		32*
		0+584 to 0+601		17
C.R. 168 Convoy Rd.	Lt.	0+387 to 12+504(M.L.)		32*
	Rt.	0+387 to 0+399		12
		0+399 to 12+550(M.L.)		35*
	Lt.	12+529(M.L.) to 0+459		32*
		0+459 to 0+466		7
	Rt.	12+575(M.L.) to 0+466		29*
T.R. 75 Richey Rd.	Lt.	0+465 to 0+482		17
		0+482 to 15+168(M.L.)		32*
	Rt.	0+465 to 0+482		17
		0+482 to 15+209(M.L.)		24*
	Lt.	15+155(M.L.) to 0+552		24*
		0+552 to 0+569		17
	Rt.	15+195(M.L.) to 0+552		32*
		0+552 to 0+569		17
C.R. 77 Liberty-Union Rd.	Lt.	1+472 to 1+490		18
		1+490 to 16+942(M.L.)		30*
	Rt.	1+472 to 1+490		18
		1+490 to 16+981(M.L.)		23*
	Lt.	16+932(M.L.) to 1+558		23*
		1+558 to 1+576		18
	Rt.	16+971(M.L.) to 1+558		30*
		1+558 to 1+576		18
				2074
		Total	27130	27296
		Total	54426	
		Total (Kilometer)	54.43	

* - Estimated Quantity

LANE LINE

Location		Station	Linear Meter
U.S. 30	E.B.	6+618 to 7+500	882
		7+500 to 7+950	404
		7+950 to 8+400	450
		8+400 to 8+850	410
		8+850 to 11+150	2300
		11+150 to 11+600	410
		11+600 to 12+300	700
		12+300 to 12+800	454
		12+800 to 15+000	2200
		15+000 to 15+400	359
		15+400 to 16+700	1300
		16+700 to 17+200	461
		17+200 to 18+288	1088
	W.B.	6+618 to 7+500	882
		7+500 to 7+950	403
		7+950 to 8+400	450
		8+400 to 8+850	410
		8+850 to 11+150	2300
		11+150 to 11+600	410
		11+600 to 12+300	700
		12+300 to 12+800	454
		12+800 to 15+000	2200
		15+000 to 15+400	360
		15+400 to 16+700	1300
		16+700 to 17+200	461
		17+200 to 18+288	1088
Ramps	E.B.	10+061 to 10+454	68
		10+598 to 11+339	86
		13+346 to 13+701	82
		13+855 to 14+451	87
		16+984 to 17+481(Ramp C)	60
		(Ramp D)17+316 to 18+154	86
	W.B.	13+045 to 13+643	87
		13+797 to 14+151	85
		17+110 to 19+971(Ramp A)	86
		(Ramp B)19+971 to 18+132	71
		Total	23634
		Total (Kilometer)	23.63

610mm STOP LINE

Location	Station	Linear Meter
S.R. 49	0+522	8
T.R. 192 (Dixon Rd.)	0+598	5
	0+645	5
T.R. 55 (Convoy Rd.)	0+570	8
T.R. 65 (Colwell Rd.)	0+525	8
	0+573	8
C.R. 168 (Convoy Rd.)	0+405	5
	0+452	5
T.R. 75 (Richey Rd.)	0+494	8
	0+542	8
C.R. 77 (Liberty-Union Rd.)	0+500	7
	0+548	8
	Total	83

CALCULATED B.J.D
CHECKED D.J.S

PAVEMENT MARKINGS

VAN-30-6.618(4.05)

DESIGN FILE : i:\pd\van30d\v30pm.dgn
USERNAME : rhermon

DATE : 16-SEP-1997
TIME : 11:00

ITEM 642 TRAFFIC ZONE PAVEMENT MARKING

ISLAND MARKING (WHITE)

Location		Station	Square Meter
U.S.30	E.B.	7+706 to 7+710	22
		8+594 to 8+598	22
		11+347 to 11+351	22
		12+513 to 12+517	22
		15+158 to 15+162	22
		16+932 to 16+936	22
	W.B.	7+756 to 7+760	22
		8+639 to 8+643	22
		11+393 to 11+397	22
		12+562 to 12+566	22
		15+203 to 15+207	22
		16+977 to 16+981	22
		Total	264

100mm DOUBLE SOLID LINE (WHITE)

Location		Station	Meter
U.S.30	E.B.	7+631 to 7+706	151
		8+517 to 8+594	155
		11+270 to 11+347	155
		12+438 to 12+513	151
		15+081 to 15+157	155
		16+855 to 16+932	155
	W.B.	7+760 to 7+835	151
		8+643 to 8+720	155
		11+397 to 11+474	155
		12+566 to 12+641	151
		15+207 to 15+284	155
		16+981 to 17+058	155
		Total	1844
		Total (Kilometer)	1.84

200mm CHANNELIZING LINE

Location		Station	Meter
U.S.30	E.B. (Islands)	7+581 to 7+631	50
		8+467 to 8+517	50
		11+220 to 11+270	50
		12+388 to 12+438	50
		15+056 to 15+081	25
		16+805 to 16+855	50
U.S.30	W.B. (Islands)	7+835 to 7+885	50
		8+720 to 8+770	50
		11+474 to 11+524	50
		12+641 to 12+691	50
		15+284 to 15+334	50
		17+058 to 17+108	50
Ramps	E.B.	10+061 to 10+454	184
		10+598 to 11+339	44
		13+346 to 13+701	250
		13+855 to 14+451	42
		16+984 to 17+481(Ramp C)	246
		(Ramp D)17+316 to 18+154	45
	W.B.	13+045 to 13+643	44
		13+797 to 14+151	236
		17+110 to 19+971(Ramp A)	44
		(Ramp B)19+971 to 18+132	234
		Total	1944

100mm DOUBLE SOLID CENTER LINE (YELLOW)

Location	Station	Meter
S.R. 49	0+494 to 0+522	28
T.R. 192 (Dixon Rd.)	0+569 to 0+598	29
	0+645 to 0+673	28
T.R. 55 (Convoy Rd.)	0+570 to 0+597	27
T.R. 65 (Colwell Rd.)	0+497 to 0+525	28
	0+573 to 0+601	28
C.R. 168 (Convoy Rd.)	0+387 to 0+405	18
	0+452 to 0+466	14
T.R. 75 (Richey Rd.)	0+465 to 0+482	17
	0+553 to 0+569	17
C.R. 77 (Liberty-Union Rd.)	1+472 to 1+490	18
	1+558 to 1+576	18
	Total	270
	Total (Kilometer)	0.27

600mm TRANSVERSE LINES @ 3.7m (WHITE)

Location	Station	Meter
U.S.30 E.B. (Islands)	7+631 to 7+706	133
	8+517 to 8+594	133
	11+270 to 11+347	133
	12+438 to 12+513	133
	15+080 to 15+157	133
	16+855 to 16+932	133
U.S.30 E.B. (Islands)	7+760 to 7+835	133
	8+643 to 8+720	133
	11+397 to 11+474	133
	12+566 to 12+641	133
	15+207 to 15+284	133
	16+981 to 17+058	133
U.S.30 E.B.	10+228 to 10+305	92
	13+510 to 13+620	197
	17+105 to 17+213	195
W.B.	13+877 to 13+980	195
	17+858 to 17+960	195
	Total	2470

ITEM 620 DELINEATOR

DELINEATORS

Location		Station	Delineator Type C Each	Delineator Type D Each	Spacing Meter
U.S. 30	E.B.	6+617 to 9+939	28		122
		10+061 to 10+305	5		61
		10+305 to 10+454 Ramp "A"		3	74
		10+305 to 10+837	6		106
		10+598 to 10+672 Ramp "B"	2		74
		10+672 to 10+881 Ramp "B"		4	70
		10+881 to 11+339	8		65
		11+461 to 13+224	15		122
		13+346 to 13+620	5		68
		13+620 to 13+701 Ramp "C"		2	81
		13+620 to 13+939	4		106
		13+855 to 13+939 Ramp "D"		2	84
		13+939 to 14+451	9		64
		14+573 to 16+862	20		122
		16+984 to 17+213	4		76
		17+213 to 17+652	5		110
		17+652 to 18+154	9		63
		18+276 to 18+288	1		0
	W.B.	6+617 to 12+923	53		122
		13+045 to 13+556	9		64
		13+556 to 13+643 Ramp "A"		2	87
		13+556 to 13+877	4		107
		13+797 to 13+877 Ramp "B"		2	80
		13+877 to 14+151	5		68
		14+273 to 16+988	23		122
		17+110 to 17+604	9		62
		17+604 to 17+858	3		127
		17+858 to 18+132	5		68
		18+254 to 18+288	1		0
U.S. 224 Ramp "C"		17+213 to 17+481		5	67
U.S. 224 Ramp "D"		17+316 to 17+652		6	67
U.S. 224 Ramp "B"		19+970 to 20+191		4	74
U.S. 224 Ramp "A"		19+971 to 20+115		3	72
		Totals	233	33	

CALCULATED BJD
CHECKED DJS

PAVEMENT MARKINGS

VAN-30-6.618(4.05)

97
134

DESIGN FILE : i:\pd\van30d\v30pm.dgn
USERNAME : rhermon
DATE : 16-SEP-1997
TIME : 11:04

ITEM 621 RAISED PAVEMENT MARKER

Location	Station	@ DOUBLE SOLID LINES	@ LANE LINES		@ EDGE LINES		@ CHANNELIZING LINES	
		1-WAY	1-WAY	2-WAY	1-WAY		1-WAY	
		Var.@ 12m Spa.	@ 24m Spa.	@ 24m Spa.	@ 12m Spa.		@ 6m Spa.	@ 12m Spa.
		White	White	Wh./Red	White	Yellow	White	White
		Each	Each	Each	Each	Each	Each	Each
U.S. 30 E.B.	6+618 to 7+194		25					
	7+218 to 7+698			20				
	7+631 to 7+706	13						
	7+770 to 8+101		14					
	8+125 to 8+605			20				
	8+517 to 8+594	13						
	8+645 to 10+855		72	20				
	10+228 to 10+329 *					2	25	2
	10+825 to 11+017 *				16	12		4
	10+865 to 11+359			20				
	11+270 to 11+347	13						
	11+399 to 12+000		25					
	12+024 to 12+504			20				
	12+438 to 12+513	13						
	12+550 to 14+664		68	20				
	13+510 to 13+644 *					2	35	2
	13+927 to 14+127 *				18	14		4
	14+688 to 15+168			20				
	15+081 to 15+158	13						
	15+209 to 16+438		51					
	16+462 to 16+942			20				
	16+855 to 16+927	13						
	16+981 to 18+288		45	10				
	17+105 to 17+237 *					2	37	2
	17+640 to 17+832 *				17	13		4
U.S. 30 W.B.	6+618 to 6+739			6				
	6+266 to 6+343	13						
	6+763 to 7+722		40					
	7+760 to 7+835	13						
	7+769 to 8+249			20				
	8+273 to 8+592		13					
	8+632 to 9+112			20				
	8+643 to 8+720	13						
	9+136 to 11+345		92					
	11+385 to 11+865			20				
	11+397 to 11+474	13						
	11+889 to 12+502		26					
	12+566 to 12+641	13						
	12+575 to 13+055			20				
	13+079 to 15+155		66	20				
	13+368 to 13+568 *				18	13		5
	13+853 to 13+980 *					2	35	2
	15+195 to 15+675			20				
	15+207 to 15+284	13						
	15+699 to 16+932		51					
	16+987 to 17+451			20				
	16+987 to 17+059	13						
	17+432 to 17+616 *				16	12		4
	17+475 to 18+288 *		34					
	17+834 to 17+960					2	35	2
	17+858 to 18+290			19				
	Subtotals	169	622	335	85	74	167	31
	Total	1483						

* - See Standard Construction Drawing TC-65.11 M For R.P.M. placement at these locations

NOTE: For Pavement Markings at acceleration and deceleration lanes see Standard Construction Drawing TC-72.20M

PAVEMENT MARKING SUMMARY

ITEM	SHEET No. 96	97	98	ITEM	TOTAL	UNIT	DESCRIPTION
620		233		620	233	Each	Delineator, Type C, Post Mounted
620		33		620	33	Each	Delineator, Type D, Post Mounted
621			1483	621	1483	Each	Raised Pavement Marker
642	54.43			642	54.43	Kilometer	Edge Line
642	23.63			642	23.63	Kilometer	Lane Line
642		2.11		642	2.11	Kilometer	Center Line
642		1944		642	1944	Meter	Channelizing Line
642	83			642	83	Meter	Stop Line
642		2470		642	2470	Meter	Transverse Line
642		264		642	264	Sq Meter	Island Marking

Quantities Carried to General Summary, Sheet 14.

CALCULATED BJD CHECKED DJS

PAVEMENT MARKINGS

VAN-30-6.618(4.05)

98
134

DESIGN FILE : i:\pd\van30d\v30pm.dgn
USERNAME : rhermon
DATE : 16-SEP-1997
TIME : 11:05

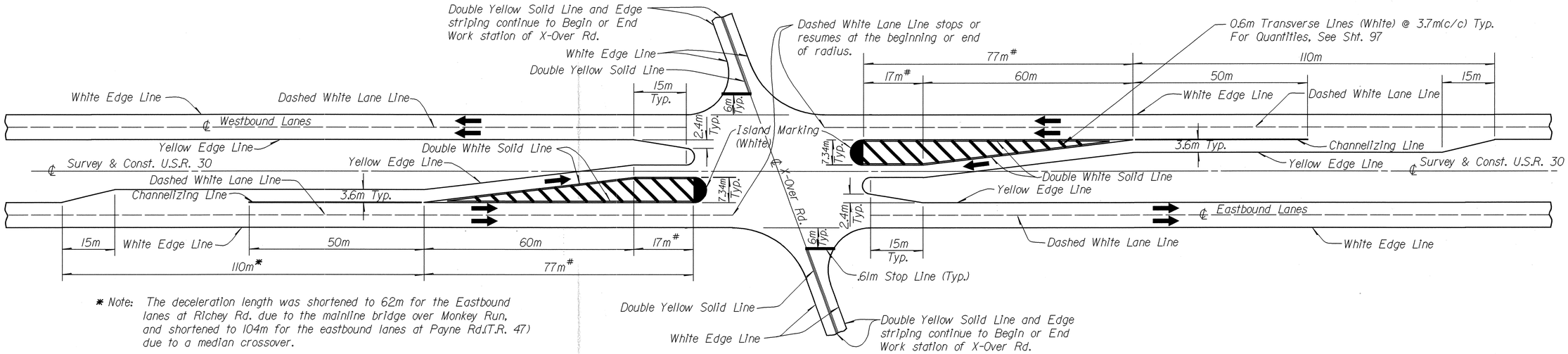

* Note: The deceleration length was shortened to 62m for the Eastbound lanes at Richey Rd. due to the mainline bridge over Monkey Run, and shortened to 104m for the eastbound lanes at Payne Rd.(T.R. 47) due to a median crossover.

Note: For the following intersections the 77m length is 75m, and the 17m length is 15m: T.R. 192 and C.R. 168

DETAIL APPLIES @:

T.R. 192 (Dixon Rd.)
S.R. 49
T.R.55 (Convoy Rd.)
T.R.75 (Richey Rd.)
C.R.168 (Convoy Rd.)
C.R.77 (Liberty-Union Rd.)
T.R.65 (Colwell Rd.)

NOTE: For specific placement of Traffic Islands and Radius Dimensions, See Intersection Details, Sht. 88

For Individual Stationing and Quantities, See Pavement Markings, Shts. 96-97.

PAVEMENT MARKING DETAILS AT INTERSECTIONS

VAN-30-6.618(4.05)

DESIGN FILE : i:\pd\van30d\v30pmid.dgn
USERNAME : rhermon
DATE : 16-SEP-1997
TIME : 11:10

TRAFFIC CONTROL QUANTITIES

CALCULATED REH CHECKED

GROUND MOUNTED SIGNS

REF. NO.	STATION	SIDE	CODE	SIZE	LEVEL	630 SIGNS FLAT SHEET TYPE "G" SQ. M.	630 SIGNS EXTRU SHEET TYPE "G" SQ. M.	630 GROUND MOUNTED SIGN SUPPORTS NO. 2 POST METER	NO. 3 POST METER	SIGN ATTACHMENT ASSEMBLY EACH	S100x11.5 (S4x7.7) METER	W150x13.5 (W6x9) METER	W250x17.9 (W10x12) METER	W200x26.6 (W8x18) METER	W250x32.7 (W10x22) METER	GROUND MOUNTED BEAM SUPPORT FOUNDATION EACH	BREAK-AWAY BEAM CONNECTION EACH	REMOVAL OF GRD. MTD. SIGN AND REERECTION EACH	REMOVAL OF GRD. MTD. SIGN AND DISPOSAL EACH	REMOVAL OF GRD. MTD. MAJOR SIGN AND DISPOSAL EACH	REMOVAL OF GRD. MTD. BEAM SUPPORT AND DISPOSAL EACH	REMOVAL OF GRD. MTD. POST SUPPORT AND DISPOSAL EACH	625 GROUND ROD EACH	631 SIGN SERVICE EACH	631 SIGNS WIRED EACH
1	6+646	LT.	W-24-36	900x900		0.81		4.3/4.3											1			2			
2	7+163	RT.	R-10-36	900x1200		1.08			4.5/4.5										1			2			
3	7+422	RT.	W-24-36	900x900		0.81																			
			D-8Y-8	1200x200		0.24			4.5/4.5										2			2			
4	7+536	RT.&Med.	R-31C-48	1200x750		0.90		4.1/4.1																	
			R-31C-48	1200x750		0.90		4.1/4.1																	
5	7+631	RT.&Med.	R-31C-48	1200x750		0.90																			
			R-41A-36	900x600		0.54			4.1/4.1																
			R-31C-48	1200x750		0.90																			
			R-41A-36	900x600		0.54			4.1/4.1																
6	7+683	LT.	M-1-30-2	750x750		0.56																			
			M-40-30	750x375		0.28			4.5																
			M-2-30-2	750x750		0.56																			
			M-37-30	750x375		0.28			4.5										4			2			
7	7+698	RT.	R-41B-36	900x900		0.81		4.2/4.2																	
			R-43L-48	1200x450		0.54		3.8/3.8																	
8	7+709	LT. Med.	R-43R-48	1200x450		0.54		3.8/3.8																	
9	7+712	LT. Med.	R-37R-36	900x1200		1.08		4.5/4.5											1			2			
10	7+713	LT. Med.																	1			2			
11	7+721	LT.																	1			2			
12	7+728	RT.	R-1-30	750x750		0.56																			
			R-107A-24	600x450		0.27		4.5/4.5											2			2			
12A	7+730	LT.	D-7-72	1800x300		0.54		3.5/3.6																	
13	7+736	LT.	R-1-30	750x750		0.56																			
			R-107A-24	600x450		0.27		4.5/4.5											2			2			
13A	7+740	RT.	D-7-72	1800x300		0.54		3.5/3.6																	
14	7+744	RT.																	1			2			
15	7+746	RT. Med.																	1			2			
16	7+753	RT. Med.																	1			2			
17	7+754	RT. Med.	R-37R-36	900x1200		1.08		4.5/4.5																	
18	7+756	RT. Med.	R-43R-48	1200x450		0.54		3.8/3.8																	
19	7+769	LT.	R-41B-36	900x900		0.81		4.2/4.2																	
			R-43L-48	1200x450		0.54		3.8/3.8																	
20	7+785	RT.	M-1-30-2	750x750		0.56																			
			M-39-30	750x375		0.28			4.5																
			M-2-30-2	750x750		0.56																			
			M-38-30	750x375		0.28			4.5										4			2			
21	7+835	LT.&Med.	R-31C-48	1200x750		0.90																			
			R-41A-36	900x600		0.54			4.1/4.1																
			R-31C-48	1200x750		0.90																			
			R-41A-36	900x600		0.54			4.1/4.1																
22	7+925	RT.	GB	3900x2850	2		11.12							7.72/8.29		2	2			1	2				
23	7+930	LT.&Med.	R-31C-48	1200x750		0.90		4.1/4.1																	
			R-31C-48	1200x750		0.90		4.1/4.1																	
24	8+034	LT.	W-24-36	900x900		0.81																			
			D-8Y-8	1200x200		0.24			4.5/4.5										2			2			
25	8+085	RT.																		1		2			
26	8+100	LT.	Moved from Sta. 8+238					4.1/4.1																	
27	8+238	RT.	Move to Sta. 8+100															1				2			
28	8+275	RT.	GSS-A	2400x1200			2.88					5.81/6.13				2	2								
29	8+382	RT.	D-4A	4200x900			3.78					5.71/6.03				2	2								
			M-2-30-2	750x750		0.56																			
			M-19-24	600x450		0.27													3			2			
30	8+422	LT.	R-31C-48	1200x750		0.90		4.1/4.1																	
			R-31C-48	1200x750		0.90		4.1/4.1																	
31	8+516.5	RT.	R-31C-48	1200x750		0.90																			
			R-41A-36	900x600		0.54			4.1/4.1																
			R-31C-48	1200x750		0.90																			
			R-41A-36	900x600		0.54			4.1/4.1																
32	8+550	LT.	M-1-30-2	750x750		0.56																			
			M-40-30	750x375		0.28			4.5																
			M-2-30-2	750x750		0.56																			
			M-37-30	750x375		0.28			4.5										4			2			
33	8+588	LT. Med.	R-43R-48	1200x450		0.54		3.8/3.8																	
34	8+590	LT.	M-52A-108	2700x750		0.54	2.03				4.72/4.93					2	2			1	2				
	Sub-Totals					34.74	19.81	161.8	103.2		9.65	23.68		16.01		8	8	1	31	3	4	36			

DESIGN FILE : i:\pdv\van30d\v30gmsq4.dgn
USERNAME : rhermon

DATE : 16-SEP-1997
TIME : 13:24

GROUND MOUNTED SIGN QUANTITIES

VAN-30-6.618(4.05)

TRAFFIC CONTROL QUANTITIES

GROUND MOUNTED SIGNS

REF. NO.	STATION	SIDE	CODE	SIZE	LEVEL	630 SIGNS FLAT SHEET TYPE "G" SQ. M.	630 SIGNS EXTRU SHEET TYPE "G" SQ. M.	630 GROUND MOUNTED SIGN SUPPORTS NO. 2 POST METER	NO. 3 POST METER	SIGN ATTACHMENT ASSEMBLY EACH	S100x11.5 (S4x7.7) METER	W150x13.5 (W6x9) METER	W250x17.9 (W10x12) METER	W200x26.6 (W8x18) METER	W250x32.7 (W10x22) METER	GROUND MOUNTED BEAM SUPPORT FOUNDATION EACH	BREAKAWAY BEAM CONNECTION EACH	REMOVAL OF GRD. MTD. SIGN AND REERECTION EACH	REMOVAL OF GRD. MTD. SIGN AND DISPOSAL EACH	REMOVAL OF GRD. MTD. MAJOR SIGN AND DISPOSAL EACH	REMOVAL OF GRD. MTD. BEAM SUPPORT AND DISPOSAL EACH	REMOVAL OF GRD. MTD. POST SUPPORT AND DISPOSAL EACH	625 GROUND ROD EACH	631 SIGN SERVICE EACH	631 SIGNS WIRED EACH
35	8+591	LT. Med.	R-37R-36	900x1200		1.08		4.5/4.5																	
36	8+594	LT.																	1			2			
37	8+596	RT.	R-41B-36	900x900		0.81		4.2/4.2																	
			R-43L-48	1200x450		0.54		3.8/3.8																	
38	8+598	LT. Med.																	1			2			
39	8+602	LT.	R-1-30	750x750		0.56																			
			R-107A-24	600x450		0.27		4.5/4.5											2			2			
40	8+604	RT. Med.																	1			2			
41	8+631	RT. Med.																	1			2			
42	8+633	LT.	M-1-30-2	750x750		0.56																			
			M-25-24	600x450		0.27			4.5																
			M-2-30-2	750x750		0.56																			
			M-24-24	600x450		0.27			4.5										4			2			
43	8+636	RT.	R-1-30	750x750		0.56																			
			R-107A-24	600x450		0.27		4.5/4.5											2			2			
44	8+639	RT. Med.																	1			2			
45	8+641	LT.	R-41B-36	900x900		0.81		4.2/4.2																	
			R-43L-48	1200x450		0.54		3.8/3.8																	
46	8+642	RT.	M-45	2100x2250	2		4.73						6.98/7.24			2	2			1	2				
47	8+644	RT.																	1			2			
48	8+646	RT. Med.	R-37R-36	900x1200		1.08		4.5/4.5																	
49	8+649	RT. Med.	R-43R-48	1200x450		0.54		3.8/3.8																	
50	8+672	RT.	M-1-30-2	750x750		0.56																			
			M-39-30	750x375		0.28			4.5										2			1			
51	8+720	LT.&Med.	R-31C-48	1200x750		0.90																			
			R-41A-36	900x600		0.54			4.1/4.1																
			R-31C-48	1200x750		0.90																			
			R-41A-36	900x600		0.54			4.1/4.1																
52	8+815	LT.&Med.	R-31C-48	1200x750		0.90		4.1/4.1																	
			R-31C-48	1200x750		0.90		4.1/4.1																	
53	8+868	LT.	D-4B	4200x1500			6.30																		
			M-2-30-2	750x750		0.56																			
			M-30-24	600x450		0.27							6.00/6.35			2	2		2	1	2				
54	8+880	RT.	WS-1-108	2700x1950			5.27						6.84/7.22			2	2			1	2				
55	9+143	RT.	R-103-96	2400x1200			2.88					5.66/5.98				2	2			1	2				
56	9+396	LT.	GSS-A	2400x1200			2.88					5.96/5.65				2	2			1		2			
57	9+597	LT.	GB	3000x2250	2		6.75						6.95/7.17			2	2			1	2				
58	9+870	RT.	WS-3-156	3900x1650			6.44						6.45/6.56			2	2						1	1	1
59	10+065	RT.																		1	2				
60	10+162	RT.	R-70-48	1200x900		1.08		4.3/4.3											1			2			
61	10+328	RT.	WS-4-84	2100x1800			3.78					5.27/5.23				2	2			1	2				
62	10+385	RT.	R-41A-36	900x600		0.54			4.1/4.1																
			R-41A-36	900x600		0.54			4.1/4.1										2			4			
63	10+709	RT.	R-70-48	1200x900		1.08		4.3/4.3											1			2			
64	10+784	RT.	W-49R-36	900x900		0.81		4.3/4.3											1			2			
65	11+063	RT.	W-24-36	900x900		0.81																			
			D-8Y-8	1200x200		0.24			4.5/4.5										2			2			
66	11+175	RT.&Med.	R-31C-48	1200x750		0.90		4.1/4.1																	
			R-31C-48	1200x750		0.90		4.1/4.1																	
67	11+270	RT.&Med.	R-31C-48	1200x750		0.90																			
			R-41A-36	900x600		0.54			4.1/4.1																
			R-31C-48	1200x750		0.90																			
			R-41A-36	900x600		0.54			4.1/4.1																
68	11+325	LT.	M-1-30-2	750x750		0.56																			
			M-40-30	750x375		0.28			4.5										2			1			
69	11+342	LT. Med.	R-43R-48	1200x450		0.54		3.8/3.8																	
70	11+345	LT. Med.	R-37R-36	900x1200		1.08		4.5/4.5																	
71	11+345	LT.																	1			2			
72	11+350	RT.	R-41B-36	900x900		0.81		4.2/4.2																	
			R-43L-48	1200x450		0.54		3.8/3.8																	
72A	11+350	LT.	D-7-72	1800x300		0.54		3.5/3.6																	
73	11+352	LT. Med.																	1			2			
74	11+355	LT.	R-1-30	750x750		0.56																			
			R-107A-24	600x450		0.27		4.5/4.5											2			2			
	Sub-Totals					30.57	39.03	183.4	76.2			33.75	67.76			16	16		31	8	14	44	1	1	1

CALCULATED REH CHECKED

GROUND MOUNTED SIGN QUANTITIES

VAN-30-6.618(4.05)

101
134

DESIGN FILE : i:\pdv\van30d\v30gmsq4.dgn
USERNAME : rhermon
DATE : 16-SEP-1997
TIME : 13:24

TRAFFIC CONTROL QUANTITIES

GROUND MOUNTED SIGNS

REF. NO.	STATION	SIDE	CODE	SIZE	LEVEL	630 SIGNS FLAT SHEET TYPE "G" SQ. M.	630 SIGNS EXTRU SHEET TYPE "G" SQ. M.	630 GROUND MOUNTED SIGN SUPPORTS NO. 2 POST METER	NO. 3 POST METER	SIGN ATTACHMENT ASSEMBLY EACH	S100x11.5 (S4x7.7) METER	W150x13.5 (W6x9) METER	W250x17.9 (W10x12) METER	W200x26.6 (W8x18) METER	W250x32.7 (W10x22) METER	GROUND MOUNTED BEAM SUPPORT FOUNDATION EACH	BREAK-AWAY BEAM CONNECTION EACH	REMOVAL OF GRD. MTD. SIGN AND REERECTION EACH	REMOVAL OF GRD. MTD. SIGN AND DISPOSAL EACH	REMOVAL OF GRD. MTD. MAJOR SIGN AND DISPOSAL EACH	REMOVAL OF GRD. MTD. BEAM SUPPORT AND DISPOSAL EACH	REMOVAL OF GRD. MTD. POST SUPPORT AND DISPOSAL EACH	625 GROUND ROD EACH	631 SIGN SERVICE EACH	631 SIGNS WIRED EACH
75	11+356	LT. Med.																	1			2			
76	11+387	RT. Med.																	1			2			
77	11+389	RT.	R-1-30	750x750		0.56																			
			R-107A-24	600x450		0.27		4.5/4.5											2			2			
78	11+391	RT. Med.																	1			2			
79	11+394	LT.	R-41B-36	900x900		0.81		4.2/4.2																	
			R-43L-48	1200x450		0.54		3.8/3.8																	
79A	11+394	RT.	D-7-72	1800x300		0.54		3.5/3.6																	
80	11+397	RT.																	1			2			
81	11+400	RT.	M-1-30-2	750x750		0.56																			
			M-39-30	750x375		0.28			4.5										2			1			
82	11+400	RT. Med.	R-37R-36	900x1200		1.08		4.5/4.5																	
83	11+403	RT. Med.	R-43R-48	1200x450		0.54		3.8/3.8																	
84	11+474	LT.&Med.	R-31C-48	1200x750		0.90																			
			R-41A-36	900x600		0.54			4.1/4.1																
			R-31C-48	1200x750		0.90																			
			R-41A-36	900x600		0.54			4.1/4.1																
85	11+569	LT.&Med.	R-31C-48	1200x750		0.90		4.1/4.1																	
			R-31C-48	1200x750		0.90		4.1/4.1																	
86	11+678	LT.	W-24-36	900x900		0.81																			
			D-8Y-8	1200x200		0.24			4.5/4.5										2			2			
87	12+005	RT.	RA-1-132	3300x1350			4.46						6.19/6.32			2	2			1	2				
88	12+236	RT.	W-24-36	900x900		0.81																			
			D-8Y-8	1200x200		0.24			4.5/4.5										2			2			
89	12+343	RT.&Med.	R-31C-48	1200x750		0.90		4.1/4.1																	
			R-31C-48	1200x750		0.90		4.1/4.1																	
90	12+437	RT.&Med.	R-31C-48	1200x750		0.90																			
			R-41A-36	900x600		0.54			4.1/4.1																
			R-31C-48	1200x750		0.90																			
			R-41A-36	900x600		0.54			4.1/4.1																
91	12+504	RT.	R-41B-36	900x900		0.81		4.2/4.2																	
			R-43L-48	1200x450		0.54		3.8/3.8																	
92	12+512	LT.	M-1-30-2	750x750		0.56																			
			M-40-30	750x375		0.28			4.5										2			1			
93	12+515	LT. Med.	R-43R-48	1200x450		0.54		3.8/3.8																	
94	12+518	LT. Med.	R-37R-36	900x1200		1.08		4.5/4.5																	
95	12+525	LT. Med.																	1			2			
96	12+530	LT.																	1			2			
96A	12+535	LT.	D-7-72	1800x300		0.54		3.5/3.6																	
97	12+536	RT.	R-1-30	750x750		0.56																			
			R-107A-24	600x450		0.27		4.5/4.5											2			2			
98	12+539	LT.	R-1-30	750x750		0.56																			
			R-107A-24	600x450		0.27		4.5/4.5											2			2			
98A	12+545	RT.	D-7-72	1800x300		0.54		3.5/3.6																	
99	12+550	RT.																	1			2			
100	12+553	RT. Med.																	1			2			
101	12+557	RT. Med.																	1			2			
102	12+512	RT. Med.	R-37R-36	900x1200		1.08		4.5/4.5																	
103	12+565	RT. Med.	R-43R-48	1200x450		0.54		3.8/3.8																	
104	12+578	LT.	R-41B-36	900x900		0.81		4.2/4.2																	
			R-43L-48	1200x450		0.54		3.8/3.8																	
105	12+585	RT.	M-1-30-2	750x750		0.56																			
			M-39-30	750x375		0.28			4.5										2			1			
106	12+642	LT.&Med.	R-31C-48	1200x750		0.90																			
			R-41A-36	900x600		0.54			4.1/4.1																
			R-31C-48	1200x750		0.90																			
			R-41A-36	900x600		0.54			4.1/4.1																
107	12+736	LT.&Med.	R-31C-48	1200x750		0.90		4.1/4.1																	
			R-31C-48	1200x750		0.90		4.1/4.1																	
108	12+847	LT.	W-24-36	900x900		0.81																			
			D-8Y-8	1200x200		0.24			4.5/4.5										2			2			
109	13+085	LT.						4.1/4.1										1				2			
110	13+344	RT.	RA-2-132	3300x1500			4.95						6.29/6.62			2	2			1	2				
111	13+398	LT.	R-70-48	1200x900		1.08		4.3/4.3											1			2			
	Sub-Totals					35.43	9.41	208.9	89.7				25.42			4	4	1	28	2	4	37			

CALCULATED REH CHECKED

GROUND MOUNTED SIGN QUANTITIES

VAN-30-6.618(4.05)

102
134

DESIGN FILE : i:\pdv\van30dv\30gmsq.dgn
USERNAME : rhermon

DATE : 16-SEP-1997
TIME : 13:25

TRAFFIC CONTROL QUANTITIES

GROUND MOUNTED SIGNS

REF. NO.	STATION	SIDE	CODE	SIZE	LEVEL	630 SIGNS FLAT SHEET TYPE "G" SQ. M.	630 SIGNS EXTRU SHEET TYPE "G" SQ. M.	630 GROUND MOUNTED SIGN SUPPORTS NO. 2 POST METER	NO. 3 POST METER	SIGN ATTACHMENT ASSEMBLY EACH	S100x11.5 (S4x7.7) METER	W150x13.5 (W6x9) METER	W250x17.9 (W10x12) METER	W200x26.6 (W8x18) METER	W250x32.7 (W10x22) METER	GROUND MOUNTED BEAM SUPPORT FOUNDATION EACH	BREAKAWAY BEAM CONNECTION EACH	REMOVAL OF GRD. MTD. SIGN AND REERECTION EACH	REMOVAL OF GRD. MTD. SIGN AND DISPOSAL EACH	REMOVAL OF GRD. MTD. MAJOR SIGN AND DISPOSAL EACH	REMOVAL OF GRD. MTD. BEAM SUPPORT AND DISPOSAL EACH	REMOVAL OF GRD. MTD. POST SUPPORT AND DISPOSAL EACH	625 GROUND ROD EACH	631 SIGN SERVICE EACH	631 SIGNS WIRED EACH
112	13+437	RT.	R-70-48	1200x900		1.08		4.3/4.3											1			2			
113	13+502	LT.						4.1/4.1										1				2			
114	13+541	LT.						4.1/4.1										1				2			
115	13+578	LT.	W-49R-36	900x900		0.81		4.3/4.3											1			2			
116	13+587	LT.	R-70-48	1200x900		1.08		4.3/4.3											1			2			
117	13+605	RT.	RA-4-72	1800x1650			2.97				4.64/4.66					2	2			1	2				
118	13+635	RT.	R-41A-36	900x600		0.54			4.1/4.1																
			R-41A-36	900x600		0.54			4.1/4.1										2			4			
119	13+840	LT.	R-41A-36	900x600		0.54			4.1/4.1																
			R-41A-36	900x600		0.54			4.1/4.1										2			4			
120	13+885	LT.	RA-4-72	1800x1650			2.97				4.73/4.71					2	2			1	2				
121	13+898	RT.	W-49R-36	900x900		0.81		4.3/4.3											1			2			
122	13+931	RT.	R-70-48	1200x900		1.08		4.3/4.3											1			2			
123	14+019	RT.							4.1/4.1									1				2			
124	14+058	RT.							4.1/4.1									1				2			
125	14+065	LT.	R-70-48	1200x900		1.08		4.3/4.3											1			2			
126	14+131	RT.	R-70-48	1200x900		1.08		4.3/4.3											1			2			
127	14+156	LT.	RA-2-132	3300x1500			4.95						6.38/6.40			2	2			1	2				
128	14+896	RT.	W-24-36	900x900		0.81																			
			D-8Y-8	1200x200		0.24			4.5/4.5										2			2			
129	15+030	RT.&Med.	R-31C-48	1200x750		0.90		4.1/4.1																	
			R-31C-48	1200x750		0.90		4.1/4.1																	
130	15+080	RT.&Med.	R-31C-48	1200x750		0.90																			
			R-41A-36	900x600		0.54			4.1/4.1																
			R-31C-48	1200x750		0.90																			
			R-41A-36	900x600		0.54			4.1/4.1																
131	15+137	LT.	M-1-30-2	750x750		0.56																			
			M-40-30	750x375		0.28			4.5										2			1			
132	15+152	LT. Med.	R-43R-48	1200x450		0.54		3.8/3.8																	
133	15+155	LT. Med.	R-37R-36	900x1200		1.08		4.5/4.5																	
133A	15+160	LT.	D-7-72	1800x300		0.54		3.5/3.6																	
134	15+161	RT.	R-41B-36	900x900		0.81		4.2/4.2																	
			R-43L-48	1200x450		0.54		3.8/3.8																	
135	15+161	LT.																	1			2			
136	15+165	LT.	R-1-30	750x750		0.56																			
			R-107A-24	600x450		0.27		4.5/4.5											2			2			
137	15+166	LT. Med.																	1			2			
138	15+170	LT. Med.																	1			2			
139	15+196	RT. Med.																	1			2			
140	15+199	RT.	R-1-30	750x750		0.56																			
			R-107A-24	600x450		0.27		4.5/4.5											2			2			
141	15+200	RT. Med.																	1			2			
142	15+204	LT.	R-41B-36	900x900		0.81		4.2/4.2																	
			R-43R-48	1200x450		0.54		3.8/3.8																	
142A	15+205	RT.	D-7-72	1800x300		0.54		3.5/3.6																	
143	15+207	RT.																	1			2			
144	15+210	RT. Med.	R-37R-36	900x1200		1.08		4.5/4.5																	
145	15+213	RT. Med.	R-43R-48	1200x450		0.54		3.8/3.8																	
146	15+231	RT.	M-1-30-2	750x750		0.56																			
			M-39-30	750x375		0.28			4.5										2			1			
147	15+284	LT.&Med.	R-31C-48	1200x750		0.90																			
			R-41A-36	900x600		0.54			4.1/4.1																
			R-31C-48	1200x750		0.90																			
			R-41A-36	900x600		0.54			4.1/4.1																
148	15+379	LT.&Med.	R-31C-48	1200x750		0.90		4.1/4.1																	
			R-31C-48	1200x750		0.90		4.1/4.1																	
149	15+488	LT.	W-24-36	900x900		0.81																			
			D-8Y-8	1200x200		0.24			4.5/4.5										2			2			
150	15+498	RT.	GB	3300x2850	2		9.41							6.70/7.16		2				1	2				
151	15+510	LT.	RA-1-132	3300x1350			4.46					6.38/5.96				2	2			1	2				
152	16+280	RT.							4.1/4.1									1				2			
153	16+307	LT.	GJ	3900x1650	3		6.44						6.23/6.31			2	2			1	2				
154	16+462	RT.	GB	3300x2850	2		9.41								8.06/8.28	2	2			1	2				
155	16+620	LT.	R-10-36	900x1200		1.08		4.3/4.3											1			2			
	Sub-Totals					33.16	40.61	216.0	117.2		18.74	12.34	25.32	13.86	16.34	14	12	5	30	7	14	58			

DESIGN FILE : i:\pd\van30d\v30gmsq.dgn
USERNAME : rhermon

DATE : 16-SEP-1997
TIME : 13:25

CALCULATED REH CHECKED

GROUND MOUNTED SIGN QUANTITIES

VAN-30-6.618(4.05)

TRAFFIC CONTROL QUANTITIES

GROUND MOUNTED SIGNS

REF. NO.	STATION	SIDE	CODE	SIZE	LEVEL	630 SIGNS FLAT SHEET TYPE "G"	630 SIGNS EXTRU SHEET TYPE "G"	630 GROUND MOUNTED SIGN SUPPORTS NO. 2 POST	NO. 3 POST	SIGN ATTACHMENT ASSEMBLY	S100x11.5 (S4x7.7)	W150x13.5 (W6x9)	W250x17.9 (W10x12)	W200x26.6 (W8x18)	W250x32.7 (W10x22)	GROUND MOUNTED BEAM SUPPORT FOUNDATION	BREAKAWAY BEAM CONNECTION	REMOVAL OF GRD. MTD. SIGN AND REERECTION	REMOVAL OF GRD. MTD. SIGN AND DISPOSAL	REMOVAL OF GRD. MTD. MAJOR SIGN AND DISPOSAL	REMOVAL OF GRD. MTD. BEAM SUPPORT AND DISPOSAL	REMOVAL OF GRD. MTD. POST SUPPORT AND DISPOSAL	625 GROUND ROD	631 SIGN SERVICE	631 SIGNS WIRED
						SQ. M.	SQ. M.	METER	METER	EACH	METER	METER	METER	METER	METER	EACH	EACH	EACH	EACH	EACH	EACH	EACH	EACH	EACH	EACH
156	16+657	RT.	W-24-36	900x900		0.81																			
			D-8Y-8	1200x200		0.24			4.5/4.5										2			2			
157	16+745	RT.&Med.	R-31C-48	1200x750		0.90		4.1/4.1																	
			R-31C-48	1200x750		0.90		4.1/4.1																	
158	16+820	RT.	GSS-A	2400x1200			2.88					5.96/6.04				2	2								
159	16+854	RT.&Med.	R-31C-48	1200x750		0.90																			
			R-41A-36	900x600		0.54			4.1/4.1																
			R-31C-48	1200x750		0.90																			
			R-41A-36	900x600		0.54			4.1/4.1																
160	16+881	RT.																		1	2				
161	16+906	LT.	M-1-30-2	750x750		0.56																			
			M-40-30	750x375		0.28			4.5										2			1			
162	16+926	LT. Med.	R-43R-48	1200x450		0.54		3.8/3.8																	
163	16+929	LT. Med.	R-37R-36	900x1200		1.08		4.5/4.5																	
164	16+932	LT.																	1			2			
165	16+934	RT.	R-41B-36	900x900		0.81		4.2/4.2	4.1/4.1																
			R-43L-48	1200x450		0.54		3.8/3.8																	
165A	16+938	LT.	D-7-72	1800x300		0.54		3.5/3.6																	
166	16+939	LT. Med.							4.1/4.1										1			2			
167	16+940	LT.	R-1-30	750x750		0.56																			
			R-107A-24	600x450		0.27		4.5/4.5											2			2			
168	16+944	RT. Med.																	1			2			
169	16+969	RT. Med.																	1			2			
170	16+972	LT.	R-1-30	750x750		0.56																			
			R-107A-24	600x450		0.27		4.5/4.5											2			2			
171	16+977	RT.																	1			2			
171A	16+978	RT.	D-7-72	1800x300		0.54		3.5/3.6																	
172	16+979	RT. Med.																	1			2			
173	16+979	LT.	R-41B-36	900x900		0.81		4.2/4.2																	
			R-43L-48	1200x450		0.54		3.8/3.8																	
174	16+984	RT. Med.	R-37R-36	900x1200		1.08		4.5/4.5																	
175	16+987	RT. Med.	R-43R-48	1200x450		0.54		3.8/3.8																	
176	17+038	RT.																		1	2				
177	17+059	LT.&Med.	R-31C-48	1200x750		0.90																			
			R-41A-36	900x600		0.54			4.1/4.1																
			R-31C-48	1200x750		0.90																			
			R-41A-36	900x600		0.54			4.1/4.1																
178	17+145	RT.	GG	4800x3000	2		14.4			3															
			GE	3900x1800	2		7.02			3															
179	17+169	LT.&Med.	R-31C-48	1200x750		0.90		4.1/4.1																	
			R-31C-48	1200x750		0.90		4.1/4.1																	
180	17+310	RT.	M-1-30-2	750x750		0.56																			
			M-39-30	750x375		0.28			4.5																
			M-1-30-3	750x750		0.56													1						
			M-39-30	750x375		0.28			4.5										4			2			
181	17+315	LT.	W-24-36	900x900		0.81																			
			D-8Y-8	1200x200		0.24			4.5/4.5										2			2			
182	17+599	LT.	W-49R-30	750x750		0.53			4.5/4.5										1			2			
183	17+636	RT.	W-49R-30	750x750		0.53			4.5/4.5										1			2			
184	17+817	LT.	M-1-30-2	750x750		0.56																			
			M-40-30	750x375		0.28			4.5										2			1			
185	17+869	LT.	GF	1800x1500	2		2.70				4.31/4.38					2	2			1	2				
186	18+135	RT.	GB	3300x2850	2		9.41							7.80/7.61		2	2			1	2				
	Sub-Totals					20.45	36.41	130.2	103.2	6	8.64	12.0		15.41		6	6		24	4	8	26			
	Sub-Totals from Sheet __					33.66	19.81	161.2	103.2		9.65	23.68		16.01		8	8	1	31	3	4	36			
	Sub-Totals from Sheet __					30.03	39.03	183.1	76.2			33.75	67.76			16	16		31	8	14	44	1	1	1
	Sub-Totals from Sheet __					33.81	9.41	208.0	89.7				25.42			4	4	1	28	2	4	37			
	Sub-Totals from Sheet __					32.08	40.61	215.4	117.2		18.74	12.34	25.32	13.86	16.34	14	12	5	30	7	14	58			
	Totals					150.03	145.27	897.9	489.5	6	37.03	81.77	118.50	45.28	16.34	48	46	7	144	24	44	201	1	1	1

CALCULATED REH CHECKED

GROUND MOUNTED SIGN QUANTITIES

VAN-30-6.618(4.05)

104
134

DESIGN FILE : i:\pd\van30d\v30gmsq.dgn
USERNAME : rhermon

DATE : 16-SEP-1997
TIME : 13:26

DESIGN FILE : i:\pd\van30d\v30sgnl.dgn
USERNAME : rhermon
DATE : 03-SEP-1997
TIME : 15:19

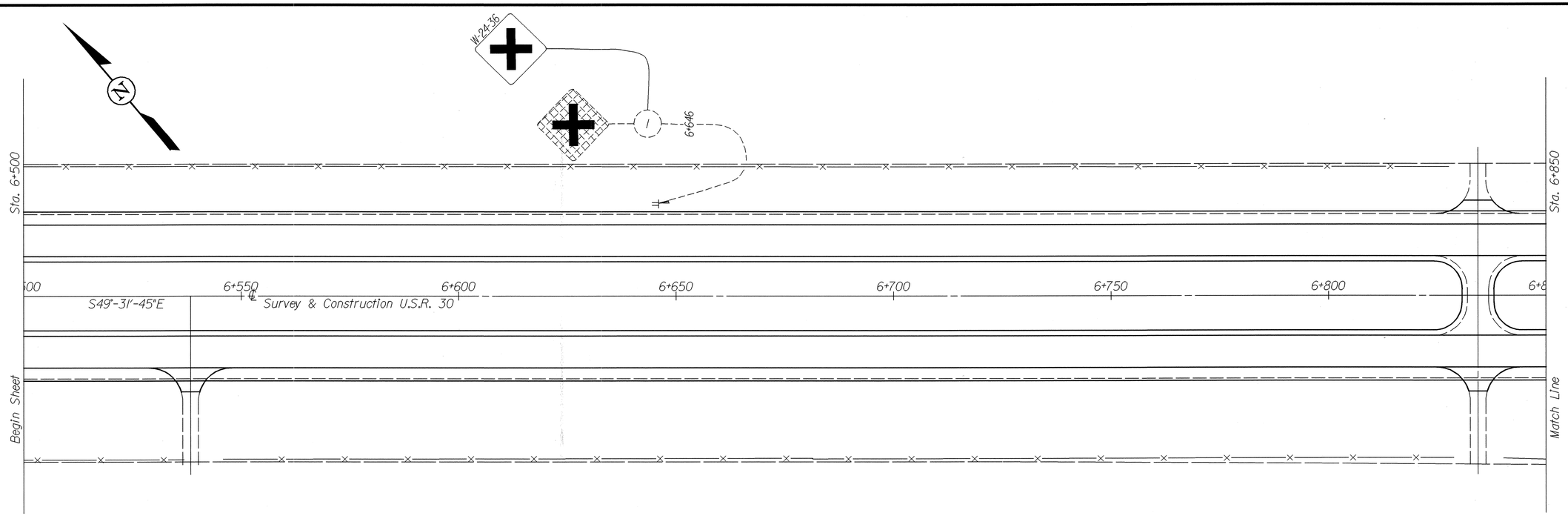

SIGN LEGEND

- New
- Existing, to Remain
- Existing, to be Removed and Reerected
- Existing, to be Removed

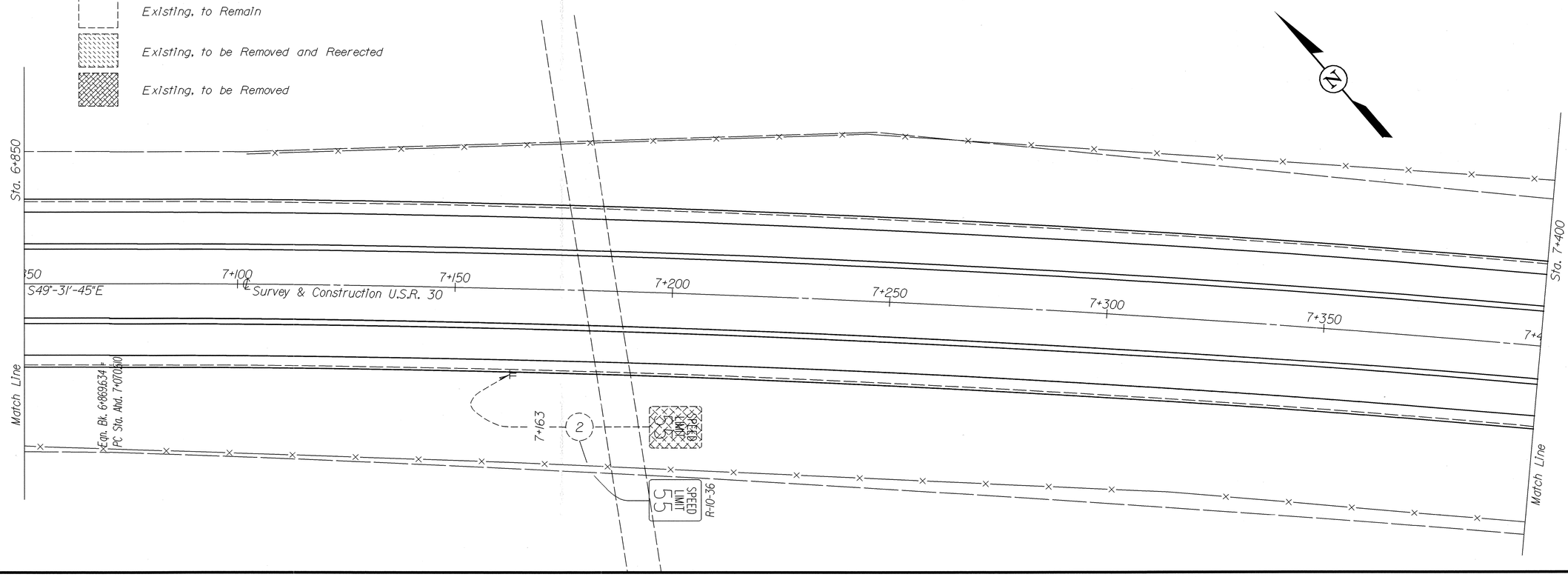

Scale in Meters
0 10 20
1:500 Ratio

CALCULATED REH
CHECKED

PLAN SHEET – U.S.R. 30
Sta. 6+500 to Sta. 7+400

VAN-30-6.618(4.05)

105
134

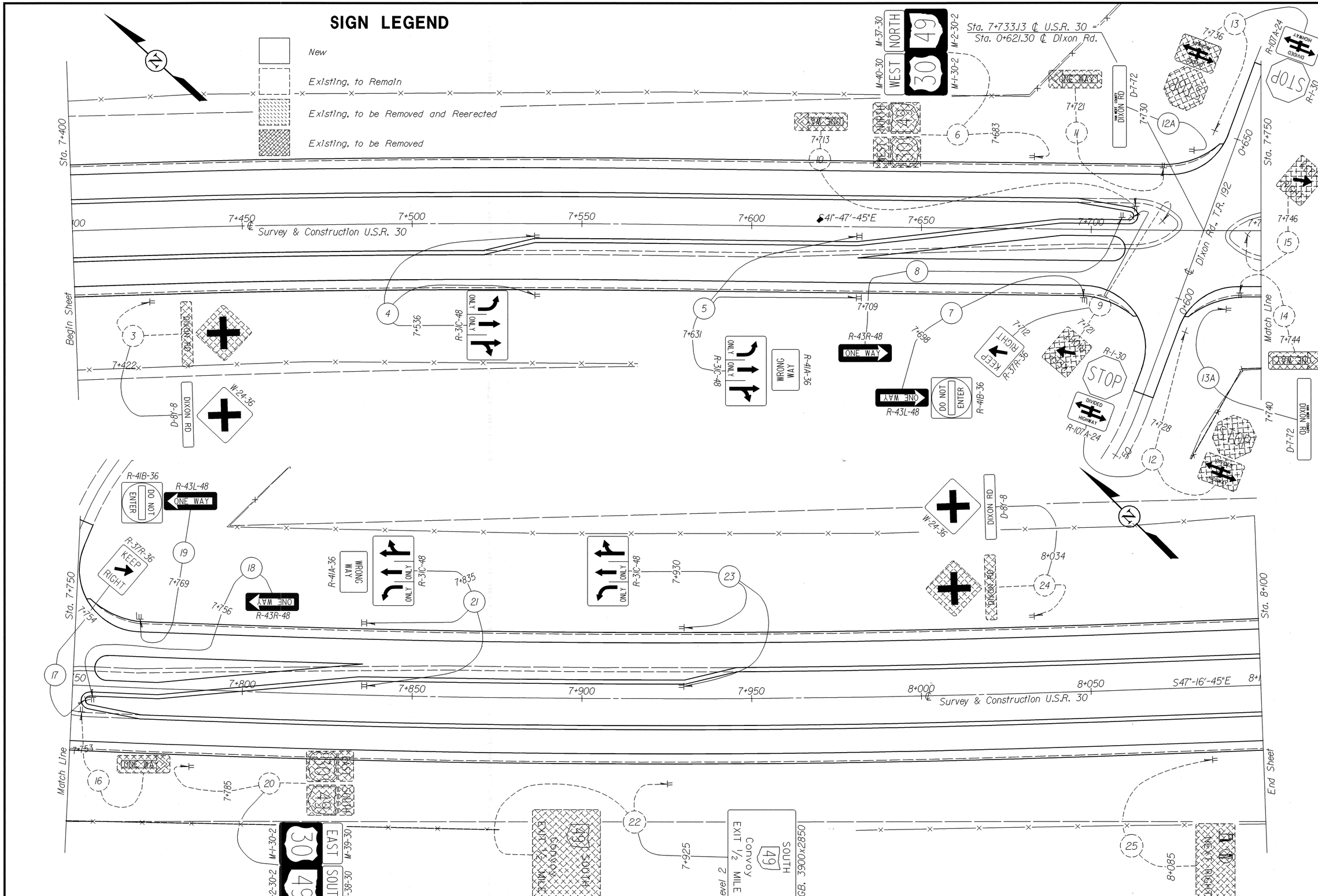

PLAN SHEET - U.S.R. 30
Sta. 7+400 to Sta. 8+100

VAN-30-6.618(4.05)

DESIGN FILE : i:\pd\van30d\v30sgn2.dgn
USERNAME : rhermon
DATE : 03-SEP-1997
TIME : 15:23

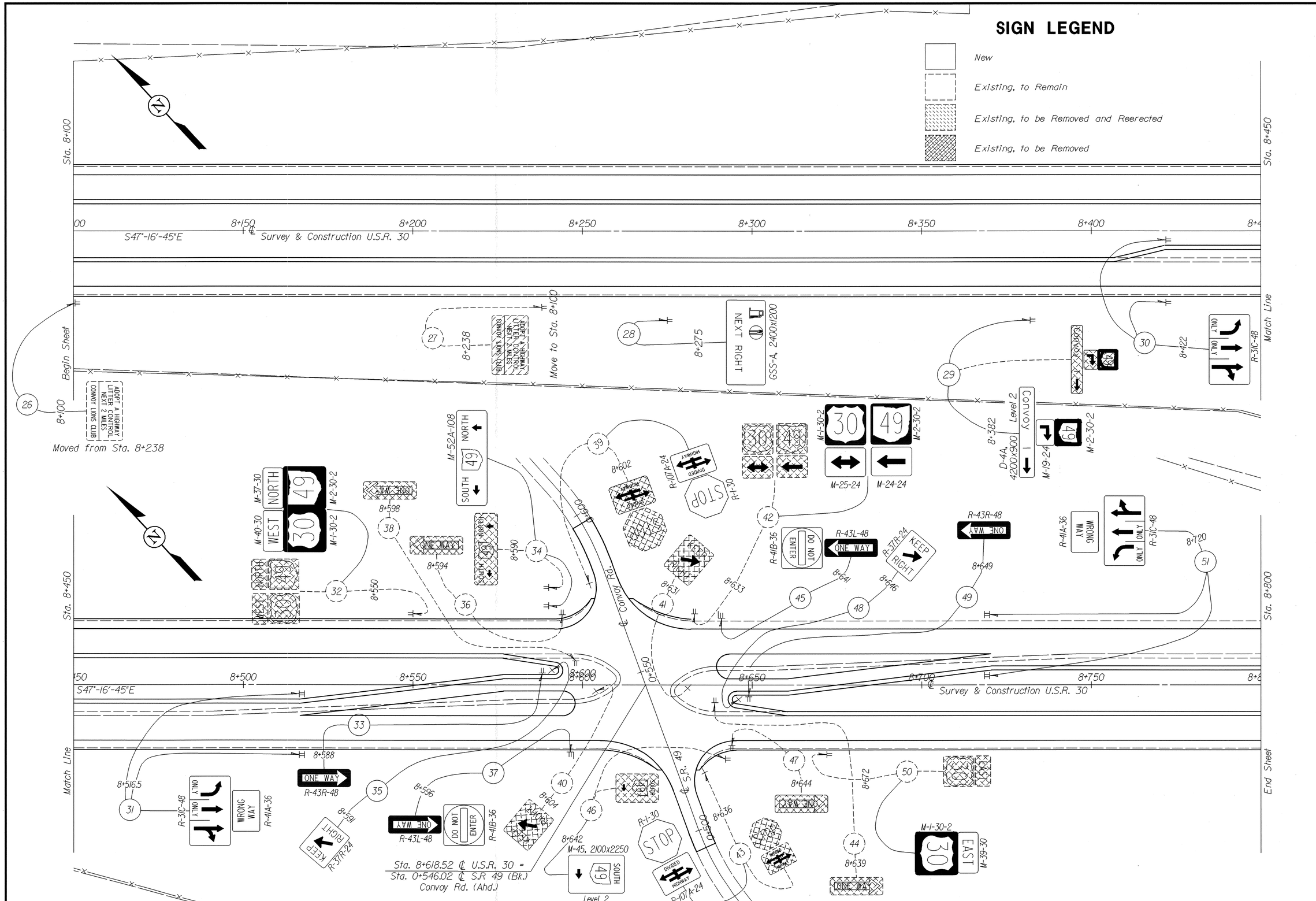

Scale in Meters
0 10 20
1:500 Ratio

CALCULATED REH
CHECKED

PLAN SHEET - U.S.R. 30
Sta. 8+100 to Sta. 8+800

VAN-30-6.618(4.05)

DESIGN FILE : i:\pd\van30d\v30sgn3.dgn
USERNAME : rhermon

DATE : 03-SEP-1997
TIME : 15:28

DESIGN FILE : i:\pd\van30d\v30sgn4.dgn
USERNAME : rhermon

DATE : 03-SEP-1997
TIME : 15:32

Scale in Meters
0 10 20
1:500 Ratio

CALCULATED REH
CHECKED

PLAN SHEET - U.S.R. 30
Sta. 8+800 to Sta. 9+500

VAN-30-6.618(4.05)

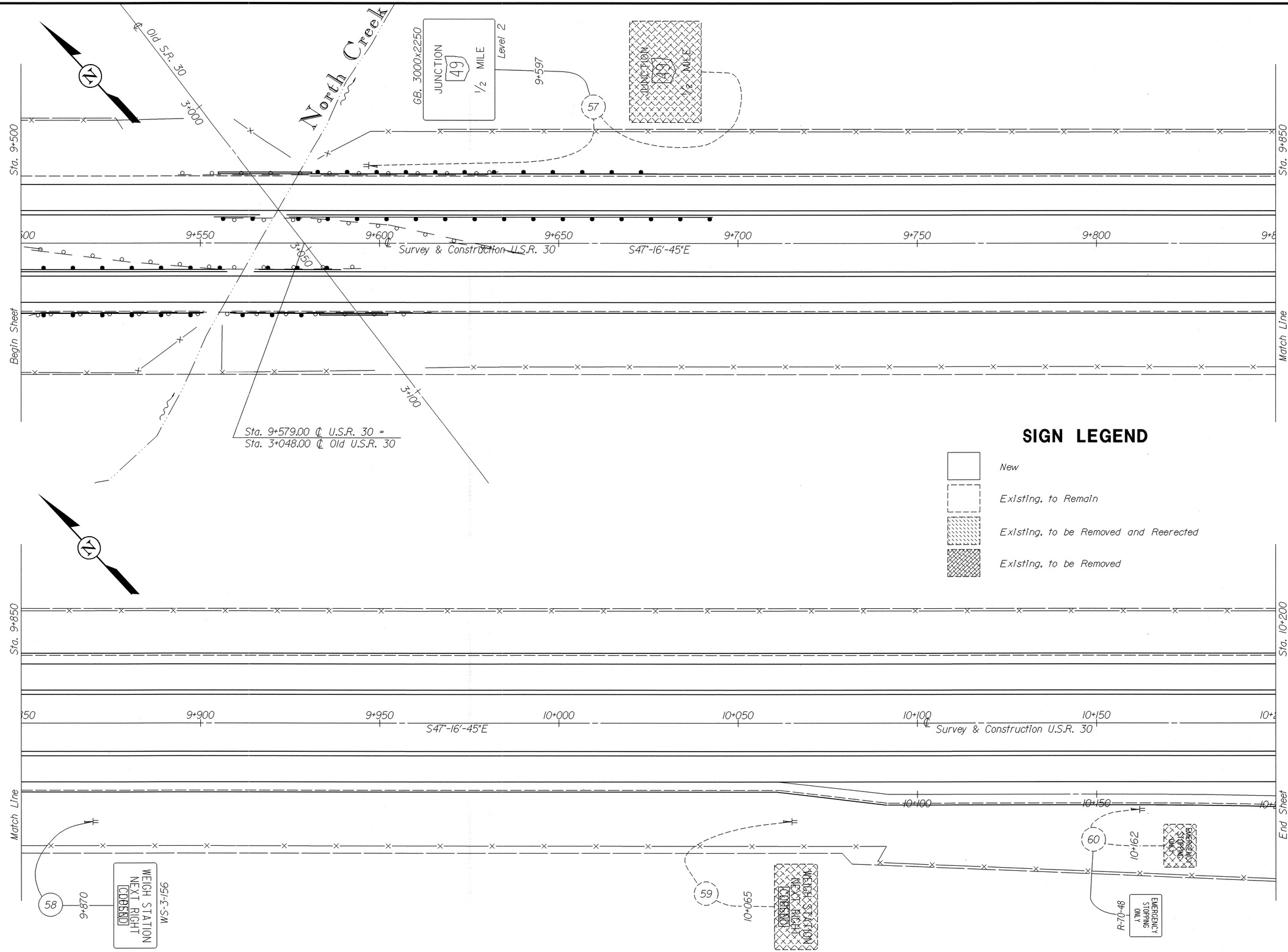

DESIGN FILE : i:\pd\van30d\v30sgn5.dgn
USERNAME : rhermon

DATE : 03-SEP-1997
TIME : 15:39

Scale in Meters
0 10 20
1:500 Ratio

CALCULATED REH
CHECKED

PLAN SHEET - U.S.R. 30
Sta. 9+500 to Sta. 10+200

VAN-30-6.618(4.05)

109
134

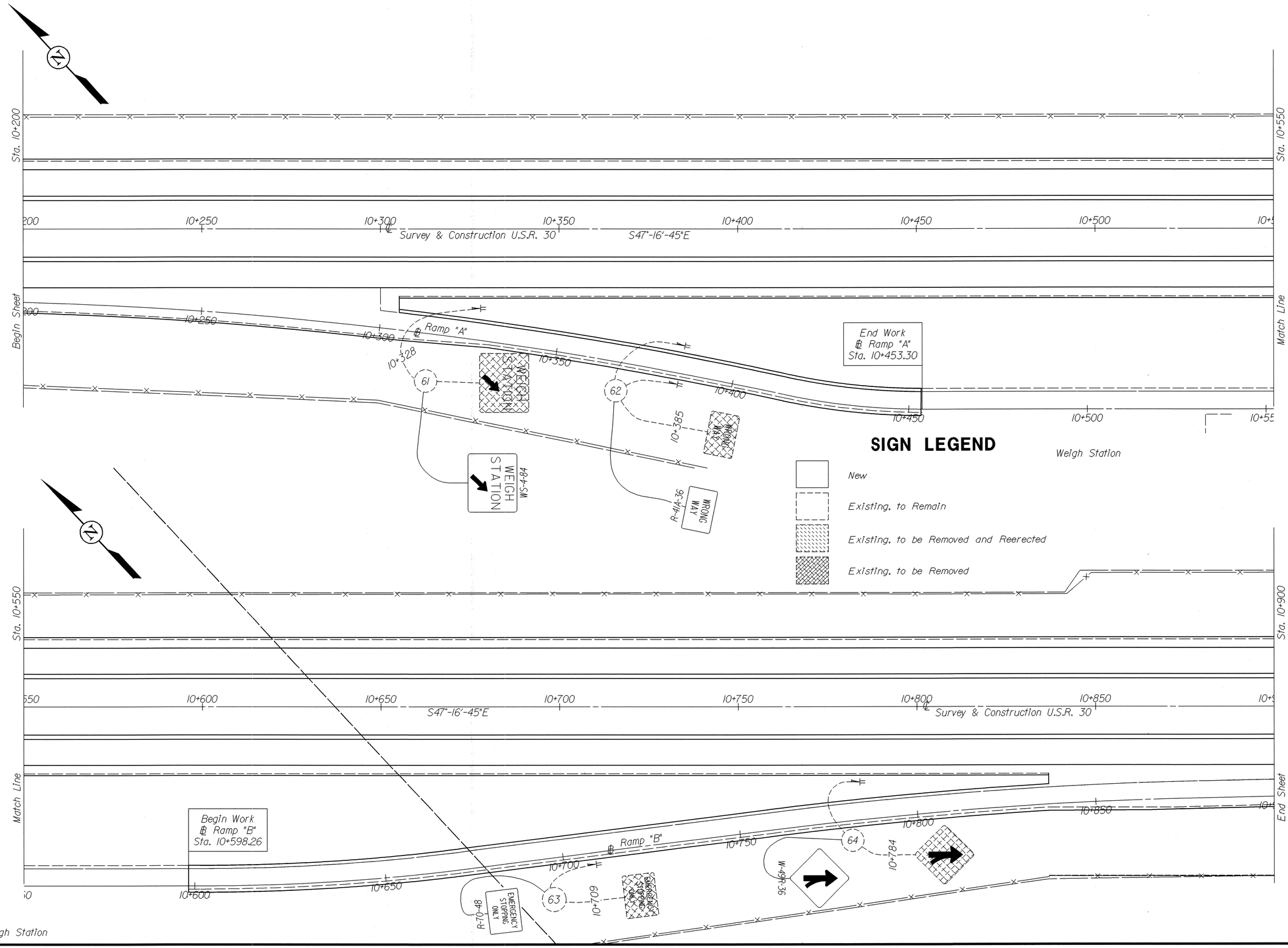

DESIGN FILE : i:\pd\van30d\v30sgn6.dgn
USERNAME : rhermon

DATE : 03-SEP-1997
TIME : 15:42

Scale in Meters
0 10 20
1:500 Ratio

CALCULATED AEH
CHECKED

PLAN SHEET - U.S.R. 30
Sta. 10+200 to Sta. 10+900

VAN-30-6.618(4.05)

110
134

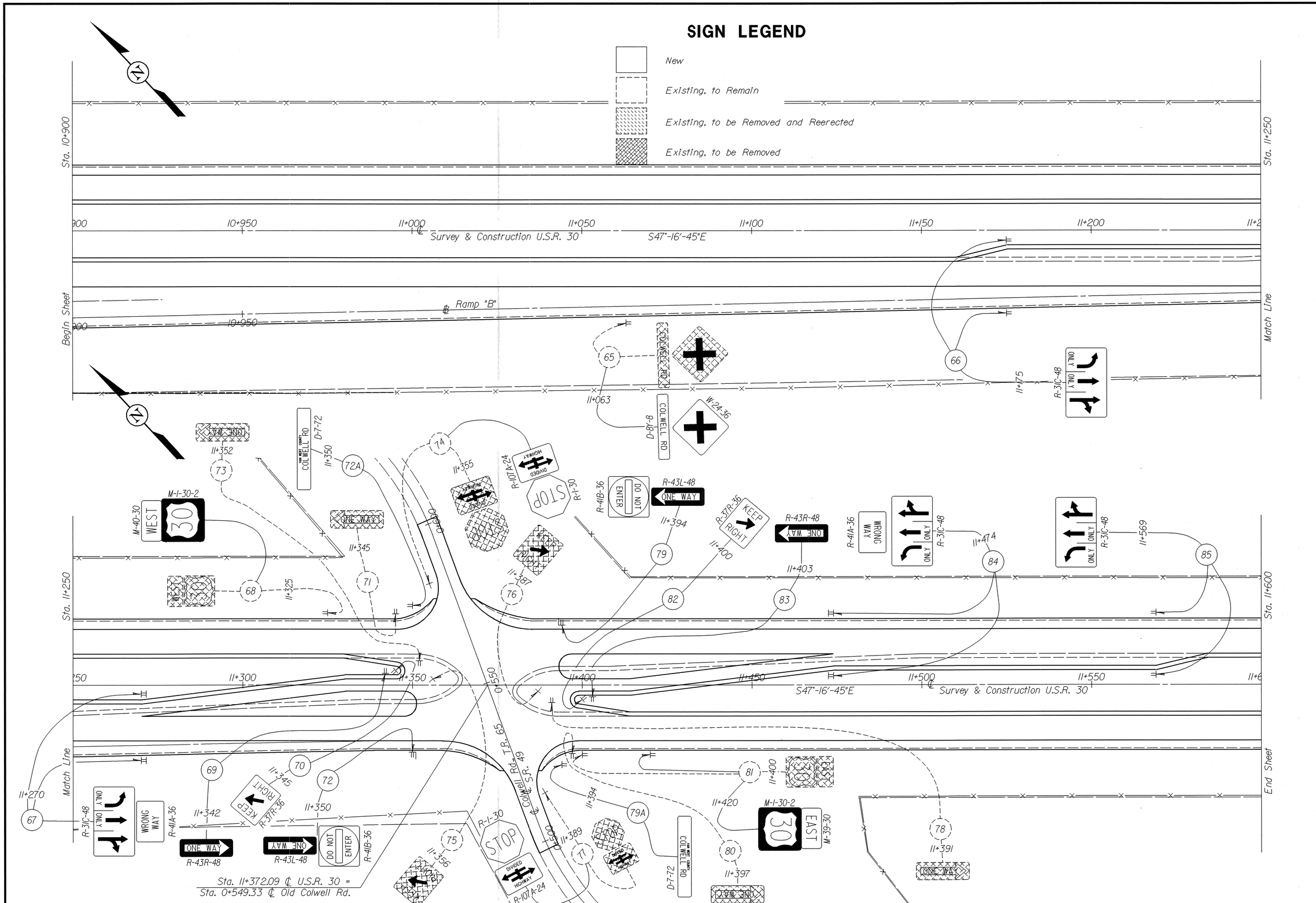

Scale in Meters
0 10 20
1:500 Ratio

CALCULATED REH
CHECKED

PLAN SHEET - U.S.R. 30
Sta. 10+900 to Sta. 11+600

VAN-30-6.618(4.05)

111
134

DESIGN FILE : i:\pd\van30d\v30sgn7.dgn
USERNAME : rhermon

DATE : 03-SEP-1997
TIME : 15:46

SIGN LEGEND

- New
- Existing, to Remain
- Existing, to be Removed and Reerected
- Existing, to be Removed

Scale in Meters
0 10 20
1:500 Ratio

CALCULATED REH
CHECKED

PLAN SHEET - U.S.R. 30
Sta. 11+600 to Sta. 12+300

VAN-30-6.618(4.05)

112
134

DESIGN FILE : i:\pd\van30d\v30sgn8.dgn
USERNAME : rhermon

DATE : 17-SEP-1997
TIME : 08:43

DESIGN FILE : i:\pd\van30d\v30sgn9.dgn
USERNAME : rhermon
DATE : 03-SEP-1997
TIME : 15:51

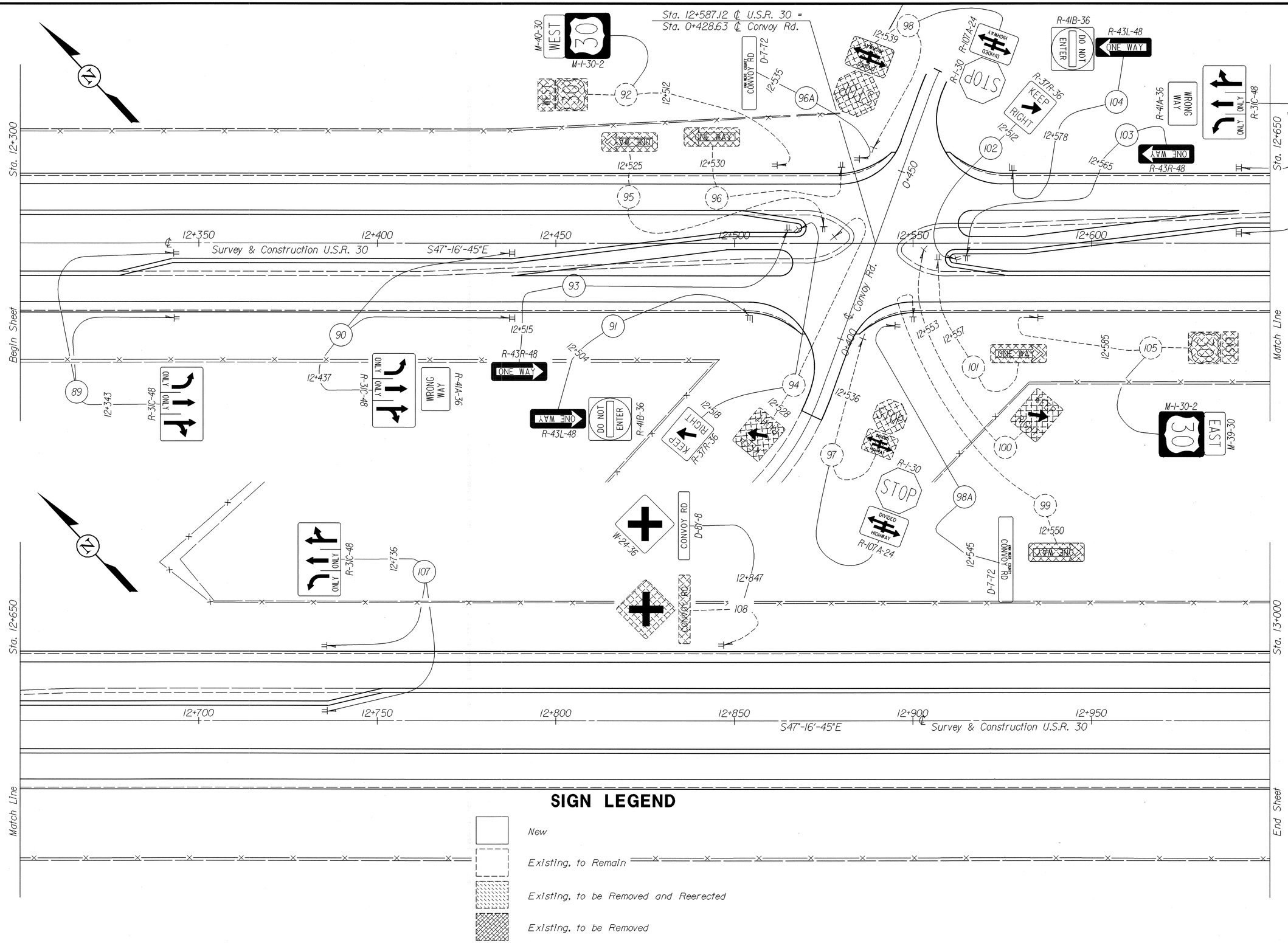

SIGN LEGEND

- New
- Existing, to Remain
- Existing, to be Removed and Reerected
- Existing, to be Removed

Scale in Meters
0 10 20
1:500 Ratio

CALCULATED REH
CHECKED

PLAN SHEET – U.S.R. 30
Sta. 12+300 to Sta. 13+000

VAN-30-6.618(4.05)

DATE : 03-SEP-1997
TIME : 15:55

DESIGN FILE : i:\pd\van30d\v30sgn10.dgn
USERNAME : rhermon

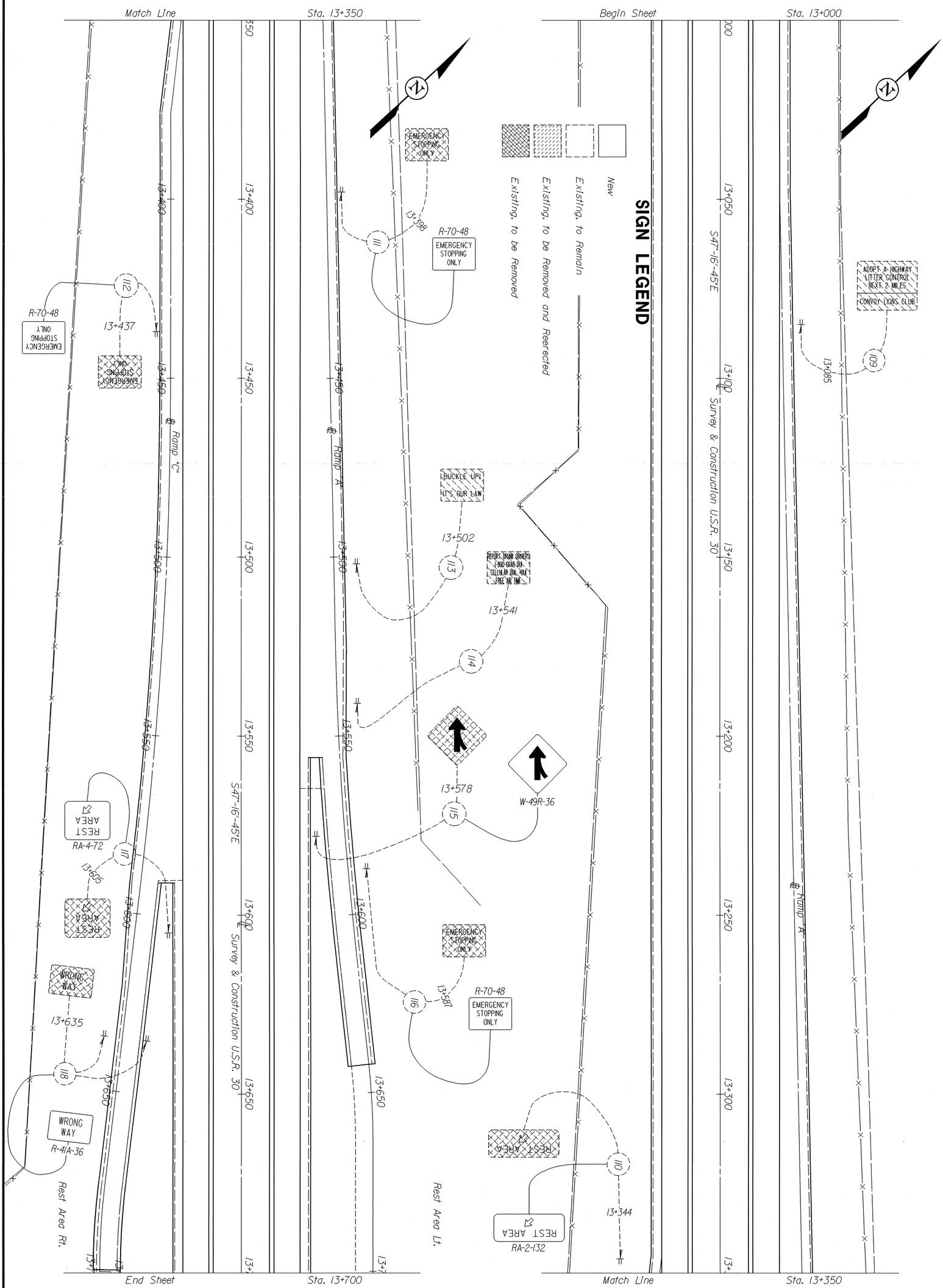

114 / 134	VAN-30-6.618(4.05)	PLAN SHEET - U.S.R. 30 Sta. 13+000 to Sta. 13+700	CALCULATED REH CHECKED	Scale in Meters 0 10 20 1:500 Ratio

Rest Area Lt.

Sta. 13+700

Begin Sheet

Rest Area Rt.

13+750 13+800 13+850 13+900 13+950 14+000

S47°-16'-45"E

Survey & Construction U.S.R. 30

Ramp "B"

Ramp "D"

Sta. 14+050

Match Line

Sta. 14+400

End Sheet

14+100 14+150 14+200 14+250 14+300 14+350

R-4A-36 WRONG WAY

RA-4-72 REST AREA

RA-2-132 REST AREA

W-49R-36

R-70-48 EMERGENCY STOPPING ONLY

119 13+840

120 13+885

121 13+898

122 13+931

123 14+019

124 14+058

125 14+065

126 14+131

127 14+156

SIGN LEGEND

- New
- Existing, to Remain
- Existing, to be Removed and Reerected
- Existing, to be Removed

DESIGN FILE : i:\pd\van30d\v30sgnll.dgn
USERNAME : rhermon

DATE : 03-SEP-1997
TIME : 16:00

Scale in Meters
0 10 20
1:500 Ratio

CALCULATED REH
CHECKED

PLAN SHEET - U.S.R. 30
Sta. 13+700 to Sta. 14+400

VAN-30-6.618(4.05)

115
134

DESIGN FILE : i:\pd\van30d\v30sgnl2.dgn
USERNAME : rhermon
DATE : 04-SEP-1997
TIME : 07:52

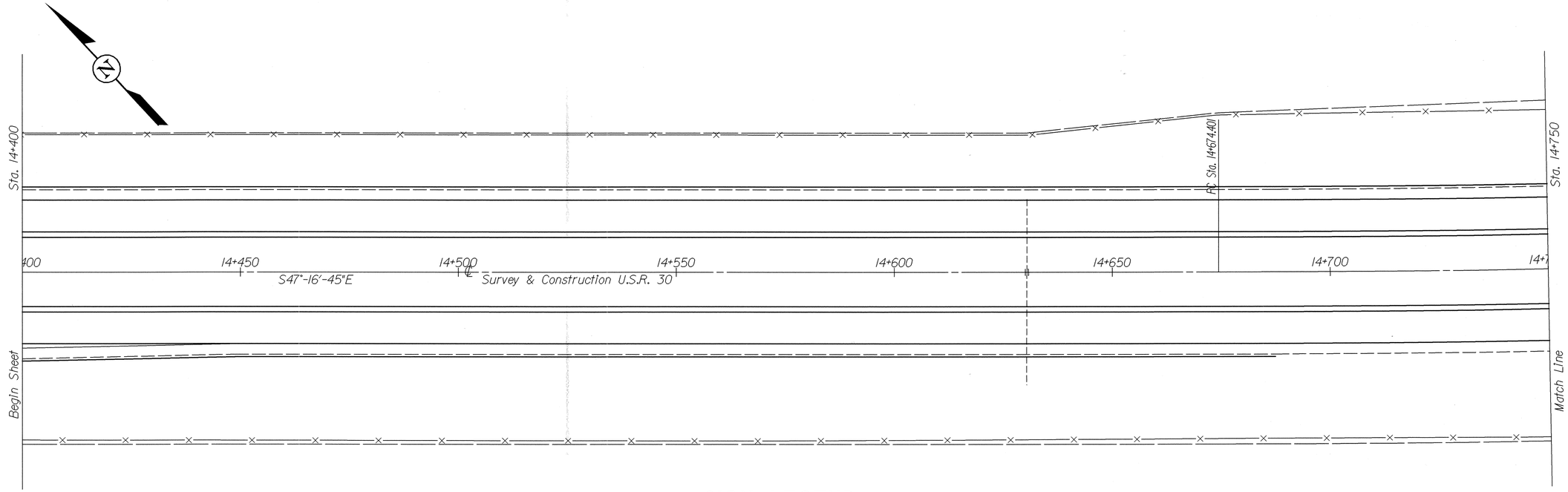

SIGN LEGEND

New

Existing, to Remain

Existing, to be Removed and Reerected

Existing, to be Removed

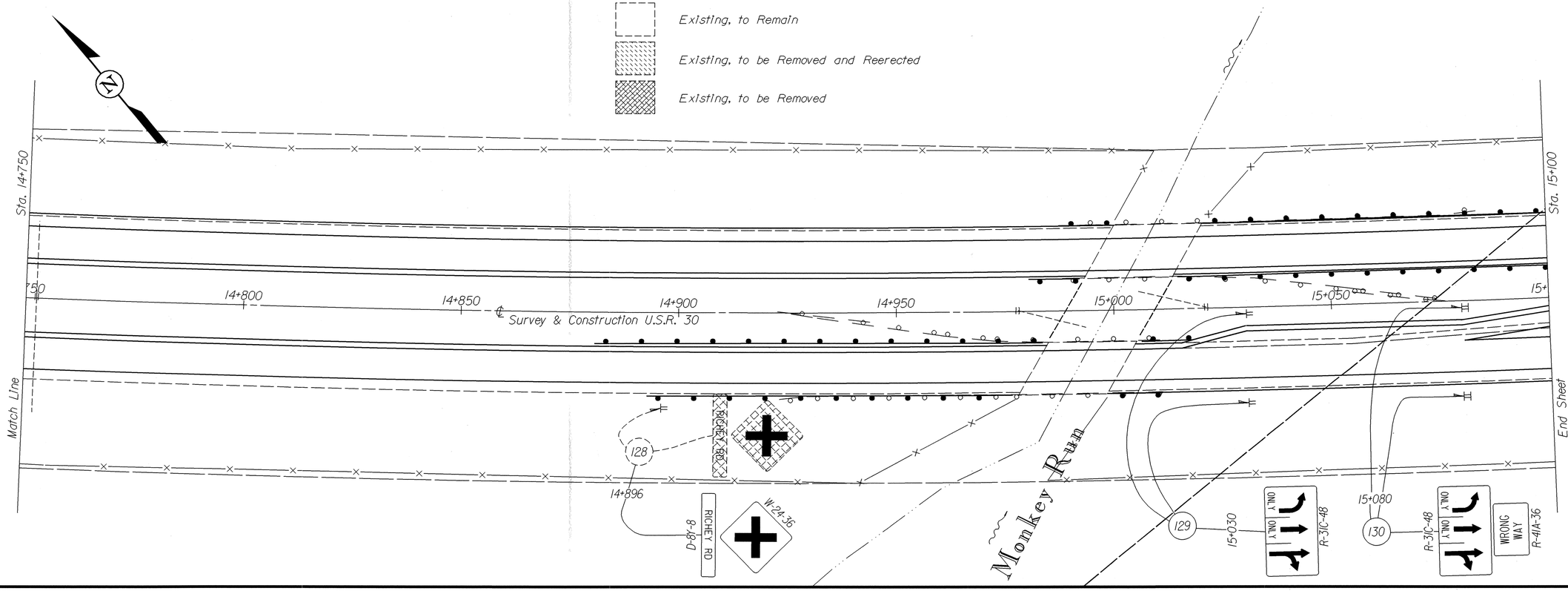

Scale in Meters
0 10 20
1:500 Ratio

CALCULATED REH
CHECKED

PLAN SHEET - U.S.R. 30
Sta. 14+400 to Sta. 15+100

VAN-30-6.618(4.05)

116
134

DATE : 04-SEP-1997
TIME : 07:57

DESIGN FILE : i:\pd\van30d\v30sgnl3.dgn
USERNAME : rhermon

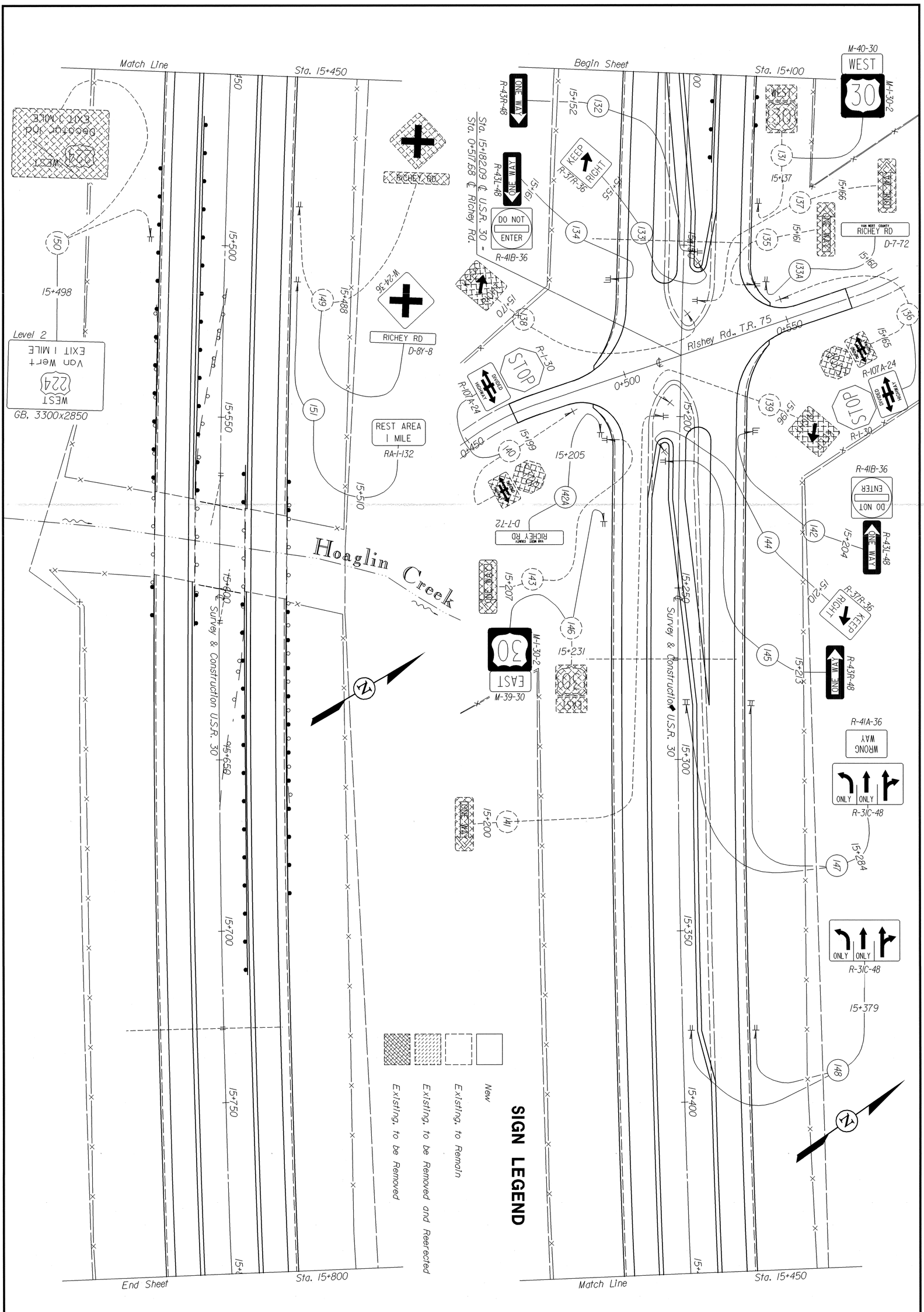

334 / 117	VAN-30-6.618(4.05)	PLAN SHEET - U.S.R. 30 Sta. 15+100 to Sta. 15+800	CALCULATED REH CHECKED Scale in Meters 0 10 20 1:500 Ratio

DATE : 04-SEP-1997
TIME : 08:06

DESIGN FILE : i:\pd\van30d\v30sgnl4.dgn
USERNAME : rhermon

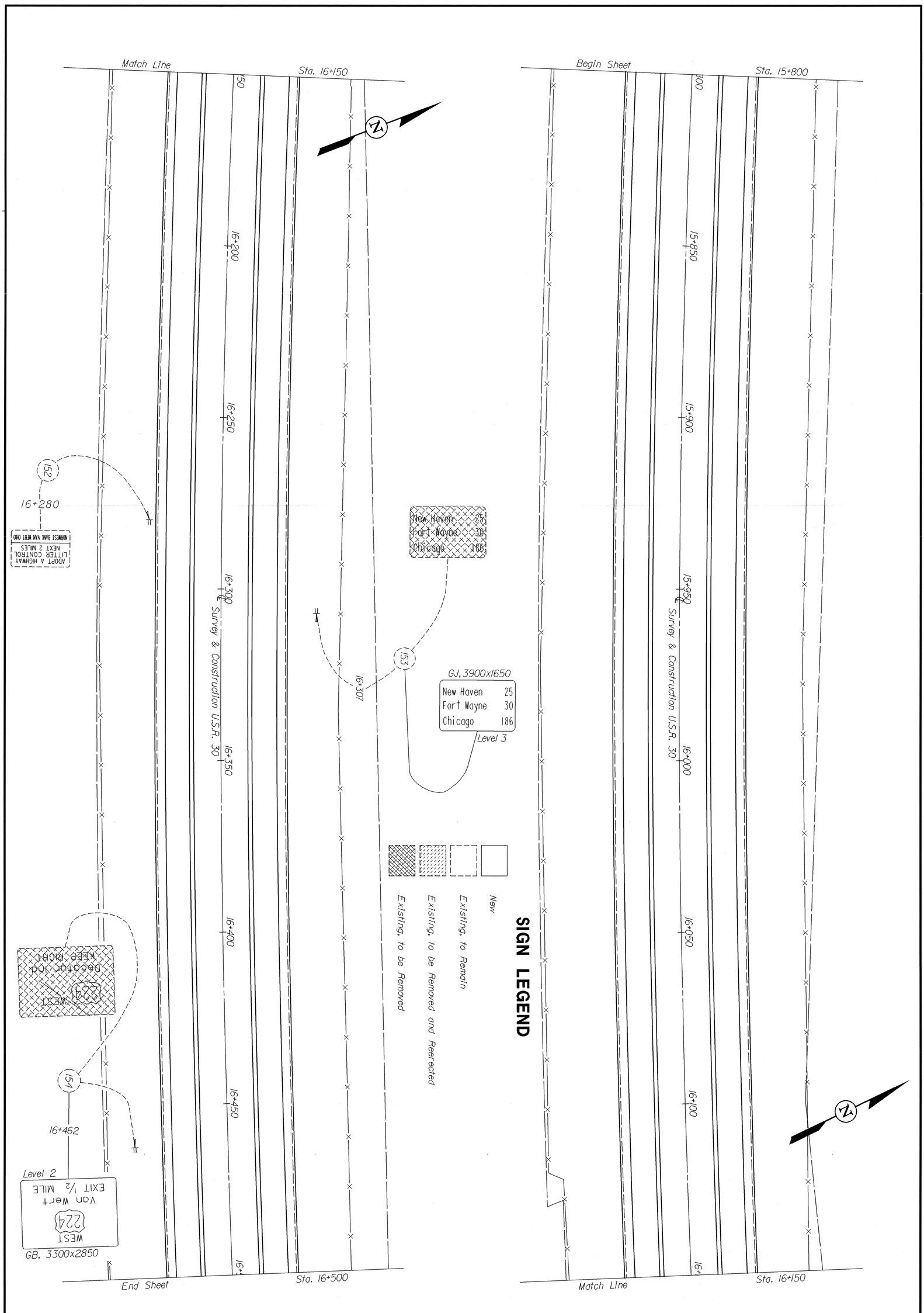

134 / 811	VAN-30-6.618(4.05)	PLAN SHEET - U.S.R. 30 Sta. 15+800 to Sta. 16+500	CALCULATED REH CHECKED Scale in Meters 0 10 20 1:500 Ratio

DATE : 04-SEP-1997
TIME : 08:11

DESIGN FILE : i:\pd\van30d\v30sgnl5.dgn
USERNAME : rhermon

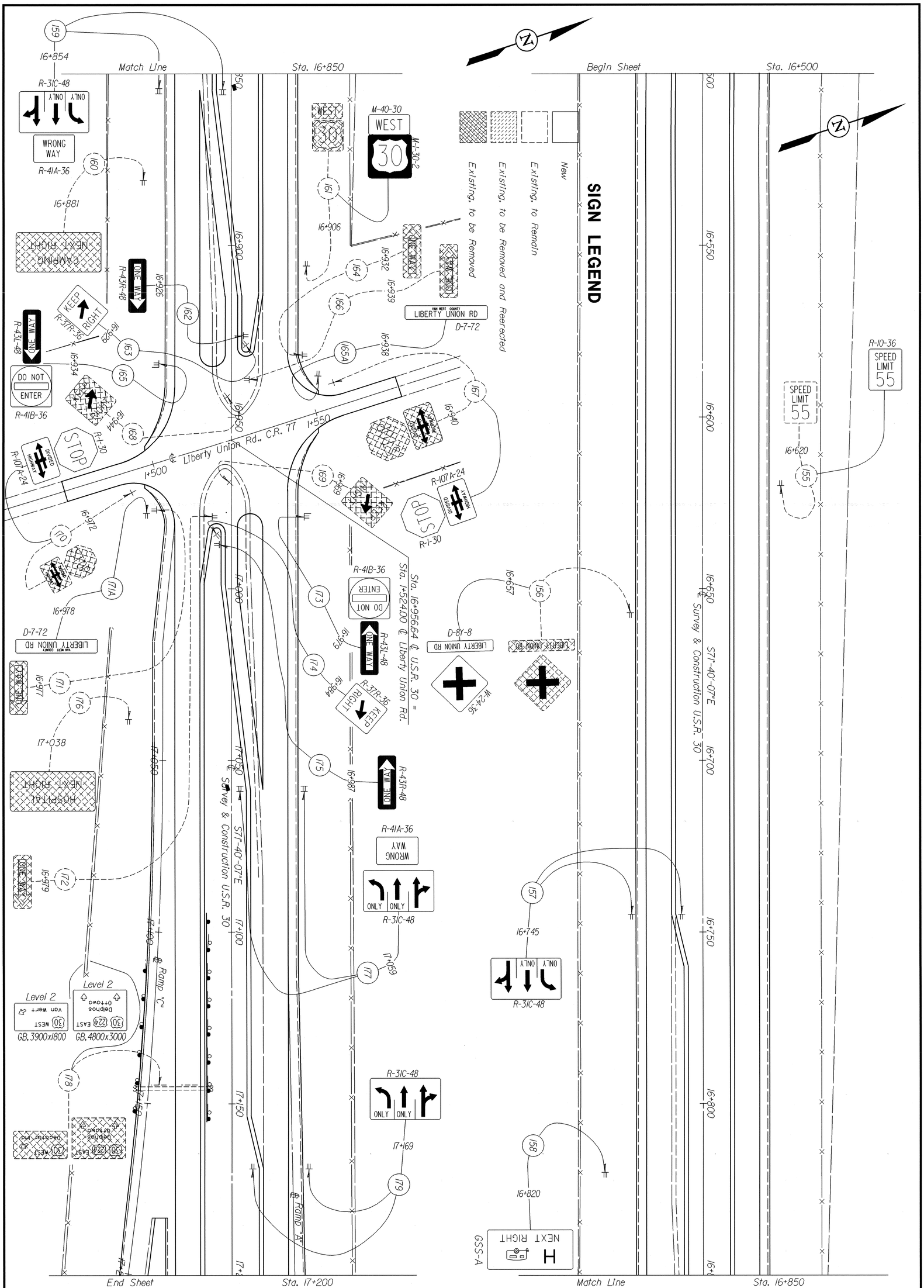

134 / 191	VAN-30-6.618(4.05)	PLAN SHEET - U.S.R. 30 Sta. 16+500 to Sta. 17+200	CALCULATED REH CHECKED Scale in Meters 0 10 20 1:500 Ratio

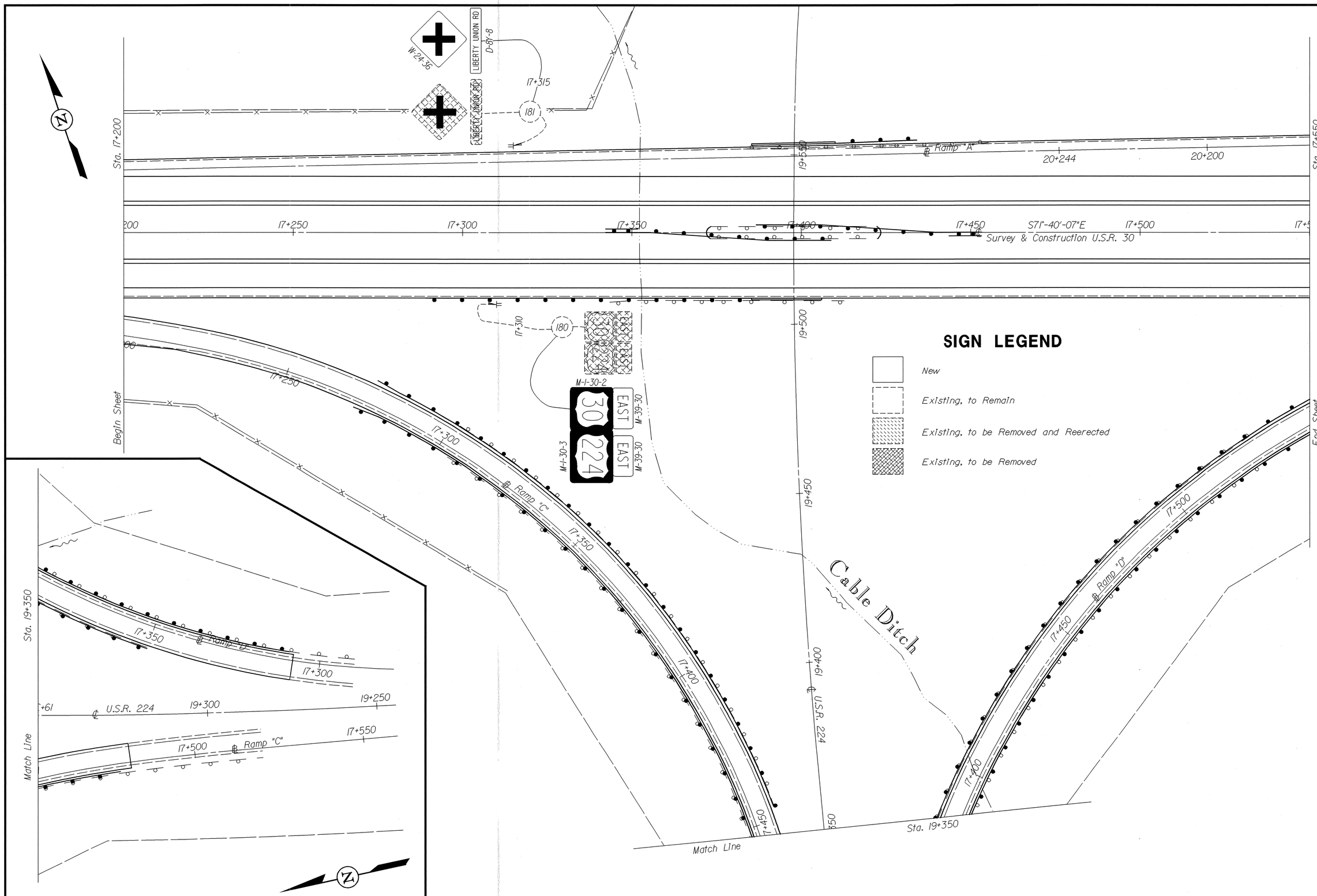

Scale in Meters
0 10 20
1:500 Ratio

CALCULATED REH
CHECKED

PLAN SHEET - U.S.R. 30
Sta. 17+200 to Sta. 17+550

VAN-30-6.618(4.05)

DESIGN FILE : i:\pd\van30d\v30sgn16.dgn
USERNAME : rhermon
DATE : 04-SEP-1997
TIME : 08:35

DATE : 04-SEP-1997
TIME : 08:38

DESIGN FILE : i:\pd\van30d\v30sgnl7.dgn
USERNAME : rhermon

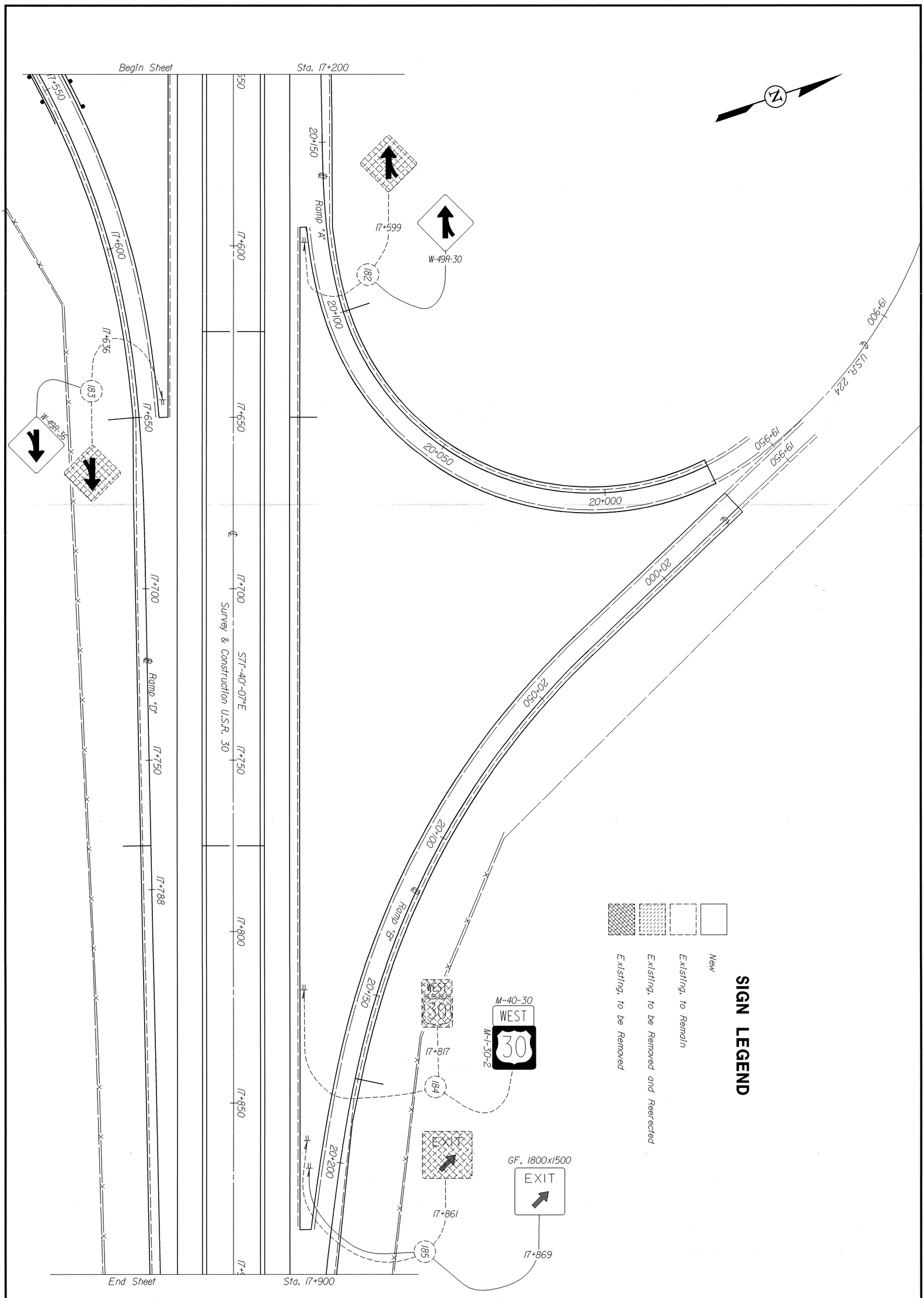

121/134	VAN-30-6.618(4.05)	PLAN SHEET - U.S.R. 30 Sta. 17+550 to Sta. 17+900	CALCULATED REH CHECKED Scale in Meters 0 10 20 1:500 Ratio

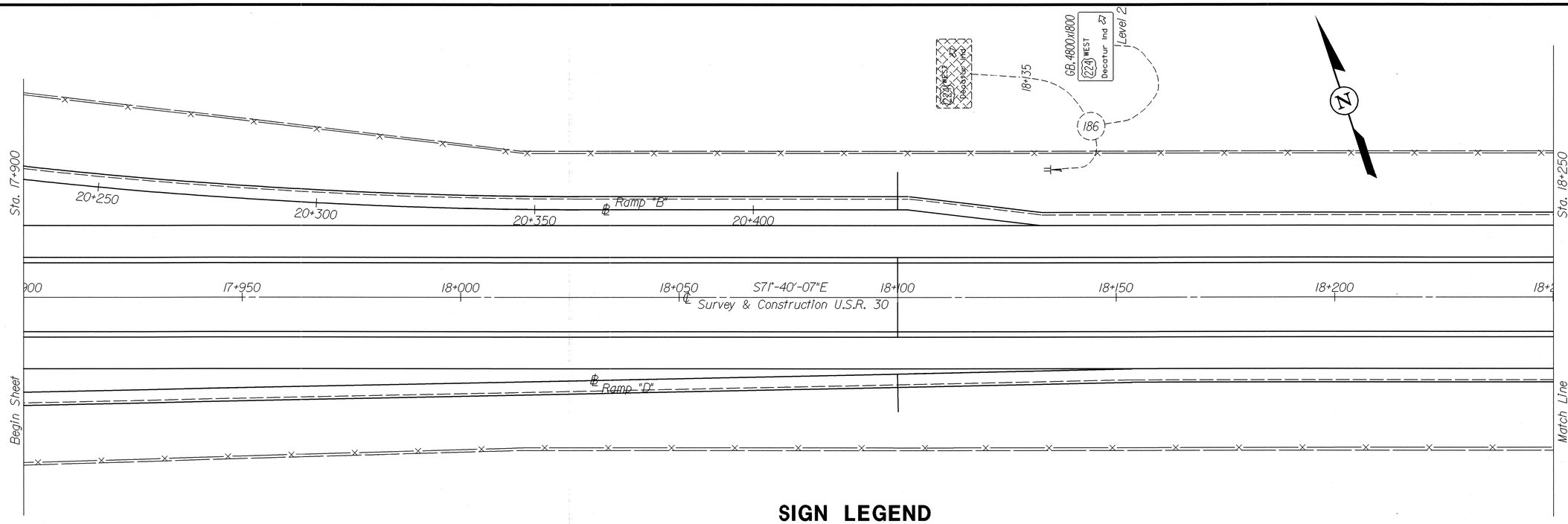

SIGN LEGEND

- New
- Existing, to Remain
- Existing, to be Removed and Reerected
- Existing, to be Removed

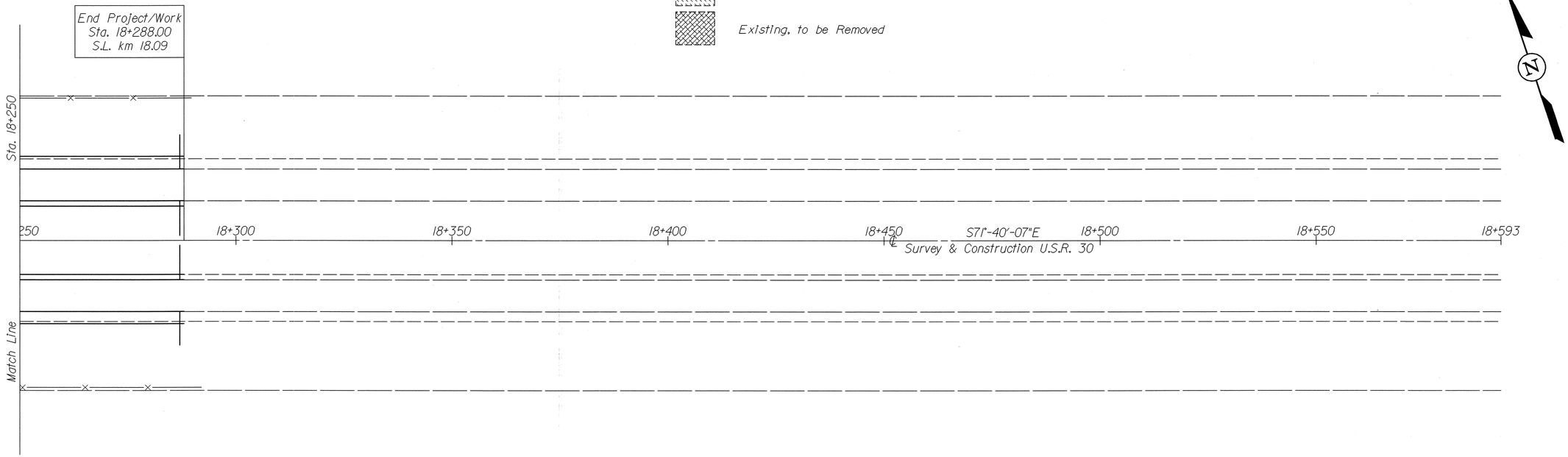

DESIGN FILE : i:\pd\van30d\v30sgnl8.dgn
USERNAME : rhermon

DATE : 04-SEP-1997
TIME : 08:50

Scale in Meters
0 10 20
1:500 Ratio

CALCULATED REH
CHECKED

PLAN SHEET - U.S.R. 30
Sta. 17+900 to Sta. 18+593

VAN-30-6.618(4.05)

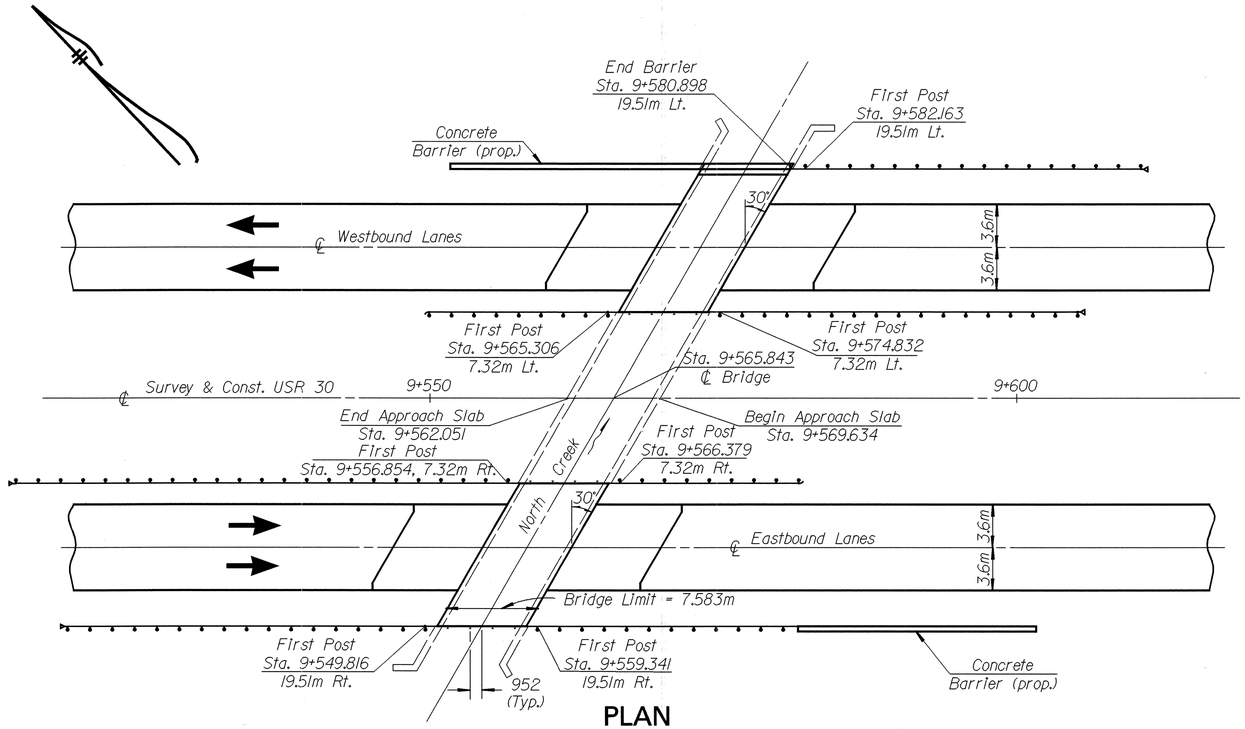

PLAN

PROPOSED WORK

1.) Remove existing asphalt wearing course
2.) Patch and repair deck & abutment walls
3.) Remove 25mm of Existing Monolithic Concrete Using Hydrodemolition
4.) Micro-Silica Modified Concrete Overlay (51mm thick)
5.) Install Polymer Modified Asphalt Expansion Joint System
6.) Seal concrete surfaces (Epoxy)
7.) Widen left bridge and replace guardrail on left side of left bridge with reinforced concrete parapet
8.) New Steel Drip Strip

NOTE: All dimensions on this sheet are in millimeters unless otherwise specified.

EXISTING STRUCTURE DATA

TYPE: Single span reinforced concrete slab with reinforced concrete abutments
SPAN: 6 710 ± face to face of abutments
ROADWAY: 12 192 ± f/f guardrail (Lt. & Rt.)
LOADING: MS18
SKEW: 30°-0' L.F.
WEARING SURFACE: Bituminous
APPROACH SLAB: AS-1-54M (7600 Long)
ALIGNMENT: Tangent
STRUCTURE FILE NUMBER (RT): 8100217
STRUCTURE FILE NUMBER (LT): 8100187
BUILT: 1968

PROPOSED STRUCTURE

ROADWAY: 12 192 Guardrail Face to Parapet Toe
WEARING SURFACE: 51mm Micro-Silica Modified Concrete

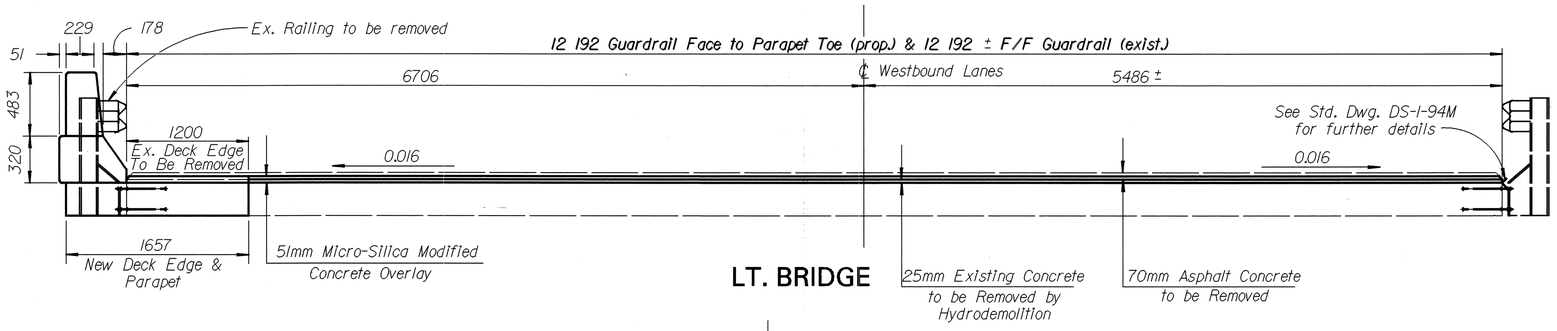

LT. BRIDGE

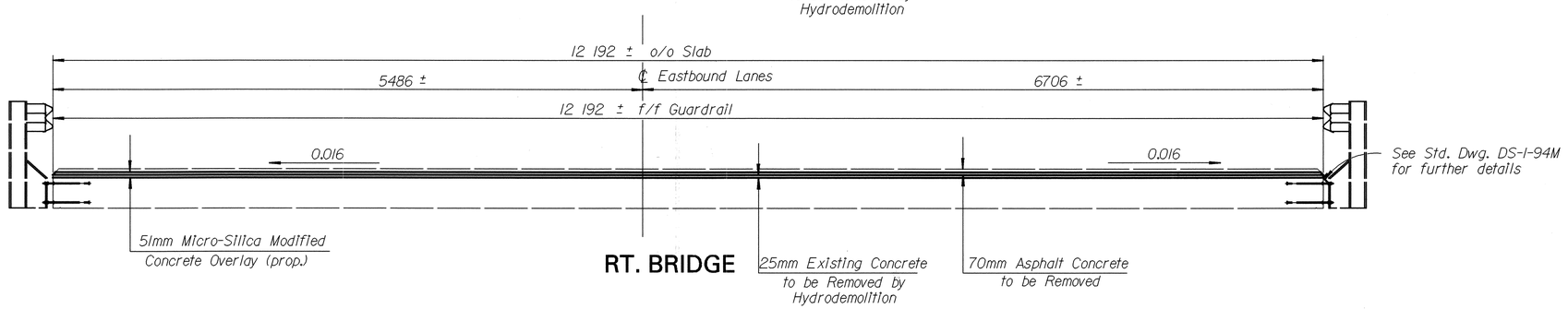

RT. BRIDGE

TRANSVERSE SECTIONS

DESIGN AGENCY: District One, Production Department
DESIGNED: DJS | DRAWN: DJS | CHECKED: JAC | REVIEWED: RLS | DATE: 9/4/97 | REVISED | STRUCTURE FILE NUMBER: 8100187 Lt. 8100217 Rt.

GENERAL PLAN

BRIDGE NO. VAN-30-09350, Over North Creek

VAN-30-6.618(4.05)

1/5

123/134

DESIGN FILE : i:\pd\van30d\br058lsp.dgn
USERNAME : rhermon
DATE : 04-SEP-1997
TIME : 10:09

ESTIMATED QUANTITIES LT. STRUCTURE

ABUT-MENTS	SUPER-STRUCTURE	ITEM	ITEM EXT.	TOTAL	UNIT	DESCRIPTION	SEE SHEET No.
	LUMP	202	11202	LUMP	LUMP	PORTIONS OF STRUCTURE REMOVED, OVER 6 METER SPAN	
	83	202	23501	83	SQ METER	WEARING COURSE REMOVED, AS PER PLAN	124
	8	202	38500	8	METER	BRIDGE RAILING REMOVED	
	7	511	34400	7	CU METER	CLASS S CONCRETE, SUPERSTRUCTURE	
115	44	SPECIAL	51267502	159	SQ METER	SEALING OF CONCRETE SURFACES(EPOXY)(SEE PROPOSAL NOTE)	
	28	SPECIAL	51631300	28	METER	POLYMER MODIFIED ASPHALT EXPANSION JOINT SYSTEM	134
	7	SPECIAL	51822300	7	METER	STEEL DRIP STRIP	124
3	17	519	11100	20	SQ METER	PATCHING CONCRETE STRUCTURE	
	92	SPECIAL	51922020	92	SQ METER	MICRO-SILICA MODIFIED CONCRETE OVERLAY, USING HYDRODEMOLITION (51mm THICK) (SEE PROPOSAL NOTE)	
	2	SPECIAL	51922130	2	CU METER	MICRO-SILICA MODIFIED CONCRETE OVERLAY (VARIABLE THICKNESS), MATERIAL ONLY (SEE PROPOSAL NOTE)	
	4	SPECIAL	51922134	4	SQ METER	HAND CHIPPING (SEE PROPOSAL NOTE)	
	2	SPECIAL	51922200	2	CU METER	FULL DEPTH REPAIR (MICRO-SILICA) (SEE PROPOSAL NOTE)	
	LUMP	SPECIAL	51922300	LUMP	LUMP	TEST SLAB (SEE PROPOSAL NOTE)	

ESTIMATED QUANTITIES RT. STRUCTURE

ABUT-MENTS	SUPER-STRUCTURE	ITEM	ITEM EXT.	TOTAL	UNIT	DESCRIPTION	SEE SHEET No.
	LUMP	202	11202	LUMP	LUMP	PORTIONS OF STRUCTURE REMOVED, OVER 6 METER SPAN	
	93	202	23501	93	SQ METER	WEARING COURSE REMOVED, AS PER PLAN	124
115	44	SPECIAL	51267502	159	SQ METER	SEALING OF CONCRETE SURFACES(EPOXY)(SEE PROPOSAL NOTE)	
	28	SPECIAL	51631300	28	METER	POLYMER MODIFIED ASPHALT EXPANSION JOINT SYSTEM	134
	19	SPECIAL	51822300	19	METER	STEEL DRIP STRIP	124
3	17	519	11100	17	SQ METER	PATCHING CONCRETE STRUCTURE	
	92	SPECIAL	51922020	92	SQ METER	MICRO-SILICA MODIFIED CONCRETE OVERLAY, USING HYDRODEMOLITION (51mm THICK) (SEE PROPOSAL NOTE)	
	2	SPECIAL	51922130	2	CU METER	MICRO-SILICA MODIFIED CONCRETE OVERLAY (VARIABLE THICKNESS), MATERIAL ONLY (SEE PROPOSAL NOTE)	
	4	SPECIAL	51922134	4	SQ METER	HAND CHIPPING (SEE PROPOSAL NOTE)	
	2	SPECIAL	51922200	2	CU METER	FULL DEPTH REPAIR (MICRO-SILICA) (SEE PROPOSAL NOTE)	
	LUMP	SPECIAL	51922300	LUMP	LUMP	TEST SLAB (SEE PROPOSAL NOTE)	

Note: All dimensions on this sheet are in millimeters unless otherwise specified.

REINFORCING STEEL LIST

MARK	NO.	LENGTH(MM)	SHAPE
	PARAPETS		
X16M01	2	7383	Bt.
X16M02	6	7433	Str.
Y16M01	12	914	Bt.
Y19M01	11	2285	Bt.
Y19M02	22	1080	Bt.
Y19M03	17	1290	Bt.
	DECK		
X22M02	54	1604	Str.
X25M02	12	7417	Str.
X25M03	12	8028	Bt.

BENDING DIAGRAMS

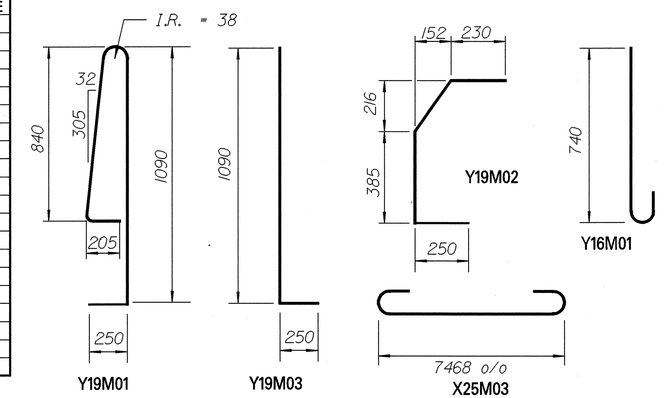

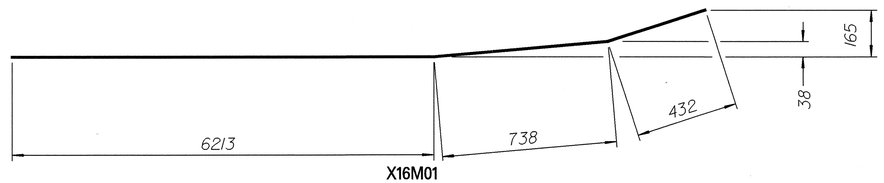

GENERAL NOTES

EXISTING STRUCTURE VERIFICATION

Details and dimensions shown on these plans pertaining to the existing structure have been obtained from plans of the existing structure and from field observations and measurements. Consequently, they are indicative of the existing structure and the proposed work but they shall be considered tentative and approximate. The contractor is referred to CMS Sections 102.05, 105.02.

Contract bid prices shall be based upon a recognition of the uncertainties described above and upon a prebid examination of the existing structure by the contractor. However, all project work shall be based upon actual details and dimensions which have been verified by the contractor in the field.

Copies of the existing bridge plans are on file at the District 1 Office of the Ohio Department of Transportation in Lima, Ohio.

ITEM 202 - WEARING COURSE REMOVED, AS PER PLAN

The payment for the removal of any waterproofing encountered while removing the existing asphalt wearing surface shall be included under Item 202 - Wearing Course Removed, as per plan

ITEM 519 - PATCHING CONCRETE STRUCTURE

Due to the small number of areas to be patched an Engineer's quantity of 15 Sq. M. per structure shall be included in the estimated quantities. This quantity shall be used at the Engineer's discretion, and shall be paid for under Item 519, Patching Concrete Structure. Some of the areas to be patched might include the wingwalls and backwall. These areas were not detailed due to the uncertainties of future deterioration of the structure. Also included in this Item will be a quantity of 3 Sq. M. to prepare the deteriorated deck edge for the steel drip strip, and 5 Sq. M. to repair the abutments.

ITEM SPECIAL - SEALING CONCRETE SURFACES (EPOXY)

Work to be performed on this item is to follow the completion of Item 519, Patching of Concrete Structures. The areas to be sealed are as follows: The exposed areas of the wingwalls and abutments also. Also seal bridge deck. See Proposal Note.

ITEM 202 - PORTIONS OF STRUCTURE REMOVED

The work to be performed on this Item shall consist of the removal of an area of concrete 510mm wide centered on the expansion joint at each abutment. The depth shall be 75mm as shown on Sheet 134. The work shall also include the removal of a 1200mm width of concrete from the north side of the left bridge deck.

Transverse steel shall remain exposed and the longitudinal steel shall be removed. Guardrail (north side of left bridge) will also be removed. This Item shall include all labor and equipment necessary to complete the described work. Payment for this Item will be a Lump Sum.

ITEM SPECIAL - STEEL DRIP STRIP

Work to be performed on this item is to follow Std. Dwg DS-1-94M.

DESIGN AGENCY: District One, Production Department
DATE REVIEWED: 9/4/97
STRUCTURE FILE NUMBER: 3100187 Lt. 3100217 Rt.
DRAWN: DJS
REVISED:
DESIGNED: DJS
CHECKED: JRC

GENERAL NOTES & ESTIMATED QUANTITIES
BRIDGE NO. VAN-30-09350

VAN-30-6.618(4.05)

2 / 5

124
134

DESIGN FILE : i:\pd\van30d\br058isn.dgn
USERNAME : rhermon
DATE : 04-SEP-1997
TIME : 11:07

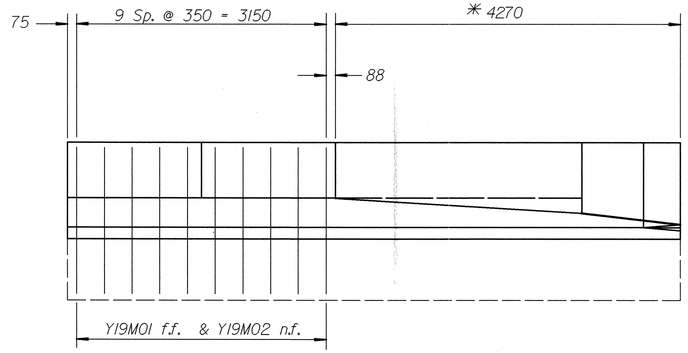

LONGITUDINAL SECTION
VERTICAL STEEL IN DEFLECTOR PARAPET

NOTES:

For details of removing existing Guardrail and reconstruction of Proposed Safety Shape Parapet on Structure, see Sht.127.

Drawing not to scale.

Sections are shown viewing face of Parapets.

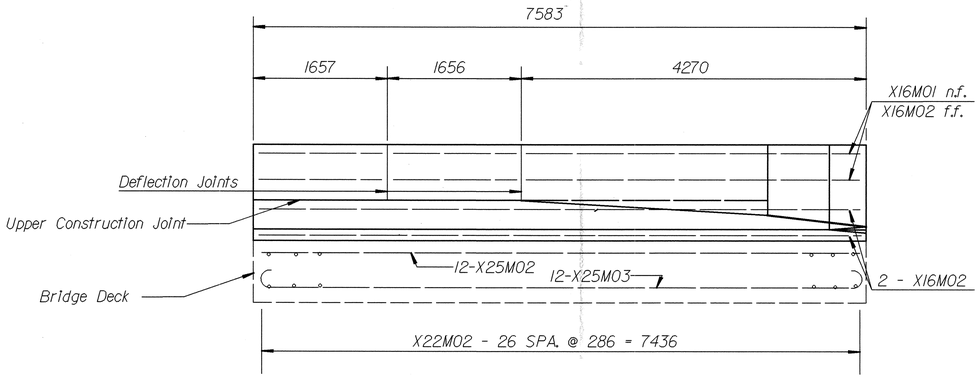

LONGITUDINAL SECTION
HORIZONTAL STEEL IN DEFLECTOR PARAPET

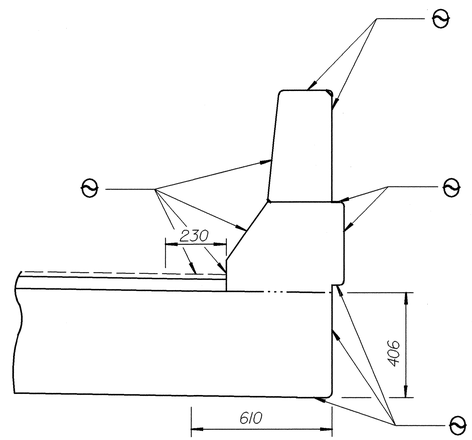

⊖ - *Surfaces to be sealed (Epoxy)*

SECTION THRU DEFLECTION JOINT

** For additional details of 4270mm End Section, see sheet 126.*

Note: All dimensions on this sheet are in millimeters unless otherwise specified.

LEGEND

f.a. - Fwd. Abutment
r.a. - Rear Abutment
n.f. - Near Face
f.f. - Far Face
Rt. - Right Side
Lt.. - Left Side

DESIGN AGENCY: District One Production Department

DESIGNED	DRAWN	REVIEWED	DATE
DJS	DJS	RLS	9/4/97
CHECKED	REVISED	STRUCTURE FILE NUMBER	
JRC		800187 Lt. 800217 Rt.	

PARAPET DETAILS
BRIDGE NO. VAN-30-09350

VAN-30-6.618(4.05)

3 / 5

125
134

DESIGN FILE : i:\pd\van30d\br058lhv.dgn
USERNAME : rhermon
DATE : 04-SEP-1997
TIME : 11:00

Note: All dimensions on this sheet are in millimeters unless otherwise specified.

Note A: Seal 16mm Plate all around with Hypalon. Include with Item 606, Bridge Terminal Assembly Type I for payment. (see Std. Dwg. GR-3JM for additional details.)

DESIGN SPECIFICATIONS: See Std. Dwg. BR - IM

DESIGN DATA FOR PARAPET END SECTION: See Std. Dwg. BR - IM

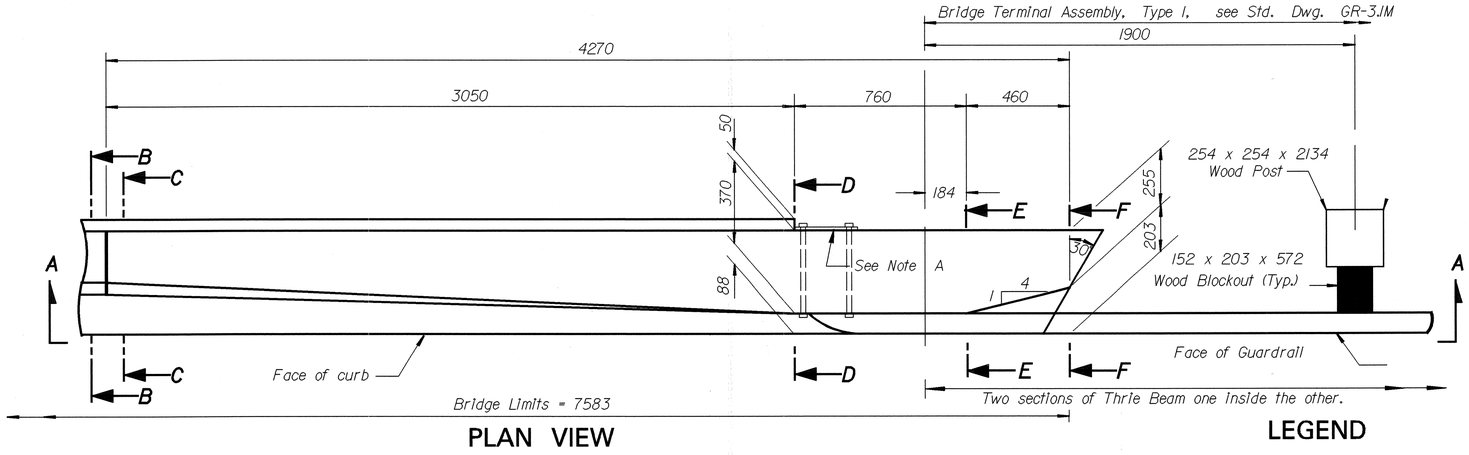

PLAN VIEW

LEGEND

n.f. ~ Near Face
f.f. ~ Far Face
~ Optional Construction Joint
~ Construction Joint
▬ ~ 51mm Micro-Silica Modified Concrete Overlay
* ~ 25mm Existing Concrete Removed By Hydrodemolition

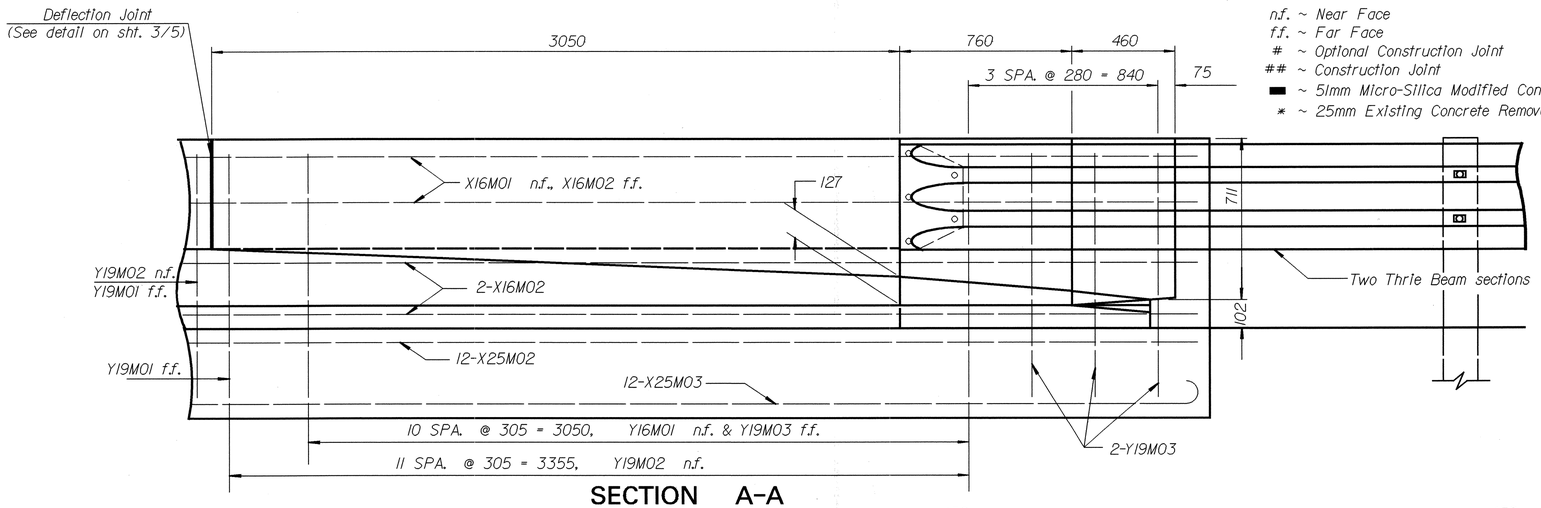

SECTION A-A

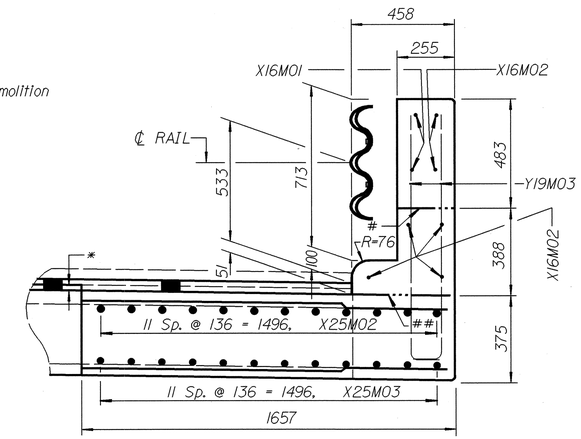

SECTION F-F

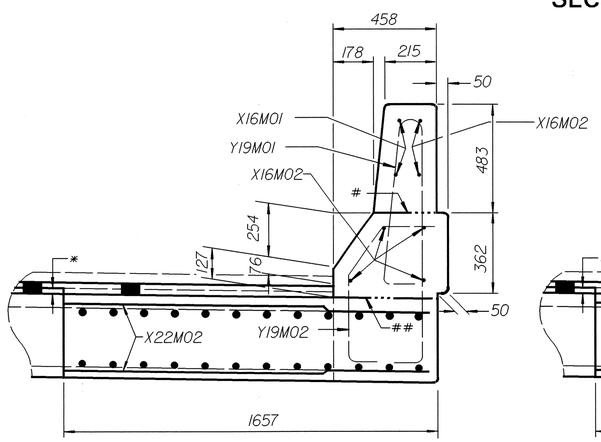

SECTION B-B

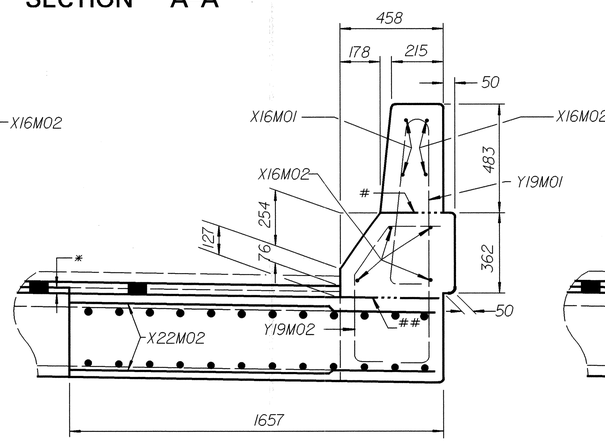

SECTION C-C

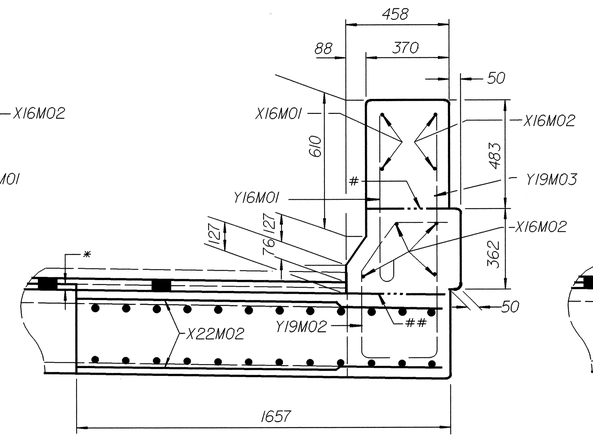

SECTION D-D

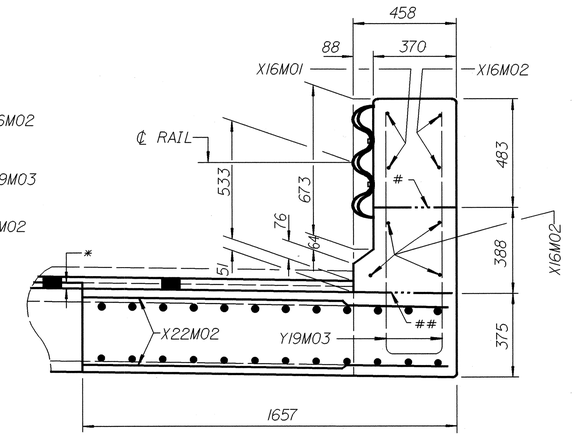

SECTION E-E

DESIGN AGENCY: District One Production Department

DESIGNED DJS | DRAWN DJS | CHECKED JRC | REVIEWED RLS 9/4/97 | REVISED | DATE | STRUCTURE FILE NUMBER 800187 Lt. 800217 Rt.

DEFLECTOR PARAPET END SECTION

BRIDGE NO. VAN-30-09350

VAN-30-6.618(4.05)

4 / 5

126 / 134

DESIGN FILE : i:\pd\van30d\br058lpe.dgn
USERNAME : rhermon

DATE : 04-SEP-1997
TIME : 11:12

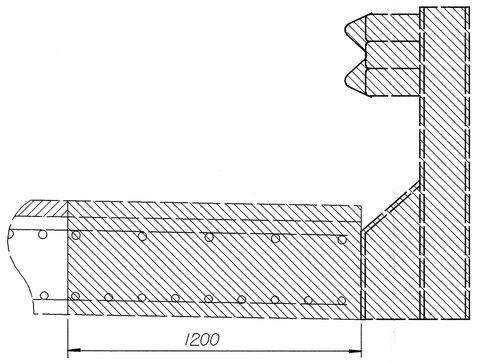

TYPICAL EXISTING SECTION

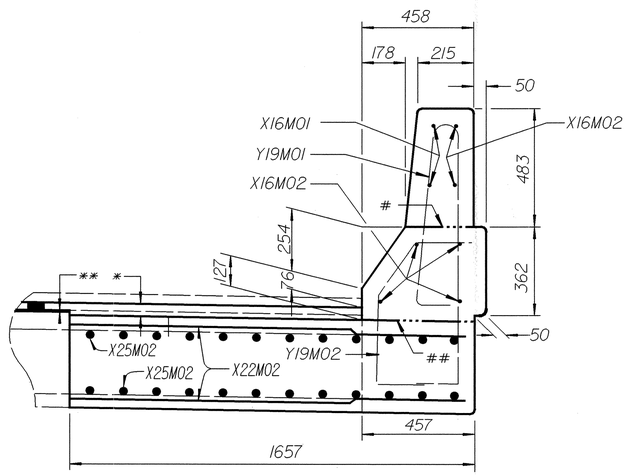

TYPICAL PROPOSED SECTION THROUGH SAFETY SHAPE PARAPET

LEGEND

n.f. ~ Near Face
f.f. ~ Far Face
\# ~ Optional Construction Joint
~ Construction Joint
▬ ~ 51mm Micro-Silica Modified Concrete Overlay
* ~ 25mm Existing Concrete Removed By Hydrodemolition
▨ ~ Portions of structure to be removed (202).
▨ ~ Wearing course removed, as per plan (202).

NOTES

All bars shall maintain a 64mm minimum clearance from the outside edge of Parapet unless otherwise noted.

Drawings not to scale.

All dimensions on this sheet are in millimeters unless otherwise specified.

DESIGN AGENCY: District One Production Department

DESIGNED	DRAWN	REVIEWED	DATE
DJS	DJS	RLS	9/4/97
CHECKED	REVISED	STRUCTURE FILE NUMBER	
JRC		810087 Lt. 810021 Rt.	

PARAPET DETAILS
BRIDGE NO. VAN-30-09350

VAN-30-6.618(4.05)

5 / 5

127
134

DESIGN FILE : i:\pd\van30d\br058lpp.dgn
USERNAME : rhermon

DATE : 04-SEP-1997
TIME : 11:33

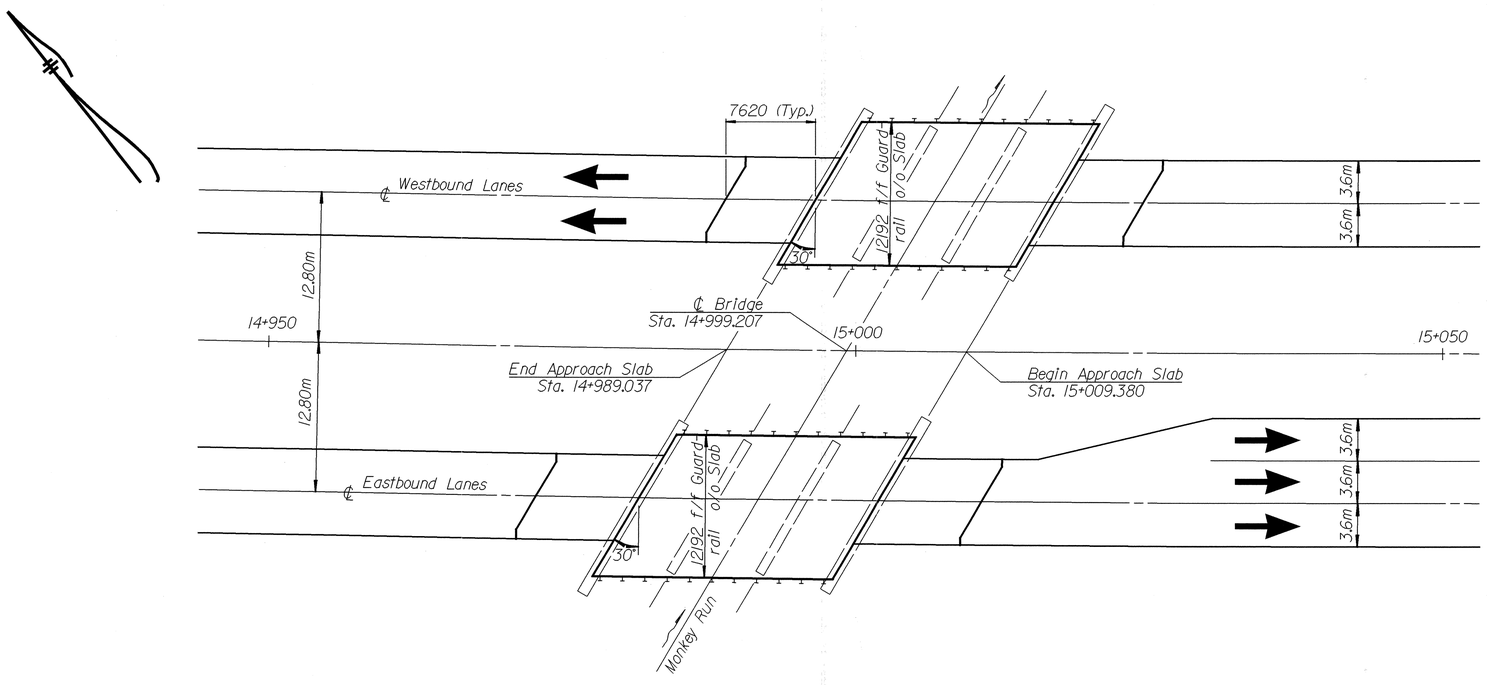

NOTE: All dimensions on this sheet are in millimeters unless otherwise specified.

PLAN

℄ CURVE DATA

PI STA. 15+603.64
Δ_C = 24°-23′-22" Lt.
R = 4365.937m
T = 943.528m
L = 1858.475m
E = 100.790m
No Super

PROPOSED WORK

1.) Remove existing asphalt overlay
2.) Remove 25mm existing concrete deck by hydrodemolition
3.) Patch and repair deck & abutment backwalls
4.) Micro-Silica Modified Concrete Overlay (51mm thick)
5.) Seal concrete surfaces (Epoxy)
6.) Encase "H"-piles in concrete
7.) New Steel Drip Strip
8.) Install Polymer Modified Asphalt Expansion Joint System

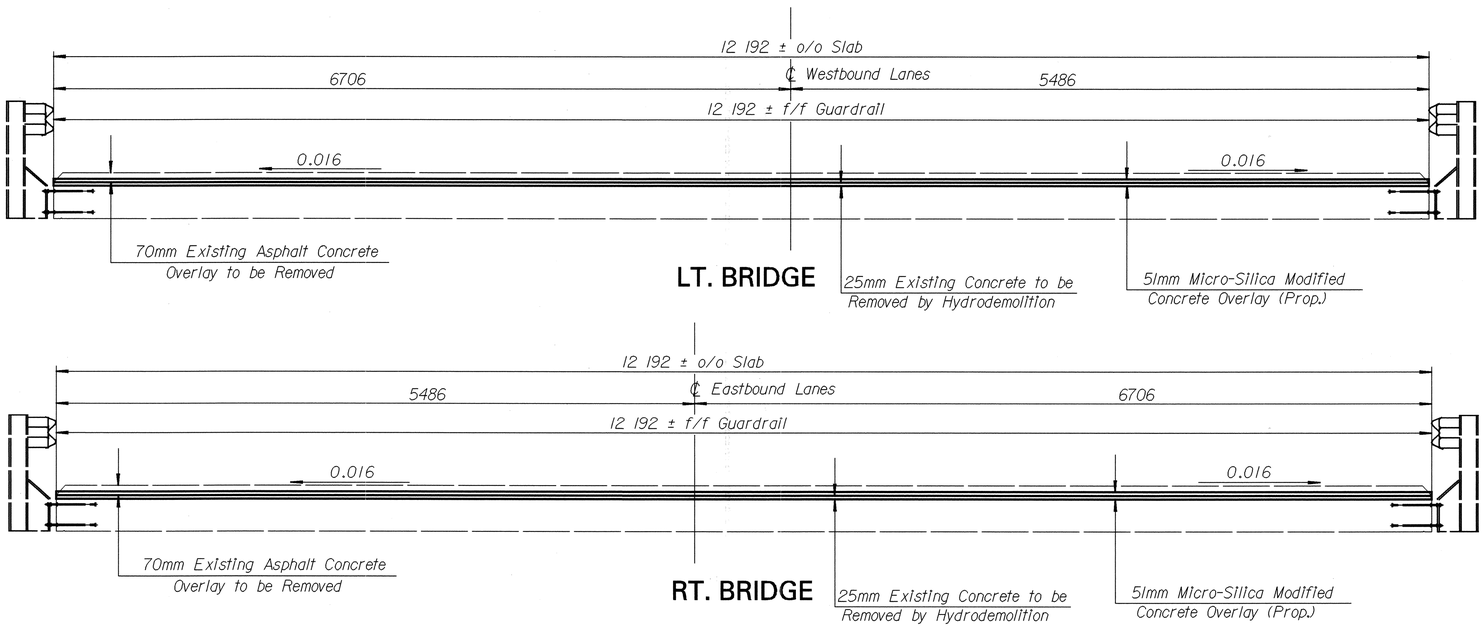

TRANSVERSE SECTIONS

EXISTING STRUCTURE DATA

TYPE: Continuous reinforced conc. slab with capped pile substructure
SPANS: 6100-7620-6100 c/c bearings
ROADWAY: 12 192 ± f/f guardrail (Lt. & Rt.)
LOADING: MS18
SKEW: 30°-0′ L.F.
WEARING SURFACE: 70mm Asphalt Concrete
APPROACH SLABS: AS-1-54M (7620 Long)
ALIGNMENT: Δ = 24°-23′-22" Curve to the Left
STRUCTURAL FILE NUMBER (RT): 8100306
STRUCTURAL FILE NUMBER (LT): 8100276
BUILT: 1968

PROPOSED STRUCTURE

ROADWAY: 12 192 ± f/f guardrail (Lt. & Rt.)
WEARING SURFACE: 51mm Micro-Silica Modified Concrete

DESIGN AGENCY: District One Production Department
DESIGNED: DJS
DRAWN: DJS
CHECKED: JRC
REVIEWED: RLS
DATE: 9/4/97
REVISED:
STRUCTURE FILE NUMBER: 8100276 Lt. 8100306 Rt.

GENERAL PLAN
BRIDGE NO. VAN-30-14774

VAN-30-6.618(4.05)

1 / 3

128 / 134

DESIGN FILE : i:\pd\van30d\br0918sp.dgn
USERNAME : rhermon
DATE : 04-SEP-1997
TIME : 13:17

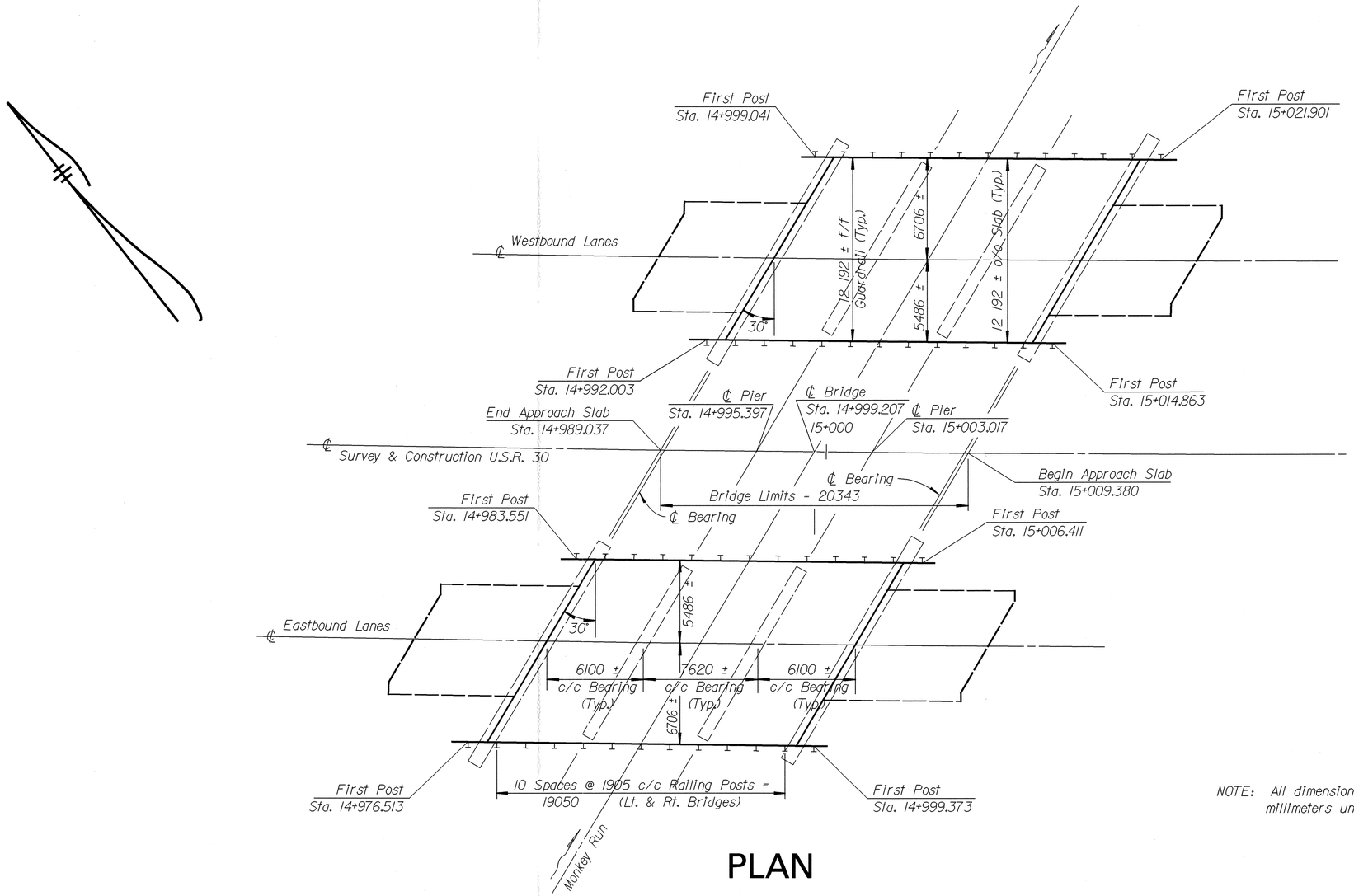

PLAN

NOTE: All dimensions on this sheet are in millimeters unless otherwise specified.

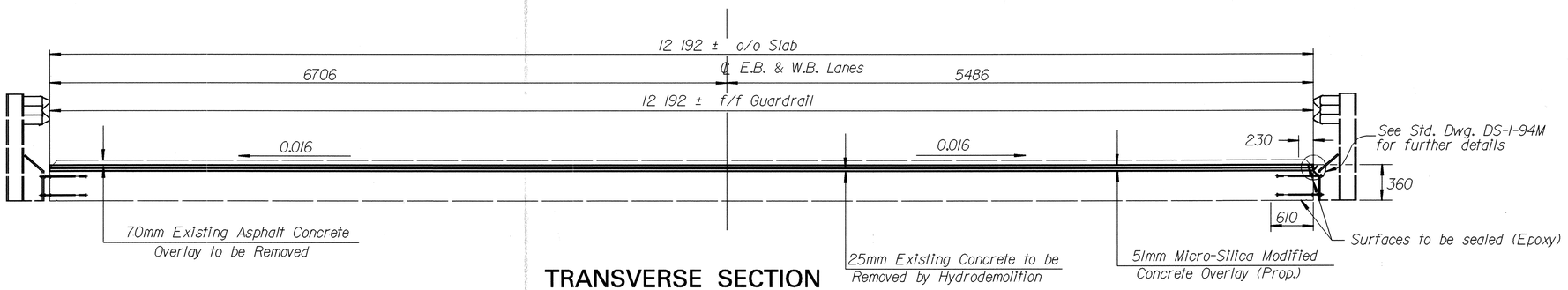

TRANSVERSE SECTION

DESIGN FILE : i:\pd\van30d\br09l8sd.dgn
USERNAME : rhermon

DATE : 17-SEP-1997
TIME : 08:41

DESIGN AGENCY: District One, Production Department

DESIGNED	DRAWN	REVIEWED	DATE
DJS	DJS	RLS	9/4/97
CHECKED	REVISED	STRUCTURE FILE NUMBER	
JRC		8100276 Lt. 8100306 Rt.	

GUARDRAIL AND DECK OVERLAY DETAIL
BRIDGE NO. VAN-30-14774

VAN-30-6.618(4.05)

2 / 3

129
134

GENERAL NOTES

ITEM SPECIAL - PILE ENCASEMENT

All piles for the capped pile piers shall be encased in Class S concrete (499.03) and shall be in accordance with 511, except as modified and supplemented herein. The required slump is 150mm, plus or minus 12mm. The maximum water to cement ratio shall be 0.50. If concrete is placed under water, the requirements of adding 10 percent more cement to the concrete shall be waived. The concrete shall be placed within a form that consists of polyethylene pipe (707.16), or PVC pipe. The encasement shall extend from 1 meter below the finished ground surface up to the concrete pier cap and shall be positioned so that at least 75mm of concrete cover is provided around the exterior of the pile.

The length of pile encasement shall be measured in meters along the length of the pile. This item includes all work and materials necessary to furnish the required encasement. Payment will be made at the contract unit price per meter of pile encasement approved in place.

In lieu of encasing the pile in concrete, at the option of the contractor, the pile may be galvanized as per 711.02. The galvanizing shall be continuous from a minimum of 1 meter below the finished ground surface up to the concrete pier cap. The galvanized coating thickness shall be a minimum of 4 mils. All gouges, scrapes, scratches or other surface imperfections caused by the handling or the driving of the pile shall be repaired to the satisfaction of the Engineer. Payment for the galvanizing will be made at the contract unit price for Item Special, Pile Encasement. Payment will only be made for the galvanized length of pile as required by the plan and/or approved by the Engineer. All galvanizing provided beyond the project requirements is at the Contractor's expense.

EXISTING STRUCTURE VERIFICATION

Details and dimensions shown on these plans pertaining to the existing structure have been obtained from plans of the existing structure and from field observations and measurements. Consequently, they are indicative of the existing structure and the proposed work but they shall be considered tentative and approximate. The contractor is referred to CMS Sections 102.05 & 105.02.

Contract bid prices shall be based upon a recognition of the uncertainties described above and upon a prebid examination of the existing structure by the contractor. However, all project work shall be based upon actual details and dimensions which have been verified by the contractor in the field.

Copies of the existing bridge plans are on file at the District 1 Office of the Ohio Department of Transportation in Lima, Ohio.

ITEM 202 - WEARING COURSE REMOVED, AS PER PLAN

The payment for the removal of any waterproofing encountered while removing the existing asphalt wearing surface shall be included under Item 202 - Wearing Course Removed, as per plan.

ITEM 202 - PORTIONS OF STRUCTURE REMOVED

The work to be performed on this Item shall consist of the removal of an area of concrete 510mm wide centered on the expansion joint at each abutment. The depth shall be 72mm as shown on Sheet 134. This Item shall include all labor and machinery necessary to complete the described work. Payment for this Item will be a Lump Sum.

ITEM 519 - PATCHING CONCRETE STRUCTURE

Due to the small number of areas to be patched an Engineer's quantity of 15 Sq. M. per structure shall be included in the estimated quantites. This quantity shall be used at the Engineer's discretion, and shall be paid for under Item 519, Patching Concrete Structure. Some of the areas to be patched might include the wingwalls and backwall. These areas were not detailed due to the uncertainties of future deterioration of the structure. Also included in this item will be a quantity of 4.5 Sq. M. per structure to prepare the deteriorated deck edge for the steel drip strip, and 5 Sq. M. to repair the abutments.

ITEM SPECIAL - SEALING CONCRETE SURFACES (EPOXY)

Work to be performed on this item is to follow the completion of Item 519, Patching of Concrete Structures. The areas to be sealed are as follows: The exposed areas of the wingwalls and abutments also include the sides of the pier caps (leave bottom of pier cap unsealed). Also seal bridge deck. See Proposal Note.

ESTIMATED QUANTITIES LT. STRUCTURE

ABUT-MENTS	SUPER-STRUC-TURE	ITEM	ITEM EXT.	TOTAL	UNIT	DESCRIPTION	SEE SHEET No.
	LUMP	202	11202	LUMP	LUMP	PORTIONS OF STRUCTURE REMOVED, OVER 6 METER SPAN	
	248	202	23501	248	SQ METER	WEARING COURSE REMOVED, AS PER PLAN	130
9	69	SPECIAL	51267502	78	SQ METER	SEALING OF CONCRETE SURFACES(EPOXY)(SEE PROPOSAL NOTE)	
	51	SPECIAL	50771200	51	METER	PILE ENCASEMENT	130
	28	SPECIAL	51631300	28	METER	POLYMER MODIFIED ASPHALT EXPANSION JOINT SYSTEM	134
	48	SPECIAL	51822300	48	METER	STEEL DRIP STRIP	130
3	20	519	11100	23	SQ METER	PATCHING CONCRETE STRUCTURE	
	248	SPECIAL	51922020	248	SQ METER	MICRO-SILICA MODIFIED CONCRETE OVERLAY, USING HYDRODEMOLITION (51mm THICK) (SEE PROPOSAL NOTE)	
	7	SPECIAL	51922130	7	CU METER	MICRO-SILICA MODIFIED CONCRETE OVERLAY (VARIABLE THICKNESS), MATERIAL ONLY (SEE PROPOSAL NOTE)	
	12	SPECIAL	51922134	12	SQ METER	HAND CHIPPING	
	2	SPECIAL	51922200	2	CU METER	FULL DEPTH REPAIR (MICRO-SILICA) (SEE PROPOSAL NOTE)	
	LUMP	SPECIAL	51922300	LUMP	LUMP	TEST SLAB (SEE PROPOSAL NOTE)	

ESTIMATED QUANTITIES RT. STRUCTURE

ABUT-MENTS	SUPER-STRUC-TURE	ITEM	ITEM EXT.	TOTAL	UNIT	DESCRIPTION	SEE SHEET No.
	LUMP	202	11202	LUMP	LUMP	PORTIONS OF STRUCTURE REMOVED, OVER 6 METER SPAN	
	248	202	23501	248	SQ METER	WEARING COURSE REMOVED, AS PER PLAN	130
9	69	SPECIAL	51267502	78	SQ METER	SEALING OF CONCRETE SURFACES(EPOXY)(SEE PROPOSAL NOTE)	
	51	SPECIAL	50771200	51	METER	PILE ENCASEMENT	130
	28	SPECIAL	51631300	28	METER	POLYMER MODIFIED ASPHALT EXPANSION JOINT SYSTEM	134
	48	SPECIAL	51822300	48	METER	STEEL DRIP STRIP	130
3	20	519	11100	23	SQ METER	PATCHING CONCRETE STRUCTURE	
	248	SPECIAL	51922020	248	SQ METER	MICRO-SILICA MODIFIED CONCRETE OVERLAY, USING HYDRODEMOLITION (51mm THICK) (SEE PROPOSAL NOTE)	
	7	SPECIAL	51922130	7	CU METER	MICRO-SILICA MODIFIED CONCRETE OVERLAY (VARIABLE THICKNESS), MATERIAL ONLY (SEE PROPOSAL NOTE)	
	12	SPECIAL	51922134	12	SQ METER	HAND CHIPPING	
	2	SPECIAL	51922200	2	CU METER	FULL DEPTH REPAIR (MICRO-SILICA) (SEE PROPOSAL NOTE)	
	LUMP	SPECIAL	51922300	LUMP	LUMP	TEST SLAB (SEE PROPOSAL NOTE)	

NOTE: All dimensions on this sheet are in millimeters unless otherwise specified.

DESIGN AGENCY: District One, Production Department
DATE: 9/4/97
REVIEWED: RLS
STRUCTURE FILE NUMBER: 8100276 Lt. 8100306 Rt.
DRAWN: DJS
REVISED:
DESIGNED: DJS
CHECKED: JRC

GENERAL NOTES & ESTIMATED QUANTITIES
BRIDGE NO. VAN-30-14774

VAN-30-6.618(4.05)

3 / 3

130 / 134

DESIGN FILE : i:\pd\van30d\br0918sn.dgn
USERNAME : rhermon
DATE : 04-SEP-1997
TIME : 13:35

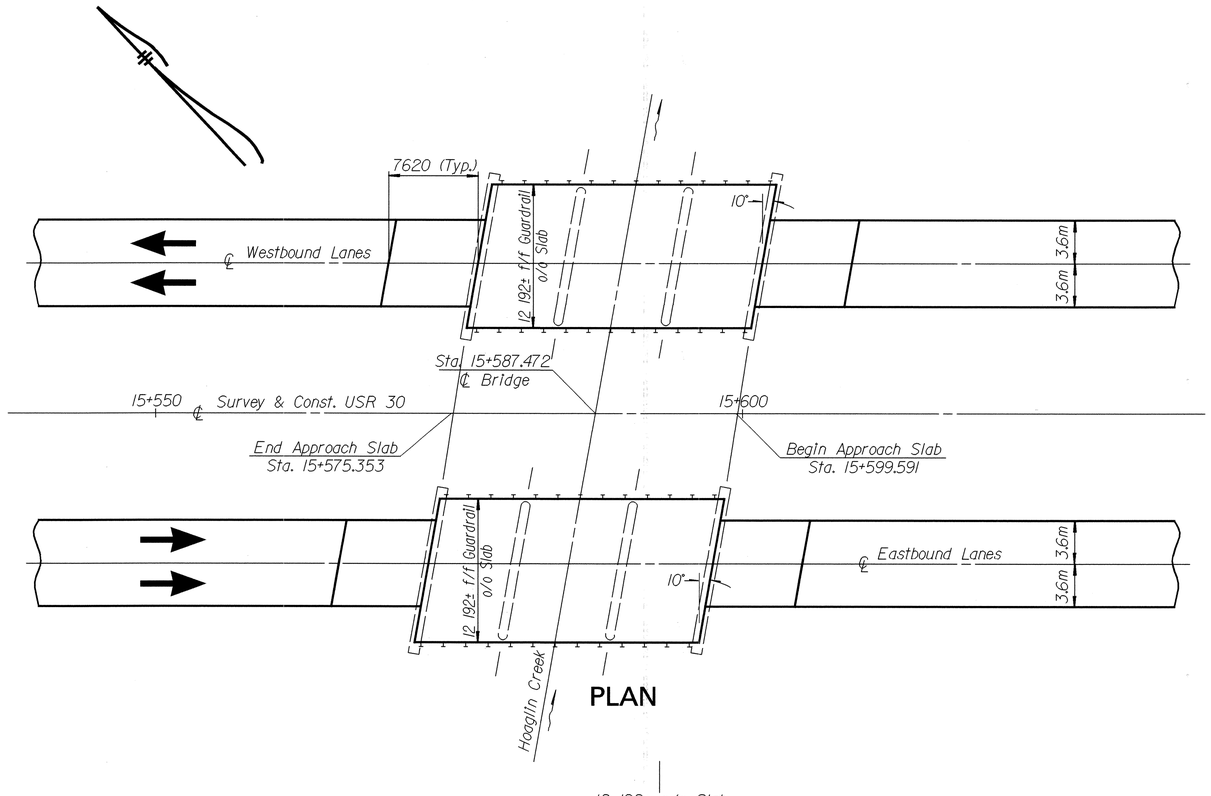

PLAN

℄ CURVE DATA

PI STA. 15+603.64
Δ_c = 24°-23'-22" Lt.
R = 4365.937m
T = 943.528m
L = 1858.475m
E = 100.790m
No Super

PROPOSED WORK

1.) Remove existing asphalt wearing course
2.) Remove 25mm of existing concrete deck by hydrodemolition
3.) Patch and repair deck & abutment walls
4.) Micro-Silica Modified Concrete Overlay (51mm thick)
5.) Seal concrete surfaces (Epoxy)
6.) Clean & Paint "H" piles
7.) New Steel Drip Strip
8.) Install Polymer Modified Asphalt Expansion Joint System

EXISTING STRUCTURE DATA

TYPE: Continuous reinforced conc. slab with capped pile substructure
SPANS: 7315-9144-7315 c/c bearings
ROADWAY: 12 192± f/f guardrail (Lt. & Rt.)
LOADING: MS18
SKEW: 10°-0' L.F.
WEARING SURFACE: Bituminous
APPROACH SLAB: AS-1-54M (7600 Long)
ALIGNMENT: △ = 24°-23'-22" Curve to the Left
STRUCTURAL FILE NUMBER (RT): 8100365
STRUCTURAL FILE NUMBER (LT): 8100330
BUILT: 1968

PROPOSED STRUCTURE

ROADWAY: 12 192± f/f guardrail (Lt. & Rt.)
WEARING SURFACE: 51mm Micro-Silica Modified Concrete

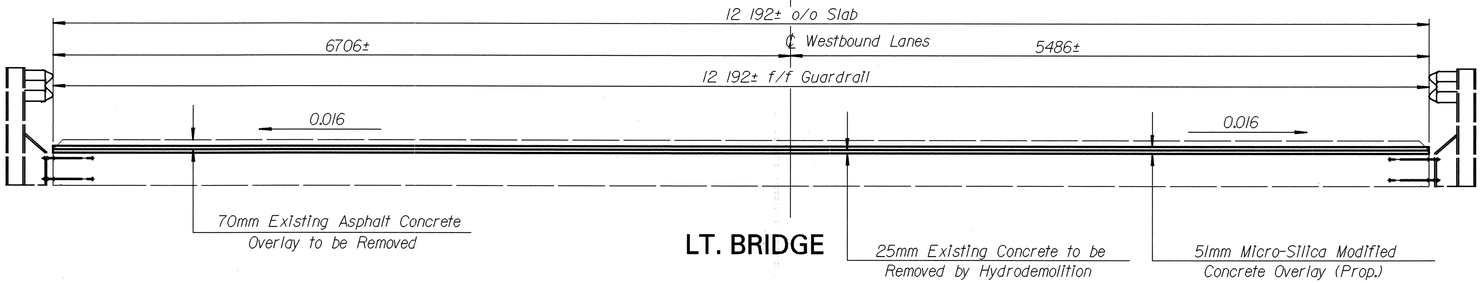

LT. BRIDGE

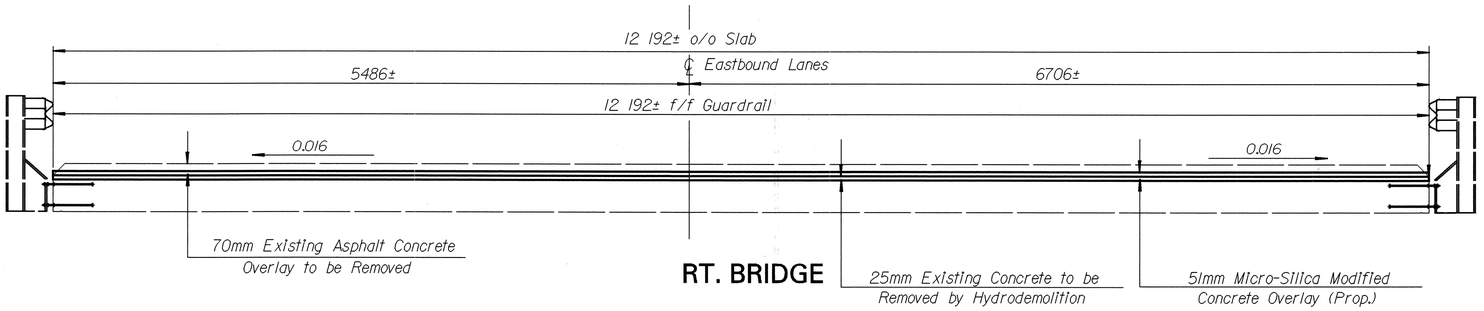

RT. BRIDGE

TRANSVERSE SECTIONS

NOTE: All dimensions on this sheet are in millimeters unless otherwise specified.

DESIGN AGENCY: District One, Production Department
REVIEWED: RLS DATE: 9/4/97
STRUCTURE FILE NUMBER: 8100330 Lt. 8100365 Rt.
DRAWN: DJS
REVISED: 000
DESIGNED: DJS
CHECKED: JRC

GENERAL PLAN
BRIDGE NO. VAN-30-5369

VAN-30-6.618(4.05)

1/3

131/134

DESIGN FILE : i:\pd\van30d\br0955sp.dgn
USERNAME : rhermon
DATE : 04-SEP-1997
TIME : 14:01

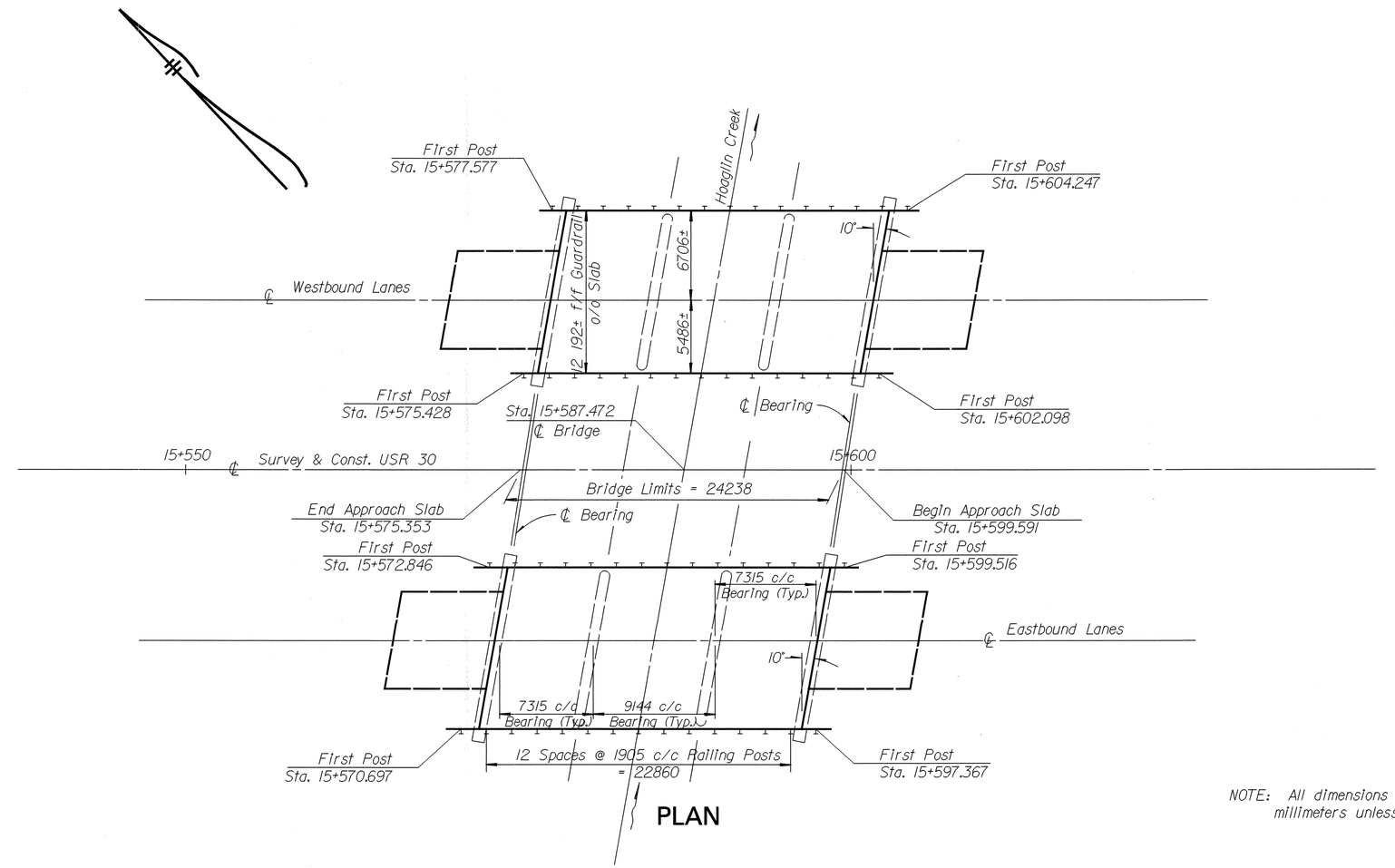

PLAN

NOTE: All dimensions on this sheet are in millimeters unless otherwise specified.

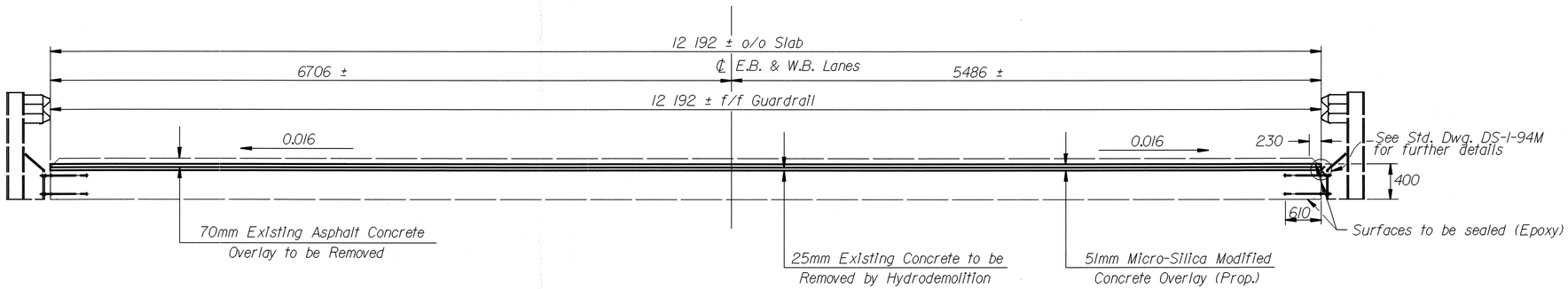

TRANSVERSE SECTIONS
(LT. BRIDGE SHOWN)

DESIGN AGENCY: District One, Production Department
DATE REVIEWED: RLS 9/4/97
STRUCTURE FILE NUMBER: 800330 Lt. 800365 Rt.
DRAWN: DJS
REVISED:
DESIGNED: DJS
CHECKED: JRC

GUARDRAIL AND DECK OVERLAY DETAIL
BRIDGE NO. VAN-30-15369

VAN-30-6.618(4.05)

2 / 3

132
134

DESIGN FILE : i:\pd\van30d\br0955sd.dgn
USERNAME : rhermon
DATE : 04-SEP-1997
TIME : 15:18

DESIGN FILE : i:\pd\van30d\br0955sn.dgn
USERNAME : rhermon

DATE : 04-SEP-1997
TIME : 15:33

GENERAL NOTES

EXISTING STRUCTURE VERIFICATION

Details and dimensions shown on these plans pertaining to the existing structure have been obtained from plans of the existing structure and from field observations and measurements. Consequently, they are indicative of the existing structure and the proposed work but they shall be considered tentative and approximate. The contractor is referred to CMS Sections 102.05, 105.02.

Contract bid prices shall be based upon a recognition of the uncertainties described above and upon a prebid examination of the existing structure by the contractor. However, all project work shall be based upon actual details and dimensions which have been verified by the contractor in the field.

Copies of the existing bridge plans are on file at the District 1 Office of the Ohio Department of Transportation in Lima, Ohio.

ITEM SPECIAL - PILE ENCASEMENT

All piles for the capped pile piers shall be encased in Class S concrete (499.03) and shall be in accordance with 511, except as modified and supplemented herein. The required slump is 150mm, plus or minus 12mm. The maximum water to cement ratio shall be 0.50. If concrete is placed under water, the requirements of adding 10 percent more cement to the concrete shall be waived. The concrete shall be placed within a form that consists of polyethylene pipe (707.16), or PVC pipe. The encasement shall extend from 1 meter below the finished ground surface up to the concrete pier cap and shall be positioned so that at least 75mm of concrete cover is provided around the exterior of the pile.

The length of pile encasement shall be measured in meters along the length of the pile. This item includes all work and materials necessary to furnish the required encasement. Payment will be made at the contract unit price per meter of pile encasement approved in place.

In lieu of encasing the pile in concrete, at the option of the contractor, the pile may be galvanized as per 711.02. The galvanizing shall be continuous from a minimum of 1 meter below the finished ground surface up to the concrete pier cap. The galvanized coating thickness shall be a minimum of 4 mils. All gouges, scrapes, scratches or other surface imperfections caused by the handling or the driving of the pile shall be repaired to the satisfaction of the Engineer. Payment for the galvanizing will be made at the contract unit price for Item Special, Pile Encasement. Payment will only be made for the galvanized length of pile as required by the plan and/or approved by the Engineer. All galvanizing provided beyond the project requirements is at the Contractor's expense.

ITEM 519 - PATCHING CONCRETE STRUCTURE

Due to the small number of areas to be patched, an Engineer's quantity of 15 Sq. M. per structure shall be included in the estimated quantites. This quantity shall be used at the Engineer's discretion, and shall be paid for under Item 519, Patching Concrete Structure. Some of the areas to be patched might include the wingwalls and backwall. These areas were not detailed due to the uncertainties of future deterioration of the structure. Also included in this item will be a quantity of 5.5 Sq. M. to prepare the deteriorated deck edge for the steel drip strip, and 5 Sq. M. to repair the abutments.

ITEM SPECIAL - SEALING CONCRETE SURFACES (EPOXY)

Work to be performed on this Item is to follow the completion of Item 519, Patching of Concrete Structures. The areas to be sealed are as follows: The exposed areas of the wingwalls and abutments also include the sides of the pier caps (leave bottom of pier cap unsealed). Also seal bridge deck. See Proposal Note.

ITEM 202 - WEARING COURSE REMOVED, AS PER PLAN

The payment for the removal of any waterproofing encountered while removing the existing asphalt wearing surface shall be included under Item 202 - WEARING COURSE REMOVED, AS PER PLAN

ITEM 202 - PORTIONS OF STRUCTURE REMOVED

The work to be performed on this Item shall consist of the removal of an area of concrete 510mm wide centered on the expansion joint at each abutment. The depth shall be 72mm as shown on Sheet 134. This Item shall include all labor and equipment necessary to complete the described work. Payment will be a Lump Sum.

ESTIMATED QUANTITIES LT. STRUCTURE

ABUT-MENTS	SUPER-STRUC-TURE	ITEM	ITEM EXT.	TOTAL	UNIT	DESCRIPTION	SEE SHEET No.
	LUMP	202	11202	LUMP	LUMP	PORTIONS OF STRUCTURE REMOVED, OVER 6 METER SPAN	
	296	202	23501	296	SQ METER	WEARING COURSE REMOVED, AS PER PLAN	133
9	78	SPECIAL	51267502	87	SQ METER	SEALING OF CONCRETE SURFACES(EPOXY)(SEE PROPOSAL NOTE)	
	44	SPECIAL	50771200	44	METER	PILE ENCASEMENT	133
	25	SPECIAL	51631300	25	METER	POLYMER MODIFIED ASPHALT EXPANSION JOINT SYSTEM	134
	57	SPECIAL	51822300	57	METER	STEEL DRIP STRIP	124
3	21	519	11100	24	SQ METER	PATCHING CONCRETE STRUCTURE	
	296	SPECIAL	51922020	296	SQ METER	MICRO-SILICA MODIFIED CONCRETE OVERLAY, USING HYDRODEMOLITION (51mm THICK) (SEE PROPOSAL NOTE)	
	8	SPECIAL	51922130	8	CU METER	MICRO-SILICA MODIFIED CONCRETE OVERLAY (VARIABLE THICKNESS), MATERIAL ONLY (SEE PROPOSAL NOTE)	
	15	SPECIAL	51922134	15	SQ METER	HAND CHIPPING	
	2	SPECIAL	51922200	2	CU METER	FULL DEPTH REPAIR (MICRO-SILICA) (SEE PROPOSAL NOTE)	
	LUMP	SPECIAL	51922300	LUMP	LUMP	TEST SLAB (SEE PROPOSAL NOTE)	

ESTIMATED QUANTITIES RT. STRUCTURE

ABUT-MENTS	SUPER-STRUC-TURE	ITEM	ITEM EXT.	TOTAL	UNIT	DESCRIPTION	SEE SHEET No.
	LUMP	202	11202	LUMP	LUMP	PORTIONS OF STRUCTURE REMOVED, OVER 6 METER SPAN	
	296	202	23501	296	SQ METER	WEARING COURSE REMOVED, AS PER PLAN	133
9	78	SPECIAL	51267502	87	SQ METER	SEALING OF CONCRETE SURFACES(EPOXY)(SEE PROPOSAL NOTE)	
	44	SPECIAL	50771200	44	METER	PILE ENCASEMENT	133
	25	SPECIAL	51631300	25	METER	POLYMER MODIFIED ASPHALT EXPANSION JOINT SYSTEM	134
	57	SPECIAL	51822300	57	METER	STEEL DRIP STRIP	124
3	21	519	11100	24	SQ METER	PATCHING CONCRETE STRUCTURE	
	296	SPECIAL	51922020	296	SQ METER	MICRO-SILICA MODIFIED CONCRETE OVERLAY, USING HYDRODEMOLITION (51mm THICK) (SEE PROPOSAL NOTE)	
	8	SPECIAL	51922130	8	CU METER	MICRO-SILICA MODIFIED CONCRETE OVERLAY (VARIABLE THICKNESS), MATERIAL ONLY (SEE PROPOSAL NOTE)	
	15	SPECIAL	51922134	15	SQ METER	HAND CHIPPING	
	2	SPECIAL	51922200	2	CU METER	FULL DEPTH REPAIR (MICRO-SILICA) (SEE PROPOSAL NOTE)	
	LUMP	SPECIAL	51922300	LUMP	LUMP	TEST SLAB (SEE PROPOSAL NOTE)	

DESIGN AGENCY: District One Production Department
DATE REVIEWED: RLS 9/4/97
STRUCTURE FILE NUMBER: 8100330 U, 8100365 Rt
DRAWN: DJS
REVISED:
DESIGNED: DJS
CHECKED: JRC

DRIP STRIP DETAIL, GENERAL NOTES & ESTIMATED QUANTITIES
BRIDGE NO. VAN-30-15369

VAN-30-6.618(4.05)

3 / 3

133
134

GENERAL NOTES AND DETAILS FOR POLYMER MODIFIED ASPHALT EXPANSION JOINT SYSTEM

ITEM SPECIAL - POLYMER-MODIFIED ASPHALT EXPANSION JOINT SYSTEM

THIS ITEM WILL BE USED TO SEAL THE EXPANSION/CONTRACTION JOINTS AS PER THESE DETAILS AND THE MANUFACTURER'S REQUIREMENTS USING A POLYMER-MODIFIED ASPHALT SYSTEM. THE PRIME CONTRACTOR WILL OBTAIN THE SERVICES OF ONE OF THE FOLLOWING LICENSED APPLICATORS WHO WILL FURNISH AND INSTALL THE NEW BRIDGE EXPANSION JOINT SYSTEM AFTER ALL PAVING ON THE AFFECTED BRIDGE(S) HAS BEEN COMPLETED.

PAVETECH INTERNATIONAL, INC.
P.O. BOX 498969
12066 MONTGOMERY RD.
CINCINNATI, OH 45249
TEL: 1-800-258-0162

BRIDGESAVER, INC.
1575 HARMON AVENUE
P.O. BOX 30248
COLUMBUS, OH 43223
TEL: 1-800-448-3636

EXPANDEX
95 PINEVIEW DR.
AMHERST, NY 14228
TEL: 1-716-691-7566

LINEAR DYNAMICS, INC.
RD #2 BOX 311
MUNCY, PA 17756
TEL: (717) 546-6041

MATERIALS:

BRIDGING PLATE:

MILD STEEL OR ALUMINUM 3mm OR 6mm THICK PLATE, 200mm WIDE

BINDER:

TYPE:	POLYMER MODIFIED ASPHALT
SOFTENING POINT:	82.22 °C MIN.
FLOW:	3mm MAX. AT 60 °C
PENETRATION:	9mm MAX. AT 25 °C 1mm MAX AT -17.78 °C ASTM D 3407
DUCTILITY:	40cm MIN. ASTM D 113
RESILIENCE:	60% MIN. AT 25 °C
TENSILE ADHESION:	700% MIN.
SPECIFIC GRAVITY:	1.10 ± 0.05
POURING TEMP:	176.67 - 198.89 °C

AGGREGATE:

TYPE:	CRUSHED, DOUBLE WASHED, AND DRIED GRANITE OR BASALT
GRADATION	THE GRADATION OF THE AGGREGATE VARIES BY MANUFACTURER AND WILL BE AS PER THE MANUFACTURER'S RECOMMENDATIONS FOR THE SYSTEM BEING USED ON THIS PROJECT.

BACKER ROD:

PROPERTY	NOMINAL VALUE	TEST METHOD
DENSITY	32.04 kg/m^3	ASTM D 1622
TENSILE STRENGTH	172.37KPa	ASTM D 1623
WATER ABSORPTION BY VOLUME	0.5%	ASTM C 509
COMPRESSION DEFLECTION AT 55.16kPa	25%	ASTM D 1621
TEMPERATURE RESISTANCE	-42.78 TO 232.22 °C	

THE BACKER SHALL BE A CLOSED CELL FOAM EXPANSION JOINT FILLER CAPABLE OF WITHSTANDING THE PLACEMENT TEMPERATURE OF THE POLYMER MODIFIED ASPHALT.

INSTALLATION PROCEDURES:

SAWING AND SURFACE PREPARATION:

AFTER ALL PAVING OPERATIONS ARE COMPLETE, THE OVERLAY IS TO BE TRANSVERSELY SAW CUT FULL DEPTH NO LESS THAN 50.8mm DEEP (0.5m CENTERED OVER JOINT OPENING, UNLESS OTHERWISE NOTED). REMOVE ALL MATERIAL, INCLUDING WATER-PROOFING MATERIAL, BETWEEN SAW CUTS. THOROUGHLY CLEAN AND DRY EXPOSED CONCRETE, STEEL, AND CUT SURFACES USING COMPRESSED AIR AND A HOT COMPRESSED AIR (HCA) LANCE. THE LANCE MUST PRODUCE A FLAME RETARDED AIR STREAM TEMPERATURE OF 1648.89 °C AT A VELOCITY OF 914.40m/s WITH 103.42KPa (GAGE) CHAMBER PRESSURE. IF THERE IS AN INTERRUPTION DUE TO WEATHER OR OTHER CAUSES, THE OPERATION WILL BE REPEATED WITH THE HCA LANCE IMMEDIATELY BEFORE THE TANKING OPERATION ALSO, 150mm OF THE ROAD SURFACE ON EITHER SIDE OF THE JOINT WILL BE DRIED SO THAT A SUITABLE SURFACE FOR BITUMEN ADHESION IS OBTAINED.

SEALING OF EXPANSION JOINT:

THE EXPANSION JOINT GAP IS TO BE SEALED AND A BRIDGING PLATE CENTERED ALONG IT. A VERY NARROW GAP WILL BE SEALED BY POURING HOT BINDER INTO THE GAP. GAPS OF 3mm OR MORE WILL FIRST BE FILLED WITH AN APPROPRIATELY SIZED BACKER ROD. THE BACKER ROD WILL BE INSTALLED SO THAT IT IS BETWEEN 3mm AND 30mm BELOW THE TOP OF THE EXISTING GAP. THE GAP WILL THEN BE FILLED WITH BINDER. ADDITIONAL BINDER WILL BE SPREAD OVER THE SURFACE AREA WHERE THE METAL PLATE WILL BE PLACED.

BOND BREAKER:

SPREAD BINDER OVER SURFACE AREA WHERE THE METAL BRIDGING PLATE WILL BE PLACED. CENTERTHE BRIDGING PLATE OVER EXISTING JOINT ABD BED INTO THE HOT BINDER. BUTT JOINT THE BRIDGING PLATES TO ACCOMODATE THE ENTIRE JOINT LENGTH. SPIKE HOLES WILL BE DRILLED AT 310mm INTERVALS ALONG THE LONGITUDINAL CENTERLINE OF THE PLATES. SECURE BRIDGING PLATE WITH NAILS OR SPIKES. SEAL BUTT JOINTS WITH HOT BINDER AND ALLOW BINDER TO SETUP BEFORE NEXT OPERATION. WHEN ALUMINUM BRIDGING PLATES ARE USED, ONLY THE BINDER IS REQUIRED TO SECURE THE INDIVIDUAL PLATES.

TANKING:

POUR THE HOT BINDER OVER THE FLOOR AREA OF THE JOINT AND SEAL ALL PREPARED, EXPOSED SURFACES OF THE JOINT WITH BINDER. SPREAD TO COAT ALL EXPOSED SURFACES. THE BINDER WILL BE A MINIMUM OF 0.8mm THICK ON THE BOTTOM OF THE JOINT CAVITY, WITH POOLS OF GREATER THICKNESS WHERE SURFACE IRREGULARITIES EXIST. THE BINDER APPLICATION TEMPERATURE WILL BE BETWEEN 175 AND 200 °C. THE BINDER WILL NOT BE ALLOWED TO BE HEATED ABOVE 210 °C NOR ALLOWED TO EXCEED 200 °C FOR MORE THAN 1 HOUR. A DOUBLE JACKETED OIL METER WILL BE USED TO HEAT THE BINDER. THE MELTER WILL BE EQUIPPED WITH A CONTINUOUS AGITATION SYSTEM, TEMPERATURE CONTROLS, AND A CALIBRATED THERMOMETER. ALSO A SYSTEM FOR ACCURATELY MEASURING THE WEIGHTS OF THE BINDER AND THE AGGREGATE WILL BE REQUIRED.

BUILD-UP OF JOINT LAYERS:

AGGREGATE PREPARATION:

HEAT THE AGGREGATE TO A TEMPERATURE OF 135 TO 162.78 °C, WITH A SUITABLE ROTATING DRUM WITH ATTACHED HEAT SOURCE OR A HOT COMPRESSED AIR LANCE, TO REMOVE ALL DUST AND MOISTURE.

AGGREGATE PROPORTION AND LAYER THICKNESS:

MIX THE AGGREGATE WITH THE BINDER SUCH THAT THE MINIMUM AGGREGATE CONTENT BY WEIGHT WILL BE 68%. THE HEATED AGGREGATE AND BINDER WILL BE COMBINED IN LAYERS NOT LESS THAN 19mm NOR EXCEEDING 51mm. THE THICKNESS OF EACH LAYER CAN BE VARRIED, WITHIN THESE LIMITS, TO ACHIEVE THE REQUIRED JOINT THICKNESS. THE OBJECTIVE IS TO COAT EACH STONE AND FILL THE VOIDS WHILE AVOIDING AN EXCESS OF BINDER. THIS WILL ACHIEVE THE MAXIMUM CONTENT OF STONE CONSITENT WITH ALL STONES BEING COATED WITH BINDER AND A MAXIMUM VOID CONTENT OF 2%. RAKE THE MIXTURE TO MIX AND LEVEL.

AGGREGATE PREPARATION:

THE TOP LAYER THICKNESS WILL VARY BETWEEN 13mm AND 25mm. IN PREPARING THE TOP LAYER, THE RATIO OF AGGREGATE TO BINDER WILL BE APPROXIMATELY 6:1 BY WEIGHT. THIS RATIO IS NOT ABSOLUTELY VITAL SINCE ADDITIONAL BINDER WILL INFILTRATE THE TOP LAYER FROM BOTH BELOW AND ABOVE. OVERFILL THE TOP LAYER AND COMPACT TO THE LEVEL OF THE ADJACENT SURFACES USING A ROLLER OR VIBRATORY PLATE COMPACTOR. IMMEDIATELY AFTER COMPLETION OF THE COMPACTION, POUR SUFFICIENT BINDER OVER THE JOINT TO FILL THE SURFACE VOIDS AND COAT THE SURFACE STONE. DUST THE FINISHED JOINT WITH A FINE, DRY AGGREGATE TO PREVENT TACKINESS.

MAINTENANCE OF TRAFFIC:

IF NECESSARY TO FACILITATE TRAFFIC MAINTENANCE, THE JOINT WILL BE INSTALLED IN TWO HALF-WIDTH PHASES. DURING PHASE 1 APPROXIMATELY HALF OF THE TOTAL JOINT WILL BE INSTALLED. DURING PHASE 2, A MINIMUM OF 50mm OF THE PHASE 1 JOINT WILL BE REMOVED, AT OR NEAR THE CENTERLINE, WITH THE REMAINDER OF THE JOINT INSTALLED. IN ALL CASES, OPERATIONS WILL BE SCHEDULED SO THAT ALL LANES CAN BE OPEN TO TRAFFIC DURING ALL NON-WORKING HOURS.

TESTING:

CERTIFICATION WILL BE SUPPLIED FOR EACH PROJECT SHOWING BINDER COMPLIANCE WITH REQUIRED PROPERTIES. A ONE QUART SAMPLE OF BINDER WILL BE RETRIEVED FROM EACH BRIDGE FOR FURTHER TESTING BY THE O.D.O.T. TESTING LABORATORY.

PAYMENT:

PAYMENT FOR ALL THE ABOVE WILL BE AT THE UNIT PRICE BID PER METER OF SEALED JOINT IN PLACE FOR ITEM SPECIAL 516M 31300, POLYMER MODIFIED ASPHALT EXPANSION JOINT SYSTEM (51mm THICK). THIS WILL INCLUDE ALL LABOR, EQUIPMENT, MATERIALS, AND INCIDENTALS NECESSARY TO COMPLETE THE ABOVE WORK.

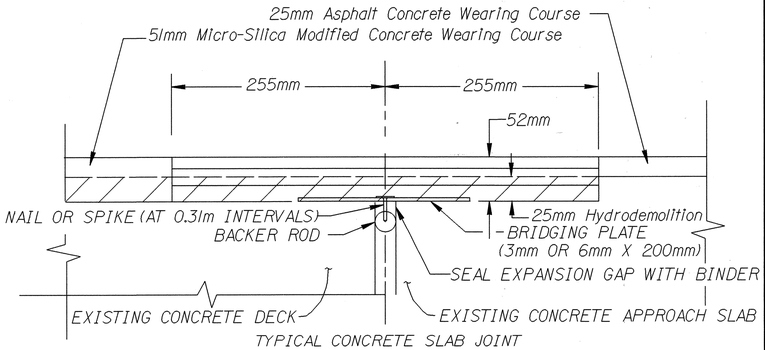

DESIGN FILE : i:\pd\van30d\polymer.dgn
USERNAME : rthermon
DATE : 04-SEP-1997
TIME : 15:39

DESIGNED	DRAWN	REVIEWED
DJS	DJS	
CALCULATED	CHECKED	DATE
DJS	KM	9/4/97

ASPHALT EXPANSION JOINT SYSTEM

POLYMER MODIFIED ASPHALT

VAN-30-6.618(4.05)

1 / 1

134
134