#3121

INDEX OF SHEETS

1 TITLE SHEET
GENERAL PLAN AND ELEVATION
GENERAL NOTES
9 ESTIMATED QUANTITIES
UNIT 1
10-11 ROADWAY CROSS SECTIONS
12 STEEL FRAMING PLAN
13-14 GIRDER ELEVATIONS
15-18 GIRDER DETAILS
19-20 STRESSES AND DEFLECTIONS
21-22 EXPANSION JOINTS 22A REVISED SHEET NO. 22
23-24 ROADWAY SLAB
BASCULE SPAN
25 ROADWAY CROSS SECTIONS
26 STEEL FRAMING PLAN
27 GIRDER ELEVATIONS
28 STRESSES AND DIMENSIONS
29 OPERATING CLEARANCE AND BALANCING
33 GIRDER DETAILS
34 BRACING
35 ROADWAY AND SIDEWALK
37 COUNTERWEIGHT
BASCULE PIERS
40 GENERAL VIEWS
46 CONCRETE DETAILS
45 LIVE LOAD ANCHORS
62 METAL WORK IN BASCULE PIERS
63 GENERAL SECTIONS
MACHINERY
68 ELECTRICAL CIRCUITS
69 ROADWAY CONDUIT DETAILS
70 OPERATING PROCEDURE
74 OPERATORS HOUSE
75-76 NORTH PORTION-GENERAL PLAN AND ELEVATION
UNIT 2
77-79 ROADWAY CROSS SECTIONS
80 STEEL FRAMING PLAN
81-82 GIRDER ELEVATIONS
83-87 GIRDER DETAILS
88 GIRDER OUTLINES AND DEFLECTIONS
89 GIRDER STRESSES
90 ROADWAY SLAB
UNIT 3
91 ROADWAY CROSS SECTIONS
92 STEEL FRAMING PLAN AND GIRDER ELEVATIONS
93 GIRDER DETAILS
94 GIRDER STRESSES AND DEFLECTIONS
95 EXPANSION JOINTS
96 ROADWAY SLAB
RAMP E-E
97 ROADWAY CROSS SECTIONS
98 STEEL FRAMING PLAN AND GIRDER ELEVATIONS
99-100 GIRDER DETAILS
101 GIRDER STRESSES AND DEFLECTIONS
102 EXPANSION JOINTS
103 ROADWAY SLAB
104 STAIRWAY
RAMP X
105 ROADWAY CROSS SECTIONS AND SHOES
106 STEEL FRAMING PLAN
107 GIRDER ELEVATIONS
108 GIRDER DETAILS
109 EXPANSION JOINTS
110 ROADWAY SLAB
111 HANDRAIL AND FASCIA
112-113 CURB
114 CURB, NAME PLATES AND POWER MANHOLES
115-116 SHOES
117 BRIDGE DRAINAGE
118-120 APPROACH SLABS

MICROFILMED JUL 22 1955

STATE OF OHIO
DEPARTMENT OF HIGHWAYS

UI-1052 (9)

FED. ROAD DIV. NO.	STATE	FED. AID PROJ. NO.	TYPE FUNDS	1 / 120
2	OHIO	UI-1052(9)		

LUCAS COUNTY
CITY OF TOLEDO
TOLEDO EXPRESSWAY SYSTEM
MAUMEE RIVER BRIDGE
LUC-120 -3.46

TOLEDO EXPRESSWAY SYSTEM

LUC-120 -3.46
LUCAS COUNTY
CITY OF TOLEDO

MAUMEE RIVER BRIDGE
PART 3 - SUPERSTRUCTURE

NOTE: SECTION LUC-120R-3.46 APPEARING THROUGHOUT THESE PLANS SHALL BE CONSIDERED TO BE LUC-120-3.46.

NOTE: FEDERAL NUMBER UI-1052(2) APPEARING THROUGHOUT THESE PLANS SHALL BE CONSIDERED TO BE UI-1052(9)

LIMITED ACCESS

APPROVED _____
DATE 2/27/54 DIRECTOR OF PUBLIC SERVICE CITY OF TOLEDO

APPROVED _____
DATE 2/27/54 CITY MANAGER, CITY OF TOLEDO

PRINT APPROVED BY D.L. Sommerville
DATE CHIEF ENGINEER, PENNSYLVANIA RAILROAD
CENTRAL REGION

NOTE:
THIS SET OF PLANS, PART 3 OF THIS PROJECT, CONSISTS PRINCIPALLY OF THE SUPERSTRUCTURE OF THE MAUMEE RIVER BRIDGE AND PORTIONS OF PIERS 4 AND 5 NOT CONSTRUCTED UNDER PART 1. PARTS 1 AND 2, THE SUBSTRUCTURE OF THIS BRIDGE, AND PART 2A, THE EMBANKMENT AT THE SOUTH END OF THIS BRIDGE HAVE PREVIOUSLY BEEN PLACED UNDER CONTRACT. THE CONTIGUOUS HIGHWAY WORK WILL BE LET IN SUBSEQUENT CONTRACTS.

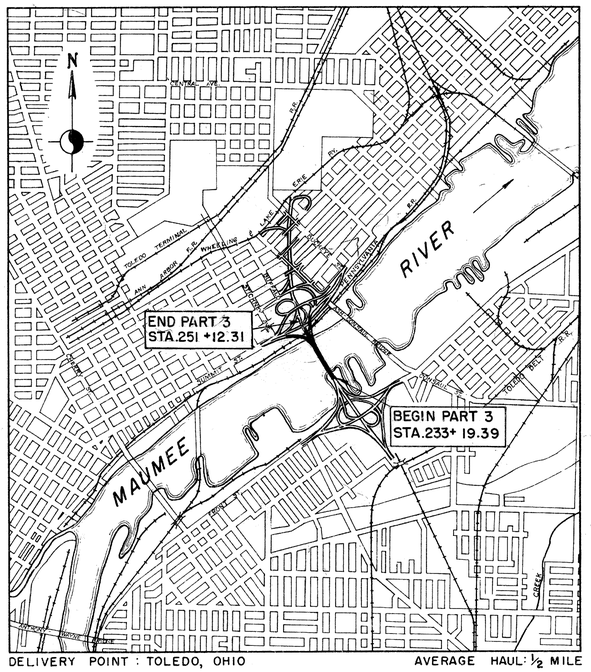

DELIVERY POINT : TOLEDO, OHIO AVERAGE HAUL: ½ MILE

LOCATION PLAN

0 660 1320 2640 3960 5280
SCALE IN FEET

PORTION TO BE IMPROVED

THE STANDARD SPECIFICATIONS OF THE STATE OF OHIO DEPARTMENT OF HIGHWAYS, INCLUDING CHANGES AND SUPPLEMENTAL SPECIFICATIONS LISTED IN THE PROPOSAL SHALL GOVERN THIS IMPROVEMENT.

I HEREBY APPROVE THESE PLANS AND DECLARE THAT THE MAKING OF THIS IMPROVEMENT WILL NOT REQUIRE THE CLOSING TO TRAFFIC OF THE HIGHWAY AND THAT PROVISIONS FOR THE MAINTENANCE AND SAFETY OF TRAFFIC WILL BE AS SET FORTH IN THE PLANS AND ESTIMATE.

THE RIGHT OF WAY FOR THIS IMPROVEMENT WILL BE PROVIDED BY THE STATE OF OHIO.

APPROVED George W. Rubin
DATE 3-15-54 DIVISION DEPUTY DIRECTOR

APPROVED John Reese
DATE 4-8-54 DEPUTY DIRECTOR OF PLANNING AND PROGRAMMING

APPROVED Richard S. Orth
DATE 3-19-54 ENGINEER OF BRIDGES

APPROVED _____
DATE _____ ENGINEER OF LOCATION AND DESIGN

APPROVED J. Harold
DATE 4-5-54 DEPUTY DIRECTOR OF DESIGN AND CONSTRUCTION

APPROVED _____
DATE _____ FIRST ASSISTANT DIRECTOR

APPROVED _____
DATE _____ DIRECTOR OF HIGHWAYS

LINE DATA

BEGIN PART 3 & PROJ. UI-1052(9)	STA. 233+19.39 EXPRESSWAY
END PART 3 & PROJ. UI-1052(9)	STA. 251 +12.31 EXPRESSWAY
NET LENGTH PART 3 & PROJ. UI-1052(9	1792.92 FT. OR .339 MI.
ADD FOR RAMP E-E	321 FT.
ADD FOR RAMP X	553 FT.
NET LENGTH OF WORK	2666.92 FT. OR .505 MI.

PREPARED AND RECOMMENDED BY

JWARD NEEDLES TAMMEN & BERGENDOFF — H. G. SOURS
CONSULTING ENGINEERS — ASSOCIATE
ANSAS CITY — NEW YORK — COLUMBUS

R. M. Bergendoff

LUCAS COUNTY
SEC LUC 120 -3.46, PART 3
DATE OF LETTING _____, 195__
CONTRACT NO. _____

SUPPLEMENTAL SPECIFICATIONS

NUMBER	DATE	NUMBER	DATE
24	1-28-48	M-101.7	1-24-53
33	REV-10-24-49	CE-107	5-21-53
M-206.14	7-15-49	[illegible]-171.13	REV. 3-19-53

STANDARD DRAWINGS

	DATE	NUMBER	DATE
*TJ No 1	3-2-53		
*TJ No 2	3-2-53		
*TJ No 3	3-2-53		

* Accepted By B.P.R.

DEPARTMENT OF COMMERCE
BUREAU OF PUBLIC ROADS

APPROVED:

DISTRICT ENGINEER — DATE

MICROFILMED
JUL 22 1993

FED. ROAD DIV. NO.	STATE	FED. AID PROJ. NO.	TYPE FUNDS
2	OHIO	UI-1052(9)	POST WAR

2
120

LUCAS COUNTY
CITY OF TOLEDO
TOLEDO EXPRESSWAY SYSTEM
MAUMEE RIVER BRIDGE
LUC 120R-3.46

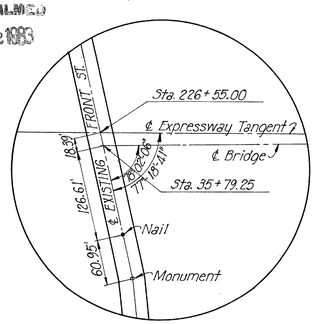

TIES AT FRONT STREET

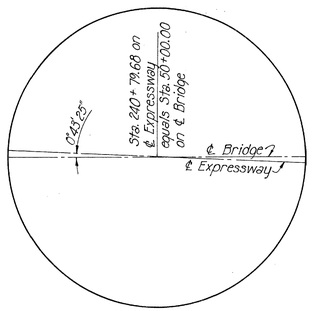

INTERSECTION OF ℄ BRIDGE AND ℄ EXPRESSWAY

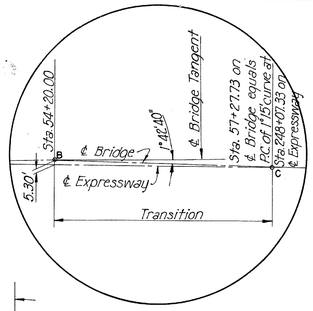

TRANSITION FROM ℄ BRIDGE TO ℄ EXPRESSWAY

Marker will be furnished and erected on the left by the State before acceptance of this improvement.

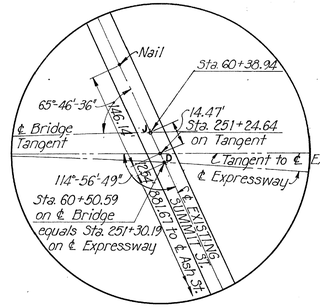

TIES AT SUMMIT STREET

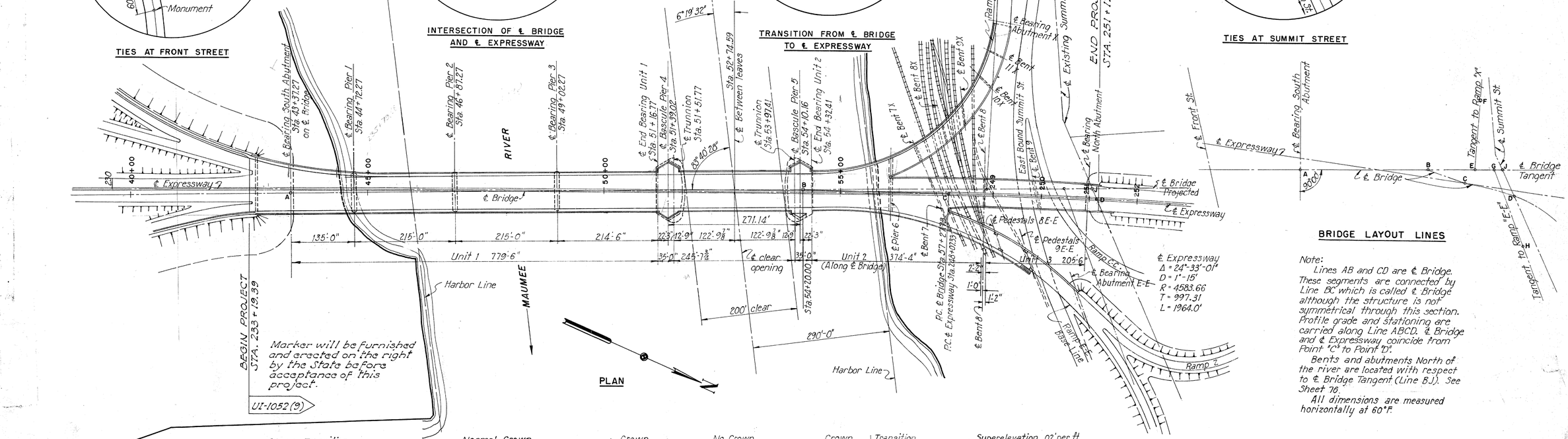

PLAN

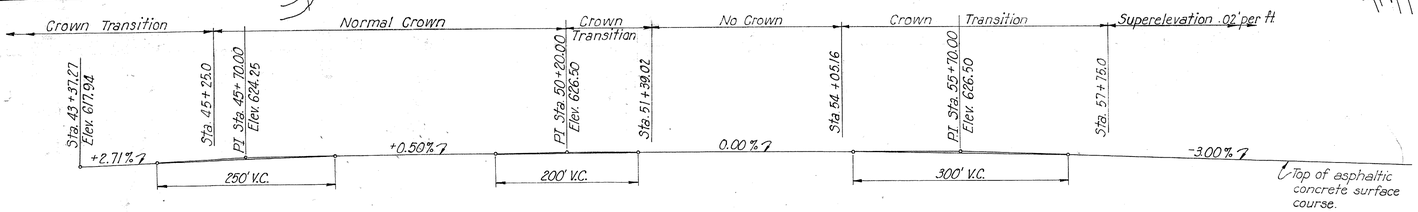

PROFILE GRADE ALONG LINE ABCD

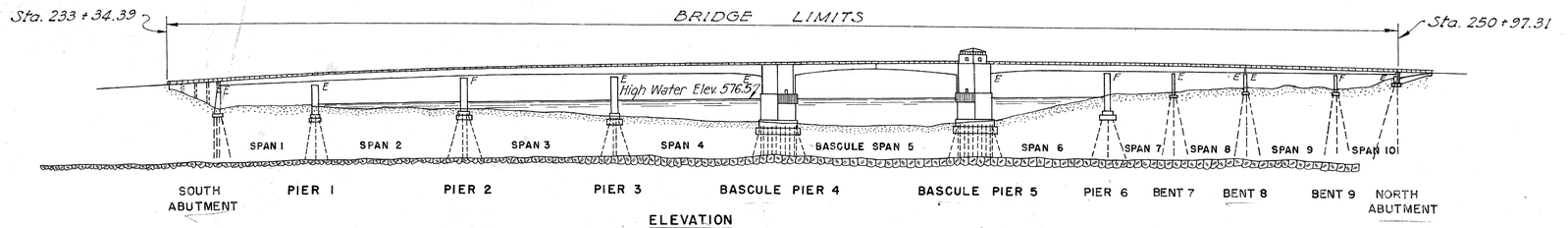

ELEVATION

BRIDGE LAYOUT LINES

Note:
Lines AB and CD are ℄ Bridge. These segments are connected by Line BC which is called ℄ Bridge although the structure is not symmetrical through this section. Profile grade and stationing are carried along Line ABCD. ℄ Bridge and ℄ Expressway coincide from Point "C" to Point "D".

Bents and abutments North of the river are located with respect to ℄ Bridge Tangent (Line B.J.). See Sheet 16.

All dimensions are measured horizontally at 60°F.

BENCH MARK
City Bench Mark No.1112 at Ash Street Bridge, northwesterly end of bridge. Brass Bench Mark Plate set in northwesterly end of northerly retaining wall, 28 feet southeasterly of newel post on northerly side of bridge at Summit Street end of railing - Elevation 601.615 feet above Mean Sea Level, New York.

DECLARATION OF LIMITATION OF ACCESS:
This improvement has been declared a limited access highway or freeway by action of the Director of Highways in accordance with the provisions of Section 5511.02, Revised Code of Ohio.

PART 3
TOLEDO EXPRESSWAY SYSTEM
MAUMEE RIVER BRIDGE
BR. NO. LU 120R-35
GENERAL PLAN AND ELEVATION
TOLEDO LUCAS COUNTY OH

SCALE 1" = 100'
MADE HBK-EBB DATE 8-16-51
TRCD B.L.B. DATE 8-21-51
CKD J.T. DATE 6-26-53

HOWARD, NEEDLES, TAMMEN & BERGEN
CONSULTING ENGINEERS
KANSAS CITY NEW YORK

810 SHEET 3

702

MICROFILMED JUL 2 19..

FED. ROAD DIV. NO	STATE	FED AID PROJ NO.	TYPE FUNDS
2	OHIO	UI-1052(2)	POST WAR

LUCAS COUNTY
CITY OF TOLEDO
TOLEDO EXPRESSWAY SYSTEM
MAUMEE RIVER BRIDGE
LUC 120R- 3.46

GENERAL

1. DESIGN SPECIFICATIONS.

"DESIGN SPECIFICATIONS FOR HIGHWAY STRUCTURES", STATE OF OHIO, DEPARTMENT OF HIGHWAYS, DATED OCTOBER, 1951, (WITH A LOAD FREQUENCY RATING OF CF 1200-51) ARE USED IN THE DESIGN OF THIS STRUCTURE. THE A.A.S.H.O. STANDARD SPECIFICATIONS FOR HIGHWAY BRIDGES, ARTICLE 3.4.8, ARE USED FOR THE ALLOWABLE UNIT STRESSES IN MANGANESE STRUCTURAL STEEL.

MACHINERY AND ELECTRICAL DESIGNS ARE IN ACCORDANCE WITH A.A.S.H.O. "STANDARD SPECIFICATIONS FOR MOVABLE HIGHWAY BRIDGES", 1953, EXCEPT AS NOTED BELOW AND AS SPECIFIED OTHERWISE UNDER "MACHINERY", ETC.

3.5.9 KEYS; BEARING; 14,000 PSI FOR FORGED STEEL AND 13,000 PSI FOR CAST STEEL.

3.5.12 FOR HERRINGBONE GEARS $W = 0.7\ PcfS\ (0.154 - \frac{0.912}{N})\ \frac{(1200)}{1200+V}$.

3.5.18 FOR SHAFT BENDING, $ME = 0.375M + 0.625\ \sqrt{(KmM)^2 + (KtT)^2}$

$$d = \sqrt[3]{\frac{ME \times 10.2}{\text{UNIT STRESS (BENDING)}}}$$

3.5.22 TRUNNION BEARINGS DO NOT HAVE LININGS IN THE TOP.

3.9.3 USED 60 PER CENT OF GROSS FLOOR AREA FOR ICE AND WIND.

3.9.6 MAIN MOTORS SELECTED AS SPECIFIED EXCEPT THAT MAXIMUM CALCULATED REQUIRED TORQUE AT PRIME MOVER WAS MULTIPLIED BY 1.25.
GASOLINE ENGINE WAS SELECTED FOR 133 PER CENT OF THE MAXIMUM CALCULATED TORQUE IN CASE B, BASED ON THE EQUIPPED (NOT STRIPPED) ENGINE.

3.9.8 MACHINERY WAS DESIGNED FOR 150 PER CENT OF THE NORMAL RATED TORQUE OF THE ELECTRIC MOTORS.

3.9.10 TWO BRAKES TO STOP SPAN IN 10 SECONDS WITH 2½# WIND AND 2½# ICE. FOUR BRAKES TO STOP SPAN IN 10 SECONDS WITH 7½# WIND AND 2½# ICE. FOUR BRAKES TO HOLD SPAN AGAINST 30# WIND.

3.11.15 ROADWAY GATES ARE STEEL; NOT OF STANDARD MANUFACTURE.

2. CONSTRUCTION SPECIFICATIONS.

THIS WORK SHALL BE GOVERNED BY THE CONSTRUCTION AND MATERIAL SPECIFICATIONS OF THE STATE OF OHIO, DEPARTMENT OF HIGHWAYS, DATED JANUARY 1, 1953; BY SUPPLEMENTAL SPECIFICATIONS NO. 24, DATED MAY 28, 1948, NO. M-206.14, DATED JULY 15, 1949; NO. 33, REVISED OCTOBER 24, 1949; NO. M-101.7, DATED JANUARY 24, 1953; NO. CE-107, DATED MAY 21, 1953; AND NO. T-171.19 REVISED MARCH 19, 1953; AND BY THE NOTES IN THE PROPOSAL.

3. SCOPE OF CONTRACT.

THE WORK INCLUDED IN THIS CONTRACT CONSISTS OF THE FOLLOWING: THE ENTIRE SUPERSTRUCTURE OF THIS BRIDGE; THE COMPLETION OF BASCULE PIERS 4 AND 5 INCLUDING THE OPERATOR'S HOUSE; THE ROADWAY GATES; THE MACHINERY, MECHANICAL, ELECTRICAL AND OTHER EQUIPMENT FOR OPERATING THE BASCULE SPAN AND ROADWAY GATES; THE SHOE ANCHOR BOLTS INTO THE SUBSTRUCTURE EXCEPT WHERE THESE AND SCREED FRAMES ARE PREVIOUSLY PROVIDED UNDER PARTS 1 AND 2; THE STEEL HANDRAIL AND CURB ON THE ABUTMENTS AND RETAINING WALLS, AND THE TYPE "C" WATERPROOFING AND ASPHALTIC CONCRETE SURFACE COURSE ON THE ROADWAY SLAB OF THE ABUTMENTS (THE ABUTMENTS AND RETAINING WALLS BEING PREVIOUSLY BUILT UNDER PART 2); THE EXPANSION JOINTS AT THE ABUTMENTS INCLUDING THE ADJACENT PORTIONS OF CONCRETE; THE CONCRETE BRIDGE APPROACH SLABS; THE STAIRWAY FROM RAMP E-E INCLUDING ITS CONCRETE BASES; THE BRIDGE DRAINAGE SYSTEM INCLUDING DOWNSPOUTS AT PIERS AND ABUTMENTS DOWN TO GROUND LEVEL; THE TRAFFIC CONTROL LIGHT SYSTEM; THE NAVIGATION LIGHTING SYSTEM; THE BASCULE PIER AND OPERATOR'S HOUSE LIGHTING SYSTEM; CONDUITS AND BOXES FOR THE BRIDGE ROADWAY LIGHTING SYSTEM, FOR POLICE AND FIRE ALARM SIGNALS AND FOR OUTSIDE TELEPHONE; STANDARDS AND BRACKETS (BUT NOT INCLUDING LUMINAIRES) FOR THE BRIDGE ROADWAY LIGHTING SYSTEM; AND ANY OTHER INCIDENTALS NECESSARY TO COMPLETE THE WORK, READY FOR USE, EXCLUDING ONLY THOSE ITEMS SPECIFICALLY LISTED HEREIN AS PROVIDED BY OTHERS.

WORK ON THE BASCULE SPAN AND PIERS WILL INCLUDE ALL METAL WORK OF THE BASCULE LEAVES, THE COUNTERWEIGHTS, ALL CONCRETE IN THE TWO BASCULE PIERS ABOVE ELEVATION 585.5, CONCRETE IN TRUNNION SUPPORT RECESSES BELOW ELEVATION 585.5, TRUNNION SUPPORTS AND ALL OTHER METALWORK IN THE BASCULE PIERS, SPAN OPERATING AND TRAFFIC CONTROL MACHINERY, ALL ELECTRICAL WORK(EXCEPT ROADWAY LIGHTING), AND OPERATOR'S HOUSE COMPLETE WITH FURNISHINGS AND EQUIPMENT.

WORK PERFORMED BY THE CONTRACTORS FOR PARTS 1 AND 2 WILL INCLUDE ANCHOR BOLTS AND SCREED FRAMES FOR SHOES AT THE SOUTH ABUTMENT, PIERS 1, 2 AND 3 AND UNDER GIRDERS G-1 TO G-4 INCLUSIVE AT PIER 6; ANCHOR BOLTS FOR EXPANSION CASTINGS TO BE PLACED ON THE BACKWALLS OF THE SOUTH AND NORTH ABUTMENTS; RECESSES FOR STEEL CURB POSTS ON THE SOUTH AND RAMP X ABUTMENTS; RECESSES FOR HANDRAIL POSTS ON ALL ABUTMENTS AND RETAINING WALLS; SLEEVES FOR CONDUITS THROUGH ABUTMENT BACKWALLS; CERTAIN CONDUITS IN THE BASES OF THE BASCULE PIERS TO BE EXTENDED UNDER PART 3; SOIL PIPE IN BASE OF PIER 5 TO BE EXTENDED UNDER PART 3 TO THE REST ROOM IN THE OPERATOR'S HOUSE; RECESSES FOR SUMP PUMPS IN BASES OF THE BASCULE PIERS AND ELECTRICAL GROUND WIRES FOR GROUNDING THE SUPERSTRUCTURE AT PIERS 2, 4, 5, 6, 9, 7X AND 11X.

WORK PERFORMED BY VARIOUS OTHER PARTIES WILL INCLUDE FURNISHING AND INSTALLING THE ROADWAY LIGHTING SYSTEM COMPLETE EXCEPT FOR CONDUITS, BOXES, STANDARDS (AND BRACKETS) AND ACCESSORIES SHOWN ON THE PLANS; THE BRIDGE DRAINAGE PIPES FROM BASES OF SUBSTRUCTURE UNITS UNDERGROUND TO SEWER OUTFALL; THE CONNECTION OF THE WATER SUPPLY LINE TO THE WATER MAIN; THE CONNECTION OF THE POWER SUPPLY CABLES TO THE POWER SOURCES, THE TELEPHONE CABLE FOR OUTSIDE CALLS AND THE POLICE AND FIRE ALARM SIGNAL CABLES CROSSING THE RIVER.

4. MINIMUM TEMPORARY CONSTRUCTION CLEARANCE FOR RAILROAD TRACKS.

THE MINIMUM TEMPORARY CONSTRUCTION CLEARANCE FOR THE PENNSYLVANIA RAILROAD TRACKS SHALL BE 19'-0" VERTICALLY ABOVE TOP OF RAIL AND 8'-0" HORIZONTALLY FROM CENTERLINE OF THE NEAREST TRACK.

5. FIELD OFFICE.

THE CONTRACTOR SHALL PROVIDE A FIELD OFFICE, IN ACCORDANCE WITH SEC. S-0.01 (b) OF THE "CONSTRUCTION AND MATERIAL SPECIFICATIONS" AS SOON AS POSSIBLE AFTER THE AWARD OF THE CONTRACT, HAVING A MINIMUM OF 250 SQUARE FEET OF FLOOR SPACE. THE OFFICE SHALL BE OF WATERTIGHT CONSTRUCTION WITH SUITABLE WINDOWS AND DOORS, PROPERLY SCREENED, AND WITH INTERIOR WALLS AND CEILING FINISHED WITH CELOTEX OR SIMILAR INSULATING BOARD. THE FLOOR SHALL BE DOUBLE THICKNESS. THE OFFICE SHALL BE PROVIDED WITH HEATING, LIGHTING AND TELEPHONE FACILITIES AND SHALL BE EQUIPPED WITH ONE DESK, ONE CAMP TYPE PLAN TABLE, ONE CAMP TYPE WORK TABLE AND TWO CHAIRS. THE CONTRACTOR SHALL MAINTAIN THE OFFICE AND SERVICES UNTIL COMPLETION OF HIS CONTRACT.

6. WORK IN NAVIGABLE WATERS.

ALL CONSTRUCTION OPERATIONS IN THE RIVER SHALL CONFORM TO THE REQUIREMENTS OR DIRECTIONS OF THE DISTRICT ENGINEER, U. S. ARMY, AND TO THE REQUIREMENTS OF THE U. S. COAST GUARD. THE CONTRACTOR SHALL NOTIFY THE DISTRICT ENGINEER'S OFFICE, CORPS OF ENGINEERS, U. S. ARMY, SEVEN DAYS IN ADVANCE OF COMMENCEMENT OF WORK IN THE RIVER SO THAT NAVIGATION INTERESTS MAY BE NOTIFIED OF THE PRESENCE OF CONSTRUCTION EQUIPMENT AND ALSO SHALL NOTIFY THE SAME OFFICE WHEN WORK IN THE RIVER IS COMPLETED. THE CONTRACTOR SHALL PROVIDE AND MAINTAIN NAVIGATION LIGHTS AND OTHER NAVIGATION SIGNALS OR FACILITIES WHICH MAY BE REQUIRED ON TEMPORARY CONSTRUCTIONS OR VESSELS, AND SHALL PROVIDE AND MAINTAIN NAVIGATION LIGHTS ON PARTIALLY OR ENTIRELY COMPLETED SPANS FOR THE DURATION OF HIS CONTRACT, IN ACCORDANCE WITH THE REQUIREMENTS OF THE U. S. COAST GUARD. THE CONTRACTOR SHALL APPLY FOR AND SECURE ALL NECESSARY DEPARTMENT OF THE ARMY PERMITS FOR DREDGING AND DUMPING AND FOR CONSTRUCTING FALSEWORK OR OTHER TEMPORARY CONSTRUCTIONS IN THE RIVER. THE CONTRACTOR SHALL PROVIDE AREAS FOR DISPOSAL OF EXCAVATED MATERIALS AT HIS OWN EXPENSE.

7. NAME PLATES.

A. THERE SHALL BE PROVIDED TWO DUPLICATE NAME PLATES, ONE AT EACH END OF THE BRIDGE. EACH NAME PLATE SHALL BE MOUNTED ON THE ROADWAY FACE OF THE CONCRETE TERMINAL POST AT THE RIGHT HAND SIDE ALONG THE EXPRESSWAY, APPROACHING EACH END OF THE BRIDGE. NAME PLATES SHALL BE OF STATUARY BRONZE OF THE SIZE AND GENERAL SECTION INDICATED ON THE PLANS AND SHALL CONTAIN, IN RAISED LETTERING, INSCRIPTION INFORMATION AS SHOWN ON THE PLANS. THE SURFACE OF LETTERING AND THE BORDER MOULDING SHALL BE POLISHED AND THE BACKGROUND BETWEEN BORDERS SHALL BE ETCHED. THE LETTERS SHALL BE NEATLY FORMED OF DIMENSIONS SUITABLE TO THE PLATE DIMENSIONS, PROPERLY SPACED AND ARRANGED. THE CONTRACTOR SHALL SUBMIT SHOP DRAWINGS IN ADVANCE OF MAKING PATTERN AND RUBBINGS FROM THE FINAL PATTERN FOR APPROVAL BEFORE THE CASTINGS ARE MADE. PLATES SHALL BE SUBSTANTIALLY ATTACHED AND ANCHORED TO THE CONCRETE POSTS IN THE MANNER SHOWN ON THE PLANS.

B. PAYMENT FOR THE TWO NAME PLATES SHALL BE MADE AT THE CONTRACT LUMP SUM PRICE BID FOR ITEM S-26, NAME PLATES.

8. ROADWAY LIGHTING SYSTEM.

A. THE BRIDGE ROADWAY LIGHTING SYSTEM COMPRISES 32 LIGHTS. UNDER THIS CONTRACT THERE SHALL BE PROVIDED THE BRACKETS ON WHICH TO MOUNT THE STANDARDS, THE STANDARDS (INCLUDING LUMINAIRE BRACKETS) AND THE CONDUIT SYSTEM ON THE BRIDGE AND ABUTMENTS, COMPLETE WITH JUNCTION BOXES, PULL BOXES, AND ACCESSORIES READY FOR INSTALLATION OF WIRING. THE LUMINAIRES, LAMPS, ELECTRICAL WIRING, AND FURNISHING AND INSTALLING OF INSULATING TRANSFORMERS IN THE JUNCTION BOXES ADJACENT TO THE LIGHT STANDARDS, AND THE EXTENSION OF THE CONDUIT SYSTEM FROM THE ABUTMENT TO CONNECTION WITH EXISTING STREET LIGHTING CIRCUITS WILL BE DONE BY OTHERS.

B. THE CONDUITS FOR CARRYING THE ROADWAY LIGHTING CIRCUITS SHALL BE 3 IN. DIAMETER ASBESTOS-CEMENT CONDUIT CONFORMING TO SUPPLEMENTAL SPEC. M-206.14. THE PLANS INCLUDE DETAILS OF TRANSFORMER BOXES OR JUNCTION BOXES FOR THE CONDUIT SYSTEM WHICH SHALL BE PROVIDED IN THE SIDEWALK ADJACENT TO EACH ROADWAY LIGHT, AND ELSEWHERE AS SHOWN ON THE PLANS. SEPARATE CIRCUITS WILL BE PROVIDED FOR THE LIGHTS EACH WAY FROM THE BASCULE SPAN. THE LOCATIONS OF THE CONDUIT RUNS ARE INDICATED ON THE PLANS.

C. THE CONDUIT SYSTEM SERVING THE LIGHTS SOUTH OF THE BASCULE SPAN BEGINS AT A MANHOLE ON THE WEST SIDE OF THE ROADWAY NEAR THE ABUTMENT AND EXTENDS THROUGH A PIPE SLEEVE PROVIDED BY OTHERS IN THE PARAPET WALL OF THE ABUTMENT, AND THENCE UNDER THE SIDEWALK ON THE BRIDGE STRUCTURE SUPPORTED ON THE STEELWORK AS SHOWN. FROM THE JUNCTION BOX ADJACENT TO THE WEST ROADWAY LIGHT IN SPAN NO. 4 THE CONDUIT SHALL CROSS UNDER THE ROADWAY TO A JUNCTION BOX IN THE EAST SIDEWALK. FROM THIS JUNCTION BOX A CONDUIT RUN SHALL BE CARRIED EACH WAY; ONE TO SERVE THE ROADWAY LIGHT ON THE BASCULE PIER, AND THE OTHER RETURNING UNDER THE EAST SIDEWALK TO BEYOND THE ABUTMENT. FROM THE ABUTMENT, SHORT SECTIONS OF CAPPED CONDUIT SHALL BE PROVIDED; TO EXTEND A FEW FEET BEYOND THE ABUTMENT, FROM WHICH POINT THE CONDUIT SYSTEM WILL BE EXTENDED BY OTHERS. THE CONDUIT SYSTEM SERVING THE ROADWAY AND RAMP LIGHTS NORTH OF THE BASCULE SPAN TO THE ABUTMENT IS SIMILAR TO THAT DESCRIBED ABOVE.

D. THE STANDARDS SHALL BE OF CIRCULAR SECTION, UNIFORMLY TAPERING FROM BASE TO TOP AND SHALL BE OF ALUMINUM ALLOY 63S-T6, HAVING A MINIMUM WALL THICKNESS OF .1875". THE STANDARDS SHALL HAVE A SATIN GROUND FINISH WHICH SHALL BE CAREFULLY PROTECTED DURING SHIPPING AND HANDLING. THE STANDARDS SHALL BE COMPLETE WITH FINIAL CAP, BASE AND GALVANIZED ANCHOR BOLTS AND SHALL HAVE HOLES AS NECESSARY FOR CONDUIT CONNECTIONS. THE HEIGHT OF THE STANDARD SHALL BE AS NECESSARY TO PLACE THE LUMINAIRE 30' ABOVE THE ROADWAY.

THE BRACKETS SHALL BE OF ALUMINUM, FINISHED TO MATCH THE STANDARDS AND SHALL BE PROVIDED WITH FITTINGS AS REQUIRED FOR ATTACHING THE LUMINAIRE. THE LENGTH OF THE BRACKET SHALL BE AS NECESSARY TO PLACE THE LUMINAIRE APPROXIMATELY 5' BEYOND THE CURB LINE OVER THE ROADWAY. THE BRACKETS FOR THE TWO POLES ON THE BASCULE LEAVES SHALL BE CAPABLE OF WITHSTANDING A HORIZONTAL LOAD OF 125 LBS. AT THE CENTER OF GRAVITY OF THE LUMINAIRE, WITHOUT FAILURE OR APPARENT PERMANENT DEFORMATION.

STANDARDS, EXCEPT TWO AS SHOWN SHALL BE MOUNTED ON STEEL BRACKETS ATTACHED TO THE OUTSIDE OF FASCIA. BEFORE SETTING THE BASE IN PLACE A COATING OF ALUMILASTIC SHALL BE APPLIED TO THE BASE AND TO THE MOUNTING BRACKET. ALUMILASTIC SHALL BE AS MANUFACTURED BY THE PARR PAINT AND COLOR COMPANY, CLEVELAND, OHIO OR AN APPROVED EQUIVALENT. TWO STANDARDS ON THE BASCULE PIERS SHALL BE MOUNTED ON CONCRETE.

E. FOR THE LIGHT ON EACH BASCULE LEAF THE CONTRACTOR SHALL PROVIDE CONDUIT AND SUPPORTS AS INDICATED ON THE PLANS. THE FLEXIBLE CONNECTION BETWEEN MOVABLE LEAF AND PIER SHALL BE PROVIDED BY OTHERS. THE CONTRACTOR SHALL TERMINATE CONDUITS IN 16" BY 16" BY 6" DEEP TERMINAL BOXES AT SUITABLE LOCATIONS FOR SUSPENDING THE FLEXIBLE CONNECTION.

F. PAYMENT FOR ITEM S-25, ROADWAY LIGHTING SYSTEM WILL BE MADE AT THE CONTRACT LUMP SUM PRICE BID FOR THIS ITEM AND WILL INCLUDE ALL CONDUIT, BOXES, FITTINGS, FASTENINGS, STANDARDS, LUMINAIRE BRACKETS AND ANY OTHER PARTS NECESSARY TO COMPLETE THE ITEM. THE STRUCTURAL STEEL BRACKETS FOR MOUNTING THE STANDARDS, EXCLUSIVE OF ANCHOR BOLTS WILL BE PAID FOR UNDER ITEM S-7, "STRUCTURAL CARBON STEEL".

9. ROADWAY DRAINS.

THE SCUPPERS, TROUGHS AND CONNECTIONS OF THE DRAINAGE SYSTEM WILL BE INCLUDED IN ITEM S-7 "STRUCTURAL CARBON STEEL", FOR PAYMENT. DOWNSPOUTS FOR ROADWAY DRAINS (INCLUDING SPECIALS AND FASTENINGS) WILL BE PAID FOR AT THE CONTRACT UNIT PRICE PER LINEAR FOOT BID FOR ITEM S-29, "DOWNSPOUTS".

10. WINDOWS AND DOORS IN BASCULE PIERS.

THIS ITEM INCLUDES WINDOWS AND DOORS BELOW ROADWAY LEVEL, TOGETHER WITH FRAMES, ANCHORS, HINGES, LOCKS, THRESHOLDS AND OTHER APPURTENANCES, COMPLETE IN PLACE, AND INCLUDES SHOP AND FIELD PAINTING AS SPECIFIED FOR STRUCTURAL STEEL, EXCEPT FOR COLOR TO BE SELECTED BY THE ENGINEER.

PAYMENT WILL BE MADE AT THE CONTRACT LUMP SUM PRICE BID FOR THIS ITEM OF THE PROPOSAL.

11. COUNTERWEIGHTS.

A. THE COUNTERWEIGHT FOR BALANCING EACH LEAF OF THE BASCULE SPAN SHALL BE COMPOSED OF A STEEL BOX FILLED WITH HEAVY CONCRETE AND PROVIDED WITH POCKETS FOR CAST IRON BALANCE BLOCKS TO SECURE ADEQUATE AND PROPER BALANCE OF THE LEAF IN ANY POSITION, AND FOR FUTURE ADJUSTMENT. HEAVY CONCRETE SHALL BE OF SUCH WEIGHTS AS INDICATED ON THE PLANS AND SHALL BE COMPOSED OF STEEL PUNCHINGS, SCRAP METAL, OR OTHER APPROVED MATERIALS, AND MORTAR, COMPOSED OF ONE PART CEMENT AND TWO PARTS OF SAND.

B. BEFORE CONSTRUCTION OF COUNTERWEIGHT IS BEGUN, THE CONTRACTOR SHALL MAKE AT LEAST THREE BLOCKS OF EACH TYPE OF CONCRETE, NOT LESS THAN ONE CUBIC FOOT EACH, OF MATERIALS TO BE USED IN THE COUNTERWEIGHT, AND HE SHALL CAREFULLY MEASURE AND WEIGH THEM IMMEDIATELY AFTER POURING AND AGAIN AFTER THEY ARE SEASONED, AND SHALL DETERMINE AS NEARLY AS PRACTICABLE THE RESULTING UNIT WEIGHTS OF THE SEVERAL TYPES OF CONCRETE. THE UNIT WEIGHTS OF CONCRETE ACTUALLY PLACED IN THE COUNTERWEIGHT SHALL BE CHECKED BY MEANS OF OTHER TEST BLOCKS MADE AT INTERVALS DURING THE POURING OF THE COUNTERWEIGHT. EACH TEST BLOCK SHALL BE WEIGHED PROMPTLY AFTER POURING AND COMPARISON MADE WITH WEIGHTS OF ORIGINAL TEST BLOCKS TO DETERMINE THE SEVERAL RESULTING UNIT WEIGHTS OF CONCRETE WHEN SEASONED AND THE NEED FOR ANY CORRECTIONS IN PROPORTIONING TO OBTAIN THE DESIRED UNIT WEIGHT.

C. THE METHODS OF MIXING AND PLACING THE MATERIALS COMPOSING THE HEAVY CONCRETE MAY BE OF THE CONTRACTOR'S OWN SELECTION PROVIDED THAT THEY RESULT IN A PROPERLY CONSOLIDATED MASS AND ARE SUCH AS TO GIVE CLOSE CONTROL OF THE UNIT WEIGHT OF HEAVY CONCRETE AND UNIFORMITY IN UNIT WEIGHT THROUGHOUT THE MASS. UNLESS OTHERWISE APPROVED, THE HEAVY CONCRETE SHALL BE MIXED MECHANICALLY. THE PLACING AND CONSOLIDATION OF THE HEAVY CONCRETE SHALL BE DONE VERY CAREFULLY AND WITH THE ASSISTANCE OF APPROVED CONCRETE VIBRATORS OR TAMPERS. IT SHALL BE PLACED IN LAYERS NOT EXCEEDING 2.5 FEET IN THICKNESS AND EACH LAYER SHALL BE ALLOWED TO SET TWENTY-FOUR HOURS BEFORE PLACING THE SUBSEQUENT LAYER.

D. THE CONTRACTOR SHALL PREPARE CALCULATIONS SHOWING THE REQUIRED DIMENSIONS AND WEIGHTS OF COUNTERWEIGHTS BASED ON WEIGHTS COMPUTED FROM THE SHOP DRAWINGS OF STRUCTURAL STEEL AND MACHINERY, AND ON ESTIMATED UNIT WEIGHTS FOR CONCRETE AND NON-METAL PARTS ON THE SPAN, AND THESE CALCULATIONS SHALL BE SUBMITTED TO THE ENGINEER IN FORM FOR REVIEW. THESE CALCULATIONS SHALL INCLUDE BALANCE TABLES SIMILAR TO THOSE ON THE PLANS AND SHALL ALSO SHOW FOR EACH KIND OF MATERIAL, THE TOTAL QUANTITY OF THE MATERIAL, ITS ESTIMATED UNIT WEIGHT, AND ITS TOTAL ESTIMATED WEIGHT. BEFORE POURING THE COUNTERWEIGHTS, THE CONTRACTOR SHALL VERIFY THESE ESTIMATED AND COMPUTED WEIGHTS BY COMPARISON WITH SHIPPING WEIGHTS OF STEEL AND BY WEIGHING SUITABLE PORTIONS OF NON-METAL PARTS AND SHALL SUBMIT TO THE ENGINEER SUPPLEMENTAL SUMMARIZED BALANCE TABLES BASED UPON THESE ACTUAL WEIGHTS.

E. THE ENGINEER WILL REVIEW THE BALANCE TABULATIONS PREPARED BY THE CONTRACTOR, OR MATERIALS OR PROCESSES PROPOSED BY THE CONTRACTOR, BUT NEVERTHELESS THE ENTIRE RESPONSIBILITY FOR SECURING COUNTERWEIGHTS TO ACCURATELY BALANCE THE SPAN RESTS SOLELY WITH THE CONTRACTOR. THE CONTRACTOR SHALL ADJUST AND CORRECT THE COUNTERWEIGHTS, SHALL PROVIDE BALANCE BLOCKS AS NECESSARY, AND SHALL SECURE CLOSE BALANCE OF THE COUNTERWEIGHT AND SPAN FOR EVERY ANGULAR POSITION AS IN TABLE.

F. THE MONOLITHIC PORTION OF THE CONCRETE COUNTERWEIGHT SHALL BE MADE TO BALANCE APPROXIMATELY 96.5 PER CENT OF THE MOMENT OF THE MOVING LEAF, THE REMAINDER TO BE BALANCED BY CAST IRON BLOCKS, EXCEPT A SMALL POSITIVE MOMENT AS SHOWN IN THE BALANCE TABLE.

POCKET SPACE FOR BALANCE BLOCKS SHALL BE PROVIDED TO BALANCE NOT LESS THAN 3-1/2 PER CENT UNDER AND NOT LESS THAN 5 PER CENT ABOVE THE CALCULATED MOMENT OF THE COUNTERWEIGHT CONCRETE AND BALANCE BLOCKS, EXCEPT SUCH MOMENT AS IS LEFT UNBALANCED TO PROVIDE A POSITIVE DEAD LOAD REACTION AGAINST THE LIVE LOAD ANCHORS. UNBALANCED MOMENTS, AS SHOWN IN THE LAST LINE OF THE BALANCE TABLE, MAY VARY IN THE CONTRACTOR'S FINAL BALANCE TABLE FROM 196 TO 150 FOOT-KIPS FOR HORIZONTAL MOMENTS AND FROM 44 TO 15 FOOT-KIPS FOR VERTICAL MOMENTS.

THE TOTAL WEIGHT OF BALANCE BLOCKS SHOWN IS EQUAL TO 3-1/2 PER CENT OF THE CALCULATED MOMENT. BLOCKS SHALL WEIGH NOT MORE THAN 100 POUNDS EACH AND SHALL BE PROVIDED WITH SUITABLE RECESSED HANDLES. BLOCKS SHALL BE FIRMLY HELD IN PLACE BY APPROVED MEANS SO THAT THEY MAY BE EASILY REMOVED FOR FUTURE ADJUSTMENT.

BLOCKS SHALL BE FURNISHED ONLY AS NEEDED FOR BALANCING AND FOR FINAL ADJUSTMENT.

G. EXPOSED CONCRETE SURFACES OF THE COUNTERWEIGHT SHALL BE PAINTED WITH TWO COATS OF APPROVED WATERPROOF PAINT.

H. PAYMENT FOR CONCRETE IN COUNTERWEIGHTS WILL BE MADE AT THE CONTRACT UNIT PRICE FOR ITEM S-1 AND SPECIAL, CONCRETE IN COUNTERWEIGHTS INCLUDING ALL HEAVY CONCRETE, ALL WATERPROOFING, AND FOR COMPUTING, ADJUSTING AND BALANCING THE COUNTERWEIGHTS AND OTHER WORK INCIDENTAL THERETO.

12. ASPHALTIC CONCRETE SURFACE COURSE AND TYPE "C" WATERPROOFING.

A. THE ASPHALTIC CONCRETE WEARING SURFACE SHALL BE LAID ON ALL ROADWAY SURFACES OF THE BRIDGE AND ALL APPROACH SLABS, THE ROADWAY DECK OF THE SOUTH ABUTMENT AND THE RAMP X ABUTMENT AND EXCEPTING ONLY THE BASCULE SPAN WHERE STEEL GRID FLOOR IS SPECIFIED.

B. BEFORE THE WEARING SURFACE IS APPLIED TO THE ABUTMENTS, A STEEL ANGLE SHALL BE PLACED ALONG BOTH EAST AND WEST GUTTERS OF THE SOUTH ABUTMENT AND ALONG THE SOUTH GUTTER OF THE RAMP X ABUTMENT AS DESCRIBED IN SEC. 29.07 OF THE SPECIFICATIONS.

C. ALL SURFACES IN CONTACT WITH BITUMINOUS ROADWAY SURFACING SHALL BE WATERPROOFED WITH TYPE "C" WATERPROOFING, EXCEPT ALL APPROACH SLABS WHICH SHALL HAVE A BITUMINOUS TACK COAT, AS PER PLAN, APPLIED AT 0.1 GAL. PER SQ.YD. (SEE NOTE IN PROPOSAL).

D. THE ASPHALTIC CONCRETE SURFACE COURSE SHALL CONSIST OF A 1" THICK TYPE B WEARING COURSE ON A 1-1/2" THICK NO. 46 BINDER COURSE, CONFORMING TO SEC. T-50 OF THE SPECIFICATIONS AND SPREAD AND FINISHED AS DESCRIBED UNDER METHOD "B".

E. THE STEEL ANGLES FOR SUB-DRAINAGE ON THE ABUTMENTS AND THE ANGLES AND COPPER TUBES WHERE REQUIRED ON THE BRIDGE DECK SLAB, WILL BE PAID FOR AT THE CONTRACT UNIT PRICE PER LINEAR FOOT BID FOR ITEM S-29, "SUB-DRAINAGE FOR WEARING SURFACE COURSE". THERE SHALL BE A COPPER TUBE WITHIN ONE FOOT OF EACH EXPANSION JOINT.

13. CLEANING AND REPAIRING SUBSTRUCTURE.

THE CONTRACTOR SHALL, WITHOUT ADDITIONAL COMPENSATION, CLEAN AND REPAIR ANY PORTION OF THE SUBSTRUCTURE WHICH IS SOILED OR DAMAGED AS A RESULT OF HIS OPERATIONS.

CONCRETE

1. GENERAL REQUIREMENTS FOR CONCRETE.

A. ALL CONCRETE SHALL BE OF CLASS "C" MIX WITH ADMIXTURES AS SPECIFIED IN PARAGRAPH B HEREOF FOR THE SHOE RECESS CONCRETE AND AS SPECIFIED IN THE NOTE ENTITLED "CONCRETE FOR OPERATOR'S HOUSE", AND WITH ALTERATIONS AS SPECIFIED IN THE "COUNTERWEIGHTS" NOTE. THE CONCRETE FOR THE BASCULE LEAF COUNTERWEIGHTS IS CLASSIFIED FOR PAYMENT AS "CONCRETE IN COUNTERWEIGHTS", AND ALL OTHER IS GROUPED IN THE PAY ITEM OF "CLASS C CONCRETE".

B. SHOE RECESSES SHALL BE FILLED WITH NON-SHRINKING CONCRETE, SIMILAR AND EQUAL TO "EMBECO" CONCRETE, COMPOSED OF A MIXTURE OF PORTLAND CEMENT, FINE AGGREGATE, COARSE AGGREGATE, WATER AND EMBECO METALLIC AGGREGATE MANUFACTURED BY THE MASTER BUILDERS COMPANY, CLEVELAND, OHIO OR EQUAL. THE AMOUNT OF EMBECO AGGREGATE IN THE MIXTURE SHALL BE ONE POUND OF EMBECO PER POUND OF WATER IN EXCESS OF TWO GALLONS OF WATER PER BAG OF CEMENT. CEMENT CONTENT SHALL BE NOT LESS THAN SIX BAGS PER CUBIC YARD AND THE COARSE AGGREGATE SHALL BE NO. 4 SIZE.

C. GRAVEL, IF USED AS THE COARSE AGGREGATE, SHALL BE ACCORDING TO SEC. M-3.93 INSTEAD OF M-3.91 FOR CLASS "C" CONCRETE, SUPERSTRUCTURE.

D. BEFORE PLACING THE CONCRETE OF THE BASCULE PIERS THE CONTRACTOR SHALL FURNISH, FOR APPROVAL OF THE ENGINEER, A SCHEDULE SHOWING THE EXTENT OF THE INDIVIDUAL POURS AND THE SEQUENCE IN WHICH THE POURS ARE TO BE MADE. EACH POUR SHALL BE MADE IN ONE CONTINUOUS OPERATION SO AS TO ASSURE MONOLITHIC WORK WITH CONSTRUCTION JOINTS IN APPROVED LOCATION. ALL CONSTRUCTION JOINTS SHALL BE SO LOCATED AND FORMED AS TO LEAST IMPAIR THE STRENGTH AND APPEARANCE OF THE STRUCTURE. HORIZONTAL CONSTRUCTION JOINTS IN THE EXTERIOR WALLS OF THE PIERS SHALL BE LOCATED AT A RUSTICATION UNLESS OTHERWISE APPROVED.

2. CONCRETE FLOOR SLABS.

A. THE CONCRETE ROADWAY SLABS SHALL BE SO CONSTRUCTED THAT, AFTER COMPLETION AND AFTER REMOVAL OF FORMS AND ANY FALSEWORK, AND AFTER THE STEELWORK HAS DEFLECTED UNDER THE WEIGHT OF THE CONCRETE AND WEARING SURFACE, THE TOP SURFACE OF THE ROADWAY SHALL CONFORM AS NEARLY AS PRACTICABLE TO THE ELEVATIONS AND CONTOUR LINES SHOWN ON THE PLANS.

B. THE ROADWAY SLABS SHALL, IN GENERAL, BE OF UNIFORM THICKNESS BETWEEN STRINGERS AND GIRDERS. THE THICKNESS OF THE SLAB OVER THE STRINGERS SHALL VARY TO COMPENSATE FOR THE DEFLECTION OF THE STRINGER DUE TO DEAD LOAD. THE THICKNESS OF THE SLAB OVER EACH GIRDER (TOP OF WEARING SURFACE TO BACK OF FLANGE ANGLES) AT THE GIRDER SUPPORTS IS GIVEN ON THE PLANS. THE STEEL GIRDERS OF ALL SPANS WILL HAVE BEEN FABRICATED WITH CAMBER TO COMPENSATE FOR THE DEFLECTION DUE TO WEIGHT OF SLAB AND STEEL WITHIN A TOLERANCE OF ONE INCH. THE THICKNESS OF THE SLAB AT THE HAUNCH OVER EACH GIRDER WILL VARY BETWEEN SUBSTRUCTURE SUPPORTS DUE TO THE DEFICIENT CAMBER AND DUE TO MINOR ERRORS IN FABRICATION.

C. THE THEORETICAL DEFLECTIONS FOR EACH SPAN ARE TABULATED ON THE PLANS. THE ALLOWANCES TO BE MADE IN SCREED SETTING TO COMPENSATE FOR THE DEFLECTIONS DUE TO THE DEAD LOAD WEIGHT OF THE CONCRETE ARE INDICATED IN THIS TABULATION; SUCH ALLOWANCES TO BE MADE ABOVE THE ELEVATIONS STIPULATED ON THE PLANS FOR FINISHED PAVEMENT SURFACES. SCREEDS MAY REQUIRE FURTHER ADJUSTMENT DUE TO IRREGULARITIES IN THE FABRICATED STEEL.

D. AT THE EDGE OF ROADWAY SLABS, ALONG THE CURBS, A STEEL ZEE SECTION AND PLATE, AS SHOWN ON THE PLANS, WILL SERVE AS FORM AND SCREED. THESE MEMBERS ARE TO BE RIVETED TO THE CURB POSTS WHICH ALSO SUPPORT THE STEEL CURBS. ADJUSTMENT OF THESE MEMBERS TO SERVE AS SCREEDS WILL BE ACCOMPLISHED BY SHIM PACKS UNDER THE CURB POSTS. EACH POST SHALL BE SO SET THAT AFTER THE SLAB IS PLACED, THE TOP OF THE ZEE SECTION SERVING AS SCREED WILL CONFORM TO THE GRADES GIVEN ON THE PLANS.

E. THE CONCRETE OF THE ROADWAY SLABS ON THE CONTINUOUS STEEL GIRDER SPANS SHALL BE POURED IN SPECIAL SEQUENCE. THERE ARE SHOWN ON THE PLANS THE SEQUENCES, EXTENT AND DIRECTION OF INDIVIDUAL POURS FOR EACH UNIT OF GIRDERS. THE CONTRACTOR MAY SUBMIT FOR APPROVAL BY THE ENGINEER, ALTERNATE SCHEMES OF PLACING CONCRETE SLABS. THE SEQUENCE OF SLAB CONSTRUCTION SHOWN ON THE PLANS DOES NOT APPLY TO THE SIDEWALK OR MEDIAN STRIP.

F. THE SIDEWALK CONCRETE SHALL BE PLACED AFTER THE ROADWAY SLAB HAS BEEN PLACED AND AFTER THE HANDRAIL HAS BEEN ADJUSTED TO LINE AND GRADE.

G. TRANSVERSE CONSTRUCTION JOINTS THROUGH THE SLAB ARE SHOWN ON THE PLANS. THE CONTRACTOR MAY PROVIDE ADDITIONAL TRANSVERSE CONSTRUCTION JOINTS AT OTHER LOCATIONS, SUBJECT TO THE APPROVAL OF THE ENGINEER. AT EACH LOCATION THE CONTRACTOR SHALL PROVIDE A KEYED JOINT.

3. CONCRETE SURFACE FINISH.

EXTERIOR VERTICAL SURFACES OF THE BASCULE PIERS, EXCEPT SURFACES CONCEALED BY THE FIXED GIRDER SPANS, SHALL BE FINISHED ACCORDING TO SECTION S-1.22 OF THE SPECIFICATIONS. CONCRETE BASE FOR WEARING SURFACE SHALL BE FINISHED ACCORDING TO SECTION S-1.23 AND SIDEWALKS ACCORDING TO SECTION S-1.24 OF THE SPECIFICATIONS. CONCRETE CURBS SHALL BE GIVEN A RUBBED SURFACE FINISH ON THEIR VERTICAL FACES AND ON THEIR HORIZONTAL SURFACES FOR A DISTANCE OF ELEVEN INCHES FROM FACE OF CURB. THE TREADS OF CONCRETE STAIRS AND MACHINERY ROOM FLOOR SHALL HAVE STEEL TROWELED FINISH FOLLOWED BY LIGHT BROOMING TO PROVIDE NON-SLIP SURFACE.

4. REINFORCING STEEL.

CLEAR DISTANCE FROM FACE OF CONCRETE TO BARS SHALL BE 2 INCHES EXCEPT FOR SLABS THE CLEAR DISTANCE SHALL BE 1 INCH OR AS SHOWN ON THE PLANS AND IN BOTTOM OF FOOTINGS THE CLEAR DISTANCE SHALL BE 3 INCHES. IN FACES HAVING RUSTICATIONS THE CLEAR DISTANCE SHALL BE MEASURED FROM THE INNER FACE OF RUSTICATIONS.

ALL BAR SIZES ARE DESIGNATED ON THE PLANS BY NUMBER; THE FIRST DIGIT IN THE BAR MARK INDICATES THE SIZE OF THE BAR.

BEFORE ORDERING BARS, THE CONTRACTOR SHALL VERIFY THE CORRECTNESS OF THE BAR SCHEDULES SHOWN ON THE DRAWINGS.

PART 3
TOLEDO EXPRESSWAY SYSTE
MAUMEE RIVER BRIDGE
BR. NO. LU 120R-35
NOTES
TOLEDO LUCAS COUNTY

SCALE: NONE
MADE: ICW DATE: 9-7-53
TRCD: LCM DATE: 9-22-53
CKD: JT DATE: 9-30-53

HOWARD, NEEDLES, TAMMEN & BE
CONSULTING ENGINEERS
KANSAS CITY NEW
810 SHEET

LUCAS COUNTY
CITY OF TOLEDO
TOLEDO EXPRESSWAY SYSTEM
MAUMEE RIVER BRIDGE
LUC 120R- 3.46

MICROFILMED
JUL 22 19[illegible]

STRUCTURAL STEEL, HANDRAIL AND STEEL FLOOR

1. CHARACTER OF METAL.

A. METAL NOT OTHERWISE SPECIFIED SHALL BE COPPER-BEARING CARBON STRUCTURAL STEEL.

MAIN MATERIAL (WEB PLATES, FLANGE ANGLES, SIDE PLATES, COVER PLATES, AND ALL GIRDER SPLICE MATERIAL) OF ALL GIRDERS OF UNIT 1 AND GIRDERS G1, G2, G3, G4 AND G7 OF UNIT 2 SHALL BE OF A SPECIAL HIGH STRENGTH STEEL, KNOWN HEREINAFTER AS MANGANESE STRUCTURAL STEEL. THESE SPECIAL STEEL PARTS ARE IDENTIFIED ON THE DRAWINGS BY THE SUFFIX "S". OTHER PARTS OF THESE SPANS AND ALL PARTS OF THE BASCULE SPANS, UNIT 3, RAMP X AND RAMP E-E SHALL BE OF CARBON STRUCTURAL STEEL. ALL RIVETS AND BOLTS SHALL BE COPPER-BEARING RIVET STEEL. PINS NOT OTHERWISE SPECIFIED SHALL BE COLD ROLLED STEEL OR FORGED. CASTINGS NOT OTHERWISE SPECIFIED SHALL BE STEEL.

B. COPPER-BEARING CARBON STRUCTURAL AND RIVET STEEL SHALL CONFORM TO SEC. M-7.4 (B) OF THE SPECIFICATIONS.

C. MANGANESE STRUCTURAL STEEL SHALL CONFORM TO THE FOLLOWING SPECIFICATIONS:

CHEMICAL COMPOSITION - PER CENT

	LADLE	CHECK
CARBON	0.28 MAX.	0.32 MAX.
MANGANESE	1.10 TO 1.60	1.65 MAX.
PHOSPHOROUS	0.045 MAX.	.055 MAX.
SULPHUR	0.05 MAX.	
SILICON	0.30 MAX.	
COPPER	0.20 MIN.	.18 MIN.

PHYSICAL PROPERTIES

THICKNESS	½" and Under	½ to ¾" incl.	¾ to 1" incl.	1 to 1½" incl.
YIELD POINT	50,000	47,000	46,000	45,000
TENSILE STRENGTH	70,000	70,000	67,000	67,000
ELONGATION IN 8"	18% MIN.	18% MIN.	19% MIN.	19% MIN.
ELONGATION IN 2"				
BEND TEST (RATIO OF BEND DIA. TO THICKNESS OF SPECIMEN)	1	1	1½	2

ALL OTHER REQUIREMENTS SHALL BE IN ACCORDANCE WITH A.S.T.M. A6 AND A7. ALL PARTS OF MANGANESE STRUCTURAL STEEL SHALL BE IDENTIFIED BY PAINT MARKS AND STAMPING AT THE MILL, AND THESE IDENTIFICATION MARKS WITH SOME CHARACTERISTIC PAINTING SHALL BE RETAINED THROUGHOUT THE WORK OF FABRICATION, SO THAT THERE SHALL BE NO MISTAKES IN THE USE OF MANGANESE STRUCTURAL STEEL PARTS WHERE REQUIRED.

D. STEEL CASTINGS NOT OTHERWISE SPECIFIED SHALL CONFORM TO SEC. M-7.7 OF THE SPECIFICATIONS. HIGH STRENGTH STEEL CASTINGS SHALL CONFORM TO A.S.T.M. SPECIFICATIONS A148-50T, GRADE 80-50 AND SHALL BE FULLY ANNEALED AND PHYSICALLY TESTED. AS AN ALTERNATE TO THE SPECIFIED HIGH STRENGTH STEEL CASTINGS, THE CONTRACTOR MAY SUBMIT TO THE ENGINEER FOR APPROVAL ANY SUITABLE MATERIAL WHICH WILL HAVE A YIELD POINT OF NOT LESS THAN 50,000 LBS. PER SQ. IN.

E. STEEL FORGINGS SHALL CONFORM TO SEC. M-7.5 OF THE SPECIFICATIONS, EXCEPT ALLOY STEEL FORGINGS SHALL CONFORM TO A.S.T.M. SPECIFICATION A237-52T, CLASS B.

F. WROUGHT IRON PLATES SHALL CONFORM TO A.S.T.M. SPECIFICATIONS A42-52T. WROUGHT IRON PIPE SHALL CONFORM TO A.S.T.M. SPECIFICATIONS A72-52T.

G. COLD ROLLED STEEL SHALL CONFORM TO SEC. M-7.17 OF THE SPECIFICATIONS.

H. SOFT STEEL IN BENT CURB PLATES SHALL CONFORM TO A.S.T.M. SPECIFICATIONS FOR LOW AND INTERMEDIATE TENSILE STRENGTH CARBON STEEL PLATES OF STRUCTURAL QUALITY, DESIGNATION A283-52T, GRADE A.

I. HIGH STRENGTH BOLTS SHALL CONFORM TO A.S.T.M. SPECIFICATION A325-52T.

2. FABRICATION.

A. ALL GIRDERS EXCEPT THE GIRDERS IN RAMP X AND RAMP E-E SHALL BE FABRICATED TO CONFORM AS CLOSELY AS PRACTICABLE WITH THE VERTICAL CURVATURE OF THE STRUCTURE AND WITH CAMBER TO COMPENSATE FOR TOTAL DEAD LOAD DEFLECTION. THE GRADE OF THE SLAB SUPPORTED BY SOME GIRDERS WILL VARY THROUGH THE LENGTH OF THE SPAN SO THAT CAMBER TO PLACE THE FINAL POSITION OF THE FLANGE PARALLEL TO TOP OF SLAB WILL BE IMPOSSIBLE. GIRDERS, IN THESE CASES, SHALL BE CAMBERED SUCH THAT THE DISTANCE BETWEEN FLANGE AND TOP OF SLAB WILL NOT EXCEED BY MORE THAN ABOUT ONE INCH THE DISTANCE SHOWN ON THE PLANS BETWEEN BACK OF FLANGE ANGLE AND TOP OF SLAB AT GIRDER SUPPORTS.

GIRDERS IN RAMP X AND RAMP E-E, AND GIRDERS OF UNIT 2 WHICH ARE NOT FULL LENGTH OF UNIT 2, SHALL BE CAMBERED FOR DEAD LOAD DEFLECTION, BUT NEED NOT CONFORM TO THE VERTICAL CURVE. GIRDERS IN RAMP E-E SHALL BE FABRICATED SO THAT IN FINAL POSITION THEY WILL APPROXIMATE A STRAIGHT LINE BETWEEN ELEVATIONS SHOWN ON THE PLANS AT THE BEND POINTS.

B. HOLES IN WEB PLATES, FLANGE ANGLES AND COVER PLATES OF GIRDERS AND IN ALL METAL CONNECTED TO THE GIRDERS THROUGH THESE HOLES SHALL BE REAMED.

ALL GIRDERS SHALL BE ASSEMBLED AT THEIR SHOP AND FIELD SPLICES IN THE SHOP AND HOLES FOR RIVETS IN SPLICES SHALL BE REAMED WHILE THE GIRDERS ARE ASSEMBLED.

FOR REQUIREMENTS REGARDING REAMING OF FLOOR BEAM, CROSS FRAME AND BRACING CONNECTIONS, SEE THE SPECIFICATIONS.

C. PLATES 36 INCHES WIDE AND UNDER SHALL HAVE ROLLED EDGES. EDGES OF ANGLES CUT TO SPECIAL SIZE SHALL HAVE FINISHED EDGES. SHEARED EDGES OF STEEL PLATES IN EXCESS OF THREE-QUARTERS INCH THICK SHALL BE PLANED TO A DEPTH OF ONE-QUARTER INCH. SHEARED EDGES OF IRREGULAR SHAPED GIRDER FLANGE SPLICE PLATES SHALL BE PLANED TO A DEPTH OF ONE-QUARTER INCH.

D. FLAME CUTTING. FLAME CUTTING WITH OXY-ACETYLENE BLOW PIPE MAY BE USED AS APPROVED BY THE ENGINEER. FLAME CUTTING SHALL BE DONE ONLY WITH EXPERIENCED OPERATORS AND SO AS TO AVOID BURNING THE EDGES OF THE CUT. THE CUT SHALL BE MADE BY USE OF MACHINES DESIGNED TO GUIDE THE BLOW PIPE SO AS TO GIVE A SMOOTH CUT CORRESPONDING TO THE DESIRED OUTLINE. ANY RAGGED EDGES MUST BE CAREFULLY GROUND OFF.

E. SPLICE LOCATIONS ARE SHOWN ON THE PLANS FOR BOTH SHOP AND FIELD SPLICES FOR GIRDERS. SHOULD THE CONTRACTOR DESIRE TO ALTER LOCATIONS OF SPLICES OR TO MODIFY SPLICE DETAILS FOR HIS PREFERENCE IN FABRICATION OR ERECTION, OR SHOULD HE DESIRE TO INCREASE THE NUMBER OF SPLICES, ALTERATIONS MAY BE MADE SUBJECT TO THE APPROVAL OF THE ENGINEER, PROVIDED ANY INCREASES IN WEIGHT OF THE METALWORK DUE TO SUCH CHANGES SHALL NOT BE INCLUDED IN THE FINAL PAY QUANTITY.

F. WELDING SHALL BE CLASS "A".

G. RIVETS SHALL BE 7/8 IN. IN DIAMETER UNLESS OTHERWISE SPECIFIED. IN THE PREPARATION OF WORKING DRAWINGS, THE SPACING OF RIVET HOLES SHALL BE MADE TO MAINTAIN THE FULL NET SECTION SHOWN ON THE PLANS FOR ALL TENSION MEMBERS. OUTSTANDING LEGS OF ALL BACK TO BACK STIFFENER ANGLES ON GIRDERS SHALL BE STITCH RIVETED AT 6 IN. MAXIMUM STAGGERED PITCH UNLESS OTHERWISE SHOWN. WHERE RIVET GRIPS EXCEED 6 DIAMETERS SPECIALLY DESIGNED RIVETS OR HIGH STRENGTH BOLTS SHALL BE USED.

H. FOR SHOE PINS THE DIFFERENCE IN DIAMETER BETWEEN PINS AND PIN HOLES SHALL BE 1/16 IN.

I. DRAIN HOLES OF CHARACTER AND LOCATIONS AS APPROVED BY THE ENGINEER SHALL BE PROVIDED IN METAL WORK PARTS WHEREVER WATER MIGHT COLLECT AND HAVE NO OTHER MEANS OF DRAINAGE. SHOULD IT BECOME EVIDENT AFTER ERECTION THAT SUFFICIENT DRAIN HOLES HAVE NOT BEEN PROVIDED IN FABRICATION, THE CONTRACTOR ERECTING THE STEELWORK SHALL PROVIDE ADDITIONAL DRAINAGE HOLES OF CHARACTER AND LOCATIONS AS MAY BE APPROVED.

J. BENDING OF STEEL PLATES SHALL CONFORM TO A.A.S.H.O. 1953 SPECIFICATIONS; SECTION 2.10.29.

3. EXPANSION JOINTS.

STEEL CASTINGS FOR ROADWAY EXPANSION JOINTS SHALL BE MACHINED ON BOTTOM SURFACES WHICH WILL CONTACT SUPPORTING STEEL. ALL SECTIONS FOR BOTH SIDES OF EACH JOINT SHALL BE SHOP ASSEMBLED WITH NOMINAL CLEARANCE OF 3/4 IN. BETWEEN ENDS AND ROOTS OF MATING PROJECTIONS. WHILE THUS ASSEMBLED THE JOINT SHALL BE CHECKED AND CORRECTED TO PROVIDE NOT LESS THAN 1/4 IN. CLEARANCE BETWEEN SIDES OF PROJECTIONS AND NOT LESS THAN 5/8 IN. CLEARANCE BETWEEN ENDS AND ROOTS OF PROJECTIONS. ALL PARTS OF ROADWAY JOINTS SO ASSEMBLED SHALL BE MATCHMARKED.

ROADWAY EXPANSION JOINT CASTINGS SHALL BE ERECTED ACCORDING TO THE SHOP MATCHMARKING AND SHALL BE SET TO THE LONGITUDINAL CLEARANCE REQUIRED FOR THE TEMPERATURE AT THE TIME OF SETTING, TO THE REQUIRED GRADE AND CROWN OF ROADWAY, AND TO PROVIDE EQUAL SIDE CLEARANCE BETWEEN MATING PROJECTIONS. FOR JOINT CASTINGS SUPPORTED ON STRUCTURAL STEEL, THE HOLES IN THE SUPPORTING STEEL SHALL BE DRILLED IN THE FIELD AFTER THE CASTINGS ARE ADJUSTED IN FINAL POSITION; FOR JOINT CASTINGS SUPPORTED ON CONCRETE ABUTMENTS, OVERSIZE HOLES SHALL BE PROVIDED IN THE CASTINGS TO ALLOW FOR VARIATION IN ANCHOR BOLT SETTINGS. AFTER ADJUSTMENT OF THESE CASTINGS IN FINAL POSITION ON THE ABUTMENTS, THE SPACES BETWEEN CASTINGS AND ANCHOR BOLTS SHALL BE FILLED WITH MOLTEN LEAD.

SIDEWALK AND CURB JOINTS SHALL BE SHOP ASSEMBLED, CORRECTED TO PROVIDE UNIFORM CLOSE CONTACT BETWEEN THE TWO MATING PARTS OF EACH JOINT, MATCHMARKED AND ERECTED TO REQUIRED LINES AND GRADES.

4. TEMPLATE-SCREED-FRAMES.

FOR THE FIXED SPANS BEARING ON PIERS 4 AND 5 THERE SHALL BE PROVIDED AT THE LOCATIONS INDICATED A TEMPLATE-SCREED-FRAME MADE OF ANGLES WITH DIMENSIONS AS SHOWN ON THE DRAWINGS. THESE FRAMES SHALL HAVE HOLES FOR THE ANCHOR BOLTS, SHALL BE SCRIBED WITH BOTH TRANSVERSE AND LONGITUDINAL CENTERLINES, AND SHALL BE USED AS TEMPLATES FOR SETTING ANCHOR BOLTS AND AS SCREEDS FOR FINISHING THE TOP SURFACE OF SPECIAL CONCRETE PADS. FRAMES SHALL BE STRAIGHTENED AFTER WELDING AND SHALL BE MACHINED ON THE TOP IF NECESSARY TO PROVIDE A TRUE PLANE SURFACE. A SIMILAR FRAME COMPOSED OF CHANNELS SHALL BE PROVIDED FOR HOLDING THE BOTTOMS OF THE BOLTS IN CORRECT POSITION. ALL ANCHOR BOLTS SHALL BE THREADED ON THEIR UPPER END TO APPROXIMATELY FOUR INCHES BELOW THE FINAL ELEVATION FOR BOTTOM OF SHOE OR BEARING PLATE AND ON THEIR LOWER END FOR A LENGTH OF APPROXIMATELY SIX INCHES. EACH BOLT SHALL BE EQUIPPED WITH FOUR NUTS, ONE ABOVE AND ONE BELOW EACH FRAME. A FIFTH NUT SHALL BE PROVIDED FOR EACH BOLT BEFORE COMPLETION OF THE CONTRACT. THE FRAMES TOGETHER WITH THE ANCHOR BOLTS SHALL BE SET IN PLACE, SUITABLY SUPPORTED FROM THE TOP OF THE FORMS AND ADJUSTED TO CORRECT HORIZONTAL POSITION BEFORE PLACING THE BRIDGE SEAT OR TOP OF PIER CONCRETE. AFTER THE PIER CONCRETE HAS FULLY CURED, THE UPPER FRAME SHALL BE ADJUSTED TO EXACT ELEVATION BY USE OF THE NUTS ABOVE AND BELOW THIS FRAME. THE UPPER FRAME WILL THUS FORM THE SIDES OF A PAD AT LEAST ONE INCH HIGHER THAN THE GENERAL TOP SURFACE OF THE CONCRETE. THE RECESSES SHALL BE FILLED WITH SPECIAL NON-SHRINKING CONCRETE AS DESCRIBED UNDER "CONCRETE". THIS SPECIAL CONCRETE SHALL BE SCREEDED, TROWELED AND FINISHED TO PROVIDE A SMOOTH LEVEL SURFACE EVEN WITH THE TOP OF THE TEMPLATE-SCREED-FRAME.

5. CURBS, FASCIA AND HANDRAIL.

A. THE EDGE OF PAVEMENT OR CURB LINES ARE DEFINED ON THE PLANS. A STEEL ZEE SECTION AND PLATE SERVING AS FORM AND SCREED FOR THE PAVEMENT, A BENT CURB PLATE THE FACE OF WHICH IS THE DEFINED CURB LINE, A CHANNEL AND ANGLE FORMING AN UPPER CURB AND A BULB ANGLE SUPPORTING THE SIDEWALK ARE ALL ATTACHED TO AND SUPPORTED BY BUILT-UP CURB POSTS OCCURRING AT EACH SIDEWALK BRACKET AND AT INTERMEDIATE STRUTS. THESE MEMBERS SHALL BE ASSEMBLED IN THE SHOP IN LENGTHS SUITABLE FOR SHIPPING. THE CURB UNITS THUS FORMED SHALL BE ERECTED SO THAT AFTER THE SPANS HAVE DEFLECTED UNDER THE DEAD LOAD OF SLAB AND STEEL, THE CURBS SHALL DEPART NOT MORE THAN ONE-EIGHTH INCH FROM THE REQUIRED LINE AND GRADE SHOWN ON THE PLANS AND SHALL SHOW NO ABRUPT KINKS. VERTICAL ADJUSTMENT OF THE CURB POSTS WILL BE ACCOMPLISHED BY SHIM PACKS UNDER THE POSTS. THE HOLES FOR RIVETS ATTACHING THE POSTS TO THE BRACKETS SHALL BE REAMED IN THE FIELD TO PROVIDE LATERAL ADJUSTMENT. FOR PORTIONS OF THE STRUCTURE WHERE THE CONCRETE SIDEWALK IS TO BE OMITTED, THE SAFETY WALK, BENT CURB PLATE AND ZEE SECTION ARE TO BE CARRIED BY CURB POSTS WHICH SHALL BE ADJUSTED IN A MANNER SIMILAR TO THAT DESCRIBED ABOVE.

B. THE FASCIA BEAMS SUPPORTED AT THE ENDS OF THE SIDEWALK BRACKETS SHALL BE ADJUSTED, AFTER THE ROADWAY SLAB AND WEARING SURFACE IS IN PLACE, SO AS TO DEPART NOT MORE THAN ONE-EIGHTH INCH FROM THE REQUIRED LINE AND GRADE SHOWN ON THE PLANS, AND SHALL SHOW NO ABRUPT KINKS. ADJUSTMENTS SHALL BE MADE BY REAMING THE CONNECTION HOLES.

C. THE HANDRAILS, MADE UP OF H-BEAM POSTS AND METAL PIPES SHALL BE FABRICATED IN THE SHOP IN LENGTHS SUITABLE FOR SHIPMENT. METAL PIPES SHALL CONFORM TO SEC. M-6.9 OF THE SPECIFICATIONS AND SHALL BE STANDARD WEIGHT SEAMLESS PIPE, GRADE B, WITH PLAIN ENDS. AFTER ERECTION THE SEVERAL LENGTHS OF PIPES SHALL BE WELDED TOGETHER TO PROVIDE CONTINUOUS RAILS FOR THE LENGTHS BETWEEN HANDRAIL EXPANSION JOINTS, AS INDICATED ON THE PLANS. THE COMPLETED HANDRAIL SHALL BE FREE OF BURRS, SHARP CORNERS AND ROUGH SURFACES. THE CONNECTION OF THE HANDRAIL POSTS TO THE STEEL FASCIA BEAM WILL BE BY HIGH STRENGTH BOLTS. POSTS ON CONCRETE ABUTMENTS AND BASCULE PIERS WILL BE GROUTED IN RECESSES IN THE CONCRETE. AFTER THE HANDRAILS HAVE BEEN SET IN PLACE, THEY SHALL BE ADJUSTED BY MOVING THE POSTS INWARD OR OUTWARD UNTIL THE TOP RAIL SHALL CONFORM TO A LINE PARALLEL TO OR CONCENTRIC WITH THE CURBS OR AS SHOWN ON THE PLANS. FOR THE POSTS ON THE SPANS SLOTTED HOLES WILL HAVE BEEN PROVIDED FOR LATERAL AND VERTICAL ADJUSTMENT OF THE POSTS, AND SUCH ADJUSTMENTS SHALL BE MADE AFTER CURBS AND FASCIA HAVE BEEN ADJUSTED AND ROADWAY SLAB IS IN PLACE. THE POSTS ON CONCRETE STRUCTURES SHALL BE ADJUSTED AND SHALL BE HELD FIRMLY IN PLACE TO CORRECT ALIGNMENT AND GRADE UNTIL GROUTING IS COMPLETED AND THE MORTAR HAS SET. THE ADJUSTMENT OF THE HANDRAIL SHALL BE SUCH THAT THE TOP RAIL SHALL NOT DEPART MORE THAN ONE-EIGHTH INCH FROM CORRECT LINE OR GRADE.

D. ITEM S-14, HANDRAIL, INCLUDES THE METAL HANDRAIL ON THE BRIDGE SUPERSTRUCTURE, AND ON THE ABUTMENTS, MEASURED ALONG THE TOP OF TOP RAIL AND FROM END TO END OF RAIL. THIS ITEM DOES NOT INCLUDE HANDRAILS INSIDE THE BASCULE PIERS OR OPERATOR'S HOUSE, WHICH ARE COVERED BY OTHER ITEMS. PAYMENT FOR HANDRAIL SHALL BE MADE AT THE CONTRACT UNIT PRICE PER LINEAR FOOT BID FOR ITEM S-14, HANDRAIL (STEEL) AND SHALL INCLUDE POSTS, CONNECTION TEES, CONNECTION BOLTS, GROUTING OF POSTS ON CONCRETE STRUCTURES AND ALL WORK NECESSARY TO PROPERLY ADJUST THE HANDRAIL TO ACCEPTABLE POSITION. FOR PAYMENT, HANDRAIL QUANTITIES ARE SEPARATED INTO 2-RAIL AND 3-RAIL TYPES.

6. INSTALLATION OF TRUNNION SUPPORTS IN BASCULE PIERS.

THE TRUNNION SUPPORTS ARE EACH FITTED WITH SCREW JACKS FOR ACCURATE VERTICAL AND LATERAL ADJUSTMENT OF THE STEELWORK. THE EIGHT TRUNNION SUPPORTS, WITH ERECTION BRACING AND SPACERS AS REQUIRED, TOGETHER WITH ALL MACHINERY BEAMS AND OTHER METALWORK ATTACHED TO THE TRUNNION SUPPORTS, SHALL BE CAREFULLY ERECTED, ADJUSTED ACCURATELY TO REQUIRED POSITION AND RIVETED BEFORE ANY OF THE CONCRETE SURROUNDING AND CONNECTING THE LOWER PARTS OF THE TRUNNION SUPPORTS IS PLACED. THE CONTRACTOR SHALL DO ALL NECESSARY FIELD REAMING AND MAKE ALL NECESSARY ADJUSTMENTS TO SECURE THE EXACT ALIGNMENT REQUIRED FOR ALL THESE STEEL PARTS. AFTER THE STEELWORK IS FULLY RIVETED, THE CONCRETE SHALL BE CAREFULLY TAMPED UNDER ALL TRUNNION SUPPORTS TO PROVIDE FULL BEARING, AND THE CONCRETE SURROUNDING THE STEEL PARTS SHALL BE CAREFULLY DEPOSITED SO AS NOT TO DISTURB THEIR POSITION, BUT IT SHALL BE THOROUGHLY VIBRATED AND OTHERWISE SOLIDIFIED AS ELSEWHERE SPECIFIED.

7. WARNING SIGNS.

A. SIX WARNING SIGNS ARE REQUIRED. THEY SHALL BE DIAMOND SHAPED SHEET METAL SIGNS HAVING THE WORDS "DRAW BRIDGE" ON THE FACE. THE FACE SHALL BE REFLECTORIZED WITH SCOTCHLITE AS MANUFACTURED BY THE MINNESOTA MINING AND MANUFACTURING COMPANY OR A SIMILAR REFLECTING MEDIUM. THREE SIGNS SHALL BE MOUNTED ON THE POLES FOR TRAFFIC SIGNAL LIGHTS NEAR THE ROADWAY GATES AND THREE ON THE POLES FOR THE TIMED OUT GREEN AND FLASHING YELLOW LIGHTS AS SHOWN ON SHEET 69.

B. PAYMENT FOR THE WARNING SIGNS WILL BE MADE AT THE POUND PRICE FOR ITEM S-7, STRUCTURAL CARBON STEEL.

8. PAINTING.

ALL STRUCTURAL STEEL SHALL HAVE ONE RED LEAD SHOP COAT. ALL STRUCTURAL STEEL INCLUDING EXPOSED SURFACES OF METAL FURNISHED UNDER PARTS 1 AND 2 SHALL BE GIVEN TWO FIELD COATS OF ALUMINUM PAINT CONFORMING TO SEC. M-9.12 OF THE SPECIFICATIONS, EXCEPT STRUCTURAL STEEL IN SPANS 8, 8E-E, 8x, 9x AND 10x SHALL BE PAINTED ONE RED LEAD COAT AND TWO ALUMINUM COATS, IN ADDITION TO THE SHOP COAT.

BOTH SHOP AND FIELD PAINT SHALL BE APPLIED BY BRUSHING. SPRAY APPLICATION WILL NOT BE PERMITTED.

9. MILL TEST REPORTS.

THE MILL TEST REPORTS SHALL INCLUDE TESTS OF DRILLINGS FROM METAL MORE THAN 1" THICK. FOR THESE TEST SPECIMENS THE CARBON AND MANGANESE CONTENT, AS WELL AS THE PHOSPHORUS AND SULPHUR CONTENT, SHALL BE REPORTED IN ORDER TO PERMIT DETERMINATION OF THE NEED FOR PREHEATING IN CONNECTION WITH WELDING AS PER ART. 105 (METHOD 2) AND ART. 604(f) OF THE AMERICAN WELDING SOCIETY SPECIFICATIONS.

10. STEEL FLOOR.

ROADWAY GRID FLOOR SHALL CONFORM TO SUPPLEMENTAL SPECIFICATIONS SS-33. SIDEWALK GRATING SHALL CONFORM TO SUPPLEMENTAL SPECIFICATIONS SS-24.

11. PAYMENT

ITEM S-7, STRUCTURAL CARBON STEEL, INCLUDES ALL STRUCTURAL CARBON STEEL, CASTINGS, INCLUDING COUNTERWEIGHT BALANCE BLOCKS, FORGINGS, RIVETS, BOLTS, ANCHOR BOLTS, SHOES, ROADWAY AND CURB EXPANSION JOINTS, EDGE ANGLES AND CHANNELS, TREADS AND RAILS, SIDEWALK HATCHES, ROADWAY SCUPPERS, WARNING SIGNS, PARTS OF GATES AS DESCRIBED IN NOTES COVERING CONSTRUCTION OF GATES, SHIMS BETWEEN MACHINERY AND STRUCTURAL PARTS, STRUCTURAL STANDS FOR MAIN MOTORS AND GASOLINE ENGINE UNITS, SUPPORTS FOR MACHINERY AND MOTORS OF CENTER POSTS AT GATES, SHEET METAL DRAINAGE COVERS, SUPPORTS FOR MACHINERY AND MOTORS OF TAIL LOCKS, BRACKETS, ANCHOR BOLTS AND SUPPORTS FOR AIR BUFFERS, PARTS OF LIVE LOAD ANCHORS INCLUDING PIPES, PLUGS AND WRENCHES. ALL PARTS OF SPAN POSITION INDICATORS FOR GAS ENGINE OPERATION EXCEPT ALUMINUM SCALES AND POINTERS, AND EVERY OTHER ITEM OF METALWORK FOR WHICH PAYMENT IS NOT OTHERWISE PROVIDED, INCLUDING SHOP PAINTING OF ALL METALWORK COVERED BY THIS ITEM.

ITEM S-7, MANGANESE STRUCTURAL STEEL, INCLUDES ALL MAIN MATERIAL (WEB PLATES, FLANGE ANGLES, SIDE PLATES, COVER PLATES, AND ALL GIRDER SPLICE MATERIAL) OF ALL GIRDERS OF UNIT 1 AND GIRDERS G1, G2, G3, G4 AND G7 OF UNIT 2.

OPERATOR'S HOUSE

1. GENERAL REQUIREMENTS FOR OPERATOR'S HOUSE.

THE PROVISIONS REGARDING CONCRETE, STEELWORK, ETC., GIVEN ELSEWHERE IN THESE NOTES, ON THE PLANS AND IN THE SPECIFICATIONS SHALL BE APPLICABLE TO CONSTRUCTION OF THE OPERATOR'S HOUSE EXCEPT AS MODIFIED HEREIN. LIGHTING AND HEATING REQUIREMENTS ARE INCLUDED IN THE ELECTRICAL WORK.

2. CONCRETE FOR OPERATOR'S HOUSE.

A. ALL CONCRETE SHALL BE CLASS C EXCEPT ROOF SLAB WHICH SHALL BE AS HEREIN SPECIFIED.

B. ALL EXPOSED CONCRETE ABOVE SIDEWALK LEVEL, CONSISTING PRINCIPALLY OF STAIR RISERS, END FACE OF STAIRWAY AND THE CEILING OF ROOM B, SHALL BE FINISHED IN ACCORDANCE WITH THE REQUIREMENTS OF SEC. S-1.22 OF THE SPECIFICATIONS.

C. CONCRETE STAIR TREADS SHALL BE FINISHED MONOLITHICALLY WITHOUT ADDED MORTAR TOPPING AND SHALL BE MADE NON-SLIP BY ADDING TO THE FINISH AN APPLICATION OF ABRASIVE AGGREGATE, SIMILAR AND EQUAL TO ALUNDUM AS MANUFACTURED BY THE NORTON CO. OF WORCHESTER, MASSACHUSETTS. THE ABRASIVE SHALL BE APPLIED IN ACCORDANCE WITH THE MANUFACTURER'S RECOMMENDATIONS AND AT A RATE OF NOT LESS THAN ONE-QUARTER POUND PER SQUARE FOOT OF AREA.

D. ALL CONCRETE FLOORS TO BE COVERED WITH SHEET RUBBER SHALL BE STEEL TROWELED TO A SMOOTH, EVEN, LEVEL AND HARD SURFACE.

3. STONE FACING FOR OPERATOR'S HOUSE.

A. THE STONE FACING FOR THE OPERATOR'S HOUSE SHALL BE ACCORDING TO THE REQUIREMENTS OF ITEM S-21 EXCEPT AS OTHERWISE SPECIFIED IN THESE NOTES AND ON THE PLANS. THE STONE SHALL BE DURABLE, SOUND INDIANA LIMESTONE OR APPROVED EQUAL, OF UNIFORM QUALITY, STRUCTURE AND TEXTURE.

B. THE CONTRACTOR SHALL SUBMIT TO THE ENGINEER, TWO SAMPLES ABOUT 4 INCHES BY 7 INCHES, 1 INCH THICK, TYPICAL OF THE EXTREMES OF COLOR AND TEXTURE WHICH WILL BE FURNISHED. THE LARGE FACES SHALL SHOW ACROSS THE GRAIN OF THE STONE AND SHALL SHOW THE FINISH SPECIFIED; TWO EDGES SHALL BE ROCK FACE. SAMPLES SHALL BE CLEARLY MARKED WITH THE CONTRACTOR'S NAME, GRADE OF STONE AND NAME OF JOB.

C. THE CONTRACTOR SHALL PREPARE COMPLETE WORKING DRAWINGS FOR THE CUT STONE. THESE SHALL INCLUDE ALL DRAWINGS NECESSARY SUPPLEMENTARY TO THE DESIGN PLANS TO ENABLE THE CONTRACTOR TO CONSTRUCT THE WORK, INCLUDING ANY FULL-SIZE DRAWINGS NEEDED, WITH COMPLETE CUTTING AND SETTING DIAGRAMS FOR ALL STONEWORK, SHOWING SIZES, SECTIONS, DIMENSIONS OF STONE, ARRANGEMENTS OF JOINTS, BOLTS, ANCHORAGE, RUSTICATION OFFSETS AND OTHER DETAILS, AND THE MARKING OF STONES FOR IDENTIFICATION.

D. ALL STONE SHALL BE CUT ACCURATELY TO SHAPE AND DIMENSIONS FULL TO THE SQUARE, WITH APPROVED JOINTING. EXPOSED FACES SHALL BE CUT TRUE AND OUT OF WIND. JOINTS SHALL BE UNIFORM ONE-HALF INCH THICK. THERE SHALL BE NO PATCHING NOR HIDING OF DEFECTS, AND LEWIS HOLES SHALL NOT BE IN EXPOSED SURFACES. THE FINISH ON EXPOSED SURFACES SHALL BE SMOOTH, MACHINE DRESSED, SHOWING NO TOOL MARKS. LEWIS HOLES SHALL BE PROVIDED IN ALL STONES WEIGHING MORE THAN 100 POUNDS. EACH STONE SHALL HAVE ON THE BACK OR BED A NUMBER MARKED WITH NON-STAINING PAINT, CORRESPONDING TO THE NUMBER ON THE WORKING DRAWINGS.

E. ANCHORS AND DOWELS SHALL BE PROVIDED TO FIRMLY TIE THE STONE TOGETHER AND TO THE BRICK BACKING. ANCHORS SHALL BE FLAT BARS ONE-QUARTER INCH BY ONE AND ONE-HALF INCH, SHALL EXTEND 8 INCHES INTO THE BRICK BACKING AND SHALL HAVE ENDS BENT AT RIGHT ANGLES ONE AND ONE-HALF INCHES INTO THE STONE AND INTO THE BRICK BACKING. IN GENERAL, TWO ANCHORS SHALL BE USED ALONG THE TOP OF EACH STONE OVER 5 FEET LONG AND ONE ANCHOR FOR EACH SMALLER STONE. DOWELS FOR TYING THE STONES TOGETHER SHALL BE 1 INCH ROUND BARS, 8 INCHES LONG EXTENDING 4 INCHES INTO EACH STONE. DOWELS SHALL BE SPACED AT ABOUT 18 INCH CENTERS ALONG HORIZONTAL AND VERTICAL JOINTS BETWEEN STONES, EACH STONE HAVING AT LEAST ONE DOWEL FOR EACH EDGE ABUTTING OTHER STONES. HOLES IN STONES FOR ANCHORS AND DOWELS SHALL BE OF SUCH SIZE TO ALLOW AT LEAST ONE-EIGHTH INCH MORTAR BETWEEN METAL AND STONE. ALL ANCHORS AND DOWELS SHALL BE OF BRASS OR OF GALVANIZED WROUGHT IRON. BENDING SHALL BE DONE PRIOR TO GALVANIZING.

F. STONES SHALL BE CAREFULLY PACKED FOR TRANSPORTATION AND SHALL BE UNLOADED AND DELIVERED AT THE SITE WITH CARE, HANDLED THROUGHOUT BY COMPETENT WORKMEN AND BY SUCH METHODS AS WILL AVOID SOILING, MUTILATION, CHIPPING OR OTHER DAMAGE. STONE SHALL BE STORED AT THE SITE ON PLANKS CLEAR OF THE GROUND, PROTECTED FROM DAMAGE BY DIRT, GREASE OR OTHER STAINING OR DISFIGURING ELEMENTS.

G. STONE SHALL BE SET IN CAREFULLY PREPARED CEMENT MORTAR CONFORMING TO SEC. S-21.03 OF THE SPECIFICATIONS. MORTAR SHALL BE MIXED ONLY IN SUCH QUANTITIES AS NEEDED FOR IMMEDIATE USE. ANY MORTAR MIXED FOR A PERIOD EXCEEDING 30 MINUTES SHALL NOT BE USED. SAND SHALL CONFORM TO SEC. M-2.2 OR SEC. M-2.3 OF THE SPECIFICATIONS, AND IF CONTAINING COARSE MATERIAL THAT WOULD INTERFERE WITH PROPER JOINTING, SHALL BE SCREENED.

H. STONES SHALL BE SET IN ACCORDANCE WITH THE SETTING DRAWINGS. BEFORE SETTING EACH STONE SHALL BE WASHED CLEAN ON ALL SIDES BY SCRUBBING WITH SOAP POWDER AND WATER APPLIED WITH A FIBER BRUSH AND RINSED WITH CLEAN WATER. IMMEDIATELY PRIOR TO SETTING, EACH STONE SHALL AGAIN BE SPONGED AND DRENCHED ON ALL SIDES WITH CLEAN WATER. STONES SHALL BE SET ACCURATELY TRUE TO LINE AND LEVEL BY COMPETENT STONE SETTERS, WITH FULL FLUSH JOINTS, FILLING ALL ANCHOR HOLES. THE FACES SHALL BE SET ON THOROUGHLY SOAKED WOODEN WEDGES WHICH SHALL REMAIN IN PLACE UNTIL THE WORK IS CLEANED AND POINTED. THE BRICK BACKING SHALL BE THOROUGHLY DRENCHED IMMEDIATELY PRIOR TO SETTING STONES AND SHALL BE PLASTERED WITH MORTAR. SPLASHING EXPOSED FACES WITH MORTAR SHALL BE AVOIDED, AND ANY SPLASHING SHALL BE IMMEDIATELY REMOVED WITH SPONGE AND CLEAN WATER.

I. ALL FACE JOINTS SHALL BE RAKED OUT CLEAN THREE-QUARTERS INCH DEEP FOR POINTING AND WEDGES CAREFULLY REMOVED. AFTER THOROUGH CLEANING AND WETTING ALL JOINTS SHALL BE POINTED WITH MORTAR CONSISTING OF ONE PART STAINLESS CEMENT, TWO PARTS CLEAN WHITE SAND AND SUFFICIENT COLD LIME PUTTY TO MAKE AS STIFF A MIXTURE AS CAN BE WORKED. THE JOINTS SHALL BE STRUCK FLUSH. THE FACE OF ALL STONE SHALL BE THOROUGHLY CLEANED UPON COMPLETION WITH SOAP POWDER BOILED IN WATER AND APPLIED VIGOROUSLY WITH STIFF FIBER BRUSHES. IF NECESSARY, CLEAN SHARP WHITE SAND MAY BE ADDED TO THE SOAP MIXTURE. AFTER CLEANING, ALL SURFACES SHALL BE DRENCHED WITH CLEAR WATER AND IN HOT OR DRY WEATHER THE CONTRACTOR SHALL KEEP THE STONE WORK PROTECTED FROM DAMAGE FROM WEATHER OR OTHER CAUSE UNTIL FINAL COMPLETION AND ACCEPTANCE OF THE WORK AND IN A MANNER APPROVED BY THE ENGINEER.

J. BRICK FOR THE WALLS OF THE HOUSE SHALL BE FIRST QUALITY HARD BURNED COMMON BRICK. LAYING BRICK MASONRY SHALL CONFORM TO SEC. 1-8.05 OF THE SPECIFICATIONS. BRICK SHALL BE LAID WITH FULL MORTAR JOINTS AND ALL INTERSTICES IN THE BRICK WORK SHALL BE FILLED. ANCHORS TO THE EXTERIOR STONE FACING SHALL BE BUILT INTO THE BRICK WORK IN SUFFICIENT NUMBER TO THOROUGHLY BOND AND ANCHOR ALL PARTS OF THE COMPLETED WALL. THE GLAZED TILE OF THE INTERIOR SHALL BE BONDED WITH THE BRICK WORK AS HEREAFTER DESCRIBED.

4. STRUCTURAL STEEL AND MISCELLANEOUS METALWORK FOR OPERATOR'S HOUSE.

A. PRINCIPAL METAL PARTS CONSIST OF WIDE FLANGE BEAMS IN THE FLOOR OF ROOM A, PIPE COLUMNS, ROOF FRAMING, LINTELS, STAIR HANDRAILING, RACEWAYS FOR CONDUITS, THE PARTITION FOR THE TOILET ROOM AND ANY OTHER PARTS INDICATED ON THE PLANS OR REQUIRED FOR SATISFACTORY COMPLETION OF THE STRUCTURE. ALL METALWORK SHALL RECEIVE ONE SHOP COAT OF PAINT AND ALL METALWORK EXPOSED TO VIEW IN THE COMPLETED CONSTRUCTION SHALL RECEIVE TWO FIELD COATS. COLOR OF FINISH COAT SHALL BE AS DIRECTED.

B. THE METAL TOILET PARTITION SHALL BE PANEL TYPE OF 16 GAUGE STEEL EQUAL TO THOSE MANUFACTURED BY THE AMERICAN SANITARY PARTITION COMPANY OF LONG ISLAND CITY, N. Y. THE DOOR SHALL BE FLUSH TYPE OF 22 GAUGE STEEL AND SHALL HAVE GRAVITY TYPE, BALL BEARING HINGES, THROW LATCH, BUMPER AND KEEPER AND ONE RUBBER TIPPED COAT HOOK. ALL FITTINGS SHALL BE CHROME PLATED AND THE DOOR AND PARTITION SHALL HAVE TWO COATS BAKED-ON GRAY ENAMEL PROTECTED BY HEAVY PAPER COVERING APPLIED AT THE FACTORY.

PART 3

TOLEDO EXPRESSWAY SYSTEM
MAUMEE RIVER BRIDGE
BR. NO. LU 120R-35
NOTES

TOLEDO LUCAS COUNTY OHIO

SCALE: NONE
MADE: ICW DATE: 9-7-53
TRCD: LCM DATE: 9-22-53
CKD: JT DATE: 9-30-53

HOWARD, NEEDLES, TAMMEN & BERGENDOFF
CONSULTING ENGINEERS
KANSAS CITY NEW YORK

810 SHEET 3.4

MICROFILMED
JUL 22 1993

FED. ROAD DIV. NO	STATE	FED. AID PROJ. NO.	TYPE FUNDS
2	OHIO	UI-1052(2)	POST WAR

5 / 120

LUCAS COUNTY
CITY OF TOLEDO
TOLEDO EXPRESSWAY SYSTEM
MAUMEE RIVER BRIDGE
LUC 120R- 3.46

C. THE HANDRAILING SHALL BE OF FLAT BARS WELDED AND BENT IN THE SHOP TO THE LINES SHOWN ON THE PLANS. THE RAILING SHALL BE ERECTED TRUE TO LINE AND GRADE INDICATED AND IN PROPER RELATION TO THE OTHER WORK. CURVED SECTIONS SHALL BE ACCURATELY BENT TO SMOOTH CURVES WITHOUT KINKS OR SHORT CHORDS. VERTICAL MEMBERS SHALL BE ATTACHED TO THE CONCRETE WITH ONE-HALF INCH EXPANSION BOLTS.

5. ROOF OF OPERATOR'S HOUSE.

A. THE HOUSE ROOF SHALL CONSIST OF A WATER PROOFED REINFORCED CONCRETE SLAB OVER CORRUGATED SHEET METAL SUPPORTED BY STRUCTURAL STEEL FRAMING AS SHOWN ON THE PLANS. THE STRUCTURAL STEEL FRAMING OF THE HOUSE ROOF SHALL CONFORM TO THE REQUIREMENTS FOR SUPERSTRUCTURE METALWORK GIVEN ELSEWHERE IN THESE NOTES AND IN THE SPECIFICATIONS.

B. THE CORRUGATED METAL SHALL BE EQUAL TO "GALBESTOS" 20 GAUGE CORRUGATED SHEETS AS MANUFACTURED BY H. H. ROBERTSON COMPANY OF PITTSBURGH, PA. EACH SHEET SHALL BE ATTACHED TO EACH STEEL PURLIN WITH AT LEAST THREE STAINLESS STEEL SCREWS AS RECOMMENDED BY THE MANUFACTURER. END LAPS SHALL BE MADE AT A PURLIN OR AS SHOWN ON THE PLANS AND SHALL LAP AT LEAST SIX INCHES. SIDE LAPS SHALL BE ONE AND ONE-HALF CORRUGATIONS AND SHALL BE SECURED WITH STAINLESS STEEL SCREWS AT 12 INCH CENTERS. ALL LAPS SHALL BE LAID IN ROOFING CEMENT IN ACCORDANCE WITH THE MANUFACTURER'S RECOMMENDATIONS. SUITABLE CLOSURE PLATES OF 20 GAUGE GALVANIZED STEEL SHALL BE PROVIDED AT ALL RIDGES.

C. CONCRETE FOR THE HOUSE ROOF SHALL BE LIGHT WEIGHT, REINFORCED, INTEGRALLY WATERPROOFED CONCRETE CONSISTING OF WATER, PORTLAND CEMENT, AGGREGATE SIMILAR AND EQUAL TO ZONOLITE AS MANUFACTURED BY ZONOLITE COMPANY OF CHICAGO, ILLINOIS, AND A WATER-PROOFING COMPOUND SIMILAR AND EQUAL TO STEAROX "100" AS MANUFACTURED BY THE MASTER BUILDERS COMPANY OF CLEVELAND, OHIO, ALL PROPORTIONED, MIXED AND PLACED IN ACCORDANCE WITH THE RECOMMENDATIONS OF THE RESPECTIVE MANUFACTURERS. THE CONCRETE ROOF SLAB SHALL BE POURED COMPLETE IN ONE OPERATION TO THE TOTAL THICKNESS OF 3-1/2 INCHES AND SHALL CONFORM ACCURATELY TO THE LINES AND GRADES SHOWN ON THE PLANS AND SHALL BE GIVEN A RUBBED SURFACE FINISH TO CONFORM WITH SEC. S-1.22 OF THE SPECIFICATIONS. THE WIRE MESH REINFORCEMENT SHALL BE 10 GAUGE WIRES SPACED SIX INCH CENTERS IN BOTH DIRECTIONS WITH ELECTRICALLY WELDED JOINTS. THE SEPARATE PIECES SHALL BE LAPPED AT LEAST 12 INCHES.

D. THE COPPER FLASHING, SHOWN ON THE PLANS, BETWEEN THE CONCRETE ROOF SLAB AND THE STEEL CHANNEL FASCIA SHALL BE MADE CONTINUOUS FOR THE PERIMETER OF THE HOUSE BY SOLDERING THE JOINTS AT THE CORNERS. THE FLASHING SHALL BE MADE WATERTIGHT IN A CONTINUOUS REGLET ALONG THE EDGE OF THE CONCRETE SLAB BY POINTING WITH PLASTIC CEMENT AND SHALL BE SECURED TO THE STEEL FASCIA CHANNEL BY STAINLESS STEEL SCREWS WITH PLIABLE, NON-CORROSIVE WASHERS AT 8 INCH CENTERS.

6. WINDOWS AND GLAZING FOR OPERATOR'S HOUSE.

A. ALL GLASS IN THE HOUSE EXCEPT AS NOTED HEREIN SHALL BE SIMILAR AND EQUAL TO THERMOPANE AS MANUFACTURED BY LIBBY-OWENSFORD GLASS COMPANY COMPOSED OF TWO SHEETS OF ONE-QUARTER INCH THICK POLISHED PLATE GLASS, SEPARATED BY ONE-QUARTER INCH DEHYDRATED AIR SPACE, SEALED PERMANENTLY AIR-TIGHT WITH A METAL SEAL. THE INTERIOR SHEET SHALL BE CLEAR GLASS AND THE EXTERIOR SHEET SHALL BE HEAT ABSORBING GLASS TO REDUCE GLARE EXCEPT GLASS FOR THE TOILET ROOM WINDOW SHALL BE OF OBSCURE TYPE. ALL WINDOWS SHALL BE FURNISHED OPEN AND ALL GLAZING SHALL BE DONE ON THE JOB AFTER ERECTION. GLASS SHALL BE SET WITH HIGH GRADE LINSEED OIL BASE CASEMENT PUTTY OR APPROVED ELASTIC GLAZING COMPOUND. THE GLASS UNITS SHALL BE SET WITH ONE-SIXTEENTH INCH BACK PUTTY AND SASH SHALL BE BED PUTTIED. FACE PUTTY SHALL BE NEATLY APPLIED AND ALL GLASS SHALL BE THOROUGHLY CLEANED ON COMPLETION OF THE WORK. THE GLASS FOR THE EXTERIOR ENTRANCE DOOR TRANSOM IN ROOM B SHALL BE ONE-QUARTER INCH POLISHED PLATE GLASS OF APPROVED MANUFACTURE, SET IN WOOD SASH WITH METAL CLIPS AND PUTTIED AS DESCRIBED ABOVE.

B. WINDOW SASHES AND FRAMES SHALL BE OF BRONZE AND SHALL CONFORM TO THE DETAILS GIVEN ON THE PLANS. ALL SHALL HAVE INTEGRAL WEATHER-STRIPPING AND SHALL BE PROVIDED WITH COMPLETE OPERATING AND LOCKING HARDWARE IN DULL BRONZE FINISH. ALL VENTILATING WINDOWS SHALL BE FITTED WITH BRONZE FRAME SCREENS OF 16 MESH BRONZE INSECT CLOTH.

7. DOORS AND HARDWARE FOR OPERATOR'S HOUSE.

A. INTERIOR AND EXTERIOR DOORS AND FRAMES SHALL CONFORM TO THE SPECIFICATIONS OF THE NATIONAL DOOR MANUFACTURER'S ASSOCIATION. INTERIOR DOORS SHALL BE STOCK FLUSH VENEER, ONE AND THREE-QUARTERS INCHES THICK EXCEPT THE DOOR TO THE CLOSET IN ROOM B SHALL BE ONE AND THREE-EIGHTHS INCHES THICK. THE EXTERIOR DOOR SHALL BE A STOCK SOLID SLAB-TYPE DOOR, ONE AND THREE-QUARTERS INCHES THICK. THE EXTERIOR DOOR OPENING SHALL BE PROVIDED WITH A COMBINATION DOOR, COMPLETE WITH SCREEN PANEL AND STORM SASH PANEL.

B. ALL EXPOSED WOODWORK SHALL RECEIVE TWO COATS OF APPROVED LEAD AND OIL PAINT IN ADDITION TO A PRIME COAT.

C. EACH DOOR SHALL BE FITTED WITH THREE BUTTS, OVERHEAD CHECK AND BRACKET AND CYLINDER LOCK WITH KNOBS, AND ALL DOORS SHALL BE KEYED ALIKE. THE CHECK AND LOCK WILL NOT BE REQUIRED FOR THE CLOSET DOOR IN ROOM B. FINISH HARDWARE SHALL BE ALL BRASS OR BRONZE, DULL BRONZE FINISH, FIRST QUALITY YALE AND TOWNE OR EQUAL AND SHALL BE OF DESIGN APPROVED BY THE ENGINEER. THE EXTERIOR ENTRANCE DOOR SHALL HAVE SPRING BRONZE WEATHER-STRIPPING, CHAMBERLIN NO. 800-ds OR EQUAL AND METAL THRESHOLD, SAGER NO. 7L OR EQUAL. THE TOILET ROOM DOOR SHALL BE AS DESCRIBED IN NOTES REGARDING METALWORK IN OPERATOR'S HOUSE.

8. PLUMBING FOR OPERATOR'S HOUSE.

A. PLUMBING WORK SHALL INCLUDE A COMPLETE SYSTEM OF HOT AND COLD WATER SUPPLY AND WASTE, TOGETHER WITH ALL PLUMBING FIXTURES, FITTINGS AND ACCESSORIES NECESSARY FOR THE COMPLETE INSTALLATION. PLUMBING SHALL BE IN ACCORDANCE WITH THE BEST MODERN PLUMBING PRACTICE AND SHALL CONFORM TO LOCAL CODES. THE WATER SUPPLY LINE FROM THE RAMP X ABUTMENT INCLUDED IN THE PLUMBING WORK SHALL BE INSTALLED AS SPECIFIED UNDER "WATER SUPPLY LINE".

B. ALL PIPES FOR WATER SUPPLY SHALL BE STANDARD WEIGHT GALVANIZED WROUGHT IRON PIPE. FITTINGS AND CONNECTIONS SHALL BE OF GALVANIZED WROUGHT OR MALLEABLE IRON. JOINTS SHALL BE THREADED AND SHALL BE MADE UP WITH AN APPROVED PIPE JOINT COMPOUND. VALVES SHALL BE IRON BODY, BRASS MOUNTED VALVES DESIGNED FOR A MINIMUM WATER WORKING PRESSURE OF NOT LESS THAN 150 p.s.i.

C. THE CONTRACTOR FOR PART 1 WILL INSTALL A 4 IN. C.I. SOIL PIPE IN THE BASE OF PIER 5 WHICH WILL EXTEND FROM A POINT OF DISCHARGE BELOW WATER LINE ON THE CHANNEL FACE OF THE PIER TO ROOM E WHERE THE PIPE WILL BE TERMINATED 18 IN. ABOVE FLOOR LEVEL. THE CONTRACTOR FOR PART 3 SHALL EXTEND THE SOIL PIPE AND MAKE THE NECESSARY CONNECTIONS TO FIXTURES IN ROOM B. CONCEALED SOIL, WASTE AND DRAIN PIPES SHALL BE EXTRA HEAVY CAST IRON SOIL PIPE, ASPHALTUM COATED INSIDE AND OUT, AND MADE UP WITH EXTRA HEAVY CAST IRON FITTINGS. EXPOSED SOIL PIPES AND ALL VENT PIPES SHALL BE STANDARD WEIGHT GALVANIZED WROUGHT IRON PIPE MADE UP WITH RECESSED CAST IRON DRAINAGE FITTINGS. WASTE LINES FROM ALL FIXTURES SHALL BE LAID WITH A MINIMUM SLOPE OF ONE-QUARTER INCH PER FT. CLEAN OUTS SHALL BE PROVIDED SO THAT THE ENTIRE SYSTEM MAY BE RODDED. VENT EXTENDING THROUGH THE ROOF SHALL BE FLASHED WITH 4 LBS. P.S.F. SHEET LEAD EXTENDING A MINIMUM OF 8 INCHES AROUND THE PIPE UNDER THE ROOF SLAB AND OVER THE TOP OF THE VENT AND INTO THE VENT AT LEAST 1 IN. ALL JOINTS SHALL BE THOROUGHLY CAULKED AND LEADED. THE ENTIRE WASTE SYSTEM SHALL BE TESTED IN A MANNER APPROVED BY THE ENGINEER TO SHOW THAT THERE ARE NO LEAKS OR IMPROPERLY MADE CONNECTIONS.

D. THE WATER SUPPLY SYSTEM SHALL BE PROVIDED WITH VALVES AT SUITABLE LOCATIONS SO THAT THE WATER MAY BE SHUT OFF AND THE LINES DRAINED READILY. UNLESS OTHERWISE SHOWN GALVANIZED WROUGHT IRON PIPE SLEEVES SHALL BE PROVIDED AT ALL POINTS OF PASSAGE THROUGH WALLS AND FLOORS, AND OPENINGS CLOSED WITH APPROVED FLANGES.

E. PRINCIPAL PLUMBING FIXTURES ARE INCLUDED IN THE FOLLOWING LIST. REFERENCES ARE TO CRANE COMPANY PRODUCTS EXCEPT AS NOTED BUT OTHER MAKES OF SIMILAR PRODUCTS WILL BE ACCEPTABLE SUBJECT TO THE APPROVAL OF THE ENGINEER. ALL EXPOSED METAL PARTS OF FIXTURES SHALL BE CHROMIUM PLATED. ELECTRICAL CONNECTIONS TO THE WATER HEATER AND DRINKING FOUNTAIN WILL BE MADE AS A PART OF THE GENERAL ELECTRICAL WORK.

1. THE WATER HEATER IN ROOM C SHALL BE EQUAL TO CRANE E-305 SELECTRIC AUTOMATIC, INSULATED 30 GALLON STORAGE, ELECTRIC WATER HEATER WITH NO. 40-A WATTS COMBINATION TEMPERATURE AND PRESSURE RELIEF VALVE.

2. THE CLOSET IN ROOM B SHALL BE EQUAL TO CRANE NO. 3-122 DREXEL, CLOSE COUPLED, ELONGATED RIM CLOSET WITH JET, COMPLETE WITH THREE-EIGHTS INCH SUPPLY WITH STOP, AND FITTED WITH NO. 9500-B MOLTEX BLACK PLASTIC OPEN-FRONT SEAT WITHOUT COVER AND WITH CHINA BOLT CAPS.

3. THE LAVATORY IN ROOM B SHALL BE EQUAL TO CRANE NO. 1-220 S, 20 IN. BY 18 IN. NORWICH VITREOUS CHINA LAVATORY WITH 6 IN. INTEGRAL BACK, CONCEALED HANGER, AND SINGLE CHINA LEG, FITTED WITH NO. 8-140 EMBASSY SUPPLY FITTING WITH METAL HANDLES AND COVER PLATES, NO. 8-300, THREE-EIGHTS INCH SUPPLIES WITH WHEEL HANDLE STOPS AND NO. 8-401 - 1¼" BRASS "P" TRAP.

4. AN 18 IN. BY 24 IN. PLATE GLASS MIRROR SHALL BE INSTALLED ABOVE THE LAVATORY. THERE SHALL BE PROVIDED AT LOCATIONS PROPERLY RELATED TO THE FIXTURES, A PAPER TOWEL CABINET SIMILAR TO NO. 648 "ONLIWON" WITH FILL INDICATOR, LOCK AND KEY, A TOILET PAPER HOLDER AND A LIQUID SOAP DISPENSER.

5. THE DRINKING FOUNTAIN IN ROOM B SHALL BE EQUAL TO WESTINGHOUSE MODEL LPX4 ELECTRIC WATER COOLER, PRESSURE TYPE WITH AIR COOLED CONDENSING UNIT.

9. WATER SUPPLY LINE FOR OPERATOR'S HOUSE.

A. THE CONTRACTOR SHALL INSTALL A 2 INCH GALVANIZED WROUGHT IRON WATER PIPE FROM THE PLUMBING IN ROOM B OF THE OPERATOR'S HOUSE, AS ELSEWHERE SPECIFIED, TO THE WEST END OF THE RAMP X ABUTMENT WHERE THE PIPE SHALL BE CAPPED. THE LINE WILL BE EXTENDED BY OTHERS TO THE CONNECTION WITH THE WATER MAIN.

B. THE PIPE COUPLINGS SHALL BE GASKETED, SLEEVE-TYPE EQUAL TO DRESSER, STYLE 38 AS MANUFACTURED BY THE DRESSER MFG. CO. OF BRADFORD, PENNA. COUPLINGS SHALL BE INSTALLED IN ACCORDANCE WITH THE MANUFACTURER'S RECOMMENDATIONS.

C. THE PIPE SHALL BE INSULATED EXCEPT FOR LENGTHS UNDERGROUND AND WITHIN THE OPERATOR'S HOUSE. INSULATION SHALL BE EQUAL TO JOHNS-MANVILLE BUILT-UP HAIR FELT INSULATION AND SHALL BE 2 INCHES THICK IN TWO ONE-INCH LAYERS. EACH LAYER SHALL BE SECURED TO THE PIPE WITH A WRAPPING OF HEAVY JUTE TWINE ON TWO INCH CENTERS, AND OVER EACH LAYER SHALL BE APPLIED A LAYER OF 15 LB. ASPHALT FELT, SECURED IN PLACE WITH A WRAPPING OF JUTE TWINE. INSULATION SHALL BE PROTECTED BY A JACKET EQUAL TO DOUBLE COATED FLEX-STONE WEATHER-PROOF JACKET AS MADE BY JOHNS-MANVILLE. THE JACKET SHALL BE SECURED WITH RINGS OF 16 GAUGE COPPER WIRE ON 4 INCH CENTERS. LAPS ON HORIZONTAL PIPE SHALL BE PLACED ON THE SIDE AND TURNED DOWNWARD.

D. THE SPECIFIED INSULATION WILL PREVENT FREEZING OF WATER STANDING IN THE PIPES FOR A PERIOD OF ABOUT TWO HOURS WHEN THE TEMPERATURE DIFFERENTIAL BETWEEN THE WATER AND THE AMBIENT AIR IS ABOUT 60 DEGREES.

E. THE CONTRACTOR SHALL PROVIDE IN THE PIER A ONE-QUARTER INCH SOLENOID-OPERATED VALVE, NORMALLY CLOSED, SIMILAR TO MERCOID LEVER VALVE. TYPE K10-1, WHICH SHALL BE OPERATED BY A MERCURY TUBE SWITCH WITH THERMOSTAT HAVING-20 DEGREE F. TO+50 DEGREE F. RANGE, 10 AMP., WEATHERPROOF, EQUIPPED WITH 5 FT. CAPILLARY TUBE AND ONE-HALF INCH BY 4 INCH BULB ON EXTERIOR OF PIER, SIMILAR TO MINNEAPOLIS-HONEYWELL, NO. L426. THE SWITCH SHALL BE ADJUSTED TO OPEN THE VALVE FOR OUTSIDE TEMPERATURES BELOW +25 DEGREES F. DISCHARGE SHALL BE INTO (BUT NOT CONNECTED TO) PLUMBING WASTE SYSTEM.

10. INTERIOR FINISH FOR OPERATOR'S HOUSE.

A. THE CEILING OF ROOM A SHALL BE INSULATED WITH A 2-INCH BLANKET OF ROCK WOOL BATTS AND SHALL BE FINISHED WITH A PERFORATED METAL ACOUSTICAL TILE SIMILAR AND EQUAL TO JOHNS-MANVILLE SANACOUSTIC UNITS. THE UNITS SHALL BE 12 INCHES SQUARE, OF CREAM COLOR AND SHALL BE SUSPENDED IN ACCORDANCE WITH THE MANUFACTURER'S RECOMMENDATIONS BY A METAL RUNNER SYSTEM ATTACHED TO THE LOWER MEMBERS OF THE ROOF FRAMING. AT THE WALLS THE TILE SHALL BE FINISHED AGAINST AN APPROVED METAL MOULDING. THE CONCRETE CEILING OF ROOM B SHALL HAVE A RUBBED FINISH PAINTED AS DESCRIBED IN SECTION 11 OF THESE NOTES.

B. THE SOFFIT OVER THE WINDOWS IN ROOM A SHALL BE PLASTERED. LATH SHALL BE EXPANDED METAL LATH OF APPROVED MAKE WHICH SHALL WEIGH NOT LESS THAN 3.4 POUNDS PER SQUARE YARD. LATH SHALL BE SUPPORTED BY THREE-QUARTER INCH FURRING CHANNELS SPACED AT 12-INCH CENTERS. THE CHANNELS SHALL BE SECURELY ATTACHED TO THE STEEL ROOF FRAMING BY NO. 8 WIRE OR SUITABLE METAL CLIPS. A METAL NOSING BEAD SHALL BE PROVIDED AT THE JUNCTION OF HORIZONTAL AND VERTICAL FACES. SAND FOR PLASTER SHALL BE DRY AND CLEAN AND WELL GRADED FROM FINE TO COARSE. IT SHALL BE STRAINED THROUGH A 6 MESH SCREEN. WATER SHALL BE POTABLE.

PLASTER OF ONE BRAND SHALL BE USED THROUGHOUT THE WORK AND SHALL BE U. S. GYPSUM CO. PLASTER OR EQUAL. KEENE'S CEMENT SHALL BE U. S. GYPSUM CO. PRODUCT OR EQUAL.

THE SCRATCH COAT SHALL BE ONE PART OF FIBRED PLASTER TO NOT MORE THAN TWO PARTS OF SAND BY WEIGHT. THIS COAT SHALL BE APPLIED WITH SUFFICIENT PRESSURE TO FILL ALL MESHES AND OBTAIN A GOOD KEY, LEAVING A LIGHT COAT OVER THE LATH. THE SURFACE SHALL BE SCRATCHED IMMEDIATELY AFTER SETTING TO PROVIDE A BOND FOR THE SECOND COAT.

THE BROWN COAT SHALL BE ONE PART OF FIBRED PLASTER TO NOT MORE THAN THREE PARTS OF SAND BY WEIGHT. THIS COAT SHALL BE APPLIED AFTER THE FIRST COAT IS SET AND HARD, BUT BEFORE THE SCRATCH COAT IS DRY. THE COAT SHALL BE RODDED OR STRAIGHT-EDGED TO A TRUE AND EVEN SURFACE. THE SURFACE SHALL BE BROOMED OR SLIGHTLY ROUGHENED TO RECEIVE THE FINISH COAT.

THE FINISH COAT, SAND FLOAT FINISH, SHALL BE 100 LBS. OF LIME PUTTY, 400 LBS. OF WHITE SILICA SAND, 100 LBS. OF KEENE'S CEMENT, AND COLORING AS SELECTED. THE FINISH COAT SHALL BE APPLIED WHEN THE BROWN COAT IS SET FIRM AND HARD AND IS NEARLY DRY. THE SURFACE OF THE BROWN COAT SHALL BE SPRINKLED WITH WATER BEFORE THE FINISH COAT IS APPLIED IN ORDER TO STOP EXCESSIVE SUCTION. FINISHING COAT SHALL BE APPLIED AND FINISHED IN A WORKMANLIKE MANNER, SHALL BE LEFT LEVEL, TRUE AND EVENLY PLANED, FREE OF TROWEL MARKS, BLOTCHES AND WITHOUT JOINTS SHOWING.

C. THE WALLS OF ROOM B AND THOSE OF ROOM A UP TO WINDOW SILL LEVEL SHALL BE FINISHED WITH CERAMIC GLAZED STRUCTURAL UNITS SIMILAR AND EQUAL TO UNITS MANUFACTURED BY THE ARKETEX CERAMIC CORP. OF BRAZIL, INDIANA AND SHALL CONFORM TO THE SPECIFICATIONS FOR SELECT QUALITY CERAMIC GLAZED STRUCTURAL FACING TILE OF THE FACING TILE INSTITUTE. FIELD UNITS SHALL BE GRAY AND THE BASE AND WINDOW SILL UNITS SHALL BE RED OF SHADES AS MAY BE APPROVED. UNITS SHALL BE 5 IN. BY 12 IN. FACE SIZE AND SHALL BE 4 IN. (NOMINAL) THICK EXCEPT FOR BONDING UNITS WHICH SHALL BE 8 IN. THICK. ALL NECESSARY SHAPES SHALL BE FURNISHED AS REQUIRED. IN GENERAL, ALL EXTERIOR CORNERS, JAMBS AND LINTELS SHALL BE BULLNOSED. INTERNAL CORNERS AND BASE SHALL BE COVED. TILE SHALL BE SET WITH ONE-QUARTER INCH CEMENT MORTAR JOINTS AND SHALL BE BONDED TO THE BRICKWORK BY USING 8 IN. THICK UNITS EVERY THIRD COURSE. ON COMPLETION OF THE WORK ALL TILE SHALL BE THOROUGHLY CLEANED.

D. FLOORS OF ROOMS A AND B INCLUDING TOILET ROOM, SHALL BE COVERED WITH ONE-QUARTER INCH THICK SHEET OF RUBBER FLOOR COVERING. COLORS OF THE COVERINGS SHALL BE AS SHOWN ON THE PLANS OR AS DIRECTED BY THE ENGINEER. THE COVERING SHALL BE LAID ON MASTIC CEMENT IN ACCORDANCE WITH THE MANUFACTURER'S RECOMMENDATIONS. JOINTS SHALL BE ACCURATELY ALIGNED. THE COMPLETED FLOOR SHALL BE PROTECTED WITH BUILDING PAPER UNTIL COMPLETION OF ALL WORK IN THE HOUSE, AND UPON COMPLETION OF ALL WORK SHALL BE THOROUGHLY CLEANED.

11. PAINTING IN BASCULE PIERS AND OPERATOR'S HOUSE.

A. ALL ROOMS ABOVE ELEV. 585.50 IN THE TWO BASCULE PIERS, INCLUDING THE COUNTERWEIGHT PITS SHALL BE PAINTED BY THE CONTRACTOR.

B. STEEL PARTITION WALLS, TRUNNION SUPPORTS, MACHINERY FLOOR BEAMS, DOORS, LADDERS AND OTHER FIXED STRUCTURAL METAL PARTS SHALL BE PAINTED THREE COATS AS SPECIFIED FOR STRUCTURAL STEEL EXCEPT THAT THE TWO FIELD COATS SHALL BE WHITE AND THE FINAL COAT SHALL HAVE A FULL GLOSS FINISH. THE INTERMEDIATE COAT SHALL BE SLIGHTLY TINTED. STEEL FLOORS SHALL BE PRIMED AND THEN FINISHED WITH TWO THIN COATS OF DARK GRAY ENAMEL. METAL STAIR TREADS SHALL NOT BE PAINTED. BASCULE GIRDERS, COUNTERWEIGHT BOX AND SIMILAR MOVABLE STRUCTURAL STEEL PARTS SHALL BE PAINTED ALUMINUM AS FOR EXTERIOR STRUCTURAL STEEL.

C. CONCRETE WALLS AND CEILINGS SHALL BE PAINTED WITH A SEALING PRIMER AND TWO COATS OF WHITE PAINT, THE FINAL COAT HAVING A FULL GLOSS FINISH. CONCRETE FLOORS, STAIR TREADS AND RISERS SHALL BE PAINTED WITH PRIMER AND TWO COATS OF DARK GRAY ENAMEL. CONCRETE SURFACES SHALL PREFERABLY BE ALLOWED TO AGE 60 TO 90 DAYS BEFORE BEING PAINTED. BEFORE BEING PAINTED ALL SUCH SURFACES SHALL BE TREATED WITH A WASH COAT OF ZINC SULPHATE SOLUTION COMPOSED OF THREE POUNDS OF ZINC SULPHATE CRYSTALS DISSOLVED IN A GALLON OF WARM WATER. LOOSE CRYSTALS SHALL BE BRUSHED OFF BEFORE APPLICATION OF PRIMER. ALL PAINTS SHALL BE BEST QUALITY OIL-BASE PAINTS AND SHALL BE APPROVED BY THE ENGINEER.

D. THE PAINTING OF ALL PARTS CLASSIFIED AS STRUCTURAL STEEL SHALL BE PAID FOR PER POUND OF THE STEEL UNDER ITEM S-8. PAYMENT FOR THE PAINTING OF ALL OTHER PARTS SHALL BE CONSIDERED AS INCLUDED IN THE CONTRACT PRICE BID FOR THE OPERATOR'S HOUSE.

12. FURNITURE AND EQUIPMENT FOR OPERATOR'S HOUSE.

A. TEN LOCKERS SHALL BE PROVIDED IN ROOM B, SIMILAR TO SINGLE DOOR, SINGLE TIER, STEEL LOCKER MANUFACTURED BY THE FRED MEDART MFG. CO. OF ST. LOUIS, MO. THEY SHALL BE ALL STEEL WELDED CONSTRUCTION 18 IN. WIDE BY 18 IN. DEEP BY 72 IN. HIGH AND EQUIPPED WITH COAT ROD, COAT HOOK, HAT SHELF, AND LOWERED SINGLE DOOR WITH RUST PROOF HANDLES AND CYLINDER LOCKS INDIVIDUALLY AND MASTER KEYED. FINISH SHALL BE FACTORY APPLIED BAKED-ON ENAMEL OF GRAY COLOR. THERE SHALL ALSO BE PROVIDED IN ROOM B A WOODEN BENCH 15 IN. WIDE, 8 FT. LONG AND 17 IN. HIGH, BOLTED IN PLACE IN THE LOCATION SHOWN ON THE PLANS AND SHALL BE PAINTED AS ELSEWHERE SPECIFIED FOR EXPOSED WOODWORK.

B. THE FOLLOWING OFFICE FURNITURE AND EQUIPMENT SHALL BE FURNISHED AND INSTALLED IN ROOM A.

1 - FLAT TOP DESK, 60 IN. BY 34 IN. SIMILAR TO SECURITY STEEL DESK NO. SF-60, GREEN FINISH (STEEL EQUIPMENT CORP., AVENEL, N. J.)

1 - SWIVEL ARM CHAIR, SIMILAR TO SECURITY STEEL CHAIR NO. 400, GREEN FINISH WITH LEATHER UPHOLSTERED CUSHIONED SEAT PADS.

2 - SIDE CHAIRS, SIMILAR TO SECURITY STEEL CHAIR NO. 420, GREEN FINISH WITH LEATHER UPHOLSTERED CUSHIONED SEAT PADS.

1 - DESK HIGH LOCK DRAWER METAL FILE CABINET WITH LEGAL SIZE STORAGE DRAWERS AND ROLLER DRAWER SLIDES, GREEN FINISH, SIMILAR TO SECURITY 36A22.

1 - WASTE BASKET, SIMILAR TO SECURITY NO. 51, GREEN FINISH.

1 - FLAT CUSPIDOR ABOUT 12 IN. DIAMETER.

1 - ONE AND ONE-HALF QUART PYRENE FIRE EXTINGUISHER, HAND TYPE, MOUNTED ON WALL BRACKET.

13. PAYMENT FOR OPERATOR'S HOUSE.

PAYMENT FOR OPERATOR'S HOUSE WILL BE MADE AT THE LUMP SUM PRICE BID FOR "OPERATOR'S HOUSE", WHICH PRICE SHALL BE FULL COMPENSATION FOR ALL CONSTRUCTION OF WHATSOEVER MATERIAL INCLUDING EQUIPMENT AND FURNISHINGS OF THE OPERATOR'S HOUSE ABOVE ELEV. 627.75, FOR FURNISHING AND INSTALLING THE 2 IN. WATER LINE FROM THE RAMP X ABUTMENT, FOR ALL PLUMBING, INCLUDING THE HOT WATER HEATER SERVING THE OPERATOR'S HOUSE AND ALL INCIDENTALS NECESSARY TO THE SATISFACTORY COMPLETION OF THE HOUSE READY FOR USE EXCLUDING ONLY ELECTRICAL WORK, COVERED BY ITEM S-25, ELECTRICAL EQUIPMENT, STRUCTURAL STEEL, AND PAINTING OF PARTS CLASSIFIED AS STRUCTURAL STEEL.

IT ALSO SHALLBE CONSIDERED AS PROVIDING COMPENSATION FOR PAINTING OF CONCRETE SURFACES IN THE BASCULE PIERS.

PARTS OF OPERATOR'S HOUSE TO BE PAID FOR UNDER ITEM S-7, STRUCTURAL CARBON STEEL INCLUDES WIDE FLANGE BEAMS IN FLOOR OF ROOM A, ROOF FRAMING AND 4 INCH PIPE COLUMNS.

MACHINERY

1. GENERAL REQUIREMENTS FOR MACHINERY.

A. THE MACHINERY AND EQUIPMENT FOR EACH BASCULE LEAF ARE LOCATED IN THE BASCULE PIER AND CONSIST OF A PAIR OF MAIN DRIVING ELECTRIC REVERSING MOTORS CONNECTED BY GEAR TRAINS AND SHAFTING TO THE OPERATING PINIONS WHICH ENGAGE RACKS ATTACHED TO THE BASCULE GIRDERS. GASOLINE ENGINES AND MANUAL CONTROL ARE PROVIDED FOR EMERGENCY USE. TRAFFIC SIGNALS, BELLS AND GATES ARE ELECTRICALLY INTERLOCKED WITH EACH OTHER AND WITH THE SPAN LOCKS AND BASCULE LEAVES SO AS TO ASSURE OPERATION IN A SAFE, PREDETERMINED SEQUENCE.

B. THE CONTRACTOR SHALL MAKE ALL NECESSARY TESTS OF THE COMPLETE OPERATING SPANS AND CONTROL DEVICES AND SHALL MAKE ALL TRIAL OPERATIONS. THE CONTRACTOR SHALL SUPPLY ALL FUEL AND LUBRICANTS NECESSARY FOR TESTING, ADJUSTMENTS AND SPAN OPERATIONS. ELECTRIC POWER WILL BE FURNISHED BY OTHERS. THE CONTRACTOR SHALL OPERATE THE SPAN FOR NAVIGATION UNTIL FINAL ACCEPTANCE. THE CONTRACTOR SHALL PROVIDE ONE SKILLED OPERATOR TO REMAIN ON DUTY EIGHT HOURS PER DAY FOR FOUR WEEKS AFTER ACCEPTANCE TO INSTRUCT AND SUPERVISE CITY OF TOLEDO EMPLOYEES IN THEIR WORK OF SPAN OPERATION AND MAINTENANCE.

C. BEFORE FINAL ACCEPTANCE, THE CONTRACTOR SHALL SUPPLY TO THE ENGINEER TWELVE COPIES OF "INSTRUCTIONS FOR OPERATION" IN BOOK FORM. THESE MAY BE IN PRINT, IN BLUEPRINT FORM, IN MIMEOGRAPH FORM, OR IN COMBINATION THEREOF. THESE "INSTRUCTIONS FOR OPERATION" SHALL BE PREPARED OR ENDORSED BY THE MANUFACTURERS OF ALL ELECTRICAL AND MECHANICAL EQUIPMENT SUCH AS MOTORS, CONTROLLERS, PUMPS AND OTHER PARTS REQUIRING MAINTENANCE, AND SHALL INCLUDE DETAILED INSTRUCTIONS COVERING PROPER METHODS OF ADJUSTING, MAINTAINING, LUBRICATING AND OPERATING EACH ITEM OF ELECTRICAL AND MECHANICAL EQUIPMENT AND FOR THE OPERATION OF THE ENTIRE BRIDGE.

D. THE CONTRACTOR SHALL FURNISH AND INSTALL IN THE OPERATOR'S HOUSE, CHARTS FOR THE GUIDANCE OF THE OPERATOR OUTLINING SEQUENCES FOR THE OPERATION OF THE SPAN UNDER ALL DIFFERENT CONDITIONS. HE SHALL ALSO FURNISH AND INSTALL AS DIRECTED DETAILED WIRING DIAGRAMS CONFORMING TO THE ACTUAL INSTALLATION. ALL CHARTS AND DIAGRAMS SHALL BE IN GLASS COVERED FRAMES AND SHALL BE PREPARED AND INSTALLED AS APPROVED BY THE ENGINEER.

2. MACHINERY MANUFACTURE.

A. THE MACHINERY SHALL BE FINISHED, ASSEMBLED AND ADJUSTED IN APPROVED MANNER AND ACCORDING TO THE BEST MACHINE SHOP PRACTICE. THE LIMITS OF ACCURACY WHICH ARE TO BE OBSERVED IN MACHINING THE WORK AND THE ALLOWANCES FOR ALL METAL FITS SHALL BE SHOWN ON THE CONTRACTOR'S WORKING DRAWINGS. JOURNAL DIAMETERS AND BORES OF BEARINGS GIVEN ON THE DRAWINGS ARE NOMINAL. THE SHOP DRAWINGS SHALL SHOW WORKING ALLOWANCES SEPARATELY FOR THE JOURNALS AND FOR BEARINGS SUCH THAT THE TOTAL DIFFERENCES, IN INCHES, BETWEEN JOURNALS AND BEARING DIAMETERS SHALL BE WITHIN THE FOLLOWING LIMITS.

B. FOR MACHINERY JOURNALS HAVING BOTH BEARINGS IN ONE UNIT FRAME WITH SHAFTS AND BEARINGS FINALLY ASSEMBLED AND ALIGNED IN THE SHOP:

MAXIMUM DIFFERENCE	.003 PLUS .00085 d
MINIMUM DIFFERENCE	.001 PLUS .00070 d

C. FOR ALL OTHER MACHINERY JOURNALS AND FOR MAIN TRUNNION SHAFT JOURNALS:

MAXIMUM DIFFERENCE	.005 PLUS .00085 d
MINIMUM DIFFERENCE	.003 PLUS .00070 d

D. PARTS OF THE MACHINERY IN CONTACT WITH OTHER PARTS OR WITH SUPPORTS SHALL BE MACHINED SO AS TO PROVIDE EVEN TRUE BEARINGS, AND SURFACES IN ROTATING OR SLIDING CONTACT WITH OTHER SURFACES SHALL BE FINISHED TRUE TO DIMENSIONS AND HIGHLY POLISHED. OTHER SURFACES SHALL BE LEFT IN A NEAT AND WORKMANLIKE CONDITION. UNFINISHED EDGES OF FLANGES AND RIBS SHALL BE NEATLY MADE WITH ROUNDED CORNERS. ALL INSIDE CORNERS SHALL HAVE SUITABLE FILLETS. DRAINAGE HOLES OF SUITABLE SIZES SHALL BE DRILLED SO AS TO DRAIN ALL PLACES WHERE WATER MIGHT COLLECT.

E. KEYS SHALL CONFORM TO THE REQUIREMENTS ELSEWHERE GIVEN FOR FORGED STEEL UNLESS OTHERWISE APPROVED. THEY SHALL BE PARALLEL-SIDED, SQUARE OR RECTANGULAR IN SHAPE, SHALL HAVE A DRIVING FIT ON BOTH SIDES, AND GENERALLY SHALL NOT EXTEND BEYOND THE ENDS OF THEIR HUBS. SAFETY SET SCREWS SHALL BE PROVIDED FOR ALL KEYS.

F. BOLTS AND NUTS SHALL CONFORM TO A.S.T.M. SPECIFICATION A307-52T AND SHALL BE GRADE B, EXCEPT THAT BOLTS SUBJECT TO DIRECT TENSION SUCH AS BOLTS FOR BEARING CAPS SHALL CONFORM TO A.S.T.M. SPECIFICATION A325-52T. BOLTS SUBJECT TO SHEARING STRESSES AND FOR CONNECTING THE VARIOUS PARTS OF THE MACHINERY TO OTHER PARTS OR TO THE STEELWORK, SHALL BE TURNED TO A DRIVING FIT. TURNED BOLTS SHALL HAVE THE DIAMETER OF THE SHANK AT LEAST 1/32 IN. GREATER THAN THE OUTSIDE DIAMETER OF THE THREADS. BOLTS NOT SUBJECT TO SHEARING STRESSES MAY BE UNFINISHED BOLTS AND MAY HAVE A PLAY OF 1/16 IN. IN BOLT HOLES. MACHINED BOSSES SHALL BE PROVIDED ON MACHINERY PARTS TO GIVE PROPER SEATS FOR BOLT HEADS AND NUTS. UNLESS OTHERWISE SPECIFIED, BOLTS SHALL HAVE HEXAGONAL NUTS AND SHALL BE PROVIDED WITH CHECK NUTS OR LOCKWASHERS. BEARING CAP BOLTS SHALL HAVE TWO NUTS. ALL OTHER BOLTS SHALL HAVE TWO NUTS OR ONE NUT AND A LOCK WASHER.

PART 3

TOLEDO EXPRESSWAY SYSTEM
MAUMEE RIVER BRIDGE
BR. NO. LU 120R-35
NOTES

TOLEDO LUCAS COUNTY OHIO

SCALE None
MADE ICW DATE 9-7-53
TRCD. LCM DATE 9-30-53
CKD. JT DATE 9-30-53

HOWARD, NEEDLES, TAMMEN & BERGENDOFF
CONSULTING ENGINEERS
KANSAS CITY NEW YORK
810 SHEET 3.5

MICROFILMED
JUL 22 19[illegible]

G. FINISHED CONTACT SURFACES SHALL BE COATED WITH A HOT MIXTURE OF WHITE LEAD AND TALLOW AS SOON AS POSSIBLE AFTER BEING ACCEPTED AND BEFORE REMOVAL FROM THE SHOP. DURING ERECTION THESE SURFACES ARE TO BE THOROUGHLY WASHED OFF WITH SUITABLE NON-CORROSIVE SOLVENTS. OTHER SURFACES SHALL BE PAINTED IN SHOP AND FIELD AS SPECIFIED FOR STRUCTURAL STEEL EXCEPT THAT THE COLOR OF FIELD COATS SHALL BE MACHINERY GRAY. CLEANING OF SURFACES PREPARATORY TO SHOP PAINTING MAY BE BY MEANS OF WIRE BRUSHES, SCRAPERS AND OTHER SUITABLE HAND TOOLS. ALL FINISHED CONTACT SURFACES WHICH ARE NOT FINALLY ASSEMBLED IN THE SHOP SHALL BE ADEQUATELY PROTECTED DURING SHIPMENT BY WRAPPING WITH BURLAP OR CANVAS HELD BY WOOD BATTENS SECURELY WIRED TOGETHER. ALL GREASE HOLES SHALL BE ADEQUATELY PLUGGED FOR SHIPMENT. CAREFUL ATTENTION SHALL BE PAID TO THE PROTECTION OF ALL MACHINERY PARTS DURING SHIPMENT AND WHILE STORED BEFORE ERECTION.

3. MACHINERY FRAMES, GEAR HOUSINGS, BEARINGS AND BUSHINGS.

A. MACHINERY FRAMES AND ALL BEARINGS NOT OTHERWISE SPECIFIED SHALL BE STEEL CASTINGS, THOROUGHLY ANNEALED. CAPS SHALL BE STEEL CASTINGS OF APPROVED FORM, PROPERLY BOLTED. GEAR GUARDS, OR HOUSINGS, OF NEAT FORM AND DESIGN SUITED TO THE MACHINERY TO BE COVERED AND ENCLOSED SHALL BE PROVIDED ON ALL MACHINERY FRAMES, UNLESS OTHERWISE NOTED, SO THAT GEARS AND SIMILAR PARTS SHALL BE COMPLETELY ENCLOSED. GEAR GUARDS SHALL BE MADE OF SHEET METAL, WITH SUITABLE FLANGES AND BRACING MEMBERS TO ASSURE RIGIDITY, RIVETED AND CAULKED OR WELDED, WITH HANDLES FOR REMOVAL, AND WHERE NECESSARY, WITH VENTS AND OIL DRAINS. GEAR GUARDS FOR MAIN MACHINERY FRAMES SHALL BE OIL TIGHT AND SHALL BE ATTACHED TO MACHINERY FRAMES WITH REMOVABLE BOLTS, OR MADE REMOVABLE BY OTHER MEANS IN SUCH A WAY AS TO PROVIDE A TIGHT JOINT, GASKETED WHERE NEEDED, BETWEEN GEAR GUARDS AND FRAMES. THE WEBS OF GEAR GUARDS SHALL FIT INTO SUITABLE GROOVES IN THE CAPS OF BEARINGS, AND GROOVES SHALL BE FITTED WITH GRAPHITED FELT RINGS. BEARINGS SHALL ALSO HAVE FELTED DUST-GUARD RINGS AS SHOWN ON THE PLANS.

B. ALL BEARINGS, EXCEPT AS OTHERWISE APPROVED, SHALL BE PROVIDED WITH BRONZE BUSHINGS. BUSHINGS SHALL BE SCRAPED TO A TRUE FIT SO THAT THE JOURNALS WILL RUN WITHOUT EXCESS FRICTION OR HEATING. ACCESSIBLE LUBRICATING DEVICES SHALL BE PROVIDED FOR ALL BEARINGS; WHERE NOT OTHERWISE SPECIFIED BEARINGS SHALL BE PROVIDED WITH ALEMITE OILING EQUIPMENT OR APPROVED EQUIVALENT. WHERE NECESSARY FOR ACCESSIBILITY, PRESSURE CUPS SHALL BE FILLED THROUGH APPROVED BRASS PIPES. GREASE DUCTS SHALL BE LOCATED SO THAT THE LUBRICANT WILL TEND TO FLOW BY GRAVITY TOWARD THE BEARING SURFACE. ALL NECESSARY GROOVES FOR ADEQUATE DISTRIBUTION OF THE LUBRICANT SHALL BE PROVIDED. GROOVES SHALL BE MACHINE CUT AND SHALL BE SMOOTH WITH ROUNDED CORNERS.

C. ALL SHAFTS, GEARS AND PINIONS AND OTHER PARTS SUPPORTED BY MACHINERY FRAMES SHALL BE ASSEMBLED AND ADJUSTED IN THE SHOP IN THEIR SEVERAL FRAMES, TESTED BY OPERATION, AND SHIPPED TO THE FIELD READY TO BE SET INTO PLACE. EACH ASSEMBLY SHALL BE OPERATED CONTINUOUSLY FOR A PERIOD OF NOT LESS THAN FOUR HOURS IN THE SHOP BEFORE SHIPMENT; THE SPEED OF OPERATION SHALL BE NOT LESS THAN THAT OF THE ASSEMBLY UNDER NORMAL BRIDGE OPERATION.

4. MACHINERY GEARS, PINIONS AND RACKS.

A. ALL GEARS, PINIONS AND RACKS SHALL HAVE CUT TEETH OF THE INVOLUTE TYPE. UNLESS OTHERWISE SHOWN ON THE PLANS OR CONSTITUTING INTEGRAL PARTS OF SPECIFIED STANDARD MANUFACTURED ASSEMBLIES, ALL TEETH OF GEARS AND PINIONS SHALL HAVE 20-DEGREE OBLIQUITY. THE GEARS AND PINIONS IN THE MAIN MACHINERY FRAMES, EXCEPT G5 AND P5, SHALL HAVE TEETH OF THE HERRINGBONE TYPE WITH 20-DEGREE PRESSURE ANGLE AND 30-DEGREE HELIX ANGLE. ALL OTHER GEARS AND PINIONS SHALL HAVE TEETH OF THE SPUR TYPE. ALL GEARS AND PINIONS SHALL HAVE THE PITCH LINES SCRIBED ON BOTH ENDS OF THE TEETH. PINIONS SHALL BE OF FORGED STEEL, SHALL HAVE THEIR TEETH CUT FROM SOLID METAL AND SHALL BE FORGED INTEGRAL WITH SHAFTS EXCEPT AS SHOWN OTHERWISE. GEARS SHALL BE OF STEEL CASTINGS UNLESS OTHERWISE SPECIFIED. UNLESS OTHERWISE NOTED, GEARS AND PINIONS SHALL HAVE A PRESS FIT ON THEIR SHAFTS AND SHALL BE KEYED THERETO. OPERATING RACKS SHALL BE STEEL CASTINGS.

B. IN ORDER TO REDUCE THE NOISE OF OPERATION TO A MINIMUM THE GEARS SHALL BE ASSEMBLED IN THE SHOP ON THEIR SHAFTS WITH THEIR KEYS IN PLACE AND EACH SHAFT ASSEMBLY BALANCED FOR ANY POSITION OF ROTATION OF THE SHAFT. EACH INDIVIDUAL UNIT SHALL BE SIMILARLY BALANCED. GEARS SHALL BE SO CAST THAT COMPENSATION CAN BE OBTAINED AFTER ASSEMBLING. THE HOLES IN THE HUBS OF GEARS AND PINIONS SHALL BE BORED CONCENTRIC WITH THE PITCH CIRCLE AND, UNLESS OTHERWISE SPECIFIED, SO AS TO GIVE A PRESS FIT ON THE SHAFT. PARTS SHALL BE PROPERLY KEYED TO THE SHAFT AS SHOWN BY THE PLANS, OR ACCORDING TO GOOD PRACTICE WHERE NOT SHOWN.

5. MACHINERY COUPLINGS.

COUPLINGS SHALL BE OF THE TYPES AND SIZES SHOWN ON THE PLANS. EXCEPT AS NOTED OTHERWISE, COUPLINGS SHALL HAVE PRESSED FITS ON THEIR SHAFTS. COUPLINGS SHALL IN ALL CASES BE FITTED TO THEIR SHAFTS IN THE SHOP, THE COUPLINGS OR PARTS OF THEM AFTER MANUFACTURE BEING SHIPPED TO THE MANUFACTURER OF THE SHAFTS AS NECESSARY TO ACCOMPLISH THIS.

6. SHAFTS AND PINS FOR MACHINERY.

SHAFTS AND PINS 6 IN. DIAMETER OR LESS MAY BE COLD-FINISHED STEEL OR FORGED STEEL. SHAFTS AND PINS LARGER THAN 6 IN. DIAMETER SHALL BE FORGED STEEL. COLD-FINISHED STEEL SHALL CONFORM TO A.S.T.M. SPECIFICATIONS FOR COLD-FINISHED CARBON-STEEL BARS AND SHAFTING, DESIGNATION A108-52TAND SHALL BE OPEN HEARTH CARBON STEEL, GRADE 1040. COLD-FINISHED SHAFTING SHALL BE HEAT TREATED TO PROVIDE A YIELD POINT OF NOT MORE THAN 65,000 P.S.I. FORGED STEEL SHALL CONFORM TO A.S.T.M. SPECIFICATIONS FOR CARBON-STEEL FORGINGS, DESIGNATION A235-52T AND SHALL BE CLASS F NORMALIZED AND TEMPERED. ALL SHAFTS AND PINS SHALL BE STRAIGHT, TRUE TO GAGE AND FINISHED THROUGHOUT THEIR LENGTHS, BY POLISHING COLD-FINISHED STEEL AND BY TURNING AND POLISHING FORGED STEEL. JOURNALS SHALL HAVE ACCURATE MACHINE FINISH AND SHALL BE POLISHED. UNLESS OTHERWISE REQUIRED, JOURNALS SHALL BE TURNED WITH SUITABLE FILLETS. COLD-ROLLED SHAFTING SHALL NOT BE TURNED FOR JOURNALS.

7. BRONZE BUSHINGS FOR MACHINERY.

A. BRONZE BUSHINGS FOR BASCULE TRUNNION BEARINGS SHALL BE OF LUMEN BRONZE AS MANUFACTURED BY THE LUMEN BEARING COMPANY, BUFFALO, NEW YORK, OR APPROVED EQUIVALENT. BRONZE BUSHINGS FOR OTHER BEARINGS SHALL BE ALLOY C BRONZE, CONFORMING TO THE REQUIREMENTS OF TENTATIVE SPECIFICATIONS FOR BRONZE CASTINGS FOR BRIDGES AND TURNTABLES, A.S.T.M. DESIGNATION B22-51.

B. FOR THE BRONZE BUSHINGS THE MANUFACTURER SHALL MAKE THE FOLLOWING ANALYSES AND TESTS IN THE PRESENCE OF THE ENGINEER'S REPRESENTATIVE AND REPORT THE SAME TO THE ENGINEER. FOR EACH MELT HE SHALL MAKE A COMPLETE ANALYSIS WHICH SHALL BE FROM THE COMPRESSION TEST COUPON. FOR EACH MELT HE SHALL MAKE NOT LESS THAN ONE COMPRESSION TEST AND SHALL REPORT THE LOAD WHICH PRODUCES A PERMANENT SET OF 0.001 IN. AND ALSO THE PERMANENT SET IN ONE INCH UNDER A LOAD OF 50,000 LB PER SQ. IN. FOR BASCULE TRUNNION BEARINGS. SUCH A TEST SHALL BE MADE FOR EACH CASTING HAVING A FINISHED WEIGHT OVER 100 LBS. FOR EACH MELT HE SHALL MAKE AT LEAST ONE HARDNESS TEST OF THE FINISHED CASTINGS BY THE BRINNELL BALL METHOD. SUCH A TEST SHALL BE MADE FOR EACH BASCULE TRUNNION BEARING. ALL BUSHING CASTINGS SHALL BE SOUND, CLEAN AND FREE FROM BLOW HOLES, POROUS PLACES, CRACKS AND OTHER DEFECTS.

8. MACHINERY -- RACK SETTING

THE RACKS SHALL BE SET AND BOLTED INTO PLACE IN THE SHOP. THE RACK SHALL BE SET BY MEANS OF A METAL TEMPLATE WHICH SHALL BE PROVIDED WITH A HUB FITTING THE TRUNNION HOLE AND EXTENDING TO THE RACK SO THAT THE PITCH LINE MAY BE SET TO CORRECT RADIUS AT BOTH ENDS OF THE RACK TEETH. AFTER THE RACK IS SET TO CORRECT RADIUS WITH THE SHIMS IN PLACE, THE HOLES CONNECTING THE RACK SEGMENTS TO THE STRUCTURAL PARTS SHALL BE DRILLED FOR DRIVING FIT TURNED BOLTS. RACKS AND SHIMS SHALL BE MATCH-MARKED IF SHIPPED SEPARATELY.

9. INSTALLATION OF MACHINERY.

A. THE MACHINERY FRAMES CARRYING MACHINERY ASSEMBLIES AND ALL OF THE INDIVIDUAL BEARINGS AND MACHINERY PARTS INCLUDING THE LOCK ASSEMBLIES AND THE MOTORS SHALL BE ASSEMBLED IN THE FIELD AND ADJUSTED TO PROPER ELEVATION AND ALIGNMENT ON THE SUPPORTING STEEL PARTS, BY USE OF FULL LENGTH STEEL SHIMS, AND THE HOLES FOR CONNECTION TO THE STEELWORK SHALL BE DRILLED WHILE THE PARTS ARE THUS ASSEMBLED. IF ANY SMALL SIZED PLACEMENT HOLES ARE PROVIDED TO AID IN FIELD ALIGNMENT OF MACHINERY, THEY SHALL BE REAMED TO FIT THE PERMANENT BOLTS AFTER ALL OTHER HOLES HAVE BEEN DRILLED AND THEIR BOLTS PLACED.

B. THE FINAL ADJUSTMENT OF MACHINERY SHALL NOT BE MADE UNTIL THE BASCULE SPAN IS IN PLACE AND FULLY LOADED WITH ALL DEAD LOAD INCLUDING THE COUNTERWEIGHTS. AT THAT TIME, THE PINIONS ENGAGING THE RACKS SHALL BE ADJUSTED BY RAISING OR LOWERING BY THE ADDITION OR REMOVAL OF SHIMS SO AS TO BRING THE PITCH CIRCLES SCRIBED ON THE PINIONS EXACTLY TO MEET THE PITCH CIRCLES SCRIBED ON THE RACKS. THE OTHER BEARINGS AND OTHER MACHINERY PARTS SHALL THEN BE ADJUSTED TO CORRESPOND TO THE CORRECTED POSITION OF THESE OPERATING PINIONS BY ADDING OR REMOVING SHIMS. THE INSTALLATION AND ADJUSTMENT OF ALL MACHINERY SHALL BE BY COMPETENT MACHINISTS EXPERIENCED IN THIS CLASS OF WORK AND THEY SHALL BE PROVIDED WITH ALL NECESSARY GAUGES, STRAIGHTEDGES AND OTHER INSTRUMENTS OF PRECISION TO INSURE ACCURATE INSTALLATION.

C. THE CONTRACTOR SHALL FURNISH GREASE, OIL, AND ALL ACCESSORIES NECESSARY FOR SATISFACTORY OPERATION. ALL GREASES AND OILS SHALL MEET THE APPROVAL OF THE ENGINEER. TEETH OF RACKS AND OF ALL GEARS AND PINIONS EXCEPT THOSE USED FOR OPERATION OF LIMIT SWITCHES AND SELSYNS SHALL BE CLEANED AND DRESSED WITH AN APPROVED TACKY GEAR COMPOUND SIMILAR TO TEXACO CRATER COMPOUND NO. 5. THE LUBRICANT USED IN MAIN TRUNNION BEARINGS SHALL BE DESIGNED FOR HEAVY PRESSURE.

10. MACHINERY ALTERNATES.

WHERE PARTS OR PRODUCTS ARE SPECIFIED BY REFERENCE TO MANUFACTURER OR TRADE NAME ALTERNATE PRODUCTS ACCEPTABLE TO THE ENGINEER MAY BE USED.

11. LUBRICATION OF MACHINERY.

ALL BEARINGS OF DRIVE MACHINERY AND TRUNNIONS SHALL BE PROVIDED WITH 2-OZ. AUTOMATIC PRESSURE CUPS, ALEMITE NO. G-43570 OR EQUAL. LINE SHAFT BEARINGS OF CENTER LOCKS SHALL BE PROVIDED WITH 1-OZ. AUTOMATIC PRESSURE CUPS, NO. G-43530. OTHER BEARINGS REQUIRING GREASE FITTINGS SHALL BE PROVIDED WITH GIANT BUTTON HEAD FITTINGS OR OTHERS AS REQUIRED.

12. MACHINERY - TIME OF OPERATION.

FOR NORMAL OPENING OF 82 DEGREES.

1. FOR ELECTRIC OPERATION ABOUT 1-1/2 MINUTES.
2. FOR GASOLINE ENGINE OPERATION ABOUT 10 MINUTES

13. PAINTING MACHINERY.

SURFACES OF MACHINERY PARTS, EXCEPT AS OTHERWISE HEREIN PROVIDED, SHALL BE PAINTED ONE COAT IN THE SHOP AND TWO COATS IN THE FIELD. PAINT AND PAINTING SHALL CONFORM TO THE REQUIREMENTS ELSEWHERE SPECIFIED FOR STRUCTURAL STEEL, EXCEPT THAT THE PAINT FOR THE TWO FIELD COATS FOR MACHINERY ENCLOSED IN THE BASCULE PIERS SHALL BE APPROVED GLYCERYL PHTHALATE MACHINERY PAINT. THE FIRST COAT SHALL BE A MACHINERY FINISH, LIGHT TAN, AND THE SECOND COAT A MACHINERY FINISH, BRIGHT YELLOW. THE PAINT SHALL BE APPLIED BY BRUSHING. SPRAY APPLICATION WILL NOT BE PERMITTED.

14. PAYMENT FOR MACHINERY.

PAYMENT FOR THE MACHINERY WILL BE MADE AT THE CONTRACT UNIT PRICE PER POUND BID FOR THE ITEM OF "MACHINERY", WHICH PAYMENT WILL PROVIDE FULL COMPENSATION FOR ALL OF THE MACHINERY AND APPURTENANT PARTS EXCEPT SUCH PARTS AS ARE EXPLICITLY INDICATED AS BEING PAID FOR IN ANOTHER ITEM. THE ITEM OF "MACHINERY" INCLUDES SUCH PARTS AS THE RACKS ATTACHED TO BASCULE GIRDERS, ALL OTHER RACKS, MACHINERY FRAMES, COUPLINGS, SHAFTS, KEYS, GEARS, PINIONS, BEARINGS, GREASECUPS, TAIL LOCKS, SHIMS WITHIN MACHINERY PARTS, GEAR GUARDS, MACHINERY COVERS AND HOUSINGS, DRUMS, CLUTCHES AND CLUTCH SHIFTING MECHANISMS, HAND RELEASE AT GASOLINE ENGINE FOR ONE MOTOR BRAKE, THE SPAN LOCKS COMPLETE, PARTS OF ROADWAY GATES, CENTER POSTS FOR GATES, LIVE LOAD ANCHOR SCREWS AND CASTINGS, ALUMINUM SCALES AND POINTERS FOR SPAN POSITION INDICATOR, AND BOLTS FOR CONNECTING THESE MACHINERY PARTS TO EACH OTHER AND TO THEIR SUPPORTS.

THE BID PRICE PER POUND INCLUDES PAYMENT FOR ALL SHOP AND FIELD PAINTING OF THE MACHINERY.

THE PAYMENT PER POUND WILL BE BASED ON SCALE WEIGHTS OF THE FINISHED MATERIAL, EXCLUDING WRAPPINGS, CRATES OR OTHER TEMPORARY PARTS.

TRUNNION SHAFTS AND BEARINGS

1. TRUNNION SHAFTS AND BEARINGS.

A. TRUNNION SHAFTS SHALL BE OF FORGED STEEL AND SHALL CONFORM TO THE REQUIREMENTS ELSEWHERE GIVEN FOR MACHINERY SHAFTS. THE JOURNALS SHALL HAVE A CAREFULLY GROUND FINISH AND SHALL BE HIGHLY POLISHED. THE SHAFTS SHALL HAVE A SHOP SHRINKAGE FIT IN THE GIRDERS WHICH MAY BE MADE BY COOLING THE SHAFTS TO THE REQUIRED TEMPERATURE BY PACKING IN DRY ICE AND THEN INSERTING THEM IN THE GIRDERS, OR BY OTHER APPROVED MEANS. BEARINGS SHALL BE OF CAST STEEL. BUSHINGS SHALL BE OF LUMEN BRONZE, OR EQUAL, AND SHALL CONFORM TO REQUIREMENTS ELSEWHERE GIVEN FOR MACHINERY BUSHINGS.

B. IN THE SHOP, EACH PAIR OF BEARINGS SHALL BE ASSEMBLED, ALIGNED AND ADJUSTED TO CORRECT RELATIVE POSITION HORIZONTALLY AND VERTICALLY WITH THEIR SHAFT PLACED IN THEM (BEFORE THE SHAFT IS INSERTED IN THE GIRDER) ON A STEEL TEMPLATE, AND HOLES SHALL BE DRILLED THROUGH THE PLATE CORRESPONDING TO THE HOLES FOR BOLTS IN THE BEARINGS. A SEPARATE PLATE SHALL BE USED FOR EACH PAIR OF BEARINGS. THE PLATE SHALL BE SOMEWHAT LONGER THAN THE TOTAL DIMENSIONS OUT TO OUT OF BEARINGS AND SHALL HAVE PROPERLY SCRIBED ON IT THE CENTER LINE OF THE SHAFT AND THE CENTER LINE OF THE GIRDER. BEFORE THE HOLES ARE DRILLED IN THE STEEL PLATE THE CLEARANCE BETWEEN THE SHAFT AND ITS BEARINGS ALONG EACH SIDE OF THE SHAFT AND AT ITS ENDS SHALL BE MEASURED BY FEELERS TO VERIFY THE ALIGNMENT OF THE SHAFT IN ITS BEARINGS AND TO DEMONSTRATE THAT THE CLEARANCES PROVIDED COMPLY WITH THE REQUIREMENTS. THESE MEASUREMENTS SHALL BE MADE IN THE PRESENCE OF AN INSPECTOR. SHAFTS, BEARINGS AND TEMPLATES SHALL BE MATCH-MARKED.

C. AFTER THE SUPPORTING STEELWORK HAS BEEN ERECTED AND FULLY RIVETED AND THE TRUNNION SUPPORTS HAVE BEEN CONCRETED IN PLACE, THE STEEL TEMPLATES SHALL BE PLACED ON THE BEARING SUPPORTS AND CAREFULLY ALIGNED VERTICALLY, TRANSVERSELY AND LONGITUDINALLY. THE FOUR TEMPLATES FOR EACH LEAF SHALL BE SET IN TRUE LINE EXACTLY AT RIGHT ANGLES TO THE CENTERLINE OF BRIDGE AND BROUGHT TO EXACT ELEVATION BY THE USE OF FULL SIZE SHIMS. TRUNNION BEARINGS SHALL BE SET AND ADJUSTED SO AS TO COMPENSATE FOR UNEQUAL DEFLECTION BETWEEN THE DIFFERENT TYPES OF TRUNNION SUPPORT.. THE DISTANCE BETWEEN THE CENTER LINES OF TRUNNIONS ON THE TWO LEAVES SHALL BE CAREFULLY DETERMINED BY REPEATED MEASUREMENTS, WITH PROPER CORRECTIONS FOR TEMPERATURE, SO THAT THE CLEARANCE AT CENTER OF SPAN WILL BE AS SHOWN ON THE PLANS. THE BOLT HOLES IN SUPPORTING STEELWORK SHALL THEN BE DRILLED THROUGH THE TEMPLATES, AND THE BEARINGS PLACED IN POSITION AND BOLTED DOWN. THE ACCURACY OF THE SETTING OF EACH PAIR OF TRUNNION BEARINGS SHALL BE VERIFIED WITH A STEEL STRAIGHTEDGE AT LEAST 8 FEET LONG, AND ANY INEQUALITIES SHALL BE CORRECTED. THE BUSHINGS SHALL THEN BE PROPERLY GREASED, THE GIRDER WITH ITS TRUNNION SHAFT SET IN PLACE, AND FINALLY THE TENSION TIE AT THE TOP OF THE TRUNNION SUPPORT SHALL BE RIVETED. THE STEEL TEMPLATES WILL BE CONSIDERED AS ERECTION MATERIAL AND NO DIRECT PAYMENT WILL BE MADE FOR THEM.

D. TRUNNIONS AND BEARINGS INCLUDES ALL METAL OF THE TRUNNION SHAFTS, BEARINGS, KEEPER NUTS, END PLATES ON BEARINGS AND BOLTS FOR CONNECTING BEARINGS TO THEIR SUPPORTS AND WILL BE PAID FOR AT THE CONTRACT UNIT PRICE PER POUND BID FOR TRUNNIONS AND BEARINGS. THE PAYMENT PER POUND WILL BE BASED ON SCALE WEIGHTS OF THE FINISHED MATERIAL, EXCLUDING WRAPPINGS, CRATES OR OTHER TEMPORARY PARTS.

STANDBY POWER UNITS

1. STANDBY POWER UNITS.

A. GASOLINE ENGINES AND REVERSING UNITS MOUNTED ON A COMMON BASE, EARLE GEAR UNIT 3AD OR EQUAL. GASOLINE ENGINE SHALL BE A HERCULES GASOLINE POWER UNIT, MODEL JXC OR EQUAL, CLOSED TYPE, 6 CYLINDER, 4-1/4" STROKE, 282 CU. IN. DISPLACEMENT, RATED FOR INTERMITTENT SERVICE AND 85% OF STANDARD RATING 47 H.P. AT 1400 R.P.M. GOVERNED SPEED. REVERSING UNIT TO HAVE A REDUCTION RATIO OF 3 TO 1. CONTRACTOR SHALL FURNISH COMPLETE DETAIL WORKING DRAWINGS OF THE REVERSING UNIT; PROVIDE DIRECTIONAL SIGNS: "RAISE", "NEUTRAL" AND "LOWER" AT REVERSE LEVER; PROVIDE CAM ON REVERSE LEVER TO OPERATE DEVICES 99R AND 99L AND PROVIDE SUPPORTS FOR THESE TWO DEVICES; EXTEND THROTTLE TO OPERATOR'S POSITION AS SHOWN ON THE PLANS.

B. SILENT CHAIN DRIVES SHALL BE PROVIDED IN ACCORDANCE WITH THE DETAILS SHOWN ON THE PLANS. EACH ENGINE SHALL BE FURNISHED COMPLETE WITH GOVERNOR, FUEL PUMP, WATER PUMP, CARBURETOR, FAN, RADIATOR, CLUTCH, MAGNETO, ELECTRIC STARTER, ENGINE HOOD, EXHAUST PIPING AND MUFFLER, CONTROL PANEL WITH GAS AND SPARK LEVERS, IGNITION SWITCH, STARTER BUTTON AND OIL PRESSURE GAGE, GASOLINE TANK AND ALL ACCESSORIES REQUIRED FOR SUCCESSFUL OPERATION. PROVISION SHALL BE MADE FOR EASILY STARTING THE ENGINES BY HAND CRANKING. ONE 115-AMPERE-HOUR STORAGE BATTERY WITH BATTERY CHARGING UNITS EQUAL TO GENERAL ELECTRIC COPPER OXIDE OR WESTINGHOUSE RECTOX SHALL BE PROVIDED FOR EACH ENGINE.

C. PAYMENT FOR THE STANDBY POWER UNITS, INCLUDING THE GASOLINE ENGINES AND ALL ACCESSORIES LISTED ABOVE, INCLUDING REVERSING UNITS, SILENT CHAIN DRIVES, BATTERIES, ETC., COMPLETELY INSTALLED, TESTED AND IN OPERATING CONDITION, WILL BE MADE AT THE CONTRACT LUMP SUM PRICE BID FOR "STANDBY POWER UNITS".

ELECTRICAL EQUIPMENT

1. SCOPE OF ELECTRICAL EQUIPMENT ITEM.

THIS ITEM INCLUDES ALL OF THE ELECTRICAL EQUIPMENT FOR THIS BRIDGE EXCEPT FOR THE ROADWAY LIGHTING SYSTEM. THAT PART OF THE ROADWAY LIGHTING SYSTEM INCLUDED IN THE CONTRACT FOR THIS PROJECT IS PAID FOR IN A SEPARATE ITEM AND THE DESCRIPTIVE TEXT THEREFOR IS PROVIDED ELSEWHERE IN THESE NOTES.

2. GENERAL REQUIREMENTS FOR ELECTRICAL EQUIPMENT.

A. A SCHEMATIC WIRING DIAGRAM SHOWING IN GENERAL THE ARRANGEMENT AND EQUIPMENT REQUIRED IS SHOWN ON THE PLANS. THIS SHALL BE CONSIDERED ONLY AS ILLUSTRATIVE AND SUBJECT TO THE APPROVAL OF THE ENGINEER; THE CONTRACTOR SHALL MODIFY IT AS NECESSARY TO COMPLY WITH THE SEQUENCES OF OPERATIONS, PROTECTIVE FEATURES, INTERLOCKING AND THE OTHER REQUIREMENTS INDICATED ON THE PLANS AND IN THE SPECIFICATIONS, AND SHALL FURNISH AND INSTALL ALL EQUIPMENT NECESSARY FOR THE SATISFACTORY OPERATION OF THE ELECTRICAL APPARATUS AND FOR THE COMPLETE OPERATION OF THE SPAN WHETHER SPECIFICALLY MENTIONED OR NOT.

B. ALL ELECTRICAL MATERIAL, CONSTRUCTION AND INSTALLATION SHALL MEET THE REQUIREMENTS OF THE NATIONAL ELECTRIC CODE AND SHALL CONFORM TO ALL LOCAL AND SPECIAL LAWS OR ORDINANCES GOVERNING SUCH INSTALLATION, AND TO THE SPECIAL REQUIREMENTS HEREIN SET FORTH.. WHERE THESE REQUIREMENTS DO NOT GOVERN AND WHERE NOT OTHERWISE SPECIFIED, ELECTRICAL EQUIPMENT SHALL CONFORM TO THE STANDARDIZATION RULES OF THE AMERICAN INSTITUTE OF ELECTRICAL ENGINEERS.

C. INSOFAR AS PRACTICABLE, ALL MAJOR ITEMS OF ELECTRICAL EQUIPMENT THROUGHOUT SUCH AS MOTORS, CONTROL, ETC., SHALL CONSIST OF PRODUCTS OF THE SAME MANUFACTURER IN ORDER TO SECURE SINGLE RESPONSIBILITY AND MOST SATISFACTORY SERVICE. UNLESS SPECIFICALLY NOTED OTHERWISE, ALL ELECTRICAL EQUIPMENT SHALL BE EQUAL TO THE BEST GRADE OF THAT PARTICULAR TYPE OF EQUIPMENT AS MANUFACTURED BY THE GENERAL ELECTRIC COMPANY, THE WESTINGHOUSE ELECTRIC AND MANUFACTURING COMPANY, OR ALLIS CHALMERS MANUFACTURING COMPANY.

D. IN ORDER TO PREVENT DETERIORATION DUE TO CORROSION, ALL BOLTS, NUTS, STUDS, PINS, SCREWS, TERMINALS, SPRINGS AND SIMILAR FASTENINGS AND FITTINGS SHALL BE, WHERE PRACTICABLE, OF AN APPROVED CORROSION-RESISTING MATERIAL SUCH AS BRASS OR BRONZE, OR OF A MATERIAL TREATED IN AN APPROVED MANNER TO RENDER IT ADEQUATELY RESISTANT TO CORROSION. HOT-DIP GALVANIZING AS ELSEWHERE SPECIFIED SHALL BE CONSIDERED SUCH APPROVED TREATMENT.

E. THE CONTRACTOR SHALL MAKE ALL USUAL TESTS AND SHALL OPERATE THE BASCULE LEAVES AS MAY BE REQUIRED TO PROPERLY BALANCE THE LEAVES AND COUNTERWEIGHTS, DEMONSTRATE THAT ALL INTERLOCKING AND OPERATING DEVICES ACT IN THE PRESCRIBED MANNER, AND ASSURE SMOOTH AND RAPID ACCELERATION OF THE LEAVES SO THAT THE MINIMUM AND MAXIMUM TORQUES WILL NOT DIFFER BY MORE THAN 10% FROM THE AVERAGE TORQUE REQUIRED FOR UNIFORM ACCELERATION OF THE LEAVES AGAINST ALL RESISTANCES.

3. ELECTRIC POWER LINE, TRANSFORMERS AND ACCESSORIES.

A. POWER FOR THE BRIDGE WILL BE OBTAINED FROM EACH SIDE OF THE RIVER. THE CONTRACTOR SHALL CONSTRUCT A CONCRETE MANHOLE AT THE SOUTHWEST CORNER OF THE SOUTH ABUTMENT AND AT THE SOUTHWEST CORNER OF THE RAMP X ABUTMENT FOR SPLICING THE POWER CABLES. A 15-KV, 3-WIRE PRIMARY LINE CONSISTING OF THREE INSULATED PHASE CONDUCTORS FOR THE FEEDER SHALL BE INSTALLED BY THE CONTRACTOR FROM EACH OF THESE MANHOLES THROUGH 3 IN. METAL CONDUIT LOCATED UNDER THE BRIDGE DECK TO THE RESPECTIVE BASCULE PIER, THENCE IN CONDUIT TO THE 15 KV METAL CLAD FUSED INTERRUPTER UNIT IN THAT PIER. IN THE TRANSFORMER ROOM OF EACH BASCULE PIER THE PRIMARY SHALL BE FUSED FOR BRIDGE OPERATION REQUIREMENTS. THE SERVICE WILL BE CONNECTED (THROUGH SWITCHES, FUSES, TRANSFORMERS AND OTHER APPARATUS INDICATED ON THE PLANS) TO METERING TRANSFORMERS. FROM THE INTERRUPTER UNITS AND SWITCHING APPARATUS THE CIRCUIT SHALL BE CARRIED TO THE RESPECTIVE 500-KVA TRANSFORMER BANK. INITIAL SUPPLY FROM SOUTH ABUTMENT TO PIER 4 WILL BE 4160 VOLTS AND FROM RAMP X ABUTMENT TO NEAR SIDE PIER 5 WILL BE 7200 VOLTS. BOTH SERVICES WILL BE FOR FUTURE 12,470 VOLT OPERATION.

B. THE CONTRACTOR SHALL PROVIDE A THREE PHASE CAPACITOR AT THE SECONDARY OF EACH MAIN TRANSFORMER BANK TO CORRECT REACTIVE KVA. EACH TRANSFORMER SHALL HAVE A 15 KVA CAPACITOR, ENCLOSED, ASKAREL FILLED AND OF SUITABLE WORKING VOLTAGE FOR 480 VOLTS RMS. CONDUCTORS SHALL BE OF SIZE RECOMMENDED BY THE N.E.C.

C. ALL CONDUIT, PULL BOXES, JUNCTION BOXES, SUPPORTS, AND ACCESSORIES IN THE BASCULE PIERS AND ON THE BRIDGE, OUT TO THE MANHOLES BEYOND THE SOUTH ABUTMENT AND THE RAMP X ABUTMENT, SHALL BE FURNISHED AND INSTALLED BY THE CONTRACTOR. THE 15-KV PRIMARY CABLES FROM THE TOLEDO EDISON COMPANY POLES WILL BE SPLICED IN THE MANHOLES NEAR THE ABUTMENTS BY THE TOLEDO EDISON COMPANY. THE PRIMARY CABLES THROUGH THE BRIDGE CONDUIT SYSTEM TO THE POTHEADS IN BASCULE PIERS WILL BE FURNISHED AND INSTALLED BY THE CONTRACTOR. ALL POWER WIRING ON THE LOAD SIDE OF THESE POTHEADS SHALL BE PROVIDED BY THE CONTRACTOR.

D. POTHEADS ON THE INCOMING SERVICES IN BASCULE PIERS WILL BE 15-KV, SINGLE CONDUCTOR, AND WILL BE APPROVED BY OTHERS. THEY SHALL BE MOUNTED, IN AN APPROVED LOCATION AND MANNER, BY THE CONTRACTOR.

E. THE INDOOR METAL-CLAD SWITCHGEAR UNITS SHALL BE MOUNTED IN ROOM D OF EACH BASCULE PIER. EACH UNIT SHALL BE IN A SINGLE BAY, OF 11-GAUGE SHEET STEEL, WITH FINISH COAT TO RESIST DAMPNESS, SCRATCHING, ABRASION AND CHECKING, FREE STANDING AND CONTAINING A FUSED INTERRUPTER SWITCH, WITH INTERPHASE AND END BARRIERS. THE HINGED DOUBLE DOORS OVER THE FUSE COMPARTMENT SHALL BE INTERLOCKED SO THAT THE DOORS CANNOT BE OPENED WHILE THE SWITCH IS CLOSED AND THE SWITCH CANNOT BE CLOSED WHILE THE DOORS ARE OPENED.

F. THE T.P. INTERRUPTER SWITCHES SHALL BE EQUAL TO S & C CAT. #34432, 15KV, 400 AMP. CONTINUOUS RATING, 400 AMP. INTERRUPTING RATING, TYPE PCS-CMC, FUSED ALDUTI INTERRUPTER SWITCH AS MANUFACTURED BY S & C ELECTRIC CO., CHICAGO 40, ILLINOIS. THE FUSE HOLDERS SHALL BE EQUAL TO S & C CAT. #86502, 15 KV, 400 E AMPERE MAXIMUM TYPE SMPM WITH INTERRUPTING CAPACITY OF 180,000 KVA AT 2400/4160 VOLTS, 261,000 KVA AT 7200 VOLTS AND 405,000 KVA AT 7200/12,470 VOLTS. FUSE UNITS RATED AT 100 E AMPERES SHALL BE INSTALLED FOR 4160 VOLT INITIAL OPERATION IN PIER 4 AND FUSE UNITS RATED AT 65 E AMPERES SHALL BE INSTALLED FOR 7200 VOLT INITIAL OPERATION IN PIER 5. THE 15 KV, 100 E AMPERE FUSE UNITS SHALL BE EQUAL TO S & C #132150, TYPE SM, AND THE 15 KV, 65 E AMPERE FUSE UNITS SHALL BE EQUAL TO S & C 132100, TYPE SM.

G. METERING TRANSFORMERS WILL BE FURNISHED BY OTHERS AND SHALL BE INSTALLED BY THE CONTRACTOR. THE CURRENT TRANSFORMERS WILL BE THREE PER CIRCUIT. ADEQUATE BARRIERS SHALL BE PROVIDED BETWEEN CURRENT TRANSFORMERS, HAVING NOT LESS THAN 6-IN. OVERLAP ALL AROUND. POTENTIAL TRANSFORMERS WILL BE 2400/120 VOLTS AND 7200/120 VOLTS, 60 CYCLE, WITH FUSES, DRY TYPE UNIT TWO PER CIRCUIT.

H. DISTRIBUTION TRANSFORMERS SHALL BE FURNISHED AND INSTALLED BY THE CONTRACTOR. TRANSFORMERS IN THE TWO MAIN 3-PHASE BANKS SHALL EACH BE 167 KVA, SINGLE PHASE, 60 CYCLE, OIL-IMMERSED SELF-COOLED POLE TYPE, AND WITH HIGH VOLTAGE WINDING RATED AT 2400/7200/12470 Y VOLTS FOR THE SOUTH PIER AND 7200/12470 Y VOLTS FOR THE NORTH PIER WITH TWO 5% TAPS BELOW AND A LOW VOLTAGE WINDING RATED AT 240/480 VOLTS. TRANSFORMER FOR LIGHTING AND CONTROL SHALL BE 15 KVA, SINGLE PHASE, 60 CYCLE, DISC POLE TYPE, WITH HIGH VOLTAGE WINDING RATED AT 480 VOLTS AND A LOW VOLTAGE WINDING RATED AT 120/240 VOLTS. ONE IS REQUIRED.

I. THE METERING TRANSFORMERS MENTIONED ABOVE, THE SECONDARY METER LEADS (FROM TRANSFORMER TO INSTRUMENTS) AND THE METAL PANELS FOR MOUNTING THE METERS WILL BE FURNISHED BY OTHERS AND SHALL BE INSTALLED BY THE CONTRACTOR. THE METERING INSTRUMENTS WILL BE FURNISHED, INSTALLED AND CONNECTED BY OTHERS. THE SECONDARY METER LEADS WILL BE CONNECTED TO THE CURRENT AND POTENTIAL TRANSFORMERS BY OTHERS. THE CONTRACTOR SHALL FURNISH AND INSTALL TWO 1-1/2 IN. CONDUITS FOR CARRYING THE SECONDARY METER LEADS FROM THE METERING TRANSFORMERS TO THE METERING INSTRUMENTS. THE CONTRACTOR SHALL ALSO PROVIDE AT THE METER INSTRUMENT PANEL, SINGLE PHASE, 120 VOLT, 60 CYCLE ENERGY FOR OPERATION OF A DEMAND METER.

J. DETAILED PLANS OF THE EQUIPMENT LAYOUT AND DETAILS OF APPARATUS AND STRUCTURE SHALL BE SUBMITTED TO THE ENGINEER FOR APPROVAL BEFORE ACTUAL CONSTRUCTION IS STARTED.

MICROFILMED
JUL 22 19??

FED. ROAD DIV. NO	STATE	FED. AID PROJ. NO.	TYPE FUNDS
2	OHIO	UI-1052(2)	POST WAR

LUCAS COUNTY
CITY OF TOLEDO
TOLEDO EXPRESSWAY SYSTEM
MAUMEE RIVER BRIDGE
LUC 120R- 3.46

4. MAIN LEAF ELECTRIC MOTORS AND BRAKES.

A. TWO ELECTRIC MOTORS SHALL BE INSTALLED AND PROPERLY CONNECTED WITH THE MACHINERY FOR EACH LEAF OF THE BASCULE SPAN. THESE MOTORS SHALL BE 100 H.P. WOUND ROTOR INDUCTION MOTORS TOTALLY ENCLOSED, 3 PHASE, 60 CYCLE, 440 VOLTS WITH 30 MINUTE 55° C. RISE. MOTORS TO BE GENERAL ELECTRIC TYPE MR FRAME 6325Z OR WESTINGHOUSE TYPE CI FRAME 754-D OR EQUAL WITH 720 R.P.M. SYNCHRONOUS SPEED. 680 R.P.M. APPROXIMATE FULL LOAD SPEED, 767 FT. LBS. FULL LOAD TORQUE AND 2000 FT. LBS. PULL OUT TORQUE. OPERATION CAN BE WITH BOTH MOTORS SIMULTANEOUSLY OR WITH EITHER MOTOR ALONE. FOR SPEED TORQUE CURVES SEE THE PLANS. WHEN SUBJECTED TO THE STANDARD TESTS OF THE AMERICAN INSTITUTE OF ELECTRICAL ENGINEERS, EACH MOTOR SHALL RUN AT RATED FULL LOAD TORQUE FOR THIRTY MINUTES WITHOUT PRODUCING A RISE IN EXCESS OF 55 DEGREES C. IN ANY PART OF THE MOTOR WINDINGS.

B. EACH MOTOR SHALL BE GIVEN COMPLETE TESTS IN ACCORDANCE WITH A.I.E.E. STANDARDS INCLUDING THE DETERMINATION OF POWER FACTOR AND EFFICIENCY AT ONE-HALF, THREE-FOURTHS, AND FULL LOAD, AND IN ADDITION THESE TESTS SHALL DETERMINE THE ABILITY OF THE MOTOR TO MEET THE SPECIFIED REQUIREMENTS FOR TORQUE.

C. FOR EACH BASCULE LEAF THERE SHALL BE PROVIDED FOUR BRAKES, TWO DESIGNATED AS THE MOTOR BRAKES AND TWO AS THE MACHINERY BRAKES. BRAKES SHALL BE SPRING SET THRUSTOR OPERATED, WESTINGHOUSE HI-198 OR GE. CR9516 SIZE 466N OR EQUAL, NORMALLY RATED AT 1200 FT. LBS. CONTINUOUS, 1600 FT. LBS. INTERMITTENT. SET BRAKES IN FACTORY; MACHINERY BRAKES FOR 810 FT. LBS. EACH AND MOTOR BRAKES FOR 1170 FT. LBS. EACH, WITH TIME DELAY SETTING. BRAKES SHALL BE IN NEMA TYPE "B" ENCLOSURES WITH CORROSION RESISTANT FITTINGS. ALL BRAKES SHALL BE FLOOR-MOUNTED AND DESIGNED TO HOLD OFF WHILE THE CURRENT IS ON AND TO APPLY AUTOMATICALLY WHEN THE CURRENT IS OFF. THREE OF THE BRAKES SHALL BE PROVIDED WITH A LEVER FOR RELEASING THE BRAKE BY HAND, AND THIS LEVER SHALL BE PERMANENTLY ATTACHED TO THE BRAKE MECHANISM. THE ARRANGEMENT SHALL BE SUCH THAT ONE MAN CAN OPERATE THE RELEASE EASILY AND RAPIDLY, AND THE RELEASE SHALL NOT BE OF THE ROTATING NUT TYPE. AN ELECTRIC INTERLOCK SHALL BE PROVIDED ON ALL FOUR BRAKES TO FUNCTION IN COMBINATION WITH THE MANUAL RELEASE TO PREVENT POWER BEING APPLIED TO THE DRIVING MOTORS WHEN THE BRAKE IS MANUALLY RELEASED. ALL BRAKES SHALL BE ADJUSTED IN THE SHOP FOR THE TORQUE SHOWN ON THE PLANS.

D. THE CONTRACTOR SHALL PROVIDE A THREE PHASE CAPACITOR AT EACH MAIN MOTOR TO CORRECT THE POWER FACTOR TO 95 TO 98 PER CENT WHILE RUNNING FULL LOAD. THE CAPACITORS SHALL BE 30 KVA, ENCLOSED ASKAREL FILLED, AND OF SUITABLE WORKING VOLTAGE FOR 480 VOLTS RMS. CAPACITORS SHALL BE CONNECTED TO THE MOTOR TERMINALS AND LOCATED IN THE SPACE UNDER THE MOTORS. OVERLOAD ELEMENTS SHALL BE REDUCED TO COMPENSATE FOR REDUCED CURRENTS. CONDUCTORS SHALL BE OF SIZE RECOMMENDED BY THE N.E.C.

E. ALL THRUSTOR MOTORS SHALL HAVE WEATHERPROOF INSULATION EQUAL TO GENERAL ELECTRIC INSULATION NO. 1002 OR WESTINGHOUSE SPECIAL INSULATION NO. 1.

F. EACH MOTOR SHALL HAVE A TAPERED SHAFT EXTENSION TO CARRY THE BRAKE WHEEL FOR THE MOTOR SHAFT. THE BRAKE WHEELS FOR THE MACHINERY BRAKES SHALL BE SHIPPED TO THE MANUFACTURER OF THE MACHINERY WHO SHALL PRESS THEM ON THE SHAFT.

5. ELECTRIC MOTOR FOR CENTER LOCKS.

A. FOR THE CENTER LOCKS, THERE SHALL BE PROVIDED A MOTOR OF THE SIZE, CHARACTER AND MAKE SPECIFIED ON THE PLANS, OR APPROVED EQUIVALENT. MOUNTED ON THE MOTOR FRAME THERE SHALL BE AN APPROVED ENCLOSED TYPE C SPRING-SET MAGNETIC BRAKE OF CAPACITY TO SUIT THE MOTOR USED. THIS BRAKE SHALL BE EQUIPPED WITH SUITABLE HAND RELEASE ELECTRICALLY INTERLOCKED WITH THE LOCK MOTOR CIRCUIT. THE MOTOR SHAFT SHALL BE CONNECTED TO THE SPEED REDUCER. THE OTHER END OF THE SPEED REDUCER SHAFT SHALL BE FITTED WITH A REMOVABLE CRANK FOR EMERGENCY HAND OPERATION.

B. PAYMENT FOR MOTOR, BRAKE, LIMIT SWITCH, CONDUIT, JUNCTION BOXES, WIRING AND ALL ELECTRICAL PARTS OF THE INSTALLATION WILL BE INCLUDED IN THE LUMP SUM PAYMENT FOR ITEM S-25, ELECTRICAL EQUIPMENT..

C. PAYMENT FOR SPEED REDUCER, HAND CRANKS, CHAIN AND SPROCKETS OF LIMIT SWITCH DRIVE, SHAFTING, COUPLINGS, BEARINGS AND COMPLETE LOCK MECHANISMS AND TONGUES AND BOLTS FOR CONNECTING THESE PARTS TO THEIR SUPPORT WILL BE MADE AT THE POUND PRICE FOR MACHINERY.

6. ELECTRICALLY - OPERATED TAIL LOCKS.

A. THERE SHALL BE PROVIDED AT THE COUNTERWEIGHT ENDS OF THE FOUR EXTERIOR GIRDERS, FOUR TAIL LOCKS, TO GIVE POSITIVE ASSURANCE THAT THE BRIDGE, WHEN IN A NORMALLY CLOSED POSITION, WILL NOT OPEN UP FROM ANY CAUSE WHATSOEVER. A TAIL LOCK CONSISTS OF A STEEL STRUT ARRANGED SO THAT ITS UPPER END WILL BEAR AGAINST A BRACKET ON THE GIRDER AND THUS PREVENT DOWNWARD MOVEMENT OF THE REAR END OF THE GIRDER WHEN THE BRIDGE IS CLOSED. A CONNECTING ROD ACTUATED BY A GEARMOTOR AND CRANK IS PROVIDED TO WITHDRAW THE STRUT WHEN A BRIDGE OPENING IS DESIRED.

B. PAYMENT FOR GEARMOTORS, BRAKES, LIMIT SWITCHES, CONDUIT, JUNCTION BOXES, WIRING AND ALL ELECTRICAL PARTS OF THE INSTALLATION WILL BE INCLUDED IN THE LUMP SUM PAYMENT FOR ITEM S-25, ELECTRICAL EQUIPMENT.

C. PAYMENT FOR MOUNTING BRACKETS FOR GEARMOTORS AND LIMIT SWITCHES AND FOR BRACKETS ON GIRDERS WILL BE MADE AT THE POUND PRICE FOR ITEM S-7, STRUCTURAL STEEL. PAYMENT FOR CRANK, CONNECTING ROD AND STRUT WILL BE MADE AT THE POUND PRICE FOR MACHINERY.

7. ELECTRIC GEARMOTORS FOR TAIL LOCKS.

FOR THE TAIL LOCKS LOCATED AT THE EXTERIOR GIRDERS OF EACH LEAF, THERE SHALL BE PROVIDED A GEAR MOTOR OF THE SIZE, CHARACTER AND MAKE SPECIFIED ON THE PLANS, OR APPROVED EQUIVALENT. MOUNTED WITH EACH MOTOR THERE SHALL BE AN APPROVED SPRING-SET MAGNETIC BRAKE OF CAPACITY TO SUIT THE MOTOR USED. EACH GEARMOTOR AND BRAKE SHALL BE SHOP-MOUNTED ON A COMMON BASE. THE CONTROL OF THE TAIL LOCK MOTORS SHALL BE INCORPORATED INTO THE CONTROL OF THE CENTER LOCK MOTOR SO THAT ALL SPAN LOCKS WILL OPERATE SIMULTANEOUSLY FROM THE COMMON CONTROLLER.

8. MASTER ELECTRIC CONTROLLER AND MOTOR RESISTANCE GRIDS.

A. A MASTER CONTROLLER OF THE REVERSING DRUM TYPE SHALL BE PROVIDED FOR OPERATION FOR EACH OF THE TWO LEAVES OF THE BASCULE SPAN. LOW VOLTAGE PROTECTION SHALL BE PROVIDED.

B. THERE SHALL BE NOT LESS THAN EIGHT STEPS IN CUTTING OUT THE RESISTANCE IN THE MAIN MOTOR SECONDARY CIRCUIT AND THESE STEPS SHALL BE SUCH THAT THE MOTOR TORQUE WILL DIFFER AS LITTLE AS PRACTICABLE FROM THE AVERAGE TORQUE REQUIRED FOR UNIFORM ACCELERATION OF THE BRIDGE AGAINST ALL OPERATING RESISTANCE. RESISTANCE GRIDS SHALL BE INSTALLED IN SUCH MANNER AND QUANTITY THAT THE SPAN WILL START SLOWLY AND ACCELERATE SMOOTHLY AND WITHOUT EXCESS TORQUE WHEN UNDER SMALLEST FRICTION CONDITIONS AND WITHOUT WIND OR OTHER EXTRANEOUS UNBALANCED LOADS; AND WILL ACCELERATE SIMILARLY WHEN THE MOTOR IS CARRYING ITS MAXIMUM LOAD. RESISTANCE GRIDS SHALL BE INSTALLED IN STEEL ANGLE FRAMEWORK LOCATED IN ROOM C OF EACH PIER SUSPENDED FROM THE CEILING AND ARRANGED SO THAT ANY UNIT BOX MAY BE REMOVED WITHOUT DISTURBING ANY OTHER BOX. THIS FRAMEWORK SHALL BE PROVIDED AS PART OF THE ELECTRICAL EQUIPMENT AND SHALL BE PAINTED AS ELSEWHERE SPECIFIED FOR STRUCTURAL STEEL.

C. THE DESIRED SPEED TORQUE CURVES ARE SHOWN ON THE PLANS. THE CONTRACTOR SHALL SUBMIT FOR APPROVAL, SPEED TORQUE CURVES BASED ON THE ACTUAL STEPS OF RESISTANCE WHICH HE PROPOSES TO USE. A SEPARATE SET OF RESISTANCE GRIDS SHALL BE FURNISHED FOR EACH MOTOR.

9. ELECTRIC LIMIT SWITCHES AND SPAN POSITION INDICATORS.

A. A SPAN LIMIT SWITCH SHALL BE PROVIDED FOR EACH LEAF WHICH WILL CUT OFF THE CURRENT FROM THE MAIN MOTORS AND SET THE BRAKES SO THAT THE LEAF WILL BE STOPPED BEFORE IT REACHES EITHER THE CLOSED OR THE FULLY OPEN POSITION. THERE SHALL ALSO BE PROVIDED TWO KNEE-OPERATED SPRING OPENING SWITCHES FOR OPERATION, ONE FOR USE WITH EACH LEAF, WHICH, IF HELD CLOSED, WILL BY-PASS THE SPAN LIMIT SWITCH AND THUS ENABLE THE OPERATOR TO CLOSE OR FULLY OPEN THE BRIDGE WITHOUT STOPPING WHEN THE SPAN IS UNDER CONTROL.

B. A CENTRIFUGAL GOVERNOR SHALL BE PROVIDED FOR EACH LEAF TO GOVERN THE MAXIMUM SPEED NEAR FULLY OPEN POSITION AND MAXIMUM SEATING SPEED OF THE LEAF.

C. FOR THE CENTER LOCK MOTOR AND EACH TAIL LOCK MOTOR THERE SHALL BE PROVIDED A SEPARATE LIMIT SWITCH WHICH WILL STOP THE RESPECTIVE MOTOR AND SET THE RESPECTIVE BRAKE AUTOMATICALLY AT EACH END OF TRAVEL. THERE SHALL BE A REVERSING MAGNETIC CONTROLLER FOR STARTING THE CENTER LOCK AND EACH TAIL LOCK MOTOR DIRECT FROM THE LINE WITH OVERLOAD AND LOW VOLTAGE PROTECTION.

D. ALL LIMIT SWITCHES SHALL BE WEATHERPROOF AND EQUAL TO THE TYPE SPECIFIED ON THE PLANS.

E. IN ORDER THAT THE OPERATOR MAY KNOW THE POSITION OF THE LEAVES AT ALL TIMES, THERE SHALL BE PROVIDED SELSYN POSITION INDICATORS OF THE HIGH ACCURACY TYPE. THE TRANSMITTERS SHALL BE GEARED TO MACHINERY SHAFTS AS SHOWN ON THE PLANS. THE RECEIVERS ON THE CONTROL DESK SHALL BE INTERNALLY GEARED. THE GEARING SHALL, SUBJECT TO THE APPROVAL OF THE ENGINEER, BE SUCH AS TO GIVE THE GREATEST POSSIBLE ACCURACY.

F. SELSYN TRANSMITTERS SHALL BE FURNISHED AS PART OF THE ELECTRICAL EQUIPMENT. SPEED REDUCERS, CHAINS, BELTS, SPROCKETS AND PULLEYS FOR TRANSMITTERS AND SPAN LIMIT SWITCHES AND CENTRIFUGAL SPEED RELAYS ARE INCLUDED UNDER "MACHINERY ".

10. ROADWAY ELECTRIC TRAFFIC SIGNAL LIGHTS.

A. AT LOCATIONS SHOWN ON THE PLANS, THERE SHALL BE PROVIDED THREE APPROACH SIGNALS EQUIPPED WITH A TIMED-OUT GREEN LIGHT AND A FLASHING YELLOW LIGHT. APPROXIMATELY 100 FEET AHEAD OF THE ROADWAY GATES THERE SHALL BE PROVIDED THREE CONVENTIONAL TRAFFIC SIGNALS EQUIPPED WITH A RED AND A GREEN SIGNAL LIGHT. TWENTY FIVE FEET BEHIND EACH OF THESE TRAFFIC SIGNALS THERE SHALL BE A FLASHING "STOP" SIGN AND WARNING BELL, A FLASHING AMBER BEACON AND AN ELECTRIC BELL GONG.

B. THE APPROACH SIGNAL LIGHTS AND THE TRAFFIC SIGNAL LIGHTS SHALL BE MOUNTED ON AN INDIVIDUAL POLE AND SHALL BE SIMILAR AND EQUAL TO UNIT SL-50 OF WESTERN RAILROAD SUPPLY CO., CHICAGO, ILLINOIS, WITHOUT BELL. THE FLASHING "STOP" SIGN, FLASHING BEACON AND BELL SHALL BE MOUNTED ON A SINGLE POLE AND SHALL BE EQUAL TO B & B APPROACH WARNING TYPE 71-AD-PM, SHALL BE WEATHER, BUG AND DUST PROOF AND SHALL OPERATE WHEN THE "STOP" SIGNAL IS "ON" EXCEPT THAT THE BELL SHALL BE TIMED OUT AFTER ONE MINUTE. IN THE CIRCUIT TO THE "STOP" SIGN THERE SHALL BE A MOTOR FLASHING SWITCH SIMILAR TO CROUSE-HINDS TYPE TSS-16 SET SO AS TO FLASH THE "STOP" LIGHT ABOUT 36 TIMES PER MINUTE WITH AN "ON" PERIOD ABOUT THREE TIMES AS LONG AS THE "OFF" PERIOD. IN THE CIRCUIT TO ALL THE "GO" SIGNALS THERE SHALL BE A TIME DELAY RELAY SIMILAR TO DUNCO TYPE TD-130, AS MANUFACTURED BY STRUTHERS-DUNN, INC. OF PHILADELPHIA, WHICH WILL PERMIT THE "GO" LIGHT TO REMAIN ON FOR THREE MINUTES AFTER THE "STOP" LIGHTS ARE TURNED OFF, AND THEN AUTOMATICALLY TURN OFF.

C. WHERE TRAFFIC SIGNALS OCCUR ON CONCRETE SIDEWALKS, LEVEL SURFACES SHALL BE FORMED AND PROJECTING ANCHOR BOLTS SHALL BE USED.

D. PAYMENT FOR ROADWAY TRAFFIC SIGNAL LIGHTS, "STOP" SIGNS, WARNING BELLS, TIMED-OUT GREEN AND FLASHING YELLOW LIGHTS, COMPLETE WITH MOUNTING POSTS AND ANCHORAGE, WIRED, TESTED AND IN OPERATING CONDITION, WILL BE INCLUDED IN THE LUMP SUM PAYMENT FOR ITEM S-25, ELECTRICAL EQUIPMENT.

11. ELECTRICALLY OPERATED ROADWAY GATES.

A. ACROSS THE ROADWAY NORTH AND SOUTH OF THE BASCULE SPAN THERE SHALL BE PROVIDED A PAIR OF HORIZONTALLY-SWINGING ROADWAY GATES OF THE AXLE OPERATED TYPE. EACH GATE WILL HAVE A FRONT ARM EXTENDING FROM THE CENTER OF THE ROADWAY TO A VERTICAL POST SET BACK OF THE CURB AND A COUNTERWEIGHTED REAR ARM EXTENDING ACROSS THE SIDEWALK TO GIVE A COMPLETE GATE PIVOTED AND BALANCED AT THE POST. THE FRONT ARM OF EACH GATE WILL CARRY RED WARNING LIGHTS WHICH SHALL BE "ON" FOR ALL POSITIONS OF THE GATE WHILE THE TRAFFIC SIGNALS ARE SET TO "STOP" TRAFFIC. GATE ARM OBSTRUCTION LIGHTS SHALL BE SIMILAR TO CAA SPEC. L-810 OBSTRUCTION MARKER LIGHT. EACH GATE LEAF WILL BE POWERED BY A SUITABLE MOTOR WHICH, THROUGH A SPEED REDUCER, ACTUATES A CRANK ATTACHED TO THE GATE AXLE. A LIMIT SWITCH SHALL CONTROL THE TRAVEL OF EACH GATE.

B. TRUSSES FOR THE FRONT ARM OF THE GATE SHALL BE CONSTRUCTED OF STANDARD WEIGHT WROUGHT IRON PIPE. DIAPHRAGMS AND WEBS SHALL BE OF SHEET STEEL. THE REAR ARM OF THE GATE SHALL COMPRISE A STRUCTURAL STEEL BOX CARRYING CAST IRON BALANCE BLOCKS, NOT SUFFICIENT, HOWEVER TO ENTIRELY BALANCE THE FRONT ARM.

C. MOTORS, BRAKES AND TRAVELING NUT LIMIT SWITCHES, WARNING LIGHTS AND OTHER DETAILS SHALL BE OF THE SIZE, CHARACTER AND MAKE SPECIFIED ON THE PLANS.

D. GATES SHALL BE PAINTED AS SPECIFIED FOR METALWORK PAINTING WITH THREE COATS OF PAINT, PLUS A FINAL FINISH COAT OR COATS OF WHITE OR OF CONTRASTING COLORS IN A PATTERN OR PATTERNS AS MAY BE PRESCRIBED BY THE ENGINEER. PARTS BELOW DECK LEVEL SHALL BE PAINTED AS ELSEWHERE SPECIFIED FOR STRUCTURAL STEEL, MACHINERY AND ELECTRICAL EQUIPMENT.

E. PAYMENT FOR MOTORS, BRAKES, LIMIT SWITCHES, WARNING LIGHTS, CONDUITS, JUNCTION BOXES, WIRING AND ALL ELECTRICAL PARTS OF THE INSTALLATION WILL BE INCLUDED IN THE LUMP SUM PAYMENT FOR ITEM S-25, ELECTRICAL EQUIPMENT.

F. PAYMENT FOR ALL METAL PARTS OF THE FRONT GATE ARM, (EXCLUSIVE OF CONDUIT, LAMPS AND DRIVE SHAFT), FOR THE CAST IRON BALANCE BLOCKS, FOR THE SLEEVE CASTING EMBEDDED IN THE CONCRETE OF THE SIDEWALK, FOR THE MANHOLE FRAME AND COVER, LADDER AND ALL STRUCTURAL STEEL PLATES AND SHAPES BELOW DECK LEVEL INCLUDING PARTS FOR SUPPORTING THE ELECTRICAL EQUIPMENT AND MACHINERY WILL BE MADE AT THE POUND PRICE FOR ITEM S-7, STRUCTURAL STEEL.

G. PAYMENT FOR THE DRIVE SHAFT OR AXLE, THE REAR ARM (COUNTERWEIGHT ENCLOSURE), THE BUSHED CASTING ABOVE SIDEWALK, THE FRICTION LATCH IN GUARD POST AT OUTER END OF FRONT ARM, AND ALL MACHINERY PARTS BETWEEN THE AXLE AND THE MOTOR WILL BE MADE AT THE POUND PRICE FOR MACHINERY.

H. PAYMENT FOR THE STEEL GUARD POSTS AT THE CURB EXCEPT FOR FRICTION LATCH WILL BE MADE UNDER ITEM S-7, STRUCTURAL STEEL.

12. ELECTRICALLY-OPERATED CENTER POSTS FOR ROADWAY GATES.

A. FOR EACH PAIR OF ROADWAY GATES THERE SHALL BE PROVIDED A RETRACTABLE POST AT THE CENTER OF ROADWAY. THE MECHANISM CONSISTS OF A STEEL PLUNGER WHICH CAN BE RAISED FROM A POSITION FLUSH WITH THE ROADWAY BY A RACK AND PINION DRIVE CONNECTED TO A GEARMOTOR. A LIMIT SWITCH SHALL CONTROL THE TRAVEL OF THE PLUNGER.

B. PAYMENT FOR GEARMOTORS, BRAKES, LIMIT SWITCHES, CONDUITS, JUNCTION BOXES, WIRING AND ALL ELECTRICAL PARTS OF THE INSTALLATION WILL BE INCLUDED IN THE LUMP SUM PAYMENT FOR ITEM S-25, ELECTRICAL EQUIPMENT.

C. PAYMENT FOR SUPPORTS FOR MOUNTING GEARMOTORS, BRAKES AND LIMIT SWITCHES, FOR STRUCTURAL STEEL BRACKETS FOR SUPPORTING GUIDE CASTINGS, AND FOR SHEET STEEL DRAINAGE SLEEVES WILL BE MADE AT THE POUND PRICE FOR ITEM S-7, STRUCTURAL STEEL.

D. PAYMENT FOR THE MOVABLE PLUNGER, GUIDE CASTING, RACK, PINION, BEARINGS, DRIVE SHAFT AND COUPLINGS WILL BE MADE AT THE POUND PRICE FOR MACHINERY.

13. ELECTRIC TRAFFIC CONTROLS.

A. THE TRAFFIC CONTROLS SHALL INCLUDE THE THREE TIMED-OUT GREEN AND FLASHING YELLOW ROADWAY TRAFFIC SIGNAL LIGHTS, THE THREE RED AND GREEN SIGNALS, STOP SIGNS, WARNING BEACONS AND WARNING BELLS, ROADWAY GATES WITH CENTER POSTS AND DRAW BRIDGE SIGNS AS FOLLOWS:

B. AT THE EAST CURB SOUTH OF THE BASCULE SPAN AND AT THE WEST CURB NORTH OF THE BASCULE SPAN ON THE EXPRESSWAY AND RAMP X THERE SHALL BE A CONVENTIONAL ROADWAY TRAFFIC SIGNAL LIGHT. SOUTH AND NORTH OF THE BASCULE SPAN THERE SHALL BE A PAIR OF ROADWAY GATES OF THE AXLE OPERATED TYPE. FOR EACH PAIR OF ROADWAY GATES THERE SHALL BE AT THE CENTERLINE OF ROADWAY A RETRACTABLE POST WHICH RISES FROM A POSITION FLUSH WITH ROADWAY SURFACE. A STANDARD "DRAW BRIDGE" WARNING SIGN WILL BE INSTALLED ON EACH OF THE TRAFFIC SIGNAL LIGHT POLES AND ON EACH OF THE APPROACH SIGNAL POLES UNDER THE HEADING OF "WARNING SIGNS", SHEET 4.

C. ALL ROADWAY TRAFFIC SIGNAL LIGHTS, "STOP" SIGNS, WARNING BELLS, TIMED-OUT GREEN AND FLASHING YELLOW LIGHTS, ROADWAY GATES AND CENTER POSTS SHALL BE CONTROLLED FROM THE CONTROL DESK IN THE OPERATOR'S HOUSE. THE CIRCUITS TO EACH OF THESE TRAFFIC CONTROL DEVICES SHALL BE INTERLOCKED WITH EACH OTHER AND WITH THE CIRCUITS TO THE SPAN LOCKS AND MAIN DRIVE MOTORS FOR THE BASCULE LEAVES IN SUCH MANNER THAT THE OPERATION OF THESE DEVICES CAN PROCEED ONLY IN A SAFE, PREDETERMINED SEQUENCE AS DESCRIBED IN PARAGRAPH 15. ALL TRAFFIC SIGNAL LIGHTS SHALL BE OPERATED BY A SINGLE SWITCH. EACH ROADWAY GATE SHALL HAVE A SEPARATE SELECTOR SWITCH TO START, STOP AND REVERSE THE GATE AT ANY POINT IN ITS MOVEMENT, AND EACH GATE SHALL HAVE LIMIT SWITCHES TO STOP THE GATE AT OPEN AND CLOSED POSITIONS. WARNING LIGHTS MOUNTED ON THE ROADWAY GATES SHALL BE "ON" FLASHING FOR ALL POSITIONS OF THE GATES WHILE ROADWAY SIGNALS ARE FOR "STOP." EACH CENTER POST SHALL BE CONTROLLED BY A SEPARATE CONTACTOR AND SHALL HAVE LIMIT SWITCHES TO STOP THE POST AT ITS RAISED AND LOWERED POSITIONS, AND SHALL ALL BE CONTROLLED THROUGH THE SPAN LOCK CONTROLLER.

D. ALL TRAFFIC CONTROL DEVICES, EXCEPT AS OTHERWISE STIPULATED OR APPROVED, SHALL CONFORM TO THE REQUIREMENTS SET FORTH IN THE MANUAL ON "UNIFORM TRAFFIC CONTROL DEVICES FOR STREETS AND HIGHWAYS" AS APPROVED BY A.A.S.H.O. SIGNS SHALL CONFORM TO THE REQUIREMENTS OF THE OHIO DEPARTMENT OF HIGHWAYS, DIVISION OF TRAFFIC AND SAFETY.

14. ELECTRICALLY-OPERATED SUMP PUMPS.

THE CONTRACTOR SHALL FURNISH AND INSTALL IN EACH BASCULE PIER AT THE LOCATION INDICATED ON THE PLANS A MOTOR DRIVEN, DEEP WELL, TURBINE PUMP FOR DISPOSING OF SEEPAGE WATER COLLECTED IN THE BASCULE PIER. THE PUMP SHALL BE A SELF-PRIMING, MULTI-STAGE DEEP WELL TURBINE PUMP SIMILAR AND EQUAL TO THE 5-5/8 IN. SIZE, 5 STAGE UNIT MANUFACTURED BY A..D. COOK, INC., LAWRENCEBURG, INDIANA, WITH 3-IN. FLANGED COLUMN PIPE, 1-1/4 IN. SHAFT ENCLOSING TUBE AND 3/4 IN. SHAFT, AND POWERED BY 1-1/2 H. P. 1750 RPM THREE PHASE MOTOR. THE SUCTION PIPE SHALL BE EQUIPPED WITH A SUITABLE RUBBISH STRAINER. OPERATION OF THE PUMP SHALL BE CONTROLLED BY MEANS OF AN APPROVED AUTOMATIC ELECTRIC FLOAT SWITCH SET SO AS TO START THE PUMP WHEN WATER IN THE SUMP RISES TO ELEVATION 547.8 AND TO STOP THE PUMP WHEN THE WATER LEVEL FALLS TO ELEVATION 545.8. IN ADDITION, A SWITCH FOR MANUAL CONTROL SHALL BE PROVIDED NEAR THE MOTOR. THE DISCHARGE LINE SHALL BE 3 IN. DIAMETER STANDARD WEIGHT WROUGHT IRON PIPE.

15. ELECTRIC INTERLOCKING AND INDICATOR LIGHTS.

A. INTERLOCKING OF OPERATIONS AND THE MEANS OF INDICATION SHALL BE PROVIDED AS OUTLINED HEREIN AND AS DESCRIBED IN THE PLANS, IN ORDER THAT THE VARIOUS OPERATIONS OF OPENING AND CLOSING THE SPAN CAN PROCEED ONLY IN A SAFE, PREDETERMINED SEQUENCE. THE CIRCUITS SHALL BE SO INTERLOCKED THAT: (1) ONCOMING ROADWAY GATES CANNOT BE CLOSED UNTIL TRAFFIC SIGNAL LIGHTS HAVE BEEN CHANGED FROM OFF (OR GREEN) TO RED, (2) OFFGOING ROADWAY GATES CANNOT BE CLOSED UNTIL ONCOMING ROADWAY GATES ARE FULLY CLOSED, (3) CENTER POSTS CANNOT BE RAISED UNTIL ROADWAY GATES ARE FULLY CLOSED, (4) SPAN LOCKS CANNOT BE WITHDRAWN UNTIL ROADWAY GATES ARE FULLY CLOSED, (5) CIRCUITS TO MAIN DRIVE MOTORS CANNOT BE ENERGIZED UNTIL THE CENTER LOCKS AND TAIL LOCKS ARE WITHDRAWN, (6) SPAN LOCKS CANNOT BE OPERATED UNTIL SPAN IS FULLY SEATED, (7) GATES CANNOT BE OPENED OR CLOSED UNTIL CENTER POSTS ARE DOWN, OR OPENED UNTIL SPAN CENTER LOCKS ARE FULLY DRIVEN, (8) TRAFFIC SIGNAL LIGHTS CANNOT BE CHANGED TO GREEN UNTIL GATES ARE FULLY OPEN, (9) CIRCUITS TO THE CENTER SPAN LOCK MOTOR CANNOT BE ENERGIZED IF THE LOCK MOTOR BRAKE IS RELEASED BY HAND RELEASE, AND (10) CIRCUITS TO THE MAIN DRIVE MOTORS CANNOT BE ENERGIZED IF THE MACHINERY IS SET FOR GASOLINE ENGINE OPERATION OR ANY OF THE FOUR LEAF BRAKES ARE RELEASED BY HAND RELEASES. FOR USE IN EMERGENCY, BY-PASS SWITCHES SHALL BE PROVIDED FOR ELIMINATING ANY OR ALL OF THE INTERLOCKING DESCRIBED ABOVE, EXCEPT (6), (9) AND (10).

B. INDICATION OF THE SETTING OF TRAFFIC SIGNALS, POSITION OF ROADWAY GATES, LOCKS, SPAN LEAVES AND BRAKES, SHALL BE SHOWN BY INDICATING LIGHTS ON THE CONTROL DESK AS PROVIDED FOR ON THE PLANS. INDICATING LIGHTS SHALL BE EQUAL TO WESTINGHOUSE MINALITE OR GENERAL ELECTRIC MAZDA WITH T2 BULB AND NO. 902 BASE.

16. ELECTRIC NAVIGATION SIGNALS.

A. NAVIGATION SIGNAL LIGHTS SHALL BE PROVIDED FOR THE BASCULE SPAN AND FOR THE FENDERS. ONE LIGHT SHALL BE PROVIDED FOR EACH END OF EACH FENDER, AXIS LIGHT FOR EACH PIER, AND ONE PAIR OF LIFT SPAN OR PIVOT TYPE LIGHTS FOR EACH LEAF OF THE BASCULE SPAN. THE LIGHTS ON THE FENDERS AND AXES SHALL SHOW 180 DEGREES RED. THE LIFT SPAN LIGHTS ON THE BASCULE LEAVES SHALL AUTOMATICALLY SHOW GREEN FOR EACH LEAF WHEN FULLY OPEN AND RED FOR ALL OTHER POSITIONS. ALL LIGHTS SHALL BE CONTROLLED BY AN OFF-ON-AUTOMATIC SWITCH LOCATED ON THE CONTROL DESK IN THE OPERATOR'S HOUSE. THE SPAN LIGHT CIRCUITS SHALL BE SO INTERLOCKED WITH THE SPAN LIMIT SWITCH CIRCUIT THAT THE LIGHTS ON EACH LEAF WILL CHANGE FROM RED TO GREEN WHEN THE LEAF REACHES THE FULLY OPENED POSITION. WHEN ON AUTOMATIC A TIME SWITCH WITH ASTRONOMIC DIAL FOR TOLEDO LATITUDE AND MECHANICAL CARRYOVER SHALL CONTROL OFF AND ON TIME.

B. THE CHARACTER OF THE LIGHTS SHALL CONFORM TO THE REQUIREMENTS OF THE UNITED STATES COAST GUARD. ON A DARK NIGHT WITH CLEAR ATMOSPHERE, ALL LIGHTS SHALL BE VISIBLE FOR AT LEAST 2,000 YARDS. THEY SHALL BE NOT LESS THAN 50-WATT LAMPS, SHOWN FROM PRESSED FRESNEL LENSES, 8 IN. INSIDE DIAMETER BY 6-1/2 IN. CLEAR HEIGHT OF OPENING. ALL LAMPS ARE TO BE ENCLOSED IN SUBSTANTIAL WATERPROOF METAL LANTERNS OF GALVANIZED CAST IRON FIRMLY ATTACHED AS MAY BE APPROVED.

C. ALL LAMPS ON THE MOVING LEAVES AND ON THE FENDERS SHALL BE OF THE ROUGH SERVICE TYPE, CAPABLE OF WITHSTANDING SHOCKS AND ROUGH TREATMENT, AND SHALL BE PROVIDED WITH SHOCK- ABSORBING SOCKET ADAPTERS.

D. FOR SIGNALLING TO RIVER TRAFFIC THERE SHALL BE PROVIDED ONE DUPLEX ELECTRIC AIR WHISTLE. THE HORNS SHALL BE OF CAST BRONZE, SHALL BE MACHINED INSIDE AND OUT, AND SHALL HAVE A FREQUENCY OF ABOUT 340 C.P.S. THE WHISTLE SHALL BE OPERATED BY COMPRESSED AIR PRODUCED BY ITS OWN BUILT-IN AIR COMPRESSOR DRIVEN BY A 220-VOLT MOTOR, AND SHALL BE SIMILAR AND EQUAL TO DORAN-CUNNINGHAM UNIT 1EA-11B, AS MANUFACTURED BY THE CUNNINGHAM MANUFACTURING COMPANY OF SEATTLE, WASHINGTON. THE UNIT SHALL BE MOUNTED ON THE BRIDGE AXIS AS INDICATED ON THE PLANS, THE HORNS POINTING UPSTREAM AND DOWNSTREAM. A PUSHBUTTON FOR CONTROLLING THE WHISTLE SHALL BE PLACED ON THE CONTROL DESK IN THE OPERATOR'S HOUSE.

17. ELECTRIC CHANNEL - OBSTRUCTION INDICATOR.

A. ON THE UPSTREAM END AND AT THE CENTER OF EACH BASCULE PIER ABOVE THE HIGH WATER LINE THERE SHALL BE LOCATED PHOTOELECTRIC EQUIPMENT IN WEATHERPROOF HOUSINGS TO OPERATE A FLASHING LIGHT ON THE CONTROL DESK IN ROOM A AND AT THE GASOLINE ENGINE IN THE MACHINERY ROOM OF EACH PIER WHEN THERE IS AN OBSTRUCTION IN THE CHANNEL. SEE SHEET 55 FOR LOCATION AT GASOLINE ENGINE.

B. EACH PHOTOELECTRIC SOURCE COMPLETE WITH AMPLIFIER, TUBES, LENSES, RELAY, 110 VAC. CONTROL PANEL, SENSITIVITY CONTROL, METER JACK TO DETERMINE CORRECT CUT-OFF AND PLATE CURRENT IN RELAY CIRCUIT, WIRING, CONDUITS AND MOUNTING BRACKET SHALL BE MOUNTED ON NEAR SIDE PIER. EACH LIGHT SOURCE SHALL BE MOUNTED ON THE FAR SIDE PIER IN A SIMILAR HOUSING, COMPLETE WITH BRACKET, WIRING CONDUIT, LONG LIFE LAMP AND TRANSFORMER. THE FLASHER FOR THE INDICATING LAMPS SHALL BE MOUNTED ON PANEL B. IN ROOM B, AND SHALL GIVE APPROXIMATELY 24 FLASHES PER MINUTE.

C. EACH PHOTOELECTRIC SOURCE SHALL BE EQUIPPED WITH A DEVICE OR DEVICES FOR LIMITING "UNWANTED LIGHT" SO THAT THE RESPECTIVE RELAY WILL FUNCTION PROPERLY UNDER ALL DAYLIGHT AND NIGHT CONDITIONS. EACH AMPLIFIER SHALL BE EQUAL TO WORNER MODEL 7500 R AND THE LIGHT SOURCE SHALL BE EQUAL TO THAT SUPPLIED AS A PART OF MODEL 7500 R.

18. ELECTRIC PUBLIC ADDRESS SYSTEM

A COMPLETE OUTDOOR SOUND SYSTEM SHALL BE INSTALLED FOR DIRECTING PEDESTRIAN TRAFFIC ON THE BRIDGE FROM THE CONTROL ROOM A. THE AMPLIFIER SHALL BE LOCATED INSIDE CONTROL DESK IN ROOM A ON THE FLOOR. IT SHALL HAVE A GUARANTEED, UNDISTORTED POWER OUTPUT OF 50 WATTS, FREQUENCY RESPONSE OF 50 TO 12,000 CPS, INPUT CONTROL, BASE CONTROL, TREBLE CONTROL, AND WIRED TO BE ENERGIZED NORMALLY ONLY WHEN SIGNALS ARE AGAINST TRAFFIC WITH AN OFF-ON SWITCH ON AMPLIFIER TO DEFEAT THIS INTERLOCK IF NECESSARY. THE AMPLIFIER SHALL BE EQUAL TO MASCO MODEL ME-60. A COMBINATION DYNAMIC MICROPHONE FOR HANGING AND HANDLING, AND ONE THAT IS RECOMMENDED FOR BAD CLIMATIC CONDITIONS AND ROUGH HANDLING SHALL BE PROVIDED IN ROOM A. A SUITABLE HANGING HOOK SHALL BE PROVIDED ON THE LEFT SIDE OF THE CONTROL DESK. A MICROPHONE OUTLET SHALL BE PROVIDED IN THE WALL OF ROOM A NEAR THE LEFT SIDE OF THE CONTROL DESK. THE FLUSH COVER SHALL CONTAIN A CHROME PLATE BRASS FEMALE BASE FOR SCREW ATTACHMENT OF SHIELDED MICROPHONE CABLE OF A SINGLE LENGTH TO REACH ANY POINT IN ROOM A. THE MICROPHONE SHALL HAVE AN ON-OFF SWITCH, A FREQUENCY RESPONSE OF 100/7000 CYCLES PER SECOND AND EQUAL TO TURNER MODEL 9-D. TWO ALL METAL WEATHERPROOF REFLEX TRUMPETS FOR DIRECTIONAL SOUND PROJECTION TO THE NEAR SIDE LEAF AND FAR SIDE LEAF SHALL BE MOUNTED UNDER EAVES OF OPERATOR'S HOUSE WHERE INDICATED ON THE DRAWINGS. THE UNITS SHALL BE EQUAL TO UNIVERSITY MODEL LH. EACH TRUMPET SHALL HAVE A WEATHERPROOF DRIVING UNIT OF AT LEAST 25 WATTS, 90/10,000 CPS, EQUAL TO UNIVERSITY MODEL SA-AF. LINE MATCHING TRANSFORMERS AND MIKE CABLE TRANSFORMERS SHALL BE INSTALLED IF REQUIRED FOR DISTORTIONLESS VOICE OUTPUT. EACH TRUMPET SHALL BE WIRED WITH AN INDIVIDUAL CIRCUIT OF BELDEN TYPE 8652 #16 AWG WIRE. CIRCUITS TO TRUMPETS SHALL BE IN 1/2" RIGID CONDUIT. CABLE FROM MICROPHONE OUTLET TO AMPLIFIER SHALL BE BELDEN TYPE 8410 IN 1/2" RIGID CONDUIT.

19. TELEPHONE SYSTEMS.

A. TWO TELEPHONE SYSTEMS SHALL BE PROVIDED: (1) A PRIVATE INTER-COMMUNICATION TELEPHONE SYSTEM CONNECTING THE MACHINERY ROOMS OF THE TWO BASCULE PIERS AND ROOM A IN THE OPERATOR'S HOUSE, (2) A TELEPHONE IN ROOM A OF THE OPERATOR'S HOUSE CONNECTED TO THE PUBLIC TELEPHONE SYSTEM. THE CONTRACTOR SHALL FURNISH AND INSTALL COMPLETE ALL OTHER EQUIPMENT, BATTERIES, WIRING, FASTENINGS, SUPPORTS, ETC. NECESSARY FOR SATISFACTORY TELEPHONE SERVICE ON THE TWO SYSTEMS, OR SHALL MAKE THE NECESSARY ARRANGEMENTS WITH THE TELEPHONE COMPANY FOR THE FURNISHING AND INSTALLING OF PARTS OR ALL OF THE SYSTEMS. ANY SUCH INSTALLATION CHARGES SHALL BE BORNE BY THE CONTRACTOR.

PART 3

TOLEDO EXPRESSWAY SYSTEM
MAUMEE RIVER BRIDGE
BR. NO. LU 120R-35
NOTES

TOLEDO | LUCAS COUNTY | OHIO

SCALE: NONE
MADE: ICW DATE: 9-7-53
TRCD.: LCM DATE: 9-30-53
CKD.: JT DATE: 9-30-53

HOWARD, NEEDLES, TAMMEN & BERGENDOFF
CONSULTING ENGINEERS
KANSAS CITY NEW YORK
810 SHEET- 3.7

MICROFILMED
JUL 22 19[illegible]

FED. ROAD DIV. NO	STATE	FED. AID PROJ NO.	TYPE FUNDS
2	OHIO	UI-1052(2)	POST WAR

LUCAS COUNTY
CITY OF TOLEDO
TOLEDO EXPRESSWAY SYSTEM
MAUMEE RIVER BRIDGE
LUC 120R- 3.46

B. THE INTERCOMMUNICATION SYSTEM BETWEEN THE THREE STATIONS AT THE BRIDGE SHALL BE INSTALLED AS SOON AS THE PIERS AND THE HOUSE ARE READY TO RECEIVE SAME, AND THIS EQUIPMENT SHALL BE AVAILABLE FOR USE BY THE CONTRACTOR AND THE ENGINEER DURING THE ERECTION, INSTALLATION AND TESTING OF MECHANICAL AND ELECTRICAL EQUIPMENT. UPON COMPLETION OF THE WORK THIS EQUIPMENT SHALL BE CLEANED UP AND LEFT IN FIRST-CLASS CONDITION, AND THE CONTRACTOR SHALL REPLACE ALL EQUIPMENT DAMAGED DURING CONSTRUCTION AND SHALL FURNISH NEW BATTERIES FOR ALL THREE STATIONS. THE EQUIPMENT AT EACH STATION SHALL INCLUDE A MAGNETO WALL MONOPHONE, AUTOMATIC ELECTRIC SALES COMPANY OF CHICAGO, CATALOG NO. AE-44, OR APPROVED EQUAL WITH BATTERIES. EACH STATION SHALL HAVE SUITABLE PROTECTION AGAINST LIGHTNING AND CROSSING WITH ELECTRIC CIRCUITS. WIRING, INCLUDING THAT IN SUBMARINE CABLE, SHALL BE AS SPECIFIED IN PARAGRAPH 24. IF THERE IS ANY OBJECTIONABLE AC HUM IN THE SYSTEM THE CONTRACTOR SHALL PROVIDE THE NECESSARY FILTERS FOR SATISFACTORY RECEPTION.

C. HANDSET LEADS FOR PHONES AND MIKE IN THE OPERATOR'S HOUSE SHALL BE OF SUFFICIENT LENGTH TO ENABLE THE OPERATOR TO OBSERVE ALL INSTRUMENTS ON THE CONTROL DESK WHILE IN USE, AND, SIMILARLY, THOSE IN THE MACHINERY ROOMS SHALL BE OF SUFFICIENT LENGTH TO PROVIDE MAXIMUM UTILITY.

20. ELECTRIC SWITCHBOARD AND APPURTENANCES.

A. THE GENERAL ARRANGEMENT AND EQUIPMENT FOR WIRING AND CONTROL ARE SHOWN BY THE WIRING DIAGRAM OF THE PLANS. EQUIPMENT NOT SPECIFICALLY DESCRIBED SHALL BE ACCORDING TO THE BEST MODERN PRACTICE AND SUBJECT TO APPROVAL.

B. THE SWITCHBOARD UNITS IN ROOMS B AND C OF NEAR PIER AND ROOM C OF FAR PIER SHALL BE OF DEAD-FRONT CABINET TYPE CONSTRUCTION WITH EQUIPMENT NEATLY ARRANGED SO AS TO BE SAFELY AND EASILY REACHED. CONTACTORS, LINE-STARTERS, RELAYS, ETC., SHALL BE MOUNTED ON 1-1/2 IN. EBONY ASBESTOS OR EQUIVALENT IN BACK OF SUITABLY ARRANGED DOORS. THE LOCATION OF THESE BOARDS SHALL BE AS SHOWN ON THE PLANS. EACH BOARD SHALL BE ASSEMBLED AS ONE UNIT AND ALL SHEET METAL PANELS, DOORS, ETC. SHALL BE OF COPPER BEARING SHEET STEEL NOT LESS THAN 1/8 IN. THICK AND CONSTRUCTED AND FINISHED IN THE MANNER SPECIFIED FOR THE METAL SIDES OF THE CONTROL DESK. THE ARRANGEMENT OF THE EQUIPMENT ON THE BOARD, THE DETAILS OF THE FRAMING AND THE APPEARANCE OF THE BOARD SHALL BE APPROVED BY THE ENGINEER BEFORE CONSTRUCTION IS STARTED. EACH DEVICE ON EACH BOARD SHALL HAVE A DEVICE NUMBER PROPERLY ENGRAVED IN WHITE ON A WHITE METAL NAME PLATE HAVING A BLACK BACKGROUND.

C. THE EQUIPMENT ON THE SWITCHBOARDS SHALL BE ARRANGED TO GIVE A NEAT AND ATTRACTIVE APPEARANCE. ALL CONNECTIONS SHALL BE MADE ON THE BACK OF THE BOARD AND ALL INTER-CONNECTIONS CARRYING OVER 50 AMPERES SHALL BE MADE BY COPPER BUS BARS. ALL WIRING AT THE BOARD SHALL TERMINATE IN APPROVED TERMINAL STRIPS SUPPORTED IN APPROVED MANNER. ALL BUS BARS ON THE BOARDS SHALL HAVE RIGHT ANGLE BENDS AND SHALL RUN IN HORIZONTAL AND VERTICAL LINES ONLY.

D. UNLESS OTHERWISE SHOWN BY THE PLANS, LEVER SWITCHES OF THE QUICK BREAK RAILWAY TYPE SHALL BE PROVIDED FOR EACH MOTOR, LIGHT, SIGNAL, AND INDICATOR CIRCUIT. CIRCUIT BREAKERS SHALL NOT BE USED FOR MOTOR OVERLOAD PROTECTION.

E. OVERLOAD RELAYS FOR MOTOR PROTECTION SHALL HAVE AN OVERLOAD COIL IN EACH OF TWO LINES OF A THREE -PHASE THREE-WIRE CIRCUIT. THE OVERLOAD ATTACHMENTS SHALL OPEN ALL LINES OF AN ALTERNATING CURRENT CIRCUIT. TRIPPING ATTACHMENTS SHALL BE POSITIVE IN ACTION.

F. EACH CABLE, EACH MOTOR CIRCUIT AND EACH LIGHTING CIRCUIT, SIGNAL INDICATOR OR OTHER CIRCUIT SHALL BE PROTECTED BY APPROVED FUSES OR CIRCUIT BREAKERS. FUSES FOR CIRCUITS OF 60 AMPERES OR MORE SHALL HAVE KNIFE BLADE CONTACTS. ALL SWITCHBOARD APPURTENANCES NECESSARY FOR THE SATISFACTORY OPERATION OF THE SPAN SHALL BE FURNISHED WHETHER SPECIFICALLY MENTIONED OR NOT. ALL FUSES SHALL BE OF A NON-REFILLABLE TYPE APPROVED BY THE ENGINEER. TEN EXTRA FUSES OF EACH KIND SHALL BE FURNISHED.

G. SWITCHES AND BUS BARS SHALL BE DESIGNED TO CARRY NOT MORE THAN 900 AMPERES PER SQUARE INCH OF CROSS-SECTION. KNIFE SWITCHES SHALL BE OF NOT LESS THAN 100 AMPERES CAPACITY. THE BLADES OR CLIPS OF KNIFE SWITCHES AND SIMILAR PARTS SHALL BE NOT LESS THAN 3/32 INCH THICK. SNAP SWITCHES SHALL BE OF NOT LESS THAN 20 AMPERES CAPACITY, AND SHALL NOT BE INSTALLED IN CIRCUITS CARRYING MORE THAN 6 AMPERES.

H. MAGNETIC CONTACTORS SHALL BE QUICK-ACTING WITH WIPING CONTACTS WELL SHIELDED TO PREVENT ARCING BETWEEN THE SWITCH AND OTHER METAL PARTS NEAR. TRIPPING ATTACHMENTS SHALL BE POSITIVE IN ACTION.

I. THE SWITCHBOARD SHALL BE IN COMPLETELY ASSEMBLED UNITS WITH ALL THE REQUIRED DEVICES FULLY WIRED AND FACTORY TESTED WITH THE COMPLETED CONTROL DESK, PARTICULARLY TO CHECK THE CORRECT FUNCTIONING OF THE CONTROL SYSTEM AS DESCRIBED IN THE PLANS AND SPECIFICATIONS.

21. ELECTRIC CONTROL DESK.

A. A CONTROL DESK SHALL BE PROVIDED ON WHICH SHALL BE MOUNTED ALL NECESSARY CONTROLLERS, PUSH BUTTON STATIONS, SELSYN INDICATORS, INDICATING LIGHTS, AMMETERS, VOLTMETER, AMMETER SWITCHES, VOLTMETER SWITCH, ETC. AS PROVIDED ON THE PLANS. EACH DEVICE SHALL BE IDENTIFIED BY MEANS OF A PROPERLY ENGRAVED WHITE METAL NAME PLATE, HAVING A BLACK BACKGROUND. THE AMMETERS, VOLTMETER AND SPAN POSITION INDICATOR SHALL BE OF THE ILLUMINATED TYPE WITH SUITABLE SCALES AND SHALL BE FLUSH-MOUNTED ON THE CONTROL DESK. THESE INSTRUMENTS SHALL BE OF THE SQUARE TYPE, BACK CONNECTED. CONTROLLER HANDLES SHALL BE CHROMIUM PLATED.

B. THE DESK SHALL BE OF CABINET TYPE CONSTRUCTION WITH A HORIZONTAL FRONT SECTION ABOUT 40 IN. ABOVE THE FLOOR AND AN INCLINED SECTION SLOPING ABOUT 30 DEGREES WITH THE HORIZONTAL AS SHOWN ON THE PLANS. THE TOP OF THE DESK SHALL BE OF EBONY ASBESTOS COMPOUND 1-1/2 IN. THICK. THE SLOPING SECTION SHALL BE ACCURATELY CUT AND BEVELED TO INSURE A CLOSE FIT. THE DESK FRAME SHALL BE CONSTRUCTED OF COPPER BEARING SHEET STEEL 1/8 IN. THICK. ALL EBONY ASBESTOS EDGES SHALL BE BEVELED AND NEATLY FINISHED.

C. ALL METAL CORNERS AND EDGES OF THE DESK SHALL BE ROUNDED AND THE SHEET STEEL SHALL BE REINFORCED BY FLANGING THE METAL INTO ANGLE AND CHANNEL SECTIONS. ALL CONNECTING SECTIONS SHALL BE PROPERLY JOINED BY CONTINUOUS SEAM WELDING AND ALL EXTERNAL WELDED JOINTS SHALL BE CAREFULLY GROUND TO CONFORM TO THE RADII OF THE FORMED SHEET METAL. THE BOTTOM OF THE DESK SHALL BE LEFT OPEN. THE SUPPORTING FLANGE ON THE INSIDE OF THE DESK FRAME AT THE BOTTOM SHALL BE PROVIDED WITH SUITABLE HOLES FOR BOLTING THE DESK TO THE FLOOR. SUITABLE SUPPORTING BRACKETS AND ANGLES SHALL BE PROVIDED ON THE INSIDE OF THE DESK TO SUPPORT THE TOP BASES AND THE MASTER SWITCHES MOUNTED THEREON.

D. THE DESK SHALL BE PROVIDED WITH HINGED DOUBLE DOORS ON THE FRONT, A SINGLE DOOR AT ONE END, AND A REMOVABLE BACK. ALL DOORS SHALL HAVE FLANGED EDGES WELL ROUNDED AND SHALL BE FLUSH-MOUNTED ON CONCEALED HINGES. THE HINGES SHALL INCORPORATE JAMBS TO LIMIT THE SWING OF THE DOORS. THE DOORS SHALL BE HELD SHUT BY STURDY, THREE POINT LATCHES OPERATED BY AUTOMOBILE TYPE, CHROMIUM PLATED, LOCKABLE HANDLES, ALL KEYED ALIKE. THE DOORS SHALL BE ASSEMBLED ACCURATELY AND SHALL HAVE A CLEARANCE NOT TO EXCEED 1/8 IN. AT ANY POINT.

E. THE KNEE-OPERATED BYPASS SWITCHES SHALL BE SET IN A SUITABLE RECESS IN ONE FRONT DOOR OF THE DESK. THE RECESS SHALL BE KNEE HIGH AND ROUNDED ALL AROUND WITH 1-1/4 IN. RADIUS. THE SWITCHES SHALL BE CONNECTED TO THE DESK BY EXTRA FLEXIBLE CABLE OF SUFFICIENT LENGTH TO ALLOW THE DOOR TO BE FULLY OPENED WITHOUT SHARP BENDS AND TENSIONS.

F. ALL OUTGOING CONTROL CONNECTIONS FROM THE DESK SHALL BE BROUGHT TO SUITABLY MARKED BARRIER TYPE TERMINAL BOARDS SUPPORTED ON STRAPS WELDED ON THE BACK PLATE OF THE DESK FRAME. THE TERMINAL BOARDS SHALL BE SO LOCATED THAT THEY DO NOT INTERFERE WITH ACCESS TO THE INSIDE OF THE DESK THROUGH THE DOORS. ALL WIRES SHALL BE BROUGHT FROM THE TERMINAL BLOCKS TO THEIR RESPECTIVE TERMINALS IN A NEAT AND ORDERLY ARRANGEMENT PROPERLY BUNCHED AND TIED.

G. ON THE INSIDE OF THE DESK AND CONNECTED TO A CIRCUIT OF THE LIGHTING SUPPLY THROUGH A SUITABLE SWITCH LOCATED ON THE DESK, THERE SHALL BE PROVIDED TWO LAMP SOCKETS FOR 60 WATT LIGHTS FOR FURNISHING ILLUMINATION FOR THE INTERIOR OF THE DESK. THERE SHALL BE MOUNTED ON THE DESK A FLUORESCENT LAMP OF A SUITABLE DESIGN AND COLOR.

H. THE DESK FRAME WHEN FINISHED SHALL BE GIVEN ONE COAT OF MOISTURE RESISTING PRIMER, FOLLOWED BY A COAT OF FILLER AND FINALLY BY A COAT OF DULL BLACK LACQUER.

22. ELECTRIC HEATING AND VENTILATING.

A. THE OPERATOR'S CONTROL ROOM A AND ROOM B IN BASCULE PIER 5 WILL BE HEATED ELECTRICALLY. NO ROOM HEAT WILL BE PROVIDED IN THE REMAINING ROOMS OF PIER 5, NOR IN PIER 4. THE ENTIRE HEATING SYSTEM SHALL BE INSTALLED IN ACCORDANCE WITH THE REGULATIONS OF THE NATIONAL BOARD OF FIRE UNDERWRITERS.

B. FOR ROOM A OF OPERATOR'S HOUSE THERE SHALL BE SIX, 230-VOLT, 3-KW FORCED CONVECTION TYPE RECESS WALL HEATERS SIMILAR TO EDWIN L. WIEGAND CHROMALOX TYPE RF. THE HEATERS WILL BE PERMANENTLY WIRED FOR PAIRS OF HEATERS IN SERIES ON 440 VOLTS. CONDUIT SHALL INTERCONNECT HEATERS.

C. THE FOUR HEATERS IN ROOM B SHALL BE FORCED CONVECTION TYPE RECESS WALL UNIT HEATERS OF THE SAME MAKE AND KW RATING SPECIFIED FOR ROOM A. THEY SHALL BE CONNECTED FOR FULLY AUTOMATIC CONTROL, AND CONTROL EQUIPMENT SHALL BE SO ARRANGED AS TO PERMIT MANUAL STOPPING AND STARTING AS INDICATED ON THE PLANS. A HEATER AND FAN SWITCH AND THERMOSTAT SHALL BE PROVIDED FOR EACH ROOM. HEATERS SHALL BE SO CONNECTED THAT, FOR SUMMERTIME USE, THE MOTORS AND FANS IN EACH ROOM CAN BE OPERATED INDEPENDENTLY OF THE HEATING ELEMENTS. CONTROL EQUIPMENT, THERMOSTATS, MAGNETIC SWITCHES, ETC. SHALL CONFORM TO MANUFACTURER'S REQUIREMENTS, AND SHALL BE SUBJECT TO APPROVAL OF THE ENGINEER.

23. ELECTRIC LIGHTING IN OPERATOR'S HOUSE AND BASCULE PIERS.

A. SERVICE LIGHTS SHALL BE PROVIDED FOR THE OPERATOR'S HOUSE AND PIERS AS SHOWN ON THE PLANS AND AS HEREIN SPECIFIED.

THE FOUR CEILING LIGHTS IN ROOM A OF THE OPERATOR'S HOUSE SHALL BE SIMILAR AND EQUAL TO DAY-BRITE KINGSWAY SINGLE UNITS, NUMBER 70447 NB FITTED WITH FOUR 40-WATT LAMPS. THE LIGHTS IN ROOM B SHALL BE SIMILAR AND EQUAL TO MOE BROTHERS NO. M-810, COMPLETE WITH TWO 60-WATT LAMPS.

B. THE LIGHTS FOR PIER ROOMS, COUNTERWEIGHT PIT AND FOR THE MACHINERY FLOOR SHALL BE EITHER CEILING OR WALL LIGHTS AS INDICATED ON THE PLANS. CEILING LIGHTS SHALL BE EQUAL TO WESTINGHOUSE ONE-PIECE RLM REFLECTOR SOCKET FIXTURES. WALL LIGHTS SHALL BE EQUAL TO WESTINGHOUSE ELLIPTICAL ANGLE REFLECTORS. ALL LIGHTS SHALL HAVE SHOCK ABSORBING SOCKETS EXCEPT THOSE NOTED ON PLANS TO HAVE PULL CHAIN SOCKETS.

C. WIRING FOR ALL LIGHTS, CONTROL AND POWER IN ROOMS A AND B OF THE OPERATOR'S HOUSE SHALL BE CONCEALED; ELSEWHERE THE WIRING CONDUITS SHALL BE CONCEALED OR CONDUITS SHALL BE SO LOCATED AS TO PROVIDE A SIGHTLY INSTALLATION.

CONVENIENCE OUTLETS FOR ROOMS A AND B SHALL BE OF THE TWIN RECEPTACLE TYPE. CONVENIENCE OUTLETS FOR THE MACHINERY FLOOR AND PIER ROOMS SHALL BE OF THE WATERPROOF RECEPTACLE TYPE WITH SCREW COVER. FOR ROOMS A AND B THE OUTLETS SHALL BE OF THE FLUSH, WALL-MOUNTED TYPE BUT NEED NOT BE WATERPROOF. WATERPROOF RECEPTACLES SHALL BE OF CAST BRASS SIMILAR TO RUSSELL AND STOLL NO. 3772.

SWITCHES LOCATED AT THE MACHINERY FLOOR AND IN ROOMS IN THE BASCULE PIERS SHALL BE WATERTIGHT SWITCHES OF CAST BRASS SIMILAR TO RUSSELL AND STOLL NO. 3725 AND 3728.

THE CONTRACTOR SHALL FURNISH TWO HEAVY-RUBBER-JACKETED CORDS, EACH 30 FEET LONG AND EACH FITTED WITH PLUG AND PORTABLE HAND LAMP WITH GUARD EQUAL TO CROUSE-HINDS COMPANY VS30 FITTER WITH 100-WATT LAMP, AND WITH PLUGS TO FIT THE WATERPROOF RECEPTACLES SPECIFIED ABOVE.

ONE DOZEN EXTRA LAMPS EACH OF 50-WATT ROUGH SERVICE FOR NAVIGATION UNITS, 60, 100 AND 200 WATTS AND ONE DOZEN 40-WATT FLUORESCENT LIGHTS SHALL BE FURNISHED IN EXCESS OF THOSE REQUIRED TO FILL THE FIXTURES PROVIDED.

24. ELECTRIC WIRING AND CABLES.

A. THIS APPLIES TO ELECTRIC WIRING AND CABLES OTHER THAN FOR THE ROADWAY LIGHTING SYSTEM. THE WIRING AND CABLES FOR THE LATTER ARE NOT A PART OF THIS CONTRACT.

B. ALL ELECTRIC WIRING AND CABLES SHALL CONFORM TO THE REQUIREMENTS HEREIN SPECIFIED. ALL CONDUCTORS SHALL BE OF AMPLE CAPACITY TO CARRY THE REQUIRED CURRENT WITHOUT INJURIOUS HEATING AND WITH A DROP OF POTENTIAL NOT TO EXCEED 3 PER CENT.

C. ALL WIRES, EXCEPT TELEPHONE WIRES, SHALL BE NOT SMALLER THAN NO. 12 AWG AND ALL WIRES SHALL BE STRANDED. STRANDING FOR ALL WIRES SHALL CONFORM TO THE REQUIREMENTS FOR CLASS B CONDUCTORS IN A.S.T.M. SPECIFICATION B8, EXCEPT WHERE EXTRA FLEXIBLE CONDUCTORS ARE SPECIFIED HEREIN, IN WHICH CASE THE STRANDING SHALL BE IN ACCORDANCE WITH THE REQUIREMENTS FOR CLASS D CONDUCTORS. ALL WIRES, INCLUDING TELEPHONE WIRES, SHALL BE NUMBERED AND THE NUMBER PERMANENTLY MARKED ON DURABLE METAL TAGS SO THAT ANY WIRE MAY BE TRACED FROM TERMINAL TO TERMINAL. IN LIEU OF THE TAGS ON THE SWITCHBOARDS, ALL TERMINAL POSTS, LUGS, ETC. MAY BE CLEARLY STENCILED WITH WHITE PAINT ON THE BACK OF THE BOARD IMMEDIATELY ADJACENT TO THE TERMINAL OR LUG. ALL TAGS OR MARKING ON THE SWITCHBOARD AND CONTROL DESK SHALL BE APPLIED IN THE FACTORY DURING CONSTRUCTION AND AFTER ALL CIRCUITS HAVE BEEN TESTED. ALL SPARES SHALL BE CONNECTED TO TERMINAL BOARDS AND GIVEN IDENTIFICATION.

D. SPLICES IN CONDUCTORS SHALL BE MADE MECHANICALLY AND ELECTRICALLY SECURE AND THEN FLOODED WITH SOLDER, WRAPPED WITH RUBBER TAPE AND FRICTION TAPE, AND PAINTED WITH A WATERPROOF INSULATING VARNISH SO THAT THE INSULATION AND THE MECHANICAL AND ELECTRICAL QUALITIES OF THE SPLICES SHALL BE EQUAL TO THAT OF THE REMAINDER OF THE CONDUCTOR. SPLICES SHALL NOT BE INSIDE A CONDUIT OR A CONDULET.

E. THE ENDS OF ALL CONDUCTORS NO. 8AWG AND SMALLER SHALL HAVE APPROVED CUP TERMINALS WHERE THEY TERMINATE AT THE SWITCHBOARD, CONTROL DESK, TERMINAL STRIPS, LIGHTING PANELS, ETC. SIMILAR CONNECTIONS FOR LARGER CONDUCTORS SHALL BE SOLDERED IN APPROVED TERMINAL LUGS, OR MAY BE MADE WITH APPROVED SOLDERLESS TERMINALS.

F. EXCEPT AS OTHERWISE SPECIFIED, ALL INSULATION SHALL BE OF AN OIL BASE COMPOUND AND SHALL BE HIGHLY RESISTANT TO HEAT, MOISTURE, AND OZONE. INSULATION SHALL CONFORM TO THE REQUIREMENTS OF A.S.T.M. STANDARD SPECIFICATION D574 FOR INSULATED WIRE AND CABLE, AND IPCEA SPECIFICATION (APPENDIX D). ALL INSULATED CONDUCTORS SHALL BE COVERED BY A SHEATH OF GR-M POLYCHLOROPRENE COMPOUND PER IPCEA SPECIFICATION AND ASTM D752. IN ADDITION, INSULATION SHALL BE UNDERWRITERS LABORATORIES APPROVED AS TYPE RW, AND SHALL BE SUITABLE FOR USE AS SUBMARINE CABLE. CONDUCTORS SHALL BE SUBJECTED TO AC AND DC TESTS PER MANUFACTURER'S RECOMMENDATIONS. POLYCHLOROPRENE SHEATH SHALL CONTAIN AT LEAST 50% NEOPRENE BY WEIGHT AND SHALL CONTAIN NO RUBBER. CABLE SHALL BE SIMILAR AND EQUAL TO OKOLITE-OKOPRENE AS MANUFACTURED BY THE OKONITE COMPANY.

G. THE CONTRACTOR SHALL USE SPLICING KITS, TERMINATING KITS AND POTHEADS AS RECOMMENDED BY THE CABLE MANUFACTURER.

H. INSULATED WIRE USED FOR CONNECTIONS ON THE BACK OF THE SWITCHBOARDS AND IN THE CONTROL DESK SHALL BE APPROVED ASBESTOS VARNISHED CAMBRIC SWITCHBOARD WIRE.

I. THE GENERAL MAKEUP OF THE PRINCIPAL POWER, CONTROL, AND LIGHTING CABLES SHOWING THE NUMBER AND SIZE OF CONDUCTORS IN EACH IS GIVEN ON DRAWING NO. 68. EACH CONDUCTOR SHALL BE STRANDED IN ACCORDANCE WITH THE REQUIREMENTS FOR CLASS B CONDUCTORS IN A.S.T.M. SPECIFICATION B8 EXCEPT WHERE EXTRA FLEXIBLE CONDUCTORS ARE SPECIFIED HEREIN, IN WHICH CASE THE STRANDING SHALL CONFORM TO THE REQUIREMENTS FOR CLASS D CONDUCTORS.

J. WIRING BETWEEN THE FIXED STRUCTURE AND THE MOVING SPAN, WIRING FOR THE NAVIGATION LIGHTS ON THE BASCULE SPAN, AND WIRING TO THE WARNING LIGHTS ON THE TRAFFIC GATES SHALL BE EXTRA FLEXIBLE WIRE, AND, WHERE THE USE OF RIGID CONDUIT IS NOT PRACTICAL, SUCH CABLES SHALL BE RUN IN APPROVED WEATHERPROOF FLEXIBLE COUPLINGS SIMILAR TO CROUSE-HINDS TYPE EC.

K. WIRING CARRYING CIRCUITS ACROSS THE CHANNEL BETWEEN BASCULE PIERS SHALL BE IN SUBMARINE CABLES. THERE SHALL BE PROVIDED THREE SEPARATE AND SIMILAR 600 VOLT SUBMARINE CABLES FOR THE LOW VOLTAGE SECONDARY POWER CIRCUITS, CONTROL, MISCELLANEOUS LIGHTING, AND TELEPHONE CIRCUIT. THE SUBMARINE CABLES WILL BE FURNISHED AND LAID BY THE CONTRACTOR. THE NUMBER OF CONDUCTORS IN EACH CABLE IS INDICATED ON THE PLANS. THE CONDUCTORS SHALL BE INSULATED AND JACKETED AS PREVIOUSLY SPECIFIED. CONDUCTORS IN THE CABLE SHALL BE INSULATED FOR 600 VOLTS. THE CONDUCTORS SHALL BE COLOR CODED PER N.E.M.A. AND N.E.L.A. COLOR SCHEME. THE SEVERAL CONDUCTORS SHALL BE LAID TOGETHER IN CABLE FORM WITH JUTE FILLERS TO MAKE A UNIFORM CIRCULAR SECTION, THE WHOLE THEN COVERED WITH A WRAPPING OF RUBBER FILLED CABLE TAPE AND A LEAD SHEATH ALLOYED WITH 2 PER CENT TIN APPLIED. OVER THIS LEAD SHEATH THERE SHALL BE A LAYER OF TARRED JUTE AND ASPHALT COMPOUND, A CLOSE WINDING OF DOUBLE GALVANIZED STEEL WIRE ARMOR, FOLLOWED BY A FINAL LAYER OF ASPHALTED JUTE. AT INTERVALS OF NOT MORE THAN 25 FEET ALONG THE CABLE WIRE BAND SERVINGS SHALL BE APPLIED OVER THE WIRE ARMOR. THE SERVINGS SHALL BE MADE OF WIRE, NOT SMALLER THAN .109 IN. IN DIAMETER AND WRAPPED IN A BAND NOT LESS THAN 4 IN. LONG. EACH CABLE SHALL BE IN ONE CONTINUOUS LENGTH WITHOUT JOINTS OR SPLICES IN CONDUCTORS, INSULATION, OR COVERINGS.

L. THE CABLES SHALL BE LAID ACROSS THE CHANNEL IN A TRENCH AT AN ELEVATION NOT HIGHER THAN 537.0. AT EACH SIDE OF THE CHANNEL THE CABLES SHALL EXTEND UP THROUGH THE 8-IN. DIAMETER CONDUITS INTO THE PIERS, SHALL BE SUPPORTED AT ELEVATION 600.875 BY MEANS OF SUITABLE CABLE CLAMPS AS SPECIFIED IN PARAGRAPH 25 AND SHOWN ON THE PLANS, AND SHALL TERMINATE IN THE CABLE SPLICE CABINETS. TO COMPENSATE FOR ANY SETTLEMENT THAT MAY OCCUR IN THE TRENCH, THE CABLES SHALL BE INSTALLED ALLOWING AMPLE EXCESS SLACK BETWEEN ENDS OF CONDUITS AND BOTTOM OF TRENCH. THE TRENCH SHALL BE SUITABLY BACKFILLED. ALL SPARE CONDUCTORS SHALL TERMINATE AT THE CABLE SPLICE CABINETS ON TERMINAL BOARDS.

25. ELECTRIC CABLE SPLICE CABINETS.

A SUBMARINE CABLE SPLICE CABINET SHALL BE PROVIDED IN EACH BASCULE PIER AT THE LOCATION INDICATED. THESE CABINETS SHALL BE OF STEEL PLATES AND ANGLES NOT LESS THAN 3/16 IN. THICK WITH ALL JOINTS CONTINUOUS WELDED. EACH CABINET SHALL BE OF AMPLE SIZE AND ARRANGED SO THAT TERMINAL STRIPS, SUPPORTS, AND OTHER DEVICES ARE READILY ACCESSIBLE FOR MAINTENANCE, REPAIR AND REPLACEMENT. ACCESS TO CABINETS SHALL BE THROUGH TWO REMOVABLE SCREW COVERS ON FRONT. THE CABINETS SHALL BE PROVIDED WITH BOLTS FOR FASTENING TO THE CONCRETE AS INDICATED ON THE DRAWINGS. THE SUBMARINE CABLES SHALL BE SUPPORTED AT BOX FLOOR LEVEL BY CABLE SUPPORTS SIMILAR TO GENERAL ELECTRIC CATALOG NO. 3640471. THE WIRE ARMOR SHALL BE CUT AS REQUIRED FOR ATTACHMENT TO THE CABLE SUPPORTS, AND ABOVE THE CABLE SUPPORT THE WIRE ARMOR SHALL BE REMOVED. CABINETS SHALL BE GALVANIZED AFTER FABRICATION IS COMPLETED AND SHALL BE PAINTED.

26. ELECTRIC CONDUITS AND FITTINGS.

A. ALL ELECTRICAL CONDUITS EXCEPT FOR ROADWAY LIGHTING CIRCUITS, SHALL BE STANDARD WEIGHT GALVANIZED STEEL PIPE, EXCEPT THAT AT LOCATIONS WHERE THE USE OF RIGID CONDUIT IS NOT PRACTICABLE, APPROVED FLEXIBLE METAL CONDUIT OR FLEXIBLE COUPLINGS SHALL BE USED. CONDUITS SHALL BE OF THE SIZES INDICATED ON THE PLANS, OR WHERE NOT SHOWN, SHALL CONFORM IN SIZE TO THE REQUIREMENTS OF THE NATIONAL ELECTRIC CODE. NO CONDUIT SHALL BE SMALLER THAN 3/4 INCH DIAMETER.

B. APPROVED CONDULETS, PULL BOXES AND OTHER FITTINGS SHALL BE USED WITH CONDUITS AND SHALL BE WEATHERPROOF. JUNCTION BOXES SHALL BE USED WHERE SO INDICATED ON THE PLANS AND ELSEWHERE AS FOUND NECESSARY BY THE CONTRACTOR. ALL CONDULETS AND OTHER FITTINGS, UNLESS OTHERWISE NOTED, SHALL BE OF CAST IRON OR MALLEABLE IRON, AND SHALL BE GALVANIZED. JUNCTION BOXES AND PULL BOXES SHALL BE OF STEEL BUILT UP OF WELDED PLATES AND WITH CAST IRON TOPS. COVERS SHALL BE CONNECTED WITH CORROSION RESISTANT BOLTS OR SCREWS AS INDICATED, AND EQUIPPED WITH ADEQUATE GASKETS WHICH WILL PREVENT ENTRANCE OF WATER. ALL JUNCTION BOXES AND PULL BOXES SHALL BE GALVANIZED INSIDE AND OUTSIDE.

C. BENDS IN CONDUITS SHALL BE USED SPARINGLY. THE TOTAL ANGLE OF BENDING BETWEEN JUNCTION BOXES OR CONDULETS SHALL NOT EXCEED 180° UNLESS OTHERWISE APPROVED BY THE ENGINEER. IF THE CONDUIT IS BENT, THE RADIUS OF THE CENTER OF THE CONDUIT SHALL BE NOT LESS THAN 12 TIMES THE INSIDE DIAMETER OF THE CONDUIT. THIS DOES NOT APPLY TO FACTORY ELLS. ALL CONDUITS AND BOXES SHALL HAVE SUITABLE DRAIN HOLES. DRAIN HOLES IN CONDUITS SHALL BE PLACED IN TEE CONNECTIONS LOCATED AT THE LOW POINTS OF THE CONDUIT. THE LENGTH OF CONDUIT BETWEEN JUNCTION BOXES OR CONDULETS EXCEPT IN STRAIGHT RUNS, SHALL NOT EXCEED 70 FT. EXCEPT AS OTHERWISE SHOWN ON THE PLANS OR SPECIFIED HEREIN. ALL CONDUITS SHALL HAVE ENDS REAMED AFTER THREADING. CONDUITS SHALL BE PUT TOGETHER WITH STANDARD COUPLINGS MADE UP WITH RED LEAD AND SCREWED TIGHT.

D. ALL CONDUITS SHALL BE RUN AS FAR AS POSSIBLE IN LINES PARALLEL AND PERPENDICULAR TO THE PRINCIPAL LINES OF THE STRUCTURE TO WHICH THEY ARE ATTACHED. ALL CONDUITS SHALL BE CAREFULLY RODDED AFTER PLACING WITH A DEVICE THAT WILL INSURE THAT THE WHOLE INTERIOR SURFACE OF THE CONDUIT IS FREE AND CLEAR OF OBSTRUCTION. THE CONDUIT SHALL BE PLUGGED WITH WOODEN PLUGS BEFORE BEING LAID AND AFTER BEING RODDED.

E. CONDUITS SHALL BE FIRMLY CLAMPED TO THE STRUCTURE TO PREVENT RATTLING AND SHALL BE SO PLACED THAT DIRT WILL NOT ACCUMULATE AROUND THEM. SUPPORTS SHALL BE AT NOT MORE THAN 5 FT. CENTERS FOR NON-METALLIC AND 8 FT. FOR METALLIC EXCEPT AS OTHERWISE SHOWN ON THE PLANS. THERE SHALL BE AT LEAST 1/2 IN. CLEARANCE BETWEEN CONDUITS. IF ON A HORIZONTAL SURFACE THEY SHALL CLEAR THE SURFACE BY AT LEAST 3 IN. CONDUITS IN ROOMS A AND B OF THE OPERATOR'S HOUSE SHALL BE CONCEALED.

F. FROM EACH END OF THE STRUCTURE TO THE NEAR PIER THERE SHALL BE PROVIDED FIVE 3" ELECTRICAL CONDUITS; ONE FOR INCOMING HIGH VOLTAGE POWER, TWO FOR POLICE, FIRE AND TELEPHONE, AND TWO (ONE ALONG EACH SIDE) FOR ROADWAY LIGHTING. IN ADDITION TWO 3" CONDUITS SHALL BE PROVIDED FOR ROADWAY LIGHTING, ONE ALONG RAMP X AND ONE ALONG RAMP EE. THREE 1" CONDUITS SHALL EXTEND FROM THE ROADWAY GATES, ONE CONDUIT TO EACH APPROACH SIGNAL. BEGINNING BEYOND THE ABUTMENTS THE CONDUITS FOR INCOMING POWER, FOR POLICE, FIRE AND TELEPHONE AND FOR ROADWAY LIGHTING SHALL PASS THROUGH SLEEVES PROVIDED BY OTHERS IN THE BACKWALLS OF THE ABUTMENTS AND SHALL EXTEND, SUPPORTED ON STEELWORK AS SHOWN, TO THE BASCULE PIERS, ENTERING THE PIERS THROUGH PIPE SLEEVES IN THE WALLS AS SHOWN ON THE PLANS.

G. THE POWER CONDUIT FROM BASCULE PIER 5 TO THE NORTH END SHALL BE INSTALLED BY THE CONTRACTOR ALONG RAMP X AND EXTENDED THROUGH THE RAMP X ABUTMENT AND TERMINATED IN A MANHOLE NEAR THE ABUTMENT. THE POWER CONDUIT FROM BASCULE PIER 4 TO THE SOUTH END SHALL BE INSTALLED BY THE CONTRACTOR ALONG THE WEST SIDE OF THE BRIDGE THROUGH THE SOUTH ABUTMENT AND TERMINATED IN A MANHOLE NEAR THE ABUTMENT.

H. ALL CONDUITS SHALL BE SECURELY ATTACHED TO THE STEELWORK IN THE MANNER SHOWN SO AS TO PREVENT RATTLING. AT EACH ROADWAY EXPANSION JOINT THERE SHALL BE PROVIDED IN EACH CONDUIT LINE AN EXPANSION DEVICE, SIMILAR TO OZ TYPE AX. PULL BOXES IN STRAIGHT RUNS SHALL BE PROVIDED AT INTERVALS NOT GREATER THAN 200 FT. OPENINGS BETWEEN CONDUIT AND SLEEVES IN THE PIER WALLS AND ABUTMENT PARAPET WALLS SHALL BE THOROUGHLY CAULKED. THROUGH THE ABUTMENTS THE POWER CONDUIT SHALL BE SUPPORTED AT 8 FT. MAXIMUM INTERVALS BY PIPE CLAMPS FASTENED TO THE CONCRETE WITH EXPANSION BOLTS.

27. OPENINGS FOR ELECTRIC CABLES AND CONDUITS.

OPENINGS IN SLABS OR WALLS SHALL BE PROVIDED WHERE INDICATED ON THE PLANS, AND ELSEWHERE AS NECESSARY, SUBJECT TO THE APPROVAL OF THE ENGINEER. WHERE INDIVIDUAL CONDUITS PASS THROUGH THIN WALLS OR FLOORS, APPROVED PIPE SLEEVES SHALL BE USED. WHERE CONDUITS PASS THROUGH PIPE SLEEVES, THE SPACE BETWEEN THE CONDUIT AND THE PIPE SLEEVE SHALL BE SUITABLY CAULKED AND/OR FILLED WITH COMPOUND AS DIRECTED BY THE ENGINEER. ALL COSTS OF CAULKING AND CLOSING OPENINGS AND OF PROVIDING CONDUITS AND SLEEVES SHALL BE INCLUDED IN THE PRICE PAID FOR ELECTRICAL EQUIPMENT.

28. ELECTRICAL EQUIPMENT ALTERNATES.

WHERE PARTS OR PRODUCTS ARE SPECIFIED BY REFERENCE TO A MANUFACTURER OR TRADE NAME, ALTERNATE PRODUCTS ACCEPTABLE TO THE ENGINEER MAY BE USED.

29. ELECTRICAL GROUNDS.

A. ALL PARTS OF THE SUPERSTRUCTURE STEELWORK AND THE ENTIRE ELECTRICAL SYSTEM SHALL BE THOROUGHLY GROUNDED AT PIERS 2, 6, BENTS 7X, 11X, 9, AND AT THE TWO BASCULE PIERS. THE CONTRACTOR FOR SUBSTRUCTURE WILL EMBED IN THE CONCRETE OF EACH OF THESE PIERS AND BENTS A NO. 0 SOLID, COPPER WIRE BRAZED AT ITS LOWER END TO A STEEL FOUNDATION PILE OR CONCRETE PILE CASING, AND AT ITS UPPER END EXTENDING SUFFICIENTLY ABOVE TOP OF CONCRETE TO PROVIDE FOR CONVENIENT SPLICING AND EXTENSION BY THE CONTRACTOR FOR SUPERSTRUCTURE. AT EACH SUCH PIER OR BENT THE TWO OUTSIDE GIRDERS SHALL BE GROUNDED BY A NO. 6 COPPER WIRE BOLTED OR BRAZED TO THE BOTTOM FLANGE OF THE GIRDER AND TO THE BOTTOM CASTING OF THE FIXED SHOE, AND CARRIED TO CONNECTION WITH THE GROUND WIRE EXTENDING TO THE FOUNDATION PILE. ACROSS ALL ROADWAY EXPANSION JOINTS AT BOTH OUTSIDE GIRDERS, THERE SHALL BE PROVIDED A NO. 6 STRANDED TINNED COPPER WIRE SUITABLY LOOPED TO ALLOW FOR EXPANSION OF THE STEELWORK, AND CONNECTED TO EACH SIDE OF THE EXPANSION JOINT BY BOLTING OR BRAZING SO AS TO PROVIDE AN EFFECTIVE ELECTRICAL CONNECTION FOR GROUNDING THE ENTIRE STRUCTURAL STEELWORK EACH WAY FROM THE BASCULE SPAN.

B. TO THE GROUND WIRES IN THE BASCULE PIERS THE CONTRACTOR SHALL, IN ADDITION TO THE SUPERSTRUCTURE STEELWORK, CONNECT THE CASES OF THE TRANSFORMERS, MOTORS, AND ALL OTHER ELECTRICAL EQUIPMENT, THE NEUTRAL, AND MAKE OTHER GROUND CONNECTIONS REQUIRED BY THE NATIONAL ELECTRICAL CODE, BY THE POWER COMPANY AND BY THE VARIOUS REGULATIONS GOVERNING THE INSTALLATION OF THE EQUIPMENT. THE GROUNDING SYSTEM SHALL BE SO CONSTRUCTED THAT THE RESISTANCE BETWEEN THE SUBSTATION EQUIPMENT AND GROUND, WHEN TESTED BY APPROVED METHODS, SHALL NOT EXCEED 3 OHMS.

30. PAINTING ELECTRICAL EQUIPMENT.

EXCEPT AS OTHERWISE PROVIDED IN THESE SPECIFICATIONS, ALL CABINETS, SWITCH BOXES, CONDUITS, JUNCTION BOXES, PULL BOXES, FITTINGS, CLAMPS, SIDEWALK BOXES, BRACKETS AND ALL OTHER METAL PARTS OF THE ELECTRICAL EQUIPMENT INCLUDING METAL SUPPORTS SHALL BE PAINTED AS ELSEWHERE SPECIFIED FOR STRUCTURAL STEEL. FOR CONDUITS AND SIMILAR PARTS WHERE IT IS NOT PRACTICABLE OR CONVENIENT TO APPLY PAINT IN THE SHOP, THE PRIMER COAT SHALL BE APPLIED IN THE FIELD, THIS TO BE FOLLOWED BY THE REQUIRED FIELD COATS. FOR ELECTRICAL EQUIPMENT IN THE BASCULE PIERS, THE ENGINEER WILL SELECT THE COLOR TO BE USED.

PART 3

TOLEDO EXPRESSWAY SYSTEM
MAUMEE RIVER BRIDGE
BR. NO. LU 120R-35
NOTES

TOLEDO LUCAS COUNTY. OHIO

SCALE: NONE
MADE: ICW DATE: 9-7-53
TRCD.: LCM DATE: 9-30-53
CKD.: JT DATE: 9-30-53

HOWARD, NEEDLES, TAMMEN & BERGENDOFF
CONSULTING ENGINEERS
KANSAS CITY NEW YORK

810 SHEET: 3.8

FED. ROAD DIV. NO	STATE	FED. AID PROJ. NO.	TYPE FUNDS
2	OHIO	UH-1052(2)	POST WAR

9
120

LUCAS COUNTY
CITY OF TOLEDO
TOLEDO EXPRESSWAY SYSTEM
MAUMEE RIVER BRIDGE
LUC 120R- 3.46

31. PAYMENT FOR ELECTRICAL EQUIPMENT.

PAYMENT FOR THE ELECTRICAL EQUIPMENT WILL BE MADE AT THE CONTRACT LUMP SUM PRICE BID FOR "ITEM S-25 - ELECTRICAL EQUIPMENT (EXCLUSIVE OF ROADWAY LIGHTING SYSTEM)", WHICH PAYMENT WILL PROVIDE FULL COMPENSATION FOR ALL ELECTRICAL EQUIPMENT (EXCEPT THAT FOR THE ROADWAY LIGHTING SYSTEM) AND APPURTENANT PARTS EXCEPT SUCH PARTS AS ARE EXPLICITY INDICATED AS BEING PAID FOR IN ANOTHER ITEM. THE ITEM OF "ELECTRICAL EQUIPMENT (EXCLUSIVE OF ROADWAY LIGHTING SYSTEM)" INCLUDES ALL ELECTRICAL EQUIPMENT NECESSARY FOR THE OPERATION AND CONTROL OF THE BASCULE LEAVES; FOR THE OPERATION AND CONTROL OF TRAFFIC CONTROL EQUIPMENT; FOR NAVIGATION, SERVICE AND INDICATING LIGHTS; FOR HEATING, VENTILATING, AND PUMPING; AND FOR COMMUNICATIONS; AND ALL APPURTENANCES THEREOF, INCLUDING EVERY ELECTRICAL PART NECESSARY TO THE COMPLETED STRUCTURE, (EXCLUSIVE ONLY OF THOSE ELECTRICAL PARTS INCLUDED UNDER ROADWAY LIGHTING SYSTEM). THE ITEM WILL THUS INCLUDE THE POWER SERVICE LINE CABLES AS SPECIFIED, TWO INTERRUPTER SWITCHES IN CUBICLES FOR THE POWER TRANSFORMERS, POWER, LIGHT AND CONTROL TRANSFORMERS, THE SPAN MOTORS AND BRAKES, FEEDER BREAKERS, FEEDER SWITCHES AND TRAFFIC SWITCHES, LOCK GEARMOTORS AND BRAKES, TRAFFIC SIGNALS, BELLS, ELECTRICAL PARTS FOR ROADWAY GATES, CENTER POSTS AND TAIL LOCKS, WARNING LIGHTS, STOP SIGNS AND FLASHING BEACONS, NAVIGATION LIGHTS, AIR WHISTLE AND COMPRESSOR, INDICATING LIGHTS, SERVICE LIGHTS, INCLUDING HOUSE AND PIER ROOM LIGHTS, LAMPS AND EQUIPMENT, FIXTURES, GLOBES AND SOCKETS, CONVENIENCE OUTLETS, EXTENSION CORDS, SPACE HEATERS, AIR HEATERS, SOLENOID VALVE ON WATER LINE, AQUASTATS, THERMOSTATS, HEATER, FAN AND SWITCHES, SUMP PUMPS, WIRING AND CONNECTIONS TO THE SUMP PUMPS COMPLETE WITH PIPING AND CONTROLS, FLOAT SWITCHES AND FLOAT SWITCH BYPASSES, TELEPHONE SYSTEMS, GROUND CONNECTIONS, TOGETHER WITH ALL SWITCHBOARDS AND THEIR SUPPORTS AND APPURTENANCES, CONTROLLERS, CONTROL DESK, SWITCHES, CIRCUIT BREAKERS, CONTACTORS, REVERSING CONTACTORS, RHEOSTATS, MOTOR RESISTORS AND THEIR SUPPORTS, ELECTRICAL POSITION INDICATORS COMPLETE INCLUDING GEARING NOT SPECIFIED TO BE FURNISHED AS A PART OF THE MACHINERY, WIRING, CABLES, SUBMARINE CABLES, CABLE SUPPORTS, SPLICE BOXES, JUNCTION BOXES, PULL BOXES, CONDUITS, CONDUIT FITTINGS, CLAMPS AND FASTENINGS FOR CABLES AND CONDUITS, INCLUDING CONDUITS, BOXES AND ACCESSORIES FOR THE POLICE AND FIRE ALARM CABLE, RELAYS, OVERLOAD RELAYS, UNDERVOLTAGE RELAYS, PHASE REVERSAL RELAYS, CENTRIFUGAL SPEED RELAYS, INTERLOCKS, SWITCH CABINETS, PANELBOARD, TERMINAL BOXES, TERMINAL STRIPS, WALL AND FLOOR SLEEVES, BOLTS AND FASTENINGS FOR ALL PARTS, GROUNDS, FUSES, PUSHBUTTONS, SNAP SWITCHES, SELECTOR SWITCHES, AND OTHER APPARATUS HEREIN CALLED FOR OR OTHERWISE REQUIRED FOR THE COMPLETION OF THE BRIDGE, TESTED, OPERATED, IN OPERATIVE CONDITION, READY FOR TRAFFIC AND FOR OPERATION. THE LUMP SUM PRICE BID INCLUDES PAYMENT FOR ALL SHOP AND FIELD PAINTING OF THE ELECTRICAL EQUIPMENT. ELECTRICAL EQUIPMENT WHICH IS NOT INCLUDED IN THE LUMP SUM PRICE BID FOR ELECTRICAL EQUIPMENT CONSISTS OF THE ROADWAY LIGHTING SYSTEM, AND TOOLS AND APPARATUS FOR TESTING AND MAINTAINING THE ELECTRICAL SYSTEM.

SPECIFICATIONS FOR MAINTENANCE EQUIPMENT AND FOR PERFORMANCE GUARANTEE

1. MAINTENANCE EQUIPMENT IN BASCULE PIERS.

A. IN EACH BASCULE PIER THERE SHALL BE PROVIDED ONE MANUALLY OPERATED CHAIN HOIST, AS SHOWN ON THE PLANS.

B. IN EACH BASCULE PIER THERE SHALL BE PROVIDED ONE WORK BENCH EQUAL TO HALLOWELL FIGURE 600W STEEL FRAME BENCH WITH LAMINATED WOOD TOP WITH HALLOWELL FIGURE 1821 STEEL DRAWER AND LOCK (AS MANUFACTURED BY THE STANDARD PRESSED STEEL CO., JENKINTOWN, PA.) AND A SUBSTANTIAL SWIVEL BASE BENCH TYPE VISE WITH 4-IN. ADJUSTABLE JAWS. EACH BENCH SHALL BE FASTENED TO THE FLOOR WITH EXPANSION BOLTS.

C. IN EACH BASCULE PIER THERE SHALL BE PROVIDED THE FOLLOWING TOOLS FOR MAINTAINING THE MACHINERY: ONE SET OF THREE OILING CANS; ONE SET OF SIX VARIED FILES; TWO FLAT CHISELS, TWO CAPE CHISELS; TWO MACHINIST'S HAMMERS; TWO SCREW DRIVERS WITH INSULATED HANDLES, TWO 24-IN. PIPE WRENCHES, TWO MONKEY WRENCHES; TWO PAIRS OF PLIERS; ONE HACK SAW AND SIX BLADES, ONE SET OF SEMI-FINISHED WRENCHES TO FIT EACH SIZE BOLT IN THE MACHINERY; AND ONE SOCKET WRENCH FOR EACH SIZE SET SCREW.

D. FOR MAINTAINING AND TESTING THE ELECTRICAL INSTALLATION THE FOLLOWING TOOLS AND APPARATUS SHALL BE PROVIDED AT EACH BASCULE PIER: ONE PAIR 8-1/2 IN. SIDE CUTTING PLIERS, ONE PAIR 6-IN. LONG NOSE PLIERS, ONE SCREW DRIVER WITH INSULATED HANDLE, ONE AC-DC PORTABLE VOLTMETER 0-750 AC and 0-300 DC VOLT SCALES, ONE MEGGER (STATISCOPE), ONE SET OF FEELER GAUGES - .005, .010, .020 AND .030 IN. NOT LESS THAN 16 IN. LONG, AND ONE PAIR OF LINEMAN'S HEAVY DUTY GLOVES, CLASS A, 10,000 VOLTS WITH LEATHER GAUNTLET PROTECTION.

E. THE FOLLOWING LUBRICATING EQUIPMENT SHALL BE PROVIDED:

TWO (2) LEVER GUNS 21 OZ. CAPACITY, ALEMITE MODEL 6679 WITH HOSE 6829-A FOR TRUNNION BEARINGS AND FOR LINE SHAFT OF CENTER LOCKS.

TWO (2) VOLUME PUMPS ALEMITE MODEL 6521 WITH 15-FT. RUBBER HOSE WITH GIANT BUTTON HEAD COUPLINGS, FOR MAIN OPERATING MACHINERY.

ONE (1) HAND GUN, 8-OZ. CAPACITY, SCREW TYPE, ALEMITE NO. C-600 WITH 15-IN. HOSE NO. 7089 FOR ROADWAY GATES.

ONE (1) HAND GUN, ALEMITE TYPE 5585-Z WITH FITTING FOR FALK COUPLINGS.

THIS EQUIPMENT, INSTALLED AND ACCEPTED, WILL BE PAID FOR AT THE CONTRACT LUMP SUM PRICE BID FOR "MAINTENANCE EQUIPMENT IN BASCULE PIERS."

2. MACHINERY AND ELECTRICAL EQUIPMENT PERFORMANCE GUARANTEE.

THE CONTRACTOR SHALL BE RESPONSIBLE FOR THE PROPER PERFORMANCE IN PART AND AS A WHOLE OF THE MECHANICAL AND ELECTRICAL EQUIPMENT PROVIDED FOR THE OPERATION OF THE BASCULE SPAN AND RELATED PARTS FOR A PERIOD OF ONE YEAR AFTER FINAL ACCEPTANCE OF THE WORK, TO THE EXTENT THAT HE SHALL CORRECT AT HIS OWN EXPENSE ANY DIFFICULTIES WITH THE OPERATION WHICH MAY ARISE DURING THIS PERIOD AS THE RESULT OF DEFECTS IN MATERIAL, EQUIPMENT, MANUFACTURE AND ERECTION. RESPONSIBILITY FOR SUCH CORRECTION SHALL INCLUDE THE REPAIR, READJUSTMENT AND REPLACEMENT NOT ONLY OF DEFECTIVE PARTS, BUT OF OTHER PARTS WHICH MAY BE DAMAGED THEREBY. THE DEPARTMENT RESERVES THE RIGHT TO ITSELF CORRECT ANY SUCH DEFECTS AND THE CONTRACTOR SHALL PAY THE COST THEREOF. THE CONTRACTOR SHALL GIVE A WRITTEN GUARANTEE SATISFACTORY TO THE DEPARTMENT TO INSURE THE CARRYING OUT OF THESE OBLIGATIONS.

PAYMENT FOR THIS GUARANTEE SHALL BE CONSIDERED AS INCLUDED IN THE CONTRACT PRICE BID FOR "MACHINERY" AND FOR "ELECTRICAL EQUIPMENT (EXCLUSIVE OF ROADWAY LIGHTING SYSTEM)".

MICROFILMED
JUL 12 1954

ESTIMATED QUANTITIES FOR PART 3

STRUCTURE OVER 20 FOOT SPAN

LINE NO.	ITEM	DESCRIPTION	UNIT	SOUTH ABUTMENT	UNIT 1	BASCULE PIER 4	BASCULE SPAN	BASCULE PIER 5	UNIT 2	UNIT 3	NORTH ABUTMENT	RAMP E-E	RAMP E-E ABUTMENT	RAMP X	RAMP X ABUTMENT	GENERAL	TOTAL
1	S-1 & Special	Concrete in Counterweights (including embedded metal for "heavy concrete")	Cubic Yards														691
2	S-1 & Special	Class "C" Concrete	Cubic Yards	10.	1724	2483	——	2500	858	312	6	250	4	238	2	13 ④	8400
3	S-3	Type "C" Waterproofing	Square Yards	839	5190	293	——	293	3237	1221		924		815	273		13,685
4	S-4	Reinforcing Steel	Pounds		537,590	100,980	——	101,250	306,350	114,390		82,840		73,020		530 ⑥	1,316,950
5	S-7	Structural Carbon Steel	Pounds	20,000	2,518,200	609,400	3,194,000	624,800	1,463,600	882,500	10,600	732,500	2000	703,000	3,400		10,764,000
6	S-7	Manganese Structural Steel	Pounds		2,638,700				1,126,800								3,825,500
7	S-8	Field Painting of Structural Steel	Pounds														14,139,500 ①
8	S-14	Handrail (Two-pipe)	Linear Feet						272	416	65	516 ⑦	159	424	127		1979
9	S-14	Handrail (Three-pipe)	Linear Feet	154	1,557	147	445	102	466			160		403	125		3559
10	S-25	Roadway Lighting System ②	Lump Sum														Lump Sum
11	S-25 & Special	Electrical Equipment (Exclusive of Roadway Lighting System)	Lump Sum														Lump Sum
12	S-26	Name Plates	Lump Sum														Lump Sum
13	S-29	Downspouts (6" W.I. pipe with specials and fastening)	Linear Feet						107		53		25	45			230
14	S-29	Sub-drainage for Surface Course ③	Linear Feet	158	45				157	206					135		701
15	SS-24	Sidewalk Grating ④	Square Feet			130	3500	130									3,760
16	SS-33	5" Open Steel Grid Floor	Square Feet				15,400										15,400
17	T-50	2½" Hot Mixed, Hot laid Asphaltic Concrete Surface Course, Type B (60-70)	Square Yards	830	5755	292	——	292	3,220	1211		911		796	266		13,573
18	Special	Trunnion shafts and Bearings	Pounds														182,040
19	Special	Machinery	Pounds														274,050
20	Special	Operators House	Lump Sum														Lump Sum
21	Special	Maintenance Equipment in Bascule Piers	Lump Sum														Lump Sum
22	Special	Windows and Doors in Bascule Piers	Lump Sum														Lump Sum
23	Special	Standby Power Units	Lump Sum														Lump Sum
24																	
25																	

PAVEMENT

TYPE CODE 6708

26	I-7	Reinforced Concrete Approach Slabs, as per plan	Square Yards	183							97		50		32		362
27	T-30	Bituminous Tack Coat, as per plan	Gals	18							10		6		3		37
28	T-50	2½" Hot Mixed, Hot laid Asphaltic Concrete Surface Course, Type B (60-70)	Square Yards	175							98		55		30		358

① Structural steel not to be field painted includes bases of trunnion supports, cast iron balance blocks, and certain other parts of counterweights.
② Exclusive of luminaires, wiring and transformers.
③ Includes angles along gutter on abutments, and angles and copper tubes on the bridge.
④ Includes painting of the grating.
⑤ Concrete in Ramp EE stairway footings 9 cu.yds, and in Power Manholes 4 cu. yds.
⑥ Reinforcing steel in Ramp EE stairway footings and Power Manholes.
⑦ Includes 102 Linear Feet of stairway handrail.

PART 3

TOLEDO EXPRESSWAY SYSTEM
MAUMEE RIVER BRIDGE
BR. NO. LU 120R-35

ESTIMATED QUANTITIES AND NOTES

TOLEDO LUCAS COUNTY, OHIO

SCALE: NONE
MADE: TCW-AH DATE: 9-27-53
TRCD: LCM-RR DATE: 9-30-53
CKD: JT DATE: 9-30-53

HOWARD, NEEDLES, TAMMEN & BERGENDOFF
CONSULTING ENGINEERS
KANSAS CITY NEW YORK
810 SHEET: 3.9

FED. ROAD DIV. NO	STATE	FED. AID PROJ. NO.	TYPE FUNDS
2	OHIO	UI-1052(2)	POST WAR

10
120

LUCAS COUNTY
CITY OF TOLEDO
TOLEDO EXPRESSWAY SYSTEM
MAUMEE RIVER BRIDGE
LUC 120R-3.46

MICROFILMED JUL 22 1953

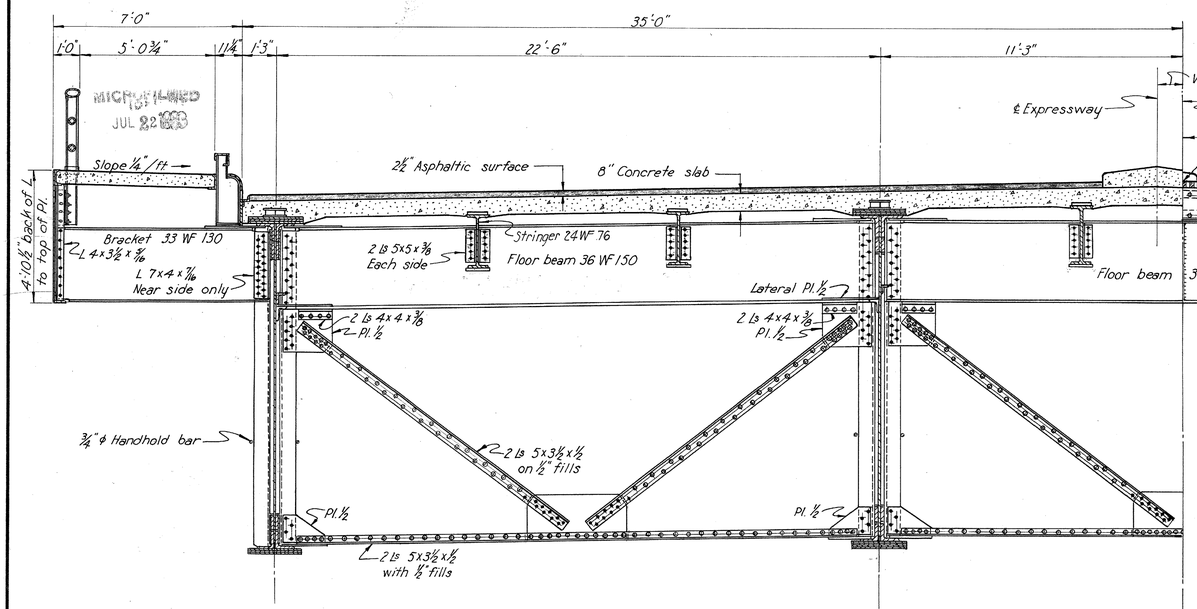

HALF CROSS SECTION AT INTERMEDIATE CROSS FRAMES

Points 7 to 15 inclusive, 17 to 25 inclusive, 27 to 34 inclusive. Point 35 is similar except depth of girder and cross frame and connection Pls. for bottom strut to be cut and bent as shown for point 5.

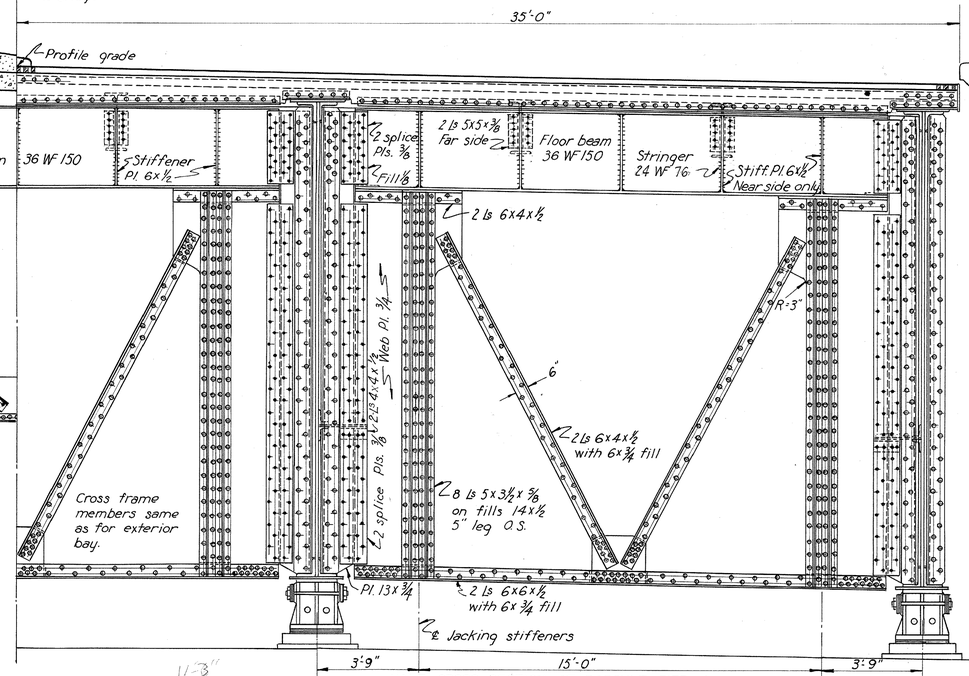

HALF CROSS SECTION AT BASCULE PIER 4
Point 36

Sidewalk on bascule pier

Note:
See Sheet 77 for typical location of conduits.

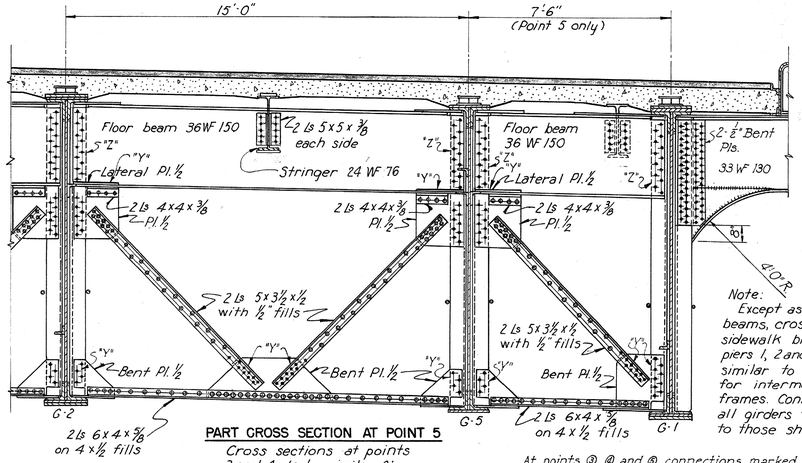

Note:
Parts of cross section not shown to be similar to those shown for other intermediate cross frames except for depth of girders.

PART CROSS SECTION AT POINT 5

Cross sections at points 3 and 4 to be similar At point 3 cross frame between G-1 and G-5 to be similar to cross frame between G-2 and G-5.

At points ③, ④ and ⑤ connections marked "Y" and "Z" shall be reamed or drilled and then riveted after concrete slab and asphalt surface have been placed. Floor beam connections "Z" shall be provided with erection bolts as required.

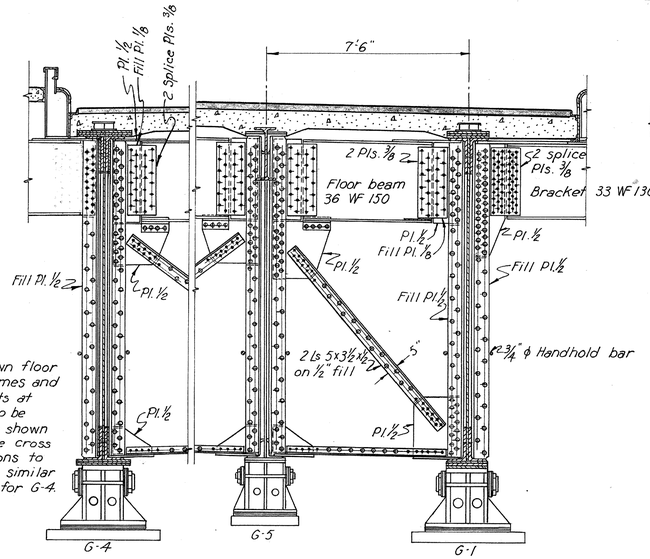

Note:
Except as shown floor beams, cross frames and sidewalk brackets at piers 1, 2 and 3 to be similar to those shown for intermediate cross frames. Connections to all girders to be similar to those shown for G-4.

PART CROSS SECTION AT PIERS 1, 2 AND 3

Points 6, 16 and 26
Same details for Girder G-1 at Piers 2 and 3.

PART CROSS SECTION AT PIER 1
Point 6

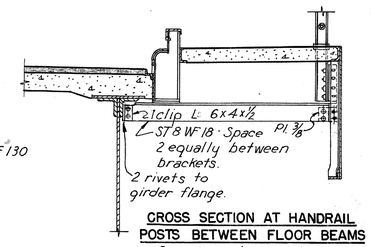

CROSS SECTION AT HANDRAIL POSTS BETWEEN FLOOR BEAMS
Except west side of Span 1.

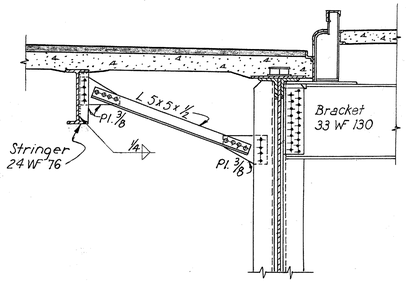

END SIDEWALK BRACKET

Near point 36. In Unit 1 and point 0 in Unit 2.

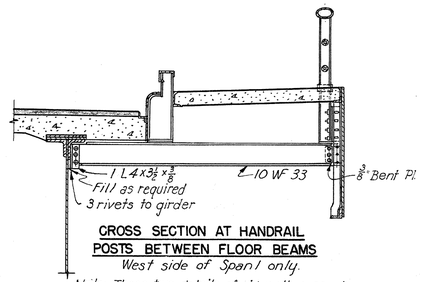

CROSS SECTION AT HANDRAIL POSTS BETWEEN FLOOR BEAMS
West side of Span 1 only.

Note: These two details of sidewalk supports between floorbeams are typical for Unit 2, Unit 3 and Ramp E-E. Use bent ⅜ plate at connections where angles are not practical.

PART 3

TOLEDO EXPRESSWAY SYSTEM
MAUMEE RIVER BRIDGE
BR. NO. LU 120R-35
UNIT 1
ROADWAY CROSS SECTIONS
TOLEDO LUCAS COUNTY, OHIO

SCALE 3/8" = 1'-0"
MADE GD DATE 2-15-52
TRCD KLG DATE 4-27-53
CKD. AHS DATE 5-16-53

HOWARD, NEEDLES, TAMMEN & BERGENDOFF
CONSULTING ENGINEERS
KANSAS CITY NEW YORK

810 SHEET: 3.10

704

MICROFILMED
JUL 22 1953

FED. ROAD DIV. NO	STATE	FED. AID PROJ. NO.	TYPE FUNDS
2	OHIO	UI-1052(2)	POST WAR

11
120

LUCAS COUNTY
CITY OF TOLEDO
TOLEDO EXPRESSWAY SYSTEM
MAUMEE RIVER BRIDGE
LUC 120R-3.46

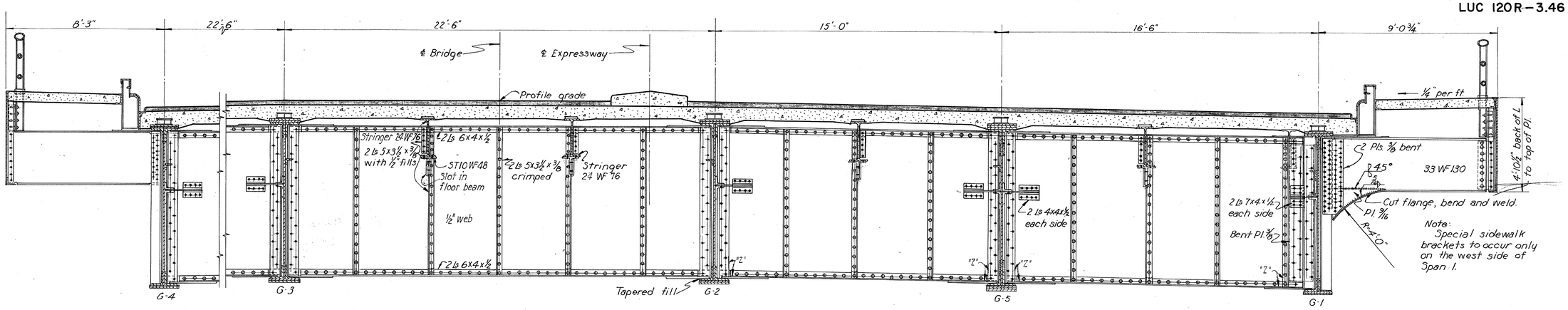

Note:
Floor beam between G-3 and G-4 to be similar to that shown between G-2 and G-3.

PART CROSS SECTION AT POINT 2
Cross section at point 1 similar except for depth of girder and floor beam and distance between G-1 and G-5.

At points ① and ② connections marked "Z" shall be reamed or drilled and then riveted after concrete slab and asphalt surface have been placed. Provide erection bolts as required.

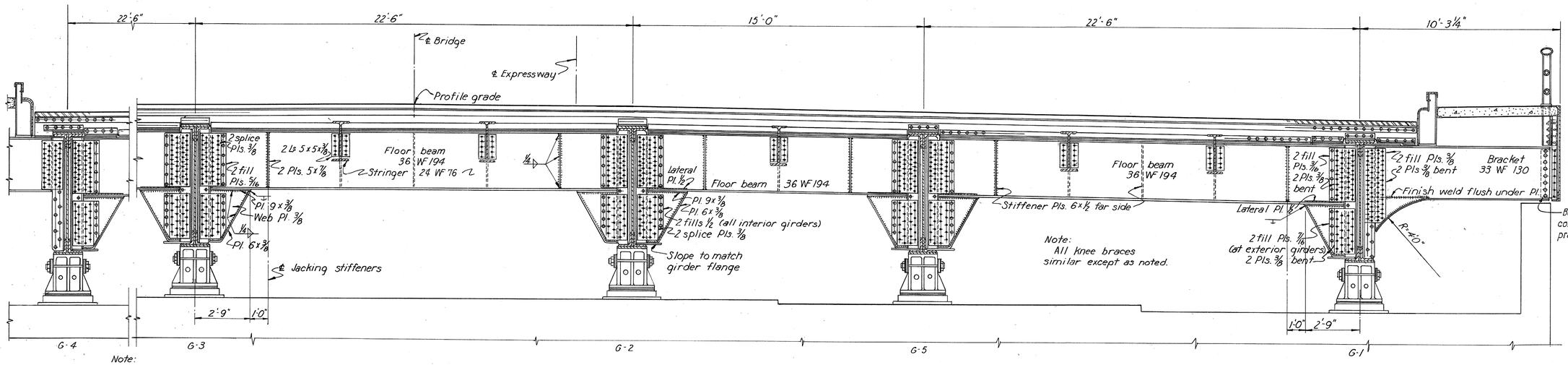

Note:
Floor beam between G-3 and G-4 to be similar to that shown between G-1 and G-5.

PART CROSS SECTION AT SOUTH ABUTMENT
Point 0

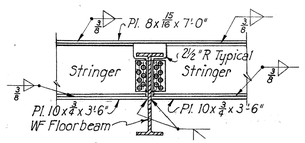

STRINGER CONNECTION AT WF FLOOR BEAMS

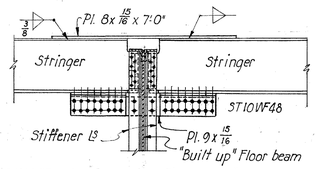

STRINGER CONNECTION AT "BUILT UP" FLOOR BEAMS

PART 3

TOLEDO EXPRESSWAY SYSTEM
MAUMEE RIVER BRIDGE
BR. NO. LU 120 R-35
UNIT 1
ROADWAY CROSS SECTIONS
TOLEDO LUCAS COUNTY, OHIO

SCALE 3/8" = 1'-0"
MADE G.D. DATE 3-27-52
TRCD. KLG DATE 4-29-53
CKD. AHS DATE 5-6-53

HOWARD, NEEDLES, TAMMEN & BERGENDOFF
CONSULTING ENGINEERS
KANSAS CITY NEW YORK
810 SHEET 3.11

705

MICROFILMED
JUL 22 1983

FED. ROAD DIV. NO.	STATE	FED. AID PROJ. NO.	TYPE FUNDS
2	OHIO	UI-1052(2)	POST WAR

12
120

LUCAS COUNTY
CITY OF TOLEDO
TOLEDO EXPRESSWAY SYSTEM
MAUMEE RIVER BRIDGE
LUC 120R-3.46

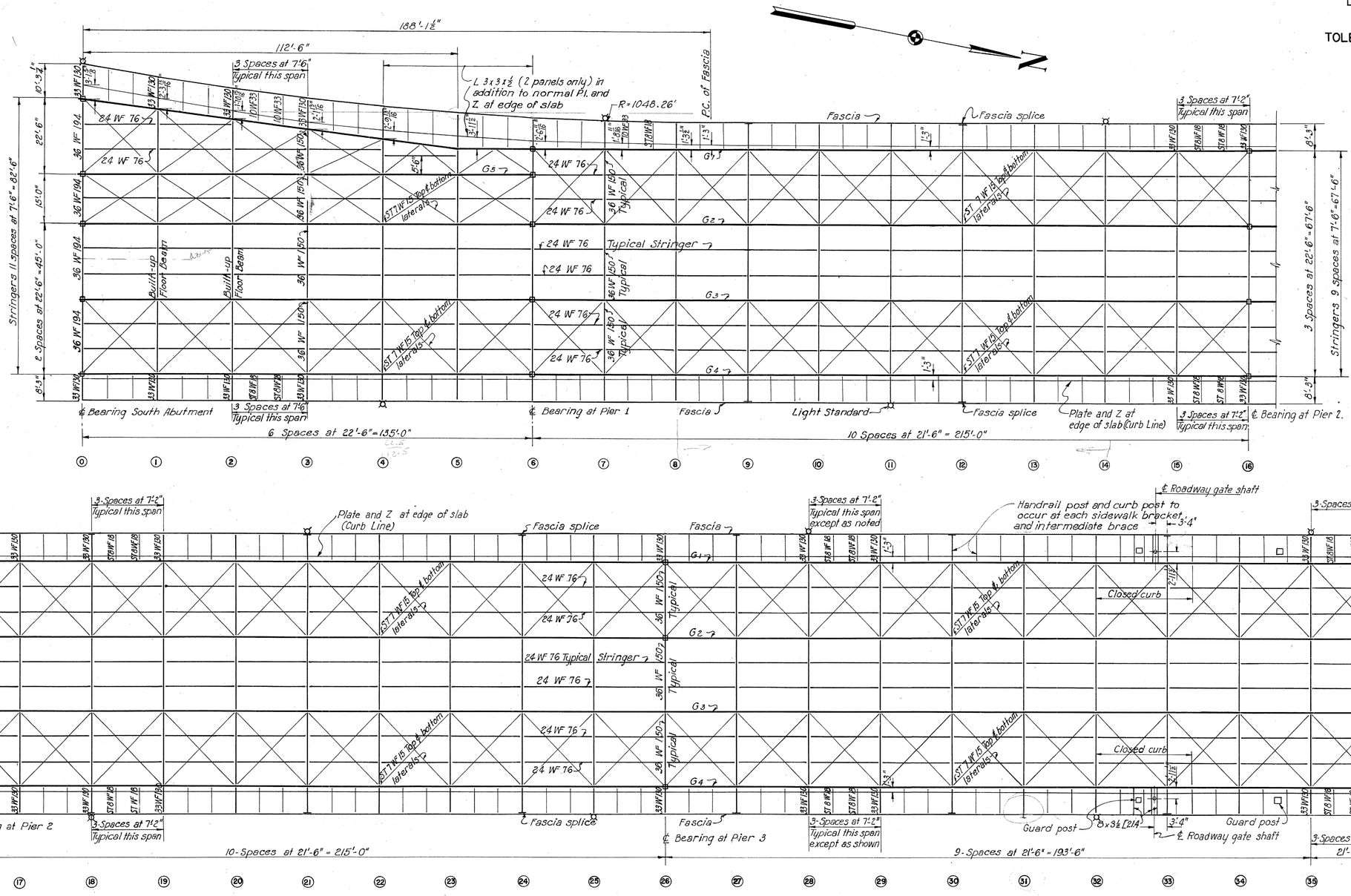

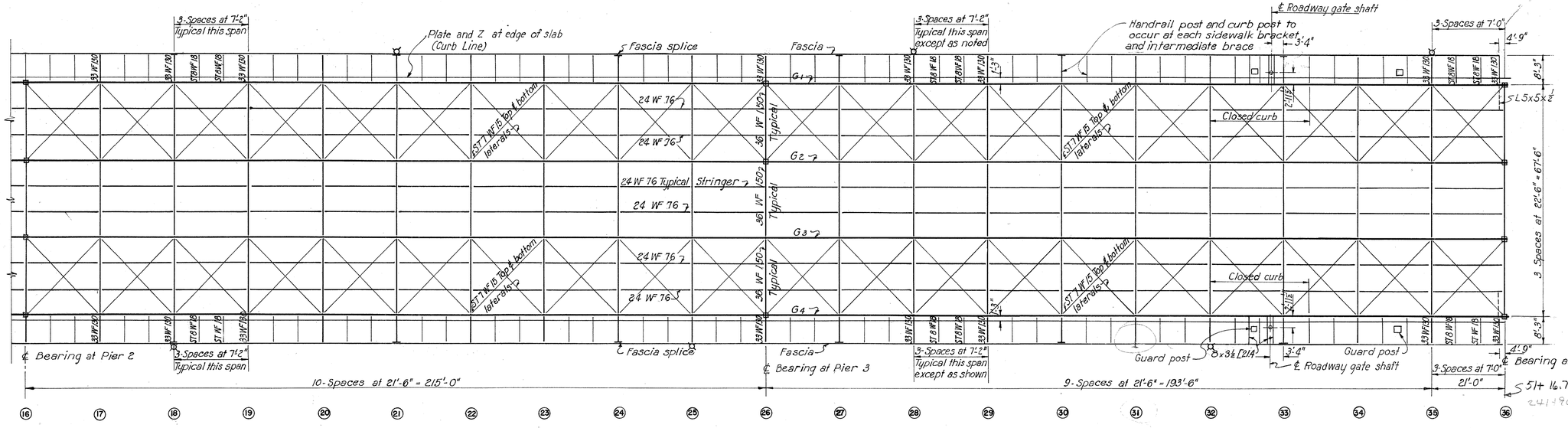

FRAMING PLAN

Note:
Closed curb is not required for Unit I except at roadway gates as shown on Framing Plan.
In general, angles and other shapes shall not be bent to make a skewed connection.

PART 3

TOLEDO EXPRESSWAY SYSTEM
MAUMEE RIVER BRIDGE
BR. NO. LU 120R-35
UNIT I
STEEL FRAMING PLAN
TOLEDO LUCAS COUNTY OHIO

SCALE 1/8" = 1'-0"
MADE W.B.C. DATE 1-26-52
TRCD A.H. DATE 5-12-52
CKD A.H.S. DATE 4-24-53

HOWARD, NEEDLES, TAMMEN & BERGENDOFF
CONSULTING ENGINEERS
KANSAS CITY NEW YORK
810 SHEET: 3.12

707

CHARLES BRUNING CO., INC.

FED. ROAD DIV. NO.	STATE	FED. AID PROJ. NO.	TYPE FUNDS
2	OHIO	UI-1052(2)	POST WAR

LUCAS COUNTY
CITY OF TOLEDO
TOLEDO EXPRESSWAY SYSTE
MAUMEE RIVER BRIDGE
LUC 120R-3.46

MICROFILMED
JUL 22 1953

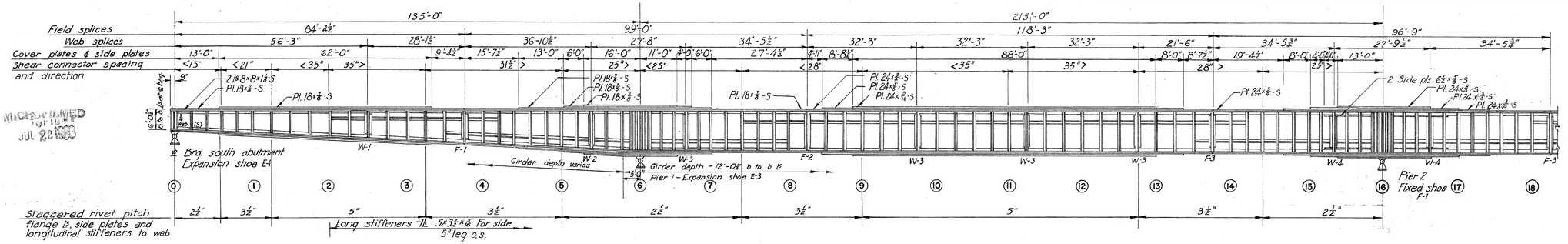

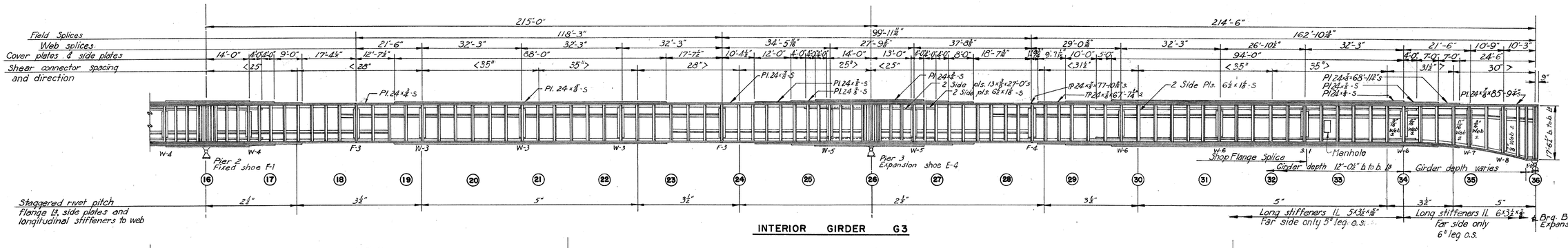

INTERIOR GIRDER G3

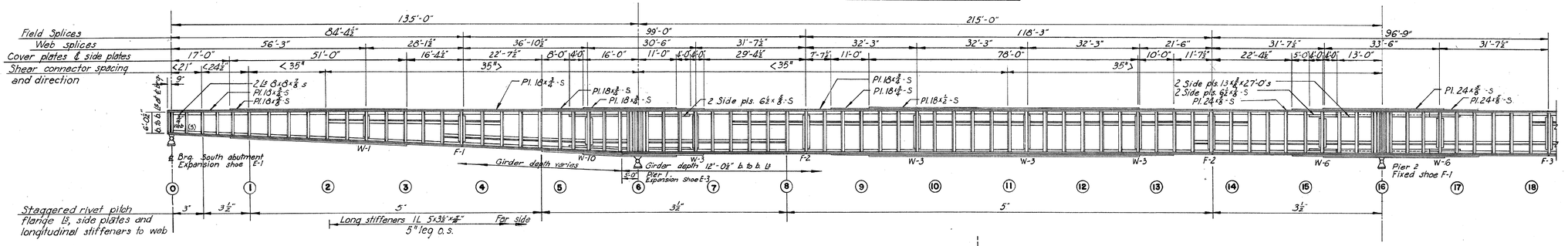

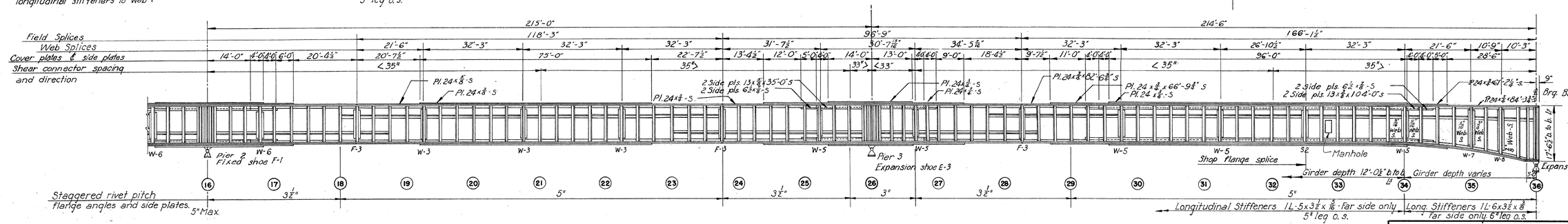

EXTERIOR GIRDER G4

See Sheet 14 for General Notes.

PART 3

TOLEDO EXPRESSWAY SYSTE

MAUMEE RIVER BRIDGE
BR. NO. LU 120R-35

UNIT I

GIRDER ELEVATIONS

TOLEDO LUCAS COUNTY, OHI

SCALE 1/16" = 1'-0"
MADE W.B.C. DATE 1-21-52
TRCD MCK DATE 7-10-52
CKD TPS-BW DATE 8-16-52

HOWARD, NEEDLES, TAMMEN & BERGENDC
CONSULTING ENGINEERS
KANSAS CITY NEW YORK

708

MICROFILMED
JUL 22 1953

FED. ROAD DIV. NO.	STATE	FED. AID PROJ. NO.	TYPE FUNDS
2	OHIO	UI-1052(2)	POST WAR

14
120

LUCAS COUNTY
CITY OF TOLEDO

TOLEDO EXPRESSWAY SYSTEM
MAUMEE RIVER BRIDGE
LUC 120R-3.46

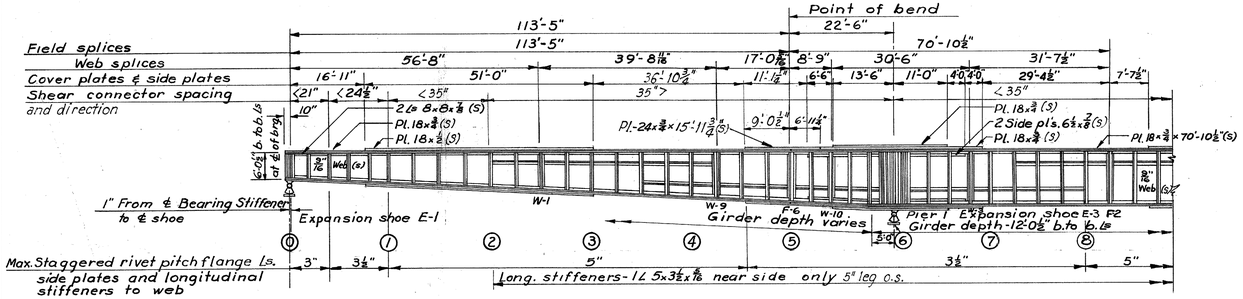

EXTERIOR GIRDER G-1

Note: Remainder of girder similar to G4
All dimensions are parallel to girder

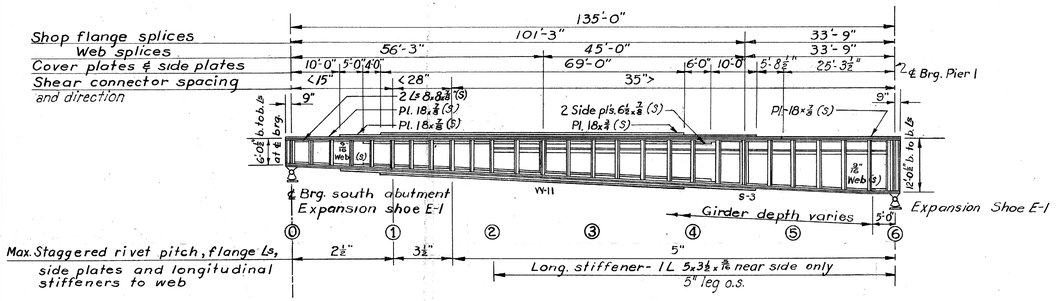

INTERIOR GIRDER G-5

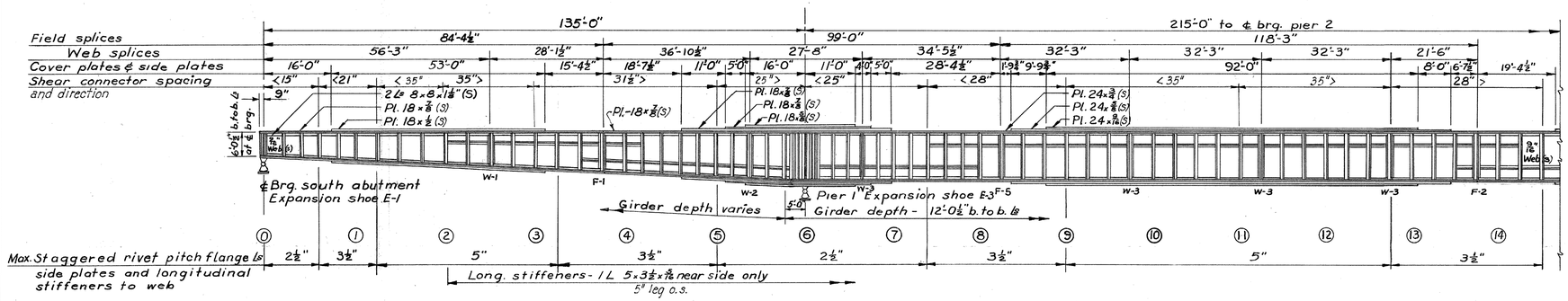

INTERIOR GIRDER G-2

Note: Remainder of girder similar to G3

STIFFENER ANGLES

LOCATION	GIRDERS G1 ℄ G4	GIRDERS G2 ℄ G3	GIRDER G5
Intermediate stiffeners Point 34 to 36 inclusive	2 Ls 9x4x7/16	2 Ls 9x4x5/8	
Intermediate stiffeners Point 0 to 34 inclusive	2 Ls 7x4x7/16 *	2 Ls 7x4x7/16	2 Ls 7x4x7/16
Bearing stiffeners at abutment	4 Ls 7x4x5/8	4 Ls 7x4x3/4	4 Ls 7x4x3/4
Bearing stiffeners at pier 1	8 Ls 7x4x5/8	8 Ls 8x4x1	4 Ls 7x4x5/8
Bearing stiffeners at pier 2	8 Ls 7x4x3/4	8 Ls 8x4x1	
Bearing stiffeners at pier 3	8 Ls 7x4x3/4	8 Ls 8x4x1	
Bearing stiffeners at bascule pier 4	4 Ls 7x4x5/8 (S)	4 Ls 8x4x1 (S)	
Longitudinal stiffeners Point 34 to 36 inclusive	1L 6x3 1/2 x 3/8	1L 6x3 1/2 x 3/8	
Longitudinal stiffeners Point 2 to 34 inclusive	1L 5x3 1/2 x 7/16	1L 5x3 1/2 x 7/16	1L 5x3 1/2 x 7/16
Jacking stiffeners at pier 1	2 Sets of 4 Ls 7x4x3/4	2 Sets of 4 Ls 7x4x3/4	2 Ls 7x4x5/8
Jacking stiffeners at pier 2	2 Sets of 4 Ls 7x4x5/8	2 Sets of 4 Ls 7x4x5/8	
Jacking stiffeners at pier 3	2 Sets of 4 Ls 7x4x5/8	2 Sets of 4 Ls 7x4x3/4	

* At panel points 1 to 5 inclusive on Girder G-1 use 2 Ls 7x4x9/16

GENERAL NOTES FOR "GIRDER ELEVATIONS"

ALL UNITS OF BRIDGE

Material marked with suffix "S" to be Manganese Structural Steel. All other material to be carbon steel.

Web plates shall be 1/8" less in depth than the distance back-to-back of flange angles.

Bottom flange angles and cover plates are the same as top flange angles and cover plates, unless noted otherwise.

Rivet spacing between cover plates and flange angles to be the same as between flange angles and web.

Ends of jacking and bearing stiffeners shall be milled to bear. Other stiffeners shall have a tight fit top and bottom. All stiffeners at panel points and at bearing points shall be on fills and shall not be crimped. All intermediate stiffeners shall be on fills as required to limit crimping to 3/8".

The gage line of longitudinal stiffeners shall be 1/2" "D" from toe of the nearest flange angle where "D" equals the clear distance between toes of flange angles.

Splices having the same mark will be alike except for fills.

Numbers encircled thus (3) refer to panel points as indicated on framing plan.

For Shear Connector details see Sheet 16.

Provide 3/4" ϕ handbars 4'-6" above lower flange on both sides of each girder, continuous between Floorbeams and welded to stiffener angles. Handbar will be bent to clear small obstructions to make handbar as continuous as possible. At field splices and where floorbeam does not permit continuous bar, handbar will be bent and end of bar welded to a clip angle riveted to the web of the girder.

NOTES FOR GIRDER ELEVATIONS

UNIT 1

Web plates, flange angles, side plates, cover plates, and splice material of all girders on this unit to be Manganese Structural Steel. Stiffeners to be carbon steel; except bearing stiffeners at bascule pier 4 shall be Manganese Structural Steel.

PART 3

TOLEDO EXPRESSWAY SYSTEM

MAUMEE RIVER BRIDGE
BR. NO. LU 120R-35
UNIT 1
GIRDER ELEVATIONS

TOLEDO LUCAS COUNTY, OHIO

SCALE 1/16"=1'-0"
MADE B.B.C. DATE 1-28-52
TRCD H.A.S. DATE 9-30-52
CKD J.P.S.H.C. DATE 8-22-53

HOWARD, NEEDLES, TAMMEN & BERGENDOFF
CONSULTING ENGINEERS
KANSAS CITY NEW YORK

810 SHEET- 3.14

709

LEE BRUNING CO., INC.

FED. ROAD DIV. NO.	STATE	FED. AID PROJ. NO.	TYPE FUNDS
2	OHIO	UI-1052(2)	POST WAR

15
120

LUCAS COUNTY
CITY OF TOLEDO
TOLEDO EXPRESSWAY SYSTEM
MAUMEE RIVER BRIDGE
LUC 120R- 3.46

MICROFILMED JUL 22 1953

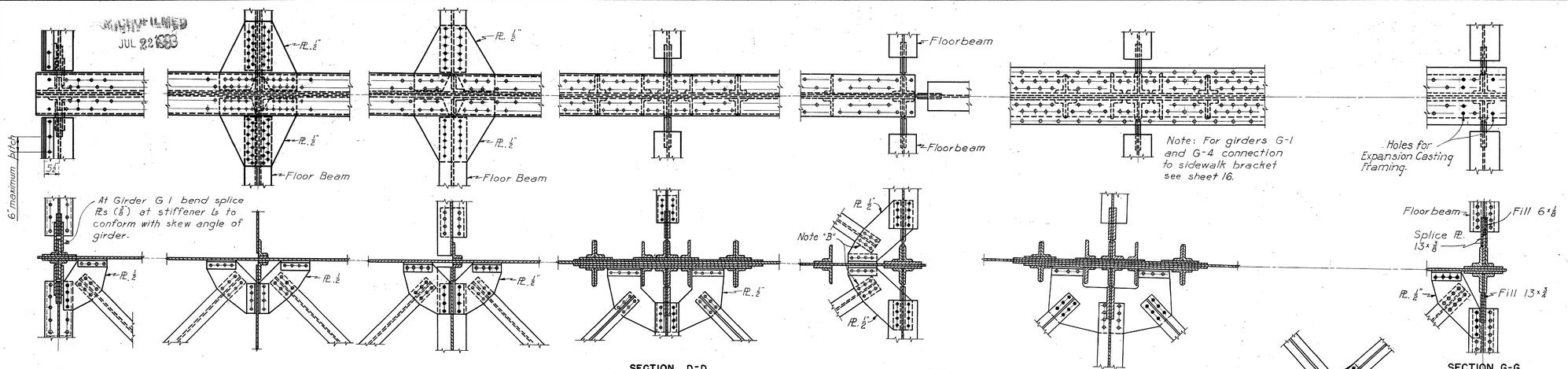

BEARING AT SOUTH ABUTMENT
Note: G-1 varies, see sheet 16.

PANEL POINT 1
Panel point 2 similar.

PANEL POINT 3

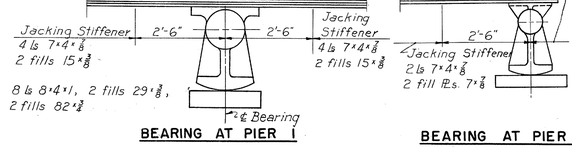

BEARING AT PIER 1

BEARING AT PIER 1
Girder G-5

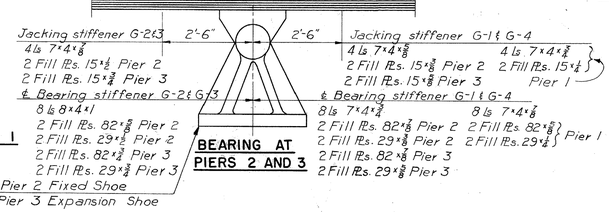

BEARING AT PIERS 2 AND 3

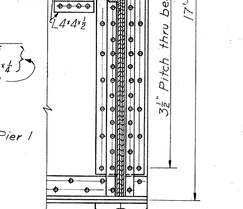

BEARING AT BASCULE PIER

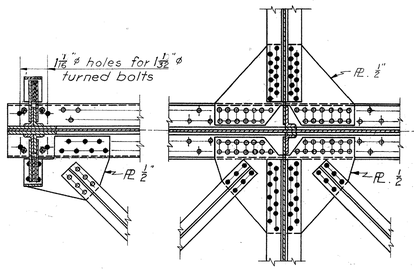

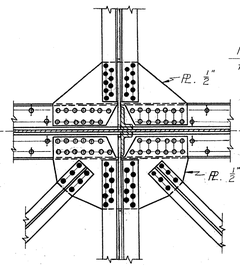

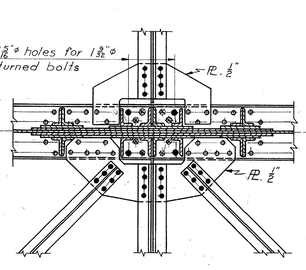

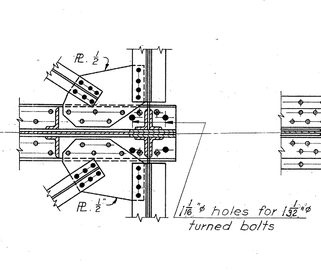

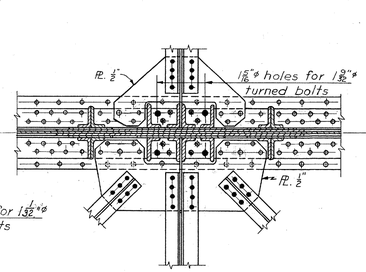

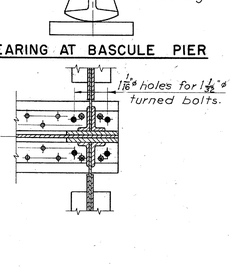

GENERAL NOTES FOR "GIRDER DETAILS"
ALL UNITS OF BRIDGE:

Bottom flange angles and cover plates are the same as top flange angles and cover plates, unless noted otherwise.

Splice material and riveting for the bottom flange are the same as for top flange, unless shown otherwise.

Material marked with suffix "S" to be Manganese Structural Steel. All other steel to be carbon steel.

Ends of jacking and bearing stiffeners shall be milled to bear. Other stiffeners shall have a tight fit top and bottom.

For shear connector details, see Sheet 16.

Cover plate ends shall be developed as close to their ends as possible with rivets at 3" pitch for ⅞"ø rivets, at 3½" pitch for 1"ø rivets. See Sheet 82. for number of rivets required for various sizes of plates.

NOTES FOR "GIRDER DETAILS"
UNIT 1

All rivets through main material of girders to be 1"ø. All other rivets to be ⅞"ø.

All views shown are for Girder G-3. Other girders similar except as shown or noted.

Note "A": Use high strength bolts with horizontal holes 1⅛" x 1⅛" in splice plates, nuts to be tightened on the bolts after concrete slab and asphalt surface have been placed on Span 1.

Note "B": Top lateral connections to G-5 at points ②, ⑨ and ⑩ shall be reamed or drilled and then riveted after concrete slab and asphalt surface have been placed on Span 1.

PART 3

TOLEDO EXPRESSWAY SYSTEM
MAUMEE RIVER BRIDGE
BR. NO. LU 120R-35
UNIT 1
GIRDER DETAILS

TOLEDO LUCAS COUNTY, OHIO

SCALE 1" = 1'-0"
MADE HAM DATE 2-25-52
TRCD. LWL DATE 6-9-53
CKD. JPSAAS DATE 8-13-53

HOWARD, NEEDLES, TAMMEN & BERGENDOFF
CONSULTING ENGINEERS
KANSAS CITY NEW YORK

810 SHEET 3.15

710

MICROFILMED
JUL 22 1953

FED. ROAD DIV. NO	STATE	FED. AID PROJ. NO.	TYPE FUNDS
2	OHIO	UI-1052(2)	POST WAR

16
120

LUCAS COUNTY
CITY OF TOLEDO
TOLEDO EXPRESSWAY SYSTEM
MAUMEE RIVER BRIDGE
LUC 120R-3.46

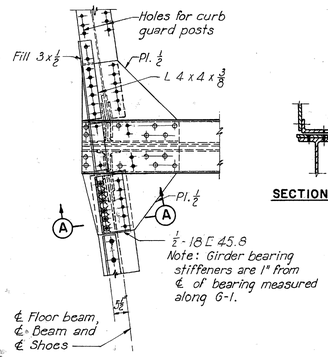

POINT O
Girder G-1

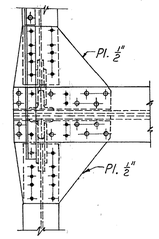

POINT O
Girder G-4

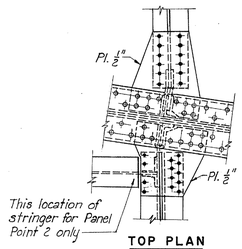

TOP PLAN
for Stringer Connection Details see Sheet 23.

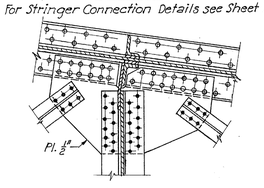

BOTTOM PLAN

PANEL POINTS 1 AND 2
Girder G-1

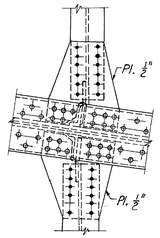

TOP PLAN

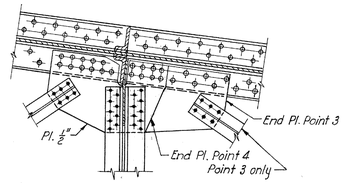

BOTTOM PLAN

PANEL POINTS 3 AND 4
Girder G-1

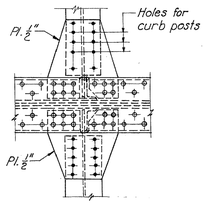

TOP PLAN

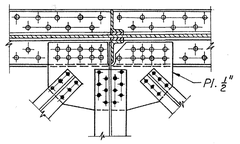

BOTTOM PLAN
Girders G-1 and G-4

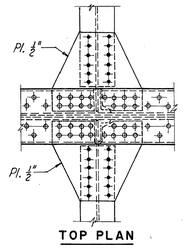

TOP PLAN

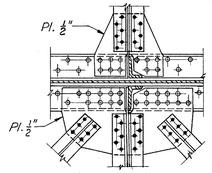

BOTTOM PLAN
Girders G-2 and G-3

TYPICAL TIE PLATES

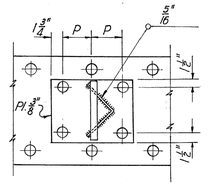

SHEAR CONNECTOR DETAILS
Scale: 1"= 1'-0"

Note:
Shear connectors may be shop riveted and field welded, shop welded and field riveted or shop riveted and shop welded at option of contractor.
Connectors shall point toward the support, hence direction will be reversed in each span from point of minimum shear.
For spacing see sheets 13, 14, 81, 82, 92, 98 and 107.

Note:
For framing under expansion castings, see Sheet 21
For Notes applying to this Unit, see Sheet 15.

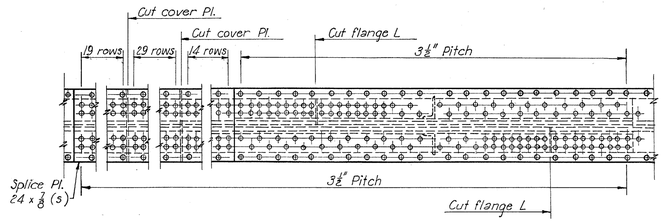

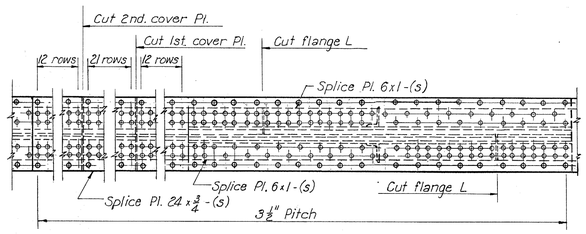

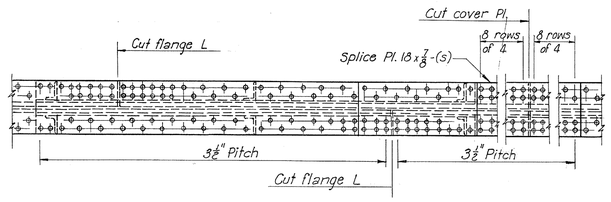

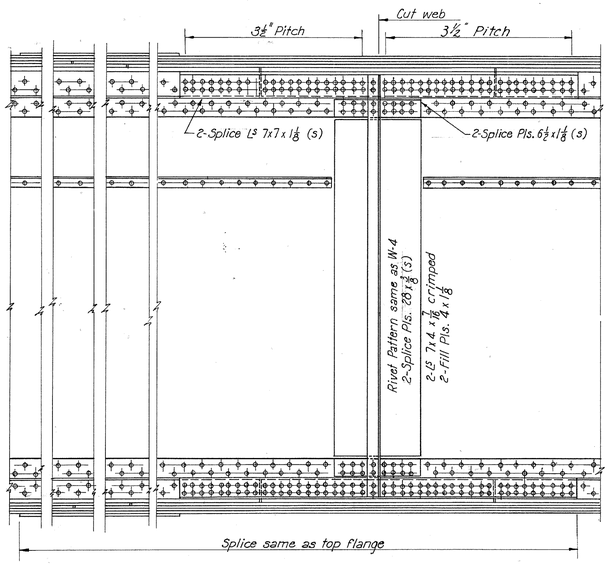

SHOP SPLICE S-1
Girders G-2 and G-3

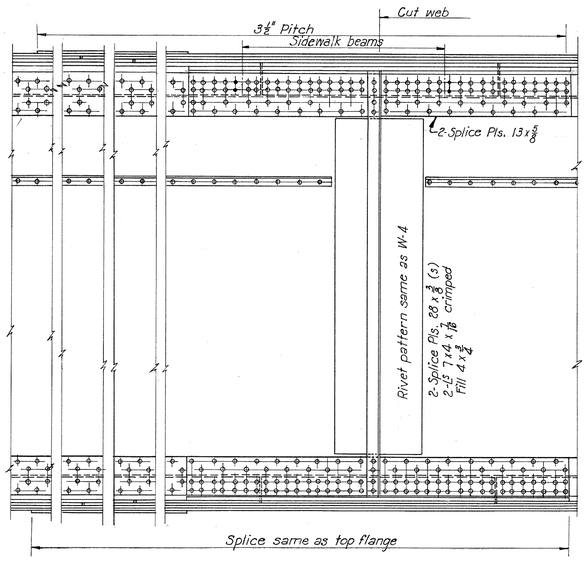

SHOP SPLICE S-2
Girders G-1 and G-4

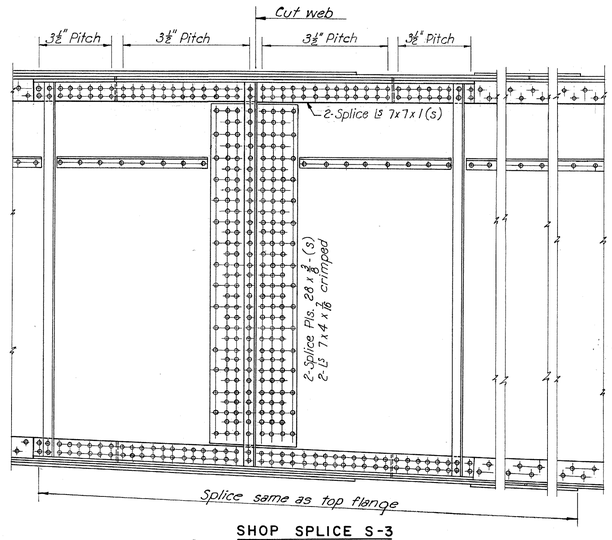

SHOP SPLICE S-3
Girder G-5

PART 3

TOLEDO EXPRESSWAY SYSTEM
MAUMEE RIVER BRIDGE
BR. NO. LU 120R-35
UNIT 1
GIRDER DETAILS
TOLEDO LUCAS COUNTY, OHIO

SCALE 1/2" = 1'-0"
MADE HAM DATE 3-3-52
TRCD. AH DATE 6-5-53
CKD. FPS-AHC DATE 8-13-53

HOWARD, NEEDLES, TAMMEN & BERGENDOFF
CONSULTING ENGINEERS
KANSAS CITY NEW YORK

810 SHEET- 3.16

711

MICROFILMED
JUL 22 1993

FED. ROAD DIV. NO	STATE	FED. AID PROJ. NO.	TYPE FUNDS
2	OHIO	UI-1052(2)	POST WAR

17
120

LUCAS COUNTY
CITY OF TOLEDO
TOLEDO EXPRESSWAY SYSTEM
MAUMEE RIVER BRIDGE
LUC 120R-3.46

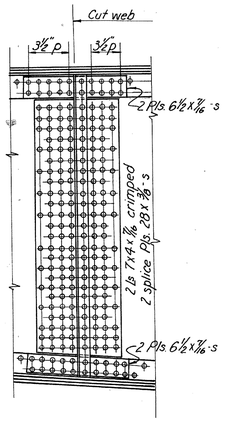

WEB SPLICE W-1

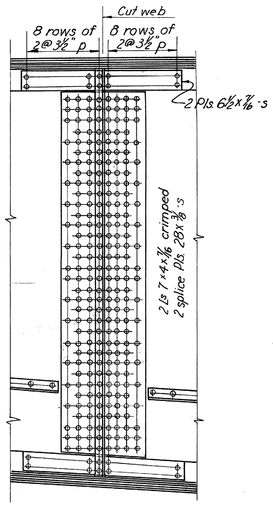

WEB SPLICE W-2

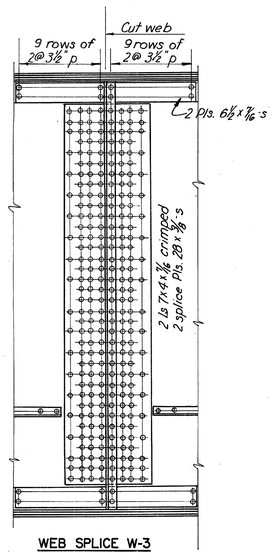

WEB SPLICE W-3

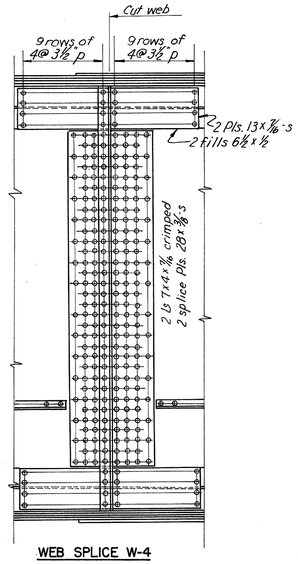

WEB SPLICE W-4

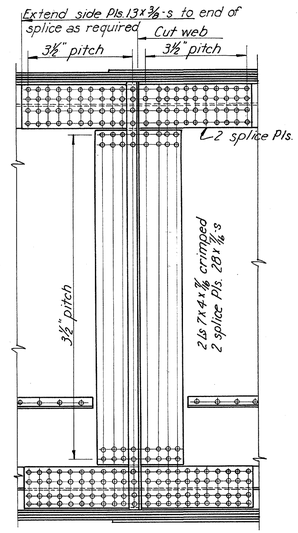

WEB SPLICE W-5

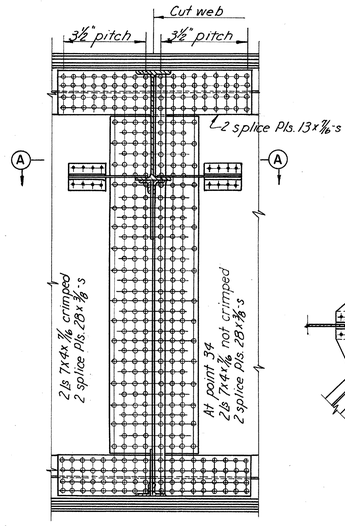

WEB SPLICE W-6
Floor beam and lateral connection at point 34 only.

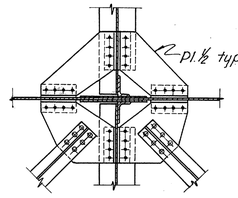

SECTION A-A

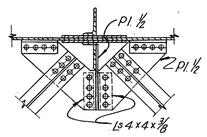

SECTION B-B

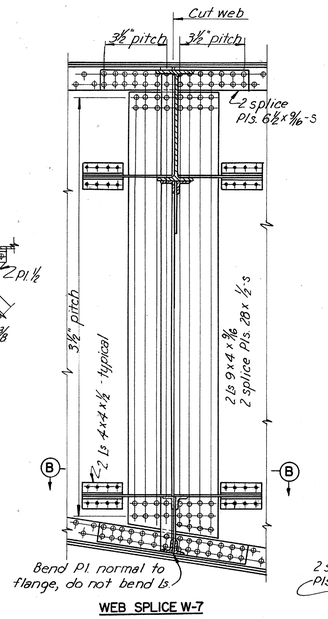

WEB SPLICE W-7

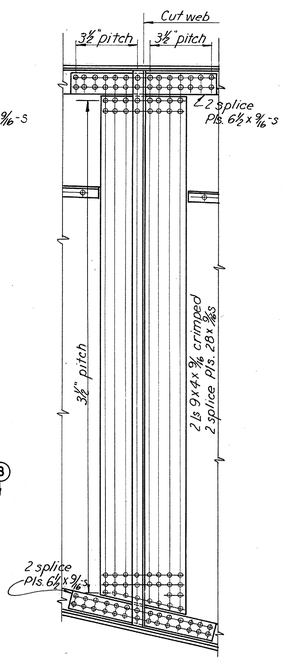

WEB SPLICE W-8

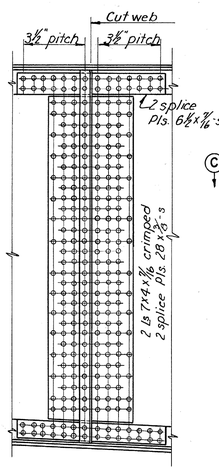

WEB SPLICE W-9
Girder G-1

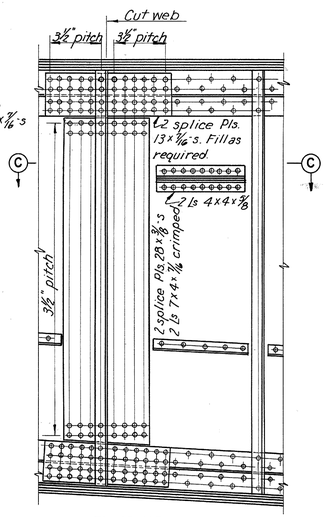

WEB SPLICE W-10
Girder G-4 shown. (Lateral bracing connections at Girder G-1 only.)

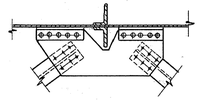

TOP LATERAL BRACING CONNECTION FOR GIRDER G-1
Between panel points 4 and 5.

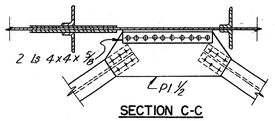

SECTION C-C

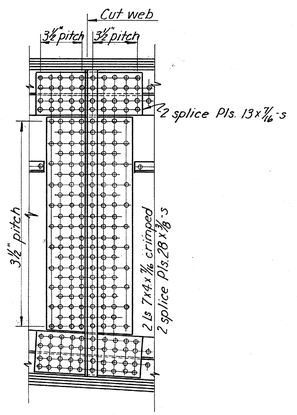

WEB SPLICE W-11
Girder G-5

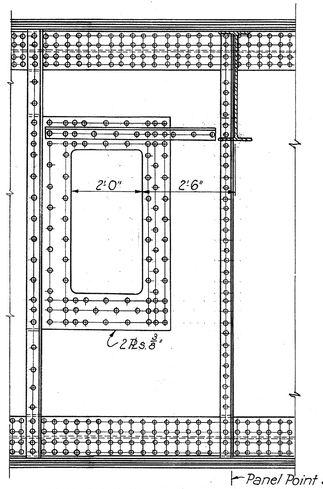

WEB OPENING AT PANEL POINT 33
For opening location see sheets 59 & 61
To be in all four girders.

For Notes applying to this Unit, see Sheet 15.

PART 3

TOLEDO EXPRESSWAY SYSTEM
MAUMEE RIVER BRIDGE
BR. NO. LU 120R-35
UNIT 1
WEB SPLICES
TOLEDO LUCAS COUNTY, OHIO

SCALE ½"=1'-0"
MADE HAM DATE 3-3-52
TRCD KLG DATE 4-5-53
CKD TPS:AHS DATE 8-13-53

HOWARD, NEEDLES, TAMMEN & BERGENDOFF
CONSULTING ENGINEERS
KANSAS CITY NEW YORK

810 SHEET 3.17

712

MICROFILMED
JUL 22 1953

FED. ROAD DIV. NO	STATE	FED. AID PROJ. NO.	TYPE FUNDS
2	OHIO	UI-1052(2)	POST WAR

18
120

LUCAS COUNTY
CITY OF TOLEDO
TOLEDO EXPRESSWAY SYSTEM
MAUMEE RIVER BRIDGE
LUC 120R-3.46

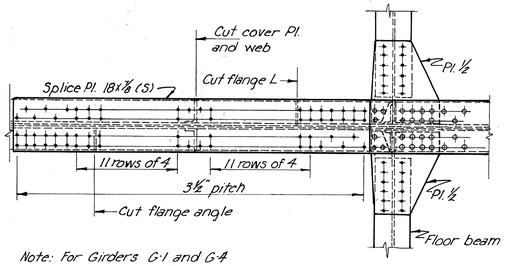

Note: For Girders G-1 and G-4 connection to sidewalk bracket see sheet 16

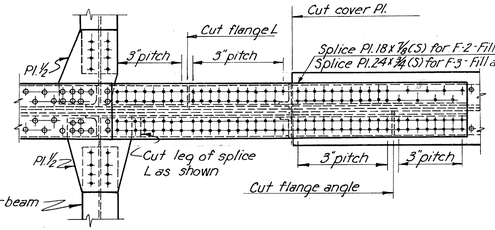

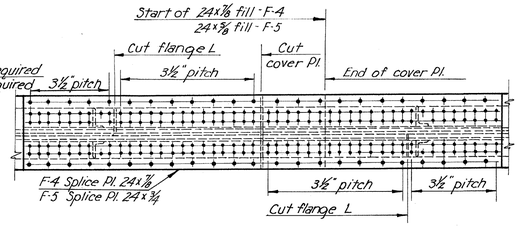

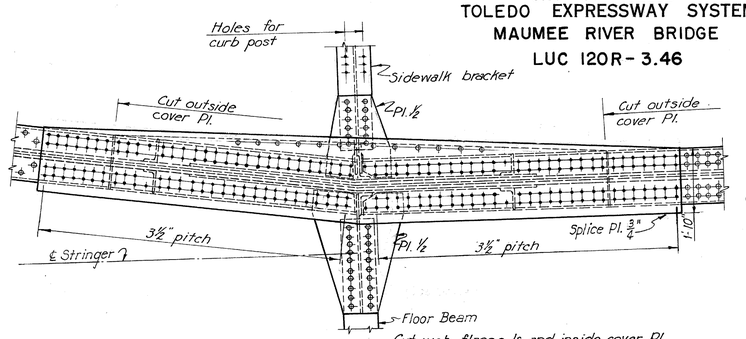

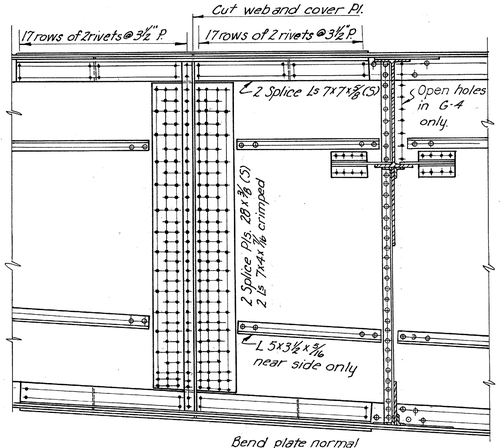

Bend plate normal to flange. Do not bend ls

FIELD SPLICE F-1 AND PANEL POINT 4

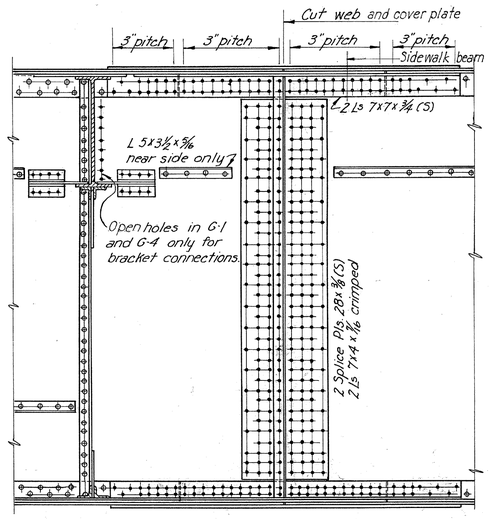

FIELD SPLICE F-2 AND F-3

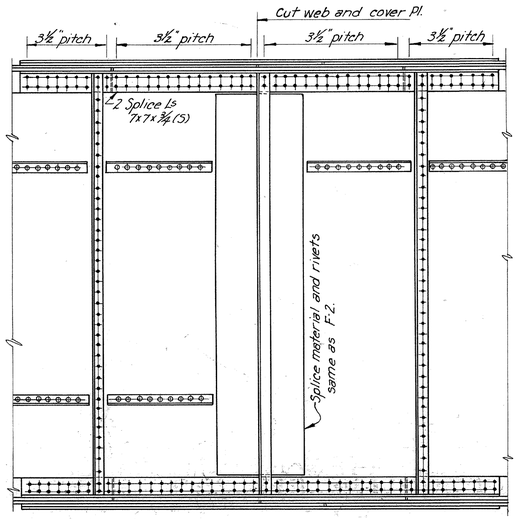

FIELD SPLICE F-4 AND F-5

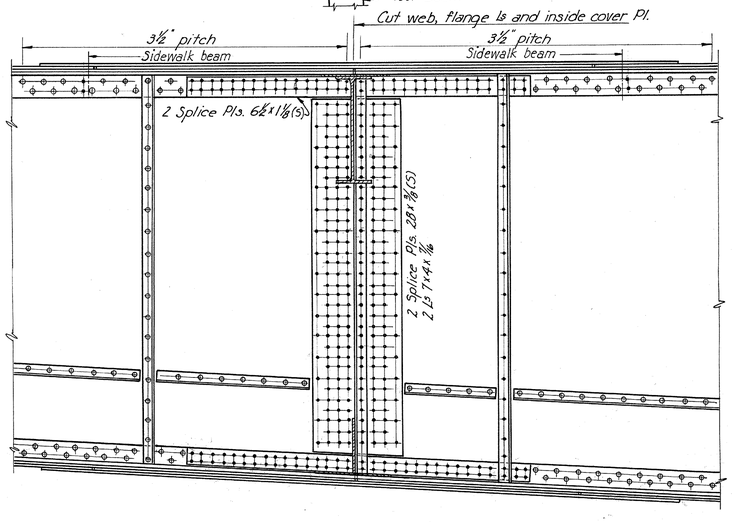

FIELD SPLICE F-6
Girder G-1

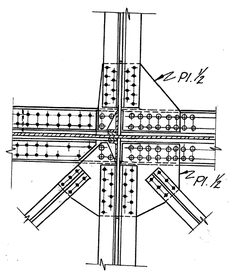

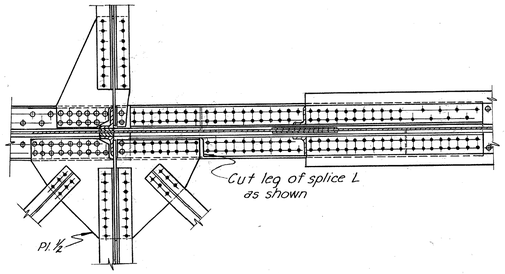

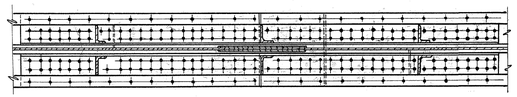

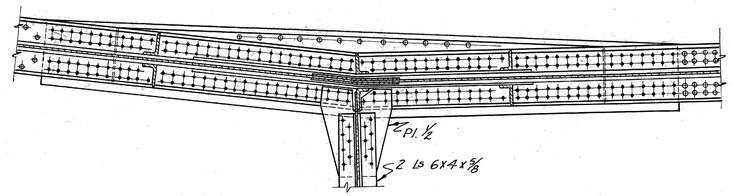

Note: All views shown are for Girder G-3. Other girders similar except as noted. For General Notes see sheet 15.

PART 3

TOLEDO EXPRESSWAY SYSTEM

MAUMEE RIVER BRIDGE

BR. NO. LU 120R-35

UNIT I
FIELD SPLICES

TOLEDO LUCAS COUNTY, OHIO

SCALE ½" = 1'-0"
MADE HAM DATE 5-26-52
TRCD KLG DATE 6-3-53
CKD JPS-AHS DATE 8-3-53

HOWARD, NEEDLES, TAMMEN & BERGENDOFF
CONSULTING ENGINEERS
KANSAS CITY NEW YORK
810 SHEET 3.18

718

MICROFILMED
JUL 22 1953

FED. ROAD DIV. NO.	STATE	FED. AID PROJ. NO.	TYPE FUNDS
2	OHIO	UI-1052(2)	POST WAR

19
120

LUCAS COUNTY
CITY OF TOLEDO
TOLEDO EXPRESSWAY SYSTEM
MAUMEE RIVER BRIDGE
LUC 120R-3.46

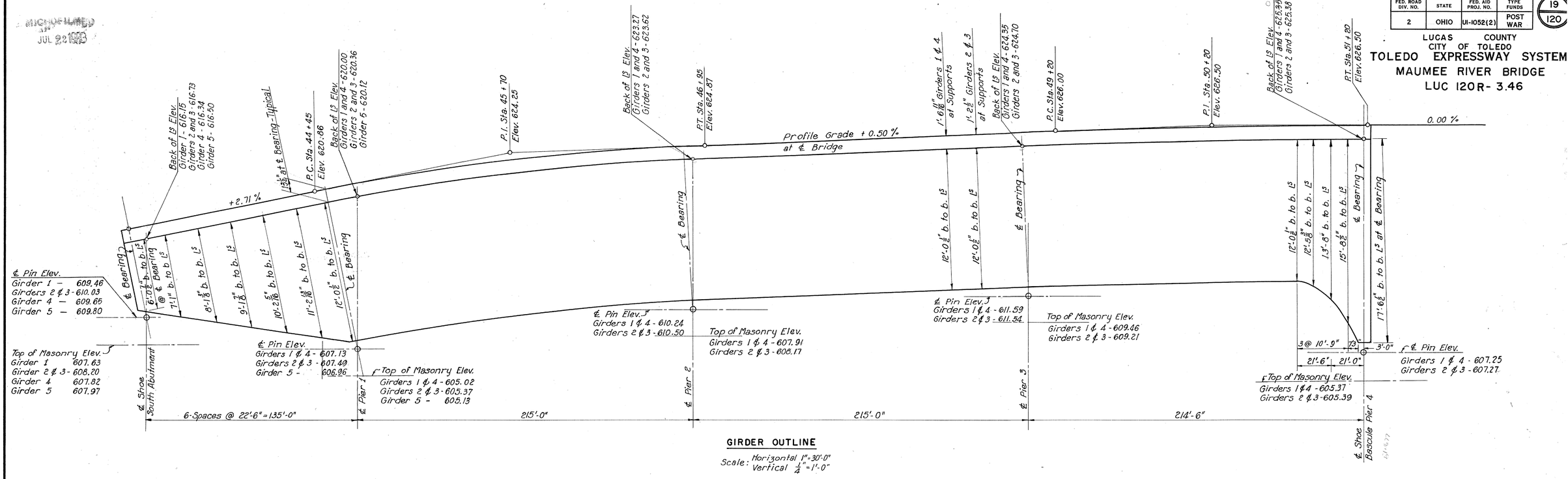

GIRDER OUTLINE

Scale: Horizontal 1" = 30'-0"
Vertical 1/4" = 1'-0"

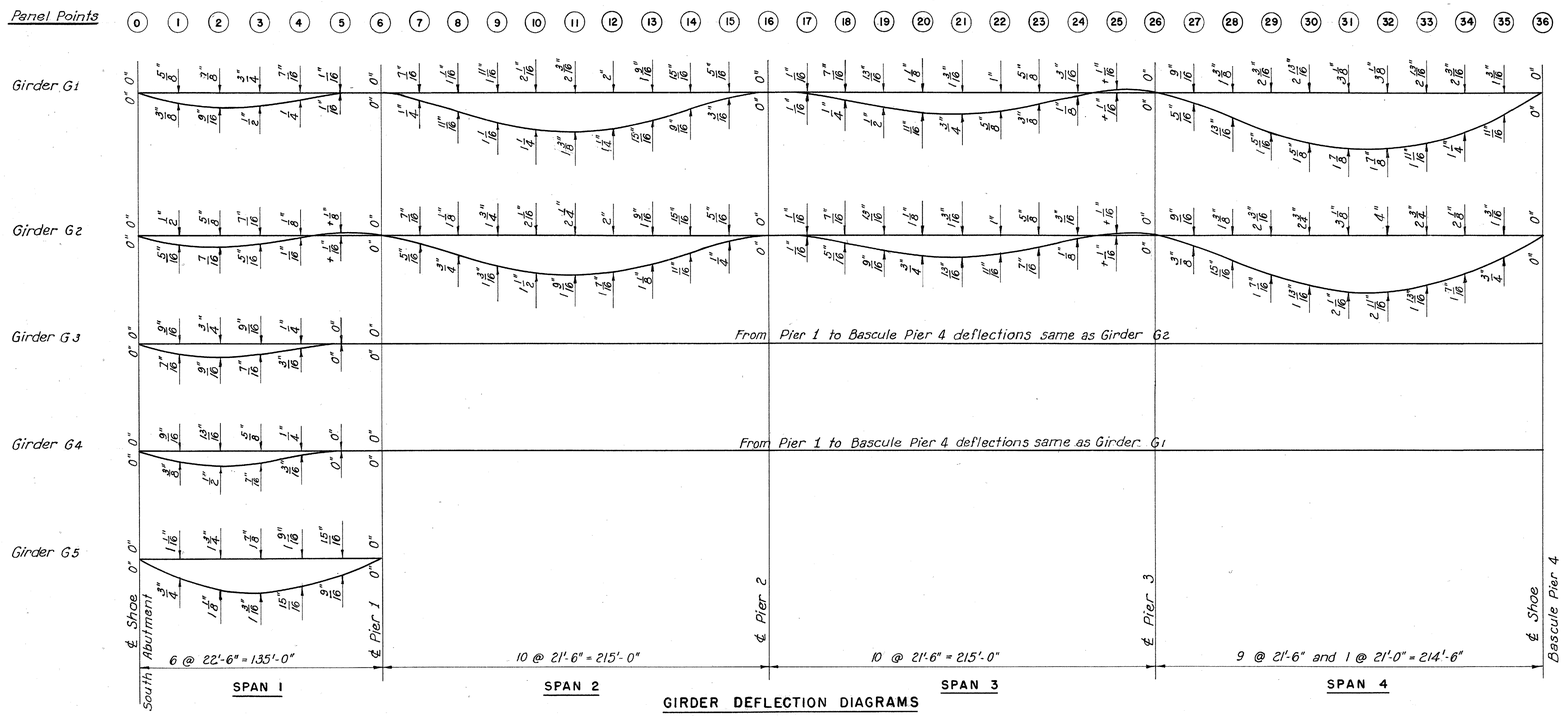

GIRDER DEFLECTION DIAGRAMS

Scale: Horizontal 1" = 40'-0" Vertical 3" = 1'-0"

Notes:

Values shown above the base line in the deflection diagrams are deflections due to total dead load of steel and concrete.

Values shown below the base line are deflections due to weight of concrete and wearing surface.

Concrete haunches over girders shall measure 13 1/2" back of flange angles to top of wearing surface at bearings.

Girders shall be cambered for vertical curve and dead load of steel and enough in addition to limit depth of haunch to 14 1/2".

Cambering shall be accomplished by mitering webs at splices and bending flange angles to an arc approximately parallel to top of roadway.

Elevations shown at the top of wearing surface are profile grade elevations.

PART 3

TOLEDO EXPRESSWAY SYSTEM

MAUMEE RIVER BRIDGE
BR. NO. LU 120R-35
UNIT 1
GIRDER OUTLINES AND DEFLECTIONS

TOLEDO, LUCAS COUNTY, OHIO

SCALE As Shown
MADE NBA/KA DATE 1-31-52
TRCD AH DATE 5-12-52
CKD J.P.S. DATE 5-22-52

HOWARD, NEEDLES, TAMMEN & BERGENDOFF
CONSULTING ENGINEERS
KANSAS CITY NEW YORK

810 SHEET- 3.19

714

CHARLES BRUNING CO., INC.

MICROFILMED
JUL 22 1953

FED. ROAD DIV. NO.	STATE	FED. AID PROJ. NO.	TYPE FUNDS
2	OHIO	UI-1052 (2)	POST WAR

20
120

LUCAS COUNTY
CITY OF TOLEDO
TOLEDO EXPRESSWAY SYSTEM
MAUMEE RIVER BRIDGE
LUC 120 R-3.46

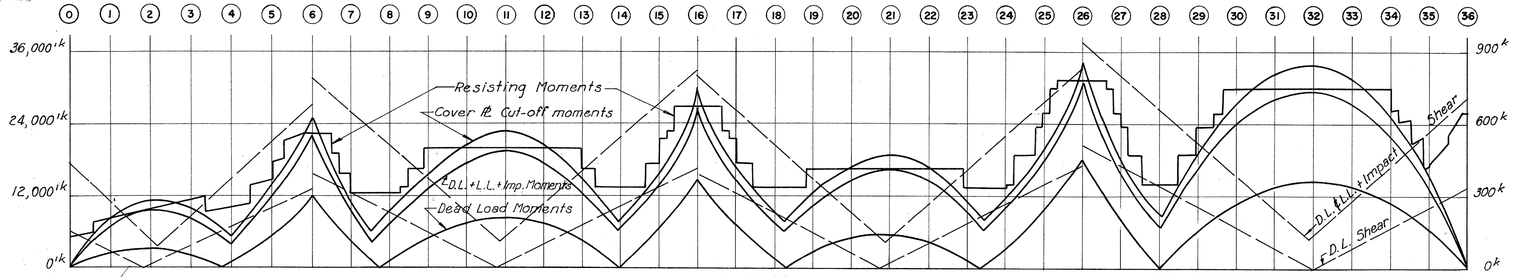

GIRDER G3

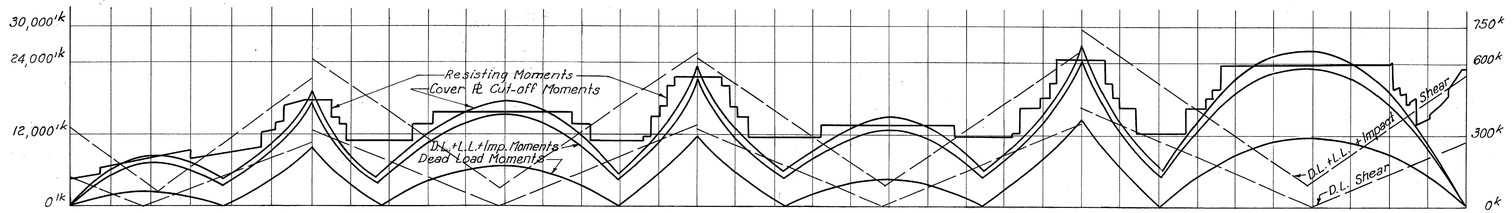

GIRDER G 4

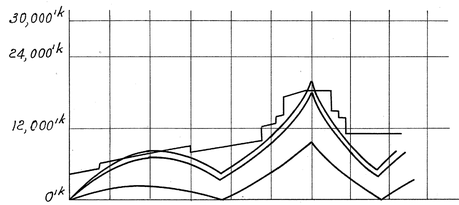

Girder G1 to be similar to Girder G4 except as shown

GIRDER G 1

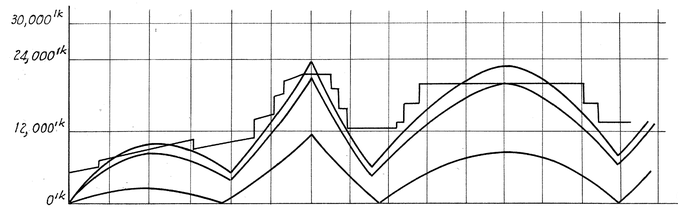

Girder G2 to be similar to Girder G3 except as shown

GIRDER G 2

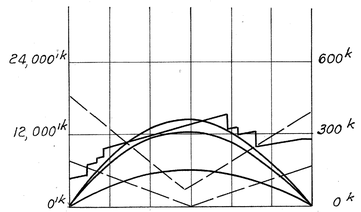

GIRDER G5

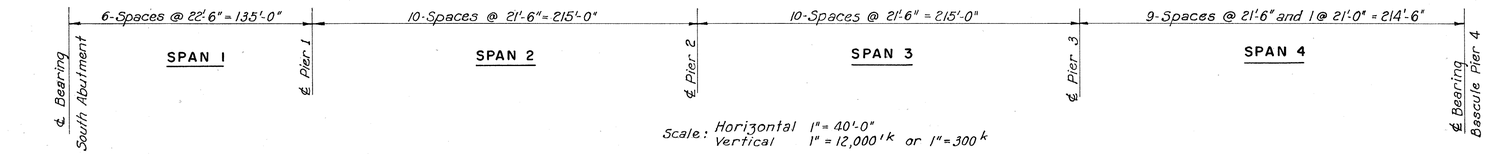

Scale: Horizontal 1" = 40'-0"
Vertical 1" = 12,000'k or 1" = 300k

DESIGN MOMENTS AND SHEARS

Girder and Load		Reactions and Shears in Kips										Moments in foot kips						
		So. Abt.	Pier 1			Pier 2			Pier 3			Pier 4	Span 1	Pier 1	Span 2	Pier 2	Span 3	Pier 3	Span 4
		R	Vs	Vn	R	Vs	Vn	R	Vs	Vn	R	R	+M	-M	+M	-M	+M	-M	+M
GIRDER G1	D.L.	113.8	255.9	314.9	570.8	337.0	318.8	655.8	345.5	410.4	755.9	273.5	2320	9620	6750				
	L.L.+Imp.	176.9	236.9	268.9	351.3	273.0	269.5	394.1	272.4	291.9	408.0	247.0	3470	6130	7570	Moments same			
	S.W.L.L.	24.0	25.0	28.7	56.2	29.3	28.8	55.7	29.3	32.4	58.2	25.6	660	990	900	as			
	Bend Load Mac	12.9	135.3		135.3			0	3.0		3.0	0	580	1410		Girder G4			
	Total	327.6	653.1	612.6	1113.6	639.3	617.1	1105.6	650.2	734.7	1225.1	546.1	7030	18150	15220				
GIRDER G2	D.L.	130.0	302.3	390.3	692.6	420.9	397.0	817.9	428.6	511.0	939.6	340.2	2582	11672	8526				
	U.L.L.	102.0	154.7	203.0	136.2	207.4	203.4	405.0	206.4	228.5	424.0	180.7	2780	6310	6330	Moments same			
	C.L.L.	113.0	141.8	146.9	352.0	148.0	147.3	134.5	148.1	151.1	134.7	140.7	2060	2270	3520	as			
	Imp.	41.4	57.0	51.4	51.4	52.2	51.5	48.6	52.1	55.8	50.4	47.3	940	902	1450	Girder G3			
	Total	386.4	655.8	791.6	1232.2	828.5	799.2	1406.0	835.2	946.4	1548.7	708.9	8362	21154	19826				
GIRDER G3	D.L.	152.8	333.6	393.6	727.2	417.6	396.0	813.6	429.6	511.2	940.8	340.0	3200	12240	8300	14790	5620	18370	14540
	U.L.L.	113.1	154.7	203.0	361.0	207.4	203.4	405.0	206.4	228.5	424.0	180.7	3070	6540	6330	8330	6170	8800	8460
	C.L.L.	124.3	141.8	146.9	136.2	148.0	147.3	134.5	148.1	151.1	134.7	140.7	2280	2470	3520	2880	3440	2880	4710
	Imp.	45.6	57.0	51.4	52.9	52.2	51.5	48.6	52.1	55.8	50.4	47.3	1030	950	1450	1030	1410	1050	1940
	Total	435.8	687.1	794.9	1283.3	825.2	798.2	1401.7	836.2	946.6	1549.9	708.7	9580	22200	19600	26950	16640	31100	29650
GIRDER G4	D.L.	122.9	268.4	316.3	584.7	335.7	318.3	654.1	345.9	410.5	756.4	273.4	2570	9850	6670	11900	4520	14770	11700
	L.L.	159.2	196.7	234.5	337.1	238.0	235.0	361.5	237.5	254.5	374.3	215.3	3590	6040	6600	7460	6440	7830	8820
	S.W.L.L.	18.2	25.0	28.7	49.6	29.3	28.8	55.7	29.3	32.4	58.2	25.6	500	890	900	1150	880	1210	1200
	Imp.	30.6	38.2	34.4	35.5	35.0	34.5	32.6	34.9	37.4	33.7	31.7	690	640	970	690	950	700	1300
	Total	330.9	530.3	613.9	1006.9	638.0	616.6	1103.9	647.6	734.8	1222.6	546.0	7350	17420	15140	21200	12790	24510	23020
GIRDER G5	D.L.	192.2			172.8								6160						
	U.L.L.	109.0			97.0								3470						
	C.L.L.	115.2			89.0								1887						
	Imp.	43.1			35.8								1071						
	Total	459.5			394.6								12588						

Note:
Design moments and shears are obtained by multiplying the D.L. by 0.8 and the L.L. by 2.06.

D.L.	Dead load
L.L.	Live load
U.L.L.	Uniform live load
C.L.L.	Concentrated live load
Imp.	Impact
R	Reaction
Vs	Shear to south of support
Vn	Shear to north of support
+M	Maximum positive moment
-M	Maximum negative moment
S.W.	Sidewalk

PART 3

TOLEDO EXPRESSWAY SYSTEM
MAUMEE RIVER BRIDGE
BR. NO. LU 120 R-35
UNIT 1
GIRDER STRESSES

TOLEDO LUCAS COUNTY, OHIO

SCALE As shown
MADE MKA DATE 3-26-52
TRCD AH DATE 5-27-52
CKD JPS-BKH DATE 12-10-52

HOWARD, NEEDLES, TAMMEN & BERGENDOFF
CONSULTING ENGINEERS
NEW YORK
KANSAS CITY

810 SHEET- 3.20

719

CHARLES BRUNING CO., INC.

HIGHWAYS FILMED
JUL 22 1953

FED. ROAD DIV. NO.	STATE	FED. AID PROJ. NO.	TYPE FUNDS
2	OHIO	UI-1052(2)	POST WAR

LUCAS COUNTY
CITY OF TOLEDO
TOLEDO EXPRESSWAY SYSTE
MAUMEE RIVER BRIDGE
LUC 120R-3.46

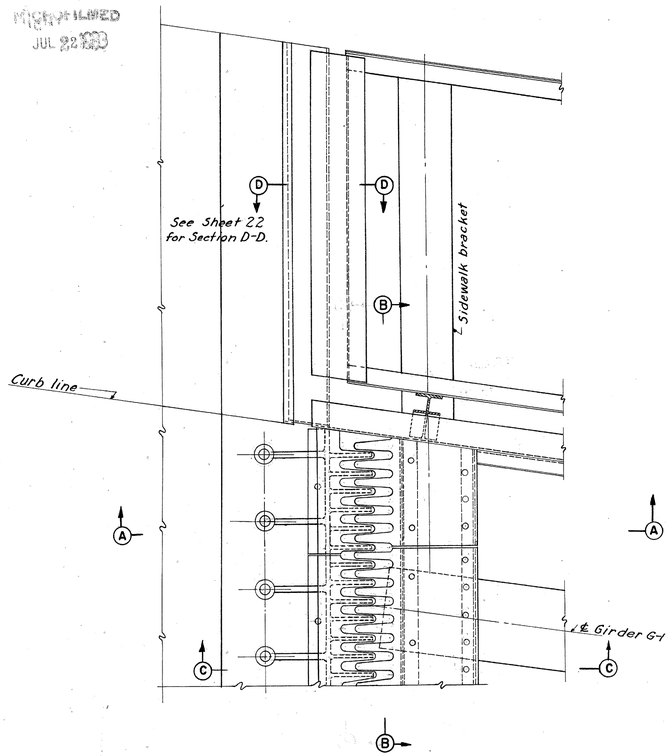

PART PLAN

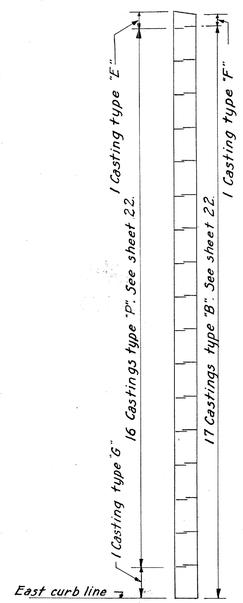

EXPANSION JOINT PLAN

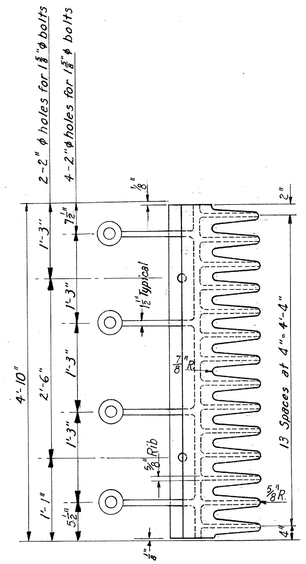

CASTING G
Scale: 1"=1'-0"

Note: Elevation similar to casting "D", Sheet 22.

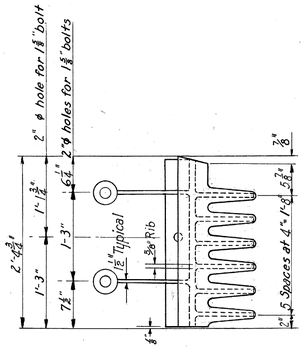

CASTING E
Scale: 1"=1'-0"

Note: Elevation similar to casting "D", Sheet 22. Dimensions not shown similar to casting "G".

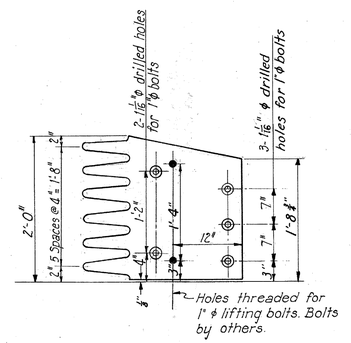

CASTING F
Scale: 1"=1'-0"

Note: Elevation similar to castings "A", "B", and "C", Sheet 22.

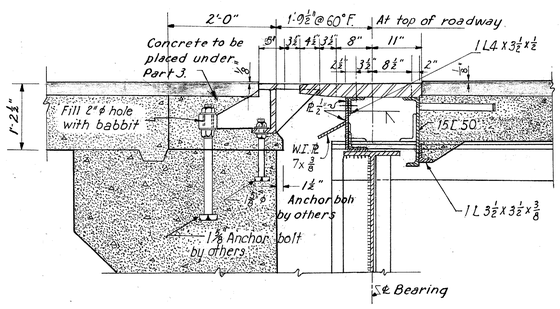

SECTION C-C
Scale: ¾"= 1'-0"

Note: Details not shown to be similar to those shown for joints at Bascule Piers.

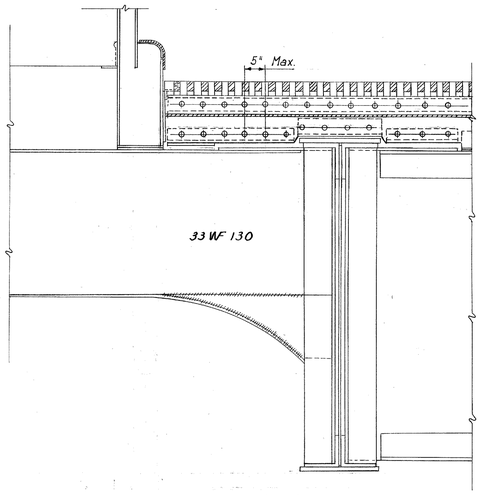

SECTION B-B
Scale: ¾"= 1'-0"

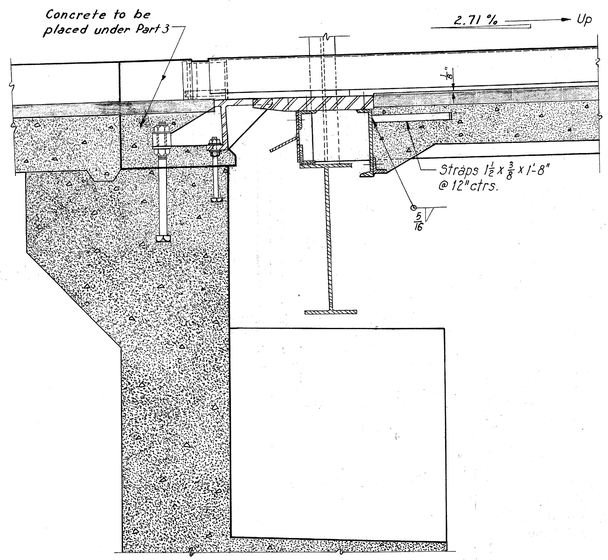

SECTION A-A
Scale: ¾"= 1'-0"

Notes:
All fillets in castings shall have ½" radius unless otherwise shown.
Top of expansion castings shall be set ⅛" below roadway grade elevations and conform to cross sections of slab.

For expansion joint in hand-rail and curb, see sheet 111 and 112.
Bolts in castings A, B, C, and F, shall be Monel metal or equal, each bolt to have a lock washer under the head.
Lifting bolt holes shall be filled with standard threaded counter-sunk head screws which shall be Monel metal or equal.

PART

TOLEDO EXPRESSWAY SYSTE
MAUMEE RIVER BRIDGE
BR. NO. LU 120R-35
UNIT 1
EXPANSION JOINT AT SOUTH ABUTME
TOLEDO LUCAS COUNTY, OH

SCALE As noted
MADE W.B.C. DATE 2-11-52
TRCD N.A.M. DATE 10-13-52
CKD H.J.C.-D.M.D. DATE 8-20-53

HOWARD, NEEDLES, TAMMEN & BERGEND
CONSULTING ENGINEERS
KANSAS CITY NEW YORK

810 SHEET: 3.21

716

MURING CO., INC.

MICROFILMED
JUL 29 1953

FED. ROAD DIV. NO.	STATE	FED. AID PROJ. NO.	TYPE FUNDS
2	OHIO	UI-1052(2)	POST WAR

22
120

LUCAS COUNTY
CITY OF TOLEDO
TOLEDO EXPRESSWAY SYSTEM
MAUMEE RIVER BRIDGE
LUC 120R-3.46

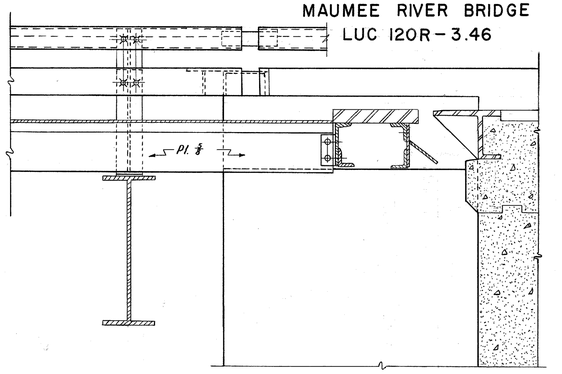

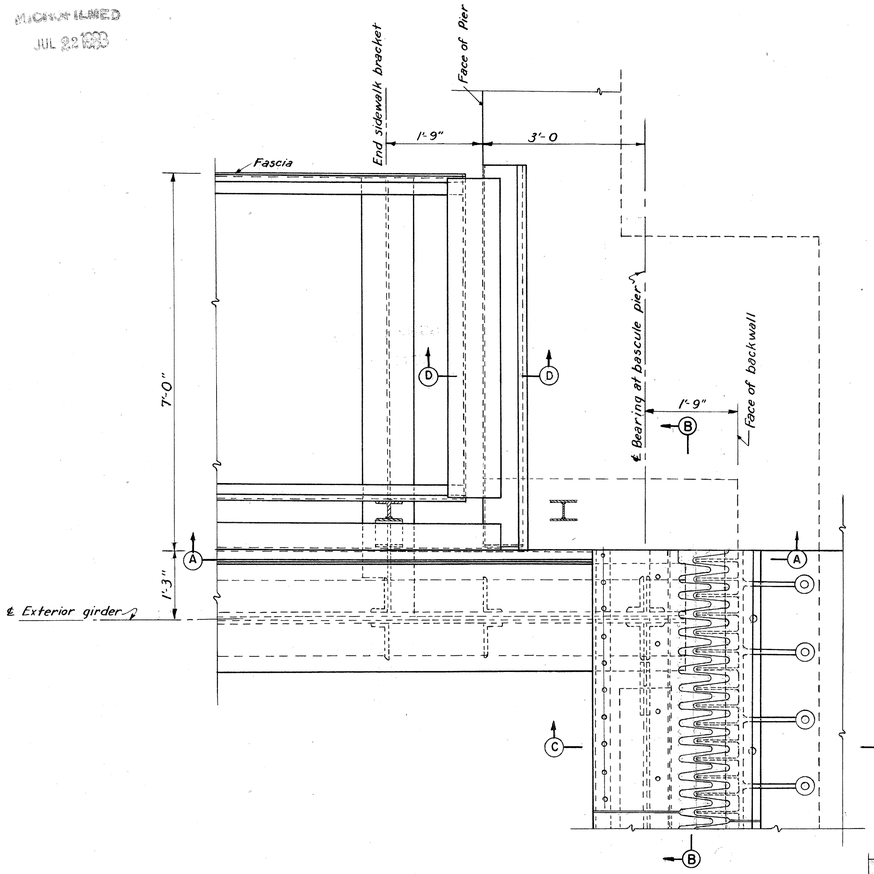

PART PLAN EXPANSION JOINT
Scale: ¾"=1'-0"

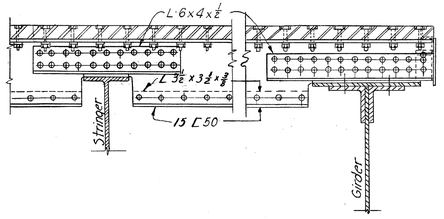

SECTION E-E
Scale: ½"=1'-0"

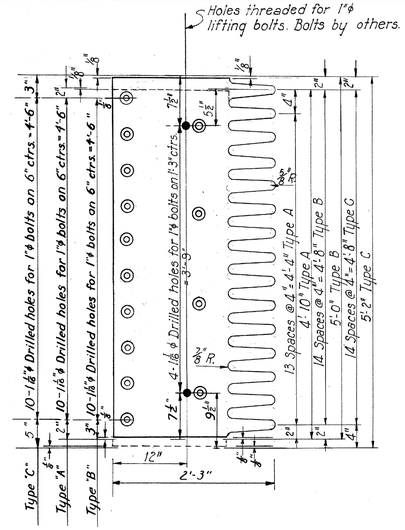

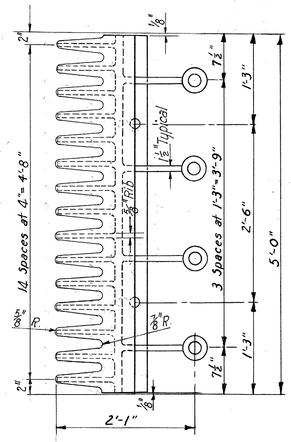

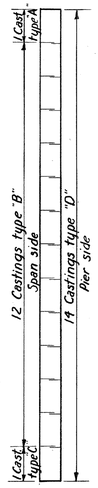

EXPANSION JOINT PLAN

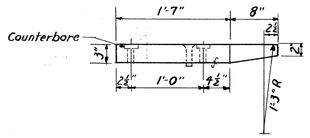

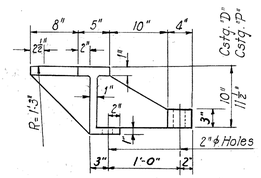

CASTINGS A, B, AND C
Scale 1"=1'-0"
Material: Cast Steel

CASTINGS D AND P
Scale 1"=1'-0"
Material: Cast Steel

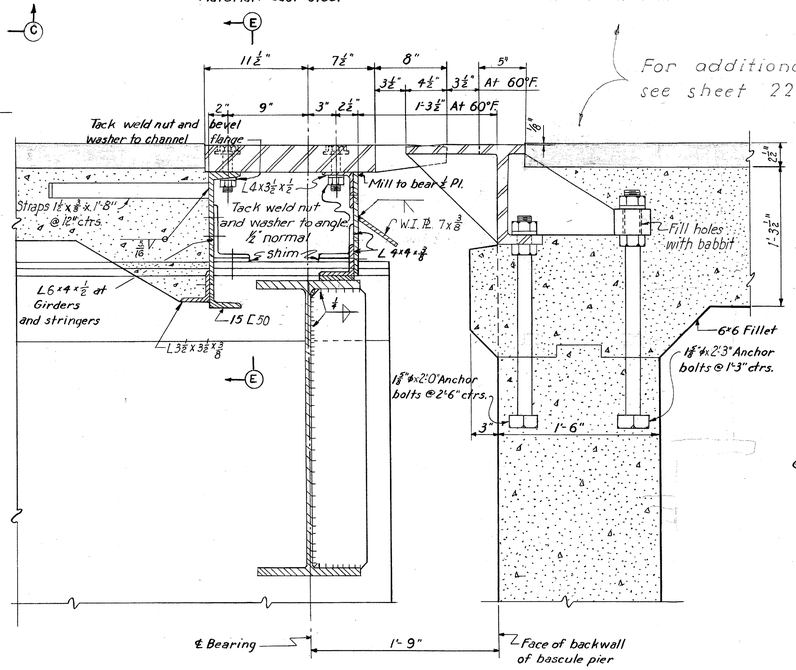

SECTION C-C
Scale: 12"=1'-0"

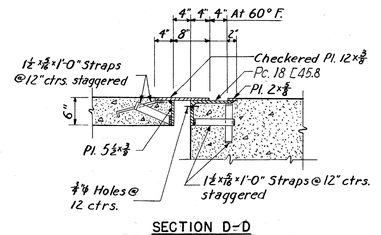

SECTION D-D
Scale ¾"=1'-0"

Note: All welds in sidewalk joints to be ⅛" continuous fillet welds.

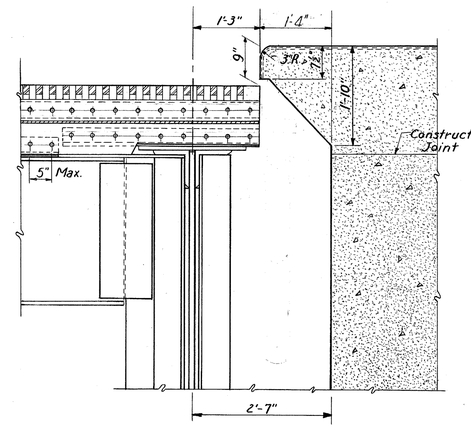

SECTION A-A
Scale ¾"=1'-0"

SECTION B-B
Scale ¾"=1'-0"

Note: See Sh.21 for general notes.

Pencil Revision 10-14-55

PART 3

TOLEDO EXPRESSWAY SYSTEM
MAUMEE RIVER BRIDGE
BR. NO. LU 120R-35
UNIT 1
EXPANSION JOINTS AT BASCULE PIERS
TOLEDO LUCAS COUNTY, OHIO

SCALE As noted
MADE W.B.C. DATE 2-4-52
TRCD. N.A.M. DATE 9-26-52
CKD. H.V.C.-D.M.D. DATE 3-20-53

HOWARD, NEEDLES, TAMMEN & BERGENDOFF
CONSULTING ENGINEERS
KANSAS CITY NEW YORK

810 SHEET 3.22

7/15

MICROFILMED
JUL 22 1983

FED. RD. DIVISION	STATE	PROJECT	
2	OHIO		

22-A
120

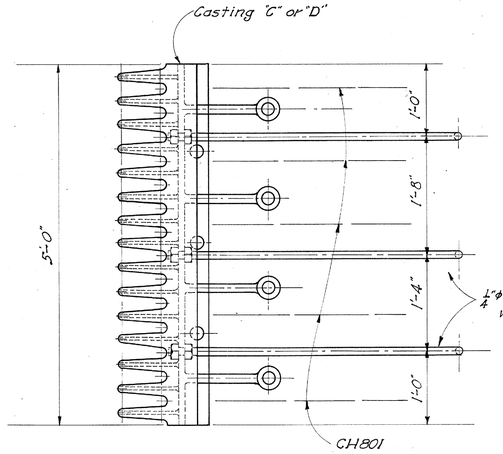

1¼"ϕ x 4'-0" anchor bars with double nuts

For details not shown see sheet 22

Spacing of anchor bars and CH801 reinforcing bars is typical for full length of expansion joint.

PART PLAN

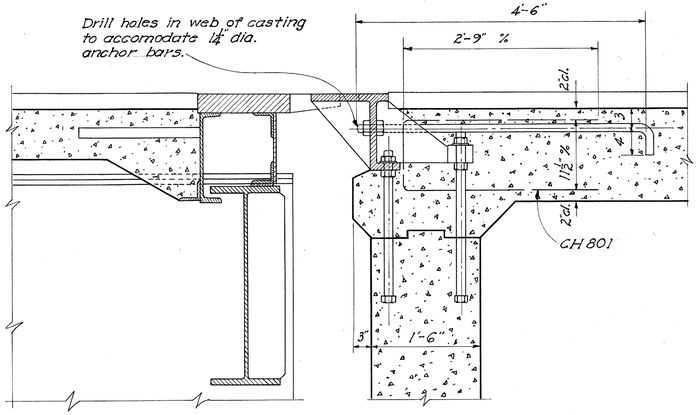

SECTION C-C

EXPLANATION:

The supplemental details shown on this sheet apply to Bascule Pier No. 5. They constitute a corrective measure in view of the inadvertent omission, during the construction of this pier, of the No. 801 and No. 629 bars.

PART 3

STATE OF OHIO
DEPARTMENT OF HIGHWAYS
DIVISION OF DESIGN AND CONSTRUCTION
BUREAU OF BRIDGES

TOLEDO EXPRESSWAY SYSTEM
MAUMEE RIVER BRIDGE
BR. NO. LU-120R-35
UNIT 1
REVISION AT EXPANSION JOINT ON BASCULE PIER NO. 5
TOLEDO LUCAS COUNTY OHIO

DESIGNED	DRAWN	TRACED	CHECKED	REVIEWED	DATE	REVISED
	Ray	RH		WHR	10-14-55 10-21-55	

FED. ROAD DIV. NO.	STATE	FED. AID PROJ. NO.	TYPE FUNDS
2	OHIO	UI-1052(2)	POST WAR

23
120

LUCAS COUNTY
CITY OF TOLEDO
TOLEDO EXPRESSWAY SYSTEM
MAUMEE RIVER BRIDGE
LUC 120 R - 3.46

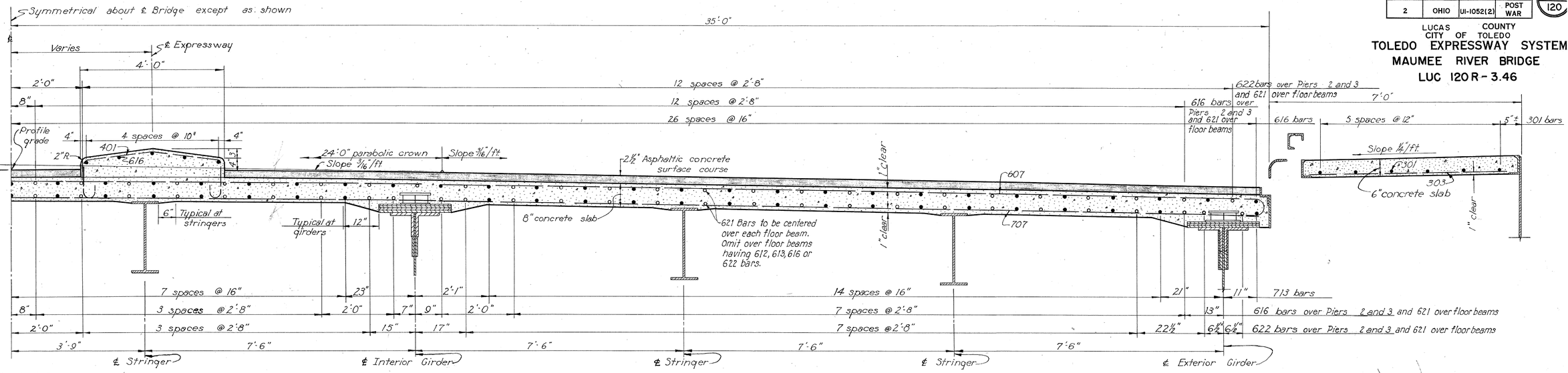

HALF CROSS SECTION THRU SLAB
Scale: ¾" = 1'-0"
Roadway crown shown is referred to as "normal" crown.

MICROFILMED
JUL 22 1993

REINFORCING STEEL SCHEDULE

Mark	No.	Length	Type	Dimension A	Dimension B	Weight
701	1 set of 90	43'-3" to 52'-6"	Str.			8,810
702	1 set of 90	37'-9" to 43'-3"	Str.			7,450
703	20	37'-9"	Str.			1,890
704	2	25'-0"	Str.			100
705	25	37'-0"	Str.			1,890
706	2	41'-6"	Str.			170
707	2095	36'-0"	Str.			154,160
708	3	28'-6"	Str.			170
709	3	38'-6"	Str.			230
710	3	31'-3"	Str.			190
711	3	35'-9"	Str.			220
712	1 set of 6	46'-0" to 46'-0"	Str.			320
713	667	54'-0"	Str.			73,620
714	1 set of 3	10'-9" to 38'-9"	Str.			150
715	1	30'-0"	Str.			60
716	1	28'-6"	Str.			60
717	47	51'-3"	Str.			4,920
718	3	41'-6"	Str.			250
719	8	7'-0"	Str.			110
#7*	13	6'-3"	Str.			170
601	1 set of 90	43'-9" to 53'-0"	100	42'-3" to 51'-8"	1'-4"	6,540
602	1 set of 90	43'-9" to 38'-3"	100	42'-3" to 36'-11"	1'-4"	5,550
603	20	38'-3"	100	36'-11"	1'-4"	1,150
604	2	25'-6"	100	24'-2"	1'-4"	80
605	25	37'-6"	100	36'-2"	1'-4"	1,410
606	2	41'-6"	100	40'-2"	1'-4"	120
607	2095	36'-6"	100	35'-2"	1'-4"	114,850
608	3	29'-0"	100	27'-8"	1'-4"	130
609	3	39'-0"	100	37'-8"	1'-4"	180
610	3	31'-0"	100	30'-5"	1'-4"	130
611	3	36'-3"	Str.			130
612	104	42'-6"	Str.			6640
613	54	44'-0"	Str.			3,560
614	12	15'-0"	Str.			270
615	1 set of 6	5'-6" to 45'-9"	Str.			230
616	913	54'-0"	Str.			74050
617	1 set of 3	11'-3" to 39'-9"	Str.			120
618	1	30'-0"	Str.			40
619	1	28'-6"	Str.			40
620	53	48'-6"	Str.			3,850
621	2719	9'-0"	Str.			34,650
622	208	50'-0"	Str.			15,600
623	3	41'-6"	Str.			190
624	30	9'-6"	Str.			430
625	5	19'-9"	Str.			150
626	10	38'-6"	Str.			580
627	5	47'-0"	Str.			350
#6*	12	6'-0"	Str.			110
401	714	6'-1"	102			4,110
402	4	7'-10"	103			20
#4*	1	7'-10"	103			10
301	198	40'-0"	Str.			2,980
302	84	9'-6"	Str.			300
303	1558	5'-6"	Str.			3,190
304	12	6'-0"	Str.			30
305	24	30'-0"	Str.			350
#3*	1	5'-0"	Str.			10
Total						537,590

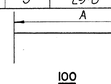

100

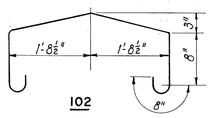

102

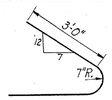

103

* Test Replacement Bars.

HATCH PLAN
Scale: ¾" = 1'-0"

Note: Manholes at Piers 1 and 2 to be on west side of ℄ Median. Manhole at Pier 3 to be on east side of ℄ Median.

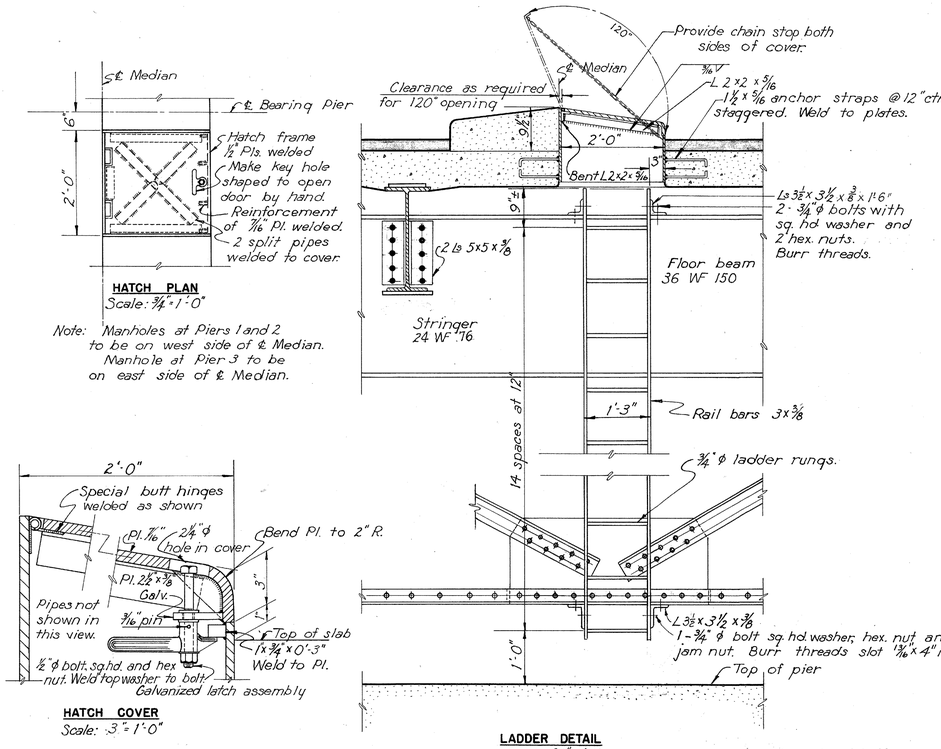

LADDER DETAIL
Scale: ¾" = 1'-0"

HATCH COVER
Scale: 3" = 1'-0"

HATCHWAY DETAILS

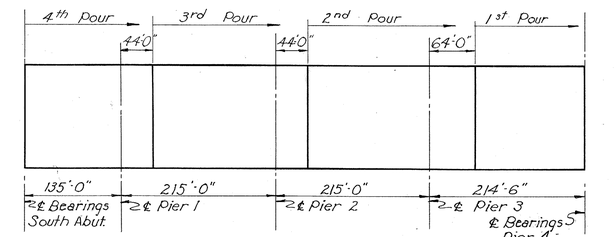

Note: Contractor may submit alternate sequence for approval by the engineer.

POURING SEQUENCE
Not to scale

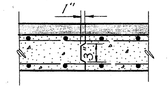

TRANSVERSE CONSTRUCTION JOINT
Scale: ¾" = 1'-0"

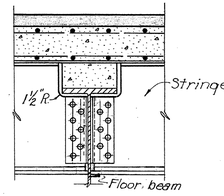

HAUNCH AT FLOORBEAMS
Scale: ¾" = 1'-0"

PART 3

TOLEDO EXPRESSWAY SYSTEM
MAUMEE RIVER BRIDGE
BR. NO. LU 120 R-35
UNIT 1
ROADWAY SLAB

TOLEDO — LUCAS COUNTY, — OHIO

SCALE As shown
MADE W.G.E. - T.K.M. DATE 2-13-53
TRCD E.J.M. DATE 4-8-53
CKD. L.L. - T.H.G. DATE 4-10-53

HOWARD, NEEDLES, TAMMEN & BERGENDOFF
CONSULTING ENGINEERS
KANSAS CITY NEW YORK

810 SHEET- 3.23

THE BRUNING CO., INC.

MICHAEL MEEG
JUL 22 1953

FED. ROAD DIV. NO.	STATE	FED. AID PROJ. NO.	TYPE FUNDS
2	OHIO	UI-1052(2)	POST WAR

24
120

LUCAS COUNTY
CITY OF TOLEDO
TOLEDO EXPRESSWAY SYSTEM
MAUMEE RIVER BRIDGE
LUC 120R — 3.46

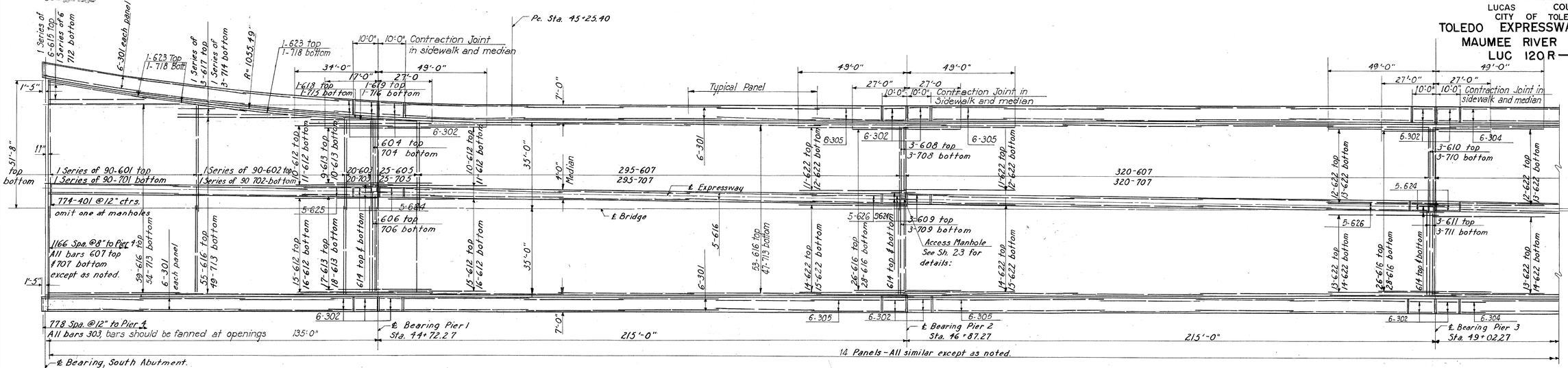

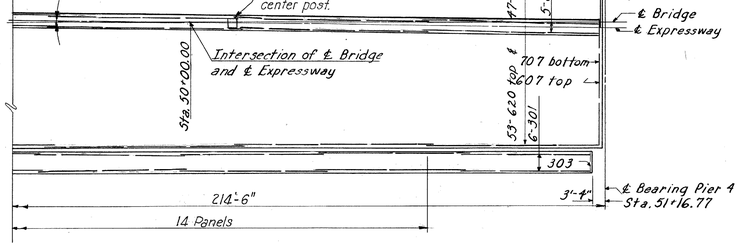

SLAB PLAN
Scale: 1"=20'-0"

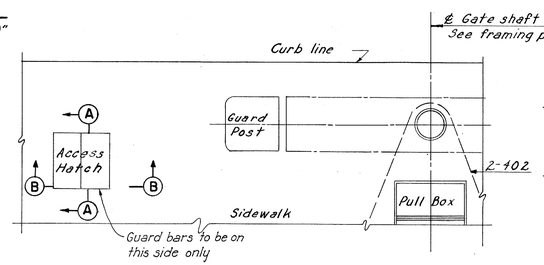

PART SIDEWALK PLAN AT ROADWAY GATES
Scale: ½"=1'-0"

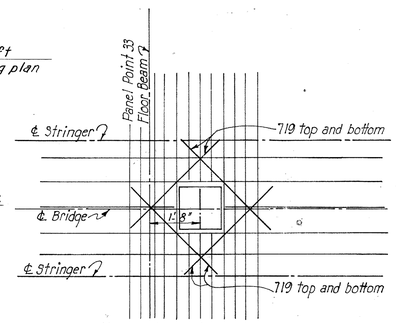

Opening in Slab for Center Post
Scale: ½"=1'-0"
Opening 2'-4"x 2'-4"
Transverse and long bars to be cut at opening.

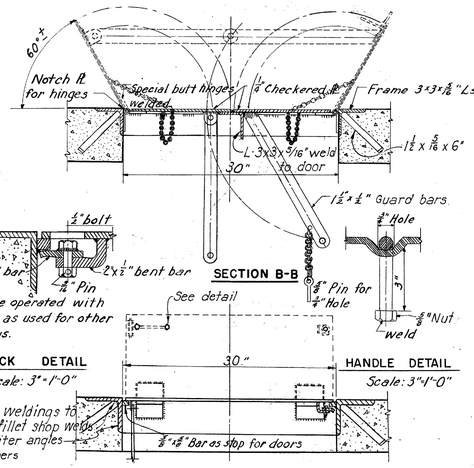

ACCESS HATCH
Scale: 1½"=1'-0"
Four required; one for each gate.
2 thus at gates A and C
2 opp. hand at gates B and D.

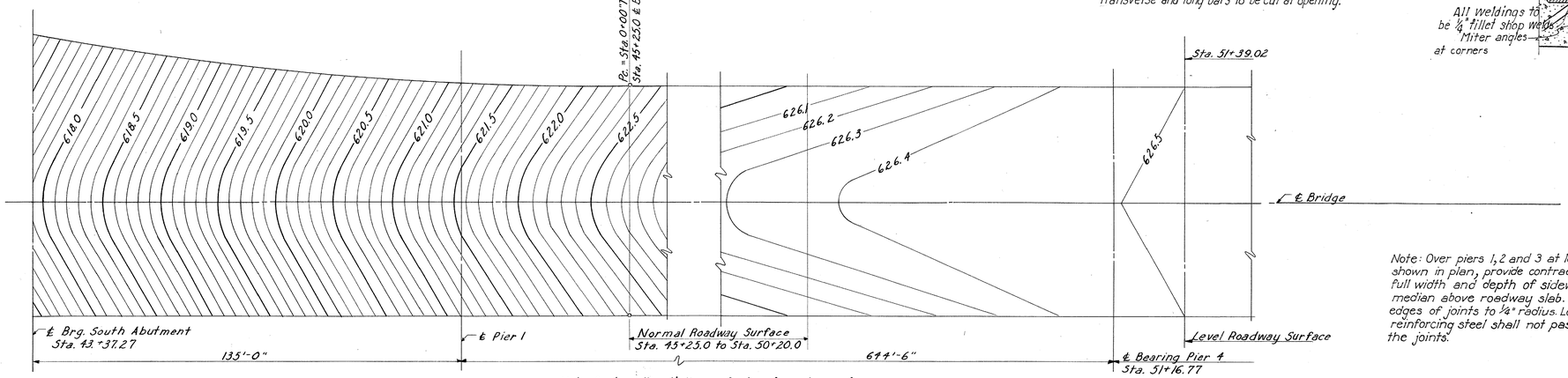

Note: Contour elevations are for top of wearing surface.

SLAB CONTOUR - PLAN
Scale: 1"=20'-0"

Note: Over piers 1, 2 and 3 at locations shown in plan, provide contraction joints full width and depth of sidewalk, and median above roadway slab. Round edges of joints to ¼" radius. Longitudinal reinforcing steel shall not pass through the joints.

PART 3

TOLEDO EXPRESSWAY SYSTEM

MAUMEE RIVER BRIDGE
BR. NO. LU 120R-35
UNIT 1
ROADWAY SLAB

TOLEDO LUCAS COUNTY, OHIO

SCALE 1"=20'-0" & ½"=1'-0"
MADE H.A.M. DATE 3-31-53
TRCD. H.A.M. DATE 10-27-52
CKD. L.I.D.-B.K. DATE 4-10-53

HOWARD, NEEDLES, TAMMEN & BERGENDOFF
CONSULTING ENGINEERS
KANSAS CITY NEW YORK

SHEET- 3.24

717

CHARLES BRUNING CO., INC.

MICROFILMED
JUL 22 1968

FED. ROAD DIV. NO.	STATE	FED. AID PROJ. NO.	TYPE FUNDS
2	OHIO	UI-1052 (2)	POST WAR

25/20

LUCAS COUNTY
CITY OF TOLEDO
TOLEDO EXPRESSWAY SYSTEM
MAUMEE RIVER BRIDGE
LUC 120R-3.46

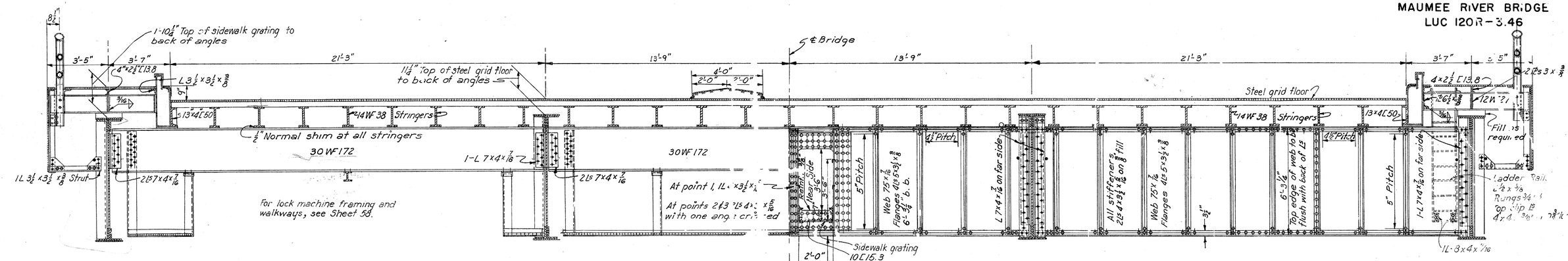

HALF CROSS SECTION AT POINT 0
Looking toward ℄ between leaves

HALF CROSS SECTION AT POINT 1
Cross section at points 2 and 3 similar except depth of floor beam at point 2 6'-7½" and at point 3 7'-5¼". Use 78¼x7/16 web at point 2 and 85 x ⅛ web at point 3. Ladder at point 1 only.

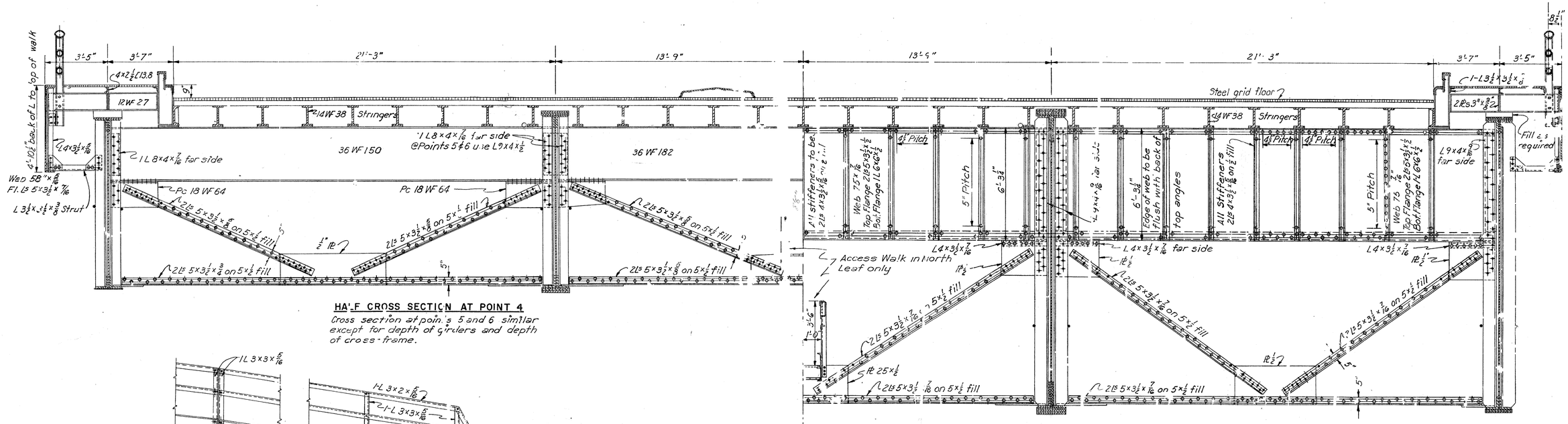

HALF CROSS SECTION AT POINT 4
Cross section at points 5 and 6 similar except for depth of girders and depth of cross-frame.

HALF CROSS SECTION AT POINT 7

Note: ¾"ϕ handbars 4'-6" above lower flange on both sides of each girder, continuous between floorbeams and welded to stiffener angles. Stiffener angles under stringers on floor beams shall be milled to bear on upper ends.

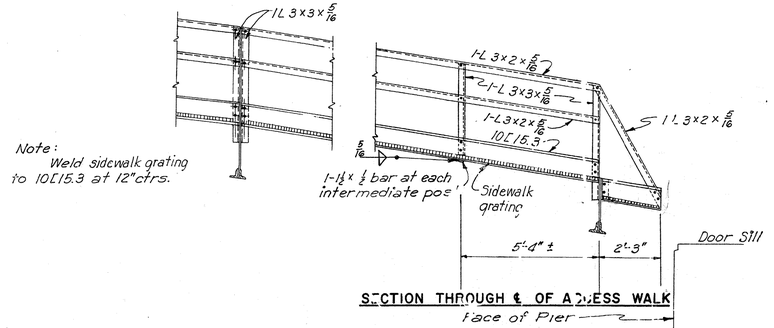

Note: Weld sidewalk grating to 10L15.3 at 12" ctrs.

SECTION THROUGH ℄ OF ACCESS WALK

PART 3

TOLEDO EXPRESSWAY SYSTEM

MAUMEE RIVER BRIDGE
BR. NO. LU 120R-3.3
BASCULE SPAN
ROADWAY CROSS SECTIONS

TOLEDO LUCAS COUNTY OHIO

SCALE 1/8" = 1'-0"
ROADWAY DATA 12-18-51
TOLL DATA 9-27-52
CKD DJ 1-21-53
WARD, NEED, HAMMER & BERG
CONSULTING ENGINEERS
KANSAS CITY NEW YORK

810 SHEET 5

MICROFILMED
JUL 22 1953

FED. ROAD DIV. NO.	STATE	FED. AID PROJ. NO.	TYPE FUNDS
2	OHIO	UI-1052(2)	POST WAR

26
120

LUCAS COUNTY
CITY OF TOLEDO

TOLEDO EXPRESSWAY SYSTEM
MAUMEE RIVER BRIDGE
LUC 120R-3.46

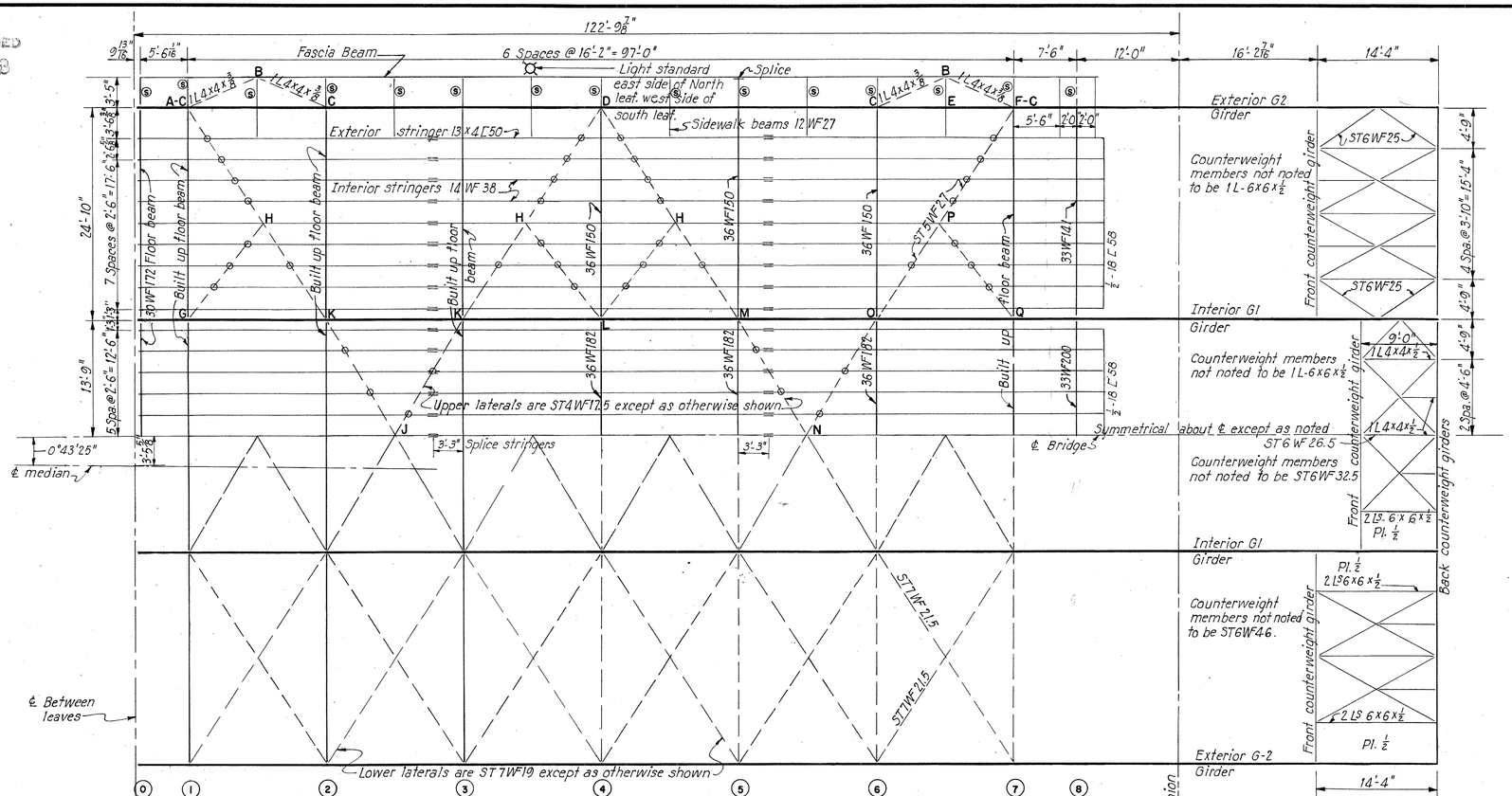

FRAMING PLAN
Scale: 1/8" = 1'-0"

HALF CROSS SECTION AT POINT 8
Scale: 3/8" = 1'-0"

Notes:
⑤ Indicates struts between flange of fascia beam and exterior girder.
Letters "H" on framing plan refer to connection types on Sheet No. 34.
⊠ Indicate connection of upper laterals and stringers which is connection I.
For stringer splice details see Section B-B on Sheet 35.

PART 3

TOLEDO EXPRESSWAY SYSTEM
MAUMEE RIVER BRIDGE
BR. NO. LU 120R-35
BASCULE SPAN
STEEL FRAMING PLAN
TOLEDO LUCAS COUNTY, OHIO

SCALE 1/8" & 3/8" = 1'-0"
MADE W.B.G. DATE 7-17-52
TRCD E.N.R. DATE 9-18-52
CKD DME DATE 9-19-52

HOWARD, NEEDLES, TAMMEN & BERGENDOFF
CONSULTING ENGINEERS
KANSAS CITY NEW YORK

810 SHEET- 3.26

743

RECEIVED
JUL 29 1953

FED. ROAD DIV. NO.	STATE	FED. AID PROJ. NO.	TYPE FUNDS
2	OHIO	UI-1052(2)	POST WAR

27
120

LUCAS COUNTY
CITY OF TOLEDO
TOLEDO EXPRESSWAY SYSTE
MAUMEE RIVER BRIDGE
LUC 120R-3.46

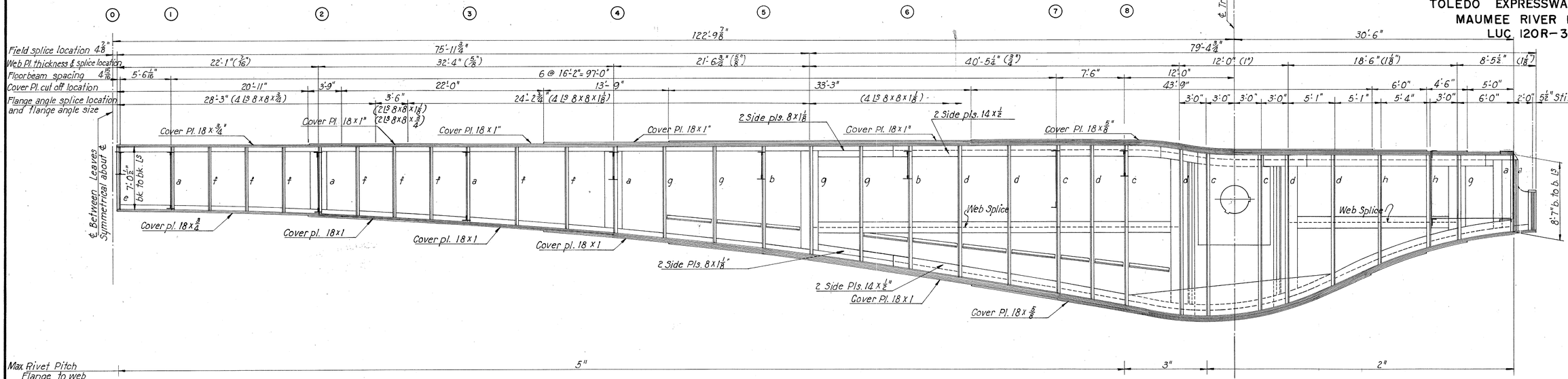

INTERIOR GIRDER G1

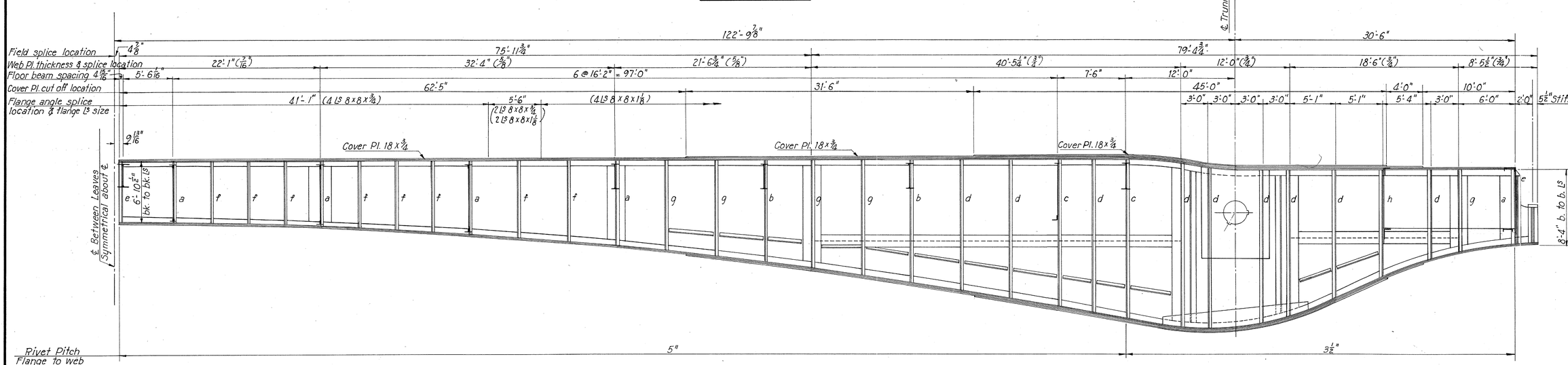

SCHEDULE OF STIFFENER ANGLES	
a	2 Ls 7 x 4 x 7/16 on fill
b	2 Ls 8 x 4 x 1/2 on fill
c	2 Ls 9 x 4 x 9/16 on fill
d	2 Ls 9 x 4 x 9/16 crimp
e	1 L 7 x 4 x 7/16 on fill
f	2 Ls 6 x 4 x 3/8 crimp
g	2 Ls 8 x 4 x 1/2 crimp
h	1 L 9 x 4 x 9/16 on fill
	1 L 9 x 4 x 9/16 crimp

EXTERIOR GIRDER G2

Note:
For general notes regarding girders, see Sheet 14.

PART
TOLEDO EXPRESSWAY SYSTE
MAUMEE RIVER BRIDGE
BR. NO. LU 120 R-35
BASCULE SPAN
GIRDER ELEVATIONS
TOLEDO LUCAS COUNTY, OHIO

SCALE 3/16" = 1'-0"
MADE R.E.S. DATE 12-12-51
TRCD R.R. DATE 4-28-52
CKD D.L.J. DATE 8-22-53

HOWARD, NEEDLES, TAMMEN & BERGENDOF
CONSULTING ENGINEERS
KANSAS CITY NEW YORK

810 SHEET- 3.27

744

CHARLES BRUNING CO., INC.

FED. ROAD DIV. NO.	STATE	FED. AID PROJ. NO.	TYPE FUNDS
2	OHIO	LI-1052(2)	POST WAR

28
120

LUCAS COUNTY
CITY OF TOLEDO

TOLEDO EXPRESSWAY SYSTEM
MAUMEE RIVER BRIDGE
LUC 120R—3.46

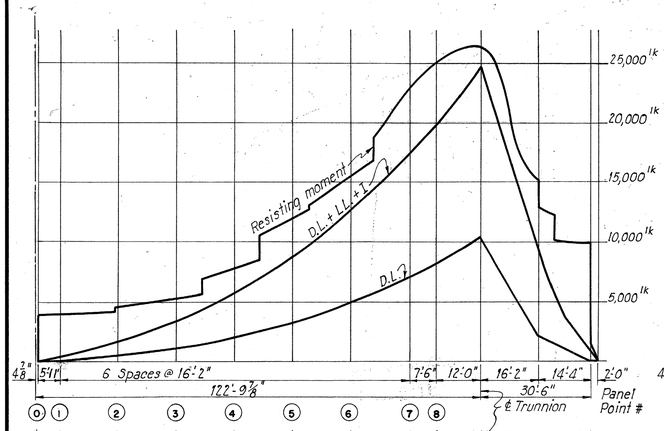

EXTERIOR GIRDER
Horz. 1" = 20'
Scale: Vert. 1" = 6000 lk
1" = 150 k

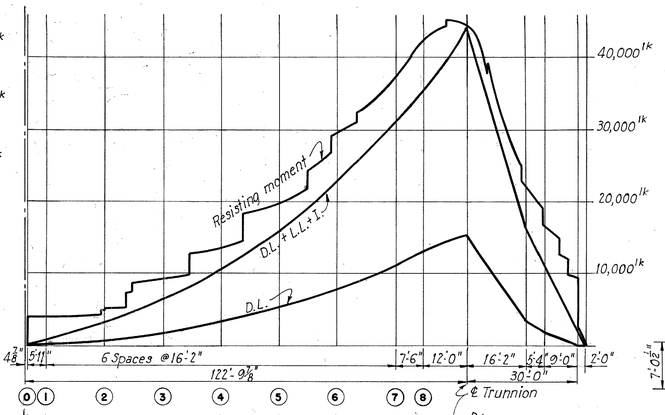

INTERIOR GIRDER
Horz. 1" = 20'
Scale: Vert. 1" = 10,000 lk
1" = 250 k

MICROFILMED
JUL 20 1993

MAXIMUM MOMENT AND SHEAR DIAGRAMS

EXTERIOR GIRDER					INTERIOR GIRDER				
Panel Point	Moments ('K)		Shears (K)		Panel Point	Moments ('K)		Shears (K)	
	D.L.	D.L.+L.L.+I.	D.L.	D.L.+L.L.+I.		D.L.	D.L.+L.L.+I.	D.L.	D.L.+L.L.+I.
0	0	0	7	65	0	0	0	14	131
1	-40	-360	19	88	1	-80	-720	31	171
2	-390	-1660	36	130	2	-640	-3170	57	246
3	-1020	-3360	55	176	3	-1640	-6280	85	327
4	-1980	-5660	75	226	4	-3110	-10350	120	421
5	-3240	-8570	98	278	5	-5170	-15610	156	514
6	-4960	-12600	122	332	6	-7850	-22610	193	607
7	-7060	-17380	149	376	7	-11200	-31230	238	683
8	-8210	-19760	166	404	8	-13040	-35450	270	736
℄ Trunnion	-10280	-24710	477	928	℄ Trunnion	-16380	-44370	761	1636
Face of outer counterweight	2145	9145	460	911	Face of outer counterweight	3420	17000	731	1606
Face of inner counterweight	——	——	——	——	Face of inner counterweight	——	——	498	1373
End of top Flange L3	0	902	225	686	End of top Flange L3	0	1750	3555	12305

The above tables and diagrams are design moments and shears.
For design purposes calculated dead load moments and shears are multiplied by 0.8; live load moments and shears are multiplied by 2.06.

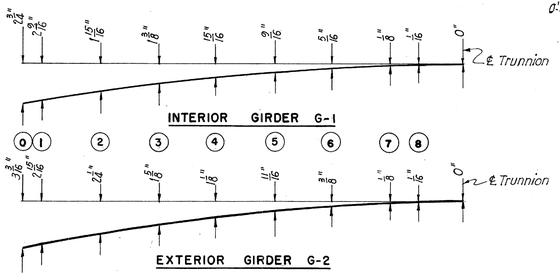

GIRDER DEAD LOAD DEFLECTION DIAGRAMS

Scale: Horizontal - 1" = 20'-0"
Vertical - 1" = 5"

Girders shall be cambered for full dead load.

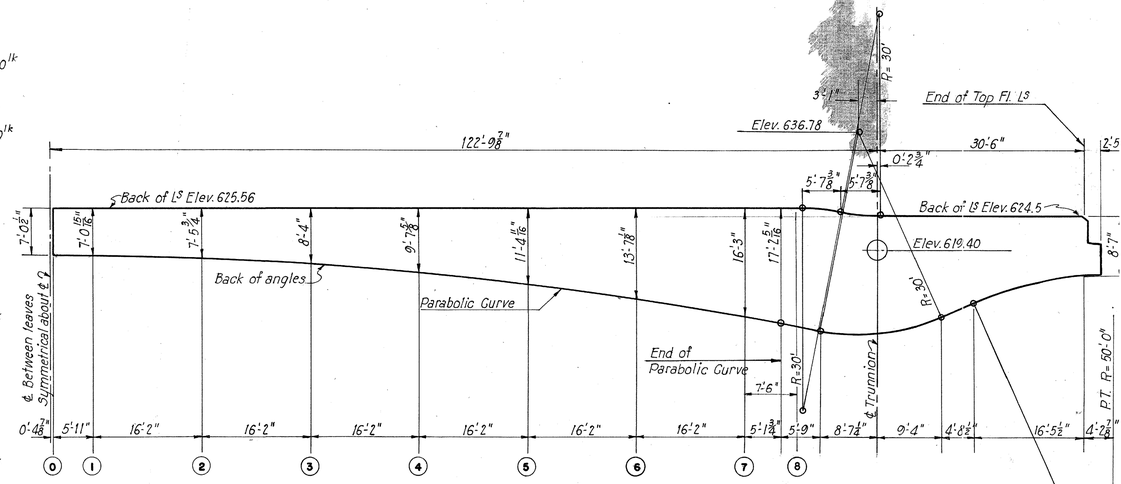

INTERIOR GIRDER G-1
Scale: 3/32" = 1'-0"

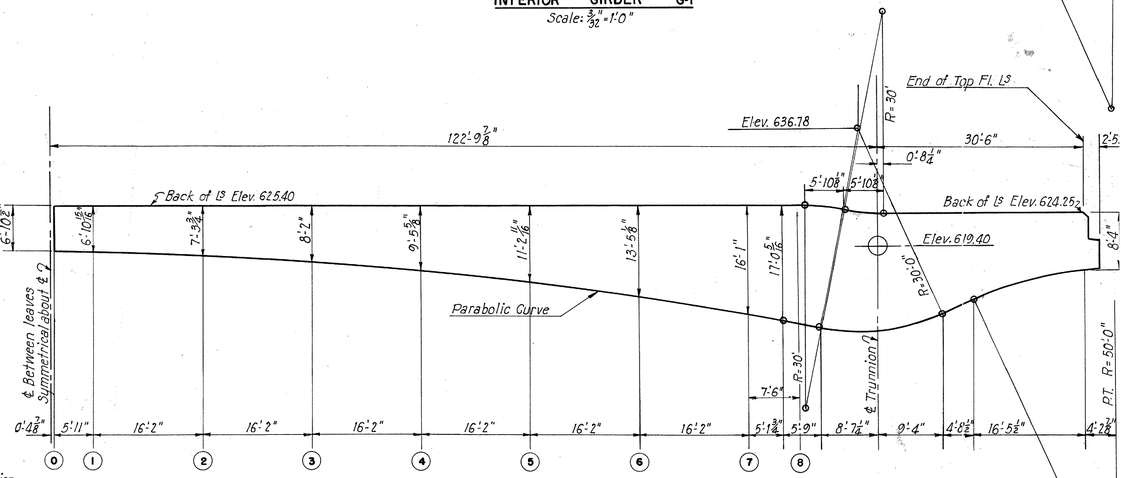

EXTERIOR GIRDER G-2
Scale: 3/32" = 1'-0"

Note: All radii given are to back of angles.

PART 3

TOLEDO EXPRESSWAY SYSTEM
MAUMEE RIVER BRIDGE
BR. NO. LU 120R-35
BASCULE SPAN
GIRDER STRESSES AND DIMENSIONS
TOLEDO LUCAS COUNTY OHIO

SCALE As Shown
MADE D.M.E. DATE 7-15-52
TRCD E.J.M.R. DATE 9-30-52
CKD J.P.S. DATE 9-30-53

HOWARD, NEEDLES, TAMMEN & BERGENDOFF
CONSULTING ENGINEERS
KANSAS CITY NEW YORK

810 SHEET- 3.28

752

CHARLES BRUNING CO., INC.

RECEIVED
JUL 22 1953

FED. ROAD DIV. NO.	STATE	FED. AID PROJ. NO.	TYPE FUNDS
2	OHIO	UI-1052(2)	POST WAR

29
120

LUCAS COUNTY
CITY OF TOLEDO
TOLEDO EXPRESSWAY SYSTEM
MAUMEE RIVER BRIDGE
LUC 120 R-3.46

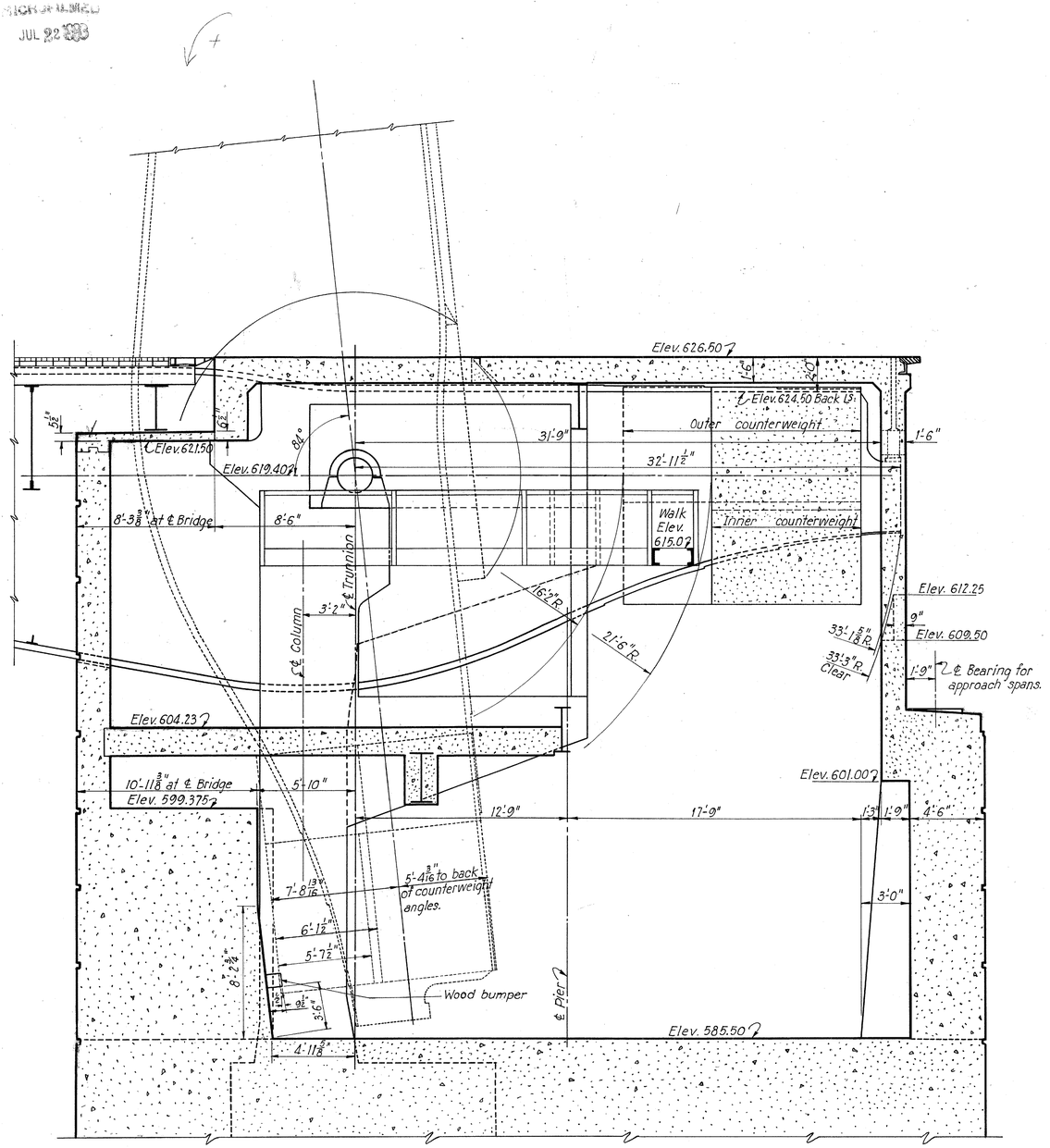

OPERATING CLEARANCES

COUNTERWEIGHT BALANCE TABLE

SOUTH LEAF						NORTH LEAF					
Item	Weight (kips)	Arm (Horiz.)	Horiz. Moment about ℄ Trunnion (foot kips)	Arm (Vert.)	Vert. Moment about ℄ Trunnion (foot kips)	Item	Weight (kips)	Arm (Horiz.)	Horiz. Moment about ℄ Trunnion (foot kips)	Arm (Vert.)	Vert. Moment about ℄ Trunnion (foot kips)
Forward Arm	1,249	+53.56	+66,900	-2.07	-2,590	Forward Arm	1,273	+54.42	+69,276	-2.04	-2,596
Rear Arm (Including Counterweight Box empty and Buffers)	504	-14.91	-7,514	+2.17	+1,094	Rear Arm (Including Counterweight Box empty and Buffers)	504	-14.91	- 7,514	+2.17	+1,094
Concrete in Outer Counterweights 4240 cu. ft. @ 284 #/cu. ft.	1,204	-23.84	-28,708	-1.83	-2,184	Concrete in Outer Counterweights 4240 cu. ft. @ 282 #/cu. ft.	1,196	-23.84	-28,510	-1.82	-2,178
Concrete in Outer Counterweights 2624 cu. ft. @ 292 #/cu. ft.	766	-23.38	-17,906	+4.63	+3,548	Concrete in Outer Counterweights 2624 cu. ft. @ 288 #/cu. ft.	756	-23.36	-17,658	+4.63	+3,498
Concrete in Inner Counterweights 2458 cu. ft. @ 163 #/cu. ft.	400	-26.27	-10,508	+0.69	+277	Concrete in Inner Counterweights 2458 cu. ft. @ 206 #/cu. ft.	504	-26.29	-13,248	+0.69	+346
Balance Blocks	86	-24.05	- 2,068	-1.36	-116	Balance Blocks	89	-24.16	-2,150	-1.35	-120
Net	4,109		+196		+29	Net	4,322		+196		+44

Sign Convention:
+ Moments tend to close leaves
- Moments tend to open leaves

In closed position:
forward of trunnions is +
back of trunnions is -
above trunnions is -
below trunnions is +

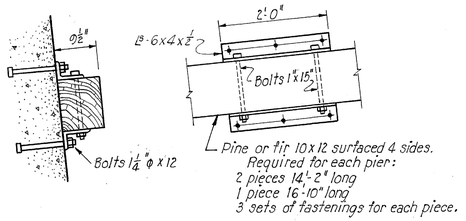

WOOD BUMPER FOR COUNTERWEIGHT
Scale: 3/4" = 1'-0"

PART 3
TOLEDO EXPRESSWAY SYSTEM
MAUMEE RIVER BRIDGE
BR. NO. LU 120 R-35
BASCULE SPAN
OPERATING CLEARANCES AND BALANCING
TOLEDO LUCAS COUNTY, OHIO

SCALE 1" = 1'-0"
MADE D.L.J. DATE 8-28-52
TRCD EM-HRR DATE 9-18-52
CKD DMD DATE 9-30-53

HOWARD, NEEDLES, TAMMEN & BERGENDOFF
CONSULTING ENGINEERS
KANSAS CITY NEW YORK

810 SHEET: 3.29

751

RECEIVED
JUL 22 1952

FED. ROAD DIV. NO.	STATE	FED. AID PROJ. NO.	TYPE FUNDS
2	OHIO	UH-1052(2)	POST WAR

30
120

LUCAS COUNTY
CITY OF TOLEDO
TOLEDO EXPRESSWAY SYSTEM
MAUMEE RIVER BRIDGE
LUC 120R-3.46

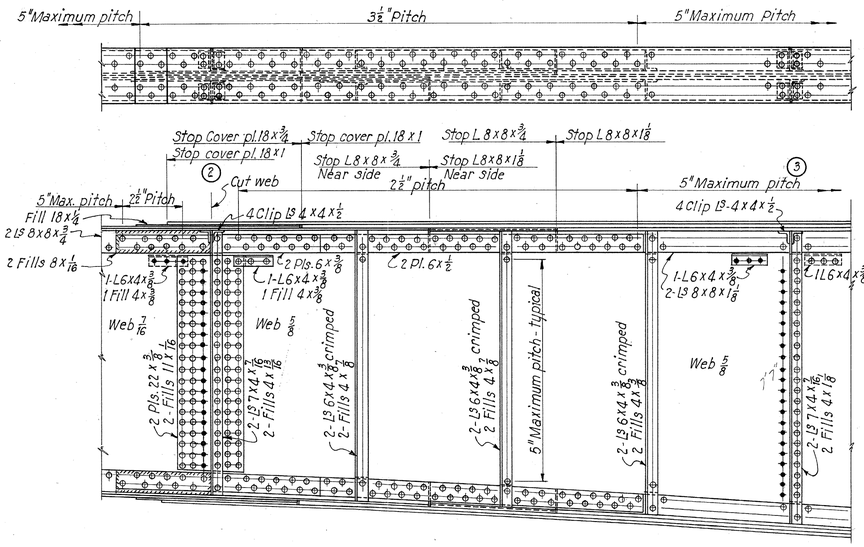

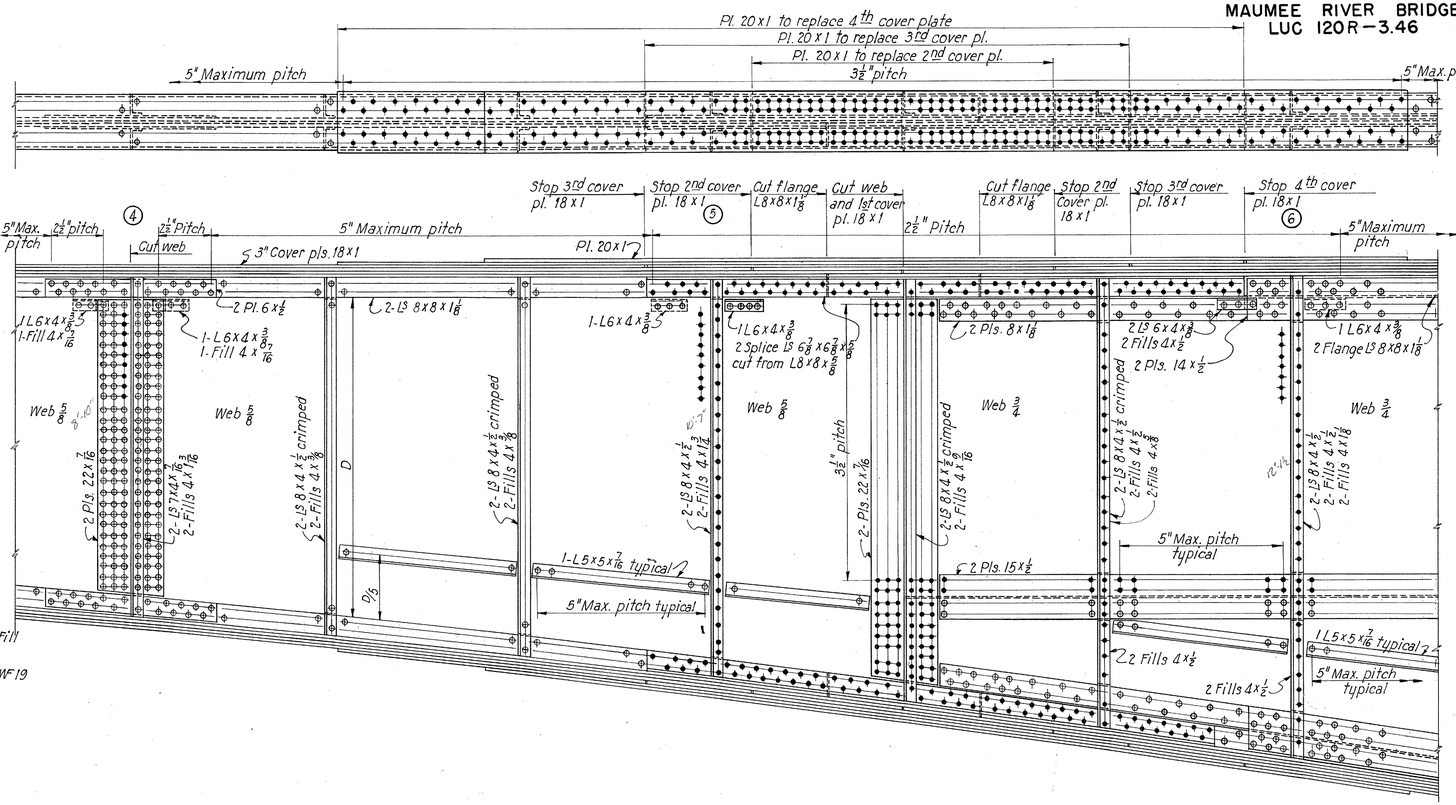

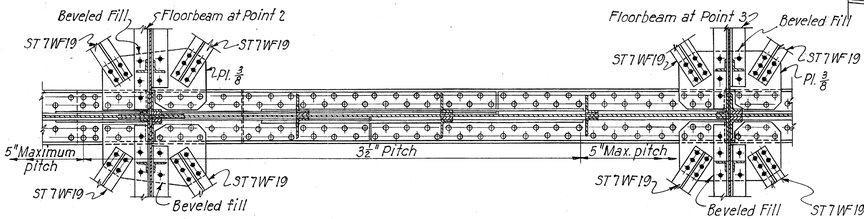

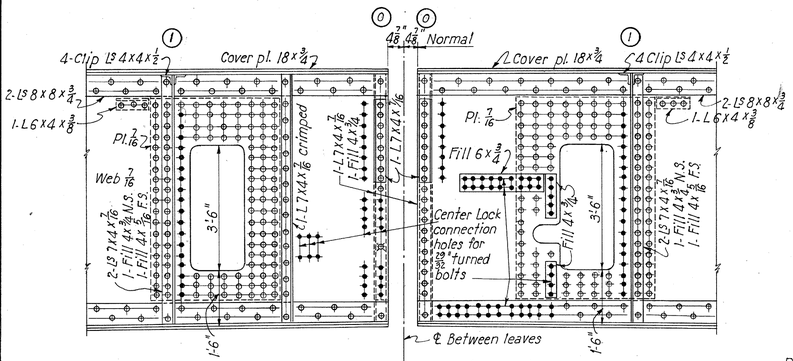

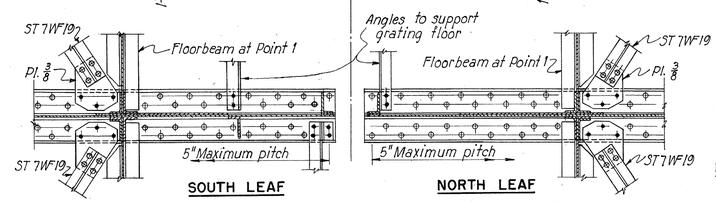

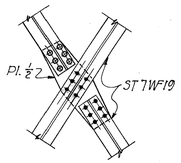

TYPICAL BOTTOM LATERAL INTERSECTION FOR ST7WF19

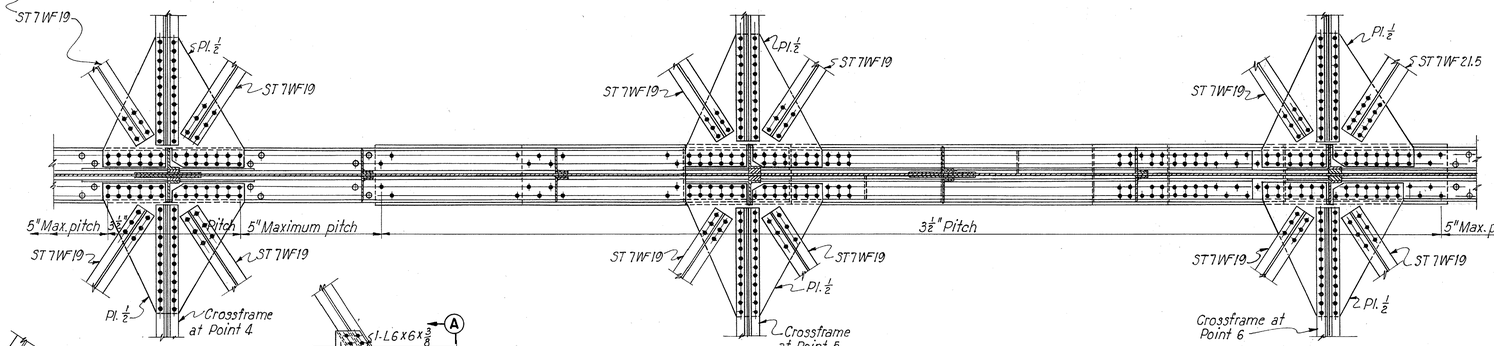

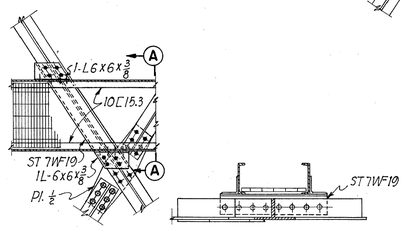

ACCESS WALK CONNECTION TO BOTTOM LATERALS

Connection at ℄ of bridge between Points 1 & 2 and 2 & 3 in North Leaf.

SECTION A-A

Notes:
Rivets through main material of girder shall be 1"ϕ, all other rivets ⅞"ϕ.
Main and splice material in top and bottom flange similar except as shown.
Numbers shown thus (3) indicate panel points.
F.S. refers to Far Side; N.S. refers to Near Side.
For upper lateral connections, see Sheet 34.
All material to be carbon steel.

PART 3

TOLEDO EXPRESSWAY SYSTEM

MAUMEE RIVER BRIDGE
BR. NO. LU 120R-35
BASCULE SPAN
INTERIOR GIRDER G1

TOLEDO LUCAS COUNTY, OHIO

SCALE ½" = 1'-0"
MADE D.L.J. DATE 5-14-52
TRCD R.R. DATE 10-13-52
CKD JPS DATE 12-20-52

HOWARD, NEEDLES, TAMMEN & BERGENDOFF
CONSULTING ENGINEERS
KANSAS CITY NEW YORK

810 SHEET 3.30

740

FED. ROAD DIV. NO.	STATE	FED. AID PROJ. NO.	TYPE FUNDS
2	OHIO	UI-1052 (2)	POST WAR

31
120

LUCAS COUNTY
CITY OF TOLEDO
TOLEDO EXPRESSWAY SYSTEM
MAUMEE RIVER BRIDGE
LUC 120R-3.46

RECEIVED
JUL 22 1953

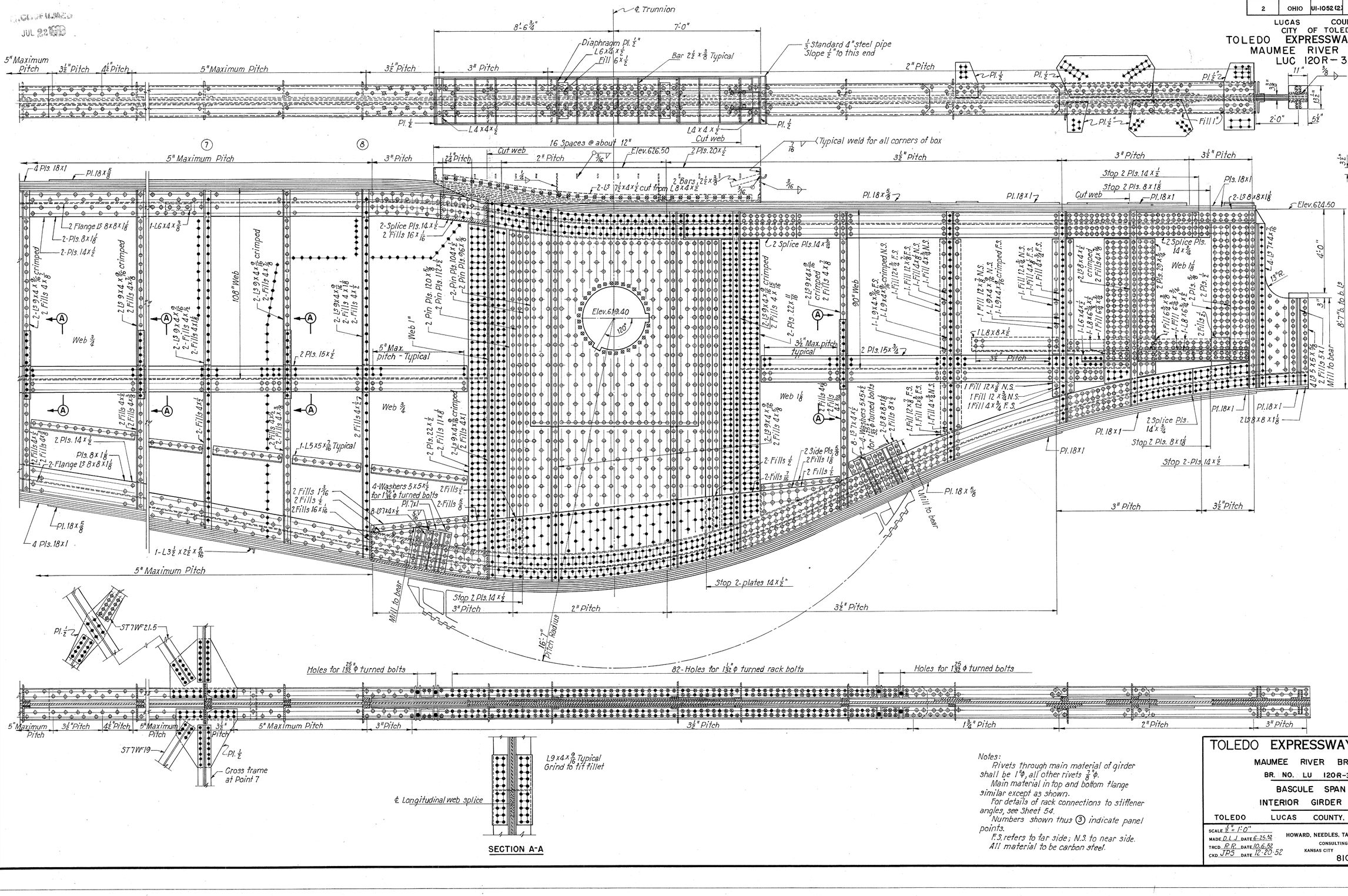

Notes:
Rivets through main material of girder shall be 1⅛ϕ, all other rivets ⅞ϕ.
Main material in top and bottom flange similar except as shown.
For details of rack connections to stiffener angles, see Sheet 54.
Numbers shown thus ③ indicate panel points.
F.S. refers to far side; N.S. to near side.
All material to be carbon steel.

PART 3

TOLEDO EXPRESSWAY SYSTE
MAUMEE RIVER BRIDGE
BR. NO. LU 120R-35
BASCULE SPAN
INTERIOR GIRDER G 1
TOLEDO LUCAS COUNTY, OHIO

SCALE ½" = 1'-0"
MADE D.L.J. DATE 6-25-52
TRCD. R.R. DATE 10-6-52
CKD. JPS DATE 12-20-52

HOWARD, NEEDLES, TAMMEN & BERGENDOFF
CONSULTING ENGINEERS
KANSAS CITY NEW YORK

810 SHEET 3.31

745

CHARLES BRUNING CO., INC.

RECEIVED
JUL 29 1953

FED. ROAD DIV. NO.	STATE	FED. AID PROJ. NO.	TYPE FUNDS
2	OHIO	UI-1052(12)	POST WAR

32
120

LUCAS COUNTY
CITY OF TOLEDO
TOLEDO EXPRESSWAY SYSTEM
MAUMEE RIVER BRIDGE
LUC 120R-3.46

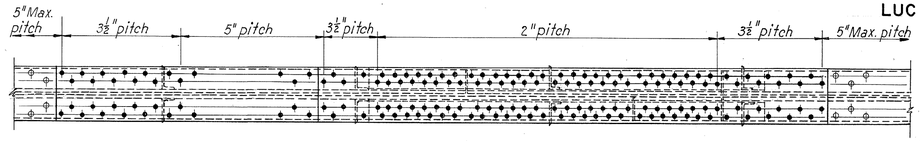

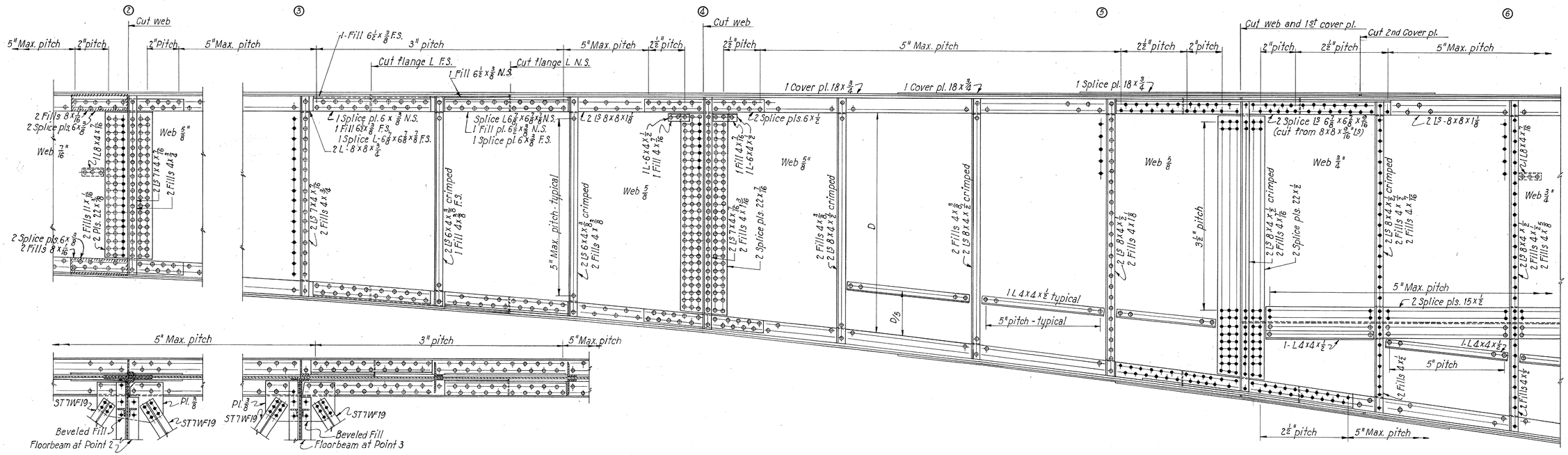

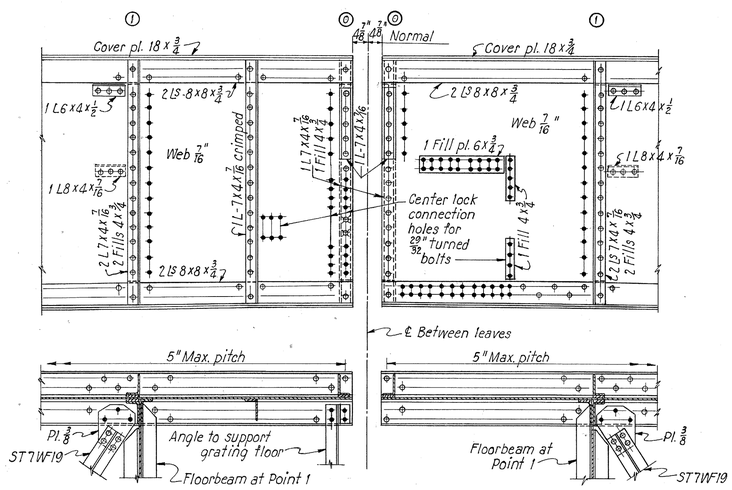

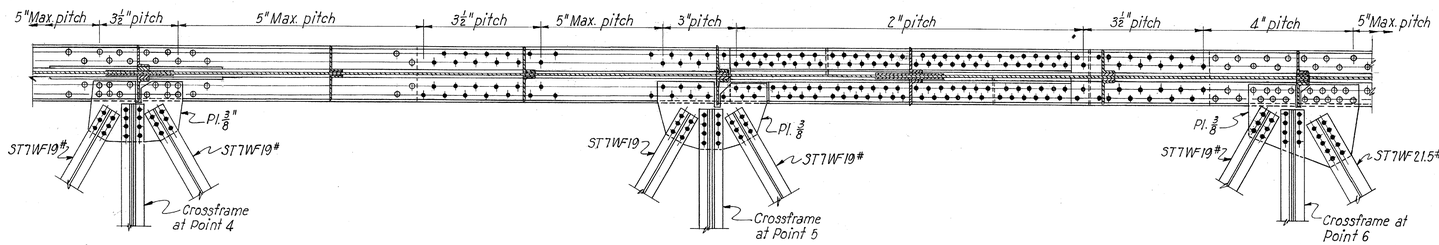

Notes:
Rivets through main material of girder shall be 1" ϕ. All other rivets shall be ⅞" ϕ.
Main and splice material in top and bottom flanges similar except as shown.
Numbers shown thus: ③ indicate panel points.
F.S. refers to far side: N.S. to near side.
For upper lateral connections, see Sheet 34.
All material to be carbon steel.

PART 3

TOLEDO EXPRESSWAY SYSTEM
MAUMEE RIVER BRIDGE
BR. NO. LU 120 R-35
BASCULE SPAN
EXTERIOR GIRDER G-2

TOLEDO LUCAS COUNTY. OHIO

SCALE 1/2" = 1'-0"
MADE M.K.A. DATE 2-20-52
TRCD. F.F. DATE 10-16-52
CKD. DMEDI DATE 5-8-53

HOWARD, NEEDLES, TAMMEN & BERGENDOFF
CONSULTING ENGINEERS
KANSAS CITY NEW YORK

810 SHEET- 3.32

741

CHARLES BRUNING CO., INC.

JUL 29 1953

FED. ROAD DIV. NO.	STATE	FED. AID PROJ. NO.	TYPE FUNDS
2	OHIO	UI-1052(2)	POST WAR

33
120

LUCAS COUNTY
CITY OF TOLEDO
EXPRESSWAY SYSTEM
MAUMEE RIVER BRIDGE
LUC 120 R-3.46

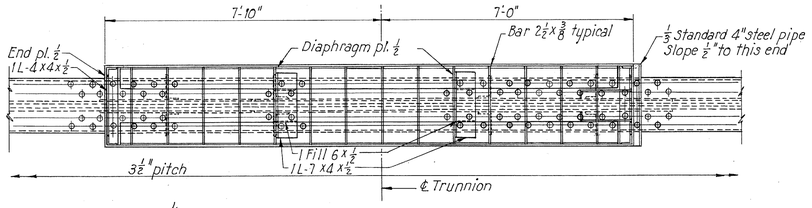

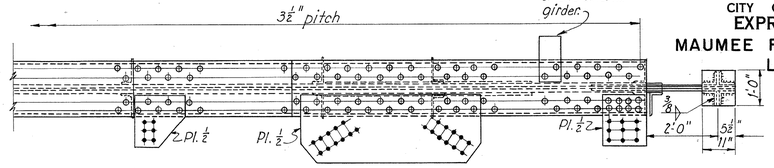

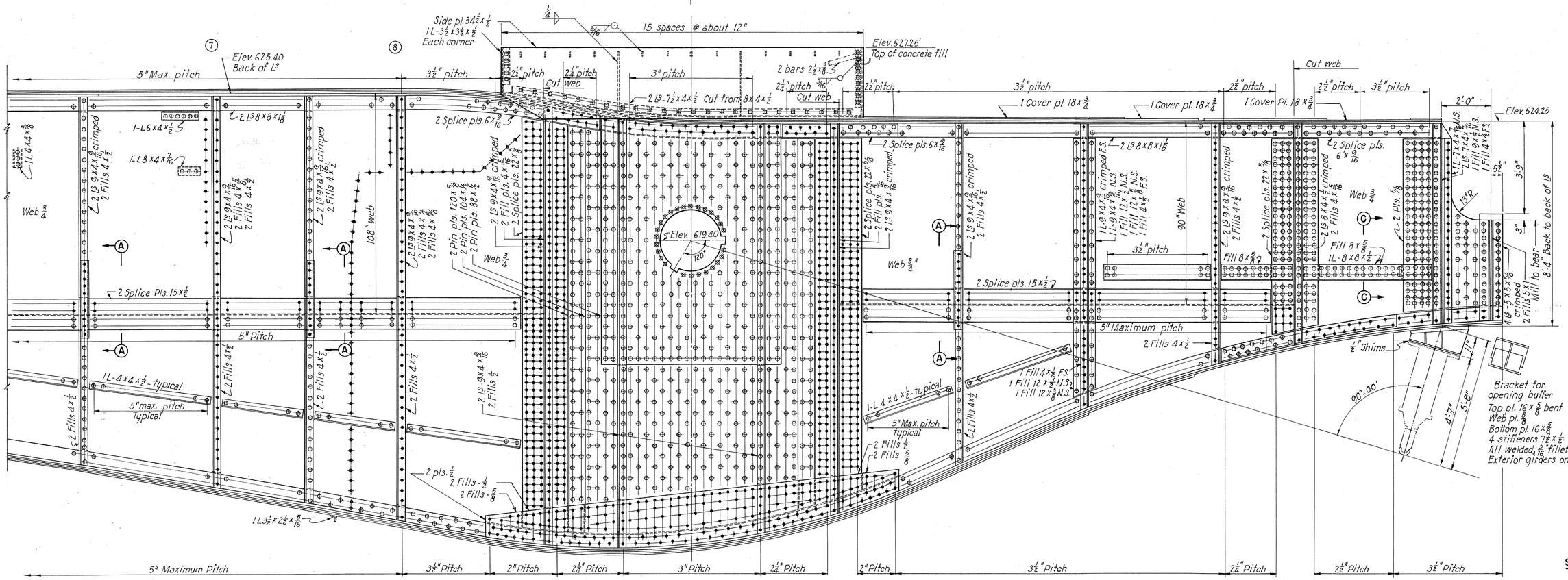

SECTION AT ℄ TRUNNION

Notes: For Section A-A, see Sheet 31.
Rivets through main material of girder shall be 1" ϕ. All other rivets 7/8 ϕ.
Main and splice material in top and bottom flanges similar except as shown.
Numbers shown thus Ⓐ indicate panel points.
F.S. refers to far side. N.S. refers to near side.
All material to be carbon steel.

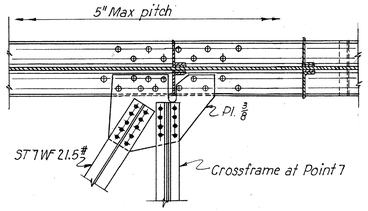

PLAN OF LOWER FLANGE

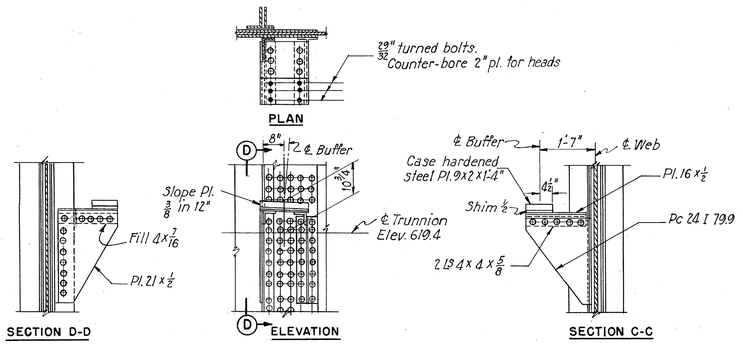

CLOSING BUFFER BRACKET CONNECTION DETAILS

PART 3

TOLEDO EXPRESSWAY SYSTEM

MAUMEE RIVER BRIDGE
BR. NO. LU 120 R-35
BASCULE SPAN
EXTERIOR GIRDER G-2

TOLEDO LUCAS COUNTY, OHIO

SCALE 1/2" = 1'-0"
MADE M K A DATE 2-13-52
TRCD R R DATE 10-9-52
CKD D L J DATE 5-8-53

HOWARD, NEEDLES, TAMMEN & BERGENDOFF
CONSULTING ENGINEERS
KANSAS CITY NEW YORK

810 SHEET 3.33

746

HARLES BRUNING CO., INC.

RECEIVED
JUL 22 1953

FED. ROAD DIV. NO.	STATE	FED. AID PROJ. NO.	TYPE FUNDS
2	OHIO	UI-1052(2)	POST WAR

LUCAS COUNTY
CITY OF TOLEDO
TOLEDO EXPRESSWAY SYSTE
MAUMEE RIVER BRIDGE
LUC 120R-3.46

SECTION A-A

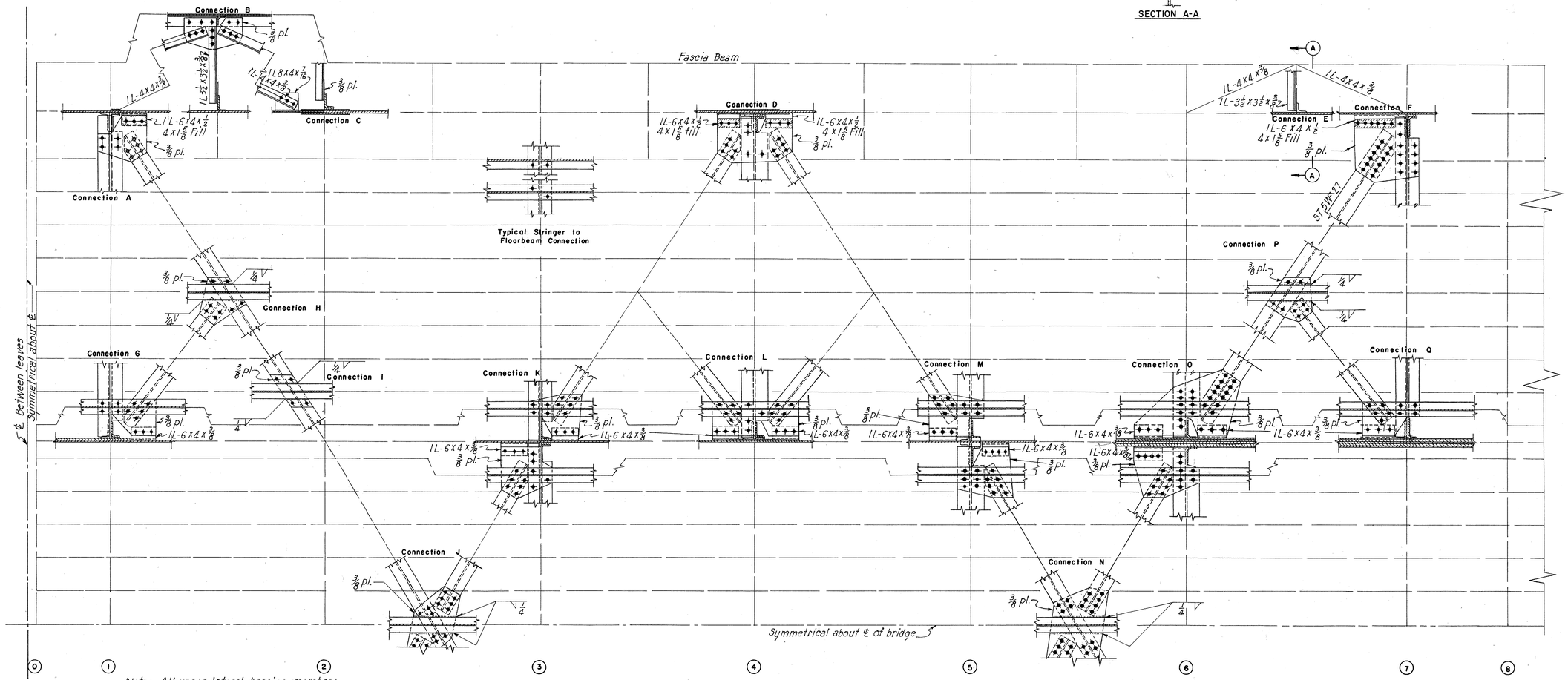

Note: All upper lateral bracing members not noted are ST4WF175, Stem down.
Scales - Framing Plan, 1/4"=1'-0"
Connection Details, 1/2"=1'-0"

UPPER LATERAL BRACING CONNECTIONS

PART

TOLEDO EXPRESSWAY SYSTE
MAUMEE RIVER BRIDGE
BR. NO. LU 120R-35
BASCULE SPAN
UPPER LATERAL BRACING
TOLEDO LUCAS COUNTY, OH

SCALE 1/4" 1/2" = 1'0"
MADE D.M.E. DATE 7-11-52
TRCD E.N.R.R. DATE 10-24-52
CKD. HKA-BKU DATE 12-6-52

HOWARD, NEEDLES, TAMMEN & BERGEND
CONSULTING ENGINEERS
KANSAS CITY NEW YORK

810 SHEET 3.34

147

FED. ROAD DIV. NO.	STATE	FED. AID PROJ. NO.	TYPE FUNDS
2	OHIO	UI-1052(2)	POST WAR

LUCAS COUNTY
CITY OF TOLEDO
TOLEDO EXPRESSWAY SYSTE
MAUMEE RIVER BRIDGE
LUC 120R-3.46

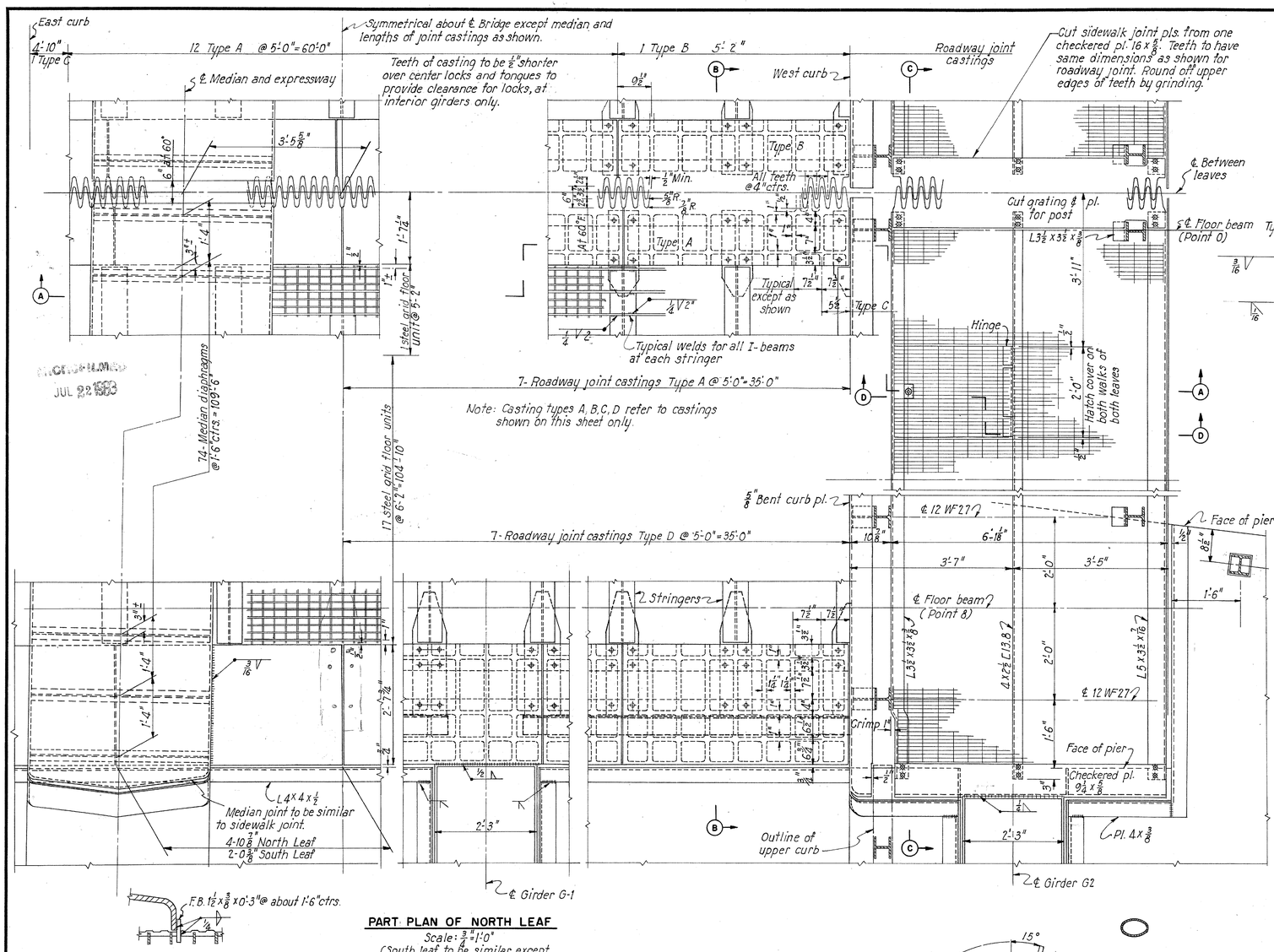

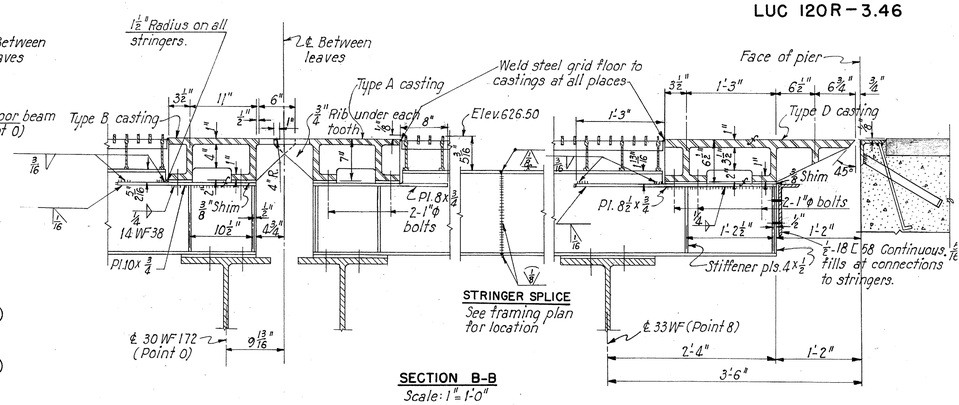

STRINGER SPLICE
See framing plan for location

SECTION B-B
Scale: 1" = 1'-0"

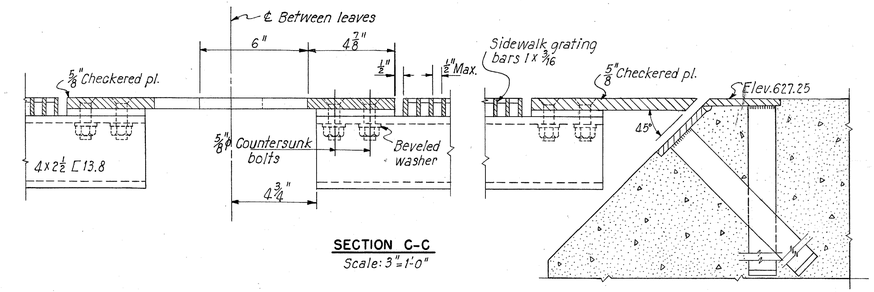

SECTION C-C
Scale: 3" = 1'-0"

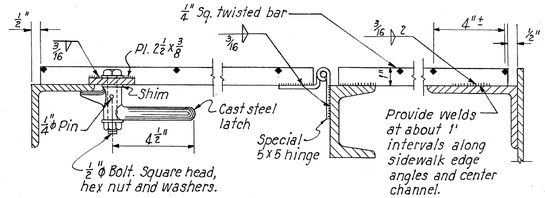

SECTION D-D
Scale: 3" = 1'-0"

DETAIL OF MEDIAN SHEAR LUGS
Scale: 1½" = 1'-0"

PART PLAN OF NORTH LEAF
Scale: ¾" = 1'-0"
(South leaf to be similar except as shown)

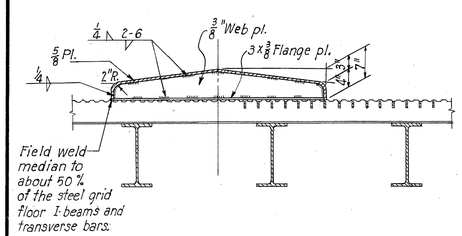

SECTION A-A
Scale: ¾" = 1'-0"

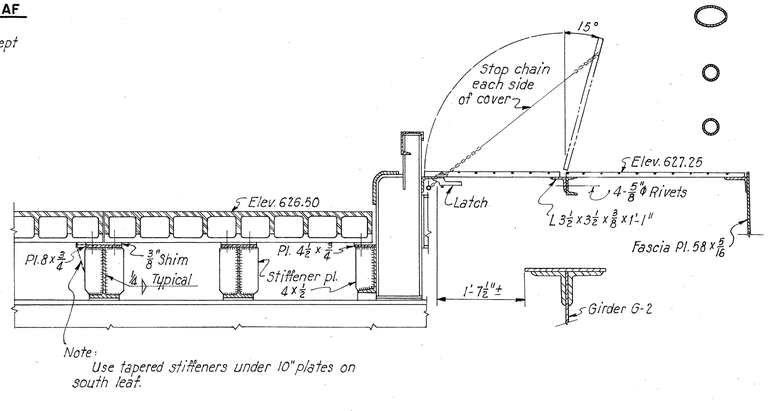

Note:
Use tapered stiffeners under 10" plates on south leaf.

Notes:
For other curb details, see Sheet 112.
For handrail and fascia details, see Sheet 111
For details of metalwork on pier side of roadway break, see Sheet 50.
All roadway joint castings shall be cast steel. Fillets shall be ½" unless otherwise noted. Make castings ¼" less in length than the nominal lengths shown in plan, so that castings can be adjusted to provide at least ½" clear between sides of mating teeth at 60°F.
All bolts shall be provided with self locking nuts.
Roadway grid floor shall be 5" Open Steel Grid Floor according to supplemental specification No. 33. I-beams in steel grid floor shall be placed transverse to traffic.
Sidewalk grating shall be according to supplemental specifications 24, except that payment per square foot shall include the cost of painting gratings.

PART
TOLEDO EXPRESSWAY SYSTE
MAUMEE RIVER BRIDGE
BR. NO. LU 120R-35
BASCULE SPAN
ROADWAY AND SIDEWALK
TOLEDO LUCAS COUNTY, OH

SCALE As shown
MADE J.T. DATE 2-28-52
TRC'D E.N.P. DATE 10-20-52
CK'D JPS/DKB DATE 12-5-53

HOWARD, NEEDLES, TAMMEN & BERGEND
CONSULTING ENGINEERS
KANSAS CITY NEW YORK

SHEET 3.35
810

749

CHARLES BRUNING CO., INC.

RECEIVED
JUL 22 1953

FED. ROAD DIV. NO	STATE	FED. AID PROJ. NO.	TYPE FUNDS
2	OHIO	UI-1052(2)	POST WAR

36
120

LUCAS COUNTY
CITY OF TOLEDO
TOLEDO EXPRESSWAY SYSTEM
MAUMEE RIVER BRIDGE
LUC 120R-3.46

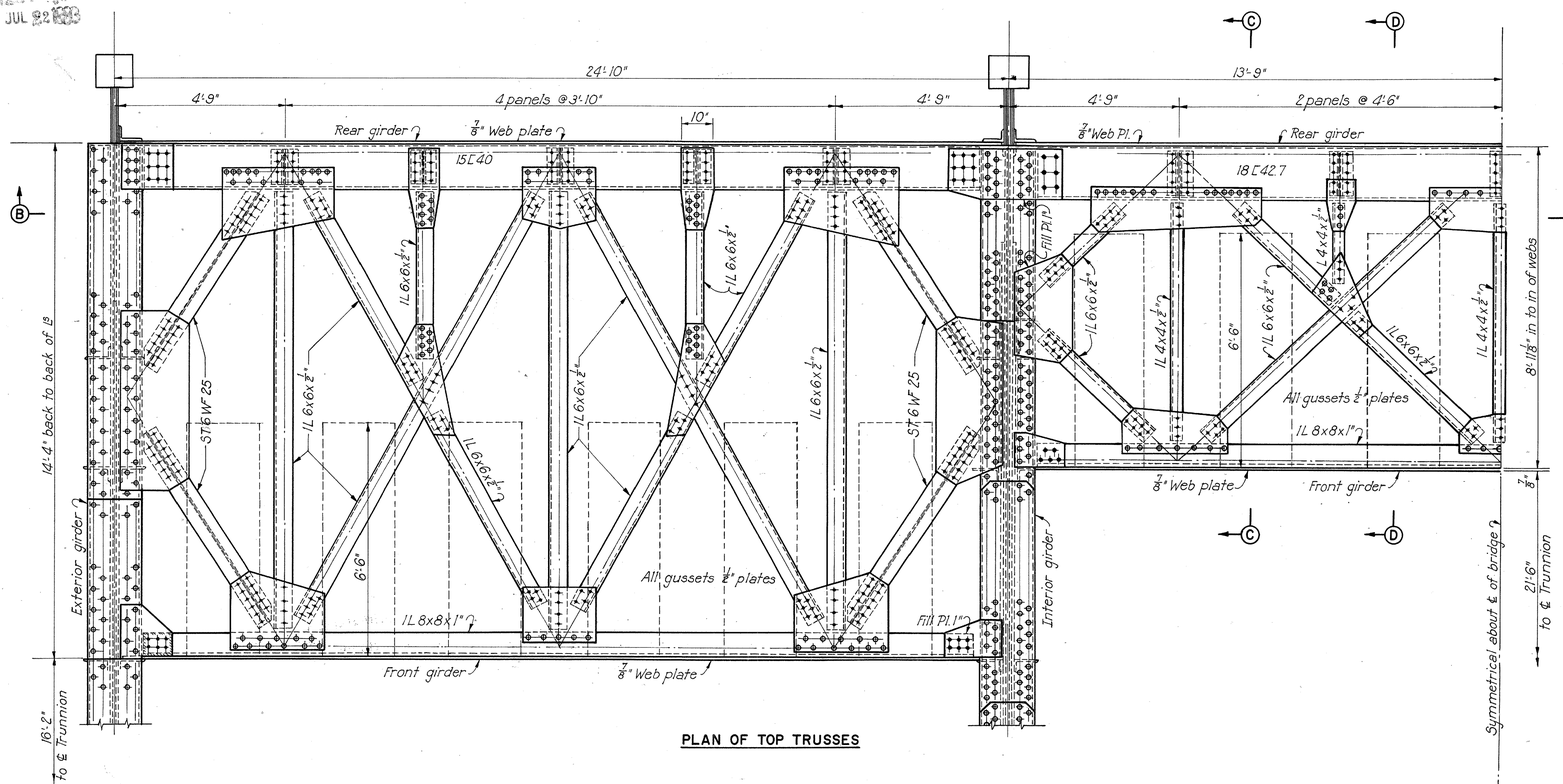

PLAN OF TOP TRUSSES

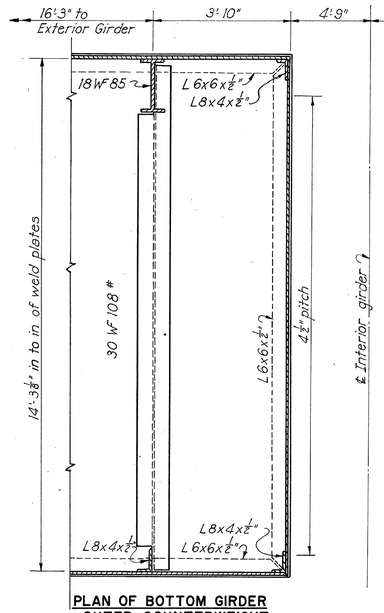

PLAN OF BOTTOM GIRDER
OUTER COUNTERWEIGHT

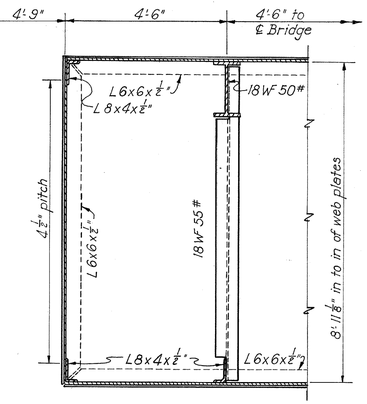

PLAN OF BOTTOM GIRDER
INNER COUNTERWEIGHT

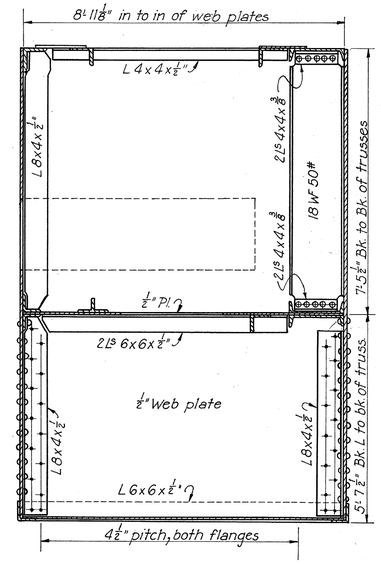

SECTION C-C

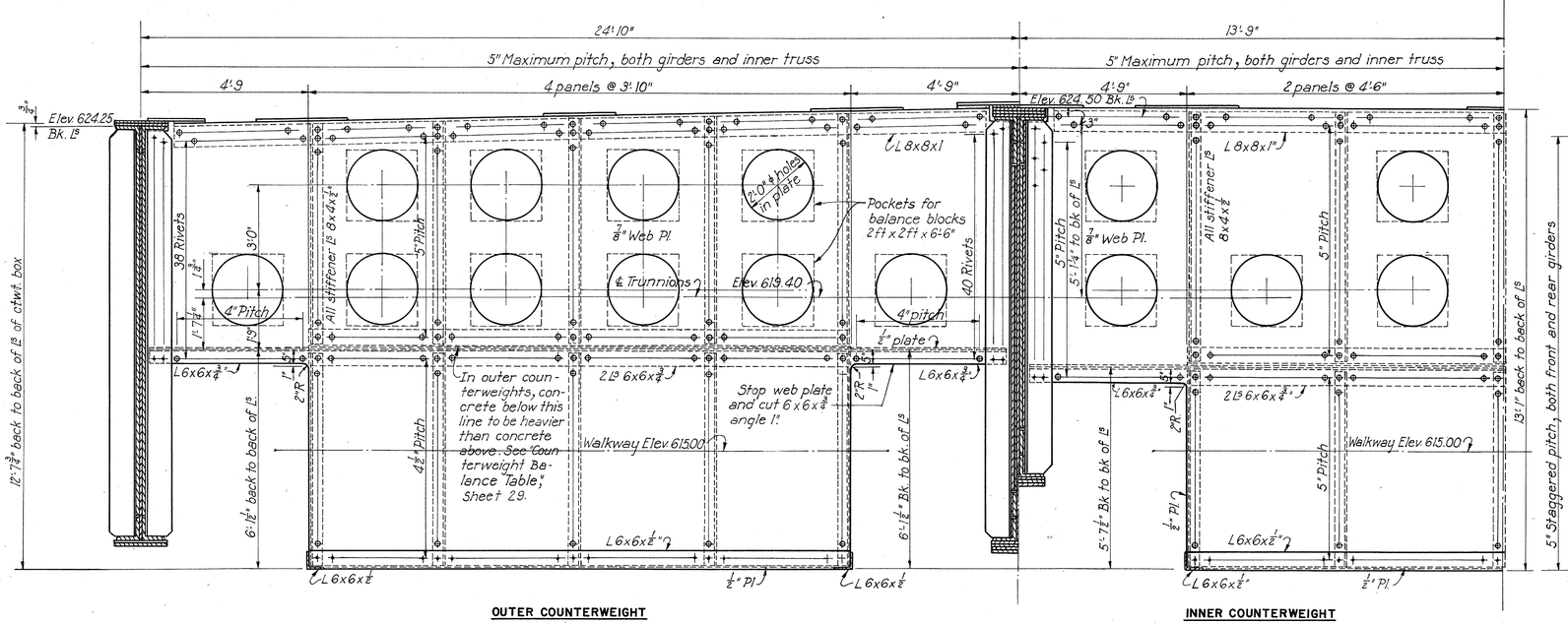

OUTER COUNTERWEIGHT

ELEVATION OF FRONT GIRDER

INNER COUNTERWEIGHT

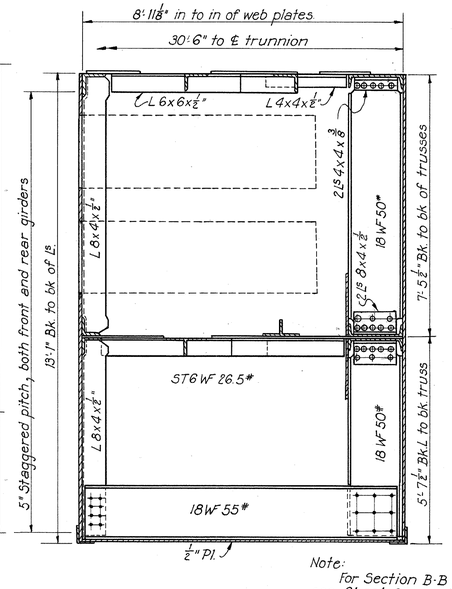

SECTION D-D

Note:
For Section B-B
see Sheet 37.

PART 3

TOLEDO EXPRESSWAY SYSTEM
MAUMEE RIVER BRIDGE
BR. NO. LU 120R-35
COUNTERWEIGHT

TOLEDO LUCAS COUNTY, OHIO

SCALE 1/2" = 1'-0"
MADE MKA DATE 1-10-52
TRCD CAL DATE 10-2-53
CKD DMD DATE 9-30-53

HOWARD, NEEDLES, TAMMEN & BERGENDOFF
CONSULTING ENGINEERS
KANSAS CITY NEW YORK

810 SHEET 3.36

748

JUL 22 2003

FED. ROAD DIV. NO.	STATE	FED. AID PROJ. NO.	TYPE FUNDS	37
2	OHIO	UI-1052(2)	POST WAR	120

LUCAS COUNTY
CITY OF TOLEDO
TOLEDO EXPRESSWAY SYSTEM
MAUMEE RIVER BRIDGE
LUC 120R-3.46

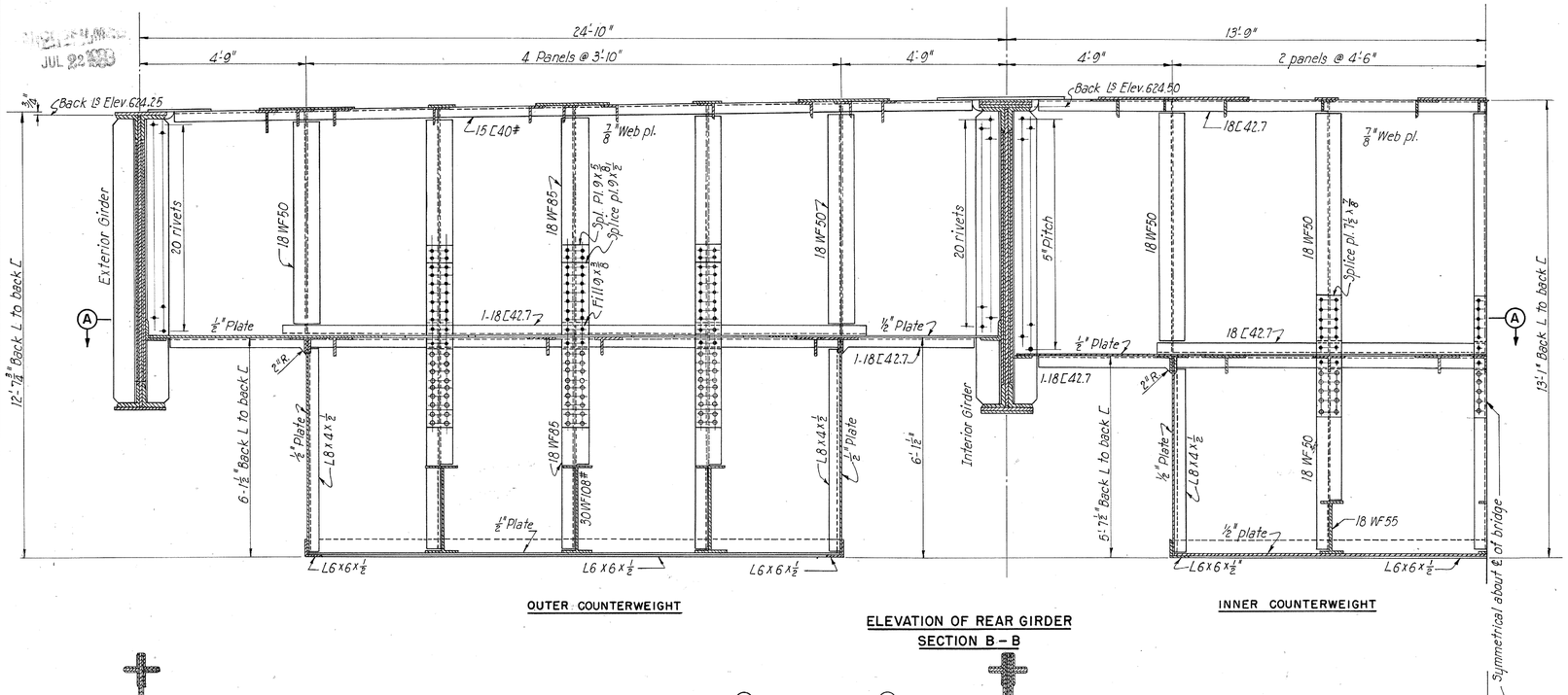

OUTER COUNTERWEIGHT

INNER COUNTERWEIGHT

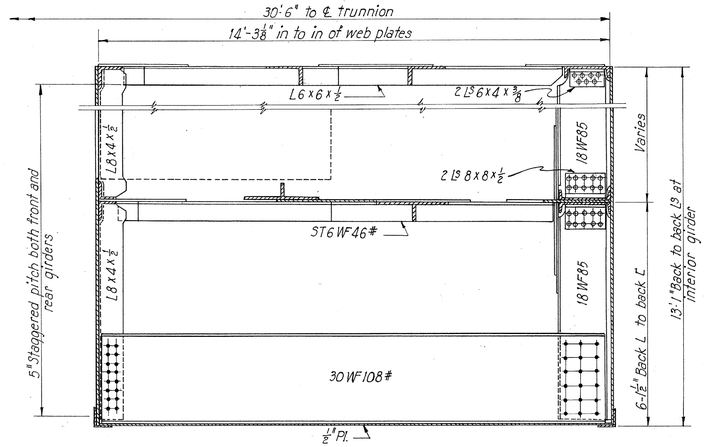

SECTION E-E

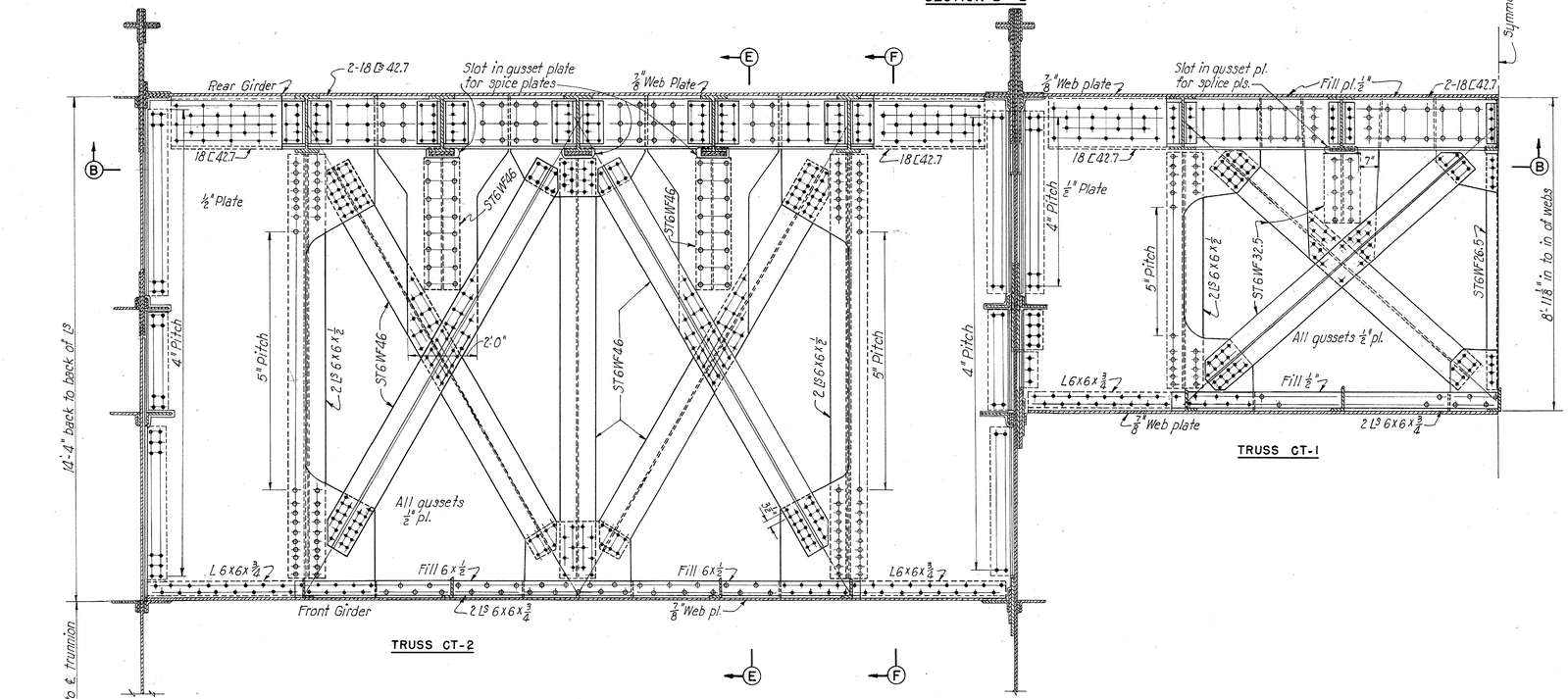

TRUSS CT-2

TRUSS CT-1

ELEVATION OF REAR GIRDER
SECTION B - B

PLAN OF INNER TRUSSES CT-1 AND CT-2
SECTION A-A

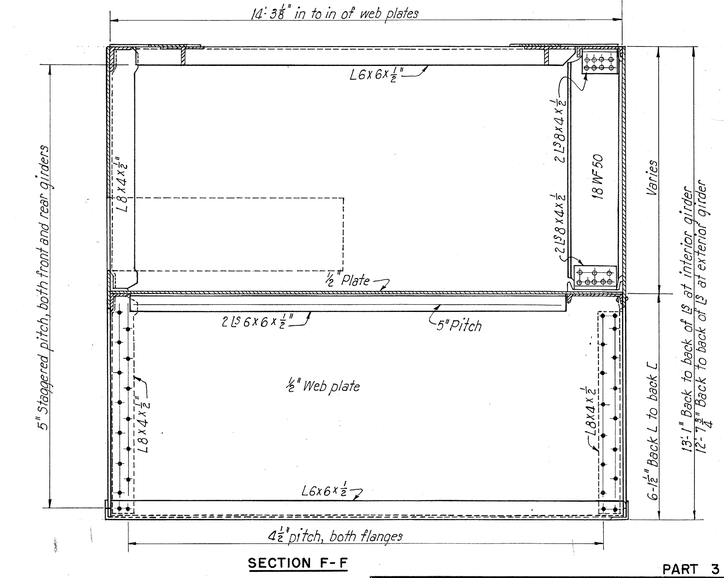

SECTION F-F

PART 3

TOLEDO EXPRESSWAY SYSTEM
MAUMEE RIVER BRIDGE
BR. NO. LU 120R-35
COUNTERWEIGHT
TOLEDO LUCAS COUNTY, OHIO

SCALE 1/2" = 1'-0"
MADE M.K.A. DATE 1-22-52
TRCD. R.R. DATE 9-30-53
CKD. D.M.D. DATE 9-30-53

HOWARD, NEEDLES, TAMMEN & BERGENDOFF
CONSULTING ENGINEERS
KANSAS CITY NEW YORK

810 SHEET 3.37

753

RECEIVED
JUL 29 1953

FED. ROAD DIV. NO.	STATE	FED. AID PROJ. NO.	TYPE FUNDS
2	OHIO	UI-1052(2)	POST WAR

LUCAS COUNTY
CITY OF TOLEDO
TOLEDO EXPRESSWAY SYS
MAUMEE RIVER BRIDGE
LUC 120R-3.46

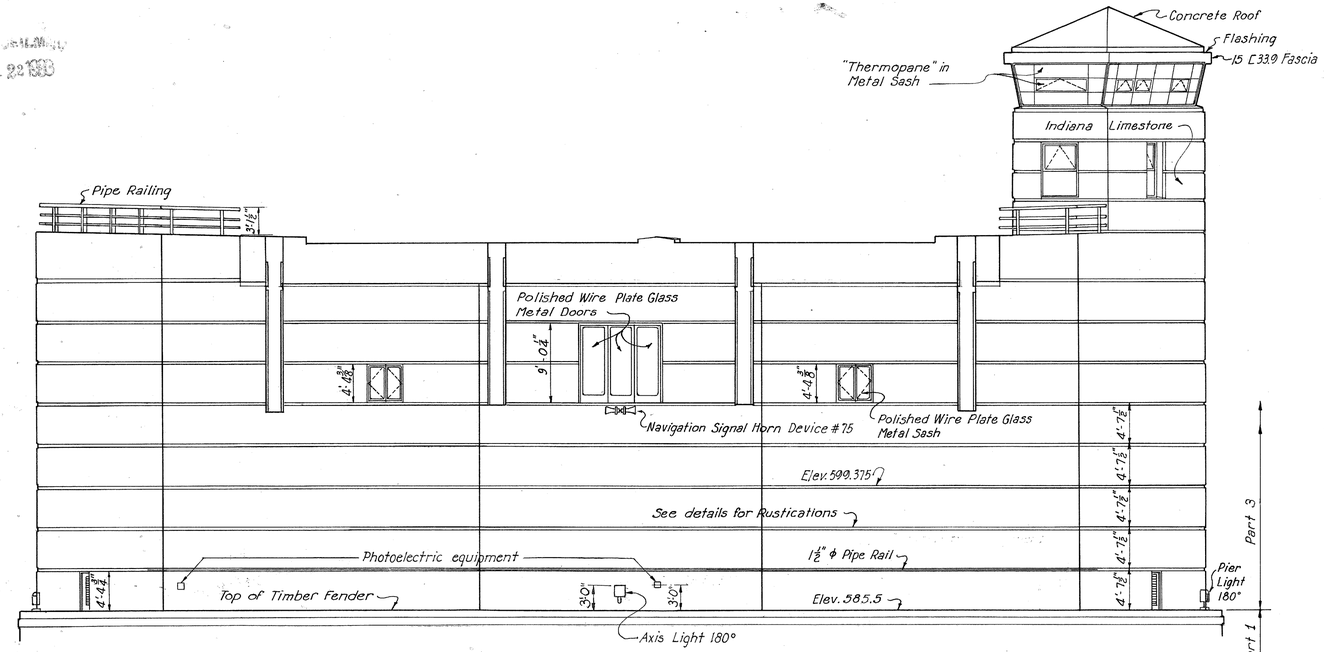

CHANNEL ELEVATION

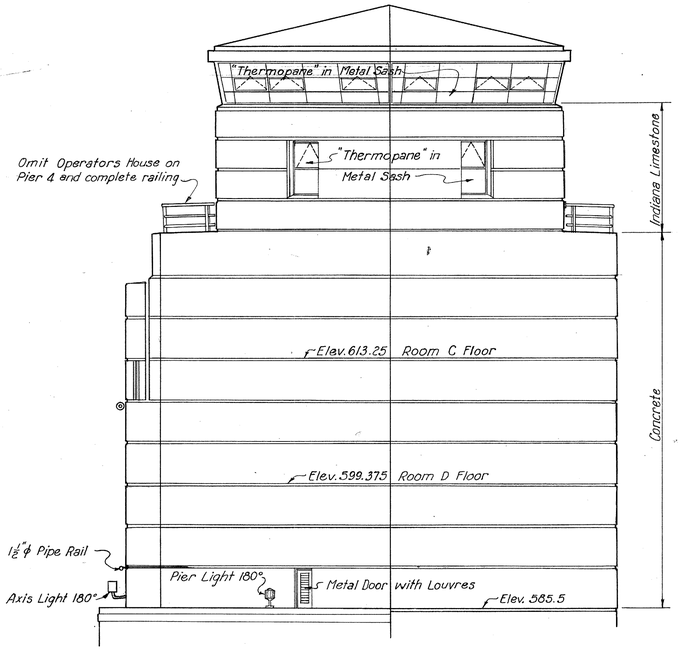

DOWNSTREAM ELEVATION

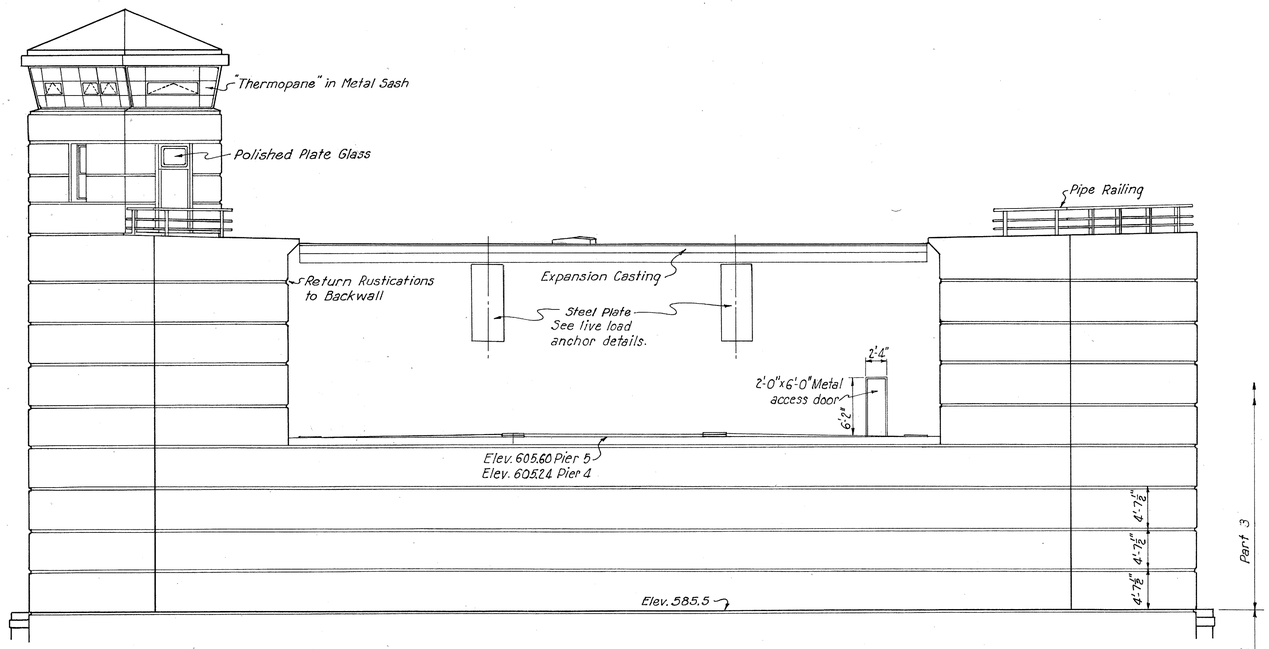

SHORESIDE ELEVATION

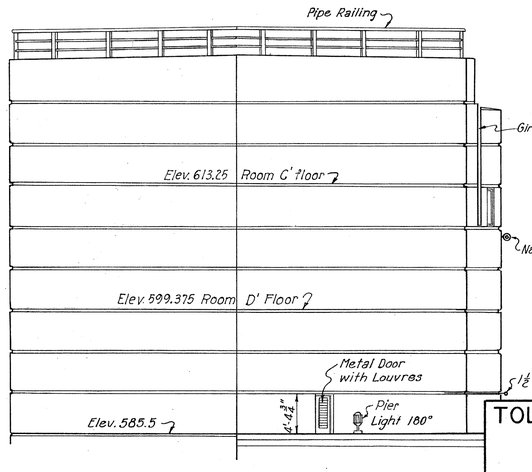

UPSTREAM ELEVATION

Note: Operators House on Pier 5 only.

PA

TOLEDO EXPRESSWAY SYS
MAUMEE RIVER BRIDGE
BR. NO. LU 120 R-35
BASCULE PIERS
GENERAL ELEVATIONS

TOLEDO LUCAS COUNTY.

SCALE 1/8" = 1'-0"
MADE W L G DATE 10-30-51
TRCD A H DATE 4-29-30
CKD D.M.D. DATE 10-29-52

HOWARD, NEEDLES, TAMMEN & BERG
CONSULTING ENGINEERS
KANSAS CITY NEW YORI

810 SHEET- 3.

779

CHARLES BRUNING CO., INC.

JUL 29 1952

FED. ROAD DIV. NO.	STATE	FED. AID PROJ. NO.	TYPE FUNDS
2	OHIO	UI-1052(2)	POST WAR

LUCAS COUNTY
CITY OF TOLEDO
TOLEDO EXPRESSWAY SYST
MAUMEE RIVER BRIDGE
LUC 120R—3.46

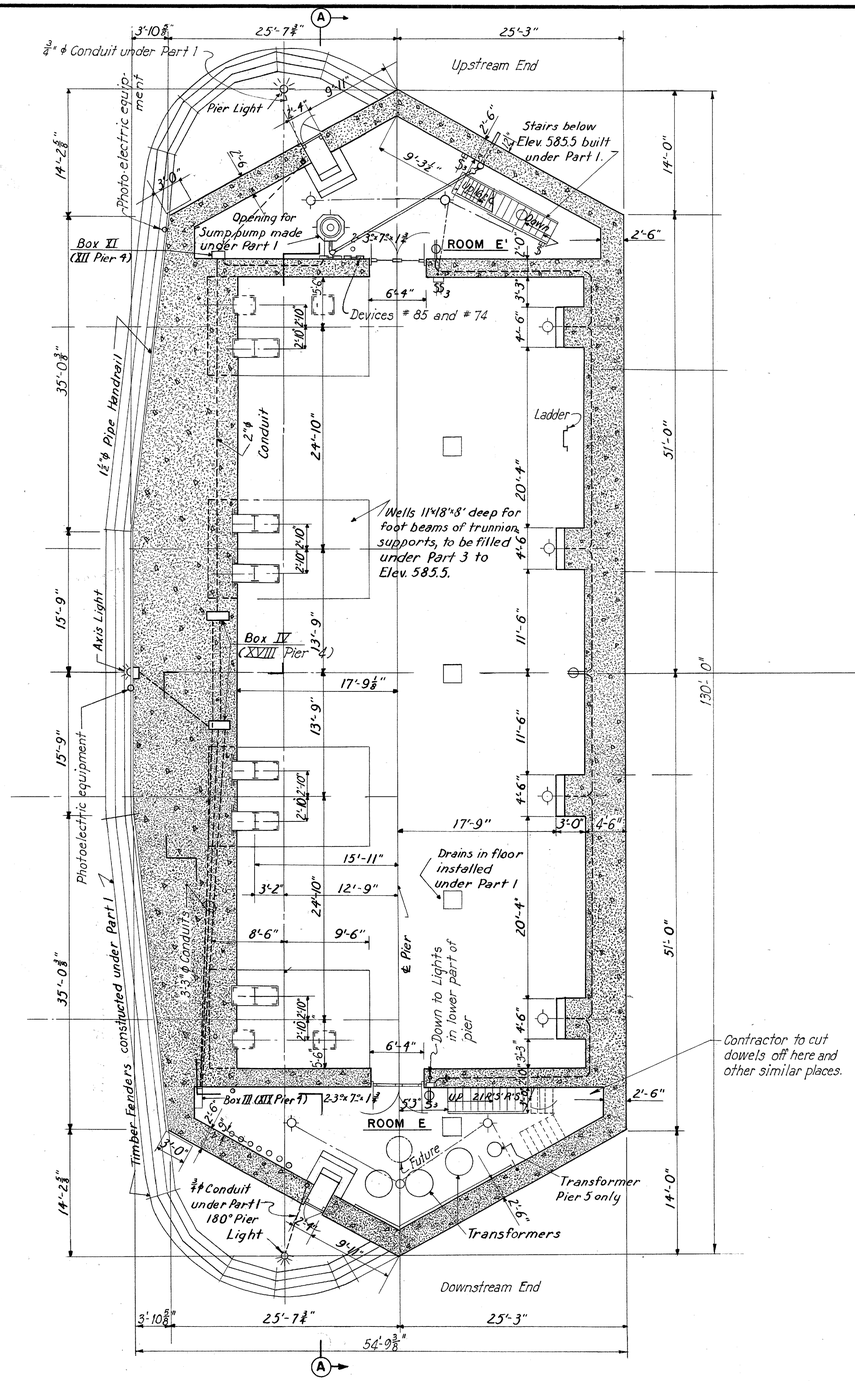

PLAN AT BOTTOM OF COUNTERWEIGHT PIT
Elev. 585.5

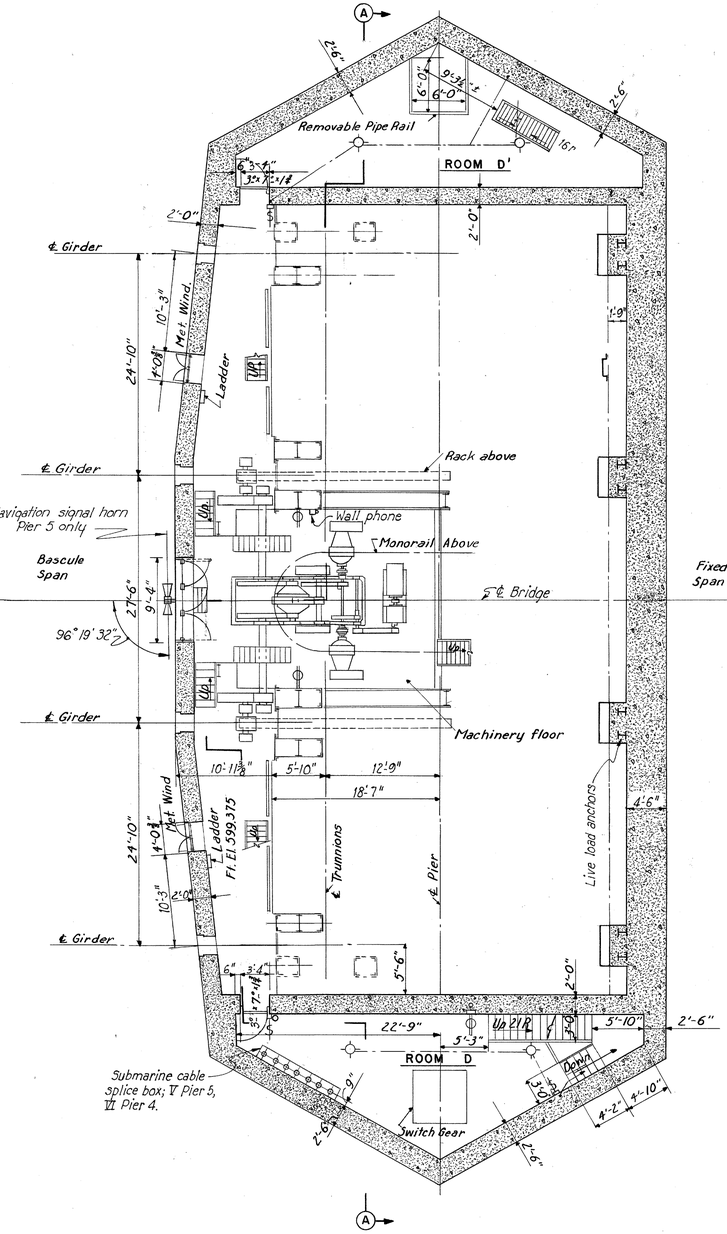

PLAN AT MACHINERY FLOOR
Machinery floor Elev. 604.23
Room D' floor Elev. 599.375

See sheet 53 for Section A-A.

PART 3

TOLEDO EXPRESSWAY SYSTI
MAUMEE RIVER BRIDGE
BR. NO. LU 120R-35
BASCULE PIERS
GENERAL PLANS
TOLEDO LUCAS COUNTY, OH

SCALE ⅛" 1'-0"
MADE W.L.G. DATE 1-24-52
TRCD N.A.M. DATE 10-2-52
CKD O.M.D. DATE 10-20-52

HOWARD, NEEDLES, TAMMEN & BERGEND
CONSULTING ENGINEERS
KANSAS CITY NEW YORK

810 SHEET- 3.3

780

JUL 22 1953

FED. ROAD DIV. NO.	STATE	FED. AID PROJ. NO.	TYPE FUNDS
2	OHIO	UI-1052(2)	POST WAR

LUCAS COUNTY
CITY OF TOLEDO
TOLEDO EXPRESSWAY SYST
MAUMEE RIVER BRIDGE
LUC 120R-3.46

Note: Except as noted handrail dimensio shown are typical on both sides of b Bascule Piers.

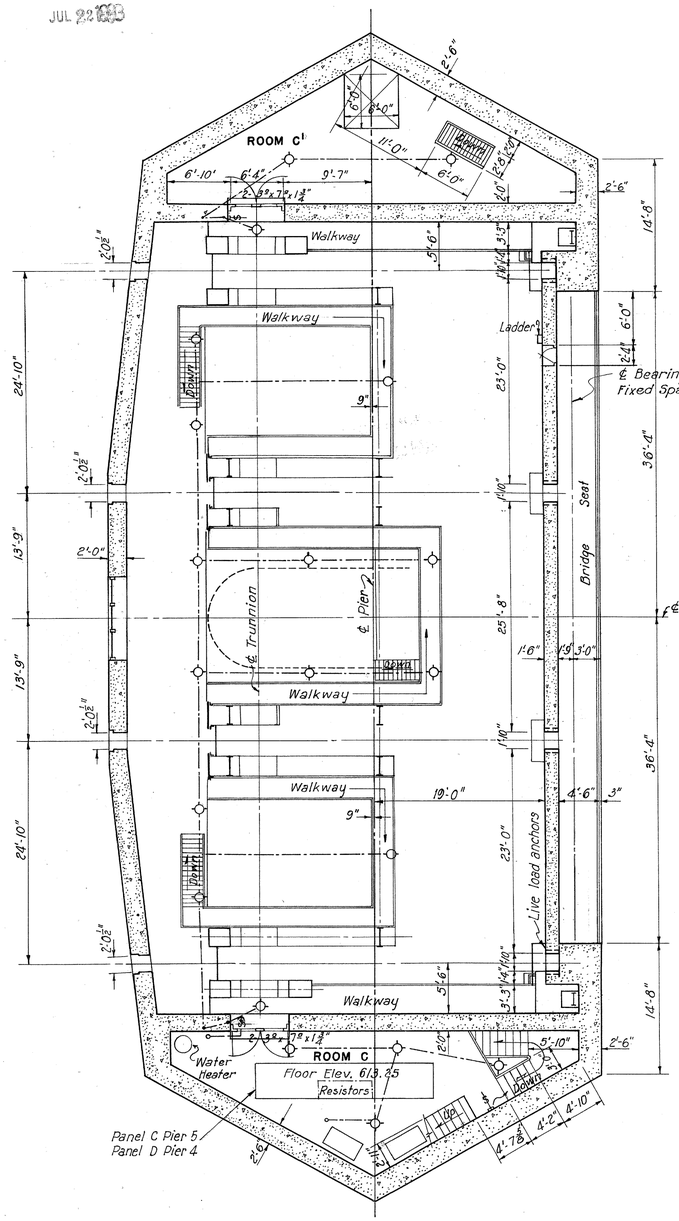

PLAN AT UPPER WALKWAYS
Walkways Elev. 615.00
Rooms C & C' Elev. 613.25

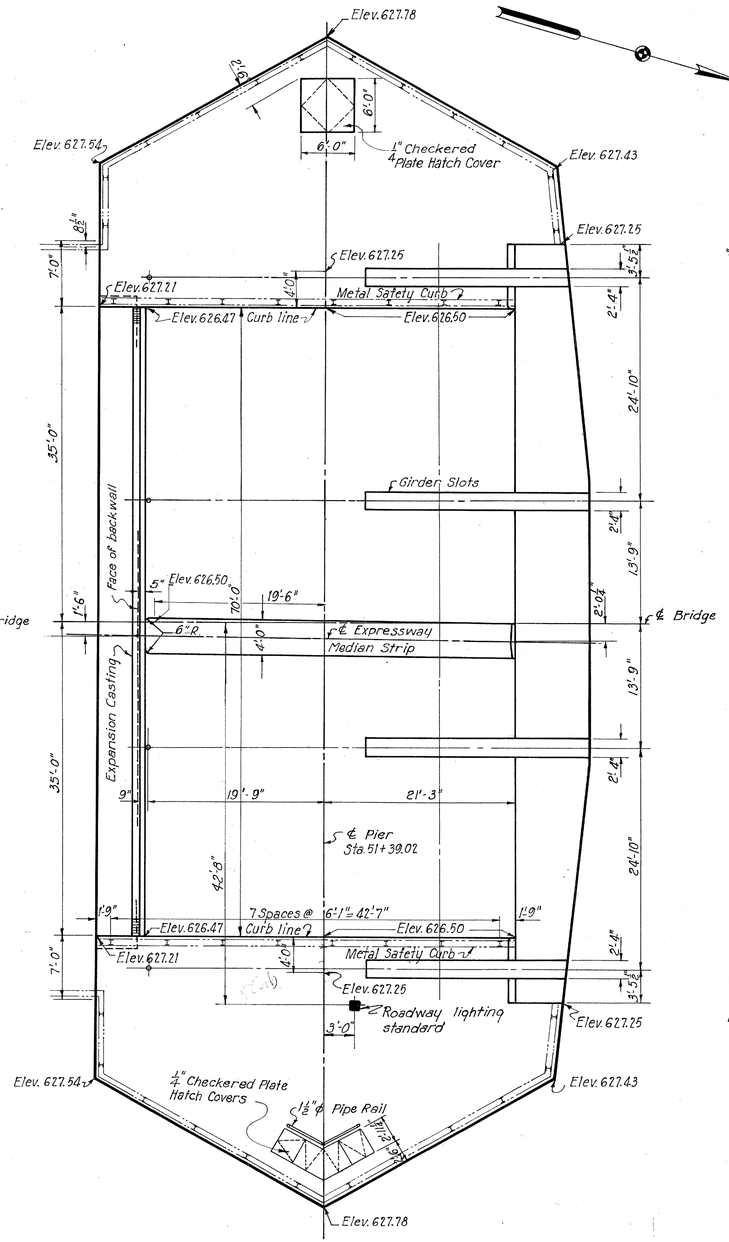

PIER 4

PLAN AT ROADWAY LEVEL
Elevation 626.5

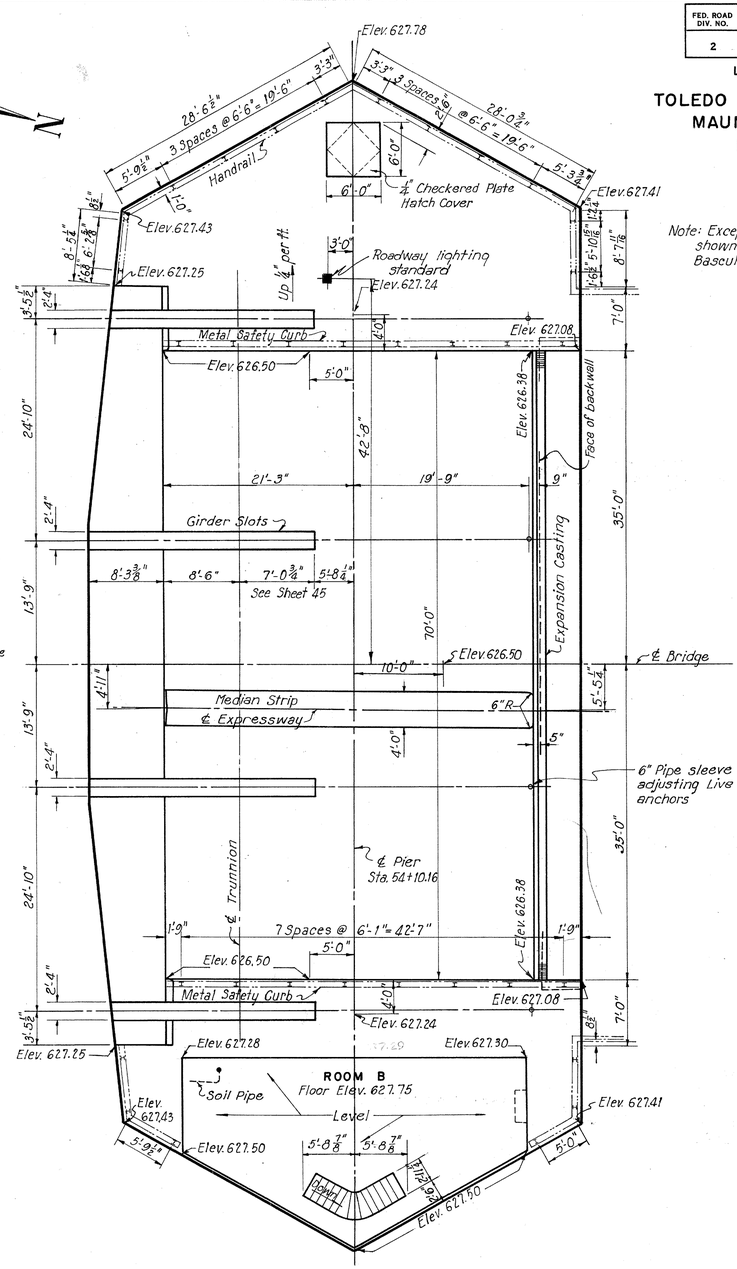

PIER 5

PART
TOLEDO EXPRESSWAY SYST
MAUMEE RIVER BRIDGE
BR. NO. LU 120R-35
BASCULE PIERS
GENERAL PLANS

TOLEDO LUCAS COUNTY, O

SCALE 1/8" = 1'-0"
MADE W.L.G. DATE 11-3-51
TRCD. A.H. DATE 5-23-52
CKD. D.M.P. DATE 10-20-52

HOWARD, NEEDLES, TAMMEN & BERGEN
CONSULTING ENGINEERS
KANSAS CITY NEW YORK

810 SHEET 3.4

781

FED. ROAD DIV. NO.	STATE	FED. AID PROJ. NO.	TYPE FUNDS
2	OHIO	UI-1052 (2)	POST WAR

LUCAS COUNTY
CITY OF TOLEDO
TOLEDO EXPRESSWAY SYSTE
MAUMEE RIVER BRIDGE
LUC 120R-3.46

JUL 22 1953

See Sheet 22A

PLAN AT ROADWAY LEVEL
Scale: 3/16"=1'-0"

Note:
For additional Reinforcing Steel in wall shore side adjacent to Live Load Anchors, see Sheet 45.
For Sections A, B, C and D, see sheet 42.
Pier 5 detailed, Pier 4 similar except as shown.

PIER 4 - EAST END
Scale: 3/8"=1'-0"

CURB DETAIL
Scale: 1"=1'-0"

REINFORCING STEEL AT HANDRAIL POST

Pencil Revisions 10-14-5

HALF ELEVATION CHANNEL SIDE

WALL REINFORCING
Scale: 3/16"=1'-0"

HALF ELEVATION SHORE SIDE

PART 3

TOLEDO EXPRESSWAY SYSTE
MAUMEE RIVER BRIDGE
BR. NO. 120R-35
BASCULE PIERS
CONCRETE DETAILS
TOLEDO LUCAS COUNTY, OHI

SCALE 3/16"=1'-0"
MADE W.L.G. DATE 8-29-52
TRCD P.R. DATE 11-8-52
CKD M.K.A.-T.H.S. DATE 4-15-53

HOWARD, NEEDLES, TAMMEN & BERGENDO
CONSULTING ENGINEERS
KANSAS CITY NEW YORK

SHEET 3.41

CHARLES BRUNING CO., INC.

FED. ROAD DIV. NO.	STATE	FED. AID PROJ. NO.	TYPE FUNDS
2	OHIO	UI-1052(2)	POST WAR

42
120

LUCAS COUNTY
CITY OF TOLEDO
TOLEDO EXPRESSWAY SYSTE
MAUMEE RIVER BRIDGE
LUC 120R-3.46

JUL 22 1953

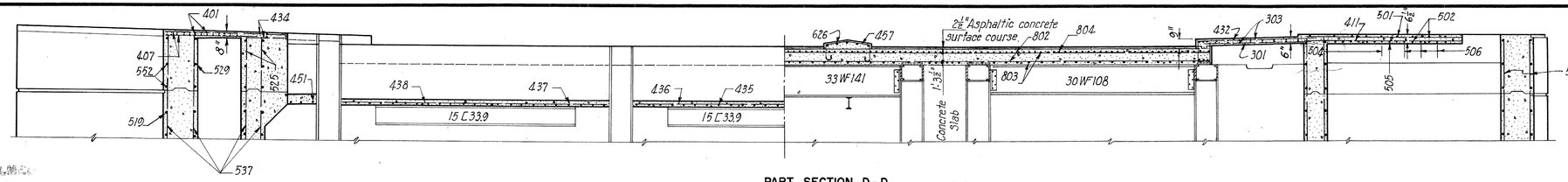

PART SECTION D-D
Scale: $\frac{3}{16}$"=1'-0"

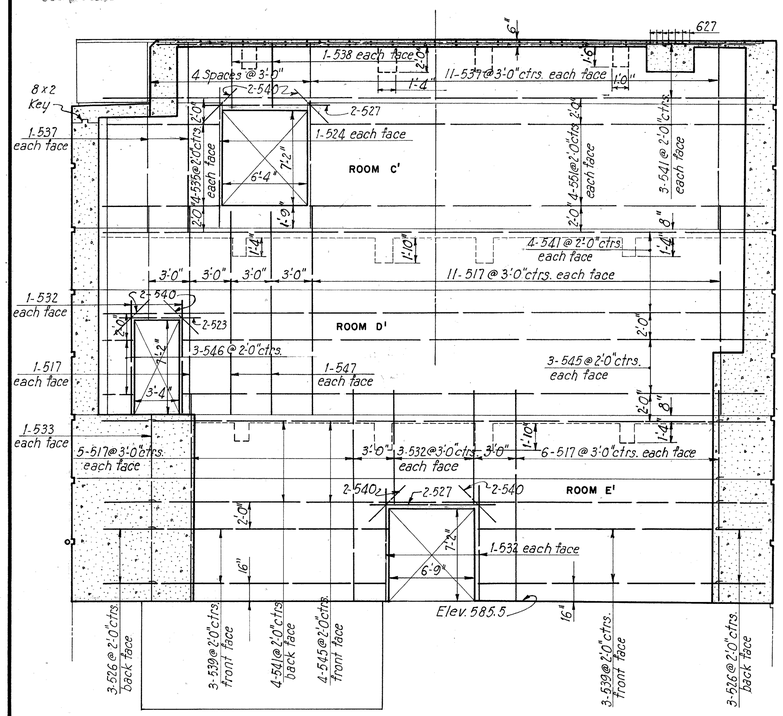

SECTION A-A
Scale: $\frac{3}{16}$"=1'-0"

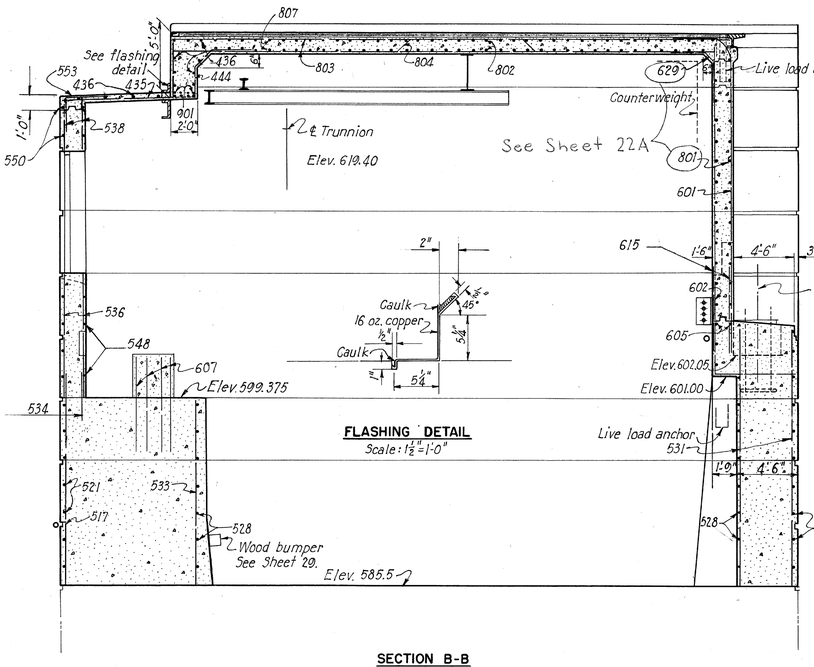

FLASHING DETAIL
Scale: 1½"=1'-0"

SECTION B-B
Scale: $\frac{3}{16}$"=1'-0"
(Machinery floor not shown)

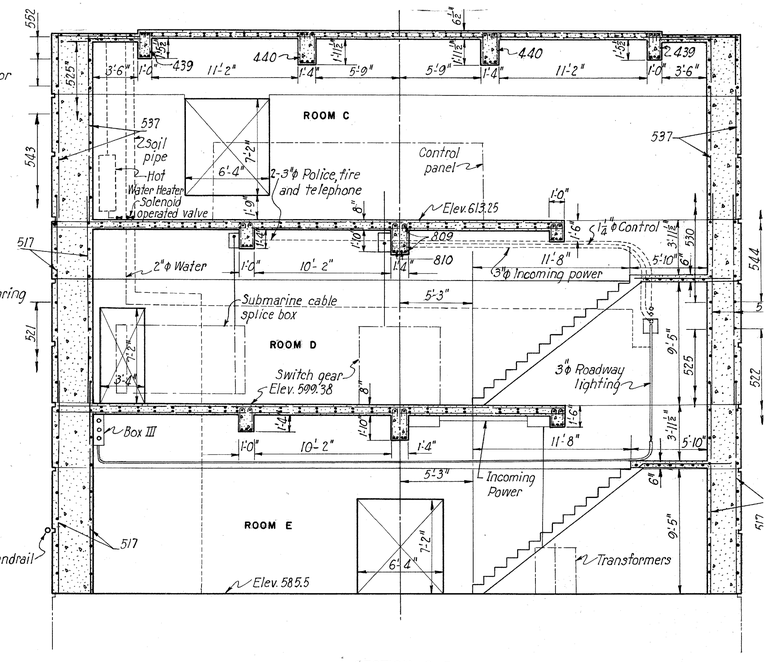

SECTION C-C
Scale: $\frac{3}{16}$"=1'-0"

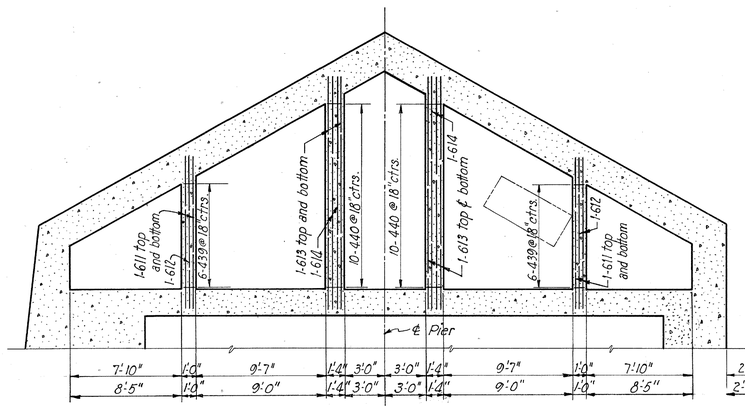

FLOORS C' AND D' AND ROADWAY LEVEL
Floor D' shown
Scale: $\frac{3}{16}$"=1'-0"

2'-6" Beam spacing for floors C' and D'
2'-6" Beam spacing for floor at Roadway level.

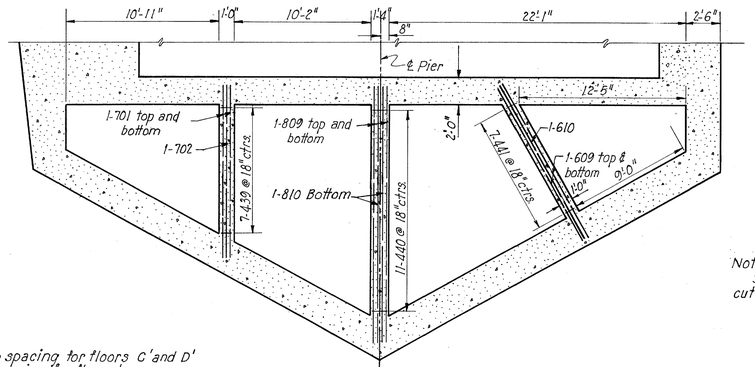

FLOORS C AND D
Floor D shown

FLOOR BEAM REINFORCING
Scale: $\frac{3}{16}$"=1'-0"

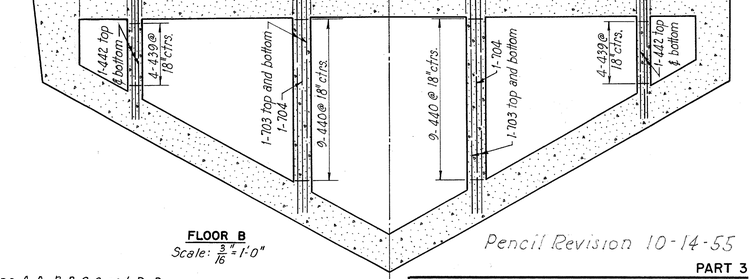

FLOOR B
Scale: $\frac{3}{16}$"=1'-0"

Note:
Sections A-A, B-B, C-C and D-D cut on Sheet 41.

Pencil Revision 10-14-55

PART 3

TOLEDO EXPRESSWAY SYSTE
MAUMEE RIVER BRIDGE
BR. NO. LU 120R-35
BASCULE PIERS
CONCRETE DETAILS

TOLEDO LUCAS COUNTY, OHIO

SCALE As shown
MADE J.D.P. DATE 8.5.52
TRCD E.J.M.R.R. DATE 12-9-52
CKD M.K.A. J.H.G. DATE 4-15-53

HOWARD, NEEDLES, TAMMEN & BERGENDOF
CONSULTING ENGINEERS
KANSAS CITY NEW YORK

810 SHEET- 3.42

787

LEE BRUNING CO., INC.

FED. ROAD DIV. NO.	STATE	FED. AID PROJ. NO.	TYPE FUNDS
2	OHIO	UI-1052(2)	POST WAR

LUCAS COUNTY
CITY OF TOLEDO
TOLEDO EXPRESSWAY SYSTE
MAUMEE RIVER BRIDGE
LUC 120R-3.46

JUL 22 1953

Note: All vertical bars are 517 unless otherwise shown.

For spacing of 615 bars, see Sheet 45.

Water pipe to go under door and behind ladder.

All conduits

Reinforcing steel for floor of Room D' similar to reinforcing for floor Room C'.

Reinforcing steel for floor of Room D similar to reinforcing for floor Room C.

Power conduit to go to switch gear, transformer and submarine cable box. Telephone and control conduits to go to submarine cable box. Except as shown, inlet of conduits in Pier 4 to be similar to that in Pier 5.

See Sheet 47

Box III (XIX Pier 4)

PLAN AT ELEVATION 608.63

Interior walls at Elevation 604.00
Scale: 3/16"=1'-0"

PLAN AT BRIDGE SEAT, PIER 4.

Scale: 3/16"=1'-0"

TOP PLAN

SECTION

BOTTOM PLAN

ROOM C'

Scale: 3/16"=1'-0"

ROOM C

Scale: 3/16"=1'-0"

Pier	Girder	Screed frame Elev. A	Angle A
4	G-1	605.37	90°0'0"
	G-2	605.39	90°0'0"
	G-3	605.39	90°0'0"
	G-4	605.37	90°0'0"
5	G-1	605.83	89°07'35"
	G-2	605.87	89°07'35"
	G-3	605.86	89°07'35"
	G-4	605.76	89°07'35"
	G-7	605.76	89°07'35"

Notes: Miter corners of top screed frame and weld with double bevel weld equal to thickness of L. Grind flush and smooth on top.
Anchor bolts to have 5 hex. nuts and 1-3½x¼ flat washer each. Thread bottom of bolt 6" and top 1'-6".

SCREED FRAME DETAILS

Scale: ¾"=1'-0"

PART 3

TOLEDO EXPRESSWAY SYSTE
MAUMEE RIVER BRIDGE
BR. NO. LU 120R-35
BASCULE PIERS
CONCRETE DETAILS

TOLEDO LUCAS COUNTY, OHI

SCALE As shown
MADE RRR DATE 4-9-52
TRCD EJM/HO DATE 4-11-53
CKD MKA JWG DATE 4.15.53

HOWARD, NEEDLES, TAMMEN & BERGENDO
CONSULTING ENGINEERS
KANSAS CITY NEW YORK

810 SHEET- 3.43

785

CHARLES BRUNING CO., INC.

JUL 22 1953

FED. ROAD DIV. NO.	STATE	FED. AID PROJ. NO.	TYPE FUNDS
2	OHIO	UI-1052(2)	POST WAR

44
120

LUCAS COUNTY
CITY OF TOLEDO
TOLEDO EXPRESSWAY SYSTEM
MAUMEE RIVER BRIDGE
LUC 120R-3.46

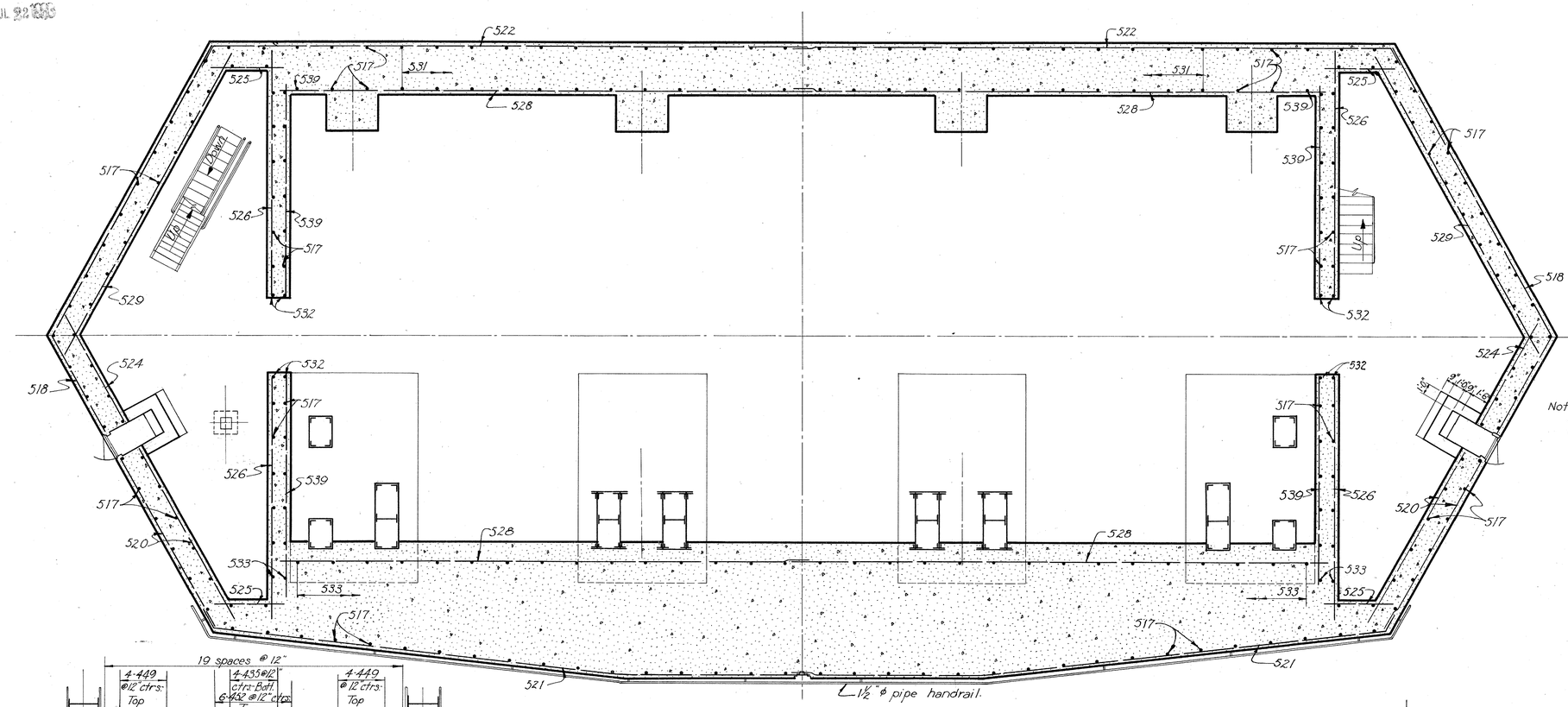

PLAN AT ELEVATION 585.5
Scale: 3/16" = 1'-0"

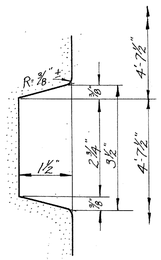

RUSTICATION DETAIL
Scale: 6" = 1'-0"

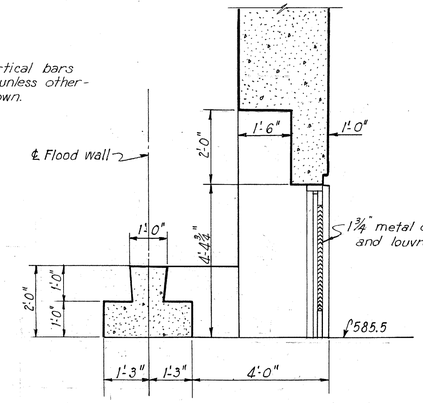

DETAIL OF STEPS AND WALL AT EXTERIOR DOOR
Not to scale

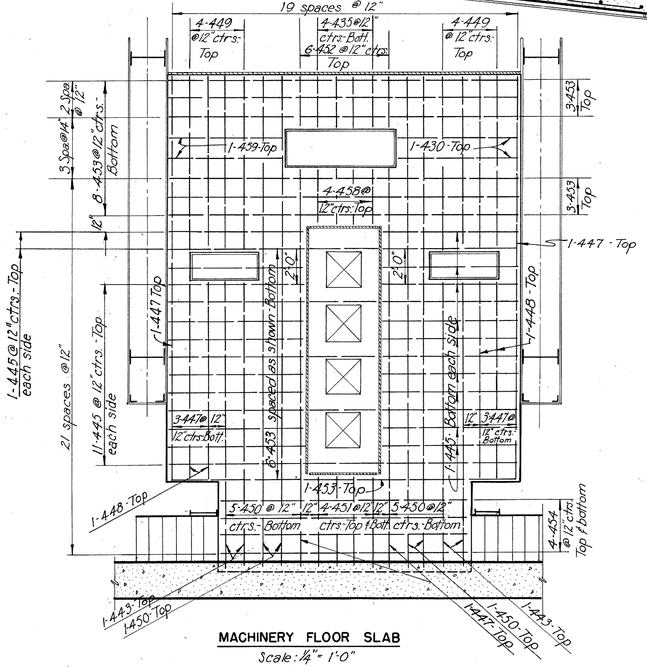

MACHINERY FLOOR SLAB
Scale: ¼" = 1'-0"

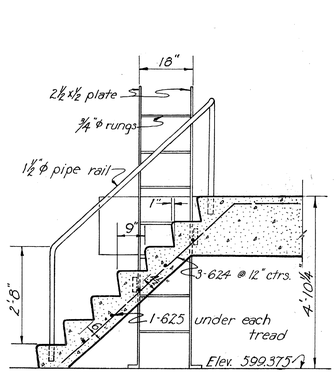

STAIRWAY FROM FLOOR "D" TO MACHINERY FLOOR
Scale: ½" = 1'-0"

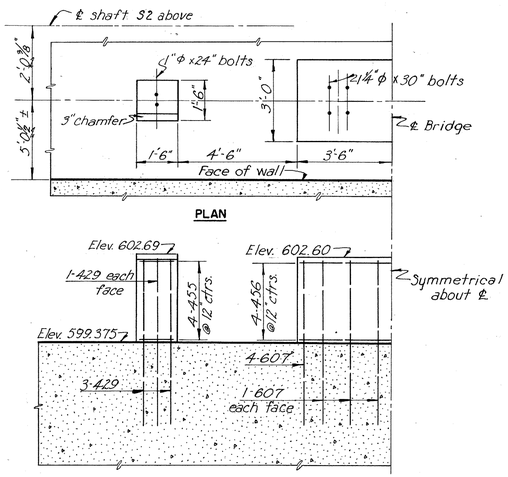

PLAN

ELEVATION

MACHINERY FLOOR PEDASTALS
Scale: ⅜" = 1'-0"

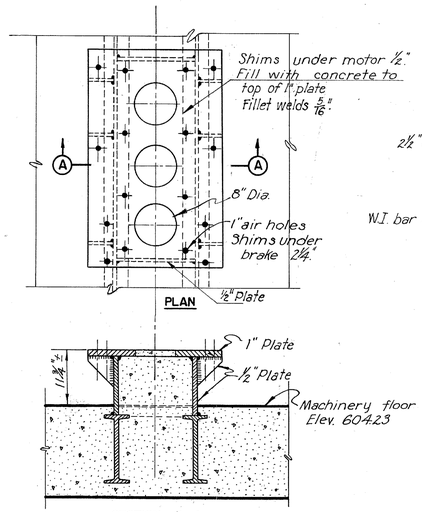

PLAN

SECTION A-A

DETAIL OF MOTOR AND BRAKE STAND
Scale: ¼" = 1'-0"

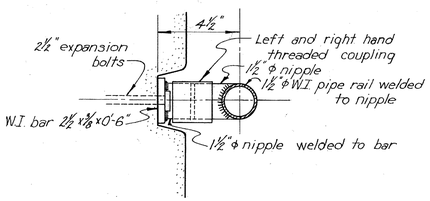

HANDRAIL SUPPORT
Scale: 3" = 1'-0"

PART 3

TOLEDO EXPRESSWAY SYSTEM
MAUMEE RIVER BRIDGE
BR. NO. LU 120R-35
BASCULE PIERS
CONCRETE DETAILS
TOLEDO LUCAS COUNTY, OHIO

SCALE As shown
MADE JDP DATE 8-29-52
TRCD EJM/MG DATE 5-13-52
CKD MK A.TH DATE 4-15-53

HOWARD, NEEDLES, TAMMEN & BERGENDOFF
CONSULTING ENGINEERS
KANSAS CITY NEW YORK

810 SHEET: 3.44

784

JUL 29 1953

FED. ROAD DIV. NO.	STATE	FED. AID PROJ. NO.	TYPE FUNDS
2	OHIO	UI-1052(2)	POST WAR

45
120

LUCAS COUNTY
CITY OF TOLEDO
TOLEDO EXPRESSWAY SYSTEM
MAUMEE RIVER BRIDGE
LUC 120 R – 3.46

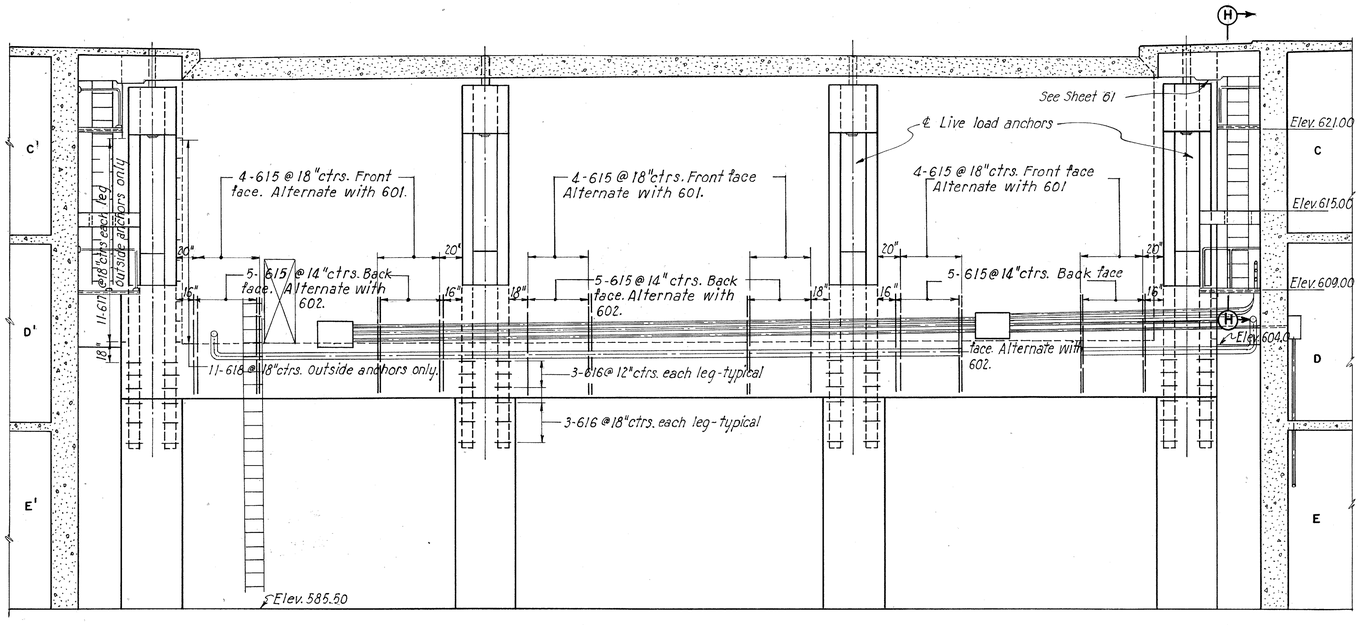

INTERIOR ELEVATION NORTH WALL PIER 5
Scale: 3/16" = 1'-0"

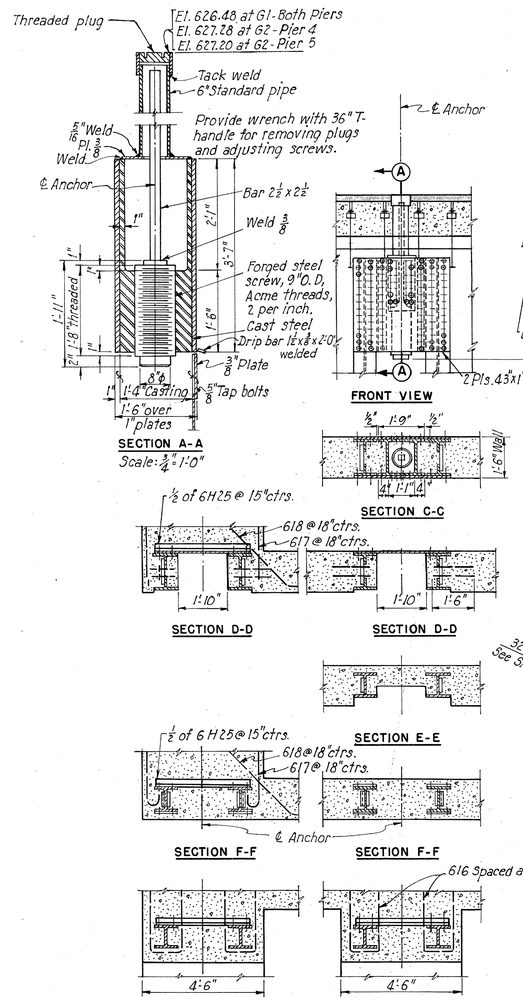

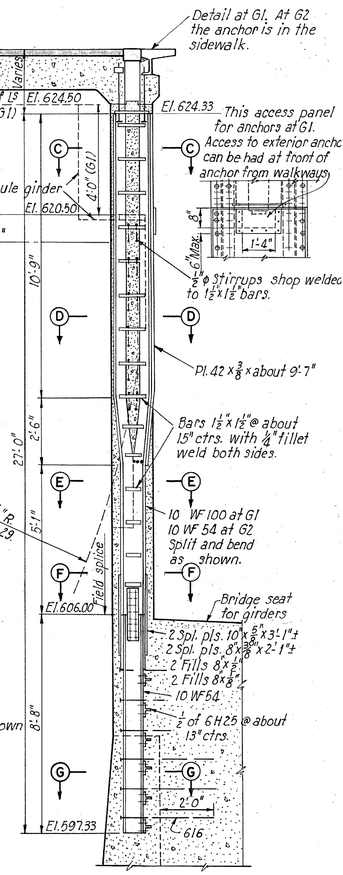

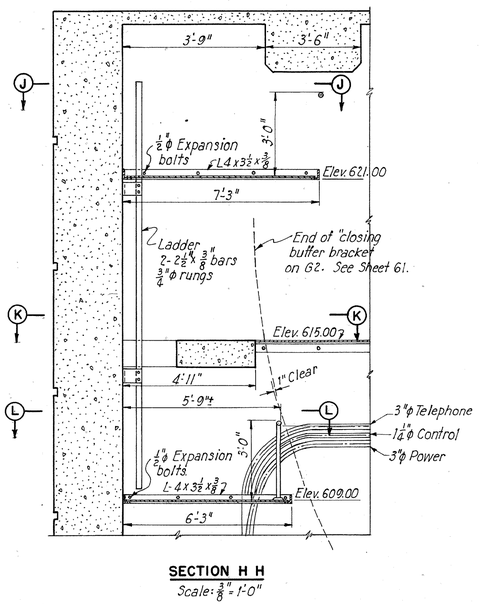

SECTION H H
Scale: ⅜" = 1'-0"

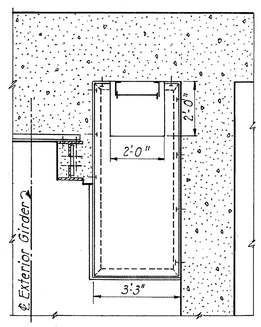

SECTION J-J
Scale: ⅜" = 1'-0"

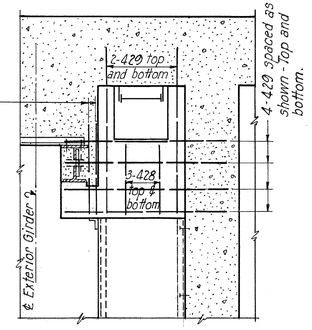

SECTION K-K
Scale: ⅜" = 1'-0"

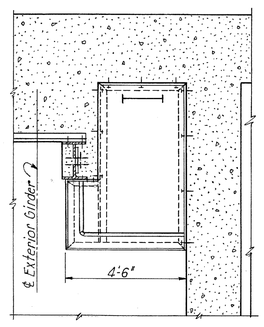

SECTION L-L
Scale: ⅜" = 1'-0"

Note: LS 4 x 3½ x ⅜ which form floor frames shall be butt welded at all corners and other points of intersection.

LIVE LOAD ANCHORS
4 required at G1
4 required at G2
Scale: ⅜" = 1'-0"

Note:
Live load anchors shall be adjusted after full dead load (including cast iron balance blocks in the counterweights) is on the girders. Adjustments shall be made until the roadway of both leaves is at the same elevation at centerline between leaves and is dead level under full dead load at the elevation given. Care shall be taken to determine that all live load anchors bear firmly against the rear ends of the girders.

PART 3

TOLEDO EXPRESSWAY SYSTEM
MAUMEE RIVER BRIDGE
BR. NO. LU 120 R-35
BASCULE PIERS
CONCRETE DETAILS AND LIVE LOAD ANCHORS
TOLEDO LUCAS COUNTY, OHIO

SCALE 3/8 and 3/4" = 1'-0"
MADE D.M.D DATE 2-15-52
TRCD R.R. DATE 4-13-53
CKD M.K.A., J.H.G. DATE 4-15-53

HOWARD, NEEDLES, TAMMEN & BERGENDOFF
CONSULTING ENGINEERS
KANSAS CITY NEW YORK

SHEET 3.45

774

CHARLES BRUNNER CO., INC.

REINFORCING STEEL SCHEDULE FOR PIERS 4 AND 5.

MARK	NUMBER OF BARS PIER 4 Exter. Walls	Rdwy. & Sdwlk.	Int. Walls & Floors	Stairs & Lndgs.	Mach. Floor	Total	NUMBER OF BARS PIER 5 Exter. Walls	Rdwy. & Sdwlk.	Int. Walls & Floors	Stairs & Lndgs.	Mach. Floor	Total	LENGTH	TYPE	DIMENSIONS A	B	C	D	WEIGHT PIER 4	PIER 5
301		70				70		70				70	10'-0"	Str.					260	260
302		20				20		20				20	45'-6"	Str.					340	340
303		6				6		6				6	30'-0"	Str.					70	70
304		4				4		4				4	50'-9"	Str.					80	80
305		6				6		6				6	29'-0"	Str.					70	70
Test	replacement bars											1	5'-0"	Str.						10
401		20	12			32		10	12			22	50'-6"	Str.					1080	740
402		2 series of 3				6		2 series of 3				6	47'-6"-40'-0"	Str.					180	180
403		4 series of 10				40		4 series of 10				40	15'-6"-4'-6"	Str.					270	270
404		2				2		2				2	13'-0"	Str.					20	20
405		4				4		4				4	51'-11"	Str.					140	140
406		1 series of 3				3		1 series of 3				3	42'-1"-49'-0"	Str.	8'-7"	12'-6"	9'-0"	12'-0"	90	90
407		4 series of 20				80		4 series of 20				80	6'-0"-18'-3"	Str.					700	700
408		12				12		12				12	10'-0"	Str.					80	80
409			4 series of 17			68			4 series of 17			68	8'-0"-17'-0"	Str.					570	570
410		4				4		4				4	14'-0"	Str.					40	40
411			4 series of 5			20			4 series of 5			20	12'-0"-13'-9"	Str.					170	170
412		2 series of 5				10							32'-0"-46'-6"	Str.					260	
413		2 series of 4				16							6'-0"-9'-6"	Str.					80	
414		4				4							51'-0"	Str.	8'-10"	6'-6"	5'-0"	5"	140	
415		1				1							48'-0"	Str.	7'-4"	6'-6"	5'-0"	5"	30	
416		1 series of 5				5							33'-4"-43'-4"	Str.	6'-0"	0'-6"to5'-6"	5'-0"	5"	130	
417			6			6		6				6	51'-10"	Str.					210	210
418			4 series of 5			20			4 series of 5			20	25'-0"-37'-0"	Str.					410	410
419			2 series of 5			10			2 series of 5			10	23'-9"-36'-4"	Str.	6'-8"-12'-11"	2'-6"-8'-10"			200	200
420			24			24			24			24	4'-0"	Str.					60	60
421			4 series of 9			36			4 series of 9			36	8'-0"-12'-3"	Str.					240	240
422			4 series of 7			28			4 series of 7			28	5'-9"-11'-6"	Str.					160	160
423			4 series of 7			28			4 series of 7			28	7'-3"-14'-3"	Str.					200	200
424			4 series of 8			32			4 series of 8			32	7'-0"-16'-5"	Str.					250	250
425			4 series of 20			80			4 series of 20			80	7'-9"-18'-3"	Str.					690	690
426			4 series of 5			20			4 series of 5			20	5'-0"-7'-0"	Str.					80	80
427			4 series of 5			20			4 series of 5			20	16'-3"-18'-3"	Str.					230	230
428				6		6				6		6	2'-6"	Str.					10	10
429				24	16	40				24	16	40	6'-0"	Str.					160	160
430					2	2					2	2	6'-6"	Str.					10	10
431		2 series of 3				6		2 series of 3				6	8'-0"-9'-0"	Str.					30	30
432		36				36		36				36	15'-1"	136					360	360
433		22				22		22				22	8'-4"	109	1'-11"	2'-0"			120	120
434		44	4			48		44	4			48	5'-3"	Str.					170	170
435	26				4	30	26				4	30	8'-0"	Str.					160	160
436	10					10	10					10	24'-9"	Str.					170	170
437	2 series of 23					46	2 series of 23					46	5'-6"-8'-0"	Str.					210	210
438	18					18	18					18	22'-0"	Str.					270	270
439			58			58			58			58	4'-8"	110	0'-8"	1'-0"			180	180
440			100			100			100			100	6'-0"	110	1'-0"	2'-3"			400	400
441			14			14			14			14	3'-9"	110	0'-9"	1'-9"			40	40
442			12			12			12			12	10'-4"	100	9'-0"	0'-8"			80	80
443					4	4					4	4	16'-0"	Str.					40	40
444		68				68		68				68	14'-9"	121					670	670
445		4			44	48		4			44	48	7'-6"	Str.					240	240
446		6	24			30		6	24			30	10'-0"	Str.					200	200
447					10	10					10	10	22'-3"	Str.					150	150
448					4	4					4	4	11'-0"	Str.					30	30
449					8	8					8	8	9'-6"	Str.					50	50
450					14	14					14	14	27'-3"	Str.					260	260
451	6				8	14	6				8	14	5'-0"	Str.					50	50
452					6	6					6	6	2'-9"	Str.					10	10
453					21	21					21	21	19'-0"	Str.					270	270
454			16		8	24			16		8	24	13'-6"	Str.					220	220
455					8	8					8	8	5'-2"	109	1'-2"	1'-2"			30	30
456					8	8					8	8	10'-2"	109	6'-8"	2'-8"			100	100
457		42				42		42				42	6'-1"	133					170	170
458					4	4					4	4	2'-0"	Str.					10	10
459					2	2					2	2	6'-3"	Str.					10	10
460		48				48		36				36	3'-10"	132					120	90
Test	replacement bars											2	5'-3"	Str.						20
501									5			5	30'-6"	100	37'-6"	1'-0"				210
502									2 series of 3			6	30'-0"-38'-0"	Str.						210
503									2 series of 4			16	4'-6"-9'-0"	Str.						110
504									5			5	38'-0"	Str.						200
505									4			4	38'-10"	124	2'-0"	6'-0"	5'-3"	3⅝"		160
506									1 series of 3			3	28'-4"-38'-10"	124	3'-0"	0'-6"to5'-9"	5'-3"	3⅝"		110
507			4 series of 4			16			4 series of 4			16	38'-0"-36'-0"	Str.					620	620
508			4 series of 3			12			4 series of 3			12	32'-9"-36'-0"	Str.					430	430
509			2 series of 5			20			4 series of 5			20	11'-9"-30'-3"	Str.					440	440
510			2 series of 3			6			2 series of 3			6	19'-10"-27'-10"	125	5'-0"	2'-0"-6'-0"			150	150
511			2 series of 3			6			2 series of 3			6	34'-11"-32'-8"	126	4'-9"to6'-6"	11'-0"to7'-0"			210	210
512			2 series of 4			8			2 series of 4			8	36'-11"-37'-8"	127	3'-9"to3'-6"	4'-0"to6'-0"	4'-0"to3'-0"		310	310
513			2 series of 17			68			2 series of 17			68	8'-0"-19'-9"	Str.					990	990
514			2 series of 14			28			2 series of 13			26	15'-6"-19'-0"	Str.					520	520
515			4 series of 3			12			4 series of 3			12	7'-6"-13'-6"	Str.					130	130
516		12				12		12				12	13'-6"	Str.					170	170
517	364					364	364					364	15'-6"	Str.					5890	5890
518	4					4	4					4	38'-0"	130	28'-6"	9'-6"	21⅝"		160	160
519	76					76	76					76	29'-6"	130	28'-6"	12"	21⅝"		2340	2340
520	8					8	8					8	16'-6"	Str.					140	140
521	22					22	22					22	53'-8"	131					1230	1230
522	20					20	20					20	53'-6"	130	51'-0"	1'-0"	21⅝"		1120	1120
523	8					8	8					16	6'-6"	Str.					220	220
524	4		4			8	4		4			8	10'-6"	Str.					90	90
525	76					76	76					76	6'-0"	Str.					480	480
526			12			12			12			12	21'-0"	Str.					260	260
527			8			8			8			8	9'-6"	Str.					80	80
528	30					30	30					30	46'-0"	Str.					1440	1440
529	80					80	80					80	20'-0"	Str.					2420	2420
530	22					22	22					22	12'-0"	Str.					280	280
531	48					48	48					48	19'-6"	Str.					980	980
532			32			32			32			32	8'-6"	Str.					280	280
533	34					34	34					34	13'-6"	Str.					480	480
534	30					30	30					30	3'-3"	Str.					100	100
535	4					4	4					4	8'-3"	Str.					40	40
536	80					80	80					80	8'-9"	Str.					730	730
537			156			156			156			156	13'-9"	Str.					2130	2130
538	8		8			16	8		8			16	4'-6"	Str.					80	80
539	12		2			14	12		2			14	18'-3"	Str.					270	270
540	24		24			48	24		24			48	3'-6"	Str.					180	180
541			36			36			36			36	49'-0"	Str.					1840	1840
542	20					20	20					20	7'-6"	Str.					160	160
543	14					14	14					14	12'-5"	130	10'-6"	1'-11"	21⅝"		180	180
544	22					22	22					22	16'-2"	130	14'-3"	1'-11"	21⅝"		370	370
545			20			20			20			20	43'-0"	Str.					900	900
546			6			6			6			6	7'-1"	105	1'-7"	2'-9"			50	50
547			8			8			8			8	15'-3"	Str.					130	130
548	8					8	8					8	47'-3"	130	16'-9"	30'-6"	1 5/16"		390	390
549	16					16	16					16	22'-0"	Str.					370	370
550	4					4	4					4	24'-6"	Str.					100	100
551			16			16			16			16	33'-9"	Str.					560	560
552			6			6			6			6	9'-11"	130	8'-0"	1'-11"	21⅞"		60	60
553	50					50	50					50	6'-3"	104	2'-6"	3'-9"			330	330
Test	replacement bars											4	5'-6"	Str.						20
601	42					42	42					42	22'-3"	Str.					1400	1400
602	53					53	53					53	30'-0"	104	5'-9"	24'-3"			2390	2390
603	10					10	10					10	2'-0"	Str.					30	30
604	5					5	5					5	13'-6"	Str.					100	100
605	30					30	30					30	23'-6"	Str.					1060	1060
606	50					50	50					50	20'-6"	Str.					1540	1540
607	10				20	30	10				20	30	6'-0"	Str.					270	270
608				1 series of 6		12				1 series of 6		12	8'-0"-10'-0"	100	6'-0"-8'-0"	1'-0"			160	160
609		8				8		8				8	14'-9"	100	12'-9"	1'-0"			180	180
610		2				2		2				2	15'-9"	113	2'-9"	4'-11"	1'-0"	1'-2"	50	50
611	24					24	24					24	13'-6"	100	11'-6"	1'-0"			400	400
612	6					6	6					6	14'-10"	113	2'-4"	3'-6"	1'-0"	1'-8"	130	130
613	24					24	24					24	19'-3"	100	17'-3"	1'-0"			690	690
614	12					12	12					12	21'-0"	113	3'-5"	6'-1"	1'-0"	2'-2"	380	380
615	54					54	54					54	7'-0"	Str.					570	570
616	48					48	48					48	8'-0"	105	1'-0"	3'-6"			580	580
617	44					44	44					44	6'-0"	101	5'-0"	1'-0"			400	400
618	22					22	22					22	7'-0"	108	2'-0"	5'-0"			230	230
619				1 series of 3		3				1 series of 3		3	22'-9"-21'-3"	Str.					100	100
620			64			64				64		64	5'-0"	101	4'-0"	1'-0"			480	480
621			6			6				6		6	20'-3"	134	15'-3"	5'-0"			180	180
622			6			6				6		6	11'-6"	134	5'-9"	4'-9"			100	100
623			12			12				12		12	4'-6"	134	2'-6"	2'-0"			80	80
624			3			3				3		3	8'-6"	135					40	40
625			5			5				5		5	5'-6"	101	4'-6"	1'-0"			40	40
626		5				5		5				5	40'-9"	Str.					300	300
627		14				14		14				14	10'-0"	Str.					210	210
628			3			3			3			3	4'-6"	101	3'-6"	1'-0"			20	20
629	56					56	56					56	5'-9"	120	2'-6"	6"			480	480
630	16					16	20					20	11'-0"	137					260	330
Test	replacement bars											2	6'-0"	Str.						20
701			8			8			8			8	14'-10"	100	12'-6"	1'-2"			240	240
702			2			2			2			2	16'-2"	113	2'-6"	4'-2"	1'-2"	1'-8"	70	70
703			8			8			8			8	18'-1"	100	15'-9"	1'-2"			300	300
704			2			2			2			2	19'-10"	113	3'-2"	5'-1"	1'-2"	2'-2"	80	80
Test	replacement bars											1	7'-6" *	101	6'-4"	1'-2"				20
	* To replace part of 701 bar used for Test																			
801	70					70	70					70	12'-11"	119	7'-6"	2'-6"			2420	2420
802		96				96		96				96	37'-6"	Str.					9610	9610
803		136				136		136				136	40'-9"	Str.					14,800	14,800
804		65				65		65				65	41'-6"	115	14'-4"	8'-0"	16'-10"		7200	7200
805		8				8		8				8	45'-6	Str.					970	970
806		58				58		58				58	22'-0"	Str.					3410	3410
807		20				20		20				20	24'-9"	Str.					1920	1920
808		8				8		8				8	25'-9"	Str.					550	550
809			8			8			8			8	21'-5"	100	18'-0"	1'-4"			460	460
810			4			4			4			4	23'-2"	113	3'-9"	6'-11"	1'-4"	2'-2"	260	260
811		8				8			8			8	24'-9"	Str.					530	530
Test	replacement bars											5	6'-6"	Str.						90
901		8				8		8				8	24'-9"	Str.					670	670
902		16				16		16				16	22'-0"	Str.					1200	1200
Test	replacement bars											1	6'-9"	Str.						20
Total																			100,980	101,250

FED. ROAD DIV. NO	STATE	FED. AID PROJ. NO.	TYPE FUNDS
2	OHIO	UI-1052(2)	POST WAR

46
120

LUCAS COUNTY
CITY OF TOLEDO
TOLEDO EXPRESSWAY SYSTEM
MAUMEE RIVER BRIDGE
LUC 120R-3.46

BENDING DIAGRAMS - PIER 4 & 5

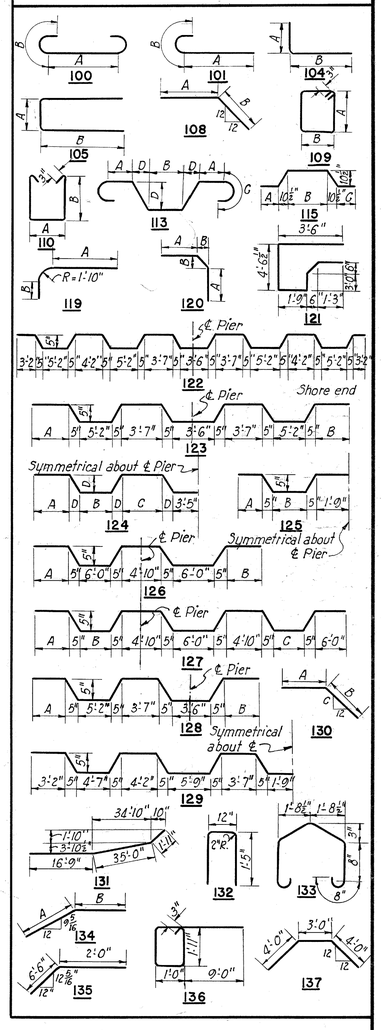

PART 3

TOLEDO EXPRESSWAY SYSTEM

MAUMEE RIVER BRIDGE
BR. NO. LU 120R-35
BASCULE PIERS
REINFORCING STEEL SCHEDULE
TOLEDO LUCAS COUNTY, OHIO

SCALE No Scale
MADE J.D.P. DATE 12-16-52
TRCD. J.F.P. DATE 6-22-53
CKD. MK-AJH DATE 4-16-53

HOWARD, NEEDLES, TAMMEN & BERGENDOFF
CONSULTING ENGINEERS
KANSAS CITY NEW YORK

810 SHEET 3.46

FED. ROAD DIV. NO.	STATE	FED. AID PROJ. NO.	TYPE FUNDS
2	OHIO	UI-1052(2)	POST WAR

47
120

LUCAS COUNTY
CITY OF TOLEDO

TOLEDO EXPRESSWAY SYSTEM
MAUMEE RIVER BRIDGE
LUC 120 R - 3.46

JUL 22 1953

Sidewalk Elev. 627.25

¼"checkered plate

Elev. 615.0

1'-9"

10"

L 5 x 3½ x 5/16

L 5 x 3 x 3/8

TS-4

Plate 24 x ½

L 4 x 3½ x 5/8

15 [33.9

2 L 8 x 6 x ½

30 WF 108

L 3 x 3 x ¼

L 3½ x 3½ x ¼

3'-6"

2'-6"

1"¼ Checkered Plate

12 [20.7

2 Ls 4 x 3½ x 5/8

TS-3

TS-2

℄ Exterior Girder

℄ Interior Girder

33 WF 141

12 I 31.8 Monorail

L 3½ x 3½ x ⅜

8 x 3½ x 21.4

1"¼ Checkered Pl.

TS-1

SECTION A-A
Scale ½"=1'-0"

Supporting member 10 WF 29

4-¾"ϕ Bolts

12 I 31.8

Plate 5 x ½ x 1'-0" welded to flanges and web.

MONORAIL DETAIL
Scale ½"=1'-0"

Note: Monorail shall be equipped with a trolley similar to Yale and Towne Mgf. Co. Model "T," Plain Type having a capacity of 4 tons.
Hoist to be a Yale and Towne screw geared chain hoist, or similar, with a capacity of 4 tons, and 33 feet maximum lift.

2-1"ϕ Bolts

L 4 x 3½ x ⅜

L 3 x 3 x ¼ handrail

10 [15.3

1"¼ Checkered plate

33 WF 130

2 Ls 4 x 3½ x ⅜

Elev. 604.23

15 I 42.9

9'-5¾" ±

Railing to be on one side of each stile only

Sidewalk grating

1"¼ Protection Pl.

L 3 x 3 x ¼

℄ 10" shaft

Machinery floor

15 equal risers

2'-8"

Bar 3 x ⅜

2'-10"

7¼"

PL G x 5/16

1"¼ϕ expansion bolt

Symmetrical about ℄

DETAIL OF STILE
Scale: ½"=1'-0"

Door sill

7¼"

PL G x ⅜

4 equal risers

11'-10"

1"¼ϕ expansion bolt

DETAIL OF LADDER TO DOOR
Scale: ½"=1'-0"

Note: All stair treads to be equal to type "J" Blaw Knox" electro forged stair treads with diamond plate nosings.

L 3 x 3 x ¼

2'-6"

3'-6"

L 3 x 3 x ¼

L 8 x 3½ x 21.4

1"¼ checkered Pl.

12 [20.7

5'-5"

10 equal risers

L 3 x 3 x ¼

10 [15.3

2'-8"

33 WF 130

SECTION F-F
Scale: ½"=1'-0"

Floor Elev. 604.23

℄ Bridge

2½"

6"

Elev. 602.69

10" x 1" x 0'-10" Bearing Pl

2½"

Elev. 602.60

18" x 1½" x 1'-6" Bearing Pl

Elev. 599.375

SECTION J-J
Scale ½"=1'-0"

℄ Exterior Girder

℄ Interior Girder

℄ Interior Girder

12'-0"

2'-0"

24'-10"

13'-9"

2'-6"

3'-6"

1'-0"

12 I 31.8 above

5'-6"

5'-5"

10 [15.3

Up 10 risers

8 [21.4

Fill 7/16

℄ Pier

L 3 x 3 x ¼

12 [20.7

L 3½ x 3½ x ⅜

33 WF 130

L 3½ x 3 x ⅜

℄ Reinforcing Pl 12 x ½ x 7'-0"

20'-10½"

1½"ϕ expansion bolts

L 3½ x 3½ x ¼ to support ℄ railing

12 [20.7

3'-3"

2'-8"

2'-10"

2'-10"

2'-6"

12'-9"

Rail Post L 3 x 3 x ¼

L 3 x 3 x ¼

12 [20.7

2'-10"

2'-10"

Monorail beam 15 I 42.9

Elev. Conc. Machinery Floor 604.23

5'-6"

5'-6"

24 I 79.9

36 WF 230

℄ Trunnions

℄ Columns

3'-2"

3'-2"

3'-2"

2'-6"

TS-4

TS-3

TS-2

TS-1

15 I 42.9

24 WF 100

4 bolts @ 2'-0"

6"

6"

2'-6"

L 4 x 4 x ½

L 3½ x 3½ x ⅜

12 [20.7

TS-1

Provide safety chains at end of Walkway. East and west side of pier.

Up 16 risers

2'-6"

L 3½ x 3½ x ¼

1½"ϕ Pipe rail

12 [20.7

Walkway elevation 599.375

¾"ϕ Grab bars

¾"ϕ Ladder rungs 1'-0" O.C. extend to top of window.

¾"ϕ Bar Ladder

15 I 42.9

24 I 79.9

Concrete Supports

2'-0" Ladder to door

Bolts

Stile railing this side only

11'-9"

6"

2'-9"

1½"ϕ Pipe rail

Up 7 risers

℄ I Beam

4'-8¼"

4'-2"

PLAN OF MACHINERY FLOOR AND WALKWAYS
Scale ¼"=1'-0"

L 3½ x 3½ x ¼

L 3 x 3 x ¼

3'-6"

Elev. 615.0

¼"Checkered Plate

Plate 10 x ⅜

12 [20.7

12 [20.7

10 equal risers

16 equal risers

2'-8"

10 [15.3

L 3 x 3 x ¼

6½"

33 WF 130

1½"ϕ welded pipe rail

3'-6"

8'-0"

3'-6"

5'-0"

3"

3"

TS-3

TS-2

Elev. 599.375

2-1½"ϕ expansion bolts

2½"ϕ pipe sleeves

SECTION G-G
Scale ½"=1'-0"

Notes:
Floor plates to be attached with ⅝" rivets at 6" centers.
Handrails to be bolted with ⅝" button head bolts where rivets are not needed, as in some posts.
For sections B-B, C-C, D-D, E-E, see Sheets 48, 49 and 50.

PART 3

TOLEDO EXPRESSWAY SYSTEM
MAUMEE RIVER BRIDGE
BR. NO. LU 120R-35
BASCULE PIERS
MACHINERY FLOOR AND WALKS

TOLEDO LUCAS COUNTY, OHIO

SCALE 1/4" & 1/2" = 1'-0"
MADE L.L.D. DATE 6-8-52
TRCD. E.M. DATE 4-4-53
CKD. J.D.P. DATE 10-23-53

HOWARD, NEEDLES, TAMMEN & BERGENDOFF
CONSULTING ENGINEERS
KANSAS CITY NEW YORK

810 SHEET 3.47

790

CHARLES BRUNING CO., INC.

FED. ROAD DIV. NO.	STATE	FED. AID PROJ. NO.	TYPE FUNDS
2	OHIO	UI-1052(2)	POST WAR

LUCAS COUNTY
CITY OF TOLEDO
TOLEDO EXPRESSWAY SYSTE
MAUMEE RIVER BRIDGE
LUC 120 R - 3.46

JUL 22 1953

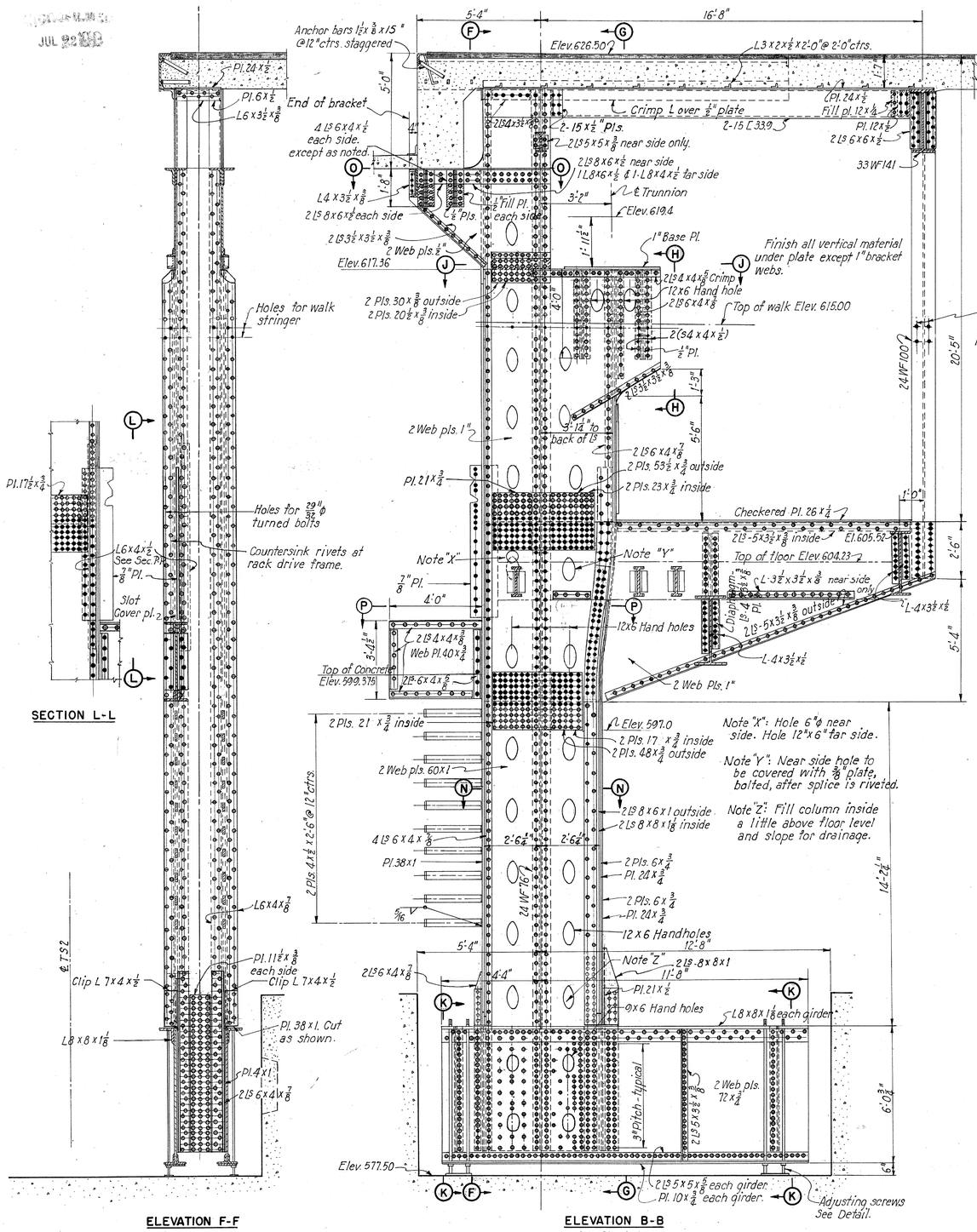

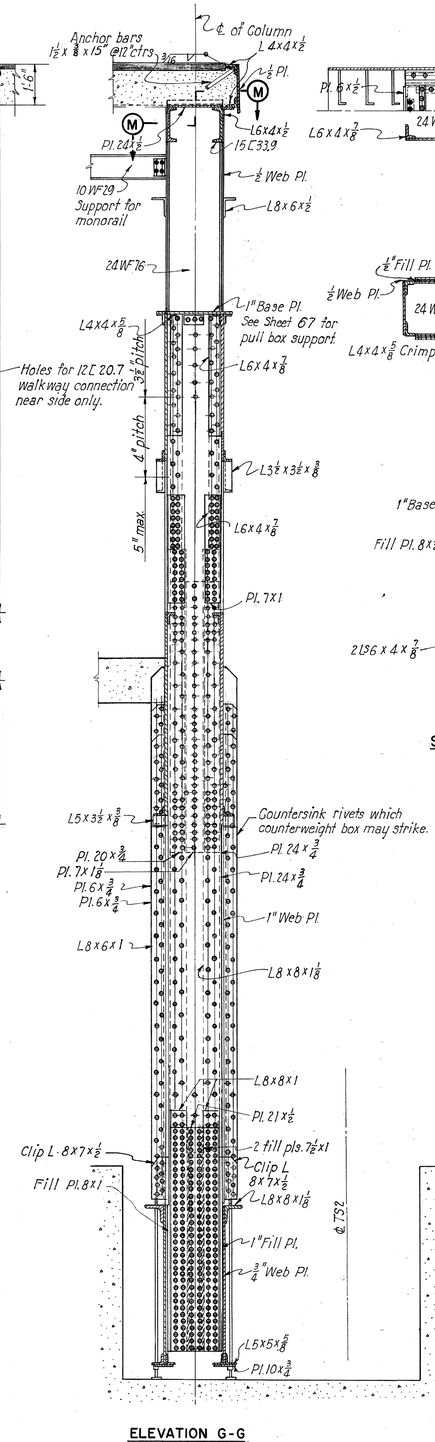

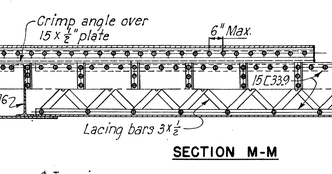

SECTION M-M

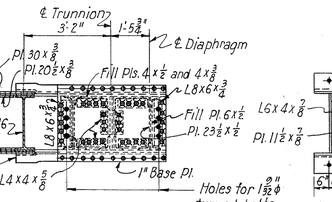

SECTION J-J
Scale: ⅜" = 1'-0"

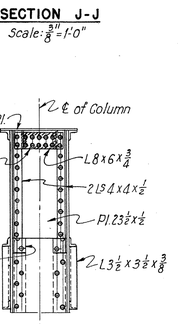

SECTION H-H

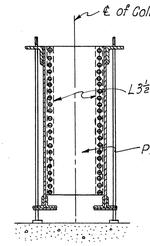

SECTION K-K

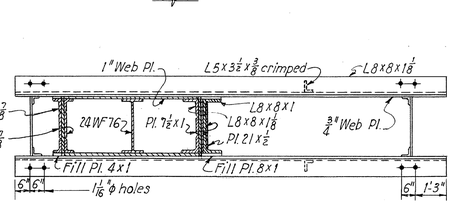

PLAN OF FOOT BEAM

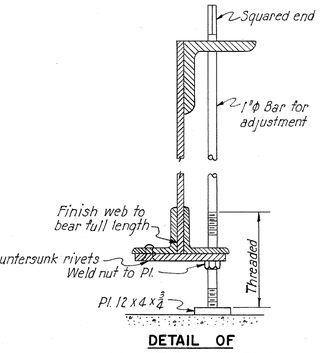

DETAIL OF ADJUSTING SCREWS
Scale: 1½" = 1'-0"

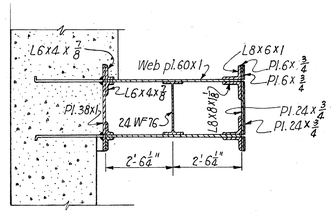

SECTION N-N

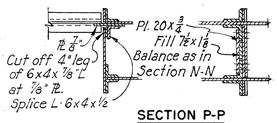

SECTION P-P

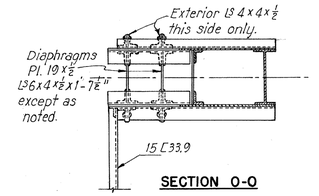

SECTION O-O

PART 3

TOLEDO EXPRESSWAY SYSTE
MAUMEE RIVER BRIDGE
BR. NO. LU 120 R-35
BASCULE PIERS
TRUNNION SUPPORTS TS-1

TOLEDO LUCAS COUNTY, OHI

SCALE 3/8, 1½ = 1'-0"
MADE R.R.R. DATE 1-23-52
TRCD EJM, RR DATE 11-25-52
CKD JDP - BKH DATE 11-25-52

HOWARD, NEEDLES, TAMMEN & BERGENDC
CONSULTING ENGINEERS
KANSAS CITY NEW YORK

810 SHEET- 3.48

CHARLES BRUNING CO., INC.

JUL 22 1953

FED. ROAD DIV. NO.	STATE	FED. AID PROJ. NO.	TYPE FUNDS
2	OHIO	UI-1052(2)	POST WAR

49
120

LUCAS COUNTY
CITY OF TOLEDO
TOLEDO EXPRESSWAY SYSTEM
MAUMEE RIVER BRIDGE
LUC 120R – 3.46

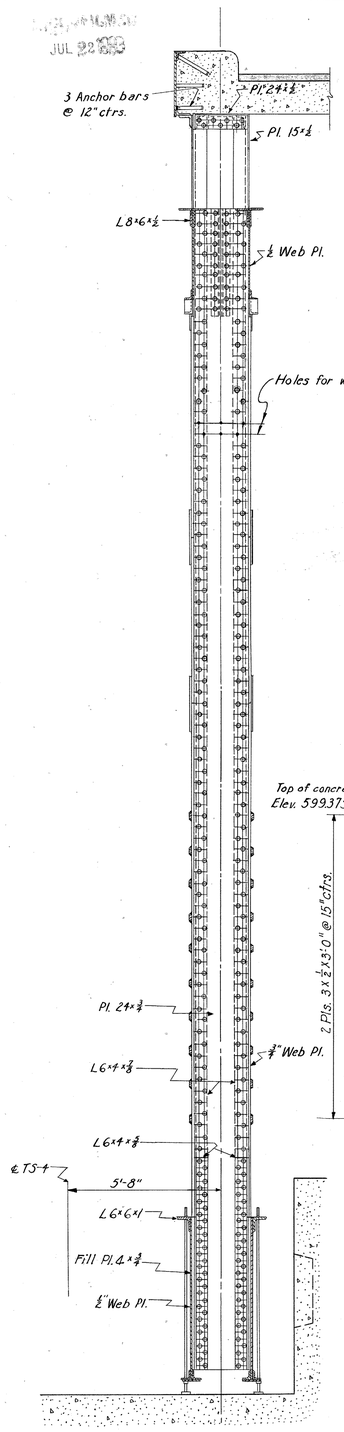

ELEVATION R-R

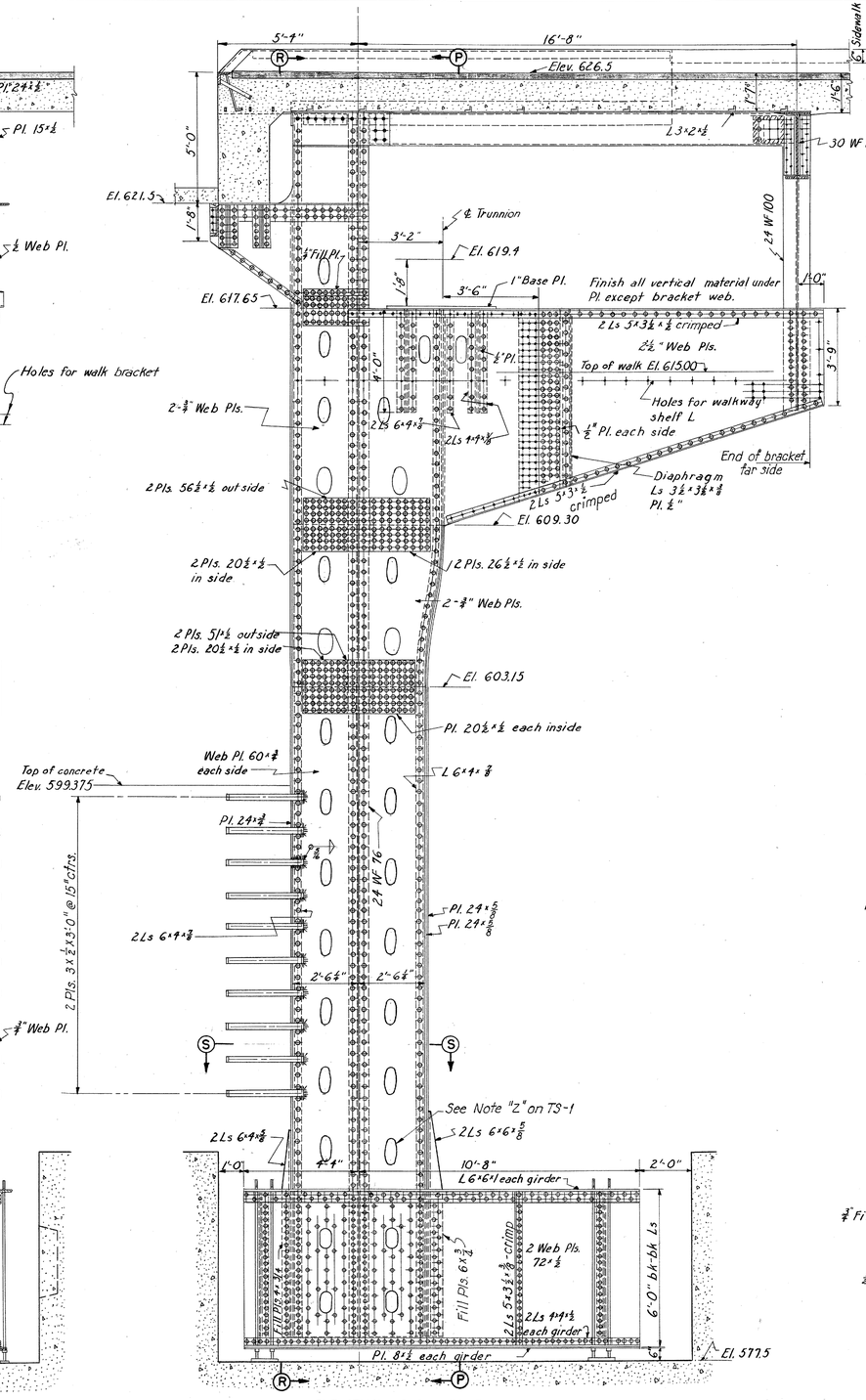

ELEVATION D-D TS-3
See Sheet 47

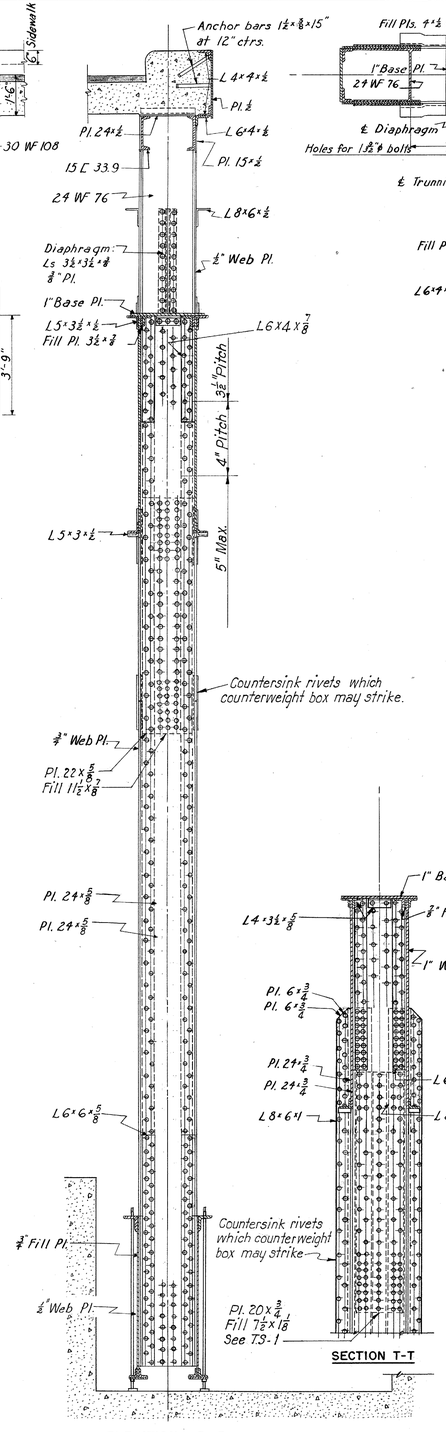

SECTION T-T

ELEVATION P-P

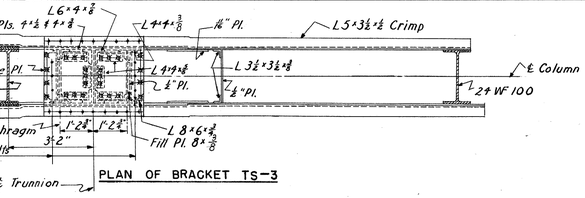

PLAN OF BRACKET TS-3

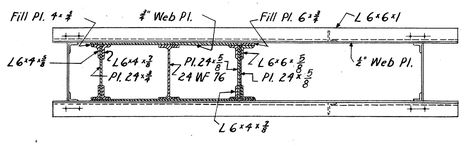

PLAN OF FOOTBEAM TS-3

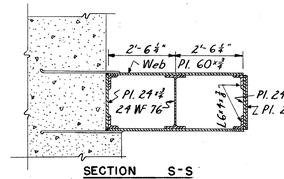

SECTION S-S

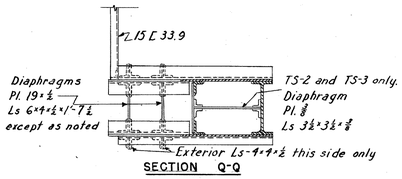

SECTION Q-Q

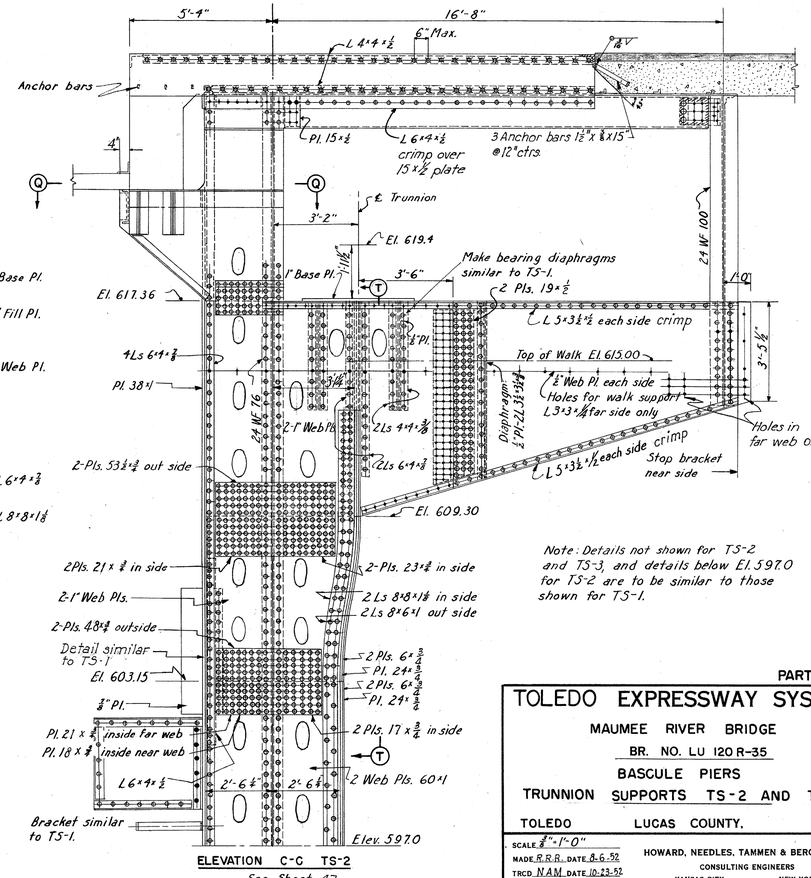

ELEVATION C-C TS-2
See Sheet 47

Note: Details not shown for T.S-2 and T.S-3, and details below El. 597.0 for T.S-2 are to be similar to those shown for T.S-1.

PART 3

TOLEDO EXPRESSWAY SYSTEM
MAUMEE RIVER BRIDGE
BR. NO. LU 120 R-35
BASCULE PIERS
TRUNNION SUPPORTS TS-2 AND TS-3
TOLEDO LUCAS COUNTY, OHIO

SCALE 3/8" = 1'-0"
MADE R.R.R. DATE 4-6-52
TRCD. N.A.M. DATE 10-23-52
CKD. J.D.P. DATE 12-5-52

HOWARD, NEEDLES, TAMMEN & BERGENDOFF
CONSULTING ENGINEERS
KANSAS CITY NEW YORK

810 SHEET- 3.49

792

CHARLES BRUNING CO., INC.

FED. ROAD DIV. NO.	STATE	FED. AID PROJ. NO.	TYPE FUNDS
2	OHIO	UI-1052 (2)	POST WAR

LUCAS COUNTY
CITY OF TOLEDO
TOLEDO EXPRESSWAY SYSTE
MAUMEE RIVER BRIDGE
LUC 120R-3.46

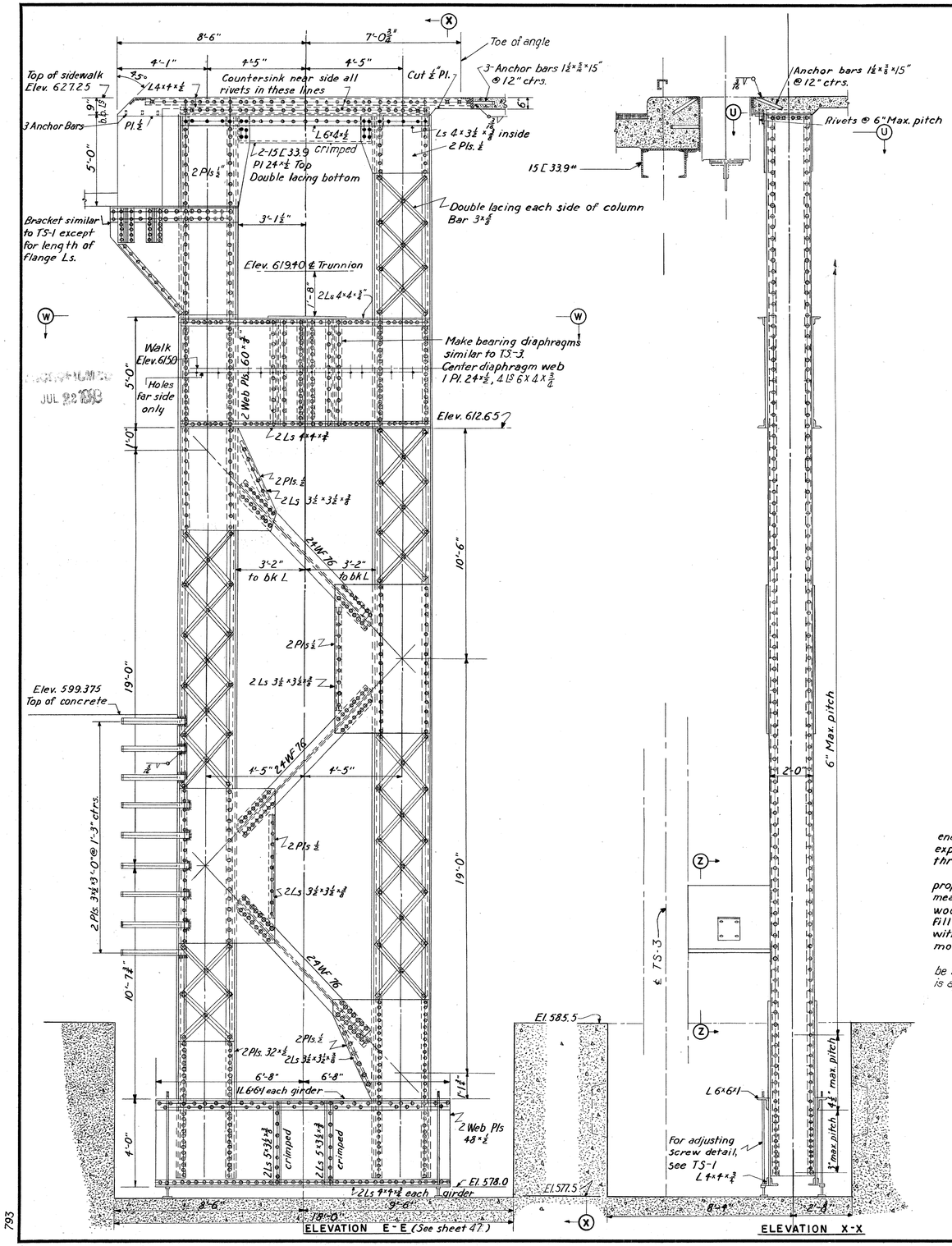

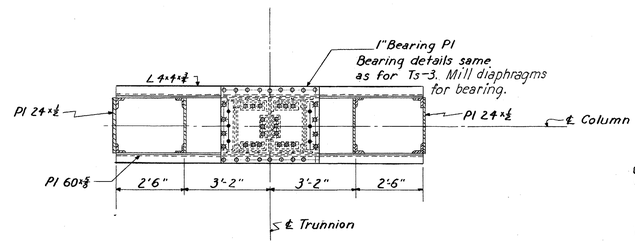

SECTION W-W

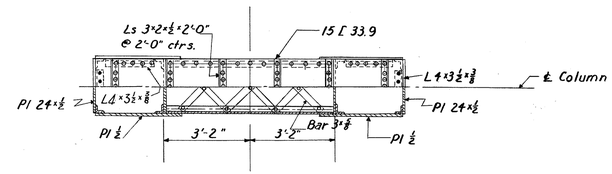

PLAN OF TOP BEAM

SECTION U-U

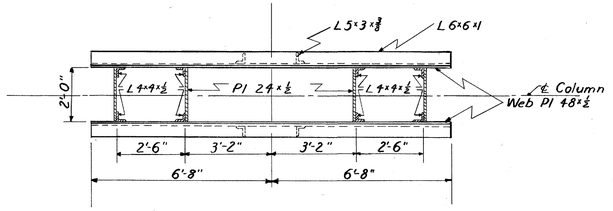

PLAN OF FOOT BEAM

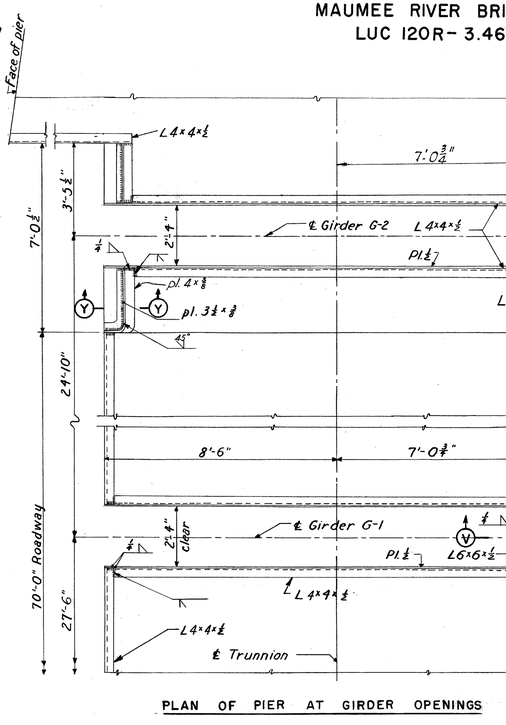

PLAN OF PIER AT GIRDER OPENINGS

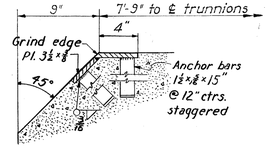

SECTION Y-Y
Scale 1½"=1'0"

12"×12"×2" case hardened steel plate. 4-1¼" ϕ expansion bolts with three-unit lead shields. Adjust plate to proper position by means of the nuts and wood wedges; then fill space behind plate with stiff 1:4 cement mortar driven in tight. Clearance "A" should be 2½" when counterweight is against wood bumper.

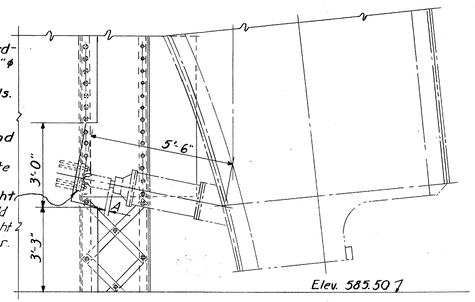

SECTION Z-Z

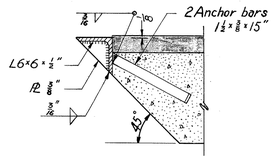

SECTION V-V
Scale 1"=1'0"

PART

TOLEDO EXPRESSWAY SYSTE
MAUMEE RIVER BRIDGE
BR. NO. LU 120R-35
BASCULE PIERS
TRUNNION SUPPORTS TS-4

TOLEDO LUCAS COUNTY, OHI

SCALE ⅜"=1'-0"
MADE JHG DATE 2-5-52
TRCD NAM DATE 10-1-52
CKD JDP BKH DATE 12-5-52

HOWARD, NEEDLES, TAMMEN & BERGENDO
CONSULTING ENGINEERS
KANSAS CITY NEW YORK

810 SHEET- 3.50

793

JUL 22 1952

CHARLES BRUNING CO., INC.

JUL 22 1953

FED. ROAD DIV. NO.	STATE	FED. AID PROJ. NO.	TYPE FUNDS
2	OHIO	UI-1052 (2)	POST WAR

51
120

LUCAS COUNTY
CITY OF TOLEDO

TOLEDO EXPRESSWAY SYSTEM
MAUMEE RIVER BRIDGE
LUC 120R-3.46

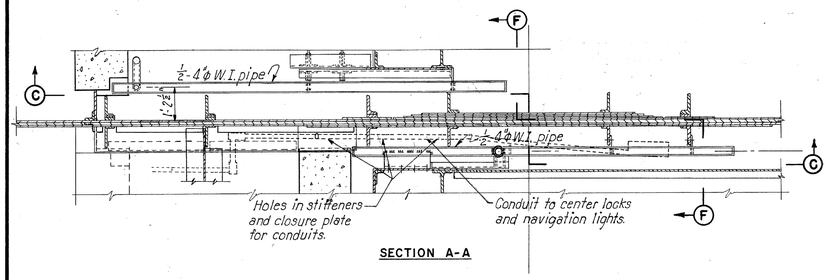

SECTION A-A

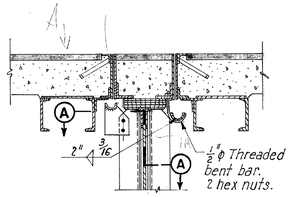

SECTION F-F

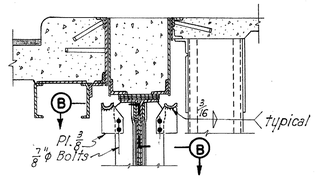

SECTION H-H

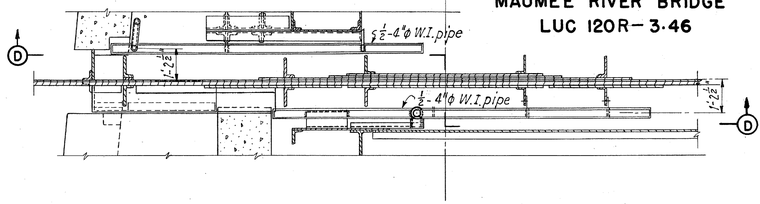

SECTION B-B

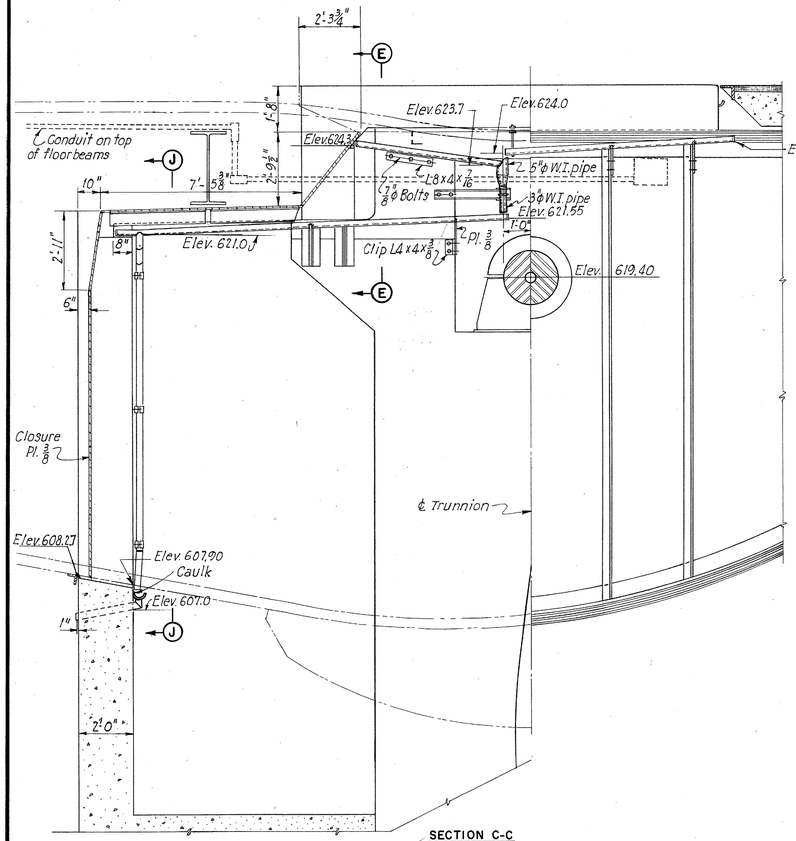

SECTION C-C

INTERIOR GIRDER

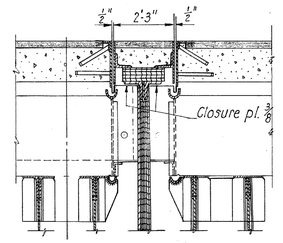

SECTION E-E

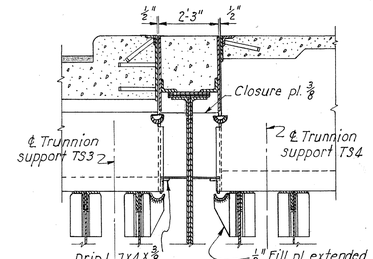

SECTION G-G

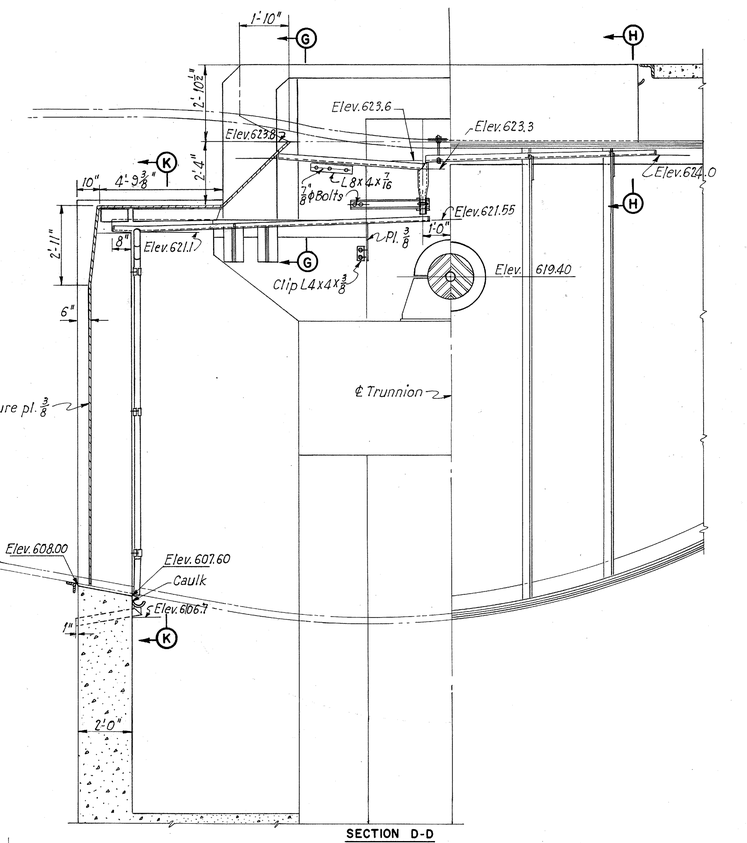

SECTION D-D

EXTERIOR GIRDER

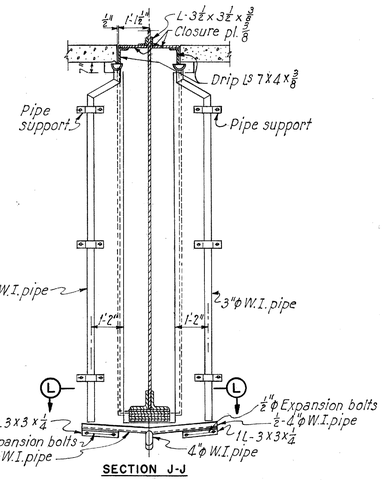

SECTION J-J

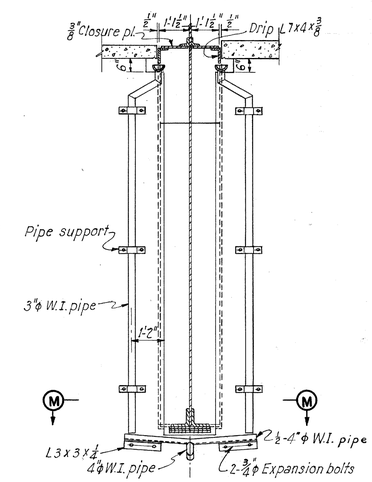

SECTION K-K

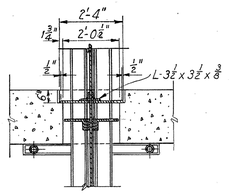

SECTION L-L

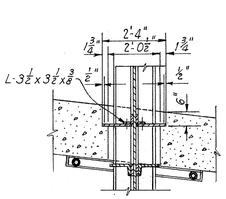

SECTION M-M

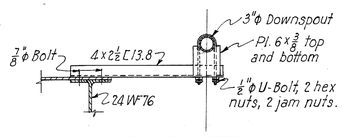

DOWNSPOUT SUPPORT DETAIL
Scale: ¾" = 1'-0"

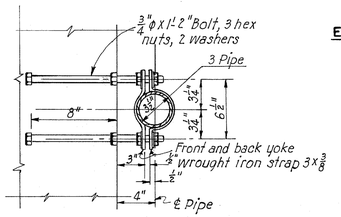

PIPE SUPPORTS
Scale: 1½" = 1'-0"

PART 3

TOLEDO EXPRESSWAY SYSTEM

MAUMEE RIVER BRIDGE
BR. NO. LU 120-R-35
BASCULE PIERS
DRAINAGE AT GIRDER OPENINGS

TOLEDO LUCAS COUNTY, OHIO

SCALE 3/8" = 1'-0"
MADE G.D. DATE 8-11-52
TRCD CJM-RD DATE 10-14-52
CKD MKA-BKH DATE 12-8-52

HOWARD, NEEDLES, TAMMEN & BERGENDOFF
CONSULTING ENGINEERS
KANSAS CITY NEW YORK

810 SHEET 3.51

7904

CHARLES BRUNING CO., INC.

RECEIVED
JUL 22 1953

FED. ROAD DIV. NO.	STATE	FED. AID PROJ. NO.	TYPE FUNDS
2	OHIO	UI-1052(2)	POST WAR

52
120

LUCAS COUNTY
CITY OF TOLEDO
TOLEDO EXPRESSWAY SYSTE
MAUMEE RIVER BRIDGE
LUC 120R-3.46

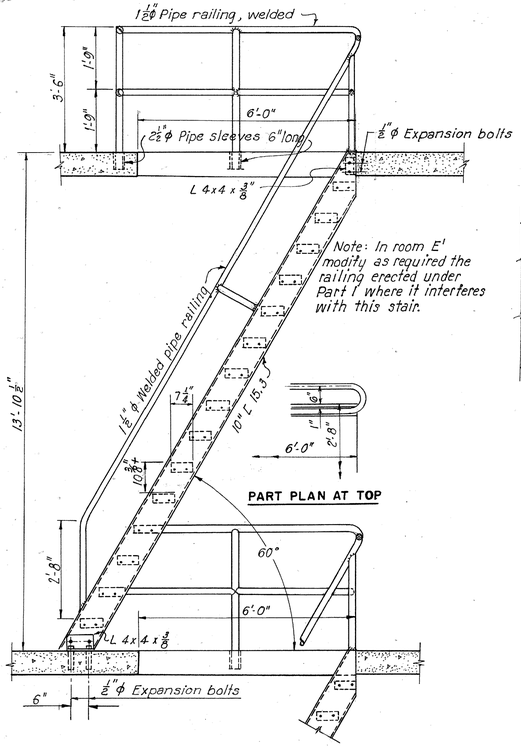

TYPICAL STAIR DETAILS, WEST ROOMS

Scale : ½" = 1'-0"

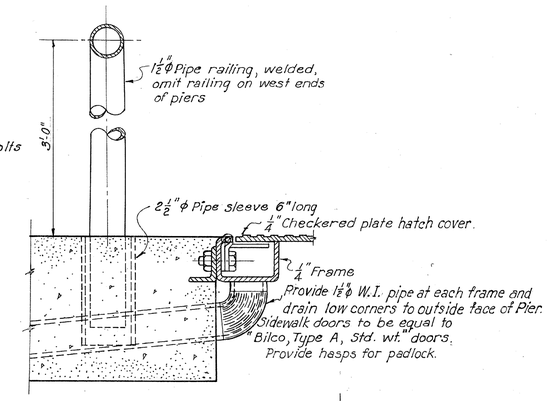

DETAIL OF SIDEWALK DOORS

Scale : 3" = 1'-0"

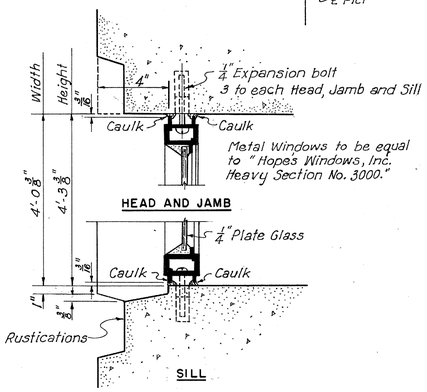

DETAIL OF METAL WINDOWS

Scale : 3" = 1'-0"

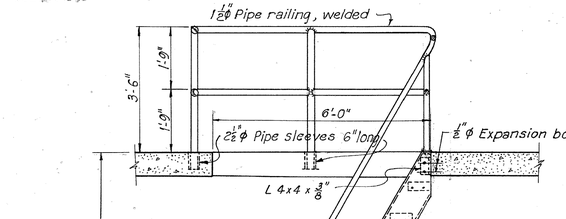

SECTION THROUGH EXTERIOR DOOR FRAMES

Scale : 3" = 1'-0"

SECTION THROUGH INTERIOR DOOR FRAMES

Scale : 3" = 1'-0"

Notes :

Exterior doors at machinery room, Elev. 608.625, shall be extruded aluminum similar in design and construction to the "Custom Line" doors as manufactured by the Kawneer Co, Niles, Michigan. Each door shall have two pairs 5"x 5" butt hinges and shall have waterproof threshold at bottom. The center door shall hinge from the west door. See Sheet 47. Panels shall be polished plate glass.

Exterior doors at Elev. 585.50 shall be similar to doors at Elev. 608.625 except panel shall be adjustable aluminum louvres and threshold is not required.

Exterior doors to approach girder bridge seats shall be the same as interior doors except shall have waterproof thresholds.

Interior doors shall be commercial grade flush type hollow metal doors of furniture grade steel. Thresholds are not required.

All doors shall have substancial latches but no locks.

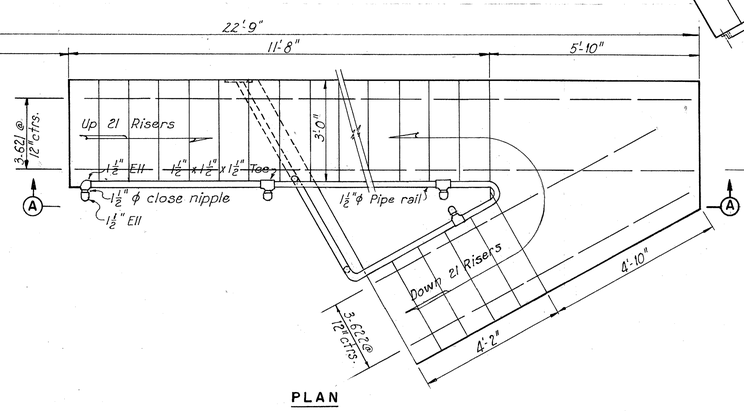

PLAN

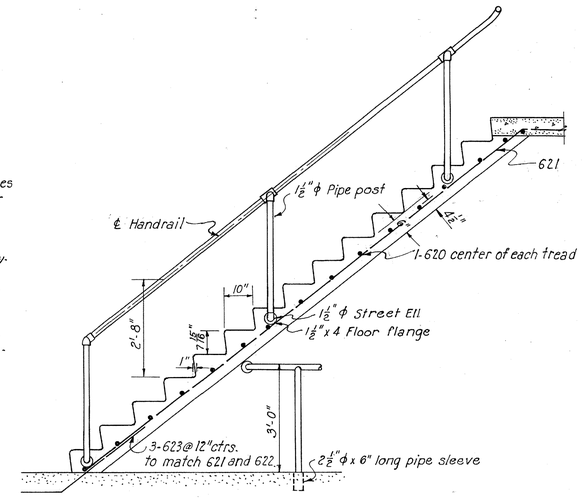

SECTION A-A

TYPICAL STAIR DETAILS, EAST ROOMS

Scale : ½" = 1'-0"

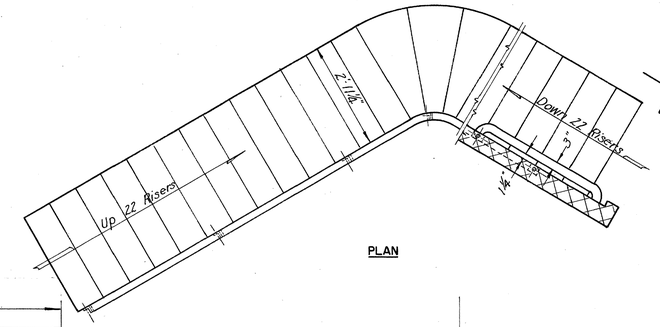

PLAN

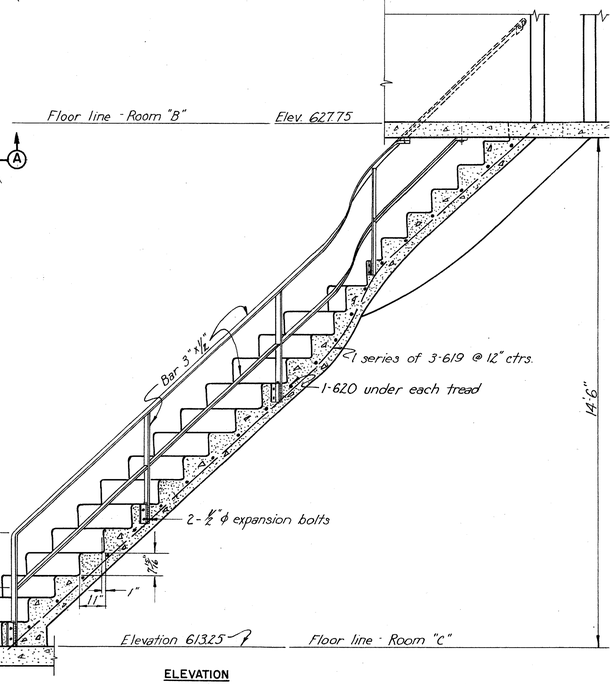

ELEVATION

STAIR DETAILS
ROOM "B" TO ROOM "C" — PIER 5

Scale: ½" = 1'-0"

PART

TOLEDO EXPRESSWAY SYSTE

MAUMEE RIVER BRIDGE
BR. NO. LU 120R-35
BASCULE PIERS
MISCELLANEOUS DETAILS

TOLEDO LUCAS COUNTY, OHIO

SCALE ½" & 3" = 1'-0"
MADE W.L.G. DATE 1-18-52
TRCD A.H.K. DATE 4-16-53
CKD M.K.A. A.H.R. DATE 4-17-53

HOWARD, NEEDLES, TAMMEN & BERGENDOF
CONSULTING ENGINEERS
KANSAS CITY NEW YORK

810 SHEET 3.52

789

CHARLES BRUNING CO., INC.

JUL 22 1953

FED. ROAD DIV. NO.	STATE	FED. AID PROJ. NO.	TYPE FUNDS
2	OHIO	UI-1052(2)	POST WAR

53
12(

LUCAS COUNTY
CITY OF TOLEDO
TOLEDO EXPRESSWAY SYSTE
MAUMEE RIVER BRIDGE
LUC 120R-3.46

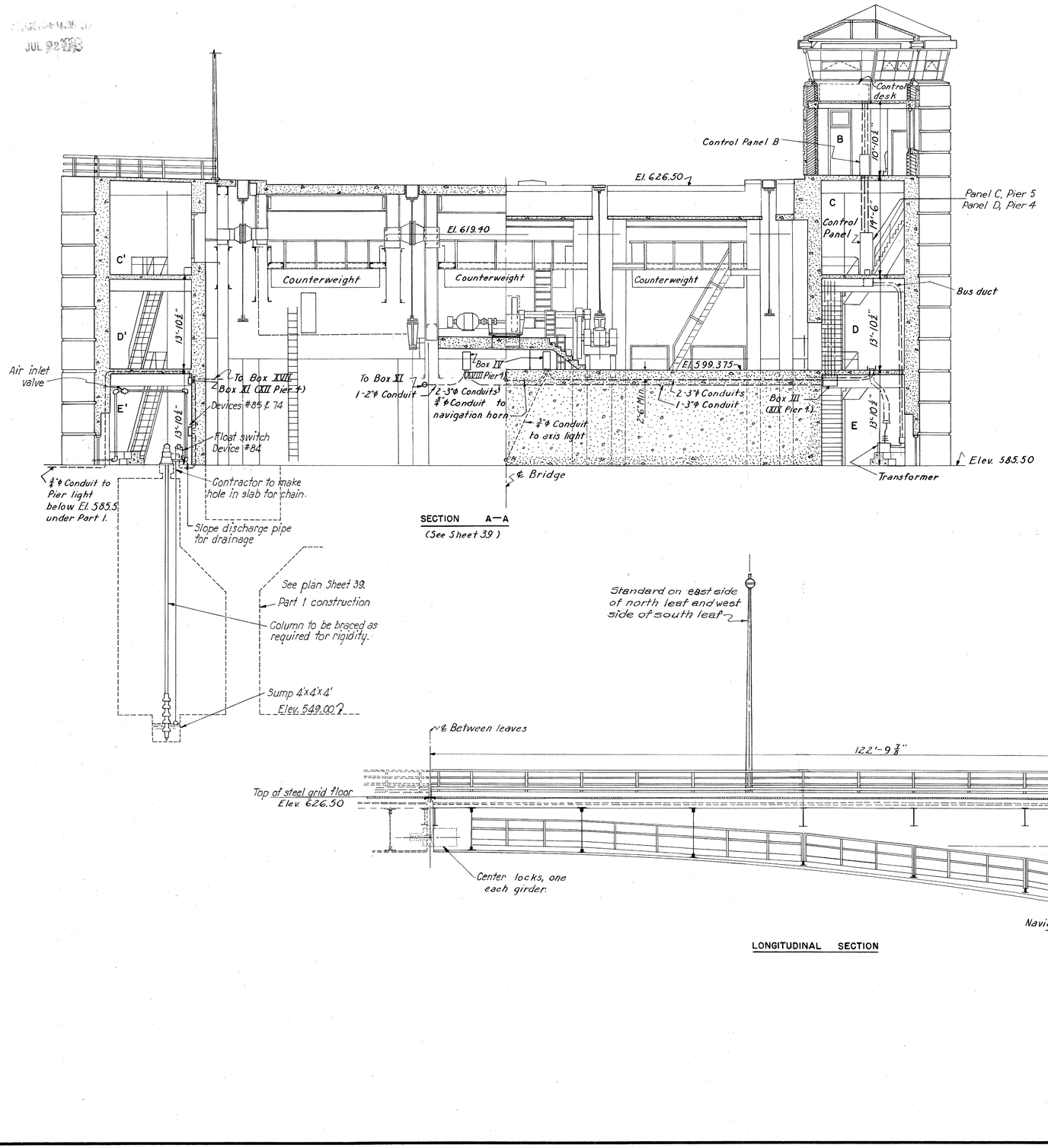

SECTION A—A
(See Sheet 39)

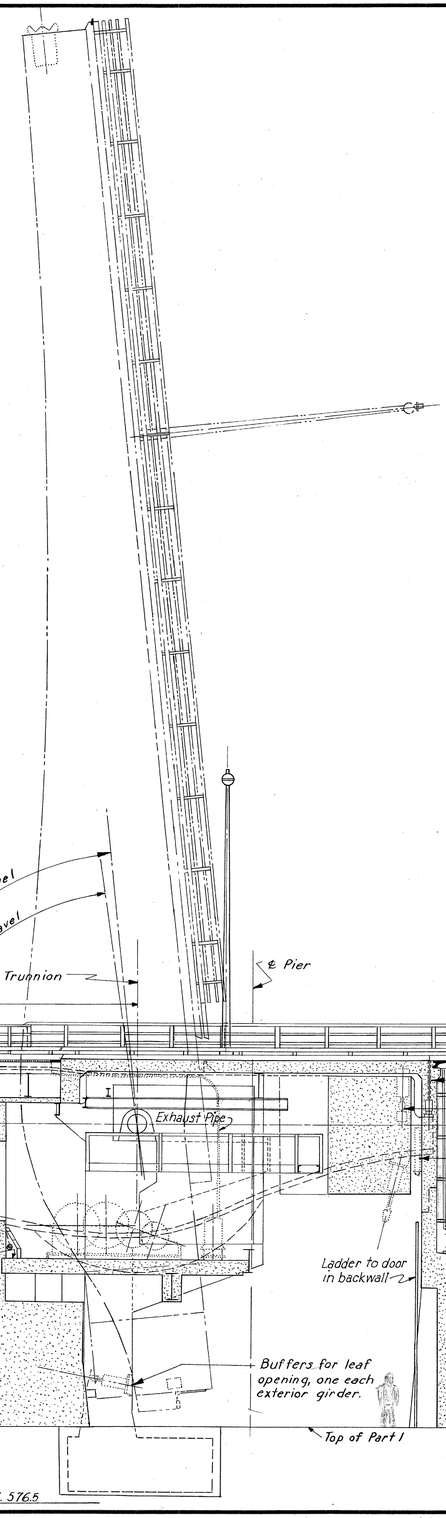

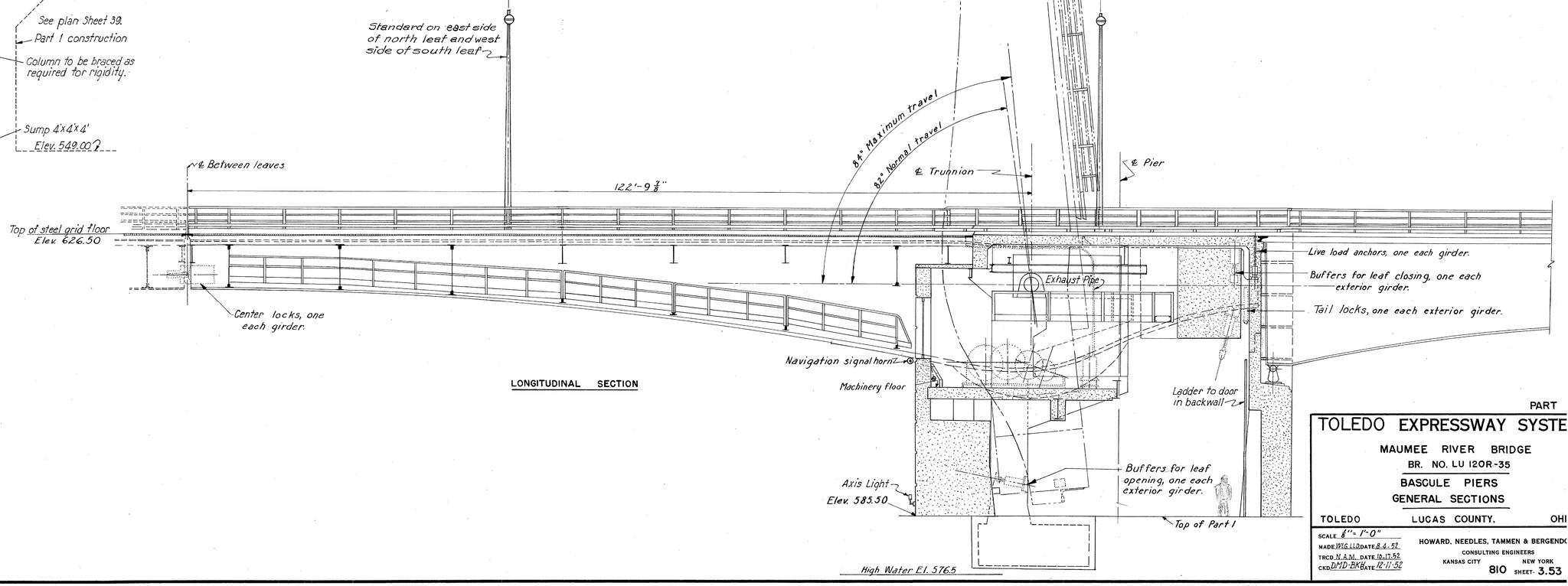

LONGITUDINAL SECTION

PART

TOLEDO EXPRESSWAY SYSTE

MAUMEE RIVER BRIDGE
BR. NO. LU 120R-35
BASCULE PIERS
GENERAL SECTIONS

TOLEDO LUCAS COUNTY, OHI

SCALE 1/4"=1'-0"
MADE W.I.G. III DATE 8-4-52
TRCD N.A.M. DATE 10-17-52
CKD D.M.D.-B.K.B. DATE 12-11-52

HOWARD, NEEDLES, TAMMEN & BERGENDO
CONSULTING ENGINEERS
KANSAS CITY NEW YORK

810 SHEET- 3.53

782

NING CO., INC.

JUL 22 1953

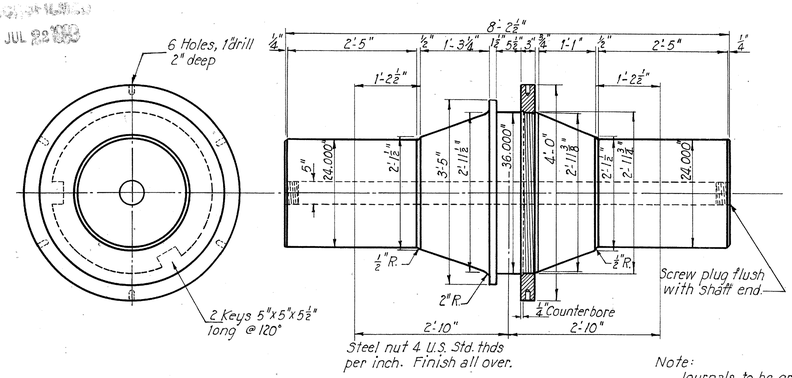

TRUNNION SHAFT
Interior Girder
Scale: ¾"-1'-0"
4 required

Note:
Journals to be ground to high polish, showing no tool marks.
Trunnion shafts to be forged steel. Finish all over.
Shafts to be shrunk into girders in shop.

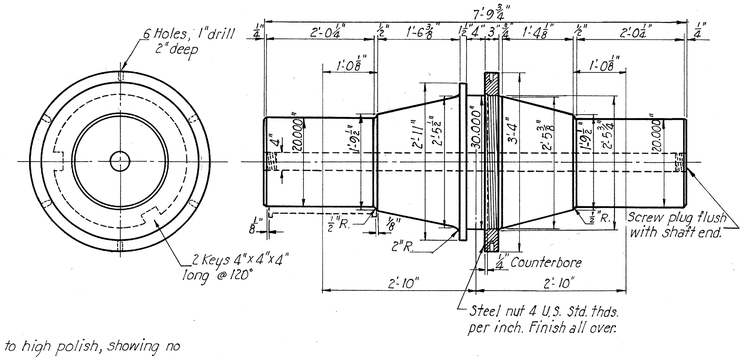

TRUNNION SHAFT
Exterior Girder
Scale: ¾"-1'-0"
4 required

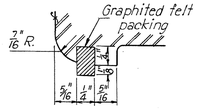

DETAIL OF BEARING SEAL
Scale: Full size

FED. ROAD DIV. NO.	STATE	FED. AID PROJ. NO.	TYPE FUNDS
2	OHIO	UI-1052(2)	POST WAR

54
120

LUCAS COUNTY
CITY OF TOLEDO
TOLEDO EXPRESSWAY SYSTEM
MAUMEE RIVER BRIDGE
LUC 120 R-3.46

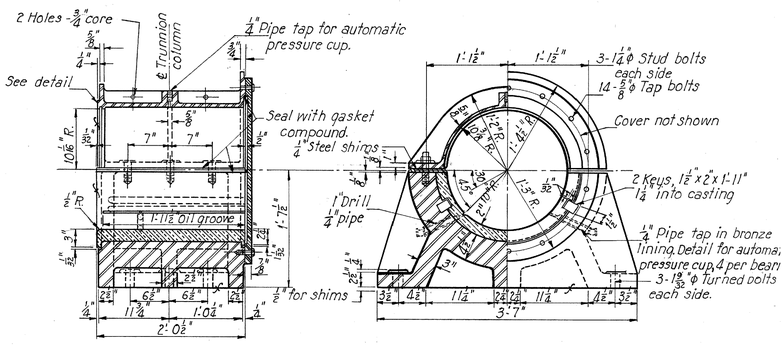

TRUNNION BEARING
Exterior Girder
Scale: 1"-1'-0"
8 required

Note:
Material: Base & cap, steel casting. Lining, Lumen Bronze as made by Lumen Bearing Co. Buffalo, N.Y. or equivalent.
Scrape linings to fit journals and match ma
Care shall be taken that specified clearance between journal and bearing is obtained.

ELEVATION

BOLT PLAN

RACK
Scale: ½"=1'-0"
4 required

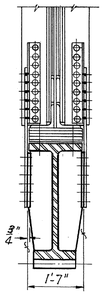

SECTION A-A

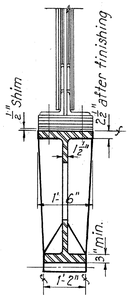

SECTION B-B

Note:
Rack to be of cast steel.
Rack to be assembled with girder in shop, match marked if shipped separately.
All rivets to be 1"ø.
All fillet radii to be ¾" minimum.
Pitch circle to be scribed on both faces of rack.
Turned bolts for attaching racks shall be high strength bolts, ASTM specification A 325-52T.

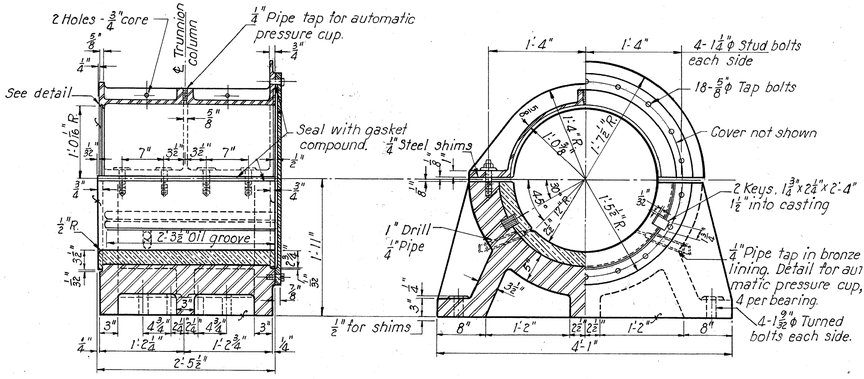

TRUNNION BEARING
Interior Girder
Scale: 1"-1'-0"
8 required

DETAIL OF OIL GROOVE
No scale

PART 3

TOLEDO EXPRESSWAY SYSTEM
MAUMEE RIVER BRIDGE
BR. NO. LU 120R-35

RACKS AND TRUNNIONS

TOLEDO LUCAS COUNTY, OHIO

SCALE Noted
MADE B.H.R. DATE 3-11-52
TRCD P.R. DATE 5-1-52
CKD D.M.P. DATE 9.9.53

HOWARD, NEEDLES, TAMMEN & BERGENDOFF
CONSULTING ENGINEERS
KANSAS CITY NEW YORK

810 SHEET 3.54

754 and 755

CHARLES BRUNING CO., INC.

FED. ROAD DIV. NO.	STATE	FED. AID PROJ. NO.	TYPE FUNDS
2	OHIO	UI-1052(2)	POST WAR

LUCAS COUNTY
CITY OF TOLEDO
TOLEDO EXPRESSWAY SYST
MAUMEE RIVER BRIDGE
LUC 120R-3.46

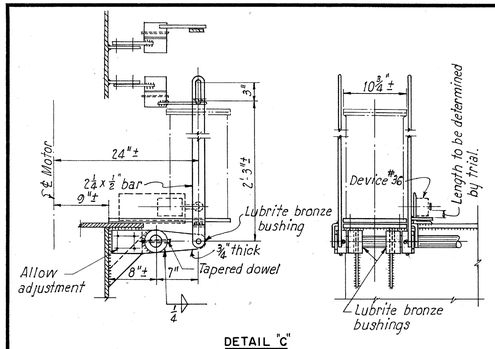

DETAIL "C"

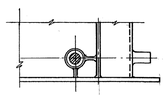

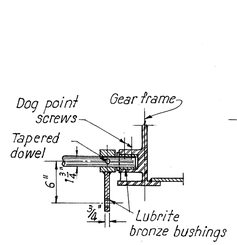

DETAIL "B"

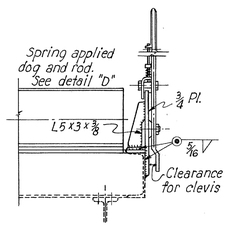

DETAIL "A"

Attach plate to lever stamped plainly PULL LEVER BACK TO RELEASE BRAKE.

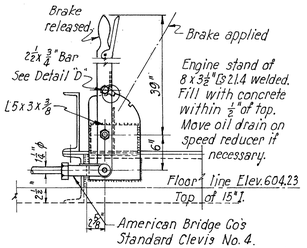

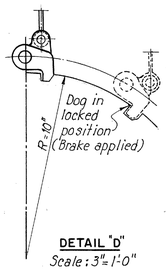

DETAIL "D"
Scale: 3" = 1'-0"

HAND LEVER RELEASE FOR MOTOR BRAKE
Scale: 1" and 3" = 1'-0"
Two required

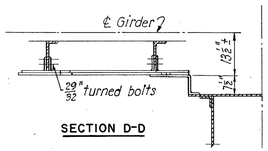

SECTION D-D

NOTES
Scale to be made of aluminum plate in three sections and screwed to steel bar. Letters and division marks to be engraved and blackened or otherwise made plainly visible and permanent, subject to approval.
Letters and figures 1/2" high, marks 1½" and 2¼" long. Width of letters and marks ¼" Degree marks are required only as shown. Submit full size details for approval.

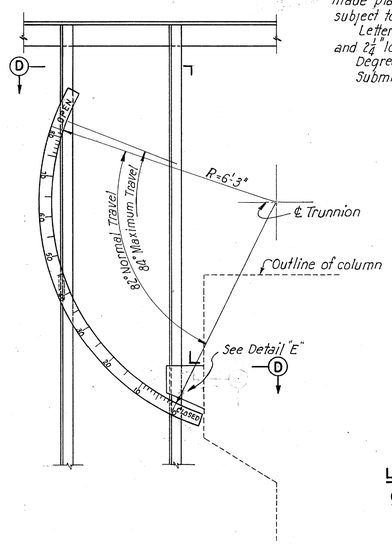

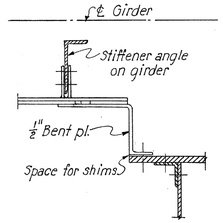

SECTION E-E

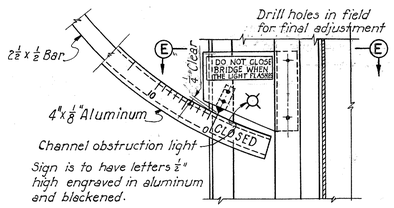

DETAIL "E"

LEAF POSITION INDICATOR FOR GASOLINE ENGINE OPERATION
VIEW C-C
Scale: 1/2" and 1" = 1'-0" Two required.

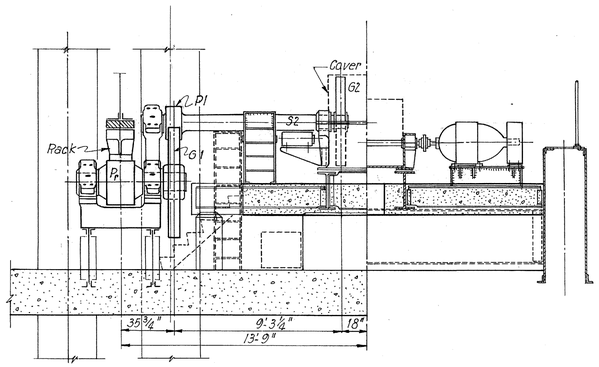

SECTION B-B

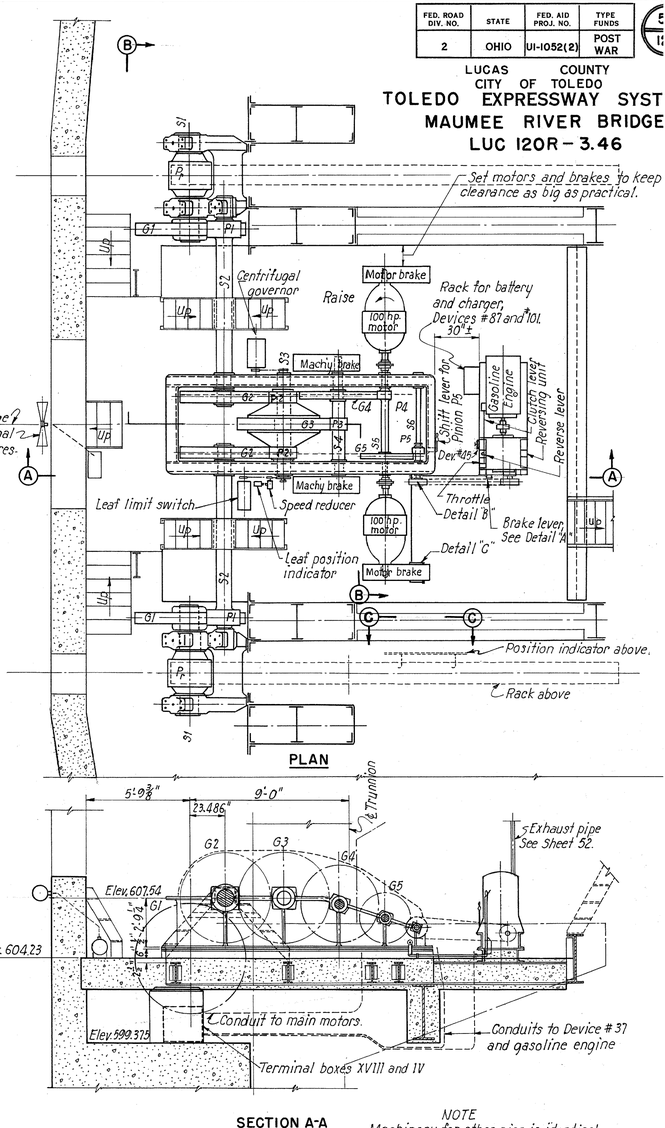

SECTION A-A

NOTE
Machinery for other pier is identical with this layout; not opposite hand.

PAR
TOLEDO EXPRESSWAY SYST
MAUMEE RIVER BRIDGE
BR. NO. LU 120R-35
OPERATING MACHINERY LAYOUT
TOLEDO LUCAS COUNTY, O

SCALE 1/4", 1" and 6" = 1'-0"
MADE B.K.H. DATE 7-20-51
TRCD R.R. DATE 11-8-51
CKD. O.M.D. DATE 9-9-53

HOWARD, NEEDLES, TAMMEN & BERGEN
CONSULTING ENGINEERS
KANSAS CITY NEW YORK

SHEET 3.55

757

CHARLES BRUNING CO., INC.

JUL 22 '53

FED. ROAD DIV. NO.	STATE	FED. AID PROJ. NO.	TYPE FUNDS
2	OHIO	UI-1052 (2)	POST WAR

LUCAS COUNTY
CITY OF TOLEDO
TOLEDO EXPRESSWAY SYSTE
MAUMEE RIVER BRIDGE
LUC 120 R — 3.46

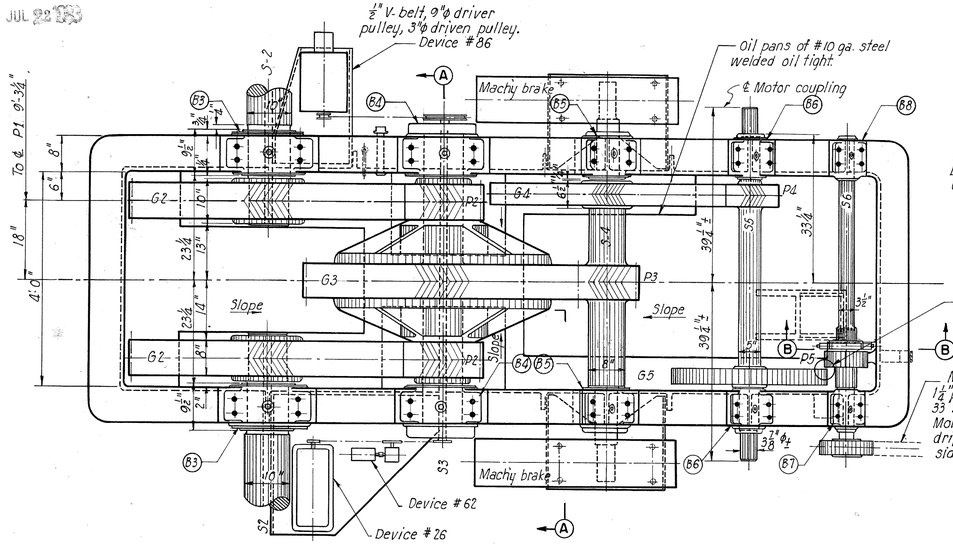

PLAN

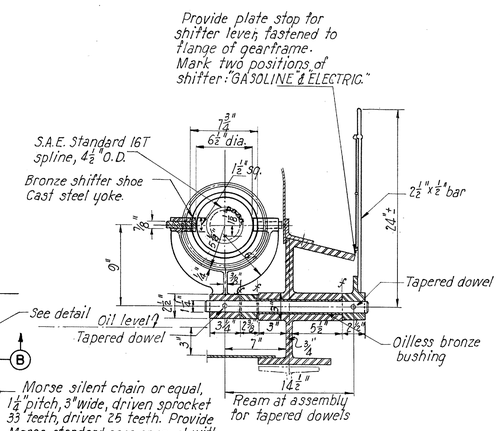

SECTION B-B
Shifter Lever Yoke Assembly.
Scale: 1½" = 1'-0"

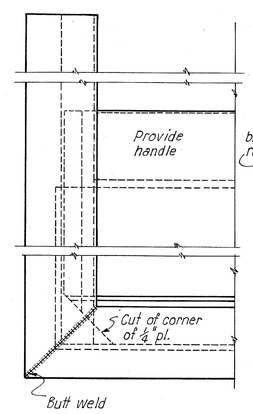

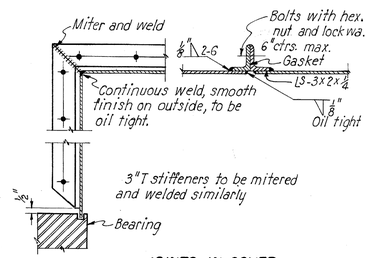

JOINTS IN COVER
Scale: 1½" = 1'-0"

GEAR TABLE

Mark	No. Reqd	Teeth	D.P.	Circ. Pitch	Pitch Dia.	Face	RPM	Type
Rack	2	—	—	5.25	398"	14	0.168	Stub spur
Pr	4	15	—	5.25	25.067	19	2.68	Stub spur
G1	4	54	¾	4.189	72.0	8	2.68	Std. spur
P1	4	15	¾	4.189	20.0	11	9.64	Std. spur
G2	4	76	1¼	2.513	60.75	8	9.64	Herringbone
P2	4	21	1¼	2.513	16.80	8	34.8	Herringbone
G3	2	91	1½	2.094	60.667	8	34.8	Herringbone
P3	2	19	1½	2.094	12.667	8	162.	Herringbone
G4	2	102	2	1.571	51.00	5	162.	Herringbone
P4	2	25	2	1.571	12.500	5	680	Herringbone
G5	2	102	3	1.047	34.00	3½	*935	Std. spur
P5	2	27	3	1.047	9.00	3½	354*	Std. spur

* Gasoline engine operation.

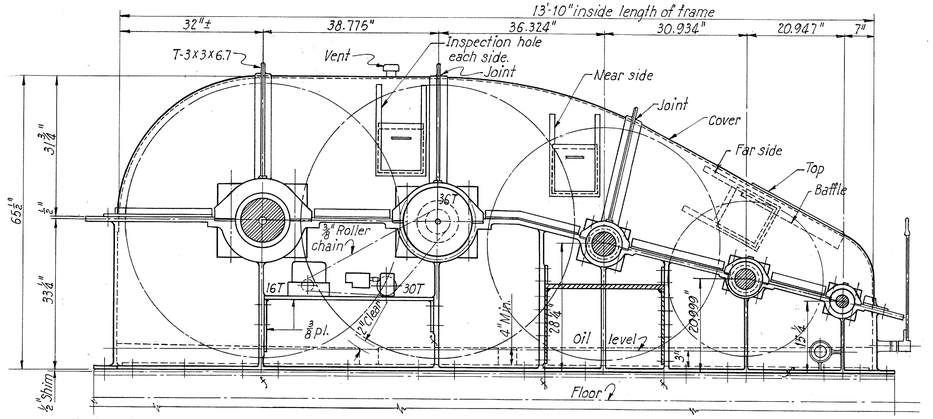

ELEVATION

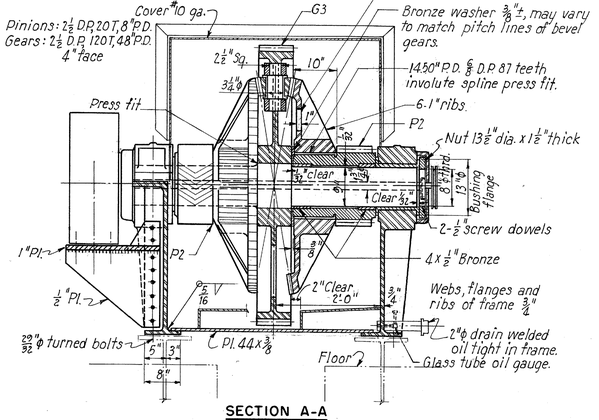

SECTION A-A
Differential

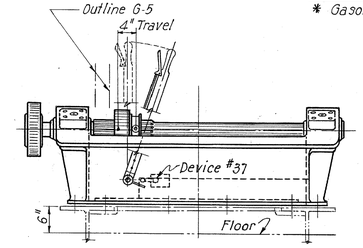

END VIEW

NOTES

Motor couplings, Falk Steeltlex size 13 F.

Centrifugal Speed Relay, Device #86. Cutler-Hammer Centrifugal Govenor Type N13, contacts closed at zero speed, set to open at 26 rpm. of govenor.

Speed Reducer for Device #62, Boston Model AT 13, ratio 20 to 1. Device #62 to revolve approximately 2.90 times for 84° leaf movement.

Device #26 to revolve about 109 times.

Open holes are for 29/32"ϕ turned bolts unless shown otherwise.

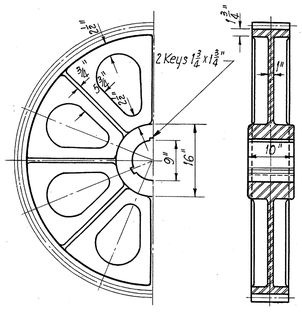

GEAR G2

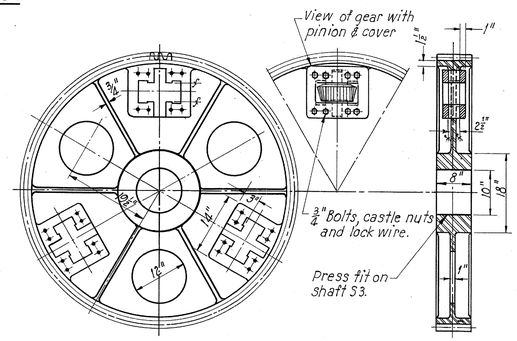

GEAR G3

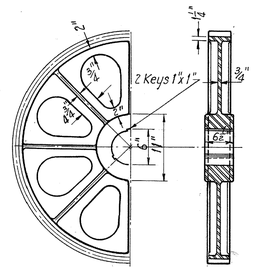

GEAR G4

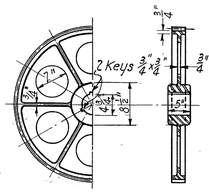

GEAR 5

DETAILS OF INSPECTION HOLES
Scale: Full size

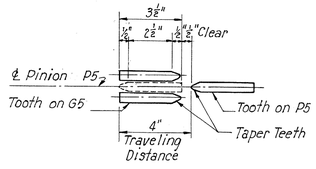

DETAIL OF TEETH IN G5 & P5
Scale: 3" = 1'-0"

PART 3
TOLEDO EXPRESSWAY SYSTE
MAUMEE RIVER BRIDGE
BR. NO. LU 120R-35

CENTRAL MACHINERY

TOLEDO LUCAS COUNTY, OHIO

SCALE As shown
MADE B.K.H. DATE 5.6.52
TRCD R.R. DATE 11.1.52
CKD D.M.D. DATE 9.9.53

HOWARD, NEEDLES, TAMMEN & BERGENDOFF
CONSULTING ENGINEERS
KANSAS CITY NEW YORK

810 SHEET 3.56

768

CHARLES BRUNING CO., INC.

RECEIVED
JUL 22 1953

FED. ROAD DIV. NO.	STATE	FED. AID PROJ. NO.	TYPE FUNDS
2	OHIO	UI-1052 (2)	POST WAR

LUCAS COUNTY
CITY OF TOLEDO
TOLEDO EXPRESSWAY SYSTE
MAUMEE RIVER BRIDGE
LUC 120R-3.46

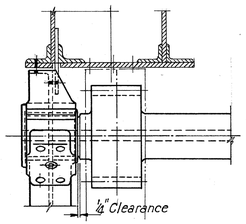

PLAN

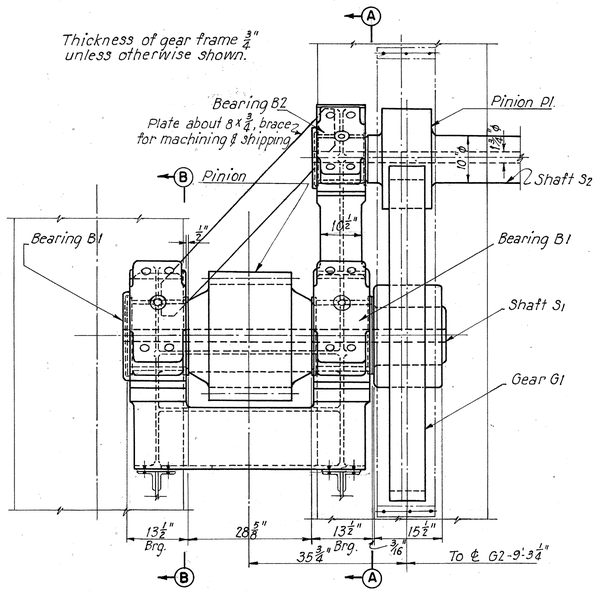

ELEVATION

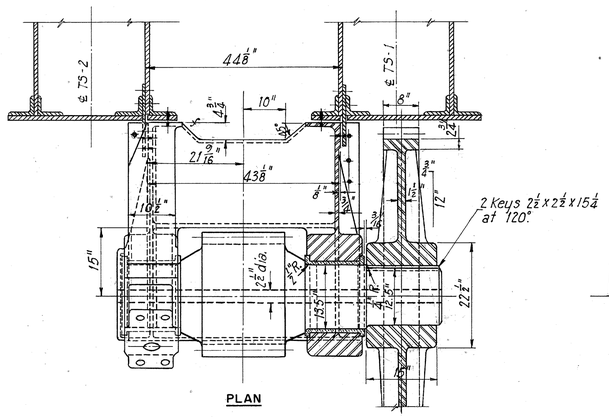

PLAN

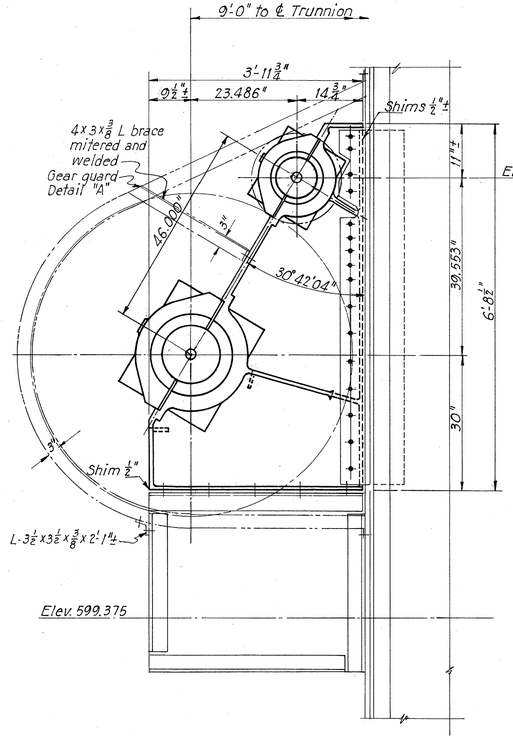

SECTION A-A

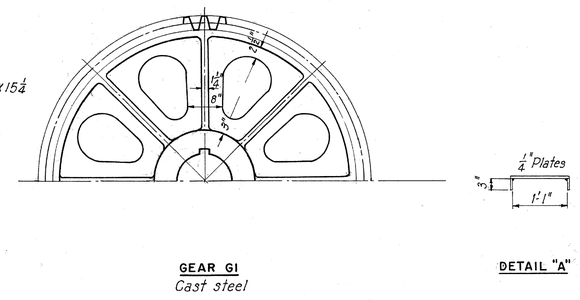

GEAR G1
Cast steel

DETAIL "A"

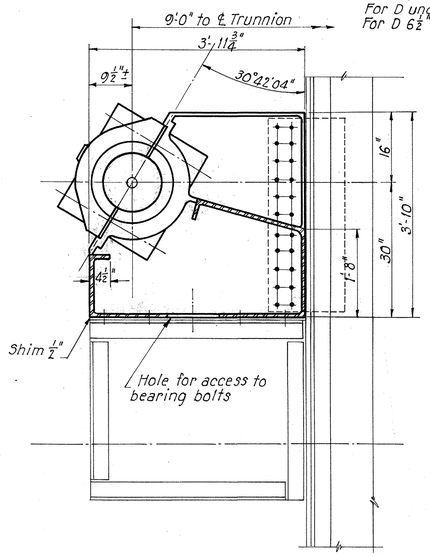

SECTION B-B

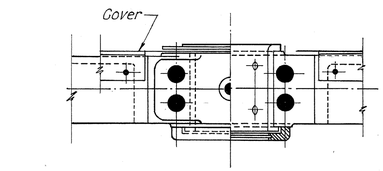

TYPICAL BEARING DETAILS

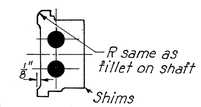

DIMENSIONS OF BEARINGS									
Mark	D	A	B	C	E	T	G	H	L	Bolts
B1	13½	30	20½	13½	1 3/8	6 3/4	16 3/8	—	13½	4-2 25/32 ϕ
B2	9	20½	14	8 13/16	1 3/16	4 5/16	11 1/8	9 5/32	13½	4-2 29/32 ϕ
B3	9½	21½	14 3/8	9 5/16	1 3/16	4 9/16	11 3/8	9 5/32	9½	4-1 29/32 ϕ
B4	9	20½	14	8 13/16	1 3/16	4 5/16	13	⊕	9½	4-1 17/32 ϕ
B5	5	11¼	7 3/4	4 11/16	1 3/16	2 13/16	6 3/8	5 1/32	9½	4-1 5/32 ϕ
B6	4½	10	7	4 5/8	7/8	2 1/8	5 3/4	4 29/32	9½	4-29/32 ϕ
B7	3½	8	5½	3 5/8	7/8	2 1/8	4 3/8	3 3/32	9½	4-25/32 ϕ
B8	3	7¼	4 3/4	3 5/8	7/8	2 1/8	4 1/8	3 3/32	9½	4-25/32 ϕ

⊕ As required for sprocket and pulley shafts.

Note:
Open holes are for 29/32" ϕ turned bolts.

PART
TOLEDO EXPRESSWAY SYSTE
MAUMEE RIVER BRIDGE
BR. NO. LU 120R-35

RACK DRIVE MACHINERY

TOLEDO LUCAS COUNTY, OH

SCALE 3/4" = 1'-0"
MADE B.K.H. DATE 5-6-52
TRCD P.P. DATE 7-1-52
CKD D.M.D. DATE 9-9-53

HOWARD, NEEDLES, TAMMEN & BERGEND
CONSULTING ENGINEERS
KANSAS CITY NEW YORK

810 SHEET 3.57

765

CHARLES BRUNING CO., INC.

FED. ROAD DIV. NO.	STATE	FED. AID PROJ. NO.	TYPE FUNDS
2	OHIO	UI-1052 (2)	POST WAR

58
120

LUCAS COUNTY
CITY OF TOLEDO
TOLEDO EXPRESSWAY SYSTEM
MAUMEE RIVER BRIDGE
LUC 120R-3.46

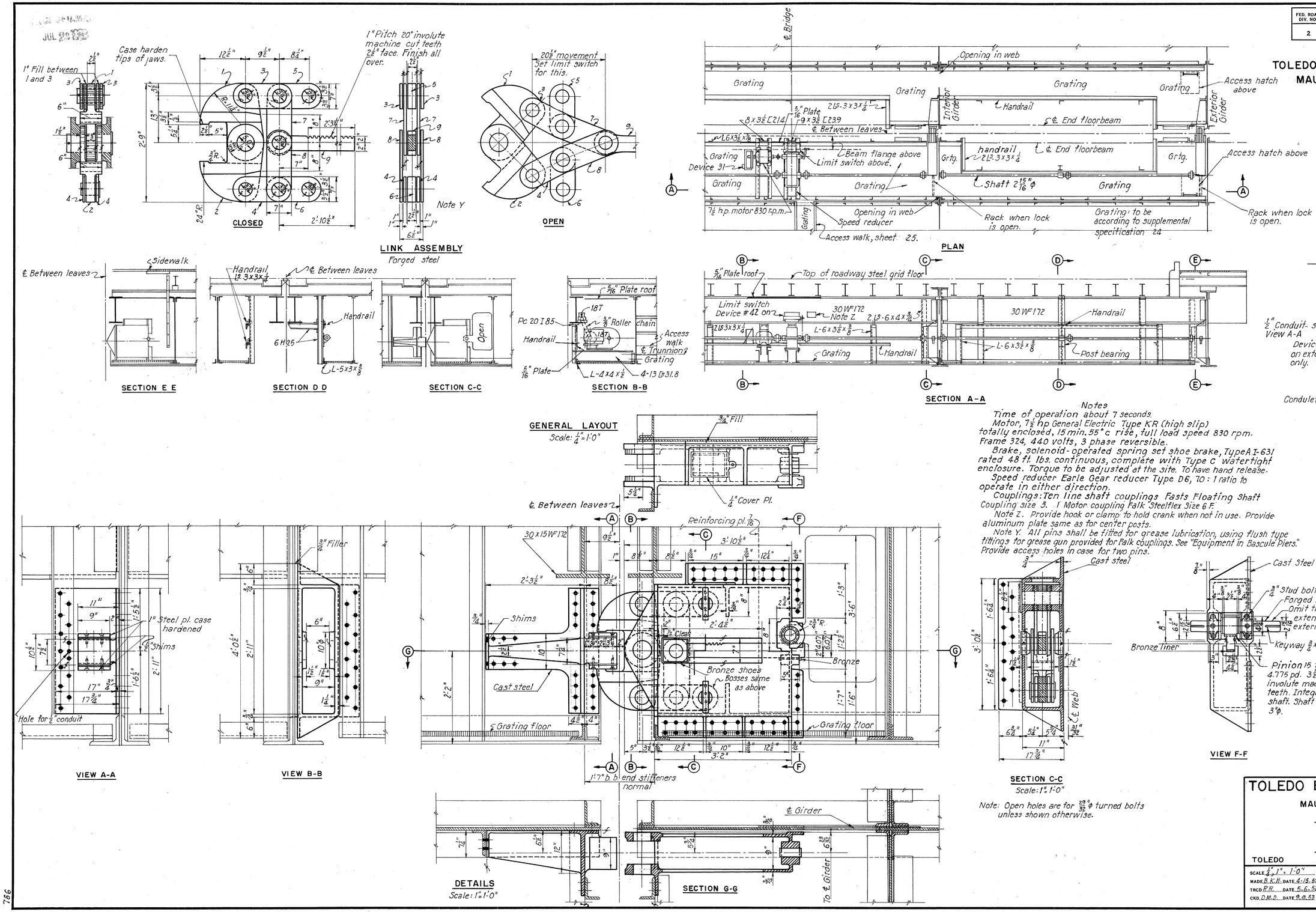

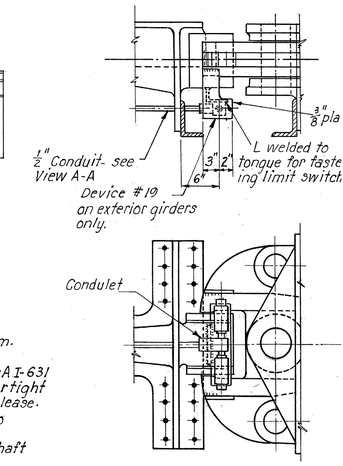

Notes

Time of operation about 7 seconds.

Motor, 7½ hp General Electric Type KR (high slip) totally enclosed, 15 min. 55° c rise, full load speed 830 rpm. Frame 324, 440 volts, 3 phase reversible.

Brake, solenoid-operated spring set shoe brake, Type A I-631 rated 48 ft. lbs. continuous, complete with Type C watertight enclosure. Torque to be adjusted at the site. To have hand release.

Speed reducer Earle Gear reducer Type D6, 70 : 1 ratio to operate in either direction.

Couplings: Ten line shaft couplings Fasts Floating Shaft Coupling size 3. 1 Motor coupling Falk Steelflex Size 6 F.

Note Z. Provide hook or clamp to hold crank when not in use. Provide aluminum plate same as for center posts.

Note Y. All pins shall be fitted for grease lubrication, using flush type fittings for grease gun provided for Falk couplings. See "Equipment in Bascule Piers." Provide access holes in case for two pins.

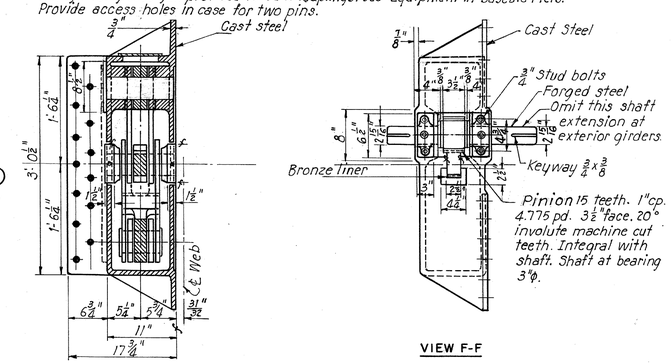

Note: Open holes are for 29/32" φ turned bolts unless shown otherwise.

PART 3

TOLEDO EXPRESSWAY SYSTEM

MAUMEE RIVER BRIDGE

BR. NO. LU 120R-35

CENTER LOCKS

TOLEDO LUCAS COUNTY, OHIO

SCALE 1/4", 1" = 1'-0"
MADE B.K.H. DATE 4-15-52
TRCD P.R. DATE 5-6-52
CKD D.M.D. DATE 9-9-53

HOWARD, NEEDLES, TAMMEN & BERGENDOFF
CONSULTING ENGINEERS
KANSAS CITY NEW YORK

810 SHEET 3.58

766

FED. ROAD DIV. NO.	STATE	FED. AID PROJ. NO.	TYPE FUNDS
2	OHIO	UI-1052 (2)	POST WAR

59
120

LUCAS COUNTY
CITY OF TOLEDO
TOLEDO EXPRESSWAY SYSTE
MAUMEE RIVER BRIDGE
LUC 120R-3.46

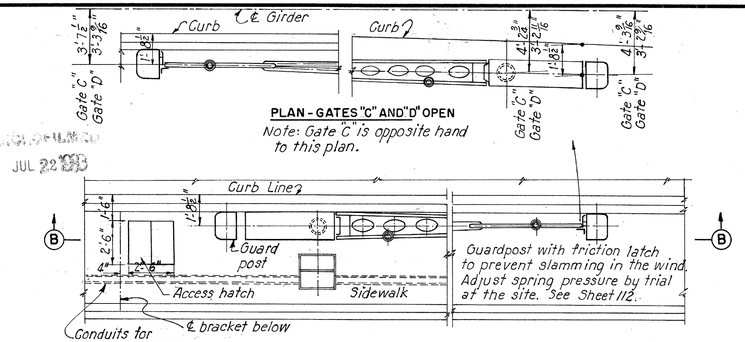

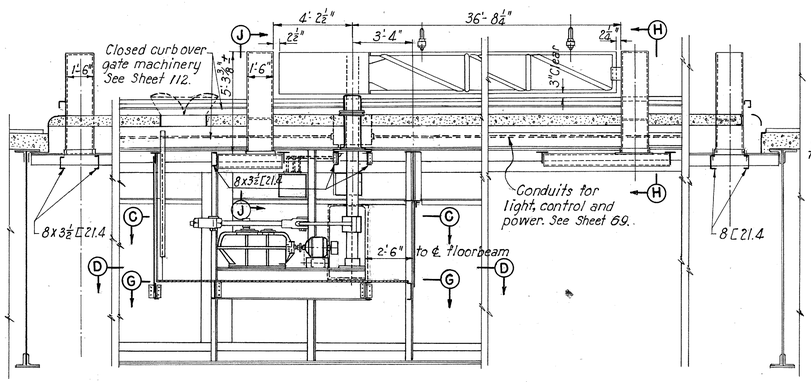

SECTION J-J

SECTION H-H

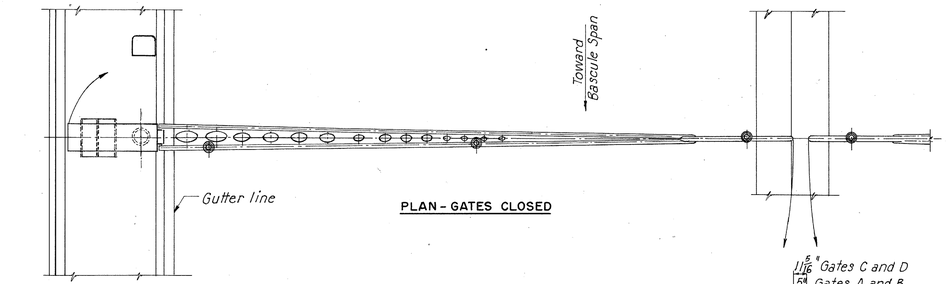

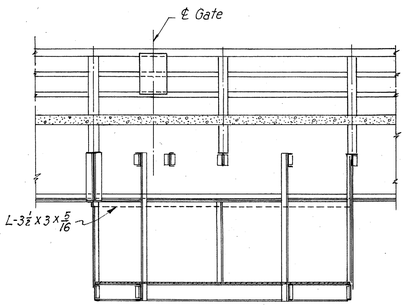

GENERAL VIEWS
Scale: 1/4" = 1'-0"

SECTION B-B GATES OPEN

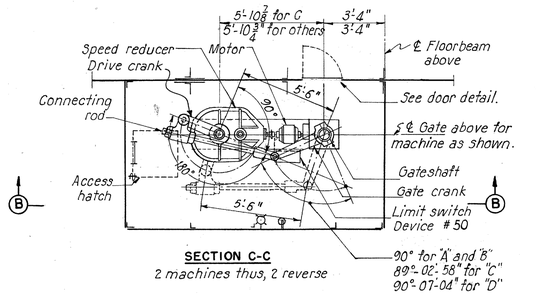

SECTION C-C
2 machines thus, 2 reverse

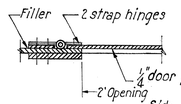

DOOR DETAIL
Not to scale

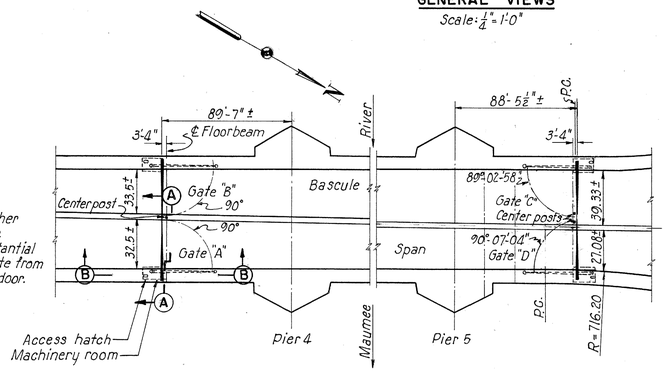

LOCATION PLAN

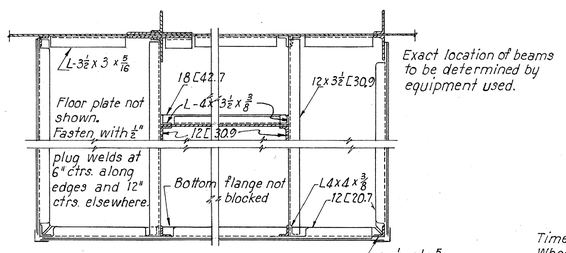

SECTION G-G

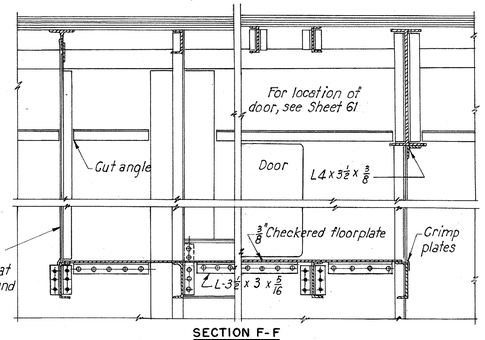

SECTION F-F

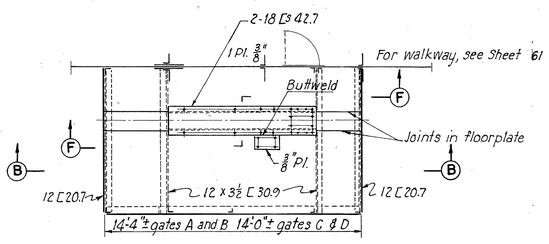

SECTION D-D

FRAMING DETAILS
Scale: 1/2" = 1'-0"

NOTES

Time of operation about 15½ seconds.

Where products are specified by manufacturer or trade name, other products, acceptable to the Engineer as equivalent may be used.

Motor, 3 hp. Gen. Electric Type K.R. (high-slip), totally enclosed, 15 min. 55 °C rise, full load speed 830 rpm. frame 254, 440 volts 3 phase, reversible.

Brake, solenoid-operated spring set shoe brake Type AI-431 rated 35 ft. lbs. continuous, complete with Type C water tight enclosure. Torque to be adjusted by trial at the site. To have hand release.

Speed reducer, Falk vertical shaft reducer Type 8 RX, 430:1 ratio, to operate in either direction.

Coupling, Falk steelflex size 4 F.

Limit switch drive, ½" pitch roller chain, 16T driver, 35T. driven sprocket.

PART 3

TOLEDO EXPRESSWAY SYSTE
MAUMEE RIVER BRIDGE
BR. NO. LU 120 R-35

ROADWAY GATES — GENERAL

TOLEDO LUCAS COUNTY, OHIO

SCALE 1/4"; 1/2" = 1'-0"
MADE B.K.H DATE 5-10-52
TRCD. R.R. DATE 5-21-52
CKD. D.M.D. DATE 6.6.52

HOWARD, NEEDLES, TAMMEN & BERGENDOFF
CONSULTING ENGINEERS
KANSAS CITY NEW YORK

810 SHEET 3.59

768

CHARLES BRUNING CO., INC.

JUL 22 1952

FED. ROAD DIV. NO.	STATE	FED. AID PROJ. NO.	TYPE FUNDS
2	OHIO	UI-1052(2)	POST WAR

60
120

LUCAS COUNTY
CITY OF TOLEDO
TOLEDO EXPRESSWAY SYSTE
MAUMEE RIVER BRIDGE
LUC 120R 3.46

SECTION F-F

SECTION D-D

SECTION B-B

GATE PLAN

SECTION E-E

SECTION A-A

SECTION G-G

WRENCH FOR PINS
Scale: 3"= 1'-0"
2 Required

DETAIL A

DRIVE CRANK

SECTION C-C

GATE DETAIL
Scale: 1"=1'-0"

CONNECTING ROD

DETAIL B
Scale: 3"=1'-0"

DETAIL C
Scale: 3"=1'-0"

Open holes are for $\frac{29}{32}$"ϕ button head turned bolts in connection of front arm to counterweight box; elsewhere $\frac{25}{32}$"ϕ hex. head turned bolts.
Note "A". This stud should be located so that link can be connected when gate ends are about 2'-6" offset from line through centers of shafts.

PART 3

TOLEDO EXPRESSWAY SYSTEM

MAUMEE RIVER BRIDGE
BR. NO. LU 120R-35

ROADWAY GATES — DETAILS

TOLEDO LUCAS COUNTY, OHIO

SCALE 1"& 3"= 1'-0"
MADE B.K.H. DATE 5-10-52
TRCD. R.R. DATE 6-28-52
CKD. D.M.D. DATE 9.9.53

HOWARD, NEEDLES, TAMMEN & BERGENDOFF
CONSULTING ENGINEERS
KANSAS CITY NEW YORK

810 SHEET- 3.60

769

CHARLES BRUNING CO., INC.

#3121A

JUL 22 1953

FED. ROAD DIV. NO	STATE	FED. AID PROJ. NO.	TYPE FUNDS
2	OHIO	UI-1052(2)	POST WAR

61
120

LUCAS COUNTY
CITY OF TOLEDO
TOLEDO EXPRESSWAY SYSTEM
MAUMEE RIVER BRIDGE
LUC 120R-3.46

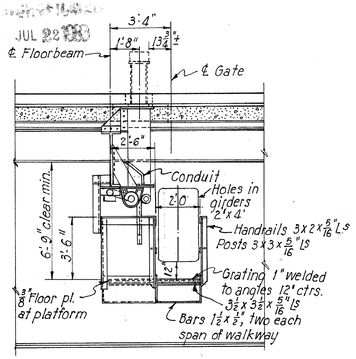

SECTION B-B

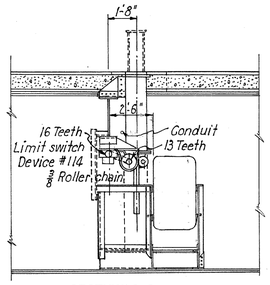

SECTION C-C

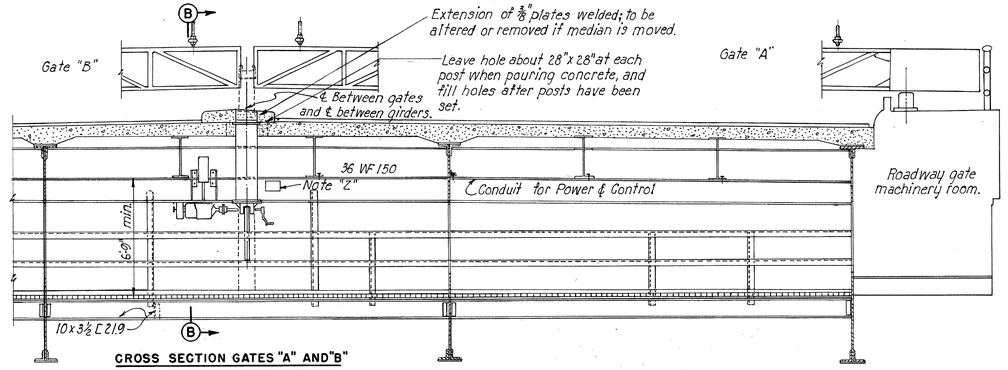

CROSS SECTION GATES "A" AND "B"
See location plan Sheet 59.

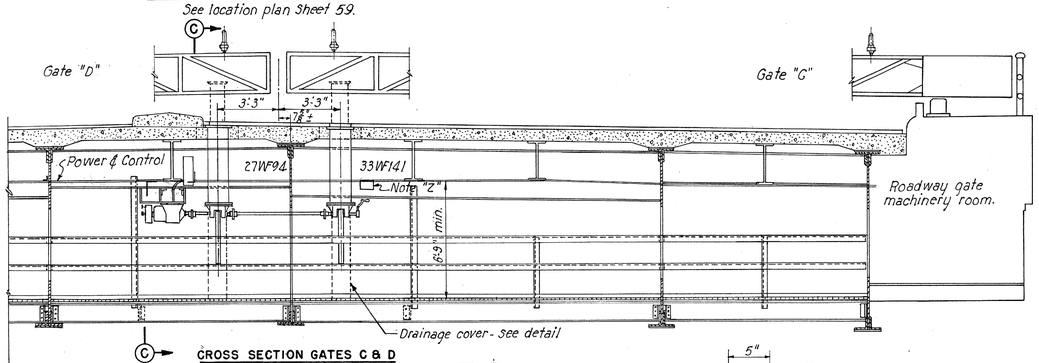

CROSS SECTION GATES C & D
See location plan Sheet 59.
Scale: ¼"=1'-0"

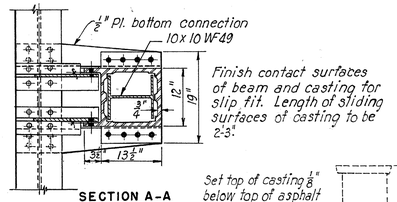

SECTION A-A

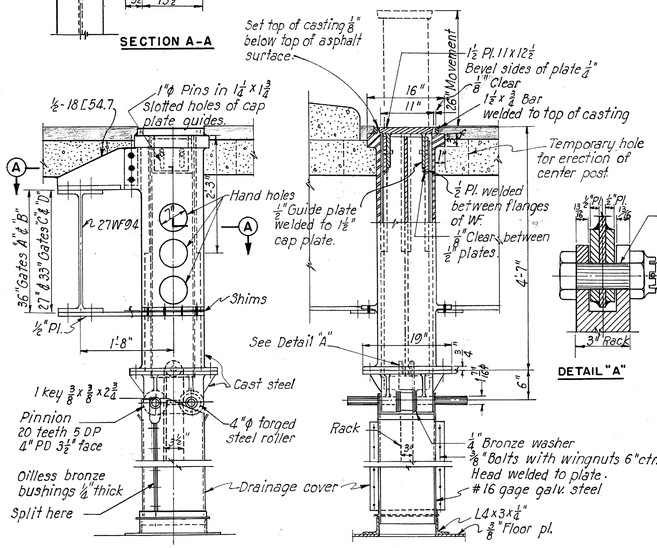

CENTER POSTS
Scale: ¾"=1'-0"

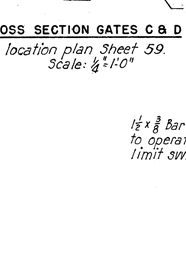

TAIL LOCK DETAILS
Scale: 1½"=1'-0"

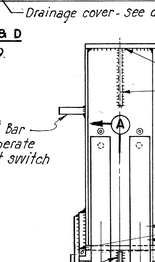

SECTION A-A

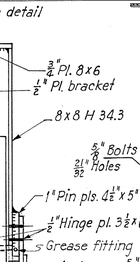

DETAIL "B"

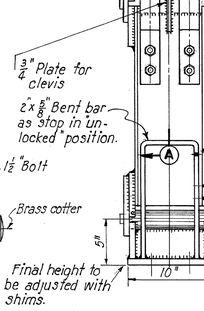

DETAIL "A"

Note "Z". Provide aluminum plate about 6"x9" with letters ¼" high, stamped into the metal and blackened, reading as below. Provide hook to hang crank on when not in use.

CRANK FOR HAND OPERATION

CAUTION

RELEASE BRAKE BEFORE PLACING CRANK ON SHAFT

HANG CRANK UP BEFORE LETTING BRAKE RELEASE OFF

HALF PLAN
"CLOSING" BUFFER

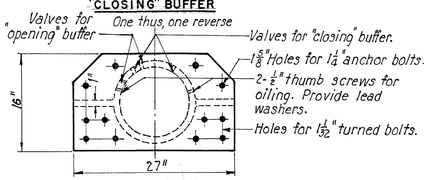

HALF PLAN
"OPENING" BUFFER

Each buffer to have 1- Angle needle valve ⅜" opening. 1-1½" swing check valve. Both valves suitable for air at 350 p.s.i. at 850°F. Provide air filter on intake. Valves on side toward walkway or platform.

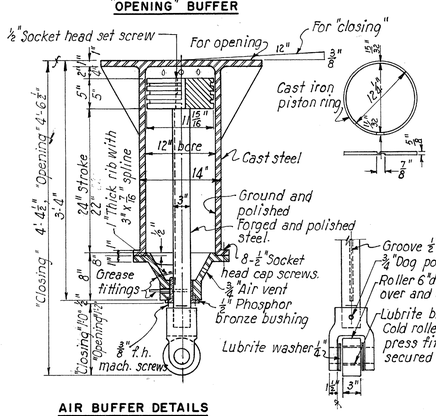

AIR BUFFER DETAILS
4"Closing"-4"Opening"
Scale: 1"=1'-0"

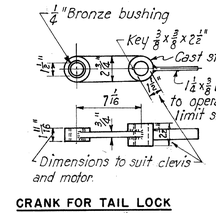

CRANK FOR TAIL LOCK
Scale: 1½"=1'-0"

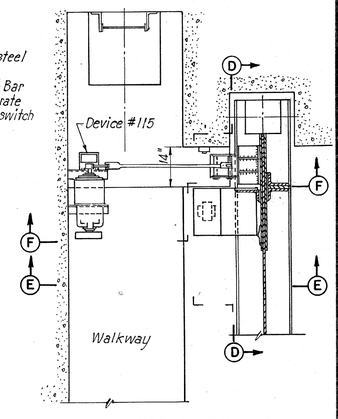

SECTION G-G

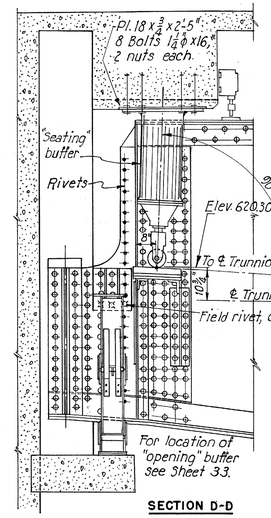

SECTION D-D

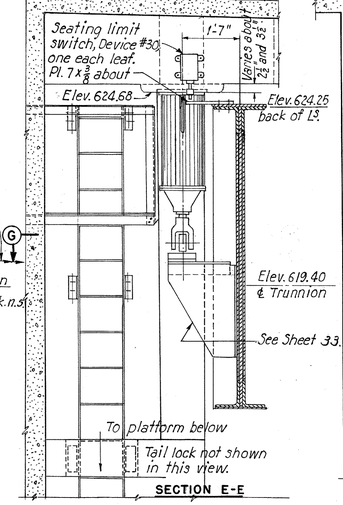

SECTION E-E

AIR BUFFER AND TAIL LOCK
Scale: 1"=1'-0"

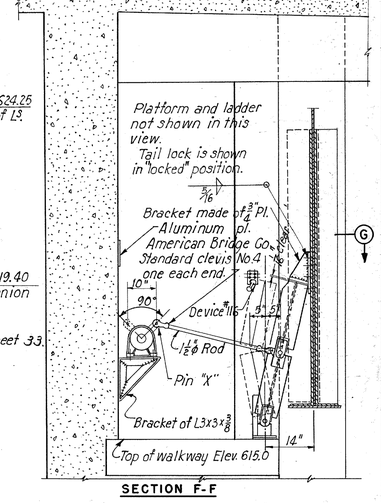

SECTION F-F

Note: Open holes are for 29/32" ϕ turned bolts unless noted otherwise. This applies to all details on this drawing.

Notes on Tail Locks

Tail locks are required at exterior girders only, a total of 4.

Operating time for locks about 3 seconds.

½ Hp. G.E. Gearmotor, 720 rpm. sync. speed, about 5.4 r.p.m. output speed, Type K 440 volts, 3 phase, 60 cycles, frame 063336 with brake GR 5916-458 D rated 3'# intermittent.

Brakes shall be in NEMA Type "B" enclosures with corrosion resistant fittings.

Limit switch to be Westinghouse Type 438 K, maintained contact type with forked lever.

Provide chain for pin "X" and pivoted metal clip on clevis to drop into groove turned in pin to keep pin in place. Other clevis pin to have cotter pin.

Aluminum plate above motor to be about 6"x10" with letters ¼" high, stamped into the metal and blackened in, 6 lines reading as follows:

TO UNLOCK BY HAND REMOVE PIN FROM MOTOR CRANK, LEAN BEAM BACK AGAINST STOP AND PUT ATTACHED PIN IN HOLES IN STOP AND BEAM FLANGE TO LOCK BEAM BACK AWAY FROM GIRDER.

Notes on Center Posts

Couplings to be Falk Steelflex, size 6F.

¾ Hp. G.E. Gearmotor 30 rpm. output speed. Type K 440 Volts 3 phase, 60 cycles, frame 073332, with brake GR 5916 458 D, rated 3'# intermittent. Brakes shall be in NEMA Type "B" enclosures with corrosion resistant fittings and shall have hand release.

Limit switch to be of travelling nut type. G.E. Type GR 9441-D1 or equal.

Operating time for center posts about 4 sec.

PART 3

TOLEDO EXPRESSWAY SYSTEM
MAUMEE RIVER BRIDGE
BR. NO. LU 120R-35

CENTER POSTS, AIR BUFFERS. TAIL LOCKS

TOLEDO LUCAS COUNTY, OHIO

SCALE As Shown
MADE B.K.H. DATE 8.29.52
TRCD. R.R. DATE 6-5-53
CKD D.M.D. DATE 9.9.53

HOWARD, NEEDLES, TAMMEN & BERGENDOFF
CONSULTING ENGINEERS
KANSAS CITY NEW YORK

810 SHEET 3.61

770

FED. ROAD DIV. NO	STATE	FED. AID PROJ. NO.	TYPE FUNDS
2	OHIO	UI-1052(2)	POST WAR

62
120

LUCAS COUNTY
CITY OF TOLEDO
TOLEDO EXPRESSWAY SYSTEM
MAUMEE RIVER BRIDGE
LUC 120R-3.46

JUL 29 1952

All roadway lighting conduits, poles, brackets, pullboxes, sidewalk boxes, fittings and pole supports between abutments (except in substation) by Contractor.

The underground feeders from T.E.Co. underground lines in manholes to transformer stations in piers complete with connections to substations by Contractor. Contractor shall terminate underground fiber or asbestos conduits with a 3'by 5' by 4' deep, reinforced concrete manhole, complete with 30"cover, ground rod, pulling irons, sump, end bells, 1-3" capped stub 6" beyond wall 3" below grade for T.E.Co. service.

Far Side (Southwest) — Near Side (Northeast)

Transformer primary protection by 15 Kv metal clad fused interrupter switch units, indoor, 400 Amp. cont., 400 Amp. interrupting rating, 100,000 Kva interrupting capacity, equal to S and G Type PCS-CMC fused Alduti interrupter switches.

All equipment for roadway lighting on bridge, including circuit breakers, controllers, protectors, control relays, cables, ballasts and luminaires, with mountings, enclosures and interconnections, and conduits within substation by Toledo Edison Co. All conduits, pullboxes, sidewalk boxes, expansion fittings, poles, brackets and supports outside substation by Contractor.

65 Amp. fuse I-F

Current transformers 30:1 ratio, 5000 Volt, by Toledo Edison Co.

L4 L5 L6 — L4A L5A L6A — L4B L5B L6B

15 Kv, 3 wire, #6 AWG feeders from service beyond south abutment, in 3" conduit.

Potential transformers, 4200:120 V., with fuses, by Toledo Edison Co.

To pier ground

2-Element polyphase meter with metal panel by Toledo Edison Co.

644 645 646

16-F Safety enclosed switch in substation. 641 642 643

91-F 638 639 640

1.8 Amp. instrument fuse equal to GE # 111382.

64-F 1-3 2-3 1-2 Off (1) (2) (3) (4) (5) (6)

65-F V 636 637

Voltmeter phase transfer switch in Panel D, Room C, far side pier.

500 Kva transformer bank - 3 167 Kva OISC 2400/7200/12470 Y volt-480 volts equal to G.E. Type H.S. furnished and installed by Contractor.

641 642

13-F

#6 Type RWSN in 1"ϕ conduit 647 648

General purpose enclosure in transformer room.

0-1000 Amp. ammeter in Panel D, Room C — 25-F A — 651

66-F 1 Inter. 2 Inter. 3 (1) (2) (3) (4)

652 653 654

70-F

Nominal 460 Volt bus in substation, 3-750 MCM conductors in 4" conduit.

Ammeter phase transfer switch in Panel D, Room C, far side.

The 3-phase capacitor banks required but not shown for the secondaries of the main transformer banks are described in the specifications. The banks are wall-mounted in the transformer rooms.

10-F G R Trip Close — Control switch in Panel D, Room C, far side.

655 659 658 657

3-F 635 656

Manual closing switch on breaker. CC CR TC Control relay

665 664 663

Air circuit breaker 600A, 600 VAc., T.P., magnetic over-current trips set at 1050 A., electrically operated, 25,000A inter. rating, enclosed with pull box & mechanical trip.

In far side transformer room

FAR SIDE FEEDER BREAKER

3-750 MCM Type RWSN conductors in 4½"ϕ conduit.

672 673

57-F 6A, 600V encl. fuse

200-Watt, 230 Volt strip heaters in series on 440 Volts in far side control cabinet in Panel D. 79 79 79 79

CONDENSATION SPACE HEATERS

90-F 660 661 662 Res. Res. Res. 71-F

6A. fuse

PHASE REVERSAL RELAY

300 MCM conductors with 3' phase wires in same submarine cable

46-FA 666 667 668

400 Amp., 575 V., 4 PDT safety switch in Panel D, Room C

46-FB 63 64 65 Far Side

69-F F N 669 670 671

To far side bus 300 MCM. 679 678 677

Voltmeter phase transfer switch on control desk.

65-N V

64-N 1-2 Off 3-1 (1) (2) (3) (4) (5) (6) 22 23

1.8 Amp. instrument fuse equal to G.E. #111382.

91-N 5 6 7

Safety enclosed switch in substation

16-N 8 9 10

100 Amp. 575 D.P.D.T. safety switch in transformer room.

General purpose enclosure in transformer room.

Nominal 460 Volt bus in substation - 3-750 MCM conductors in 4" conduit.

General Purpose enclosure

13-N 11 12 8 9

Similar to Bull Dog # 23263 650 649

15 Kva, 480 V - 240/120 V. 60 ~ OISC transformer in substation enclosure.

15 14 13 2 18 16 11 9 21 20 19 10 20 21

In general purpose enclosure in substation

3#4 Type RWSN in 1½" ϕ conduit

Air circuit breaker, 600A., 600 VAc., TP magnetic over current trips set at 1050A., electrically operated, 25,000A. inter. rating, enclosed with pull box and mechanical trip.

To control circuits, see Sheets 64 & 65. 5 18 1

To lighting panelboard - see Sheets 64, 66 and 67. 7 106 105 104

500 Kva transformer bank - 3 167 Kva OISC 7200/12470 Y volts - 480 volts equal to G.E. Type H.S. furn. & installed by Contr.

Current transformers, 10:1 ratio, 5000 Volt, by Toledo Edison Co.

40 Amp. fuse I-N

L1B L2B L3B — L1A L2A L3A — L1 L2 L3

2 3 4

15 Kv., 3 wire, #6 AWG feeders from manhole beyond Ramp X abutment in 3" conduit.

Potential transformers, 7200:120 V, with fuses, by Toledo Edison Co.

2 Element polyphase meter with metal Panel by Toledo Edison Co.

25-N A — Ammeter on control desk. 24

66-N 3 Inter. 2 Inter. 1 (1) (2) (3) (4)

25 27 28

70-N

Ammeter phase transfer switch on control desk.

31 30 29

3-N 41 40 39 38

10-N R G C.R. C.G. T.C. Close Trip

Breaker control switch on span control desk.

42 41

In near side transformer room, Room E.

NEAR SIDE FEEDER BREAKER

32 33 34

71-N Res. 35 90-N 34

36 33

Res. Res. 37 Res. 32

6 Amp. fuse

PHASE REVERSAL RELAY

Indicates near side source

3-750 MCM Type RWSN conductors in 4½" conduit

69-N F N 66 67 68 46-NA

400 Amp., 575 V., 4 PDT safety switch in Panel C, Room G, near side.

Polished Finish

46-NB

To near side bus. 300 MCM. 676 675 674

57-N 308 309

6A., 600 V, encl. fuse

79 79 79 79 79 79 79 79 17

200 Watt heaters in control cabinets in Room C.

200 Watt heater in control cabinet Room B.

Single heater in control desk.

CONDENSATION SPACE HEATERS

PART 3

TOLEDO EXPRESSWAY SYSTEM
MAUMEE RIVER BRIDGE
BR. NO. LU 120R-35
INCOMING POWER SECTION
TOLEDO LUCAS COUNTY, OHIO

SCALE No Scale
MADE G.J.C. DATE 8-5-52
TRCD W.H.S. DATE 4-29-53
CKD. D.M.P. DATE 9-24-53

HOWARD, NEEDLES, TAMMEN & BERGENDOFF
CONSULTING ENGINEERS
KANSAS CITY NEW YORK

810 SHEET 3.62

730

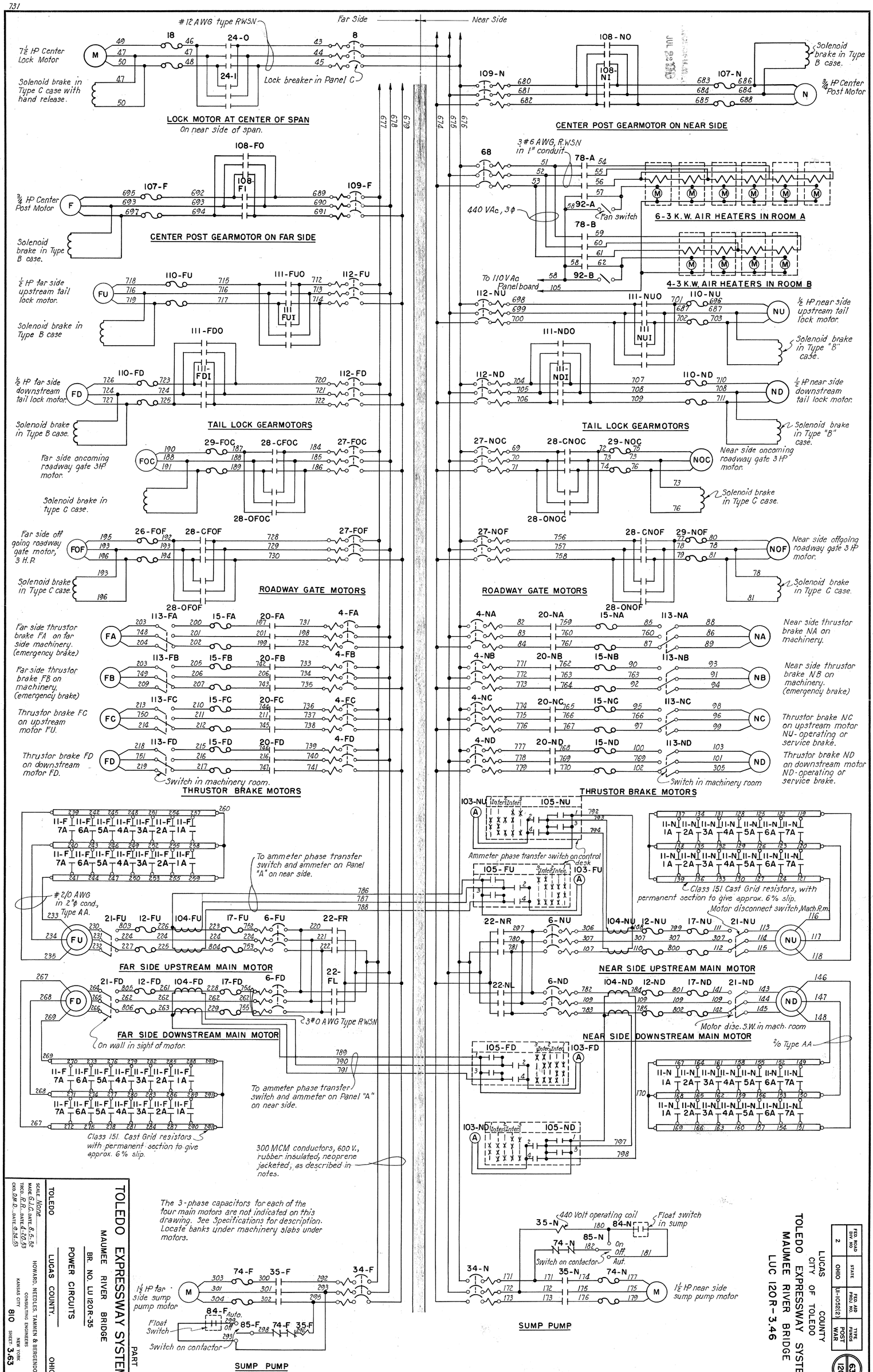

731
Far Side
Near Side
#12 AWG type RWSN
7½ HP Center Lock Motor
Solenoid brake in Type C case with hand release.
Lock breaker in Panel C
LOCK MOTOR AT CENTER OF SPAN
On near side of span.
Solenoid brake in Type B case.
¾ HP Center Post Motor
CENTER POST GEARMOTOR ON NEAR SIDE
3#6 AWG, RWSN in 1" conduit
440 VAc, 3φ
Fan switch
6-3 K.W. AIR HEATERS IN ROOM A
4-3 K.W. AIR HEATERS IN ROOM B
To 110 VAc Panel board
CENTER POST GEARMOTOR ON FAR SIDE
½ HP far side upstream tail lock motor.
½ HP near side upstream tail lock motor.
Solenoid brake in Type "B" case.
½ HP far side downstream tail lock motor.
½ HP near side downstream tail lock motor.
TAIL LOCK GEARMOTORS
Far side oncoming roadway gate 3HP motor.
Near side oncoming roadway gate 3 HP motor.
Solenoid brake in type C case.
Far side off going roadway gate motor, 3 H.P.
Near side offgoing roadway gate 3 HP motor.
ROADWAY GATE MOTORS
Far side thrustor brake FA on far side machinery. (emergency brake)
Near side thrustor brake NA on machinery.
Far side thrustor brake FB on machinery. (emergency brake)
Near side thrustor brake NB on machinery. (emergency brake)
Thrustor brake FC on upstream motor FU.
Thrustor brake NC on upstream motor NU-operating or service brake.
Thrustor brake FD on downstream motor FD.
Thrustor brake ND on downstream motor ND-operating or service brake.
Switch in machinery room.
THRUSTOR BRAKE MOTORS
Ammeter phase transfer switch on control desk
To ammeter phase transfer switch and ammeter on Panel "A" on near side.
#2/0 AWG in 2"φ cond., Type AA.
Class 151 Cast Grid resistors, with permanent section to give approx. 6% slip.
Motor disconnect switch, Mach. R.m.
FAR SIDE UPSTREAM MAIN MOTOR
NEAR SIDE UPSTREAM MAIN MOTOR
3#0 AWG Type RWSN
FAR SIDE DOWNSTREAM MAIN MOTOR
On wall in sight of motor.
NEAR SIDE DOWNSTREAM MAIN MOTOR
Motor disc. S.W. in mach. room
2/0 Type AA
To ammeter phase transfer switch and ammeter on Panel "A" on near side.
Class 151 Cast Grid resistors with permanent section to give approx. 6% slip.
300 MCM conductors, 600 V., rubber insulated, neoprene jacketed, as described in notes.
The 3-phase capacitors for each of the four main motors are not indicated on this drawing. See Specifications for description. Locate banks under machinery slabs under motors.
440 Volt operating coil
Float switch in sump
Switch on contactor
Aut.
1½ HP far side sump pump motor
1½ HP near side sump pump motor
Float Switch
Switch on contactor
SUMP PUMP
SUMP PUMP
TOLEDO EXPRESSWAY SYSTEM
MAUMEE RIVER BRIDGE
BR. NO. LU 120R-35
POWER CIRCUITS
TOLEDO
LUCAS COUNTY.
OHIO
PART 3
SCALE None
MADE G.J.C. DATE 8.5.52
TRCD. R.B. DATE 4-20-53
CKD. D.M.D. DATE 9.24.53
HOWARD, NEEDLES, TAMMEN & BERGENDOFF
CONSULTING ENGINEERS
KANSAS CITY NEW YORK
810
SHEET 3.63
LUCAS COUNTY
CITY OF TOLEDO
TOLEDO EXPRESSWAY SYSTEM
MAUMEE RIVER BRIDGE
LUC 120R-3.46
FED. ROAD DIV. NO. 2
STATE OHIO
FED. AID PROJ. NO. UI-1052(2)
TYPE FUNDS POST WAR
63
120

FED. ROAD DIV. NO	STATE	FED. AID PROJ. NO.	TYPE FUNDS
2	OHIO	UI-1052(2)	POST WAR

64
120

LUCAS COUNTY
CITY OF TOLEDO
TOLEDO EXPRESSWAY SYSTEM
MAUMEE RIVER BRIDGE
LUC 120R-3.46

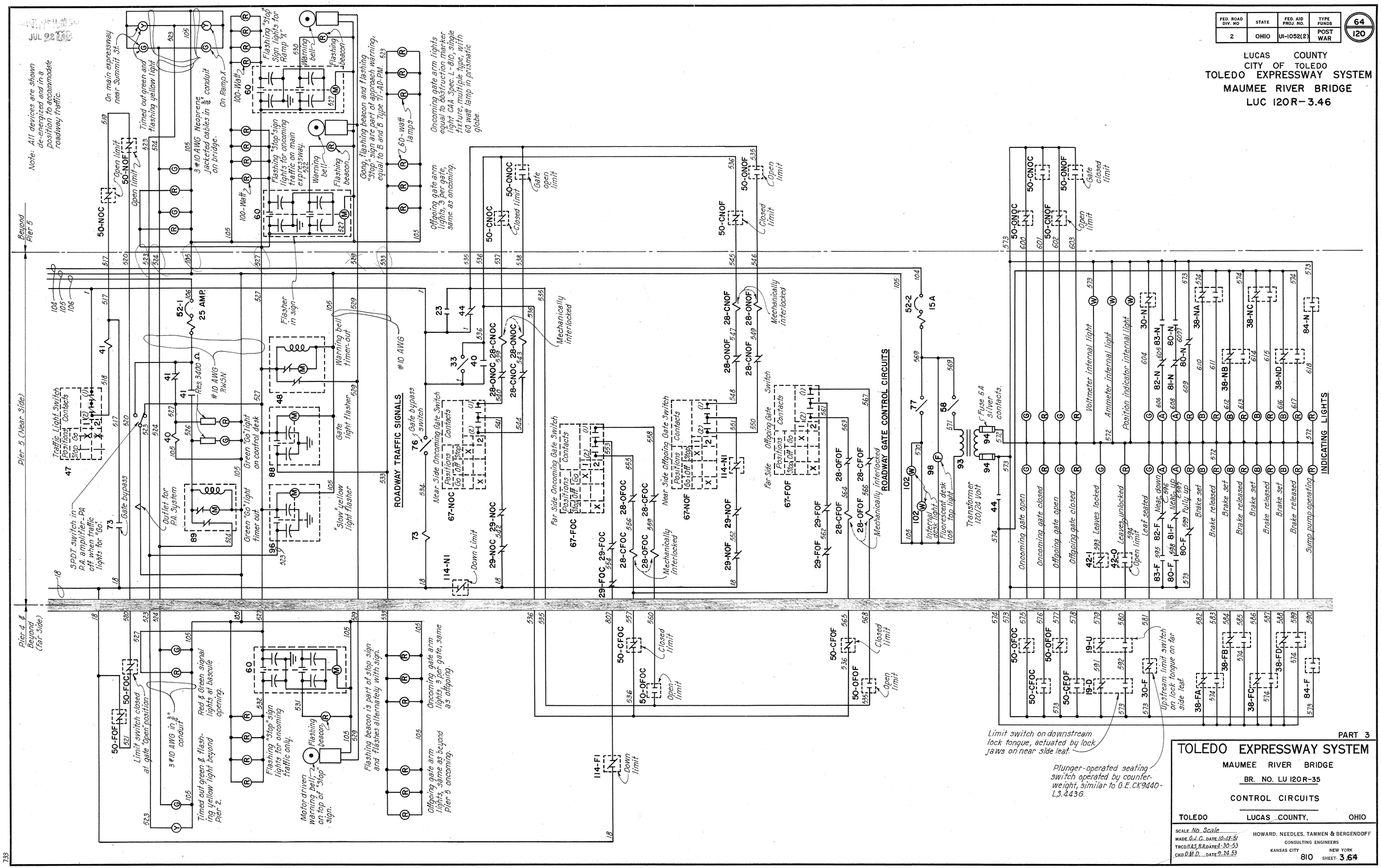

PART 3

TOLEDO EXPRESSWAY SYSTEM
MAUMEE RIVER BRIDGE
BR. NO. LU 120R-35
CONTROL CIRCUITS
TOLEDO LUCAS COUNTY, OHIO

SCALE No Scale
MADE G.J.C. DATE 10-13-51
TRCD H.A.S., R.R. DATE 4-30-53
CKD D.M.D. DATE 9.24.53

HOWARD, NEEDLES, TAMMEN & BERGENDOFF
CONSULTING ENGINEERS
KANSAS CITY NEW YORK
810 SHEET 3.64

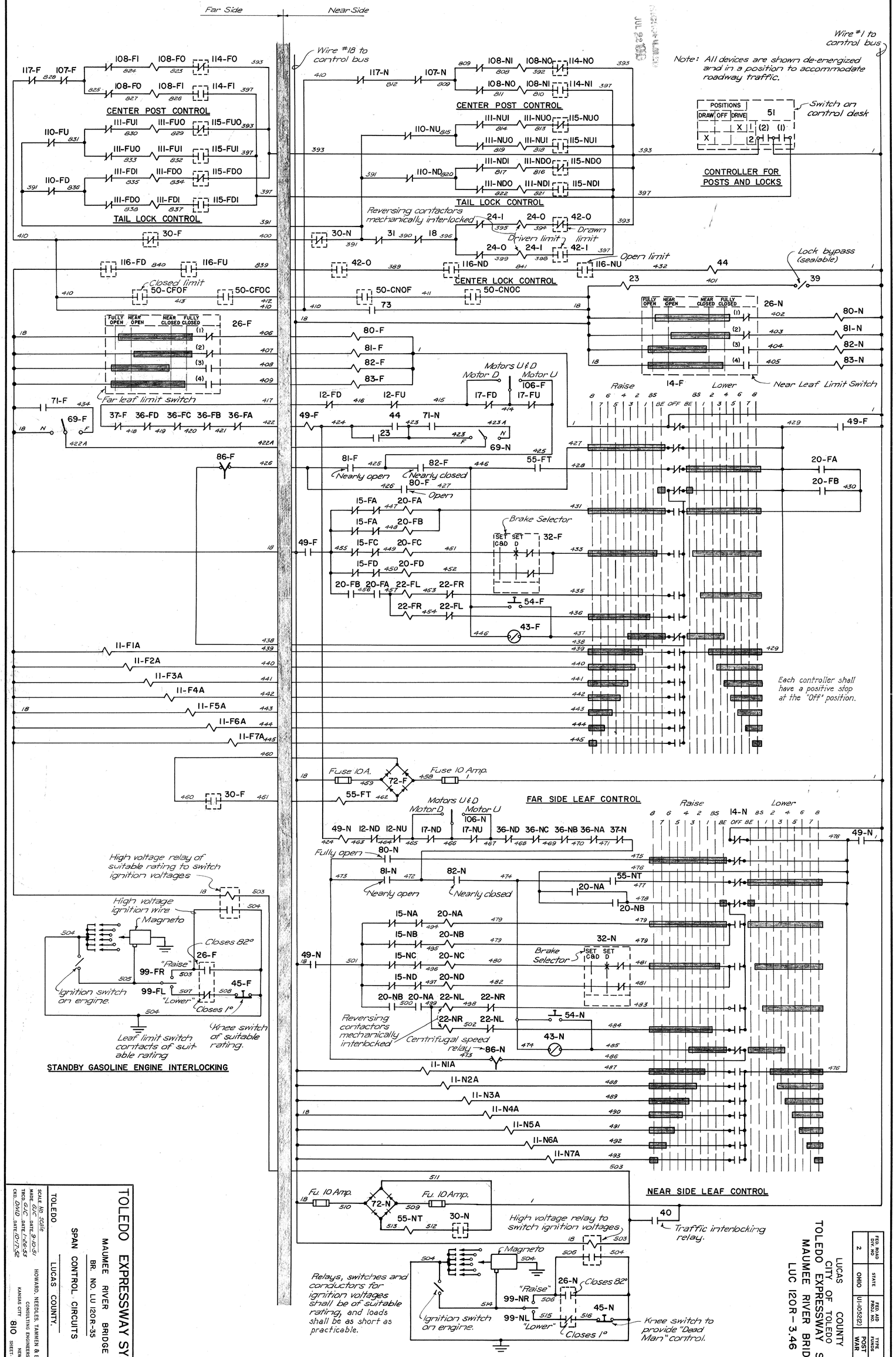
Far Side
Near Side
Wire #18 to control bus
Wire #1 to control bus
Note: All devices are shown de-energized and in a position to accommodate roadway traffic.
CENTER POST CONTROL
TAIL LOCK CONTROL
CENTER LOCK CONTROL
CONTROLLER FOR POSTS AND LOCKS
Switch on control desk
Reversing contactors mechanically interlocked
Driven limit
Drawn limit
Open limit
Closed limit
Lock bypass (sealable)
Far leaf limit switch
Near Leaf Limit Switch
Motors U & D
Motor D
Motor U
Raise
Lower
Nearly open
Nearly closed
Open
Brake Selector
Each controller shall have a positive stop at the "Off" position.
Fuse 10A.
Fuse 10 Amp.
FAR SIDE LEAF CONTROL
Fully open
Nearly open
Nearly closed
High voltage relay of suitable rating to switch ignition voltages
High voltage ignition wire
Magneto
Closes 82°
"Raise"
"Lower"
Closes 1°
Ignition switch on engine.
Leaf limit switch contacts of suitable rating
Knee switch of suitable rating.
STANDBY GASOLINE ENGINE INTERLOCKING
Reversing contactors mechanically interlocked
Centrifugal speed relay
NEAR SIDE LEAF CONTROL
Fu. 10 Amp.
Traffic interlocking relay.
Relays, switches and conductors for ignition voltages shall be of suitable rating, and loads shall be as short as practicable.
Knee switch to provide "Dead Man" control.
STANDBY GASOLINE ENGINE INTERLOCKING
TOLEDO EXPRESSWAY SYSTEM
MAUMEE RIVER BRIDGE
BR. NO. LU 120R-35
SPAN CONTROL CIRCUITS
TOLEDO LUCAS COUNTY, OHIO
SCALE No. scale
MADE GJC DATE 9-10-51
TRCD. GJC DATE 1-26-53
CKD. DMD DATE 10-17-52
HOWARD, NEEDLES, TAMMEN & BERGENDOFF
CONSULTING ENGINEERS
KANSAS CITY NEW YORK
810 SHEET 3.65
LUCAS COUNTY
CITY OF TOLEDO
TOLEDO EXPRESSWAY SYSTEM
MAUMEE RIVER BRIDGE
LUC 120R-3.46
FED. ROAD DIV. NO. 2
STATE OHIO
FED. AID PROJ. NO. UI-1052(2)
TYPE FUNDS POST WAR
65
120

FED. ROAD DIV. NO	STATE	FED. AID PROJ. NO.	TYPE FUNDS
2	OHIO	UI-1052(2)	POST WAR

66
120

LUCAS COUNTY
CITY OF TOLEDO
TOLEDO EXPRESSWAY SYSTEM
MAUMEE RIVER BRIDGE
LUC 120R-3.46

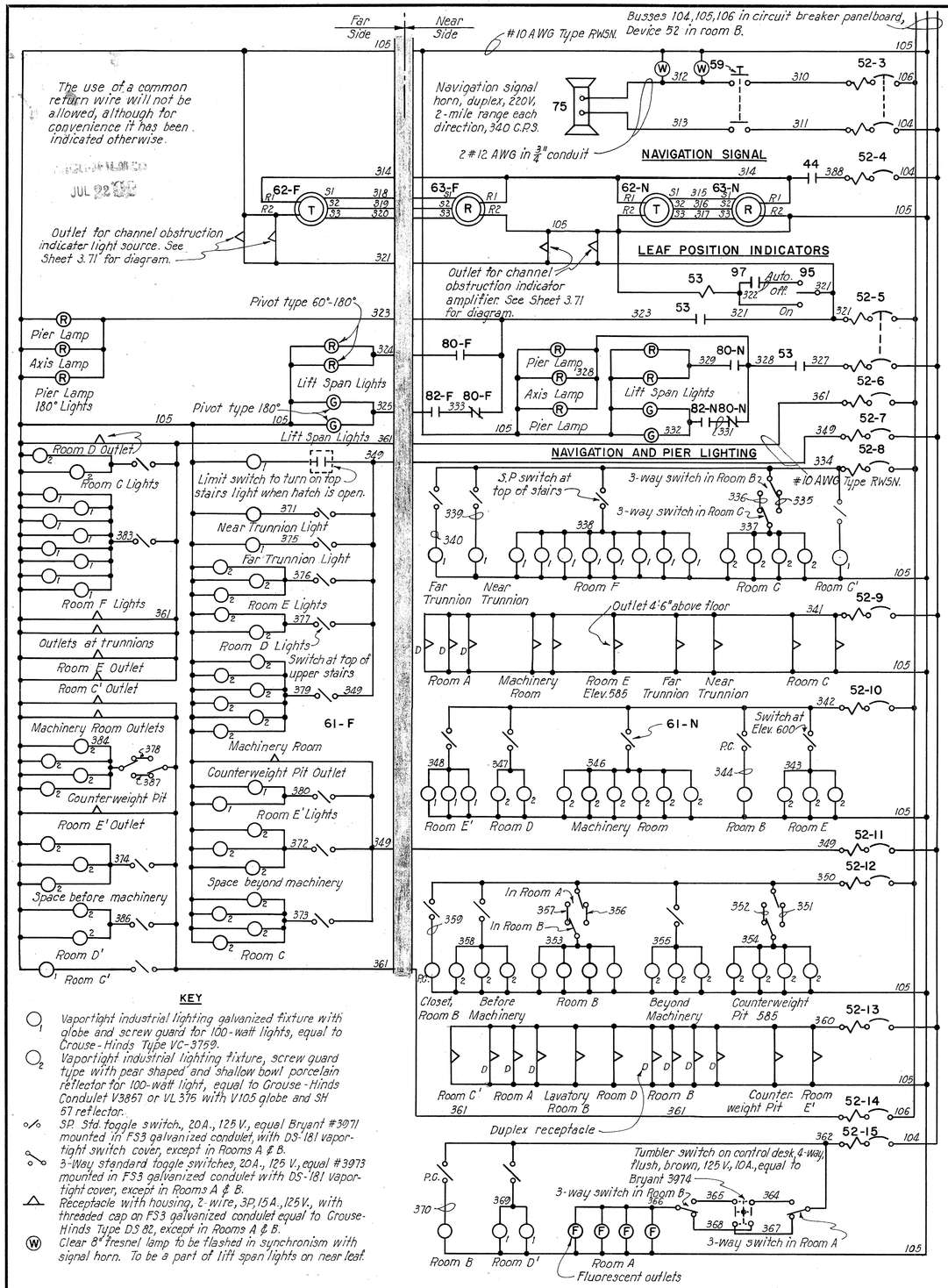

HOUSE AND INSIDE PIER LIGHTING

KEY

- ○1 Vaportight industrial lighting galvanized fixture with globe and screw guard for 100-watt lights, equal to Crouse-Hinds Type VC-3759.
- ○2 Vaportight industrial lighting fixture, screw guard type with pear shaped and shallow bowl porcelain reflector for 100-watt light, equal to Crouse-Hinds Condulet V3857 or VL 376 with V105 globe and SH 57 reflector.
- ○/○ S.P. Std. toggle switch., 20A., 125 V., equal Bryant #3971 mounted in F53 galvanized condulet, with DS-181 vaportight switch cover, except in Rooms A & B.
- ○/○/○ 3-Way standard toggle switches, 20A., 125 V., equal #3973 mounted in F53 galvanized condulet with DS-181 vaportight cover, except in Rooms A & B.
- △ Receptacle with housing, 2-wire, 3P, 15A., 125V., with threaded cap on F53 galvanized condulet equal to Crouse-Hinds Type DS 82, except in Rooms A & B.
- (W) Clear 8" fresnel lamp to be flashed in synchronism with signal horn. To be a part of lift span lights on near leaf.

734

LIST OF DEVICE NUMBERS

DEVICE	QUANTITY	DESCRIPTION AND SERVICE	SIMILAR TO MFR.	SIMILAR TO MFR. NO.	RATING VOLTS	RATING AMPS.	LOCATION
1	2	Fused interrupter switch, primary 100,000 Kva. I.R.	S&C.	PC3-CMC	15 KV.	400	E
2	1	Air circuit breaker, lighting and control, DPST, open	(T)	ATB-26070	600 V.	70	B
3	2	Air circuit breaker, secondary feeders, TP, 25,000 A.I.R.F.D.	G.E.	AK-1-25	600 V.	600	K
4	8	Air circuit breaker, span brake circuits, TPST	(T)	ATB-36025	600 V.	25	GD
5	1	Air circuit breaker, control circuit, DPST	(T)	AT-21050	250 V.	50	B
6	4	Air circuit breaker, main motor circuit, T.P., 25,000 A.I.R.	(T)	AT-38250	600 V.	250	GD
7	1	Air circuit breaker, lighting circuit, 2 P. 3 W.	(T)	AT-21050	250 V.	50	B
8	1	Air circuit breaker, lockmotor circuit, TPST	(T)	ATB-36035	600 V.	35	C
9	1	Disconnect switch, lighting & control, TPST, back conn.	F.A.	B 10330	500 V.	100	B
10	2	Control switch, secondary feeder breaker, SPDT	G.E.	Type 3B1	600 V.	10	AD
11	14	Contactor, accelerating, 4P, NEMA Size 4, open	G.E.	CR 2810	600 V.	200	GD
12	4	Overload relay, main motor, instantaneous, Trip 320A	G.E.	CR 2820-1043	600 V.	10	GD
13	2	Fused disconnect switch, lighting & control, D.P. end	(T)	# 72262	575 V.	60	K
14	2	Master switch, main motor, 18 circ., 12 pts. each direction	G.E.	CR 3012-3643	600 V.	20	A
15	16	Overload relay, main brakes, single element, hand reset	G.E.	CR 2824-41	600 V.	10	CD
16	2	Disconnect switch, 440 V. power, TPST, enclosed	(T)	# 36366	575 V.	600	K
17	4	Overload relay, main motor, instantaneous, Trip 200 A.	G.E.	CR 2820-1043	600 V.	10	CD
18	1	Overload relay, lock motor, thermal, double, Trip 17A.±	G.E.	CR 2824-2D	600 V.	25	G
19	4	Limit switch, push rod, lock tongue, NEMA Type 4	C.H.	Bul. 10316	600 V.	1.5	J
20	8	Contactor, span brakes, 4 P, Size 0, open	G.E.	CR 7006-D50	600 V.	15	CD
21	4	Disconnect switch, main motors, 3PST, unmounted	(T)	3926	500 V.	200	GL
22	2	Contactor, main motor, reversing, mech. int., TP, Size 5	G.E.	CR 2810	600 V.	300	CD
23	1	Relay, lock interlock bypass, DP, 2 N.O., Size 0	G.E.	CR 2810	600 V.	15	B
24	1	Contactor, lock motor, reversing, T.P., Size 1, mech. interlock.	G.E.	CR 7009-B51E	600 V.	25	G
25	2	AC Ammeter, line current, 0-1000 Amp. Scale, semi-flush	G.E.	AD-7	600 V.	5	AD
26	2	Limit switch, leaf position, traveling nut, watertight	G.E.	CR 9441-D1	600 V.	10	GL
27	4	Air circuit breaker, roadway gate, T.P.S.T., 50 Amp. frame	(T)	ATB-36035	600 V.	35	CD
28	4	Contactor, roadway, reversing, T.P. Size 1, mech. interlock.	G.E.	CR 7009-B51E	600 V.	25	CD
29	8	Overload relay, roadway, thermal, single, trip 6A.±	G.E.	CR 2824-41C	600 V.	25	CD
30	2	Limit switch, fully seated, WP, 2 N.O., spring buffer	W.R.S.	Model BV	600 V.	7	M
31	1	Limit switch center lock brake hand release, S.P., N.O.	G.E.	CR 9440-J1C	600 V.	7	H
32	2	Control switch, motor brakes, 2 P, 3-position	G.E.	Type SB-1	600 V.	20	A
33	1	Tumbler switch, traffic signal interlock bypass, sealable	(T)	2228 S	230 V.	30	A
34	2	Air circuit breaker, sump pump, T.P., 50A. Fr., enclosed	(T)	ATB-36015	600 V.	15	N
35	2	Contactor, sump pump, T.P., Size 0, enclosed	G.E.	CR7006-D50H	600 V.	15	N
36	8	Limit switch, brake hand release interlock, S.P., N.O.	G.E.	CR 9440-J1C	600 V.	7	GL
37	2	Limit switch, gas engine shift lever interlock, SP, N.O.	G.E.	CR 9440-J1C	600 V.	7	GL
38	8	Limit switch, span brake indicator lights, SPDT	G.E.	CR 9440-J1G	600 V.	7	GL
39	1	Tumbler switch, lock control bypass, sealable, S.P.	(T)	2228 S	230 V.	30	A
40	1	Relay, traffic signal interlocking, D.P, NO, Size 0	G.E.	CR 2810	600 V.	15	B
41	1	Contactor, changes traffic lights, 2 NO, 2 NC, Size 0	G.E.	CR 2810	600 V.	15	B
42	1	Limit switch, lock position, traveling nut, watertight	G.E.	CR 9441-D1	600 V.	10	H
43	2	Tumbler switch, leaf limit switch bypass, sealable	(T)	2228-S	230 V.	30	A
44	1	Relay, lock motor interlocking, 3 N.O., 2 N.C., Size 0	G.E.	CR 2810	600 V.	15	B
45	2	Push-button, knee operated, leaf limit bypass, S.P. N.C.	G.E.	NH101A	600 V.	10	GL
46	4	Air circuit breaker, pier bus, T.P., 25,000 A.I.R.	(T)	AT-38500	600 V.	500	CD
47	1	Control switch, traffic lights, desk type, pistol grip	G.E.	SB-1	600 V.	20	A
48	1	Relay, time-out warning bells, 2 min. adjustable, N.C.	G.E.	TSA10-75x620	115 V.	30	B
49	2	Contactor, undervoltage, 2 N.O., NEMA Size 0	G.E.	CR-2810	600 V.	15	G
50	4	Limit switch, roadway gate, traveling nut, watertight	G.E.	CR9441-D1	600 V.	10	FN
51	1	Control switch, lock motor control, 2 P, 3 position	G.E.	Type SB-1	600 V.	20	A
52	1	Panelboard, circuit breaker, lighting, 20 circ., 3-wire 3N	(T)	NAB 320AB	250 V.	15	N
53	1	Contactor, signal lighting, 2 NO., NEMA Size 0	G.E.	CR 2810	600 V.	15	B
54	2	Push button, knee operated, leaf limit bypass, S.P., N.O.	G.E.	NH101A	600 V.	10	A
55	2	Relay, time delay, seating power removal, NO,	G.E.	CR 2820-1054	600 V.	15	G
56	2	Thermostat, room heaters, 55°-90°, 1½°F diff., 3 P.	G.E.	CR 7865-Z1A	125 V.	4	N
57	4	Fuse holder, porcelain, cubicle heaters, W/ barriers, 3P	G.E.	180667	600 V.	30	CD
58	1	Tumbler switch, indicating lights, "Off-On", S.P.	(T)	22285	230 V.	30	A
59	1	Pushbutton, navigation signal horn, D.P, N.O. flush	G.E.	CR2940	230 V.	20	A
60	3	Flashing switch, motor driven, D.P., alternate, 24 per min.	T-O-M.	Mod. 1-61-A2	115 V.	25	O
61	2	Tumbler switch, machinery lights, "Off-On", D.P.	Bry.	3972	125 V.	10	A
62	2	Selsyn transmitter, leaf position, high accuracy, ± 1°	G.E.	2J55VA1	115 V.		GL
63	2	Selsyn receiver, leaf position, damped, high accuracy, ±1°	G.E.	2JD55VA1	115 V.		A
64	2	Control switch, voltmeter selector, 3 position-off	G.E.	Type 3B-1	600 V.	20	AD
65	2	A.C. Voltmeter, phase voltage, semi-flush, 0-600 VAc.	G.E.	AD-7	600 V.		AD
66	2	Control switch, ammeter circuit selector, 5-position	G.E.	Type 3B-1	600 V.	20	AD
67	4	Control switch, roadway gates, D.P., 3 position	G.E.	Type SB-1	600 V.	20	A
68	1	Air circuit breaker, room heater, 3PST, 50A. trip	(T)	ATB-36050	600 V.	50	G
69	2	Disconnect switch, leaf power 4 PST, unmounted	F.A.	640 340T	500 V.	400	CD
70	4	Current transformers, ammeter, dry, 120:1 ratio	G.E.	JY-285	5000 V.	600	K
71	2	Relay, open phase & phase reversal, S.P., with resistors	G.E.	1072 D6	600 V.	10	CD
72	8	Rectifiers, copper oxide, Time accelerating relays	G.E.	Mod. 6RG3	230 V.	1	GD
73	1	Relay, gate interlocking bypass, 3P, 2NO, Size 0	G.E.	CR-2810	600 V.	15	B
74	4	Overload relay, sump pump, thermal, single, trip 3A±	G.E.	CR2824-41C	600 V.	10	N
75	1	Air whistle, duplex, signal navigation, with compressor	Gun.	1EA-11B	220 V.	3	N
76	1	Tumbler switch, interlocking bypass, sealable	(T)	2228S	230 V.	30	A
77	1	Tumbler switch, inside control desk light, S.P.	(T)	2228S	230 V.	30	A
78	2	Contactor, room heaters, 4 P, NO., Size 2 open	G.E.	CR 2810	600 V.	50	C
79	10	Space heaters, condensation, chrome steel sheath, 200 W.	G.E.	ZA 400G2	230 V.	1	N
80	2	Relay, leaf fully open, T.P., 2 NO., INC, NEMA Size 0	G.E.	CR 2810	600 V.	15	C
81	2	Relay, leaf nearly open, T.P., 2 NO., INC., NEMA Size 0	G.E.	CR 2810	600 V.	15	C
82	2	Relay, leaf nearly closed, T.P., 2 NO., INC., NEMA Size 0	G.E.	CR 2810	600 V.	15	C
83	2	Relay, leaf fully closed, T.P., 2 NO., INC., NEMA Size 0	G.E.	CR 2810	600 V.	15	C
84	2	Float switch, sump pump, D.P., chain oper., 5" response, encl.	G.E.	CR 2931-L	550 V.	15	N
85	2	Selector switch, sump pump, hand-off-auto., SPDT	G.E.	CR 2943U101C	600 V.	3	N
86	2	Centrifugal governor, zone speed control, S.P. double break	C.H.	Bul. 14979	250 V.	2.5	GL
87	2	Electric storage battery, 3-cells, 17 plate, 115 Amp.-hr.	G.Y.	Y117	6 V	135	GL
88	1	Flashing switch, gate lights, S.P., 24 per. min., Off-On	T-O-M	Mod. 1-6101	115 V.	25	B
89	1	Relay, time-out green traffic lights, 5 min., N.C. adj.	G.E.	TSA10-75x652	115 V.	30	B
90	6	Fuseholder, phase reversal relay, S.P. with barriers	G.E.	180667	600 V.	30	CD
91	6	Fuseholder, instrument, voltmeter, S.P. with barriers	G.E.	111381	600 V.	1.8	K
92	2	Tumbler switch, fan motors, S.P., "Off-On"	(T)	22283	230 V.	30	N
93	1	Transformer, step down, indicating lights, 110/24, 150VA	G.E.	71G88	24 V.	6	A
94	1	Fuseholder, indicating lights transformer, D.P. barriers	G.E.	34367	250 V.	30	A
95	1	Selector switch, navigation lights, on-off-auto, DPDT	G.E.	CR2943-U109B	600 V.	3	A
96	1	Flashing switch, yellow lights, S.P. Off-On, 24 per min.	T-O-M.	Mod. 1-6101	115 V.	25	B
97	1	Time switch, navigation lights, astronomic, carryover, D.P.	San.	V3W-21	120 V.	35	B
98	1	Fluorescent lamp, control desk top, 2-15 watt lamps, H.P.F	Daz.	R2124-16	110 V.		A
99	4	Limit switch, gasoline engine reversing, S.P. spring ret.	G.E.	CR 9440-J1G	600 V.	7	GL
100	2	Tumbler switch, room heaters, "Off-On", 3P, flush	(T)	2228 S	250 V	30	N
101	2	Battery charger, trickle, CuO, ammeter, 3 cells, variable	G.E.	6RC98A1	6-7.5	1.0	GL
102	2	Lampholder, internal desk light, medium base, exposed	G.E.	50715	250 V.	6	A
103	4	A.C. Ammeter, motor current, 0-400 Amp. Scale, flush	G.E.	AB-18-541X17	600 V.	5	A
104	8	Current transformers, ammeter, dry, 40:1 ratio	G.E.	JY-285	5000 V.	200	C
105	4	Control switch, ammeter circuit selector, 5-position	G.E.	Type SB-1	600 V.	20	A
106	2	Selector switch, overload, 3-position, SPDT	G.E.	CR 2943U101C	600 V.	3	A
107	4	Overload relay, center post, thermal	G.E.	CR 2824-41C	600 V.	10	GD
108	2	Contactor, center post, reversing T.P. Size 1	G.E.	CR 7009-B51E	600 V.	25	CD
109	2	Air circuit breaker, center post, T.P.	(T)	ATB-36025	600 V.	25	CD
110	8	Overload relay, tail lock, thermal	G.E.	CR 2824-41C	600 V.	10	GD
111	4	Contactor, tail lock, reversing, T.P., Size 1	G.E.	CR-7009-B51E	600 V.	25	CD
112	4	Air circuit breaker, tail lock, T.P.	(T)	ATB-36025	600 V.	25	CD
113	8	Disconnect switch, span brakes, back conn.	F.A.	B 10330	500 V.	100	GL
114	2	Limit switch, center post, traveling nut, water tight	G.E.	CR 9441-D1	600 V.	10	N
115	4	Limit switch, tail lock, maint. contact, forked lever	W.H.	438 K	600 V.	10	N
116	4	Limit switch, tail lock position indicating	W.H.	L3	600 V.	7	N
117	2	Limit switch, center post brake hand release, D.P.	G.E.	CR 9440-J1C	600 V.	7	F

MANUFACTURER KEY

G.E. General Electric Co.	Bry. Bryant Electric Co.
(T) Trumbull	T-O-M. Time-O-Matic
F.A. Frank Adam	Gun. Cunningham-Doran Co.
C.H. Cutler-Hammer	San. Sangamo Elect. Co.
W.R.S. Western Railroad Supply	G.Y. Good Year
W.H. Westinghouse	Daz. Dazor Mfg. Co.

LOCATION KEY

A. Control Desk, Room A	H. Leaf, Near Side
B. Panel "B", Room B	J. Leaf, Far Side
C. Panel "C", Room C, Near Side	K. Transformer Room
D. Panel "D", Room C, Far Side	L. Span Machinery, Far Side
E. Switchgear Room	M. Near tail locks.
F. Roadway Gates	N. Shown on plans.
G. Span Machinery, Near Side	O. Stop signs.

PART 3

TOLEDO EXPRESSWAY SYSTEM

MAUMEE RIVER BRIDGE
BR. NO. LU 120R-35

ELECTRICAL DEVICES

TOLEDO — LUCAS COUNTY, — OHIO

SCALE No Scale
MADE G.J.C. DATE 11-3-52
TRCD H.A.S., R.P. DATE 4-23-53
CKD. O.M.P. DATE 9-24-53

HOWARD, NEEDLES, TAMMEN & BERGENDOFF
CONSULTING ENGINEERS
KANSAS CITY NEW YORK

810 SHEET 3.66

RECEIVED
JUL 29 1953

FED. ROAD DIV. NO	STATE	FED. AID PROJ. NO.	TYPE FUNDS
2	OHIO	UI-1052(2)	POST WAR

67
120

LUCAS COUNTY
CITY OF TOLEDO
TOLEDO EXPRESSWAY SYSTEM
MAUMEE RIVER BRIDGE
LUC 120R-3.46

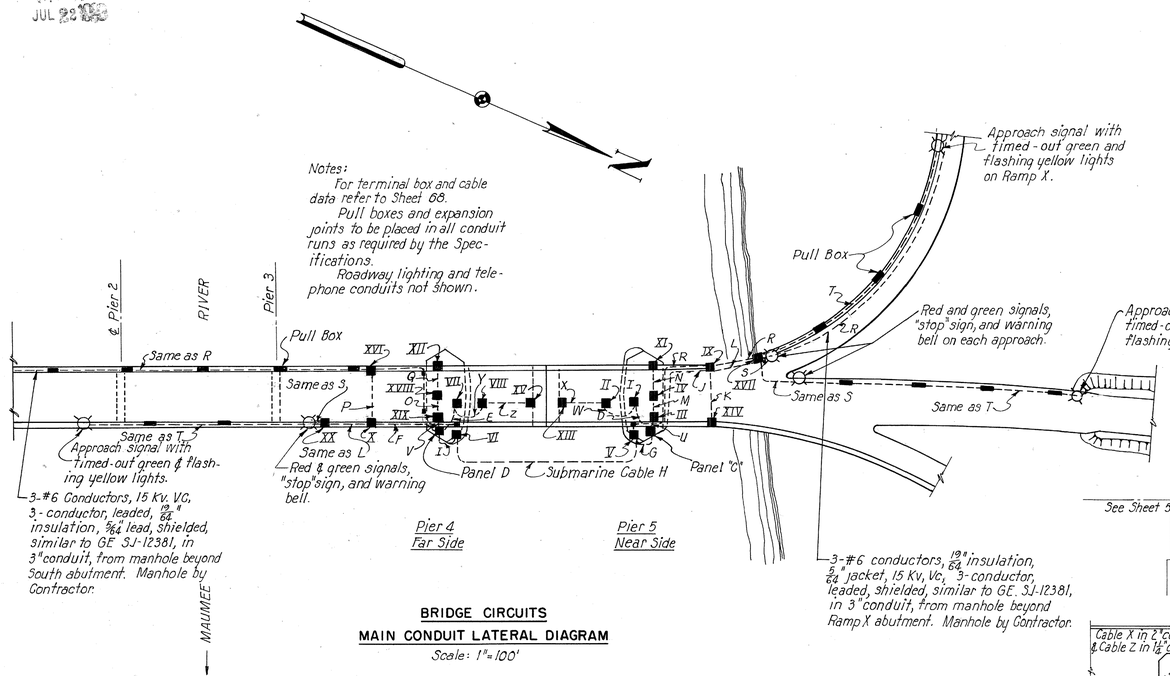

Notes:
For terminal box and cable data refer to Sheet 68.
Pull boxes and expansion joints to be placed in all conduit runs as required by the Specifications.
Roadway lighting and telephone conduits not shown.

BRIDGE CIRCUITS
MAIN CONDUIT LATERAL DIAGRAM
Scale: 1"=100'

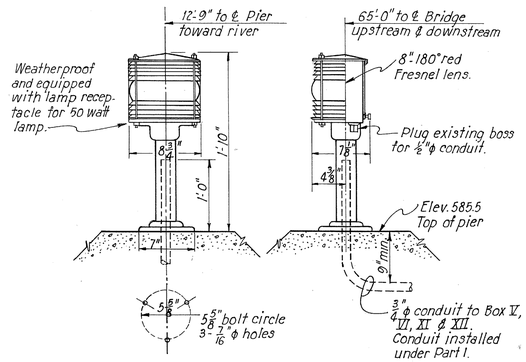

180° PIER LAMP
No Scale
4 Reqd

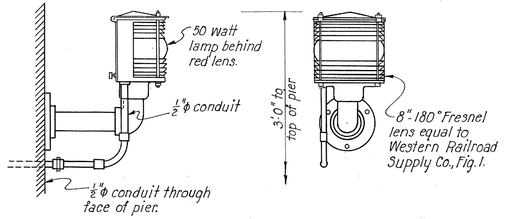

AXIS LAMP
No Scale
2 Reqd

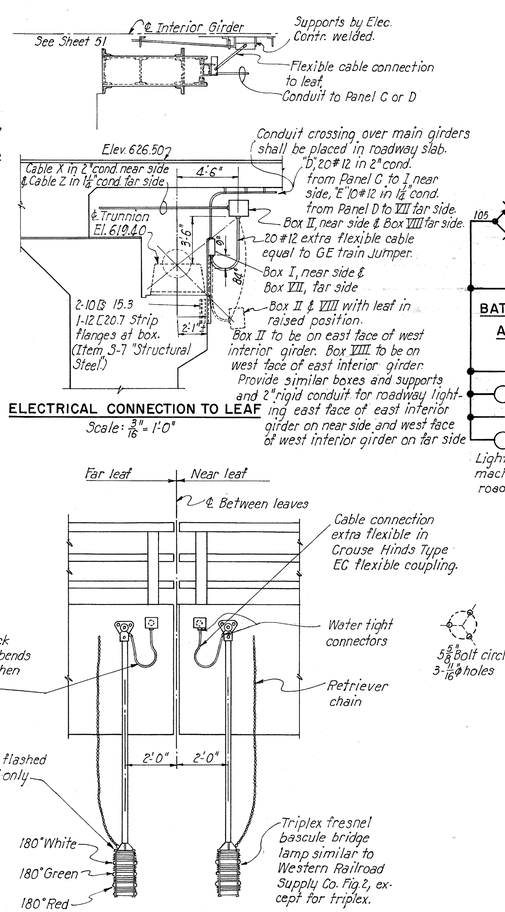

ELECTRICAL CONNECTION TO LEAF
Scale: 3/16" = 1'-0"

BASCULE SPAN CLEARANCE LIGHTS
(Up and Down Stream)
Scale: 3/8" = 1'-0"

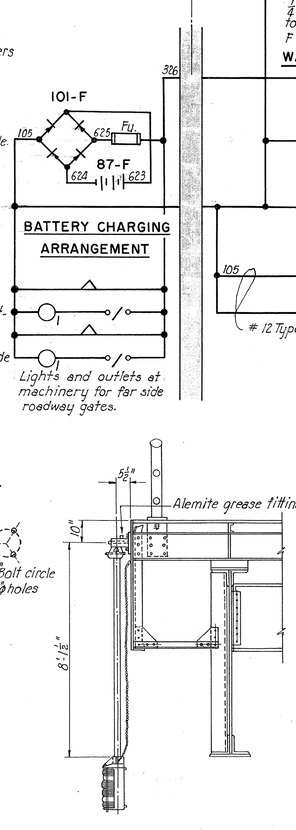

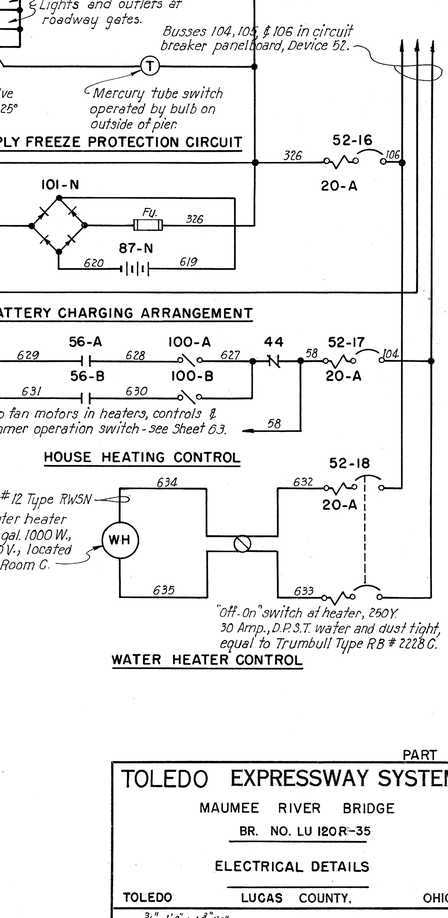

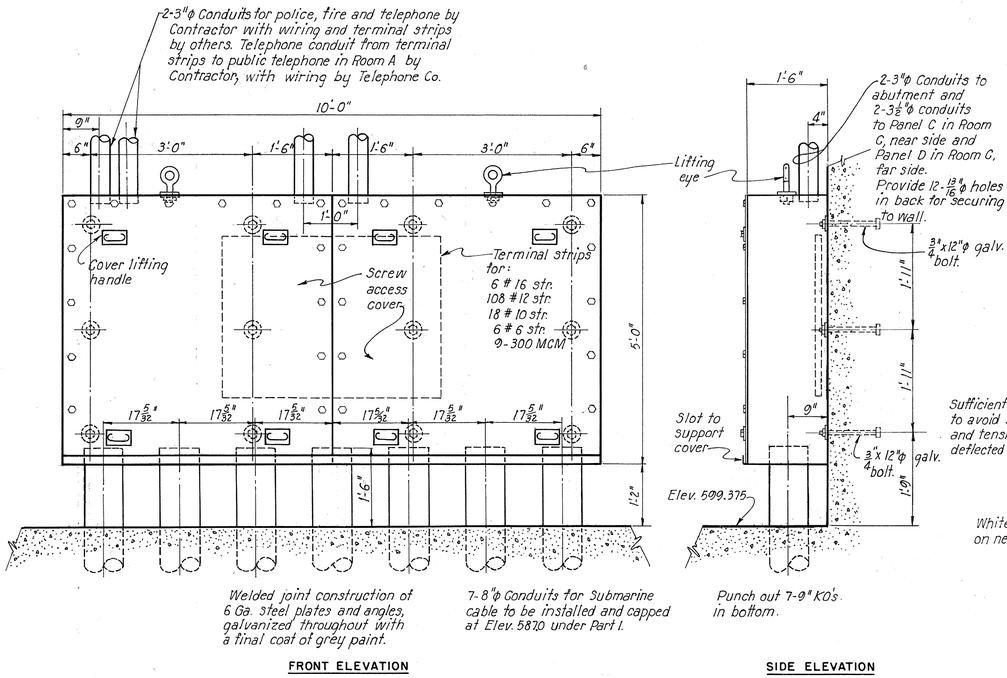

SUBMARINE CABLE SPLICE BOX IN ROOM D
Scale: 3/4" = 1'-0"
(2 Reqd.)

PART 3

TOLEDO EXPRESSWAY SYSTEM
MAUMEE RIVER BRIDGE
BR. NO. LU 120R-35
ELECTRICAL DETAILS
TOLEDO LUCAS COUNTY, OHIO

SCALE 3/4" = 1'-0" and 1" = 1'-0"
MADE G.J.C. DATE 12-14-51
TRCD. R.R. DATE 9-27-53
CKD. D.M.D. DATE 9-24-53

HOWARD, NEEDLES, TAMMEN & BERGENDOFF
CONSULTING ENGINEERS
KANSAS CITY NEW YORK

810 SHEET 3.67

736

ARCHIVED
JUL 28 1993

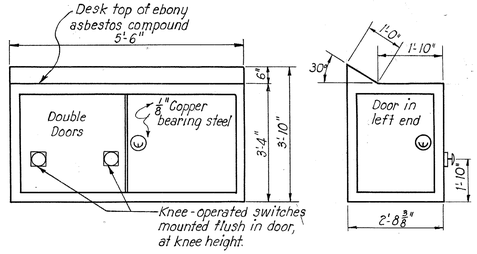

FRONT ELEVATION

SIDE ELEVATION

Scale: 1/2" = 1'-0"

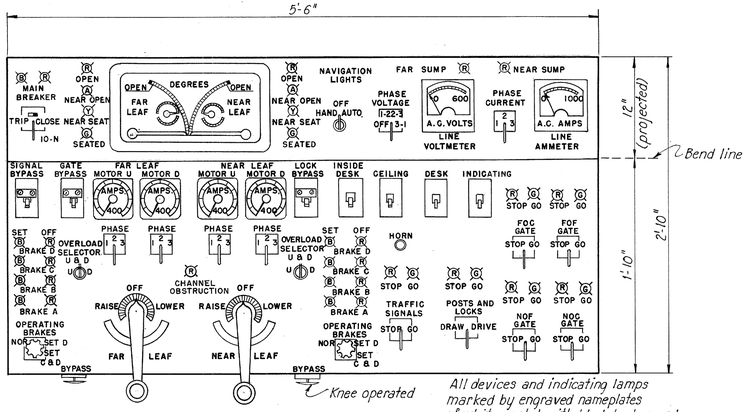

PLAN

Scale: 1 1/2" = 1'-0"

CONTROL DESK

All devices and indicating lamps marked by engraved nameplates of white metal with black background.

Indicating lamps shall be equal to G.E. Type ET-5 with 24 volt T-2 bulbs for #902 and color caps.

MAIN CABLES						
NO.	FROM	TO	TYPE	NO. CONDUCTORS *USED	NO. CONDUCTORS *FURN.	SIZES IN AWG OR MCM
A	Transformer Room	Panel C in N.S. Room C	4½" conduit	16	20	14#12; 3#4; 3-750 MCM
B	Panel C in N.S. Room C	Panel B in Room B	4-2½" conduits	172	182	2#16; 168#12; 3#10; 3#4; 6#6
C	Panel B in Room B	Control Desk in Room A	3-3" conduits	160	170	2#16; 165#12; 3#6
D	Panel C in N.S. Room C	Terminal Box I	2" conduit	20	20	#12
E	Panel D in F.S. Room C	Terminal Box VII	1¼" conduit	7	10	#12
F	Panel D in F.S. Room C	Terminal Box X	3" conduit	38	48	45#12; 3#10
G	Panel C in N.S. Room C	Terminal Box V	2-3½" conduits	97	109	4#16; 83#12; 12#10; 4#6; 6-300 MCM
H	Terminal Box V	Terminal Box VI	Submarine	97	147	6#16; 108#12; 18#10; 6#6; 9-300 MCM
I	Terminal Box VI	Panel D in F.S. Room C	2-3½" conduits	97	109	4#16; 83#12; 12#10; 4#6; 6-300 MCM
J	Panel C in near Room C	Terminal Box IX	3" conduit	38	48	45#12; 3#10
K	Terminal Box IX	Terminal Box XIV	2½" conduit	27	37	#12
L	Terminal Box IX	Terminal Box XVII	1¼" conduit	5	10	4#12; 6#10
M	Terminal Box III	Terminal Box IV	3-3" conduits	72	82	2#16; 68#12, 6-1/0, 6-2/0
N	Terminal Box IV	Terminal Box XI	2" conduit	12	20	#12
O	Terminal Box XIX	Terminal Box XVIII	3-3" conduits	72	82	2#16; 68#12; 6-1/0; 6-2/0
P	Terminal Box X	Terminal Box XVI	2½" conduit	27	37	#12
Q	Terminal Box XVIII	Terminal Box XII	2" conduit	12	20	#12
R	T.E. Co. service	Switchgear in Room D	3" conduit	3	3	#6 AWG; 15 Kilovolt ⊙
S	Stop signal, Ramp X	Terminal Box XVII	1" conduit	4	6	#12
T	Approach signal, Ramp X	Terminal Box XVII	1" conduit	3	5	#10
U	Panel C in near Room C	Terminal Box III	3-3" conduits	72	82	2-#16; 68#12; 6-1/0; 6-2/0
V	Panel D in far Room D	Terminal Box XIX	3-3" conduits	72	82	2#16, 68#12; 6-1/0; 6-2/0
W	Terminal Box I	Terminal Box II	Extra flexible	20	20	#12 (train jumper cable)
X	Terminal Box II	Terminal Box XIII	2" conduit	20	20	#12
Y	Terminal Box VII	Terminal Box VIII	Extra flexible	7	20	#12 (train jumper cable)
Z	Terminal Box VIII	Terminal Box XV	1¼" conduit	7	10	#12

In flexible conduit similar to Crouse-Hinds Type EC flexible coupling.

Note: Contractor shall allow spare wires in all conduit runs as indicated.

⊙ Two cables - one from beyond each abutment to respective bascule pier.
*The difference between "Used" and "Furnished" is spare conductors.

FED. ROAD DIV. NO.	STATE	FED. AID PROJ. NO.	TYPE FUNDS
2	OHIO	UI-1052(2)	POST WAR

68
120

LUCAS COUNTY
CITY OF TOLEDO
TOLEDO EXPRESSWAY SYSTEM
MAUMEE RIVER BRIDGE
LUC 120R-3.46

See description of make up in three 49 conductor cables with one as spare.

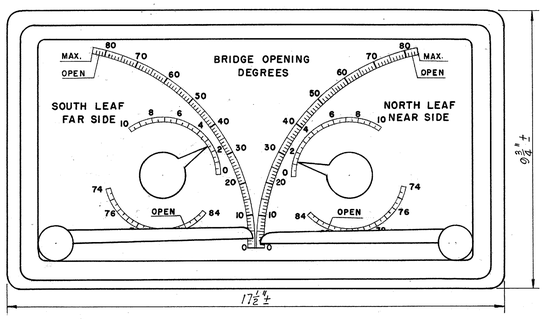

SPAN POSITION INDICATOR

No Scale

Span position indicator shall be internally illuminated and each selsyn receiver with directly connected vernier dial arm shall turn 1036 degrees for leaf travel of 84° maximum. A 14:1 step down internal gear shall operate the indicator arm through 74°± with the face calibrated to read 84° maximum.

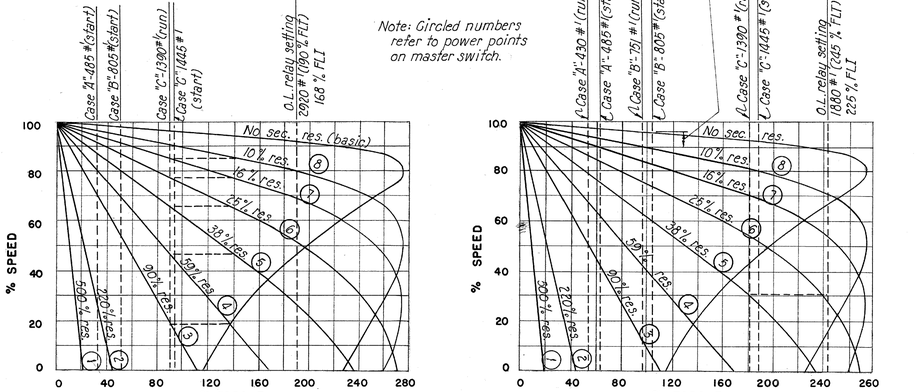

NORMAL OPERATION

Note: Circled numbers refer to power points on master switch.

APPROXIMATE SPEED-TORQUE CURVES

EMERGENCY OPERATION

Note: Circled numbers refer to power points on master switch.

SPEED-TORQUE CURVES

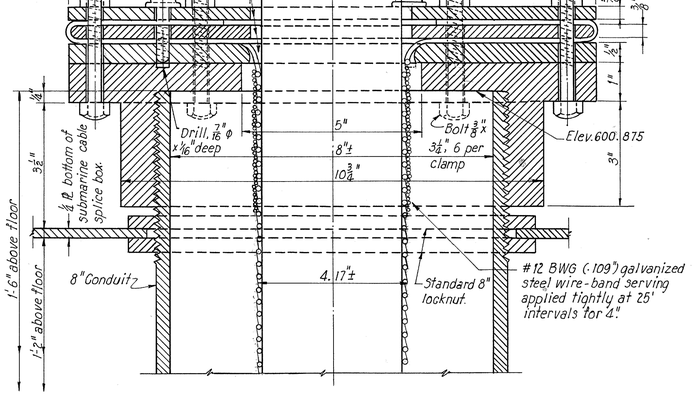

Type RLJWJ, 49-conductor (3 cables req'd.) submarine cable for 600 volt service, 3-9-15-21 lay-up with 3-300 MCM, 3/64" insul., 5/64" jacket, 2 #6 conductors, 4/64" insul, 2/64" jacket, 6 #10 conductors with 3/64" insul., 36 #12, 3/64" insul, 5/64" jacket, 2 #16 tel. jacketed twisted pair, 3/64" insul., 1/64" sheath. Each conductor shall be stranded, with single braid, color coded and cabled together with treated jute fillers, rubber filled tape, 3/64" lead sheath, 5/64" inch asphalted jute bedding, #4 BWG (.238") galvanized steel wire armor and asphalt compound with jute serving over all. Insulation shall be equivalent to Okolite and sheath shall be equivalent to Okoprene as manufactured by the Okonite Co., Passaic, N.J.

SUBMARINE CABLE SUPPORT CLAMP

Scale: Half size
(6 Required)

TERMINAL BOXES							
NO.	LOCATION	INSIDE DIMENSIONS A	B	C	D	THICK-NESS	TERMINAL CAPACITY
I	At connection to near side leaf - on pier	18"	14"	6"	6"	10 Ga.	20 #12.
II	At connection to near side leaf - on leaf	18"	14"	6"	6"	10 Ga.	20 #12.
III	Room E, near side pier	26"	24"	9"	6"	8 Ga.	70 #12; 6-1/0; 6-2/0
IV	Machinery room, near side	26"	24"	24"	24"	8 Ga.	70 #12; 6-1/0; 6-2/0. ⊘
V	Near side submarine cable splice box	120"	60"	18"	18"	6 Ga.	128 #12; 9#10; 9-1/0
VI	Far side submarine cable splice box	120"	60"	18"	18"	6 Ga.	128 #12; 9#10; 9-1/0
VII	At connection to far side leaf - on pier	18"	14"	6"	6"	10 Ga.	20 #12
VIII	At connection to far side leaf - on leaf	18"	14"	6"	6"	10 Ga.	20 #12
IX	Near side oncoming roadway gate	20"	16"	6"	3"	8 Ga.	45 #12; 3#10
X	Far side oncoming roadway gate	20"	16"	6"	3"	8 Ga.	45 #12; 3 #10
XI	Sump pump room, near side	16"	16"	6"	6"	10 Ga.	20 #12
XII	Sump pump room, far side	16"	16"	6"	6"	10 Ga.	20 #12
XIII	Center-lock mechanism, near side leaf	18"	14"	6"	3"	10 Ga.	20 #12
XIV	Near side offgoing roadway gate	16"	16"	6"	3"	10 Ga.	37 #12
XV	At center-lock tongues, far side leaf	12"	12"	6"	3"	10 Ga.	10 #12
XVI	Far side offgoing roadway gate	16"	16"	6"	3"	10 Ga.	37 #12
XVII	Near side oncoming traffic "stop" signals	12"	12"	6"	6"	10 Ga.	4 #12, 6 #10
XVIII	Machinery room in far side pier	26"	24"	24"	24"	8 Ga.	70 #12, 6-1/0; 6-2/0 ⊘
XIX	Room E in far side pier	26"	24"	9"	6"	8 Ga.	70 #12; 6-1/0; 6-2/0
XX	Far side oncoming traffic "stop" signals	12"	12"	6"	6"	10 Ga.	4 #12; 6 #10

Notes: All wires of each individual circuit shall be located in the same conduit, cable or metal enclosure. Submarine cable shall be arranged so that on failure of one cable only one motor will be out until all connections can be transferred to the spare. All lighting circuits shall be in spare submarine cable.

⊘ Two boxes required at approximately same location, one for each side of machinery frame.

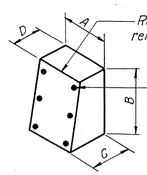

TERMINAL BOX

Conductors shall be connected to terminal boards with solderless pressure connectors and marking strips. #8 AWG and smaller shall be connected to G.E. Type EB-2 terminal boards or equal.

PART 3

TOLEDO EXPRESSWAY SYSTEM
MAUMEE RIVER BRIDGE
BR. NO. LU 120R-35

ELECTRICAL DETAILS

TOLEDO LUCAS COUNTY, OHIO

SCALE 1 1/2" 1" 3/4" = 1'-0" & 1:2
MADE G.J.O. DATE 12-14-61
TRCD. A.R. DATE 4-23-53
CKD. D.M.D. DATE 9-24-53

HOWARD, NEEDLES, TAMMEN & BERGENDOFF
CONSULTING ENGINEERS
KANSAS CITY NEW YORK

810 SHEET 3.68

735

MICROFILMED
JUL 22 1953

FED. ROAD DIV. NO	STATE	FED. AID PROJ. NO.	TYPE FUNDS
2	OHIO	UI-1052(2)	POST WAR

69
120

LUCAS COUNTY
CITY OF TOLEDO
TOLEDO EXPRESSWAY SYSTEM
MAUMEE RIVER BRIDGE
LUC 120R-3.46

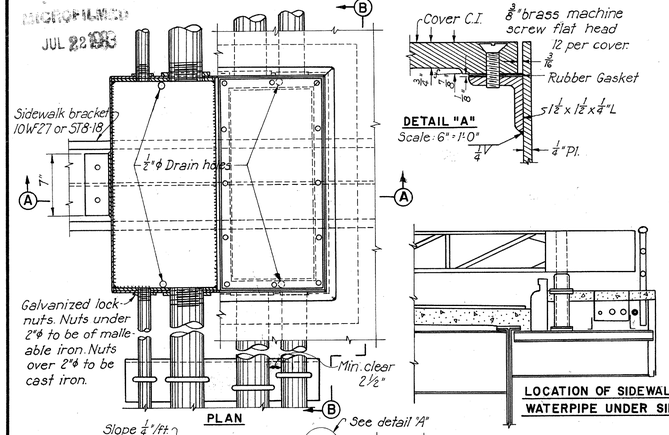

PLAN

DETAIL "A"
Scale: 6" = 1'-0"

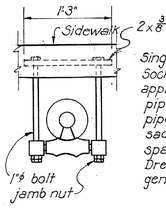

Single Pipe Roll with Special Sockets, Crane No. 1715-G or approved equal, suitable for pipe covering specified, with pipe covering protection saddles. Supports to be spaced as required for Dresser couplings specified, generally 20 ft. ctrs.

WATER PIPE SUPPORTS
Scale: 1"=1'0"

LOCATION OF SIDEWALK BOX AND WATERPIPE UNDER SIDEWALK

Note:
Size of sidewalk boxes and location and number of holes for conduits to be determined by Contractor.

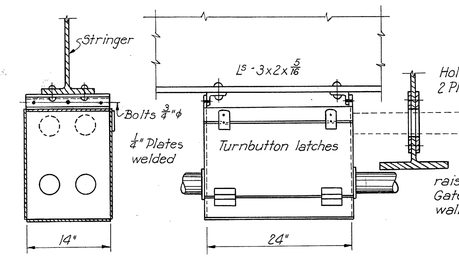

PULL BOX FOR POLICE, FIRE AND TELEPHONE CONDUITS
for conduits north of Pier 5.
Scale: 1"=1'0"

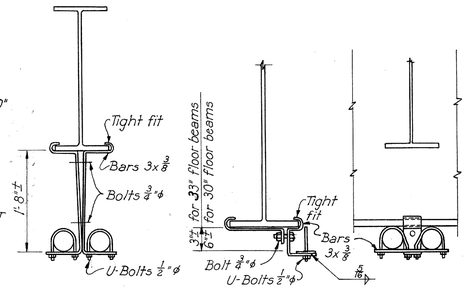

AT STRINGERS AT FLOORBEAMS

HANGERS FOR POLICE, FIRE AND TELEPHONE CONDUITS
for Conduits north of Pier 5.
Scale: 1"=1'0"

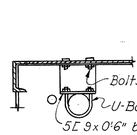

Support for roadway lighting conduit between floorbeams. Supports to be spaced equally between floorbeams, spaces not to exceed 5 feet.

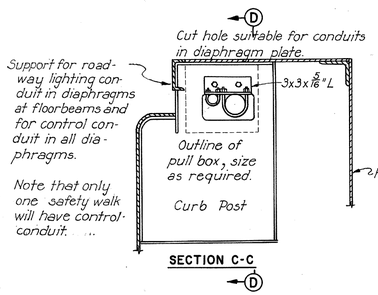

SECTION C-C

SIDEWALK BOX AND SUPPORTS UNDER SAFETY WALK
Scale: 1"=1'0"

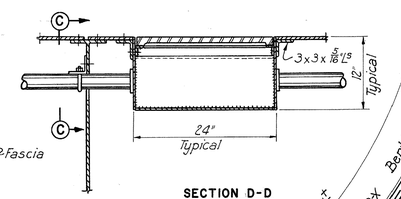

SECTION D-D

Note: Except for differences in length and width of box, details to be same as shown for box under concrete sidewalk.

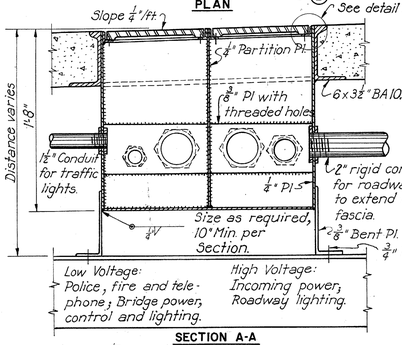

SECTION A-A

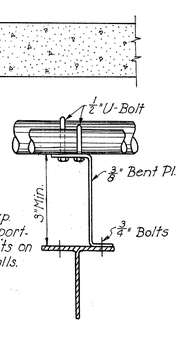

SECTION B-B

Use ½" Exp. bolts supporting conduits on concrete walls.

SIDEWALK BOX UNDER CONCRETE SIDEWALK
Scale: 1½"=1'0"

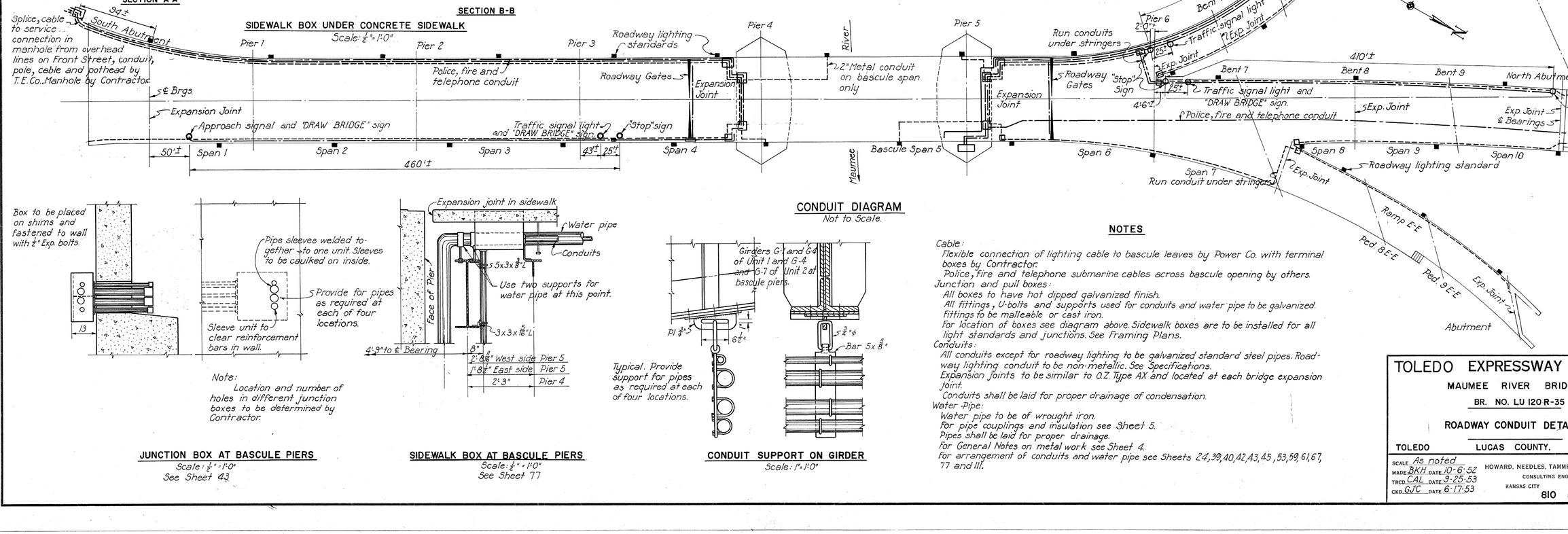

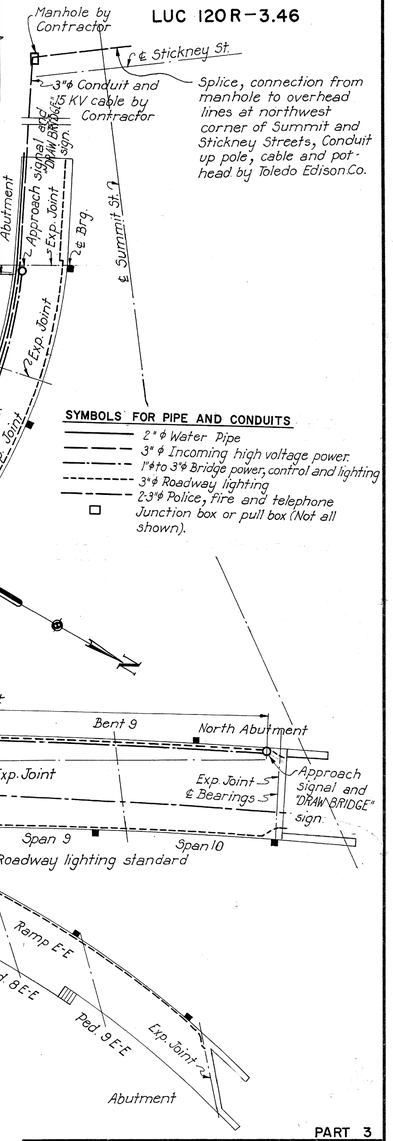

SYMBOLS FOR PIPE AND CONDUITS
- 2"ϕ Water Pipe
- 3"ϕ Incoming high voltage power.
- 1"ϕ to 3"ϕ Bridge power, control and lighting
- 3"ϕ Roadway lighting
- 2-3"ϕ Police, fire and telephone
- □ Junction box or pull box (Not all shown).

Note:
Location and number of holes in different junction boxes to be determined by Contractor.

JUNCTION BOX AT BASCULE PIERS
Scale: ½"=1'0"
See Sheet 43

SIDEWALK BOX AT BASCULE PIERS
Scale: ½"=1'0"
See Sheet 77

CONDUIT DIAGRAM
Not to Scale.

CONDUIT SUPPORT ON GIRDER
Scale: 1"=1'0"

NOTES

Cable:
Flexible connection of lighting cable to bascule leaves by Power Co. with terminal boxes by Contractor.
Police, fire and telephone submarine cables across bascule opening by others.

Junction and pull boxes:
All boxes to have hot dipped galvanized finish.
All fittings, U-bolts and supports used for conduits and water pipe to be galvanized.
fittings to be malleable or cast iron.
for location of boxes see diagram above. Sidewalk boxes are to be installed for all light standards and junctions. See Framing Plans.

Conduits:
All conduits except for roadway lighting to be galvanized standard steel pipes. Roadway lighting conduit to be non-metallic. See Specifications.
Expansion joints to be similar to O.Z. Type AX and located at each bridge expansion joint.
Conduits shall be laid for proper drainage of condensation.

Water Pipe:
Water pipe to be of wrought iron.
for pipe couplings and insulation see Sheet 5.
Pipes shall be laid for proper drainage.
for General Notes on metal work see Sheet 4.
for arrangement of conduits and water pipe see Sheets 24, 39, 40, 42, 43, 45, 53, 59, 61, 67, 77 and 111.

PART 3

TOLEDO EXPRESSWAY SYSTEM
MAUMEE RIVER BRIDGE
BR. NO. LU 120R-35

ROADWAY CONDUIT DETAILS

TOLEDO LUCAS COUNTY, OHIO

SCALE As noted
MADE BKH DATE 10-6-52
TRCD CAL DATE 9-25-53
CKD GJC DATE 6-17-53

HOWARD, NEEDLES, TAMMEN & BERGENDOFF
CONSULTING ENGINEERS
KANSAS CITY NEW YORK
SHEET 3.69

739

FED. ROAD DIV. NO	STATE	FED. AID PROJ. NO.	TYPE FUNDS
2	OHIO	UI-1052(2)	POST WAR

LUCAS COUNTY
CITY OF TOLEDO
TOLEDO EXPRESSWAY SYSTEM
MAUMEE RIVER BRIDGE
LUC 120R-3.46

JUL 22

NORMAL OPERATING PROCEDURE

TO OPEN SPAN:

1. ONE DISTINCT BLAST FROM A VESSEL SIGNIFIES THAT A BRIDGE OPENING IS REQUIRED.

2. SET TRAFFIC SIGNALS AGAINST VEHICULAR AND PEDESTRIAN MOVEMENT ACROSS THE SPAN BY TURNING TRAFFIC SIGNALS SWITCH, DEVICE 47 TO "STOP".

3. SIGNAL VESSEL WITH ONE LONG SIGNAL BY SIGNAL HORN PUSHBUTTON, DEVICE 59, IF THE SPAN WILL BE OPENED IMMEDIATELY, OR WITH FOUR SHORT DISTINCT BLASTS IF A DELAY IS NECESSARY DUE TO A TRAFFIC JAM, ACCIDENT, OR OTHER CAUSE.

4. TURN ON INDICATING LIGHTS BY SWITCH, DEVICE 58.

5. WHEN ONCOMING TRAFFIC HAS STOPPED, CLOSE ONCOMING ROADWAY GATES WITH ONCOMING GATE CONTROL SWITCHES, DEVICES 67-NOC AND 67-FOC.

6. WHEN ONCOMING GATES ARE CLOSED IN PLACE AND IT IS OBSERVED THAT TRAFFIC IS CLEAR OF OFFGOING GATES, CLOSE OFFGOING GATES WITH SWITCHES, DEVICES 67-NOF AND 67-FOF.

7. OBSERVE THAT NO VEHICLES OR PEDESTRIANS ARE BETWEEN GATES AND TURN SPAN LOCKS AND CENTER POST SWITCH HANDLE, DEVICE 51, ON TO "DRAW" AND OBSERVE INDICATING LIGHTS AS FOLLOWS:

	COLOR	INDICATION
TRAFFIC SIGNALS	RED	SIGNALS AGAINST TRAFFIC
ONCOMING GATES	RED	GATES CLOSED
OFFGOING GATES	RED	GATES CLOSED
SPAN LOCKS AND CENTER POSTS *	RED	LEAVES UNLOCKED & CENTER POSTS UP
BRAKES	BLUE	BRAKES APPLIED
LEAVES	GREEN	LEAVES SEATED

* SPAN LOCKS INCLUDE CENTER LOCKS AND TAIL LOCKS.

8. MOVE THE FAR LEAF MASTER SWITCH CONTROLLER HANDLE, DEVICE 14-F, IN THE "RAISE" DIRECTION, PASSING THROUGH BRAKE POINTS BE AND BS, SUCCESSIVELY RELEASING EMERGENCY (MACHINERY) BRAKES AND OPERATING (MOTOR) BRAKES. OBSERVE THAT BRAKE LIGHTS CHANGE FROM BLUE TO RED, INDICATING FULLY RELEASED POSITIONS.

9. MOVE ON TO POINT 1, "RAISE", AND THEN MOVE HANDLE SLOWLY THROUGH SUCCESSIVE POINTS "RAISE", INCREASING SPEED AS DESIRED UP TO FINAL POWER POINT 8.

10. REPEAT OPERATION TO START NEAR LEAF TO MAXIMUM SPEED OF UPWARD TRAVEL.

11. OBSERVE LIGHTS AFTER LEAVES HAVE RISEN FROM THE SEATED POSITION:

	COLOR	INDICATION
TRAFFIC SIGNALS	RED	SIGNALS AGAINST TRAFFIC
ONCOMING GATES	RED	GATES CLOSED
OFFGOING GATES	RED	GATES CLOSED
SPAN LOCKS AND CENTER POSTS	RED	LEAVES UNLOCKED & CENTER POSTS UP
BRAKES	RED	BRAKES RELEASED
LEAVES	OUT	LEAVES BETWEEN NEARLY OPEN AND NEARLY CLOSED

12. AS THE FAR LEAF APPROACHES ABOUT 75 DEGREES, AS OBSERVED ON THE FAR LEAF INDICATOR, RETURN CONTROLLER HANDLES OF BOTH LEAVES TO THE POWER POINT 3, "RAISE", REDUCING SPEED OF BOTH LEAVES.

13. DEPRESS THE KNEE SWITCH, DEVICE 54-F OF THE FAR LEAF AND RETURN THE MASTER SWITCH HANDLE, DEVICE 14-F TO A LOWER SPEED POINT AS REQUIRED TO HAVE THE LEAF SLOWED AS IT APPROACHES "OPEN" POSITION OF 82 DEGREES. RETURN HANDLE SLOWLY THROUGH SUCCESSIVE POINTS BS, BE AND "OFF", THEREBY APPLYING BRAKES IN SUCCESSION TO STOP LEAF. POWER IS AUTOMATICALLY CUT OFF THE MOTORS AND ALL BRAKES APPLIED AT 82 DEGREES.

14. DEPRESS THE KNEE SWITCH, DEVICE 54-N OF THE NEAR LEAF AND REPEAT OPERATION USED TO BRING FAR LEAF TO "OPEN" POSITION.

TO CLOSE SPAN:

15. MOVE NEAR LEAF CONTROLLER HANDLE IN "LOWER" DIRECTION, PASSING THROUGH BRAKE POINTS, RELEASING BRAKES, OBSERVING THAT BRAKE INDICATING LIGHTS TURN FROM BLUE TO RED. SEE THAT CHANNEL OBSTRUCTION LIGHT IS NOT ON.

16. MOVE MASTER SWITCH HANDLE, DEVICE 14-N, TO POWER POINT 1 AND THEN SLOWLY TO SUCCESSIVE POINTS, "LOWER", INCREASING SPEED.

17. REPEAT OPERATION TO START FAR LEAF TO DOWNWARD TRAVEL SPEED.

18. AS THE NEAR LEAF REACHES ABOUT 7 DEGREES AS OBSERVED ON THE NEAR LEAF POSITION INDICATOR, DEVICE 63-N, RETURN CONTROLLER HANDLES OF BOTH LEAVES TO THE POWER POINT 3, "LOWER", REDUCING SPEED OF BOTH LEAVES.

19. BEFORE THE NEAR LEAF REACHES THE "NEARLY CLOSED" POSITION, 5 DEGREES, DEPRESS THE KNEE SWITCH, DEVICE 54-N, OF THE NEAR LEAF AND RETURN THE MASTER SWITCH HANDLE, DEVICE 14-N, TO A LOWER SPEED POINT AS REQUIRED TO CONTROL SPEED OF THE LEAF, TO PREVENT EXCESSIVE JAR IN SEATING.

20. AFTER SEATING NEAR LEAF, MOMENTARILY KEEP POWER APPLIED TO THE LEAF UNTIL BRAKE INDICATORS TURN BLUE TO SHOW THAT BRAKES HAVE AUTOMATICALLY APPLIED. POWER IS AUTOMATICALLY CUT OFF AT THE SAME TIME. RETURN HANDLE THROUGH SUCCESSIVE POINTS BS AND BE TO "OFF".

21. DEPRESS THE FAR LEAF KNEE SWITCH, DEVICE 54-F, AND REPEAT THE OPERATION USED TO SEAT THE NEAR LEAF.

22. AFTER BOTH SETS OF INDICATING LIGHTS INDICATE EACH LEAF IS IN THE SEATED POSITION, TURN LOCK AND CENTER POST MASTER SWITCH HANDLE ON CONTROL DESK TO "DRIVE", DEVICE 51, AND OBSERVE THE INDICATOR LIGHTS AS FOLLOWS:

	COLOR	INDICATION
TRAFFIC SIGNALS	RED	SIGNALS AGAINST TRAFFIC
ONCOMING GATES	RED	GATES CLOSED
OFFGOING GATES	RED	GATES CLOSED
SPAN LOCKS AND CENTER POSTS	GREEN	LEAVES LOCKED AND CENTER POSTS DOWN
BRAKES	OUT	LEAVES LOCKED
LEAVES	GREEN	LEAVES SEATED

23. OPEN ONCOMING AND OFFGOING GATES SIMULTANEOUSLY BY DEVICES 67-FOF, 67-NOF, 67-FOC AND 67-NOC. LIMIT SWITCH ACTION WILL AUTOMATICALLY STOP THEM AT THE OPEN POSITIONS.

24. WHEN ALL GATES ARE AT OPEN LIMITS, SET TRAFFIC SIGNALS TO "GO" BY DEVICES 47, AND OBSERVE INDICATOR LIGHTS AS FOLLOWS:

	COLOR	INDICATION
TRAFFIC SIGNALS	GREEN	SIGNALS FOR TRAFFIC
ONCOMING GATES	GREEN	GATES OPEN
OFFGOING GATES	GREEN	GATES OPEN
SPAN LOCKS AND CENTER POSTS	GREEN	LEAVES LOCKED AND CENTER POSTS DOWN
BRAKES	OUT	LEAVES LOCKED
LEAVES	GREEN	LEAVES SEATED
SUMP PUMP	OUT	NORMAL - NOT OPERATING

NOTES: BRAKE INDICATING LIGHTS OPERATE ONLY AFTER SPAN IS UNLOCKED.

AUXILIARY OPERATION FROM OTHER SOURCE

TO CHANGE FROM ONE POWER SOURCE TO THE OTHER IT IS NECESSARY TO MANUALLY CHANGE THE LIGHTING AND CONTROL BUS TRANSFER SWITCH IN TRANSFORMER ROOM IN NEAR PIER TO THE OTHER SOURCE AND BUS TRANSFER SWITCHES, DEVICES 69-N AND 69-F IN NEAR SIDE ROOM C AND FAR SIDE ROOM C TO THE OTHER SOURCE. THE OPERATION OF THE CONTROLS REMAINS UNCHANGED.

STANDBY OPERATION WITH GASOLINE ENGINES

IN THE EVENT OF AN ELECTRICAL FAILURE THE LEAVES CAN BE OPERATED BY GASOLINE ENGINES MOUNTED IN THE MACHINERY ROOMS. IT IS NECESSARY TO MANUALLY OPERATE GATES, TAIL LOCKS AND CENTER LOCKS, AND TO RELEASE ELECTRIC BRAKES BY HAND OF THE LEAF TO BE OPENED.

IMMEDIATELY CALL FOR TWO ADDITIONAL OPERATORS TO BE ON DUTY UNTIL ELECTRICAL OPERATION IS RESTORED FOR BOTH LEAVES.

TO OPEN SPAN:

1. ONE DISTINCT BLAST OF A SIGNAL HORN OR WHISTLE FROM A VESSEL IS GIVEN WHEN A BRIDGE OPENING IS REQUIRED.

2. SET TRAFFIC SIGNALS AGAINST MOVEMENT ACROSS THE SPAN, IF POWER IS AVAILABLE.

3. SIGNAL VESSEL THAT A DELAY IS NECESSARY BY SOUNDING FOUR SHORT DISTINCT BLASTS OF THE SIGNAL HORN IF ELECTRICAL POWER IS AVAILABLE OR BY SWINGING A LANTERN AT NIGHT OR FLAG IN DAY TO AND FRO.

4. ONE MAN SHALL CLOSE THE NEAR SIDE GATES AND THE OTHER SHALL CLOSE THE FAR SIDE GATES. CLOSE ONCOMING GATES BY FIRST UNSCREWING TWO PINS IN THE TOP OF EACH GATE BY THE WRENCH PROVIDED. AFTER CLOSING GATES FASTEN TOGETHER BY A LINK PROVIDED ON ONE.

5. ONE MAN GO TO THE FAR SIDE MACHINERY ROOM DISENGAGE TAIL LOCKS (TWO) BY REMOVING PIN FROM CRANK END OF CONNECTING ROD AND DRAWING BEAM BACK FROM GIRDER BEFORE RAISING LEAF WITH GASOLINE ENGINE.

6. THE OTHER MAN GO TO THE CENTER LOCKS UNDER THE ROADWAY AT THE CENTER OF THE SPAN. RELEASE THE MOTOR BRAKE, WITHDRAW THE BRIDGE LOCKS BY MEANS OF THE HAND CRANK. RESET THE BRAKE AFTER WITHDRAWAL OF LOCKS.

7. GO TO THE NEAR SIDE MACHINERY ROOM AND DISENGAGE TAIL LOCKS (TWO) BEFORE RAISING WITH THE GASOLINE ENGINE.

8. ASCERTAIN THAT THE REVERSING CLUTCH UNIT OF THE GASOLINE ENGINE IS IN NEUTRAL.

9. TURN ON THE GASOLINE ENGINE IGNITION SWITCH.

10. RETARD SPARK AND START THE ENGINE WITH THE STARTER BUTTON, ADJUSTING THE THROTTLE AND ADVANCING THE SPARK LEVER TO PERMIT THE ENGINE TO IDLE AND WARM UP.

11. PLACE PINION SHIFT LEVER ON THE CENTRAL GEAR FRAME IN THE "GASOLINE" POSITION.

12. THE MAN IN EACH MACHINERY ROOM MUST CHECK BY TELEPHONE THAT THE ROADWAY IS CLEAR AND THAT THE CENTER LOCKS AND FOUR TAIL LOCKS HAVE BEEN WITHDRAWN BEFORE HE ATTEMPTS TO RAISE HIS LEAF.

13. RELEASE THREE ELECTRIC BRAKES OF EACH LEAF BY THEIR RELEASE LEVERS AND LOCK IN PLACE AND RELEASE THE FOURTH BRAKE WITH THE HAND LEVER AT THE ENGINE.

14. RAISE LEAF BY CAREFULLY MOVING REVERSING CLUTCH TO "RAISE" POSITION, AND AT THE SAME TIME ACCELERATING THE ENGINE WITH THE THROTTLE TO GRADUALLY ENGAGE THE CLUTCH AND SPEED UP THE LEAF MOVEMENT.

15. JUST AS THE LEAF REACHES THE OPEN POSITION OF ABOUT 82 DEGREES AS SHOWN BY THE POSITION INDICATING SCALE ON THE GIRDER, DISENGAGE THE REVERSING CLUTCH AND THROTTLE DOWN THE ENGINE AS IT IS RELIEVED OF ITS LOAD.

16. SET THE LEVER-OPERATED MOTOR BRAKE AS THE ENGINE IS DISENGAGED. (IN A HIGH WIND SET THE OTHER MOTOR BRAKE).

TO CLOSE SPAN:

17. OBSERVE OR ASCERTAIN BY TELEPHONE WITH THE OPERATOR IN THE CONTROL ROOM THAT NO VESSELS WILL APPROACH DESCENDING LEAVES.

18. RELEASE THE LEVER-OPERATED MOTOR BRAKE.

19. LOWER LEAF BY MOVING THE REVERSING CLUTCH TO "LOWER" POSITION CAREFULLY, AND AT THE SAME TIME ACCELERATING ENGINE WITH THE THROTTLE TO GRADUALLY ENGAGE AND SPEED UP THE LEAF MOVEMENT. A FLASHING CHANNEL OBSTRUCTION LIGHT AT LEAF POSITION INDICATOR INDICATES THAT A BOAT IS PASSING AND THE LEAF SHOULD BE STOPPED.

20. AS THE LEAF APPROACHES "NEARLY CLOSED", DEPRESS THE KNEE SWITCH, DEVICE 45-N OR DEVICE 45-F, OF THE RESPECTIVE SPAN.

21. AS SEATING IS APPROACHED, RETARD THE ENGINE SPEED. USE THE CLUTCH AND THE MOTOR BRAKE WITH ITS HAND LEVER FOR SQUEEZING THE LEAF INTO THEIR SEATED POSITIONS AS SHOWN BY THE POSITION INDICATING SCALE.

22. SHUT OFF THE GASOLINE ENGINE IGNITION.

23. SET THE THREE REMAINING ELECTRIC BRAKES.

24. PLACE PINION SHIFT LEVER ON THE CENTRAL GEAR FRAME IN THE "ELECTRIC" POSITION IF IT IS ANTICIPATED ELECTRIC OPERATION WILL BE RESTORED BEFORE THE NEXT OPERATION.

25. ONE MAN GO TO THE CENTER LOCKS AND DRIVE LOCKS WITH THE HAND CRANK AFTER RELEASING MOTOR BRAKE. RESET THE BRAKE AFTER THE LOCKS ARE DRIVEN. REPLACE CRANK ON ITS CLAMP.

26. ONE MAN OPEN THE FAR SIDE GATES AND THE OTHER MAN OPEN THE NEAR SIDE GATES. OPEN THE OFFGOING GATES FIRST AFTER UNLATCHING GATES. AFTER OPENING EACH GATE SCREW TWO PINS IN THE TOP TO RE-ENGAGE TO MACHINERY.

27. SIGNAL TRAFFIC TO PROCEED OVER THE SPAN BY CHANGING TRAFFIC SWITCH, DEVICE 47, TO "GO" IF POWER IS AVAILABLE.

RELAY ACTION AND INTERLOCKING FUNCTIONS

THE FOLLOWING DESCRIPTION FOLLOWS THE ELEMENTARY WIRING DIAGRAM, WHICH SHOWS ALL DEVICES DE-ENERGIZED AND IN A POSITION CORRESPONDING TO THE TRAFFIC SIGNALS CLEARED FOR ACCOMMODATING ROADWAY AND SIDEWALK TRAFFIC ACROSS THE BRIDGE.

TO OPEN SPAN:

1. WHEN TRAFFIC SIGNALS ARE SET TO STOP TRAFFIC OVER THE BRIDGE, THE BRIDGE CONTROL RELAY, DEVICE 40, IS ENERGIZED. THIS PERMITS CURRENT TO BE APPLIED TO THE GATE MOTOR CLOSING CONTACTORS, DEVICES 28-CNOC, 28-CFOC, 28-CNOF AND 28-CFOF, WHEN GATE SWITCHES, DEVICES 67-NOC, 67-FOC, 67-NOF AND 67-FOF ARE TURNED TO "STOP".

2. AS THE GATES CLOSED, GATE "CLOSED" LIMIT SWITCHES, DEVICES 50-CNOC, 50-CFOC, 50-CNOF AND 50-CFOF WERE ACTUATED, STOPPING THE GATE DRIVING MOTORS AND APPLYING BRAKES, AND CLOSING LOCK MOTOR CONTROL CIRCUIT MAKING IT POSSIBLE TO DRAW SPAN LOCKS AND RAISE CENTER POSTS.

3. MOVING LOCK MASTER SWITCH, DEVICE 51 TO "DRAW", ENERGIZES LOCK MOTOR REVERSING CONTACTORS, DEVICE 24-O, TO UNLOCK SPAN AND ALSO DRAWS TAIL LOCKS AND RAISES CENTER POSTS. AS THE LOCKS REACH THE "OUT" POSITION, OUT LIMIT SWITCH, DEVICE 42-O ON CENTER LOCK MECHANISM DE-ENERGIZES RELAY, DEVICE 24-O, AND STOPS CENTER LOCK MOVEMENT. CONTACTS ON LOCK CIRCUIT CONTROLLERS, DEVICE 19-O AND 19-D, IN SERIES WITH CONTACTS IN "OUT" LIMIT SWITCH, DEVICE 42-O, ON LOCK MECHANISM THEN CLOSE TO PROVIDE CIRCUITS FOR THE "OUT" INDICATOR LIGHTS (RED). ANOTHER CONTACT ON "OUT" LIMIT SWITCH, DEVICE 42-O, PARTIALLY ESTABLISHES A CIRCUIT TO ENERGIZE LOCK MOTOR INTERLOCKING RELAY, DEVICE 44.

4. IN TURN, THE UNDERVOLTAGE RELAYS, DEVICE 49-N AND DEVICE 49-F, OF THE LEAVES ARE ENERGIZED. THE UNDERVOLTAGE RELAY OF THE NEAR LEAF IS ENERGIZED THROUGH AN "OFF" POINT ON THE MASTER-SWITCH, DEVICE 14-N; FULLY-OPEN AND NEARLY-OPEN SPAN LIMIT SWITCH CONTACTS, DEVICE 26-N; BRAKE HAND RELEASES, DEVICES 36-NA, 36-NB, 36-NC AND 36-ND CENTRAL MACHINERY FRAME PINION SHIFT LEVER, DEVICE 37-N; OVERLOAD RELAYS, DEVICES 17-NU, 17-ND, 12-NU AND 12-NBD, A CONTACT IN THE PHASE REVERSAL RELAY, DEVICE 71, AND THROUGH A CONTACT ON THE LOCK-MOTOR INTERLOCKING RELAY, DEVICE 44, ALL OF THESE CONTACTS BEING IN SERIES WITH THE COIL OF THE UNDERVOLTAGE RELAY, DEVICE 49-N ACROSS THE CONTROL FEEDERS. SHOULD THE PINION SHIFT LEVER BE THROWN FOR GASOLINE ENGINE OPERATION, SHOULD LOCKS BE NOT COMPLETELY WITHDRAWN, SHOULD A PHASE FAIL OR BE REVERSED, OR SHOULD ANY ELECTRIC BRAKE BE RELEASED BY HAND IT WOULD NOT BE POSSIBLE TO ENERGIZE THE BRIDGE CONTROL UNDERVOLTAGE RELAY, DEVICE 49-N. AS SOON AS RELAY 49-N IS ENERGIZED, A SEALING-IN CONTACT ON THE RELAY PERMITS MOVING THE MASTER-SWITCH FROM "OFF" POINT WITHOUT DE-ENERGIZING THE RELAY. ANOTHER CONTACT ON RELAY 49-N ESTABLISHES A CIRCUIT TO THE MASTER-SWITCH FOR CONTROL OF THE BRAKE CONTACTORS, DEVICES 20-NA, 20-NB, 20-NC AND 20-ND, AND THE MAIN MOTOR REVERSING CONTACTORS, DEVICES 22-NR AND 22-NL.

5. TO APPLY THE "RAISE" DESCRIPTION OF OPERATION TO SAY THE NEAR LEAF, MOVE THE HANDLE OF THE MASTER-SWITCH, DEVICE 14-N, TO THE FIRST POINT BE, "RAISE" ENERGIZING THE MACHINERY (EMERGENCY) BRAKE RELAYS, DEVICES 20-NA AND 20-NB, WHICH IN TURN APPLIES POWER TO RELEASE BRAKES A AND B. THE SECOND POINT OF THE MASTER RELEASES MOTOR BRAKES C AND D THROUGH RELAY 20-NC AND 20-ND. WHEN THE MASTER HANDLE WAS MOVED FROM THE FIRST TO THE SECOND POINT THE BRAKE CONTROL CIRCUIT WOULD HAVE BEEN DISRUPTED, EXCEPT FOR THE FACT THAT A SEALING-IN CONTACT ON BRAKE RELAYS 20-NA AND 20-NB KEPT THE CIRCUIT INTACT. OTHER CONTACTS ON RELAYS 20-NA AND 20-NB ARE ESTABLISHED TO ENERGIZE THE CONTROL CIRCUIT FOR THE MOTOR-REVERSING CONTACTORS. THIS MEANS THAT IT IS IMPOSSIBLE TO APPLY POWER TO MAIN MOTORS UNTIL THE EMERGENCY (MACHINERY) BRAKES A AND B ARE RELEASED. BRAKES C AND D WILL NORMALLY BE RELEASED WITH THE MASTER-SWITCH ON THE SECOND BRAKE POINT AND ALL SUCCESSIVE POINTS, BUT AN EXTRA CONTROL SWITCH ON THE CONTROL DESK, DEVICE 32-N, IS PROVIDED TO SET MOTOR BRAKES C AND D AT ANY TIME EVEN THOUGH POWER IS BEING APPLIED TO THE MAIN MOTORS. THESE BRAKES CAN, THEREFORE, BE USED AS DRAG BRAKES.

6. MOVING MASTER-SWITCH TO THIRD POINT, "RAISE", (1ST POWER POINT), ENERGIZES CONTACTOR 22-NR AND APPLIES POWER TO MAIN MOTORS, THE TORQUE BEING SUFFICIENT TO TAKE UP MACHINERY SLACK. SLOWLY MOVING THE MASTER-SWITCH POINT BY POINT UP TO FINAL POWER POSITION ENERGIZES THE ACCELERATING RELAYS IN TURN. THIS CUTS OUT RESISTANCE GRADUALLY, THEREBY SPEEDING UP THE LEAF MOVEMENT TO FULL SPEED. AT THE NEARLY OPEN POSITION OF 77 DEGREES THE SPAN WILL STOP AS THE NEARLY OPEN LIMIT OPENS, DEVICE 81-N, UNLESS THE KNEE SWITCH, DEVICE 54-N, HAS BEEN DEPRESSED. THE MASTER-SWITCH, DEVICE 14-N HAS BEEN MOVED BACK TO AT LEAST THE THIRD POWER POINT, AND THE SPEED HAS BEEN REDUCED TO LESS THAN 25 PER CENT FULL LOAD SPEED, DEVICE 86-N. THE LEAF WILL CONTINUE TO OPEN UNDER LIMITED POWER TO THE "OPEN" POSITION OF 82 DEGREES WHERE THE FINAL LIMIT-SWITCH, DEVICE 80-N STOPS ALL MOVEMENT AND APPLIES ALL BRAKES.

7. THE FULLY-SEATED CIRCUIT CONTROLLER, DEVICE 30-N, CONTACTS ARE ALL OPENED BY SPRING AND GRAVITY ACTION WHEN THE LEAF IS RAISED FROM THE SEATED POSITION. THE FULLY-SEATED LIGHTS ON THE CONTROL DESK ARE DE-ENERGIZED AND THE LOCK-CIRCUIT CONTROL IS BROKEN WHICH PREVENTS ACCIDENTAL OPERATION OF CENTER OR TAIL LOCKS AT ANY TIME EXCEPT WHEN THE SPAN IS FULLY SEATED.

8. WHEN LOWERING THE NEAR LEAF, THE MASTER-SWITCH ACTION IS SIMILAR TO THAT EXPLAINED FOR "RAISE", EXCEPT HANDLE IS MOVED IN THE LOWERING DIRECTION FROM "OFF" POSITION SUCCESSIVELY TO FINAL POWER POINT. THE SAME RELAY ACTION OCCURS, EXCEPT 22-NL IS ENERGIZED ON THE THIRD POINT INSTEAD OF 22-NR AS WAS THE CASE FOR THE RAISING OPERATION.

9. BEFORE THE LEAF IS DOWN TO A POINT ABOUT 5 DEGREES ABOVE SEATING POSITION, THE OPERATOR SHOULD RETURN THE MASTER-SWITCH HANDLE TO POINT 3 OR 4 AND PRESS AGAINST KNEE-SWITCH, DEVICE 54-N, TO BYPASS THE LEAF LIMIT SWITCH DEVICE 26-N NEARLY CLOSED CUTOFF AND ALLOW THE LEAF TO COME TO FINAL SEATING POSITION. ALSO, THE LEAF SPEED MUST BE REDUCED BEFORE THIS POINT IS REACHED OR THE CENTRIFUGAL GOVERNOR, DEVICE 86-N, WILL STOP THE LEAF. THE SEATING SPEED OF THE LEAF CAN BE CONTROLLED BY VARYING THE POSITION OF THE MASTER-SWITCH BETWEEN THE FIRST THREE POWER POINTS AND BRAKING POINTS, AND USING THE MOTOR BRAKE SELECTOR, DEVICE 32-N, TO APPLY EITHER OR BOTH MOTOR BRAKES AS DRAG BRAKES. TWO BRAKES ARE ALLOWED TO APPLY ON EACH SUCCESSIVE STEP UNDER 2 TO "OFF". POINT 2 IS A COASTING POINT ON WHICH NEITHER POWER NOR BRAKING IS APPLIED. BYPASS SWITCH, DEVICE 54-N, IS INEFFECTIVE WITH MASTER-SWITCH HANDLE AT POSITIONS ABOVE 5 OR WITH SPEED ABOVE 25 PER CENT FULL SPEED. FULLY SEATED LEAF IS INDICATED BY BLUE LEAF-SEATED INDICATING LIGHT WHICH GLOWS WHEN LEAF COUNTERWEIGHT TAIL IS IN FULL BEARING ON THE LIVE LOAD ANCHOR. AFTER LEAF IS SEATED ALL BRAKES ARE AUTOMATICALLY APPLIED AND THE POWER REMOVED BY DEVICE 30 THROUGH THE TIME DELAY RELAY, DEVICE 55-NT. THE MASTER-SWITCH SHOULD NOT BE REMOVED FROM THE POWER POINTS UNTIL IT IS OBSERVED THAT BRAKES HAVE AUTOMATICALLY SET TO INSURE THAT THE LEAF IS HELD FIRMLY IN THE SEATED POSITION. FULLY-SEATED CIRCUIT CONTROLLER, DEVICE 30-N, CLOSES, ESTABLISHING LOCK MOTOR AND TAIL LOCK CONTROL CIRCUITS.

10. WHEN LOCK MASTER SWITCH, DEVICE 51, IS TURNED TO "DRIVE", THE SPAN LOCK-MOTOR IS ENERGIZED, LOCKING LEAVES TOGETHER IN THE SEATED POSITION, DRIVES THE TAIL LOCKS AND LOWERS CENTER POSTS. THIS AUTOMATICALLY DE-ENERGIZES THE LOCK INTERLOCKING RELAY, DEVICE 44, ESTABLISHING THE GATE MOTOR CONTROL CIRCUIT FOR OPENING THE GATES.

11. WHEN ALL FOUR GATES HAVE BEEN OPENED BY THEIR SWITCHES, DEVICES 67-FOF, 67-NOF, 67-FOC AND 67-NOC, LIMIT SWITCHES, DEVICES 50-OFOF, 50-ONOF, 50-OFOC AND 50-ONOC ARE ACTUATED, ESTABLISHING THE CIRCUIT FOR CHANGING THE TRAFFIC LIGHTS TO GREEN WHEN THE TRAFFIC LIGHT SWITCH, DEVICE 47 IS TURNED TO "GO".

12. AS A SAFETY FEATURE TO PREVENT WRECKING A LEAF OR MACHINERY, THE LEAF LIMIT SWITCH OF EACH LEAF IS SET TO OPEN THE POWER CIRCUIT AND APPLY BRAKES AT FIVE DEGREES BELOW THE "OPEN" POSITION WHEN RAISING AND AT A POINT FIVE DEGREES ABOVE SEATING POSITION WHEN LOWERING. FOR ORDINARY OPERATING CONDITIONS, WITH LEAVES UNDER COMPLETE CONTROL OF THE OPERATOR, THESE LIMITS ON THE LEAF LIMIT SWITCHES WILL BE BYPASSED AND WILL NOT FUNCTION. HOWEVER, THESE LIMIT-SWITCHES WILL OPEN THE CIRCUITS IF THE OPERATOR LOSES CONTROL OF THE LEAVES.

INTERLOCKING AND SAFETY FEATURES

1. THROUGH RELAY ACTION, DEVICE 40, ROADWAY GATES CANNOT BE CLOSED UNTIL SIGNALS ARE SET AGAINST TRAFFIC. CONVERSELY, THROUGH LIMIT SWITCH ACTION, TRAFFIC LIGHTS CANNOT BE CLEARED UNTIL ONCOMING AND OFFGOING GATES ARE AT FULLY OPEN LIMITS. TUMBLER BY-PASS SWITCH, DEVICE 33, WITH SEALABLE PLATE ON OPERATOR'S CONTROL DESK PERMITS GATES TO BE CLOSED WITH TRAFFIC LIGHTS GREEN OR RED LIGHTS NOT FUNCTIONING. ALSO TUMBLER BY-PASS SWITCH, DEVICE 76, WITH SEALABLE PLATE ON OPERATOR'S CONTROL DESK PERMITS TURNING LIGHTS GREEN (FOR TRAFFIC) WHEN ONCOMING OR OFFGOING GATES ARE IN OTHER THAN FULLY OPEN POSITION.

2. DEVICE 76 ALSO BYPASSES GATE OPERATION TO PERMIT LOCKS BEING WITHDRAWN WHEN ANY GATE IS IN OTHER THAN "FULLY CLOSED" POSITION.

3. LEAF CIRCUIT CONTROLLERS, DEVICES 30-N AND 30-F, PREVENT CENTER AND TAIL LOCKS BEING OPERATED WHEN EITHER LEAF IS IN OTHER THAN THE "FULLY CLOSED" POSITION. THERE IS NO BY-PASS FOR THIS OPERATION.

4. ELECTRIC OPERATION OF EITHER LEAF IS PREVENTED WHEN ANY OF THE FOUR BRAKES OF THE RESPECTIVE LEAF IS RELEASED BY HAND, PER DEVICES 36, AND ELECTRIC OPERATION OF THE LOCK MOTOR IS PREVENTED WHEN ITS BRAKE IS RELEASED BY HAND, DEVICE 31.

5. WHEN GASOLINE ENGINE POWER IS ENGAGED TO DRIVE A LEAF, ELECTRIC OPERATION OF THE LEAF IS PREVENTED BY A SHIFT LEVER INTERLOCK, DEVICE 37.

6. BRAKES CANNOT BE RELEASED NOR POWER BE APPLIED TO MAIN MOTORS UNTIL LOCKS ARE COMPLETELY WITHDRAWN, DEVICE 44. THIS INTERLOCK CAN BE BYPASSED BY OPERATING LOCK CONTROL BY-PASS SWITCH, DEVICE 39, WHICH ACTUATES LOCK INTERLOCKING BYPASS RELAY, DEVICE 23.

7. IN OPERATION OF EITHER LEAF ANY FAILURE OF POWER TO MAIN MOTORS OPENS THE RESPECTIVE LEAF CONTROL RELAY, DEVICE 49, REQUIRING CONTROLLER HANDLE TO BE RETURNED TO "OFF" POSITION BEFORE MOTORS CAN AGAIN BE OPERATED.

8. MAIN MOTORS ARE PROTECTED BY INSTANTANEOUS TRIP OVERLOAD RELAYS, AUTOMATIC RESET. THE BRAKE THRUSTOR AND ALL OTHER MOTORS ARE PROTECTED AGAINST SUSTAINED OVERLOAD BY THERMAL TYPE OVERLOAD RELAYS, HAND RESET. THE TRIPPING OF A BRAKE OVERLOAD RELAY WILL CAUSE THE RESPECTIVE BRAKE TO SET. BRAKE INDICATING LIGHTS INDICATE FAULTY BRAKE.

9. IF EITHER OPERATING MOTOR OVERLOAD RELAY TRIPS OF EITHER LEAF, IT WILL RELEASE THE RESPECTIVE LEAF CONTROL UNDERVOLTAGE RELAY, DEVICE 49, TO SHUT DOWN THE DRIVE AND APPLY BRAKES. THE CONTROLLER HANDLE MUST BE RETURNED TO THE "OFF" POSITION TO START THE AFFECTED LEAF.

10. THE "FULLY CLOSED" CIRCUIT CONTROLLERS, DEVICES 30 OF BOTH LEAVES MUST BE ACTUATED TO OPERATE LOCK MECHANISMS, PREVENTING ACCIDENTAL CLOSING OF CENTER AND TAIL LOCKS UNTIL BOTH LEAVES ARE FULLY SEATED.

11. THE HOUSE ROOM HEATERS ARE DE-ENERGIZED DURING OPERATION OF THE MAIN MOTORS TO REDUCE STANDBY CAPACITY OF ELECTRICAL POWER REQUIRED, DEVICE 44.

12. A CENTRIFUGAL SPEED GOVERNOR IS PROVIDED ON EACH LEAF TO CONTROL THE MAXIMUM SPEED IN THE LAST 5 DEGREE ZONES AT EACH END OF LEAF TRAVEL, DEVICES 86. IT PREVENTS SPEED FROM EXCEEDING 25 PER CENT FULL SPEED BY APPLYING BRAKES AND CUTTING POWER WHEN THE SPEED IS EXCEEDED, THUS INSURING CONTROL OF THE LEAVES BY THE OPERATOR WHEN HE MIGHT CONCENTRATE ON ONE TO THE NEGLECT OF THE OTHER.

13. THE BRAKE SELECTOR SWITCHES, DEVICES 32, MAY BE USED TO APPLY THE MOTOR BRAKES TO EITHER LEAF AT ANY TIME DURING OPERATION. ONE OR BOTH MAY BE APPLIED TO EITHER LEAF.

14. GATES CANNOT BE OPENED FOR TRAFFIC UNLESS LEAVES ARE LOCKED AND CENTER POSTS ARE DOWN, EXCEPT BY A TUMBLER BY-PASS SWITCH, DEVICE 39, WITH SEALABLE PLATE ON THE OPERATOR'S CONTROL DESK.

15. EITHER LEAF CAN BE OPERATED BY ONE MAIN MOTOR AT ABOUT 50 PER CENT NORMAL SPEED UNDER THE MOST ADVERSE ANTICIPATED CONDITIONS IF ONE MOTOR HAS BEEN CUT OFF THE LINE, THE OVERLOAD SELECTOR SWITCH, DEVICE 106, HAS BEEN TURNED TO THE SINGLE MAIN MOTOR, AND THE MASTER SWITCH, DEVICE, HAS BEEN MOVED SLOWLY TO THE 6TH POWER POINT AND NOT BEYOND. MOVING THE OVERLOAD SELECTOR SWITCH TO THE SINGLE MAIN MOTOR PERMITS THAT MOTOR TO DEVELOP ABOUT 235 PER CENT FULL LOAD TORQUE ON THE 5TH POWER POINT. IT IS ESSENTIAL TO CUT OUT THE DEFECTIVE MOTOR AS THE OVERLOAD RELAY WOULD FUNCTION AND LIMIT THE TORQUE TO NORMAL FOR EACH MOTOR.

ELECTRICAL SYSTEM

POWER IS OBTAINED FROM THE TOLEDO EDISON COMPANY BEYOND EACH ABUTMENT OF THE BRIDGE. THESE SERVICES ARE 3-PHASE, 3-WIRE, 60-CYCLE, AND CONSIST OF THREE 15 KV, NO. 6 AWG FEEDERS IN 3 IN. STEEL CONDUIT UNDERGROUND TO BRIDGE ABUTMENTS AND THEN CARRIED ON STEEL SUPERSTRUCTURE TO HIGH VOLTAGE SWITCHGEAR ROOMS OF BASCULE PIERS. THESE SERVICES ARE THEN CHANGED IN THE TRANSFORMER ROOMS FROM 4,160 VOLTS FROM WEST SIDE AND 7,200 VOLTS FROM EAST SIDE TO 3-PHASE, 460-VOLT, 60-CYCLE WHERE THEY GO INTO ELECTRICALLY OPERATED MAIN FEEDER CIRCUIT BREAKERS BEFORE THEY ARE CARRIED IN CONDUIT TO PANEL C IN ROOM C ON NEAR SIDE AND PANEL D IN ROOM C, FAR SIDE. IN ROOMS C ARE LOCATED THE SECONDARY PANELS TO SUPPLY ENERGY TO THE CIRCUIT BREAKERS PROTECTING THE LINES TO THE MAIN MOTORS, TAIL LOCK MOTORS, CENTER POST MOTORS, UNIT HEATERS, LEAF THRUSTOR BRAKES, LOCK MOTORS AND LOCK MOTOR BRAKES, GATE MOTORS AND GATE MOTOR BRAKES, SUMP PUMP MOTORS AND STRIP HEATERS USED TO PREVENT CONDENSATION IN CABINETS. THE POWER CIRCUITS TO THESE ARE CARRIED THROUGH VARIOUS SWITCHES, CONTROL RELAYS AND CONTACTORS, THE ACTION AND SEQUENCE BEING AS PREVIOUSLY EXPLAINED.

THE MAIN LEAF DRIVE SYSTEMS ARE PROTECTED AGAINST PHASE FAILURE AND PHASE REVERSAL BY A CONTROL RELAY. ALL OF THE INDIVIDUAL CIRCUITS ARE PROTECTED WITH OVERLOAD RELAYS.

IN THE TRANSFORMER ROOMS THERE ARE FUSED SAFETY SWITCHES PROTECTING ALTERNATE LINES TO 15 KVA, 480 VOLT TO 240 VOLT/110 VOLT LIGHTING AND CONTROL TRANSFORMER IN THE NEAR PIER. IN PANEL B IN ROOM B ARE THE CIRCUIT BREAKERS FOR CONTROL AND LIGHTING CIRCUITS. A DISTRIBUTION PANEL CONTAINS THE INDIVIDUAL CIRCUIT BREAKERS FOR LIGHTING, INDICATING, BATTERY CHARGING, SIGNALING, WATER HEATING AND ROOM HEATING CONTROL CIRCUITS.

ALSO IN THE PRIMARY SWITCHGEAR ROOMS AND IN THE TRANSFORMER ROOMS, PROVISION HAS BEEN MADE FOR ROADWAY LIGHTING CONSTANT CURRENT REGULATORS WITH CONTROL EQUIPMENT WHICH WILL BE INSTALLED BY OTHERS.

PART 3

TOLEDO EXPRESSWAY SYSTEM

MAUMEE RIVER BRIDGE

BR. NO. LU 120R-35

OPERATING PROCEDURE

TOLEDO LUCAS COUNTY, OHIO

SCALE None
MADE G.J.C. DATE 12-14-51
TRCD L.M. DATE 9-30-53
CKD D.M.D. DATE 9-30-53

HOWARD, NEEDLES, TAMMEN & BERGENDOFF
CONSULTING ENGINEERS
KANSAS CITY NEW YORK

HIGHWAY LIBRARY
JUL 22 1952

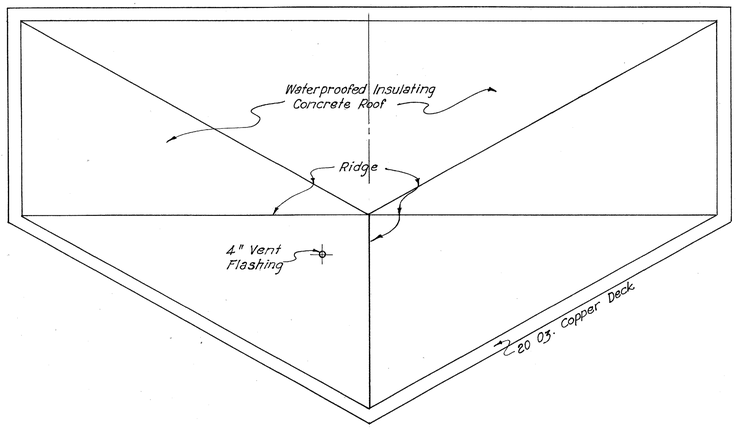

ROOF PLAN

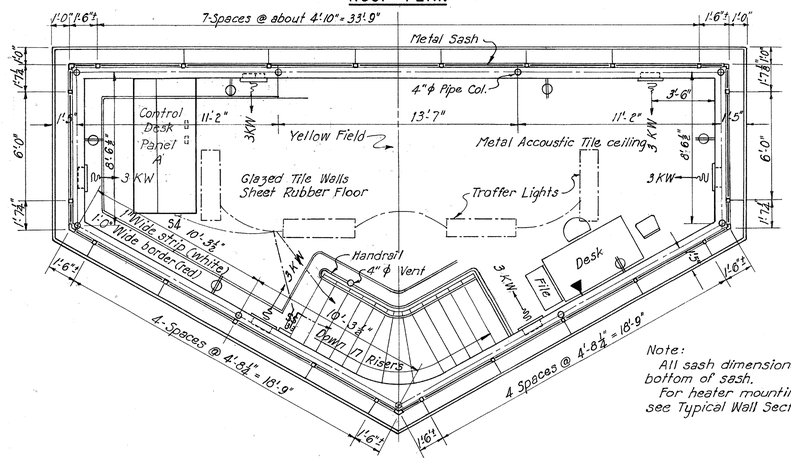

Note:
All sash dimensions are given at bottom of sash.
For heater mountings this floor see Typical Wall Section sheet 73.

PLAN ROOM A

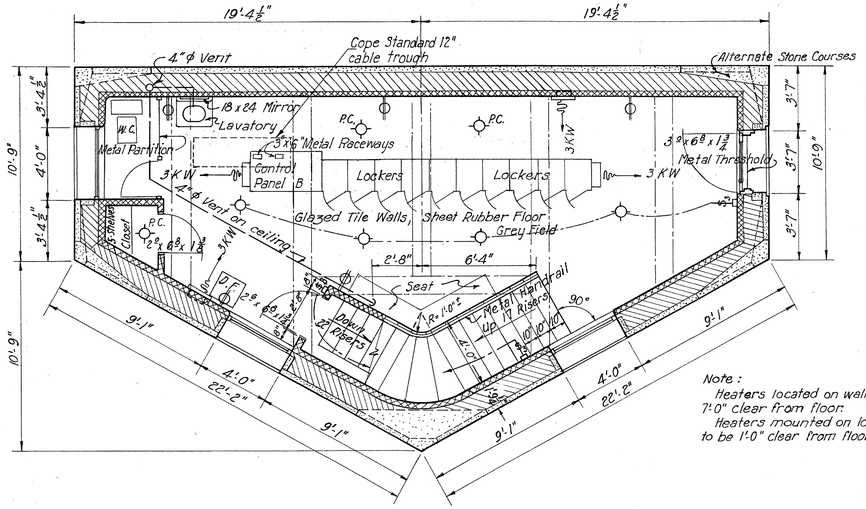

Note:
Heaters located on walls to be 7'-0" clear from floor.
Heaters mounted on lockers to be 1'-0" clear from floor.

PLAN ROOM B

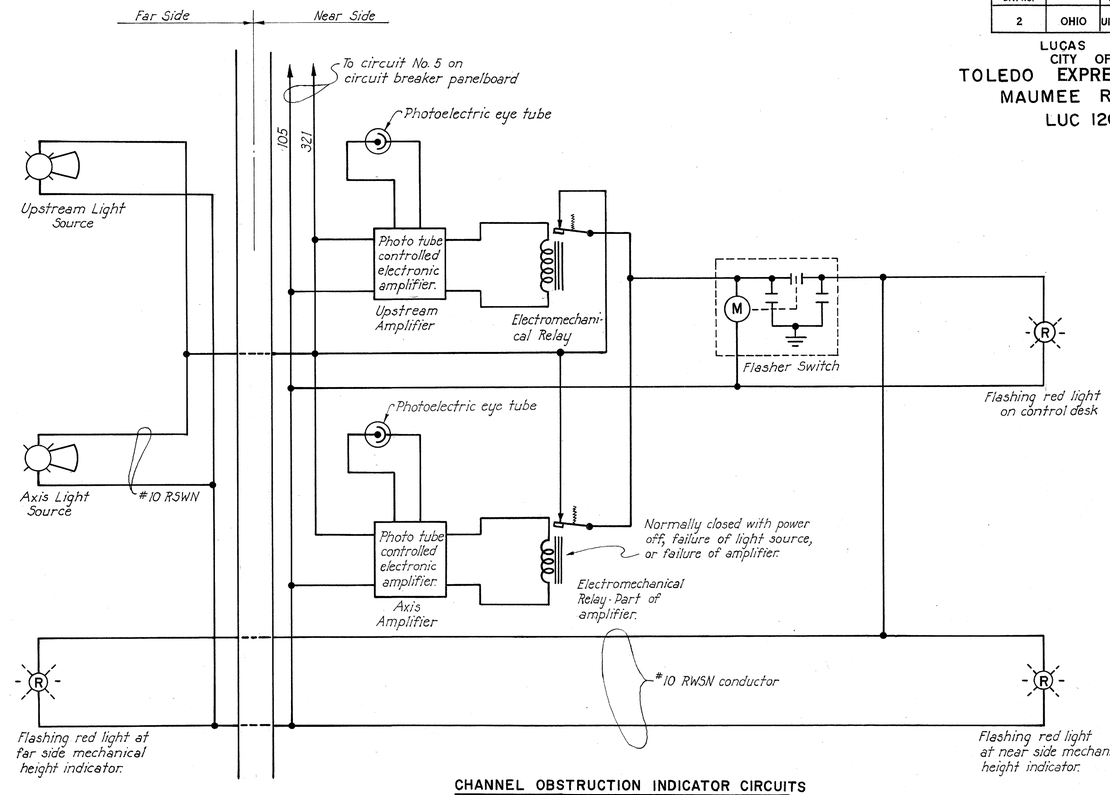

CHANNEL OBSTRUCTION INDICATOR CIRCUITS
No Scale

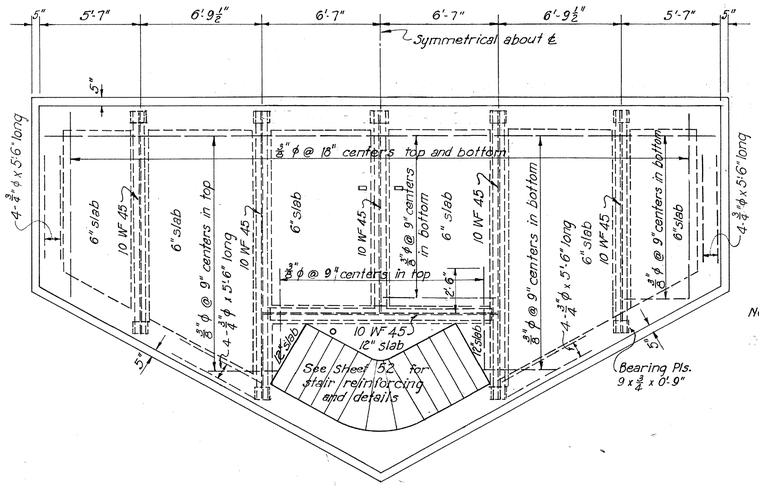

Notes:
Rivets in floor framing shall be ¾" ϕ

FRAMING PLAN, FLOOR ROOM A
Scale: ¼" = 1'-0"

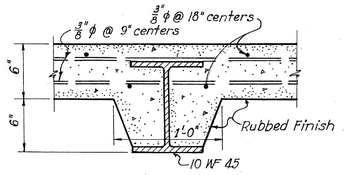

TYPICAL SECTION THRU 10 WF
Scale: 1½" = 1'-0"

FED. ROAD DIV. NO.	STATE	FED. AID PROJ. NO.	TYPE FUNDS
2	OHIO	UI-1052(2)	POST WAR

LUCAS COUNTY
CITY OF TOLEDO
TOLEDO EXPRESSWAY SYSTE
MAUMEE RIVER BRIDGE
LUC 120R-3.46

PART 3

TOLEDO EXPRESSWAY SYSTE
MAUMEE RIVER BRIDGE
BR. NO. LU 120R-35
OPERATORS HOUSE
PLANS

TOLEDO LUCAS COUNTY, OHI

SCALE 1" & 1½" = 1'-0"
MADE WLG DATE 10-5-51
TRCD AH DATE 5-8-52
CKD R.A.C. DATE 8-13-52

HOWARD, NEEDLES, TAMMEN & BERGENDO
CONSULTING ENGINEERS
KANSAS CITY NEW YORK

810 SHEET- 3.71

775

HARLES BRUNING CO., INC.

FED. ROAD DIV. NO.	STATE	FED. AID PROJ. NO.	TYPE FUNDS
2	OHIO	UI-1052(2)	POST WAR

LUCAS COUNTY
CITY OF TOLEDO
TOLEDO EXPRESSWAY SYST
MAUMEE RIVER BRIDGE
LUC 120R-3.46

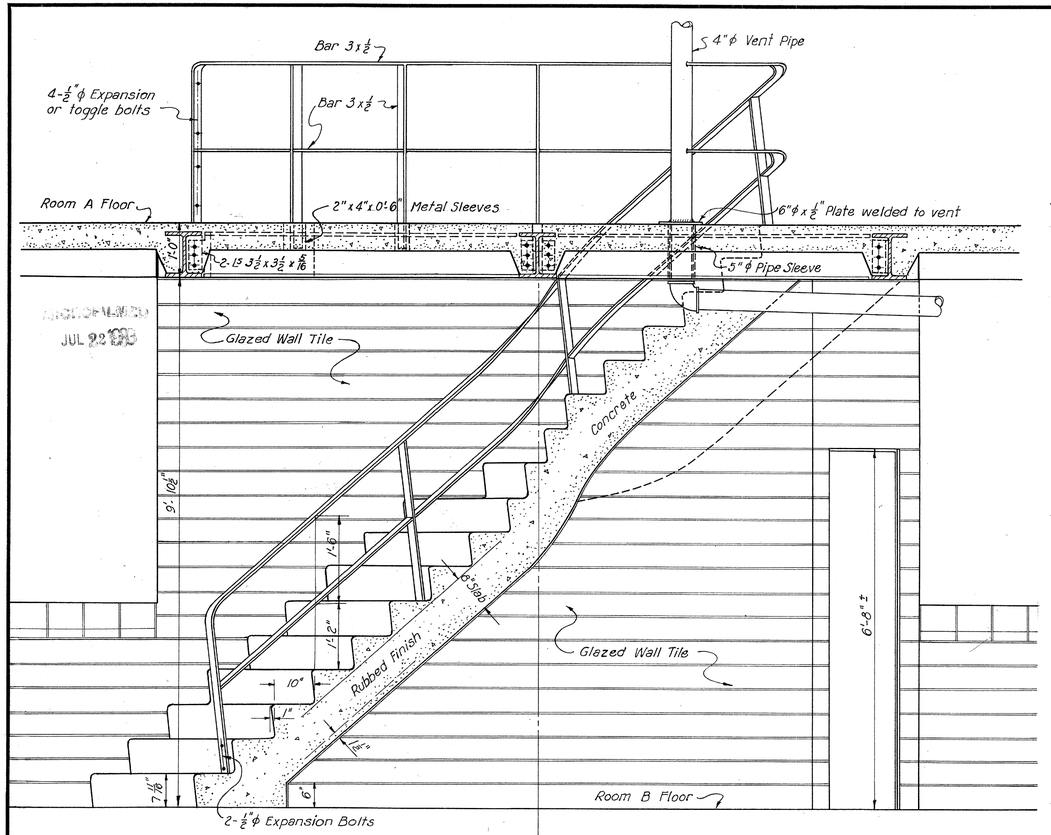

ELEVATION

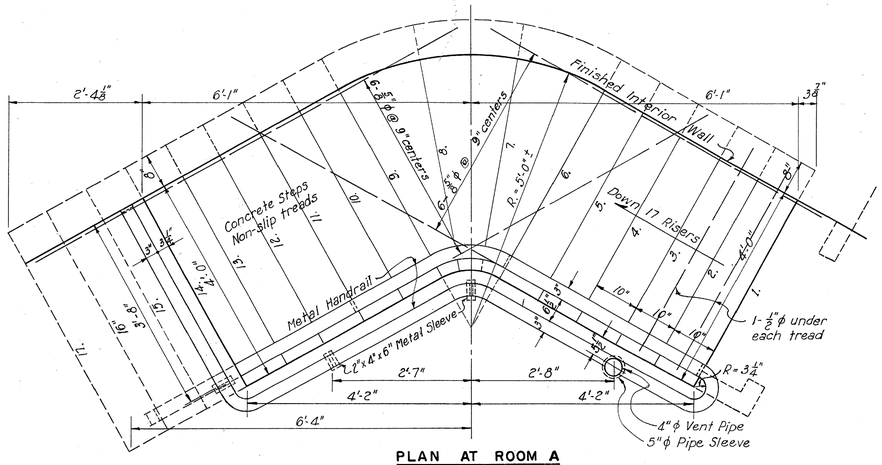

PLAN AT ROOM A
DETAIL OF STAIRS
Scale : 3/4" = 1'-0"

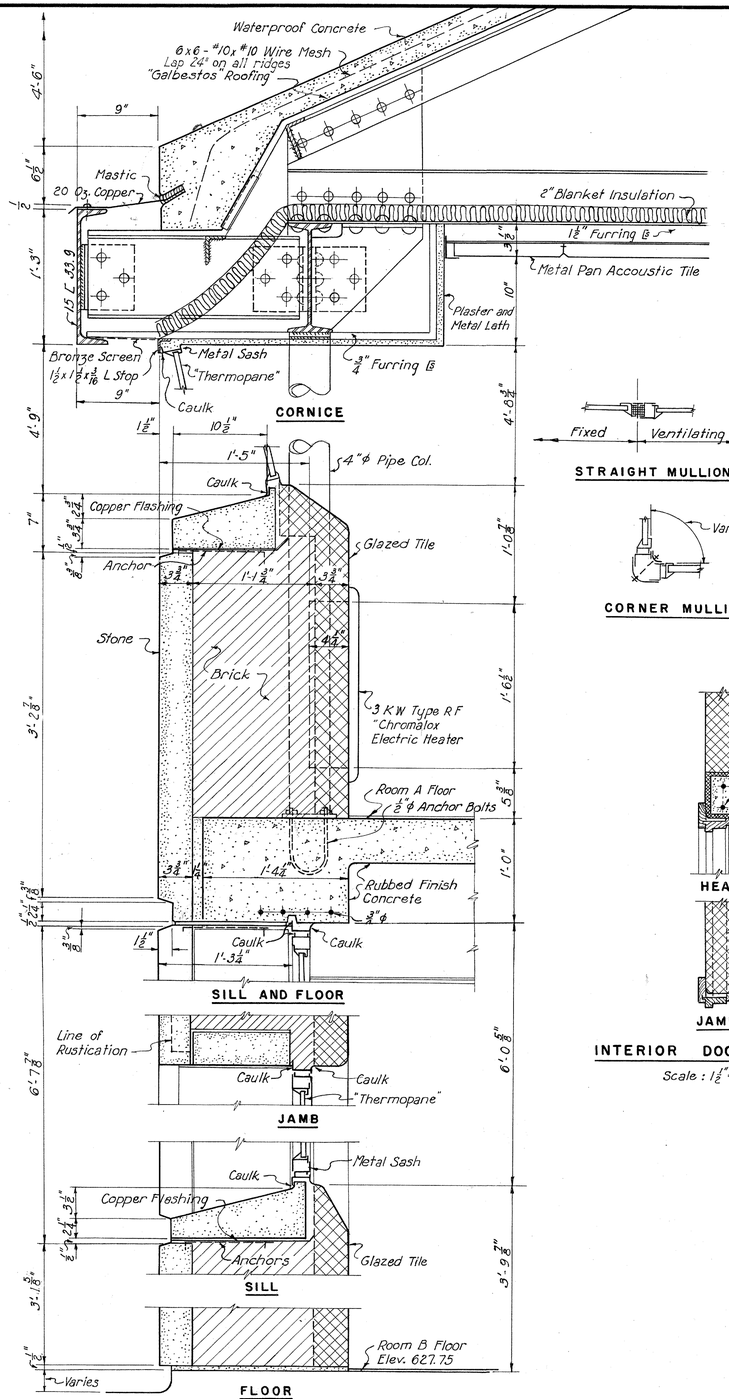

TYPICAL WALL DETAIL
Scale : 1 1/2" = 1'-0

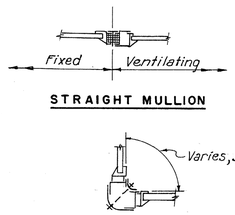

STRAIGHT MULLION

CORNER MULLION

INTERIOR DOOR SECTION
Scale : 1 1/2" = 1'-0"

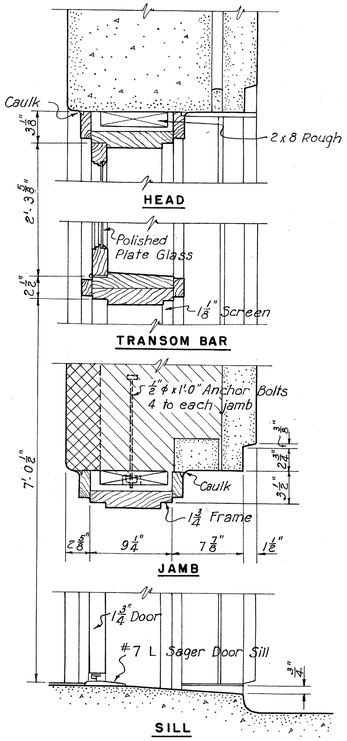

EXTERIOR DOOR SECTION
Scale : 1 1/2" = 1'-0"

PART
TOLEDO EXPRESSWAY SYSTE
MAUMEE RIVER BRIDGE
BR. NO. LU 120R-35
OPERATORS HOUSE
DETAILS
TOLEDO LUCAS COUNTY, OH

SCALE 3/4, 1 1/2" = 1'-0"
MADE W.L.G. DATE 12-26-51
TRCD A.H. DATE 5-5-52
CKD R.A.C. DATE 8-13-52

HOWARD, NEEDLES, TAMMEN & BERGENDOFF
CONSULTING ENGINEERS
KANSAS CITY NEW YORK

810 SHEET- 3.73

CHARLES BRUNING CO., INC.

JUL 22

FED. ROAD DIV. NO.	STATE	FED. AID PROJ. NO.	TYPE FUNDS
2	OHIO	UI-1052(2)	POST WAR

72
120

LUCAS COUNTY
CITY OF TOLEDO
TOLEDO EXPRESSWAY SYSTEM
MAUMEE RIVER BRIDGE
LUC 120R-3.46

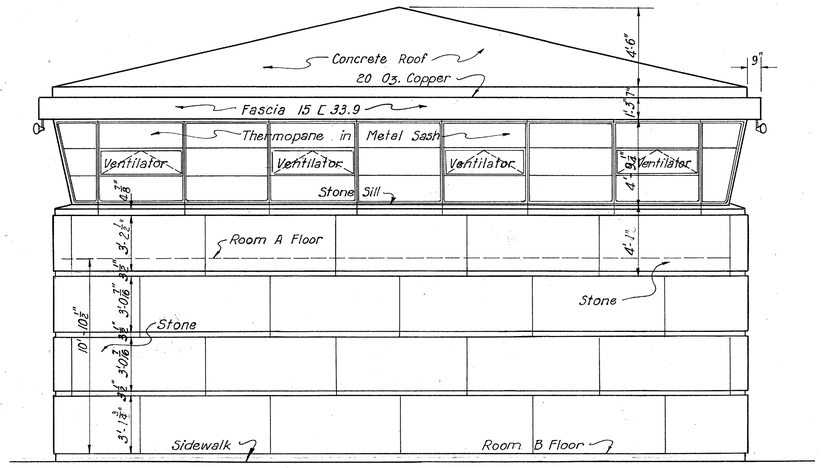

ROADWAY (WEST) ELEVATION

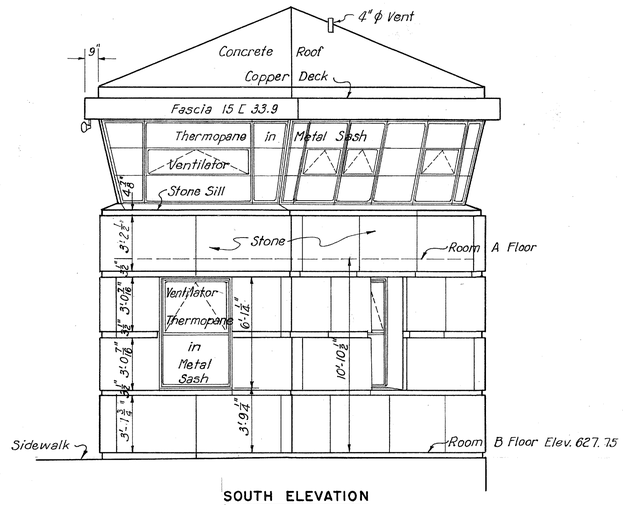

SOUTH ELEVATION

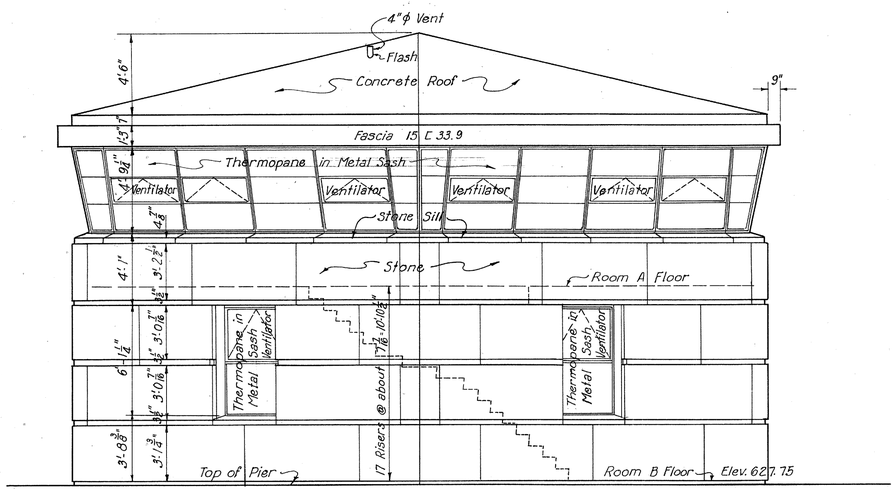

EAST ELEVATION

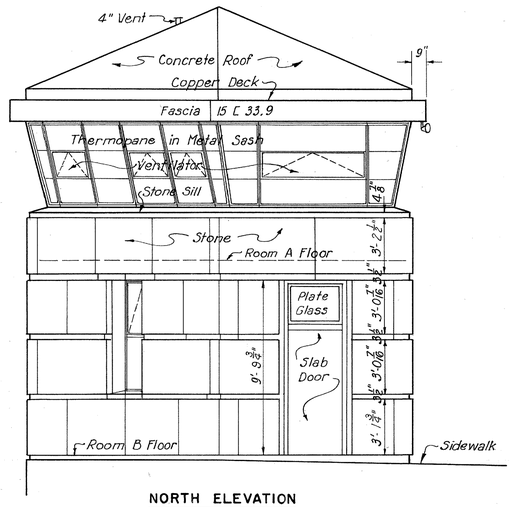

NORTH ELEVATION

PART 3

TOLEDO EXPRESSWAY SYSTEM

MAUMEE RIVER BRIDGE

BR. NO. LU 120R-35

OPERATORS HOUSE ELEVATIONS

TOLEDO LUCAS COUNTY, OHIO

SCALE 1/2" = 1'-0"
MADE W.L.G. DATE 10-19-51
TRCD A.H. DATE 4-28-52
CKD R.A.C. DATE 8-13-52

HOWARD, NEEDLES, TAMMEN & BERGENDOFF
CONSULTING ENGINEERS
KANSAS CITY NEW YORK

810 SHEET- 3.72

776

CHARLES BRUNING CO., INC.

FED. ROAD DIV. NO.	STATE	FED. AID PROJ. NO.	TYPE FUNDS
2	OHIO	UI-1052(2)	POST WAR

LUCAS COUNTY
CITY OF TOLEDO
TOLEDO EXPRESSWAY SYSTE
MAUMEE RIVER BRIDGE
LUC 120R-3.46

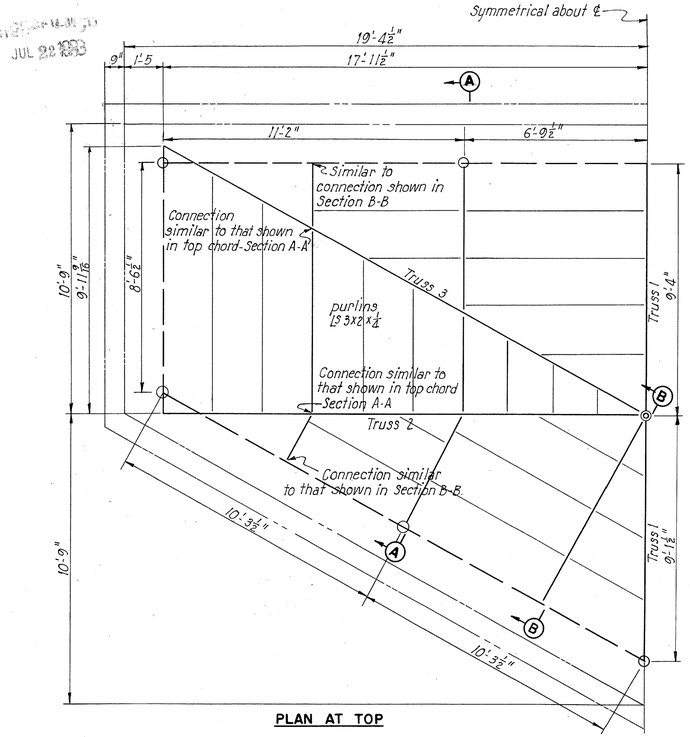

PLAN AT TOP

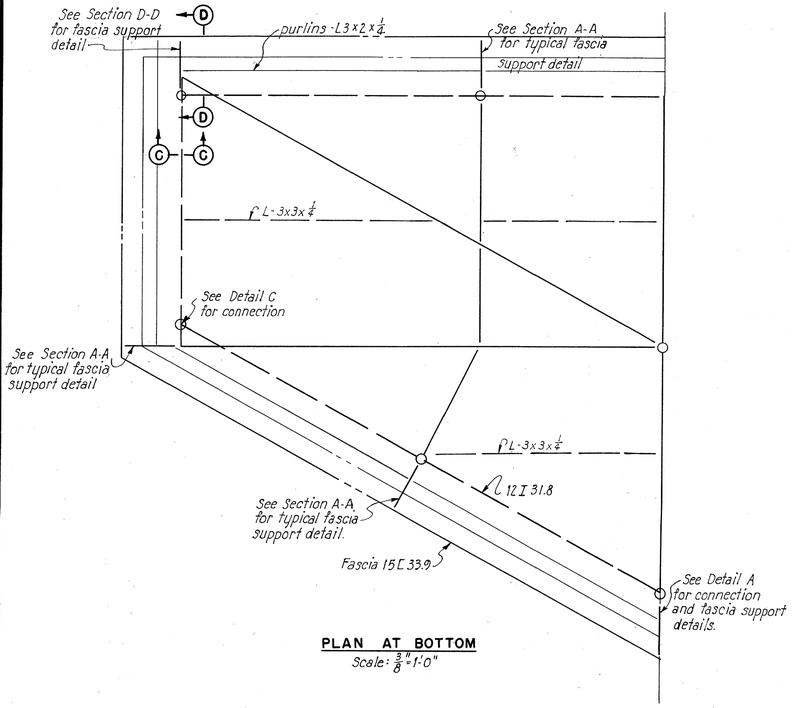

PLAN AT BOTTOM
Scale: ⅜"=1'-0"

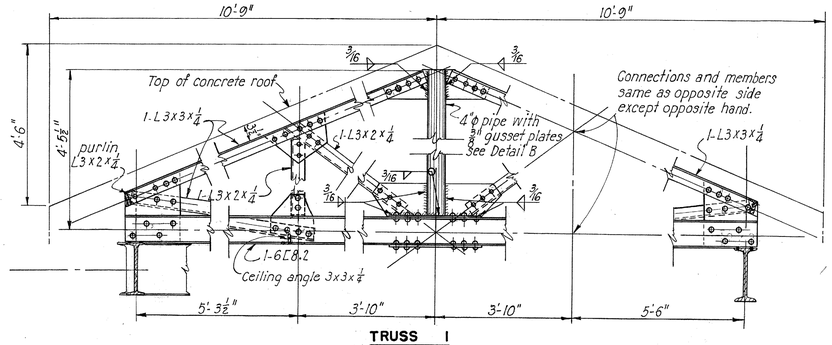

TRUSS 1

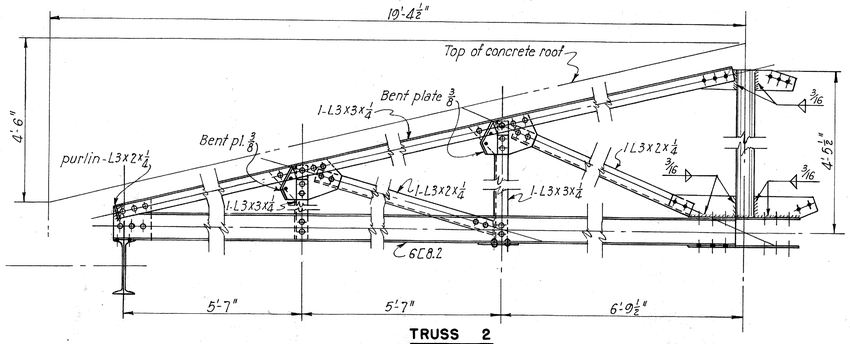

TRUSS 2

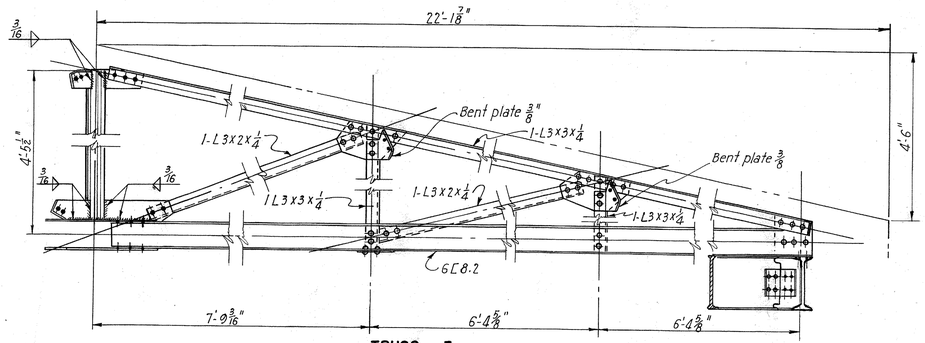

TRUSS 3

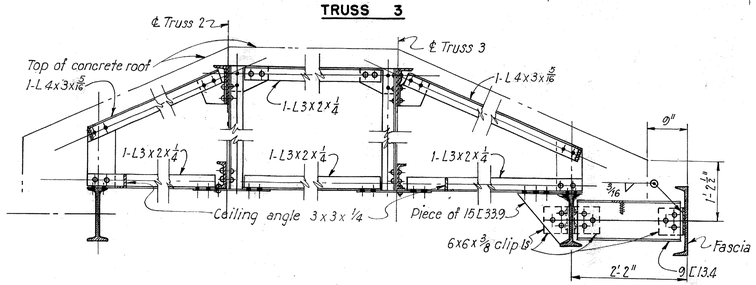

SECTION A-A
Scale: ¾"=1'-0"

TYPICAL FASCIA SUPPORT DETAIL

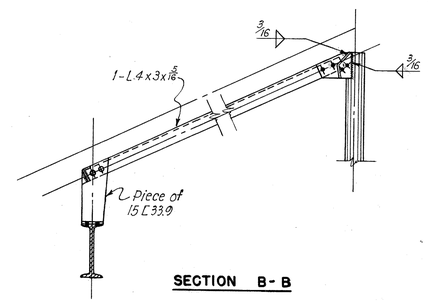

SECTION B-B

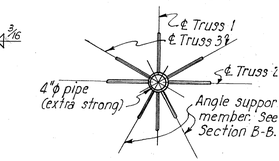

TOP PLATES

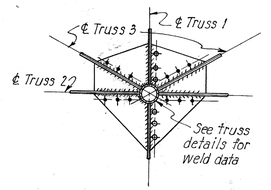

BOTTOM PLATES
DETAIL B

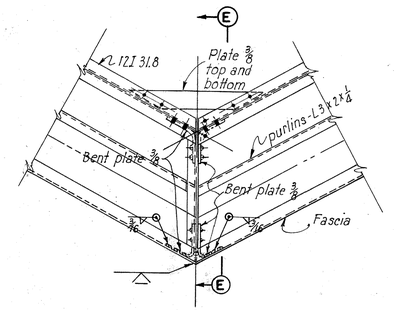

PLAN

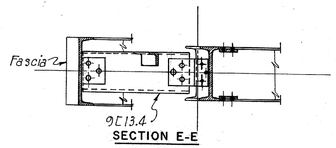

SECTION E-E

DETAIL A

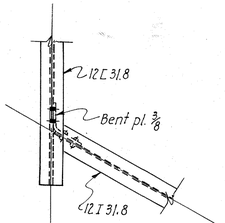

DETAIL C

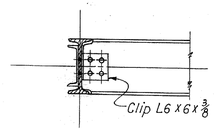

SECTION C-C

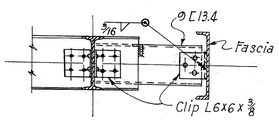

SECTION D-D

NOTES

All gusset plates to be ⅜".
All rivets ⅞ ϕ.
Use ⅞ ϕ Dardelet bolts or equivalent where necessary for erection purposes.
All purlins to be welded with ⅜" fillet welds.
All corners of fascia to be V-groove welded, finished flush on exterior side, beaded on interior side of channel.
Working lines shown on angles are 1¾" from back of angles.

PART 3

TOLEDO EXPRESSWAY SYSTEM
MAUMEE RIVER BRIDGE
BR. NO. LU 120R-35
OPERATORS HOUSE
ROOF

TOLEDO LUCAS COUNTY, OHIO

SCALE ⅜"=1'-0" and ¾"=1'-0"
MADE R.A.C. DATE 8-12-52
TRCD E.J.M.,R.R. DATE 10-24-52
CKD J.D.P. DATE 11-6-52

HOWARD, NEEDLES, TAMMEN & BERGENDOFF
CONSULTING ENGINEERS
KANSAS CITY NEW YORK

810 SHEET- 3.74

JUL 22 1953

CHARLES BRUNING CO., INC.

JUL 22 19

FED. ROAD DIV. NO.	STATE	FED. AID PROJ. NO.	TYPE FUNDS
2	OHIO	UI-1052(2)	POST WAR

LUCAS COUNTY
CITY OF TOLEDO
TOLEDO EXPRESSWAY SYST
MAUMEE RIVER BRIDGE
LUC 120 R-3.46

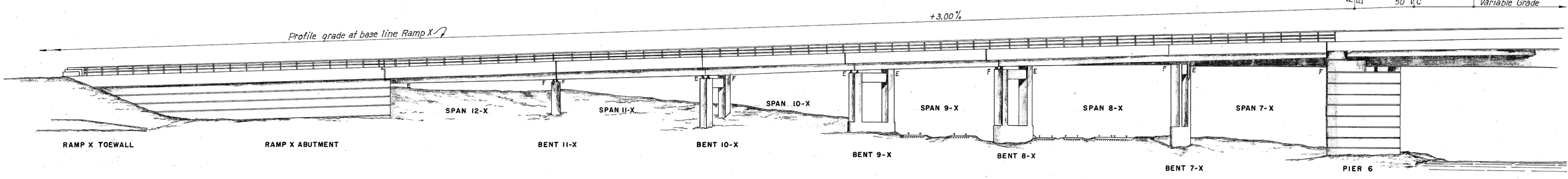

RAMP X

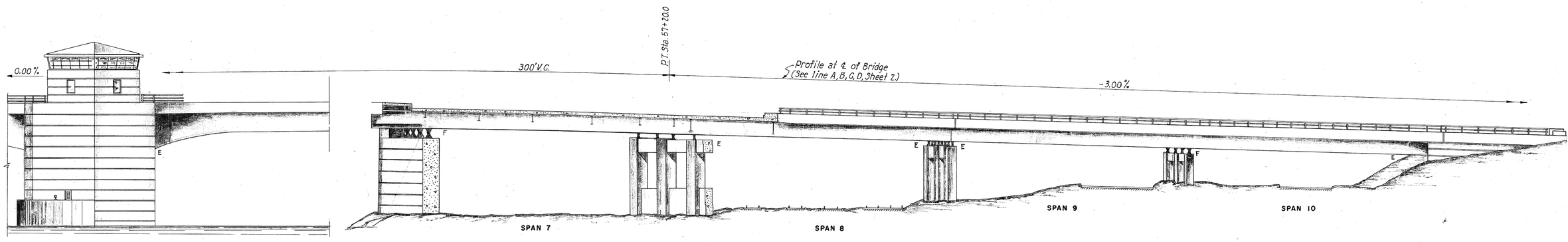

EXPRESSWAY

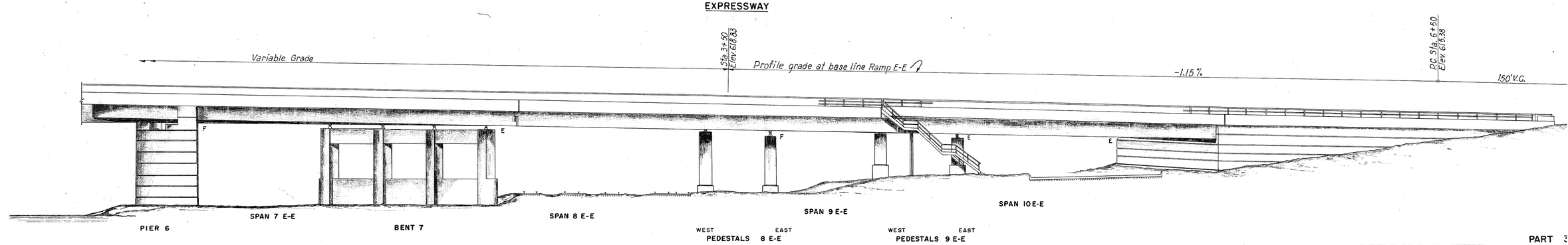

RAMP E-E

PART 3

TOLEDO EXPRESSWAY SYST
MAUMEE RIVER BRIDGE
BR. NO. LU. 120 R-35
NORTH PORTION
GENERAL ELEVATIONS
TOLEDO LUCAS COUNTY, O

SCALE No scale
MADE L.I.D. DATE 9-8-52
TRCD R.R. DATE 9-29-52
CKD D.M.D. DATE 9-2-53

HOWARD, NEEDLES, TAMMEN & BERGEN
CONSULTING ENGINEERS
KANSAS CITY NEW YORK

810 SHEET- 3.7

801

CHARLES BRUNING CO., INC.

FED. ROAD DIV. NO.	STATE	FED. AID PROJ. NO.	TYPE FUNDS
2	OHIO	UI-1052(2)	POST WAR

76/120

LUCAS COUNTY
CITY OF TOLEDO
TOLEDO EXPRESSWAY SYSTEM
MAUMEE RIVER BRIDGE
LUC 120R-3.46

JUL 22 1952

Sta. -(6+80.79) ℄ Summit St.
℄ Bush St.
Sta. -(5+81.65) ℄ Summit St.
Sta. -(3+60.00) ℄ Summit Street
℄ Stadium St.
Sta. 0+00 ℄ Summit St.
℄ Summit Street
℄ Bridge Extended
℄ Expressway
EXPRESSWAY
℄ Expressway Tangent
Sta. 6+96.025 ℄ Summit St.
Sta. 5+24.546 Summit Street
Sta. 60+15579
Sta. 59+63.341
Sta. 59+23.579
Sta. 60+36.942
Sta. 250+94.00
Sta. 251+30.19
℄ Bearing North Abutment
538.733'
℄ Bearing Abutment
248.457'
Sta. 5+59.0
Base Line Ramp E-E
Approx 33°30'
Sta. 4+49.097
℄ Pedestals 9E-E
12" Concrete piles See detail above.
Sta. 3+75.5
℄ Bent 7
Sta. 2+50.844
Sta. 247+74.5
Sta. 56+91.557
Sta. 56+00.393
Sta. 246+80.0
Sta. 1+25.743
℄ Pier 6
P.C. Sta. 0+00 Ramp E-E
Sta. 245+54.68 ℄ Expressway
Sta. 54+74.593 ℄ Bridge
℄ Bearing Sta. 245+12.12 ℄ Exp.
= Sta. 54+32.41 ℄ Bridge
℄ Pier 5
Sta. 5+46.1
Sta. 7+43.00
P.T. Ramp E-E Sta. 8+75.00
Sta. 248+07.324 ℄ Expressway
Sta. 57+27.702 ℄ Bridge
H.C.
℄ Bent 9-X
Sta. 57+81.5
163.401'
℄ Pedestals 8 EE
Sta. 57+80.527
℄ Bent 8-X
123.690'
Sta. 57+54.4
℄ Bent 8
Sta. 58+07.892
℄ Bent 9
Sta. 58+19.364
℄ Bent 10-X
Sta. 59+06.309
Sta. 249+880
172.709'
℄ Bent 11-X
Sta. 11+48.89P
Sta. 58+44.533
178.486'
Sta. 246+87.33
137.888'
Sta. 246+83.733
Sta. 12+12.106
Sta. 12+71.579
Sta. 13+46.336
Sta. 14+13.858
Sta. 15+19.82
Sta. 15+76.040
Sta. 245+54.675
Sta. 245+12.120
Sta. 244+69.570
Sta. 244+27.020
Sta. 243+84.470
Sta. 243+41.920
Sta. 242+99.370
Sta. 242+56.820
Sta. 242+14.270
Sta. 241+71.720
Sta. 241+29.170
Sta. 240+86.620
Sta. 240+44.070
Sta. 240+01.520
Sta. 239+58.970
Sta. 239+16.420
Sta. 238+73.870
Sta. 238+31.320
Sta. 237+88.770
Sta. 237+46.220
Sta. 237+03.670
Sta. 236+61.120
Sta. 236+18.570
Sta. 235+76.020
Sta. 235+33.470
Sta. 234+90.920
Sta. 234+48.370
Sta. 234+05.820
Sta. 233+63.270
Sta. 233+20.720
Sta. 232+78.170
Sta. 232+35.620
Sta. 231+93.070
Sta. 231+50.520
Sta. 231+07.970
Sta. 230+65.420
Sta. 230+22.870
Sta. 229+80.320
Sta. 229+37.770
Sta. 228+95.220
Sta. 228+52.670
Sta. 228+10.120
Sta. 227+67.570
Sta. 227+25.020
Sta. 226+82.470
Sta. 226+39.920
Sta. 225+97.370
Sta. 225+54.820
Sta. 225+12.270
Sta. 224+69.720
Sta. 224+27.170
Sta. 223+84.620
Sta. 223+42.070
Sta. 222+99.520
Sta. 222+56.970
Sta. 222+14.420
Sta. 221+71.870
Sta. 221+29.320
Sta. 220+86.770
Sta. 220+44.220
Sta. 220+01.670
Sta. 219+59.120
Sta. 219+16.570
Sta. 218+74.020
Sta. 218+31.470
Sta. 217+88.920
Sta. 217+46.370
Sta. 217+03.820
Sta. 216+61.270
Sta. 216+18.720
Sta. 215+76.170
Sta. 215+33.620
Sta. 214+91.070
Sta. 214+48.520
Sta. 214+05.970
Sta. 213+63.420
Sta. 213+20.870
Sta. 212+78.320
Sta. 212+35.770
Sta. 211+93.220
Sta. 211+50.670
Sta. 211+08.120
Sta. 210+65.570
Sta. 210+23.020
Sta. 209+80.470
Sta. 209+37.920
Sta. 208+95.370
Sta. 208+52.820
Sta. 208+10.270
Sta. 207+67.720
Sta. 207+25.170
Sta. 206+82.620
Sta. 206+40.070
Sta. 205+97.520
Sta. 205+54.970
Sta. 205+12.420
Sta. 204+69.870
Sta. 204+27.320
Sta. 203+84.770
Sta. 203+42.220
Sta. 202+99.670
Sta. 202+57.120
Sta. 202+14.570
Sta. 201+72.020
Sta. 201+29.470
Sta. 200+86.920
Sta. 200+44.370
Sta. 200+01.820
Sta. 199+59.270
Sta. 199+16.720
Sta. 198+74.170
Sta. 198+31.620
Sta. 197+89.070
Sta. 197+46.520
Sta. 197+03.970
Sta. 196+61.420
Sta. 196+18.870
Sta. 195+76.320
Sta. 195+33.770
Sta. 194+91.220
Sta. 194+48.670
Sta. 194+06.120
Sta. 193+63.570
Sta. 193+21.020
Sta. 192+78.470
Sta. 192+35.920
Sta. 191+93.370
Sta. 191+50.820
Sta. 191+08.270
Sta. 190+65.720
Sta. 190+23.170
Sta. 189+80.620
Sta. 189+38.070
Sta. 188+95.520
Sta. 188+52.970
Sta. 188+10.420
Sta. 187+67.870
Sta. 187+25.320
Sta. 186+82.770
Sta. 186+40.220
Sta. 185+97.670
Sta. 185+55.120
Sta. 185+12.570
Sta. 184+70.020
Sta. 184+27.470
Sta. 183+84.920
Sta. 183+42.370
Sta. 182+99.820
Sta. 182+57.270
Sta. 182+14.720
Sta. 181+72.170
Sta. 181+29.620
Sta. 180+87.070
Sta. 180+44.520
Sta. 180+01.970
Sta. 179+59.420
Sta. 179+16.870
Sta. 178+74.320
Sta. 178+31.770
Sta. 177+89.220
Sta. 177+46.670
Sta. 177+04.120
Sta. 176+61.570
Sta. 176+19.020
Sta. 175+76.470
Sta. 175+33.920
Sta. 174+91.370
Sta. 174+48.820
Sta. 174+06.270
Sta. 173+63.720
Sta. 173+21.170
Sta. 172+78.620
Sta. 172+36.070
Sta. 171+93.520
Sta. 171+50.970
Sta. 171+08.420
Sta. 170+65.870
Sta. 170+23.320
Sta. 169+80.770
Sta. 169+38.220
Sta. 168+95.670
Sta. 168+53.120
Sta. 168+10.570
Sta. 167+68.020
Sta. 167+25.470
Sta. 166+82.920
Sta. 166+40.370
Sta. 165+97.820
Sta. 165+55.270
Sta. 165+12.720
Sta. 164+70.170
Sta. 164+27.620
Sta. 163+85.070
Sta. 163+42.520
Sta. 162+99.970
Sta. 162+57.420
Sta. 162+14.870
Sta. 161+72.320
Sta. 161+29.770
Sta. 160+87.220
Sta. 160+44.670
Sta. 160+02.120
Sta. 159+59.570
Sta. 159+17.020
Sta. 158+74.470
Sta. 158+31.920
Sta. 157+89.370
Sta. 157+46.820
Sta. 157+04.270
Sta. 156+61.720
Sta. 156+19.170
Sta. 155+76.620
Sta. 155+34.070
Sta. 154+91.520
Sta. 154+48.970
Sta. 154+06.420
Sta. 153+63.870
Sta. 153+21.320
Sta. 152+78.770
Sta. 152+36.220
Sta. 151+93.670
Sta. 151+51.120
Sta. 151+08.570
Sta. 150+66.020
Sta. 150+23.470
Sta. 149+80.920
Sta. 149+38.370
Sta. 148+95.820
Sta. 148+53.270
Sta. 148+10.720
Sta. 147+68.170
Sta. 147+25.620
Sta. 146+83.070
Sta. 146+40.520
Sta. 145+97.970
Sta. 145+55.420
Sta. 145+12.870
Sta. 144+70.320
Sta. 144+27.770
Sta. 143+85.220
Sta. 143+42.670
Sta. 143+00.120
Sta. 142+57.570
Sta. 142+15.020
Sta. 141+72.470
Sta. 141+29.920
Sta. 140+87.370
Sta. 140+44.820
Sta. 140+02.270
Sta. 139+59.720
Sta. 139+17.170
Sta. 138+74.620
Sta. 138+32.070
Sta. 137+89.520
Sta. 137+46.970
Sta. 137+04.420
Sta. 136+61.870
Sta. 136+19.320
Sta. 135+76.770
Sta. 135+34.220
Sta. 134+91.670
Sta. 134+49.120
Sta. 134+06.570
Sta. 133+64.020
Sta. 133+21.470
Sta. 132+78.920
Sta. 132+36.370
Sta. 131+93.820
Sta. 131+51.270
Sta. 131+08.720
Sta. 130+66.170
Sta. 130+23.620
Sta. 129+81.070
Sta. 129+38.520
Sta. 128+95.970
Sta. 128+53.420
Sta. 128+10.870
Sta. 127+68.320
Sta. 127+25.770
Sta. 126+83.220
Sta. 126+40.670
Sta. 125+98.120
Sta. 125+55.570
Sta. 125+13.020
Sta. 124+70.470
Sta. 124+27.920
Sta. 123+85.370
Sta. 123+42.820
Sta. 123+00.270
Sta. 122+57.720
Sta. 122+15.170
Sta. 121+72.620
Sta. 121+30.070
Sta. 120+87.520
Sta. 120+44.970
Sta. 120+02.420
Sta. 119+59.870
Sta. 119+17.320
Sta. 118+74.770
Sta. 118+32.220
Sta. 117+89.670
Sta. 117+47.120
Sta. 117+04.570
Sta. 116+62.020
Sta. 116+19.470
Sta. 115+76.920
Sta. 115+34.370
Sta. 114+91.820
Sta. 114+49.270
Sta. 114+06.720
Sta. 113+64.170
Sta. 113+21.620
Sta. 112+79.070
Sta. 112+36.520
Sta. 111+93.970
Sta. 111+51.420
Sta. 111+08.870
Sta. 110+66.320
Sta. 110+23.770
Sta. 109+81.220
Sta. 109+38.670
Sta. 108+96.120
Sta. 108+53.570
Sta. 108+11.020
Sta. 107+68.470
Sta. 107+25.920
Sta. 106+83.370
Sta. 106+40.820
Sta. 105+98.270
Sta. 105+55.720
Sta. 105+13.170
Sta. 104+70.620
Sta. 104+28.070
Sta. 103+85.520
Sta. 103+42.970
Sta. 103+00.420
Sta. 102+57.870
Sta. 102+15.320
Sta. 101+72.770
Sta. 101+30.220
Sta. 100+87.670
Sta. 100+45.120
Sta. 100+02.570
Sta. 99+60.020
Sta. 99+17.470
Sta. 98+74.920
Sta. 98+32.370
Sta. 97+89.820
Sta. 97+47.270
Sta. 97+04.720
Sta. 96+62.170
Sta. 96+19.620
Sta. 95+77.070
Sta. 95+34.520
Sta. 94+91.970
Sta. 94+49.420
Sta. 94+06.870
Sta. 93+64.320
Sta. 93+21.770
Sta. 92+79.220
Sta. 92+36.670
Sta. 91+94.120
Sta. 91+51.570
Sta. 91+09.020
Sta. 90+66.470
Sta. 90+23.920
Sta. 89+81.370
Sta. 89+38.820
Sta. 88+96.270
Sta. 88+53.720
Sta. 88+11.170
Sta. 87+68.620
Sta. 87+26.070
Sta. 86+83.520
Sta. 86+40.970
Sta. 85+98.420
Sta. 85+55.870
Sta. 85+13.320
Sta. 84+70.770
Sta. 84+28.220
Sta. 83+85.670
Sta. 83+43.120
Sta. 83+00.570
Sta. 82+58.020
Sta. 82+15.470
Sta. 81+72.920
Sta. 81+30.370
Sta. 80+87.820
Sta. 80+45.270
Sta. 80+02.720
Sta. 79+60.170
Sta. 79+17.620
Sta. 78+75.070
Sta. 78+32.520
Sta. 77+89.970
Sta. 77+47.420
Sta. 77+04.870
Sta. 76+62.320
Sta. 76+19.770
Sta. 75+77.220
Sta. 75+34.670
Sta. 74+92.120
Sta. 74+49.570
Sta. 74+07.020
Sta. 73+64.470
Sta. 73+21.920
Sta. 72+79.370
Sta. 72+36.820
Sta. 71+94.270
Sta. 71+51.720
Sta. 71+09.170
Sta. 70+66.620
Sta. 70+24.070
Sta. 69+81.520
Sta. 69+38.970
Sta. 68+96.420
Sta. 68+53.870
Sta. 68+11.320
Sta. 67+68.770
Sta. 67+26.220
Sta. 66+83.670
Sta. 66+41.120
Sta. 65+98.570
Sta. 65+56.020
Sta. 65+13.470
Sta. 64+70.920
Sta. 64+28.370
Sta. 63+85.820
Sta. 63+43.270
Sta. 63+00.720
Sta. 62+58.170
Sta. 62+15.620
Sta. 61+73.070
Sta. 61+30.520
Sta. 60+87.970
Sta. 60+45.420
Sta. 60+02.870
Sta. 59+60.320
Sta. 59+17.770
Sta. 58+75.220
Sta. 58+32.670
Sta. 57+90.120
Sta. 57+47.570
Sta. 57+05.020
Sta. 56+62.470
Sta. 56+19.920
Sta. 55+77.370
Sta. 55+34.820
Sta. 54+92.270
Sta. 54+49.720
Sta. 54+07.170
Sta. 53+64.620
Sta. 53+22.070
Sta. 52+79.520
Sta. 52+36.970
Sta. 51+94.420
Sta. 51+51.870
Sta. 51+09.320
Sta. 50+66.770
Sta. 50+24.220
Sta. 49+81.670
Sta. 49+39.120
Sta. 48+96.570
Sta. 48+54.020
Sta. 48+11.470
Sta. 47+68.920
Sta. 47+26.370
Sta. 46+83.820
Sta. 46+41.270
Sta. 45+98.720
Sta. 45+56.170
Sta. 45+13.620
Sta. 44+71.070
Sta. 44+28.520
Sta. 43+85.970
Sta. 43+43.420
Sta. 43+00.870
Sta. 42+58.320
Sta. 42+15.770
Sta. 41+73.220
Sta. 41+30.670
Sta. 40+88.120
Sta. 40+45.570
Sta. 40+03.020
Sta. 39+60.470
Sta. 39+17.920
Sta. 38+75.370
Sta. 38+32.820
Sta. 37+90.270
Sta. 37+47.720
Sta. 37+05.170
Sta. 36+62.620
Sta. 36+20.070
Sta. 35+77.520
Sta. 35+34.970
Sta. 34+92.420
Sta. 34+49.870
Sta. 34+07.320
Sta. 33+64.770
Sta. 33+22.220
Sta. 32+79.670
Sta. 32+37.120
Sta. 31+94.570
Sta. 31+52.020
Sta. 31+09.470
Sta. 30+66.920
Sta. 30+24.370
Sta. 29+81.820
Sta. 29+39.270
Sta. 28+96.720
Sta. 28+54.170
Sta. 28+11.620
Sta. 27+69.070
Sta. 27+26.520
Sta. 26+83.970
Sta. 26+41.420
Sta. 25+98.870
Sta. 25+56.320
Sta. 25+13.770
Sta. 24+71.220
Sta. 24+28.670
Sta. 23+86.120
Sta. 23+43.570
Sta. 23+01.020
Sta. 22+58.470
Sta. 22+15.920
Sta. 21+73.370
Sta. 21+30.820
Sta. 20+88.270
Sta. 20+45.720
Sta. 20+03.170
Sta. 19+60.620
Sta. 19+18.070
Sta. 18+75.520
Sta. 18+32.970
Sta. 17+90.420
Sta. 17+47.870
Sta. 17+05.320
Sta. 16+62.770
Sta. 16+20.220
Sta. 15+77.670
Sta. 15+35.120
Sta. 14+92.570
Sta. 14+50.020
Sta. 14+07.470
Sta. 13+64.920
Sta. 13+22.370
Sta. 12+79.820
Sta. 12+37.270
Sta. 11+94.720
Sta. 11+52.170
Sta. 11+09.620
Sta. 10+67.070
Sta. 10+24.520
Sta. 9+81.970
Sta. 9+39.420
Sta. 8+96.870
Sta. 8+54.320
Sta. 8+11.770
Sta. 7+69.220
Sta. 7+26.670
Sta. 6+84.120
Sta. 6+41.570
Sta. 5+99.020
Sta. 5+56.470
Sta. 5+13.920
Sta. 4+71.370
Sta. 4+28.820
Sta. 3+86.270
Sta. 3+43.720
Sta. 3+01.170
Sta. 2+58.620
Sta. 2+16.070
Sta. 1+73.520
Sta. 1+30.970
Sta. 0+88.420
Sta. 0+45.870
Sta. 0+03.320

12" Pile, cutoff Elev. 590.63
10.39'
12.36'
1.39'
17.00'
Sta. 4+49.097
℄ Pedestals 9E-E
Base Line Ramp E-E
12" Pile, cutoff Elev. 586.26

PILE PLAN FOR STAIRWAY FROM RAMP E-E

Curve Data ℄ Expressway
Δ = 24° 33'01"
D = 1°15'
R = 4583.662'

Curve Data Ramp E-E
Δ = 70° 00'
D = 8° 00'
R = 716.197'
L = 875 ft

Curve Data Ramp X
Δ = 86° 12' 54"
D = 16° 30'
R = 347.247'
T = 325.033'
L = 522.515'

Unit 2
Unit 3
℄ Bearing Pier 5
P.T. Ramp X Sta. 15+19.820
R = 347.247'
Nose Sta. 14+43.918
℄ Pier 6
Ramp X Base Line
2°R.
℄ Bent 7
℄ Bridge Extended
℄ Between girders G-2 and G-3
℄ Bent 6 Normal to ℄ Expr. at 248+87.330
℄ Bent 9 - 80° skew with tangent to Expr. at 240+88.000
℄ Bearing North Abutment - Normal to ℄ Expr. at 250+94.000
℄ Expressway 1°15' Curve
Ramp EE Base Line
P.C. Ramp EE Sta. 0+00
P.C. Sta. 246+07.324
P.T. Sta. 248+07.324
Parabolic curve
Tangent
Nose Sta. 2+55.420 ℄ Expansion Joint Sta. 2+59.000
Opposite curb P.T. Sta. 3+46.061
Sta. 7+43.00 Ramp X End Toewall
Sta. 9+16 Ramp X Begin Toewall
Sta. 10+15.998
Sta. 10+87.0
Sta. 11+48.89P
Sta. 12+12.106
Sta. 12+71.579
Sta. 13+46.336
Sta. 14+13.858
Sta. 15+19.82
Sta. 15+76.040
Sta. 245+54.675
Sta. 245+12.120
Sta. 244+69.570
Sta. 244+27.020
Sta. 243+84.470
Sta. 243+41.920
Sta. 242+99.370
Sta. 242+56.820
Sta. 242+14.270
Sta. 241+71.720
Sta. 241+29.170
Sta. 240+86.620
Sta. 240+44.070
Sta. 240+01.520
Sta. 239+58.970
Sta. 239+16.420
Sta. 238+73.870
Sta. 238+31.320
Sta. 237+88.770
Sta. 237+46.220
Sta. 237+03.670
Sta. 236+61.120
Sta. 236+18.570
Sta. 235+76.020
Sta. 235+33.470
Sta. 234+90.920
Sta. 234+48.370
Sta. 234+05.820
Sta. 233+63.270
Sta. 233+20.720
Sta. 232+78.170
Sta. 232+35.620
Sta. 231+93.070
Sta. 231+50.520
Sta. 231+07.970
Sta. 230+65.420
Sta. 230+22.870
Sta. 229+80.320
Sta. 229+37.770
Sta. 228+95.220
Sta. 228+52.670
Sta. 228+10.120
Sta. 227+67.570
Sta. 227+25.020
Sta. 226+82.470
Sta. 226+39.920
Sta. 225+97.370
Sta. 225+54.820
Sta. 225+12.270
Sta. 224+69.720
Sta. 224+27.170
Sta. 223+84.620
Sta. 223+42.070
Sta. 222+99.520
Sta. 222+56.970
Sta. 222+14.420
Sta. 221+71.870
Sta. 221+29.320
Sta. 220+86.770
Sta. 220+44.220
Sta. 220+01.670
Sta. 219+59.120
Sta. 219+16.570
Sta. 218+74.020
Sta. 218+31.470
Sta. 217+88.920
Sta. 217+46.370
Sta. 217+03.820
Sta. 216+61.270
Sta. 216+18.720
Sta. 215+76.170
Sta. 215+33.620
Sta. 214+91.070
Sta. 214+48.520
Sta. 214+05.970
Sta. 213+63.420
Sta. 213+20.870
Sta. 212+78.320
Sta. 212+35.770
Sta. 211+93.220
Sta. 211+50.670
Sta. 211+08.120
Sta. 210+65.570
Sta. 210+23.020
Sta. 209+80.470
Sta. 209+37.920
Sta. 208+95.370
Sta. 208+52.820
Sta. 208+10.270
Sta. 207+67.720
Sta. 207+25.170
Sta. 206+82.620
Sta. 206+40.070
Sta. 205+97.520
Sta. 205+54.970
Sta. 205+12.420
Sta. 204+69.870
Sta. 204+27.320
Sta. 203+84.770
Sta. 203+42.220
Sta. 202+99.670
Sta. 202+57.120
Sta. 202+14.570
Sta. 201+72.020
Sta. 201+29.470
Sta. 200+86.920
Sta. 200+44.370
Sta. 200+01.820
Sta. 199+59.270
Sta. 199+16.720
Sta. 198+74.170
Sta. 198+31.620
Sta. 197+89.070
Sta. 197+46.520
Sta. 197+03.970
Sta. 196+61.420
Sta. 196+18.870
Sta. 195+76.320
Sta. 195+33.770
Sta. 194+91.220
Sta. 194+48.670
Sta. 194+06.120
Sta. 193+63.570
Sta. 193+21.020
Sta. 192+78.470
Sta. 192+35.920
Sta. 191+93.370
Sta. 191+50.820
Sta. 191+08.270
Sta. 190+65.720
Sta. 190+23.170
Sta. 189+80.620
Sta. 189+38.070
Sta. 188+95.520
Sta. 188+52.970
Sta. 188+10.420
Sta. 187+67.870
Sta. 187+25.320
Sta. 186+82.770
Sta. 186+40.220
Sta. 185+97.670
Sta. 185+55.120
Sta. 185+12.570
Sta. 184+70.020
Sta. 184+27.470
Sta. 183+84.920
Sta. 183+42.370
Sta. 182+99.820
Sta. 182+57.270
Sta. 182+14.720
Sta. 181+72.170
Sta. 181+29.620
Sta. 180+87.070
Sta. 180+44.520
Sta. 180+01.970
Sta. 179+59.420
Sta. 179+16.870
Sta. 178+74.320
Sta. 178+31.770
Sta. 177+89.220
Sta. 177+46.670
Sta. 177+04.120
Sta. 176+61.570
Sta. 176+19.020
Sta. 175+76.470
Sta. 175+33.920
Sta. 174+91.370
Sta. 174+48.820
Sta. 174+06.270
Sta. 173+63.720
Sta. 173+21.170
Sta. 172+78.620
Sta. 172+36.070
Sta. 171+93.520
Sta. 171+50.970
Sta. 171+08.420
Sta. 170+65.870
Sta. 170+23.320
Sta. 169+80.770
Sta. 169+38.220
Sta. 168+95.670
Sta. 168+53.120
Sta. 168+10.570
Sta. 167+68.020
Sta. 167+25.470
Sta. 166+82.920
Sta. 166+40.370
Sta. 165+97.820
Sta. 165+55.270
Sta. 165+12.720
Sta. 164+70.170
Sta. 164+27.620
Sta. 163+85.070
Sta. 163+42.520
Sta. 162+99.970
Sta. 162+57.420
Sta. 162+14.870
Sta. 161+72.320
Sta. 161+29.770
Sta. 160+87.220
Sta. 160+44.670
Sta. 160+02.120
Sta. 159+59.570
Sta. 159+17.020
Sta. 158+74.470
Sta. 158+31.920
Sta. 157+89.370
Sta. 157+46.820
Sta. 157+04.270
Sta. 156+61.720
Sta. 156+19.170
Sta. 155+76.620
Sta. 155+34.070
Sta. 154+91.520
Sta. 154+48.970
Sta. 154+06.420
Sta. 153+63.870
Sta. 153+21.320
Sta. 152+78.770
Sta. 152+36.220
Sta. 151+93.670
Sta. 151+51.120
Sta. 151+08.570
Sta. 150+66.020
Sta. 150+23.470
Sta. 149+80.920
Sta. 149+38.370
Sta. 148+95.820
Sta. 148+53.270
Sta. 148+10.720
Sta. 147+68.170
Sta. 147+25.620
Sta. 146+83.070
Sta. 146+40.520
Sta. 145+97.970
Sta. 145+55.420
Sta. 145+12.870
Sta. 144+70.320
Sta. 144+27.770
Sta. 143+85.220
Sta. 143+42.670
Sta. 143+00.120
Sta. 142+57.570
Sta. 142+15.020
Sta. 141+72.470
Sta. 141+29.920
Sta. 140+87.370
Sta. 140+44.820
Sta. 140+02.270
Sta. 139+59.720
Sta. 139+17.170
Sta. 138+74.620
Sta. 138+32.070
Sta. 137+89.520
Sta. 137+46.970
Sta. 137+04.420
Sta. 136+61.870
Sta. 136+19.320
Sta. 135+76.770
Sta. 135+34.220
Sta. 134+91.670
Sta. 134+49.120
Sta. 134+06.570
Sta. 133+64.020
Sta. 133+21.470
Sta. 132+78.920
Sta. 132+36.370
Sta. 131+93.820
Sta. 131+51.270
Sta. 131+08.720
Sta. 130+66.170
Sta. 130+23.620
Sta. 129+81.070
Sta. 129+38.520
Sta. 128+95.970
Sta. 128+53.420
Sta. 128+10.870
Sta. 127+68.320
Sta. 127+25.770
Sta. 126+83.220
Sta. 126+40.670
Sta. 125+98.120
Sta. 125+55.570
Sta. 125+13.020
Sta. 124+70.470
Sta. 124+27.920
Sta. 123+85.370
Sta. 123+42.820
Sta. 123+00.270
Sta. 122+57.720
Sta. 122+15.170
Sta. 121+72.620
Sta. 121+30.070
Sta. 120+87.520
Sta. 120+44.970
Sta. 120+02.420
Sta. 119+59.870
Sta. 119+17.320
Sta. 118+74.770
Sta. 118+32.220
Sta. 117+89.670
Sta. 117+47.120
Sta. 117+04.570
Sta. 116+62.020
Sta. 116+19.470
Sta. 115+76.920
Sta. 115+34.370
Sta. 114+91.820
Sta. 114+49.270
Sta. 114+06.720
Sta. 113+64.170
Sta. 113+21.620
Sta. 112+79.070
Sta. 112+36.520
Sta. 111+93.970
Sta. 111+51.420
Sta. 111+08.870
Sta. 110+66.320
Sta. 110+23.770
Sta. 109+81.220
Sta. 109+38.670
Sta. 108+96.120
Sta. 108+53.570
Sta. 108+11.020
Sta. 107+68.470
Sta. 107+25.920
Sta. 106+83.370
Sta. 106+40.820
Sta. 105+98.270
Sta. 105+55.720
Sta. 105+13.170
Sta. 104+70.620
Sta. 104+28.070
Sta. 103+85.520
Sta. 103+42.970
Sta. 103+00.420
Sta. 102+57.870
Sta. 102+15.320
Sta. 101+72.770
Sta. 101+30.220
Sta. 100+87.670
Sta. 100+45.120
Sta. 100+02.570
Sta. 99+60.020
Sta. 99+17.470
Sta. 98+74.920
Sta. 98+32.370
Sta. 97+89.820
Sta. 97+47.270
Sta. 97+04.720
Sta. 96+62.170
Sta. 96+19.620
Sta. 95+77.070
Sta. 95+34.520
Sta. 94+91.970
Sta. 94+49.420
Sta. 94+06.870
Sta. 93+64.320
Sta. 93+21.770
Sta. 92+79.220
Sta. 92+36.670
Sta. 91+94.120
Sta. 91+51.570
Sta. 91+09.020
Sta. 90+66.470
Sta. 90+23.920
Sta. 89+81.370
Sta. 89+38.820
Sta. 88+96.270
Sta. 88+53.720
Sta. 88+11.170
Sta. 87+68.620
Sta. 87+26.070
Sta. 86+83.520
Sta. 86+40.970
Sta. 85+98.420
Sta. 85+55.870
Sta. 85+13.320
Sta. 84+70.770
Sta. 84+28.220
Sta. 83+85.670
Sta. 83+43.120
Sta. 83+00.570
Sta. 82+58.020
Sta. 82+15.470
Sta. 81+72.920
Sta. 81+30.370
Sta. 80+87.820
Sta. 80+45.270
Sta. 80+02.720
Sta. 79+60.170
Sta. 79+17.620
Sta. 78+75.070
Sta. 78+32.520
Sta. 77+89.970
Sta. 77+47.420
Sta. 77+04.870
Sta. 76+62.320
Sta. 76+19.770
Sta. 75+77.220
Sta. 75+34.670
Sta. 74+92.120
Sta. 74+49.570
Sta. 74+07.020
Sta. 73+64.470
Sta. 73+21.920
Sta. 72+79.370
Sta. 72+36.820
Sta. 71+94.270
Sta. 71+51.720
Sta. 71+09.170
Sta. 70+66.620
Sta. 70+24.070
Sta. 69+81.520
Sta. 69+38.970
Sta. 68+96.420
Sta. 68+53.870
Sta. 68+11.320
Sta. 67+68.770
Sta. 67+26.220
Sta. 66+83.670
Sta. 66+41.120
Sta. 65+98.570
Sta. 65+56.020
Sta. 65+13.470
Sta. 64+70.920
Sta. 64+28.370
Sta. 63+85.820
Sta. 63+43.270
Sta. 63+00.720
Sta. 62+58.170
Sta. 62+15.620
Sta. 61+73.070
Sta. 61+30.520
Sta. 60+87.970
Sta. 60+45.420
Sta. 60+02.870
Sta. 59+60.320
Sta. 59+17.770
Sta. 58+75.220
Sta. 58+32.670
Sta. 57+90.120
Sta. 57+47.570
Sta. 57+05.020
Sta. 56+62.470
Sta. 56+19.920
Sta. 55+77.370
Sta. 55+34.820
Sta. 54+92.270
Sta. 54+49.720
Sta. 54+07.170
Sta. 53+64.620
Sta. 53+22.070
Sta. 52+79.520
Sta. 52+36.970
Sta. 51+94.420
Sta. 51+51.870
Sta. 51+09.320
Sta. 50+66.770
Sta. 50+24.220
Sta. 49+81.670
Sta. 49+39.120
Sta. 48+96.570
Sta. 48+54.020
Sta. 48+11.470
Sta. 47+68.920
Sta. 47+26.370
Sta. 46+83.820
Sta. 46+41.270
Sta. 45+98.720
Sta. 45+56.170
Sta. 45+13.620
Sta. 44+71.070
Sta. 44+28.520
Sta. 43+85.970
Sta. 43+43.420
Sta. 43+00.870
Sta. 42+58.320
Sta. 42+15.770
Sta. 41+73.220
Sta. 41+30.670
Sta. 40+88.120
Sta. 40+45.570
Sta. 40+03.020
Sta. 39+60.470
Sta. 39+17.920
Sta. 38+75.370
Sta. 38+32.820
Sta. 37+90.270
Sta. 37+47.720
Sta. 37+05.170
Sta. 36+62.620
Sta. 36+20.070
Sta. 35+77.520
Sta. 35+34.970
Sta. 34+92.420
Sta. 34+49.870
Sta. 34+07.320
Sta. 33+64.770
Sta. 33+22.220
Sta. 32+79.670
Sta. 32+37.120
Sta. 31+94.570
Sta. 31+52.020
Sta. 31+09.470
Sta. 30+66.920
Sta. 30+24.370
Sta. 29+81.820
Sta. 29+39.270
Sta. 28+96.720
Sta. 28+54.170
Sta. 28+11.620
Sta. 27+69.070
Sta. 27+26.520
Sta. 26+83.970
Sta. 26+41.420
Sta. 25+98.870
Sta. 25+56.320
Sta. 25+13.770
Sta. 24+71.220
Sta. 24+28.670
Sta. 23+86.120
Sta. 23+43.570
Sta. 23+01.020
Sta. 22+58.470
Sta. 22+15.920
Sta. 21+73.370
Sta. 21+30.820
Sta. 20+88.270
Sta. 20+45.720
Sta. 20+03.170
Sta. 19+60.620
Sta. 19+18.070
Sta. 18+75.520
Sta. 18+32.970
Sta. 17+90.420
Sta. 17+47.870
Sta. 17+05.320
Sta. 16+62.770
Sta. 16+20.220
Sta. 15+77.670
Sta. 15+35.120
Sta. 14+92.570
Sta. 14+50.020
Sta. 14+07.470
Sta. 13+64.920
Sta. 13+22.370
Sta. 12+79.820
Sta. 12+37.270
Sta. 11+94.720
Sta. 11+52.170
Sta. 11+09.620
Sta. 10+67.070
Sta. 10+24.520
Sta. 9+81.970
Sta. 9+39.420
Sta. 8+96.870
Sta. 8+54.320
Sta. 8+11.770
Sta. 7+69.220
Sta. 7+26.670
Sta. 6+84.120
Sta. 6+41.570
Sta. 5+99.020
Sta. 5+56.470
Sta. 5+13.920
Sta. 4+71.370
Sta. 4+28.820
Sta. 3+86.270
Sta. 3+43.720
Sta. 3+01.170
Sta. 2+58.620
Sta. 2+16.070
Sta. 1+73.520
Sta. 1+30.970
Sta. 0+88.420
Sta. 0+45.870
Sta. 0+03.320

GEOMETRICS OF UNITS 2 AND 3
No Scale

Note: ℄ Bridge thru Unit 2 serves only to provide station continuity for profile grade. See sheet 2.

Note: ℄ Bridge and ℄ Expressway intersect at Sta. 50+00 ℄ Bridge = Sta 240+79.68 ℄ Expressway.

A clear distance of 15' shall be maintained between face of wall and ℄ track.

PART 3

TOLEDO EXPRESSWAY SYSTEM

MAUMEE RIVER BRIDGE
BR. NO. LU 120 R-35
NORTH PORTION
GENERAL PLAN

TOLEDO LUCAS COUNTY, OHIO

SCALE 1" = 50'
MADE B.K.H. DATE 6-2-52
TRCD M.K. DATE 6-27-52
CKD J.D.P. DATE 7-2-52

HOWARD, NEEDLES, TAMMEN & BERGENDOFF
CONSULTING ENGINEERS
KANSAS CITY NEW YORK

810 SHEET- 3 76

847

JUL 22 1953

FED. ROAD DIV. NO	STATE	FED. AID PROJ. NO.	TYPE FUNDS
2	OHIO	UI-1052(2)	POST WAR

77
120

LUCAS COUNTY
CITY OF TOLEDO
TOLEDO EXPRESSWAY SYSTEM
MAUMEE RIVER BRIDGE
LUC 120R-3.46

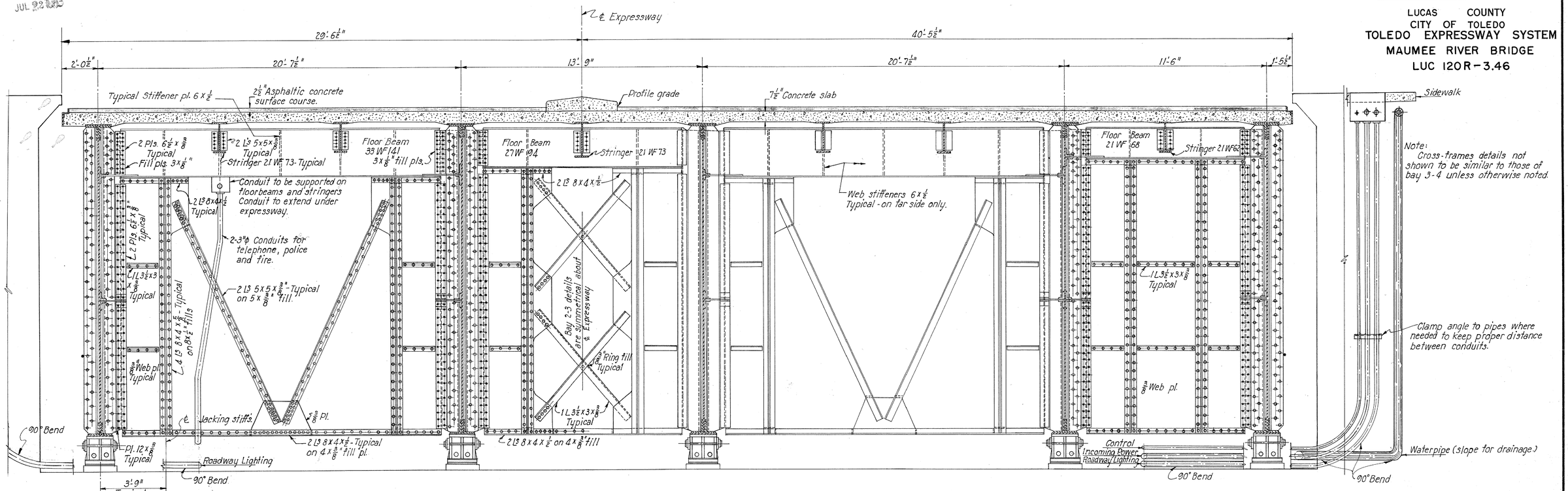

CROSS SECTION AT BASCULE PIER 5

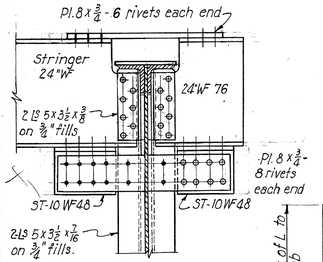

CANTILEVER STRINGER CONNECTION AT RAMP E-E
Scale: ¾" = 1'-0"

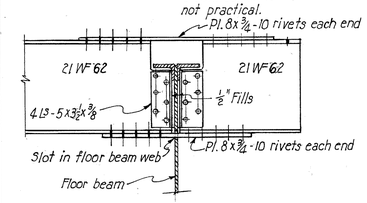

CANTILEVER STRINGER CONNECTION - PIER 6
Scale: ¾" = 1'-0"

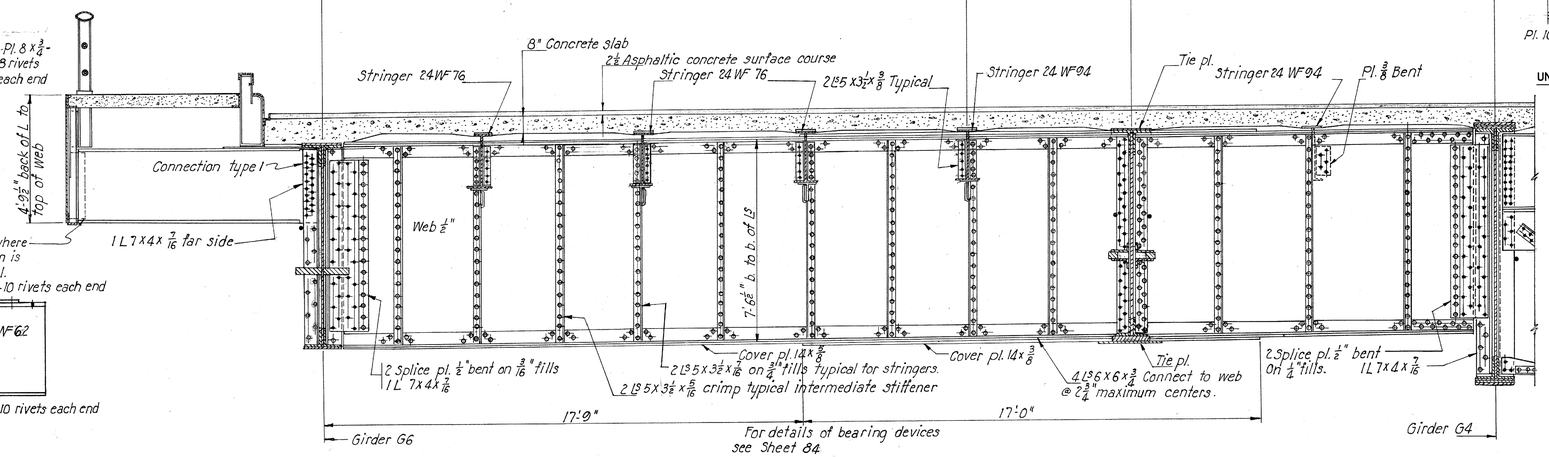

ELEVATION OF CROSS GIRDER AT RAMP E-E

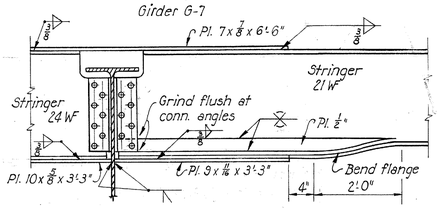

UNEQUAL DEPTH STRINGERS CONNECTION
Scale: ¾" = 1'-0"

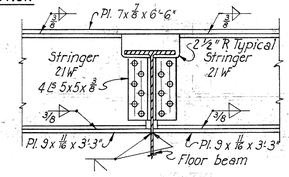

EQUAL DEPTH STRINGER CONNECTION
Scale: ¾" = 1'-0"

PART 3

TOLEDO EXPRESSWAY SYSTEM
MAUMEE RIVER BRIDGE
BR. NO. LU 120R-35
UNIT 2
ROADWAY CROSS SECTIONS
TOLEDO LUCAS COUNTY, OHIO

SCALE ¾" = 1'-0"
MADE M.K.A. DATE 9.10.52
TRCD. R.R. DATE 7-3-53
CKD. J.D.P.-N.F. DATE 9-9-53

HOWARD, NEEDLES, TAMMEN & BERGENDOFF
CONSULTING ENGINEERS
KANSAS CITY NEW YORK
810 SHEET 3.77

602

MICROFILMED
JUL 29 19

FED. ROAD DIV. NO	STATE	FED. AID PROJ. NO.	TYPE FUNDS
2	OHIO	UI-1052(2)	POST WAR

78
120

LUCAS COUNTY
CITY OF TOLEDO
TOLEDO EXPRESSWAY SYSTEM
MAUMEE RIVER BRIDGE
LUC 120R-3.46

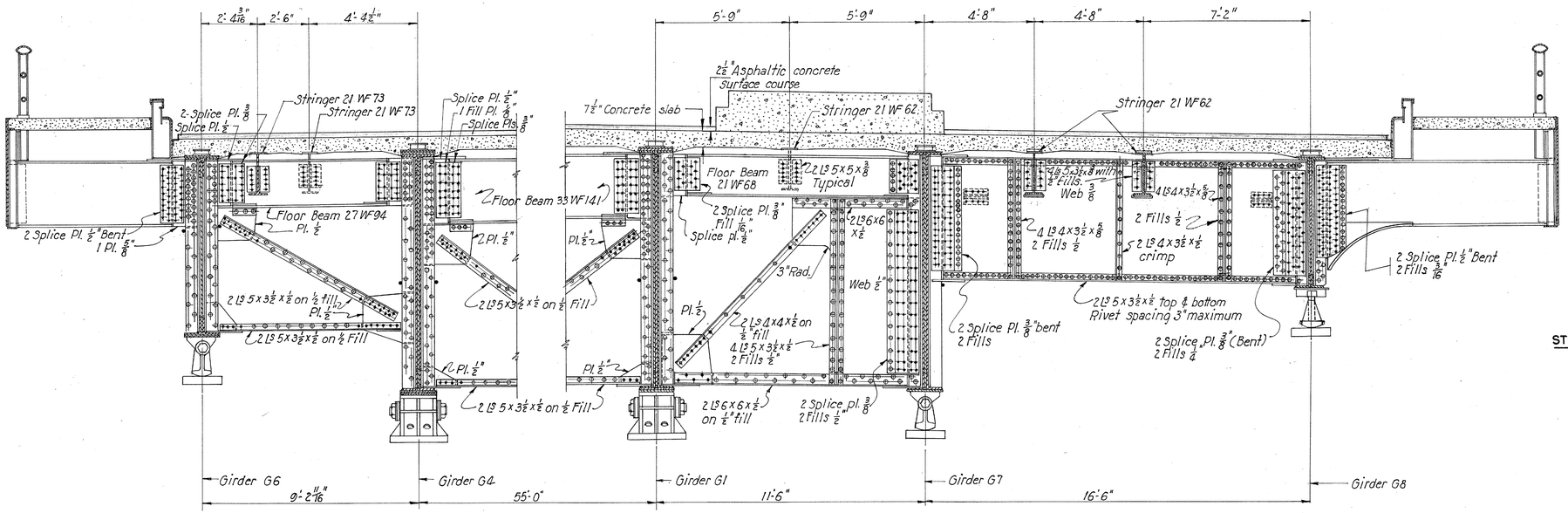

PART CROSS SECTION PIER 6 LOOKING SOUTH

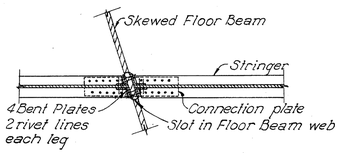

STRINGER CONNECTION AT SKEWED FLOOR BEAM

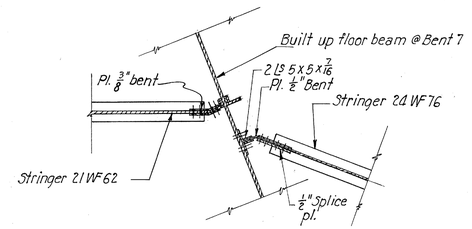

DETAIL SHOWING BENT STRINGER CONNECTIONS

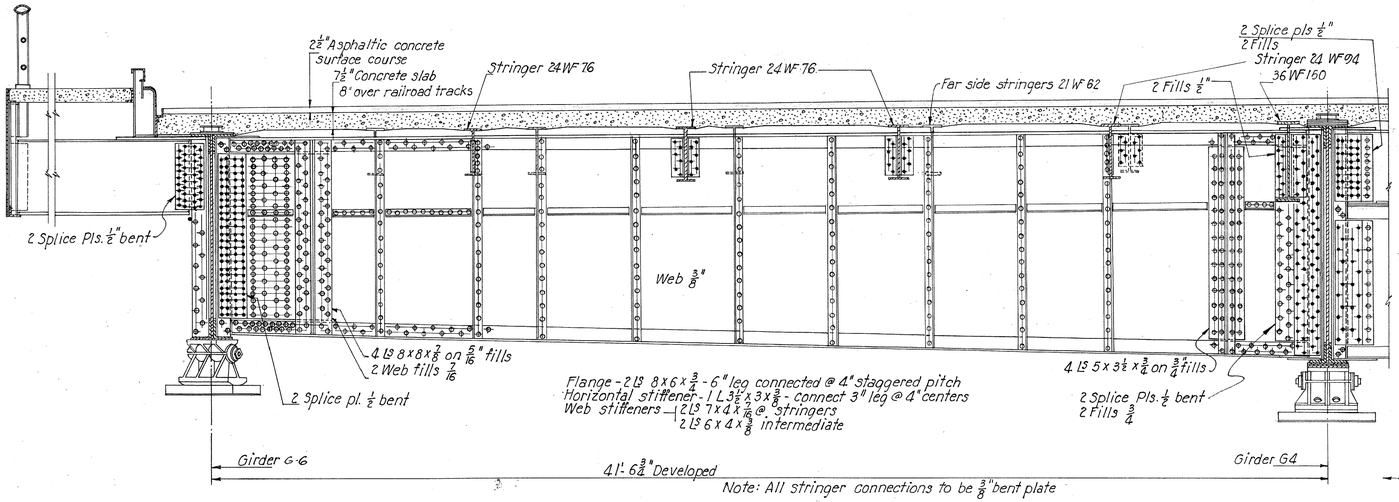

PART CROSS SECTION BENT 7 LOOKING SOUTH

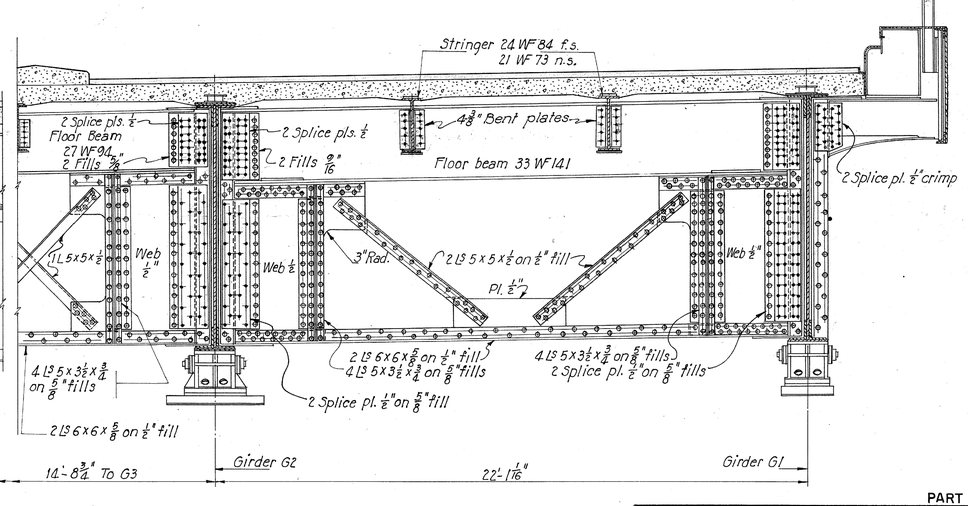

PART 3

TOLEDO EXPRESSWAY SYSTEM
MAUMEE RIVER BRIDGE
BR. NO. LU 120R-35
UNIT 2
ROADWAY CROSS SECTIONS
TOLEDO LUCAS COUNTY, OHIO

SCALE 3/8" = 1'-0"
MADE C.G.P. DATE 10-16-52
TRCD. R.R. DATE 7-14-53
CKD. JDP-NF DATE 9-15-53

HOWARD, NEEDLES, TAMMEN & BERGENDOFF
CONSULTING ENGINEERS
KANSAS CITY NEW YORK

810 SHEET- 3.78

803

FED. ROAD DIV. NO	STATE	FED. AID PROJ. NO.	TYPE FUNDS
2	OHIO	UI-1052(2)	POST WAR

79
120

LUCAS COUNTY
CITY OF TOLEDO
TOLEDO EXPRESSWAY SYSTEM
MAUMEE RIVER BRIDGE
LUC 120R-3.46

RECOMMENDED
JUL 22 19

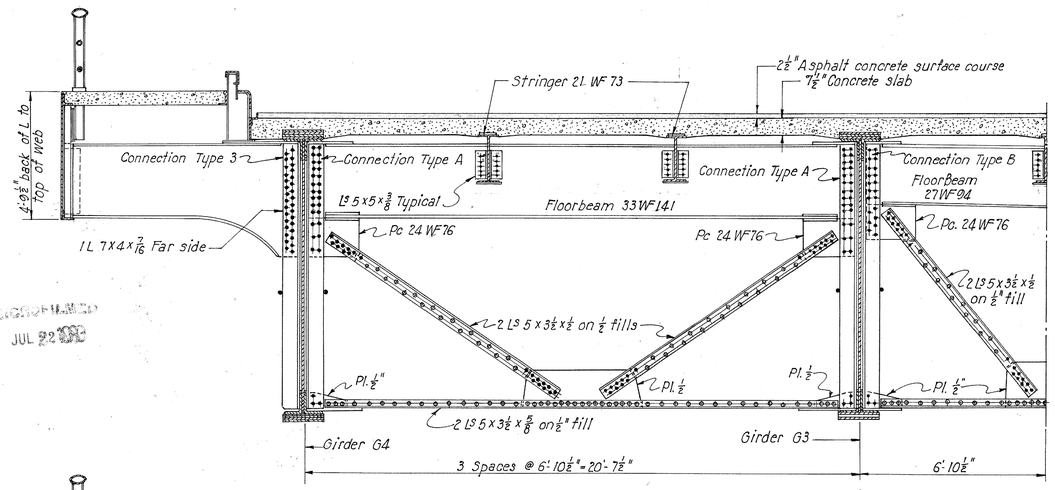

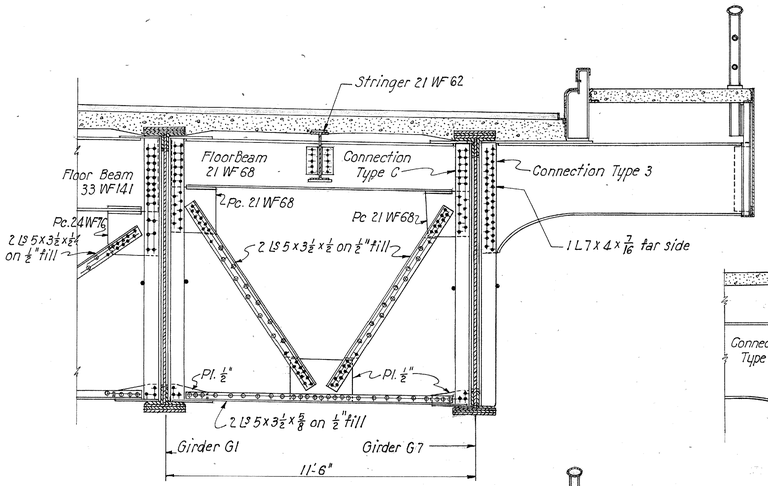

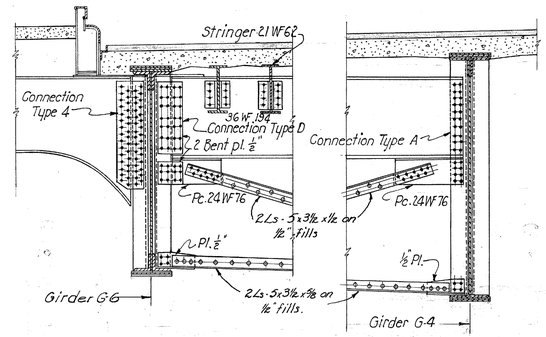

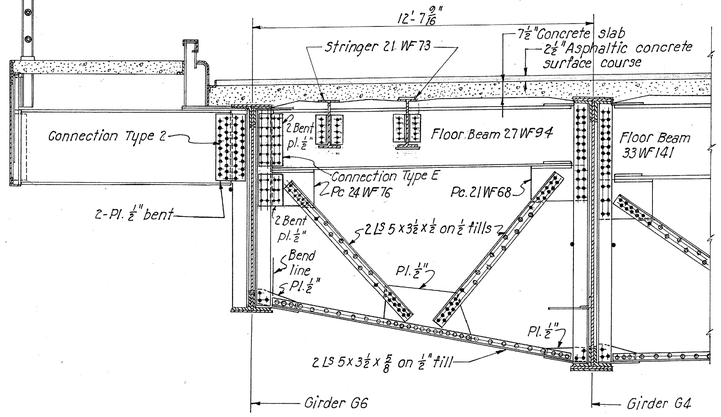

PART CROSS SECTION AT PANEL POINT ④ LOOKING SOUTH
Section between girders G1 and G4 typical throughout except as shown.

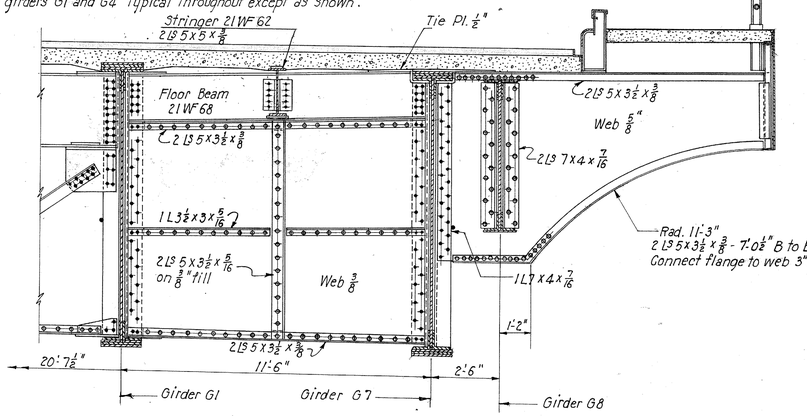

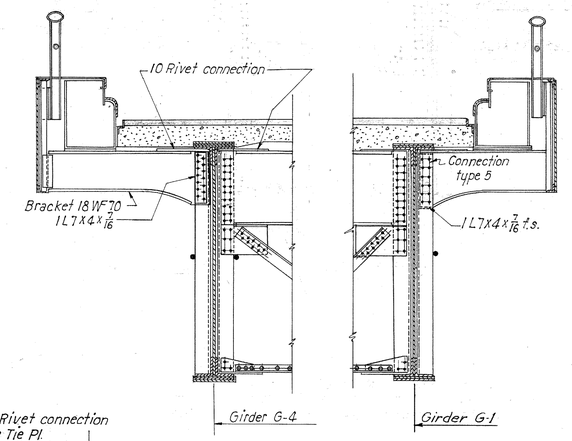

PART CROSS SECTION AT PANEL POINT ⑬

PART CROSS SECTION AT PANEL POINT ⑱

Note:
Cross section at Bent 8 for Unit 2 to be similar to cross section at Bent 8 shown for Unit 3. See Sheet 91.
For detail of end sidewalk bracket at Pier 5, see Sheet 10.
For cross section at 10 WF intermediate sidewalk supports, see Sheet 10.

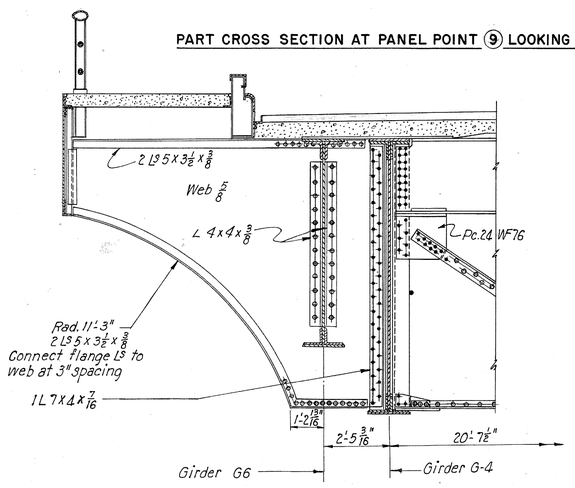

PART CROSS SECTION AT PANEL POINT ⑨ LOOKING SOUTH

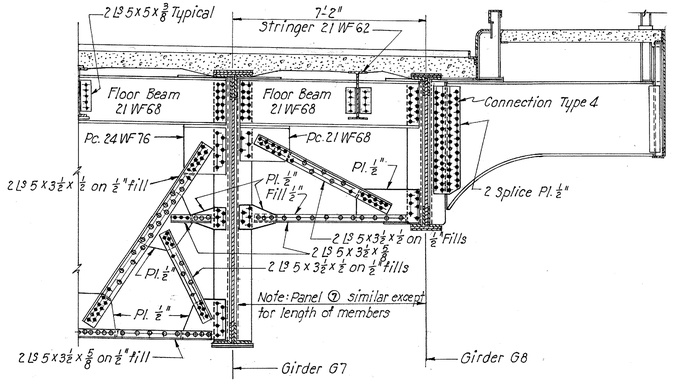

PART CROSS SECTION AT PANEL POINT ⑤ LOOKING SOUTH
Part not shown similar to ④

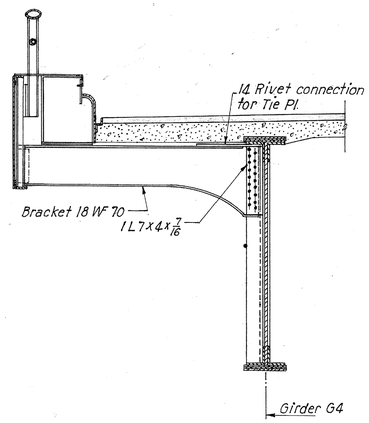

PART CROSS SECTION AT PANEL POINT ⑰

PART CROSS SECTION AT PANEL POINT ⑥ LOOKING SOUTH
Part not shown similar to ④

PART 3

TOLEDO EXPRESSWAY SYSTEM
MAUMEE RIVER BRIDGE
BR. NO. LU 120R-35
UNIT 2
ROADWAY CROSS SECTIONS
TOLEDO LUCAS COUNTY, OHIO

SCALE 3/8"=1'-0"
MADE G.G.P. DATE 9-20-52
TRCD. R.R. DATE 6-29-53
CKD. JDP-NF DATE 9-24-53

HOWARD, NEEDLES, TAMMEN & BERGENDOFF
CONSULTING ENGINEERS
KANSAS CITY NEW YORK
810 SHEET- 3.79

804

JUL 22 1953

FED. ROAD DIV. NO.	STATE	FED. AID PROJ. NO.	TYPE FUNDS
2	OHIO	UI-1052(2)	POST WAR

LUCAS COUNTY
CITY OF TOLEDO
TOLEDO EXPRESSWAY SYSTE
MAUMEE RIVER BRIDGE
LUC 120 R - 3.46

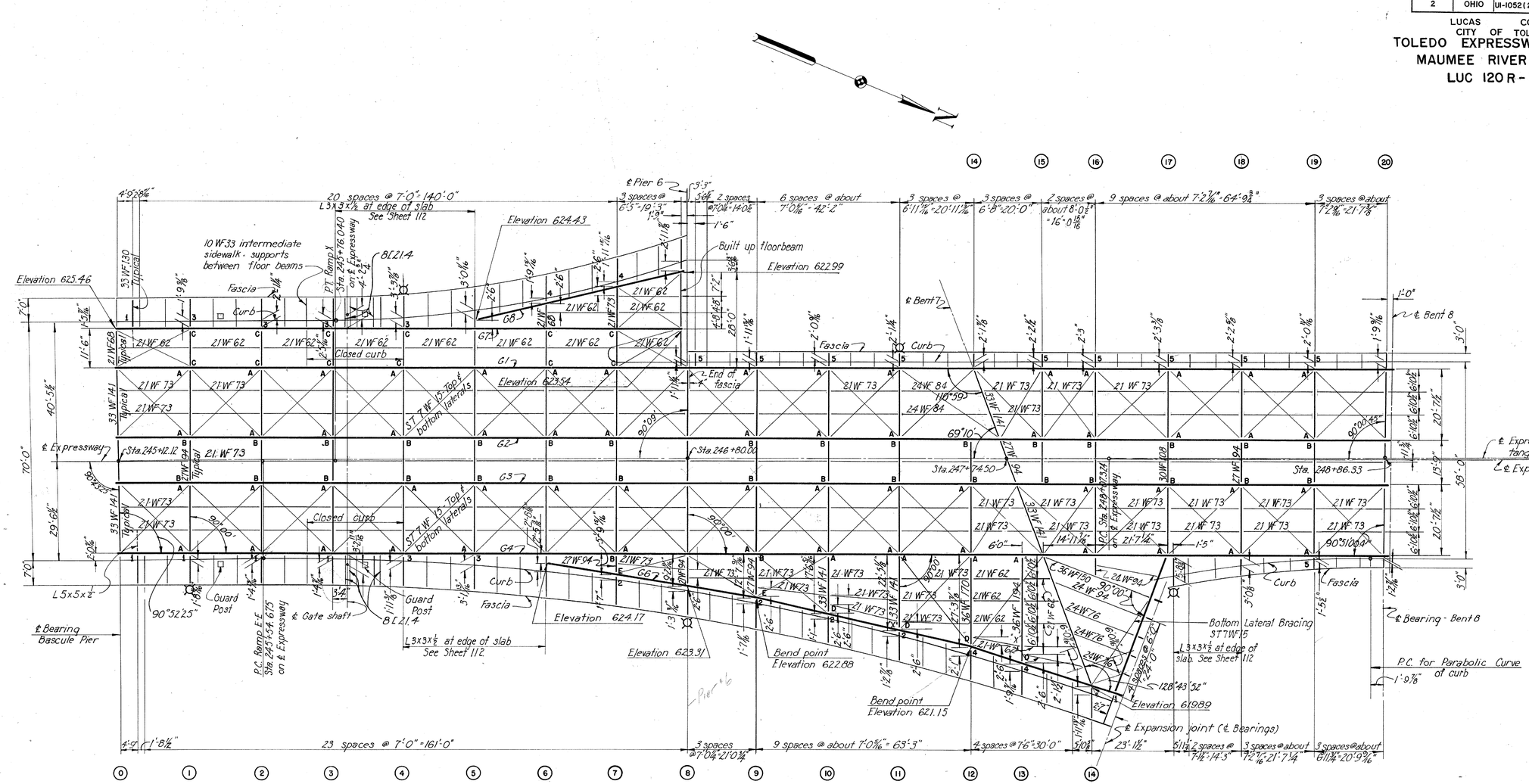

FRAMING PLAN

Notes:

On stringers "X" at points ⓐ and ⓑ do not use top and bottom flange plates.

In general, angles and other shapes shall not be bent to make a skewed connection.

Curb posts and handrail posts shall occur at every sidewalk bracket and intermediate sidewalk support.

Letters and numbers shown on the framing plan refer to connections of floor beams and sidewalk brackets as shown on Cross Section sheets.

Closed curb is required along G1 from Bent 7 to Bent 8, along G4 from Ramp E-E to Bent 8, and at roadway gates at Point ③ as shown on Framing Plan.

For typical connection details of sidewalk supports between floor beams, see Sheet 10. Use bent ⅜" plate connections where angles are not practical.

Elevations given are to back of top flange angles over points of bearing.

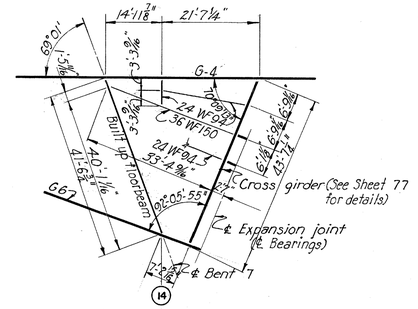

PART 3

TOLEDO EXPRESSWAY SYSTE

MAUMEE RIVER BRIDGE
BR. NO. LU 120R-35
UNIT 2
STEEL FRAMING PLAN .

TOLEDO LUCAS COUNTY, OHI

SCALE 1/16" = 1'-0"
MADE BGW DATE 8-19-52
TRCD E.M.M.G. DATE 4-16-53
CKD A.H.S. DATE 9-11-53

HOWARD, NEEDLES, TAMMEN & BERGENDO
CONSULTING ENGINEERS
KANSAS CITY NEW YORK
810 SHEET- 3.80

825

FED. ROAD DIV. NO.	STATE	FED. AID PROJ. NO.	TYPE FUNDS
2	OHIO	UI-1052(2)	POST WAR

LUCAS COUNTY
CITY OF TOLEDO
TOLEDO EXPRESSWAY SYSTE
MAUMEE RIVER BRIDGE
LUC 120 R-3.46

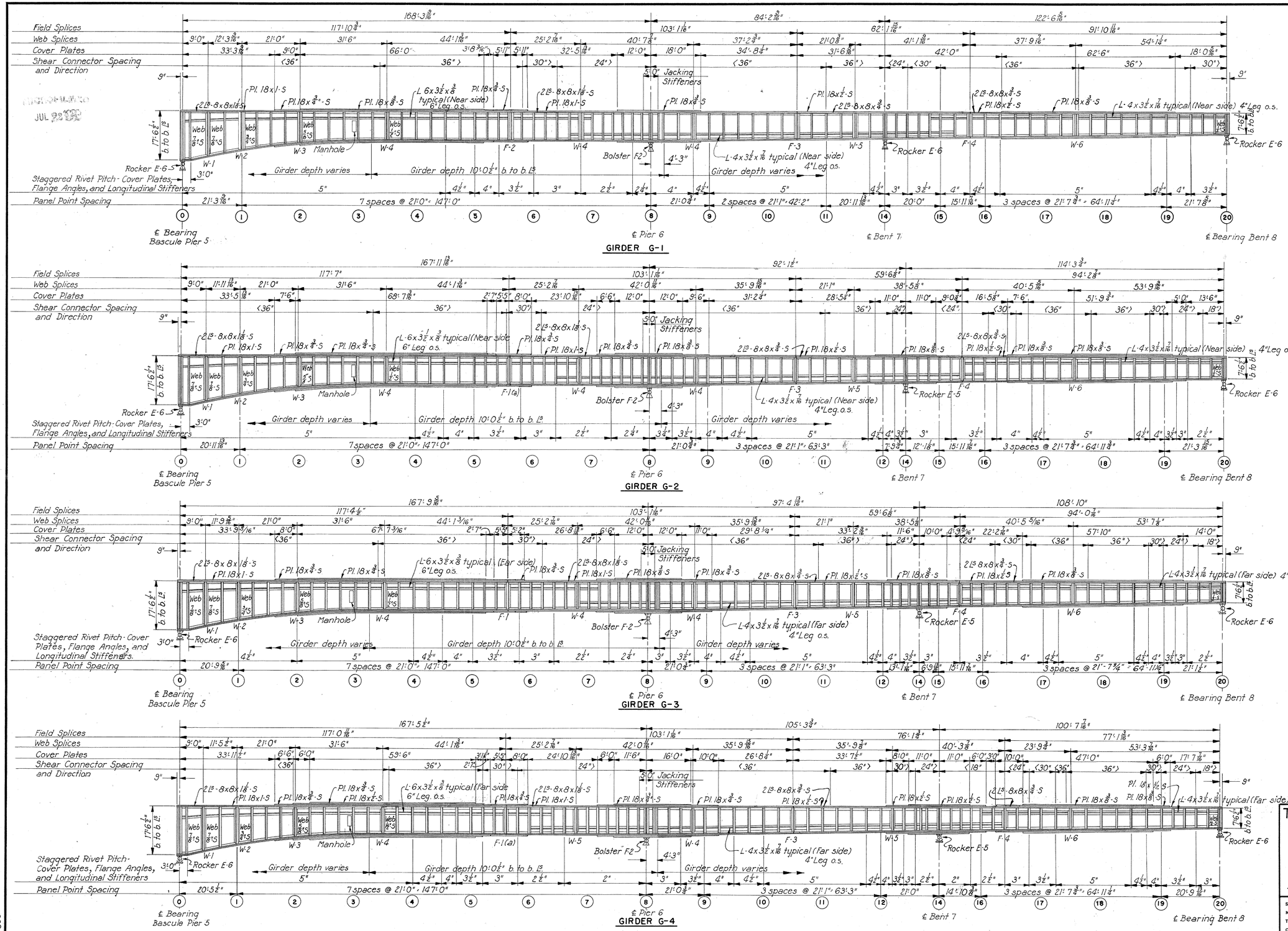

GIRDER G-1

GIRDER G-2

GIRDER G-3

GIRDER G-4

Notes:
For notes applying to this sheet, see Sheet 82.

PART 3

TOLEDO EXPRESSWAY SYSTE

MAUMEE RIVER BRIDGE
BR. NO. LU 120 R-35

UNIT 2
GIRDER ELEVATIONS

TOLEDO LUCAS COUNTY, OHIO

SCALE 1/16" = 1'-0"
MADE R.A.C. DATE 8-27-52
TRCD E.N.-C.A.L. DATE 8-18-53
CKD C.G.P.A.H.S. DATE 8-20-53

HOWARD, NEEDLES, TAMMEN & BERGENDO
CONSULTING ENGINEERS
KANSAS CITY NEW YORK

810 SHEET 3.81

806

CHARLES BRUNING CO., INC.

JUL 22 19

FED. ROAD DIV. NO.	STATE	FED. AID PROJ. NO.	TYPE FUNDS
2	OHIO	UI-1052 (2)	POST WAR

LUCAS COUNTY
CITY OF TOLEDO
TOLEDO EXPRESSWAY SYSTE
MAUMEE RIVER BRIDGE
LUC 120R-3.46

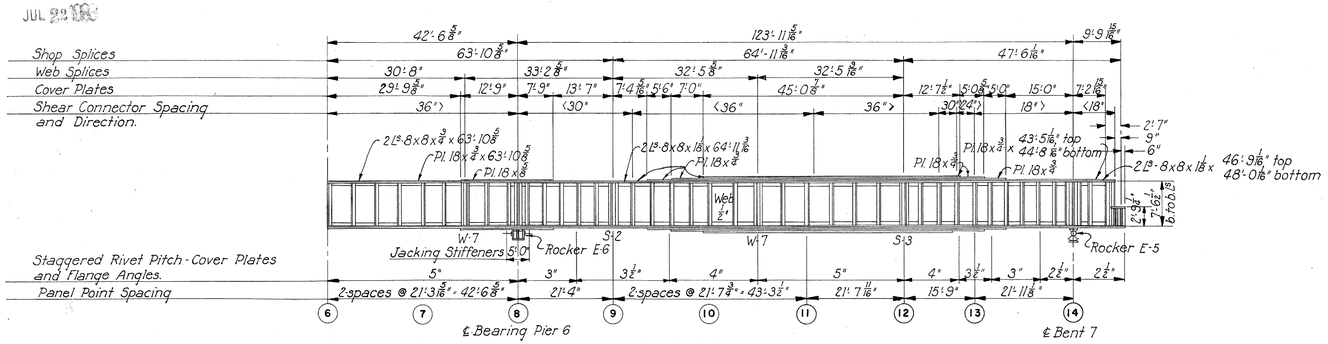

GIRDER G-6

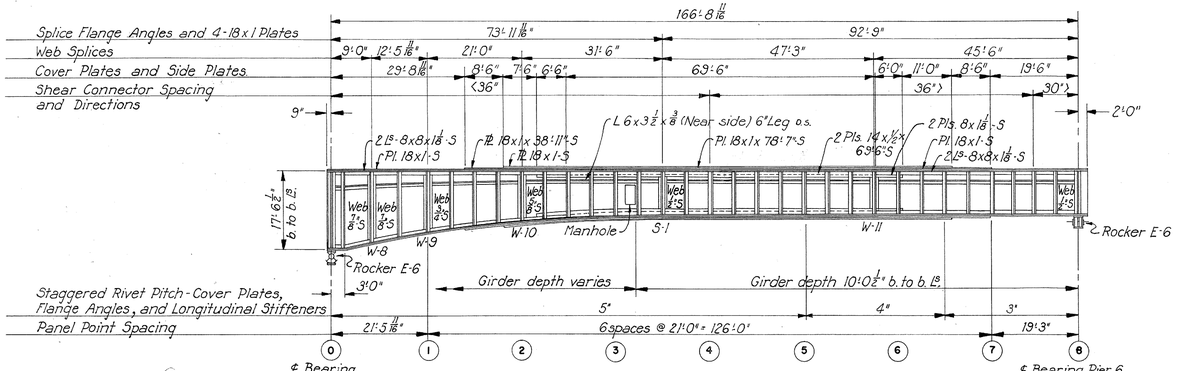

GIRDER G-7

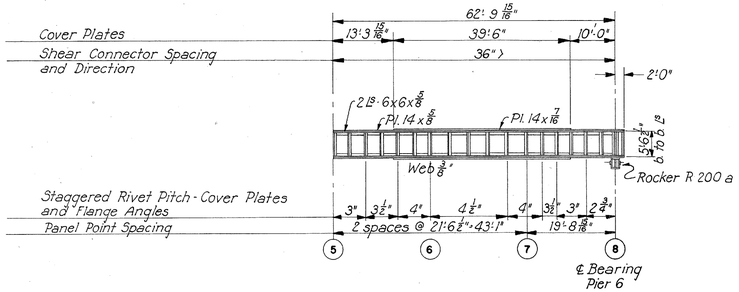

GIRDER G-8

SCHEDULE OF STIFFENER ANGLES

Stiffener	Location	Girders G-1	G-2	G-3	G-4	G-6	G-7	G-8
Bearing	Bascule Pier	4 L8-9x4x3/4	4 L8-9x4x3/4	4 L8-9x4x3/4	4 L8-9x4x3/4		4 L8-9x4x3/4	
	Pier 6	8 L8-7x4x5/8	8 L8-7x4x7/16	8 L8-7x4x3/4	8 L8-7x4x3/4	4 L8-7x4x3/4	4 L8-7x4x3/4	4 L8-6x3 1/2 x 1/2
	Bent 7	4 L8-7x4x3/4	4 L8-7x4x7/8	4 L8-7x4x7/8	4 L8-7x4x1	8 L8-7x4x5/8		
	Bent 8	4 L8-7x4x5/8	4 L8-7x4x5/8	4 L8-7x4x5/8	4 L8-7x4x5/8			
Panel Point	Girder G-6, 6 to 14					2 L8-7x4x5/16		
	Girder G-8, 5 to 8							2 L8-7x4x5/16
	1	2 L8-8x4x1/2	2 L8-8x4x1/2	2 L8-8x4x1/2	2 L8-8x4x1/2		2 L8-8x4x1/2	
	2 to 8	2 L8-7x4x7/16	2 L8-7x4x7/16	2 L8-7x4x7/16	2 L8-7x4x7/16		2 L8-7x4x7/16	
	9 to 20	2 L8-7x4x7/16	2 L8-7x4x7/16	2 L8-7x4x7/16	2 L8-7x4x7/16			
Intermediate	Girder G-6, 6 to 14					2 L8-6x4x3/8		
	Girder G-8, 5 to 8							2 L8-5x3 1/2 x 5/16
	0 to 1	2 L8-9x4x3/16	2 L8-9x4x3/16	2 L8-9x4x3/16	2 L8-9x4x3/16		2 L8-9x4x3/16	
	1 to 2	2 L8-8x4x1/2	2 L8-8x4x1/2	2 L8-8x4x1/2	2 L8-8x4x1/2		2 L8-8x4x1/2	
	2 to 7	2 L8-7x4x7/16	2 L8-7x4x7/16	2 L8-7x4x7/16	2 L8-7x4x7/16		2 L8-7x4x7/16	
	7 to 8	2 L8-7x4x7/16	2 L8-7x4x7/16	2 L8-7x4x7/16	2 L8-7x4x7/16		2 L8-6x4x3/8	
	8 to 20	2 L8-6x4x3/8	2 L8-6x4x3/8	2 L8-6x4x3/8	2 L8-6x4x3/8			
Jacking Stiffener at Pier 6.		4 L8-7x4x5/8	4 L8-7x4x5/8	4 L8-7x4x5/8	4 L8-7x4x5/8	4 L8-7x4x5/8		

RIVETS IN ENDS OF COVER PLATES

Plate Size	Manganese Steel 1" ϕ Rivets	Manganese Steel 7/8" ϕ Rivets	Carbon Steel 1" ϕ Rivets	Carbon Steel 7/8" ϕ Rivets
24 x 7/8	40	54	—	—
24 x 3/4	34	46	—	—
24 x 5/8	30	38	—	—
24 x 9/16	26	34	—	—
24 x 3/8	22	24	—	—
18 x 1	32	44	24	32
18 x 7/8	28	38	22	28
18 x 3/4	24	32	18	24
18 x 5/8	20	28	15	20
18 x 1/2	16	22	12	16
18 x 3/8	14	18	12	14
14 x 7/8	—	—	—	22
14 x 3/4	—	—	—	18
14 x 11/16	—	—	—	16
14 x 5/8	—	—	—	16
14 x 9/16	—	—	—	14
14 x 1/2	—	—	—	12
14 x 7/16	—	—	—	12

The number given in the table above for each size cover plate is the number of rivets to be spaced at 3" max. staggered pitch for 7/8" rivets and at 3 1/2" max. staggered pitch for 1" ϕ rivets at the ends of all cover plates. If the normal rivet pitch is less than this maximum, the normal pitch shall be used.

Notes:

For General Notes on "Girder Elevations", see Sheet 14.

All rivets in Girders G-6 and G-7 shall be 1" ϕ. All other rivets to be 7/8" ϕ.

Web plates, flange angles, side plates, cover plates and splice material in Girders G-1, 2, 3, 4 and 7 to be Manganese-Structural Steel. All material in Girders G-6 and G-8 to be carbon steel. All stiffener angles to be carbon steel.

PART 3

TOLEDO EXPRESSWAY SYSTE
MAUMEE RIVER BRIDGE
BR. NO. LU 120R-35
UNIT 2
GIRDER ELEVATIONS
TOLEDO LUCAS COUNTY, OHI

SCALE 1/8" = 1'-0"
MADE R.A.C. DATE 8-30-52
TRCD E.H.C.A. DATE 8-17-53
CKD C.G.P. A.H.S. DATE 8-20-53

HOWARD, NEEDLES, TAMMEN & BERGENDO
CONSULTING ENGINEERS
KANSAS CITY NEW YORK

SHEET 3.82

807

CHARLES BRUNING CO., INC.

FED. ROAD DIV. NO.	STATE	FED. AID PROJ. NO.	TYPE FUNDS
2	OHIO	UI-1052(2)	POST WAR

83
120

LUCAS COUNTY
CITY OF TOLEDO
TOLEDO EXPRESSWAY SYSTEM
MAUMEE RIVER BRIDGE
LUC 120 R-3.46

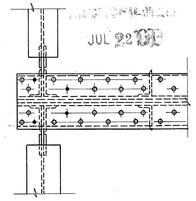

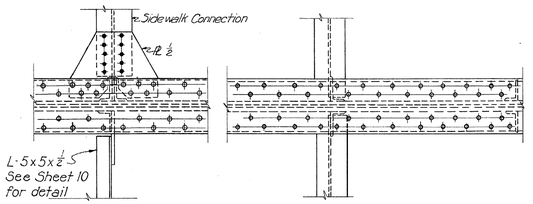

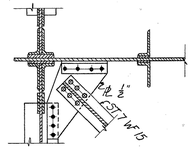

SECTION A-A

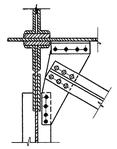

SECTION C-C

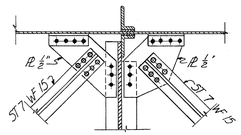

SECTION E-E

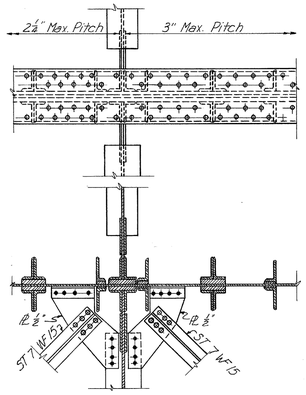

SECTION F-F

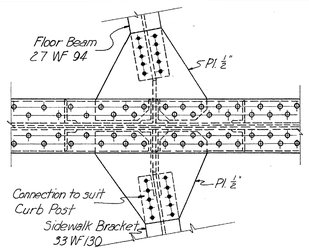

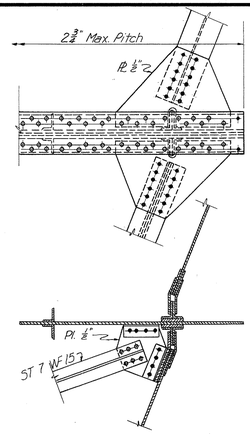

SECTION G-G

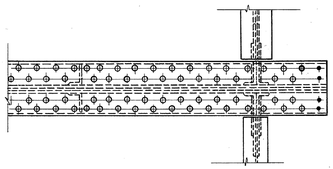

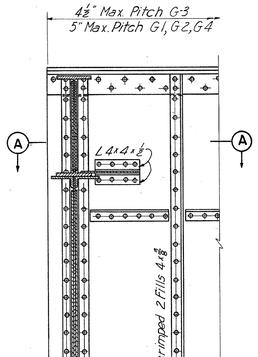

BEARING DETAIL AT BASCULE PIER 5

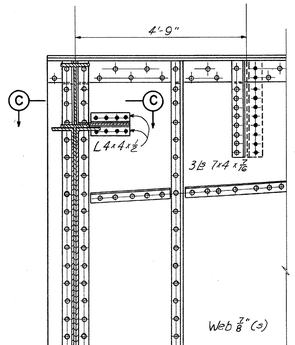

BEARING DETAIL AT BASCULE PIER 5 (Girder G-7)

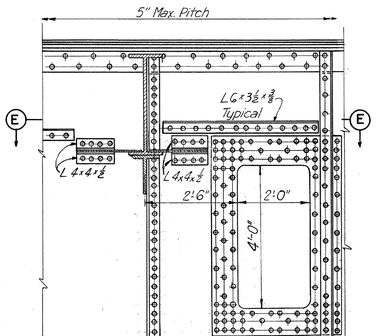

PANEL POINT 3

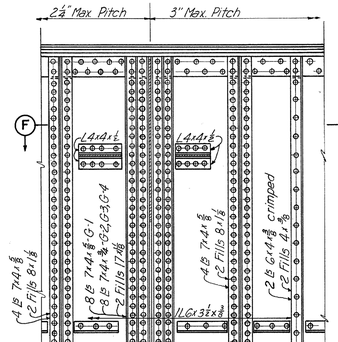

BEARING DETAIL AT PIER 6

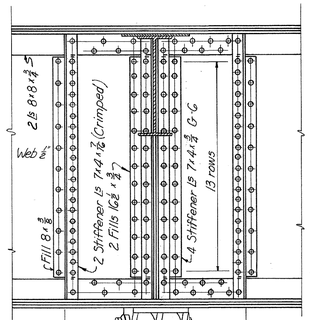

BEARING DETAIL AT PIER 6
Girder G-6

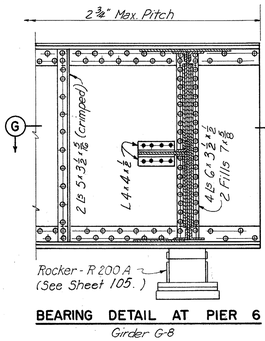

BEARING DETAIL AT PIER 6
Girder G-8

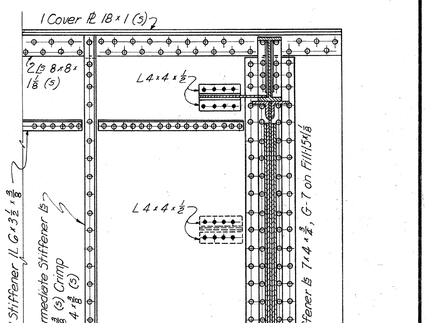

BEARING DETAIL AT PIER 6
Girder G-7

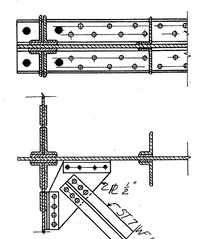

SECTION B-B

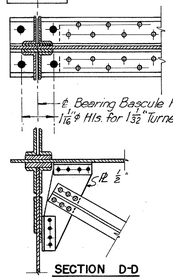

SECTION D-D

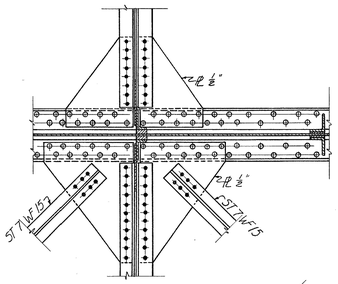

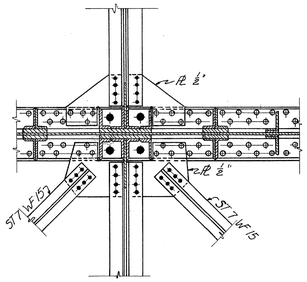

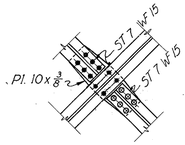

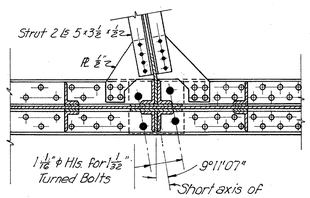

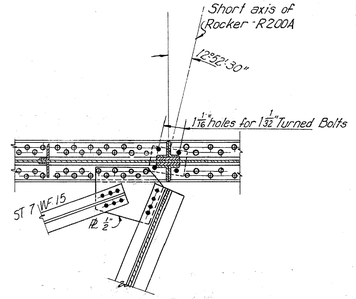

GIRDER DETAIL NOTES - UNIT 2

For general girder detail notes, see Sheet 15.
All rivets in girders G-1, G-2, G-3, G-4 and G-8 shall be ⅞ ϕ. All rivets thru main material in Girders G-6 and G-7 shall be 1" ϕ. All other rivets shall be ⅞ ϕ.
All views shown are for G-3, Girders G-1, G-2 and G-4 similar except as noted.
Intermediate bracket connections on G-4 similar to those on G-7. See Sheet 85.
For details of expansion joint at Bascule, Pier 5, see Sheet 22.

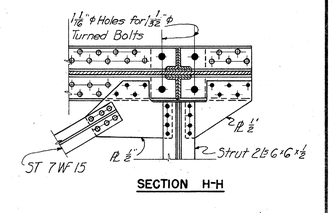

SECTION H-H

PART 3

TOLEDO EXPRESSWAY SYSTEM
MAUMEE RIVER BRIDGE
BR. NO. LU 120 R-35
UNIT 2
GIRDER DETAILS
TOLEDO LUCAS COUNTY, OHIO

SCALE ¾" = 1'-0"
MADE J.E.E. DATE 10-15-52
TRCD N.A.M. DATE 8-7-53
CKD A.H.S. DATE 9-30-53

HOWARD, NEEDLES, TAMMEN & BERGENDOFF
CONSULTING ENGINEERS
KANSAS CITY NEW YORK
810 SHEET 3.83

808

RECEIVED
JUL 22 1953

FED. ROAD DIV. NO	STATE	FED. AID PROJ. NO.	TYPE FUNDS
2	OHIO	UI-1052(2)	POST WAR

84
120

LUCAS COUNTY
CITY OF TOLEDO
TOLEDO EXPRESSWAY SYSTEM
MAUMEE RIVER BRIDGE
LUC 120 R-3.46

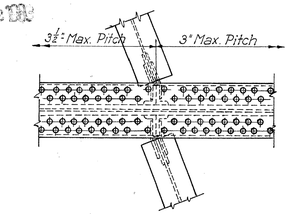

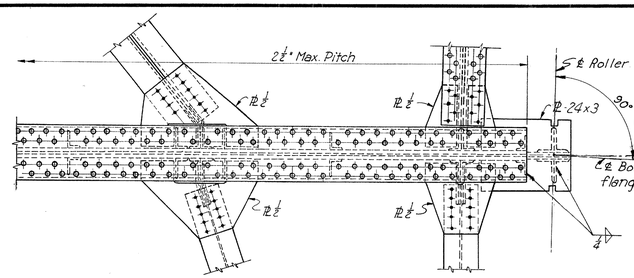

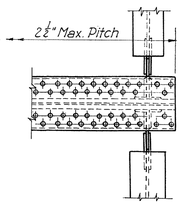

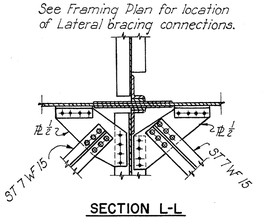

SECTION L-L

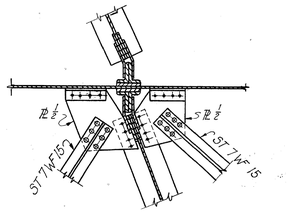

SECTION I-I

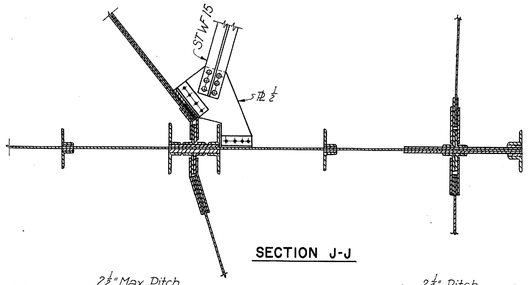

SECTION J-J

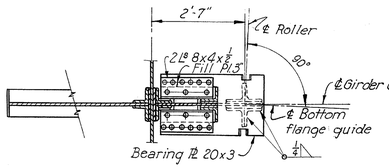

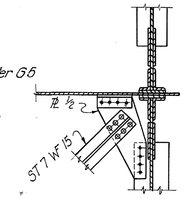

SECTION K-K

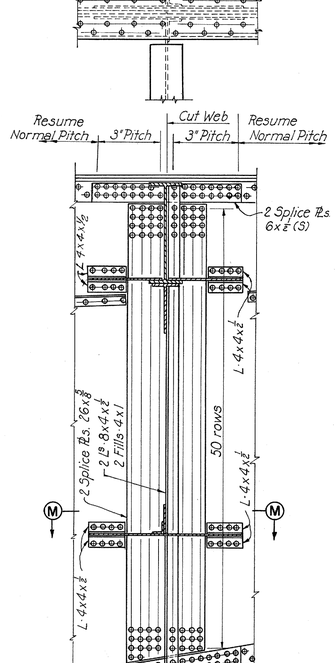

WEB SPLICE W-2
Panel Point 1

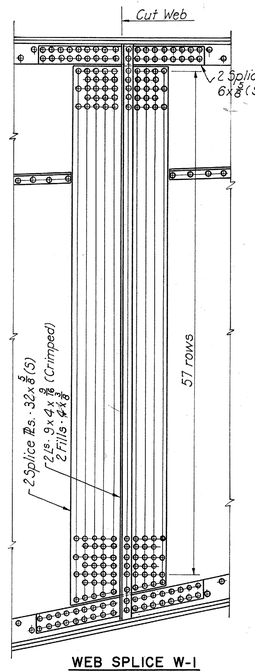

WEB SPLICE W-1

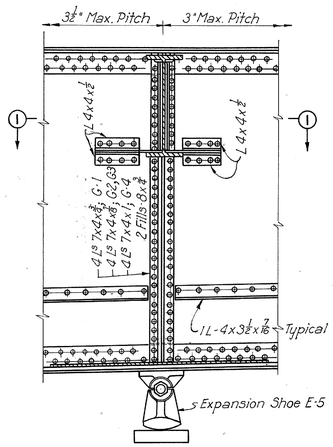

BEARING DETAIL AT BENT 7

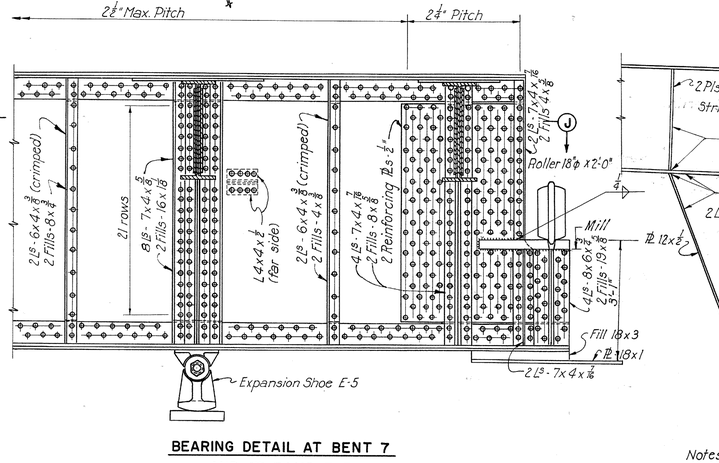

BEARING DETAIL AT BENT 7
AND AT RAMP E-E
(Girder G-6)

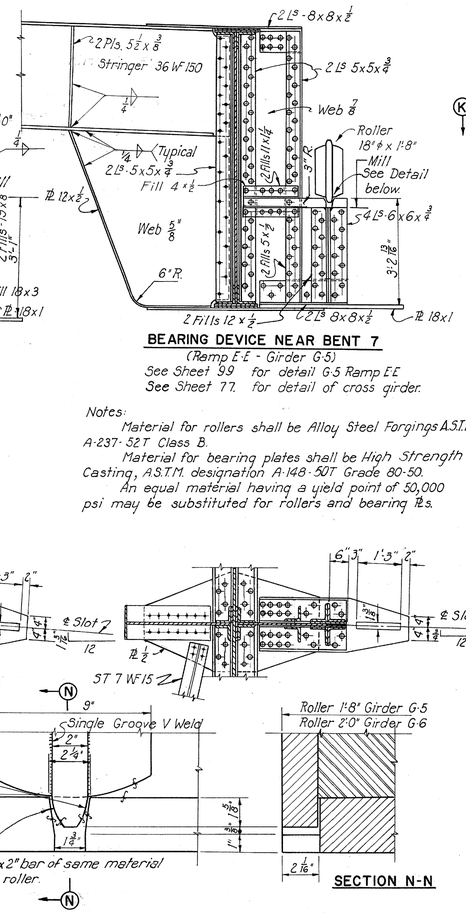

BEARING DEVICE NEAR BENT 7
(Ramp E-E - Girder G-5)
See Sheet 99 for detail G-5 Ramp E-E
See Sheet 77 for detail of cross girder.

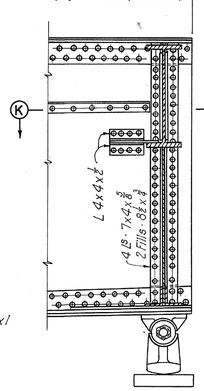

BEARING DETAIL AT BENT 8

Notes:
Material for rollers shall be Alloy Steel Forgings A.S.T.M. A-237-52T Class B.
Material for bearing plates shall be High Strength Steel Casting, A.S.T.M. designation A-148-50T Grade 80-50.
An equal material having a yield point of 50,000 psi may be substituted for rollers and bearing PLs.

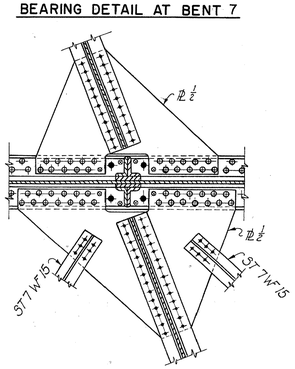

BEARING DETAIL AT BENT 7

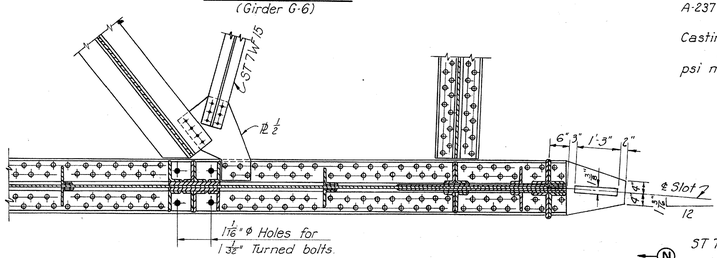

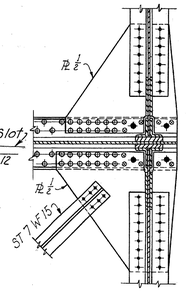

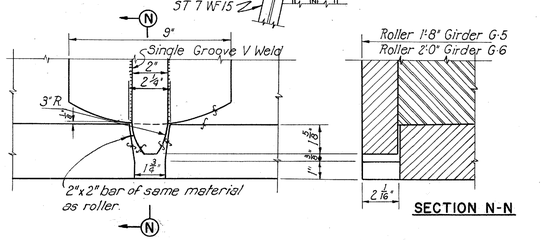

SECTION N-N

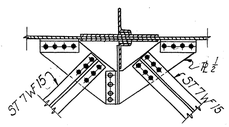

SECTION M-M

Notes:
For Girder Detail Notes applying to this unit, see Sheet 83.

PART 3

TOLEDO EXPRESSWAY SYSTEM
MAUMEE RIVER BRIDGE
BR. NO. LU 120R-35
UNIT 2
GIRDER DETAILS
TOLEDO LUCAS COUNTY, OHIO

SCALE ½" = 1'-0"
MADE DME-JDR DATE 10-25-52
TRCD. CAL DATE 9-12-53
CKD. AHS DATE 9-30-53

HOWARD, NEEDLES, TAMMEN & BERGENDOFF
CONSULTING ENGINEERS
KANSAS CITY NEW YORK

810 SHEET 3.84

809

FED. ROAD DIV. NO.	STATE	FED. AID PROJ. NO.	TYPE FUNDS	85
2	OHIO	UI-1052(2)	POST WAR	120

LUCAS COUNTY
CITY OF TOLEDO
TOLEDO EXPRESSWAY SYSTEM
MAUMEE RIVER BRIDGE
LUC 120R-3.46

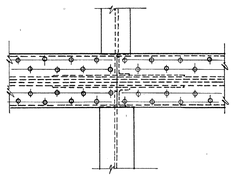

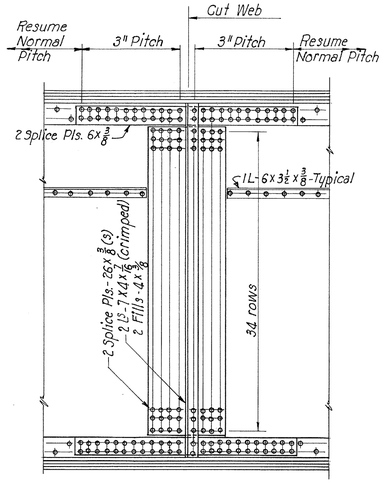

WEB SPLICE W-4

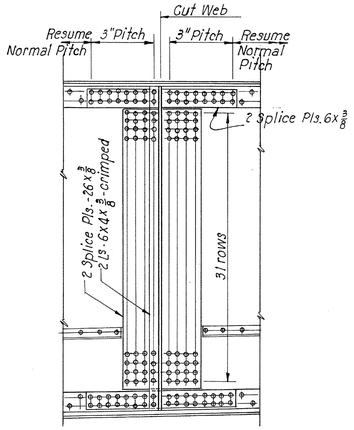

WEB SPLICE W-5

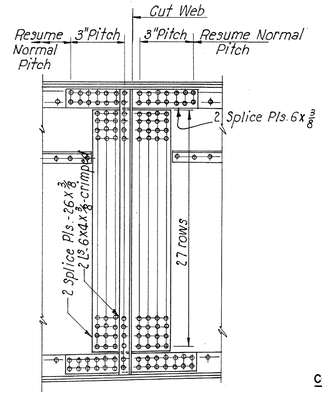

WEB SPLICE W-6

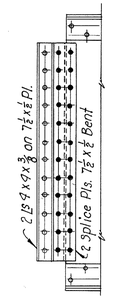

CONNECTION AT PANEL POINT 6
(Girder G-6 to Sidewalk Bracket)
See Sheet 79.

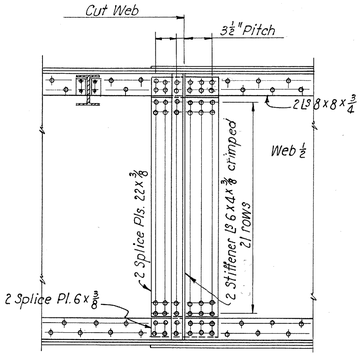

WEB SPLICE W-7

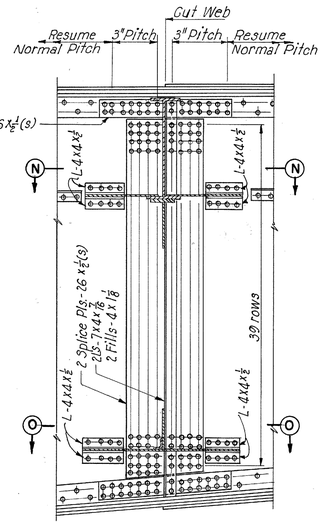

WEB SPLICE W-3
Panel Point 2

See Framing Plan for location of lateral bracing connections.

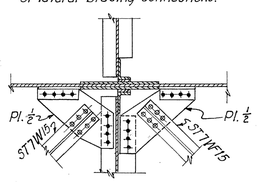

SECTION N-N

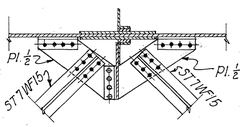

SECTION O-O

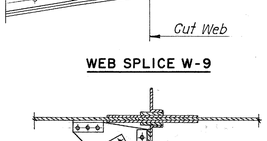

SECTION P-P

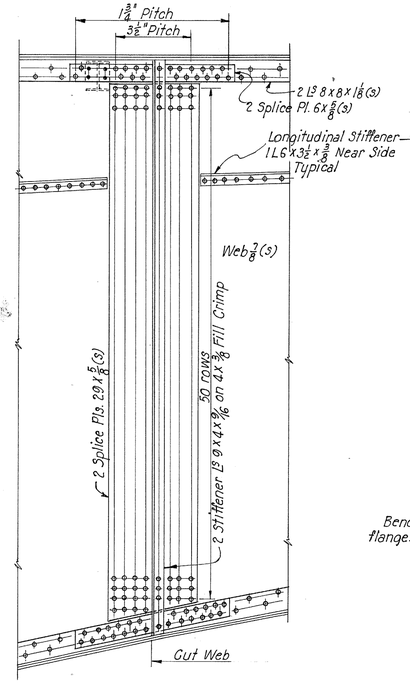

WEB SPLICE W-8

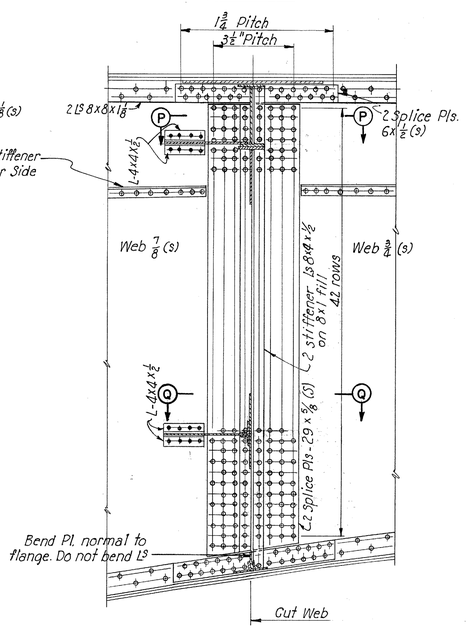

WEB SPLICE W-9

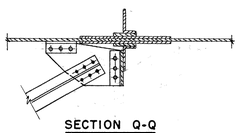

SECTION Q-Q

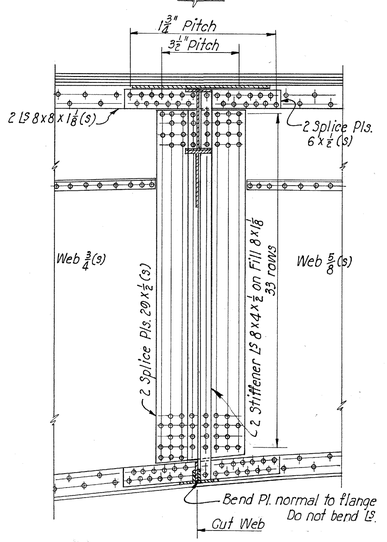

WEB SPLICE W-10

Note: Top Plan View of W-9 same as W-10.

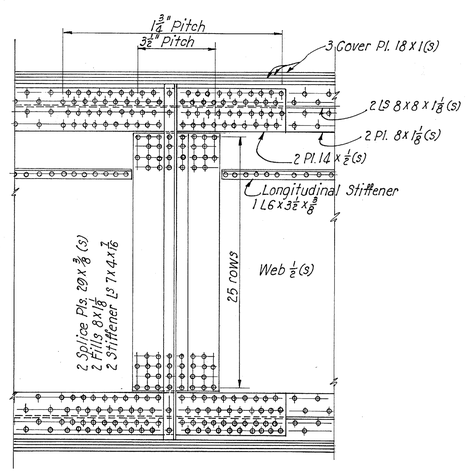

WEB SPLICE W-11

Notes:
For Girder Detail Notes applying to this unit, see Sheet 83.

PART 3

TOLEDO EXPRESSWAY SYSTEM
MAUMEE RIVER BRIDGE
BR. NO. LU 120R-35
UNIT 2
WEB SPLICES.
TOLEDO LUCAS COUNTY, OHIO

SCALE 1/2" = 1'-0"
MADE G.G.P. DATE 10-15-52
TRCD. R.R. DATE 8-11-53
CKD. AHS DATE 9-29-53

HOWARD, NEEDLES, TAMMEN & BERGENDOFF
CONSULTING ENGINEERS
KANSAS CITY NEW YORK

810 SHEET 3.85

RECEIVED
JUL 22

FED. ROAD DIV. NO	STATE	FED. AID PROJ. NO.	TYPE FUNDS
2	OHIO	UI-1052(2)	POST WAR

86
120

LUCAS COUNTY
CITY OF TOLEDO
TOLEDO EXPRESSWAY SYSTEM
MAUMEE RIVER BRIDGE
LUC 120 R-3.46

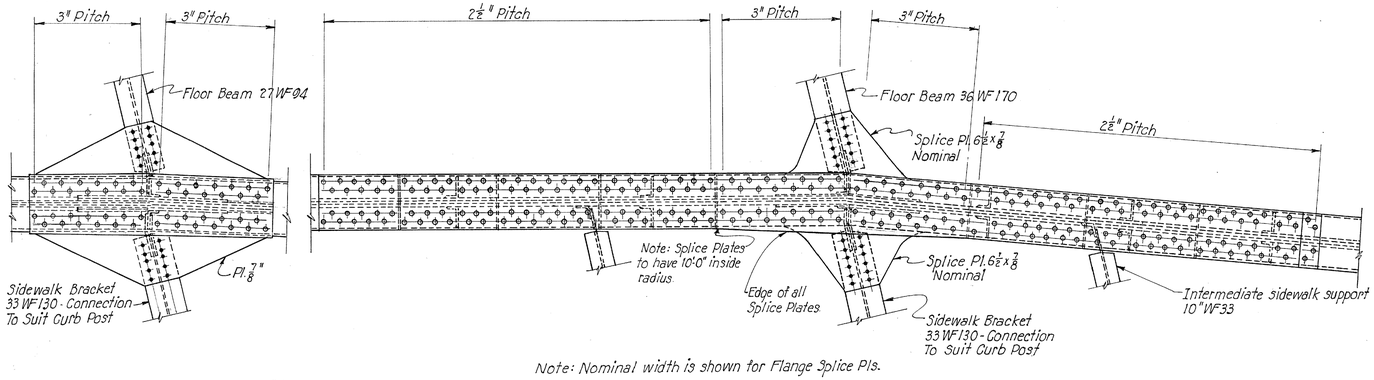

Note: Nominal width is shown for Flange Splice Pls.

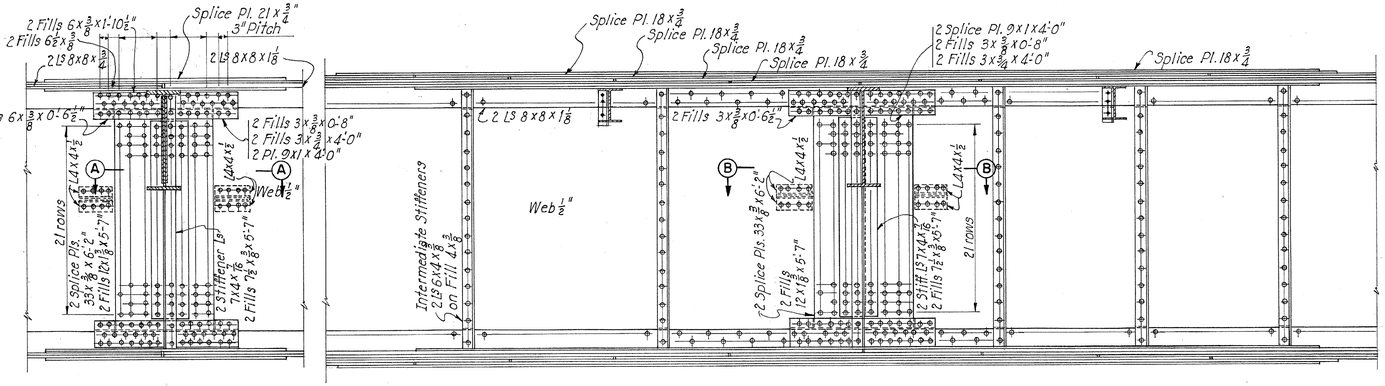

SHOP SPLICE S2

SHOP SPLICE S3

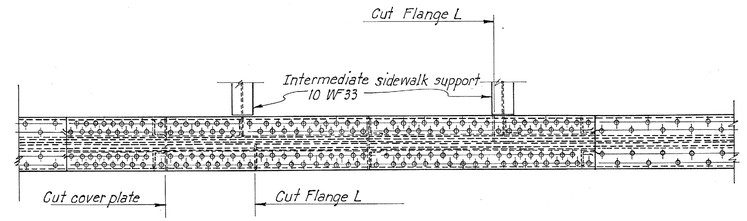

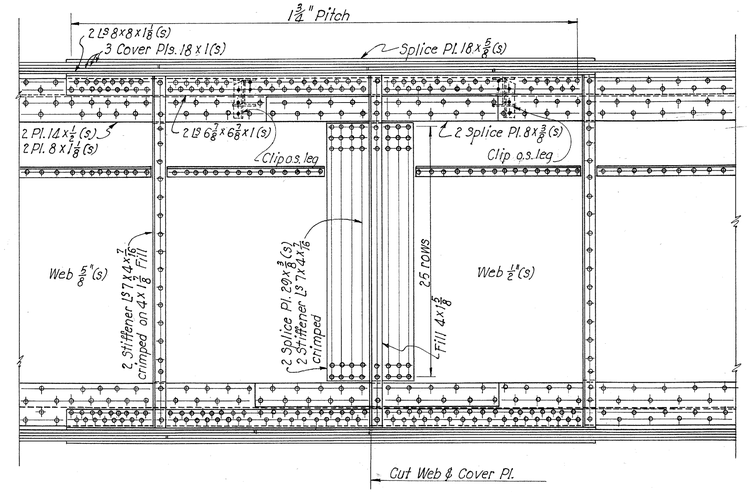

SHOP SPLICE S1

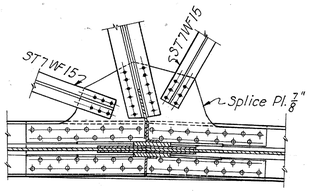

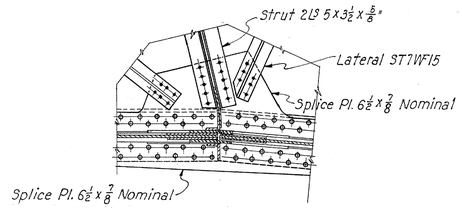

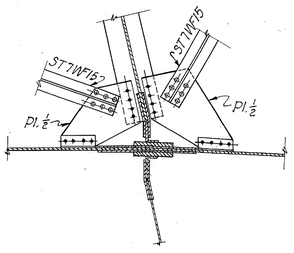

SECTION A-A

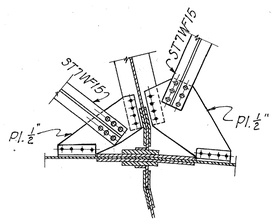

SECTION B-B

Notes:
For Girder Detail Notes applying to this unit, see Sheet 83.

PART 3

TOLEDO EXPRESSWAY SYSTEM
MAUMEE RIVER BRIDGE
BR. NO. LU 120R-35
UNIT 2
SHOP SPLICES
TOLEDO LUCAS COUNTY, OHIO

SCALE ½" = 1'-0"
MADE G.G.P. DATE 10-2-52
TRCD. R.R. DATE 8-18-53
CKD. A.H.S. N.F. DATE 9-29-53

HOWARD, NEEDLES, TAMMEN & BERGENDOFF
CONSULTING ENGINEERS
KANSAS CITY NEW YORK
810 SHEET 3.86

813

JUL 92 19

FED. ROAD DIV. NO	STATE	FED. AID PROJ. NO.	TYPE FUNDS
2	OHIO	UI-1052(2)	POST WAR

87
120

LUCAS COUNTY
CITY OF TOLEDO

TOLEDO EXPRESSWAY SYSTEM
MAUMEE RIVER BRIDGE
LUC 120R-3.46

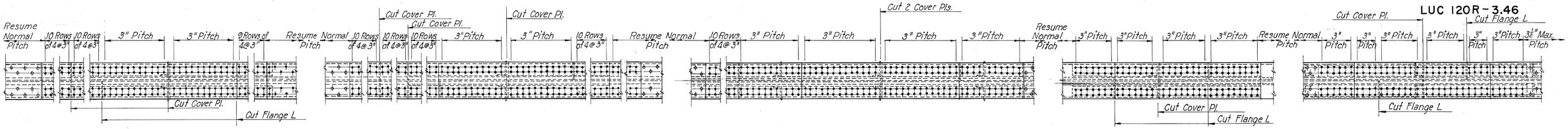

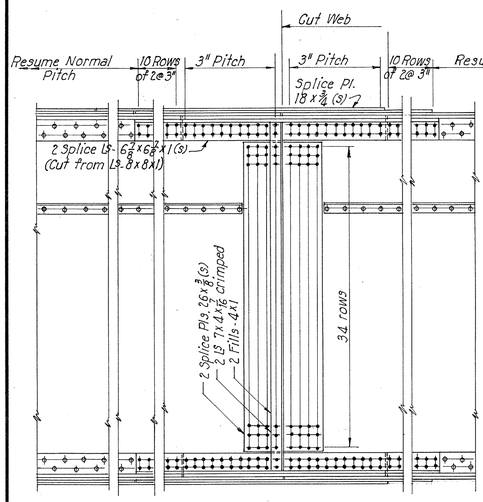

FIELD SPLICE F-1
Girder G-3 only

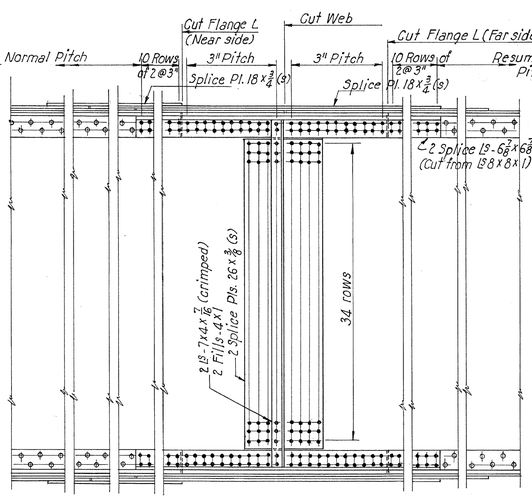

FIELD SPLICE F-1(a)
Girders G-2 and G-4

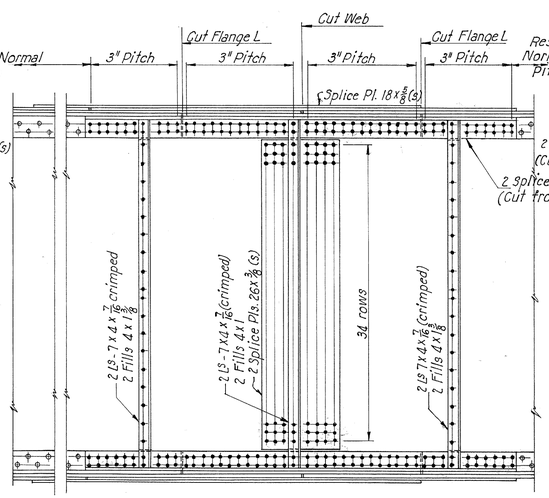

FIELD SPLICE F-2
Girder G-1

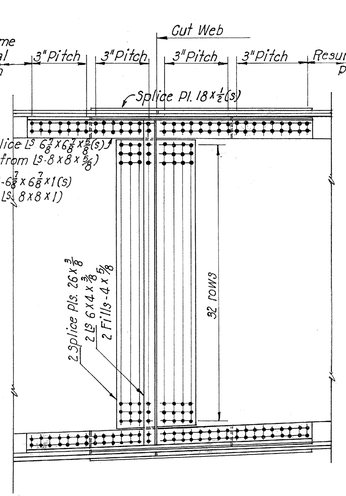

FIELD SPLICE F-3

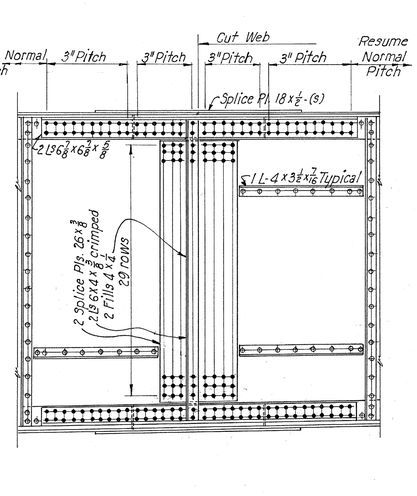

FIELD SPLICE F-4

Notes:
For Girder Detail Notes applying to this Unit, see Sheet 83.

PART 3

TOLEDO EXPRESSWAY SYSTEM
MAUMEE RIVER BRIDGE
BR. NO. LU 120R-35
UNIT 2
FIELD SPLICES
TOLEDO LUCAS COUNTY, OHIO

SCALE 1" = 1'-0"
MADE DME 6GP DATE 11-1-52
TRCD. P.R. DATE 8-12-53
CKD. AHS-NF DATE 9-29-53

HOWARD, NEEDLES, TAMMEN & BERGENDOFF
CONSULTING ENGINEERS
KANSAS CITY NEW YORK

810 SHEET 3.87

814

FED. ROAD DIV. NO.	STATE	FED. AID PROJ. NO.	TYPE FUNDS
2	OHIO	UI-1052(2)	POST WAR

88
120

LUCAS COUNTY
CITY OF TOLEDO
TOLEDO EXPRESSWAY SYSTEM
MAUMEE RIVER BRIDGE
LUC 120R-3.46

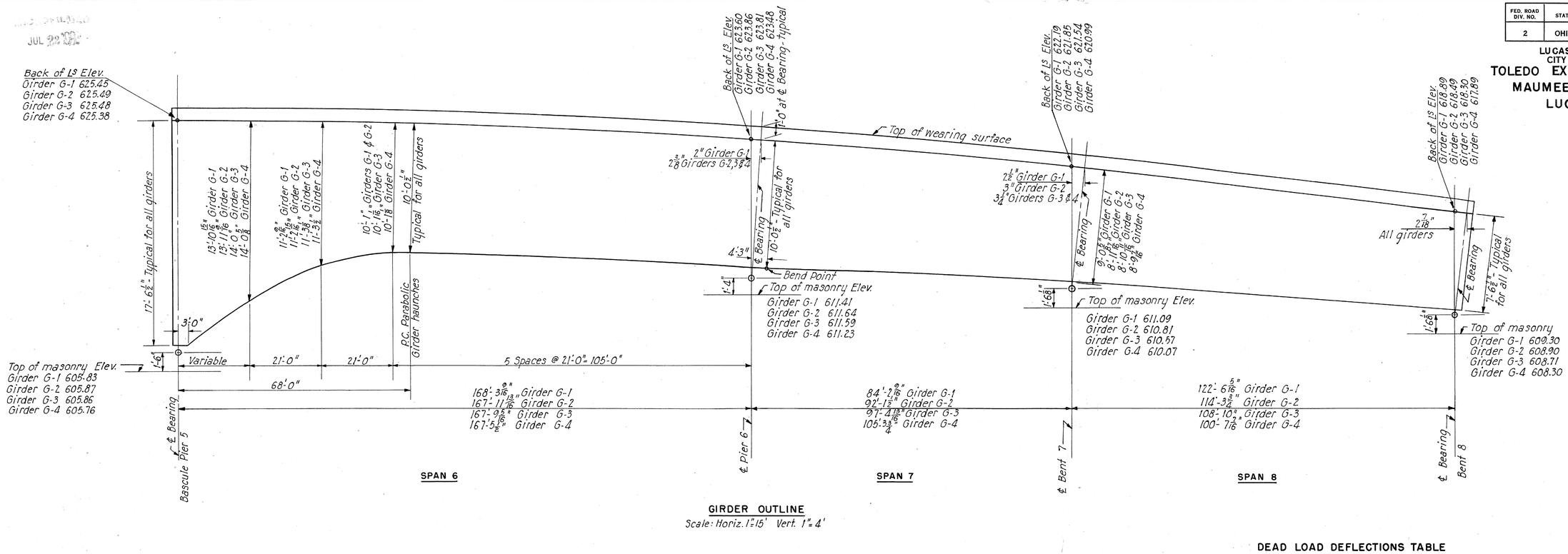

GIRDER OUTLINE
Scale: Horiz. 1"=15' Vert. 1"=4'

GIRDER G-8

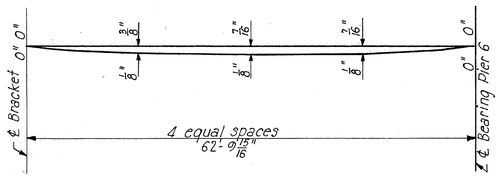

GIRDER G-7

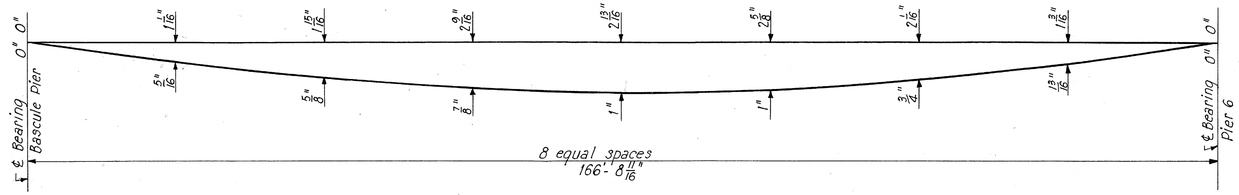

GIRDER G-6

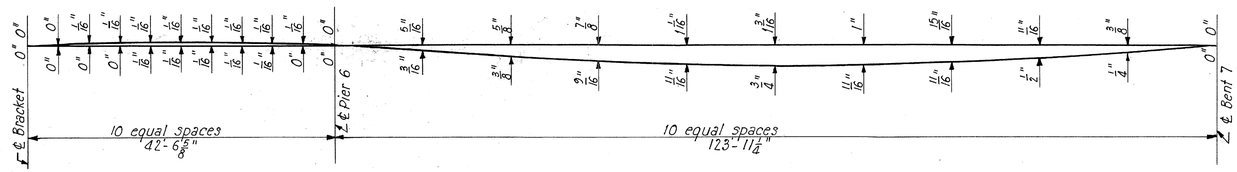

GIRDER DEFLECTION DIAGRAMS
Scale: Horiz. 1"=10' Vert. 1"=4"

DEAD LOAD DEFLECTIONS TABLE

		10 equal spaces										10 equal spaces										10 equal spaces									
	Pier	5	SPAN 6								Pier	6	SPAN 7								Bent	7	SPAN 8								Bent	8
G-1	Deflection due to total Dead Load	0	-5/8	-1 1/4	-1 3/4	-2 1/16	-2 1/8	-2	-1 5/8	-1 1/16	1/2	0	+3/16	+5/16	+7/16	+1/2	+1/2	+1/2	+7/16	+5/16	+3/16	0	-5/16	11/16	-1	-1 1/4	-1 3/8	-1 3/8	-1 3/16	-7/8	-1/2	0
	Deflection due to concrete and wearing surface	0	-7/16	-13/16	-1 1/16	-1 5/16	-1 5/16	-1 1/4	-1	-11/16	-5/16	0	+1/8	+3/16	+1/4	+5/16	+5/16	+5/16	+1/4	+3/16	+1/8	0	-3/16	-7/16	-5/8	-3/4	-13/16	-13/16	-1 3/4	-9/16	-5/16	0
G-2 & 3	Deflection due to total Dead Load	0	-11/16	-1 5/16	-1 13/16	-2 1/8	-2 5/16	-2	-1 5/8	-1 1/16	-1/2	0	+1/4	+3/8	+1/2	+9/16	+9/16	+1/2	+7/16	+3/8	+3/16	0	-1/4	-9/16	-13/16	-1	-1 1/8	-1 1/16	-1	-3/4	-7/16	0
	Deflection due to concrete and wearing surface	0	-7/16	-13/16	-1 1/8	-1 5/16	-1 3/8	-1 1/4	-1 1/16	-11/16	-5/16	0	+1/8	+1/4	+5/16	+3/8	+3/8	+3/8	+5/16	+1/4	+1/8	0	-3/16	-3/8	-9/16	-11/16	-3/4	-3/4	-1 1/16	-1/2	-5/16	0
G-4	Deflection due to Total Dead Load	0	-11/16	-1 1/8	-1 13/16	-2 1/8	-2 3/16	-1 15/16	-1 9/16	-1	-7/16	0	+1/4	+7/16	+9/16	+5/8	+5/8	+1/2	+7/16	+1/4	0	-3/16	-7/16	-5/8	-13/16	-7/8	-7/8	-3/4	-9/16	-5/16	0
	Deflection due to concrete and wearing surface	0	-3/8	-3/4	-1 1/16	-1 1/4	-1 1/4	-1 1/8	-15/16	-9/16	-1/4	0	+3/16	+5/16	+3/8	+7/16	+7/16	+7/16	+3/8	+5/16	+3/16	0	-1/8	-1/4	-7/16	-9/16	-9/16	-9/16	-9/16	-1/2	-3/8	-3/16	0

Notes:

Values shown above the base line in the deflection diagrams are deflections due to total dead load of steel, concrete, and wearing surface.

Values shown below the base line are deflections due to weight of concrete and wearing surface only.

In the table, deflections are given in inches.
All (-) deflections are downward, and (+) deflections are upward.

Concrete haunches over girders shall measure 12" back of angles to top of wearing surface at bearings.

Girders shall be cambered for vertical curve and dead load of steel and enough in addition to limit depth at haunch to 13".

Cambering shall be accomplished by mitering webs at splices and bending flange angles to an arc approximately parallel to top of roadway.

Depths of girders shown are back to back of flange angles.

For back of angle elevations for girders G-6, 7 and 8, see Sheet 80.

PART 3

TOLEDO EXPRESSWAY SYSTEM
MAUMEE RIVER BRIDGE
BR. NO. LU 120R-35
UNIT 2
GIRDER OUTLINES AND DEFLECTIONS
TOLEDO, LUCAS COUNTY, OHIO

SCALE As shown
MADE M.K.A DATE 8-26-52
TRCD E.M.R. DATE 9-15-52
CKD MKA, AHS DATE 7-6-53

HOWARD, NEEDLES, TAMMEN & BERGENDOFF
CONSULTING ENGINEERS
KANSAS CITY NEW YORK
810 SHEET- 3.88

811

CHARLES BRUNING CO., INC.

FED. ROAD DIV. NO.	STATE	FED. AID PROJ. NO.	TYPE FUNDS
2	OHIO	UI-1052(2)	POST WAR

LUCAS COUNTY
CITY OF TOLEDO
TOLEDO EXPRESSWAY SYSTE
MAUMEE RIVER BRIDGE
LUC 120R-3.46

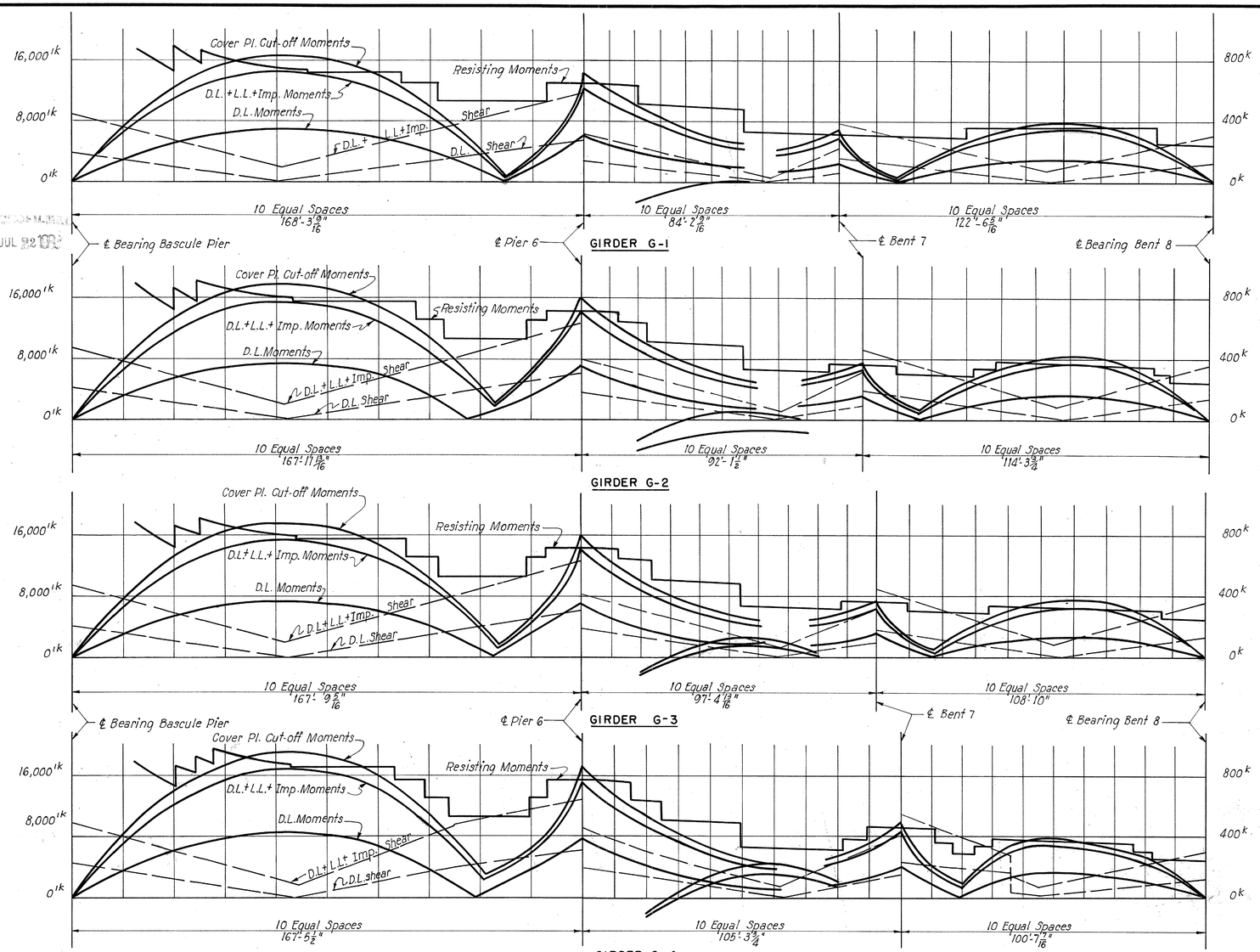

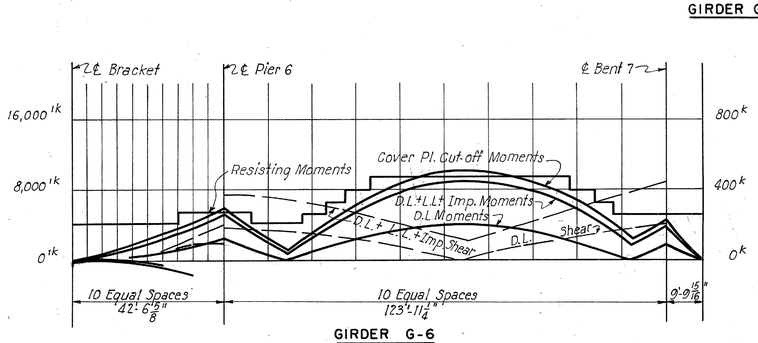

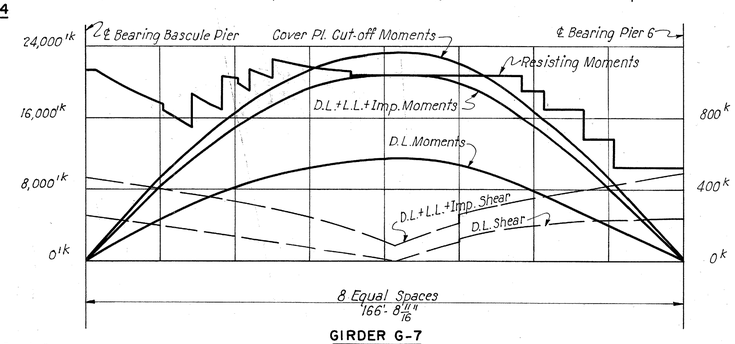

Scale: Horiz. 1" = 20'-0"
Vert. 1" = 8,000 lk or 1" = 400 k

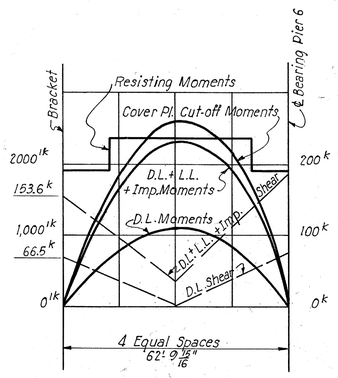

Scale: Horiz. 1" = 20'-0"
Vert. 1" = 1,000 lk or 1" = 100 k

DESIGN MOMENTS AND SHEARS

Girder and Load		Reactions and Shears in Kips								Moments in Foot Kips				
		Bascule Pier	Pier 6		Bent 7			Bent 8	Span 6	Pier 6	Span 7	Bent 7	Span 8
		R	Vs	Vn	R	Vs	Vn	R	R	+M	-M	+M	-M	+M
Girder G-1	D.L.	194.0	264.0	137.0	401.0	53.0	153.0	206.0	113.0	6850	5940	-1890	2385	2920
	U.L.L.	111.5	152.0	97.5	244.0	54.5	94.1	167.0	67.4	3960	3620	749	1908	1711
	C.L.L.	104.8	117.0	58.5	96.0	74.3	92.4	78.0	80.6	2485	1990	718	1136	1270
	Imp.	37.0	46.0	20.0	45.0	30.8	37.7	37.0	29.9	1098	740	350	460	605
	Total	447.3	579.0	513.0	786.0	212.6	377.2	488.0	290.9	14393	12290	- 73	5889	6506
Girder G-2	D.L.	213.0	296.0	176.0	472.0	86.0	183.0	269.0	130.0	7450	6980	-1560	3010	3080
	U.L.L.	117.0	159.0	78.5	267.0	78.0	109.0	206.0	80.0	4180	4210	1152	2190	1910
	C.L.L.	110.0	122.0	100.0	101.0	96.7	114.0	94.3	101.0	2650	2010	995	789	1370
	Imp.	39.0	48.0	41.1	47.9	40.3	46.6	45.5	37.8	1165	810	494	450	685
	Total	479.0	625.0	395.6	887.9	301.0	452.6	614.8	348.8	15445	14010	1081	6439	7045
Girder G-3	D.L.	212.0	295.0	186.0	481.0	91.0	174.0	265.0	124.0	7410	6980	-1360	3010	2790
	U.L.L.	117.0	159.0	83.0	267.0	82.5	104.0	206.0	76.0	4160	4210	1290	2190	1730
	C.L.L.	110.0	122.0	100.0	101.0	96.7	114.0	94.3	101.0	2640	2010	1050	789	1300
	Imp.	39.0	48.0	41.0	47.0	40.0	47.0	45.5	38.0	1160	796	526	450	650
	Total	478.0	624.0	410.0	896.0	310.2	439.0	610.8	339.0	15370	13996	14186	6439	6470
Girder G-4	D.L.	236.0	308.0	192.0	500.0	149.0	228.0	377.0	122.0	8490	7700	-1078	4015	2982
	L.L.	202.0	260.5	204.3	359.0	251.4	272.0	361.0	151.4	6390	5628	3375	4192	3017
	S.W.L.L.	23.8	25.6		25.6					899	640			73
	Imp.	35.6	45.9	44.5	46.1	54.5	38.4	42.6	23.9	1090	1230	733	495	450
	Total	497.4	640.0	440.8	930.7	454.9	538.4	780.6	297.3	16869	15198	3030	8702	6522
Girder G-6	D.L.		101.5	181.5	289.0	210.0	206.0	416.0		-224	2485	3940	1835	
	L.L.		78.2	146.2	187.5	178.6	193.3	292.5		174	1999	3545	1604	
	S.W.L.L.		8.3	16.0	45.1	18.0	18.6	34.0		55	327	511	169	
	Imp.		13.4	29.4	37.7	35.9	38.9	31.0		51	401	714	334	
	Total		201.4	379.1	559.3	442.5	456.8	773.5		56	5212	8710	3942	
Girder G-7	D.L.	258.0			236.0					11480				
	L.L.	153.9			201.6					6840				
	S.W.L.L.	31.2			20.0					1336				
	Imp.	26.4			34.6					1175				
	Total	469.5			492.2					20831				
Girder G-8	D.L.				74.3					1100				
	L.L.				76.0					778				
	S.W.L.L.				14.8					216				
	Imp.				20.2					207				
	Total				185.3					2301				

Note: Design moments and shears are obtained by multiplying D.L. by 0.8 and L.L.+I by 2.06.

D.L.	Dead load
L.L.	Live load
U.L.L.	Uniform live load
C.L.L.	Concentrated live load
Imp.	Impact
R.	Reaction
Vs	Shear to south of support
Vn	Shear to north of support
+M	Maximum positive moment
-M	Maximum negative moment
S.W.	Sidewalk

PART
TOLEDO EXPRESSWAY SYSTE
MAUMEE RIVER BRIDGE
BR. NO. LU 120R-35
UNIT 2
GIRDER STRESSES

TOLEDO LUCAS COUNTY, OHI

SCALE As shown
MADE M.K.A. DATE 9-3-52
TRCD E.J.M.,P.R. DATE 9-26-52
CKD MK.A., B.K.H. DATE 12-8-52

HOWARD, NEEDLES, TAMMEN & BERGENDO
CONSULTING ENGINEERS
KANSAS CITY NEW YORK

810 SHEET- 3.89

812

JUL 92 DR

CHARLES BRUNING CO., INC.

FED. ROAD DIV. NO.	STATE	FED. AID PROJ. NO.	TYPE FUNDS
2	OHIO	UI-1052(2)	POST WAR

90
120

LUCAS COUNTY
CITY OF TOLEDO
TOLEDO EXPRESSWAY SYSTE
MAUMEE RIVER BRIDGE
LUC 120R-3.46

Traffic Dividers Curve Data
Δ = 16°18'19.1"
D = 27°38'45.6"
R = 207.25'

Note:
Contour elevations are for top of wearing surface.

℄ Pier 5 ℄ Bearing Pier 5 Sta. 245+12.12 ℄ Exp. P.T. Ramp "X" Sta. 15+19.82 Sta. 14+77.13 "X" = Sta. 246+20.40 ℄ Exp. ℄ Girder G-8 Girder G-7 Girder G-1 Girder G-2 Girder G-3 Girder G-4 Girder G-6 ℄ Bent 7 Sta. 241+74.60 ℄ Exp. ℄ Bent 8 Sta. 238+87.33 ℄ Exp. ℄ Expressway ℄ Pier 6 ℄ Expansion Joint

14'-0" 17 Spaces @ 3'-3½" = 58'-0" 5 Spa. @ 3'-5" 27'-0"

626.50 626.50 626.45 626.0 625.5 625.0 624.5 624.0 623.5 623.0 622.5 622.0 621.5 621.0 620.5 620.0 619.5

P.C. Ramp "EE" = Sta. 245+54.68 ℄ Exp.

SLAB CONTOUR PLAN
Scale: 1/16" = 1'-0"

JUL 22 19

REINFORCING STEEL PLACEMENT PLAN
Scale: 1/16" = 1'-0"

Note: Over Pier 6 and Bent 7 at locations shown in plan, provide contraction joints full width and depth of median above road way slab and in sidewalk over Pier 6. Round edges of joints ¼" radius. Longitudinal steel shall not pass through the joints.

℄ Bearing Bascule Pier 5 ℄ Expressway ℄ Pier 6 ℄ Bent 7 ℄ Bearing Bent 8 ℄ Expressway

3'4" 6-302@12"ctrs. 166-301@12"ctrs. 1 Series 6-304 6-302@12"ctrs. 1-620 top 1-619 bottom 1 Series 8-618@16"ctrs. top 1 Series 8-717@16"ctrs. bottom 29-649@7"ctrs.-top 1-619 top 1-618 bottom 13-617@16"ctrs. top 13-716@16"ctrs. bottom 41-614@8"ctrs. top 41-714@8"ctrs. bottom

374-401@12"ctrs. 251-613@8"ctrs. top 251-713@8"ctrs. bottom Openings in slabs for center posts. 53-615@16"ctrs. top 53-728@16"ctrs. bottom 53-729 53-615@16"ctrs. bottom 1st Pour Construction Joint 42'-0" 21'-0" 12'-0" 10'-0" Contaction Joint in median 5-652 50-615@16"ctrs. top 50-728@16"ctrs. bottom 26-615@32"ctrs. top and bottom 5-615@11"ctrs. 55-656@16"ctrs. top 55-728@16"ctrs. bottom 28-615@32"ctrs. top 12'-0" 14'-0" 27'-0" Contr. Joint in median 10'-0" 10'-0" 44-615@16"ctrs. top 44-728@16"ctrs. bottom 13-612@8"ctrs. top 13-712@8"ctrs. bottom 3rd Pour 5-642@11"ctrs. 44-616@16"ctrs. top 42-715@16"ctrs. bottom ℄ Drainage Inlet

295-301@12"ctrs. 6-302@12"ctrs. 1 Series 3-621@16"ctrs. top 1 Series 3-720@16"ctrs. bottom 6-302@12"ctrs. Contr. Joint in sdwk. 35'-0" 10'-0" 6-303 6-302@12"ctrs. 254-613@8"ctrs. top 254-713@8"ctrs. bottom 2nd Pour 24-644@32"ctrs. top and bottom 1 Series 63-607@8"ctrs.-top 1 Series 63-707@8"ctrs.-bottom 1 Series 63-608@8"ctrs. top 1 Series 63-708@8"ctrs. bottom 1 Series 65-609@8"ctrs.-top 1 Series 65-709@8"ctrs. bottom 11-650@32"ctrs. top & bottom 1 Series 42-611@8"ctrs.-top 1 Series 42-711@8"ctrs.-bottom 1 Series 5-626@16"ctrs.-top 1 Series 5-725@16"ctrs.-bottom See nose detail sheet 113. 1 Series 4-643@32"ctrs. top and bottom 1 Series 17-625@16"ctrs. top 1 Series 17-724@16"ctrs. bottom 53-649@7"ctrs.-top See Sheet 103.

63-601@8"ctrs. top 63-701@8"ctrs. bottom 42-602@8"ctrs. top 42-702@8"ctrs. bottom 1 Series 30-603@8"ctrs.-top 1 Series 30-703@8"ctrs. bottom 1 Series of 37-604@8"ctrs. top 1 Series of 37-704@8"ctrs. bottom 1 Series of 37-605@8"ctrs. top 1 Series of 37-705@8"ctrs. bottom 1 Series 42-606@8"ctrs.-top 1 Series 42-706@8"ctrs.-bottom

1 Series 4-622@16"ctrs top 1 Series 4-721@16"ctrs. bottom top and bottom 1 Series 2-630@32"ctrs. 1 Series 4-623@16"ctrs. top 1 Series 4-722@16"ctrs. bottom 1 Series 2-647@32"ctrs. top and bottom 1 Series 6-629@16"ctrs. top 1 Series 6-712@16"ctrs. bottom 1 Series 3-651@32"ctrs. top and bottom. 1 Series 2-646@32"ctrs. top 1 Series 2-726@32"ctrs. bottom 1 Series 11-624@16"ctrs. top 1 Series 11-723@16"ctrs. bottom 1 Series 5-648@32"ctrs. top & bottom 1 Series 5-628@32"ctrs. top and bottom ℄ Expansion Joint

OPENINGS IN SLAB FOR CENTER POSTS
Scale: ½" = 1'-0"

Openings 2'-4"x 2'-4". Transverse and longitudinal bars to be cut at openings.

102

729 top and bottom 730 top and bottom ℄ Stringer ℄ Girder G-2 ℄ Stringer 3'-10½" 6'-6"

100 101 103 104 105

24'-9" (633 & 634) 3'-5" (640 & 641) 24'-3" (633 & 634) 2'-11" (640 & 641)

652 bars (See note) 652 bars (See Note)
644 @ 32"ctrs. top and bottom over Pier 6 only (645 over Bent 7)
615 @ 16"ctrs. top - 713 @ 16"ctrs. bottom
615 @ 32"ctrs. top and bottom (Not full length of Unit, see plan)

4'-0" 4 Spaces @ 10" = 3'-4" 4" 1-L-1½ x 1½ x ¼" continuous 22-L" Asphaltic concrete surface course 401 615 613 607 1"Clear 4½" 7½" Concrete Slab 707 1'-0" Typical at Girders 1"Clear Typical at stringers 6" 1½"Φ Copper tubing-North of Sta. 247+30.00 spaced @ about 6'-0"ctrs. West side only. Provide ½" additional cover in Span 8. Girder 3 Stringer Girder 2

Note: 8" spacing of top and bottom longitudinal bars is required over each floor beam. Supplement 644, 645 and 615 bars shown in plan with 652 bars to achieve this spacing. 652 bars are to be centered over floor-beams.

PART SECTION A-A
Scale: 3/16" = 1'-0"

1 Series 3-637@16"ctrs. 10-3⅝"± 1-638 3'-0" 2-10"R. 2-640 1-641 12-636@12"ctrs. 3'-0½"± ℄ Expansion Joint

PLAN

640 637 18" 18" 639 638 641 636 END VIEW

NOSE AT EXPRESSWAY AND RAMP E-E
Scale: ¼" = 1'-0"

632 633 634 636 5 Spaces @ 18" 631 635 633 634 636

SECTION B-B

1-634 1 Series 4-63 @18"ctrs. 3'-0" 7'-6⅞" 1-632 2-633 1 Series 17-636@18"ctrs. 54-636@12"ctrs. 24'-3⅞" ℄ Pier 6

NOSE AT EXPRESSWAY AND RAMP X
Scale: ¼" = 1'-0"

REINFORCING STEEL SCHEDULE

Mark	Number	Length	Type	Dimension A	Weight	Mark	Number	Length	Type	Dimension A	Weight
301	467	5'-6"	Str.		970	640	2	10'-9"	102	3'-0"	30
302	66	40'-0"	Str.		990	641	1	11'-10"	102	4'-2"	20
303	12	9'-6"	Str.		40	642	5	24'-3"	Str.		180
304	1-Series of 6	9'-6" to 13'-3"	Str.		30	643	2-Series of 4	3'-0" to 6'-0"	Str.		50
#3*	1	5'-0"	Str.		10	644	48	33'-0"	Str.		2380
						645	66	26'-0"	Str.		2580
401	3'-4	6'-1"	103		1520	646	1-Series of 2	29'-0" to 35'-0"	Str.		100
#4*	1*	4'-0"	Str.		10	647	1-Series of 2	20'-0" to 36'-0"	Str.		80
						648	2-Series of 5	14'-0" to 26'-0"	Str.		300
601	63	19'-3"	101	18'-3"	1820	649	82	4'-0"	101	3'-0"	500
602	42	19'-9"	101	18'-9"	1250	650	44	31'-0"	Str.		2050
603	1-Series of 30	19'-9" to 21'-9"	101	18'-9" to 20'-9"	340	651	2-Series of 3	8'-3" to 29'-9"	Str.		170
604	1-Series of 37	21'-9" to 26'-9"	101	20'-9" to 25'-9"	1350	652	1042	9'-6"	Str.		14870
605	1-Series of 37	26'-9" to 34'-3"	101	25'-9" to 33'-3"	1700	#6*	8	6'-0"	Str.		70
606	1-Series of 42	34'-3" to 26'-9"	101	33'-3" to 25'-9"	2560						
607	1-Series of 63	16'-6" to 25'-3"	101	15'-6" to 24'-9"	1980	701	63	18'-0"	Str.		2320
608	1-Series of 63	25'-3" to 36'-9"	101	24'-3" to 35'-9"	2330	702	42	18'-6"	Str.		1560
609	1-Series of 65	36'-9" to 50'-3"	101	35'-9" to 49'-3"	4250	703	1-Series of 30	18'-6" to 20'-6"	Str.		1200
610	1-Series of 21	13'-0" to 49'-9"	101	12'-0" to 48'-9"	990	704	1-Series of 37	20'-6" to 25'-6"	Str.		1740
611	1-Series of 42	3'-6" to 13'-0"	101	8'-6" to 12'-0"	710	705	1-Series of 37	25'-6" to 33'-0"	Str.		2210
612	26	31'-6"	101	30'-6"	1230	706	1-Series of 42	33'-0" to 45'-6"	Str.		3370
613	505	54'-0"	Str.		40960	707	1-Series of 63	15'-3" to 24'-0"	Str.		2530
614	82	30'-6"	101	29'-6"	3760	708	1-Series of 63	24'-0" to 35'-6"	Str.		3830
615	656	40'-9"	Str.		40150	709	1-Series of 65	35'-6" to 49'-0"	Str.		5610
616	44	24'-6"	Str.		1620	710	1-Series of 21	11'-9" to 48'-6"	Str.		1290
617	13	51'-0"	Str.		1000	711	1-Series of 42	6'-3" to 11'-9"	Str.		860
618	1-Series of 8	5'-0" to 45'-0"	Str.		300	712	1-Series of 6	41'-3" to 30'-3"	Str.		270
619	1	28'-6"	Str.		20	713	505	54'-0"	Str.		35170
620	1	51'-0"	Str.		20	714	82	30'-0"	Str.		5030
621	1-Series of 3	10'-0" to 38'-6"	Str.		110	715	44	24'-9"	Str.		2230
622	1-Series of 4	5'-0" to 34'-0"	Str.		120	716	13	51'-6"	Str.		1370
623	1-Series of 4	5'-0" to 28'-0"	Str.		100	717	1-Series of 8	5'-0" to 45'-0"	Str.		410
624	1-Series of 11	5'-9" to 47'-0"	Str.		440	718	1	28'-6"	Str.		60
625	1-Series of 11	28'-0" to 35'-0"	Str.		800	719	1	15'-0"	Str.		30
626	1-Series of 5	20'-0" to 53'-0"	Str.		270	720	1-Series of 3	10'-3" to 38'-9"	Str.		150
627	2-Series of 23	37'-6" to 54'-0"	Str.		31610	721	1-Series of 4	5'-3" to 34'-3"	Str.		160
628	2-Series of 5	6'-0" to 52'-0"	Str.		440	722	1-Series of 4	3'-6" to 28'-6"	Str.		140
629	1-Series of 6	4'-0" to 30'-0"	Str.		150	723	1-Series of 11	6'-0" to 47'-3"	Str.		600
630	2-Series of 2	7'-0" to 40'-0"	Str.		120	724	1-Series of 11	28'-3" to 35'-3"	Str.		1100
631	1-Series of 4	6'-9" to 24'-0"	Str.		90	725	1-Series of 5	20'-3" to 53'-3"	Str.		380
632	1	25'-6"	Str.		40	726	1-Series of 2	28'-6" to 35'-6"	Str.		130
633	2	59'-11"	102	31'-11"	160	727	26	30'-3"	Str.		1610
634	1	59'-4"	102	51'-4"	80	728	460	41'-0"	Str.		38530
635	1-Series of 11	35'-3" to 11'-10"	105	2'-9" to 9'-4"	220	729	9	11'-0"	Str.		170
636	66	2'-6"	104		250	730	4	11'-6"	Str.		90
637	1-Series of 3	5'-0" to 7'-0"	105	2'-6" to 4'-6"	30	# 7*	1	6'-3"	Str.		30
638	1	4'-0"	Str.		10						
639	6	4'-6"	Str.		40			Total:			306,350

* Test replacement bars.
# Use replacement bar for test.

Note: Shift longitudinal bars as required to clear shear connectors.
Place longitudinal steel parallel to ℄ Bridge in Span 6 and the Ramp E-E approach. Elsewhere in Spans 7 and 8, place longitudinal steel para to ℄ Expressway. Spacing given shall be maxim
For details of transverse construction joints and haunch at floorbeams, see Sheet 23.
For details of precast concrete traffic dividers, see Standard Construction Drawings 1-

PART 3

TOLEDO EXPRESSWAY SYSTE
MAUMEE RIVER BRIDGE
BR. NO. LU 120R-35
UNIT 2
ROADWAY SLAB
TOLEDO, LUCAS COUNTY, OHIO

SCALE As shown
MADE B.G.W. DATE 9-25-52
TRCD R.R. DATE 10-24-52
CKD MKA W.F. DATE 9-15-53

HOWARD, NEEDLES, TAMMEN & BERGENDOF
CONSULTING ENGINEERS
KANSAS CITY NEW YORK
810 SHEET- 3.90

815

CHARLES BRUNING CO., INC.

FED. ROAD DIV. NO.	STATE	FED. AID PROJ. NO.	TYPE FUNDS
2	OHIO	UI-1052(2)	POST WAR

LUCAS COUNTY
CITY OF TOLEDO
TOLEDO EXPRESSWAY SYSTE
MAUMEE RIVER BRIDGE
LUC. 120R-3.46

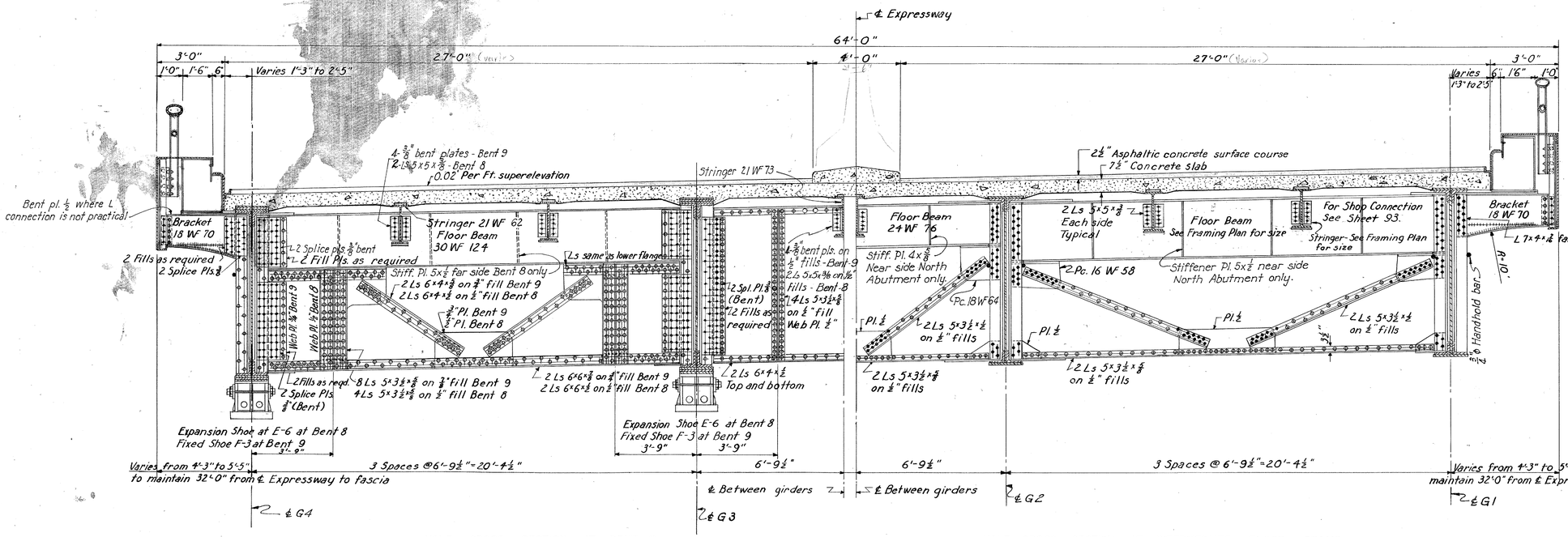

HALF CROSS SECTION AT BENT 9
Cross section at Bent 8 similar except as noted

HALF CROSS SECTION AT INTERMEDIATE FLOOR BEAMS
Cross section at North Abutment similar except as shown

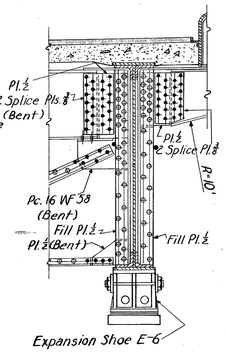

PART CROSS SECTION
AT NORTH ABUTMENT

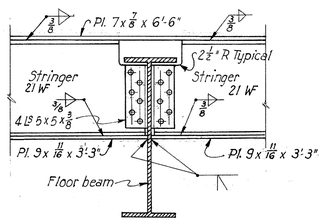

STRINGER CONNECTION
Scale: 3/4" = 1'-0"

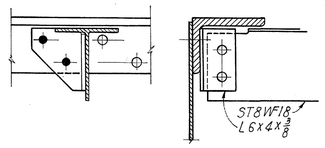

SIDEWALK SUPPORT CONNECTION
TO 8"x 6" FLANGE ANGLE
Scale: 1½" = 1'-0"

Note:
At handrail posts between floorbeams use ST8WF 18 strut to support curb post. See Unit 1 Cross Sections for connection details.
Closed curb is required entire length of Unit 3.
For typical connection details of sidewalk supports between floor beams, see Sheet 10.

PART
TOLEDO EXPRESSWAY SYSTE
MAUMEE RIVER BRIDGE
BR. NO. LU 120R-35
UNIT 3
ROADWAY CROSS SECTIONS
TOLEDO LUCAS COUNTY, OHI

SCALE 3/8" = 1'-0"
MADE G.D. DATE 4-10-52
TRCD N.A.M. DATE 10-6-52
CKD JPS, BKH DATE 12-9-53

HOWARD, NEEDLES, TAMMEN & BERGENDO
CONSULTING ENGINEERS
KANSAS CITY NEW YORK
810 SHEET 3.91

830

CHARLES BRUNING CO., INC.

JUL 28 1952

FED. ROAD DIV. NO.	STATE	FED. AID PROJ. NO.	TYPE FUNDS
2	OHIO	UI-1052 (2)	POST WAR

92
120

LUCAS COUNTY
CITY OF TOLEDO
TOLEDO EXPRESSWAY SYSTEM
MAUMEE RIVER BRIDGE
LUC 120R-3.46

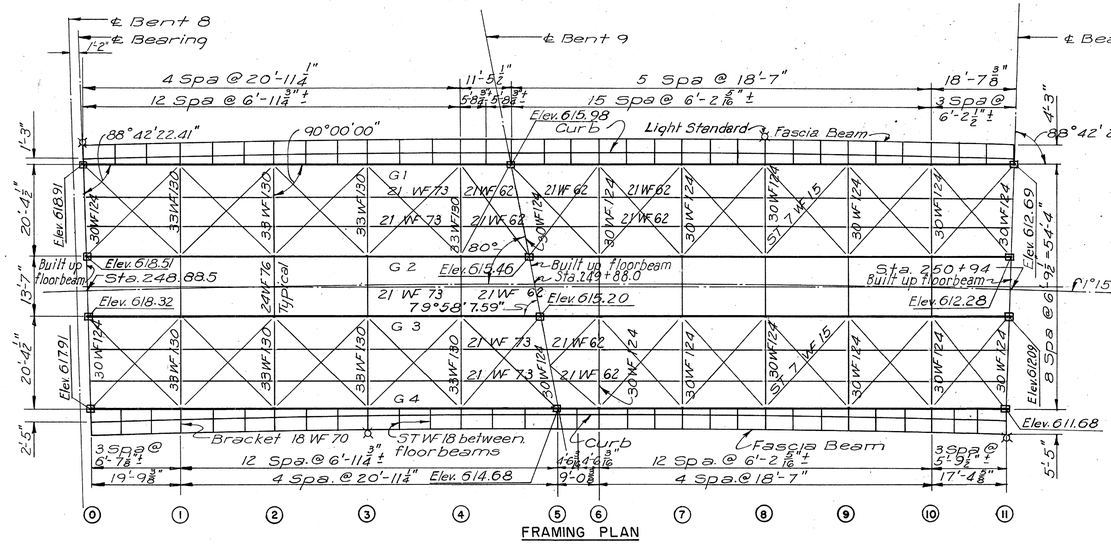

FRAMING PLAN

Note:
All dimensions are normal to girders except as shown.
Elevations given on framing plan are to back of top flange angles.
In general, angles and other shapes will not be bent to make skewed connections.

SCHEDULE OF STIFFENER ANGLES		
	G1 & 4	G2 & 3
Intermediate	2 ls 5×3½×5/16	2 ls 5×3½×7/16
Floorbeams	2 ls 7×4×7/16	2 ls 7×4×7/16
Brg. @ Pier No. 8	4 ls 7×4×7/16	4 ls 7×4×5/8
Brg. @ Pier No. 9	4 ls 7×4×5/8	4 ls 7×4×1
Brg. @ North Abut.	4 ls 7×4×7/16	4 ls 7×4×9/16
Jacking @ North Abut.	4 ls 7×4×7/16	4 ls 7×4×7/16

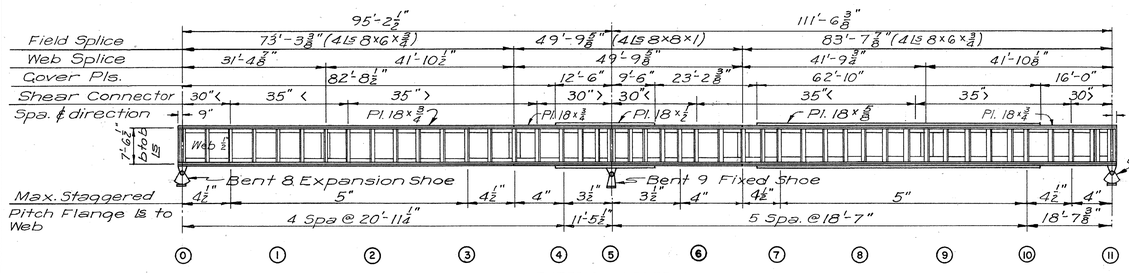

EXTERIOR GIRDER G1

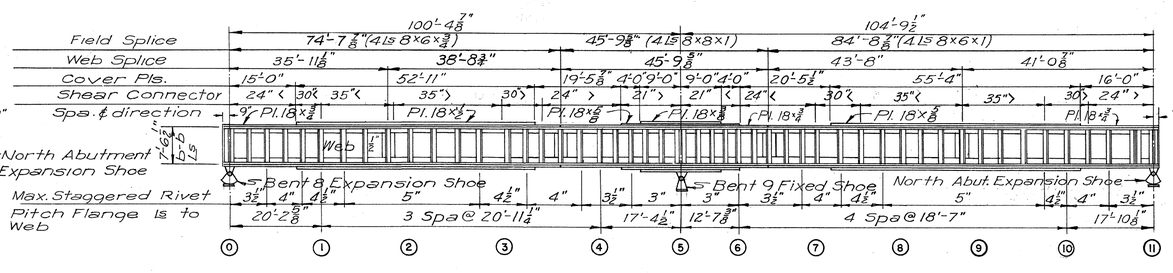

INTERIOR GIRDER G3

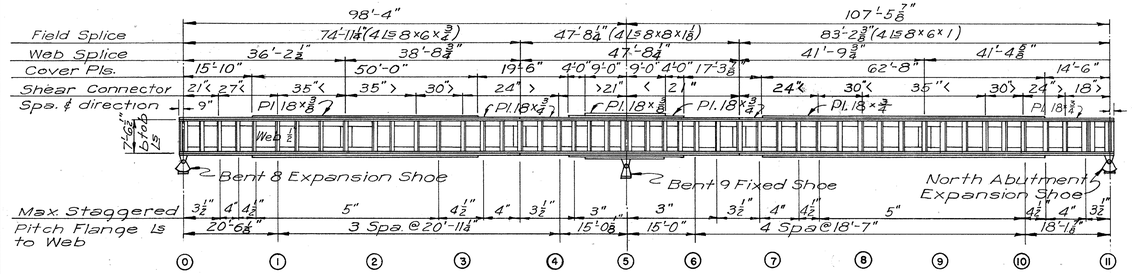

INTERIOR GIRDER G2

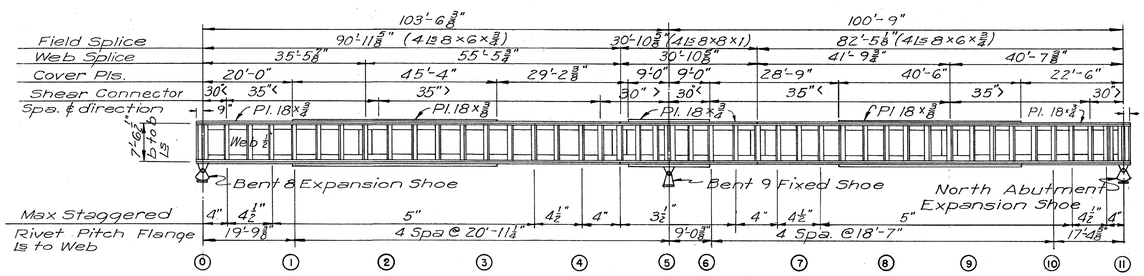

EXTERIOR GIRDER G4

Notes:
All material shall be carbon steel.
All rivets shall be 7/8 ø.
See General Notes Sheet 14.

PART 3

TOLEDO EXPRESSWAY SYSTEM

MAUMEE RIVER BRIDGE
BR. NO. LU120R-35
UNIT 3

STEEL FRAMING PLAN & GIRDER ELEVATIONS

TOLEDO LUCAS COUNTY, OHIO

SCALE 1/16" = 1'-0"
MADE JHG DATE 4-29-52
TRCD JHG DATE 5-8-52
CKD D.M.E. AHS. DATE 7-6-53

HOWARD, NEEDLES, TAMMEN & BERGENDOFF
CONSULTING ENGINEERS
KANSAS CITY NEW YORK

810 SHEET- 3.92

831

CHARLES BRUNING CO., INC.

JUL 28

FED. ROAD DIV. NO.	STATE	FED. AID PROJ. NO.	TYPE FUNDS
2	OHIO	UI-1052 (2)	POST WAR

93
120

LUCAS COUNTY
CITY OF TOLEDO

TOLEDO EXPRESSWAY SYSTEM
MAUMEE RIVER BRIDGE
LUC 120R-3.46

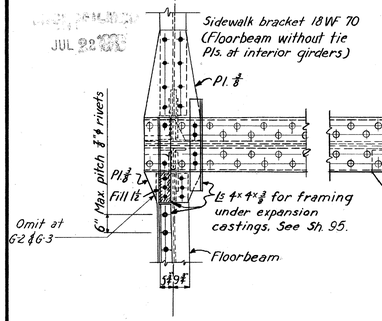

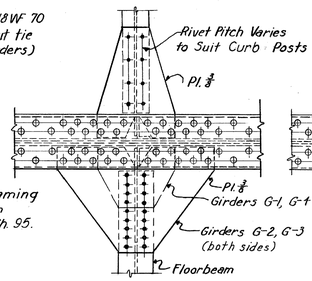

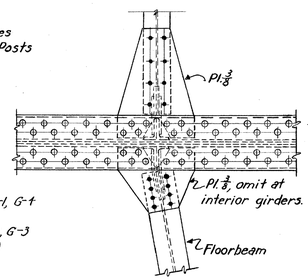

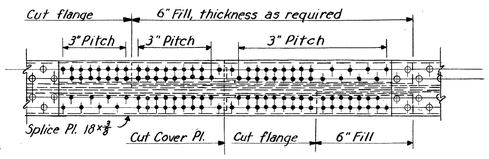

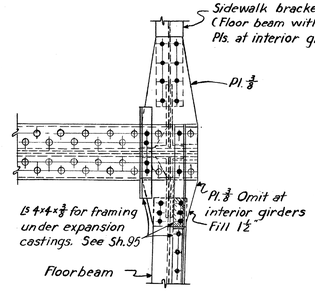

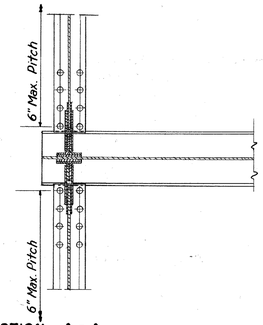

SECTION A - A
Bent 9 Similar

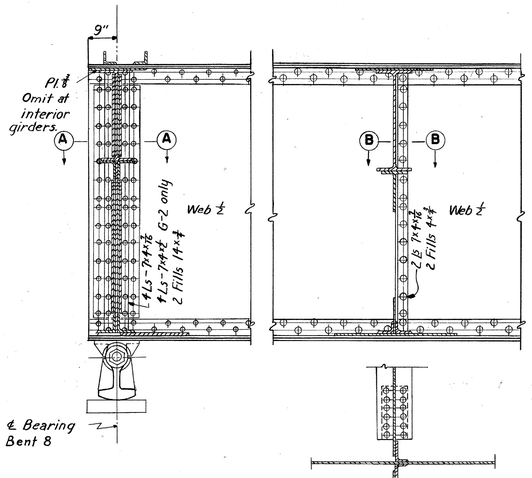

SECTION B-B

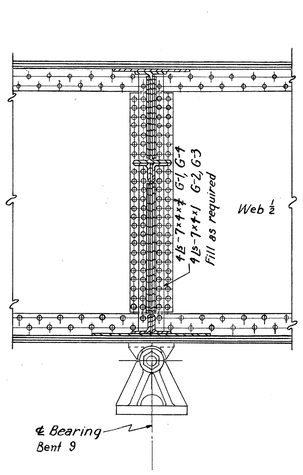

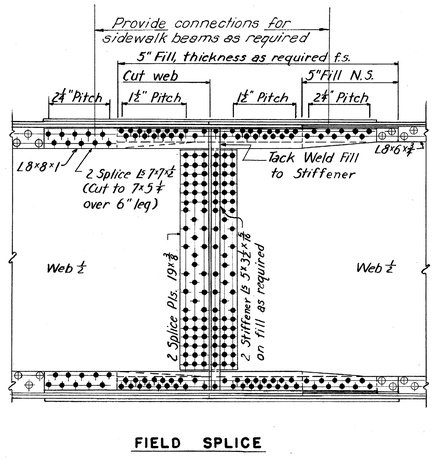

FIELD SPLICE

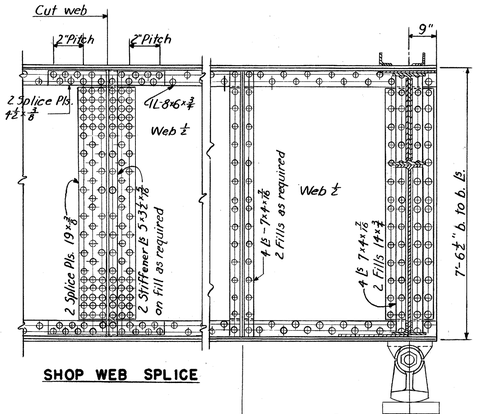

SHOP WEB SPLICE

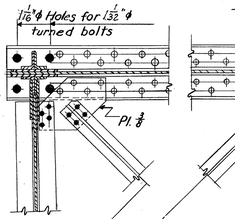

BEARING AT BENT 8

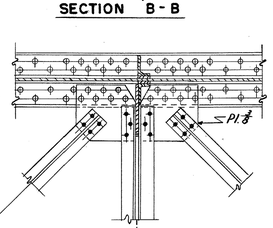

INTERMEDIATE FLOORBEAM LATERAL CONNECTION AT G-1

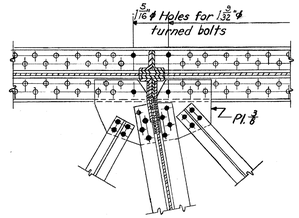

BEARING AT BENT 9

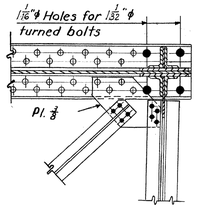

BEARING AT NORTH ABUTMENT

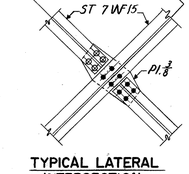

TYPICAL LATERAL INTERSECTION

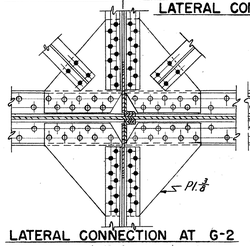

LATERAL CONNECTION AT G-2

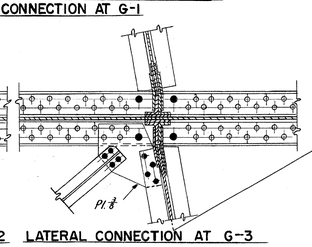

LATERAL CONNECTION AT G-3

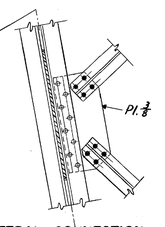

LATERAL CONNECTION BETWEEN G-3 AND G-4

Notes:
For general girder detail notes, see Sheet 15.
All material shall be carbon steel.
All rivets shall be ⅞" ϕ.
Exterior girder G-1 is shown. Other girders are similar except as noted.
For Cross Sections, see Sheet No. 91.

PART 3

TOLEDO EXPRESSWAY SYSTEM
MAUMEE RIVER BRIDGE
BR. NO. LU 120R-35
UNIT 3
GIRDER DETAILS
TOLEDO LUCAS COUNTY, OHIO

SCALE ½" = 1'-0"
MADE G.D. DATE 7-14-52
TRCD N.A.M. DATE 9-25-52
CKD J.P.S. B.R.H. DATE 12-9-52

HOWARD, NEEDLES, TAMMEN & BERGENDOFF
CONSULTING ENGINEERS
KANSAS CITY NEW YORK

810 SHEET- 3.93

833

CHARLES BRUNING CO., INC.

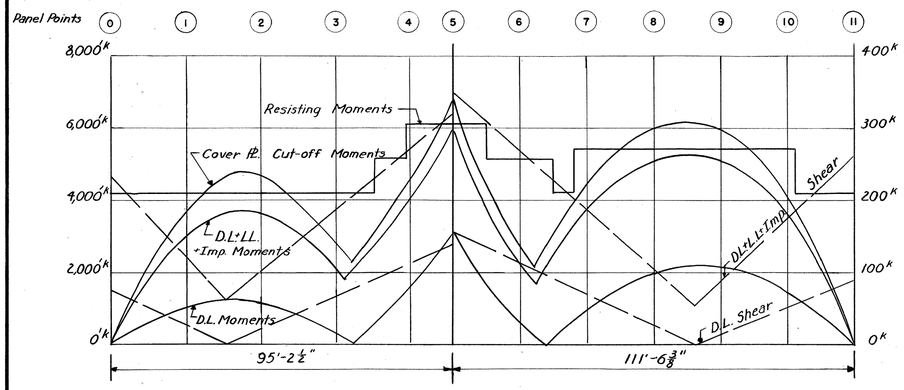

GIRDER G-1

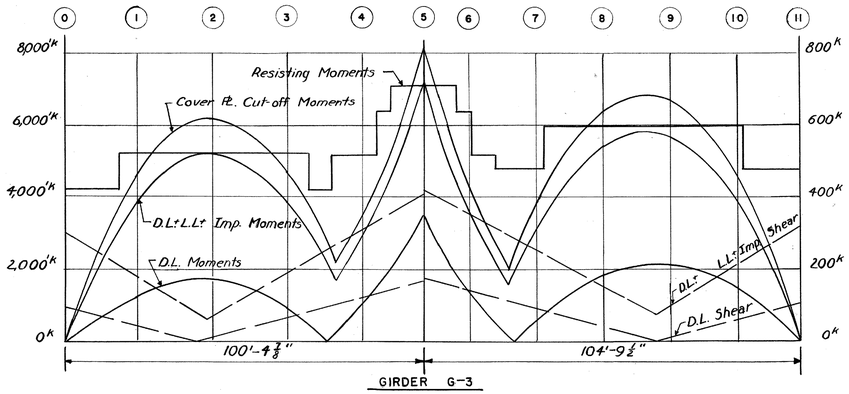

GIRDER G-3

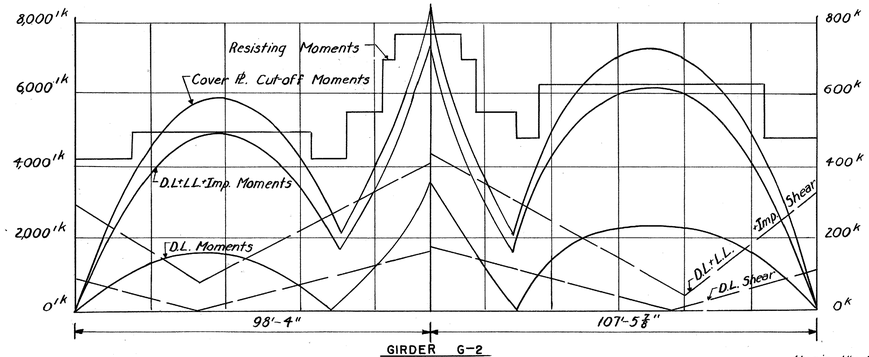

GIRDER G-2

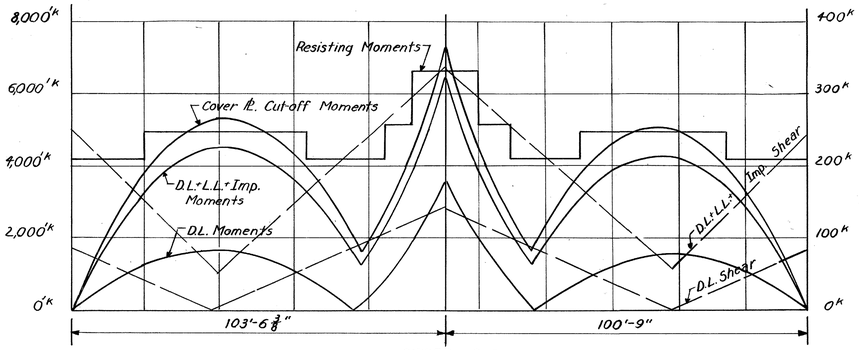

GIRDER G-4

Scale: Horiz. 1"=20'-0"
Vert. 1"=2,000'k or 1"=100^k or 1"=200^k

RECEIVED
JUL 22 1953

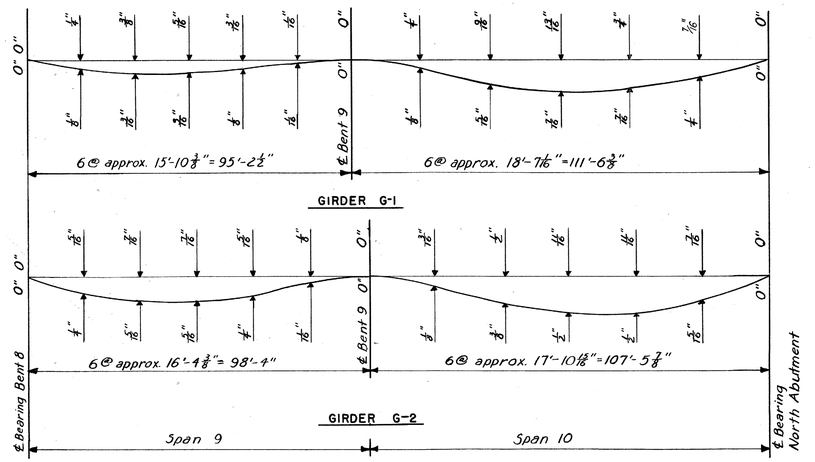

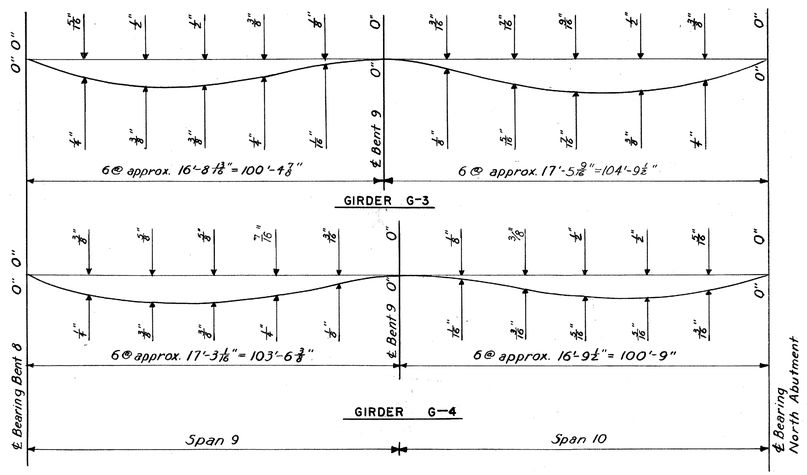

GIRDER DEFLECTION DIAGRAMS

Scale: Horiz. 1"=20' ——— Vert. Full size

FED. ROAD DIV. NO.	STATE	FED. AID PROJ. NO.	TYPE FUNDS
2	OHIO	UI-1052(2)	POST WAR

94
120

LUCAS COUNTY
CITY OF TOLEDO
TOLEDO EXPRESSWAY SYSTEM
MAUMEE RIVER BRIDGE
LUC 120R-3.46

DESIGN MOMENTS AND SHEARS

Girder and Load		Reactions and Shears in Kips					Moments in Foot Kips		
		Bent 8	Bent 9		No Abt.		Span 9	Bent 9	Span 10
		R	Vs	Vn	R	R	+M	-M	+M
GIRDER G-1	D.L.	72.3	137.0	155.0	292.0	91.7	1160	3060	2195
	U.L.L.	54.4	68.5	82.0	163.8	62.9	1130	1700	1502
	C.L.L.	74.0	81.6	87.5	72.0	77.6	942	870	1075
	Imp.	29.3	34.3	35.8	35.6	29.6	471	388	544
	Total	230.0	321.4	360.3	563.4	261.8	3703	6018	5316
GIRDER G-2	D.L.	92.1	164.0	177.0	341.0	111.8	1602	3510	2340
	U.L.L.	70.9	91.1	100.5	206.0	78.4	1508	2115	1810
	C.L.L.	95.2	105.8	110.0	90.5	98.5	1222	1198	1352
	Imp.	37.2	47.6	45.1	44.8	37.8	611	500	677
	Total	295.4	408.5	432.6	682.3	326.5	4943	7323	6179
GIRDER G-3	D.L.	96.1	166.0	174.0	340.0	107.5	1752	3500	2155
	U.L.L.	72.4	101.0	107.0	206.5	75.9	1580	2120	1722
	C.L.L.	96.4	103.0	105.2	92.5	97.5	1260	1100	1312
	Imp.	37.3	30.8	32.1	45.1	37.6	630	488	659
	Total	302.2	400.8	418.3	684.1	318.5	5222	7208	5846
GIRDER G-4	D.L.	86.8	142.8	140.5	283.3	83.3	1688	3622	1550
	U.L.L.	58.5	75.9	73.6	160.5	57.5	1308	1640	1258
	C.L.L.	76.0	84.6	84.0	69.4	75.3	1040	900	991
	Imp.	29.7	35.0	34.9	35.0	29.0	512	386	497
	Total	251.0	338.3	333.0	548.2	245.1	4548	6548	4296

Note: Design moments and shears are obtained by multiplying D.L. by 0.8 and L.L.+I by 2.06.

D.L.	Dead load
L.L.	Live load
U.L.L.	Uniform live load
C.L.L.	Concentrated live load
Imp.	Impact
R	Reaction
Vs	Shear to south of support
Vn	Shear to north of support
+M	Maximum positive moment
-M	Maximum negative moment

Note:
Refer Girder Deflection Diagrams:
Values shown above the base line in the deflection diagrams are deflections due to total dead load of steel and concrete.
Values shown below the line are deflections due to weight of concrete and wearing surface.

Concrete haunches over girders shall measure 12" back of flange angles to top of wearing surface at bearings. At Bent 8 -11⅜" for G-1, G-2, G-3, & G-4.
Girders shall be cambered for vertical curve and dead load of steel and enough in addition to limit depth at haunch to 13".

PART 3

TOLEDO EXPRESSWAY SYSTEM
MAUMEE RIVER BRIDGE
BR. NO. LU 120R-35
UNIT 3
GIRDER STRESSES, & DEFLECTIONS
TOLEDO, LUCAS COUNTY, OHIO

SCALE As Shown
MADE LLD/MM DATE 9-15-52
TRCD NAM DATE 9-23-52
CKD DME DATE 12-17-52

HOWARD, NEEDLES, TAMMEN & BERGENDOFF
CONSULTING ENGINEERS
KANSAS CITY NEW YORK
810 SHEET 3.94

834

CHARLES BRUNING CO., INC.

JUL 22

FED. ROAD DIV. NO.	STATE	FED. AID PROJ. NO.	TYPE FUNDS
2	OHIO	UI-1052(2)	POST WAR

95
120

LUCAS COUNTY
CITY OF TOLEDO
TOLEDO EXPRESSWAY SYSTEM
MAUMEE RIVER BRIDGE
LUC 120 R-3.46

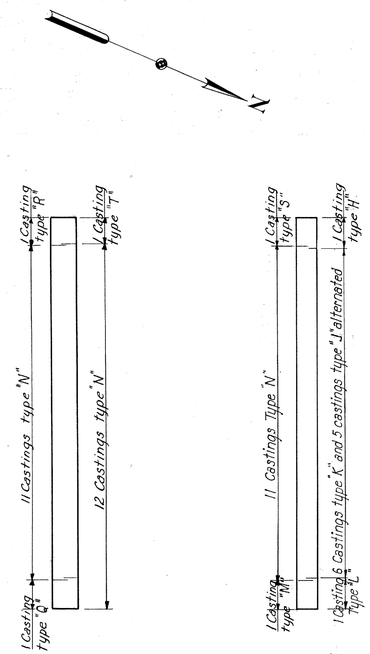

EXPANSION JOINT PLAN
AT BENT 8
Scale: 3/32" = 1'-0"

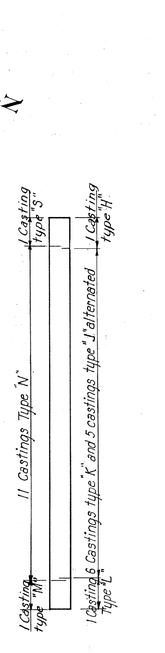

EXPANSION JOINT PLAN
AT NORTH ABUTMENT
Scale: 3/32" = 1'-0"

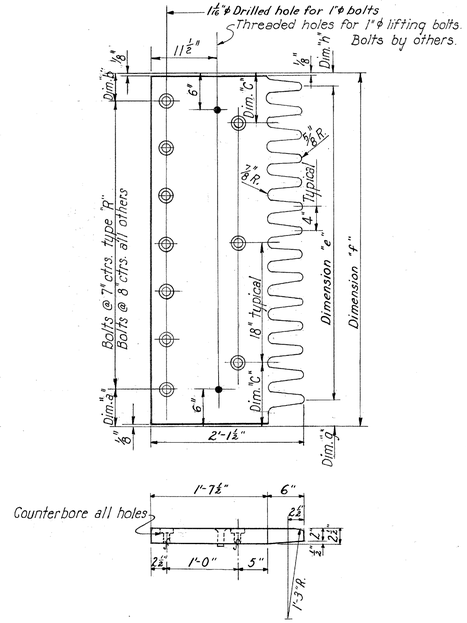

CASTINGS "M","N","Q","R","S" AND "T"
Scale: 1"=1'-0"

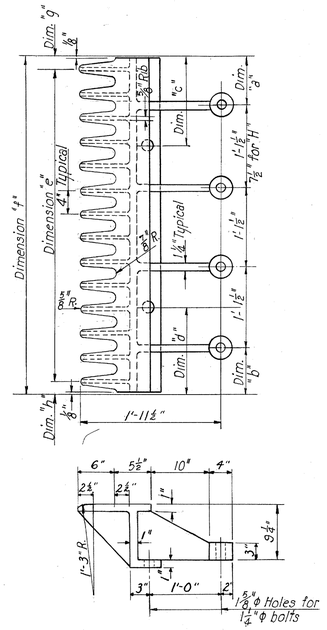

CASTINGS "H", "J", "K" AND "L"
Scale: 1"=1'-0"

DIMENSIONS FOR CASTINGS									
Type	Number Read	Dimensions							
		a	b	c	d	e	f	g	h
H	1	6 3/4"	7 3/4"	10 1/2"	1'-2 1/2"	3'-8"	4'-1"	3"	2"
J	5	7 3/4"	7 3/4"	1'-2 1/2"	1'-2 1/2"	4'-4"	4'-8"	2"	2"
K	6	5 3/4"	5 3/4"	1'-0 1/2"	1'-0 1/2"	4'-0"	4'-4"	2"	2"
L	1	7 3/4"	6 3/4"	1'-2 1/2"	1'-1 1/2"	4'-4"	4'-7"	2"	5"
M	1	5'	4"	1'-1"	8"	3'-0"	3'-5"	3"	2"
N	34	4"	4"	8"	8"	4'-4"	4'-8"	2"	2"
Q	1	6"	4"	10"	8"	4'-4"	4'-10"	4"	2"
R	1	4"	4"	11"	11"	1'-4"	1'-10"	2"	4"
S	1	4"	3"	8"	11"	2'-8"	3'-3"	2"	5"
T	1	4"	4"	1'-0"	1'-0"	1'-8"	2'-0"	2"	2"

Bolts in castings shall be Monel metal or approved equal, each bolt to have a lock washer under the head.

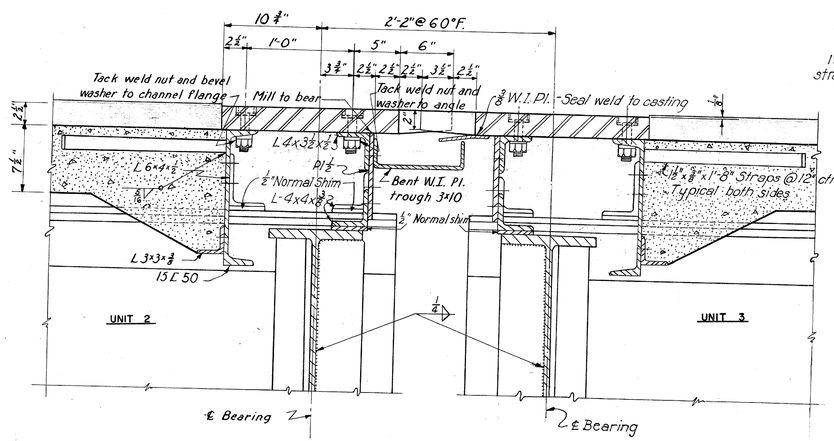

EXPANSION JOINT AT BENT 8
Scale: 1 1/2" = 1'-0"

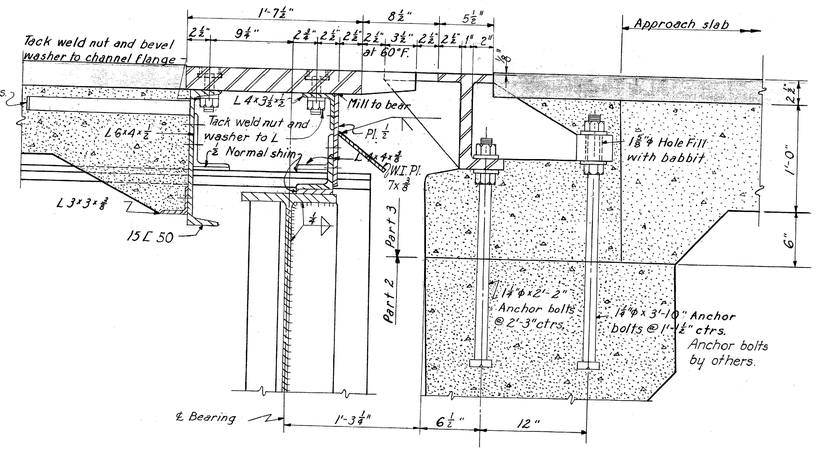

EXPANSION JOINT AT NORTH ABUTMENT
Scale: 1 1/2" = 1'-0"

See Sheet 22 for details not shown here.
See Sheet 21 for general notes.

PART 3

TOLEDO EXPRESSWAY SYSTEM
MAUMEE RIVER BRIDGE
BR. NO. LU 120 R-35
UNIT 3
EXPANSION JOINTS

TOLEDO LUCAS COUNTY, OHIO

SCALE As shown
MADE G.D. DATE 4-17-52
TRCD N.A.M. DATE 10-14-52
CKD. V.D.G. DATE 9-29-53

HOWARD, NEEDLES, TAMMEN & BERGENDOFF
CONSULTING ENGINEERS
KANSAS CITY NEW YORK

810 SHEET 3.95

635

CHARLES BRUNING CO., INC.

FED. ROAD DIV. NO.	STATE	FED. AID PROJ. NO.	TYPE FUNDS
2	OHIO	UI-1052(2)	POST WAR

96
120

LUCAS COUNTY
CITY OF TOLEDO

TOLEDO EXPRESSWAY SYSTEM
MAUMEE RIVER BRIDGE
LUC 120R-3.46

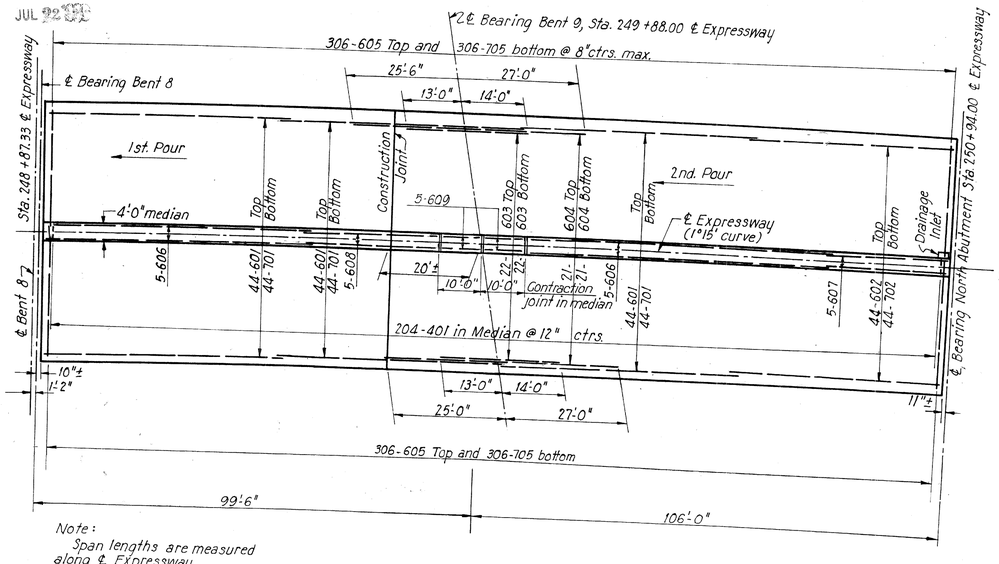

Note:
Span lengths are measured along ℄ Expressway.

SLAB PLAN
Scale: $\frac{1}{16}$" = 1'-0"

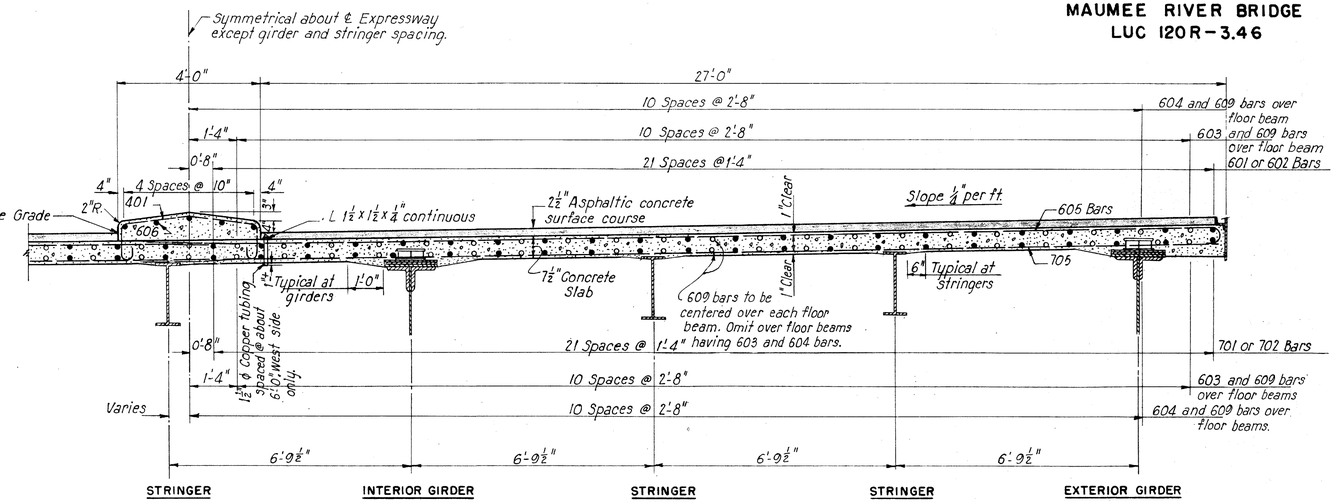

HALF CROSS SECTION THROUGH SLAB
Scale: $\frac{1}{2}$" = 1'-0"

Note: Over Bent 9 at location shown in plan, provide contraction joints full width and depth of median above roadway slab. Round edges of joints to $\frac{1}{4}$" radius. Longitudinal reinforcing steel shall not pass through the joints.

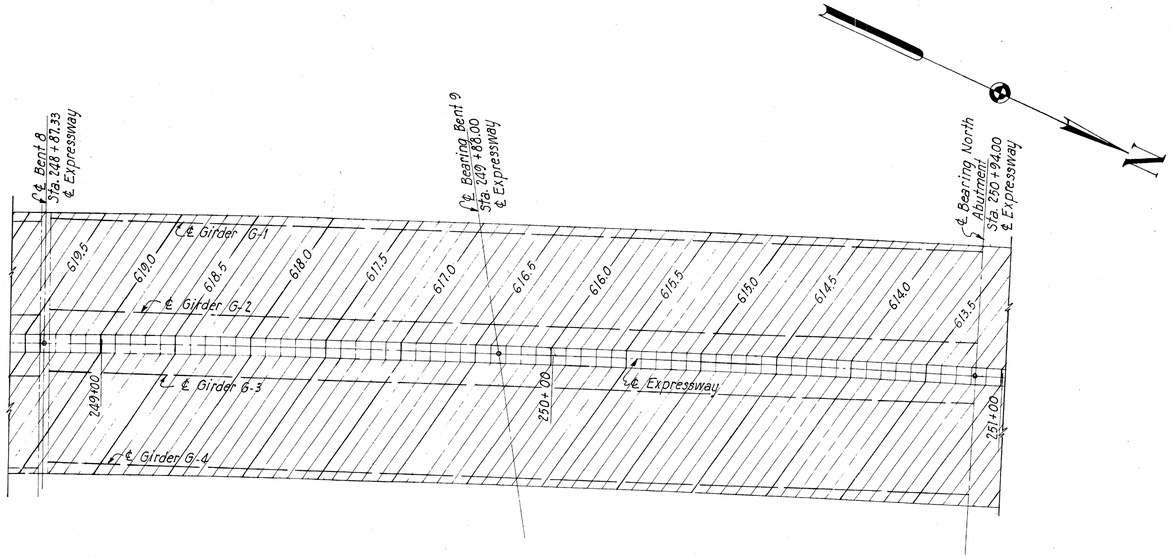

SLAB CONTOUR PLAN
Scale: $\frac{1}{16}$" = 1'-0"

Note: Contour elevations shown are for top of wearing surface.

REINFORCING STEEL

Mark	No.	Length	Type	Weight
701	132	54'-0"	Str.	14,570
702	44	46'-9"	Str.	4,200
705	612	29'-9"	Str.	37,220
#7*	3	6'-3"	Str.	40
601	132	54'-0"	Str.	10,710
602	44	46'-9"	Str.	3,090
603	44	27'-0"	Str.	1,780
604	42	52'-6"	Str.	3,310
605	612	30'-6"	101	28040
606	10	54'-0"	Str.	810
607	5	42'-9"	Str.	320
608	5	36'-6"	Str.	270
609	680	9'-6"	Str.	9700
#6*	3	6'-0"	Str.	30
401	204	6'-1"	102	830
#4**	204	6'-1"	Str.	10
			Total=	114,930

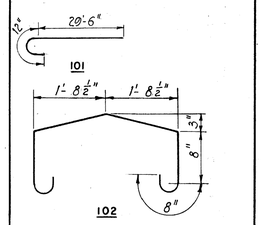

* Test replacement bars.
** Use replacement bar for test.

Notes:
Shift longitudinal bars as required to clear shear connectors. Place longitudinal bars parallel to ℄ Expressway.
For details of transverse construction joint, and haunch of floorbeams, see Sheet 23.

PART 3

TOLEDO EXPRESSWAY SYSTEM
MAUMEE RIVER BRIDGE
BR. NO. LU 120R-35
UNIT 3
ROADWAY SLAB
TOLEDO LUCAS COUNTY, OHIO

SCALE 1/16" and 1/2" = 1'-0"
MADE M.K.A. DATE 4-11-52
TRCD R.R. DATE 9-17-52
CKD M.E.A. DATE 10-1-52

HOWARD, NEEDLES, TAMMEN & BERGENDOFF
CONSULTING ENGINEERS
KANSAS CITY NEW YORK

810 SHEET 3.96

837

CHARLES BRUNING CO., INC.

FED. ROAD DIV. NO.	STATE	FED. AID PROJ. NO.	TYPE FUNDS
2	OHIO	UI-1052(2)	POST WAR

LUCAS COUNTY
CITY OF TOLEDO
TOLEDO EXPRESSWAY SYST
MAUMEE RIVER BRIDGE
LUC 120R-3.46

JUL 22 1953

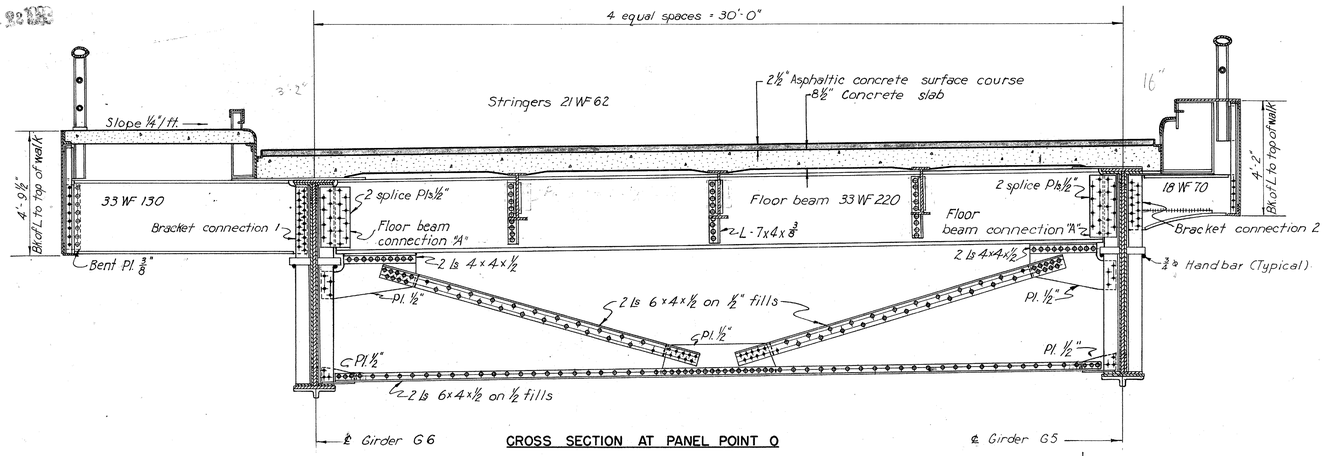

CROSS SECTION AT PANEL POINT 0

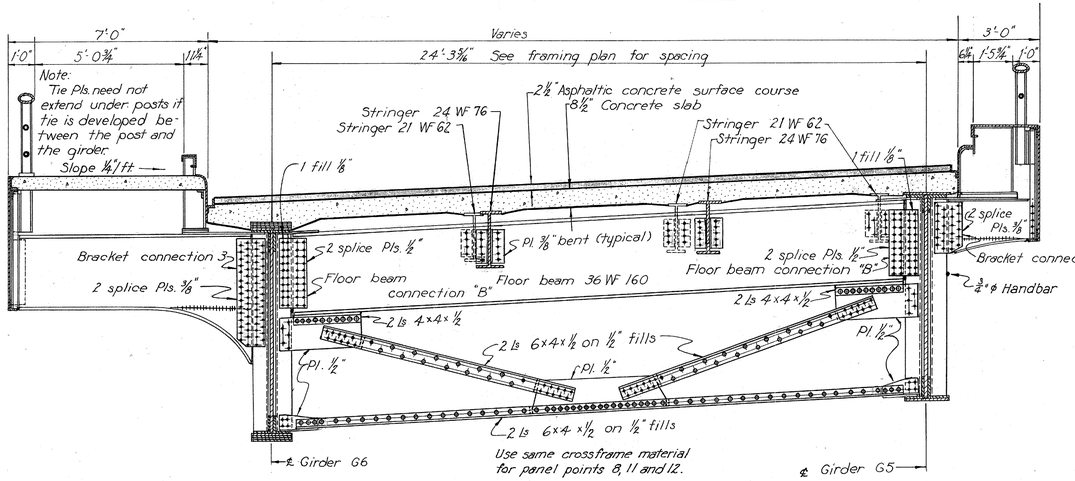

CROSS SECTION AT PANEL POINT 4

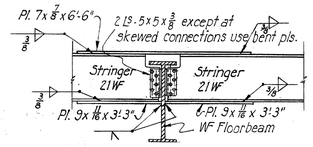

TYPICAL STRINGER CONNECTION
Scale: ⅜"=1'-0"

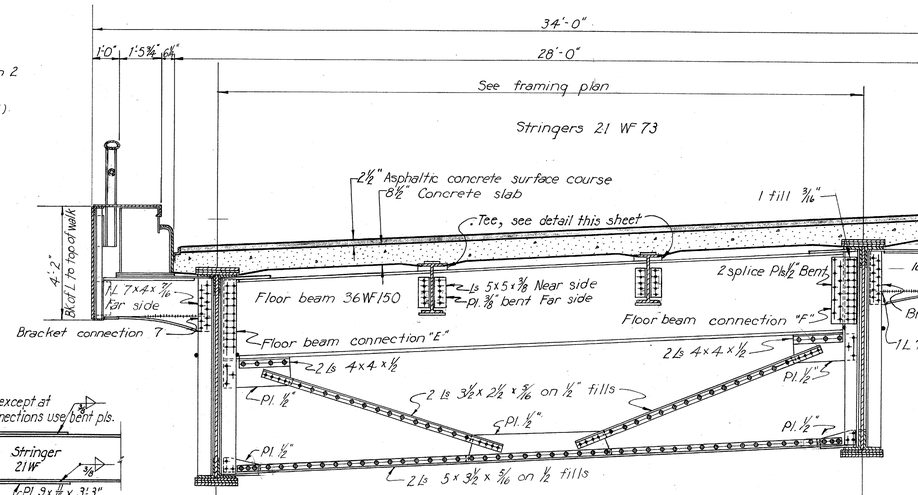

CROSS SECTION AT PANEL POINT (13)

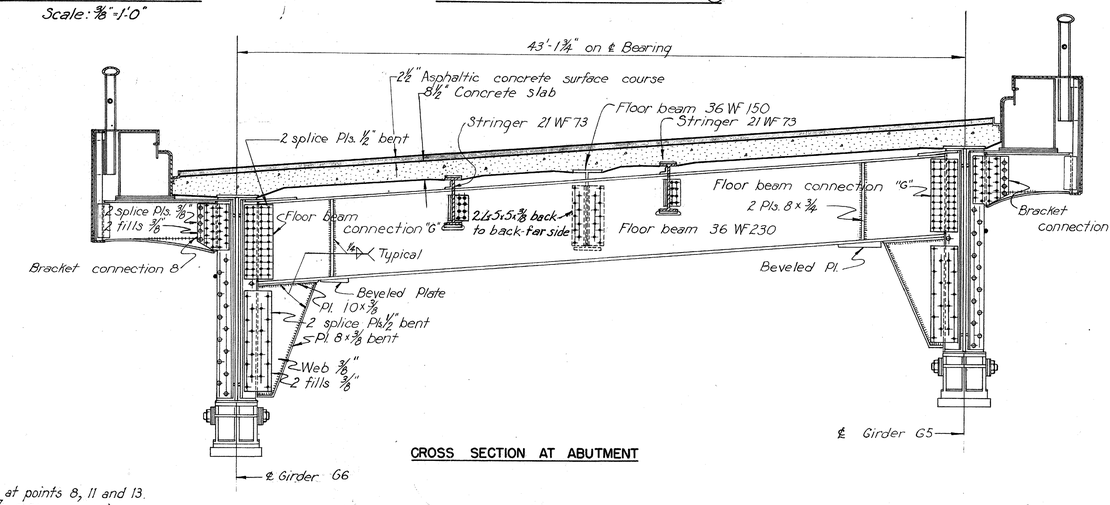

CROSS SECTION AT ABUTMENT

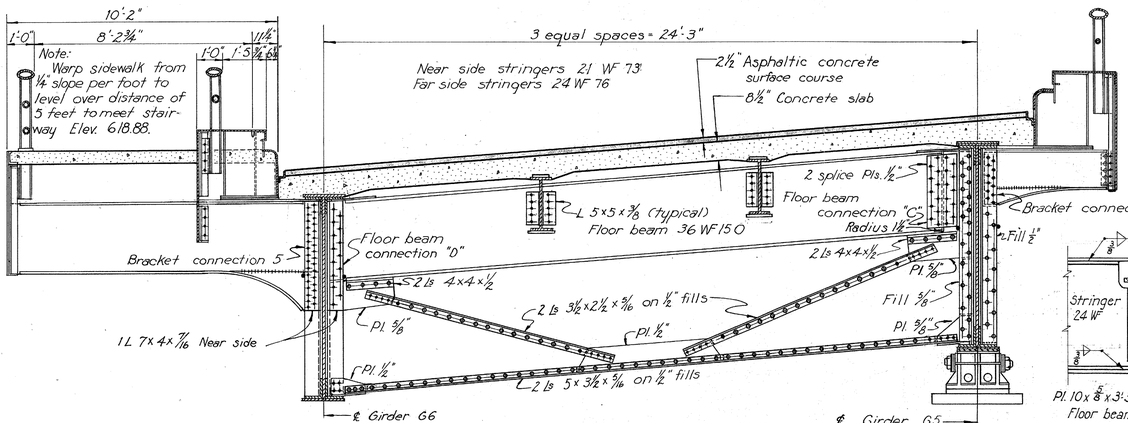

CROSS SECTION AT PANEL POINT (9)

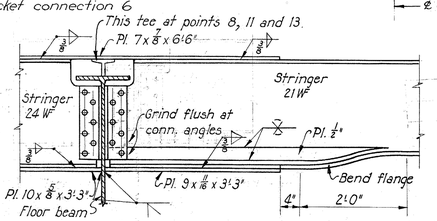

UNEQUAL DEPTH STRINGER CONNECTION
Scale: ¾"=1'-0"

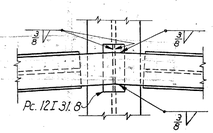

PLAN OF STRINGER CONNECTION AT POINTS 8, 11 AND 13
Scale: ¾"=1'-0"

Note:
Closed curb is required along Girder G-6, entire length of Ramp E-E.
Bent plate connection on sidewalk bracket to fascia to be used wherever angle connection does not apply.

PART
TOLEDO EXPRESSWAY SYSTI
MAUMEE RIVER BRIDGE
BR. NO. LU 120R-35
RAMP E E
CROSS SECTIONS
TOLEDO LUCAS COUNTY, OH

SCALE ⅜"=1'-0"
MADE CGP DATE 10-1-52
TRCD EJM-16 DATE 4-6-53
CKD J.H.G. DATE 4-10-53

HOWARD, NEEDLES, TAMMEN & BERGEND
CONSULTING ENGINEERS
KANSAS CITY NEW YORK

810 SHEET 3.97

820

CHARLES BRUNING CO., INC.

JUL 92

FED. ROAD DIV. NO.	STATE	FED. AID PROJ. NO.	TYPE FUNDS
2	OHIO	UI-1052(2)	POST WAR

98
120

LUCAS COUNTY
CITY OF TOLEDO
TOLEDO EXPRESSWAY SYSTEM
MAUMEE RIVER BRIDGE
LUC 120R-3.46

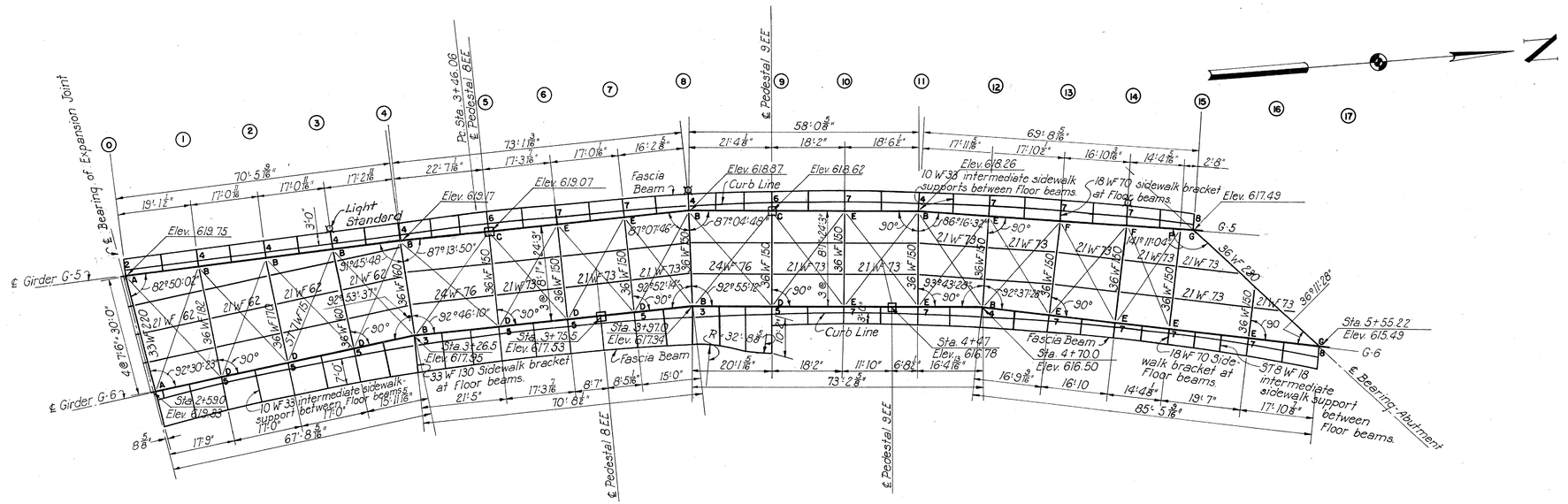

FRAMING PLAN

OFFSETS - ℄ GIRDER TO CURB LINE		
Location	G-5	G-6
Point 0	1.356	2.167
Point 1	1.423	1.610
Point 2	1.483	1.488
Point 3	1.543	1.769
Point 4	1.604	2.399
Point 5	2.075	1.704
Point 6	2.183	1.561
Point 7	1.898	1.828
Point 8	1.263	2.461
Point 9	2.043	1.715
Point 10	2.207	1.527
Point 11	1.953	1.810
Point 12	2.413	2.462
Point 13	2.440	1.650
Point 14	2.073	1.232
Point 15	1.314	1.212
Point 16	—	1.593
Point 17	—	2.432

Dimensions Above Normal To Girders And Are Measured In Feet.

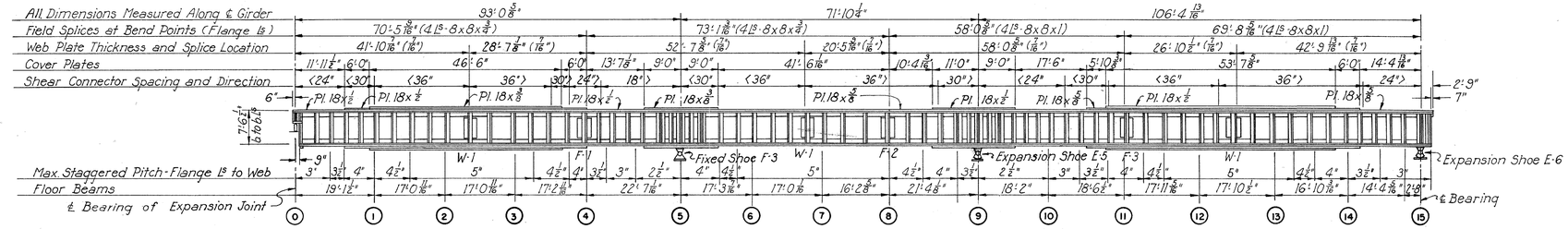

GIRDER G-5

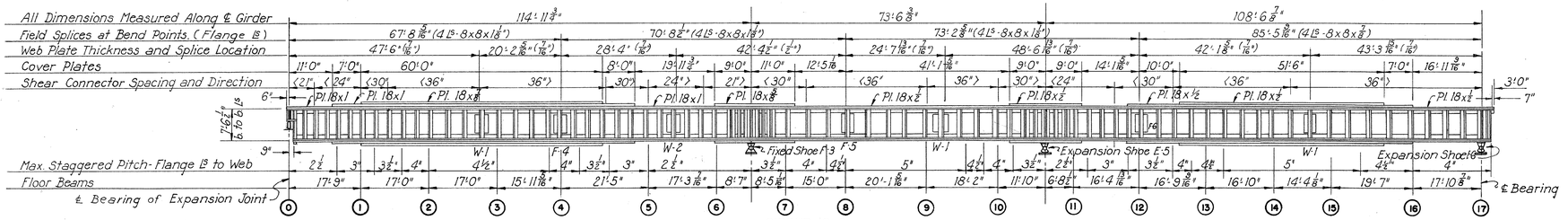

GIRDER G-6

GIRDER ELEVATIONS

SCHEDULE OF STIFFENER ANGLES		
Type · Location	G-5	G-6
Intermediate	2 L⁸ - 5 x 3½ x 5/16	2 L⁸ - 5 x 3½ x 5/16
At Floor Beams	2 L⁸ - 7 x 4 x 7/16	2 L⁸ - 7 x 4 x 7/16 *
Bearing - Expansion Joint	4 L⁸ - 8 x 6 x ¾	4 L⁸ - 8 x 6 x ¾
Bearing - Pedestal 8 EE	4 L⁸ - 7 x 4 x ½	8 L⁸ - 7 x 4 x 5/16
Bearing - Pedestal 9 EE	4 L⁸ - 7 x 4 x ½	4 L⁸ - 7 x 4 x ½
Bearing - Abutment	4 L⁸ - 7 x 4 x 5/8	4 L⁸ - 7 x 4 x 5/8
Jacking - Pedestal 8 EE	4 L⁸ - 7 x 4 x 5/8	4 L⁸ - 7 x 4 x 5/8
Jacking - Pedestal 9 EE	4 L⁸ - 7 x 4 x 5/8	4 L⁸ - 7 x 4 x 5/8

* Use 2 L⁸ - 7 x 4 x 9/16 At Bend Points.

Notes

For General Notes on "Girder Elevations" see sheet 14.

Base line for Ramp E-E on East Curb Line.

Elevations given in Framing Plan are to back of top flange angles.

Rivets through main material of girders to be 1"ϕ. All others to be ⅞" rivets.

Use ST 8 WF 18 for intermediate sidewalk support where distance from center of girder to curb is less than 1'-6". Elsewhere use 10 WF 33.

Curb posts and Handrail posts shall occur at every sidewalk bracket and intermediate sidewalk support.

Letters and numbers shown on the framing plan refer to connections of floorbeams and sidewalk brackets shown on cross sections sheet 97.

For connection of intermediate sidewalk supports see sheet 10.

All material shall be carbon steel.

In general, angles and other shapes will not be bent to make skewed connections.

PART 3

TOLEDO EXPRESSWAY SYSTEM

MAUMEE RIVER BRIDGE

BR. NO. LU 120R-35

RAMP E E

GIRDER ELEVATIONS - FRAMING PLAN

TOLEDO LUCAS COUNTY, OHIO

SCALE 1/16" = 1'0"
MADE D.M.E. DATE 9-17-52
TRCD E.J.M-C. DATE 8-20-53
CKD A.H.S-V.D.G. DATE 9-30-53

HOWARD, NEEDLES, TAMMEN & BERGENDOFF
CONSULTING ENGINEERS
KANSAS CITY NEW YORK

810 SHEET- 3.98

822

CHARLES BRUNING CO., INC.

JUL 22 1952

FED. ROAD DIV. NO	STATE	FED. AID PROJ. NO.	TYPE FUNDS
2	OHIO	UI-1052(2)	POST WAR

99
120

LUCAS COUNTY
CITY OF TOLEDO
TOLEDO EXPRESSWAY SYSTEM
MAUMEE RIVER BRIDGE
LUC 120R-3.46

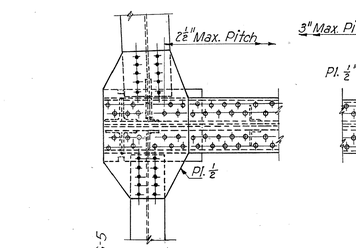

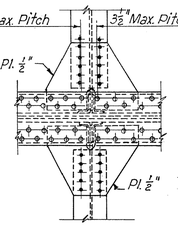

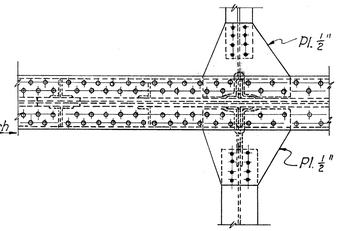

TOP PLAN OF G-5

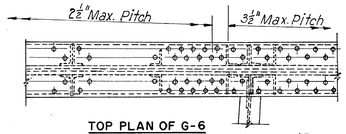

TOP PLAN OF G-6

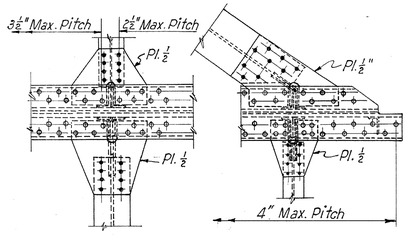

CONNECTIONS AT G-5 ONLY

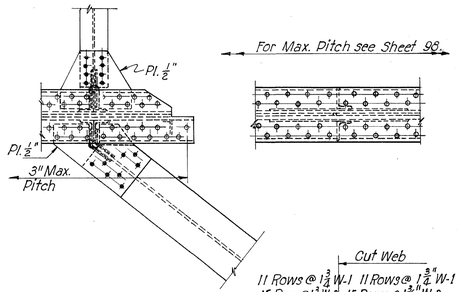

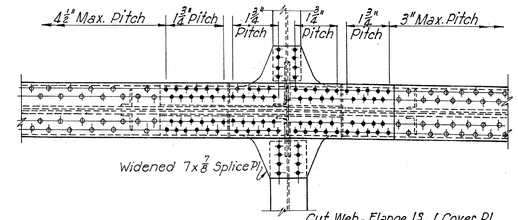

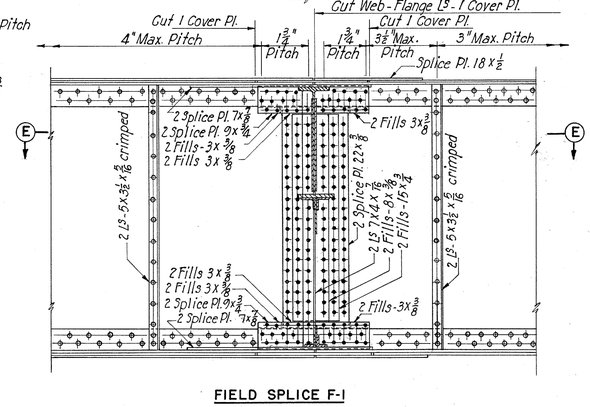

FIELD SPLICE F-1
Girder G-5

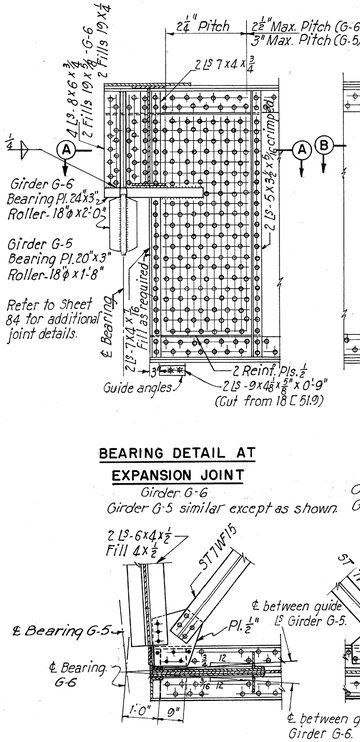

BEARING DETAIL AT
EXPANSION JOINT
Girder G-6
Girder G-5 similar except as shown.

SECTION A-A

POINT I
Girder G-6
Other points on G-6 and G-5 between bend points similar.

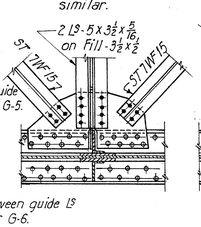

SECTION B-B

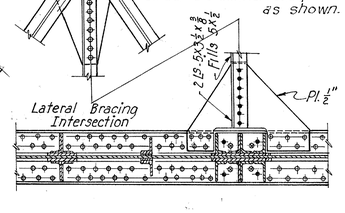

PLAN OF BOTTOM FLANGE G-6

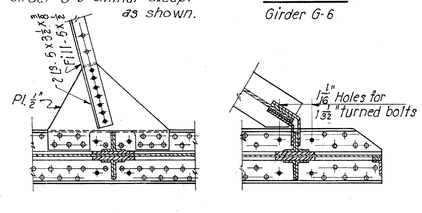

PEDESTAL 9 E-E
Girder G-6
Girder G-5 similar except as shown.

PLAN OF BOTTOM FLANGE G-6

BEARING AT RAMP E-E
ABUTMENT
Girder G-6

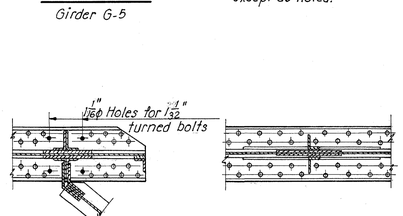

BEARING AT RAMP
E-E ABUTMENT
Girder G-5

WEB SPLICE W-1
Web splice W-2 similar. except as noted.

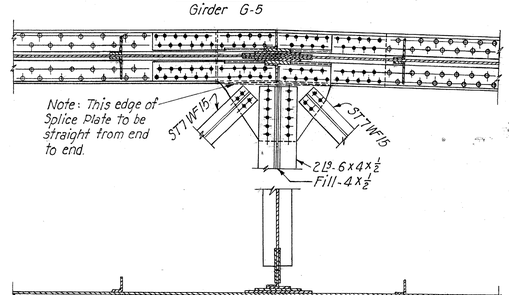

SECTION E-E

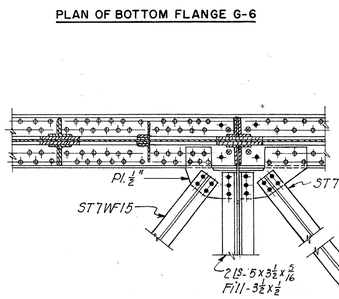

PLAN OF BOTTOM FLANGE G-5

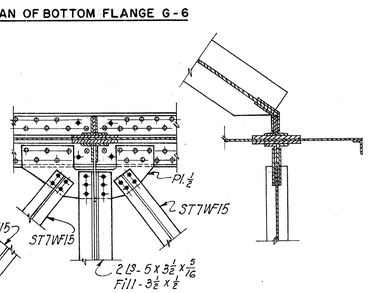

PLAN OF BOTTOM FLANGE G-5

SECTION C-C

SECTION D-D

TYPICAL LATERAL BRACING INTERSECTION

GIRDER DETAIL NOTES
RAMP E-E

For General Girder Detail Notes, see Sheet 15.
Rivets through main material of girders to be 1" ϕ. Other rivets to be ⅞ ϕ.
Nominal width and thickness are shown for cover plates and splice plates.

PART 3

TOLEDO EXPRESSWAY SYSTEM
MAUMEE RIVER BRIDGE
BR. NO. LU 120 R-35
RAMP E-E
GIRDER DETAILS

TOLEDO LUCAS COUNTY, OHIO

SCALE ½" = 1'-0"
MADE DMC/JP DATE 10-1-52
TRCD. R.R. DATE 9-6-53
CKD. AHS DATE 9-30-53

HOWARD, NEEDLES, TAMMEN & BERGENDOFF
CONSULTING ENGINEERS
KANSAS CITY NEW YORK
810 SHEET 3.99

824

FED. ROAD DIV. NO	STATE	FED. AID PROJ. NO.	TYPE FUNDS
2	OHIO	UI-1052(2)	POST WAR

100
120

LUCAS COUNTY
CITY OF TOLEDO
TOLEDO EXPRESSWAY SYSTEM
MAUMEE RIVER BRIDGE
LUC 120 R-3.46

JUL 92

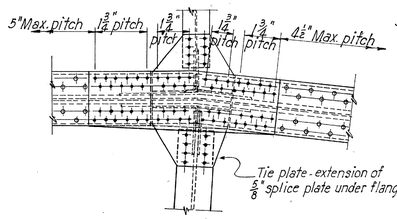

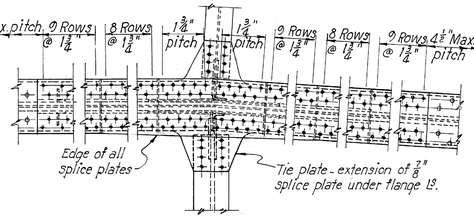

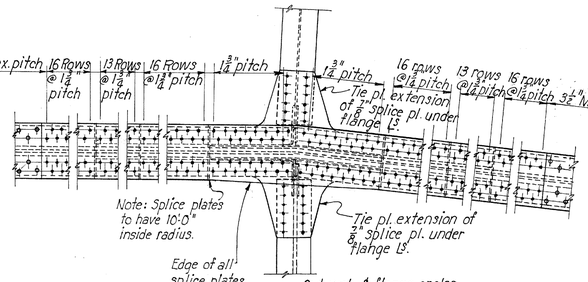

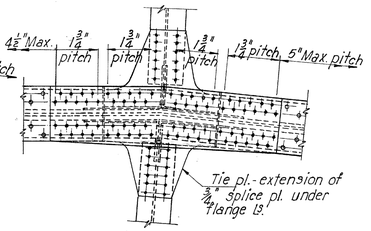

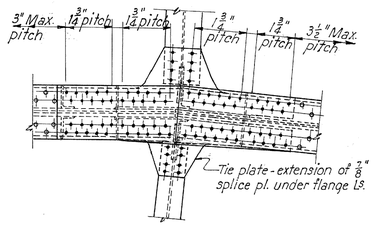

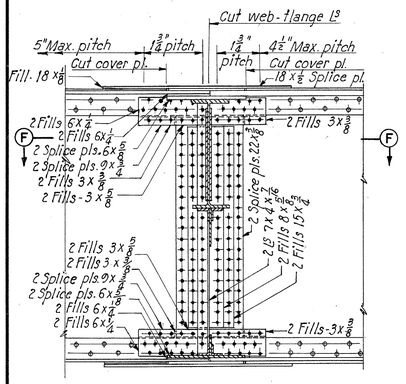

FIELD SPLICE F-2
GIRDER G-5

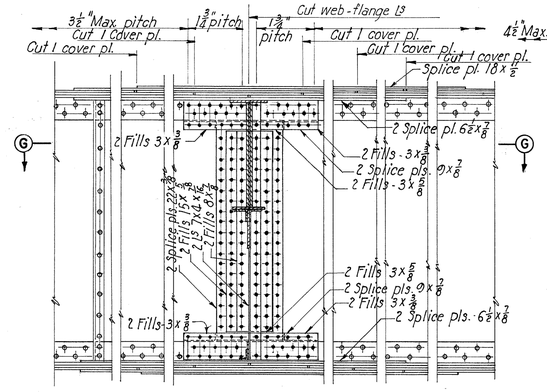

FIELD SPLICE F-3
GIRDER G-5

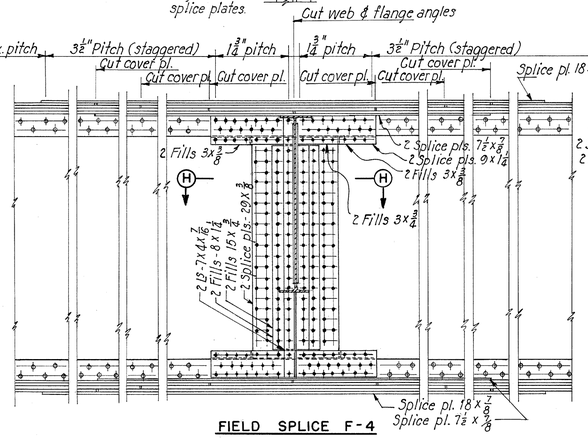

FIELD SPLICE F-4
GIRDER G-6

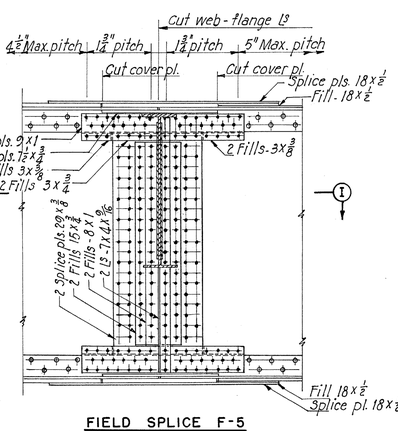

FIELD SPLICE F-5
GIRDER G-6

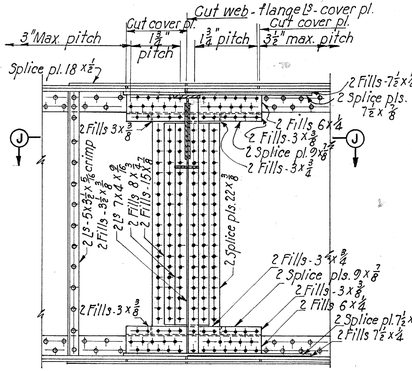

FIELD SPLICE F-6
GIRDER G-6

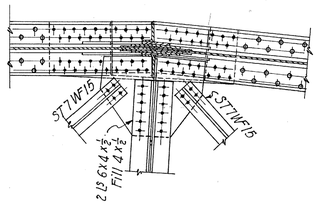

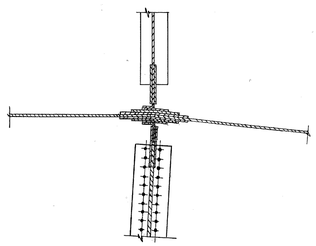

SECTION F-F

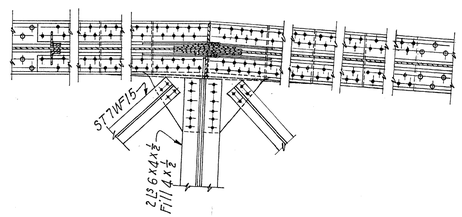

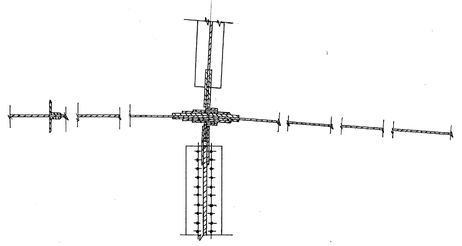

SECTION G-G

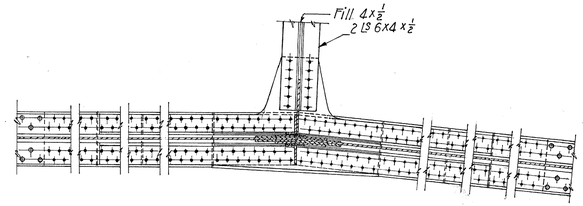

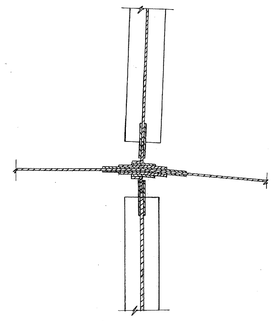

SECTION H-H

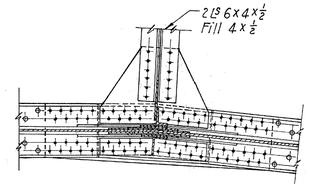

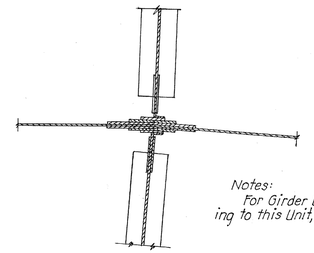

SECTION I-I

Notes:
For Girder Detail Notes applying to this Unit, see Sheet 99.

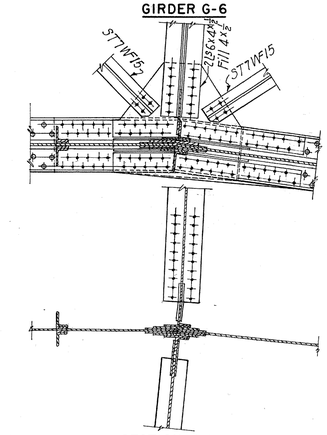

SECTION J-J

PART 3

TOLEDO EXPRESSWAY SYSTEM

MAUMEE RIVER BRIDGE

BR. NO. LU 120R-35

RAMP E-E
FIELD SPLICES

TOLEDO LUCAS COUNTY, OHIO

SCALE 1" = 1'-0"
MADE DME DATE 10-9-52
TRCD RR DATE 7-21-53
CKD AHS DATE 9-30-53

HOWARD, NEEDLES, TAMMEN & BERGENDOFF
CONSULTING ENGINEERS
KANSAS CITY NEW YORK

SHEET 3.100

825

RECEIVED
JUL 22 1952

FED. ROAD DIV. NO.	STATE	FED. AID PROJ. NO.	TYPE FUNDS
2	OHIO	UI-1052(2)	POST WAR

LUCAS COUNTY
CITY OF TOLEDO
TOLEDO EXPRESSWAY SYSTE
MAUMEE RIVER BRIDGE
LUC 120R-3.46

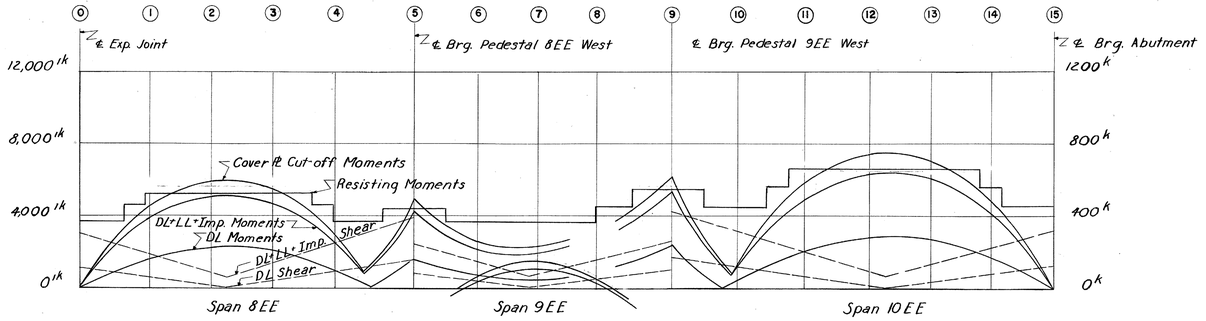

GIRDER G—5

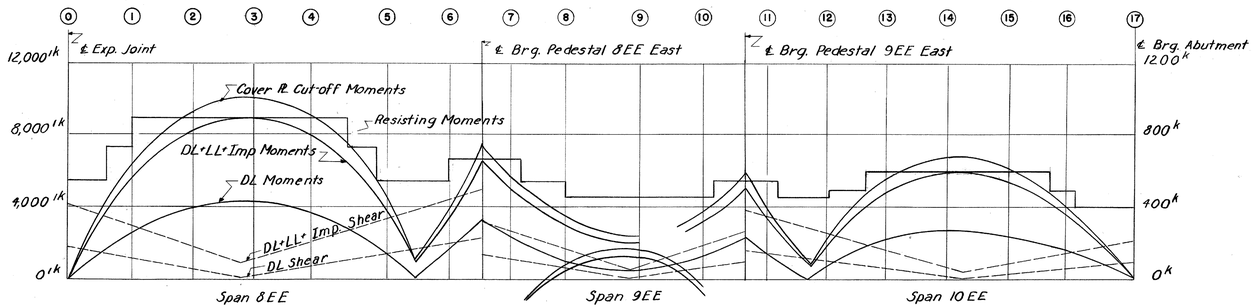

GIRDER G—6

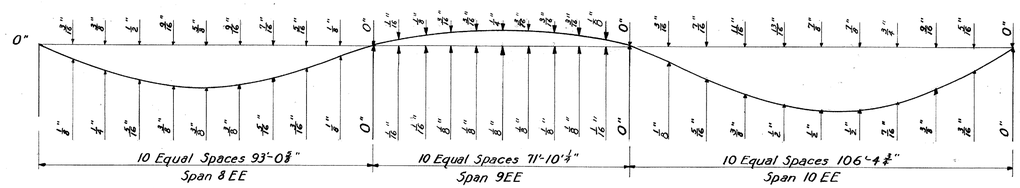

GIRDER G-5

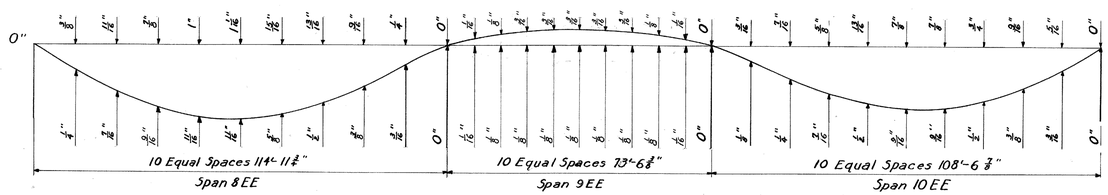

GIRDER G-6

GIRDER DEFLECTION DIAGRAMS

Scale: Horizontal-1"=20'-0"
Vertical-1'-0"=1'-0"

Girder and Load		DESIGN MOMENTS AND SHEARS												
		Reactions and Shears in Kips								Moments in Foot Kips				
		Exp. Joint	Pedestal 8EE			Pedestal 9EE			Abut.	Span 8	Ped. 8	Span 9	Ped. 9	Span 10
		R	Vs	Vn	R	Vs	Vn	R	R	+M	-M	+M	-M	+M
GIRDER G-5	D.L.	112.0	150.0	78.9	228.9	99.5	170.0	269.5	124.1	2228	1662	-456	2370	2850
	U.L.L.	64.5	91.3	52.4	160.0	52.4	100.4	172.5	73.5	1282	1292	566	1640	1758
	C.L.L.	87.9	93.0	75.4	77.5	75.4	99.4	82.6	88.1	1050	816	635	890	1210
	Imp.	34.9	46.9	32.4	40.9	32.4	50.7	42.6	34.9	525	361	305	417	642
	Total	299.3	381.2	239.1	507.3	259.7	420.5	567.2	320.6	5085	4131	1050	5317	6460
GIRDER G-6	D.L.	177.5	226.0	134.0	360.0	98.5	159.0	257.5	97.6	4260	3270	-474	2245	2580
	U.L.L.	80.6	99.4	55.4	174.9	53.4	87.4	162.0	49.5	1980	1642	591	1490	1445
	C.L.L.	99.5	101.5	72.9	84.7	77.1	95.5	79.5	41.5	1485	943	680	875	1190
	Imp.	39.3	43.9	39.9	41.5	32.9	39.1	51.6	19.5	756	414	320	386	564
	S.W.	17.3	22.1	12.7	35.0	6.0	—	—	—	432	313	108	58	25
	Total	414.2	492.9	314.9	696.1	267.9	381.0	550.6	208.1	8913	6580	1225	5054	5804

Note:
Design Moments and Shears are obtained by multiplying D.L. by 0.8 and L.L.+I by 2.06.
Values shown above the base line in the deflection diagrams are deflections due to total dead load of steel and concrete.
Values shown below the base line are deflections due to weight of concrete and wearing surface.

See General Notes for requirements concerning camber of girders.

Key to table above:

D.L.	Dead load
L.L.	Live load
U.L.L.	Uniform live load
C.L.L.	Concentrated live load
Imp.	Impact
R	Reaction
Vs.	Shear to south of support
Vn.	Shear to north of support
+M	Maximum positive moment
-M	Maximum negative moment
S.W.	Side walk

PART 3
TOLEDO EXPRESSWAY SYSTE
MAUMEE RIVER BRIDGE
BR. NO. LU 120R-35
RAMP E-E
GIRDER STRESSES & DEFLECTIONS
TOLEDO LUCAS COUNTY, OHI

SCALE As shown
MADE BKH DATE 9-19-52
TRCD NAM DATE 10-2-52
CKD JDP AHS DATE 8-20-53
HOWARD, NEEDLES, TAMMEN & BERGENDO
CONSULTING ENGINEERS
KANSAS CITY NEW YORK
810 SHEET- 3.101

826

CHARLES BRUNING CO., INC.

FED. ROAD DIV. NO	STATE	FED. AID PROJ. NO.	TYPE FUNDS
2	OHIO	UI-1052(2)	POST WAR

102
120

LUCAS COUNTY
CITY OF TOLEDO
TOLEDO EXPRESSWAY SYSTEM
MAUMEE RIVER BRIDGE
LUC 120 R-3.46

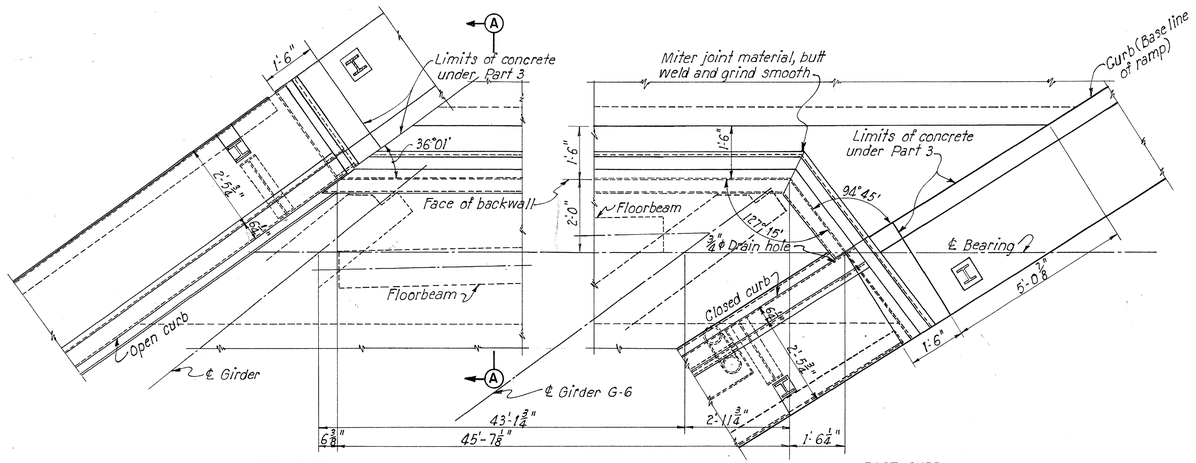

WEST CURB — EAST CURB

PART PLAN

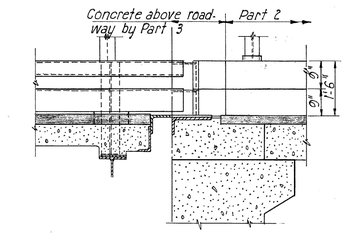

ELEVATION OF WEST CURB

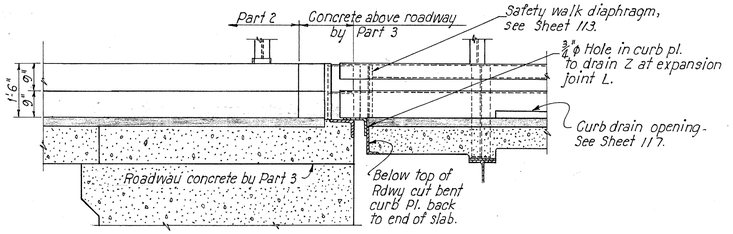

ELEVATION AT EAST CURB

JOINT AT ABUTMENT

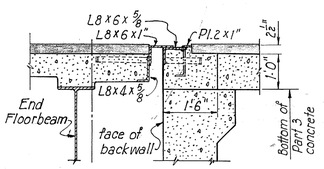

SECTION A-A

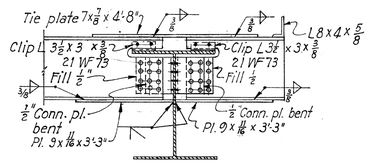

SECTION C-C

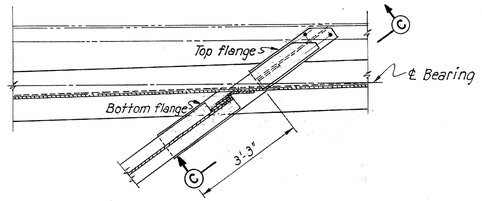

STRINGER DETAIL AT ABUTMENT

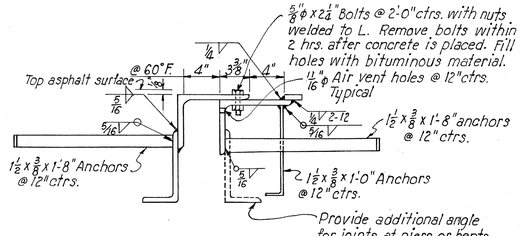

ROADWAY JOINT DETAILS
Scale: 1½" = 1'-0"

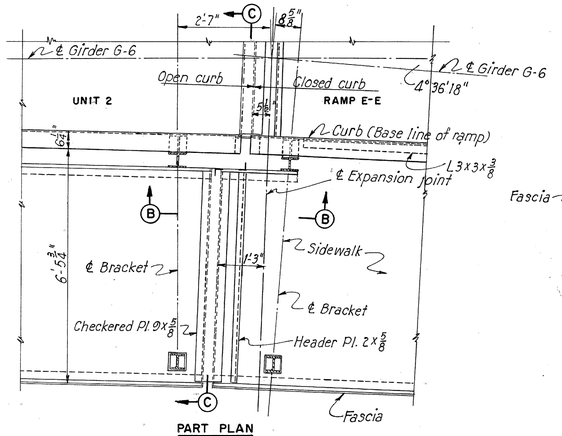

PART PLAN

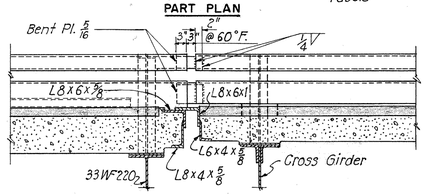

ELEVATION OF EAST CURB

For elevation of west curb at safety walk, see details of "Nose Between Ramp E-E and Expressway" Sheet 113.

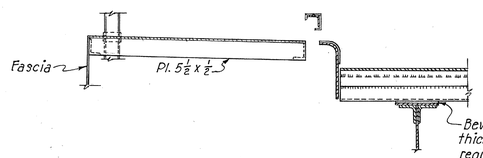

SECTION C-C

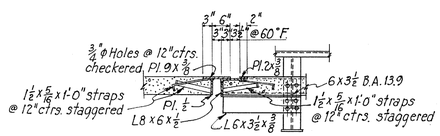

SECTION B-B

Note: All welds in sidewalk joints to be 3/16 continuous fillet welds.

JOINT NEAR BENT 7

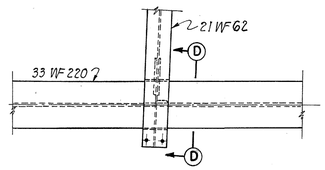

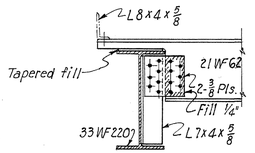

SECTION D-D

STRINGER DETAIL AT JOINT NEAR BENT 7

Notes:
Details of curb joints at Abutments to be similar to joint at North Abutment of Expressway. See Sheet 113.
For details of curb inlets for drainage, see Sheet 117.
Details of curb similar to Ramp X. See Sheet 113.
For details of joint in handrail, see Sheet 111.
The handrail expansion joint between Unit 2 and Ramp E-E along the concrete sidewalk to be similar to the handrail joint shown for the South Abutment on Sheet 111.

PART 3

TOLEDO EXPRESSWAY SYSTEM
MAUMEE RIVER BRIDGE
BR. NO. LU 120R-35
RAMP E-E
EXPANSION JOINTS
TOLEDO LUCAS COUNTY, OHIO

SCALE ½" 1'-0"
MADE G.D. DATE 2.9.52
TRCD. R.R. DATE 8-26-53
CKD. D.M.D. DATE 9-30-53

HOWARD, NEEDLES, TAMMEN & BERGENDOFF
CONSULTING ENGINEERS
KANSAS CITY NEW YORK

810 SHEET: 3.102

827

JUL 22 1953

FED. ROAD DIV. NO.	STATE	FED. AID PROJ. NO.	TYPE FUNDS
2	OHIO	UI-1052(2)	POST WAR

103
120

LUCAS COUNTY
CITY OF TOLEDO
TOLEDO EXPRESSWAY SYSTEM
MAUMEE RIVER BRIDGE
LUC 120 R — 3.46

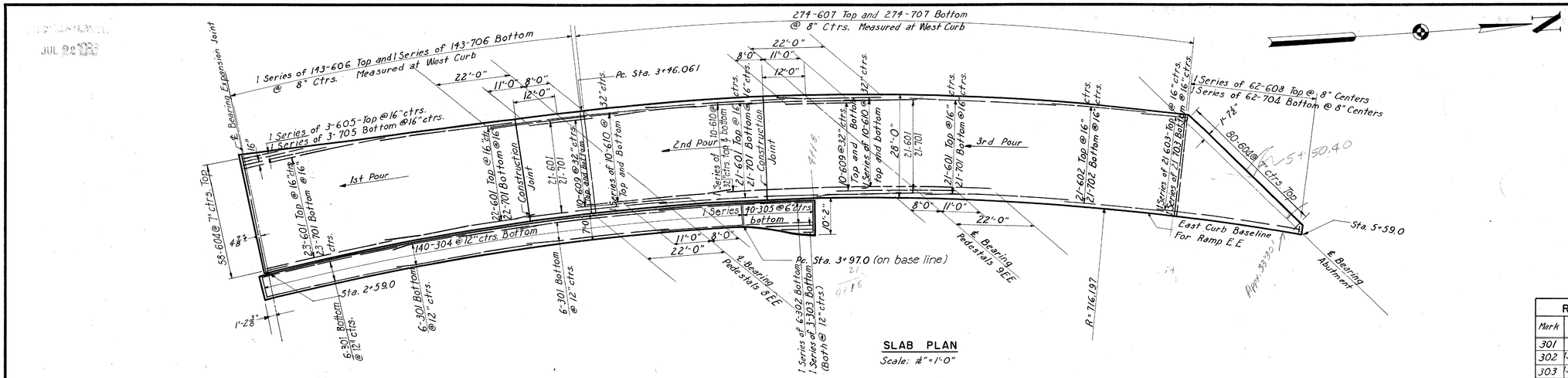

SLAB PLAN
Scale: 1/16" = 1'-0"

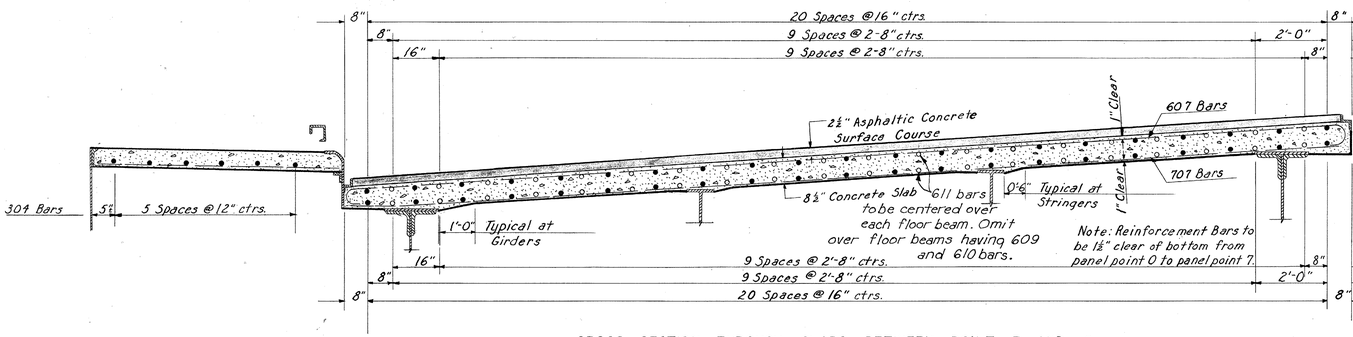

CROSS SECTION THROUGH SLABS BETWEEN POINT 7 AND 8
For width of slabs, and number of bars at other Points, see slab plan.
Scale: ½"=1'-0"

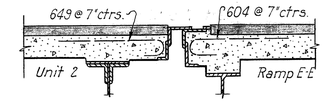

These reinforcement bars are required in the roadway slab at all expansion joints in Ramps EE and X. Not required in the abutment part of any joint.

EXPANSION JOINT REINFORCEMENT

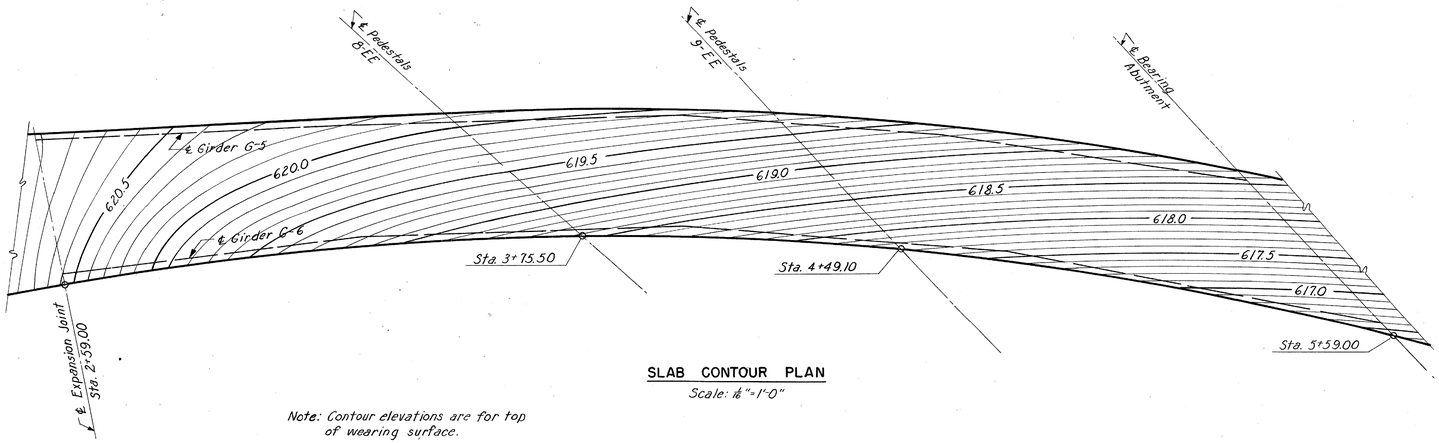

SLAB CONTOUR PLAN
Scale: 1/16"=1'-0"

Note: Contour elevations are for top of wearing surface.

REINFORCING STEEL SCHEDULE

Mark	No.	Length	Type	Dimension A	Weight
301	18	40'-9"	Str.		280
302	1 Series of 8	39'-6" to 40'-9"	Str.		90
303	1 Series of 8	5'-0" to 12'-3"	Str.		10
304	140	6'-6"	Str.		340
305	1 Series of 40	6'-6" to 9'-9"	Str.		120
#3*	1	5'-0"	Str.		10
601	120	40'-9"	Str.		7910
602	21	30'-0"	Str.		950
603	1 Series of 21	12'-6" to 39'-9"	Str.		830
604	138	4'-0"	102		830
605	1 Series of 3	9'-0" to 26'-9"	Str.		80
606	1 Series of 143	29'-3" to 35'-3"	101	27'-3" to 33'-3"	6930
607	274	29'-3	101	27'-3"	12040
608	1 Series of 62	9'-6" to 29'-0"	101	2'-6" to 27'-0"	1560
609	40	19'-0"	Str.		1140
610	6 Series of 16	39'-3" to 40'-3"	Str.		3580
611	457	9'-6"	Str.		6520
#6*	2	6'-0"	Str.		20
701	129	41'-0"	Str.		10810
702	21	30'-0"	Str.		1290
703	1 Series of 21	13'-9" to 39'-9"	Str.		1150
704	1 Series of 62	3'-0" to 27'-0"	Str.		1900
705	1 Series of 3	9'-0" to 26'-9"	Str.		110
706	1 Series of 143	27'-6" to 33'-6"	Str.		8920
707	274	27'-6"	Str.		15400
#7*	2	6'-3"	Str.		20
			Total		82,840

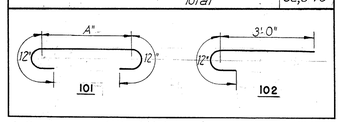

* Replacement test bars.

Note:
For details of transverse construction joints and haunch of floorbeams, see Sheet 23.

PART 3

TOLEDO EXPRESSWAY SYSTEM
MAUMEE RIVER BRIDGE
BR. NO. LU 120R-35
RAMP EE
ROADWAY SLAB

TOLEDO LUCAS COUNTY, OHIO

SCALE As Shown
MADE DME DATE 9-19-52
TRCD NAM DATE 10-29-52
CKD M.K.A. DATE 10-30-52

HOWARD, NEEDLES, TAMMEN & BERGENDOFF
CONSULTING ENGINEERS
KANSAS CITY NEW YORK

810 SHEET 3.103

828

CHARLES BRUNING CO., INC.

FED. ROAD DIV. NO.	STATE	FED. AID PROJ. NO.	TYPE FUNDS
2	OHIO	UI-1052(2)	POST WAR

104
120

LUCAS COUNTY
CITY OF TOLEDO
TOLEDO EXPRESSWAY SYSTEM
MAUMEE RIVER BRIDGE
LUC 120R-3.46

JUL 29 1952

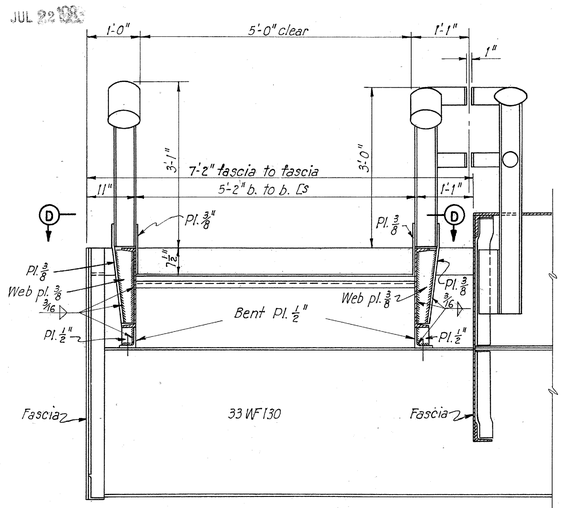

SECTION A-A
Scale: 3/4"=1'-0"

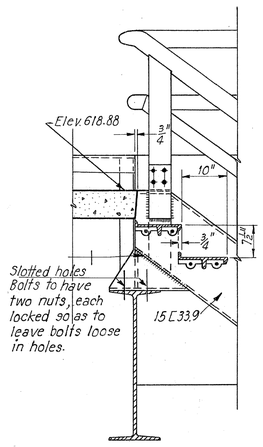

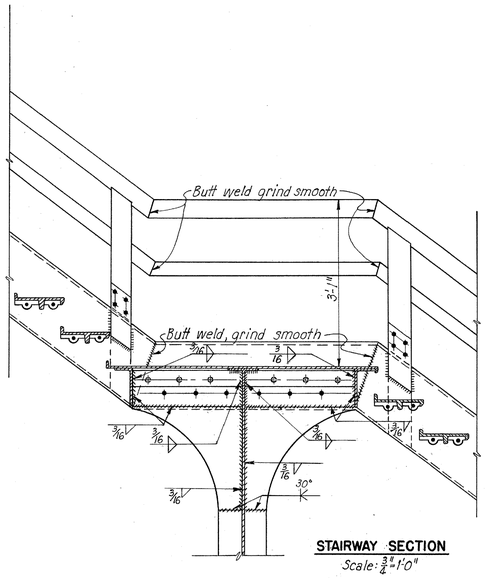

STAIRWAY SECTION
Scale: 3/4"=1'-0"

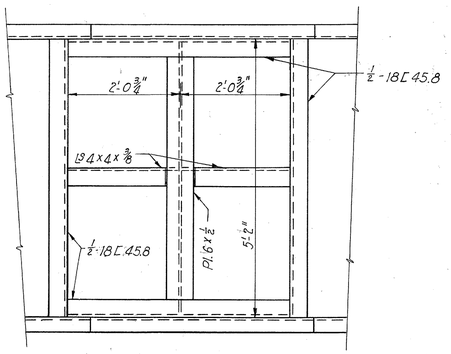

FRAMING PLAN AT LANDINGS
Scale: 3/4"=1'-0"

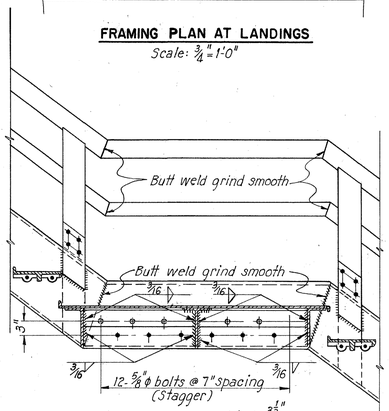

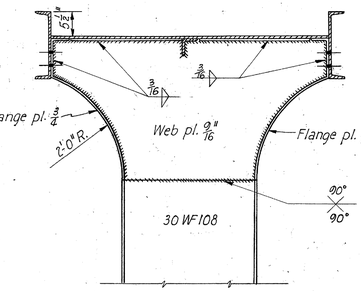

SECTION B-B
Scale: 3/4"=1'-0"

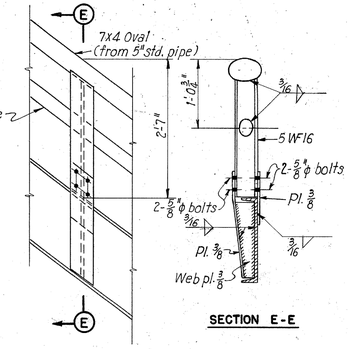

SECTION E-E

SECTION C-C

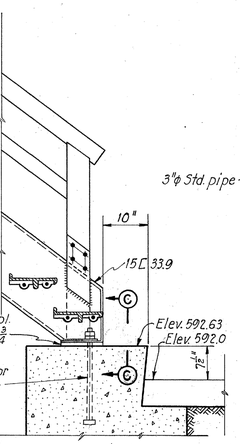

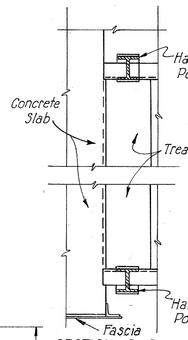

SECTION D-D
Scale: 3/4"=1'-0"

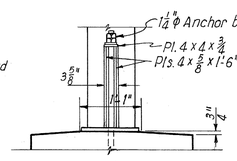

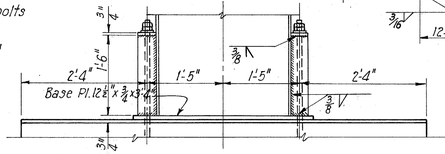

COLUMN ANCHORAGE
Scale: 3/4"=1'-0"

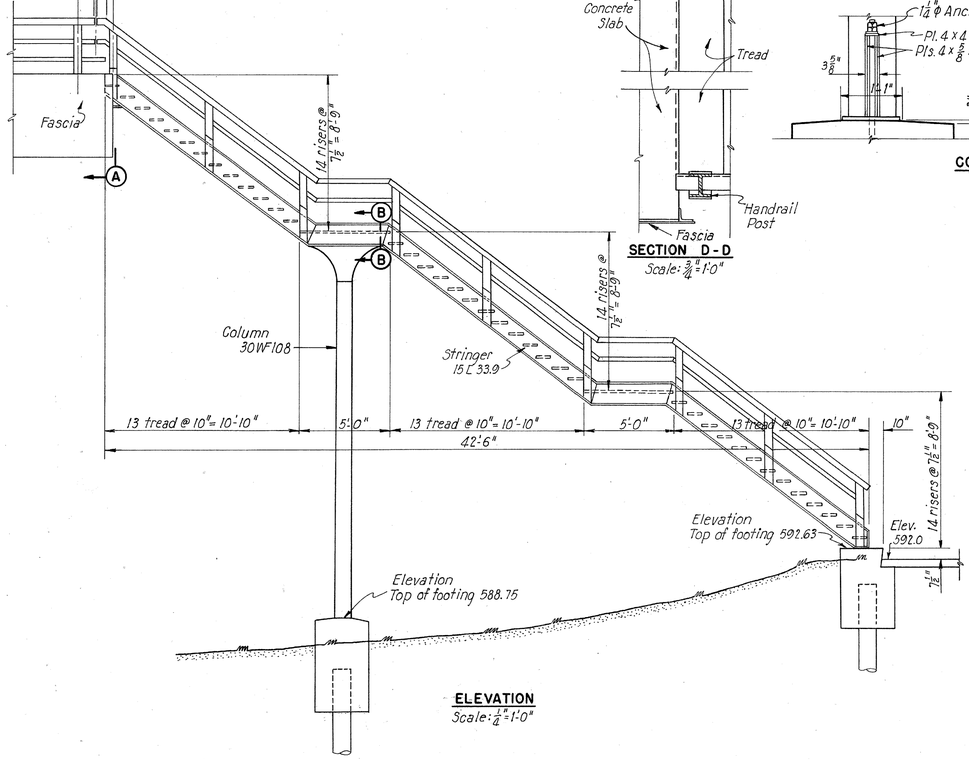

ELEVATION
Scale: 1/4"=1'-0"

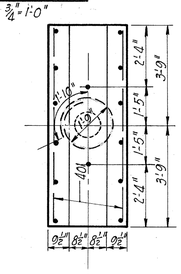

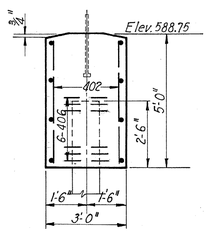

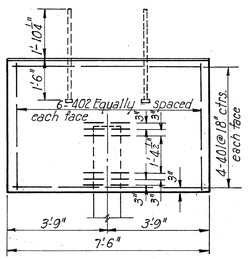

STAIRWAY FOOTINGS
Scale: 3/8"=1'-0"

REINFORCING STEEL SCHEDULE				
Mark	Number	Length	Type	Weight
401	8	7'-0"	Str.	40
402	12	4'-6"	Str.	40
403	7	6'-6"	Str.	30
404	5	2'-11"	Str.	10
405	5	4'-0"	Str.	10
406	12	7'-4"	See Plan	60
Total				190

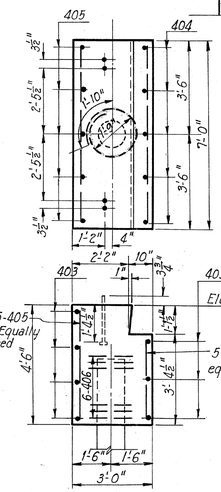

Notes:
Thread anchor bolts 3 1/2"ϕ. Provide 2 nuts and washers each.
All piles 12"ϕ concrete.
Landings to be hatched "Feralun" Style K, or equal, abrasive plate 1/2" thick.
Treads to be hatched abrasive "Feralun" Style R-K, or equal, 1/2" thick and 10 3/4" wide.

PART 3

TOLEDO EXPRESSWAY SYSTEM
MAUMEE RIVER BRIDGE
BR. NO. LU 120 R-35
RAMP E-E
STAIRWAY
TOLEDO LUCAS COUNTY, OHIO

SCALE As shown
MADE R.A.C. DATE 11-1-52
TRCD E.J.M. RR DATE 11-22-52
CKD JDP & K.W. DATE 11-28-52

HOWARD, NEEDLES, TAMMEN & BERGENDOFF
CONSULTING ENGINEERS
KANSAS CITY NEW YORK

810 SHEET 3.104

829

CHARLES BRUNING CO., INC.

RECEIVED
JUL 29 52

FED. ROAD DIV. NO.	STATE	FED. AID PROJ. NO.	TYPE FUNDS
2	OHIO	UI-1052(2)	POST WAR

105
120

LUCAS COUNTY
CITY OF TOLEDO
TOLEDO EXPRESSWAY SYSTEM
MAUMEE RIVER BRIDGE
LUC 120R-3.46

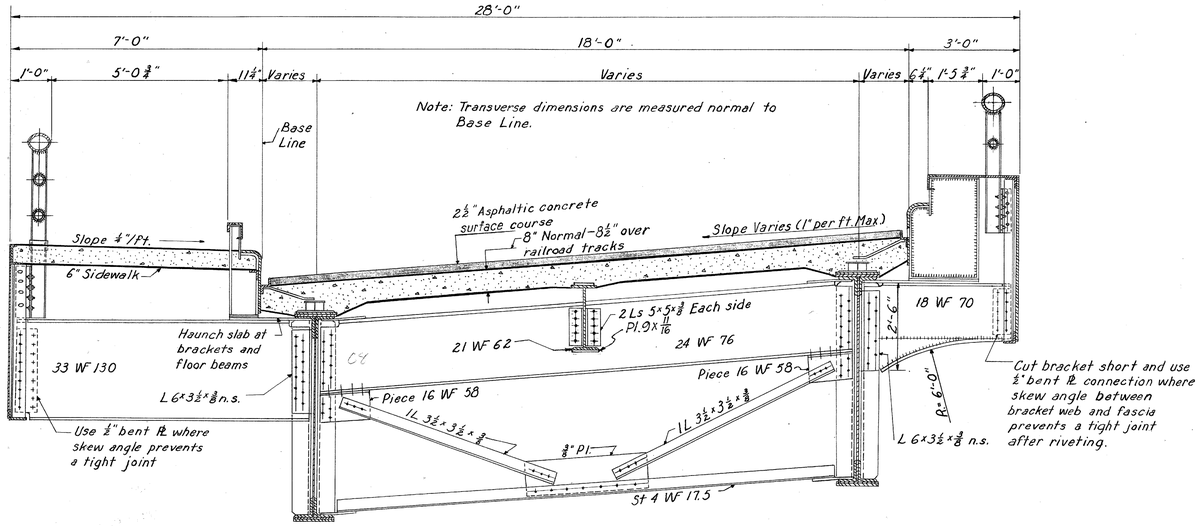

TYPICAL CROSS SECTION AT INTERMEDIATE FLOOR BEAMS
Scale: 1 1/2" = 1'-0"

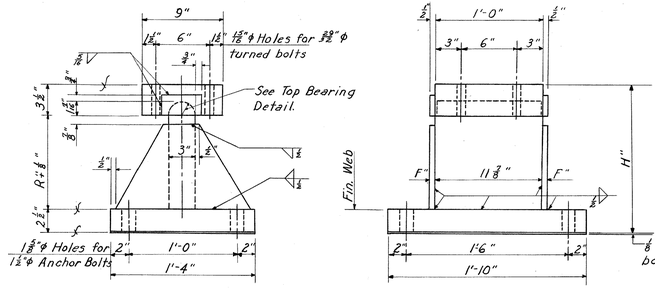

STRUCTURAL STEEL BOLSTER
Scale: 1 1/2" = 1'-0"

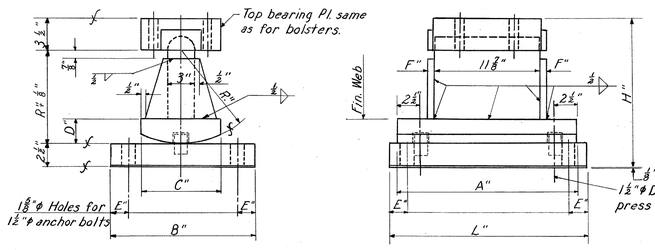

STRUCTURAL STEEL ROCKER
Scale: 1 1/2" = 1'-0"

Notes: See sheet 116 for anchor bolt detail. Notes on sheet 118, which can apply to structural steel shoes shall govern fabrication and erection of Ramp X shoes. All shoes shall be of structural carbon steel.
For Girder G-8 at Pier 6 (R: 200a) (Unit 2) provide 1/2" shim between girder and top casting of rocker.

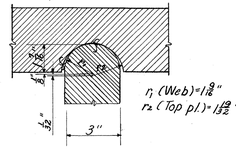

TOP BEARING DETAIL
Scale: 3" = 1'-0"

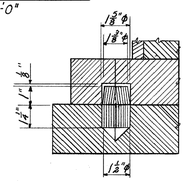

DOWEL DETAIL
Scale: 3" = 1'-0"

SHOE DIMENSIONS									
Bolster	Rocker	A	B	C	D	E	F	H	L	R
	R-175a	18	10	5	2 1/2	1 1/4	1/2	15 3/8	21	9 1/2
B-175	R-175	19	16	9	2 1/2	2	1/2	15 3/8	22	9 1/2
B-200	R-200	20	16	9	2 3/4	2	3/8	16 3/8	22	10 1/2
	R-200a	20	19	9	2 3/4	2	5/16	16 3/8	21	10 1/2

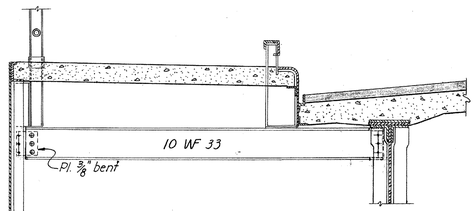

CROSS-SECTION BETWEEN FLOOR BEAMS
Scale: 1/2" = 1'-0"

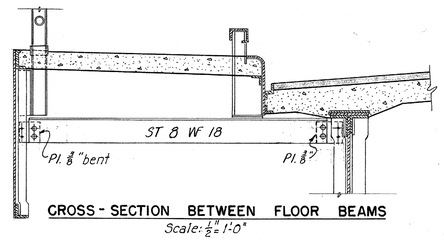

CROSS-SECTION BETWEEN FLOOR BEAMS
Scale: 1/2" = 1'-0"

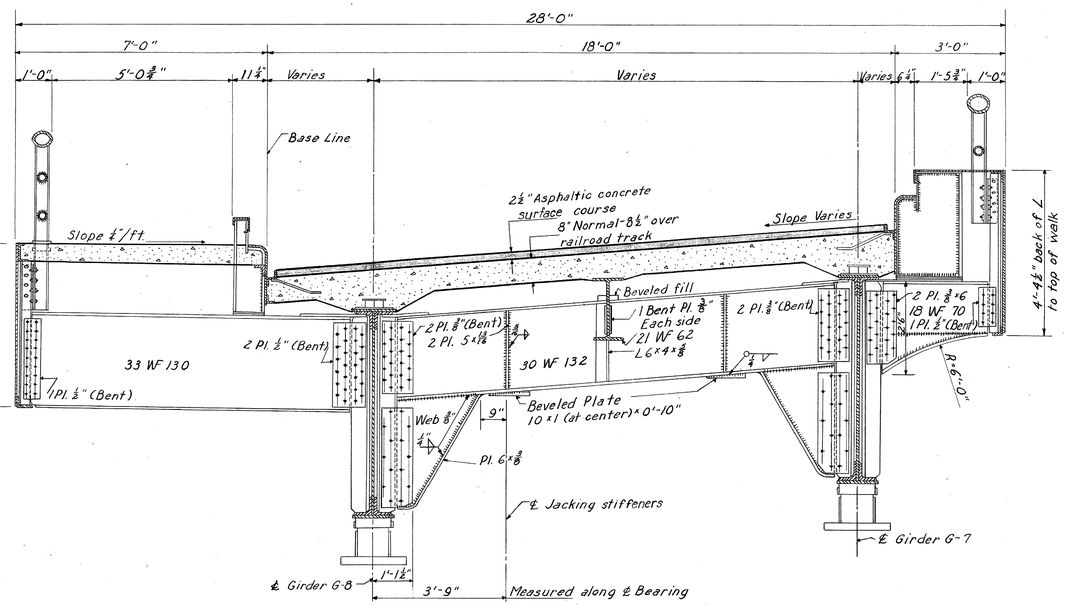

CROSS-SECTION AT END FLOOR BEAMS
Scale: 1/2" = 1'-0"

PART 3

TOLEDO EXPRESSWAY SYSTEM
MAUMEE RIVER BRIDGE
BR. NO. LU 120R-35
RAMP X
ROADWAY CROSS-SECTIONS AND SHOES
TOLEDO LUCAS COUNTY, OHIO

SCALE As Shown
MADE BGW DATE 6-24-52
TRCD AAM DATE 11-4-52
CKD JCF DATE 12-8-52
BRH

HOWARD, NEEDLES, TAMMEN & BERGENDOFF
CONSULTING ENGINEERS
KANSAS CITY NEW YORK

810 SHEET 3.105

840

CHARLES BRUNING CO., INC.

JUL 22 '52

FED. ROAD DIV. NO.	STATE	FED. AID PROJ. NO.	TYPE FUNDS
2	OHIO	UI-1052 (2)	POST WAR

LUCAS COUNTY
CITY OF TOLEDO
TOLEDO EXPRESSWAY SYSTE
MAUMEE RIVER BRIDGE
LUC 120R-3.46

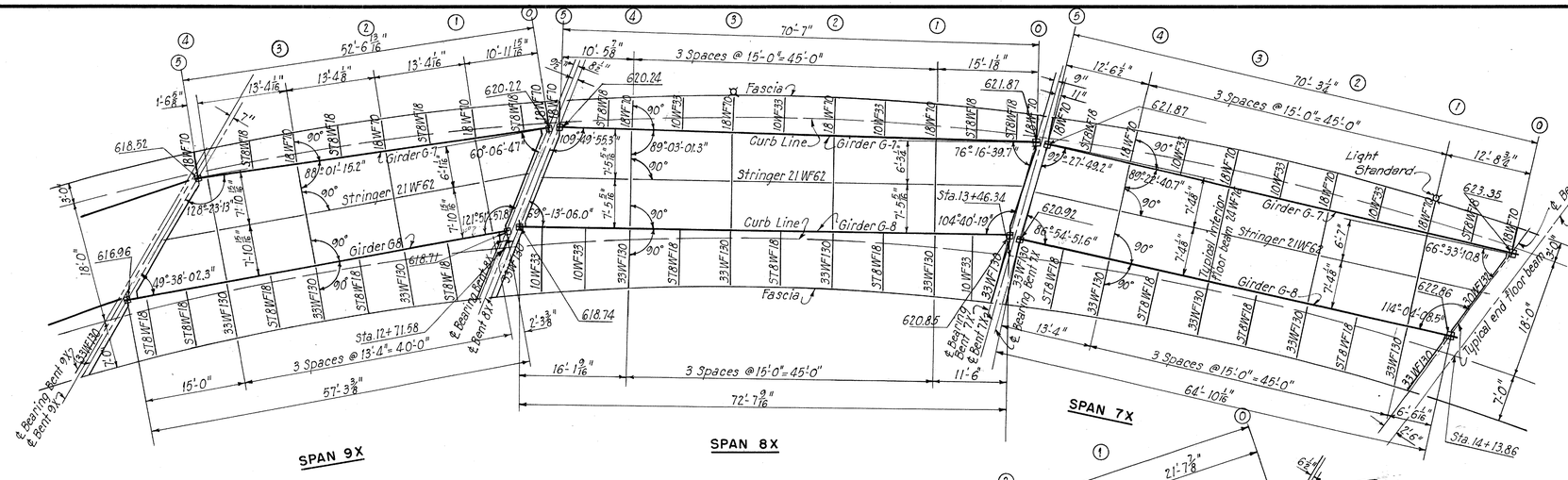

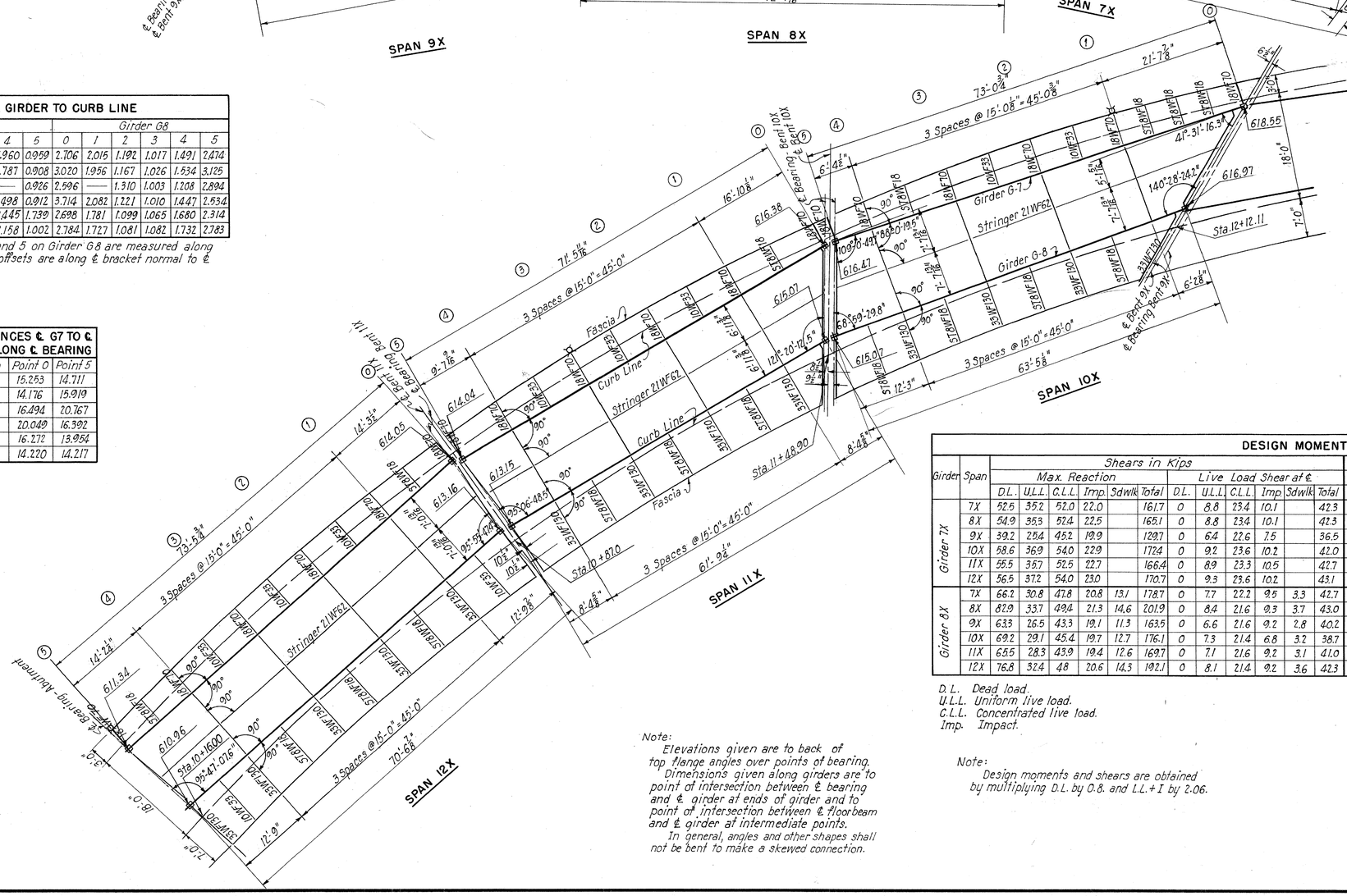

DISTANCES ℄ GIRDER TO CURB LINE

Span	Girder G7						Girder G8					
	0	1	2	3	4	5	0	1	2	3	4	5
7X	0.993	1.993	2.598	2.587	1.960	0.959	2.706	2.016	1.192	1.017	1.491	2.474
8X	0.996	2.127	2.630	2.517	1.787	0.908	3.020	1.956	1.167	1.026	1.534	3.125
9X	0.909	1.537	1.857	1.690	—	0.926	2.596	—	1.310	1.003	1.208	2.894
10X	0.931	2.454	2.753	2.435	1.498	0.912	3.714	2.082	1.221	1.010	1.447	2.534
11X	0.911	2.371	3.012	3.037	2.445	1.739	2.698	1.781	1.099	1.065	1.680	2.314
12X	1.003	2.165	2.779	2.777	2.158	1.002	2.784	1.727	1.081	1.082	1.732	2.783

Note: Offsets at points 0 and 5 on Girder G8 are measured along ℄ of bearing. Other offsets are along ℄ bracket normal to ℄ girder.

DISTANCES ℄ G7 TO ℄ G8 ALONG ℄ BEARING

Span	Point 0	Point 5
7X	15.253	14.711
8X	14.176	15.919
9X	16.494	20.767
10X	20.049	16.392
11X	16.272	13.954
12X	14.220	14.217

DESIGN MOMENTS AND SHEARS

Girder	Span	Shears in Kips						Max. Moments in Foot Kips															
		Max. Reaction						Live Load Shear at ℄						Moment at ¼ Points						Moment at ℄ Spans					
		D.L.	U.L.L.	C.L.L.	Imp.	Sdwlk	Total	D.L.	U.L.L.	C.L.L.	Imp.	Sdwlk	Total	D.L.	U.L.L.	C.L.L.	Imp.	Sdwlk	Total	D.L.	U.L.L.	C.L.L.	Imp.	Sdwlk	Total
Girder 7X	7X	52.5	35.2	52.0	22.0		161.7	0	8.8	23.4	10.1		42.3	690	464	485	243		1882	921	619	644	324		2508
	8X	54.9	35.3	52.4	22.5		165.1	0	8.8	23.4	10.1		42.3	729	468	484	244		1925	971	624	645	325		2565
	9X	39.2	25.4	45.2	19.9		129.7	0	6.4	22.6	7.5		36.5	385	250	350	170		1155	514	334	466	226		1540
	10X	58.6	36.9	54.0	22.9		172.4	0	9.2	23.6	10.2		42.0	804	505	508	253		2070	1072	674	676	340		2762
	11X	55.5	35.7	52.5	22.7		166.4	0	8.9	23.3	10.5		42.7	743	478	491	249		1961	990	637	655	331		2613
	12X	56.5	37.2	54.0	23.0		170.7	0	9.3	23.6	10.2		43.1	719	514	511	258		2062	1039	685	682	344		2750
Girder 8X	7X	66.2	30.8	47.8	20.8	13.1	178.7	0	7.7	22.2	9.5	3.3	42.7	804	375	425	211	160	1975	1072	499	565	281	212	2629
	8X	82.9	33.7	49.4	21.3	14.6	201.9	0	8.4	21.6	9.3	3.7	43.0	1126	457	464	236	199	2482	1500	610	616	314	265	3305
	9X	63.3	26.5	43.3	19.1	11.3	163.5	0	6.6	21.6	9.2	2.8	40.2	679	284	365	178	122	1628	905	379	486	237	162	2169
	10X	69.2	29.1	45.4	19.7	12.7	176.1	0	7.3	21.4	6.8	3.2	38.7	825	345	397	197	150	1914	1100	460	529	262	201	2552
	11X	65.5	28.3	43.9	19.4	12.6	169.7	0	7.1	21.6	9.2	3.1	41.0	759	327	389	192	146	1813	1012	436	519	256	194	2417
	12X	76.8	32.4	48	20.6	14.3	192.1	0	8.1	21.4	9.2	3.6	42.3	1018	430	447	225	189	2309	1356	574	596	300	252	3078

D.L. Dead load.
U.L.L. Uniform live load.
C.L.L. Concentrated live load.
Imp. Impact.

Note:
Elevations given are to back of top flange angles over points of bearing. Dimensions given along girders are to point of intersection between ℄ bearing and ℄ girder at ends of girder and to point of intersection between ℄ floorbeam and ℄ girder at intermediate points. In general, angles and other shapes shall not be bent to make a skewed connection.

Note:
Design moments and shears are obtained by multiplying D.L. by 0.8 and L.L.+I by 2.06.

PART 3

TOLEDO EXPRESSWAY SYSTE

MAUMEE RIVER BRIDGE
BR. NO. LU 120R-35
RAMP X
FRAMING PLAN

TOLEDO, LUCAS COUNTY, OHI

SCALE 1" = 10'-0"
MADE B.G.W. DATE 6-19-52
TRCD H.M. R.R. DATE 8-15-52
CKD DME, BKH DATE 12-8-52

HOWARD, NEEDLES, TAMMEN & BERGENDO
CONSULTING ENGINEERS
KANSAS CITY NEW YORK

810 SHEET- 3.10

841

CHARLES BRUNING CO., INC.

MICROFILMED
JUL 25 1983

FED. ROAD DIV. NO.	STATE	FED. AID PROJ. NO.	TYPE FUNDS
2	OHIO	UI-1052(2)	POST WAR

107
120

LUCAS COUNTY
CITY OF TOLEDO
TOLEDO EXPRESSWAY SYSTEM
MAUMEE RIVER BRIDGE
LUC 120R-3.46

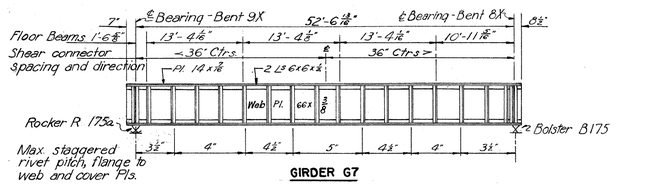

GIRDER G7

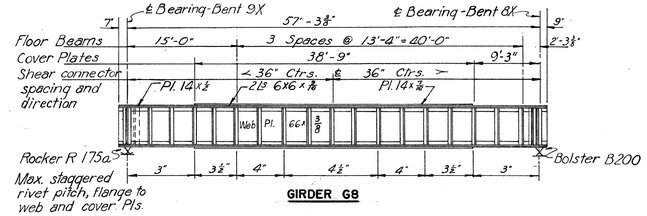

GIRDER G8

SPAN 9X

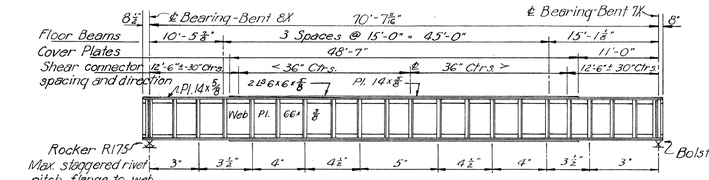

GIRDER G7

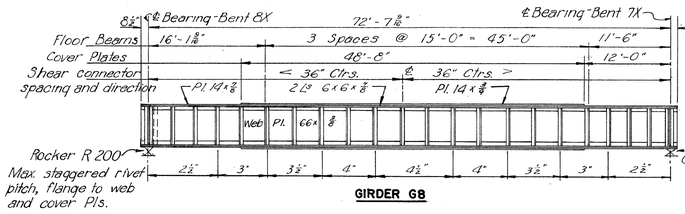

GIRDER G8

SPAN 8X

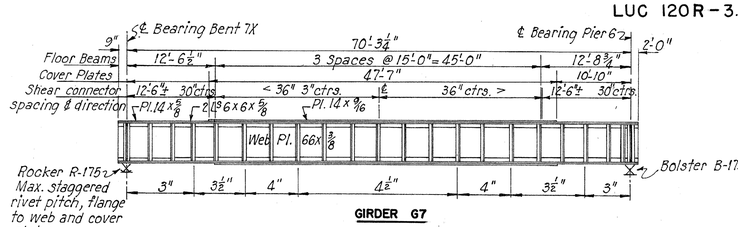

GIRDER G7

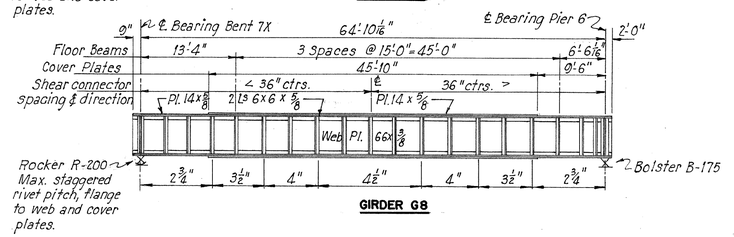

GIRDER G8

SPAN 7X

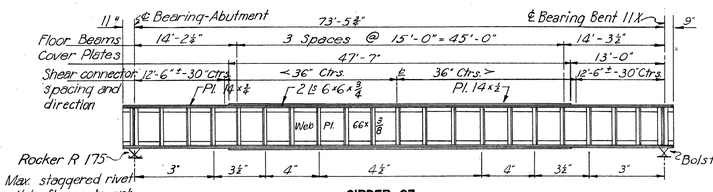

GIRDER G7

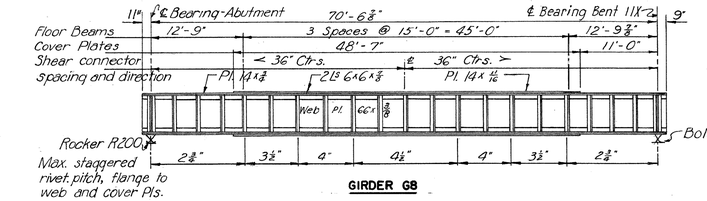

GIRDER G8

SPAN 12X

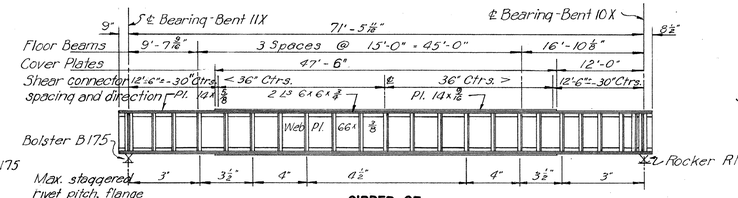

GIRDER G7

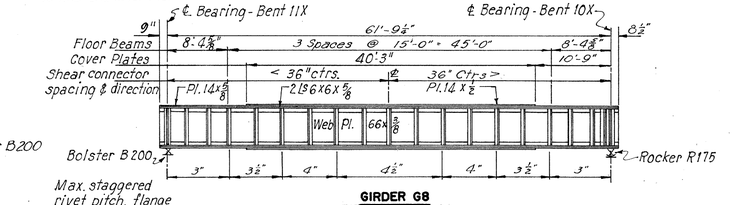

GIRDER G8

SPAN 11X

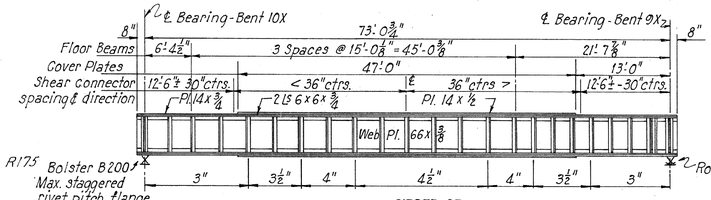

GIRDER G7

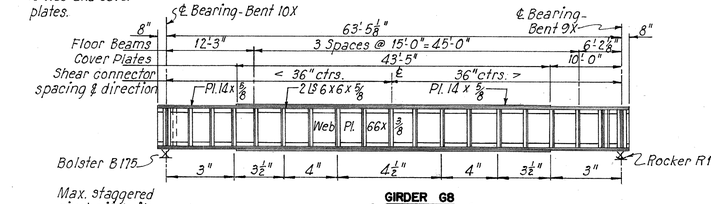

GIRDER G8

SPAN 10X

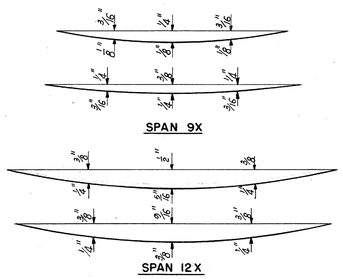

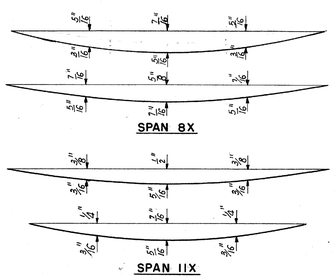

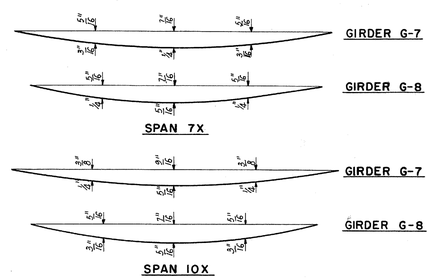

DEAD LOAD GIRDER DEFLECTIONS
Scale: Vertical 1" = 2", Horizontal 1" = 16'-0"

Note: All bearing stiffeners shall be 4 L's 6" x 4" x 7/8" on fills as required.
All stiffeners at floor beams shall be 2 L's 6" x 3 1/2" x 7/8" on fills as required.
All stiffeners at intermediate points shall be 2 L's 5" x 3 1/2" x 7/16" crimped.
For General Notes on "Girder Elevations", see Sheet 14.
All steel used in Ramp "X" shall be carbon steel.

PART 3

TOLEDO EXPRESSWAY SYSTEM
MAUMEE RIVER BRIDGE
BR. NO. LU 120R-35
RAMP X
GIRDER ELEVATIONS
TOLEDO LUCAS COUNTY, OHIO

SCALE 1" = 10'-0"
MADE BGW DATE 6-17-52
TRCD MCK DATE 7-16-52
CKD DME, AHS, DATE 7-7-53

HOWARD, NEEDLES, TAMMEN & BERGENDOFF
CONSULTING ENGINEERS
KANSAS CITY NEW YORK

810 SHEET: 3.107

842

CHARLES BRUNING CO., INC.

MICROFILMED
JUL 25 1952

FED. ROAD DIV. NO.	STATE	FED. AID PROJ. NO.	TYPE FUNDS
2	OHIO	UI-1052(2)	POST WAR

LUCAS COUNTY
CITY OF TOLEDO
TOLEDO EXPRESSWAY SYSTE
MAUMEE RIVER BRIDGE
LUC 120R - 3.46

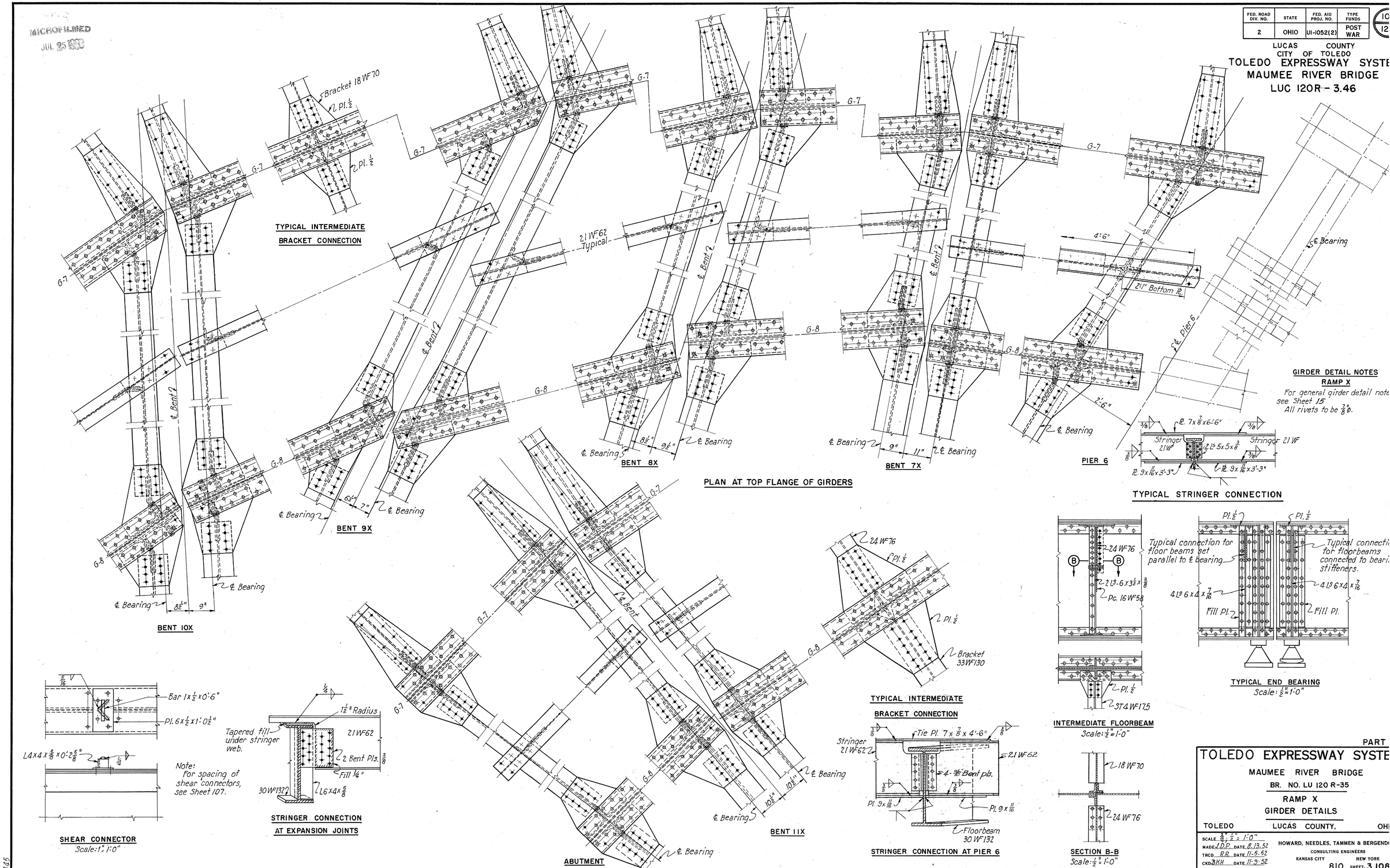

PART

TOLEDO EXPRESSWAY SYSTE

MAUMEE RIVER BRIDGE

BR. NO. LU 120 R-35

RAMP X

GIRDER DETAILS

TOLEDO LUCAS COUNTY, OHI

SCALE 3/4", 1/2" = 1'-0"
MADE J.D.P. DATE 8-13-52
TRCD. R.R. DATE 11-5-52
CKD. BKH DATE 11-9-52

HOWARD, NEEDLES, TAMMEN & BERGENDO
CONSULTING ENGINEERS
KANSAS CITY NEW YORK

810 SHEET 3.108

845

CHARLES BRUNING CO., INC.

MICROFILMED
JUL 25 1983

FED. ROAD DIV. NO	STATE	FED. AID PROJ. NO.	TYPE FUNDS	109 / 120
2	OHIO	UI-1052(2)	POST WAR	

LUCAS COUNTY
CITY OF TOLEDO
TOLEDO EXPRESSWAY SYSTEM
MAUMEE RIVER BRIDGE
LUC 120R-3.46

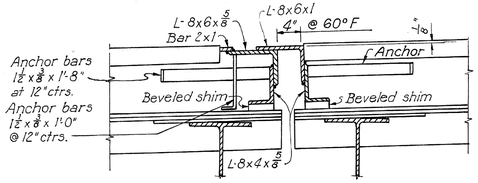

EXPANSION JOINT SECTION
Scale: 1"=1'0"

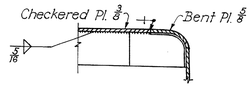

SECTION B-B

Notes:
Unless otherwise shown, sidewalk and curb joint detail to be similar to joint near Bent 7. See Sheet 102.
For details not shown, see "Roadway Joint Details", Sheet 102.

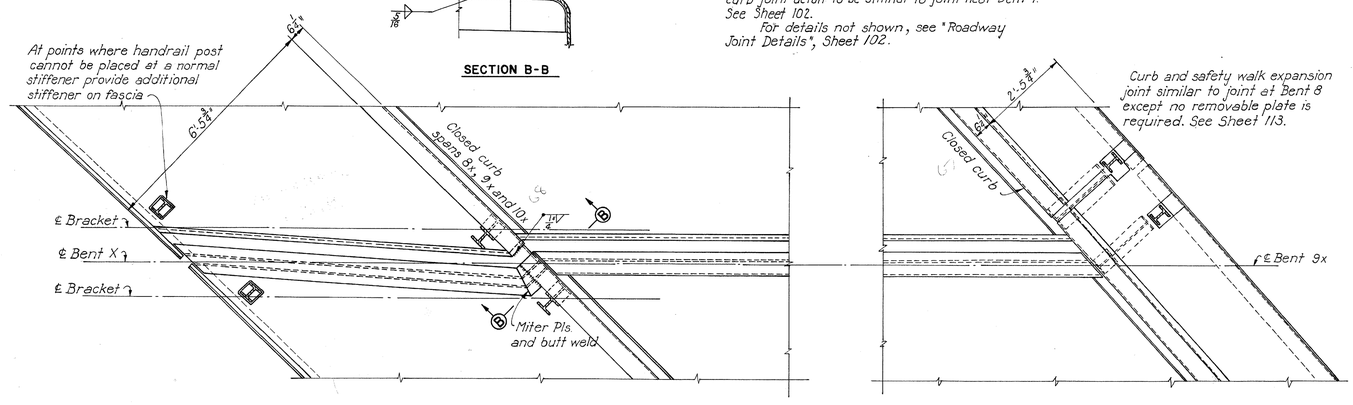

SOUTH CURB

PART PLAN AT BENT 9X
Scale 1/2"=1'0"

NORTH CURB

Note:
Unless otherwise shown, roadway joint details to be similar to joint at Abutment E-E. See Sheet 102.
Unless otherwise shown, sidewalk joint details to be similar to joint at South Abutment. See Sheet 21.
Unless otherwise shown, safetywalk joint to be similar to joint at North Abutment. See Sheet 113

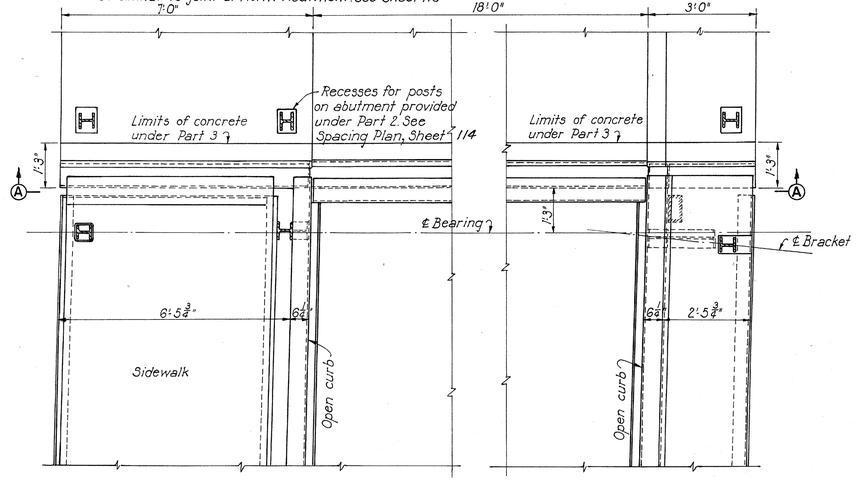

SOUTH CURB

NORTH CURB

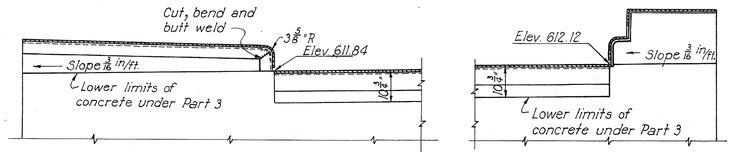

SECTION A-A

PART PLAN AT ABUTMENT
Scale 1/2"=1'0"

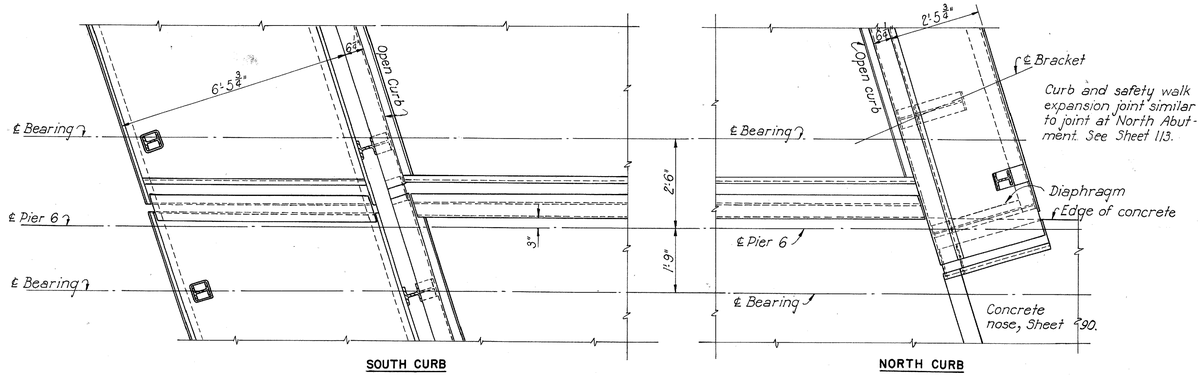

SOUTH CURB

NORTH CURB

PART PLAN AT PIER 6
Scale 1/2"=1'0"

PART 3

TOLEDO EXPRESSWAY SYSTEM
MAUMEE RIVER BRIDGE
BR. NO. LU 120R-35
RAMP X
EXPANSION JOINTS
TOLEDO LUCAS COUNTY, OHIO

SCALE As shown
MADE JDPGD DATE 7-3-52
TRCD CAL DATE 8-24-53
CKD. DMD DATE 9-30-53

HOWARD, NEEDLES, TAMMEN & BERGENDOFF
CONSULTING ENGINEERS
KANSAS CITY NEW YORK

810 SHEET- 3.109

844

MICROFILMED
JUL 25 19[illegible]

FED. ROAD DIV. NO.	STATE	FED. AID PROJ. NO.	TYPE FUNDS
2	OHIO	UI-1052(2)	POST WAR

110
120

LUCAS COUNTY
CITY OF TOLEDO

TOLEDO EXPRESSWAY SYSTEM
MAUMEE RIVER BRIDGE
LUC 120R-3.46

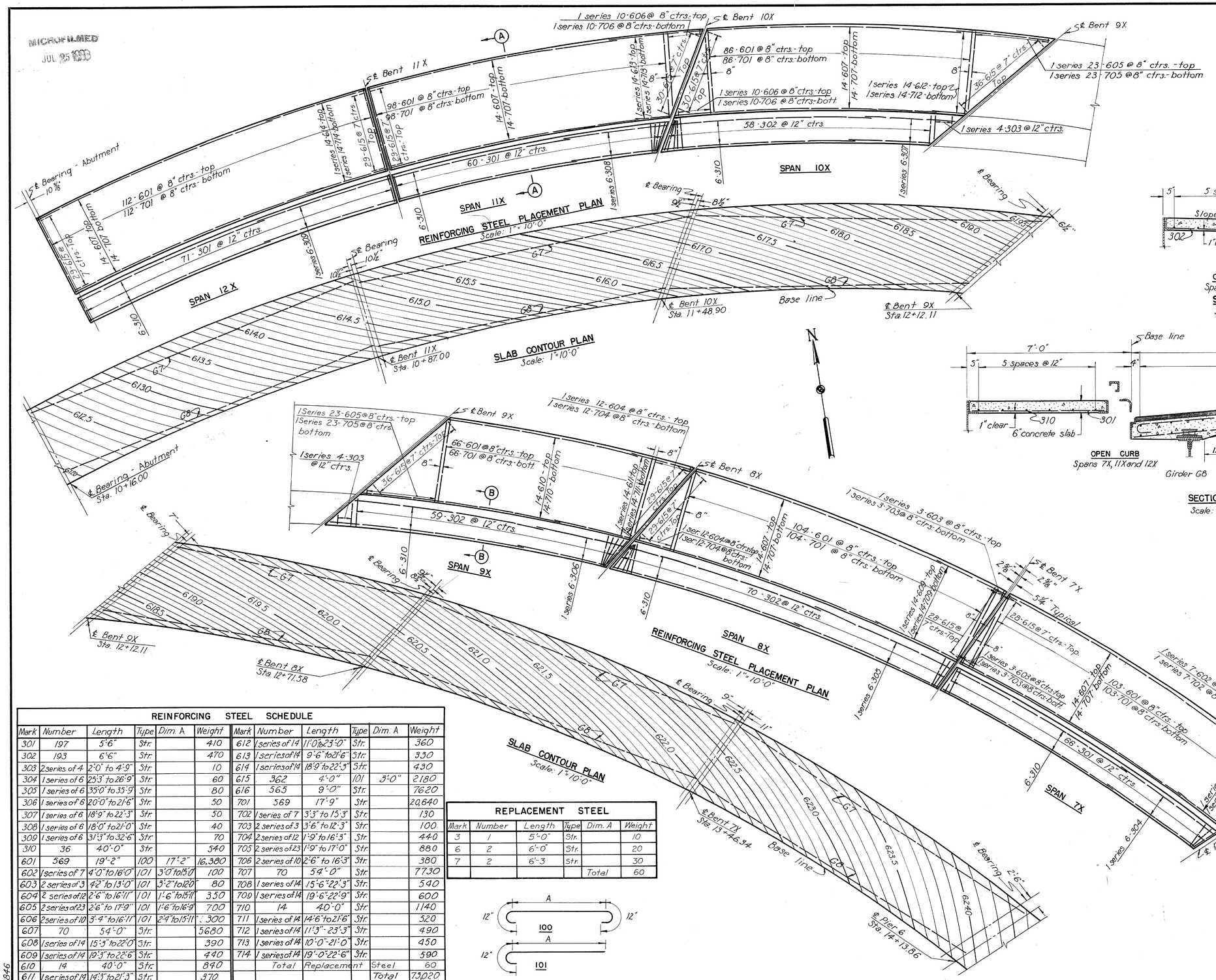

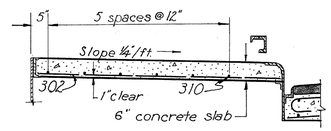

CLOSED CURB
Spans 8X, 9X and 10X
SECTION B-B
Scale: ½"=1'-0"

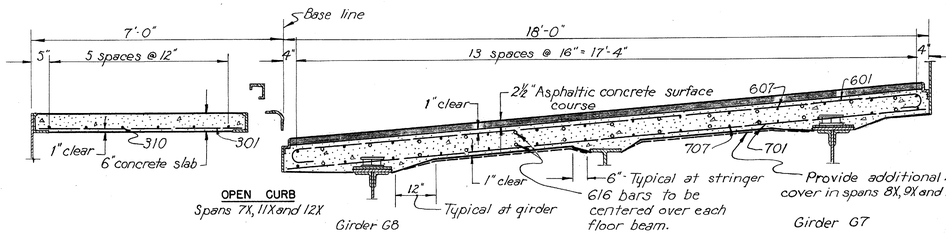

OPEN CURB
Spans 7X, 11X and 12X

SECTION A-A
Scale: ½"=1'-0"

Notes:
Horizontal steel to be bent to match curve. Spacing of bars to be measured along north side of ramp.
Shift longitudinal bars as required to clear shear connectors.
For details of transverse construction joints and haunch of floor beams, see Sheet 23.
Contour elevations are for top of wearing surface.

REINFORCING STEEL SCHEDULE

Mark	Number	Length	Type	Dim. A	Weight	Mark	Number	Length	Type	Dim. A	Weight
301	197	5'-6"	Str.		410	612	1 series of 14	11'-0" to 23'-0"	Str.		360
302	193	6'-6"	Str.		470	613	1 series of 14	9'-6" to 21'-6"	Str.		330
303	2 series of 4	2'-0" to 4'-9"	Str.		10	614	1 series of 14	18'-9" to 22'-9"	Str.		430
304	1 series of 6	25'-3" to 26'-9"	Str.		60	615	362	4'-0"	101	3'-0"	2180
305	1 series of 6	35'-0" to 35'-9"	Str.		80	616	565	9'-0"	Str.		7620
306	1 series of 6	20'-0" to 21'-6"	Str.		50	701	569	17'-9"	Str.		20,640
307	1 series of 6	18'-9" to 22'-3"	Str.		50	702	1 series of 7	3'-3" to 15'-3"	Str.		130
308	1 series of 6	18'-0" to 21'-0"	Str.		40	703	2 series of 3	3'-6" to 12'-3"	Str.		100
309	1 series of 6	31'-3" to 32'-6"	Str.		70	704	2 series of 12	1'-9" to 16'-3"	Str.		440
310	36	40'-0"	Str.		540	705	2 series of 23	1'-9" to 17'-0"	Str.		880
601	569	19'-2"	100	17'-2"	16,380	706	2 series of 10	2'-6" to 16'-3"	Str.		380
602	1 series of 7	4'-0" to 16'-0"	101	3'-0" to 15'-0"	100	707	70	54'-0"	Str.		7730
603	2 series of 3	4'-2" to 13'-0"	101	3'-2" to 12'-0"	80	708	1 series of 14	15'-6" to 22'-3"	Str.		540
604	2 series of 12	2'-6" to 16'-11"	101	1'-6" to 15'-11"	350	709	1 series of 14	19'-6" to 22'-9"	Str.		600
605	2 series of 23	2'-6" to 17'-9"	101	1'-6" to 16'-9"	700	710	14	40'-0"	Str.		1140
606	2 series of 10	3'-4" to 16'-11"	101	2'-4" to 15'-11"	300	711	1 series of 14	14'-6" to 21'-6"	Str.		520
607	70	54'-0"	Str.		5680	712	1 series of 14	11'-3" to 23'-3"	Str.		490
608	1 series of 14	15'-3" to 22'-0"	Str.		390	713	1 series of 14	10'-0" to 21'-0"	Str.		450
609	1 series of 14	19'-3" to 22'-6"	Str.		440	714	1 series of 14	19'-0" to 22'-6"	Str.		590
610	14	40'-0"	Str.		840		Total	Replacement	Steel		60
611	1 series of 14	14'-3" to 21'-3"	Str.		370				Total		73,020

REPLACEMENT STEEL

Mark	Number	Length	Type	Dim. A	Weight
3	1	5'-0"	Str.		10
6	2	6'-0"	Str.		20
7	2	6'-3"	Str.		30
				Total	60

PART 3

TOLEDO EXPRESSWAY SYSTEM
MAUMEE RIVER BRIDGE
BR. NO. LU 120R-35
RAMP "X"
ROADWAY SLAB
TOLEDO LUCAS COUNTY, OHIO

SCALE As shown
MADE BGW DATE 7-7-52
TRCD KLG DATE 4-10-53
CKD MKA-JHG DATE 4-15-53

HOWARD, NEEDLES, TAMMEN & BERGENDOFF
CONSULTING ENGINEERS
KANSAS CITY NEW YORK

810 SHEET 3.110

846

MICROFILMED
JUL 25 1983

FED. ROAD DIV. NO.	STATE	FED. AID PROJ. NO.	TYPE FUNDS
2	OHIO	UI-1052(2)	POST WAR

111
120

LUCAS COUNTY
CITY OF TOLEDO
TOLEDO EXPRESSWAY SYSTEM
MAUMEE RIVER BRIDGE
LUC 120R-3.46

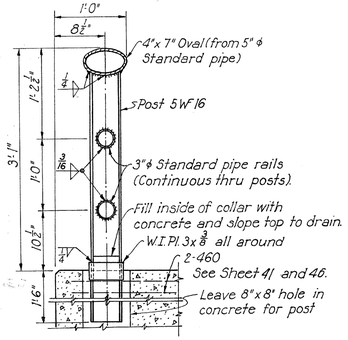

HANDRAIL POST ON CONCRETE
Scale: 1"=1'-0"

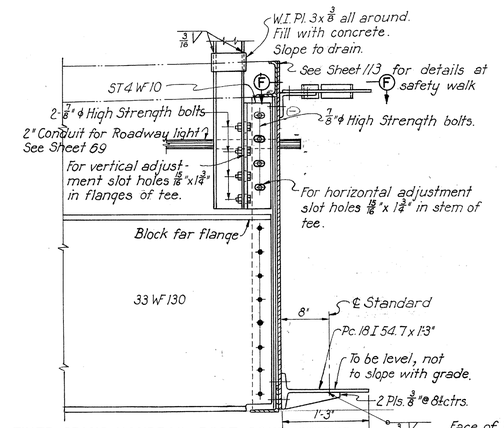

FIXED SPANS HANDRAIL POST CONNECTIONS
Scale: 1"=1'-0"

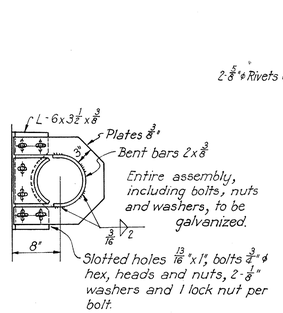

SECTION F-F

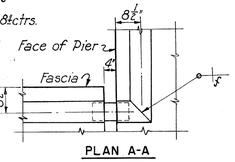

PLAN A-A

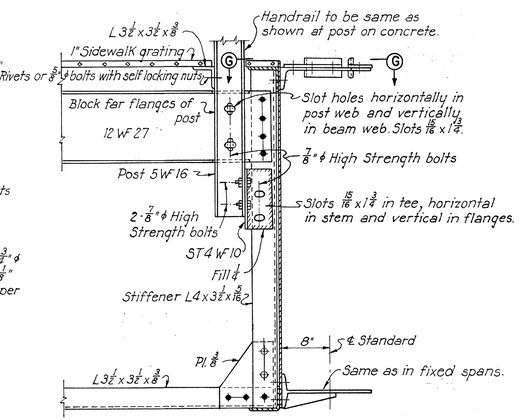

BASCULE SPAN HANDRAIL POST CONNECTION
Scale: 1"=1'-0"

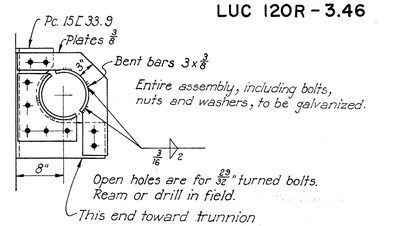

SECTION G-G

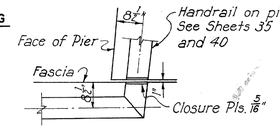

PLAN B-B

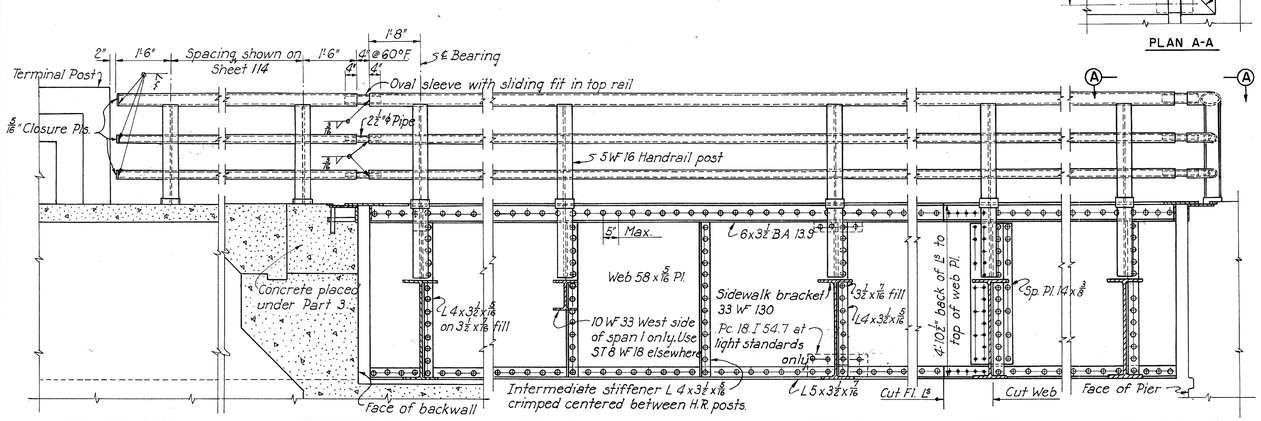

TERMINAL POST | **EXPANSION JOINT AT SOUTH ABUTMENT** | **POST BETWEEN SIDEWALK BRACKETS** | **POST AT SIDEWALK BRACKETS** | **POST AT FASCIA SPLICE** | **EXPANSION JOINT AT BASCULE PIER**

SOUTH ABUTMENT
Handrail on South sidewalk of Ramp X Abutment similar.

UNIT 1
Scale: ½"=1'-0"
Handrail and fascia along concrete sidewalks in other Units and Ramps to be similar.

Details not shown to be similar to those shown at South Abutment

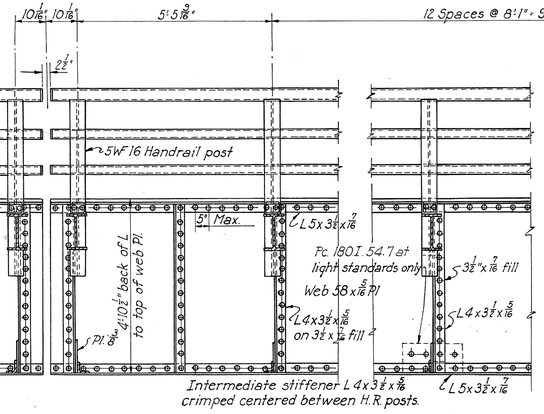

TYPICAL POST | **POST AT LIGHT STANDARDS**

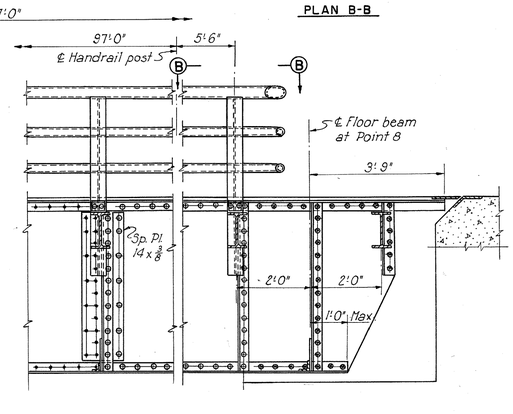

POST AT FASCIA SPLICE | **BREAK AT BASCULE PIER**

BASCULE SPAN
Scale: ½"=1'-0"

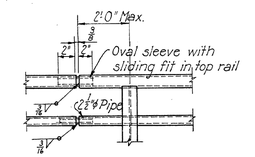

TYPICAL RAIL EXPANSION JOINT
Expansion joints shall be provided in handrail at not more than 30'-0" intervals. Joints shall be as close to posts as practical.

For handrail post spacing on abutments see Sheet 114.

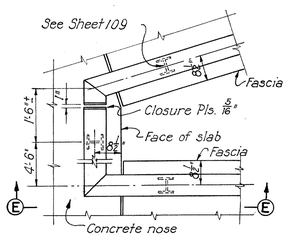

PLAN C-C

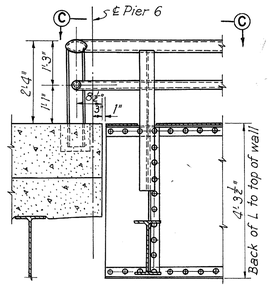

SECTION E-E

DETAILS NEAR NOSE AT BEGINNING OF RAMP X
See Sheet 113

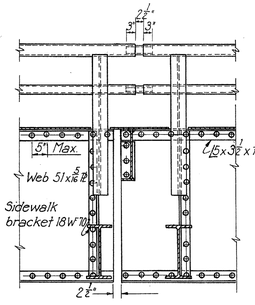

EXPANSION JOINT AT BENT 8
Handrail and fascia joints along safety walks in Ramp X to be similar.

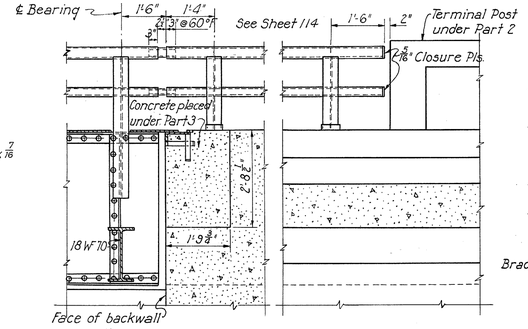

EXPANSION JOINT | **TERMINAL POST**

NORTH ABUTMENT
Details not shown to be similar to those shown at South Abutment.
Scale: ½"=1'-0"

Handrail on Ramp E-E Abutment and for safety walk on Ramp X Abutment to be similar.

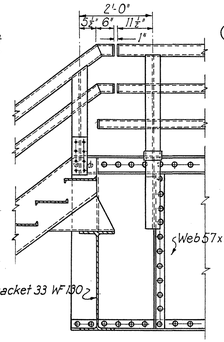

SIDEWALK HANDRAIL | **SAFETYWALK HANDRAIL**

STAIRWAY-RAMP E-E
Scale: ½"=1'-0"

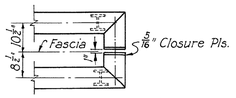

PLAN D-D

For handrail post connection, see Sheet 113.

PART 3

TOLEDO EXPRESSWAY SYSTEM
MAUMEE RIVER BRIDGE
BR. NO. LU 120R-35
HANDRAIL AND FASCIA
TOLEDO — LUCAS COUNTY, — OHIO

SCALE ½"=1'-0"
MADE G.D. DATE 9-17-52
TRCD. C.A.L. DATE 9-10-53
CKD. D.M.D. DATE 9-30-53

HOWARD, NEEDLES, TAMMEN & BERGENDOFF
CONSULTING ENGINEERS
KANSAS CITY NEW YORK

810 SHEET- 3.111

723

FED. ROAD DIV. NO	STATE	FED. AID PROJ. NO.	TYPE FUNDS
2	OHIO	UI-1052(2)	POST WAR

112
120

LUCAS COUNTY
CITY OF TOLEDO
TOLEDO EXPRESSWAY SYSTEM
MAUMEE RIVER BRIDGE
LUC 120R-3.46

MICROFILMED
JUL 25 1953

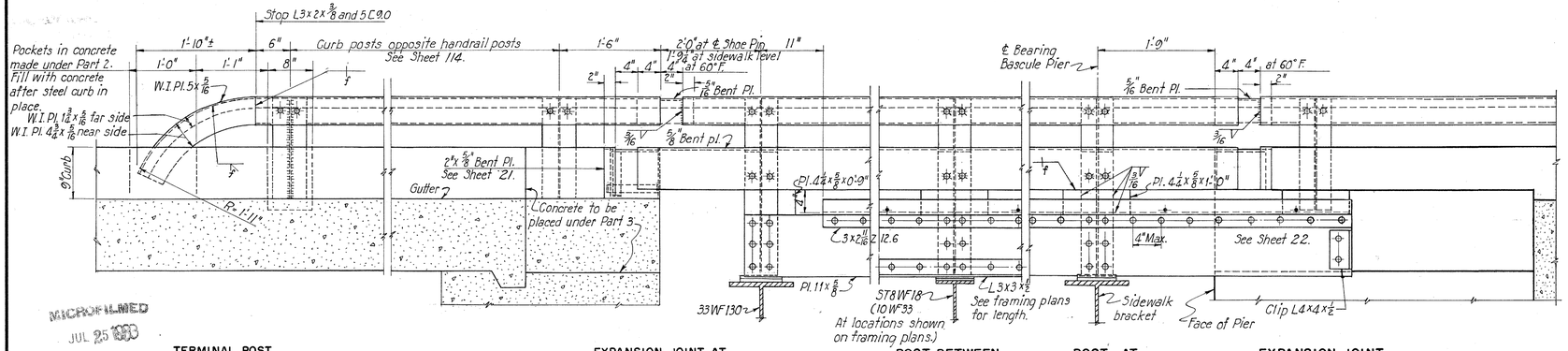

TERMINAL POST

EXPANSION JOINT AT SOUTH ABUTMENT

POST BETWEEN SIDEWALK BRACKETS

POST AT SIDEWALK BRACKET

EXPANSION JOINT AT BASCULE PIER

SOUTH ABUTMENT

Scale: 1" = 1'-0"

Steel curb along south sidewalk of the Ramp X abutment to be similar.

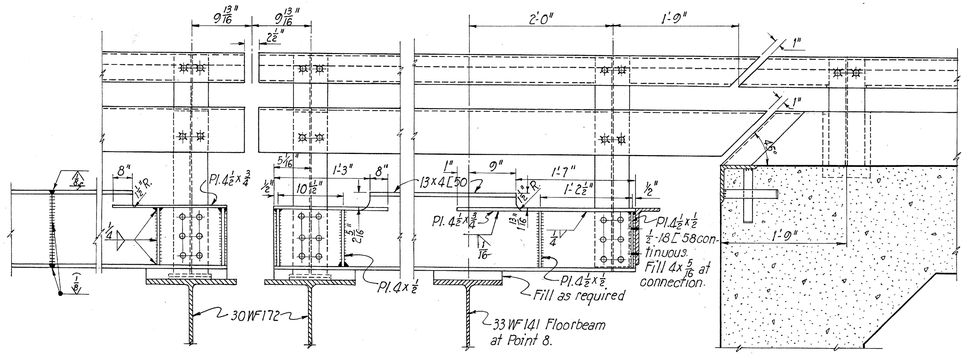

STRINGER SPLICE

See framing plan for location.

EXPANSION JOINT AT ℄ BETWEEN LEAVES

BREAK AT BASCULE PIER

BASCULE SPAN

Scale: 1" = 1'-0"

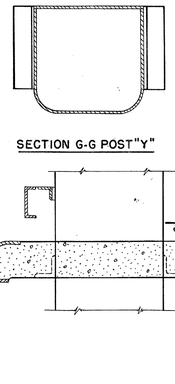

SECTION G-G POST "Y"

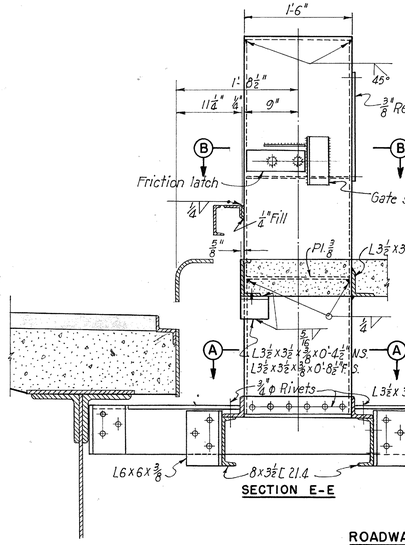

SECTION F-F POST "Y"

SECTION E-E

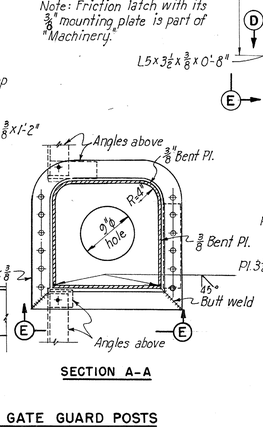

SECTION A-A

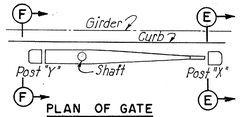

PLAN OF GATE

Friction latch occurs only on Posts "X". For location, see Sheet 59 Diaphragm to be in all posts.

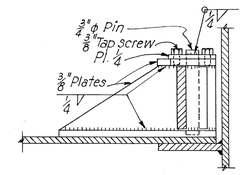

SECTION D-D

Scale: 3" = 1'-0"

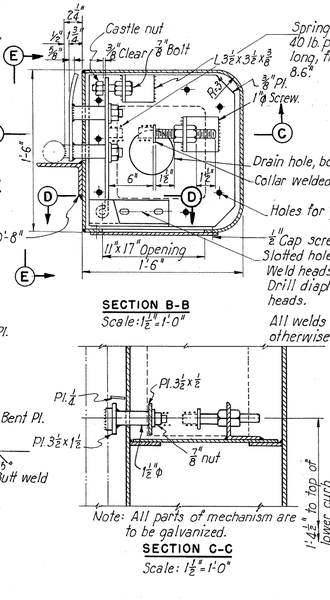

SECTION B-B

Scale: 1 1/2" = 1'-0"

Note: All parts of mechanism are to be galvanized.

SECTION C-C

Scale: 1 1/2" = 1'-0"

ROADWAY GATE GUARD POSTS

Scale: 1" = 1'-0"

Post "X" shown. Post "Y" the same except as shown otherwise.

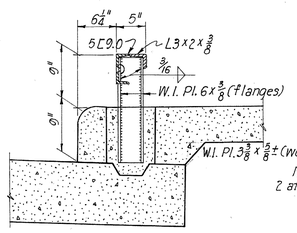

CURB POSTS IN CONCRETE

Scale: 1" = 1'-0"

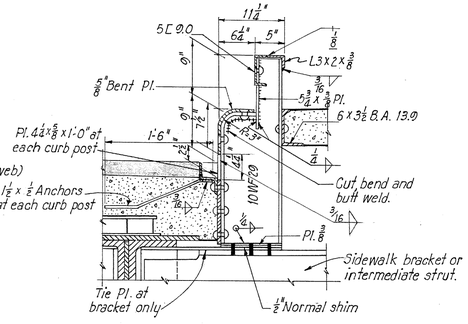

CURB POSTS FOR OPEN CURB

Scale: 1" = 1'-0"

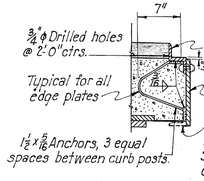

EDGE OF SLAB BETWEEN CURB POSTS

Scale: 1" = 1'-0"

For details not shown see "Curb Posts For Open Curb."

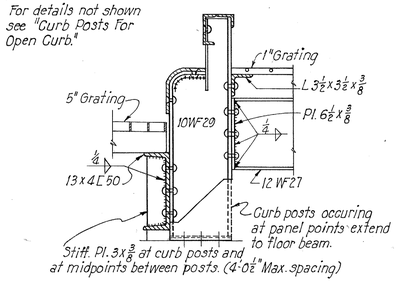

CURB POSTS FOR BASCULE SPAN

Scale: 1" = 1'-0"

For details not shown see "Curb Posts For Open Curb."

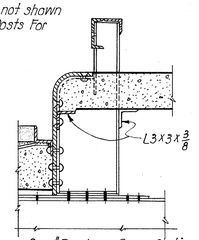

See "Roadway Cross Sections" for locations.

CURB POSTS FOR CLOSED CURB

Scale: 1" = 1'-0"

Note: All curb rivets to be 3/4" ϕ except those in base of posts which shall be 7/8" ϕ.

PART 3

TOLEDO EXPRESSWAY SYSTEM

MAUMEE RIVER BRIDGE

BR. NO. LU 120 R-35

STEEL CURBS FOR CONCRETE SIDEWALK
ROADWAY GATE GUARD POSTS

TOLEDO LUCAS COUNTY, OHIO

SCALE 1" = 1'-0" and 3" = 1'-0"
MADE G.D. DATE 5-20-52
TRCD. R.R. DATE 9-9-53
CKD. D.M.D. DATE 9-30-53

HOWARD, NEEDLES, TAMMEN & BERGENDOFF
CONSULTING ENGINEERS
KANSAS CITY NEW YORK

810 SHEET: 3.112

721

MICROFILMED
JUL 25 1983

FED. ROAD DIV. NO	STATE	FED. AID PROJ. NO.	TYPE FUNDS	113 / 120
2	OHIO	UI-1052(2)	POST WAR	

LUCAS COUNTY
CITY OF TOLEDO
TOLEDO EXPRESSWAY SYSTEM
MAUMEE RIVER BRIDGE
LUC 120R-3.46

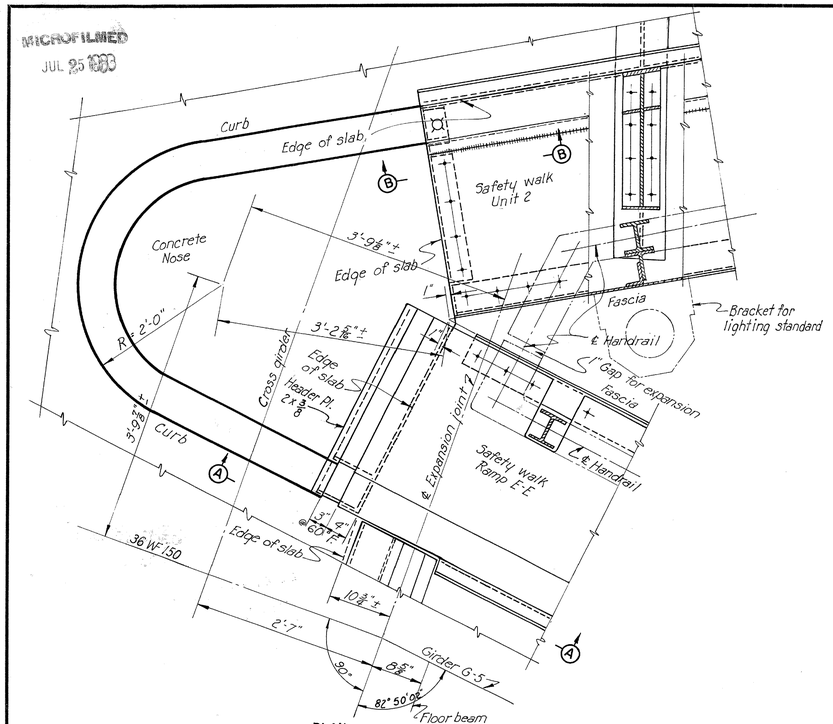

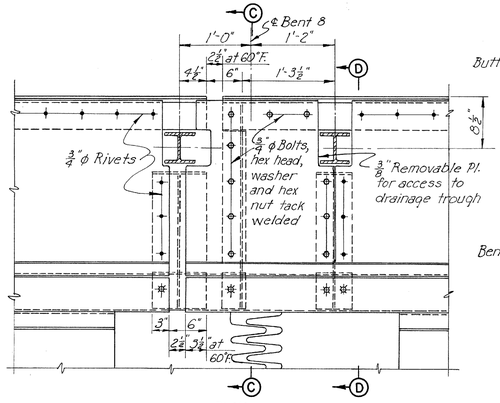

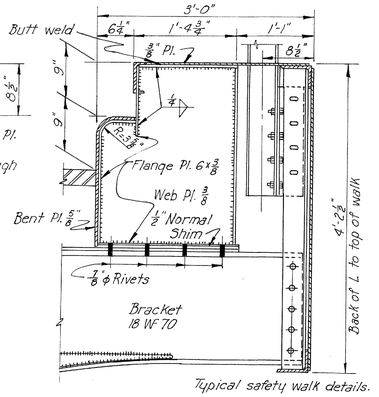

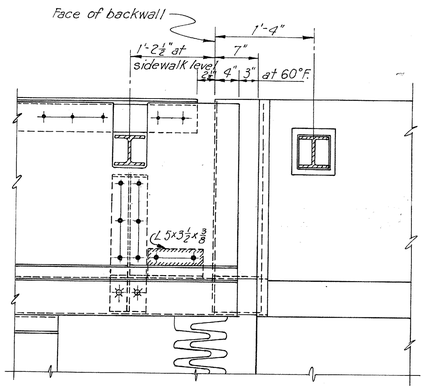

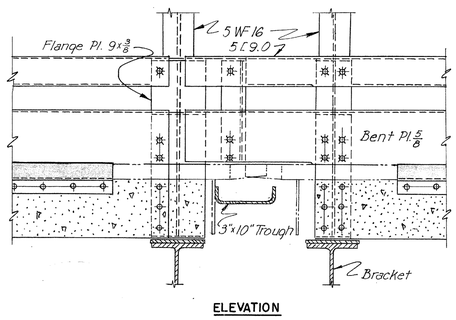

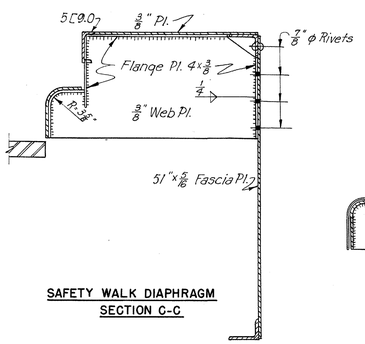

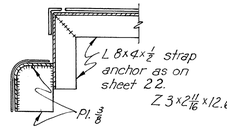

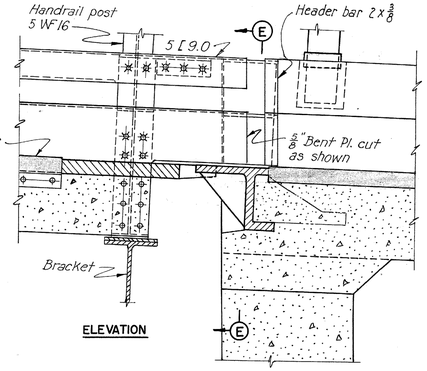

EXPANSION JOINT AT NORTH ABUTMENT
Scale: 1"=1'-0"
Joints in safety walks at Ramp E-E and Ramp X Abutments to be similar.

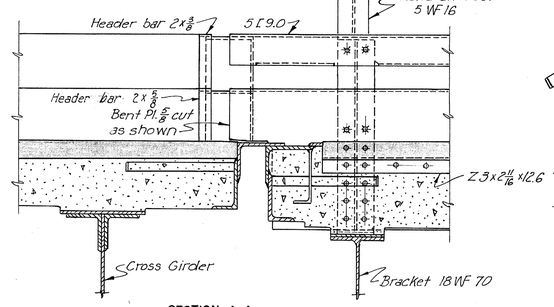

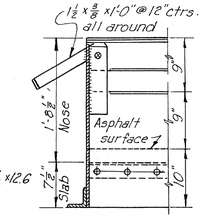

NOSE BETWEEN RAMP E-E AND EXPRESSWAY
Scale: 1"=1'-0"

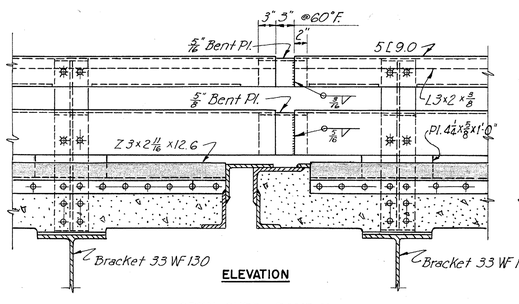

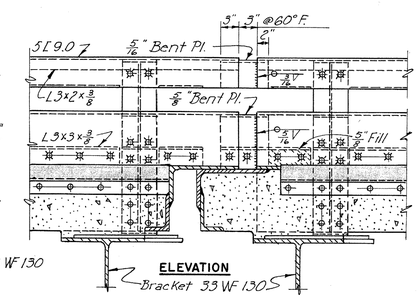

Scale: 1"=1'-0"

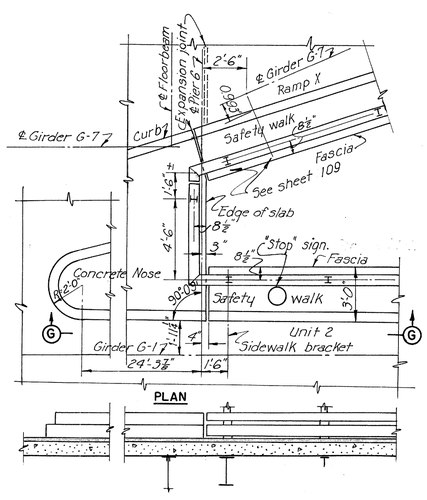

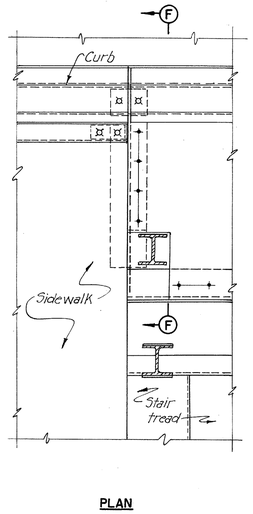

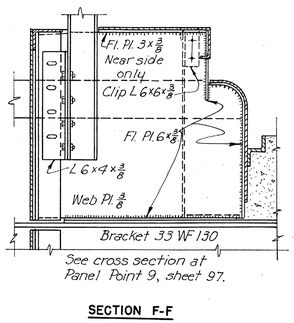

PART 3

TOLEDO EXPRESSWAY SYSTEM

MAUMEE RIVER BRIDGE
BR. NO. LU 120 R-35

STEEL CURB AND SAFETY WALK

TOLEDO LUCAS COUNTY, OHIO

SCALE As shown
MADE G.D. DATE 9-18-52
TRCD. K.L.M. DATE 9-17-53
CKD. D.M.D. DATE 9-30-53

HOWARD, NEEDLES, TAMMEN & BERGENDOFF
CONSULTING ENGINEERS
KANSAS CITY NEW YORK
810 SHEET 3.113

0722

FED. ROAD DIV. NO	STATE	FED. AID PROJ. NO.	TYPE FUNDS
2	OHIO	UI-1052(2)	POST WAR

LUCAS COUNTY
CITY OF TOLEDO
TOLEDO EXPRESSWAY SYS
MAUMEE RIVER BRIDGE
LUC 120R-3.46

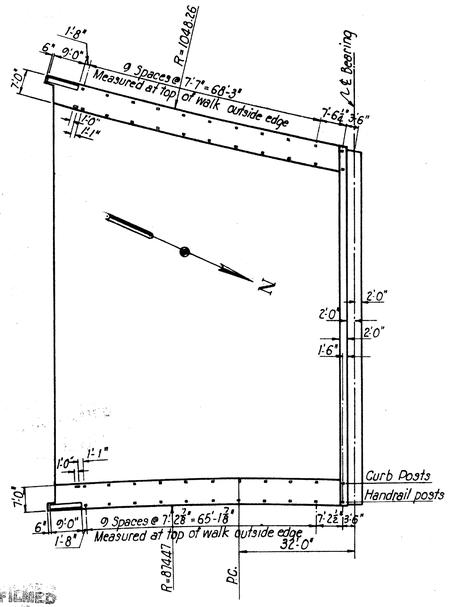

SOUTH ABUTMENT

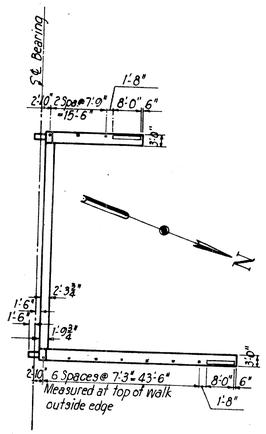

NORTH ABUTMENT

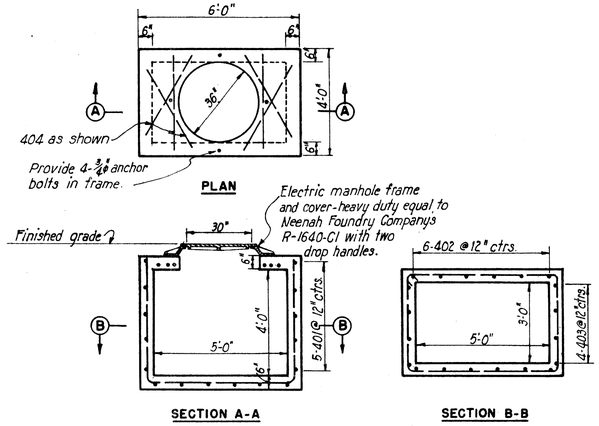

MANHOLES FOR INCOMING POWER
Scale: ⅜" = 1'-0"

Note: Two manholes required one just beyond the south abutment and one west of Ramp "X" abutment as shown on the Roadway conduit details sheet.

REINFORCING STEEL SCHEDULE FOR MANHOLES

Mark	Number So. Abut.	Number Ramp X	Length	Type	Dimension A	Dimension B	Weight So. Abut.	Weight Ramp X
401	5	5	18'-4"	101			60	60
402	6	6	12'-6"	102	3'-6"	4'-6"	50	50
403	4	4	14'-6"	102	5'-6"	4'-6"	40	40
404	6	6	5'-6"	102	3'-6"	1'-0"	20	20
					Total		170	170

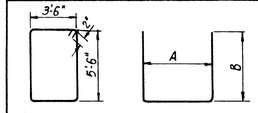

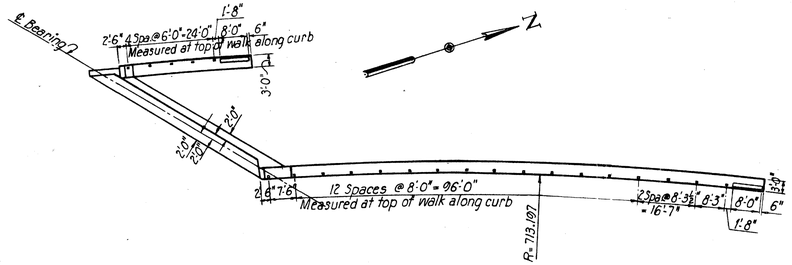

RAMP E-E ABUTMENT

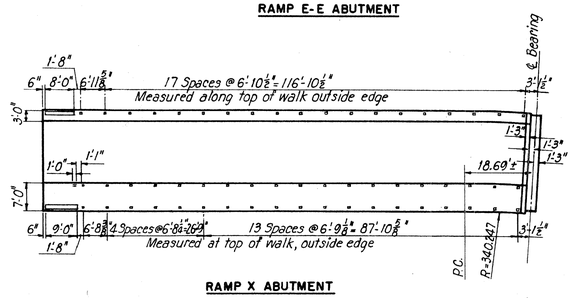

RAMP X ABUTMENT

HANDRAIL AND CURB POST ARRANGEMENT AT ABUTMENTS
Scale: 1" = 20'

Notes:
For handrail and curb post spacing on bridge proper, see Steel Framing Plans.

Note: Drawing shows terminal post at south abutment. At north abutment the terminal post is the "safety walk" type, the top lift being omitted. The concrete surface is the same size for both name plates.

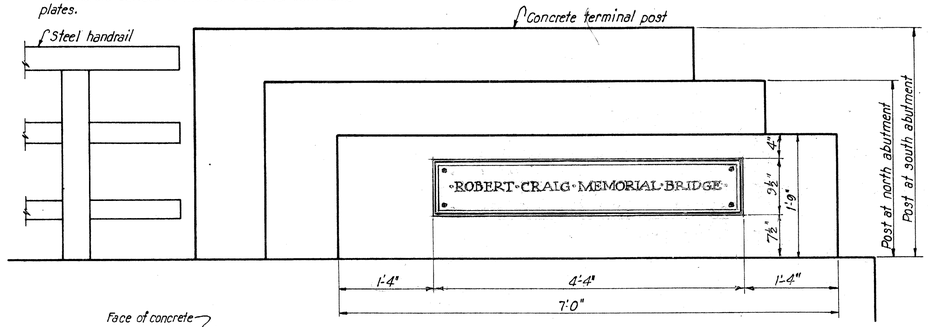

ELEVATION
Scale: 1" = 1'-0"

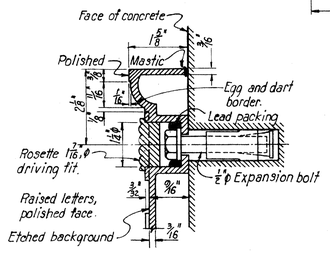

SECTION THRU PLATE AT ANCHOR
Half Size

NAME PLATES
2 Required

PART
TOLEDO EXPRESSWAY SYST
MAUMEE RIVER BRIDGE
BR. NO. LU 120R-35
CURB, NAME PLATES AND POWER MANHO
TOLEDO LUCAS COUNTY.

Revised 4-12-54

SCALE As shown
MADE G.D. DATE 9-25-52
TRCD. P.R. DATE 9-28-53
CKD. N.F. DATE 9-30-53

HOWARD, NEEDLES, TAMMEN & BERG
CONSULTING ENGINEERS
KANSAS CITY NEW YOR

810 SHEET- 3.

MICROFILMED
JUL 25 1963

MICROFILMED
JUL 25 1955

FED. ROAD DIV. NO.	STATE	FED. AID PROJ. NO.	TYPE FUNDS
2	OHIO	UI-1052 (2)	POST WAR

115
120

LUCAS COUNTY
CITY OF TOLEDO
TOLEDO EXPRESSWAY SYSTEM
MAUMEE RIVER BRIDGE
LUC 120R-3.46

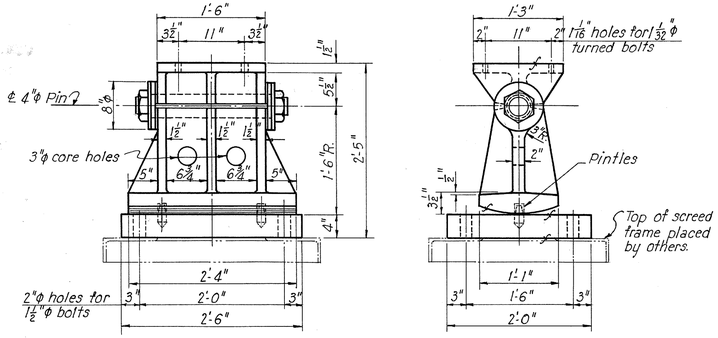

Note: For girder G-5 at Pier 1 provide 5½" shim between girder and top casting of shoe.

E-1
Scale: 1"=1'-0"
6 Required

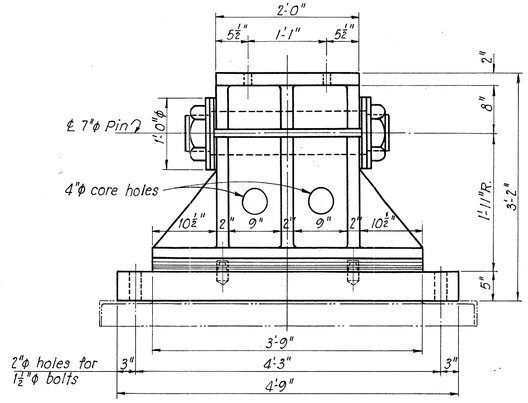

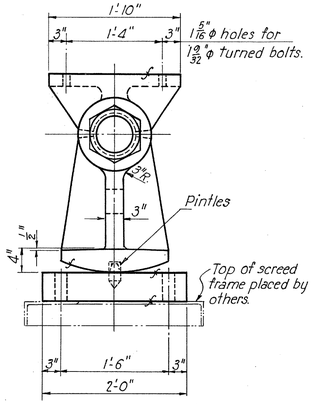

E-4
Scale: 1"=1'-0"
2 Required

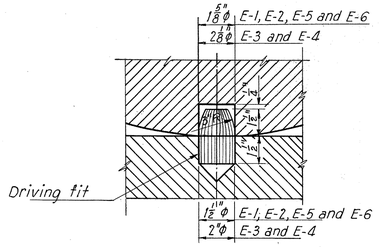

PINTLE DETAIL
Scale: 3"=1'-0"

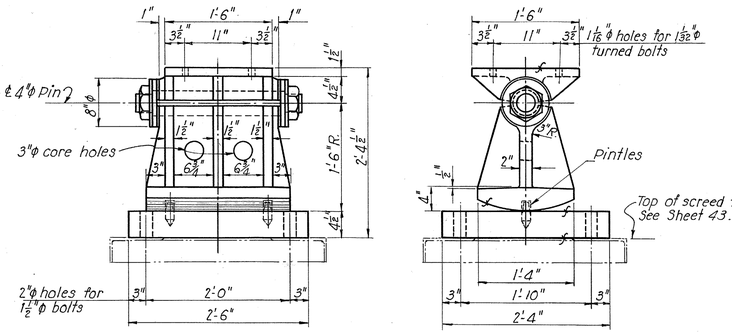

E-2
Scale: 1"=1'-0"
4 Required

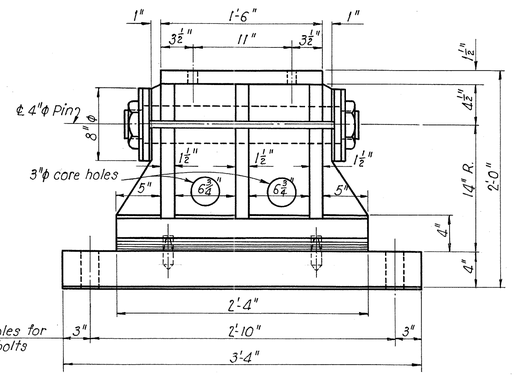

E-5
Scale: 1½"=1'-0"
6 Required

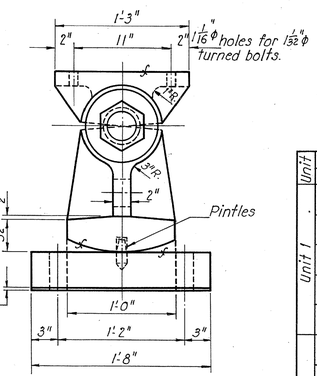

Note: For Girders G-5 and G-6 at Pedestal 9EE, provide shims ¼" and ⅜" respectively between girder and top casting of shoe.

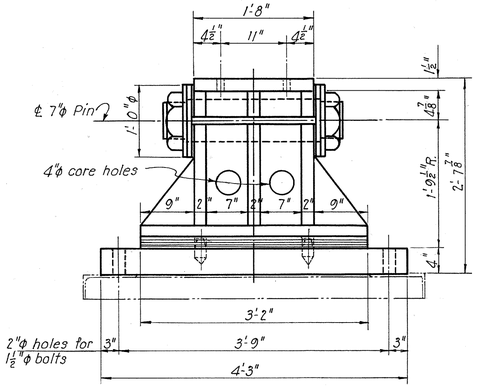

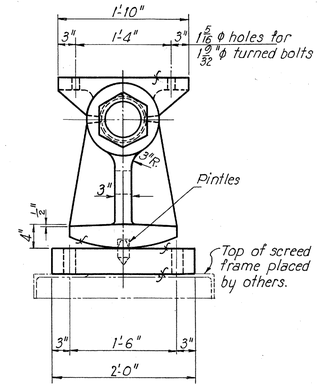

E-3
Scale: 1"=1'-0"
6 Required

Note: For girders G-1, G-2 and G-4 at Pier 1 provide shims 1¼", ¾" and 1¼" respectively between girder and top casting of shoe.

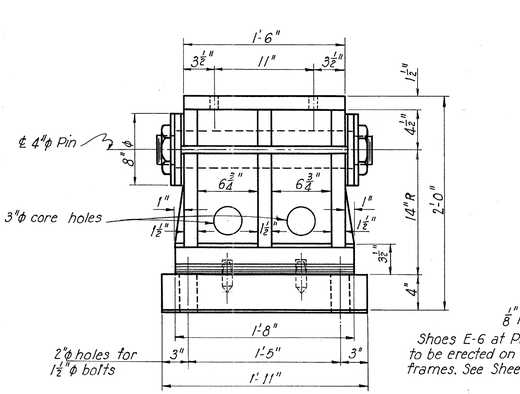

Shoes E-6 at Pier 5 to be erected on screed frames. See Sheet 43.

E-6
Scale: 1½"=1'-0"
23 Required

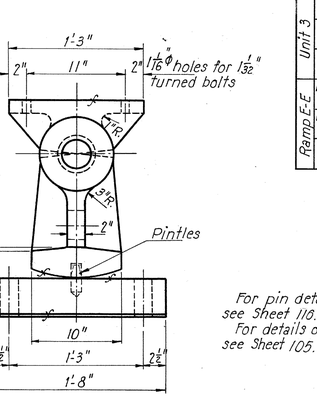

For pin details and General Notes, see Sheet 116.
For details of shoes for Ramp X, see Sheet 105.

SHOE SCHEDULE

Unit	Location		G-1	G-2	G-3	G-4	G-5	G-6	G-7	G-8
Unit 1	South Abut.	Type Shoe	E-1	E-1	E-1	E-1	E-1			
		Base Elev.	607.63	608.20	608.20	607.82	607.97			
	Pier 1	Type Shoe	E-3	E-3	E-3	E-3	E-1			
		Base Elev.	605.02	605.36	605.36	605.02	605.13			
	Pier 2		F-1	F-1	F-1	F-1				
			607.91	608.17	608.17	607.91				
	Pier 3		E-3	E-4	E-4	E-3				
			609.46	609.21	609.21	609.46				
	Pier 4		E-2	E-2	E-2	E-2				
			605.37	605.39	605.39	605.37				
Unit 2	Pier 5		E-6	E-6	E-6	E-6			E-6	
			605.83	605.87	605.86	605.76			605.76	
	Pier 6		F-2	F-2	F-2	F-2		E-6	E-6	R-200a
			611.41	611.64	611.59	611.23		613.65	611.39	615.96
	Bent 7		E-6	E-5	E-5	E-5		E-5		
			611.09	610.85	610.60	610.07		610.29		
	Bent 8		E-6	E-6	E-6	E-6				
			609.30	608.90	608.71	608.30				
Unit 3	Bent 8		E-6	E-6	E-6	E-6				
			609.30	608.90	608.71	608.30				
	Bent 9		F-3	F-3	F-3	F-3				
			606.33	605.75	605.50	605.00				
	North Abut		E-6	E-6	E-6	E-6				
			603.08	602.67	602.48	602.07				
Ramp F-E	Pedestals 8E-E						F-3	F-3		
							609.45	607.77		
	Pedestals 9E-E						E-5	E-5		
							608.94	607.10		
	Abut. E-E						E-6	E-6		
							607.90	605.89		

Note: Base Elev. is top of screed frames or top of masonry.

PART 3
TOLEDO EXPRESSWAY SYSTEM
MAUMEE RIVER BRIDGE
BR. NO. LU 120R-35
SHOES
TOLEDO LUCAS COUNTY, OHIO

SCALE As shown
MADE R.A.C. DATE 7-7-52
TRCD R.R. DATE 9-17-52
CKD J.D.P. DATE 12-17-52

HOWARD, NEEDLES, TAMMEN & BERGENDOFF
CONSULTING ENGINEERS
KANSAS CITY NEW YORK

810 SHEET: 3.115

818

CHARLES BRUNING CO., INC.

MICROFILMED
JUL 25 1953

FED. ROAD DIV. NO.	STATE	FED. AID PROJ. NO.	TYPE FUNDS
2	OHIO	UI-1052(2)	POST WAR

116
120

LUCAS COUNTY
CITY OF TOLEDO
TOLEDO EXPRESSWAY SYSTEM
MAUMEE RIVER BRIDGE
LUC 120R-3.46

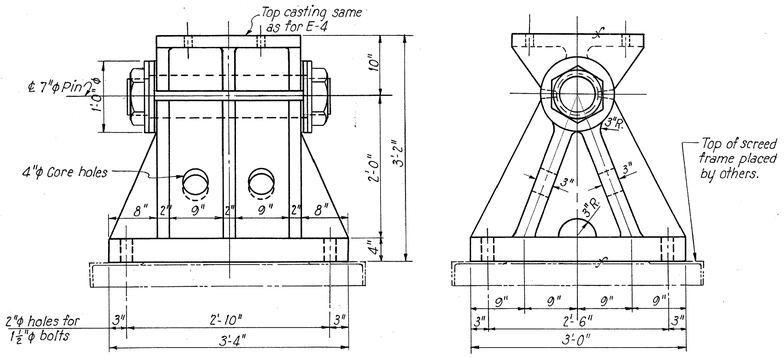

F-1
Scale: 1"=1'-0"
4 Required

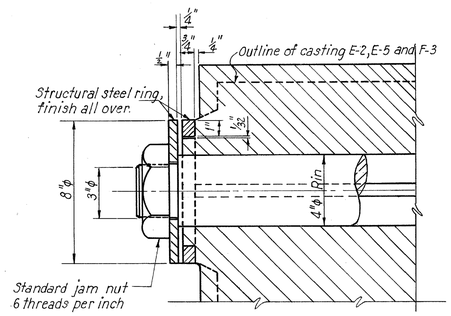

PIN END

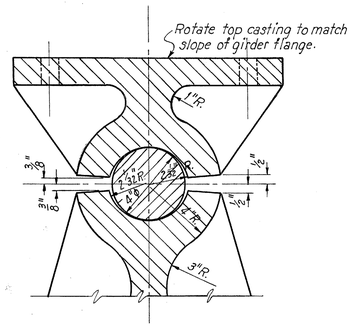

SECTION THRU PIN

PIN DETAILS E-1, E-2, E-5, E-6, AND F-3
Scale: 3"=1'-0"
Pin for E-1 shown, others similar

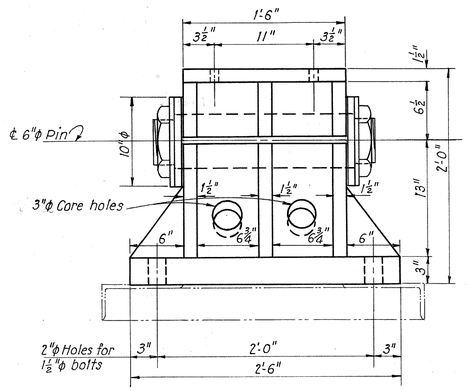

F-2
Scale: 1½"=1'-0"
4 Required.

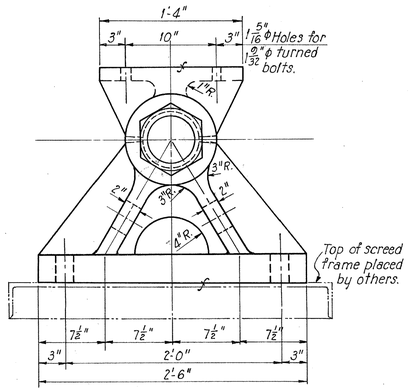

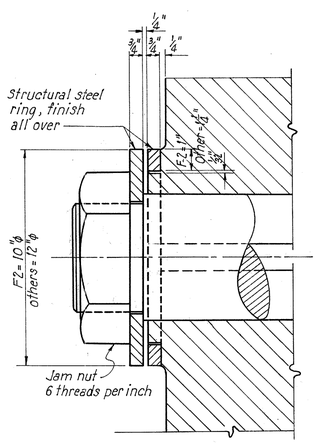

PIN END

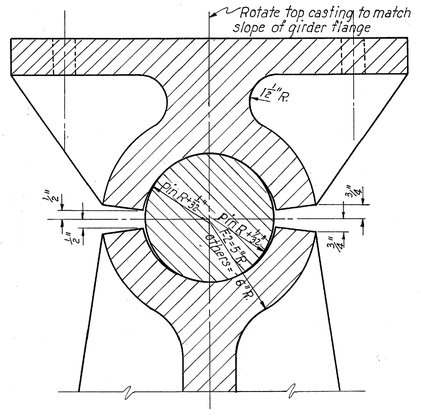

SECTION THRU PIN

PIN DETAILS E-3, E-4, F-1, AND F-2
Scale: 3"=1'-0"
Pin for E-4 shown, others similar.

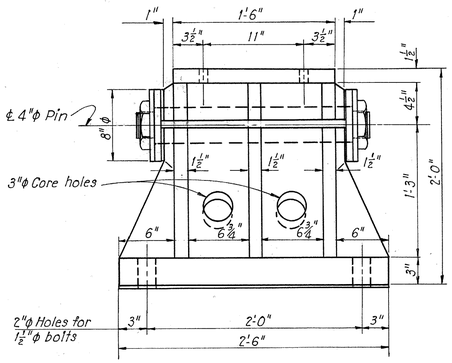

F-3
Scale: 1½"=1'-0"
6 Required

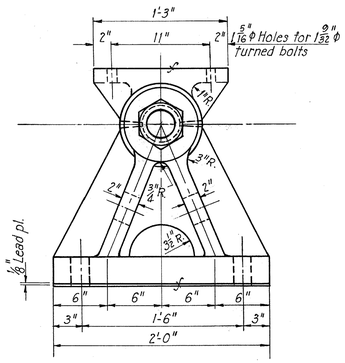

Note: For G-6 at Pedestal 8 E-E provide 1" shim between girder and top casting of shoe.

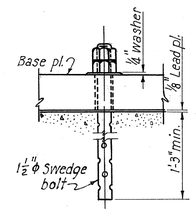

TYPICAL ANCHOR BOLT DETAILS
Scale: 1½"=1'-0"

Shoe E-1 and all fixed shoes and top castings of expansion shoes shall be carbon steel castings, A.S.T.M. A-27-46, Grade 65-35.

Base slab for shoes E-1 may be carbon steel castings or structural steel plates.

Rockers for shoes E-2, E-3, E-4, E-5 and E-6 shall be alloy steel castings, A.S.T.M. A148-50T Grade 80-50 or of an equivalent material having a minimum yield point of 50,000 lbs. per sq. inch.

Base slabs for shoes E-2, E-3, E-4, E-5 and E-6 to be alloy steel castings or plates of an equivalent material having a minimum yield point of 50,000 lbs. per square inch.

All pins, nuts, washers and rings shall be structural carbon steel.

Bolts to girder flanges shall have hex heads and self-locking nuts similar to "Anco" nuts as made by Automatic Nut Co. of Lebanon, Pa. Provide washers under heads and nuts.

Machined surfaces of rockers which bear on base slabs and all other exposed surfaces shall be painted.

All contact surfaces between metal parts shall be finished.

Lower castings of all shoes shall be centered in both directions under top castings for 60°F. temperature. Base slabs and shoe castings shall be scribed with center lines in both directions.

All fillets shall be ¾" unless otherwise shown.

Spaces around anchor bolts in base slabs shall be filled with an approved metallic filler before setting nuts.

Anchor bolts and screed frames on Piers 1, 2 and 3 will be placed under Part 1 of this project and those on the South Abutment and for girders G1, G2, G3 and G4 on Pier 6 will be placed under Part 2. Before fabrication of shoes, the Contractor for Part 3 shall verify anchor bolt spacings and screed frame elevations in the field. For details of anchor bolts and screed frames at Piers 4 and 5, see Sheet 43.

Shoes not on screed frames shall be placed on ⅛" lead plates.

PART 3
TOLEDO EXPRESSWAY SYSTEM
MAUMEE RIVER BRIDGE
BR. NO. LU120 R-35

SHOES

TOLEDO LUCAS COUNTY, OHIO

SCALE AS shown
MADE R.A.C DATE 7-21-52
TRCD C.M. RR DATE 9-11-52
CKD J.O.P. DATE 12-17-52

HOWARD, NEEDLES, TAMMEN & BERGENDOFF
CONSULTING ENGINEERS
KANSAS CITY NEW YORK

810 SHEET 3.116

720

...ER BRUNING CO., INC.

MICROFILMED
JUL 25 1963

FED. ROAD DIV. NO.	STATE	FED. AID PROJ. NO.	TYPE FUNDS
2	OHIO	UI-1052(2)	POST WAR

LUCAS COUNTY
CITY OF TOLEDO
TOLEDO EXPRESSWAY SYSTE
MAUMEE RIVER BRIDGE
LUC 120 R-3.46

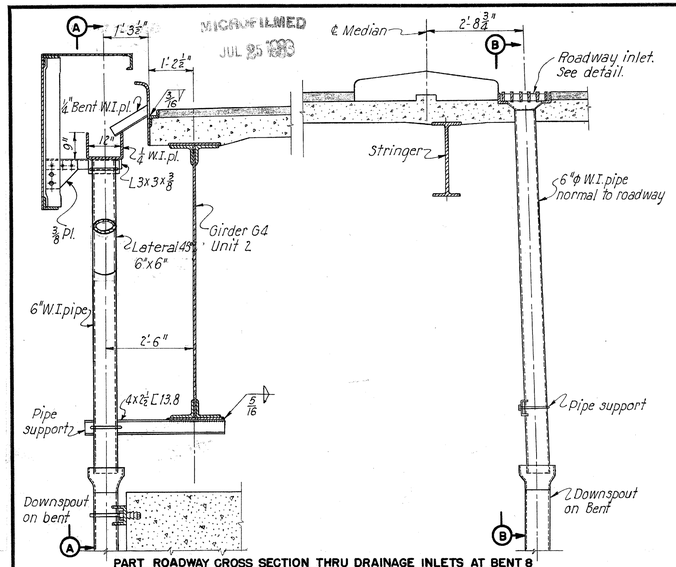

PART ROADWAY CROSS SECTION THRU DRAINAGE INLETS AT BENT 8
Scale: ½"=1'-0"

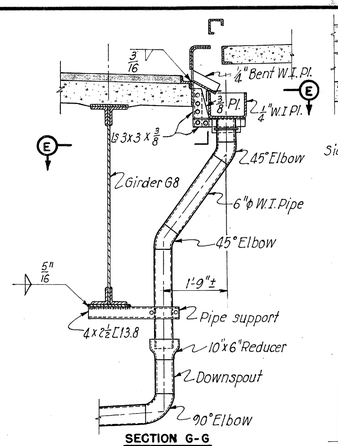

SECTION G-G
Scale: ½"=1'-0"

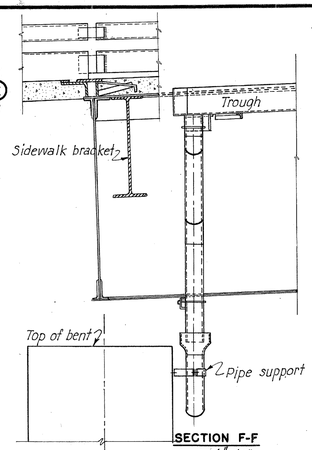

SECTION F-F
Scale: ½"=1'-0"

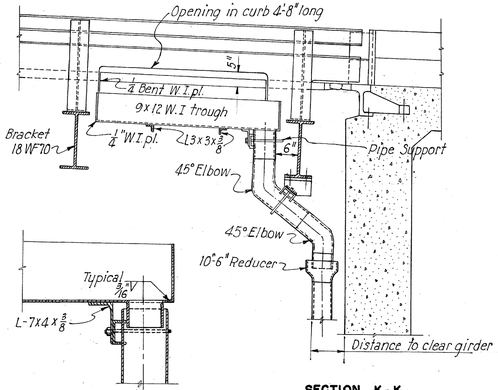

SECTION K-K
Scale: ½"=1'-0"

TYPICAL PIPE CONNECTION TO TROUGH
Scale: 1½"=1'-0"

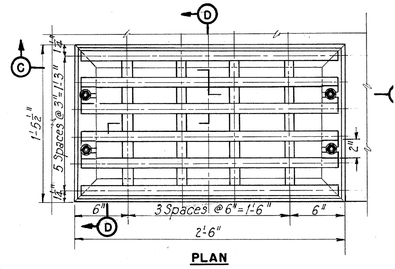

PLAN

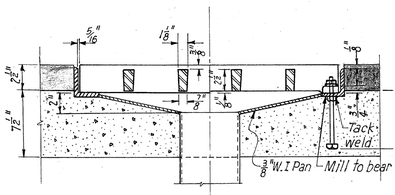

SECTION C-G

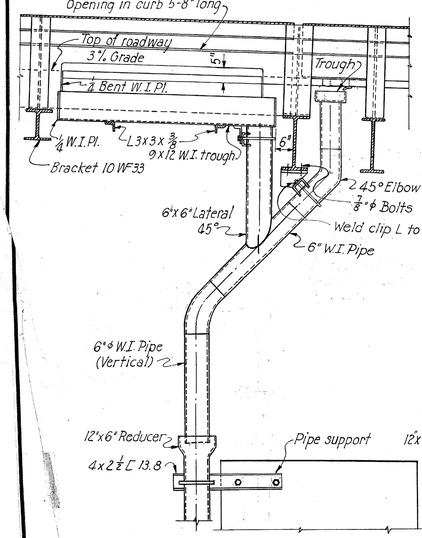

SECTION A-A
Scale: ½"=1'-0"

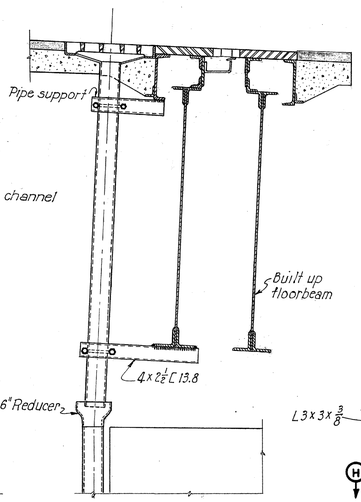

SECTION B-B
Scale: ½"=1'-0"

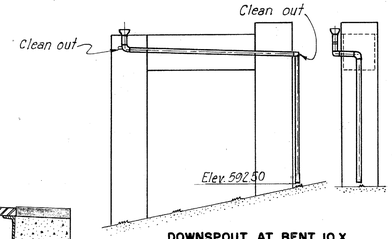

DOWNSPOUT AT BENT 10 X
Scale: ⅛"=1'-0"

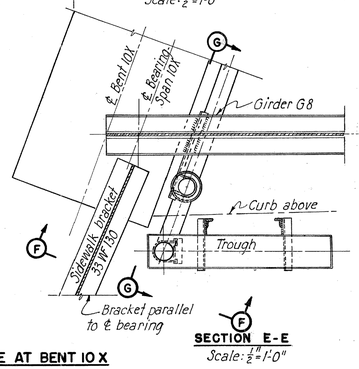

SECTION E-E
Scale: ½"=1'-0"

DRAINAGE AT BENT 10 X

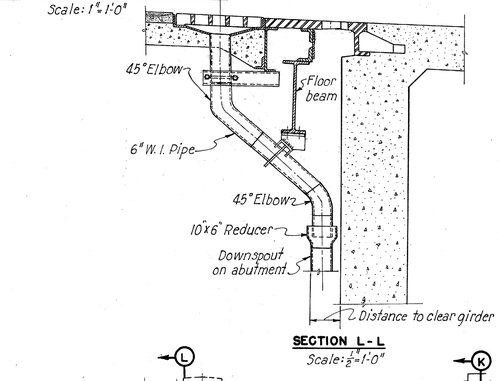

SECTION L-L
Scale: ½"=1'-0"

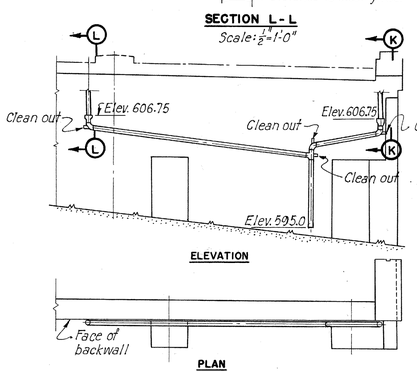

ELEVATION

PLAN

DOWNSPOUTS AT NORTH ABUTMENT
Scale: ⅛"=1'-0"

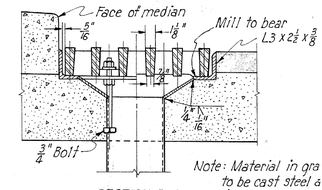

SECTION D-D

ROADWAY INLET
Scale: 1½"=1'-0"
2 Required

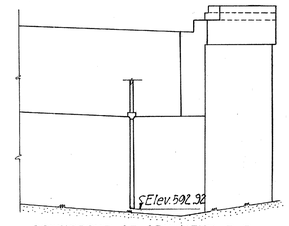

DOWNSPOUT AT ABUTMENT E-E
Scale: ⅛"=1'-0"

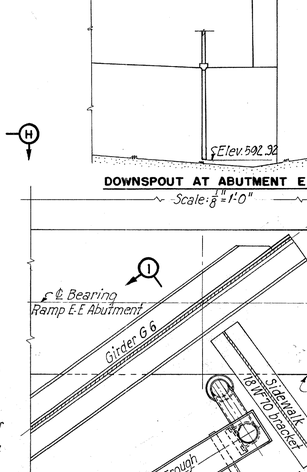

SECTION I-1
Scale: ½"=1'-0"

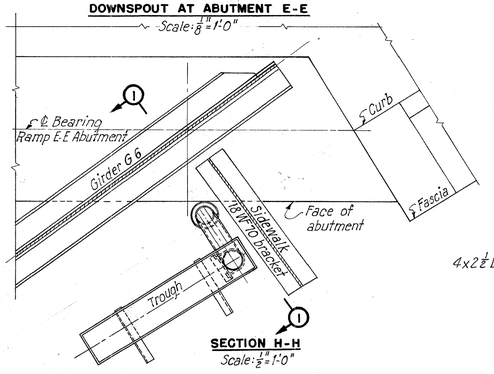

SECTION H-H
Scale: ½"=1'-0"

DRAINAGE AT RAMP E-E ABUTMENT

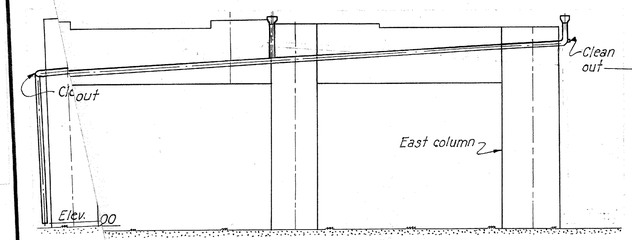

DOWNSPOUT AT BENT 8

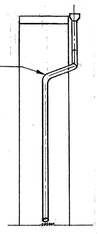

WEST END

DRAINAGE AT BENT 8

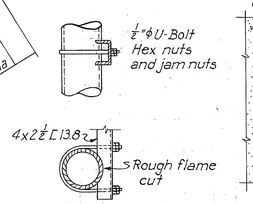

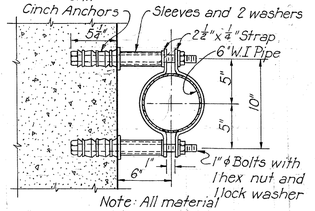

PIPE SUPPORT DETAIL
Scale: 1½"=1'-0"

Note:
All pipe shall be standard weight wrought iron with weld type, extra strong, seamless steel fittings. Special shapes and fittings required shall be extra strong steel weld type fittings. Downspouts on bents and abutments shall be supported at about 5' intervals.
Downspout to be attached to bottom of W.I. trough with continuous 5/16" fillet weld.

PART
TOLEDO EXPRESSWAY SYST
MAUMEE RIVER BRIDGE
BR. NO. LU 120R-35
DRAINAGE
TOLEDO LUCAS COUNTY,

SCALE As shown
MADE B.K.H. DATE 10-13-52
TRCD EJM, RR DATE 11-22-52
CKD J.D.P. DATE 11-25-52

HOWARD, NEEDLES, TAMMEN & BE
CONSULTING ENGINEERS
KANSAS CITY NEW Y

SHEET 810

839

LEE BRUNING CO., INC.

MICROFILMED
JUL 25 1980

FED. ROAD DIV. NO	STATE	FED. AID PROJ. NO.	TYPE FUNDS
2	OHIO	UI-1052(2)	POST WAR

LUCAS COUNTY
CITY OF TOLEDO
TOLEDO EXPRESSWAY SY
MAUMEE RIVER BRIDG
LUC 120R-3.46

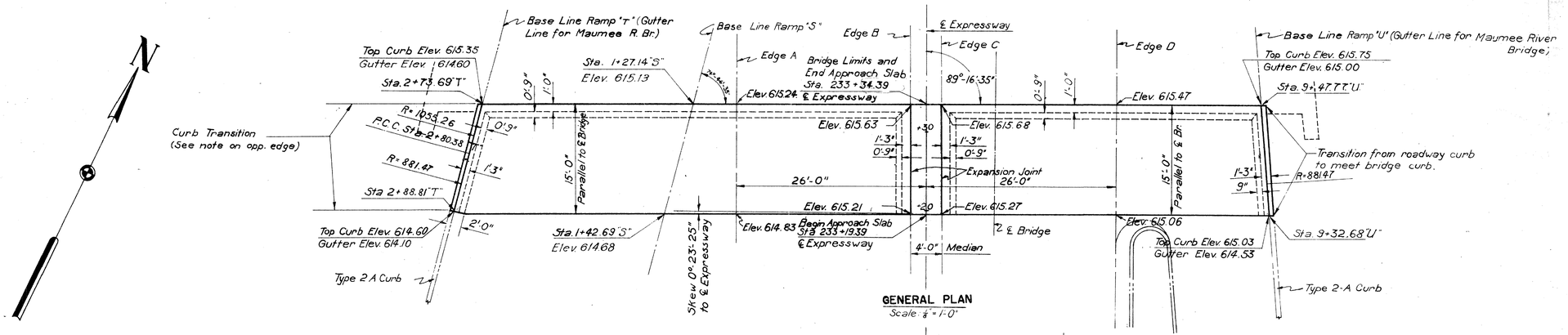

GENERAL PLAN
Scale: 1/8" = 1'-0"

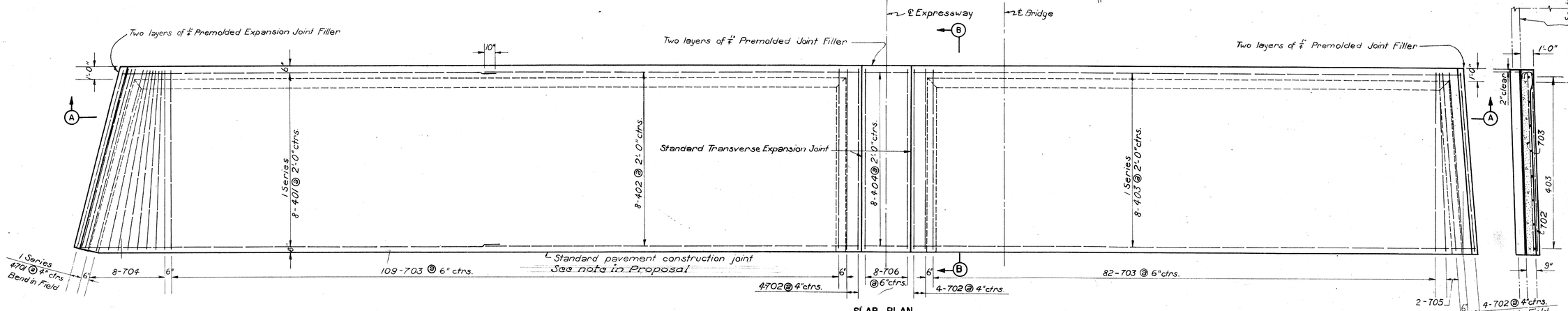

SLAB PLAN
Scale: 1/8" = 1'-0"

SECTION B-B
Scale: 1/4" = 1'-0"

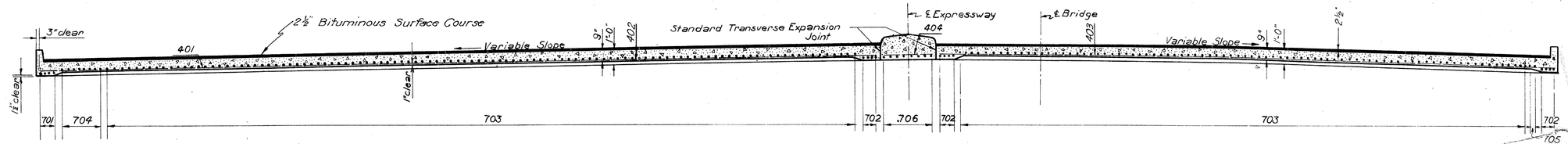

SECTION A-A
Scale: 1/8" = 1'-0"

REINFORCING STEEL SCHEDULE

Mark	Number	Length	Type	Dimensions A	B	C	Weight
401	1 Series of 8	30'-10" to 33'-6"	Str.				170
402	8	30'-0"	Str.				160
403	1 Series of 8	43'-9" to 45'-0"	Str.				240
404	8	3'-6"	Str.				20
#4 *	1	5'-3"	Str.				10
701	1 Series of 4	15'-6" to 15'-9"	101	14'-4" to 14'-7"	1'-2"	6⅛"	130
702	12	15'-7"	101	14'-5"	1'-2"	6⅛"	380
703	191	15'-3"	101	14'-3"	1'-0"	5⅛"	5,990
704	1 Series of 8	15'-3" to 15'-7"	101	14'-3" to 14'-7"	1'-0"	5⅛"	250
705	2	15'-4"	101	14'-4"	1'-0"	5⅛"	60
706	8	14'-6"	Str.				240
#7 *	1	6'-3"	Str.				10
						Total	7,660

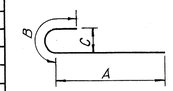

101

*) Test Replacement Bar.

Note:
See Sheet 110 for median dimensions.
Elevations given are top of bituminous surface course.
Subbase will be placed by others.
The cost of reinforcing steel will be included in the price bid for square yards of Item I-7. Weights are given for convenience only.
If dowel assemblies, as detailed on Standard Drawings TJ-№ 1, TJ-№ 2, or TJ-№ 3, cannot be obtained for use in reinforced concrete approach slabs along the concrete median, the dowels may be held in place by any special device approved by the Engineer.

TOLEDO EXPRESSW
MAUMEE RIVER
BR. NO. LU 120F
APPROACH SL.
SOUTH ABUTM
TOLEDO LUCAS COUNT

SCALE As Noted
MADE H.J.G. DATE 7-18-52
TRCD J.W.L. DATE 9-7-52
CKD A.F.S. DATE 8-4-53

HOWARD NEEDLES
CONSUL
KANSAS CITY

740

MICROFILMED
JUL 25 1958

FED. ROAD DIV. NO	STATE	FED. AID PROJ. NO.	TYP FUN
2	OHIO		POS WAR

117A
120

LUCAS COUNTY
CITY OF TOLEDO
TOLEDO **EXPRESSWAY SYSTEM**

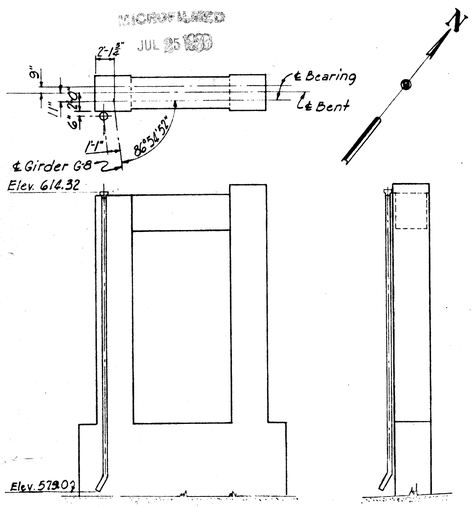

DOWNSPOUT AT BENT 7-X

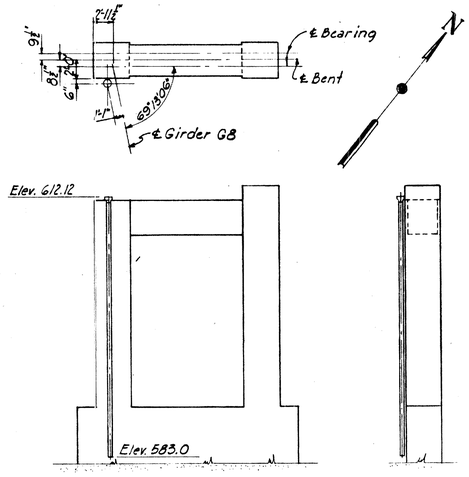

DOWNSPOUT AT BENT 8-X

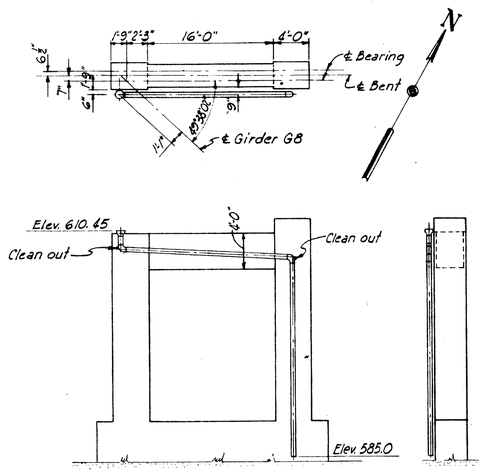

DOWNSPOUT AT BENT 9-X

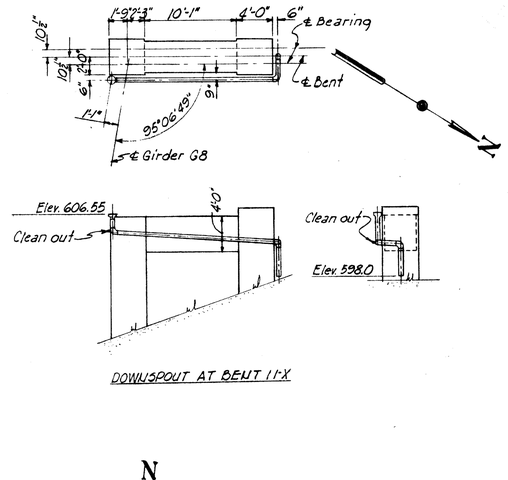

DOWNSPOUT AT BENT 11-X

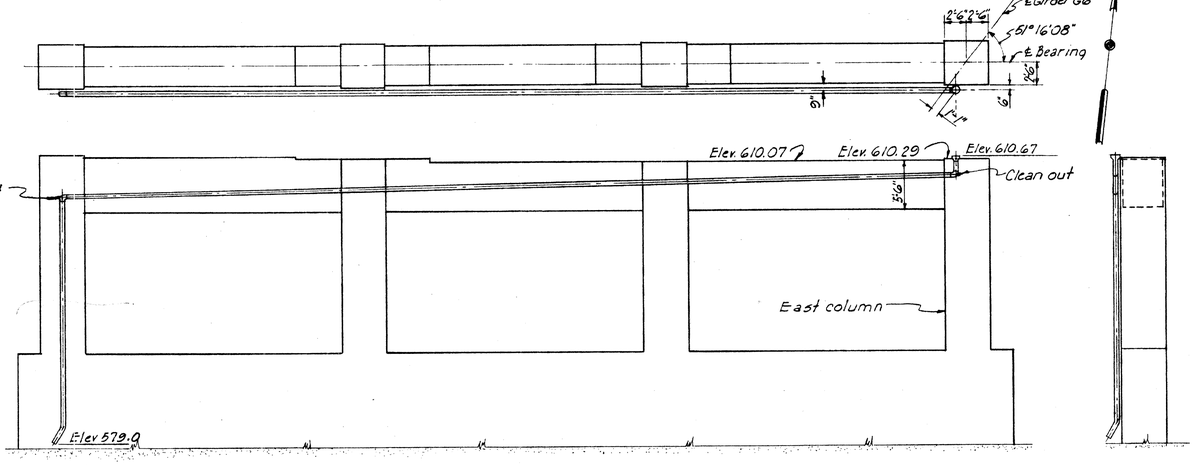

DOWNSPOUT AT BENT 7

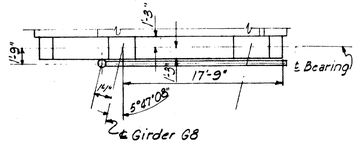

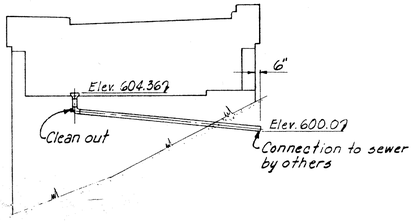

DOWNSPOUT AT RAMP X ABUTMENT

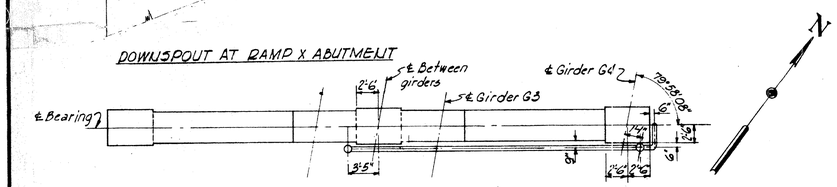

DOWNSPOUT AT BENT 9

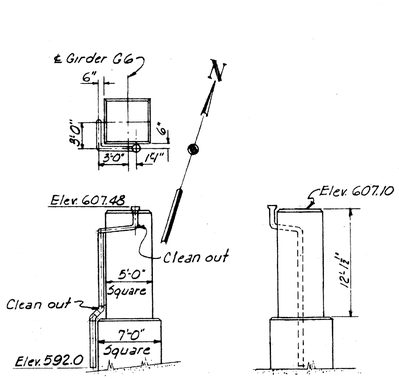

DOWNSPOUT AT EAST PEDESTAL 9-E-E

Notes:

This drawing supplements drawing 3.117 of the Part 3 Plans. In addition to the drainage inlets specified on drawing 3.117 there shall be provided drainage inlets in the low curbs near Bents 7.9, 7x, 8x, 9x, 11x, Ramp X Abutment, Pedestal 9 E-E and a drop inlet west of the median near Bent 9.

The curb openings, W.I. aprons, W.I. troughs and their supports for inlets at Bents 7, 7x, 8x, 9x, 11x and Ramp x Abutment shall be similar to those detailed on drawing 3.117 for inlet near Bent 10x and for Bent 9 and Pedestal 9 E-E shall be similar to those detailed on drawing 3.117 for inlet at Ramp E-E Abutment. Downspout connections to W.I. troughs, girders and concrete surfaces shall be as shown on drawing 3.117. The drop inlet West of the median near Bent 9 shall be similar to that detailed for Bent 8.

Downspouts shall be 6" ϕ standard weight W.I. pipe with extra strong steel weld type fittings and shall be supported on Bents and Abutments at about 5 foot intervals. Minimum grade on downspouts shall be 2%.

PART 3

TOLEDO **EXPRESSWAY SYSTEM**

MAUMEE RIVER BRIDGE
BR. NO. LU-120-35

ADDITIONAL DRAINAGE FACILITIES

TOLEDO LUCAS COUNTY, OHIO

SCALE 3/4" = 1'-0"
MADE LL DATE 4-19-54
TRCD. DATE
CKD. JT DATE 4-27-54

HOWARD, NEEDLES, TAMMEN & BERGENDOFF
CONSULTING ENGINEERS
KANSAS CITY NEW YORK

SHEET 3.117

839-A

MICROFILMED
JUL 25 1963

ROAD NO.	STATE	FED. AID PROJ. NO.	TYPE FUNDS
2	OHIO	UI-105-2(2)	POST WAR

LUCAS COUNTY
CITY OF TOLEDO
TOLEDO EXPRESSWAY SYST
MAUMEE RIVER BRIDGE
LUC 120 R-3.46

PA-WW

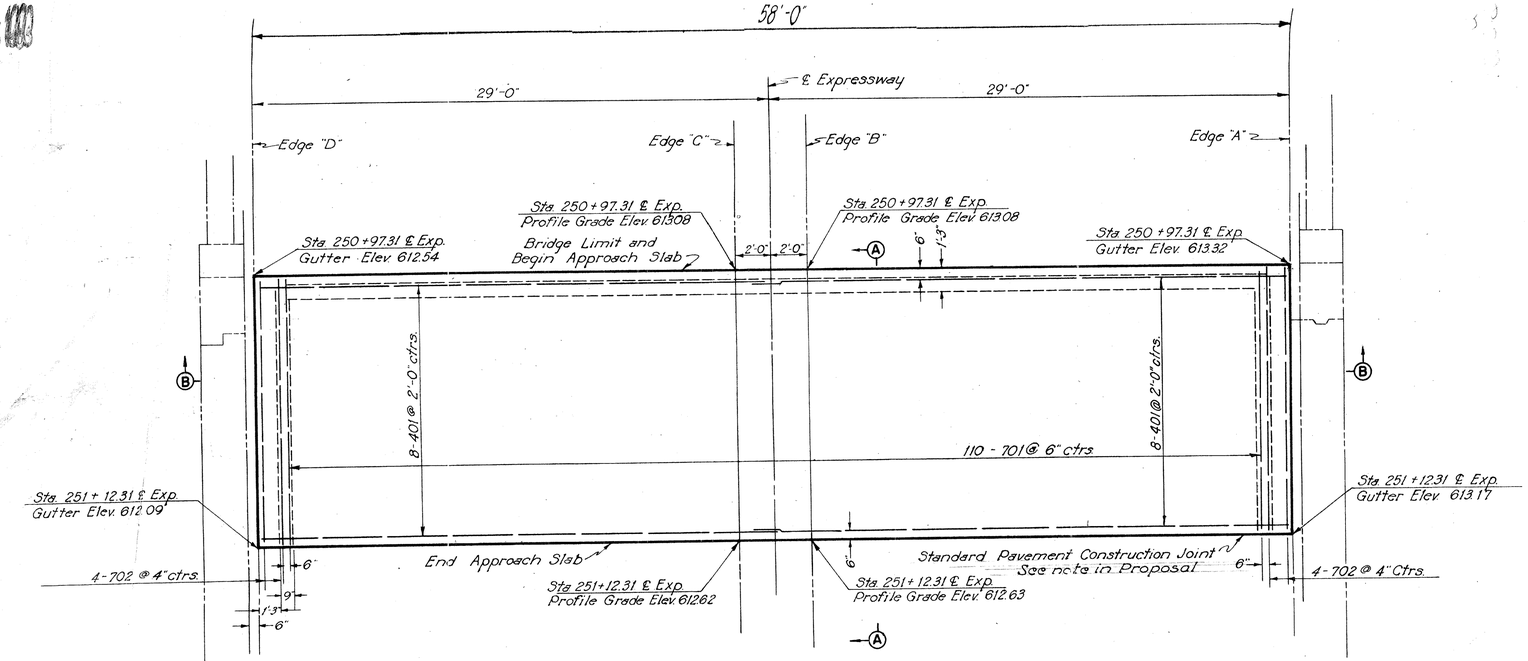

GENERAL PLAN
APPROACH SLAB
Scale: 1/4" = 1'-0"

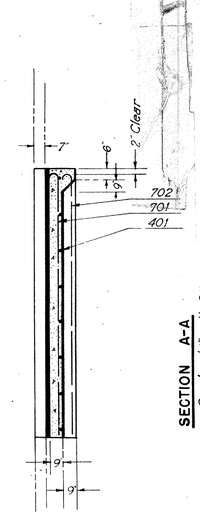

SECTION A-A
Scale: 1/4" = 1'-0"

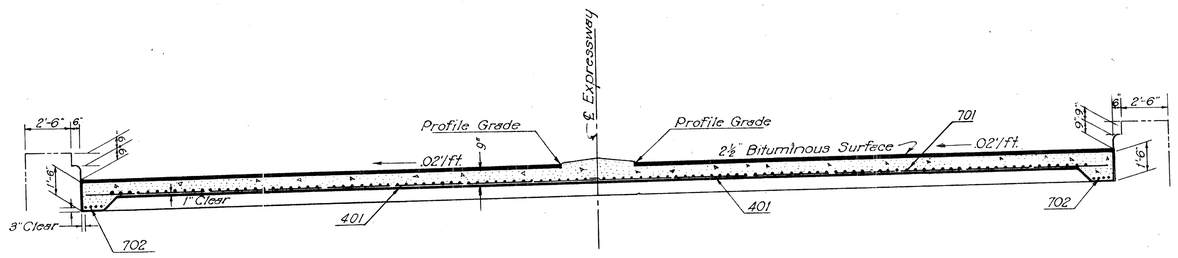

SECTION B-B
Scale: 1/4" = 1'-0"

Note:
Stationing shown is on ℄ Expressway. Lines denoting end of Approach Slab shall be a radial line to ℄ Expressway.
Payment for raised Median across Approach Slab shall be considered included in the unit price bid for the reinforced concrete Approach Slab.
Elevations given are top of bituminous surface course.

Subbase will be placed by contractor on adjacent project. The cost of reinforcing steel will be included in the price bid for square yards of Item I-7. Weights are given for convenience only.

P-4
P

REINFORCING STEEL SCHEDULE

Mark	Number	Length	Type	Dimensions A	B	C	Weight
401	16	29'6"	Str.				320
#4 *	1	5'-3"	Str.				10
701	110	15'-4"	101	14'-4"	1'-0"	5⅝"	3,450
702	8	15'-5"	101	14'-3"	1'-2"	6⅞"	250
#7 *	1	6'-3"	Str.				10
						Total	4,040

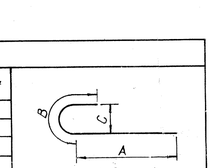

*) Test Replacement Bar.

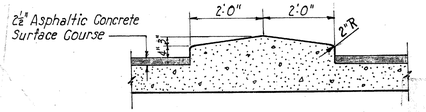

APPROACH SLAB MEDIAN
Scale: 1/2" = 1'-0"

TOLEDO EXPRE
MAUMEE
TOLEDO
SCALE As Shown
MADE D.G.M. DATE 5-2
D.H. DATE 9-9
DATE 9-