FED. ROAD DIVISION	STATE	PROJECT		236 / 288
2	OHIO			

LUCAS COUNTY
CITY OF TOLEDO
TOLEDO EXPRESSWAY SYSTEM
EXPRESSWAY - PART 26
LUC-75-6.14

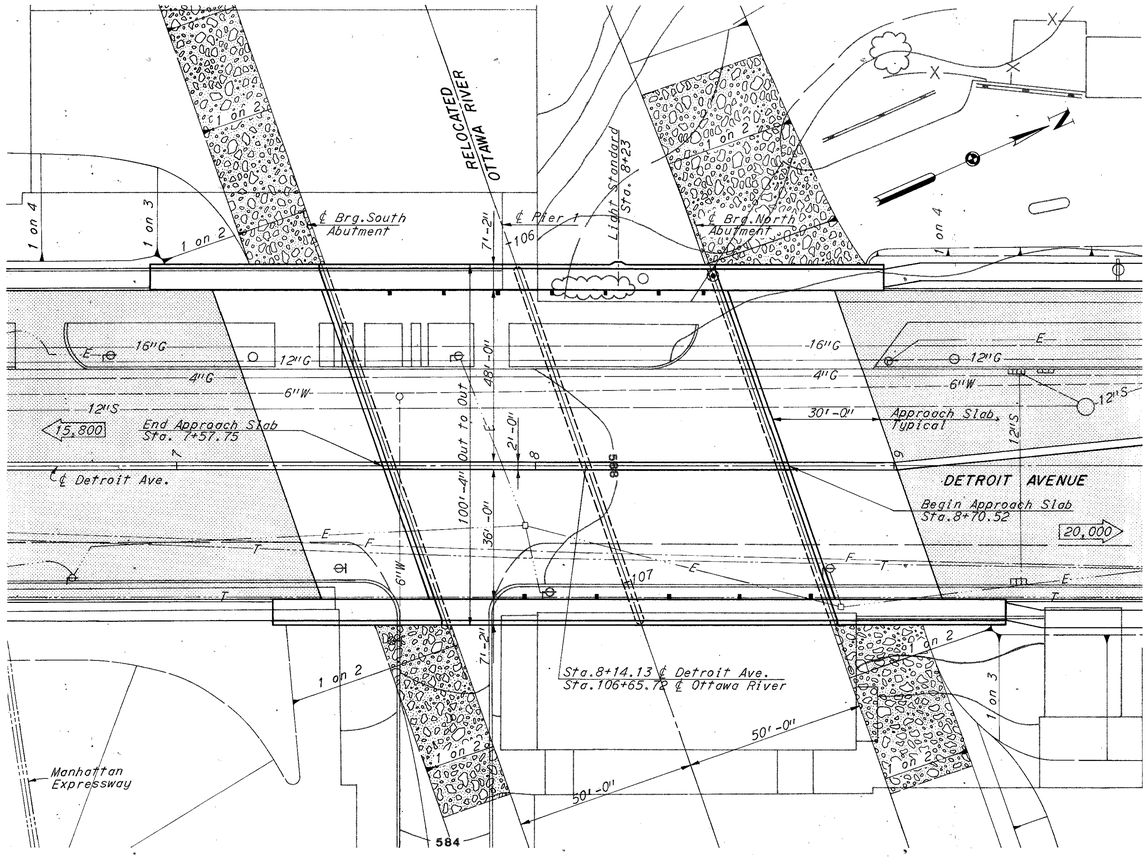

PLAN

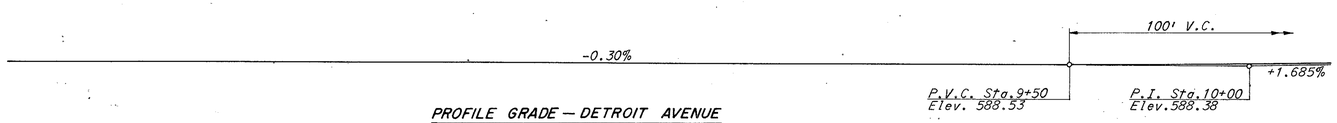

PROFILE GRADE — DETROIT AVENUE

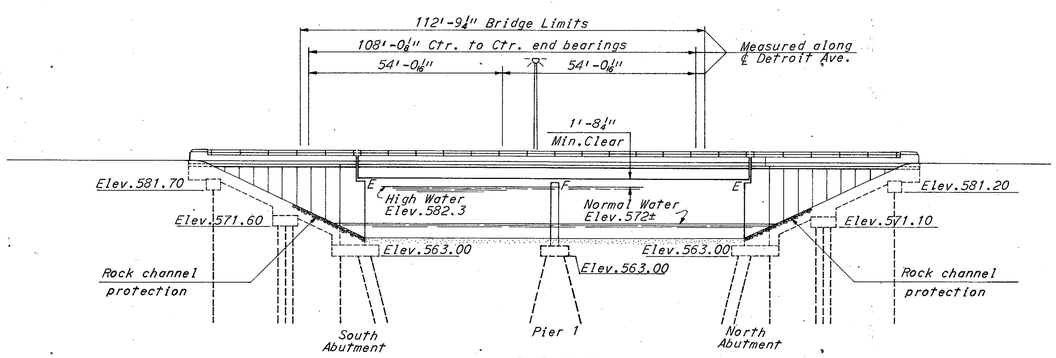

ELEVATION

ESTIMATED QUANITITIES

ITEM	TOTAL	UNIT	DESCRIPTION	ABUTMENTS	PIER	WINGWALLS	SUPERSTR.	GENERAL
503	Lump Sum	Lump Sum	Cofferdams, Cribs and Sheeting					
503	1,250	Cu.Yd.	Unclassified Excavation	795	205	250		
505	Lump Sum	Lump Sum	First Test Pile					
507	8,580	Lin.Ft.	12" Cast-In-Place Reinforced Concrete Piles	5,490	1,530	1,560		
509	223,990	Lbs.	Reinforcing Steel	84,070	15,420	34,140	90,360	
511	345	Cu.Yd.	Class "C" Concrete (Superstructure)				345	
511	133	Cu.Yd.	Class "C" Concrete (Pier Wall)		133			
511	595	Cu.Yd.	Class "C" Concrete (Abutments, Wingwalls above Footings)	415		180		
511	455	Cu.Yd.	Class "C" Concrete (Abutment, Wingwall and Pier Footings)	310	95	50		
512	175	Lin.Ft.	Waterproofing Premolded Sealing Strip	175				
513	289,500	Lbs.	Structural Steel				289,500	
514	289,500	Lbs.	Field Painting of Structural Steel				289,500	
516	396	Sq.Ft.	½" Preformed Expansion Joint Filler	360	36			
517	408	Lin.Ft.	Bridge Sidewalk Railing (including concrete parapet)			188	220	
518	12	Each	Scuppers Type 1 (Including Supports)				14	
518	335	Cu.Yd.	Porous Backfill	220		115		
625			For Lighting quantities see lighting detail sheet 161					
808	345	Units	Water Reducing, Set-retarding Admixture				345	
825	1,545	Sq.Yd.	Concrete Surface Treatment	55		195	1,295	
518	96	Lin. Ft.	8" Perforated C.M.P. (Including Specials) 707.01	96				

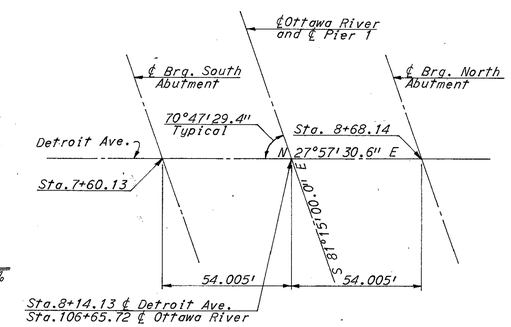

LAYOUT SKETCH

Notes:
The following items are not included in the bridge plans. See roadway plans for details.
1. Relocation or removal of existing utilities.
2. Approach grading, pavements and slabs.
3. Guardrails
4. Rock channel protection

Denotes one way average daily traffic.

Earthwork limits shown are schematic. Actual slopes shall conform to plan cross-sections.

⊙ Denotes point of minimum vertical clearance.
■ Denotes Type 1 scupper.

All piles shall be 12" cast-in-place concrete with an average estimated length of 45'-0" for the South Abutment, 45'-0" for Pier 1 and 45'-0" for The North Abutment. These estimates are based on boring data and are approximate only. The contractor shall assume full responsibility for the length of piling selected for driving.

PROPOSED STRUCTURE

Type: Continuous rolled beam with reinforced concrete slab and substructure
Spans: 54'-0⅛", 54'-0⅛" = 108'-0¼" ctr. to ctr. end bearings measured along ℄ Detroit Ave.
Roadway: 1-36'-0" and 1-48'-0" with 2-6'-0" sidewalks and 1-2'-0" raised median
Loading: HS20-44
Skew: 19°12'30.6"
Wearing Surface: 1" Monolithic concrete
Approach Slabs: AS-1-67 (30'-0" long)
Alignment: Tangent

Relocated Ottawa River
50 Year Flood Data
H.W. Elev. 582.3
Q = 6,000 c.f.s.
4.3 f.p.s.

This sheet supersedes sheet No. 236 1-9-70

H.N.T.B. BRIDGE NO. 15

HOWARD, NEEDLES, TAMMEN & BERGENDOFF
CONSULTING ENGINEERS
KANSAS CITY CLEVELAND NEW YORK

1 / 14

SITE PLAN

DETROIT AVENUE OVER
RELOCATED OTTAWA RIVER
BR. NO. LUC-75-0612 STA. 7+57.75
SCALE: STA. 8+70.52

TOLEDO EXPRESSWAY SYSTEM
TOLEDO LUCAS COUNTY OHIO

DRAWN G.W.R.	TRACED	CHECKED S.C.	REVIEWED	REVISED
DATE 2-27-69	DATE	DATE 4-10-69	DATE	SHEET 236

FED. ROAD DIVISION	STATE	PROJECT	
2	OHIO		

237 / 288

LUCAS COUNTY
CITY OF TOLEDO
TOLEDO EXPRESSWAY SYSTEM
EXPRESSWAY - PART 26
LUC-75-6.14

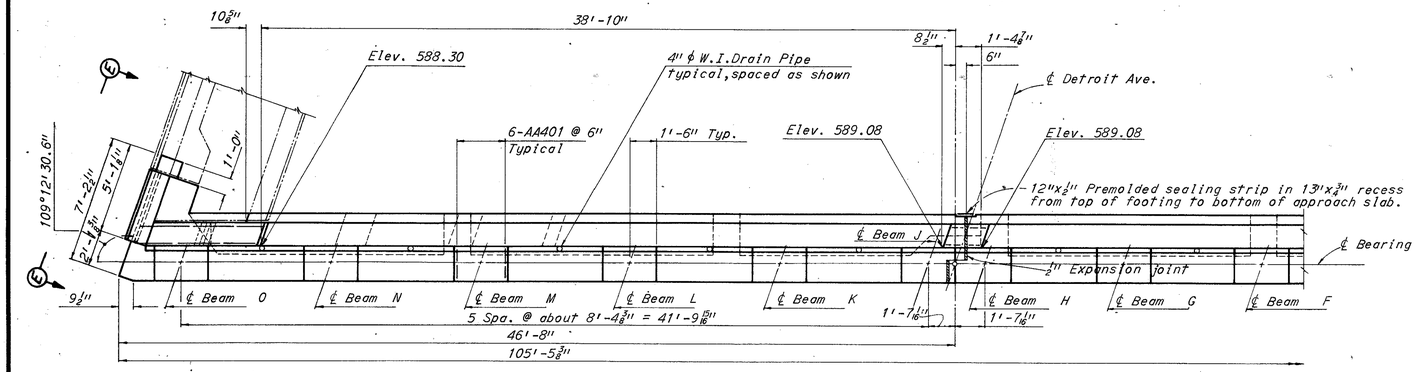

PLAN

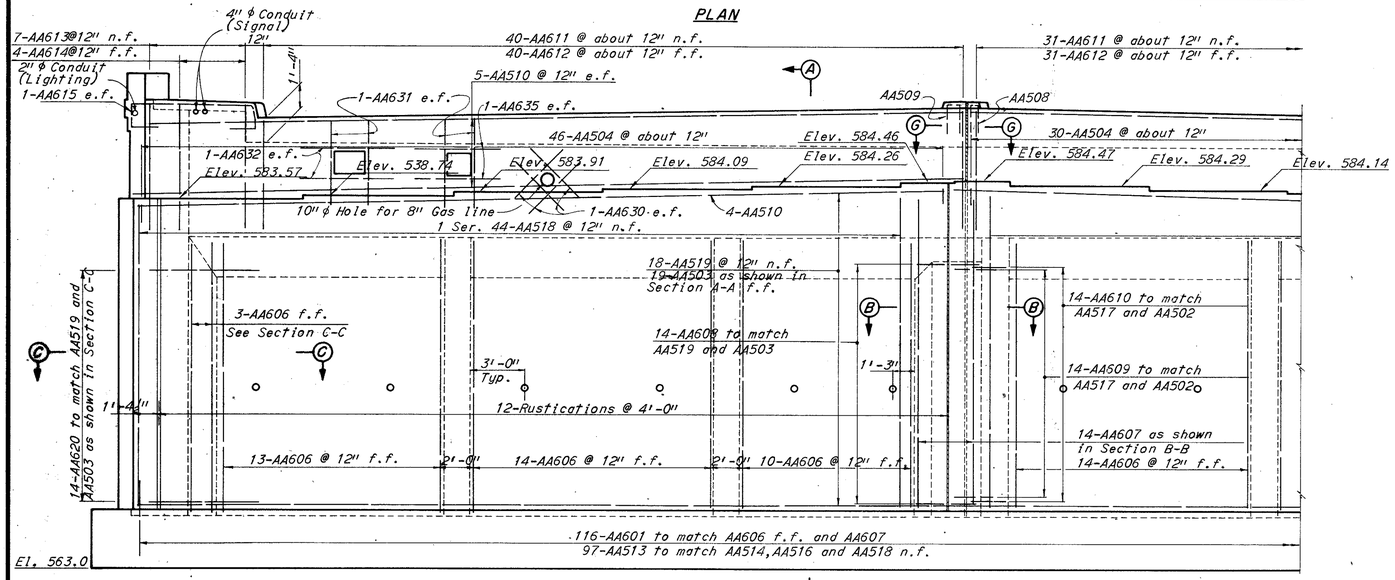

ELEVATION

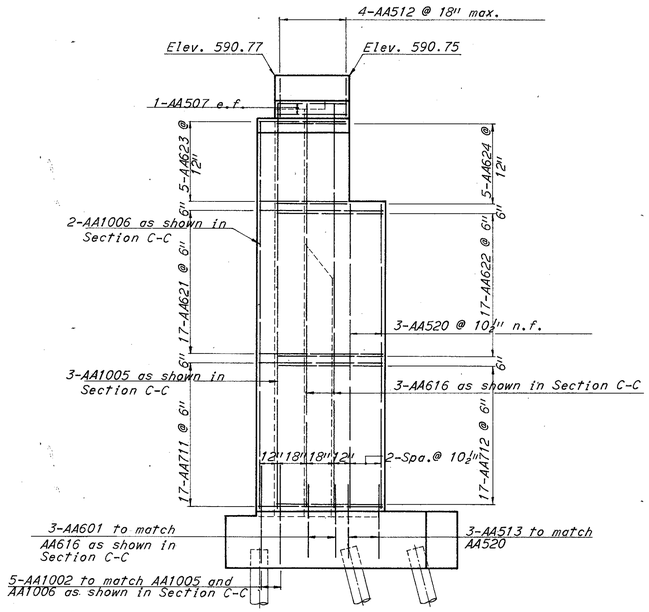

VIEW E-E

Note: For notes and sections see Sheet 6/14

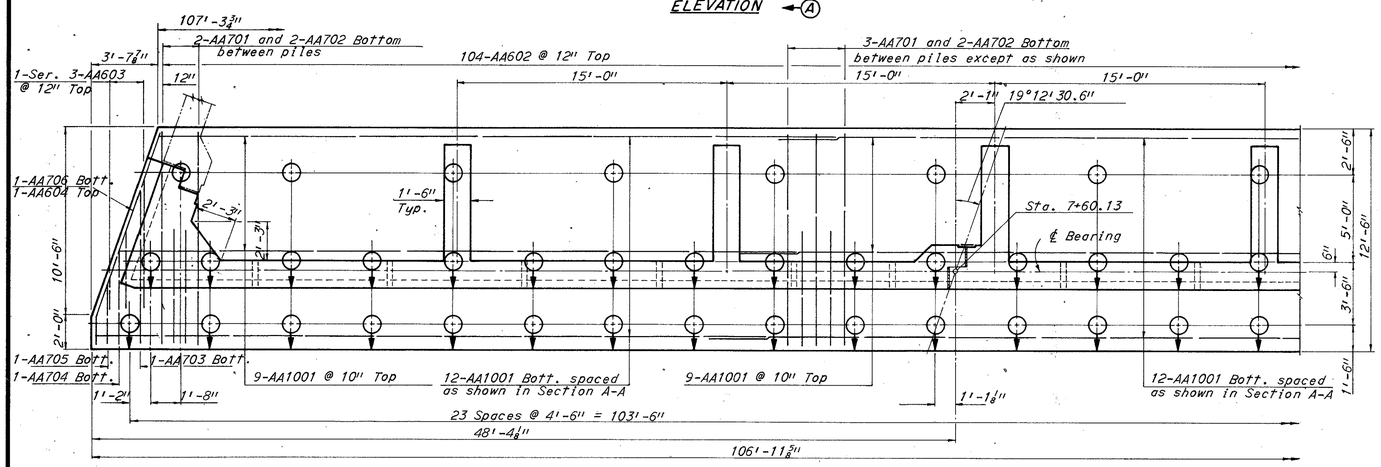

FOOTING PLAN

H.N.T.B. BRIDGE NO. 15

HOWARD, NEEDLES, TAMMEN & BERGENDOFF
CONSULTING ENGINEERS
KANSAS CITY CLEVELAND NEW YORK

2/14

SOUTH ABUTMENT

DETROIT AVENUE OVER
RELOCATED OTTAWA RIVER

BR. NO. LUC-75-0612 STA. 7+57.75
SCALE: STA. 8+70.52

TOLEDO EXPRESSWAY SYSTEM

TOLEDO LUCAS COUNTY OHIO

DRAWN S.C.	TRACED	CHECKED G.W.R.	REVIEWED	REVISED
DATE 3-3-69	DATE	DATE 3-31-69	DATE	SHEET 237

FED. ROAD DIVISION	STATE	PROJECT		238 / 288
2	OHIO			

LUCAS COUNTY
CITY OF TOLEDO
TOLEDO EXPRESSWAY SYSTEM
EXPRESSWAY - PART 26
LUC-75-6.14

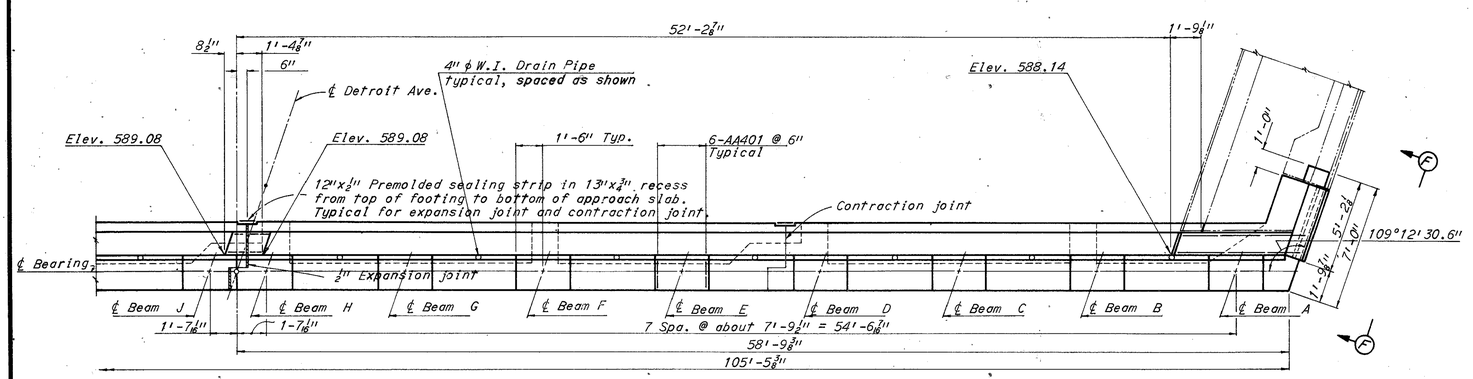

PLAN

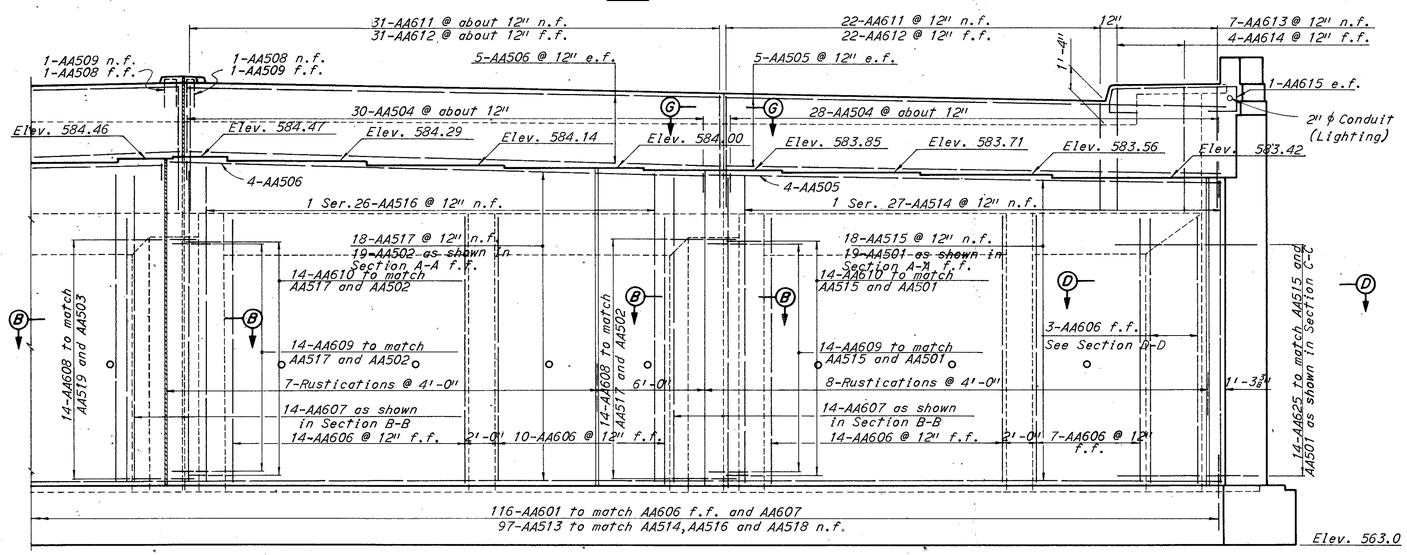

ELEVATION

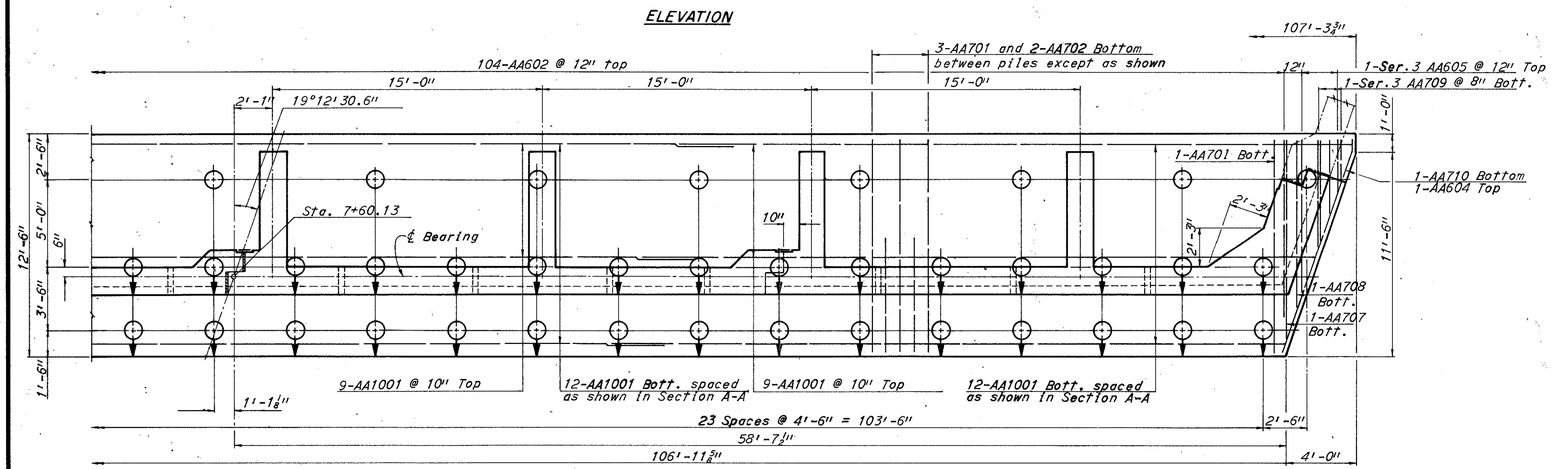

FOOTING PLAN

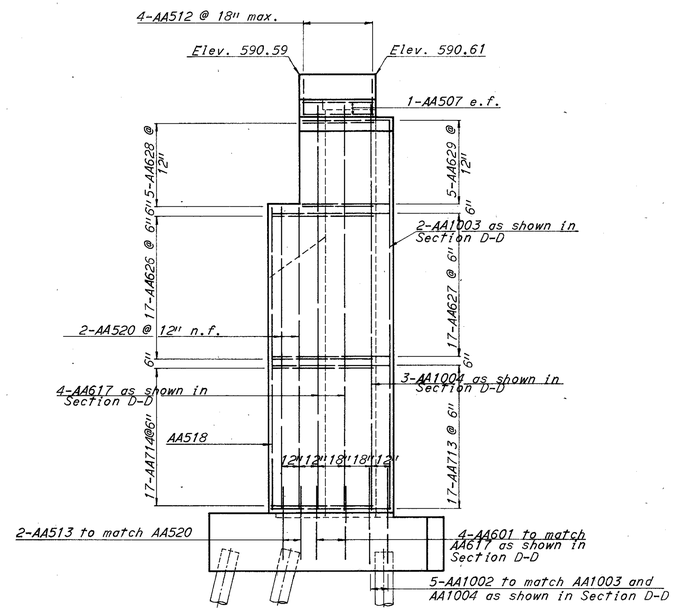

VIEW F-F

Note: For notes and sections see Sheet 6/14

H.N.T.B. BRIDGE NO. 15

HOWARD, NEEDLES, TAMMEN & BERGENDOFF — 3/14
CONSULTING ENGINEERS
KANSAS CITY CLEVELAND NEW YORK

SOUTH ABUTMENT

DETROIT AVENUE OVER
RELOCATED OTTAWA RIVER

BR. NO. LUC-75-0612 STA. 7+57.75
SCALE: STA. 8+70.52

TOLEDO EXPRESSWAY SYSTEM

TOLEDO LUCAS COUNTY OHIO

DRAWN	TRACED	CHECKED	REVIEWED	REVISED
S.C.		G.W.R.		
DATE 3-3-69	DATE	DATE 3-31-69	DATE	SHEET 238

FED. ROAD DIVISION	STATE	PROJECT	
2	OHIO		

239
288

LUCAS COUNTY
CITY OF TOLEDO
TOLEDO EXPRESSWAY SYSTEM
EXPRESSWAY - PART 26
LUC-75-6.14

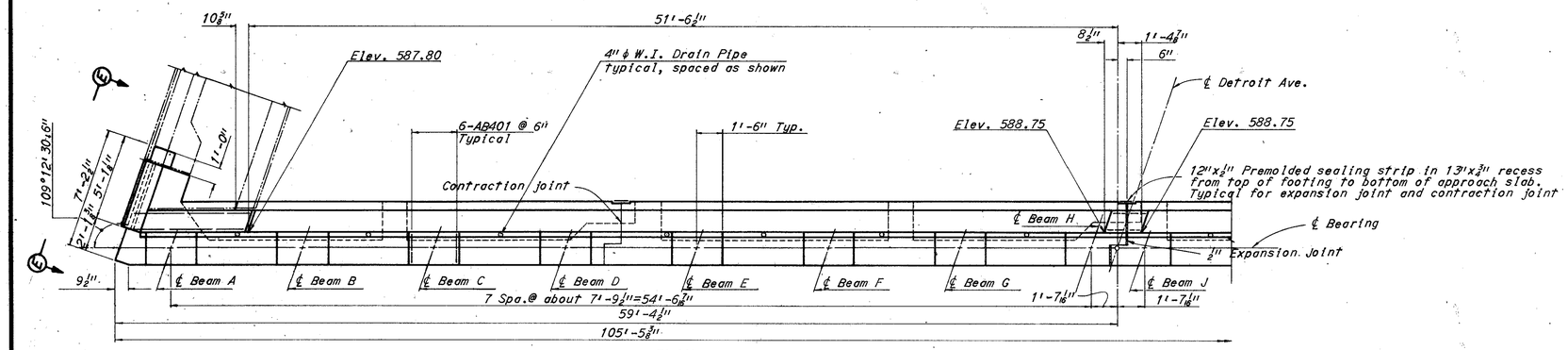

PLAN

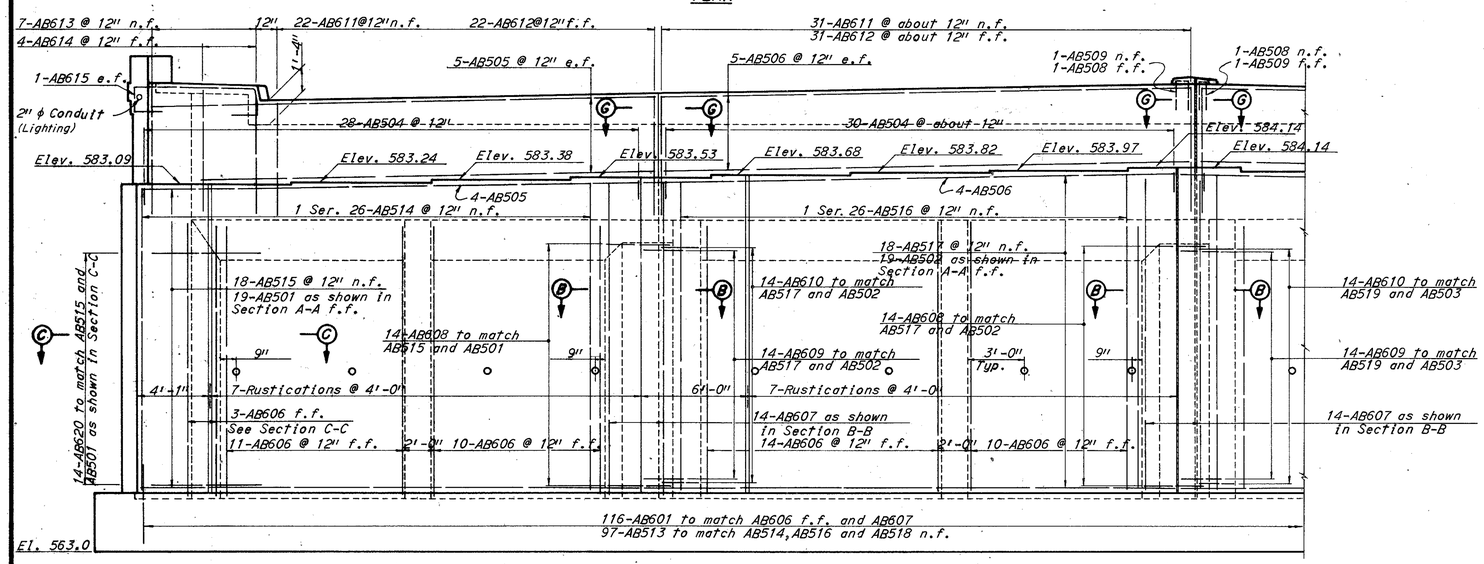

ELEVATION

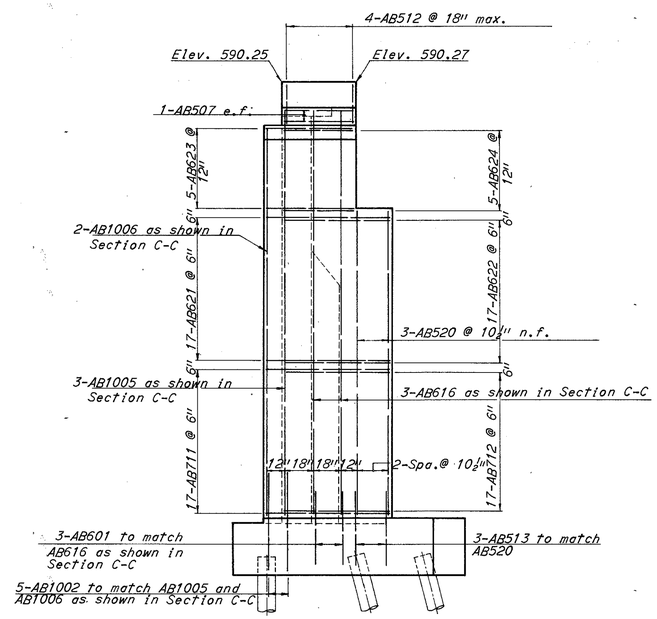

VIEW E-E

Note:
For notes and sections see Sheet 6/14

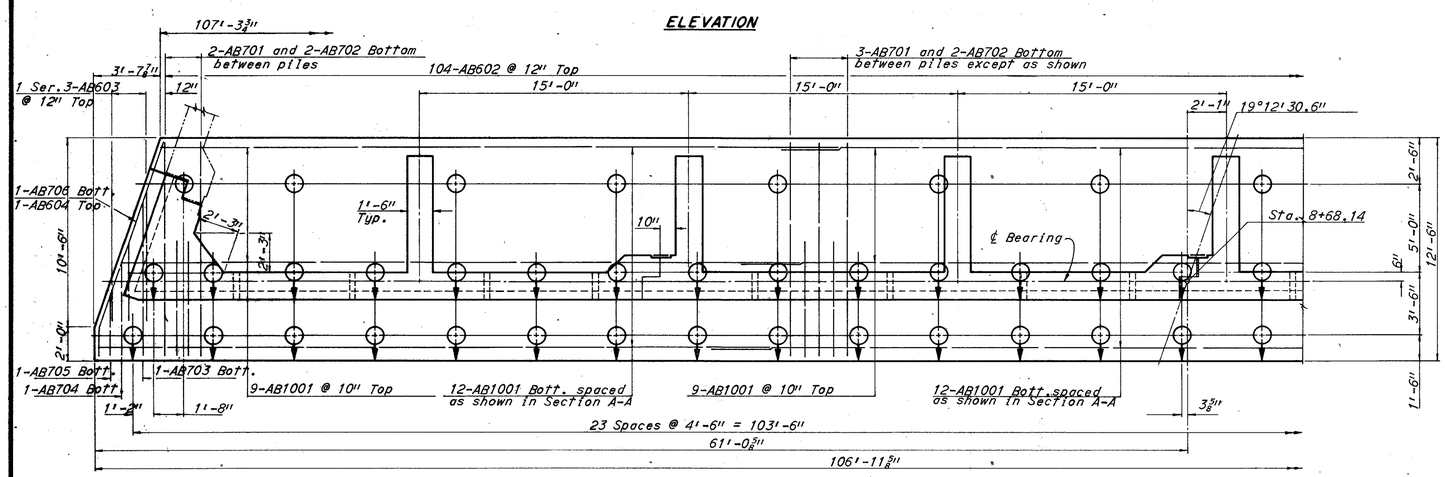

FOOTING PLAN

H.N.T.B. BRIDGE NO. 15

HOWARD, NEEDLES, TAMMEN & BERGENDOFF
CONSULTING ENGINEERS
KANSAS CITY CLEVELAND NEW YORK

4/14

NORTH ABUTMENT

DETROIT AVENUE OVER
RELOCATED OTTAWA RIVER

BR. NO. LUC-75-0612 STA. 7+57.75
SCALE: STA. 8+70.52

TOLEDO EXPRESSWAY SYSTEM

TOLEDO LUCAS COUNTY OHIO

DRAWN S.C.	TRACED	CHECKED G.W.R.	REVIEWED	REVISED
DATE 3-3-69	DATE	DATE 3-31-69	DATE	SHEET 239

FED. ROAD DIVISION	STATE	PROJECT		240 / 288
2	OHIO			

LUCAS COUNTY
CITY OF TOLEDO
TOLEDO EXPRESSWAY SYSTEM
EXPRESSWAY - PART 26
LUC-75-6.14

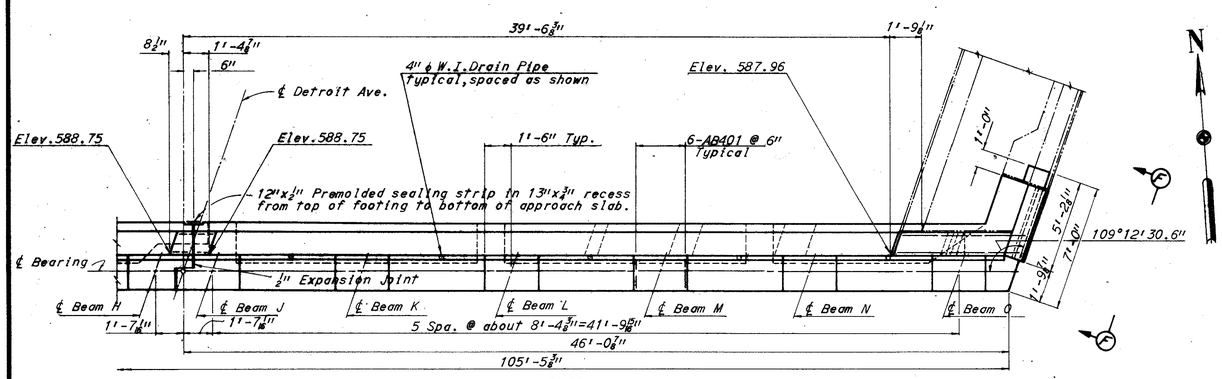

PLAN

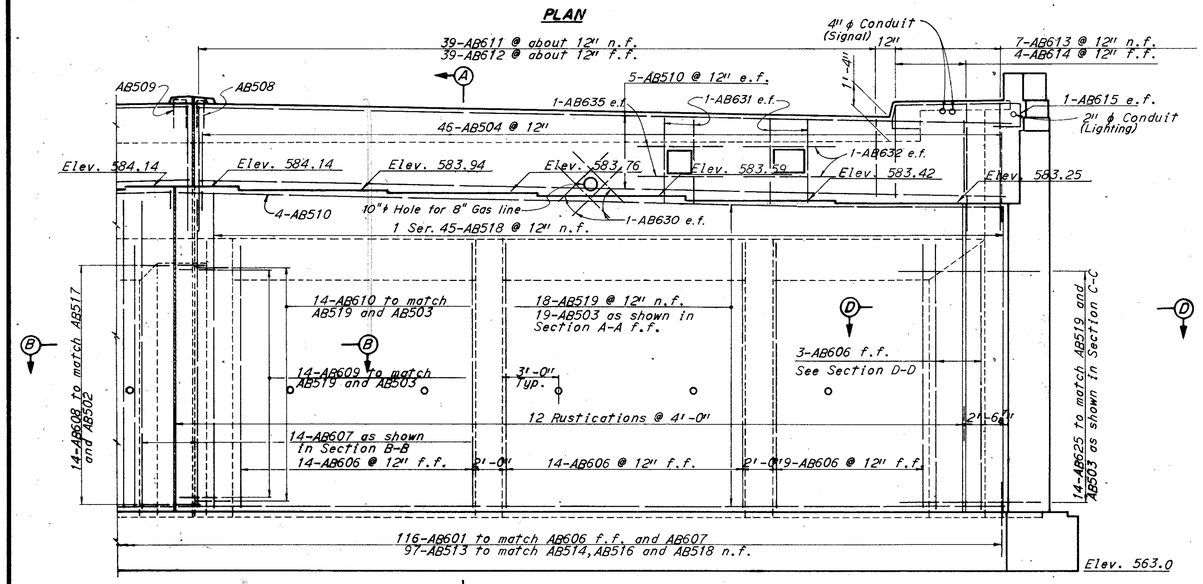

ELEVATION

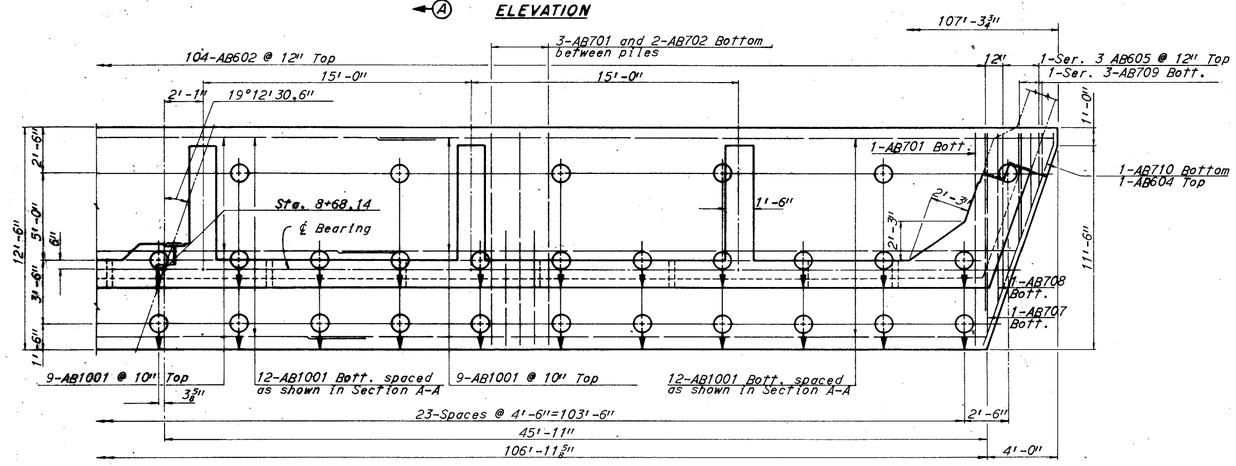

FOOTING PLAN

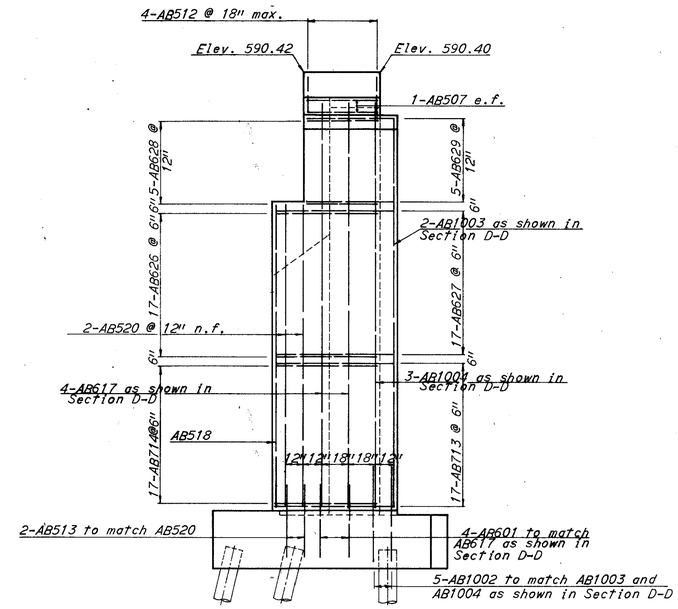

VIEW F-F

Note: For notes and sections see Sheet 6/14

H.N.T.B. BRIDGE NO. 15

HOWARD, NEEDLES, TAMMEN & BERGENDOFF 5/14
CONSULTING ENGINEERS
KANSAS CITY CLEVELAND NEW YORK

NORTH ABUTMENT

DETROIT AVENUE OVER
RELOCATED OTTAWA RIVER

BR. NO. LUC-75-0612 STA. 7+57.75
SCALE: STA. 8+70.52

TOLEDO EXPRESSWAY SYSTEM

TOLEDO LUCAS COUNTY OHIO

DRAWN S.C.	TRACED	CHECKED G.W.R.	REVIEWED	REVISED
DATE 3-3-69	DATE	DATE 3-31-69	DATE	SHEET 240

FED. ROAD DIVISION	STATE	PROJECT	
2	OHIO		

241
288

LUCAS COUNTY
CITY OF TOLEDO
TOLEDO EXPRESSWAY SYSTEM
EXPRESSWAY - PART 26
LUC-75-6.14

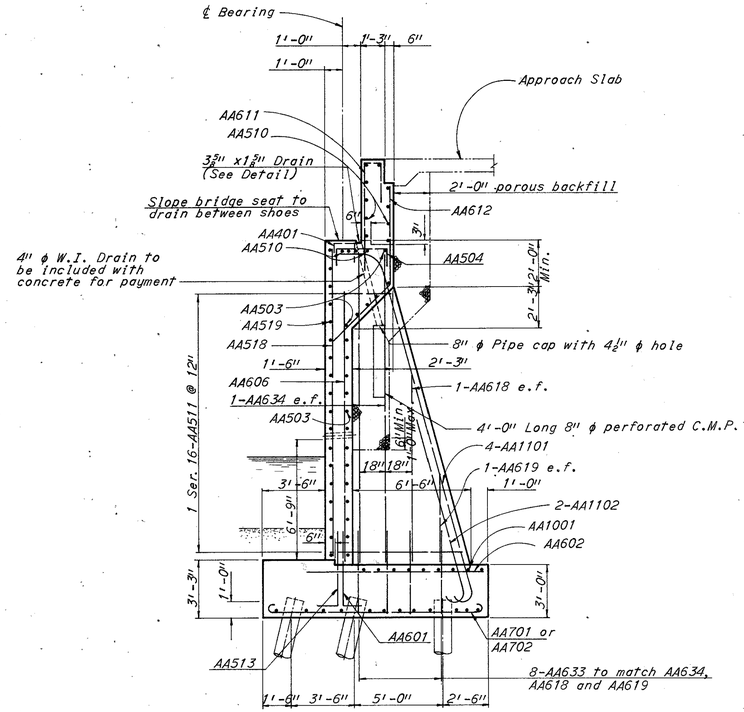

SECTION A-A

Note:
Section A-A shown is for South Abutment. North Abutment similar except for bar marks.

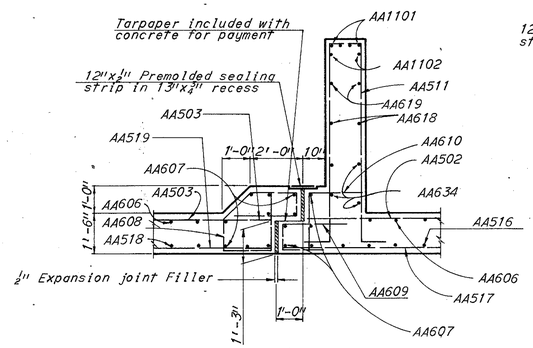

SECTION B-B

Note:
Section B-B shown is for South Abutment. Section for North Abutment is similar except for bar marks.
Section B-B shown is at expansion joint. Section at contraction joint is similar except no expansion joint filler.

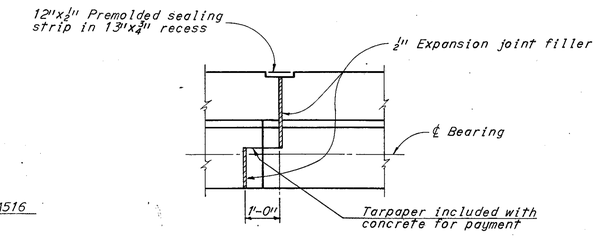

SECTION G-G

Note:
Section G-G shown is at expansion joint. Section at contraction joint is similar except no expansion joint filler.

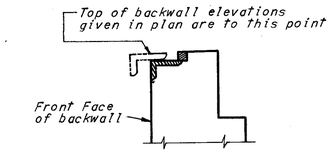

BACKWALL ELEVATION

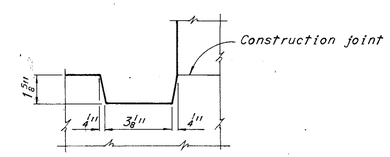

ABUTMENT BRIDGE SEAT DRAIN DETAIL

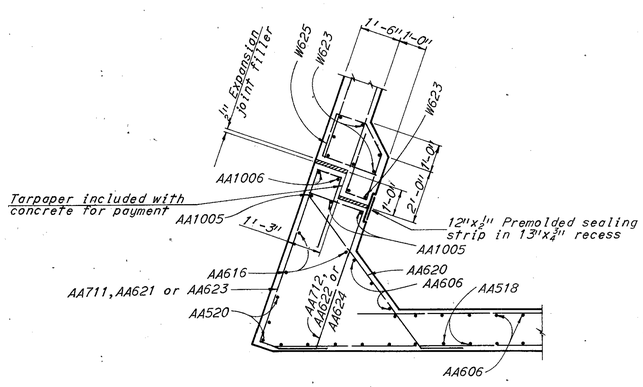

SECTION C-C

Note:
Sections C-C and D-D shown are for South Abutment. Sections for North Abutment are similar except for bar marks.

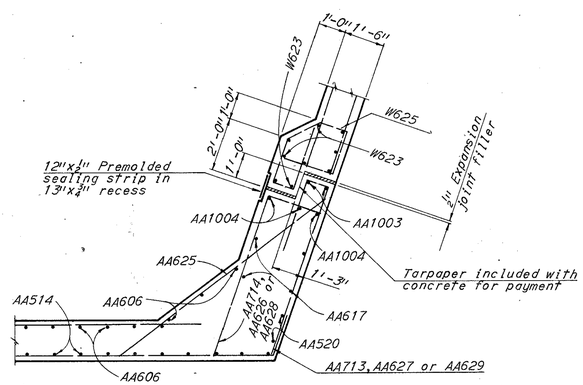

SECTION D-D

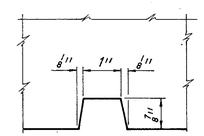

RUSTICATION DETAIL

Notes:
For roadway end dam details see Ohio Standard Drawing SD-1-65, Sheet 1 and 2 of 3.
AA401 and AB401 bars shall be placed 2½"± below top of bridge seat.
n.f. denotes near face, f.f. denotes for face, and e.f. denotes each face.
For reinforcement schedule see Sheet 12/14
For longitudinal parapet reinforcement and railing post spacing see Sheet 287
All battered piles are battered 3 in 12.
Pile dimensions are measured along bottom of footing.
All piles are 12"ϕ cast-in-place concrete.
Denotes battered piles and direction of batter.
For sidewalk and parapet details see Sheet 286

H.N.T.B. BRIDGE NO. 15

HOWARD, NEEDLES, TAMMEN & BERGENDOFF
CONSULTING ENGINEERS
KANSAS CITY CLEVELAND NEW YORK

6/14

ABUTMENT DETAILS

DETROIT AVENUE OVER
RELOCATED OTTAWA RIVER

BR. NO. LUC-75-0612 STA. 7+57.75
SCALE: STA. 8+70.52

TOLEDO EXPRESSWAY SYSTEM
TOLEDO LUCAS COUNTY OHIO

DRAWN	TRACED	CHECKED	REVIEWED	REVISED
S.C.		G.W.R.		
DATE 3-3-69	DATE	DATE 3-31-69	DATE	SHEET 241

FED. ROAD DIVISION	STATE	PROJECT	
2	OHIO		

242 / 288

LUCAS COUNTY
CITY OF TOLEDO
TOLEDO EXPRESSWAY SYSTEM
EXPRESSWAY - PART 26
LUC-75-6.14

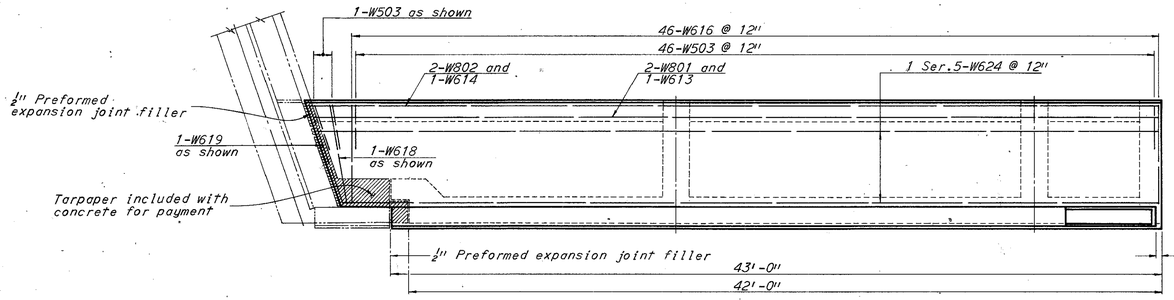

PLAN

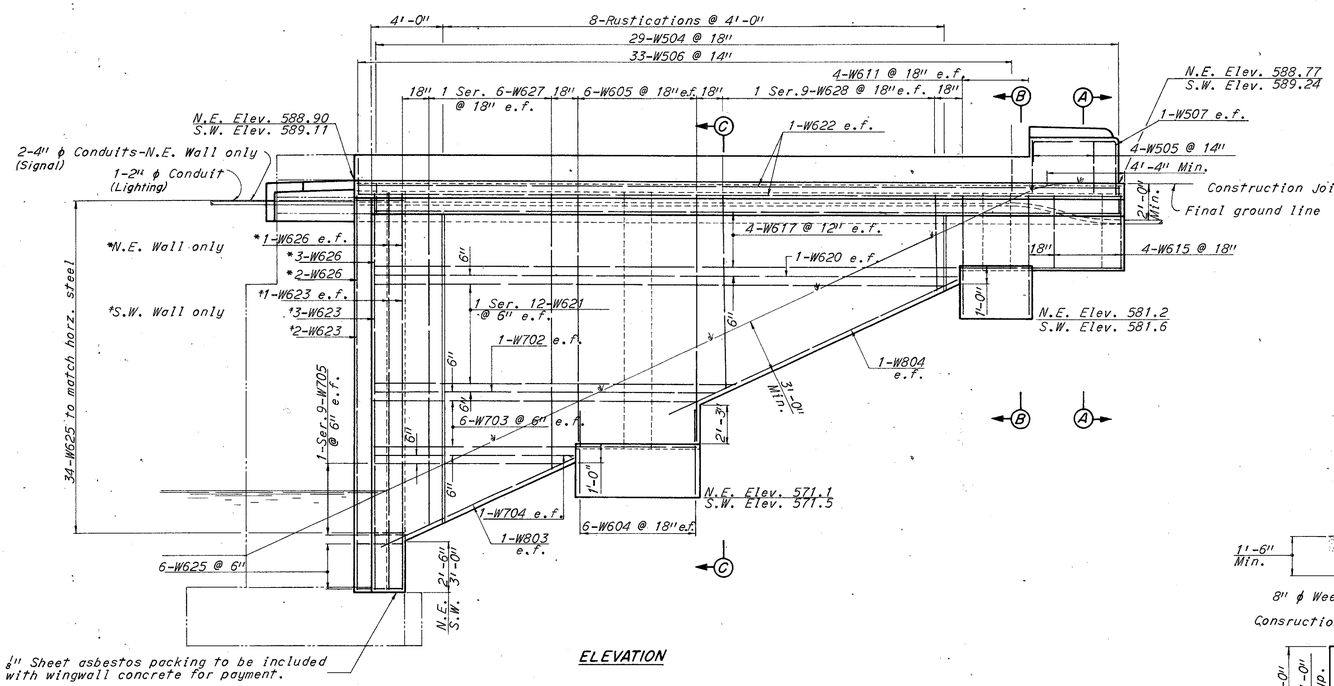

ELEVATION

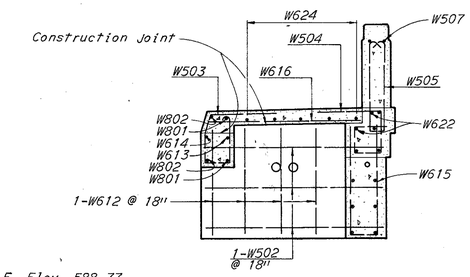

SECTION A-A

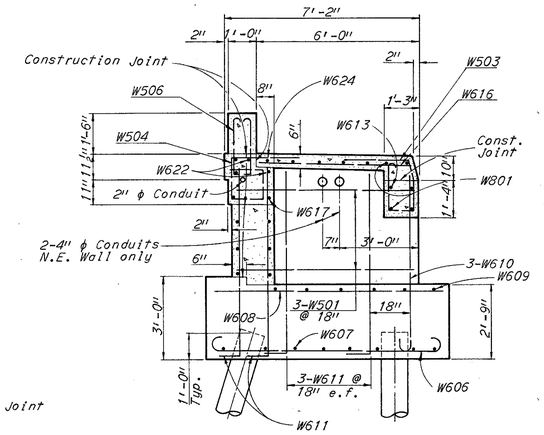

SECTION B-B

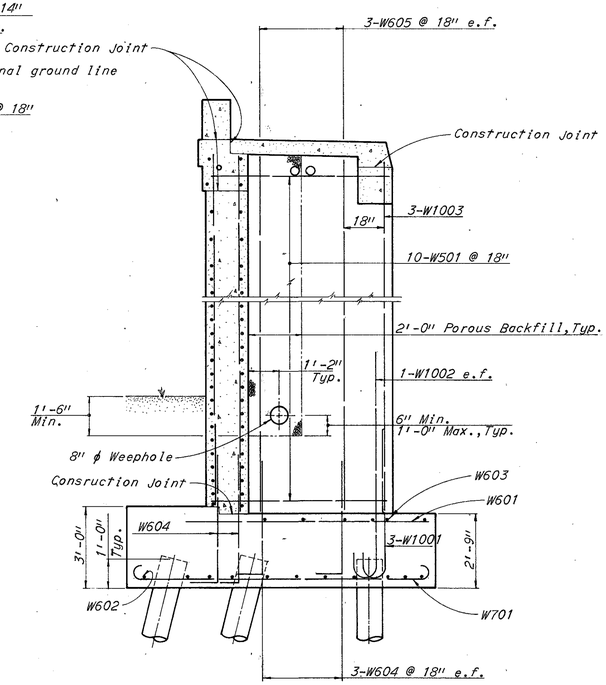

SECTION C-C

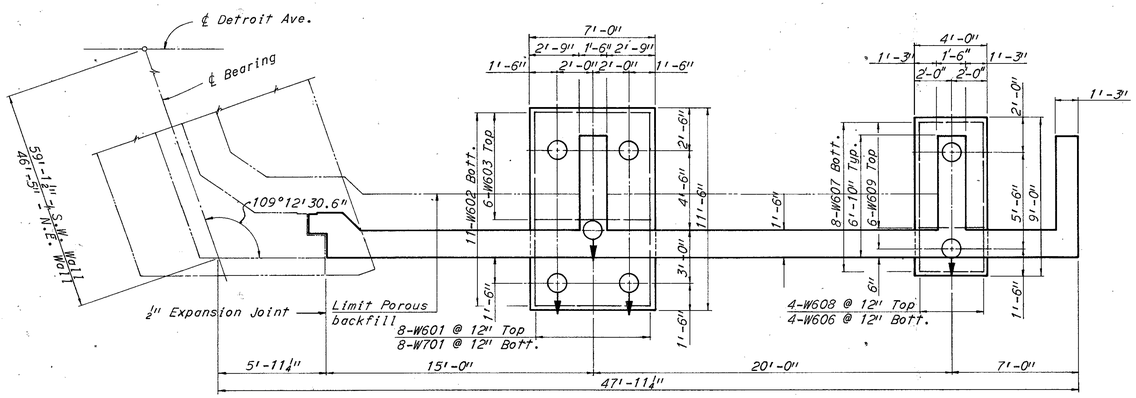

FOOTING PLAN

Notes:
Details not shown in Sections A-A and C-C are similar to Section B-B.
All piles shall be 12" ϕ cast-in-place concrete.
⊖→ denotes battered piles and direction of batter.
All battered piles shall be battered 3 in 12.
All pile dimensions are given along bottom of footing.
Sidewalks shall be placed on compacted earth.
n.f. denotes near face.
f.f. denotes far face.
e.f. denotes each face.
N.E. denotes northeast.
S.W. denotes southwest.
For reinforcement schedule see Sheets 12/14 13/14
For longitudinal parapet reinforcement and railing details see Sheet 287
For endpost details see Sheet 287
For rustication detail see Sheet 6/14
For expansion joint details see Sheet 6/14

H.N.T.B. BRIDGE NO. 15

HOWARD, NEEDLES, TAMMEN & BERGENDOFF 7/14
CONSULTING ENGINEERS
KANSAS CITY CLEVELAND NEW YORK

NORTHEAST AND SOUTHWEST WINGWALLS
DETROIT AVENUE OVER RELOCATED OTTAWA RIVER
BR. NO. LUC-75-0612 STA. 7+57.75
SCALE: STA. 8+70.52

TOLEDO EXPRESSWAY SYSTEM
TOLEDO LUCAS COUNTY OHIO

DRAWN S.C.	TRACED	CHECKED G.W.R.	REVIEWED	REVISED
DATE 3-25-69	DATE	DATE 3-27-69	DATE	SHEET 242

FED. ROAD DIVISION	STATE	PROJECT	
2	OHIO	-	

243
288

LUCAS COUNTY
CITY OF TOLEDO
TOLEDO EXPRESSWAY SYSTEM
EXPRESSWAY - PART 26
LUC-75-6.14

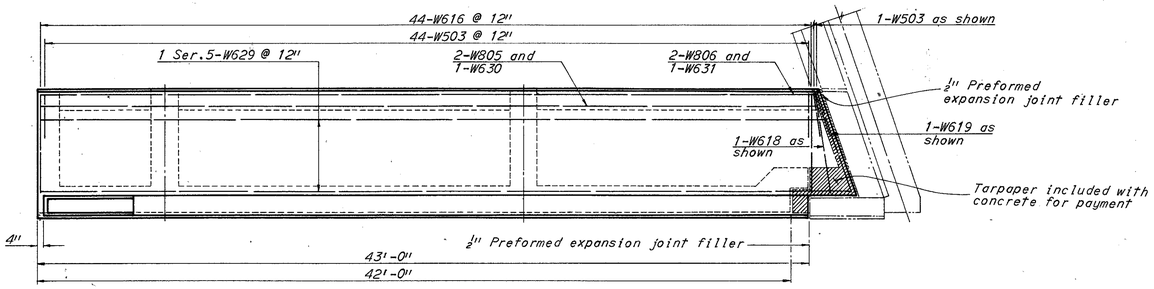

PLAN

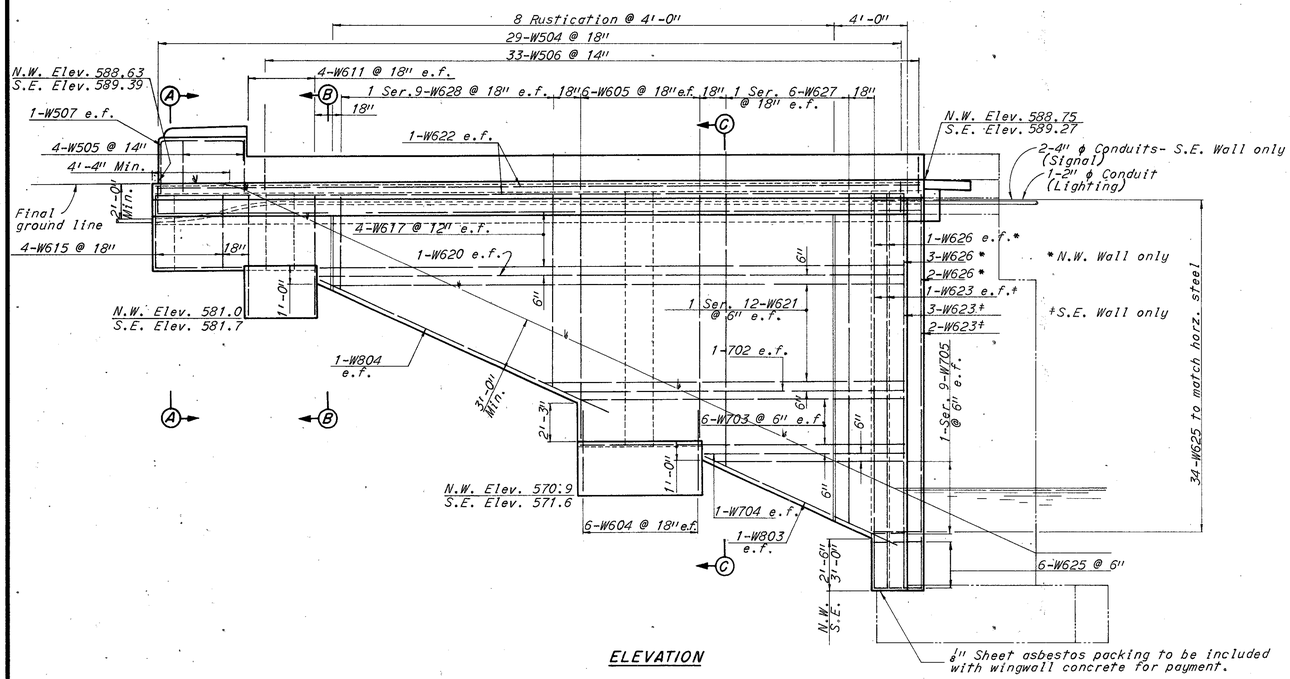

ELEVATION

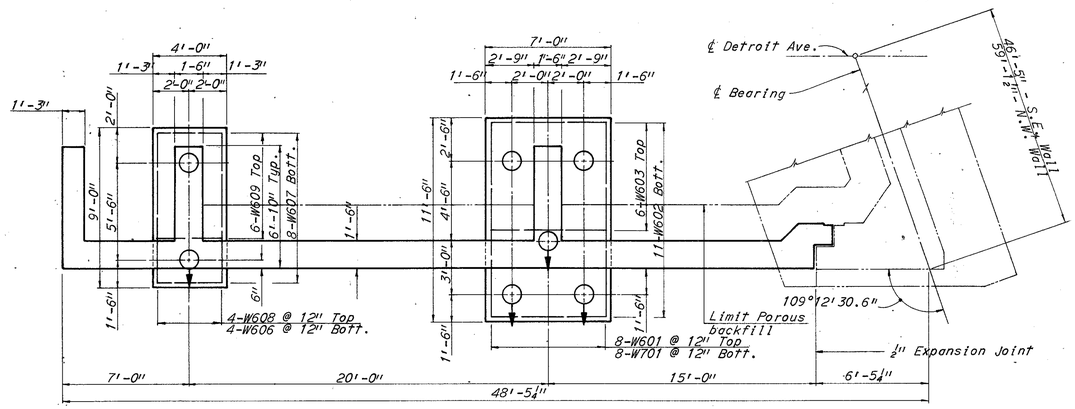

FOOTING PLAN

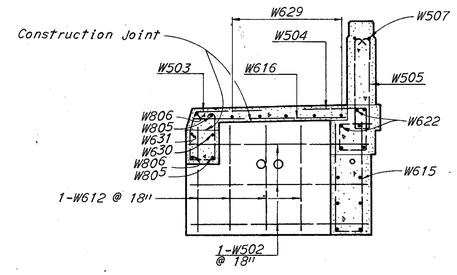

SECTION A-A

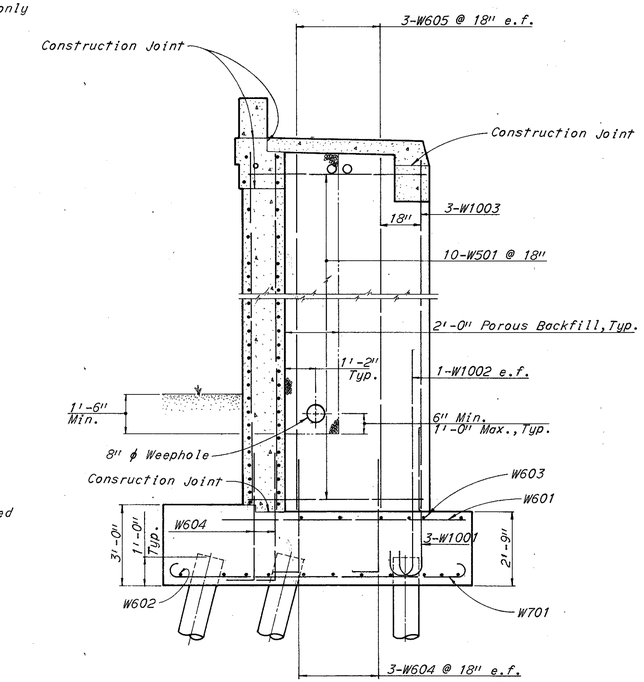

SECTION C-C

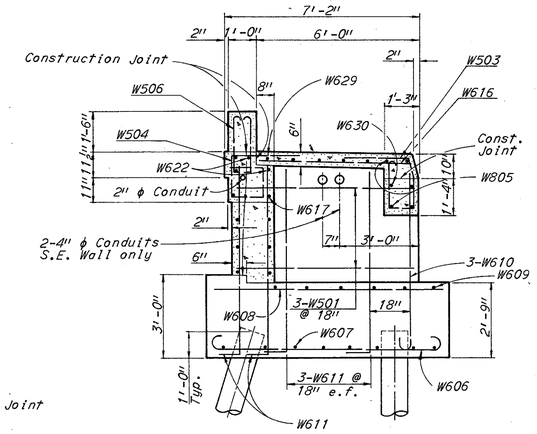

SECTION B-B

Notes:
Details not shown in Sections A-A and C-C are similar to Section B-B.
All piles shall be 12" ϕ cast-in-place concrete.
○→ denotes battered piles and direction of batter.
All battered piles shall be battered 3 in 12.
All pile dimensions are given along bottom of footing.
Sidewalks shall be placed on compacted earth.
n.f. denotes near face.
f.f. denotes far face.
e.f. denotes each face.
N.W. denotes northwest.
S.E. denotes southeast.
For reinforcement schedule see Sheets 12 | 14 | 13 | 14
For longitudinal parapet reinforcement and railing details see Sheet 287
For endpost details see Sheet 287
For rustication detail see Sheet 6 | 14
For expansion joint details see Sheet 6 | 14

H.N.T.B. BRIDGE NO. 15

HOWARD, NEEDLES, TAMMEN & BERGENDOFF
CONSULTING ENGINEERS
KANSAS CITY CLEVELAND NEW YORK

8 | 14

NORTHWEST AND SOUTHEAST WINGWALLS
DETROIT AVENUE OVER RELOCATED OTTAWA RIVER
BR. NO. LUC-75-0612 STA. 7+57.75
SCALE: STA. 8+70.52

TOLEDO EXPRESSWAY SYSTEM
TOLEDO LUCAS COUNTY OHIO

DRAWN	TRACED	CHECKED	REVIEWED	REVISED
S.C.		G.W.R.		
DATE 3-25-69	DATE	DATE 3-27-69	DATE	SHEET 243

FED. ROAD DIVISION	STATE	PROJECT	
2	OHIO		

LUCAS COUNTY
CITY OF TOLEDO
TOLEDO EXPRESSWAY SYSTEM
EXPRESSWAY - PART 26
LUC-75-6.14

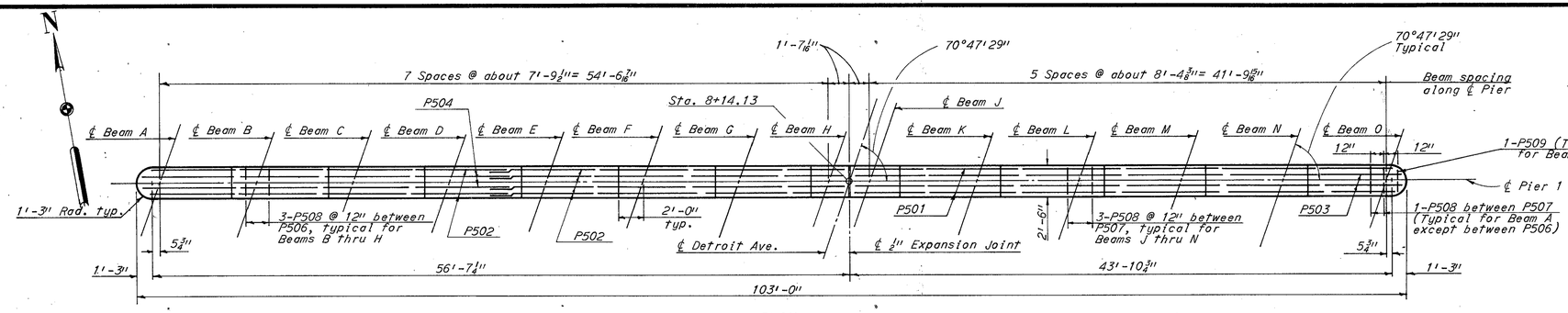

PLAN

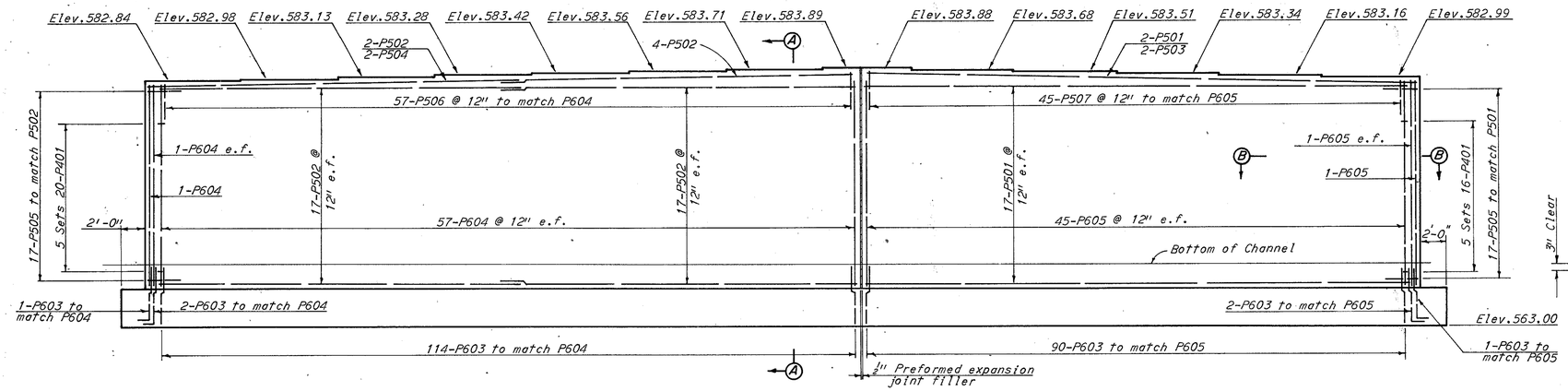

ELEVATION

Note: Piles and footing reinforcing are not shown in Elevation.

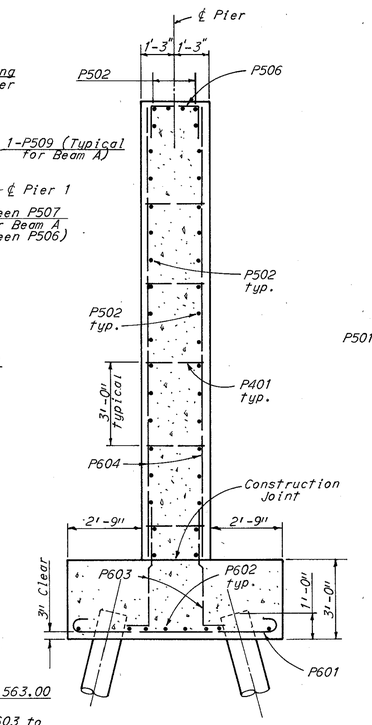

SECTION A-A

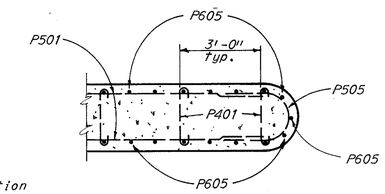

SECTION B-B

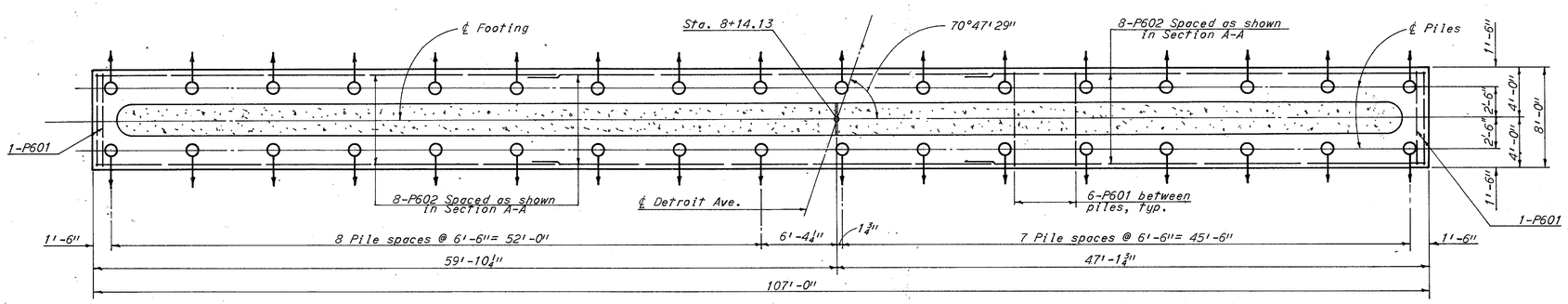

FOOTING PLAN

Notes:
The structure shall be grounded at the Pier (See lighting notes).
All piles are 12"ϕ cast-in-place concrete.
Pile dimensions are measured along bottom of footing.
All battered piles shall be battered 3 in 12.
Special care shall be taken when placing reinforcing steel so as not to interfere with anchor bolt setting.
Top wall steel shall be placed 2 1/2"± below top of wall.
For reinforcement schedule see Sheet 14/14
◄○ denotes battered piles.
e.f. denotes each face.

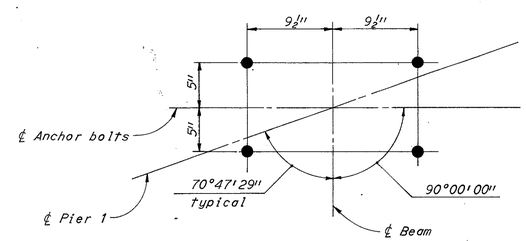

ANCHOR BOLT PLAN

This sheet is superseded by sheet No. 244A 1-9-70

H.N.T.B. BRIDGE NO. 15

HOWARD, NEEDLES, TAMMEN & BERGENDOFF 9/14
CONSULTING ENGINEERS
KANSAS CITY CLEVELAND NEW YORK

PIER 1

DETROIT AVENUE OVER
RELOCATED OTTAWA RIVER

BR. NO. LUC-75-0612 STA. 7+57.75
SCALE: STA. 8+70.52

TOLEDO EXPRESSWAY SYSTEM
TOLEDO LUCAS COUNTY OHIO

DRAWN CAP	TRACED RET	CHECKED BNF	REVIEWED	REVISED
DATE 3-6-69	DATE 3-7-69	DATE 3-31-69	DATE	SHEET 244

FED. ROAD DIVISION	STATE	PROJECT	
2	OHIO		

244
288

LUCAS COUNTY
CITY OF TOLEDO
TOLEDO EXPRESSWAY SYSTEM
EXPRESSWAY - PART 26
LUC-75-6.14

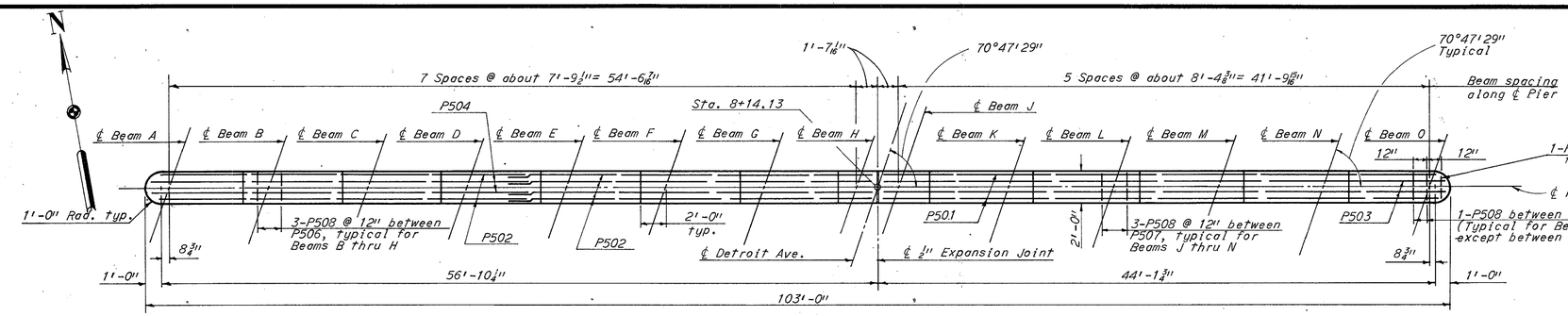

PLAN

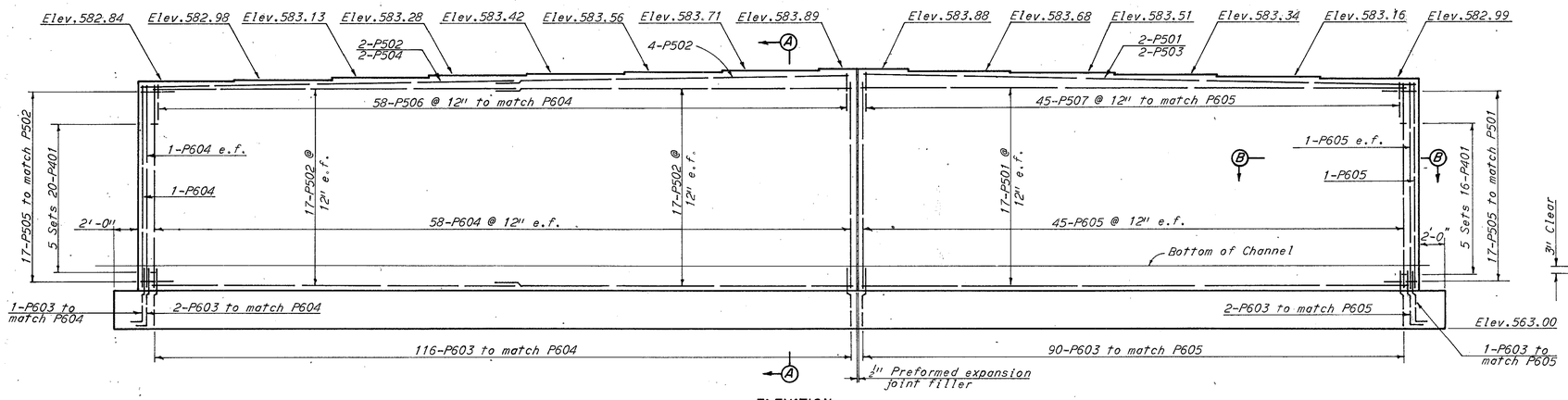

ELEVATION

Note: Piles and footing reinforcing are not shown in Elevation.

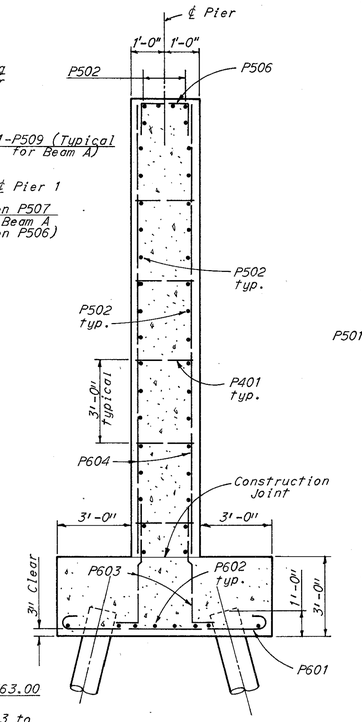

SECTION A-A

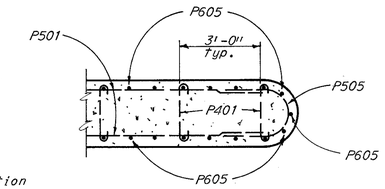

SECTION B-B

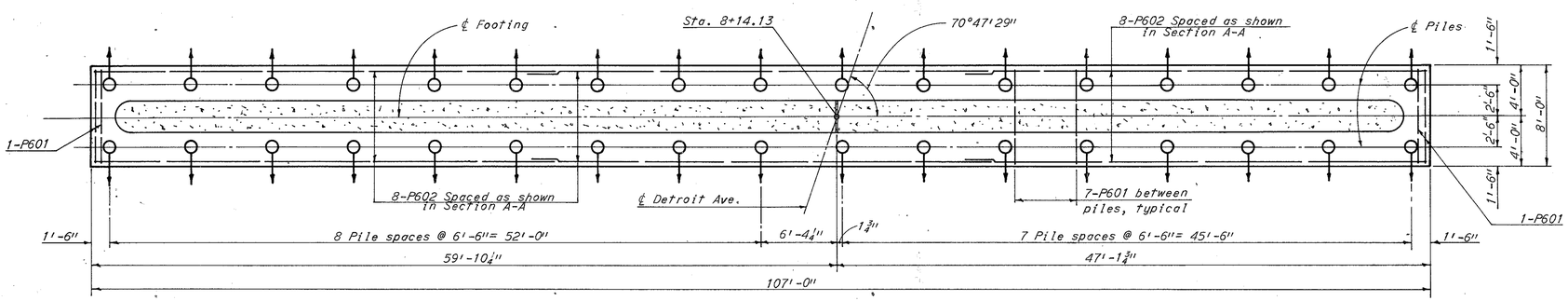

FOOTING PLAN

Notes:
The structure shall be grounded at the Pier (See lighting notes).
All piles are 12"ϕ cast-in-place concrete.
Pile dimensions are measured along bottom of footing.
All battered piles shall be battered 3 in 12.
Special care shall be taken when placing reinforcing steel so as not to interfere with anchor bolt setting.
Top wall steel shall be placed 2½"± below top of wall.
For reinforcement schedule see Sheet 14/14
◄○ denotes battered piles.
e.f. denotes each face.

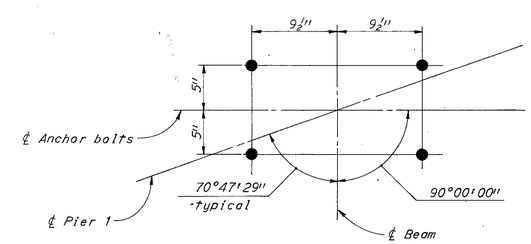

ANCHOR BOLT PLAN

This sheet supersedes sheet No. 244 1-9-70

H.N.T.B. BRIDGE NO. 15

HOWARD, NEEDLES, TAMMEN & BERGENDOFF
CONSULTING ENGINEERS
KANSAS CITY CLEVELAND NEW YORK

9/14

PIER 1

DETROIT AVENUE OVER
RELOCATED OTTAWA RIVER

BR. NO. LUC-75-0612 STA. 7+57.75
SCALE: STA. 8+70.52

TOLEDO EXPRESSWAY SYSTEM

TOLEDO LUCAS COUNTY OHIO

DRAWN CAP	TRACED RET	CHECKED BNF	REVIEWED	REVISED
DATE 3-6-69	DATE 3-7-69	DATE 3-31-69	DATE	SHEET 244

LUCAS COUNTY
CITY OF TOLEDO
TOLEDO EXPRESSWAY SYSTEM
EXPRESSWAY - PART 26
LUC-75-6.14

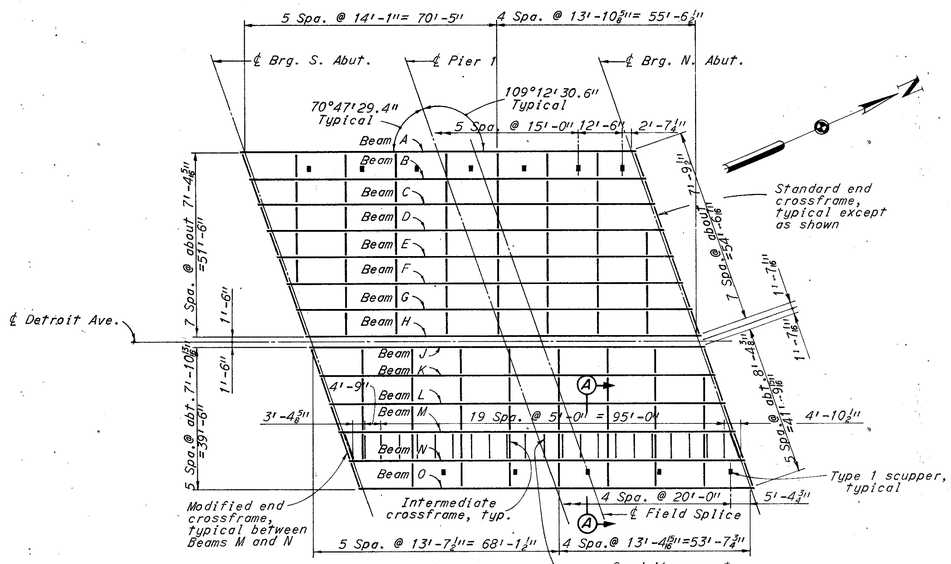

FRAMING PLAN

GUTTERLINE ELEVATIONS									
	℄ Brg. S.Abut	.25	.50	.75	℄ Pier 1	.25	.50	.75	℄ Brg. N.Abut.
West Gutterline	588.13	588.11	588.07	588.02	587.97	587.94	587.91	587.86	587.81
West Gutterline of medion	589.08	589.05	589.02	588.97	588.92	588.88	588.85	588.81	588.76
East Gutterline of medion	589.08	589.05	589.01	588.96	588.92	588.88	588.85	588.81	588.75
East Gutterline	588.29	588.27	588.23	588.18	588.13	588.10	588.07	588.03	587.97

Note: The gutterline elevations shown have been adjusted for the dead load deflections caused by the weight of concrete and are the elevations required before the concrete deck is placed.

TOP OF PAVEMENT ELEVATIONS									
Beam	℄ Brg. S.Abut	.25	.50	.75	℄ Pier 1	.25	.50	.75	℄ Brg. N.Abut.
A	588.05	588.01	587.97	587.93	587.89	587.85	587.81	587.77	587.73
B	588.20	588.16	588.12	588.08	588.04	588.00	587.96	587.91	587.87
C	588.34	588.30	588.26	588.22	588.18	588.14	588.10	588.06	588.02
D	588.49	588.45	588.41	588.37	588.33	588.29	588.25	588.21	588.17
E	588.63	588.59	588.55	588.51	588.47	588.43	588.39	588.35	588.31
F	588.78	588.74	588.70	588.66	588.62	588.58	588.54	588.50	588.46
G	588.93	588.88	588.84	588.80	588.76	588.72	588.68	588.64	588.60
H	589.07	589.03	588.99	588.95	588.91	588.87	588.83	588.79	588.75
J	589.07	589.03	588.99	588.95	588.91	588.86	588.82	588.78	588.74
K	588.89	588.85	588.81	588.77	588.73	588.69	588.65	588.61	588.57
L	588.72	588.68	588.64	588.60	588.56	588.52	588.48	588.44	588.40
M	588.55	588.51	588.47	588.43	588.39	588.35	588.31	588.27	588.23
N	588.38	588.34	588.30	588.26	588.22	588.17	588.13	588.09	588.05
O	588.20	588.16	588.12	588.08	588.04	588.00	587.96	587.92	587.88

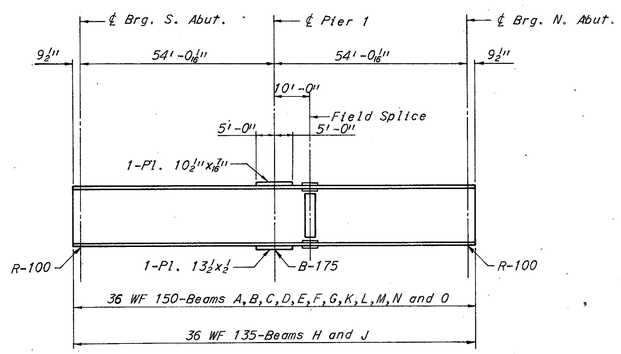

BEAM ELEVATION

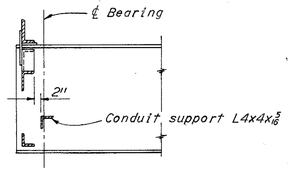

SECTION B-B

Notes:

For end crossframe details see Ohio Standard Drawing SD-1-65, Sheet 1 of 3.

For details of roadway end dam see Ohio Standard Drawing SD-1-65, Sheet 1 of 3. The supporting L6x4x1/2 in the Roadway End Dam table shall be increased to L8x4x1/2, and the Item 828 joint sealer including bond breaker, shown in Section A-A shall be omitted.

For curb plate details at safety curbs see Ohio Standard Drawing SD-1-65, Sheet 2 of 3. Details of curb plates at median are similar except the 7" vertical dimension shall be 3".

For sidewalk end dam details see Ohio Standard Drawing SD-1-65, Sheet 2 of 3.

For moment plate details see Ohio Standard Drawing SD-1-65, Sheet 2 of 3.

For details of Type 1 scupper see Ohio Standard Drawing SD-1-65, Sheet 2 of 3.

For field splice details see Ohio Standard Drawing SD-1-65, Sheet 3 of 3.

For details of rockers and bolsters see Ohio Standard Drawing RB-1-55.

For Camber and Deflection Table see Sheet 284

For intermediate crossframe details see Sheet 285

Dimensions to scuppers are measured along centerline of beam.

The allowances to be made in screed settings to compensate for dead load deflections due to concrete are to be made above or below the top of pavement elevations as required. Screeds may require further adjustment due to irregularities in fabricated steel.

For details of end dam at median see Sheet 285.

SCUPPERS: The 1 1/4" x 1/4" support bar shown on Standard Drawing SD-1-65 shall be omitted. Scuppers, including support angles, shall be galvanized.

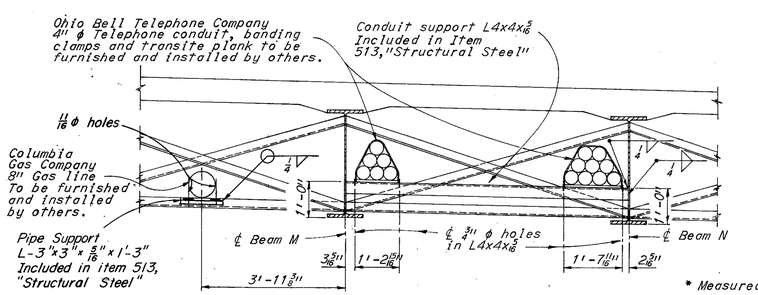

SECTION A-A

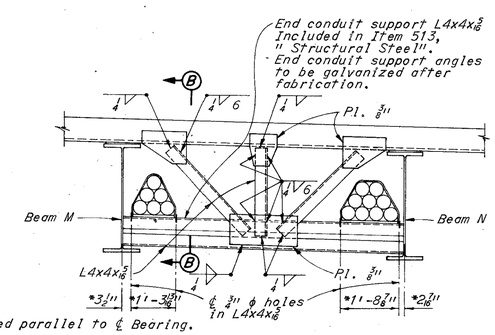

* Measured parallel to ℄ Bearing.

MODIFIED END CROSSFRAME DETAIL

H.N.T.B. BRIDGE NO. 15

HOWARD, NEEDLES, TAMMEN & BERGENDOFF 10/14
CONSULTING ENGINEERS
KANSAS CITY CLEVELAND NEW YORK

FRAMING PLAN

DETROIT AVENUE OVER
RELOCATED OTTAWA RIVER

BR. NO. LUC-75-0612 STA. 7+57.75
SCALE: STA. 8+70.52

TOLEDO EXPRESSWAY SYSTEM
TOLEDO LUCAS COUNTY OHIO

DRAWN S.F.C. DATE 2-7-69	TRACED DATE	CHECKED G.W.R. DATE 3-21-69	REVIEWED DATE	REVISED	SHEET 245

LUCAS COUNTY
CITY OF TOLEDO
TOLEDO EXPRESSWAY SYSTEM
EXPRESSWAY - PART 26
LUC-75-6.14

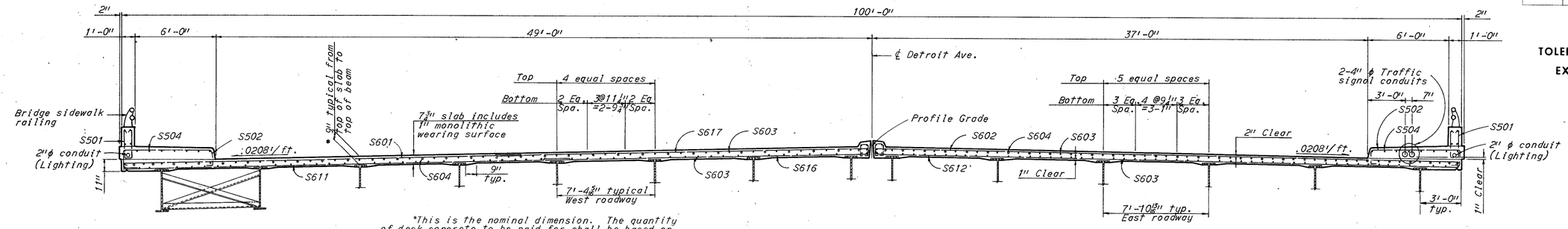

*This is the nominal dimension. The quantity of deck concrete to be paid for shall be based on this dimension, even though deviation from it may be necessary because the top flange of the beam may not have the exact camber or conformation required to place it parallel to the finished grade. Deduction shall be made for volume of encased steel plates as per Sec. 511.19 of the Construction and Materials Specifications.

SECTION A-A

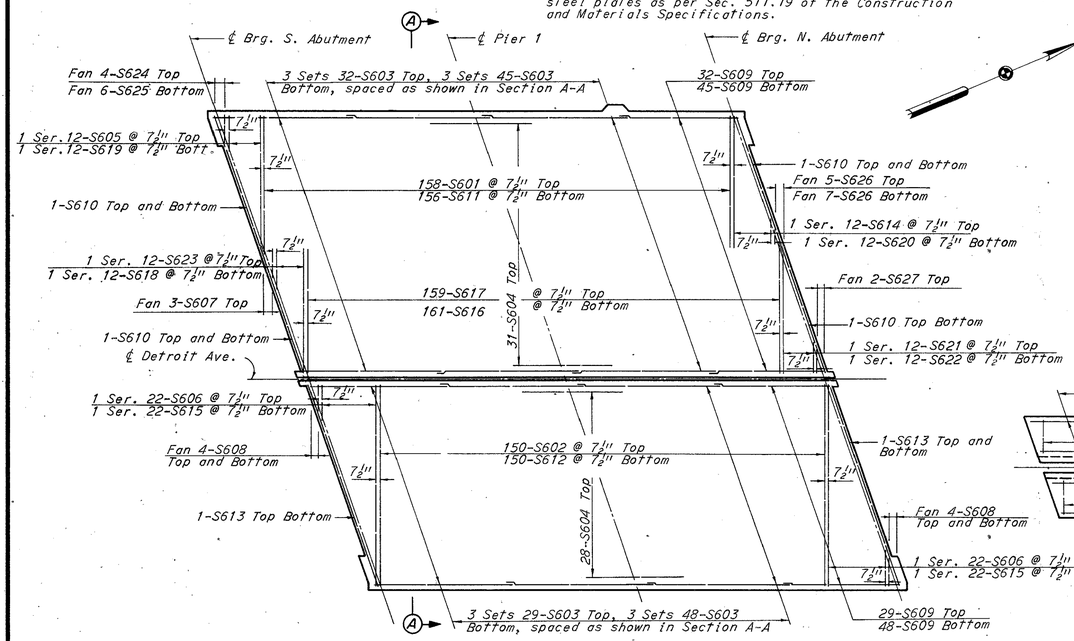

DECK PLAN

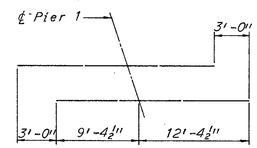

DIAGRAM SHOWING STAGGER OF S604 OVER PIER 1

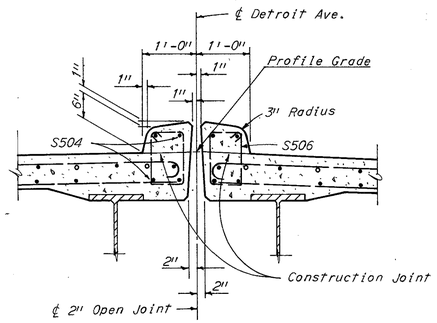

MEDIAN SECTION

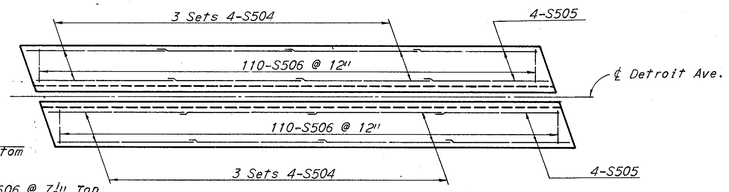

MEDIAN

Notes:

For curb and parapet dimensions see Sheet 286
Reinforcing steel shall be adjusted as required to clear scuppers.
For handrail and parapet details see Sheet 287
For details of light standard support see Sheet 286
For location of light standards see Sheet 1/14

A typical haunch width of 9" shall be used for computing quantity of concrete. However, the haunch width may vary between 6" and 12" provided that the slope shall be not more than 1:4 for a haunch less than 9" in width.

For reinforcement schedule see sheet 14/14

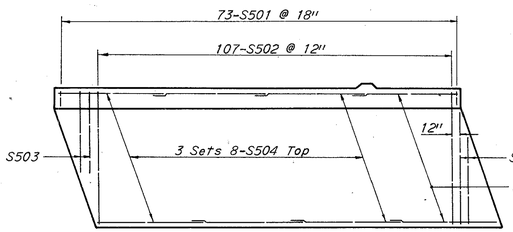

WEST PARAPET AND SIDEWALK

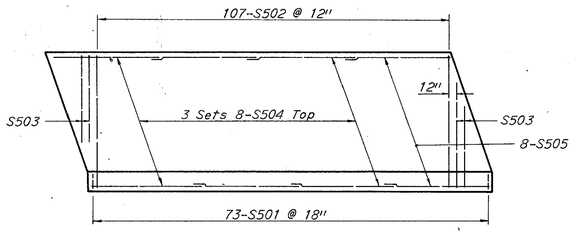

EAST PARAPET AND SIDEWALK

H.N.T.B. BRIDGE NO. 15

HOWARD, NEEDLES, TAMMEN & BERGENDOFF — 11/14
CONSULTING ENGINEERS
KANSAS CITY CLEVELAND NEW YORK

DECK PLAN

DETROIT AVENUE OVER
RELOCATED OTTAWA RIVER

BR. NO. LUC-75-0612 STA. 7+57.75
SCALE: STA. 8+70.52

TOLEDO EXPRESSWAY SYSTEM

TOLEDO LUCAS COUNTY OHIO

DRAWN SFC	TRACED	CHECKED MDD	REVIEWED	REVISED
DATE 2-14-69	DATE	DATE 3-27-69	DATE	SHEET 246

MARK	NUMBER	LENGTH	TYPE	DIMENSIONS A	DIMENSIONS B	DIMENSIONS C	SERIES INCRE.	WEIGHT POUNDS
SOUTH ABUTMENT								
AA401	84	3'-1"	105	1'-0"	1'-4"			173
AA501	19	27'-6"	Str.					545
AA502	19	28'-6"	Str.					565
AA503	19	44'-0"	Str.					872
AA504	104	6'-2"	105	1'-6"	3'-5"			669
AA505	14	28'-3"	Str.					413
AA506	14	29'-6"	Str.					431
AA507	8	3'-9"	Str.					31
AA508	2	4'-3"	105	6"	2'-0"			9
AA509	2	4'-7"	105	10"	2'-0"			10
AA510	14	45'-6"	Str.					664
AA511	6 Ser.16	9'-8" to 17'-8"	121	3'-6" to 7'-6"	1'-2"		6 5/8"	1,368
AA512	8	5'-7"	110	2'-2"				47
AA513	102	5'-3"	104	4'-5"	1'-0"			559
AA514	1 Ser.27	16'-9" to 17'-3"	Str.				1/4"	479
AA515	18	30'-4"	108	28'-9"	1'-7"	1'-6"		570
AA516	1 Ser.26	17'-3" to 17'-9"	Str.				1/4"	475
AA517	18	29'-3"	Str.					549
AA518	1 Ser.44	16'-9" to 17'-9"	Str.				1/4"	792
AA519	18	45'-3"	Str.					850
AA520	5	16'-9"	Str.					87
AA601	123	5'-4"	104	4'-6"	1'-0"			985
AA602	104	10'-0"	Str.					1,562
AA603	1 Ser.3	2'-0" to 7'-3"	Str.				2'-7 1/2"	21
AA604	2	10'-9"	Str.					32
AA605	1 Ser.3	3'-3" to 8'-9"	Str.				2'-9"	27
AA606	88	15'-9"	Str.					2,082
AA607	28	17'-3"	Str.					725
AA608	28	10'-3"	133					431
AA609	28	4'-6"	106	10"	2'-6"	1'-6"		189
AA610	28	3'-10"	104	2'-1"	1'-11"			161
AA611	93	9'-11"	106	11"	6'-10"	2'-6"		1,385
AA612	93	9'-11"	108	5'-2"	4'-9"	3'-4"		1,385
AA613	14	10'-9"	106	11"	7'-8"	2'-6"		226
AA614	8	11'-9"	103	7'-0"	4'-9"	3'-4"		141
AA615	4	11'-9"	131	6'-11"	1'-5"	7"		71
AA616	3	22'-6"	Str.					101
AA617	4	22'-9"	Str.					137
AA618	12	10'-9"	Str.					194
AA619	12	5'-0"	Str.					90
AA620	14	8'-11"	108	7'-0"	1'-11"	1'-7"		188
AA621	17	12'-1"	141	6'-10"	1'-11"	8"		309
AA622	17	7'-3"	104	5'-4"	2'-1"			185
AA623	5	10'-0"	141	4'-9"	1'-11"	8"		75
AA624	5	5'-1"	104	3'-2"	2'-1"			38
AA625	14	9'-9"	Str.					205
AA626	17	8'-3"	104	6'-4"	2'-1"			211
AA627	17	9'-8"	106	10"	6'-8"	2'-6"		247
AA628	5	6'-3"	104	4'-4"	2'-1"			47
AA629	5	7'-10"	106	10"	4'-10"	2'-6"		59
AA630	8	3'-9"	Str.					45
AA631	8	4'-9"	Str.					57
AA632	4	6'-6"	Str.					39
AA633	48	4'-9"	Str.					342
AA634	24	16'-9"	Str.					604
AA635	4	5'-0"	Str.					30
AA701	69	13'-8"	100	12'-0"				1,928
AA702	46	7'-4"	101	6'-6"				689
AA703	1	10'-5"	100	8'-9"				21
AA704	1	7'-0"	100	5'-4"				14
AA705	1	5'-2"	100	3'-6"				11
AA706	1	12'-0"	108	10'-6"	1'-6"	6"		25
AA707	1	13'-0"	100	11'-4"				27
AA708	1	11'-3"	100	9'-7"				23
AA709	1 Ser.3	4'-2" to 7'-11"	100	2'-6" to 6'-3"			1'-10 1/2"	37
AA710	1	12'-0"	108	11'-0"	1'-0"	4"		25
AA711	17	12'-1"	141	6'-10"	1'-11"	8"		420
AA712	17	7'-3"	104	5'-4"	2'-1"			252
AA713	17	9'-8"	106	10"	6'-8"	2'-6"		336
AA714	17	8'-3"	104	6'-4"	2'-1"			287
AA1001	63	37'-9"	Str.					10,234
AA1002	10	5'-7"	104	5'-11"	1'-0"			283
AA1003	2	21'-9"	Str.					187
AA1004	3	22'-9"	Str.					294
AA1005	3	22'-6"	Str.					290
AA1006	2	21'-6"	Str.					185
AA1101	24	23'-5"	134	18'-0"	3"			2,986
AA1102	12	12'-1"	101	10'-6"				770
							Total	42,108
NORTH ABUTMENT								
AB401	84	3'-1"	105	1'-0"	1'-4"			173
AB501	19	27'-0"	Str.					535
AB502	19	28'-6"	Str.					565
AB503	19	44'-6"	Str.					882
AB504	104	6'-2"	105	1'-6"	3'-5"			669
AB505	14	28'-3"	Str.					413
AB506	14	29'-6"	Str.					431
AB507	8	3'-9"	Str.					31
AB508	2	4'-3"	105	6"	2'-0"			9
AB509	2	4'-7"	105	10"	2'-0"			10
AB510	14	45'-6"	Str.					664
AB511	6 Ser.16	9'-8" to 17'-8"	121	3'-6" to 7'-6"	1'-2"		6 5/8"	1,368
AB512	8	5'-7"	110	2'-2"				47
AB513	102	5'-3"	104	4'-5"	1'-0"			559
AB514	1 Ser.26	16'-6" to 17'-0"	Str.				1/4"	454
AB515	18	28'-0"	Str.					526
AB516	1 Ser.26	17'-0" to 17'-6"	Str.				1/4"	468
AB517	18	29'-3"	Str.					549
AB518	1 Ser.45	16'-6" to 17'-6"	Str.				1/4"	798
AB519	18	47'-7"	108	46'-0"	1'-7"	1'-6"		893
AB520	5	16'-6"	Str.					86
AB601	123	5'-4"	104	4'-6"	1'-0"			985
AB602	104	10'-0"	Str.					1,562
AB603	1 Ser.3	2'-0" to 7'-3"	Str.				2'-7 1/2"	21
AB604	2	10'-9"	Str.					32
AB605	1 Ser.3	3'-3" to 8'-9"	Str.				2'-9"	27
AB606	88	15'-6"	Str.					2,049
AB607	28	17'-0"	Str.					715
AB608	28	10'-3"	133					431
AB609	28	4'-6"	106	10"	2'-6"	1'-6"		189
AB610	28	3'-10"	104	2'-1"	1'-11"			161
AB611	92	9'-11"	106	11"	6'-10"	2'-6"		1,370
AB612	92	9'-11"	108	5'-2"	4'-9"	3'-4"		1,370
AB613	14	10'-9"	106	11"	7'-8"	2'-6"		226
AB614	8	11'-9"	108	7'-0"	4'-9"	3'-4"		141
AB615	4	11'-9"	131	6'-11"	1'-5"	7"		71
AB616	3	22'-3"	Str.					100
AB617	4	22'-6"	Str.					135
AB618	12	10'-9"	Str.					194
AB619	12	5'-0"	Str.					90
AB620	14	8'-11"	108	7'-0"	1'-11"	1'-7"		188
AB621	17	12'-1"	141	6'-10"	1'-11"	8"		309
AB622	17	7'-3"	104	5'-4"	2'-1"			185
AB623	5	10'-0"	141	4'-9"	1'-11"	8"		75
AB624	5	5'-1"	104	3'-2"	2'-1"			38
AB625	14	9'-9"	Str.					205
AB626	17	8'-3"	104	6'-4"	2'-1"			211
AB627	17	9'-9"	106	10"	6'-8"	2'-6"		247
AB628	5	6'-3"	104	4'-4"	2'-1"			47
AB629	5	7'-10"	106	10"	4'-10"	2'-6"		59
AB630	8	3'-9"	Str.					45
AB631	8	4'-9"	Str.					57
AB632	4	6'-6"	Str.					39
AB633	48	4'-9"	Str.					342
AB634	24	16'-6"	Str.					604
AB635	4	5'-0"	Str.					30
AB701	69	13'-8"	100	12'-0"				1,928
AB702	46	7'-4"	101	6'-6"				689
AB703	1	10'-5"	100	8'-9"				21
AB704	1	7'-0"	100	5'-4"				14
AB705	1	5'-2"	100	3'-6"				11
AB706	1	12'-0"	108	10'-6"	1'-6"	6"		25
AB707	1	13'-0"	100	11'-4"				27
AB708	1	11'-3"	100	9'-7"				23
AB709	1 Ser.3	4'-2" to 7'-11"	100	2'-6" to 6'-3"			1'-10 1/2"	37
AB710	1	12'-0"	108	11'-0"	1'-0"	4"		25
AB711	17	12'-1"	141	6'-10"	1'-11"	8"		420
AB712	17	7'-3"	104	5'-4"	2'-1"			252
AB713	17	9'-8"	106	10"	6'-8"	2'-6"		336
AB714	17	8'-3"	104	6'-4"	2'-1"			287
AB1001	63	37'-9"	Str.					10,234
AB1002	10	6'-7"	104	5'-11"	1'-0"			283
AB1003	2	21'-6"	Str.					185
AB1004	3	22'-6"	Str.					290
AB1005	3	22'-3"	Str.					287
AB1006	2	21'-3"	Str.					183
AB1101	24	23'-2"	134	17'-9"	3"			2,954
AB1102	12	12'-1"	101	10'-6"				770
							Total	41,961
SOUTHEAST WINGWALL								
W501	13	15'-8"	121	6'-6"	1'-2"			212
W502	3	15'-1"	109	6'-6"	10"			47
W503	46	7'-1"	136	2'-4"	11"	8"		340
W504	29	6'-8"	130	1'-6"	1'-0"	2'-4"		202
W505	4	7'-7"	110	3'-2"				32
W506	33	5'-7"	110	2'-2"				192
W507	2	8'-3"	106	4'-8"	3'-2"	8"		17
W601	8	9'-3"	Str.					111
W602	11	7'-10"	100	6'-6"				130
W603	6	6'-6"	Str.					59
W604	18	5'-6"	104	4'-8"	1'-0"			149
W605	18	13'-9"	Str.					372
W606	4	9'-10"	100	8'-6"				59
W607	8	4'-10"	100	3'-6"				58
W608	4	8'-6"	Str.					51
W609	6	3'-6"	Str.					32
W610	3	7'-5"	101	6'-9"				33
W611	14	7'-7"	104	6'-9"	1'-0"			159
W612	8	8'-7"	105	4'-0"	11"			103
W615	4	8'-10"	105	4'-0"	1'-2"			53
W616	44	5'-6"	Str.					363
W617	8	41'-6"	Str.					499
W618	1	5'-9"	Str.					9
W619	1	6'-0"	Str.					9
W620	2	32'-6"	Str.					98
W621	2 Ser.12	20'-6" to 32'-0"	Str.				1'-0 1/2"	946

FED. ROAD DIVISION	STATE	PROJECT	
2	OHIO		

247
288

LUCAS COUNTY
CITY OF TOLEDO
TOLEDO EXPRESSWAY SYSTEM
EXPRESSWAY - PART 26
LUC-75-6.14

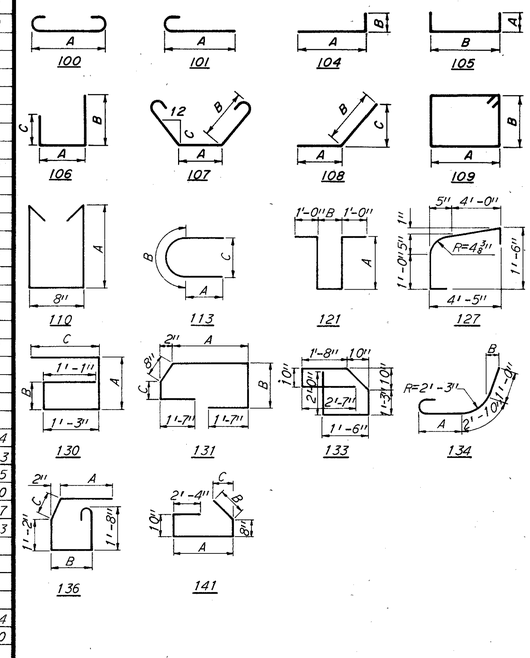

BENDING DIAGRAMS

Notes:
All bar dimensions are given out to out.
All bars of a series shall vary in length by a constant increment.
**To be included for payment in unit price bid for Item 517.
For Replacement Reinforcement schedule see sheet 14/14

H.N.T.B. BRIDGE NO. 15

HOWARD, NEEDLES, TAMMEN & BERGENDOFF
CONSULTING ENGINEERS
KANSAS CITY CLEVELAND NEW YORK

12/14

REINFORCEMENT SCHEDULE

DETROIT AVENUE OVER
RELOCATED OTTAWA RIVER

BR. NO. LUC-75-0612 STA. 7+57.75
SCALE: STA. 8+70.52

TOLEDO EXPRESSWAY SYSTEM

TOLEDO LUCAS COUNTY OHIO

DRAWN RET	TRACED	CHECKED GWR	REVIEWED	REVISED
DATE 4-4-69	DATE	DATE 4-7-69	DATE	SHEET 247

MARK	NUMBER	LENGTH	TYPE	DIMENSIONS A	B	C	SERIES INCRE.	WEIGHT POUNDS
W622	4	42'-6"	Str.					255
W623	9	22'-6"	Str.					304
W625	40	10'-3"	133					616
W627	2 Ser. 6	15'-3" to 18'-6"	Str.				7¾"	304
W628	2 Ser. 9	5'-3" to 10'-9"	Str.				8¼"	216
W629	1 Ser. 5	43'-9" to 45'-3"	Str.				4½"	334
W630	1	43'-6"	Str.					65
W631	1	43'-3"	Str.					65
W701	8	12'-8"	100	11'-0"				207
W702	2	19'-3"	Str.					79
W703	12	18'-0"	Str.					442
W704	2	11'-0"	Str.					45
W705	2 Ser. 9	2'-6" to 10'-6"	Str.				1'-0"	239
W803	2	12'-3"	Str.					65
W804	2	18'-6"	Str.					99
W805	2	43'-6"	Str.					232
W806	2	43'-3"	Str.					231
W1001	3	7'-1"	101	5'-8"				91
W1002	2	9'-11"	101	8'-6"				85
W1003	3	13'-9"	Str.					177
							Total	8,486

SOUTHWEST WINGWALL

MARK	NUMBER	LENGTH	TYPE	DIMENSIONS A	B	C	SERIES INCRE.	WEIGHT POUNDS
W501	13	15'-8"	121	6'-6"	1'-2"			212
W502	3	15'-1"	109	6'-6"	10"			47
W503	48	7'-1"	136	2'-4"	11"	8"		355
W504	29	6'-8"	130	1'-6"	1'-0"	2'-4"		202
W505	4	7'-7"	110	3'-2"				32
W506	33	5'-7"	110	2'-2"				192
W507	2	8'-3"	106	4'-8"	3'-2"	8"		17
W601	8	9'-3"	Str.					111
W602	11	7'-10"	100	6'-6"				130
W603	6	6'-6"	Str.					59
W604	18	5'-6"	104	4'-8"	1'-0"			149
W605	18	13'-9"	Str.					372
W606	4	9'-10"	100	8'-6"				59
W607	8	4'-10"	100	3'-6"				58
W608	4	8'-6"	Str.					51
W609	6	3'-6"	Str.					32
W610	3	7'-5"	101	6'-9"				33
W611	14	7'-7"	104	6'-9"	1'-0"			159
W612	8	8'-7"	105	4'-0"	11"			103
W613	1	47'-3"	Str.					71
W614	1	47'-6"	Str.					71
W615	4	8'-10"	105	4'-0"	1'-2"			53
W616	46	5'-6"	Str.					380
W617	8	41'-6"	Str.					499
W618	1	5'-9"	Str.					9
W619	1	6'-0"	Str.					9
W620	2	32'-6"	Str.					98
W621	2 Ser. 12	20'-6" to 32'-0"	Str.				1'-0½"	946
W622	4	42'-6"	Str.					255
W623	9	22'-6"	Str.					304
W624	1 Ser. 5	45'-6" to 47'-0"	Str.				4½"	347
W625	40	10'-3"	133					616
W627	2 Ser. 6	15'-3" to 18'-6"	Str.				7¾"	304
W628	2 Ser. 9	5'-3" to 10'-9"	Str.				8¼"	216

MARK	NUMBER	LENGTH	TYPE	DIMENSIONS A	B	C	SERIES INCRE.	WEIGHT POUNDS
W701	8	12'-8"	100	11'-0"				207
W702	2	19'-3"	Str.					79
W703	12	18'-0"	Str.					442
W704	2	11'-0"	Str.					45
W705	2 Ser. 9	2'-6" to 10'-6"	Str.				1'-0"	239
W801	2	47'-3"	Str.					252
W802	2	47'-6"	Str.					254
W803	2	12'-3"	Str.					65
W804	2	18'-6"	Str.					99
W1001	3	7'-1"	101	5'-8"				91
W1002	2	9'-11"	101	8'-6"				85
W1003	3	13'-9"	Str.					177
							Total	8,586

NORTHWEST WINGWALL

MARK	NUMBER	LENGTH	TYPE	DIMENSIONS A	B	C	SERIES INCRE.	WEIGHT POUNDS
W501	13	15'-8"	121	6'-6"	1'-2"			212
W502	3	15'-1"	109	6'-6"	10"			47
W503	46	7'-1"	136	2'-4"	11"	8"		340
W504	29	6'-8"	130	1'-6"	1'-0"	2'-4"		202
W505	4	7'-7"	110	3'-2"				32
W506	33	5'-7"	110	2'-2"				192
W507	2	8'-3"	106	4'-8"	3'-2"	8"		17
W601	8	9'-3"	Str.					111
W602	11	7'-10"	100	6'-6"				130
W603	6	6'-6"	Str.					59
W604	18	5'-6"	104	4'-8"	1'-0"			149
W605	18	13'-9"	Str.					372
W606	4	9'-10"	100	8'-6"				59
W607	8	4'-10"	100	3'-6"				58
W608	4	8'-6"	Str.					51
W609	6	3'-6"	Str.					32
W610	3	7'-5"	101	6'-9"				33
W611	14	7'-7"	104	6'-9"	1'-0"			159
W612	8	8'-7"	105	4'-0"	11"			103
W615	4	8'-10"	105	4'-0"	1'-2"			53
W616	44	5'-6"	Str.					363
W617	8	41'-6"	Str.					499
W618	1	5'-9"	Str.					9
W619	1	6'-0"	Str.					9
W620	2	32'-6"	Str.					98
W621	2 Ser. 12	20'-6" to 32'-0"	Str.				1'-0½"	946
W622	4	42'-6"	Str.					255
W625	40	10'-3"	133					616
W626	9	22'-3"	Str.					301
W627	2 Ser. 6	15'-3" to 18'-6"	Str.				7¾"	304
W628	2 Ser. 9	5'-3" to 10'-9"	Str.				8¼"	216
W629	1 Ser. 5	43'-9" to 45'-3"	Str.				4½"	334
W630	1	43'-6"	Str.					65
W631	1	43'-3"	Str.					65
W701	8	12'-8"	100	11'-0"				207
W702	2	19'-3"	Str.					79
W703	12	18'-0"	Str.					442
W704	2	11'-0"	Str.					45
W705	2 Ser. 9	2'-6" to 10'-6"	Str.				1'-0"	239

MARK	NUMBER	LENGTH	TYPE	DIMENSIONS A	B	C	SERIES INCRE.	WEIGHT POUNDS
W803	2	12'-3"	Str.					65
W804	2	18'-6"	Str.					99
W805	2	43'-6"	Str.					232
W806	2	43'-3"	Str.					231
W1001	3	7'-1"	101	5'-8"				91
W1002	2	9'-11"	101	8'-6"				85
W1003	3	13'-9"	Str.					177
							Total	8,483

NORTHEAST WINGWALL

MARK	NUMBER	LENGTH	TYPE	DIMENSIONS A	B	C	SERIES INCRE.	WEIGHT POUNDS
W501	13	15'-8"	121	6'-6"	1'-2"			212
W502	3	15'-1"	109	6'-6"	10"			47
W503	48	7'-1"	136	2'-4"	11"	8"		355
W504	29	6'-8"	130	1'-6"	1'-0"	2'-4"		202
W505	4	7'-7"	110	3'-2"				32
W506	33	5'-7"	110	2'-2"				192
W507	2	8'-3"	106	4'-8"	3'-2"	8"		17
W601	8	9'-3"	Str.					111
W602	11	7'-10"	100	6'-6"				130
W603	6	6'-6"	Str.					59
W604	18	5'-6"	104	4'-8"	1'-0"			149
W605	18	13'-9"	Str.					372
W606	4	9'-10"	100	8'-6"				59
W607	8	4'-10"	100	3'-6"				58
W608	4	8'-6"	Str.					51
W609	6	3'-6"	Str.					32
W610	3	7'-5"	101	6'-9"				33
W611	14	7'-7"	104	6'-9"	1'-0"			159
W612	8	8'-7"	105	4'-0"	11"			103
W613	1	47'-3"	Str.					71
W614	1	47'-6"	Str.					71
W615	4	8'-10"	105	4'-0"	1'-2"			53
W616	46	5'-6"	Str.					380
W617	8	41'-6"	Str.					499
W618	1	5'-9"	Str.					9
W619	1	6'-0"	Str.					9
W620	2	32'-6"	Str.					98
W621	2 Ser. 12	20'-6" to 32'-0"	Str.				1'-0½"	946
W622	4	42'-6"	Str.					255
W624	1 Ser. 5	45'-6" to 47'-0"	Str.				4½"	347
W625	40	10'-3"	133					616
W625	9	22'-3"	Str.					301
W627	2 Ser. 6	15'-3" to 18'-6"	Str.				7¾"	304
W628	2 Ser. 9	5'-3" to 10'-9"	Str.				8¼"	216
W701	8	12'-8"	100	11'-0"				207
W702	2	19'-3"	Str.					79
W703	12	18'-0"	Str.					442
W704	2	11'-0"	Str.					45
W705	2 Ser. 9	2'-6" to 10'-6"	Str.				1'-0"	239
W801	2	47'-3"	Str.					252
W802	2	47'-6"	Str.					254
W803	2	12'-3"	Str.					65
W804	2	18'-6"	Str.					99

FED. ROAD DIVISION	STATE	PROJECT	
2	OHIO		

248
288

LUCAS COUNTY
CITY OF TOLEDO
TOLEDO EXPRESSWAY SYSTEM
EXPRESSWAY - PART 26
LUC-75-6.14

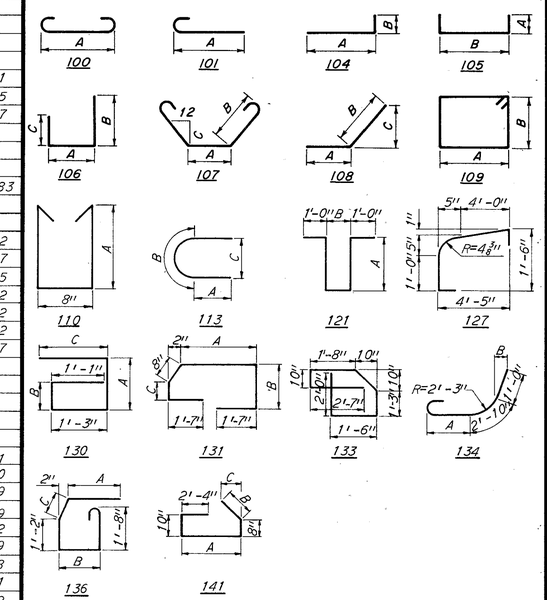

BENDING DIAGRAMS

Notes:
All bar dimensions are given out to out.
All bars of a series shall vary in length by a constant increment.
**To be included for payment in unit price bid for Item 517.
For Replacement Reinforcement schedule see sheet 14/14

H.N.T.B. BRIDGE NO. 15

HOWARD, NEEDLES, TAMMEN & BERGENDOFF 13/14
CONSULTING ENGINEERS
KANSAS CITY CLEVELAND NEW YORK

REINFORCEMENT SCHEDULE

DETROIT AVENUE OVER
RELOCATED OTTAWA RIVER
BR. NO. LUC-75-0612 STA. 7+57.75
SCALE: STA. 8+70.52

TOLEDO EXPRESSWAY SYSTEM
TOLEDO LUCAS COUNTY OHIO

DRAWN RET	TRACED	CHECKED GWR	REVIEWED	REVISED
DATE 4-4-69	DATE	DATE 4-7-69	DATE	SHEET 248

MARK	NUMBER	LENGTH	TYPE	DIMENSIONS A	DIMENSIONS B	DIMENSIONS C	SERIES INCRE.	WEIGHT POUNDS
W1001	3	7'-1"	101	5'-8"				91
W1002	2	9'-11"	101	8'-6"				85
W1003	3	13'-9"	Str.					177
							Total	8,583
PIER I								
P401	180	2'-9"	100	1'-9"				331
P501	36	44'-0"	Str.					1,652
P502	74	29'-3"	Str.					2,258
P503	2	44'-9"	Str.					93
P504	2	29'-9"	Str.					62
P505	34	5'-6"	113	1'-7"	2'-4"	1'-6½"		195
P506	58	7'-5"	105	3'-0"	1'-8"			449
P507	45	6'-11"	105	2'-9"	1'-8"			325
P508	40	4'-7"	105	1'-7"	1'-8"			191
P509	2	4'-3"	105	1'-7"	1'-4"			9
P601	116	8'-10"	100	7'-6"				1,538
P602	24	36'-9"	Str.					1,325
P603	212	5'-4"	104	4'-8"	10"			1,697
P604	119	16'-6"	Str.					2,949
P605	93	16'-9"	Str.					2,340
							Total	15,414
DECK								
S501	146	5'-5"	110	2'-1"				825
S502	214	12'-1"	131	6'-7"	1'-5"	7"		2,697
S503	8	11'-11"	131	6'-5"	1'-5"	7"		99
S504	72	30'-0"	Str.					2,253
S505	24	23'-6"	Str.					588
S506	220	3'-8"	109	7"	1'-0"			841
S601	158	30'-2"	101	29'-6"				7,159
S602	150	44'-10"	100	43'-6"				10,101
S603	462	30'-0"	Str.					20,818
S604	59	21'-9"	Str.					1,927
S605	1 Ser. 12	8'-8" to 28'-5"	101	8'-0" to 27'-9"			1'-9½"	334
S606	2 Ser. 22	7'-4" to 44'-2"	101	6'-8" to 43'-6"			1'-9⅛"	1,702
S607	3	5'-6"	Str.					25
S608	16	6'-3"	Str.					150
S609	154	24'-6"	Str.					5,667
S610	8	30'-3"	Str.					363
S611	156	33'-3"	Str.					7,791
S612	150	43'-6"	Str.					9,801
S613	4	46'-0"	Str.					276
S614	1 Ser. 12	9'-9" to 29'-6"	Str.				1'-9½"	354
S615	2 Ser. 22	6'-9" to 43'-6"	Str.				1'-9⅛"	1,660
S616	161	24'-3"	Str.					5,864
S617	159	27'-8"	101	27'-0"				6,607
S618	1 Ser. 12	4'-6" to 24'-3"	Str.				1'-9½"	259
S619	1 Ser. 12	11'-9" to 31'-6"	Str.				1'-9½"	390
S620	1 Ser. 12	13'-6" to 33'-3"	Str.				1'-9½"	421
S621	1 Ser. 12	6'-2" to 25'-11"	101	5'-6" to 25'-3"			1'-9½"	289
S622	1 Ser. 12	2'-6" to 22'-6"	Str.				1'-9½"	225
S623	1 Ser. 12	7'-3" to 27'-0"	Str.				1'-9½"	309
S624	4	6'-3"	Str.					38
S625	6	10'-0"	Str.					90
S626	12	11'-9"	Str.					212
S627	2	3'-9"	Str.					11
S681	4	9'-11"	107	1'-3"	3'-8"	7"		60
S682	6	7'-6"	101	6'-10"				68
S683	4	9'-0"	109	1'-3"	3'-0"			54
S684	2	8'-2"	109	10"	3'-0"			25
							Total	90,353

MARK	NUMBER	LENGTH	TYPE	DIMENSIONS A	DIMENSIONS B	DIMENSIONS C	SERIES INCRE.	WEIGHT POUNDS
PARAPET								
R501	16	3'-3"	113	1'-3"	9"	6½"		**
R502	8	6'-7"	127					**
R503	8	4'-8"	Str.					**
R504	16	42'-3"	Str.					**
R505	16	3'-9"	Str.					**
R506	32	13'-6"	Str.					**
R507	16	15'-0"	Str.					**
R508	24	7'-0"	Str.					**
R681	3	6'-0"	107	1'-3"	11'-8½"	7"		**
REPLACEMENT REINFORCEMENT SCHEDULE								
No. 4	1	6'-3"	105					
No. 5	2	6'-7"	Str.					
No. 6	8	6'-11"	Str.					
No. 7	1	7'-2"	Str.					
No. 8	1	7'-6"	Str.					
No. 10	2	8'-2"	Str.					
No. 11	1	8'-6"	Str.					

MARK	NUMBER	LENGTH	TYPE	DIMENSIONS A	DIMENSIONS B	DIMENSIONS C	SERIES INCRE.	WEIGHT POUNDS

FED. ROAD DIVISION	STATE	PROJECT		249 / 288
2	OHIO			

LUCAS COUNTY
CITY OF TOLEDO
TOLEDO EXPRESSWAY SYSTEM
EXPRESSWAY - PART 26
LUC-75-6.14

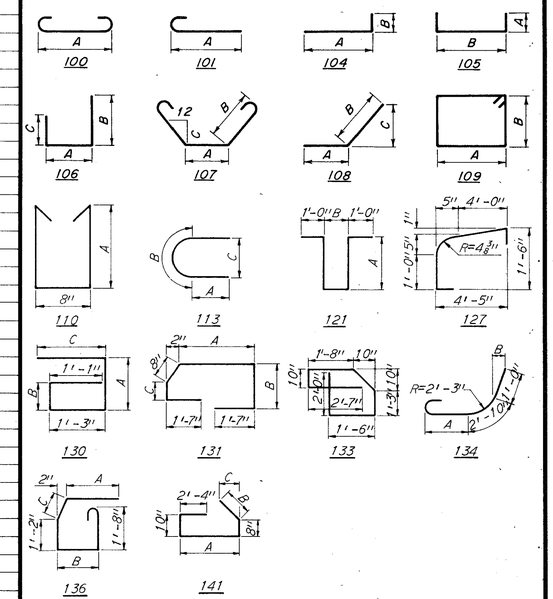

BENDING DIAGRAMS

Notes:
All bar dimensions are given out to out.
All bars of a series shall vary in length by a constant increment.
**To be included for payment in unit price bid for Item 517.
For Replacement Reinforcement schedule see sheet 14/14

This sheet supersedes sheet No. 249 1-5-70

H.N.T.B. BRIDGE NO. 15

HOWARD, NEEDLES, TAMMEN & BERGENDOFF — 14/14
CONSULTING ENGINEERS
KANSAS CITY CLEVELAND NEW YORK

REINFORCEMENT SCHEDULE

DETROIT AVENUE OVER
RELOCATED OTTAWA RIVER
BR. NO. LUC-75-0612 STA. 7+57.75
SCALE: STA. 8+70.52

TOLEDO EXPRESSWAY SYSTEM
TOLEDO LUCAS COUNTY OHIO

DRAWN RET	TRACED	CHECKED GWR	REVIEWED	REVISED
DATE 4-4-69	DATE	DATE 4-7-69	DATE	SHEET 249A