STATE OF OHIO
DEPARTMENT OF TRANSPORTATION

MED-42-1.89
MED-224-10.45

HARRISVILLE, WESTFIELD TOWNSHIPS
MEDINA COUNTY

MED-42-1.89	OHIO	1
MED-224-10.45	FHWA REGION 5	189
RS-440(11) F-51(70)	FEDERAL PROJECT	

proj. 256 (89)

All references to Item 846 appearing throughout this plan shall be considered to read Item 446.

DESIGN DESIGNATION

Current ADT (1988)	=	8,500
Design Year ADT (2008)	=	11,900
DHV (Design Hour Volume)	=	1,020
D (Directional Distribution)	=	50%
T (B & C Trucks)	=	22%
V (Design Speed)	=	55 MPH*
Legal Speed	=	55 MPH

Location	Functional Classification
MED-42-(1.89-3.06)	Major Collector
MED-42-(3.06-6.91)	Minor Arterial
MED-224-(10.45-15.97)	Minor Arterial

*Design Exceptions noted on Sheet 2

LIMITED ACCESS

This improvement is especially designed for through traffic and has been declared a limited access highway or freeway by action of the director in accordance with the provisions of Section 5511.02 of the Revised Code of Ohio.

CONVENTIONAL SIGNS

County Line
Township Line
Section Line
Corporation Line or
Fence Line (existing) (proposed)
Center Line 352 353
Trees, Stumps, (to be removed)
Utility Poles: Telephone, Power, Light

Limited Access (only) LA
Right of Way (only) RW
Limited Access & Right of Way LA & RW
Existing Right of Way
Property Line (in existing fence)
Railroad or
Guardrail (existing) (proposed)

1989 SPECIFICATIONS

The standard specifications of the State of Ohio, Department of Transportation, including changes and supplemental specifications listed in the proposal shall govern this improvement.

I hereby approve these plans and declare that the making of this improvement will not require the closing to traffic of U.S. 224 or U.S. 42 westbound and that provisions for the maintenance and safety of traffic will be as set forth on the plans and estimates. The part time closing to traffic of U.S. 42 ramp "C" and S.R. 83 will be required with detours to be provided by State forces.

INDEX OF SHEETS

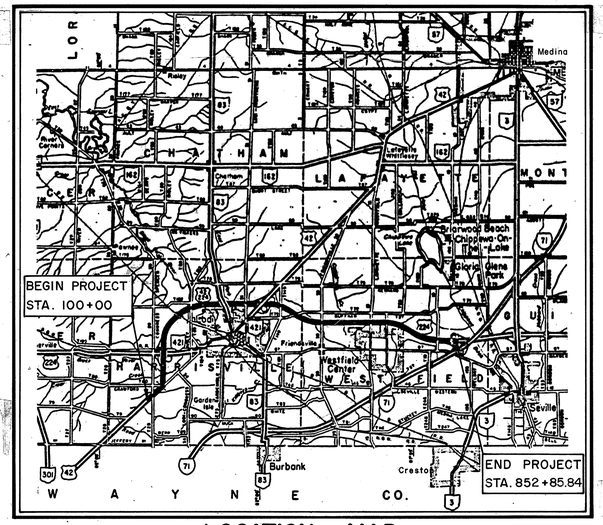

LOCATION MAP

SCALE IN MILES
0 1 2 3 4 5 6 7 8 9

Portion to be improved
State & Federal Routes
Other Roads

SCALES*

Plan 0 50 100
Profile: Horizontal 0 50 100, Vertical 0 5 10 20
Cross Section: Horizontal 0 5 10 20, Vertical 0 5 10 20

*Scales shown are for U.S. 224 only. See sheet 50 for scales used at C.R. 19.

UNDERGROUND UTILITIES
TWO WORKING DAYS
BEFORE YOU DIG
CALL 800-362-2764 (TOLL FREE)
OHIO UTILITIES PROTECTION SERVICE
NON MEMBERS
MUST BE CALLED DIRECTLY

LINE DATA

	RS-440(11)	F-51(70)	Total
Begin Project	Sta. 100+00.00	Sta. 161+36.58	Sta. 100+00.00
End Project	Sta. 161+36.58	Sta. 852+85.84	Sta. 852+85.84
Deduct For Sta. Equations		19,666.76	19,666.76
Length Of Project	6136.58 L.F. or 1.162 Mi.	49,482.50 L.F. or 9.372 Mi.	55,619.08 L.F. or 10.534 Mi.
ADD FOR APPROACHES:			
Sta. 97+56 To Sta. 100+00	244.00		244.00
Sta. 852+85.44 To Sta. 854+49.93		164.09	164.09
Sta. 25+00 To Sta. 33+44.95 US224		844.95	844.95
Sta. 33+44.95 To Sta. 37+00 SR421		355.05	355.05
Sta. 15+25 To Sta. 17+45.29 SR421		220.29	220.29
Sta. 17+45.29 To Sta. 32+50 US42		1504.71	1504.71
Sta. 4+95 To Sta. 9+90 S.R. 83		495.00	495.00
Length Of Work	6380.58 L.F. or 1.208 Mi.	53,066.59 L.F. or 10.051 Mi.	59,447.17 L.F. or 11.259 Mi.

Plan Prepared By:

ENGINEERING ASSOCIATES LTD.
Consulting Engineers
Wooster, Ohio

Project: MED-42-1.89 MED-224-10.45
Date of Letting _____ 19___, Contract No. _____

SUPPLEMENTAL PRINTS OF STANDARD CONSTRUCTION DRAWINGS

BP-5	10-1-87	GR-1	1-11-85	MC-6	1-30-84	AS-1-81	11-27-81	TC-81.10	~~1~~-20-84		SUPPLEMENTAL SPECIFICATIONS		
MC-1	6-13-69	GR-2B	2-5-82	MC-9	1-30-84	DBR-2-73	4-10-73	TC-81.20	1-20-84	812	801	3-4-88	
MT-97.10	4-29-88	GR-3	1-21-85	MC-10	5-1-76	BR-1	5-29-79	TC-82.10	8-29-84		826	6-26-78	
BP-1	6-1-65	GR-4	2-5-82	HL-50.11	5-1-87	CB-5	11-10-83	~~TC-83.10~~	~~1-20-84~~	845	833	6-26-78	
BP-2	1-11-85	GR-4A	1-30-84	I-2	12-18-84	TC-52.10	4-3-79	TC-83.20	1-20-84		850	5-31-88	
BP-3	12-6-76	GR-5	2-5-82	LA-1	6-1-79	TC-52.20	4-3-79	TC-84.20	1-20-84	847	845	5-31-88	
BP-4	10-1-87	GR-6	2-5-82	SD-1-69	6-12-69	TC-41.20	3-26-79	TC-85.20	1-20-84	941	847	10-17-83	
BP-11	1-30-84	~~GR-6A~~	2-5-82	TC-35.10	8-29-84	TC-42.10	8-19-77	HL-30.11	~~5-1-87~~	921	941	5-28-87	
F-2	5-1-76	HW-4A	4-1-80	TC-71.10	4-9-79	TC-42.20	3-26-79	HL-30.21	~~5-1-87~~	923	921	12-4-72	
F-3	5-1-76	HW-4B	4-1-80	TC-72.20	2-26-82	MC-9A	1-11-85	HL-~~30.22~~	5-1-87	947	923	1-10-69	
BP-7	10-1-87	HW-D	6-1-65	TC-41.50	3-26-79	MC-11	8-1-78	HL-~~10.13~~	5-1-87	953	947	10-17-83	
F-5	5-1-76	MC-4	7-26-76	MT-99.10	11-14-86	TC-21.20	1-20-84	HL-20.11	5-1-87	849	953	8-21-80	
F-6	5-1-76	MC-5	6-12-75	MT-99.20	11-14-86	TC-41.41	8-2-79	HL-60.11	5-1-87	949	849	12-24-85	
											949	9-26-86	

Approved Gary W. Poag
Date 6/28/88 District Deputy Director of Transportation

Approved B. D. Hardlanni / WK
Date 10/19/88 Engineer, Bureau of Bridges and Structural Design

Approved Theodore J. Stitt
Date 12/19/88 Chief Engineer, Planning and Design

Approved Bernard B. Hurst
Date 12/19/88 Director, Department of Transportation

DEPARTMENT OF TRANSPORTATION
FEDERAL HIGHWAY ADMINISTRATION

APPROVED:

DIVISION ADMINISTRATOR DATE

Rev. 2-9-89

CALC. BY DATE	MED-42-1.89	OHIO
CHKD. BY DATE	MED-224-10.45	FHWA REGION 5

SCHEMATIC

500 0 500 1000 1500

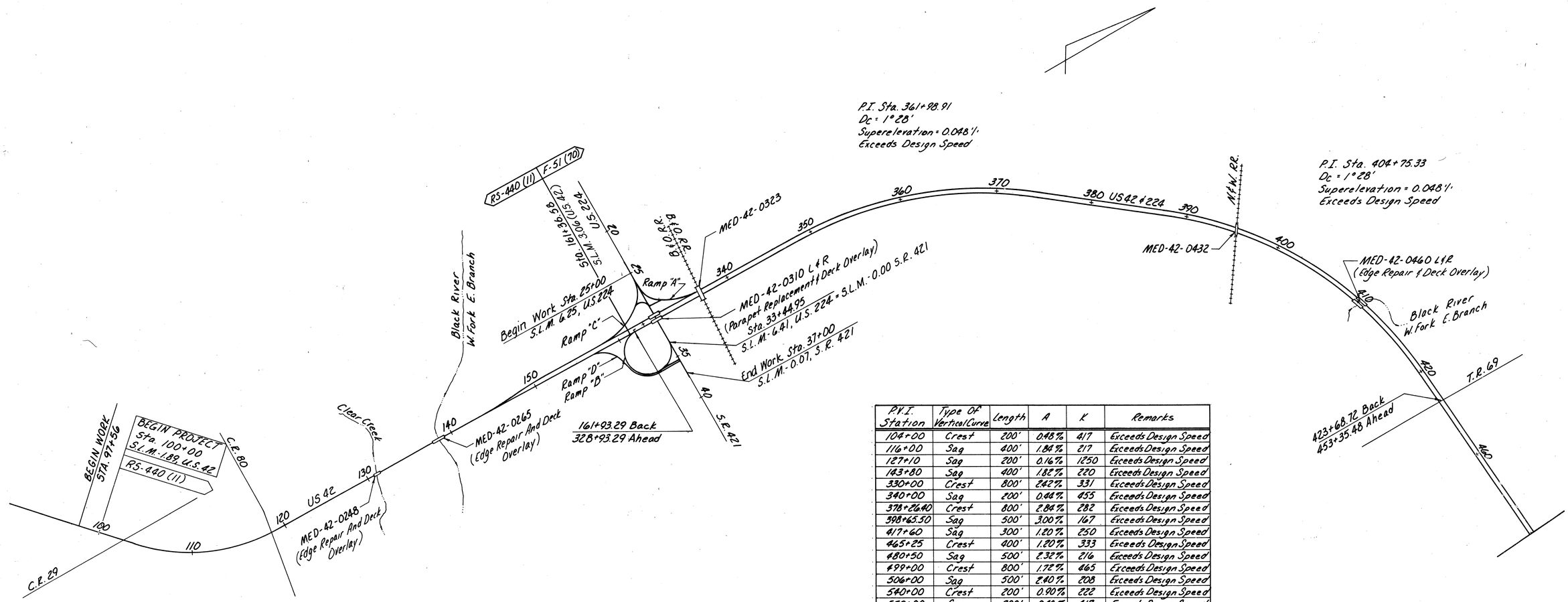

P.I. Sta. 112+02.52
Ls = 400'
Dc = 3°00'
Superelevation = 0.083'/'
Exceeds Design Speed

P.V.I. Station	Type Of Vertical Curve	Length	A	K	Remarks
104+00	Crest	200'	0.48%	417	Exceeds Design Speed
116+00	Sag	400'	1.84%	217	Exceeds Design Speed
127+10	Sag	200'	0.16%	1250	Exceeds Design Speed
143+80	Sag	400'	1.82%	220	Exceeds Design Speed
330+00	Crest	800'	2.42%	331	Exceeds Design Speed
340+00	Sag	200'	0.44%	455	Exceeds Design Speed
378+26.40	Crest	800'	2.84%	282	Exceeds Design Speed
398+65.50	Sag	500'	3.00%	167	Exceeds Design Speed
417+60	Sag	300'	1.20%	250	Exceeds Design Speed
465+25	Crest	400'	1.20%	333	Exceeds Design Speed
480+50	Sag	500'	2.32%	216	Exceeds Design Speed
499+00	Crest	800'	1.72%	465	Exceeds Design Speed
506+00	Sag	500'	2.40%	208	Exceeds Design Speed
540+00	Crest	200'	0.90%	222	Exceeds Design Speed
559+00	Sag	200'	0.48%	417	Exceeds Design Speed
568+00	Crest	600'	1.58%	380	Exceeds Design Speed
584+00	Crest	400'	0.72%	556	Exceeds Design Speed
610+00	Crest	1000'	1.88%	532	Exceeds Design Speed
629+40	Crest	200'	0.40%	500	Exceeds Design Speed
639+00	Sag	400'	1.68%	238	Exceeds Design Speed
653+00	Crest	600'	1.12%	536	Exceeds Design Speed
668+00	Crest	600'	1.56%	385	Exceeds Design Speed
680+76	Sag	900'	6.00%	150	Exceeds Design Speed
711+00	Crest	600'	1.44%	417	Exceeds Design Speed
730+00	Crest	200'	0.56%	357	Exceeds Design Speed
754+38	Crest	1200'	4.00%	300	Exceeds Design Speed
778+00	Sag	600'	2.88%	208	Exceeds Design Speed
797+67	Crest	800'	2.88%	278	Exceeds Design Speed
831+75 WB 832+00 EB	Sag	400'	2.46%	163	Exceeds Design Speed
846+22	Sag	200'	0.29%	690	Exceeds Design Speed
S.R. 42-81+50	Crest	900'	4.55%	198	Exceeds Design Speed

NOTE: See Sheets 32-42 for stations of work on side road intersections.

DESIGN EXCEPTIONS (Approved 10/9/87)

LOCATION	ITEM	PROPOSED	REQUIRED
MED-42/224 from 0.32 miles south of the US 224 and US 42 interchange to 0.52 miles east of C.R. 19	Graded Shoulder	12' With guardrail 10' Without guardrail	15' With guardrail
S.R. 83 over Mainline Roadway	Graded Shoulder	5' To 6'	8'
	Bridge Width	32'	40'
	Vertical Clearance	15'	16.5'

SCHEMATIC PLAN

CALC. BY DATE	MED-42-1.89	OHIO	3
CHKD. BY DATE	MED-224-10.45	FHWA REGION 5	18.9

SCHEMATIC

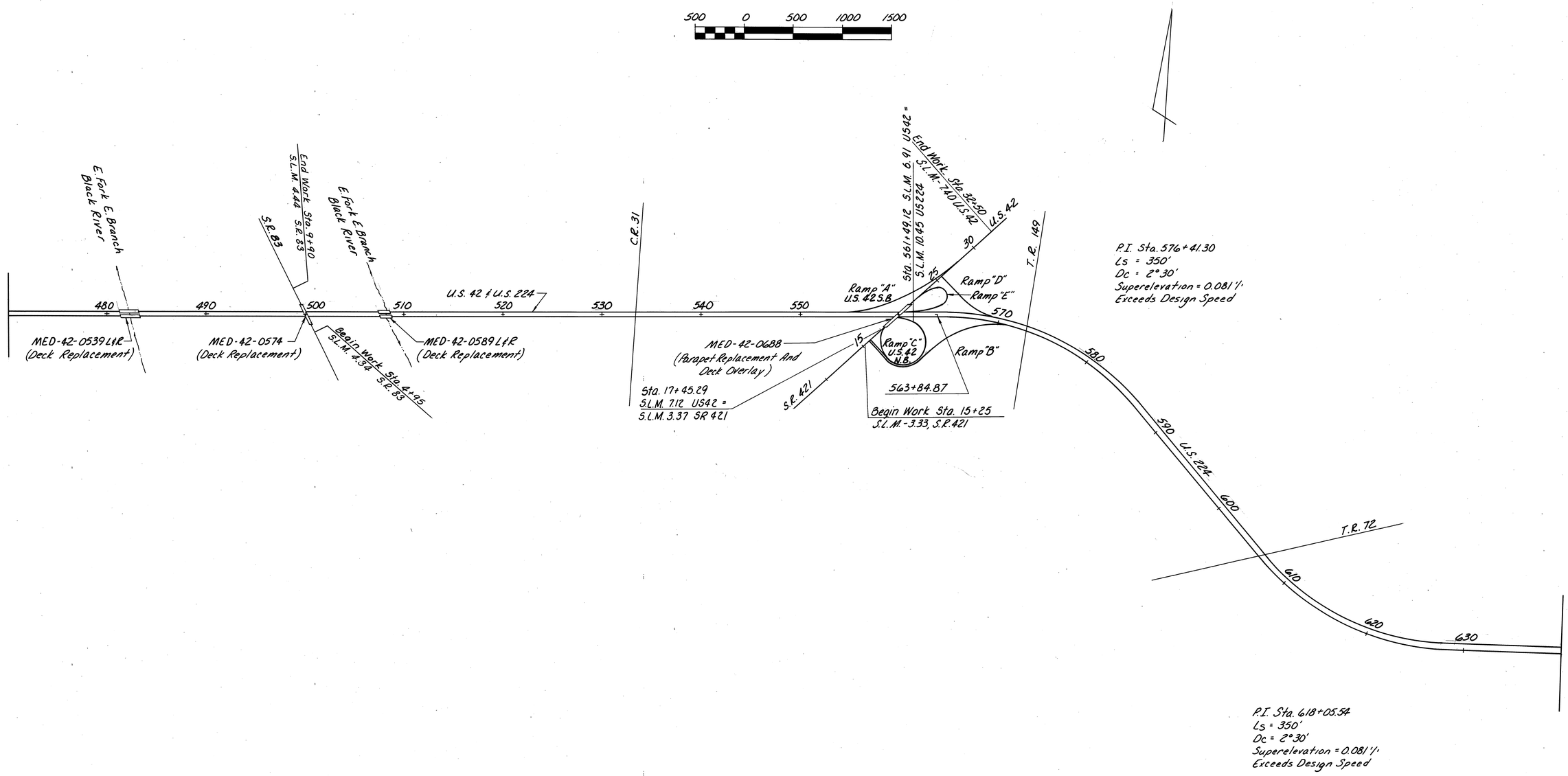

NOTE: See Sheets 32-42 for stations of work on side road intersections.

SCHEMATIC PLAN

CALC. BY ____ DATE ____	MED-42-1.89	OHIO
CHKD. BY ____ DATE ____	MED-224-10.45	FHWA REGION 5

SCHEMATIC

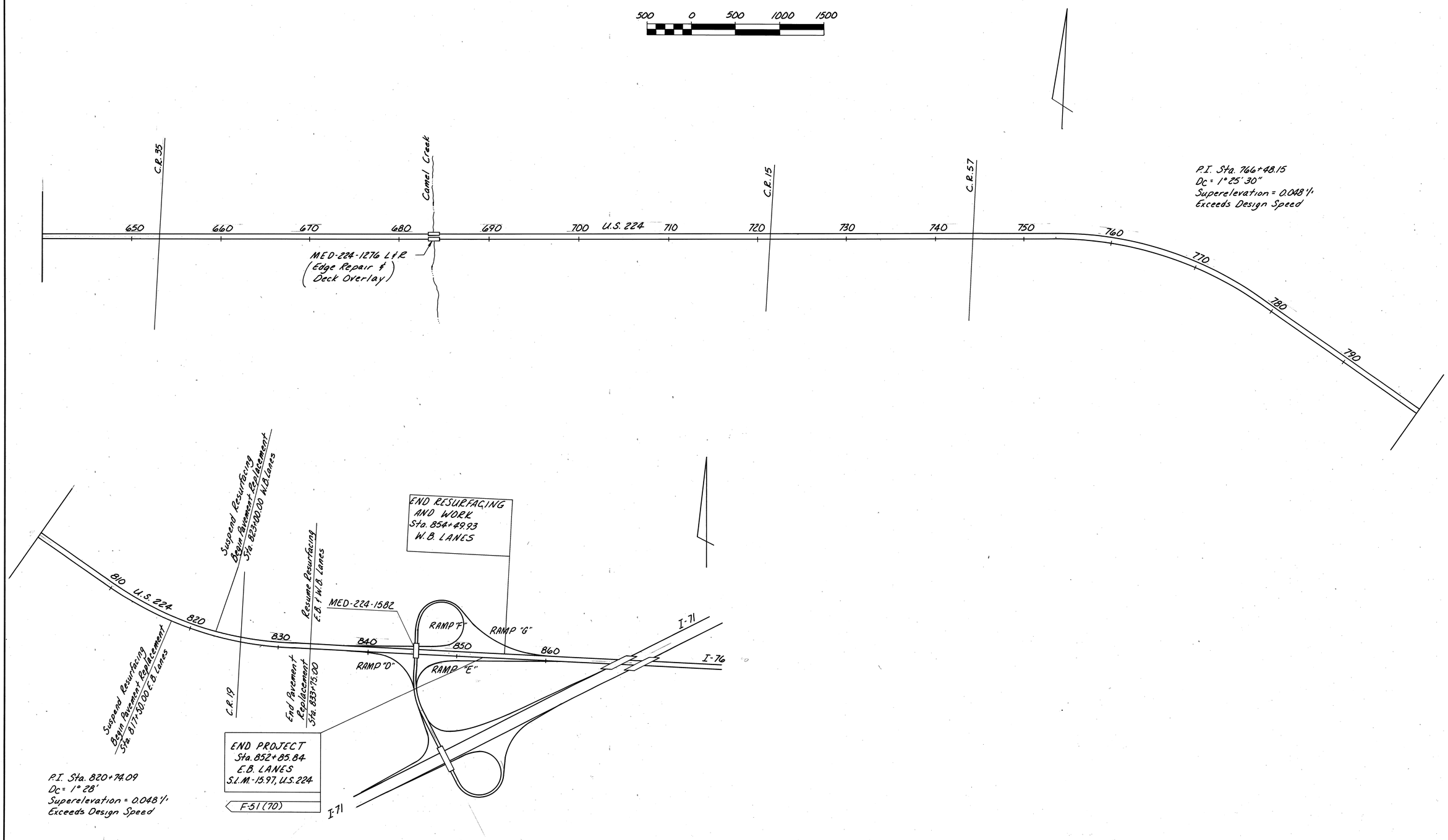

SCHEMATIC PLAN

TYPICAL SECTIONS
TYPE 846

CALC. BY DATE	MED-42-1.89	OHIO
CHKD. BY DATE	MED-224-10.45	FHWA REGION 5

5/189

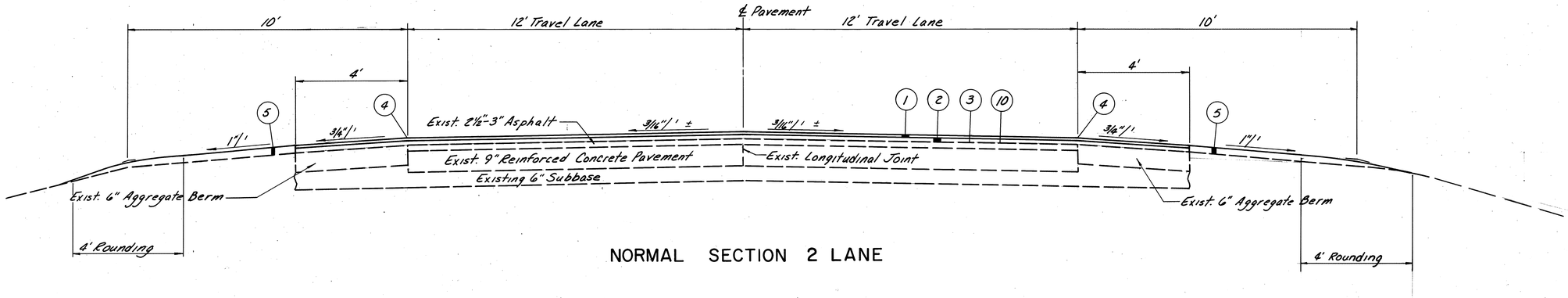

NORMAL SECTION 2 LANE

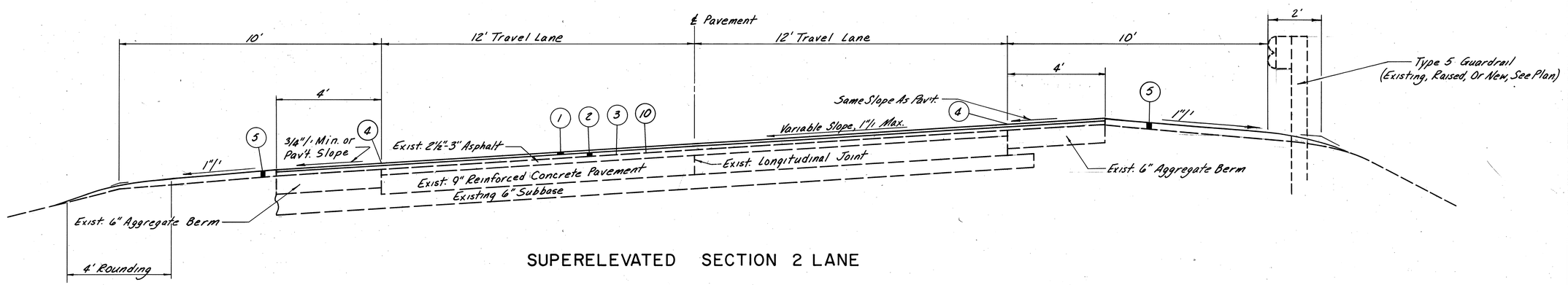

SUPERELEVATED SECTION 2 LANE

LEGEND

1. 1½"-446 Asphalt Concrete Surface Course, Type 1, AC-20.
2. 1¾"-446 Asphalt Concrete Intermediate Course, Type 2, AC-20.
3. 407 - Tack Coat, As Per Plan. (See General Note)
4. Hot Longitudinal Joint. (See General Note)
5. 617 - Compacted Aggregate, Type A.
6. 13"-451 Reinforced Concrete Pavement, As Per Plan. (See General Note)
7. 6"-304 Aggregate Base, As Per Plan.
8. 605 - Pipe Underdrain, As Per Plan.
9. 612 - Concrete Median
10. 254 - Pavement Planing, Bituminous Variable Thickness (¼" Min. In Wheel Rut To ¾" Max. Thickness, Or As Shown In Construction Details.)
11. 452 - Variable Thickness Plain Concrete Pavement, As Per Plan. (See General Note)
12. 203 - Subgrade Compaction

TYPICAL SECTIONS

Rev. 2-9-89

§240 - 290C

CALC. BY DATE	MED-42-1.89	OHIO	6
CHKD. BY DATE	MED-224-10.45	FHWA REGION 5	189

TYPICAL SECTIONS

TYPE 846

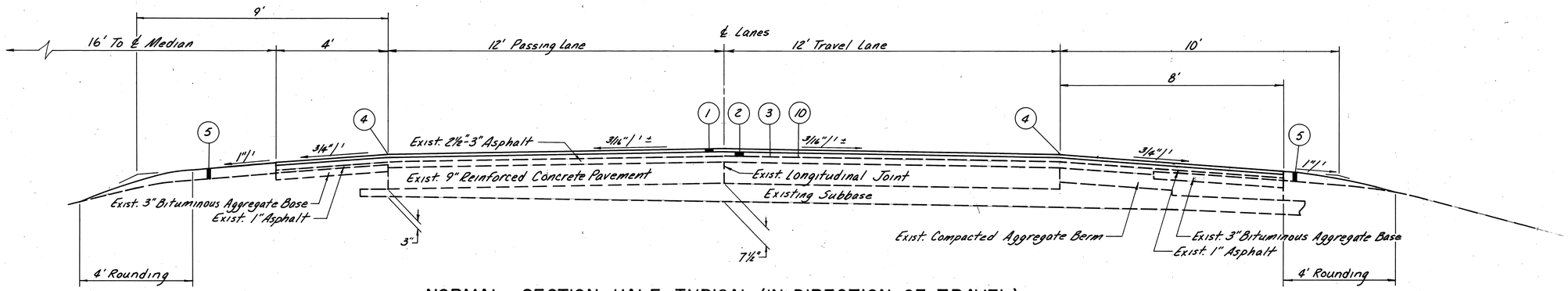

NORMAL SECTION HALF-TYPICAL (IN DIRECTION OF TRAVEL)

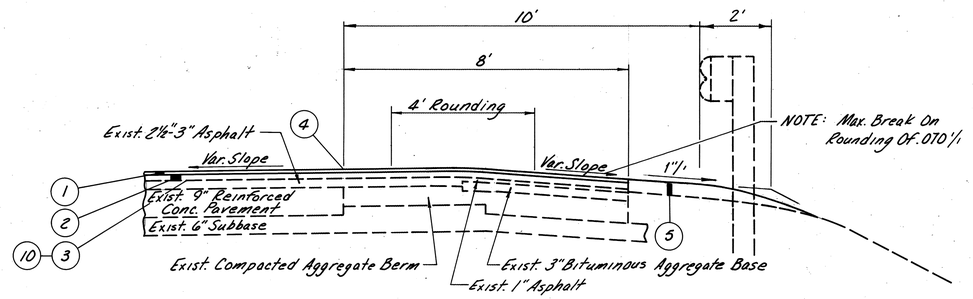

DETAIL FOR OUTSIDE BERM SUPERELEVATED

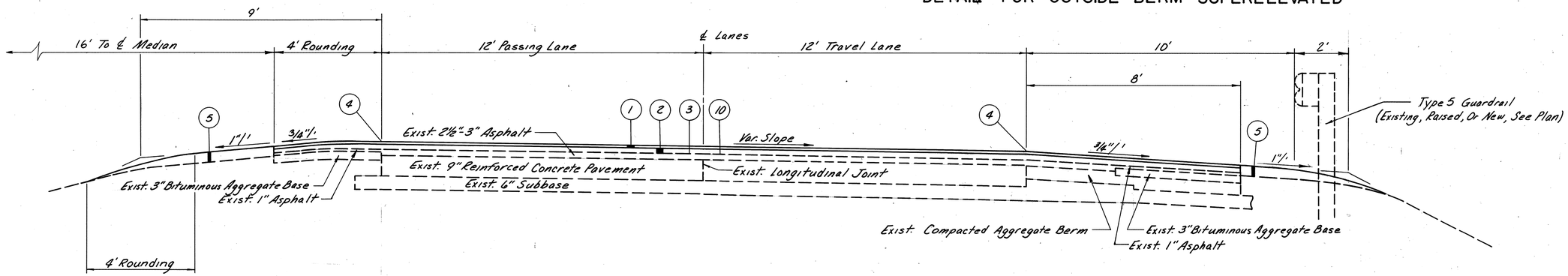

SUPERELEVATED SECTION HALF-TYPICAL (IN DIRECTION OF TRAVEL)

See Sheet 5 For Legend

TYPICAL SECTIONS

TYPE 846

CALC. BY DATE	MED-42-1.89	OHIO
CHKD. BY DATE	MED-224-10.45	FHWA REGION 5

7 / 189

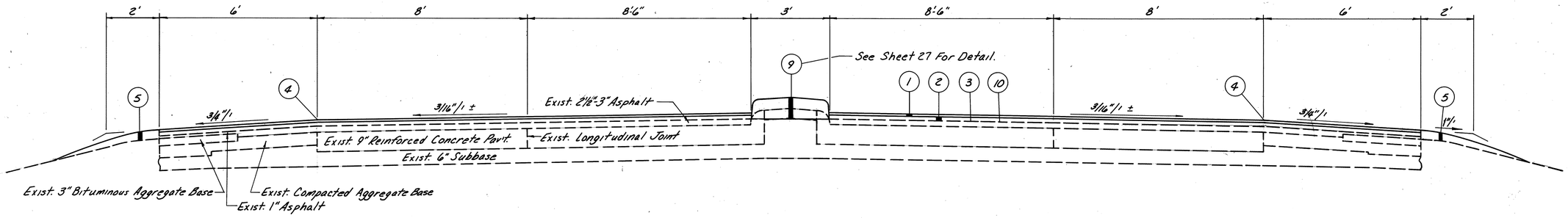

NORMAL SECTION TWO-WAY RAMP

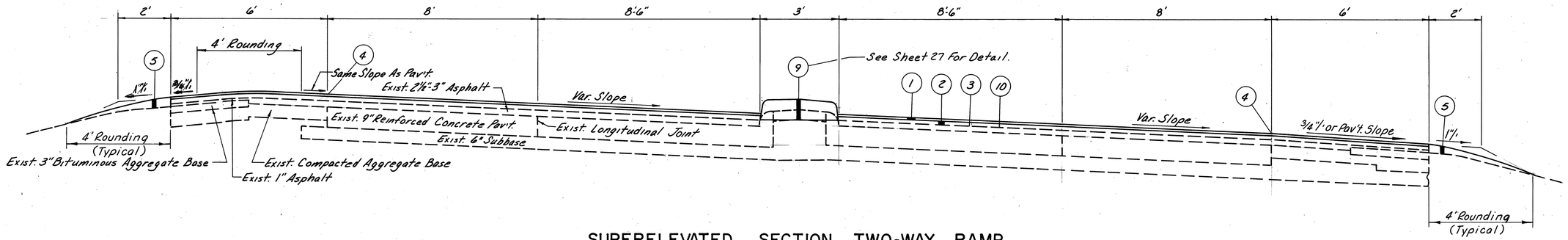

SUPERELEVATED SECTION TWO-WAY RAMP

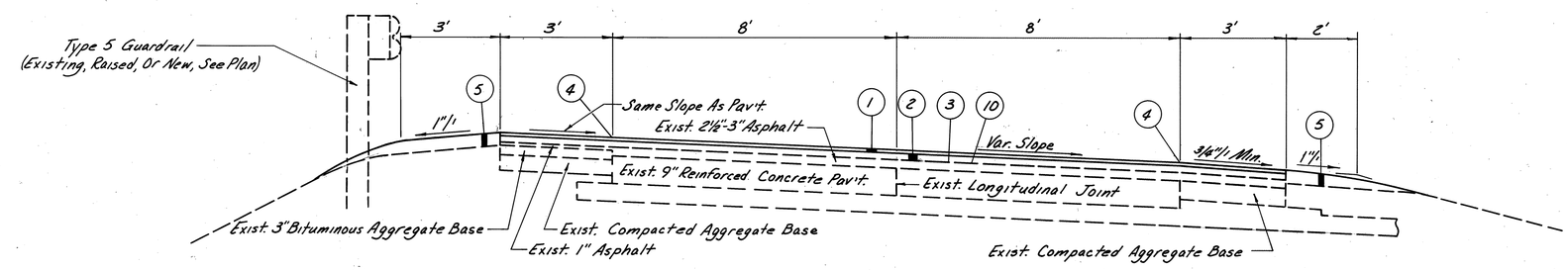

NORMAL SECTION ONE-WAY RAMP

See Sheet 5 For Legend

CALC. BY DATE	MED-42-1.89	OHIO
CHKD. BY DATE	MED-224-10.45	FHWA REGION 5

8/189

TYPICAL SECTIONS

TYPE 451

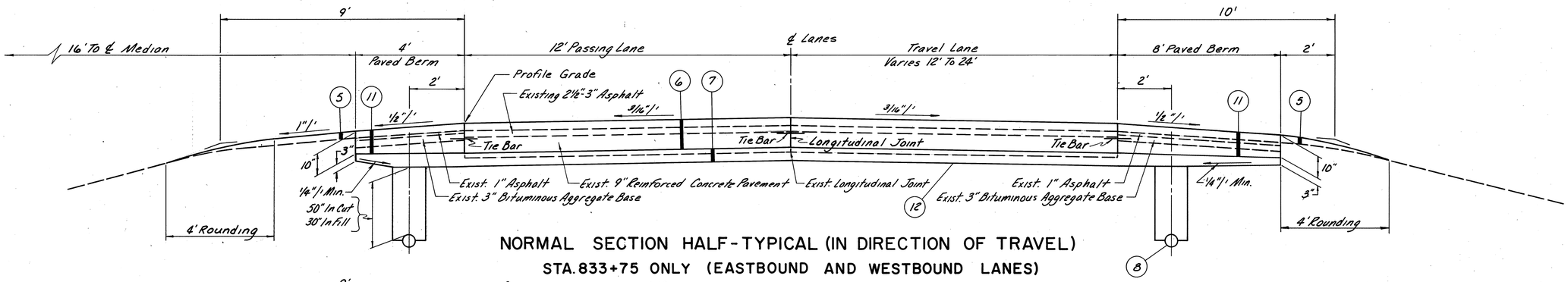

NORMAL SECTION HALF-TYPICAL (IN DIRECTION OF TRAVEL)

STA. 833+75 ONLY (EASTBOUND AND WESTBOUND LANES)

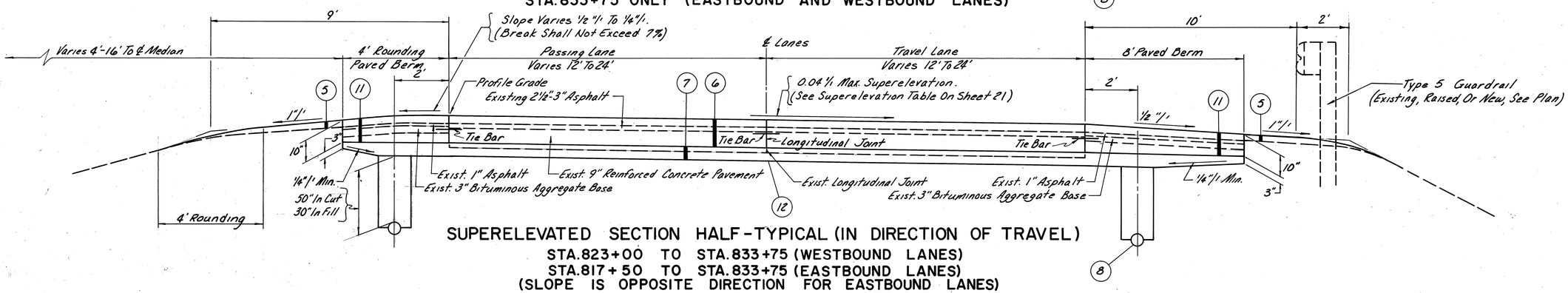

SUPERELEVATED SECTION HALF-TYPICAL (IN DIRECTION OF TRAVEL)

STA. 823+00 TO STA. 833+75 (WESTBOUND LANES)

STA. 817+50 TO STA. 833+75 (EASTBOUND LANES)

(SLOPE IS OPPOSITE DIRECTION FOR EASTBOUND LANES)

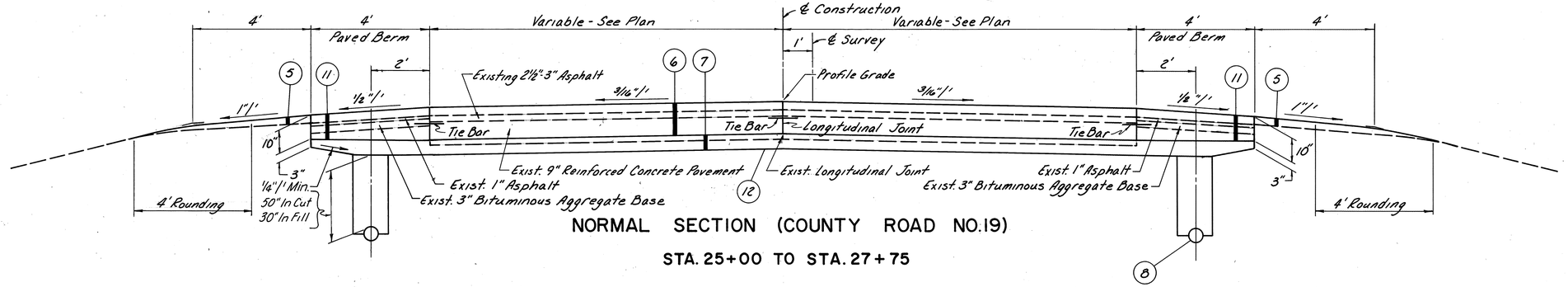

NORMAL SECTION (COUNTY ROAD NO. 19)

STA. 25+00 TO STA. 27+75

See Sheet 5 for Legend

FULL DEPTH PAVEMENT REPLACEMENT
TYPICAL SECTIONS

GENERAL NOTES

FIELD OFFICE

THE CONTRACTOR SHALL PROVIDE A SUITABLE FIELD OFFICE HAVING A MINIMUM OF 800 SQUARE FEET OF FLOOR SPACE. PAYMENT SHALL BE AT THE LUMP SUM PRICE BID FOR ITEM 619, FIELD OFFICE.

ALIGNMENT AND PROFILE

PART OF THE WORK PROPOSED BY THIS PROJECT IS FOR THE RESURFACING OF THE EXISTING PAVEMENT. THE ALIGNMENT OF THE EXISTING PAVEMENT TO BE RESURFACED WILL NOT BE CHANGED, AND THE PROFILE OF THE PROPOSED SURFACE WILL BE SIMILAR TO THAT OF THE EXISTING PAVEMENT EXCEPT THAT IT WILL BE RAISED AN AMOUNT EQUAL TO THE THICKNESS OF THE RESURFACING COURSES SPECIFIED IN THESE PLANS.

WORK WITHIN EXISTING RIGHT-OF-WAY

ALL WORK SHALL BE PERFORMED WITHIN THE EXISTING RIGHT-OF-WAY AT ALL LOCATIONS ON THIS PROJECT.

UNDERGROUND UTILITIES

THE LOCATIONS OF THE UNDERGROUND UTILITIES SHOWN ON THE PLANS ARE AS OBTAINED FROM THE OWNERS OF THE UTILITY AS REQUIRED BY SECTION 153.64 OF THE OHIO REVISED CODE.

UTILITY OWNERSHIP

THE FOLLOWING UTILITIES AND OWNERS ARE LOCATED WITHIN THE WORK LIMITS OF THIS PROJECT:

POWER:
LODI MUNICIPAL POWER & LIGHT COMPANY
108 AINSWORTH STREET
LODI, OHIO 44254
PHONE: (216) 948-1099

LORAIN-MEDINA RURAL ELECTRIC COOP., INC.
P.O. BOX 158
22898 WEST ROAD
WELLINGTON, OHIO 44090
PHONE: (216) 647-4185

OHIO EDISON CO.
76 S. MAIN STREET
AKRON, OHIO 44308
PHONE: (216) 384-5714

TELEPHONE:
GTE NORTH INC.
6223 NORWALK ROAD
MEDINA, OHIO 44256
PHONE: (216) 722-9587

LIGHTNET
2839 PACES FERRY ROAD
OVERLOOK II, SUITE 1300
ATLANTA, GEORGIA 30339
PHONE: (404) 438-5600

MCI
12300 RIDGE ROAD
NORTH ROYALTON, OHIO 44133
PHONE: (216) 237-8117 EXT 1172

US SPRINT
8113 RIDGEPOINT, SUITE 200
IRVING, TEXAS 75063
PHONE: (800) 521-0579

GAS:
COLUMBIA GAS OF OHIO
7080 FRY ROAD
MIDDLEBURG HEIGHTS, OHIO 44130
PHONE: (216) 243-1000

COLUMBIA GAS TRANSMISSION CORP.
P.O. BOX 943
COLUMBUS, OHIO 43215
PHONE: (614) 481-1000

WATER:
TRUCK STOPS OF AMERICA
c/o THE STANDARD OIL COMPANY
MARKETING OPERATIONS CENTER II
4800 E. 49TH STREET
CLEVELAND, OHIO 44125
PHONE: (216) 271-8828

CONTINGENCY QUANTITIES

THE CONTRACTOR SHALL NOT ORDER MATERIALS OR PERFORM WORK LISTED IN THE GENERAL SUMMARY FOR ITEMS DESIGNATED BY PLAN NOTE TO BE USED "AS DIRECTED BY THE ENGINEER" UNLESS AUTHORIZED BY THE ENGINEER. THE ACTUAL WORK LOCATIONS AND QUANTITIES USED AT THE ENGINEER'S DISCRETION SHALL BE MADE A MATTER OF RECORD BY INCORPORATION INTO THE FINAL CHANGE ORDER GOVERNING COMPLETION OF THIS PROJECT.

ROUNDING OF CORNERS SHOWN ON CROSS-SECTIONS

THE ROUNDED CORNERS SHOWN ON THE TYPICAL SECTIONS APPLY TO ALL CROSS-SECTIONS, EVEN THOUGH OTHERWISE SHOWN ON THESE PLANS.

REMOVAL OF TREES AND STUMPS:

ALL TREES AND STUMPS SPECIFICALLY MARKED FOR REMOVAL WITHIN THE CONSTRUCTION LIMITS OF THIS PROJECT SHALL BE REMOVED UNDER THE LUMP SUM BID FOR ITEM 201, CLEARING AND GRUBBING, EXCEPT THAT THOSE TREES FOR WHICH PROTECTION AND PRESERVATION WORK IS INDICATED ELSEWHERE IN THESE PLANS SHALL NOT BE REMOVED.

NO TREES HAVE BEEN SPECIFICALLY MARKED FOR REMOVAL *TO ERECT THE NEW RIGHT OF WAY FENCE.* THE COST OF TREE REMOVAL FOR FENCE INSTALLATION SHALL BE INCLUDED IN THE PRICE BID PER LINEAR FOOT OF FENCE. *SEE 607 FENCE NOTE, SHEET 12.*
THE FOLLOWING IS AN APPROXIMATE ESTIMATE OF THE NUMBER OF TREES AND STUMPS TO BE REMOVED IN ADDITION TO THE TREES REMOVED FOR FENCE INSTALLATION:

SIZES	NO. TREES	NO. STUMPS	TOTAL
18"	1	0	1
30"	0	0	0
48"	0	0	0
60"	0	0	0

THE ABOVE ESTIMATE IS APPROXIMATE AND THE STATE OF OHIO RESERVES THE RIGHT TO ORDER THE REMOVAL OF ADDITIONAL TREES OR STUMPS WITHIN THE LIMITS OF THE RIGHT-OF-WAY AND/OR EASEMENT LINES. PAYMENT FOR THE REMOVAL OF THESE ADDITIONAL TREES OR STUMPS SHALL BE INCLUDED IN THE LUMP SUM PRICE BID FOR ITEM 201 CLEARING AND GRUBBING.

SEEDING AND MULCHING

QUANTITIES FOR SEEDING ARE CALCULATED FOR SOIL AREAS BETWEEN TEN (10) FEET OUTSIDE THE WORK LIMITS, AS SHOWN ON THE CROSS SECTIONS, OR TO THE RIGHT-OF-WAY LINE, IF SUCH LINE IS LESS THAN TEN (10) FEET FROM THE WORK LIMITS.

SEEDING QUANTITIES ASSOCIATED WITH THE 203 EARTHWORK ITEMS SHOWN ON THE PLAN ARE ONLY APPROXIMATE AND FINAL PAYMENT WILL BE FOR THE ACTUAL NUMBER OF SQUARE YARDS OF DISTURBED AREAS SEEDED AND MULCHED AS PER 659.

COMMERCIAL FERTILIZER SHALL BE APPLIED AS PER 659.08.

(442 SQ. YDS.) X 20 X 9) / (1000 X 2000) = 0.04 TONS RS-440(11)
(14,458 SQ. YDS.) X 20 X 9) / (1000 X 2000) = 1.30 TONS F- 51(70)

WATERING PERMANENT SEEDED AREAS

THE FOLLOWING ESTIMATED QUANTITY IS TO BE USED AS DIRECTED BY THE ENGINEER TO PROMOTE GROWTH OF THE PERMANENT SEEDED AREAS AS PER 659.09.

659 WATER 1 M-GAL. RS-440(11)
20 M-GAL. F- 51(70)

TEMPORARY SOIL EROSION AND SEDIMENT CONTROL

THE FOLLOWING ESTIMATED QUANTITIES ARE TO BE USED AS DIRECTED BY THE ENGINEER, FOR TEMPORARY EROSION AND SEDIMENT CONTROL MEASURES:

ITEM 207 - STRAW OR HAY BALES 760 EACH F- 51(70)

ITEM 202 - CURB REMOVED, TYPE 6, AS PER PLAN

AFTER THE CONCRETE CURBS ARE REMOVED, THE REMAINING TRENCH SHALL BE BACKFILLED WITH 301 OR 846 ASPHALT CONCRETE AND COMPACTED TO THE LEVEL OF THE ADJACENT PAVEMENT AND/OR PAVED BERM. IN ADDITION, SOME MINOR GRADING WORK MAY BE NECESSARY ON THE EMBANKMENT BEHIND THE PORTION OF THE CURB REMOVAL BEYOND THE MAINLINE PAVED BERM AS DETAILED ON SHEET 27. THE COST OF THE 301 OR 846 ASPHALT BACKFILL AND MINOR GRADING WORK SHALL BE INCLUDED IN THE UNIT PRICE BID FOR ITEM 202 - CURB REMOVED, TYPE 6 AS PER PLAN.

ALL CURB REMOVAL AND BACKFILL WORK SHALL BE COMPLETED PRIOR TO THE PLACING OF THE 846 ON THE ADJACENT PAVEMENT AND/OR PAVED BERM.

ITEM 202 - CURB REMOVED, AS PER PLAN

PORTIONS OF THE EXISTING CURB SHALL BE REMOVED TO THE LEVEL OF THE EXISTING PAVEMENT ON A NEAT LINE AS DETAILED ON SHEET 27, BUT NEED NOT BE SAWED. CURB SHALL BE DISPOSED OF IN ACCORDANCE WITH 202.05(b).

ITEM 202 - MEDIAN PAVEMENT REMOVED, AS PER PLAN

MEDIAN PAVEMENT DESIGNATED FOR REMOVAL SHALL BE REMOVED *AND DISPOSED OF IN ACCORDANCE WITH* 202.05 (b). IN ADDITION, SOME MINOR GRADING WORK MAY BE NECESSARY TO PREPARE THE SURFACE FOR THE NEW MEDIAN PAVEMENT AS DETAILED ON SHEET 27. ANY EXCESS MATERIAL SHALL BE DISPOSED OF IN ACCORDANCE WITH 203.05.

PAYMENT FOR THE ABOVE SHALL BE AT THE UNIT PRICE BID FOR ITEM 202 - MEDIAN PAVEMENT REMOVED, AS PER PLAN.

ITEM 202 - RAISED PAVEMENT MARKERS REMOVED FOR STORAGE

THE FOLLOWING ESTIMATED QUANTITY HAS BEEN INCLUDED IN THE GENERAL SUMMARY FOR REMOVING RAISED PAVEMENT MARKERS AS PER 202.071:

ITEM 202 - RAISED PAVEMENT MARKERS REMOVED FOR STORAGE *413* EACH RS-440(11)
1671 EACH F- 51(70)

ITEM 604 - MONUMENT BOX REMOVED AND RESET

MONUMENT BOXES THAT WILL BE DISTURBED BY CONSTRUCTION SHALL BE REFERENCED BY THE ENGINEER PRIOR TO BEING REMOVED BY THE CONTRACTOR. THE CONTRACTOR SHALL FURNISH AND INSTALL A MONUMENT BOX AS DIRECTED BY THE ENGINEER IN ACCORDANCE WITH STANDARD DRAWING MC-1. THE COST OF FURNISHING AND PLACING THE MONUMENT BOX, STEEL ROD, CONCRETE, SAND AND PIPE SHALL BE INCLUDED IN THE PRICE BID FOR ITEM 604-MONUMENT BOX REMOVED AND RESET.

THE FOLLOWING QUANTITY HAS BEEN INCLUDED IN THE GENERAL SUMMARY FOR USE AS DIRECTED BY THE ENGINEER:

ITEM 604 - MONUMENT BOX REMOVED AND RESET 2 EACH F- 51(70)

ITEM SPECIAL - RESHAPING BERMS

BERMS AT LOCATIONS WHERE EXISTING GUARDRAIL IS REMOVED OR WHERE NEW GUARDRAIL IS TO BE ERECTED SHALL BE RESHAPED AS DIRECTED BY THE ENGINEER TO INSURE A SMOOTH SURFACE FREE OF ALL IRREGULARITIES. EXCESS EXCAVATION RESULTING FROM RESHAPING BERMS SHALL BE DISPOSED OF AS DIRECTED BY THE ENGINEER. PAYMENT FOR RESHAPING BERMS AS DIRECTED SHALL BE INCLUDED IN THE CONTRACT PRICE BID PER LINEAL FOOT FOR ITEM SPECIAL - RESHAPING BERMS.

LOCATIONS OF GUARDRAIL

THE LOCATIONS OF GUARDRAIL RUNS, AS SHOWN IN THE PLANS, ARE SUBJECT TO ADJUSTMENT IN THE FIELD PRIOR TO FINAL ACCEPTANCE. THE ENGINEER SHALL BE SATISFIED THAT ALL INSTALLATIONS WILL AFFORD THE MAXIMUM PROTECTION FOR TRAFFIC.

GENERAL NOTES

GUARDRAIL REPLACEMENT

NO HAZARD SHALL BE LEFT UNPROTECTED EXCEPT FOR THE ACTUAL TIME NECESSARY TO REMOVE, GRADE AND REINSTALL THE GUARDRAIL IN A CONTINUOUS OPERATION. THE REMOVAL OF ALL EXISTING GUARDRAIL SHALL AT ALL TIMES BE AS DIRECTED BY THE ENGINEER. NO GUARDRAIL SHALL BE REMOVED UNTIL THE NEW REPLACEMENT MATERIALS ARE ON THE SITE, READY FOR INSTALLATION. THE EXPOSED APPROACH END OF THE FINAL SECTION OF AN INCOMPLETE GUARDRAIL RUN SHALL BE DROPPED TO THE GROUND UNTIL THE INSTALLATION IS COMPLETED. WHEN A GAP EXISTS IN A GUARDRAIL RUN, RAIL ELEMENTS SHALL BE BOLTED TOGETHER TO ELIMINATE EXPOSED ENDS DURING NON-WORKING HOURS. FAILURE TO COMPLY WITH THESE REQUIREMENTS SHALL BE DEEMED SUFFICIENT CAUSE TO ORDER WORK SUSPENDED ON THIS PROJECT UNTIL SUCH TIME THAT THE ENGINEER IS ASSURED OF SAID COMPLIANCE.

RESTORATION OF DISTURBED AREAS ASSOCIATED WITH GUARDRAIL WORK

THE CONTRACTOR SHALL RESTORE ALL SEEDED AND SODDED AREAS, PAVED SHOULDERS, AND ALL OTHER DISTURBED SURFACES TO A CONDITION AT LEAST EQUAL TO THAT EXISTING BEFORE THIS WORK WAS STARTED. ALL REPLACEMENTS SHALL BE DONE IN ACCORDANCE WITH THE PERTINENT SPECIFICATION ITEMS AND AS DIRECTED BY THE ENGINEER. PAYMENT FOR ALL RESTORATION WORK, INCLUDING MATERIAL, EQUIPMENT, LABOR, INCIDENTALS AND DISPOSAL OF ALL SURPLUS MATERIALS, SHALL BE INCLUDED IN THE UNIT PRICE BID FOR VARIOUS 606 ITEMS.

ITEM 202 - GUARDRAIL REMOVED FOR RE-USE

GALVANIZED GUARDRAIL DESIGNATED FOR REMOVAL FOR RE-USE SHALL BE CAREFULLY DISMANTLED AND THE RAIL ELEMENTS, POST BOLTS, STEEL POSTS AND SPACER BLOCKS STORED FOR RE-USE. ALL WOOD POSTS AND BLOCKS, BOLTS AND OTHER MATERIALS NOT CONSIDERED SALVAGEABLE SHALL BE DISPOSED OF BY THE CONTRACTOR. THE ENGINEER MAY REPLACE DAMAGED RAIL ELEMENTS WITH RAIL ELEMENTS FROM ITEM 202 - GUARDRAIL REMOVED AT NO ADDITIONAL COST TO THE STATE. ALL POST AND CONCRETE ANCHOR HOLES SHALL BE CAREFULLY FILLED AND TAMPED.

PAYMENT FOR ALL OF THE ABOVE SHALL BE AT THE UNIT PRICE BID FOR ITEM 202 GUARDRAIL REMOVED FOR RE-USE, MEASURED BY THE LINEAR FOOT CENTER TO CENTER OF TERMINAL POSTS INCLUDING ANCHOR ASSEMBLIES WHERE REQUIRED AND/OR BRIDGE TERMINALS WHEN RAIL ATTACHES TO A BRIDGE PARAPET.

ITEM 202 - ANCHOR POST REMOVED, AS PER PLAN

THE EXISTING TYPE A ANCHOR ASSEMBLIES ON THE APPROACH END OF THE GUARDRAIL ON THIS PROJECT SHALL BE MODIFIED TO REMOVE POST "C"* INCLUDING SPACER BLOCKS AND CONCRETE ENCASEMENT TO A MINIMUM OF ONE FOOT BELOW THE GROUND LINE. THE RESULTING POST HOLE SHALL BE BACKFILLED AND TAMPED AND THE SITE RESTORED. SPECIAL CARE SHALL BE EXERCISED SO AS NOT TO DAMAGE THE RAIL ELEMENT OF THE ANCHOR ASSEMBLY AND ANY DAMAGE SHALL BE REPAIRED AS DIRECTED BY THE ENGINEER AT NO COST TO THE STATE. ALL MATERIALS REMOVED SHALL BE DISPOSED OF BY THE CONTRACTOR.

PAYMENT FOR ALL THE ABOVE WORK TO REMOVE THE POST FROM THE EXISTING TYPE "A" ANCHOR ASSEMBLIES SHALL BE INCLUDED IN THE UNIT PRICE BID PER EACH FOR ITEM 202, ANCHOR POST REMOVED.

*POST "C" IS FIRST POST FROM CONCRETE ANCHOR.

ITEM 606 - INTERMEDIATE GUARDRAIL POST

ADDITIONAL INTERMEDIATE GUARDRAIL POSTS SHALL BE ADDED TO PROVIDE 3'-1 1/2" POST SPACING BEGINNING 12'-6" IN ADVANCE OF THE OVERHEAD SIGN SUPPORTS TO THE END OF THE OVERHEAD SIGN SUPPORTS ON BOTH SIDES OF THE SUPPORTS. ALL NEW INTERMEDIATE POSTS SHALL BE THE SAME MATERIAL AS THE EXISTING POSTS IN THE RUN. THE INTERMEDIATE POST BOLT SLOT SHALL BE FIELD PUNCHED OR DRILLED AND THE HOLES SHALL BE REGALVANIZED AS DIRECTED BY THE ENGINEER WITH SPRAY-ON OR STICK-FORM GALVANIZING REPAIR COMPOUND MEETING THE REQUIREMENTS OF FSS-O-G-93. THE CONTRACTOR SHALL PROVIDE A NEW BLOCKOUT, BACK-UP PLATE, POST BOLT AND MISCELLANEOUS HARDWARE AS PER THE REQUIREMENTS FOR TYPE 5 GUARDRAIL.

PAYMENT FOR PROVIDING EACH INTERMEDIATE POST AND ACCESSORIES AS DETAILED ABOVE SHALL BE INCLUDED IN THE UNIT PRICE BID FOR ITEM 606 - INTERMEDIATE GUARDRAIL POST.

ITEM 606 - RAISING TYPE 5 GUARDRAIL

WHERE DESIGNATED ON THE PLANS, TYPE 5 GUARDRAIL SHALL BE RAISED ON THE EXISTING POSTS. RAISING ON EXISTING WOOD POSTS SHALL BE AS PER STANDARD DRAWING GR-2B. THE RAIL SHALL BE DISMANTLED ONLY TO THE EXTENT NECESSARY TO FIELD BORE A NEW BOLT HOLE IN THE POST, AND TO RECONNECT THE RAIL AND BLOCKS TO THE EXISTING POSTS. THE POST BOLTS MAY BE REUSED WITH WOOD POSTS.

THE EXISTING TYPE "A" ANCHOR ASSEMBLIES AND/OR BRIDGE TERMINALS WILL NOT BE ADJUSTED, UNLESS REQUIRED BY THE PLAN, AND THE LAST RAIL ELEMENT HEIGHT SHALL BE TRANSITIONED TO MEET THESE ASSEMBLIES.

PAYMENT FOR ALL THE ABOVE SHALL BE AT THE UNIT PRICE BID PER LINEAR FOOT FOR ITEM 606 - RAISING EXISTING TYPE 5 GUARDRAIL.

ITEM 606 - GUARDRAIL REBUILT TYPE 5

GALVANIZED GUARDRAIL DESIGNATED TO BE REBUILT SHALL BE REBUILT PER 606.06 USING ALL GUARDRAIL ELEMENTS SALVAGED FROM ITEM 202 - GUARDRAIL REMOVED FOR RE-USE OR THE ENGINEER MAY DIRECT THAT DAMAGED RAIL ELEMENTS BE REPLACED WITH UNDAMAGED RAIL ELEMENTS FROM ITEM 202 - GUARDRAIL REMOVED AT NO ADDITIONAL COST TO THE STATE.

ITEM 604 - NO. 5 CATCH BASIN, AS PER PLAN
ITEM 604 - NO. 5 CATCH BASIN, WITH GRATE "B", AS PER PLAN

EXISTING MODIFIED NO. 2-2-A CATCH BASINS CONSTITUTING OBSTRUCTIONS SHALL BE REPLACED WITH NEW NO. 5 CATCH BASINS WITH OR WITHOUT GRATE "B" AS SPECIFIED AT THE LOCATIONS CALLED OUT IN THE PLANS. THE EXISTING CASTINGS SHALL BECOME THE PROPERTY OF THE STATE AND SHALL BE STORED IN ONE CENTRAL YARD FOR REMOVAL BY STATE FORCES. ALL EXISTING PIPES SHALL BE RECONNECTED TO THE NEW CATCH BASIN AT EXISTING GRADES. BACKFILL MATERIAL AROUND THE NEW BASINS SHALL MEET THE REQUIREMENTS OF 310.02 OR 703.08 AND THE DISTURBED AREAS SHALL BE GRADED AND RESTORED, INCLUDING SEEDING, TO MATCH SURROUNDING GROUND.

WORK INCLUDED WITH THE NEW CATCH BASINS SHALL BE UNDER ITEM 604 - NO. 5 CATCH BASIN, AS PER PLAN OR ITEM 604 - NO. 5 CATCH BASIN, WITH GRATE "B", AS PER PLAN AS SPECIFIED IN THE PLANS AND SHALL INCLUDE THE REMOVAL OF THE EXISTING CATCH BASIN, ANY INCIDENTAL PIPE REQUIRED TO REPLACE, IN KIND, ANY PIPE BROKEN DURING THE REMOVAL OPERATIONS, AND ALL MATERIAL, NECESSARY EXCAVATION AND BACKFILL, AND RESTORATION OF DISTURBED AREAS FOR THE NEW CATCH BASIN. PAYMENT FOR ALL OF THE ABOVE SHALL BE PAID FOR AT THE UNIT PRICE BID.

CONNECTIONS TO EXISTING PIPES

WHERE THE PLANS PROVIDE FOR A PROPOSED CONDUIT TO BE CONNECTED TO OR TO CROSS EITHER OVER OR UNDER AN EXISTING SEWER, IT SHALL BE THE RESPONSIBILITY OF THE CONTRACTOR TO LOCATE THE EXISTING PIPE BOTH AS TO LINE AND GRADE BEFORE HE STARTS TO LAY THE PROPOSED CONDUIT.

PAYMENT FOR ALL OPERATIONS DESCRIBED ABOVE SHALL BE INCLUDED IN THE UNIT PRICE BID FOR THE PERTINENT 603 CONDUIT ITEMS.

ITEM 603 - 6'-1" x 4'-7" CONDUIT, TYPE A, 707.03, AS PER PLAN

EXISTING CONDUIT SHALL BE FIELD CUT OR BURNED TO THE LENGTH INDICATED IN THE CULVERT DETAIL ON SHEET 58 AND THEN HAVE 7/8" DIAMETER HOLES FIELD PUNCHED OR DRILLED APPROXIMATELY 2" IN FROM THE NEW EDGE USING THE NEW PLATES AS A TEMPLATE. ALL DAMAGED GALVANIZING SHALL BE REGALVANIZED AS DIRECTED BY THE ENGINEER WITH SPRAY-ON OR STICK-FORM GALVANIZING REPAIR COMPOUND MEETING THE REQUIREMENTS OF FSS-O-G-93.

THE NEW PLATES SHALL BE ATTACHED TO THE EXISTING PLATES WITH 3/4" DIAMETER GALVANIZED BOLTS IN ACCORDANCE WITH 707.03.

PAYMENT FOR THE ABOVE SHALL BE INCLUDED IN THE UNIT PRICE BID PER LINEAR FOOT FOR ITEM 603 - 6'-1" x 4'-7" CONDUIT, TYPE A, 707.03, AS PER PLAN.

ITEM 605 - AGGREGATE DRAINS, AS PER PLAN

AGGREGRATE DRAINS SHALL MEET THE REQUIREMENTS OF ITEM 605 EXCEPT THAT THE AGGREGATE FOR THE UNDERDRAINS SHALL BE NO. 8 NATURAL AGGREGATE. SAND AND SLAG ARE NOT PERMITTED AS BACKFILL.

AGGREGATE DRAINS ADJACENT TO REINFORCED PORTLAND CEMENT CONCRETE PAVEMENT SHALL BE PLACED AT TRANSVERSE JOINT ON THE OUTSIDE EDGE OF NORMAL SECTIONS AND ON THE LOW SIDE OF SUPERELEVATED SECTIONS.

JOINT SEALERS

ALL REFERENCES TO 705.01 OR 705.02, APPEARING ON THE STANDARD DRAWINGS OR ON THE PLANS, SHALL BE CONSIDERED TO READ 705.04.

ITEM 605 - 6" UNCLASSIFIED PIPE UNDERDRAINS, AS PER PLAN
ITEM 605 - 6" SHALLOW PIPE UNDERDRAINS, AS PER PLAN
ITEM 605 - 6" DEEP PIPE UNDERDRAINS, AS PER PLAN

UNDERDRAINS SHALL MEET THE REQUIREMENTS OF ITEM 605 EXCEPT THAT THE AGGREGATE FOR THE UNDERDRAINS SHALL BE NO. 8 NATURAL AGGREGATE. SAND AND SLAG ARE NOT PERMITTED AS BACKFILL.

EROSION CONTROL

ALL PERMANENT EROSION CONTROL ITEMS SHALL BE PLACED IMMEDIATELY AFTER THE EARTHWORK IS COMPLETED AT EACH LOCATION.

ITEMS 601, 660 & 670 ARE PROVIDED IN THE PLANS FOR EROSION CONTROL. ROCK OF A STABLE NATURE WILL NOT BE REMOVED IN ORDER TO PLACE ANY OF THESE ITEMS, AND TURF OF A STABLE NATURE WILL NOT BE REMOVED IN ORDER TO PLACE 670. THE ENGINEER SHALL CHECK AND NON-PERFORM QUANTITIES OR ADJUST LOCATIONS AND QUANTITIES FOR THESE ITEMS WHERE INDICATED BY FIELD CONDITIONS DURING CONSTRUCTION.

CONDUIT END TREATMENT

IMMEDIATELY AFTER PLACEMENT OF ANY CONDUITS, THE CONTRACTOR SHALL CONSTRUCT THE END TREATMENTS REQUIRED BY THE PLANS AT BOTH THE OUTLET AND INLET ENDS. THIS SHALL INCLUDE HEADWALLS, CONCRETE RIPRAP, ROCK CHANNEL PROTECTION, SODDING, ETC.

CONTRACTION AND EXPANSION JOINTS

ALTHOUGH SPECIFIC LOCATIONS OF CERTAIN EXPANSION AND CONTRACTION JOINTS HAVE BEEN DETAILED ON THIS PLAN, NO WAVIER OF THE SPECIFICATIONS IS INTENDED. PROVISIONS OF THE EXPANSION JOINTS AND THE MAXIMUM SPACING BETWEEN CONTRACTION JOINTS SHALL, IN ALL CASES, BE IN ACCORDANCE WITH STANDARD CONSTRUCTION DRAWINGS AND THE SPECIFICATIONS.

ITEM 304 - AGGREGATE BASE, AS PER PLAN

AGGREGATE BASE SHALL MEET THE REQUIREMENTS OF ITEM 304 EXCEPT THAT THE ONLY SLAGS PERMITTED SHALL BE GRANULATED AIR COOLED BLAST FURNACE SLAGS.

GUARDRAIL OVER CULVERTS

WHEN SUFFICIENT POST DEPTH IS NOT AVAILABLE TO A CULVERT, THE GUARDRAIL POSTS DIRECTLY OVER THE CULVERT SHALL NOT BE DRIVEN, BUT SET IN HOLES. IF THE DISTANCE BETWEEN THE GROUND AND THE TOP OF THE CULVERTS IS LESS THAN 3 FEET, THE POST SHALL BE ENCASED IN MINIMUM OF 4 INCH THICKNESS OF CLASS C CONCRETE FOR THE FULL DEPTH OF THE POST. PAYMENT FOR THE ABOVE SHALL BE INCLUDED IN THE UNIT PRICE FOR ITEM 606, GUARDRAIL TYPE 5.

DUST CONTROL

THE FOLLOWING ESTIMATED QUANTITIES HAVE BEEN PROVIDED IN THE GENERAL SUMMARY TO BE USED AS DIRECTED BY THE ENGINEER AT THE U.S. 224 - CO. RD. 19 INTERSECTION RECONSTRUCTION FOR DUST CONTROL:

ITEM 616	CALCIUM CHLORIDE	30 TON
ITEM 616	WATER	50 M-GAL
		F-51 FUNDS

GENERAL NOTES

MEDIAN CONSTRUCTION EQUIPMENT CROSSINGS

CONSTRUCTION EQUIPMENT SHALL CROSS THE MEDIAN ONLY AT THE EXISTING INTERSECTIONS AND CROSSOVERS AND AT OTHER ADDITIONAL LOCATIONS APPROVED BY THE ENGINEER. A MAXIMUM OF FOUR (4) ADDITIONAL EQUIPMENT CROSSINGS MAY BE ALLOWED WITH EACH LOCATED APPROXIMATELY MIDWAY BETWEEN THE EXISTING CROSSOVERS AND/OR INTERSECTIONS.

THE CONTRACTOR SHALL BE RESPONSIBLE, AT HIS EXPENSE, FOR THE RESTORATION OF THE ADDITIONAL EQUIPMENT CROSSINGS TO A CONDITION AT LEAST EQUAL TO THAT EXISTING PRIOR TO HIS WORK OPERATIONS, INCLUDING RESEEDING, AS PER 659.

ITEM 407 - TACK COAT,

THE RATE OF APPLICATION OF 407 TACK COAT SHALL BE SUBJECT TO ADJUSTMENT, AS DIRECTED BY THE ENGINEER. WHEN COVER AGGREGATE IS NEEDED, IT SHALL BE USED AS DIRECTED BY THE ENGINEER, AND IT SHALL BE CONSIDERED INCIDENTAL TO, AND BE INCLUDED FOR PAYMENT IN: ITEM 407 TACK COAT . PLAN QUANTITIES . INDICATE AN AVERAGE APPLICATION RATE OF 0.1 GALLONS PER SQUARE YARD OF TACK COAT FOR ESTIMATING PURPOSES ONLY.

ITEM 846 - ASPHALT CONCRETE

ON THIS PROJECT, ITEM 846, TABLE 2-2, PROPERTIES OF MIXTURES SHALL BE FOR HEAVY TRAFFIC VOLUMES.

SPREADING EQUIPMENT(SEE PROPOSAL NOTE)

AN AUTOMATIC SCREED CONTROL HAVING A 40 FOOT SKI-ARM SHALL BE USED FOR PLACING THE 846 INTERMEDIATE COURSE (SEE PROPOSAL NOTE). THE WIDTH LAID ON ANY ONE PASS SHALL NOT EXCEED THE PAVER'S RATED WIDTH AS RECOMMENDED BY THE PAVER MANUFACTURER.

LONGITUDINAL JOINTS, 846 COURSES

A HOT LONGITUDINAL JOINT SHALL BE MADE BETWEEN THE PAVEMENT LANE AND THE ADJOINING BERM AS SHOWN ON THE TYPICAL SECTIONS, ITEM NO. 4 FOR THE SURFACE COURSE. ALL OTHER LONGITUDINAL JOINTS BETWEEN PAVEMENT LANES AND CENTERLINE SHALL BE COLD JOINTS SEALED BY COATING THE VERTICAL FACE, AS PER 401.15.

THE LONGITUDINAL JOINT BETWEEN ADJACENT PAVEMENT LANES IN THE SAME TRAVEL DIRECTION SHALL BE MADE THE FOLLOWING WORK DAY AT THE LATEST, FOR ALL COURSES.

PROJECT FEATHERS

THE LENGTH OF PROJECT FEATHERS ARE INDICATED ON SHEET 27. A BUTT-JOINT AS PER STANDARD DRAWING BP-5 SHALL BE USED WHERE THE FEATHER IS ON EXISTING ASPHALT.

SUSPENSION OF RESURFACING OVER WINTER

IF THIS PROJECT SHOULD CARRY OVER THE WINTER SEASON, THE INTERMEDIATE COURSE(S) SHALL NOT BE ALLOWED TO LAY EXPOSED TO TRAFFIC OVER THE WINTER. ALL ASPHALT PAVING WORK SHALL BE SCHEDULED FOR COMPLETION BY OCTOBER 31. AFTER OCTOBER 31, IF WEATHER PERMITS AS PER 401.05, A PERMISSIVE CHANGE ORDER MAY BE WRITTEN BY THE DISTRICT CONSTRUCTION ENGINEER WHICH SHALL INCLUDE THE FOLLOWING REQUIREMENT:

ANY INTERMEDIATE COURSE LAID SHALL BE COVERED BY THE SURFACE COURSE WITHIN TWO (2) WORK DAYS.

ALSO, ALL FINAL PAVEMENT MARKINGS SHALL BE APPLIED TO THE NEW SURFACE COURSE BEFORE WINTER. IF THIS CANNOT BE ACCOMPLISHED UNDER SPECIFICATION CONDITIONS, THE CONTRACTOR SHALL APPLY INTERIM MARKINGS AS PER STANDARD DRAWING MT-99.10, WORK ZONE PAVEMENT MARKINGS AND SIGNS, AT THE CONTRACTOR'S EXPENSE. THE PERMANENT PAVEMENT MARKINGS SHALL THEN BE APPLIED THE NEXT SPRING.

ITEM SPECIAL - FLEXIBLE BERM REPAIR

THIS ITEM OF WORK SHALL CONSIST OF PARTIAL DEPTH REPAIR OF THE EXISTING PAVED BERM IN AREAS EXHIBITING SEVERE CRACKING, DETERIORATION AND SURFACE DISTORTIONS. THE ENGINEER SHALL DESIGNATE THE LOCATIONS AND LIMITS OF THE AREAS TO BE REPAIRED. THE REPAIR AREAS SHALL BE ROUGHLY RECTANGULAR IN SHAPE.

THE MATERIAL IN THE DESIGNATED AREAS SHALL BE REMOVED BY METHODS WHICH WILL NOT DAMAGE THE ADJACENT BERM. THE DEPTH OF REMOVAL SHALL BE SUFFICIENT TO REMOVE ALL BROKEN AND LOOSE ASPHALT OR PRIMED AGGREGATE, BUT TO A MINIMUM OF FOUR INCHES BELOW THE ADJACENT BERM THROUGHOUT THE REPAIR AREA. THE MATERIAL SO REMOVED SHALL BE DISPOSED OF IN ACCORDANCE WITH 203.05.

AFTER REMOVAL OF THE DETERIORATED MATERIALS, ITEM 407 TACK COAT SHALL BE APPLIED TO THE EXISTING ASPHALT IN SUFFICIENT QUANTITY TO THOROUGHLY COAT THE SURFACE AND PENETRATE CRACKS. ITEMS 301 OR 846 TYPE 2 MATERIAL THEN SHALL BE PLACED AND COMPACTED TO FINISH FLUSH WITH THE ADJACENT BERM SURFACE. THE LENGTH OF EXCAVATION OPEN AT ANY ONE TIME SHALL BE HELD TO A MINIMUM AND SHALL AT ALL TIMES BE SUBJECT TO THE APPROVAL OF THE ENGINEER. NO EXCAVATION SHALL BE LEFT OPEN OVERNIGHT. IN CASE OF EMERGENCY, THE OPEN EXCAVATION SHALL BE BACKFILLED OR PROTECTED AS DIRECTED. THIS WORK SHALL BE COMPLETED PRIOR TO THE PLACEMENT OF THE 846 COURSE ON THE PAVED BERM.

THE NUMBER OF CUBIC YARDS TO BE PAID FOR SHALL BE THE ACCEPTED QUANTITIES, COMPLETE IN PLACE. PAYMENT SHALL BE FULL COMPENSATION FOR ALL LABOR, EQUIPMENT AND MATERIALS NECESSARY TO COMPLETE THE WORK, INCLUDING THE 301 OR 846 MATERIAL

THE FOLLOWING ESTIMATED QUANTITY IS PROVIDED TO BE USED AS DIRECTED BY THE ENGINEER TO MAKE REPAIRS ON THE PAVED BERMS AS DESCRIBED ABOVE:

ITEM SPECIAL - FLEXIBLE BERM REPAIR	32 CU.YDS.	RS-440(11)
	1315 CU.YDS.	F- 51(70)

ITEM SPECIAL - PARTIAL DEPTH PAVEMENT REPAIR

THIS ITEM OF WORK SHALL CONSIST OF PARTIAL DEPTH REMOVAL OF EXISTING ASPHALT AND CONCRETE PAVEMENT IN AREAS EXHIBITING DETERIORATION AT THE SURFACE, APPLYING TACK COAT, AND PLACING AND COMPACTING ASPHALT CONCRETE. THIS WORK SHALL BE COMPLETED PRIOR TO THE PAVEMENT PLANING IN THE AREA.

THE ENGINEER SHALL DESIGNATE THE LOCATION AND THE LIMITS OF THE AREAS TO BE REPAIRED. THE REPAIR AREAS WILL BE ROUGHLY RECTANGULAR IN SHAPE AS REQUIRED TO ENVELOP SURFACE DETERIORATION. UNLESS OTHERWISE SHOWN IN THE PLANS, TYPICAL REPAIR AREAS WILL BE AT TRANSVERSE CRACKS AND JOINTS AND ALONG PORTIONS OF LONGITUDINAL JOINTS. THE REMOVAL SHALL BE AS INDICATED ON SHEET 22.

THE PAVEMENT SHALL BE REMOVED TO THE SPECIFIED DEPTH WITHIN THE DESIGNATED LIMITS BY A METHOD THAT WILL NOT LOOSEN OR OTHERWISE DAMAGE ADJACENT PAVEMENT. PAVEMENT SO REMOVED SHALL BE DISPOSED OF IN ACCORDANCE WITH 203.05. AFTER REMOVAL OF THE PAVEMENT, TACK COAT USING AC-20 SHALL BE APPLIED IN SUFFICIENT QUANTITY TO THOROUGHLY COAT ALL EXPOSED SURFACES AND TO FILL CRACKS AND JOINT OPENINGS. ASPHALT CONCRETE AS SPECIFIED IN THE DETAIL SHALL THEN BE PLACED AND COMPACTED IN ONE OR MORE LIFTS AS NECESSARY TO FINISH FLUSH WITH THE ADJACENT PAVEMENT SURFACE. (THE MAXIMUM LIFT THICKNESS SHALL BE THREE (3) INCHES.)

THE NUMBER OF CUBIC YARDS TO BE PAID FOR SHALL BE THE ACCEPTED QUANTITY OF ASPHALT CONCRETE MATERIAL COMPLETE IN PLACE.* PAYMENT SHALL INCLUDE ALL LABOR, EQUIPMENT AND MATERIALS NECESSARY TO COMPLETE THE WORK, INCLUDING TACK COAT AND ASPHALT CONCRETE. PAYMENT FOR ACCEPTED QUANTITIES COMPLETE IN PLACE, WILL BE MADE AT THE CONTRACT PRICE FOR:

ITEM	UNIT	DESCRIPTION
SPECIAL	CUBIC YARDS	PARTIAL DEPTH PAVEMENT REPAIR

SEE SHEET 22 FOR QUANTITIES

*CALCULATED BY WEIGHT CONVERSION AS PER 401.17.

ITEM 252 - FULL DEPTH RIGID PAVEMENT REMOVAL & FLEXIBLE REPLACEMENT

SEE DETAILS AND NOTES ON SHEETS 22 AND 23.

ITEM SPECIAL - CRACK SEALING, HOT APPLIED, 705.04

AFTER ALL PAVEMENT REPAIR WORK AND PAVEMENT PLANING HAS BEEN COMPLETED IN AN AREA, ALL OPEN CRACKS AND JOINTS IN THE EXISTING PAVEMENT AND BETWEEN PAVEMENT AND BERMS SHALL BE CLEANED AND SEALED, AS PER THE PROPOSAL NOTE.

THE FOLLOWING ESTIMATED QUANTITY IS PROVIDED IN THE SUMMARY TO BE USED AS DIRECTED BY THE ENGINEER ON THE PROJECT.

ITEM SPECIAL CRACK SEALING, HOT APPLIED, 705.04	3,160 LBS.	RS-440(11)
	39,215 LBS.	F- 51(70)

ITEM SPECIAL - PRESSURE RELIEF JOINT, TYPE C

PRESSURE RELIEF JOINT TYPES AND LOCATIONS SHALL BE AS SHOWN ON THE PLAN SHEETS AND AS SHOWN IN THE DETAILS ON SHEET 26. PAVEMENT WHETHER CONCRETE OR ASPHALT SHALL BE REMOVED FULL DEPTH TO THE EXISTING BASE BY A METHOD THAT WILL NOT DAMAGE ADJACENT PAVEMENT. PAVEMENT SO REMOVED SHALL BE DISPOSED OF IN ACCORDANCE WITH 203.05. ASPHALT CONCRETE, AS SPECIFIED IN THE DETAILS, SHALL BE PLACED AND COMPACTED AS SPECIFIED.

PAYMENT FOR THE ABOVE SHALL BE AT THE UNIT PRICE BID PER LINEAR FOOT OF PRESSURE RELIEF JOINT, SHALL INCLUDE ALL LABOR, EQUIPMENT, MATERIALS AND INCIDENTALS NECESSARY TO COMPLETE THE ABOVE WORK.

ITEM 451-REINFORCED CONCRETE PAVEMENT, AS PER PLAN

REINFORCED CONCRETE PAVEMENT SHALL MEET THE REQUIREMENTS OF ITEM 451 AND STANDARD DRAWING BP-4 WITH THE FOLLOWING EXCEPTIONS:

1. THE MAXIMUM SPACING BETWEEN JOINTS SHALL BE 27 FEET.
2. MESH SHALL BE RECTANGULAR AND CENTERED IN EACH PANEL SO AS TO MAINTAIN A CLEARANCE OF 3 (±2) INCHES FROM THE END OF THE NEAREST DOWEL.
3. TRANSVERSE JOINTS SHALL BE SKEWED 4 FEET RIGHT FORWARD FOR A 24 FEET WIDTH. DOWEL BARS SHALL BE INSTALLED PARALLEL TO THE LONGITUDINAL JOINT. TIE BARS AND HOOK BOLTS INSTALLED ACROSS THE LONGITUDINAL JOINT SHALL BE PARALLEL TO THE TRANSVERSE JOINT.
4. THE WIDTH OF THE CONTRACTION JOINT SHALL BE 5/8" ± 1/16" AND THE MINIMUM DEPTH SHALL BE 2-1/4". PREFORMED ELASTIC JOINT SEALER SHALL MEET THE REQUIREMENTS OF 705.11 AND SHALL HAVE A MINIMUM WIDTH OF 1-1/4". DRAWINGS AND SPECIFICATIONS OF THE MATERIAL PROPOSED FOR USE SHALL BE SUBMITTED TO THE DIRECTOR FOR REVIEW AND APPROVAL.
5. DOWEL INSTALLING MACHINES WILL NOT BE PERMITTED ON THIS PROJECT.
6. DOWEL ASSEMBLIES SHALL BE EPOXY COATED AS PER SUPP. SPECS. 941.

ITEM 452-VARIABLE THICKNESS PLAIN CONCRETE PAVEMENT, AS PER PLAN

PLAIN CONCRETE PAVEMENT SHALL MEET THE REQUIREMENTS OF ITEM 452 AND STANDARD DRAWING BP-4 WITH THE FOLLOWING EXCEPTIONS:

1. THE MAXIMUM SPACING BETWEEN JOINTS SHALL BE 27 FEET AND SHALL BE A CONTINUATION OF THE JOINTS IN THE ADJACENT 451 PAVEMENT.
2. TRANSVERSE JOINTS SHALL BE SKEWED 4 FEET RIGHT FORWARD FOR A 24 FEET WIDTH. DOWEL BARS SHALL BE INSTALLED PARALLEL TO THE LONGITUDINAL JOINT. TIE BARS AND HOOK BOLTS INSTALLED ACROSS THE LONGITUDINAL JOINT SHALL BE PARALLEL TO THE TRANSVERSE JOINT.
3. THE WIDTH OF THE CONTRACTION JOINT SHALL BE 5/8" ± 1/16" AND THE MINIMUM DEPTH SHALL BE 2-1/4". PREFORMED ELASTIC JOINT SEALER SHALL MEET THE REQUIREMENTS OF 705.11 AND SHALL HAVE A MINIMUM WIDTH OF 1-1/4". DRAWINGS AND SPECIFICATIONS OF THE MATERIAL PROPOSED FOR USE SHALL BE SUBMITTED TO THE DIRECTOR FOR REVIEW AND APPROVAL.
4. DOWEL INSTALLING MACHINES WILL NOT BE PERMITTED ON THIS PROJECT.

THE PLAIN CONCRETE PAVEMENT SHALL VARY IN THICKNESS FROM 13" AT THE EDGE OF THE TRAFFIC LANES TO 10" AT THE EDGE OF THE PAVED SHOULDER AS SHOWN ON THE TYPICAL SECTIONS ON SHEET 8.

Rev. 3-11-89
Rev. 2-9-89

GENERAL NOTES

PROFILE CORRECTION UNDER OVERHEAD BRIDGES

SEE UNDERPASS PLANING DETAILS ON SHEETS 24 AND 25 FOR DETAILS REQUIRED TO MAINTAIN ADEQUATE VERTICAL CLEARANCE UNDER OVERHEAD BRIDGES.

ITEM 607 - FENCE, TYPE 47, AS PER PLAN
ITEM 607 - FENCE, TYPE 47RA, AS PER PLAN

FENCE SHALL MEET REQUIREMENTS OF ITEM 607. IN ADDITION, THE COST OF REMOVING THE EXISTING FENCE AND VARIOUS TREES GROWING IN AND/OR NEAR THE FENCE LINE SHALL BE INCLUDED IN THE PRICE BID PER LINEAR FOOT FOR ITEM 607 - FENCE, TYPE 47, AS PER PLAN AND 607 FENCE, TYPE 47RA, AS PER PLAN. TREE REMOVAL SHALL BE DONE IN ACCORDANCE WITH ITEM 201. THE PROPOSED FENCE IN MOST CASES WILL FOLLOW THE ALIGNMENT OF THE EXISTING FENCE TO BE REMOVED.

ALTHOUGH SPECIFIC LOCATIONS OF CERTAIN POST ASSEMBLIES AND CONNECTIONS ARE DETAILED ON THIS PLAN, NO WAIVER OF THE SPECIFICATIONS IS INTENDED. CORNER, END AND INTERMEDIATE ANCHOR POST ASSEMBLIES, LINE POST ENCASEMENT IN DIP SECTIONS ETC. SHALL, WHERE NOT OTHERWISE INDICATED, BE PROVIDED IN ACCORDANCE WITH STANDARD DRAWINGS AND THE SPECIFICATIONS.

ITEM SPECIAL - IMPACT ATTENUATOR, G-R-E-A-T SYSTEM

THIS WORK SHALL CONSIST OF FURNISHING TEMPORARY IMPACT ATTENUATORS, AS REQUIRED IN THE PLANS. THIS ITEM SHALL INCLUDE ALL RELATED HARDWARE, NOT SEPARATELY SPECIFIED, AS REQUIRED BY THE MANUFACTURER TO CONSTRUCT COMPLETE AND FUNCTIONAL G-R-E-A-T IMPACT ATTENUATOR SYSTEMS. THE IMPACT ATTENUATOR SHALL BE MANUFACTURED BY THE ENERGY ABSORPTION SYSTEMS, INC., ONE EAST WACKER DR., CHICAGO, ILLINOIS 60601; TELEPHONE: (312) 467-6750. THE ATTENUATORS SHALL BE PLACED IN ACCORDANCE WITH THE MANUFACTURER'S SPECIFICATIONS AND AT THE LOCATIONS SHOWN ON SHEETS 154-162.

THE CONTRACTOR SHALL BE RESPONSIBLE FOR INSPECTION, REPAIRING, AND OTHERWISE RESTORING THE TEMPORARY IMPACT ATTENUATOR IN ACCORDANCE WITH THE MANUFACTURER'S MAINTENANCE INSTRUCTIONS WHILE IT IS IN USE ON THE PROJECT. SUCH REPAIRS SHALL BE PERFORMED WITHIN TWELVE (12) HOURS OF THE INCIDENT WHICH CAUSED DAMAGE TO THE ATTENUATOR. THE CONTRACTOR SHALL BE RESPONSIBLE FOR SUPPLYING ALL NECESSARY MATERIALS AND EQUIPMENT REQUIRED TO PERFORM THE ABOVE DESCRIBED RESTORATION OF THE ATTENUATOR. ONE (1) EXTRA COMPLETE SET OF HEX-FOAM CARTRIDGES , AS MANUFACTURED BY ENERGY ABSORPTION SYSTEMS, INC., FOR THE ATTENUATOR FURNISHED, SHALL BE STOCKED AT ALL TIMES FOR THE ABOVE REPAIRS AND THE COST SHALL BE INCLUDED IN THE COST OF THE TEMPORARY ATTENUATOR.

THE NOSE COVER OF THE TEMPORARY ATTENUATOR SHALL BE MARKED WITH EVENLY SPACED FOUR (4) INCH WIDE HORIZONTAL STRIPES OF WHITE REFLECTIVE MATERIAL.

PAYMENT FOR THE ABOVE WORK SHALL BE MADE AT THE UNIT PRICE BID FOR EACH, ITEM SPECIAL, AS DESCRIBED BELOW, WHICH PRICE SHALL BE CONSIDERED FULL PAYMENT FOR FURNISHING, INSTALLING, AT THE SPECIFIED LOCATIONS, FURNISHING EXTRA HEX-FOAM CARTRIDGES AS SPECIFIED ABOVE, RESTORATION AFTER EACH VEHICLE IMPACT, INCLUDING ALL LABOR, TOOLS, EQUIPMENT AND MISCELLANEOUS HARDWARE AND MATERIALS NECESSARY TO COMPLETE THIS ITEM OF WORK IN PLACE. ALSO INCLUDED IN THE ABOVE COST SHALL BE THE REMOVAL OF THE TEMPORARY IMPACT ATTENUATOR AND INSTALLATION AT THE LOCATION SPECIFIED FOR THE NEXT STAGE OF CONSTRUCTION.

ITEM SPECIAL - TEMPORARY IMPACT ATTENUATOR, G-R-E-A-T SYSTEM, MODEL NUMBER 200200NF6GCZ	2 EACH	F- 51(70)

TRENCH FOR TEMPORARY PAVEMENTS

TRENCH' EXCAVATION FOR PAVEMENTS SHALL BE ADEQUATELY MAINTAINED AND PROTECTED AT ALL TIMES WITH DRUMS WITH STEADY BURNING LIGHTS ATTACHED. PLACEMENT OF THE PROPOSED 301 AND/OR 846 OR 452 MATERIALS SHALL FOLLOW AS CLOSELY AS POSSIBLE BEHIND THE EXCAVATION OPERATIONS. THE LENGTH OF TRENCH OPEN AT ANY ONE TIME SHALL BE HELD TO A MINIMUM AND SHALL AT ALL TIMES BE SUBJECT TO THE APPROVAL OF THE ENGINEER. NO EXCAVATION SHALL BE LEFT OPEN OVERNIGHT. IN CASE OF EMERGENCY, THE OPEN EXCAVATION SHALL BE BACKFILLED OR PROTECTED AS DIRECTED BY THE ENGINEER.

CONTRACTORS MAINTENANCE RESPONSIBILITY

ON THIS PROJECT, THE CONTRACTOR'S RESPONSIBILITY FOR MAINTENANCE OF THE EXISTING PAVEMENT, PER ITEM 614, SHALL BE LIMITED TO THOSE PORTIONS OF THE EXISTING HIGHWAY LYING WITHIN THE PROPOSED WORK LIMITS. NECESSARY UPKEEP OF THE ADJOINING PAVEMENTS WHICH ARE USED FOR TRAFFIC MAINTENANCE BUT ARE OUTSIDE OF THE PROJECT WORK LIMITS WILL BE PROVIDED BY OTHERS.

TEMPORARY PAVEMENT MARKINGS

THE FOLLOWING ESTIMATED QUANTITY HAS BEEN CARRIED TO THE GENERAL SUMMARY FOR USE AS DIRECTED BY THE ENGINEER:

ITEM 614 - TEMPORARY CENTER LINE, CLASS II	0.89	MI	RS-440(11)
ITEM 614 - TEMPORARY LANE LINE, CLASS II	0.60	MI	RS-440(11)
ITEM 614 - TEMPORARY CENTER LINE, CLASS II	0.62	MI	F- 51(70)
ITEM 614 - TEMPORARY LANE LINE, CLASS II	22.41	MI	F- 51(70)

THESE ITEMS MAY BE NON-PERFORMED IF THE 621 PAVEMENT MARKINGS ARE IN PLACE PRIOR TO OPENING THE ROAD TO TRAFFIC.

WORK ZONE MARKING SIGNS

THE FOLLOWING ESTIMATED QUANTITY HAS BEEN CARRIED TO THE GENERAL SUMMARY FOR USE AS DIRECTED BY THE ENGINEER:

ITEM 614 - WORK ZONE MARKING SIGNS	14	EACH	RS-440(11)
	29	EACH	F-. 51(70)

A QUANTITY OF 8 EACH "NO EDGE LINES" OW-167 AND 35 EACH "UNMARKED NO PASSING ZONES" OW-168 ARE CARRIED TO THE GENERAL SUMMARY TO BE USED AS PER STANDARD DRAWING MT-99.10.

ITEM SPECIAL - LAW ENFORCEMENT OFFICER WITH PATROL CAR

IN ADDITION TO THE REQUIREMENTS OF ITEM 614, A UNIFORMED SPECIAL DUTY LAW ENFORCEMENT OFFICER AND AN OFFICIAL PATROL CAR WITH EMERGENCY FLASHERS OPERATING SHALL BE USED AS DESCRIBED BELOW DURING THE PAVEMENT REPLACEMENT PORTION OF THE PROJECT NEAR C.R. 19.

THE LAW ENFORCEMENT OFFICERS (LEOS) WILL BE REQUIRED DURING INITIAL SETUP PERIODS AND UNTIL TRAFFIC IS STABILIZED, DURING TEAR DOWN PERIODS, AND WHERE SUBSTANTIAL SHIFTS OCCUR BETWEEN DIFFERENT PHASES OF TRAFFIC CONTROL AS OUTLINED IN THE PLANS.

IT IS NOT THE INTENT TO USE LEOS WHERE ADEQUATE TRAFFIC CONTROL AND/OR FLAGGERS WILL DO THE JOB.

THE FOLLOWING CRITERIA SHOULD BE USED FOR SCHEDULING LEOS UNDER THIS PAY ITEM:

1. FOR SHORT TERM CLOSURES (ONE DAY OR LESS WHICH WILL BE REMOVED AT NIGHT) A LEO IS NOT REQUIRED AND WILL NOT BE PAID FOR.

2. FOR LONGER TERM CLOSURES (MORE THAN ONE DAY), WHERE WORKERS ARE EXPOSED TO TRAFFIC FOR A CONSIDERABLE PERIOD OF TIME FOR SETTING UP DRUMS, TEMPORARY CONCRETE BARRIER, REMOVING CONFLICTING PAVEMENT MARKINGS, ETC., A LEO WILL BE REQUIRED AND PAID FOR AS DESCRIBED BELOW.

THESE REQUIREMENTS DO NOT PRECLUDE THE CONTRACTOR'S USE OF A LEO FOR OTHER PURPOSES IN THE PROJECT AREA. HOWEVER, WHERE SUCH USAGE IS AT THE OPTION OF THE CONTRACTOR, PAYMENT FOR THE LEOS SERVICES INVOLVED SHALL BE INCLUDED IN THE LUMP SUM BID FOR ITEM 614 - MAINTAINING TRAFFIC.

ARRANGEMENTS AND PAYMENTS FOR THE SERVICES OF THE LEOS WITH PATROL CAR WILL BE MADE BY THE CONTRACTOR. INFORMATION REGARDING THE LEOS MAY BE OBTAINED BY CONTACTING:

THE STATE HIGHWAY PATROL HEADQUARTERS	MEDINA COUNTY SHERIFF
660 EAST MAIN STREET	218 EAST LIBERTY STREET
COLUMBUS, OHIO 43205	MEDINA, OHIO 44256
PHONE: (216) 466-2660	PHONE: (216) 725-6631

THE FOLLOWING ESTIMATED QUANTITY IS PROVIDED IN THE GENERAL SUMMARY:

ITEM SPECIAL - LAW ENFORCEMENT OFFICER WITH PATROL CAR	100 HOURS	F- 51(70)

GENERAL NOTES

ITEM 614-MAINTAINING TRAFFIC

A) GENERAL - THROUGH TRAFFIC SHALL BE MAINTAINED IN EACH DIRECTION AT ALL TIMES ON U.S. 42, U.S. 224, AND ON ALL INTERCHANGE RAMPS, EXCEPT RAMP C AT MED-42-0688. TRAFFIC CONTROL SHALL BE MAINTAINED AS PER THE SPECIFICATIONS, PLAN DETAILS, AND AS OUTLINED IN THE CONSTRUCTION AND MAINTENANCE OPERATIONS SECTION OF THE OHIO MANUAL OF UNIFORM TRAFFIC CONTROL DEVICES FOR STREETS AND HIGHWAYS, CURRENT EDITION WITH THE LATEST REVISIONS. THE PART TIME CLOSING OF U.S. 42NORTHBOUND AND S.R. 83 WILL BE REQUIRED WITH DETOURS TO BE PROVIDED BY STATE FORCES, SEE (D) AND (G) BELOW. IN ADDITION, THE FOLLOWING REQUIREMENTS SHALL APPLY:

1) THE CONTRACTOR SHALL SUBMIT, IN WRITING, A SCHEDULE OF OPERATIONS TO THE DIRECTOR AND RECEIVE APPROVAL BEFORE WORK IS STARTED ON THE PROJECT.

2) DURING ALL WORK EXCEPT THE PAVEMENT REPLACEMENT PORTION OF THE PROJECT AT C.R.19, A TRAFFIC CONTROL INSP. SHALL BE ON CALL AFTER WORKING HOURS DURING THE TIMES TRAFFIC IS DIVERTED FROM ITS NORMAL TRAFFIC LANES. THE INSPECTORS NAME, ADDRESS AND TELEPHONE NUMBER SHALL BE FORWARDED TO THE STATE HIGHWAY PATROL AND THE MEDINA COUNTY SHERIFF. THIS INDIVIDUAL SHALL BE ABLE TO RESPOND & BE ON THE PROJECT WITHIN FIFTEEN(15)MIN. AFTER A CALL. THIS INDIVIDUAL SHALL INSPECT, DOCUMENT, REPAIR AND /OR REPLACE ALL TRAFFIC CONTROL DEVICES THAT ARE MALFUNCTIONING OR DAMAGED. SEE NOTE BELOW FOR PROVISONS DURING PAVEMENT REPLACEMENT PORTION OF THE PROJECT IN THE AREA OF C.R. 19.

3). WHENEVER CONSTRUCTION WORK IS BEING PERFORMED WITHIN THE LIMITS OF THE PAVEMENT REPLACEMENT PORTION OF THE PROJECT IN THE AREA OF C.R. 19, THE CONTRACTOR SHALL DESIGNATE A QUALIFIED INDIVIDUAL, OTHER THAN THE SUPERINTENDENT AND SUBJECT TO THE APPROVAL OF THE ENGINEER, TO PERIODICALLY INSPECT, DOCUMENT, REPAIR AND/OR REPLACE DAMAGED OR MISSING TRAFFIC CONTROL DEVICES. THE DESIGNATED INDIVIDUAL SHALL INSPECT, DOCUMENT, REPAIR AND/OR REPLACE ALL TRAFFIC CONTROL DEVICES AT THE BEGINNING OF EACH WORK DAY, AND AT LEAST ONCE EVERY TWO (2) HOURS WHILE WORK IS BEING CONDUCTED WITHIN THE LIMITS OF THE PAVEMENT REPLACEMENT PORTION OF THE PROJECT.

THE ABOVE DESIGNATED INDIVIDUAL OR ANOTHER QUALIFIED INDIVIDUAL SUBJECT TO THE APPROVAL OF THE ENGINEER, SHALL BE AVAILABLE AND ON CALL FOR THE REMAINDER OF THE NON-WORKING PERIODS THAT TRAFFIC IS DIVERTED FROM ITS NORMAL PATH. THIS INDIVIDUAL SHALL AT A MINIMUM OF ONCE EVERY TWO (2) HOURS INSPECT, DOCUMENT, REPAIR AND/OR REPLACE MISSING TRAFFIC CONTROL DEVICES. IN ADDITION, THIS INDIVIDUAL SHALL BE ABLE TO RESPOND AND BE ON THE PROJECT WITHIN FIFTEEN (15) MINUTES AFTER A CALL.

PAYMENT FOR THE ABOVE SERVICES OF THE TRAFFIC CONTROL INSPECTORS SHALL BE INCLUDED IN THE LUMP SUM PRICE BID FOR ITEM 614 MAINTAINING TRAFFIC.

B) TRAFFIC CONTROL - 2 LANE SECTIONS: ONE-LANE TRAFFIC WITH FLAGGERS (SEE SHEETS 178 & 179) WILL BE PERMITTED DURING WORKING HOURS FOR THE ERECTION OF GUARDRAIL AND PAVING OPERATIONS. TRAFFIC SHALL BE MAINTAINED WITH SIGNALS AS DETAILED ON SHEETS 172 & 174 DURING THE DECK REPAIR AND OVERLAY PORTIONS OF THE WORK. THE CONTRACTOR WILL NOT BE PERMITTED TO WORK ON MED-42-0248 AND MED-42-0265 AT THE SAME TIME.

C) TRAFFIC CONTROL - S.R. 421: ONE-LANE TRAFFIC WITH FLAGGERS WILL BE PERMITTED DURING WORKING HOURS FOR THE ERECTION OF GUARDRAIL AT BRIDGE PIERS, PROTECTING THE AREAS UNDER MED-42-0310L AND MED-42-0310R DURING BRIDGE PARAPET REMOVAL AND REPLACEMENT, DURING THE REMOVAL OF THE OVERHEAD SIGN ON MED-42-0310L, AND DURING PAVING OPERATIONS ON S.R. 421.

D) TRAFFIC CONTROL - RAMPS: TRAFFIC SHALL BE MAINTAINED AT ALL TIMES ON ALL RAMPS, EXCEPT RAMP C OF MED-42-0688, BY USE OF THE EXISTING PAVEMENT AND PAVED BERMS. ALL TRAFFIC SHALL BE RETURNED TO ITS NORMAL PATTERN AT THE COMPLETION OF EACH WORK DAY, EXCEPT DURING DECK OVERLAYS. SPECIAL PROVISIONS SHALL BE MADE TO WARN TRAFFIC ENTERING A ONE-LANE TRAFFIC ZONE FROM A RAMP (SEE SHEETS 181 & 182).

RAMP C OF MED-42-0688 SHALL BE CLOSED TO TRAFFIC DURING THE OVERLAY WORK ON THE BRIDGE. SEE SHEET 13A FOR DETOUR LIMITATION AND OTHER REQUIREMENTS.

E) TRAFFIC CONTROL - 4 LANE RESURFACING SECTIONS: A MINIMUM OF ONE LANE OF THROUGH TRAFFIC SHALL BE MAINTAINED IN EACH DIRECTION AT ALL TIMES DURING WORKING HOURS. ALL TRAFFIC SHALL BE RETURNED TO ITS NORMAL PATTERN AFTER THE COMPLETION OF EACH WORK DAY, EXCEPT DURING THE REQUIRED PERIODS FOR THE REPAIR AND OVERLAY OF THE VARIOUS BRIDGE DECKS. (SEE DETAILS ON SHEET 22 AND SHEETS 138 TO 152 IN THE PLAN.)

IN ALL CASES, TRAFFIC SHALL BE SEPARATED FROM THE WORK AREA BY DRUMS, OR CONES (DAYTIME ONLY) SPACED AS PER THE PLAN DETAILS. THE LENGTH OF RESTRICTED TRAFFIC ZONES SHALL BE KEPT TO A MINIMUM AS DIRECTED BY THE ENGINEER.

AT EACH RAMP TO REMAIN OPEN, THERE SHALL BE AN AREA OF 175 ± FEET IN LENGTH IN THE OUTSIDE DIRECTIONAL LANE WHICH SHALL BE RESURFACED AT THE SAME TIME AS THE MEDIAN DIRECTIONAL LANE OR SHALL BE OMITTED DURING THE TIME THE OUTSIDE DIRECTIONAL LANE IS BEING RESURFACED TO MAINTAIN ACCESS TO OR FROM RAMPS AT INTERCHANGES. THESE AREAS SHALL BE LOCATED AS DIRECTED BY THE ENGINEER TO PROVIDE SAFE FLOW OF TRAFFIC ENTERING OR LEAVING THE RAMPS WHILE THE OUTSIDE DIRECTIONAL LANE IS BEING RESURFACED. THE SPEED CHANGE LANES ADJACENT TO THE 175 ± FOOT AREAS SHALL BE USED TO PROVIDE ONE-LANE TRAFFIC WHILE THE MEDIAN LANE IS BEING RESURFACED.

F) TRAFFIC CONTROL - 4 LANE PAVEMENT REPLACEMENT AT CO. RD. 19: A MINIMUM OF ONE LANE OF THROUGH TRAFFIC SHALL BE MAINTAINED IN EACH DIRECTION AT ALL TIMES. SEE SHEETS 153-170 FOR DETAILS OF TRAFFIC REROUTING ON TEMPORARY PAVEMENT.

EITHER THE EXISTING TRAFFIC SIGNAL SYSTEM OR THE NEW SIGNALS SHALL BE IN OPERATION AT ALL TIMES DURING THE VARIOUS PHASES OF THE INTERSECTION RECONSTRUCTION. THE CONTRACTOR SHALL BE RESPONSIBLE FOR SHIFTING THE SIGNAL HEAD LOCATIONS TO PROPER ALINGMENT WITH THE TEMPORARY PAVEMENT LANES USED DURING EACH CONSTRUCTION PHASE. ANY SIGNAL HEAD THAT IS NOT BEING USED TO CONTROL TRAFFIC SHALL BE EITHER COVERED OR REMOVED DURING A PARTICULAR PHASE.

LEO'S SHALL BE USED FOR CONTROLLING TRAFFIC DURING ANY PERIOD THAT SIGNAL HEAD LOCATIONS ARE BEING SHIFTED AND DURING THE CHANGE-OVER FROM ONE MAIN PHASE TO ANOTHER. SEE SHEET NO. 12 FOR REQUIREMENTS.

STATE FORCES WILL BE RESPONSIBLE FOR ALL ADJUSTMENTS OF THE SIGNAL TIMING. THE CONTRACTOR SHALL CONTACT THE DISTRICT TRAFFIC ENGINEER, A MINIMUM OF THREE (3) DAYS IN ADVANCE SO THE WORK CAN BE SCHEDULED.

G)
VARIOUS ITEMS FOR THE MAINTENANCE OF TRAFFIC HAVE BEEN ITEMIZED SEPARATELY. ANY ITEM NOT SEPARATELY ITEMIZED AND PAID FOR, BUT REQUIRED IN THE PLANS, SHALL BE INCLUDED IN ITEM 614 MAINTAINING TRAFFIC. THE ENGINEER MAY DIRECT THE CONTRACTOR TO ERECT ADDITIONAL SIGNS AND OTHER TRAFFIC CONTROL DEVICES ON THE PROJECT AT NO ADDITIONAL COST TO THE STATE. IN ADDITION THE FOLLOWING ESTIMATED QUANTITIES HAVE BEEN INCLUDED IN THE GENERAL SUMMARY TO BE USED AS DIRECTED BY THE ENGINEER FOR THE MAINTENANCE OF TRAFFIC:

ITEM 404	BITUMINOUS CONCRETE FOR MAINTAINING TRAFFIC	23 CU. YD.	RS-440(11)
		93 CU. YD.	F-51(70)

H) TRAFFIC CONTROL- S.R.83: TRAFFIC WILL BE DETOURED DURING THE DECK REPLACEMENT OF MED-42-0574. SEE SHEET 13A FOR DETOUR LIMITATION AND OTHER REQUIREMENTS.

I) IF THE CONTRACTOR SO ELECTS, HE MAY SUBMIT ALTERNATE METHODS FOR THE MAINTENANCE OF TRAFFIC, PROVIDED THE INTENT OF THE ABOVE PROVISIONS IS FOLLOWED AND NO ADDITIONAL INCONVENIENCE TO THE TRAVELING PUBLIC RESULTS THEREFROM. NO ALTERNATE PLAN WILL BE PUT INTO EFFECT UNTIL THE APPROVAL HAS BEEN GRANTED, IN WRITING, BY THE DIRECTOR.

J) SEE SHEET 80 FOR ADDITIONAL MAINTENANCE OF TRAFFIC PROVISIONS FOR THE PROTECTION OF TRAFFIC DURING BRIDGE REPAIRS AND TEMPORARY ASPHALT WEDGE AT BRIDGES AFTER OVERLAYS.

K) SCHEDULING OF WORK ON BRIDGE DECKS SHALL BE DONE IN ACCORDANCE WITH THE PROVISIONS OF THE ASPHALT PAVEMENT PLANING ON BRIDGE DECKS NOTE ON SHEET 80.

TEMPORARY GUARDRAIL

TEMPORARY GUARDRAIL SHALL CONFORM TO STANDARD TYPE 5 AS SHOWN ON THE STANDARD DRAWING GR-2B EXCEPT THAT USED RAIL ELEMENTS ARE PERMISSIBLE, PROVIDING THAT THE REQUIREMENTS OF C.M.S. 606.04 ARE MET.

ALTHOUGH ESTIMATED REQUIREMENTS FOR TEMPORARY GUARDRAIL HAVE BEEN SHOWN ON THE PLAN DETAILS, THESE ITEMS SHALL BE CONSIDERED INCIDENTAL TO, AND INCLUDED WITH, PAYMENT FOR ITEM 615 TEMPORARY ROADS.

ITEM 615 - TEMPORARY PAVEMENT, AS PER PLAN

TEMPORARY PAVEMENTS SHALL MEET THE REQUIREMENTS OF ITEM 615 AND HAVE THE FOLLOWING MINIMUM REQUIREMENTS:

TYPE	COURSE MAKUP	MINIMUM COURSE THICKNESS
6" ASPHALT	- 846 ASPHALT CONCRETE, INTERMEDIATE COURSE, TYPE 2, AC-20	6"
	- OR -	
	- 404 ASPHALT CONCRETE	1 -1/2"
	- 301 BITUMINOUS AGGREGATE BASE	4 -1/2"
9" ASPHALT	- 846 ASPHALT CONCRETE, SURFACE COURSE, TYPE 1, AC-20	1 -1/2"
	- 846 ASPHALT CONCRETE, INTERMEDIATE COURSE, TYPE 2, AC-20	1 -3/4"
	- 301 BITUMINOUS AGGREGATE BASE	6"
10" CONCRETE	- 452 PLAIN CONCRETE PAVEMENT	10"
	- 304 AGGREGATE BASE	6"

TEMPORARY CONCRETE BARRIER, AS PER PLAN

TEMPORARY CONCRETE BARRIER, AS PER PLAN SHALL BE TIED TOGETHER WITH CONNECTING PINS IN ACCORDANCE WITH STANDARD DRAWING MC-9A. TONGUE AND GROOVE SECTIONS WILL NOT BE PERMITTED ON THIS PROJECT. *PAYMENT FOR THIS ITEM SHALL INCLUDE RELOCATION FOR WORK ON SUBSEQUENT PHASES AT EACH LOCATION.*

THE COST OF PROVIDING AND MAINTAINING ALL STEADY BURNING WARNING LIGHTS AND BARRIER REFLECTORS AS CALLED FOR ON SHEETS 139 AND 176 SHALL BE INCLUDED IN THE PRICE BID FOR ITEM 622 - TEMPORARY CONCRETE BARRIER, AS PER PLAN.

TEMPORARY CONCRETE BARRIER, BRIDGE MOUNTED, AS PER PLAN.

TEMPORARY CONCRETE BARRIER USED TO PROTECT TRAFFIC DURING THE REPLACEMENT OF GUARDRAIL OR PARAPET SHALL BE ITEM 622 - TEMPORARY CONCRETE BARRIER BRIDGE MOUNTED, AS PER PLAN. THE TEMPORARY CONCRETE BARRIER, BRIDGE MOUNTED, AS PER PLAN SHALL BE TIED TOGETHER AND MODIFIED ACCORDING TO THE DETAILS ON SHEET 177. *PAYMENT FOR THIS ITEM SHALL INCLUDE RELOCATION FOR WORK ON SUBSEQUENT PHASES AT EACH LOCATION.*

THE COST OF PROVIDING AND MAINTAINING ALL STEADY BURNING WARNING LIGHTS AND BARRIER REFLECTORS AS CALLED FOR ON SHEETS 139 AND 176 SHALL BE INCLUDED IN THE PRICE BID FOR ITEM 622 - TEMPORARY CONCRETE BARRIER, BRIDGE MOUNTED, AS PER PLAN.

NOTE
SEE SHEET 153 FOR ADDITIONAL MAINTENANCE OF TRAFFIC NOTES FOR PAVEMENT REPLACEMENT PORTION OF PROJECT.

Rev. 3-11-89

DETOUR LIMITATION AND INTERIM COMPLETION DATE FOR RAMP C OF MED-42-0688:

NORTHBOUND U.S.R. 42 TRAFFIC SHALL BE MAINTAINED AT ALL TIMES ON RAMP C. EXCEPT FOR A PERIOD NOT TO EXCEED 40 CONSECUTIVE CALENDAR DAYS, NORTHBOUND U.S.R. 42 TRAFFIC WILL BE DETOURED AS SHOWN BELOW FOR THE BRIDGE DECK OVERLAY AND ASSOCIATED WORK.

THE CONTRACTOR SHALL NOTIFY THE DISTRICT TRAFFIC ENGINEER IN WRITING A MINIMUM OF SEVEN (7) DAYS IN ADVANCE OF THE DATE THE DETOUR IS NEEDED. THE STATE OF OHIO WILL INSTALL, MAINTAIN AND SUBSEQUENTLY REMOVE THE ADVANCE DETOUR SIGNING.

THE CONTRACTOR SHALL BE RESPONSIBLE FOR FURNISHING, INSTALLING, MAINTAINING AND REMOVING THE TRAFFIC CONTROL DEVICES AS SHOWN ON SHEETS 151 & 152.

THE 40 CONSECUTIVE CALENDAR DAYS SHALL BE CONSIDERED AS AN INTERIM COMPLETION DATE (SECTION 108) AND FOR EACH CALENDAR DAY BEYOND THE 40 CONSECUTIVE CALENDAR DAYS THAT THE ROADWAY REMAINS CLOSED TO THE TRAFFIC, THE CONTRACTOR WILL BE ASSESSED LIQUIDATED DAMAGES, IN THE AMOUNT OF 300 DOLLARS PER CALENDAR DAY.

THIS DETOUR CANNOT BE IN EFFECT AT THE SAME TIME THAT S.R. 83 TRAFFIC IS DETOURED, AS SHOWN AT RIGHT. *SEE SHEET 140 FOR ADDITIONAL RESTRICTIONS.**

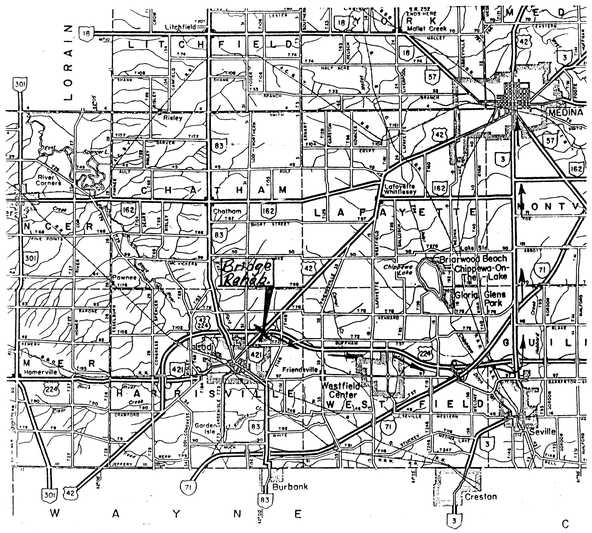

DETOUR ROUTE (U.S. 42 N.B. ONLY) → →

DETOUR LIMITATION AND INTERIM CMPLETION DATE FOR S.R. 83: *

TWO-WAY TRAFFIC SHALL BE MAINTAINED AT ALL TIMES ON S.R. 83. EXCEPT FOR A PERIOD NOT TO EXCEED 60 CONSECUTIVE CALENDAR DAYS, THROUGH TRAFFIC WILL BE DETOURED AS SHOWN BELOW.

THE CONTRACTOR SHALL NOTIFY THE DISTRICT TRAFFIC ENGINEER IN WRITING A MINIMUM OF SEVEN (7) DAYS IN ADVANCE OF THE DATE THE DETOUR IS NEEDED. THE STATE OF OHIO WILL INSTALL, MAINTAIN AND SUBSEQUENTLY REMOVE THE DETOUR SIGNING.

THE CONTRACTOR SHALL BE RESPONSIBLE FOR THE FURNISHING, INSTALLING, MAINTAINING AND REMOVING THE GATES AND BARRICADES AT THE APPROXIMATE WORK LIMITS OF THE PROJECT. SEE SHEET NO. 171 .

THE 60 CONSECUTIVE CALENDAR DAYS SHALL BE CONSIDERED AS AN INTERIM COMPLETION DATE (SECTION 108) AND FOR EACH CALENDAR DAY BEYOND THE 60 CONSECUTIVE CALENDAR DAYS THAT THE ROADWAY REMAINS CLOSED TO THE TRAFFIC, THE CONTRACTOR WILL BE ASSESSED LIQUIDATED DAMAGES, IN THE AMOUNT OF 300 DOLLARS PER CALENDAR DAY.

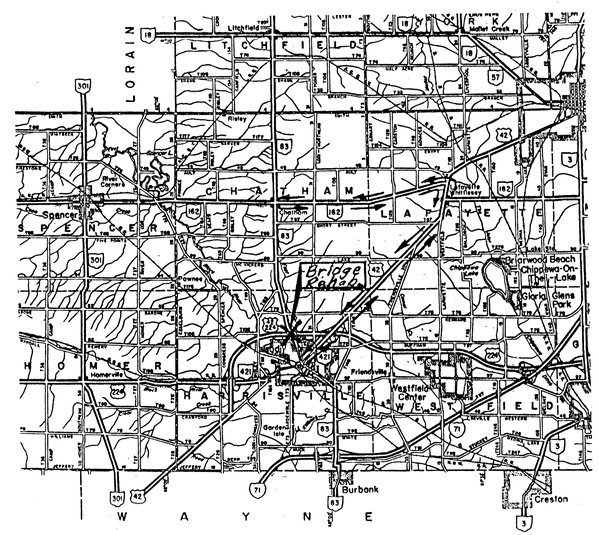

DETOUR ROUTE (S.R. 83) ⇄ ⇄

Revised 3-11-89

DETOUR NOTES & MAPS

GENERAL NOTES

ITEM 620 – BARRIER REFLECTORS, AS PER PLAN

DESCRIPTION

THIS ITEM SHALL CONSIST OF FURNISHING AND INSTALLING BARRIER REFLECTORS ON GALVANIZED STEEL GUARDRAIL, CONCRETE BARRIER, RETAINING WALL AND/OR BRIDGE PARAPETS IN ACCORDANCE WITH THE PLANS AND SPECIFICATIONS.

MATERIAL

THE BARRIER REFLECTOR SHALL BE AS MANUFACTURED BY STIMSONITE, REFLEXITE OR AN APPROVED FUNCTIONAL EQUIVALENT.

STIMSONITE – MODEL 965 (WHITE & YELLOW) OR
REFLEXITE – MODEL 650 (WHITE & YELLOW)

THE REFLECTORS MAY BE ATTACHED BY ADHESIVE OR OTHER ACCEPTABLE METHOD.

THE ADHESIVE SHALL BE FRANKLIN PANEL AND METAL FRAMING ADHESIVE AS MANUFACTURED BY FRANKLIN CHEMICAL INDUSTRIES, PR-365 AS MANUFACTURED BY PRODUCTS RESEARCH AND CHEMICAL CORPORATION, OR AN APPROVED EQUAL.

ALL MOUNTING HARDWARE UTILIZED IN ANY ACCEPTABLE ALTERNATE ATTACHMENT METHOD SHALL BE STAINLESS STEEL.

LAYOUT

THE CONTRACTOR SHALL LAYOUT ALL LOCATIONS TO ASSURE PROPER PLACEMENT. THE LAYOUT SHALL BE APPROVED BY THE ENGINEER PRIOR TO INSTALLATION OF THE REFLECTORS.

ALL BARRIERS SHALL HAVE A REFLECTOR AT THE BEGINNING AND THE END OF THE RUN AND AT LEAST ONE EVENLY SPACED BETWEEN THE TERMINI. THE REQUIRED NUMBER OF REFLECTORS (N) PER RUN FOR EACH LENGTH (L) OF RUN SHALL BE DETERMINED AS FOLLOWS:

N = L/100 + 1 (FOR TANGENTS AND CURVES LESS THAN 5°)
N = L/50 + 1 (FOR CURVES WITH DEGREE OF CURVATURE OF 5° OR GREATER)
ROUND N TO NEXT WHOLE NUMBER WITH A MINIMUM OF 3.

THE SPACING ON TANGENTS AND CURVES LESS THAN 5° MAY VARY FROM 75' TO 125' IN THE FINAL 250' TO ALLOW FOR EVEN SPACING OF THE REFLECTORS.

INSTALLATION

1. ON CONCRETE BARRIERS, RETAINING WALLS AND BRIDGE PARAPETS THE HEIGHT OF THE TOP OF THE REFLECTOR SHALL BE 26 INCHES ABOVE THE NEAR EDGE OF PAVEMENT, BUT IN NO CASE SHALL THE TOP OF THE REFLECTOR BE LESS THAN 3 INCHES BELOW THE TOP OF THE CONCRETE BARRIER.
2. GUARDRAIL REFLECTORS SHALL BE INSTALLED WITHIN THE CONCAVE SURFACE OF THE GUARDRAIL. ATTACHMENT MAY BE BY BRACKET WHICH FITS UNDER THE HEAD OF THE POST BOLT, BY THE ABOVE REFERENCED ADHESIVE APPLIED PER MANUFACTURER'S RECOMMENDATION, OR OTHER ACCEPTABLE METHOD.
3. THE ABOVE REFERENCED ADHESIVE SHALL BE FLASHED WHEN APPLIED TO ACHIEVE MAXIMUM BONDING STRENGTH.
4. WHEN MOUNTED ON A FLAT SURFACE, THE REFLECTOR SHALL BE TILTED UP-WARD FROM THE VERTICAL OR PLUMB POSITION 2-3 DEGREES TO FACILITATE "RAIN WASHING" OF THE REFLECTOR FACE.
5. ON TWO-LANE HIGHWAYS, WHITE UNITS SHALL BE PLACED ON THE RIGHT SIDE OF APPROACHING TRAFFIC. BIDIRECTIAL WHITE REFLECTORS SHALL BE USED ON THE OUTSIDE OF CURVES.
6. ON DIVIDED HIGHWAYS, DIRECTIONAL ROADWAYS AND RAMPS, WHITE UNITS SHALL BE PLACED ON THE RIGHT SIDE OF APPROACHING TRAFFIC AND YELLOW IN THE LEFT.

METHOD OF MEASUREMENT

THE NUMBER OF BARRIER REFLECTORS OF EACH TYPE SHALL BE THE ACTUAL NUMBER IN PLACE, COMPLETED AND ACCEPTED INCLUDING ALL LABOR, EQUIPMENT, HARDWARE AND MATERIALS NECESSARY TO COMPLETE THE WORK. REFLECTORS MOUNTED ON GUARDRAIL SHALL BE MEASURED AS TYPE A. REFLECTORS MOUNTED ON CONCRETE BARRIER SHALL MEASURED AS TYPE B. BIDIRECTIONAL REFLECTORS SHALL BE MEASURED AS TYPE A2 FOR GUARDRAIL AND TYPE B2 FOR BARRIER. A BIDIRECTIONAL REFLECTOR MAY ACTUALLY CONSIST OF TWO 1-WAY REFLECTORS MOUNTED BACK-TO-BACK, HOWEVER, BOTH WILL BE INCLUDED IN THE UNIT PRICE FOR A BIDIRECTIONAL REFLECTOR.

BASIS OF PAYMENT

BASIS OF PAYMENT SHALL BE AT THE UNIT PRICE BID FOR EACH REFLECTOR AND SHALL INCLUDE ALL LABOR, EQUIPMENT, HARDWARE, AND INCIDENTALS REQUIRED TO PERFORM THE WORK.

ITEM	UNIT	DESCRIPTION
620	EACH	BARRIER REFLECTOR, TYPE A AS PER PLAN
620	EACH	BARRIER REFLECTOR, TYPE B AS PER PLAN
620	EACH	BARRIER REFLECTOR, TYPE A2 AS PER PLAN
620	EACH	BARRIER REFLECTOR, TYPE B2 AS PER PLAN

ITEM 802 – BARRIER REFLECTORS

STATION LIMITS OR LOCATION		BARRIER REFLECTOR, TYPE A, ~~AS PER PLAN~~		BARRIER REFLECTOR, TYPE B, ~~AS PER PLAN~~	
		WHITE	YELLOW	WHITE	YELLOW
		EACH			
RS-440 (11)					
U.S.R. 42					
129+21± TO 132+58±	RT.	4			
129+41± TO 132+79±	LT.	2		1	
135+14± TO 139+45±	LT.& RT.	10		4	
160+55± TO 161+30±	RAMP B	2			
TOTAL RS-440 (11)		18		5	
F-51 (70)					
U.S.R. 42					
161+30± TO 337+49±	RAMP B	9		1	
161+30± TO 333+99±	LT.	5		1	
U.S.R. 42 & 224					
329+53± TO 332+10±	MED.		2		2
330+80± TO 333+30±	MED.		1		2
U.S.R. 224					
28+30± TO 31+55	LT.& RT.	8			
U.S.R. 42 & 224					
336+10± TO 337+50±	MED.		6		
336+00± TO 338+10±	LT.	3			
346+00± TO 352+45±	RT.	6			
347+38± TO 355+90±	LT.	9			
352+40± TO 354+90±	MED.		6		
394+21± TO 396+21±	RT.	3			
394+65± TO 396+65±	LT.	3			
394+85± TO 396+05±	MED.		6		
402+08± TO 422+70±	LT.	20		1	
406+35± TO 411+70±	RT.	5		1	
408+72± TO 411+82±	MED.		4		
409+67± TO 412+67±	MED.		4		
416+15± TO 422+33±	RT.	6			
472+72± TO 486+00±	RT.	12		2	
472+96± TO 489+96±	LT.	15		2	
480+10± TO 483+90±	MED.		2		2
480+70± TO 484+40±	MED.		2		2
498+83± TO 500+96±	RT.	3			

STATION LIMITS OR LOCATION		BARRIER REFLECTOR, TYPE A, ~~AS PER PLAN~~		BARRIER REFLECTOR, TYPE B, ~~AS PER PLAN~~	
		WHITE	YELLOW	WHITE	YELLOW
		EACH			
499+04± TO 501+17±	LT.	3			
499+30± TO 500+70±	MED.		6		
S.R. 83					
4+80± TO 9+50±	RT.	3		2	
5+25± TO 9+75±	LT.	3		2	
U.S.R. 42 & 224					
506+33± TO 520+49±	RT.	15			
506+48± TO 511+73±	LT.	6			
506+40± TO 509+40±	MED.		4		
507+05± TO 510+00±	MED.		4		
514+50± TO 521+25±	LT.	7			
CO. RD. 31 TO 542+50±	RT.	10			
534+25± TO 540+25±	LT.	6			
557+86± TO 560+11±	RT.	3			
559+30± TO 560+90±	MED.		6		
560+07± TO 562+32±	LT.	3			
U.S.R. 42					
16+83± TO 23+80±	LT.	6			
17+22± TO 23+19±	RT.	7			
29+15± TO 31+53±	LT.	3			
9+20± TO 10+70±	RAMP B	3			
1+80± TO 5+00±	RAMP D	6			
U.S.R. 224					
635+50± TO 641+50±	RT.	7			
636+98± TO 641+60±	LT.	5			
678+42± TO 693+55±	RT.	15			
680+00± TO 686+00±	LT.	6			
682+17± TO 685+30±	MED.		4		
682+89± TO 686+00±	MED.		4		
760+00± TO 778+20±	LT.	19			
770+65± TO 775+00±	RT.	4			
785+85± TO 790+25±	RT.	5			
786+13± TO 790+13±	LT.	4			
824+20± TO 27+70±	LT.	3			
824+45± TO 25+01±	RT.	3			
27+66± TO 826+70±	LT.	2			
24+86± TO 829+50±	RT.	5			
837+75± TO 840+20±	MED.		6		
9+00± TO 14+02±	RAMP D	8			
843+94± TO 846+19±	RT.	3			
844+70± TO 846+30±	MED.		6		
13+77± TO 16+02±	LT.	3			
TOTAL F-51 (70)		283	73	12	8

ALL TOTALS CARRIED TO GENERAL SUMMARY SHEET: 14

GENERAL SUMMARY

CALC. BY PLD DATE 3/88	MED-42-1.89	OHIO
CHKD. BY AFS DATE 3/88	MED-224-10.45	FHWA REGION 5

FROM SHT. NO.	SUB-TOTAL RS-440(11)	SUB-TOTAL F-51(70)		ITEM	PLAN TOTAL	UNIT	ITEM EXT.	DESCRIPTION
								ROADWAY
9	Lump	Lump		201	Lump			Clearing and Grubbing
16		1		202	1	Each		Concrete Sign Foundation Removed
16		13,769		202	13,769	Sq.Yd.		Pavement Removed
16	321	1498		202	1819	Sq.Yd.		Wearing Course Removed
16		273		202	273	Sq.Yd.		Median Pavement Removed, As Per Plan
16		617		202	617	Lin.Ft.		Paved Gutter Removed
16		3750.00		202	3750.00	Lin.Ft.		Guardrail Removed
16	450.00	5400.00		202	5850.00	Lin.Ft.		Guardrail Removed For Re-Use
16		250.00		202	250.00	Lin.Ft.		Guardrail Removed, Barrier Design
16	8	52		202	60	Each		Anchor Post Removed, As Per Plan
9	413	1671		202	2084	Each		Raised Pavement Markers Removed For Storage
16		152		202	152	Lin.Ft.		Curb Removed, Type 6, As Per Plan
16	60	2897		202	2957	Lin.Ft.		Curb Removed, As Per Plan
16		1		202	1	Each		Catch Basin Or Inlet Removed
16		16		202	16	Cu.Yd.		Portions Of Structures Removed, Headwalls
16	41	7248		203	7289	Cu.Yd.		Excavation Not Including Embankment Construction
16	230	2070		203	2300	Cu.Yd.		Embankment
16		18,242		203	18,242	Sq.Yd.		Subgrade Compaction
13	23	93		404	116	Cu.Yd.		Bituminous Concrete For Maintaining Traffic
9		2		604	2	Each		Monument Box Removed and Reset
16		166		Special	166	Lin.Ft.		Reshaping Berms
16		1154.50		606	1154.50	Lin.Ft.		Guardrail, Type 5
16	450.00	5400.00		606	5850.00	Lin.Ft.		Guardrail Rebuilt, Type 5
16	750.00	15,937.50		606	16,687.50	Lin.Ft.		Raising Existing Guardrail, Type 5
16		15		606	15	Each		Intermediate Guardrail Posts
16		12		606	12	Each		Anchor Assembly, Type A
16		12		606	12	Each		Anchor Assembly, Type T
16		26		606	26	Each		Bridge Terminal Assembly, Type A
16	8	32		606	40	Each		Bridge Terminal Assembly, Type B
71	13,390	96,633		607	110,023	Lin.Ft.		Fence, Type 47, As Per Plan
71		815		607	815	Lin.Ft.		Fence, Type 47 RA, As Per Plan
138	1552	24,031		615	25,583	Sq.Yd.		Temporary Pavement, As Per Plan
138	Lump	Lump		615	Lump			Temporary Roads
10		50		616	50	M.Gal.		Water
10		30		616	30	Ton		Calcium Chloride
138	18	356		802	374	Each		Barrier Reflector, Type A
138	5	20		802	25	Each		Barrier Reflector, Type B
138	760	7440		622	8200	Lin.Ft.		Temporary Concrete Barrier, As Per Plan
138	180	610		622	790	Lin.Ft.		Temporary Concrete Barrier, Bridge Mounted, As Per Plan
71	1	24		625	25	Each		Ground Rod
12		2		Special	2	Each		Temporary Impact Attenuator, G-R-E-A-T System, Model Number 200200NF66CZ

FROM SHT. NO.	SUB-TOTAL RS-440(11)	SUB-TOTAL F-51(70)		ITEM	PLAN TOTAL	UNIT	ITEM EXT.	DESCRIPTION
								EROSION CONTROL
9		760		207	760	Each		Straw Or Hay Bales
16	28	350		601	378	Cu.Yd.		Rock Channel Protection, Type B, With Filter
16		94		601	94	Cu.Yd.		Rock Channel Protection, Type C, With Filter
16		63		601	63	Lin.Ft.		Paved Gutter, Type 1-4
9	1	20		659	21	M.Gal.		Water
16	442	14,548		659	14,990	Sq.Yd.		Seeding and Mulching
9	0.04	1.30		659	1.34	Ton		Commercial Fertilizer
16		1343		660	1343	Sq.Yd.		Sodding
16	53	152		670	205	Sq.Yd.		Ditch Erosion Protection
								DRAINAGE
16	0.2	11.8		602	12	Cu.Yd.		Concrete Masonry
16	20	60		603	80	Lin.Ft.		12" Conduit, Type A, 706.01 or 706.02
16		30		603	30	Lin.Ft.		15" Conduit, Type A, 706.01 or 706.02
16		46		603	46	Lin.Ft.		15" Conduit, Type A, 707.01 or 707.02
16		34		603	34	Lin.Ft.		18" Conduit, Type A, 707.01 or 707.02
16		12		603	12	Lin.Ft.		18" Conduit, Type A, 706.01 or 706.02
16		66		603	66	Lin.Ft.		24" Conduit, Type A, 706.01 or 706.02
16		36		603	36	Lin.Ft.		49" × 33" Conduit, Type A, 707.05 (0.168")
16		40		603	40	Lin.Ft.		6'-1" × 4'-7" Conduit, Type A, 707.03, As Per Plan
16		68		603	68	Lin.Ft.		6" Conduit, Type F
16		1		604	1	Each		Catch Basin, No. 5
16		9		604	9	Each		Catch Basin, No. 5 with Grate "B", As Per Plan
16		8		604	8	Each		Catch Basin, No. 5, As Per Plan
16	1	8		604	9	Each		Catch Basin Adjusted To Grade
16		1		604	1	Each		Median Inlet Reconstructed To Grade
	335	7347						
16	335	7347		605	7682	Lin.Ft.		Aggregate Drain, As Per Plan
16		905		605	905	Lin.Ft.		6" Shallow Pipe Underdrains, As Per Plan
16		1443		605	1443	Lin.Ft.		6" Deep Pipe Underdrains, As Per Plan
16		407		605	407	Lin.Ft.		6" Unclassified Pipe Underdrains, As Per Plan

Rev. 3-11-89

GENERAL SUMMARY

CALC. BY PLD DATE 5/88	MED-42-1.89	OHIO	15
CHKD. BY AFS DATE 5/88	MED-224-10.45	FHWA REGION 5	189

FROM SHT. NO.	Sub-Total RS-440(11)	Sub-Total F-51(70)		ITEM	PLAN TOTAL	UNIT	ITEM EXT.	DESCRIPTION
								PAVEMENT
17		2656		304	2656	Cu.Yd.		Aggregate Base, As Per Plan
17	2818	42,533		407	45,351	Gal.		Tack Coat, [illegible]
17		12,467		451	12,467	Sq.Yd.		13" Reinforced Concrete Pavement, As Per Plan
17		3471		452	3471	Sq.Yd.		Variable Thickness Plain Concrete Pavement, As Per Plan
17		2304		611	2304	Sq.Yd.		Reinforced Concrete Approach Slab (T=15")
17		584		612	584	Sq.Yd.		Concrete Median
17	728	8797		617	9525	Cu.Yd.		Compacted Aggregate, Type A.
17	1011	14,959		446	15,970	Cu.Yd.		Asphalt Concrete Surface Course, [illegible], Type 1, AC-20
17	1266	19,731		446	20,997	Cu.Yd.		Asphalt Concrete Intermediate Course, [illegible] Type 2, AC-20.
17		304		Special	304	Lin.Ft.		Pressure Relief Joint, Type C
[illegible]	[illegible]	[illegible]		[illegible]	[illegible]	[illegible]		[illegible]
17, 23	130	3238		252	3368	Sq.Yd.		Full Depth Rigid Pavement Removal and Flexible Replacement,
22	38	456		Special	494	Cu.Yd.		Partial Depth Pavement Repair
23	456	13,992		252	14,448	Lin.Ft.		Full Depth Pavement Sawing
11	3160	39,215		Special	42,375	Lbs.		Crack Sealing, Hot Applied, 705.04
11	32	1315		Special	1347	Cu.Yd.		Flexible Berm Repair
17	28,181	425,325		254	453,506	Sq.Yd.		Pavement Planing, Bituminous
16		940		622	940	Lin.Ft.		Concrete Barrier, Type D.
22	5.9	71.18		812	77.08	Tons		Portland Cement
[illegible]	[illegible]	[illegible]		[illegible]	[illegible]	[illegible]		[illegible]

FROM SHT. NO.	Sub-Total RS-440(11)	Sub-Total F-51(70)		ITEM	PLAN TOTAL	UNIT	ITEM EXT.	DESCRIPTION
								TRAFFIC CONTROL
138	0.11	0.19		614	0.30	Mi.		Temporary Center Line, Class I
138		17.35		614	17.35	Mi.		Temporary Edge Line, Class I
138		1.69		614	1.69	Mi.		Temporary Lane Line, Class I
138		1250		614	1250	Lin.Ft.		Temporary Channelizing Line, Class I
138	48	225		614	273	Lin.Ft.		Temporary Stop Line, Class I
12	14	29		614	43	Each		Work Zone Marking Signs
175	1744	986		614	2730	Each		Temporary Raised Pavement Markers, Type A
12	0.89	0.62		614	1.51	Mi.		Temporary Center Line Class II
12	0.60	22.41		614	23.01	Mi.		Temporary Lane Line, Class II
61 & 62	2.90	38.23		621	41.13	Mi.		Edge Line
61 & 62	0.52	22.41		621	22.93	Mi.		Lane Line
61 & 62	1.01	0.62		621	1.63	Mi.		Center Line
61 & 62	315	5661		847	5976	Lin.Ft.		Channelizing Line, 947.02
61 & 62	70	665		847	735	Lin.Ft.		Stop Line, 947.02
61 & 62	641	1621		621	2262	Lin.Ft.		Transverse Line
185		342		625	342	Lin.Ft.		3" Conduit, Jacked or Drilled Under Pavement, 713.04.
62		20		847	20	Each		Lane Arrows, 947.02
62		19		847	19	Each		Word [illegible] On Pavement, 96", 947.02
185		1		631	1	Each		Photoelectric Control, As Per Plan.
185		4		631	4	Each		Sign Flasher Assembly, As Per Plan.
138		1		630	1	Each		Removal of Overhead Structure Mounted Sign and Storage
185		100		603	100	Lin.Ft.		4" Conduit, Type E
185		6		632	6	Each		Vehicular Signal Head, 3-Section, 12" Lens, One-Way
		2		632	2	Each		Vehicular Signal Head, 3-Section, 12" Lens, Two-Way
		9		632	9	Each		Loop Detector Units, As Per Plan
		824		632	824	Lin.Ft.		Loop Detector Pavement Cutting
		6		632	6	Cu.Yd.		Concrete for Anchor Base Foundations
		1		632	1	Each		Strain Pole, Type TC-81.10, Design 11, 32 Feet
		1		632	1	Each		Strain Pole, Type TC-81.10, Design 11, 38 Feet, As Per Plan
		2		632	2	Each		Cable Support Assembly
		220		632	220	Lin.Ft.		Messenger Wire, 7 Strand 3/8" Dia. with Accessories
		583		632	583	Lin.Ft.		Signal Cable, 5 Conductor No. 14 AWG
		2238		632	2238	Lin.Ft.		Signal Cable, 3-Conductor No. 12 AWG
		8		632	8	Each		Covering of Vehicular Signal Head
		2044		632	2044	Lin.Ft.		Loop Detector Wire, Type E
		3937		632	3937	Lin.Ft.		Loop Detector Lead-in Cable
		58		632	58	Lin.Ft.		Power Cable, 2-Conductor No. 6 AWG
		1		632	1	Each		Power Service
		701		632	701	Lin.Ft.		Signal Cable, 3-Conductor No. 12 AWG, Direct Burial, As Per Plan
		10		608	10	Sq.Ft.		Concrete Walk, T=4"
		226		632	226	Lin.Ft.		Signal Cable, 7-Conductor No. 14 AWG
		2		633	2	Cu.Yd.		Concrete for Cabinet Foundation
		1		633	1	Each		Controller, Actuated, 3 Phase, Solid State Digital Microprocessor, As Per Plan
		1		633	1	Each		Flasher Controller, As Per Plan
		18		625	18	Each		Pullbox, Concrete, 713.08, 18"
		7		625	7	Each		Ground Rod
		1724		625	1724	Lin.Ft.		Trench
		893		625	893	Lin.Ft.		1" Conduit, 713.04
		140		625	140	Lin.Ft.		3" Conduit, 713.04
		4		625	4	Each		Connector Kit, Type VIII, 713.15
		4		632	4	Each		Steel Strain Pole, 7½" Diam, 10½" Bolt Circle, 11 Guage, 15', As Per Plan
		4		625	4	Each		Sign Pole Foundation, 24" x 6' Deep, As Per Plan
		1		632	1	Each		Removal of Traffic Signal Installation, As Per Plan
		74		630	74	Sq.Ft.		Signs, Flat Sheet
185		2		630	2	Each		Sign Hanger Assembly, Span Wire
		[illegible]		[illegible]	[illegible]	[illegible]		STRUCTURE REPAIR
		[illegible]		[illegible]	[illegible]	[illegible]		(For Bridge Rehabilitation & Painting Quantities See Sht. 85, 130)
[illegible]		[illegible]		[illegible]	[illegible]	[illegible]		[illegible]
12		100		Special	100	Hrs.		Law Enforcement Officer with Patrol Car.
[illegible]								[illegible]
	Lump	Lump		614	Lump			Maintaining Traffic
9	Lump	Lump		619	Lump			Field Office
	Lump	Lump		623	Lump			Construction Layout Stakes
	Lump	Lump		624	Lump			Mobilization

CALC. BY PLD DATE 5/88	MED-42-1.89	OHIO	16
CHKD. BY AFS DATE 5/88	MED-224-10.45	FHWA REGION 5	189

SUB - SUMMARY

From Sheet No.	202 Concrete Sign Foundation Removed	202 Pavement Removed	202 Wearing Course Removed	202 Median Pavement Removed, As Per Plan	202 Paved Gutter Removed	202 Guardrail Removed	202 Guardrail Removed For Re-Use	202 Guardrail Removed, Barrier Design	202 Anchor Post Removed, As Per Plan	202 Curb Removed Type 6 As Per Plan	202 Curb Removed As Per Plan	202 Catch Basin Or Inlet Removed	202 Portions Of Structures Removed, Headwalls	203 Excavation Not Incl. Embankment Construction	203 Embankment	203 Subgrade Compaction	Spec. Reshaping Berms	606 Guardrail Type 5	606 Guardrail Rebuilt Type 5	606 Raising Guardrail Type 5	606 Intermediate Guardrail Posts	606 Anchor Assembly Type A	606 Anchor Assembly Type T	606 Bridge Terminal Assembly Type A	606 Bridge Terminal Assembly Type B	622 Concrete Barrier Type D	From Sheet No.
	Each	Sq.Yd.	Sq.Yd.	Sq.Yd.	Lin.Ft.	Lin.Ft.	Lin.Ft.	Lin.Ft.	Each	Lin.Ft.	Lin.Ft.	Each	Cu.Yd.	Cu.Yd.	Cu.Yd.	Sq.Yd.	Lin.Ft.	Lin.Ft.	Lin.Ft.	Lin.Ft.	Each	Each	Each	Each	Each	Lin.Ft.	
32			321				450.00		8		60			8	171				450.00	750.00					8		32
57														33	59												57
RS-440 (11)			321				450.00		8		60			41	230				450.00	750.00					8		Total
18		12,363														15,938											18
33		334	262	127	33	1012.50	1087.50	50.00	7		1331		1	290	28	462		200.00	1087.50	575.00		2		12		475	33
34						450.00	300.00	50.00	6					139	106			75.00	300.00	1746.23	6			2		155	34
35		536	54				1212.50		9	152				208		888			1212.50	4253.77			4		16		35
36	1	268	54			475.00	712.50	50.00	9					235	20	488	86	75.00	712.50	3537.50			2	2	8	140	36
37			267	146		500.00	750.00	50.00	8		1566			111	22		80	312.50	750.00	4.00.00		2		6		170	37
38			54																								38
39		268	54				425.00		6					114		466			425.00	2475.00			2		8		39
40			108																								40
41									4											2900.00							41
42			645			912.50	912.50	50.00	3					111	24			137.50	912.50	50.00	9	6	2				42
42A						400.00								13	67			354.50				2	2	4			42A
44					584							1	1	4716	1023												44
50														195	82												50
56									3					696	552												56
43														400													43
58									6					20	146												58
59									5																		59
F-51 (70)	1	13,769	1498	273	617	3750.00	5400	250.00	52	152	2897	1	16	2348	2070	18242	166	1154.50	5400	15937.50	15	12	12	26	32	940	Total

5400

From Sheet No.	601 Rock Channel Protection, Type B, With Filter	601 Rock Channel Protection, Type C, With Filter	601 Paved Gutter Type 1-4	659 Seeding and Mulching	660 Sodding	670 Ditch Erosion Protection	602 Concrete Masonry	603 12" Conduit, Type A, 706.01 or 706.02	603 15" Conduit, Type A, 706.01 or 706.02	603 15" Conduit, Type A, 707.01 or 707.02	603 18" Conduit, Type A, 707.01 or 707.02	603 18" Conduit, Type A, 706.01 or 706.02	603 24" Conduit, Type A, 706.01 or 706.02	603 44"×33" Conduit, Type A, 707.05 (0.168)	603 6'-1"×4'-7" Conduit, Type A, 707.03, As Per Plan	603 6" Conduit, Type F	604 Catch Basin No. 5	604 Catch Basin No. 5 w/Grate B, As Per Plan	604 Catch Basin No. 5, As Per Plan	604 Catch Basin Adjusted To Grade	604 Median Inlet Reconstructed To Grade	605 Aggregate Drain As Per Plan	605 6" Shallow Pipe Underdrain As Per Plan	605 6" Deep Pipe Underdrain As Per Plan	605 6" Unclassified Pipe Underdrain As Per Plan	From Sheet No.
	Cu.Yd.	Cu.Yd.	Lin.Ft.	Sq.Yd.	Sq.Yd.	Sq.Yd.	Cu.Yd.	Lin.Ft.	Lin.Ft.	Lin.Ft.	Lin.Ft.	Lin.Ft.	Lin.Ft.	Lin.Ft.	Lin.Ft.	Lin.Ft.	Each	Each	Each	Each	Each	Lin.Ft.	Lin.Ft.	Lin.Ft.	Lin.Ft.	
32	28			136																1		107				32
23																						228				23
57				306		53	0.2	20																		57
RS-440 (11)	28			442		53	0.2	20												1		335				Total
23										35												6996				23
33			33	740	11		0.6			33		12									1	52				33
34		79		919						4																34
35										5									3	1		104				35
36				703						6										1		52				36
37				733						7										5		43				37
39										7												54				39
40										1									1							40
41										2												10				41
42				764						7								8	4	1		36				42
42A				599			0.42	24		3																42A
43				475						3														450		43
44		1	30	8170	1235	29						20				60		1					905	993	407	44
50				266				36									1									50
56		10		644		91	1.5								36											56
58	28			535	97	32	5.2									40										58
59		2					3.1						46			66										59
60		2					1.0			10		34				8										60
71	322																									71
F-51 (70)	350	94	63	14,548	1343	152	11.82	60	30	46	34	12	66		36	40	68	1	9	8	8	1	7347	905	1443	407	Total

SUB - SUMMARY

From Sheet No.	304 Aggregate Base As Per Plan (Cu. Yd.)	407 Tack Coat (Gal.)	451 13" Reinforced Concrete Pavement As Per Plan (Sq. Yd.)	452 Variable Thickness Plain Conc. Pavt. As Per Plan (Sq. Yd.)	611 Reinforced Conc. Approach Slab (T=15") (Sq. Yd.)	612 Concrete Median (Sq. Yd.)	617 Compacted Aggregate (Cu. Yd.)	446 Asphalt Concrete Surface Course AC-20, Type 1 (Cu. Yd.)	446 Asphalt Concrete Intermediate Course AC 20, Type 2 (Cu. Yd.)	Special Pressure Relief Joint Type C (Lin. Ft.)	Special	Special	Special	252 Full Depth Rigid Pavt. Removal and Flexible Replacement (Sq. Yd.)	254 Pavement Planing, Bituminous (Sq. Yd.)	From Sheet No.
20		2818					728	1011	1260						28,181	20
32									6					32		32
RS-440 (11)		2818					728	1011	1266					32	28,181	Total
18	2656		12,467	3471			169									18
20		42,533					8628	14,959	19,731						425,325	20
33					462	291								40		33
35					888					24				56		35
36					488									32		36
37						293				64						37
39					466											39
41										24						41
42										96						42
																138
F-51 (70)	2656	42,533	12,467	3471	2304	584	8797	14,959	19,731	304				128	425,325	Total

From Sheet No.																																						From Sheet No.
Total																																						Total

Rev. 2-9-89

CALCULATIONS

LINE NO.	DESCRIPTION	QUANTITY	UNIT
1			
2	ITEM 451- REINFORCED CONCRETE PAVEMENT, 13" THICK, AS PER PLAN		
3			
4	Main E.B. Lanes 2-12' Lanes Sta. 817+50 To Sta. 833+75 = 1625.00 L.F. x 24.00' = 39,000.00 S.F.		
5	175' E.B. Taper 0-14' Taper Sta. 823+02.91 To Sta. 824+77.38 = 174.47 L.F. (3918.53/3906.53) x 1/2 x 14.00' = 1,225.04 S.F.		
6	E.B. Turn Lane 1-12' Lane Sta. 824+77.38 To Sta. 833+75 = 897.62 L.F. (3922.53/3906.53) x 12.00' = 10,821.07 S.F.		
7	Main W.B. Lanes 2-12' Lanes Sta. 823+00 To Sta. 831+69.43 = 869.43 L.F. (3842.53/3906.53) x 24.00' = 20,524.47 S.F.		
8	Main W.B. Lanes 2-12' Lanes Sta. 831+69.43 To Sta. 833+75 = 205.57 L.F. x 24.00' = 4,933.68 S.F.		
9	150' W.B. Taper 0'-12' Taper Sta. 823+14.50 To Sta. 824+67.48 = 152.98 L.F. (3830.53/3906.53) x 1/2 x 12.00' = 900.02 S.F.		
10	W.B. Turn Lane (Rt.) 1-12' Lane Sta. 824+67.48 To Sta. 831+69.43 = 701.95 L.F. (3822.53/3906.53) x 12.00' = 8,246.59 S.F.		
11	W.B. Turn Lane (Rt.) 1-12' Lane Sta. 831+69.43 To Sta. 833+75 = 205.57 L.F. x 12.00' = 2,466.84 S.F.		
12	W.B. Turn Lane (Lt.) 1-12' Lane Sta. 826+38.06 To Sta. 830+00 = 361.94 L.F. (3860.53/3906.53) x 12.00' = 4,292.14 S.F.		
13	Taper for W.B. Turn Lane (Lt.) Sta. 830+00 To Sta. 833+00:		
14	Sta. 830+00 To 831+69.43 = 169.43 L.F. x (3858.53/3906.53) x 12.00' + 5.22' (Lane) = 1,439.37 S.F.		
15	Sta. 831+69.43 To 833+00 = 130.57 L.F. x 5.22' (Lane) x 1/2 = 340.79 S.F.		
16	Sum of Lines 4 thru 15 = 94,190.01 S.F.		
17	Mainline Total - From Line 16 = 94,190.01 S.F. x 1/9 = 10,465.56 S.Y.		
18	C.R. 19 South Approach From Sheet No. 50 = 636 S.Y.		
19	Median Crossover From Sheet No. 50 = 872 S.Y.		
20	C.R. 19 North Approach From Sheet No. 50 = 493 S.Y.		
21	Quantity = Sum of Lines 17 thru 20 = 12,466.56 S.Y. Use	12,467	Sq. Yd.
22			
23			
24			
25	ITEM 452- PLAIN CONCRETE PAVEMENT, VARIABLE THICKNESS, AS PER PLAN		
26			
27	Main E.B. Lane - 8' Outside Berm - Sta. 817+50 To Sta. 823+02.91 = 552.91 L.F. (3922.53/3906.53) x 8.00' = 4,441.40 S.F.		
28	175' E.B. Taper - 8' Outside Berm - Sta. 823+02.91 To Sta. 824+77.38 = 174.47 L.F. (3922.53/3906.53) x 8.00' = 1,401.48 S.F.		
29	Main E.B. Lane - 8' Outside Berm - Sta. 826+93.02 To Sta. 831+69.43 = 476.41 L.F. (3934.53/3906.53) x 8.00' = 3,838.60 S.F.		
30	Main E.B. Lane - 8' Outside Berm - Sta. 831+69.43 To Sta. 833+75 = 205.57 L.F. x 8.00' = 1,644.56 S.F.		
31	Main E.B. Lane - 4' Median Berm - Sta. 817+50 To Sta. 823+43.54 = 593.54 L.F. (3892.53/3906.53) x 4.00' = 2,365.65 S.F.		
32	Main E.B. Lane - 4' Median Berm - Sta. 827+88.52 To Sta. 831+69.43 = 380.91 L.F. (3892.53/3906.53) x 4.00' = 1,518.18 S.F.		
33	Main E.B. Lane - 4' Median Berm - Sta. 831+69.43 To Sta. 833+75 = 205.57 L.F. x 4.00' = 822.28 S.F.		
34	Main W.B. Lane - 8' Outside Berm - Sta. 823+00 To Sta. 823+14.50 = 14.50 L.F. (3826.53/3906.53) x 8.00' = 113.62 S.F.		
35	150' W.B. Taper - 8' Outside Berm - Sta. 823+14.50 To Sta. 824+67.48 = 152.98 L.F. (3826.53/3906.53) x 8.00' = 1,198.78 S.F.		
36	Main W.B. Lane - 8' Outside Berm - Sta. 826+52.42 To Sta. 831+69.43 = 517.01 L.F. (3814.53/3906.53) x 8.00' = 4,038.67 S.F.		
37	Main W.B. Lane - 8' Outside Berm - Sta. 831+69.43 To Sta. 833+75 = 205.57 L.F. x 8.00' = 1,644.56 S.F.		
38	Main W.B. Lane - 4' Median Berm - Sta. 823+00 To Sta. 823+41.98 = 41.98 L.F. (3856.53/3906.53) x 4.00' = 165.77 S.F.		
39	Main W.B. Lane - 4' Median Berm - Sta. 826+38.06 To Sta. 831+69.43 = 531.37 L.F. (3860.53/3906.53) x 4.00' = 2,104.50 S.F.		
40	Main W.B. Lane - 4' Median Berm - Sta. 831+69.43 To Sta. 833+75 = 205.57 L.F. x 4.00' = 822.28 S.F.		
41	Sum of Lines 27 thru 40 = 26,120.63 S.F.		
42	Mainline Total - From Line 41 - 26,120.63 S.F. x 1/9 = 2,902.29 S.Y.		
43	C.R. 19 South Approach From Sheet No. 50 = 176 S.Y.		
44	Median Crossover From Sheet No. 50 = 238 S.Y.		
45	C.R. 19 North Approach From Sheet No. 50 = 155 S.Y.		
46	Quantity = Sum of Lines 42 thru 45 = 3,471.29 S.Y. Use	3471	Sq. Yd.
47			
48			
49			
50	ITEM 304- 6" AGGREGATE BASE, AS PER PLAN		
51			
52	US 224 & C.R. 19 Pavement area from Line 16 = 94,190.01 S.F. x 0.5' x 1/27 = 1744.25 C.Y.		
53	US 224 & C.R. 19 Berm area from Line 41 = 26,120.63 S.F. x 0.5' x 1/27 = 483.71 C.Y.		
54	C.R. 19 South Approach From Sheet No. 50 = 135 C.Y.		
55	Median Crossover From Sheet No. 50 = 185 C.Y.		
56	C.R. 19 North Approach From Sheet No. 50 = 108 C.Y.		
57	Quantity = Sum of Lines 52 thru 56 = 2,655.96 C.Y. Use	2656	Cu. Yd.
58			
59			
60			
61			
62			
63			
64			
65			
66			
67			
68			
69			
70			
71			

LINE NO.	DESCRIPTION	QUANTITY	UNIT
72			
73	ITEM 617- COMPACTED AGGREGATE		
74			
75	Main E.B. Lanes - Outside Edge:		
76	Sta. 817+50 To Sta. 824+77.38 = 727.38 L.F. (3926.53/3906.53) x 0.50 S.F./L.F. = 365.55 C.F.		
77	Sta. 826+93.02 To Sta. 831+69.43 = 476.41 L.F. (3938.53/3906.53) x 0.50 S.F./L.F. = 240.16 C.F.		
78	Sta. 831+69.43 To Sta. 833+75 = 205.57 L.F. x 0.50 S.F./L.F. = 102.79 C.F.		
79	Main E.B. Lanes - Median Edge:		
80	Sta. 817+50 To Sta. 823+43.54 = 593.54 L.F. (3890.53/3906.53) x 1.25 S.F./L.F. = 738.89 C.F.		
81	Sta. 827+88.52 To Sta. 831+69.43 = 380.91 L.F. (3890.53/3906.53) x 1.25 S.F./L.F. = 474.18 C.F.		
82	Sta. 831+69.43 To Sta. 833+75 = 205.57 L.F. x 1.25 S.F./L.F. = 256.96 C.F.		
83	Main W.B. Lanes - Median Edge:		
84	Sta. 823+00 To Sta. 823+41.98 = 41.98 L.F. (3858.53/3906.53) x 1.25 S.F./L.F. = 51.83 C.F.		
85	Sta. 826+38.06 To Sta. 830+00 = 361.94 L.F. (3870.53/3906.53) x 1.25 S.F./L.F. = 448.25 C.F.		
86	Sta. 830+00 To Sta. 831+69.43 = 169.43 L.F. (3870.53/3906.53) x 1.25 S.F./L.F. = 209.84 C.F.		
87	Sta. 831+69.43 To Sta. 833+00 = 130.57 L.F. (3858.53/3906.53) x 1.25 S.F./L.F. = 161.21 C.F.		
88	Sta. 833+00 To Sta. 833+75 = 75.00 L.F. (3858.53/3906.53) x 1.25 S.F./L.F. = 92.60 C.F.		
89	Main W.B. Lanes - Outside Edge:		
90	Sta. 823+00 To Sta. 824+67.48 = 167.48 L.F. (3822.53/3906.53) x 0.50 S.F./L.F. = 81.94 C.F.		
91	Sta. 826+52.42 To Sta. 831+69.43 = 517.01 L.F. (3810.53/3906.53) x 0.50 S.F./L.F. = 252.15 C.F.		
92	Sta. 831+69.43 To Sta. 833+75 = 205.57 L.F. x 0.50 S.F./L.F. = 102.79 C.F.		
93	Sum of Lines 76 thru. 92 = 3579.14 C.F.		
94	Mainline Total from Line 93 = 3579.14 C.F. x 1/27 = 132.56 C.Y.		
95	C.R. 19 South Approach From Sheet No. 50 = 8 C.Y.		
96	Median Crossover From Sheet No. 50 = 21 C.Y.		
97	C.R. 19 North Approach From Sheet No. 50 = 7 C.Y.		
98	Quantity = Sum of Lines 94 thru 97 = 168.56 C.Y. Use	169	Cu. Yd.
99			
100			
101			
102	ITEM 202 - PAVEMENT REMOVED		
103			
104	Main E.B. Lanes 2-12' Lanes Sta. 817+50 To Sta. 833+75 = 1,625.00 L.F. x 24.00' = 39,000.00 S.F.		
105	Main W.B. Lanes 2-12' Lanes Sta. 823+00 To Sta. 831+69.43 = 869.43 L.F. (3842.53/3906.53) x 24.00' = 20,524.47 S.F.		
106	Main W.B. Lanes 2-12' Lanes Sta. 831+69.43 To Sta. 833+75 = 205.57 L.F. x 24.00' = 4,933.68 S.F.		
107	E.B. Taper 2'-14' Sta. 823+00 To Sta. 824+77.38 = 177.38 L.F. (3918.53/3906.53) x (2'+14'/2) = 1,423.40 S.F.		
108	E.B. Turn Lane 1-12' Lane Sta. 824+77.38 To Sta. 831+69.43 = 692.05 L.F. (3922.53/3906.53) x 12.00' = 8,342.86 S.F.		
109	E.B. Turn Lane 1-12' Lane Sta. 831+69.43 To Sta. 833+75 = 205.57 L.F. x 12.00' = 2,466.84 S.F.		
110	W.B. Taper 0'-12' Sta. 823+44.01 To Sta. 824+94.01 = 300.00 L.F. (3830.53/3906.53) x (0'+12'/2) = 1,764.98 S.F.		
111	W.B. Turn Lane (Lt.) 1-12' Lane Sta. 826+38.06 To Sta. 830+00 = 361.94 L.F. (3860.53/3906.53) x 12.00' = 4,292.14 S.F.		
112	W.B. Turn Lane (Lt.) 12'-5.22' Sta. 830+00 To Sta. 831+69.43 = 169.43 L.F. (3854.53/3906.53) x (12'+5.22'/2) = 1,439.37 S.F.		
113	W.B. Turn Lane (Lt.) 5.22'-0' Sta. 831+69.43 To Sta. 833+00 = 130.57 L.F. (5.22/2) = 340.79 S.F.		
114	W.B. Turn Lane (Rt) 1-12' Lane Sta. 824+94.01 To Sta. 831+69.43 = 675.42 L.F. (3822.53/3906.53) x 12.00' = 7,934.91 S.F.		
115	W.B. Turn Lane (Rt.) 1-12' Lane Sta. 831+69.43 To Sta. 833+75 = 205.57 L.F. x 12.00' 2,466.84 S.F.		
116	Sum of Lines 104 thru 115 = 94,930.28 S.F.		
117	Mainline Total - From Line 116 = 94,930.28 S.F. x 1/9 = 10,547.81 S.Y.		
118	C.R. 19 South Approach From Sheet No. 50 = 447 S.Y.		
119	Median Crossover From Sheet No. 50 = 922 S.Y.		
120	C.R. 19 North Approach From Sheet No. 50 = 446 S.Y.		
121	Quantity = Sum of Lines 117 thru 120 = 12,362.81 S.Y. Use	12,363	Sq. Yd.
122			
123			
124	ITEM 203- SUBGRADE COMPACTION		
125	451 Quantity from line 21 = 12,467 sq.yd.		
126	452 Quantity from line 46 = 3,471 sq.yd.		
127	Quantity = Sum of lines 125 & 126 = 15,938 sq.yd. Use	15,938	sq.yd.
128			
129			
130			
131			
132			
133			
134			
135			
136			
137			
138			
139			
140			
141			
142			

NOTE: All Quantities carried to Sub-Summary Sheets 16 & 17.

LOCATION	STATION LIMITS	SIDE	LENGTH	PAVEMENT QUANTITIES: Pavement Width	Pavement Area	SPECIAL: Asphalt Pavement Planing	407: Tack Coat @ 0.1 Gal. Per Sq. Yd.	846 ASPHALT CONCRETE: Surface Course Type 1 Thickness	Surface Course Type 1 Quantity	Intermediate Course Type 2 Thickness	Intermediate Course Type 2 Quantity	BERM QUANTITIES: Berm Width	Total Berm Area	SPECIAL: Asphalt Pavement Planing	407: Tack Coat @ 0.1 Gal. Per Sq. Yd.	846 ASPHALT CONCRETE: Surface Course Type 1 Thickness	Surface Course Type 1 Quantity	Intermediate Course Type 2 Thickness	Intermediate Course Type 2 Quantity	617: Compacted Aggregate
			Lin. Ft.	Ft.	Sq. Yd.	Sq. Yd.	Gal.	In.	Cu. Yd.	In.	Cu. Yd.	Ft.	Sq. Yd.	Sq. Yd.	Gal.	In.	Cu. Yd.	In.	Cu. Yd.	Cu. Yd.
Mainline	100+00 To 102+00	Both	200.00	24	533	533	53.3	Var.	21.5	Var.	6.1	8	178	178	17.8	Var.	7.2	Var.	2.0	18.5
"	102+00 To 127+35.24	Both	2535.24	24	6761	6761	676.1	1.25	234.8	1.75	328.7	8	2254	2254	225.4	1.25	78.3	1.75	109.6	234.7
"	127+35.24 To 142+68.75	Both	1306.49	24	3485	3485	348.5	Var.	141.4	Var.	117.6	8	1162	1162	116.2	Var.	47.1	Var.	39.2	121.0
"	142+68.75 To 143+28.97	Both	60.22	24	161	161	16.1	1.25	5.6	1.75	7.8	8	54	54	5.4	1.25	1.9	1.75	2.6	5.6
"	143+28.97 To 151+82.97	W.B.	854.00	Var.	1297	1297	129.7	1.25	45.0	1.75	63.0	Var.	561	561	56.1	1.25	19.5	1.75	27.3	79.1
"	143+28.97 To 151+82.97	E.B.	854.00	24	2277	2277	227.7	1.25	79.1	1.75	110.7	8	759	759	75.9	1.25	26.4	1.75	36.9	79.1
"	151+82.97 To 160+30.44	W.B.	847.47	24	2260	2260	226.0	1.25	78.5	1.75	109.9	12	1130	1130	113.0	1.25	39.2	1.75	54.9	64.0
"	151+82.97 To 160+30.44	E.B.	847.47	24	2260	2260	226.0	1.25	78.5	1.75	109.9	12	1130	1130	113.0	1.25	39.2	1.75	54.9	64.0
"	160+30.44 To 161+36.58	W.B.	106.14	24	283	283	28.3	Var.	9.8	Var.	15.7	12	141	141	14.1	Var.	4.9	Var.	7.8	8.0
Mainline	160+30.44 To 161+36.58	E.B.	106.14	24	283	283	28.3	Var.	9.8	Var.	15.7	12	141	141	14.1	Var.	4.9	Var.	7.8	8.0
*	Sub-Total RS-440 (11)		7717.17		19,600	19,600	1960.0		704.0		885.1		7510	7510	751.0		268.6		343.0	682.0
Mainline	161+36.58 To 161+93.29	W.B.	56.71	24	151	151	15.1	Var.	5.3	Var.	8.6	12	76	76	7.6	Var.	2.6	Var.	4.4	4.3
"	161+36.58 To 161+93.29	E.B.	56.71	24	151	151	15.1	Var.	5.3	Var.	8.6	12	76	76	7.6	Var.	2.6	Var.	4.4	4.3
"	328+93.29 To 341+09.28	W.B.	1037.99	24	2767	2767	276.7	Var.	109.1	Var.	53.7	12	1384	1384	138.4	Var.	54.5	Var.	26.8	78.5
"	328+93.29 To 341+05.96	E.B.	1034.67	24	2758	2758	275.8	Var.	108.8	Var.	53.2	12	1380	1380	138.0	Var.	54.4	Var.	26.6	78.2
"	341+09.28 To 407+45.95	W.B.	6636.67	24	17,698	17,698	1768.8	1.25	614.5	1.75	860.3	12	8849	8849	884.9	1.25	307.2	1.75	430.2	501.4
"	341+05.96 To 406+49.06	E.B.	6543.10	24	17,448	17,448	1744.8	1.25	605.8	1.75	848.2	12	8724	8724	872.4	1.25	302.8	1.75	424.1	494.4
"	407+45.95 To 415+64.55	W.B.	650.00	24	1734	1734	173.4	Var.	65.8	Var.	61.2	12	866	866	86.6	Var.	32.8	Var.	30.6	49.2
"	406+49.06 To 414+67.66	E.B.	650.00	24	1734	1734	173.4	Var.	65.8	Var.	61.2	12	866	866	86.6	Var.	32.8	Var.	30.6	49.2
"	415+64.55 To 423+68.72	W.B.	804.17	24	2144	2144	214.4	1.25	74.4	1.75	104.2	12	1072	1072	107.2	1.25	37.2	1.75	52.1	60.8
"	414+67.66 To 423+68.72	E.B.	901.06	24	2403	2403	240.3	1.25	83.4	1.75	116.8	12	1201	1201	120.1	1.25	41.7	1.75	58.4	60.1
"	453+35.48 To 477+58.92	W.B.	2423.44	24	6463	6463	646.3	1.25	224.4	1.75	314.2	12	3231	3231	323.1	1.25	112.2	1.75	157.1	183.1
"	453+35.48 To 477+95.88	E.B.	2460.40	24	6561	6561	656.1	1.25	227.8	1.75	318.9	12	3281	3281	328.1	1.25	113.9	1.75	159.5	185.9
"	477+58.92 To 486+59.12	W.B.	650.00	24	1734	1734	173.4	Var.	65.8	Var.	61.2	12	866	866	86.6	Var.	32.8	Var.	30.6	49.2
"	477+95.88 To 486+96.08	E.B.	650.00	24	1734	1734	173.4	Var.	65.8	Var.	61.2	12	866	866	86.6	Var.	32.8	Var.	30.6	49.2
"	486+59.12 To 497+09.38	W.B.	1050.26	24	2801	2801	280.1	1.25	97.3	1.75	136.2	12	1400	1400	140.0	1.25	48.6	1.75	68.1	79.4
"	486+96.08 To 497+40.62	E.B.	1044.54	24	2785	2785	278.5	1.25	96.7	1.75	135.4	12	1393	1393	139.3	1.25	48.4	1.75	67.7	78.9
"	497+09.38 To 502+59.38	W.B.	550.00	24	1466	1466	146.6	Var.	60.2	Var.	78.8	12	734	734	73.4	Var.	30.2	Var.	39.4	41.6
"	497+40.62 To 502+90.62	E.B.	550.00	24	1466	1466	146.6	Var.	60.2	Var.	78.8	12	734	734	73.4	Var.	30.2	Var.	39.4	41.6
"	502+59.38 To 504+25.96	W.B.	166.58	24	444	444	44.4	1.25	15.4	1.75	21.6	12	222	222	22.2	1.25	7.7	1.75	10.8	12.6
"	502+90.62 To 504+24.26	E.B.	133.64	24	356	356	35.6	1.25	12.4	1.75	17.3	12	178	178	17.8	1.25	6.2	1.75	8.7	10.1
"	504+25.96 To 512+22.74	W.B.	650.00	24	1734	1734	173.4	Var.	65.8	Var.	61.2	12	866	866	86.6	Var.	32.8	Var.	30.6	49.2
"	504+24.26 To 512+46.04	E.B.	650.00	24	1734	1734	173.4	Var.	65.8	Var.	61.2	12	866	866	86.6	Var.	32.8	Var.	30.6	49.2
"	512+22.74 To 556+19.64	W.B.	4396.90	24	11,725	11,725	1172.5	1.25	407.1	1.75	570.0	12	5863	5863	586.3	1.25	203.6	1.75	285.0	332.2
"	556+19.64 To 564+69.64	W.B.	850.00	24	2267	2267	226.7	Var.	83.3	Var.	61.1	12	1133	1133	113.3	Var.	41.7	Var.	30.6	64.2
"	564+69.64 To 680+00	W.B.	11,530.36	24	30,748	30,748	3074.8	1.25	1067.6	1.75	1494.7	12	15,374	15,374	1537.4	1.25	533.8	1.75	747.3	871.2
"	512+46.04 To 680+00	E.B.	16,753.96	24	44,677	44,677	4467.7	1.25	1551.3	1.75	2171.8	12	22,339	22,339	2233.9	1.25	775.7	1.75	1085.9	1265.9
"	680+00 To 688+28	W.B.	650.00	24	1734	1734	173.4	Var.	65.8	Var.	61.2	12	866	866	86.6	Var.	32.8	Var.	30.6	49.2
"	680+00 To 688+28	E.B.	650.00	24	1734	1734	173.4	Var.	65.8	Var.	61.2	12	866	866	86.6	Var.	32.8	Var.	30.6	49.2
"	688+28 To 823+00	W.B.	13,472.00	24	35,925	35,925	3592.5	1.25	1247.4	1.75	1746.4	12	17,963	17,963	1796.3	1.25	623.7	1.75	873.2	1017.9
"	688+28 To 817+50	E.B.	12,922.00	24	34,459	34,459	3445.9	1.25	1196.5	1.75	1675.1	12	17,229	17,229	1722.9	1.25	598.2	1.75	837.5	976.3
"	833+75 To 841+25	W.B.	750.00	24	2000	2000	200.0	1.25	69.4	1.75	97.2	12	1000	1000	100.0	1.25	34.7	1.75	48.6	56.7
"	841+25 To 849+75	W.B.	850.00	24	2267	2267	226.7	Var.	60.2	Var.	78.7	12	1133	1133	113.3	Var.	30.1	Var.	39.4	64.2
"	849+75 To 852+49.93	W.B.	274.93	24	733	733	73.3	1.25	25.5	1.75	35.6	12	367	367	36.7	1.25	12.7	1.75	17.8	20.8
"	833+75 To 850+85.64	E.B.	1710.64	24	4562	4562	456.2	1.25	158.4	1.75	221.8	12	2281	2281	228.1	1.25	79.2	1.75	110.9	129.2
"	852+49.93 To 854+49.93	W.B.	200.00	24	533	533	53.3	Var.	21.5	Var.	6.1	12	267	267	26.7	Var.	10.7	Var.	3.1	15.1
Mainline	850+85.64 To 852+85.64	E.B.	200.00	24	533	533	53.3	Var.	21.5	Var.	6.1	12	267	267	26.7	Var.	10.7	Var.	3.1	15.1
*	Sub-Total F-51 (70)		94,560.73		252,163	252,163	25,216.3		8837.1		11,809.2		126,079	126,079	12,607.9		4417.6		5904.9	7145.6

* Sub-Totals carried to sheet 20

RESURFACING CALCULATIONS

LOCATION	PAVEMENT QUANTITIES									BERM QUANTITIES									
			SPECIAL	407	846 ASPHALT CONCRETE							SPECIAL	407	846 ASPHALT CONCRETE					617
					Surface Course		Intermediate Course							Surface Course		Intermediate Course			
					Type 1		Type 2							Type 1		Type 2			
	Pavement Width	Pavement Area	Pavement Planing, Bituminous without Heating	Tack Coat @ 0.1 Gal. Per Sq. Yd.	Thickness	Quantity	Thickness	Quantity		Berm Width	Total Berm Area	Pavement Planing, Bituminous without Heating	Tack Coat @ 0.1 Gal. Per Sq. Yd.	Thickness	Quantity	Thickness	Quantity		Compacted Aggregate
	Ft.	Sq. Yd.	Sq. Yd.	Gal.	In.	Cu. Yd.	In.	Cu. Yd.		Ft.	Sq. Yd.	Sq. Yd.	Gal.	In.	Cu. Yd.	In.	Cu. Yd.		Cu. Yd.
Co. Rd. 29	Var.	279	279	27.9	Var.	11.2	Var.	3.8		8	79	79	7.9	Var.	3.2	Var.	1.1		16.5
Co. Rd. 80	Var.	572	572	57.2	Var.	19.0	Var.	22.2		8	141	141	14.1	Var.	5.1	Var.	5.2		29.3
*Sub-Total RS-440(11)		851	851	85.1		30.2		26.0			220	220	22.0		8.3		6.3		45.8
S.R. 421 South Interchange																			
Ramp A & Speed Change Lane	Var.	1655	1655	165.5	Var.	59.7	Var.	52.9		6	49.7	49.7	49.7	Var.	18.0	Var.	17.1		80.6
Ramp B & Speed Change Lane	Var.	3509	3509	350.9	Var.	127.6	Var.	141.3		6	49.7	49.7	49.7	Var.	17.3	Var.	24.4		80.6
Ramp C & Speed Change Lane	Var.	2141	2141	214.1	Var.	75.1	Var.	88.8		6	45.6	45.6	45.6	Var.	16.0	Var.	20.9		73.9
Ramp D & Speed Change Lane	Var.	2409	2409	240.9	1.25	83.6	1.75	117.1		6	39.8	39.8	39.8	1.25	13.8	1.75	19.4		64.6
US42 & S.R. 421	24	3200	3200	320.0	Var.	114.1	Var.	135.8		8	37.2	37.2	37.2	Var.	13.2	Var.	16.4		90.9
Twp. Rd. 69	Var.	683	683	68.3	Var.	24.5	Var.	28.0		8	10.1	10.1	10.1	Var.	3.6	Var.	4.1		21.0
Co. Rd. 31	Var.	683	683	68.3	Var.	24.5	Var.	28.0		8	10.1	10.1	10.1	Var.	3.6	Var.	4.1		21.0
S.R. 421 North Interchange																			
Ramp A & Speed Change Lane	Var.	3268	3268	326.8	1.25	113.5	1.75	158.8		6	57.8	57.8	57.8	1.25	20.1	1.75	28.1		93.8
Ramp B & Speed Change Lane	Var.	3113	3113	311.3	1.25	108.1	Var.	152.3		6	92.5	92.5	92.5	1.25	32.1	Var.	45.1		150.0
Ramp C & Speed Change Lane	Var.	3204	3204	320.4	Var.	112.9	Var.	154.2		6	67.1	67.1	67.1	Var.	24.0	Var.	31.7		108.9
Ramp D & Speed Change Lane	Var.	1475	1475	147.5	1.25	51.2	1.75	71.7		6	34.9	34.9	34.9	1.25	12.1	1.75	17.0		54.7
Ramp E & Speed Change Lane	Var.	1958	1958	195.8	Var.	70.5	Var.	73.1		6	32.6	32.6	32.6	Var.	11.3	Var.	17.9		52.9
US42 & S.R. 421	24	3532	3532	353.2	Var.	153.7	Var.	96.0		8	90.0	90.0	90.0	Var.	40.4	Var.	21.8		187.4
Twp. Rd. 149	Var.	1059	1059	105.9	Var.	37.7	Var.	45.5		8	32.7	32.7	32.7	Var.	11.6	Var.	14.2		68.7
Twp. Rd. 72	Var.	782	782	78.2	Var.	27.9	Var.	32.9		8	30.3	30.3	30.3	Var.	10.8	Var.	13.1		63.1
Co. Rd. 35	Var.	1021	1021	102.1	Var.	36.2	Var.	44.2		8	49.3	49.3	49.3	Var.	17.4	Var.	22.3		102.6
Co. Rd. 15	Var.	692	692	69.2	Var.	24.8	Var.	28.3		8	32.0	32.0	32.0	Var.	11.4	Var.	13.9		66.7
Co. Rd. 57	Var.	688	688	68.8	Var.	24.7	Var.	28.1		8	31.9	31.9	31.9	Var.	11.3	Var.	13.9		66.5
I-71 Interchange																			
Ramp D & Speed Change Lane	Var.	1471	1471	147.1	Var.	53.0	Var.	58.3		6	17.8	17.8	17.8	Var.	5.4	Var.	1.5		21.6
Ramp F & Speed Change Lane	Var.	2160	2160	216.0	Var.	77.7	Var.	123.0		6	26.9	26.9	26.9	Var.	10.1	Var.	11.9		13.2
*Sub-Total F-51(70)		38,703	38,703	3870.3		1401.0		1658.3			838.0	838.0	838.0		303.5		358.8		1482.1

* Sub-Totals carried to Table Below

ITEM	DESCRIPTION	RS-440(11) From Sht. 19 PAV'T.	RS-440(11) From Sht. 19 BERM	RS-440(11) From Sht. 20 PAV'T.	RS-440(11) From Sht. 20 BERM	RS-440(11) Total	F-51(70) From Sht. 19 PAV'T.	F-51(70) From Sht. 19 BERM	F-51(70) From Sht. 20 PAV'T.	F-51(70) From Sht. 20 BERM	F-51(70) Total
Special	Pavement Planing, Bituminous Without Heating	19,600	7,510	851	220	28,181	252,163	126,079	38,703	8,380	425,325
407	Tack Coat, As Per Plan	1960.0	751.0	85.1	22.0	2818.1	25,216.3	12,607.9	3870.3	838.0	42,532.5
846	Asphalt Concrete Surface Course, AC-20, Type 1	704.0	268.6	30.2	8.3	1011.1	8837.1	4417.6	1401.0	303.5	14,959.2
846	Asphalt Concrete Intermediate Course, AC-20, Type 2	885.1	343.0	26.0	6.3	1260.4	11,809.2	5904.9	1658.3	358.8	19,731.2
617	Compacted Aggregate		682.0		45.8	727.8		7145.6		1482.1	8627.7

Quantities carried to Sub-Summary Sht. 17

RESURFACING CALCULATIONS

SUPERELEVATION TABLE

PI STA. 820+74.09

STATION	WESTBOUND LANES					EASTBOUND LANES			
	24' Lt.	12 Lt.	℄	12' Rt. P.G.	*24' Rt.	12' Lt. P.G.	℄	12' Rt.	24' Rt.
817+50						1044.79	1045.27	1045.75	
+75						1044.01	1044.49	1044.97	
818+00						1043.22	1043.70	1044.18	
+25						1042.44	1042.92	1043.40	
+50						1041.65	1042.13	1042.61	
+75						1040.87	1041.35	1041.83	
819+00						1040.09	1040.57	1041.05	
+25						1039.30	1039.78	1040.26	
+50						1038.52	1039.00	1039.48	
+75						1037.73	1038.21	1038.69	
820+00						1036.95	1037.43	1037.91	
+25						1036.20	1036.68	1037.16	
+50						1035.45	1035.93	1036.41	
+75						1034.70	1035.18	1035.66	
821+00						1033.95	1034.43	1034.91	
+25						1033.20	1033.68	1034.16	
+50						1032.45	1032.93	1033.41	
+75						1031.70	1032.18	1032.66	
822+00						1030.95	1031.43	1031.91	
+25						1030.20	1030.68	1031.16	
+50						1029.45	1029.93	1030.41	
+75						1028.70	1029.18	1029.66	
823+00		1026.98	1027.57	1028.15		1027.95	1028.43	1028.91	
+25		1026.25	1026.80	1027.35		1027.20	1027.68	1028.16	
+50		1025.52	1026.04	1026.56		1026.45	1026.93	1027.41	
+75		1024.79	1025.27	1025.75		1025.70	1026.18	1026.66	
824+00		1024.02	1024.50	1024.98		1024.95	1025.43	1025.91	
+25		1023.26	1023.74	1024.22		1024.20	1024.68	1025.16	
+50		1022.49	1022.97	1023.45		1023.45	1023.93	1024.41	
+75		1021.74	1022.22	1022.70		1022.70	1023.18	1023.66	
825+00		1020.99	1021.47	1021.95		1021.95	1022.43	1022.91	1022.79
+25		1020.24	1020.72	1021.20		1021.20	1021.68	1022.16	1022.04
+50		1019.49	1019.97	1020.45		1020.45	1020.93	1021.41	1021.29
+75		1018.74	1019.22	1019.70		1019.70	1020.18	1020.66	1020.54
826+00		1017.99	1018.47	1018.95		1018.95	1019.43	1019.91	1019.79
+25		1017.24	1017.72	1018.20		1018.20	1018.68	1019.16	1019.04
+50	1016.01	1016.49	1016.97	1017.45	1017.33	1017.45	1017.93	1018.41	1018.29
+75	1015.26	1015.74	1016.22	1016.70	1016.58	1016.70	1017.18	1017.66	1017.54
827+00	1014.51	1014.99	1015.47	1015.95	1015.83	1015.95	1016.43	1016.91	1016.79
+25	1013.76	1014.24	1014.72	1015.20	1015.08	1015.20	1015.68	1016.16	1016.10
+50	1013.01	1013.49	1013.97	1014.45	1014.33	1014.45	1014.93	1015.41	1015.41
+75	1012.26	1012.74	1013.22	1013.70	1013.58	1013.70	1014.18	1014.66	1014.72
828+00	1011.51	1011.99	1012.47	1012.95	1012.83	1012.95	1013.43	1013.91	1014.03
+25	1010.76	1011.24	1011.72	1012.20	1012.08	1012.20	1012.68	1013.16	1013.28
+50	1010.01	1010.49	1010.97	1011.45	1011.33	1011.45	1011.93	1012.41	1012.53
+75	1009.26	1009.74	1010.22	1010.70	1010.58	1010.70	1011.18	1011.66	1011.78
829+00	1008.51	1008.99	1009.47	1009.95	1009.83	1009.95	1010.43	1010.91	1011.03
+25	1007.76	1008.24	1008.72	1009.20	1009.08	1009.20	1009.68	1010.16	1010.28
+50	1007.01	1007.49	1007.97	1008.45	1008.33	1008.45	1008.93	1009.41	1009.53
+75	1006.26	1006.74	1007.22	1007.70	1007.58	1007.70	1008.18	1008.66	1008.78
830+00	1005.53	1006.01	1006.49	1006.97	1006.85	1006.95	1007.43	1007.91	1008.03
+25	1004.84	1005.32	1005.80	1006.28	*1006.17-23'Rt.	1006.22	1006.70	1007.18	1007.30
+50	1004.18	1004.66	1005.14	1005.62	*1005.52-22'Rt.	1005.53	1006.01	1006.49	1006.61
+75	1003.68	1004.12	1004.57	1005.01	*1004.92-21'Rt.	1004.87	1005.31	1005.76	1005.88
831+00	1003.24	1003.64	1004.03	1004.43	*1004.35-20'Rt.	1004.26	1004.66	1005.05	1005.17
+25	1002.81	1003.17	1003.53	1003.89	*1003.82-19'Rt.	1003.68	1004.04	1004.40	1004.52
+50	1002.46	1002.77	1003.08	1003.39	*1003.33-18'Rt.	1003.14	1003.45	1003.76	1003.88
+75	1002.10	1002.38	1002.65	1002.93	*1002.88-17'Rt.	1002.64	1002.92	1003.19	1003.31
832+00	1001.82	1002.05	1002.28	1002.51	*1002.47-16'Rt.	1002.18	1002.41	1002.63	1002.75
+25	1001.56	1001.75	1001.93	1002.12	*1002.09-15'Rt.	1001.76	1001.95	1002.14	1002.26
+50	1001.28	1001.47	1001.66	1001.78	*1001.76-14'Rt.	1001.37	1001.56	1001.68	1001.80
+75	1001.03	1001.22	1001.41	1001.47	*1001.46-13'Rt.	1001.04	1001.23	1001.29	1001.35
833+00	1000.82	1001.01	1001.20	1001.20	*1001.20-12'Rt.	1000.80	1000.99	1000.99	1000.99
+25	1000.65	1000.84	1001.03	1000.97		1000.62	1000.81	1000.75	1000.69
+50	1000.53	1000.72	1000.91	1000.79		1000.46	1000.65	1000.53	1000.41
+75	1000.47	1000.66	1000.85	1000.66		1000.34	1000.53	1000.34	1000.15

CALC. BY RWM 7/88
CHK'D. BY GM 7/88

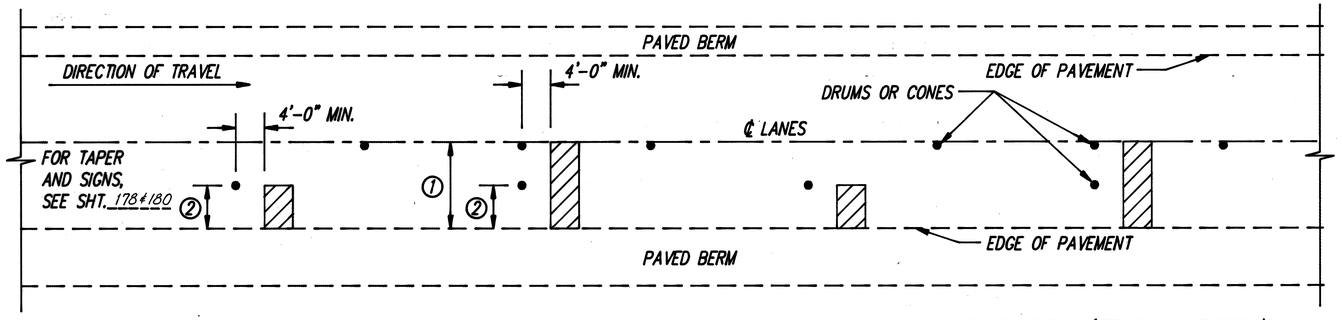

TRAFFIC MAINTENANCE DETAIL FOR LANE CLOSURE FOR PAVEMENT REPAIR (FULL DEPTH)

SEE SHEET 23 FOR FULL DEPTH REPAIR DETAILS.

NOTE: IF CONES ARE USED, PROVISIONS SHALL BE MADE TO STABILIZE THE CONES TO PREVENT THEM FROM BLOWING OVER.

① THE CONTRACTOR SHALL PLACE AN ADDITIONAL DRUM (OR CONE) AT EACH PAVEMENT REMOVAL. THE FACE OF THIS DRUM SHALL BE EVEN WITH THE OUTSIDE EDGE OF THE REMOVAL. THE DRUM SHALL REMAIN IN PLACE UNTIL TRAFFIC IS RETURNED TO THIS LANE OF PAVEMENT.

② IF PAVEMENT REMOVAL IS MORE THAN 6'-0" LONG, AN ADDITIONAL DRUM OR CONE SHALL BE PLACED ONE HALF THE DISTANCE FROM THE EDGE OF REMOVAL TO THE EDGE OF PAVEMENT. THE DRUM SHALL REMAIN IN PLACE UNTIL TRAFFIC IS RETURNED TO THIS LANE OF PAVEMENT. LANE CLOSURES SHALL NOT BE MORE THAN ONE MILE LONG UNLESS AUTHORIZED BY THE ENGINEER. THE CONTRACTOR SHALL RESTRICT THE SAWING OPERATION TO ONLY THE REMOVAL AND REPLACEMENT AREAS WHICH CAN BE COMPLETED IN ONE WEEK OR AS DIRECTED BY THE ENGINEER.

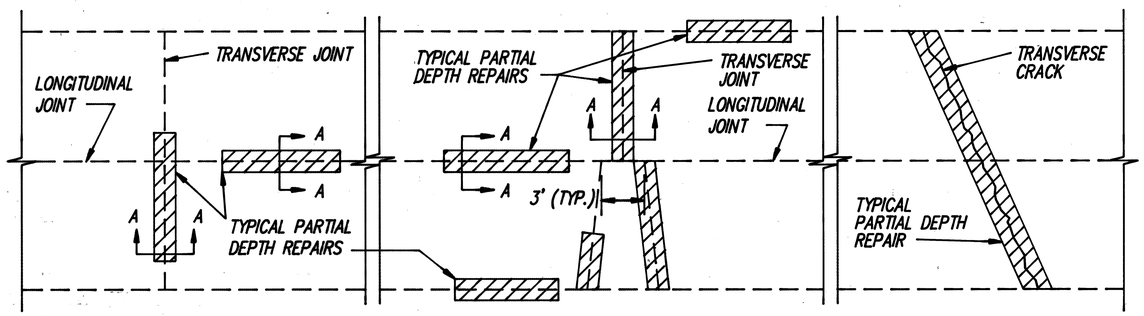

PLAN

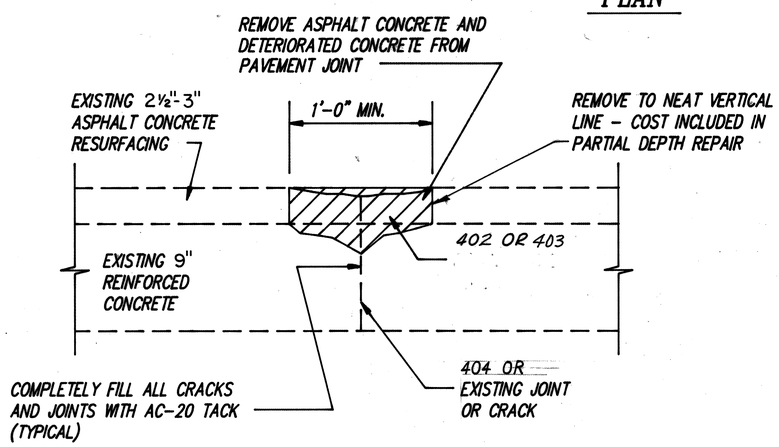

SECTION A-A

PARTIAL DEPTH PAVEMENT REPAIR DETAILS

ITEM SPECIAL - PARTIAL DEPTH PAVEMENT REPAIR RS-440(11) 38 / F-51(70) 456 CU. YD.
CARRIED TO GENERAL SUMMARY

SEE GENERAL NOTE FOR DESCRIPTION OF WORK REQUIRED

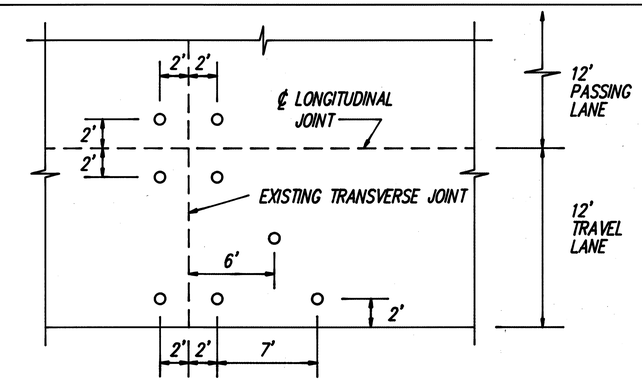

SEE NOTE BELOW FOR HOLES IN PASSING LANE.

SEE SUPPLEMENTAL SPECIFICATION 812 FOR ADDITIONAL REQUIREMENTS.

TYPICAL HOLE PATTERN FOR JOINTS NOT REPLACED WITH FULL DEPTH REPAIRS

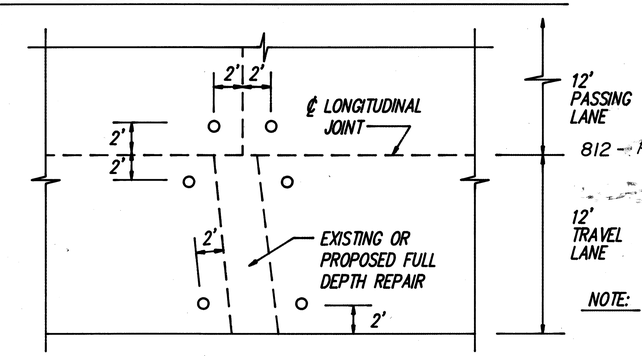

THE FOLLOWING ESTIMATED QUANTITIES ARE PROVIDED TO BE USED WHERE DIRECTED BY THE ENGINEER FOR GROUT SUB-SEALING OF THE EXISTING CONCRETE PAVEMENT.

		RS-440(11) F-51(70)	
812 -	PORTLAND CEMENT	5.9	71.18 TONS

CARRIED TO GENERAL SUMMARY

NOTE: THE HOLES IN THE PASSING LANE SHALL BE ADDED ONLY WHEN A NOTICEABLE QUANTITY OF SUB-SEALING MATERIAL IS PUMPED INTO THE ADJACENT HOLES IN THE TRAVEL LANE.

TYPICAL HOLE PATTERN AT FULL DEPTH JOINT REPAIRS

DETAILS FOR GROUT SUB-SEALING EXISTING PAVEMENT

Rev. 2-9-89

CALC. BY RDB 7/88
CHK'D. BY GM 7/88

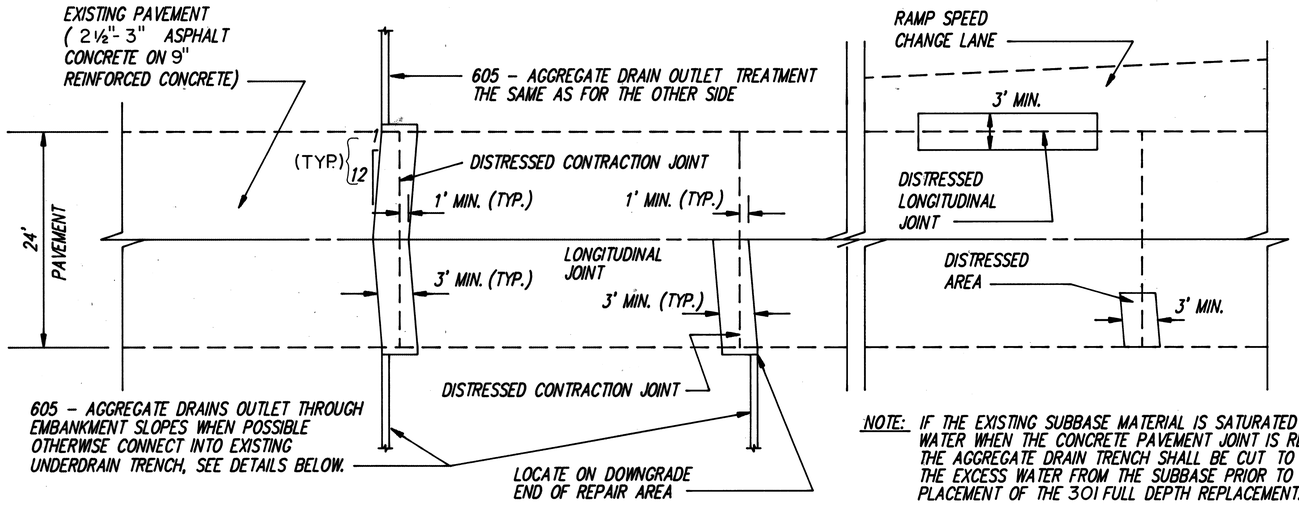

NOTE: IF THE EXISTING SUBBASE MATERIAL IS SATURATED WITH WATER WHEN THE CONCRETE PAVEMENT JOINT IS REMOVED, THE AGGREGATE DRAIN TRENCH SHALL BE CUT TO DRAIN THE EXCESS WATER FROM THE SUBBASE PRIOR TO THE PLACEMENT OF THE 301 FULL DEPTH REPLACEMENT.

PLAN

THIS TYPE OF PAVEMENT REPAIR SHALL BE USED FOR DISTRESSED TRANSVERSE CONTRACTION JOINT REPAIRS IN THE EXISTING REINFORCED CONCRETE PAVEMENT. THE LOCATION AND SIZES OF THESE REPAIRS SHALL BE AS DIRECTED BY THE ENGINEER.

THE FOLLOWING ESTIMATED QUANTITIES ARE PROVIDED FOR THIS PAVEMENT JOINT REPAIR WORK:

		RS-440(11)	F-51(70)	
ITEM 252	- FULL DEPTH RIGID PAVEMENT REMOVAL AND FLEXIBLE REPLACEMENT	98	3110	SQ.YD.≠
ITEM 252	- FULL Depth PAVEMENT SAWING	456	13,992	LIN.FT.≠
ITEM 605 -	AGGREGATE DRAIN, AS PER PLAN	228	6996	LIN.FT.⊙

≠ CARRIED TO GENERAL SUMMARY
⊙ CARRIED TO SUB-SUMMARY

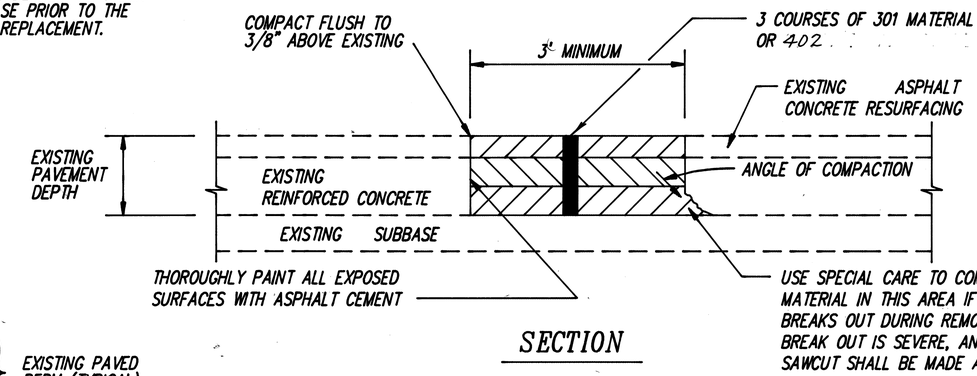

SECTION

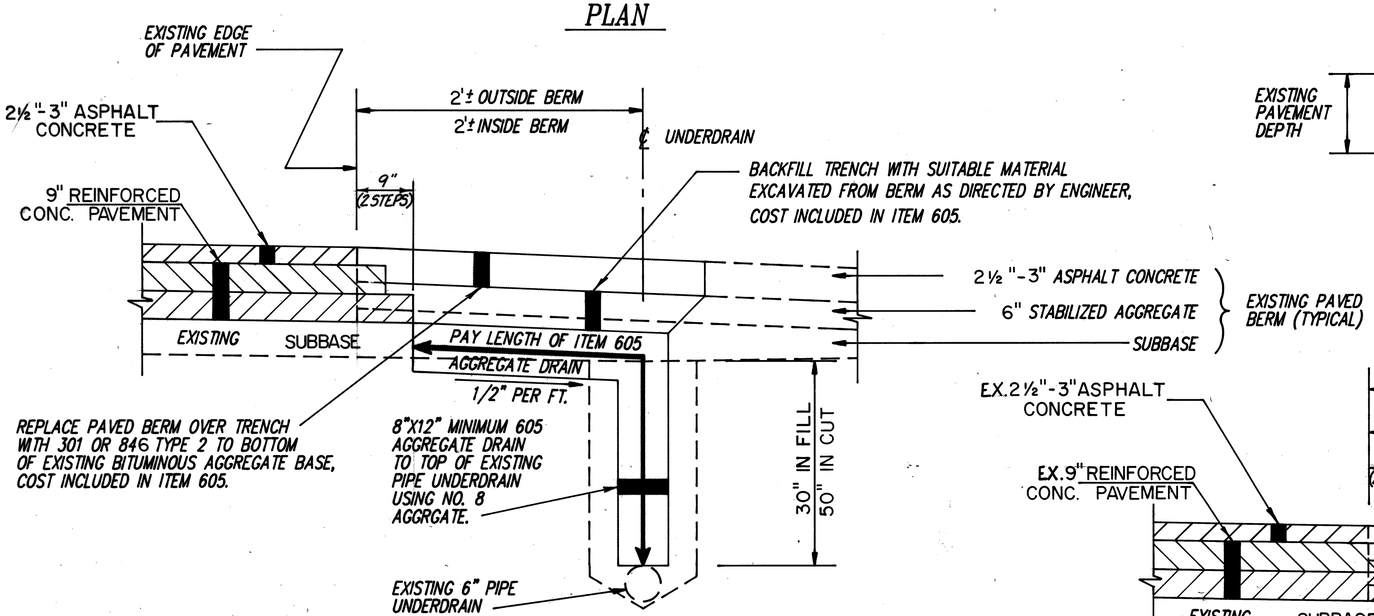

NOTE: DETAIL SHOWN IS FOR THE 8' OUTSIDE TREATMENT SIMILAR FOR 4' INSIDE BERM.

DETAIL FOR AGGREGATE DRAIN OUTLET INTO UNDERDRAIN TRENCH

(CUT SECTIONS)

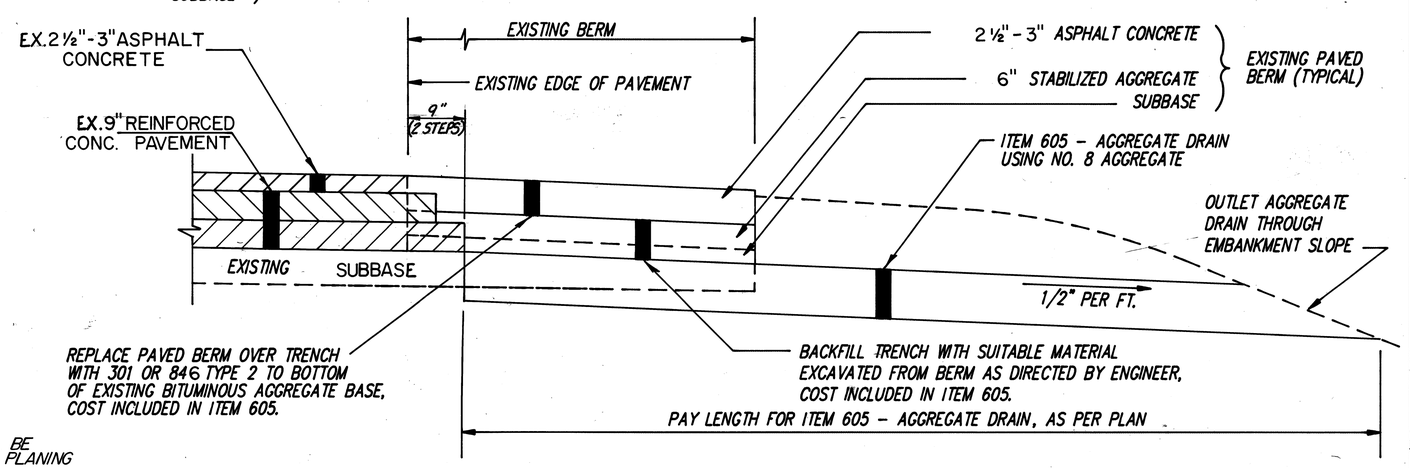

NOTE: ALL FULL DEPTH REPAIRS SHALL BE COMPLETED PRIOR TO PAVEMENT PLANING ON AN AREA.

DETAIL FOR AGGREGATE DRAIN OUTLET THROUGH EMBANKMENT SLOPE

FULL DEPTH CONCRETE PAVEMENT REPAIR DETAILS USING FLEXIBLE REPLACEMENT

Rev. 2-9-88

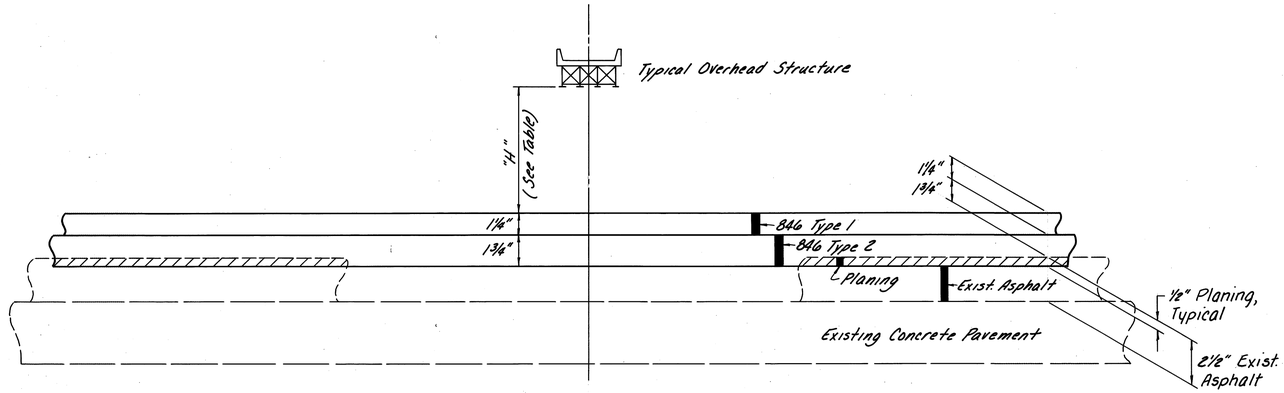

UNDERPASS CLEARANCE TABLE		
STRUCTURE	LOCATION	"H"
MED-42-0310	LEFT BRIDGE*	15'-0¼"
MED-42-0310	RIGHT BRIDGE*	15'-10⅞"
MED-42-0432	WESTBOUND	15'-2½"
MED-42-0432	EASTBOUND	15'-8¼"
MED-42-0688	EASTBOUND	15'-4"
MED-224-1582	EASTBOUND	15'-8¼"

* Over S.R. 421
See Sheet 25 for Planing Details at MED-42-0323

STANDARD UNDERPASS DETAIL WITH NORMAL PLANING

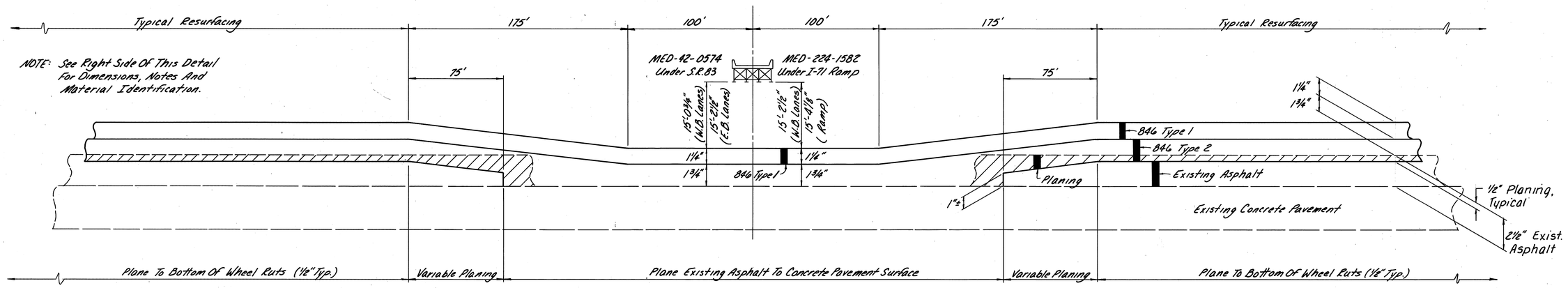

STANDARD UNDERPASS DETAIL AT MED-42-0574 & MED-224-1582(W.B. & RAMP ONLY)

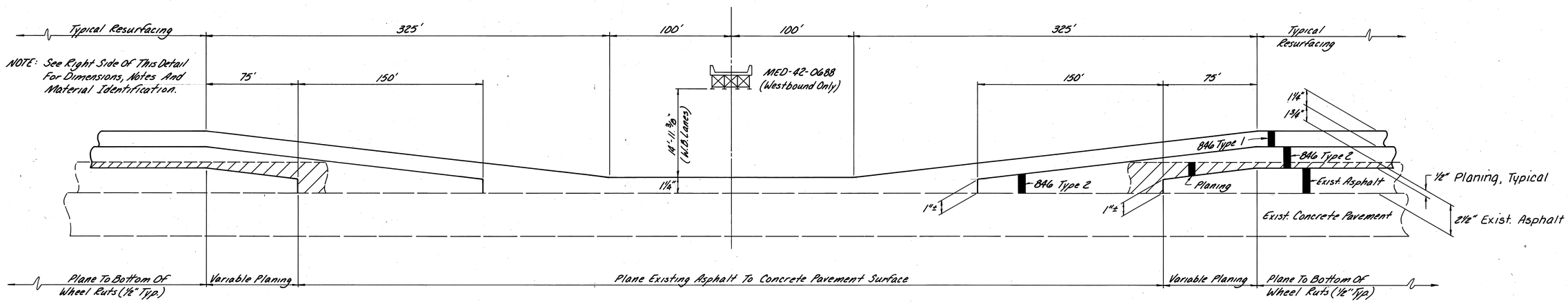

SPECIAL UNDERPASS DETAIL AT MED-42-0688(W.B. ONLY)

UNDERPASS PLANING DETAILS

CALC. BY ___ DATE ___	MED-42-1.89	OHIO
CHKD. BY ___ DATE ___	MED-224-10.45	FHWA REGION 5

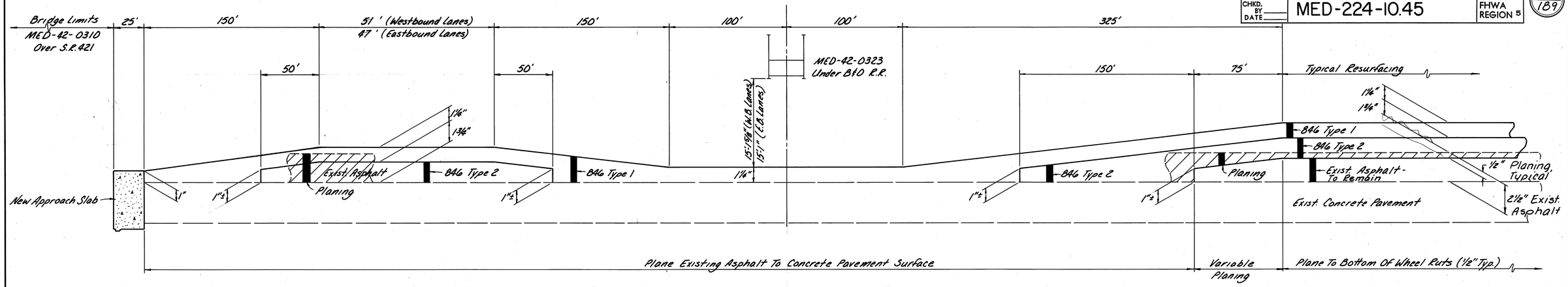

SPECIAL DETAIL BETWEEN STRUCTURES MED-42-0310 & MED-42-0323

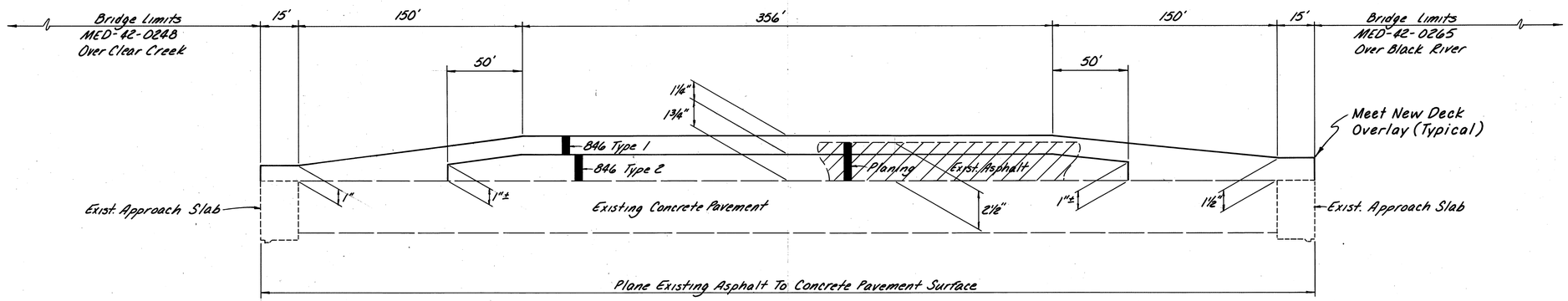

SPECIAL DETAIL BETWEEN STRUCTURES MED-42-0248 & MED-42-0265

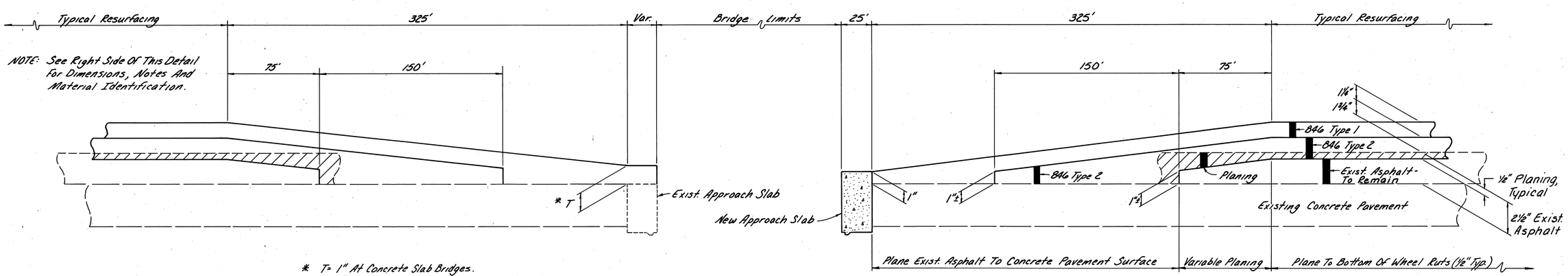

* T = 1" At Concrete Slab Bridges.
T = 1½" At Steel Beam Bridges.

STANDARD BRIDGE APPROACH DETAILS

BRIDGE APPROACH PLANING DETAILS

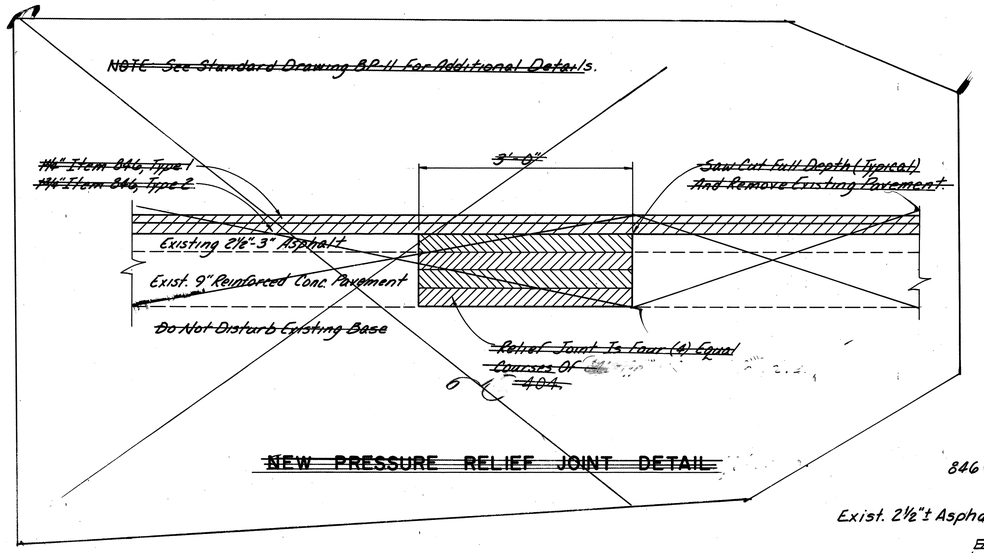

NEW PRESSURE RELIEF JOINT DETAIL

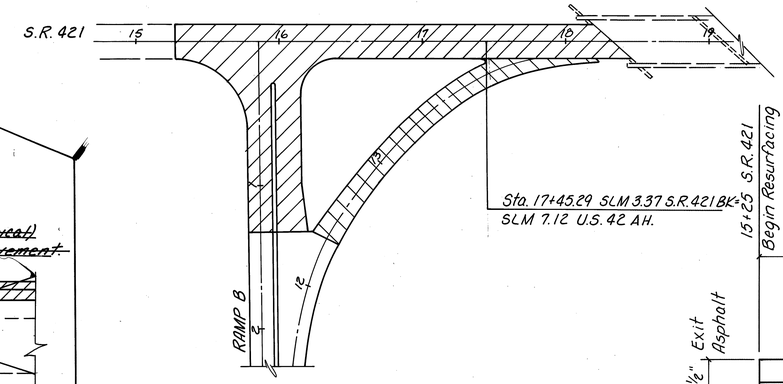

SPECIAL PLANING DETAILS AT MED - 42 - 0688 AND APPROACH RAMPS

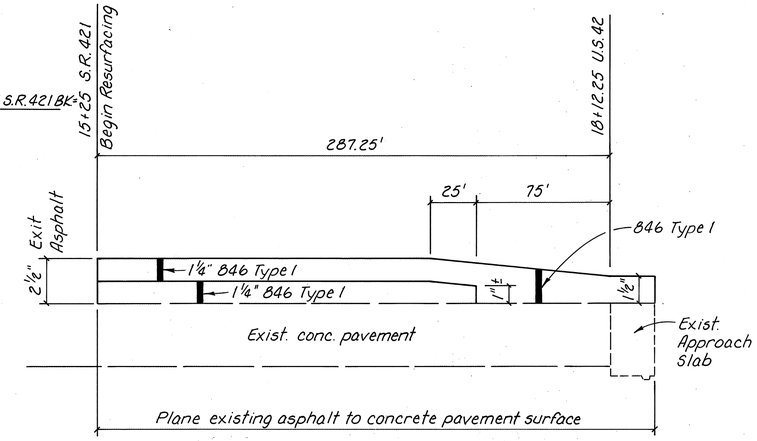

S.R. 421 & U.S. 42 AT MED - 42 - 0688

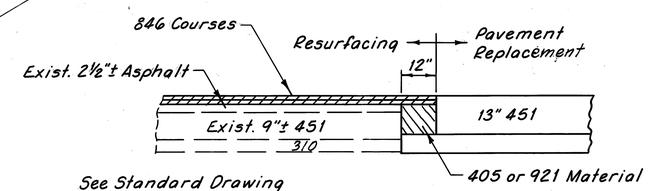

See Standard Drawing BP-11 for additional details and notes.

DETAIL OF TYPE C PRESSURE RELIEF JOINT

NOTE: See Standard Drawing BP-11 For Additional Details.

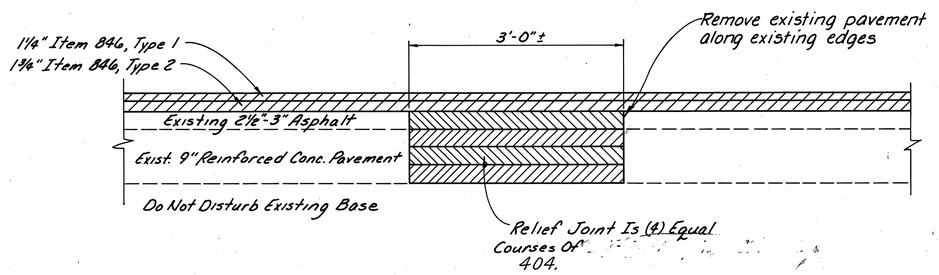

FULL DEPTH RIGID PAV'T REMOVAL AND FLEXIBLE REPLACEMENT

NOTE: 605 Aggregate Drains shall be provided at the end(s) of each replacement pressure relief joint. See Typical Details on Sheet 23.

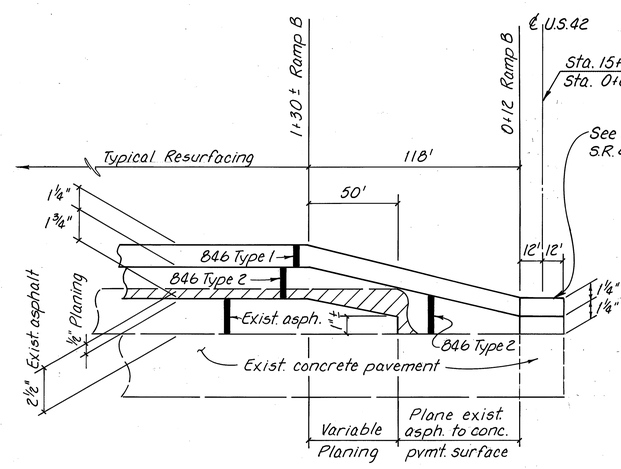

RAMP B & RAMP C - LEFT TURN

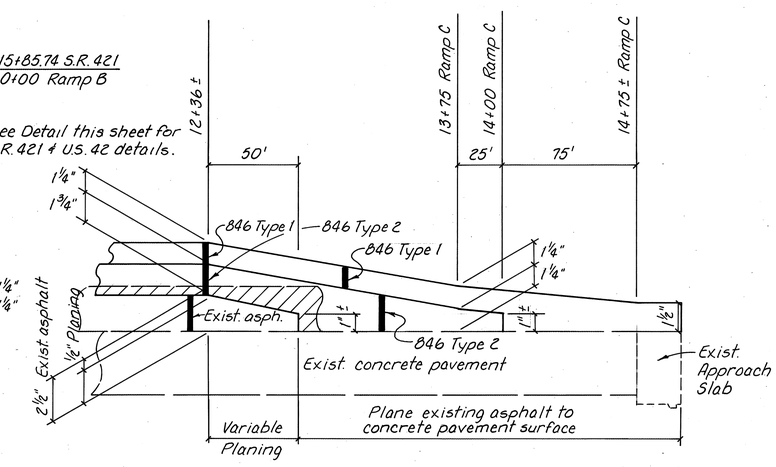

RAMP C - RIGHT TURN

PLANING AND PRESSURE RELIEF JOINT DETAILS

NOTES:
1. Subbase Removal, Disposal And Leveling Shall Be Included With Item 202, Median Pavement Removed, As Per Plan, For Payment.
2. See Standard Drawing MC-6 For All Other Details.

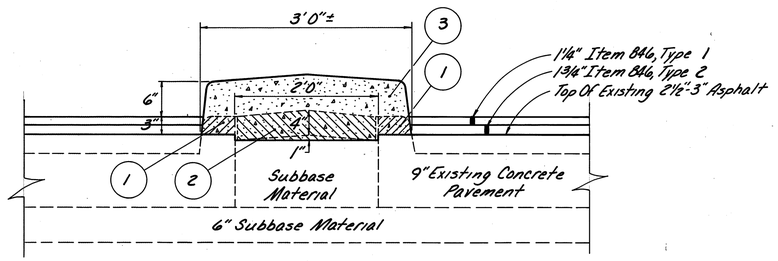

(1) Item 202, Curb Removed, As Per Plan
(2) Item 202, Median Pavement Removed, As Per Plan
(3) Item 612, Concrete Median

MEDIAN PAVEMENT REMOVAL & CONSTRUCTION DETAIL

3/16" = 1'

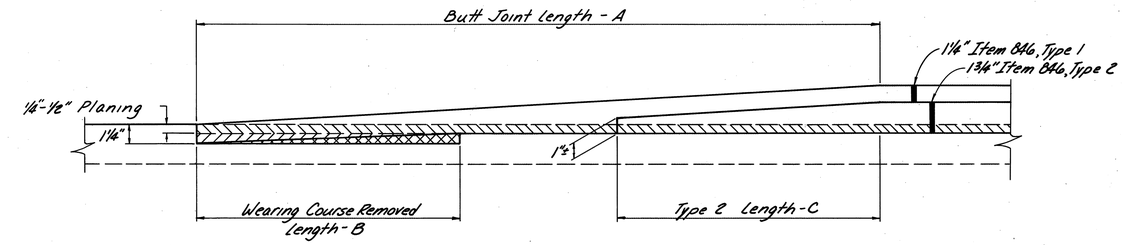

Butt Joint Length - A	Wearing Course Removed Length - B	Type 2 Length - C
25'	7'-6"	7'-6"
100'	30'-0"	30'-0"
200	60'-0"	60'-0"

NOTE: See Standard Drawing BP-5 For All Remaining Details.

BUTT JOINT DETAIL

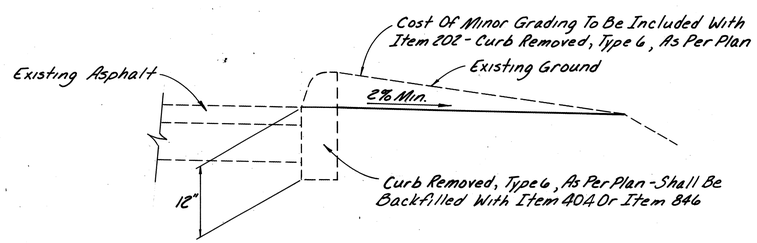

CURB REMOVAL DETAIL

CALC. BY DATE	MED-42-1.89	OHIO	28
CHKD. BY DATE	MED-224-10.45	FHWA REGION 5	189

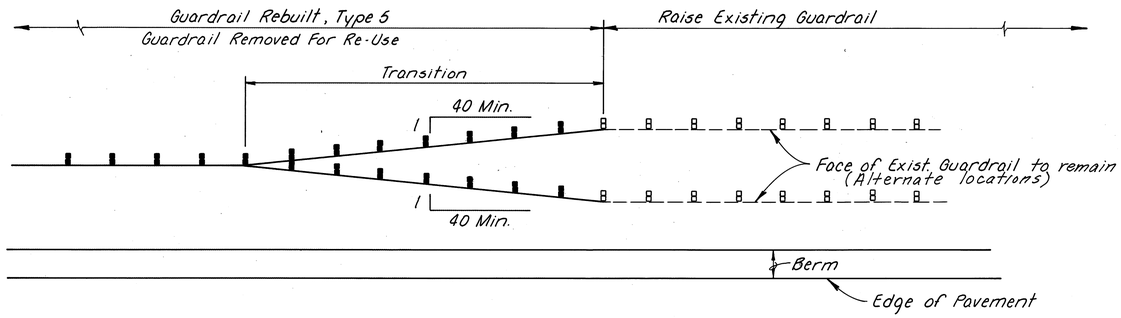

TYPICAL TRANSITION DETAIL

MED-42-0539 L&R & MED-42-0574 (83 Overpass)

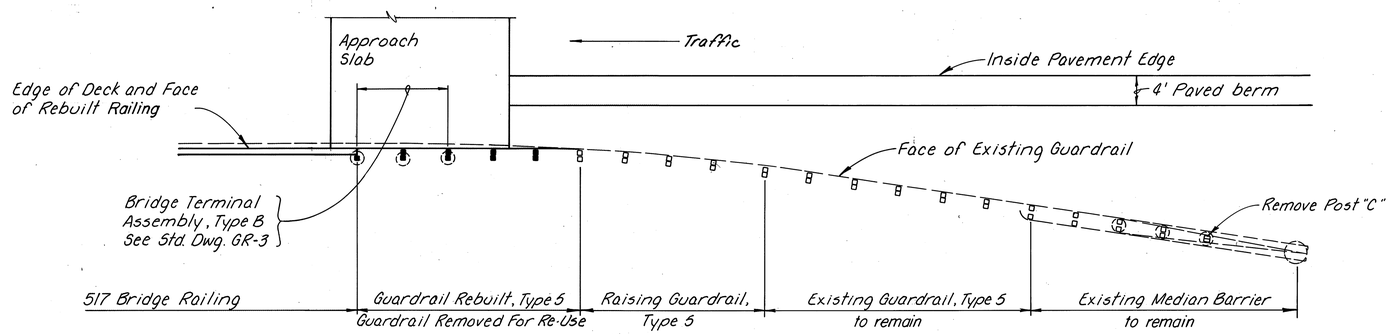

LEADING MEDIAN DETAIL

MED-42-0460, MED-42-0589, & MED-224-1276

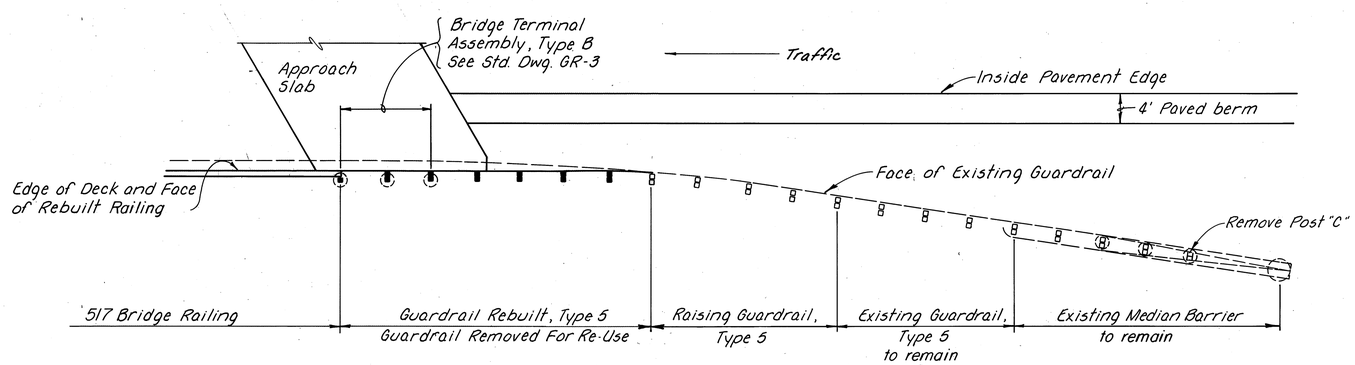

LEADING MEDIAN DETAIL

MED-42-0539

GUARDRAIL TRANSITION DETAILS

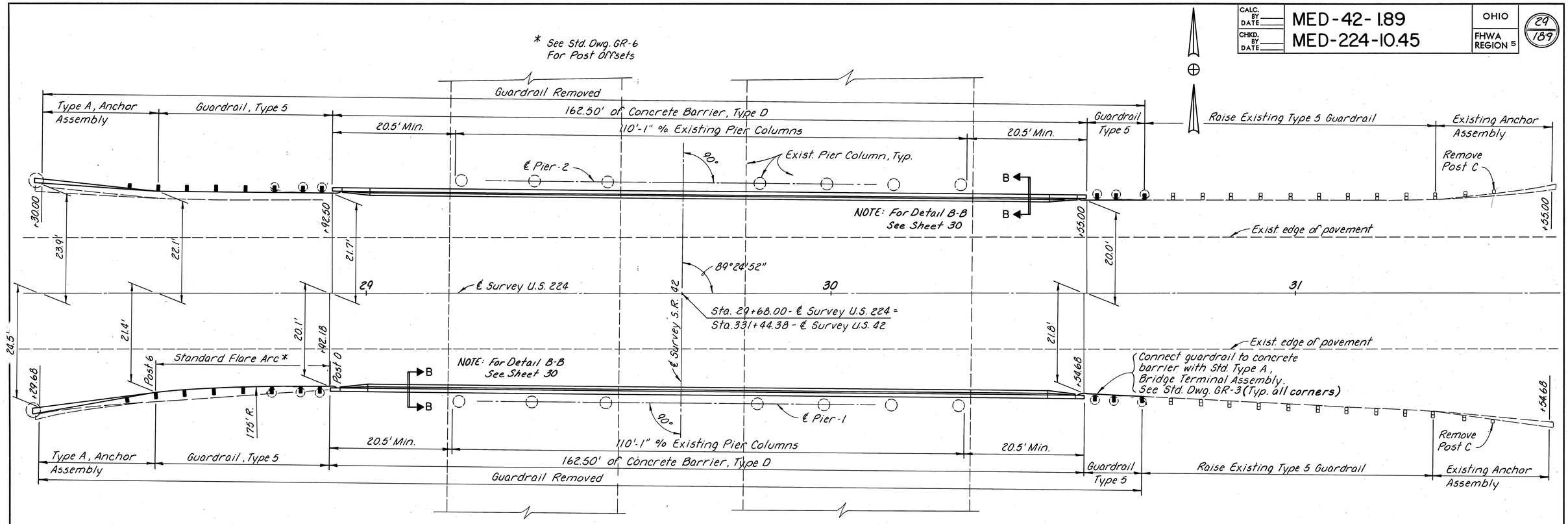

GUARDRAIL & BARRIER DETAILS

UNDER MED-42-0310 L/R

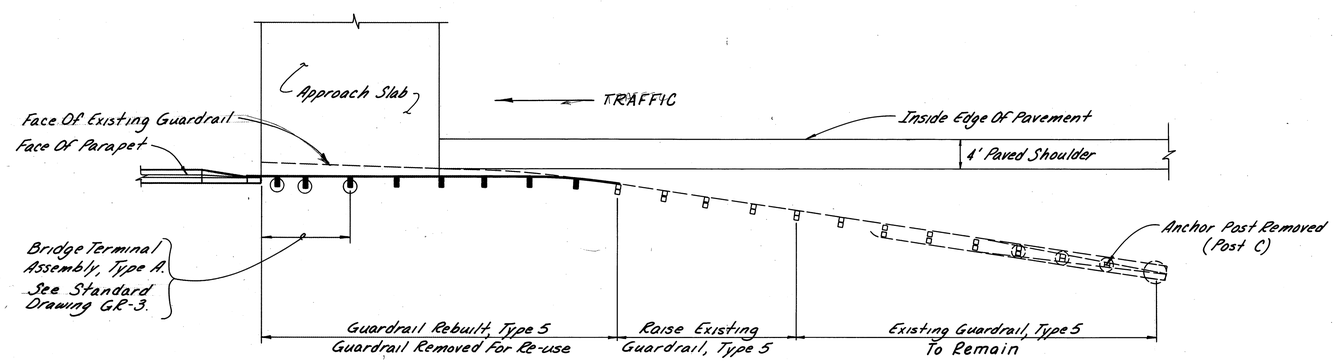

LEADING END MEDIAN DETAIL

MED-42-0310

GUARDRAIL TRANSITION DETAILS

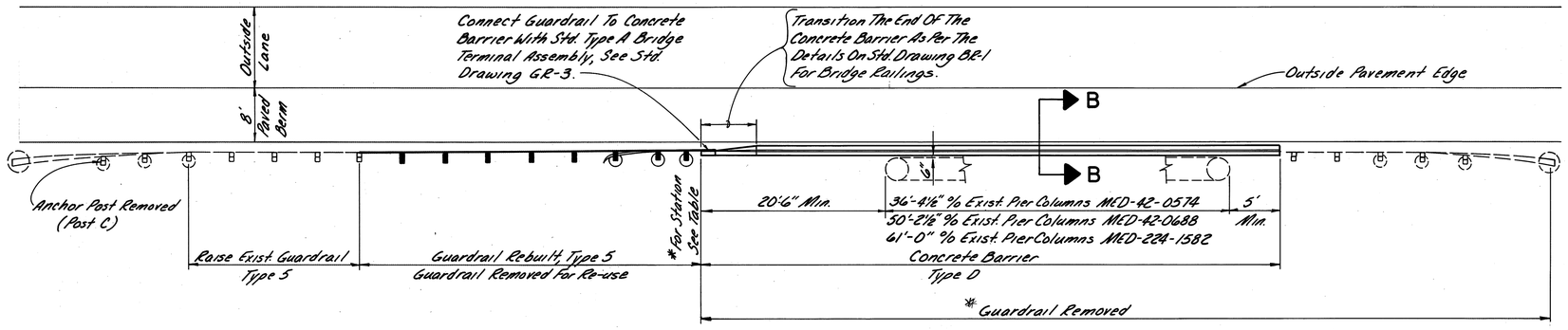

* Portions of this length is guardrail removed for re-use at MED-224-1582 See sheet 42.

PLAN AT PIERS

MED-42-0574 , MED-42-0688
& MED-224-1582

LOCATION	L/R	*STATION
MED-42-0323	R	336+36.8±
MED-42-0323	L	336+91.0±
MED-42-0432	R	395+20.9±
MED-42-0432	L	395+65.1±
MED-42-0574	R	499+83.4±
MED-42-0574	L	500+16.6±
MED-42-0688	R	558+85.8±
MED-42-0688	L	561+32.1±
MED-224-1582	R	844+94±
MED-224-1582	L	14+76.58± Ramp "F"

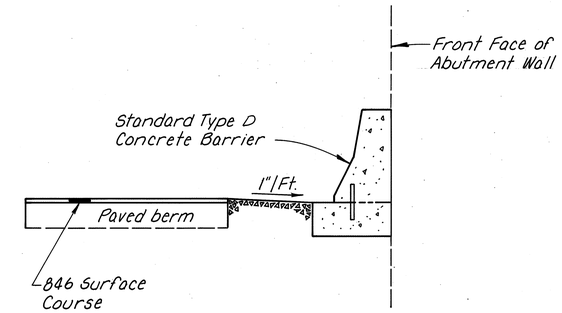

SECTION A-A

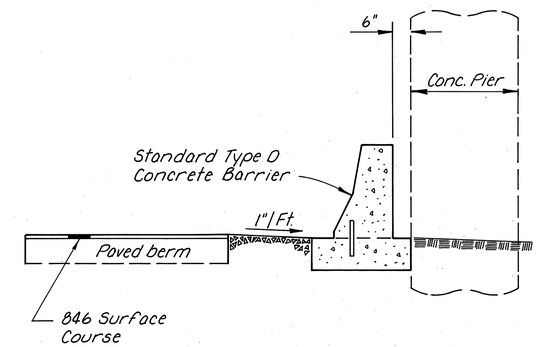

SECTION B-B

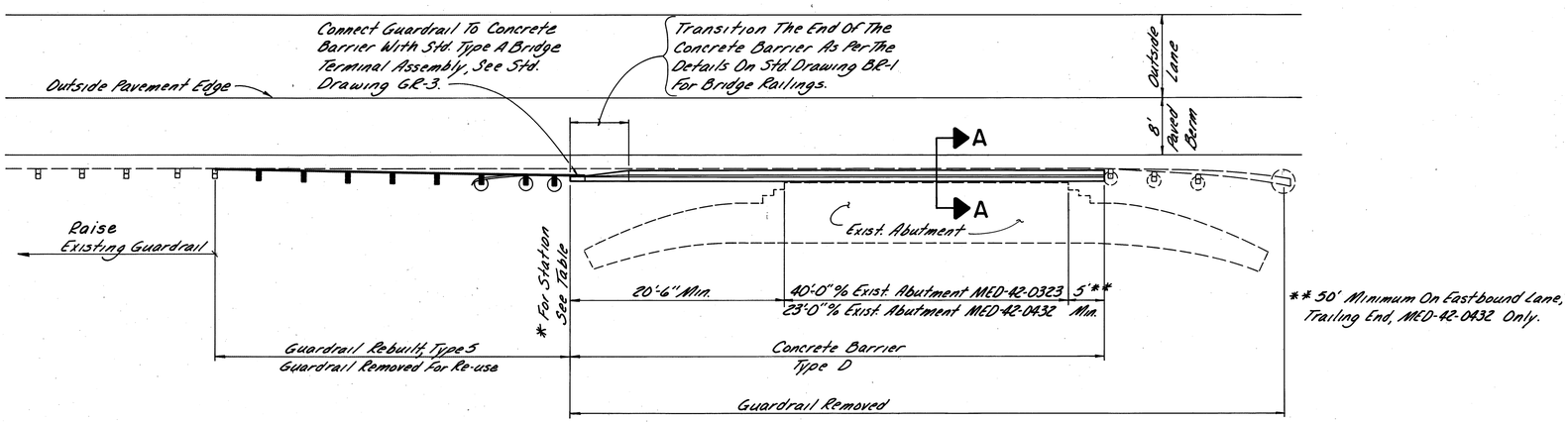

** 50' Minimum On Eastbound Lane, Trailing End, MED-42-0432 Only.

PLAN AT ABUTMENTS

MED-42-0323 & MED-42-0432

CONCRETE BARRIER DETAILS

CALC. BY RLE DATE 6/87	MED-42-1.89	OHIO	31
CHKD. BY AFS DATE 4/88	MED-224-10.45	FHWA REGION 5	189

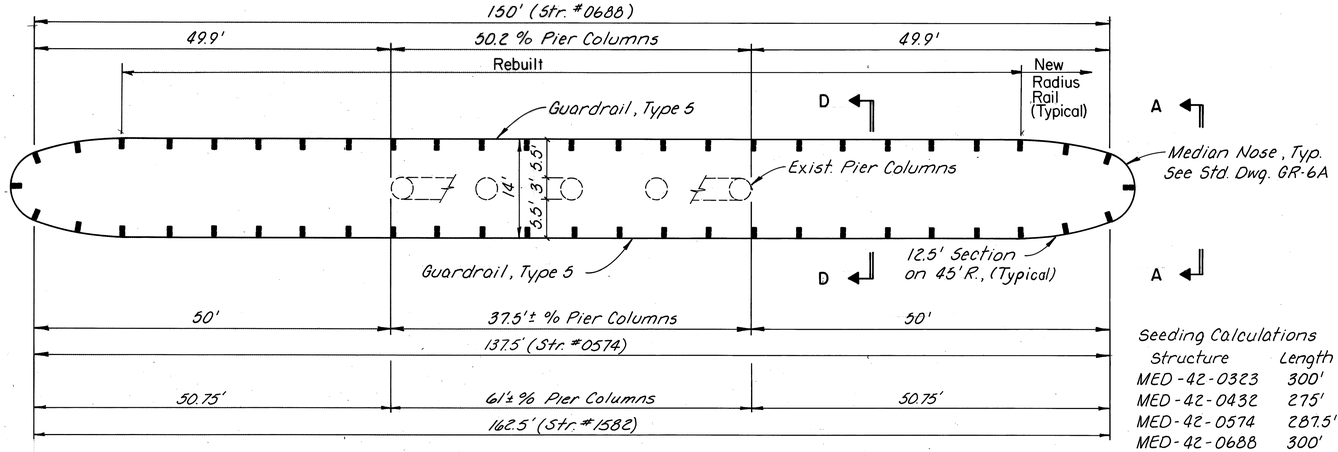

PLAN OF GUARDRAIL AT PIER

Str. #0574, #0688 & #1582

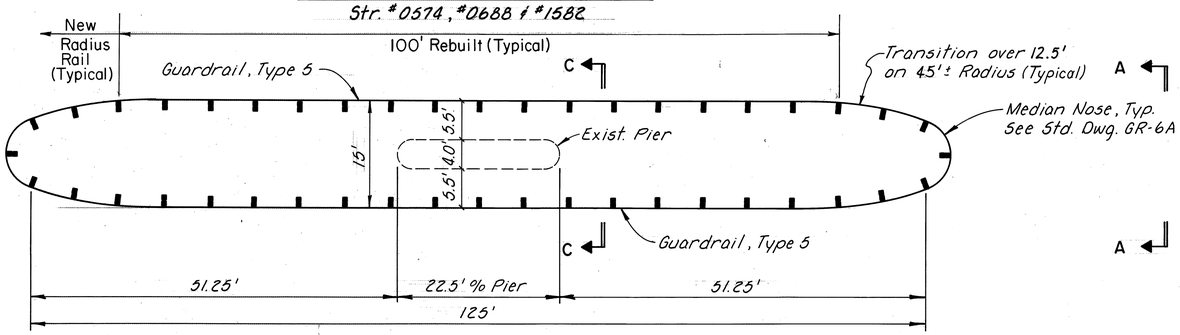

PLAN OF GUARDRAIL AT PIER

Str. #0432

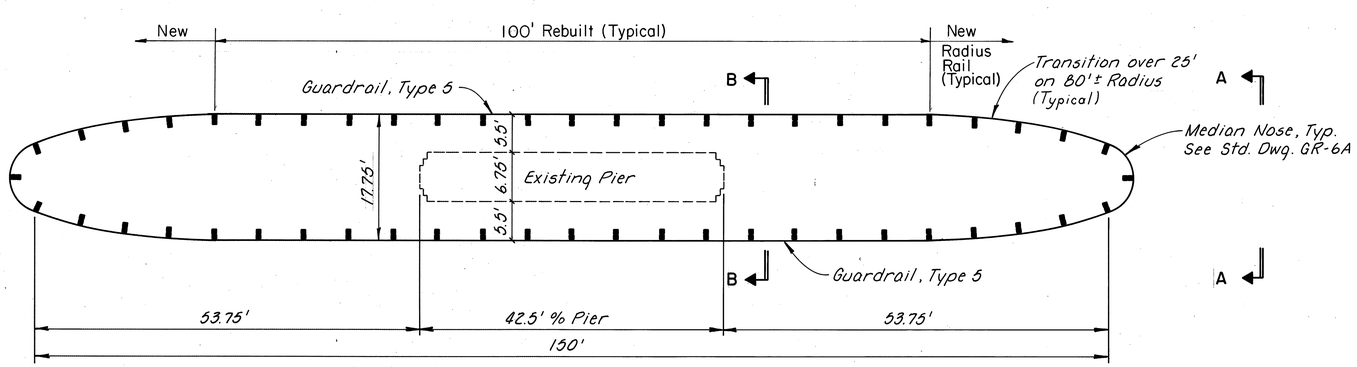

PLAN OF GUARDRAIL AT PIER

Str. #0323

Seeding Calculations

Structure	Length	Area
MED-42-0323	300'	300' x 22' x 1/9 = 733.3 Sq. Yds.
MED-42-0432	275'	275' x 22' x 1/9 = 672.2 Sq. Yds.
MED-42-0574	287.5'	287.5' x 22' x 1/9 = 702.8 Sq. Yds.
MED-42-0688	300'	300' x 22' x 1/9 = 733.3 Sq. Yds.
MED-224-1582	312.5'	312.5' x 22' x 1/9 = 763.9 Sq. Yds.

NOTE: All regrading work shall provide positive drainage as directed by Engineer

Cut Volumes calculated from each end of new median pier protection out 75' to the end of the existing median pier protection for a total of 150' (2 ends x 75' each). Fill Volumes calculated over the length of the new median pier protection. Seeding is calculated at 22' wide to cover all cut and fill areas.

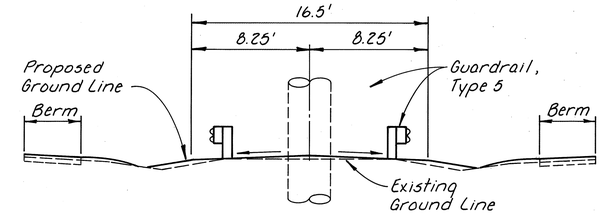

Earthwork Volume: 4 Sq. Ft. x 137.5 Lin. Ft. x 1/27 = 20 Cu. Yd. (Fill) MED-42-0574
4 Sq. Ft. x 150 Lin. Ft. x 1/27 = 22 Cu. Yd. (Fill) MED-42-0688
4 Sq. Ft. x 162.5 Lin. Ft. x 1/27 = 24 Cu. Yd. (Fill) MED-224-1582

* SECTION D-D

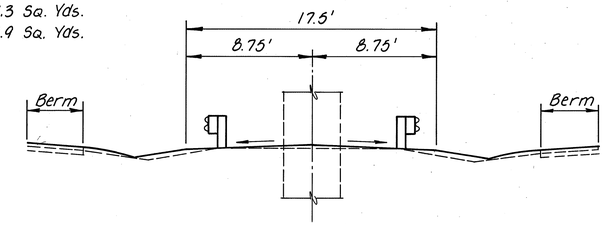

Earthwork Volume: 4 Sq. Ft. x 125 Lin. Ft. x 1/27 = 19 Cu. Yd. (Fill) MED-42-0432

* SECTION C-C

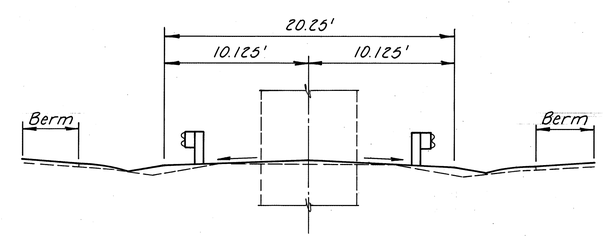

Earthwork Volume: 5 Sq. Ft. x 150 Lin. Ft. x 1/27 = 28 Cu. Yd. (Fill) MED-42-0323

* SECTION B-B

* See Standard Drawing GR-6A

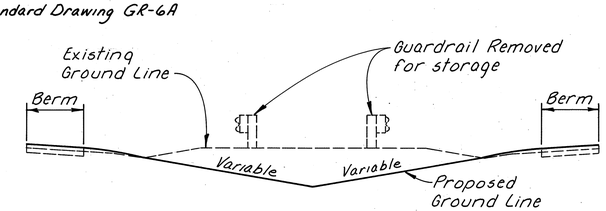

Earthwork Volume: 35 Sq. Ft. x 150 Lin. Ft. x 1/27 = 194 Cu. Yd. (Cut) MED-42-0323
Earthwork Volume: 25 Sq. Ft. x 150 Lin. Ft. x 1/27 = 139 Cu. Yd. (Cut) MED-42-0432
Earthwork Volume: 20 Sq. Ft. x 150 Lin. Ft. x 1/27 = 111 Cu. Yd. (Cut) MED-42-0574, MED-42-0688 & MED-224-1582

* SECTION A-A

GUARDRAIL AT MEDIAN PIERS

*REMOVAL OF CURBED EARTH ISLAND:
Remove 60' existing curb, excavate to bottom of existing concrete pavement (1'-3 ±) and fill hole to top of existing pavement (11½"±) with 846 Type 2. Then resurface per typical section.

Excavation = ½ x 20' x 17.32' x 1.25' x 1/27 = 8.0 Cu. Yd.
Asphalt = ½ x 20' x 17.32' x 11.5/12 x 1/27 = 6.2 Cu. Yd.

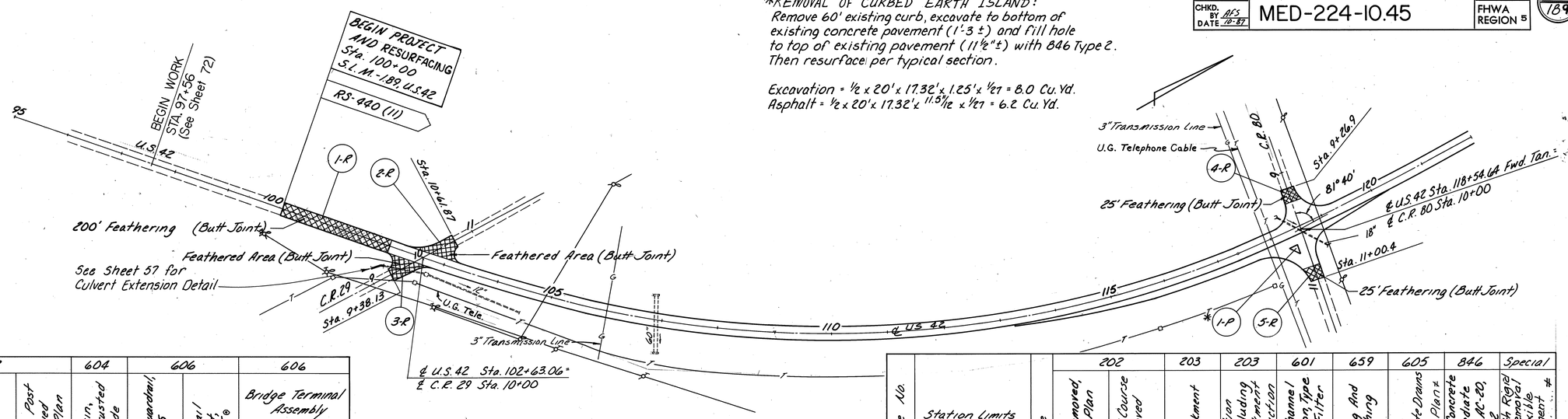

Reference No.	Station Limits From	Station Limits To	Side	202 Guardrail Removed For Re-use ⊙	202	202 Anchor Post Removed As Per Plan	604 Catch Basin, Adjusted To Grade	606 Raising Guardrail, Type 5	606 Guardrail Rebuilt, Type 5⊙	606 Bridge Terminal Assembly Type B⊙	606 Bridge Terminal Assembly
				Lin. Ft.		Each	Each	Lin. Ft.	Lin. Ft.	Each	
1-GR	129+41±	130+60.03	Lt.	43.75		1		50.00	43.75	1	
2-GR	129+21±	130+52.19	Rt.	43.75		1		62.50	43.75	1	
3-GR	131+47.53	132+79±	Lt.	43.75		1		62.50	43.75	1	
4-GR	131+39.69	132+58±	Rt.	43.75		1		50.00	43.75	1	
5-GR	135+14±	137+95	Lt.	68.75		1		187.50	68.75	1	
6-GR	135+14±	137+95	Rt.	68.75		1		187.50	68.75	1	
7-GR	139+45	141+14±	Lt.	68.75		1		75.00	68.75	1	
8-GR	139+45	141+14±	Rt.	68.75		1		75.00	68.75	1	
2-D	147+00		Lt.				1				
Totals (RS)				450.00		8	1	750.00	450.00	8	

⊙ On approaches to rebuilt bridge railing (See bridge plans)

NOTE: Existing Guardrail Is Type 5 With Wood Posts Throughout The Length Of This Project.

Reference No.	Station Limits From	Station Limits To	Side	202 Curb Removed, As Per Plan	202 Wearing Course Removed	203 Embankment	203 Excavation Not Including Embankment Construction	601 Rock Channel Protection, Type B, With Filter	659 Seeding And Mulching	605 Aggregate Drains As Per Plan ≠	846 Asphalt Concrete Intermediate Course, AC-20, Type 2	Special Full Depth Road Pav't Removal and Flexible Replacement #
				Lin. Ft.	Sq. Yd.	Cu. Yd.	Cu. Yd.	Cu. Yd.	Sq. Yd.	Lin. Ft.	Cu. Yd.	Sq. Yd.
1-R	100+00	100+60			213							
	C.R. 29											
2-R	10+54.37	10+61.87			27							
3-R	9+38.13	9+45.63			27							
	C.R. 80											
4-R	9+26.90	9+34.40			27							
5-R	10+92.90	11+00.40			27							
1-D	130+45±	130+82±	Lt.			171		28	136			
1-PR	128+93±									26		8
2-PR	132+35±									29		8
3-PR	137+02±									26		8
4-PR	140+43±									26		8
* 1-P	118+30±		Rt.	60			8				6	
Totals (RS)				60	321	171	8	28	136	107	6	32

≠ See Detail on Sheet 26

Quantity = 4' x 35' x 33' x 1/27 = 171 Cu. Yds. Item 203-Embankment.
Quantity = 33' x 37' x 1/9 = 136 Sq. Yds. Item 659-Seeding And Mulching.
Quantity = 2.5' x 33' x 9' x 1/27 = 28 Cu. Yds. Item 601-Rock Channel Protection, Type B, With Filter.

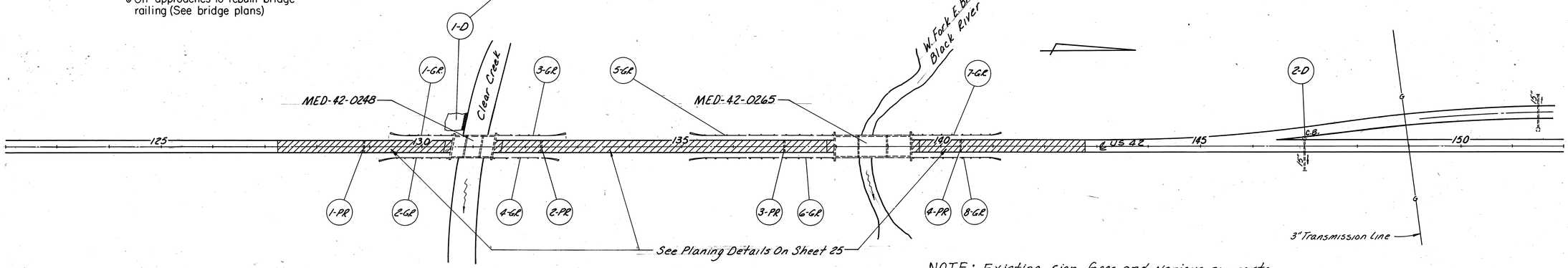

NOTE: Existing sign faces and various supports will be upgraded by a maintenance project in the summer, 1989. The Contractor shall cooperate with the sign Contractor as per 105.07.

STA. 95+00 TO STA. 152+00

Reference No.	Station Limits From	Station Limits To	Side	203 Excavation Not Incl. Embankment Construction Cu. Yd.	203 Subgrade Compaction Sq. Yd.	601 Paved Gutter Type 1-4 Lin. Ft.	602 Concrete Masonry Cu. Yd.	603 18" Conduit Type A, 706.01 or 706.02 Lin. Ft.	611 Reinforced Conc. Approach Slab (T=15") Sq. Yd.	660 Sodding Sq. Yd.	202 Paved Gutter Removed Lin. Ft.	202 Pavement Removed Sq. Yd.	604 Median Inlet Reconstructed to Grade Each	659 Seeding And Mulching Sq. Yd.	202 Portions Of Structures Removed, Headwalls Cu. Yd.
	RAMP A														
1-D	28+50		Rt.				0.31	4						3	0.3
2-D	28+50		Lt.			33	0.31	8		11	33			4	0.3
3-D	8+50	Ramp D	Lt.										1		
1-AS	330+55.44	330+80.44	Lt.	22	99				99			67			
2-AS	330+55.44	330+80.44	Rt.	26	132				132			100			
3-AS	332+08.44	332+33.44	Lt.	22	99				99			67			
4-AS	332+08.44	332+33.44	Rt.	26	132				132			100			
Totals (F-)				96	462	33	0.6	12	462	11	33	334	1	7	0.6

NOTE: See Sheets 97-99 for approach slab dimensions and details.

Seeding Calculations:
1D - 6'x4'x 1/9 = 2.7 Sq. Yds.
2D - 10'x4'x 1/9 = 4.4 Sq. Yds.

Sodding Calculations:
2D - 2 x 1'-6" x 33' x 1/9 = 11.0 Sq. Yds.

Reference No.	Station Limits From	Station Limits To	Side	202 Wearing Course Removed Sq. Yd.	202 Curb Removed, As Per Plan Lin. Ft.	202 Median Pavt. Removed, As Per Plan Sq. Yd.			605 Aggregate Drains As Per Plan * Lin. Ft.		612 Concrete Median Sq. Yd.	Special Full Depth Rigid Pav't Removal And Flexible Replacement * Sq. Yd.
1-R	25+00	25+30	US 224	169								
2-R	36+70	37+00	SR 421	93								
	RAMP D											
1-P	3+50	10+18	Lt.		1331	127					291	
1-PR	329+86±		Lt.						13			8
2-PR	329+21±		Rt.						13			12
3-PR	333+84±		Lt.						13			8
4-PR	333+09±		Rt.						13			12
Totals (F-)				262	1331	127			52		291	40

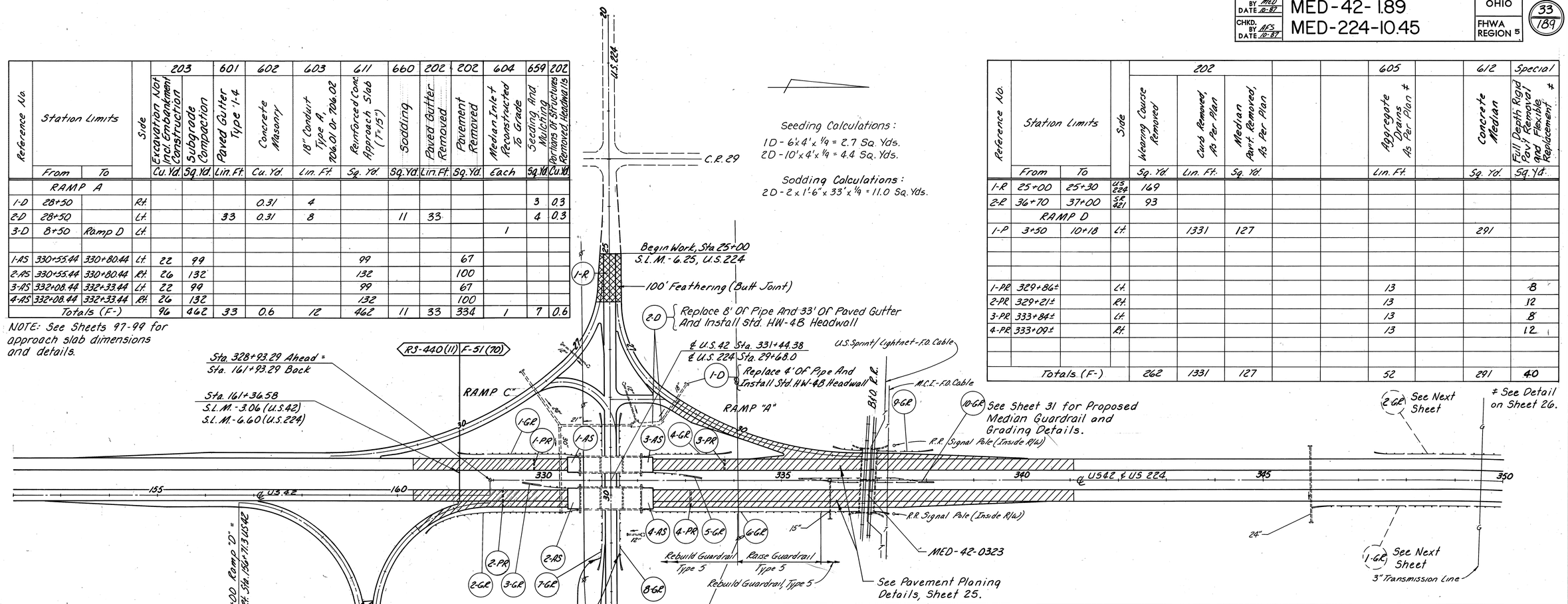

Reference No.	Station Limits From	Station Limits To	Side	202 Guardrail Removed Lin. Ft.	202 Guardrail Removed For Re-Use Lin. Ft.	202 Anchor Post Removed, As Per Plan Each	622 Concrete Barrier, Type D Lin. Ft.	606 Anchor Assembly, Type A Each	606 Guardrail, Type 5 Lin. Ft.	606 Raising Guardrail, Type 5 Lin. Ft.	606 Guardrail Rebuilt Type 5 Lin. Ft.	606 Bridge Terminal Assembly Type A Each	203 Excavation Not Including Embankment Construction Cu. Yd.	203 Embankment Cu. Yd.	202 Guardrail Removed, Barrier Design Lin. Ft.	659 Seeding And Mulching Sq. Yd.
1-GR	161+30 ±	330+77.85	Lt.		162.50											
1-GR	161+30 ±	330+79.69	Lt.							62.50	162.50	1				
2-GR	160+55 ±	330+77.85	Rt.		162.50	1										
2-GR	160+55 ±	330+79.69	Rt.							137.50	162.50	1				
3-GR	329+53±	330+77.85	Rt.		50.00	1										
3-GR	329+53±	330+79.69	Rt.							25	50	1				
4-GR	332+11.03	333+99±	Lt.		162.50	1										
4-GR	332+09.19	333+99±	Lt.								162.50	1				
5-GR	332+11.03	333+36±	Lt.		50.00	1										
5-GR	332+09.19	333+36±	Lt.							25	50	1				
6-GR	332+11.03	337+49±	Rt.	112.50	250.00											
6-GR	332+09.19	337+49±	Rt.				70			175	250	2				
	US 224															
7-GR	28+29.68	31+54.68	Rt.	237.50		1	162.50	1	37.5	62.5		2				
8-GR	28+30	31+55	Lt.	237.50		1	162.50	1	37.5	62.5		2				
9-GR	335+66±	337+91±	Lt.	125.00	50.00	1	80			25	50	1				
10-GR	335+33±	338+33±	Med.	300	200				125		200		194	28	50.0	733
Total (F-)				1012.50	1087.50	7	475	2	200.00	575.00	1087.50	12	194	28	50.00	733

STA. 152 + 00 TO STA. 350 + 00

CALC. BY MED DATE 10-87	MED-42-1.89	OHIO
CHKD. BY RFS DATE 10-87	MED-224-10.45	FHWA REGION 5

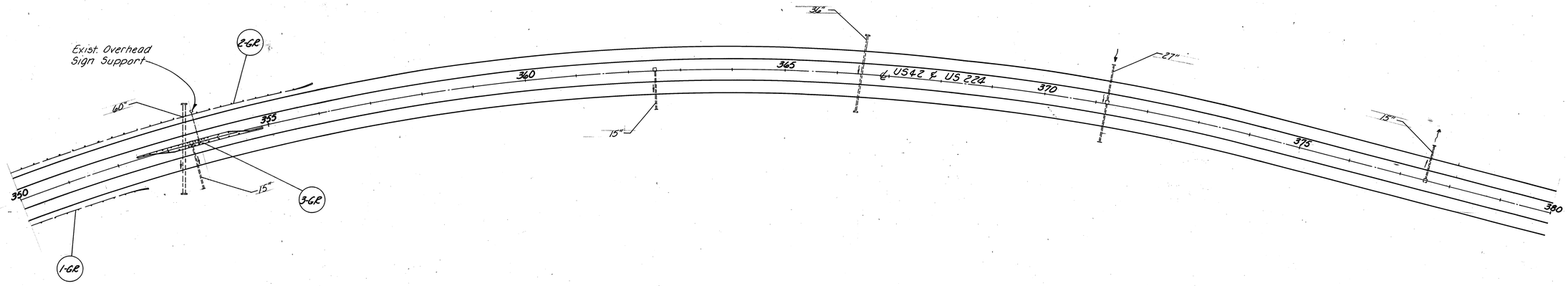

Reference No.	Station Limits From	Station Limits To	Side	202 Guardrail Removed For Re-Use	202 Anchor Post Removed, As Per Plan	202 Guardrail Removed	622 Concrete Barrier, Type D	606 Raising Guardrail, Type 5	606 Guardrail Rebuilt, Type 5	606 Intermediate Guardrail Post	202 Guardrail Removed, Barrier Design	606 Bridge Terminal Assembly, Type A	203 Excavation Not Including Embankment Construction	203 Embankment	659 Seeding And Mulching	606 Guardrail, Type 5		601 Rock Channel Protection Type C, With Filter
				Lin. Ft.	Each	Lin. Ft.	Lin. Ft.	Lin. Ft.	Lin. Ft.	Each	Lin. Ft.	Each	Cu. Yd.	Cu. Yd.	Sq. Yd.	Lin. Ft.		Cu. Yd.
1-G.R.	346+00±	352+45±	Rt.		1			600.0										
2-G.R.	347+38±	355+78±	Lt.		1			800.0										
3-G.R.	352+40±	354+90±	Med.		2					6								
4-G.R.	394+21±	396+21±	Rt.	50	1	100	100	25	50			1						
5-G.R.	394+65±	396+65±	Lt.	50	1	100	55	25	50			1						
6-G.R.	394+06±	396+81±	Med.	200		250			200		50		139	19	672	75		
7-G.R.	402+08±	405+00	Lt.					296.23										
1-D	394+25		Rt.											87	247			79
Total				300.00	6	450.00	155	1746.23	300.00	6	50.00	2	139	106	919	75.00		79

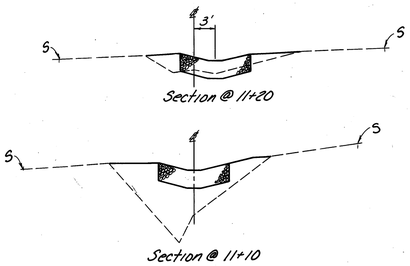

Section @ 11+20

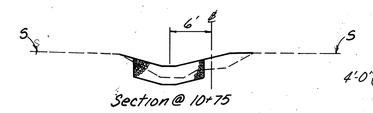

Section @ 10+75

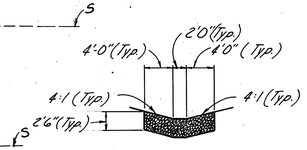

Typical Section For Rock Channel Protection, Type C, With Filter

Section @ 11+10

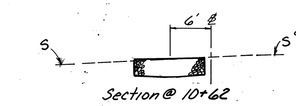

Section @ 10+62

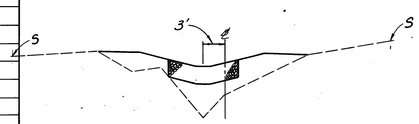

Section @ 11+00

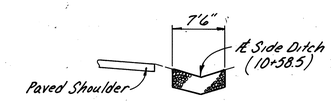

Section @ Side Ditch

Station	End Area Cut	End Area Fill	Volume Cut	Volume Fill	Seeding End Width	Seeding Sq. Yds.
10+62	0	0	0	2	20	38
10+75	0	10	0	37	33	107
11+00	0	70	0	29	44	45
11+10	0	84	0	18	37	41
11+20	0	13	0	1	36	16
11+25	0	0			20	
Total Cu. Yd.			0	87	247 Sq. Yd.	

Quantities carried to Table on this sheet.

SECTIONS FOR DITCH REPAIR
Sta. 394+25 Rt.

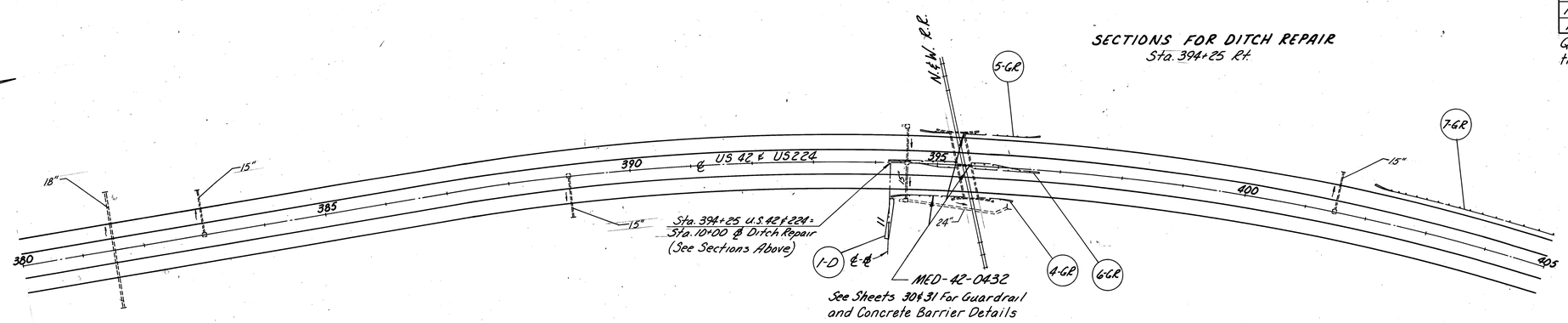

STA. 350+00 TO STA. 405+00

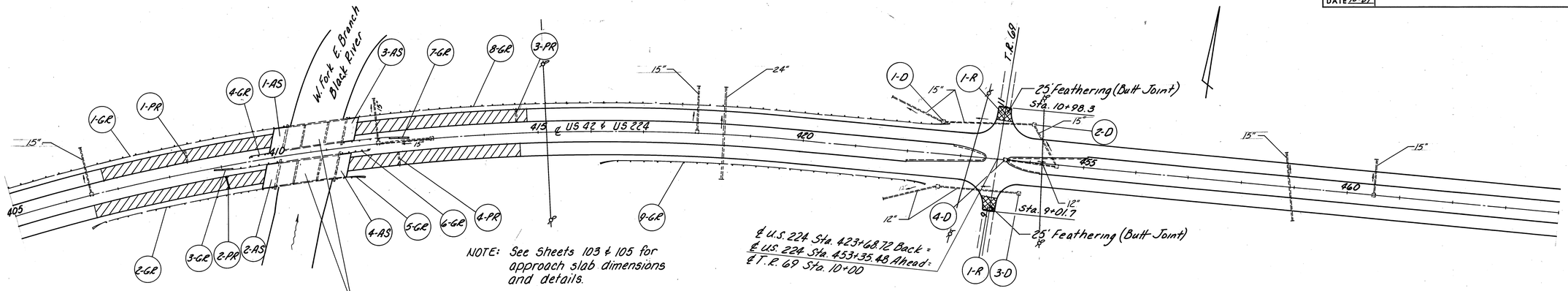

Reference No.	Station Limits From	Station Limits To	Side	202 Guardrail Removed For Re-Use	202	202 Anchor Post Removed As Per Plan	606 Anchor Assembly Type T	606 Raising Guardrail Type 5	606 Guardrail Rebuilt Type 5	606 Bridge Terminal Assembly Type B	606 Bridge Terminal Assembly
				Lin. Ft.		Each	Each	Lin. Ft.	Lin. Ft.	Each	
1-GR	405+00	410+27.73	Lt.	68.75				466.27	68.75	1	
2-GR	406+51±	409+86.69	Rt.	43.75		1		262.50	43.75	1	
3-GR	408+72±	410+03.36	Rt.	31.25		1		25.0	31.25	1	
4-GR	409+67±	410+11.16	Lt.	43.75			1		43.75	1	
5-GR	411+13.45	411+70±	Rt.	31.25					31.25	1	
6-GR	411+28.72	411+72±	Rt.	43.75			1		43.75	1	
7-GR	411+35.84	412+67±	Lt.	31.25		1		25.0	31.25	1	
8-GR	411+51.05	422+95±	Lt.	68.75		1		1062.50	68.75	1	
9-GR	416+15±	422+33±	Rt.			1		562.50			
10-GR	472+96±	480+95.50	Lt.	175.0				600.0	175.0	1	
11-GR	472+72±	481+53.24	Rt.	181.25		1		675.0	181.25	1	
12-GR	480+01±	481+32.45	Rt.	31.25		1		25.0	31.25	1	
13-GR	480+79±	481+16.29	Lt.	37.5			1		37.5	1	
14-GR	483+38.70	483+76.2±	Rt.	37.5			1		37.5	1	
15-GR	483+59.49	485+97±	Rt.	175.0				37.5	175.0	1	
16-GR	483+22.54	484+54±	Lt.	31.25		1		25.0	31.25	1	
17-GR	483+01.75	489+96±	Lt.	181.25		1		487.5	181.25	1	
Total				1212.50		9	4	4253.77	1212.50	16	

Reference No.	Station Limits From	Station Limits To	Side	203 Excavation Not Including Embankment Construction	203 Subgrade Compaction	604 Catch Basin, Adjusted To Grade	604 Catch Basin, No. 5, As Per Plan	604	611 Reinforced Concrete Approach Slab (T=15")	202 Pavement Removed (Exist. Approach Slab)
				Cu. Yd.	Sq. Yd.	Each	Each		Sq. Yd.	Sq. Yd.
1-D	422+60		Lt.				1			
2-D	454+00		Lt.				1			
3-D	453+85		Rt.				1			
4-D	453+55		Med.			1				
1-AS	409+97.19	410+22.19	Lt.	31	122				122	67
2-AS	409+73.89	409+98.89	Rt.	31	122				122	67
3-AS	411+40.78	411+65.78	Lt.	31	122				122	67
4-AS	411+17.48	411+42.48	Rt.	31	122				122	67
5-AS	480+88.97	481+13.97	Lt.	21	100				100	67
6-AS	481+25.93	481+50.93	Rt.	21	100				100	67
7-AS	483+20.22	483+45.22	Lt.	21	100				100	67
8-AS	483+57.18	483+82.18	Rt.	21	100				100	67
Total				208	888	1	3		888	536

Reference No.	Station Limits From	Station Limits To	Side	202 Wearing Course Removed	202 Curb Removed, Type 6 As Per Plan	202	605 Aggregate Drain As Per Plan ‡	605	Special Full Depth Rigid Pav't Removal and Flexible Replacement ‡	Special Pressure Relief Joint, Type C ‡
				Sq. Yd.	Lin. Ft.		Lin. Ft.		Sq. Yd.	Lin. Ft.
	C.R.	69								
1-R	10+90.8	10+98.3		27						
2-R	9+01.7	9+09.2		27						
3-R	481+00.95	481+38.95	Rt.		38					
4-R	481+14.80	481+52.80	Rt.		38					
5-R	483+02.20	483+40.20	Lt.		38					
6-R	483+16.05	483+54.05	Lt.		38					
1-PR	408+30±		Lt.				13		8	
2-PR	408+98±		Rt.				13			24 ft
3-PR	414+68±		Lt.				13		8	
4-PR	412+34±		Rt.				13		8	
5-PR	479+11±		Lt.				13		8	
6-PR	479+35±		Rt.				13		8	
7-PR	483+90±		Lt.				13		8	
8-PR	484+85±		Rt.				13		8	
Total				54	152		104		56	24 ft

‡ See Detail on Sheet 26

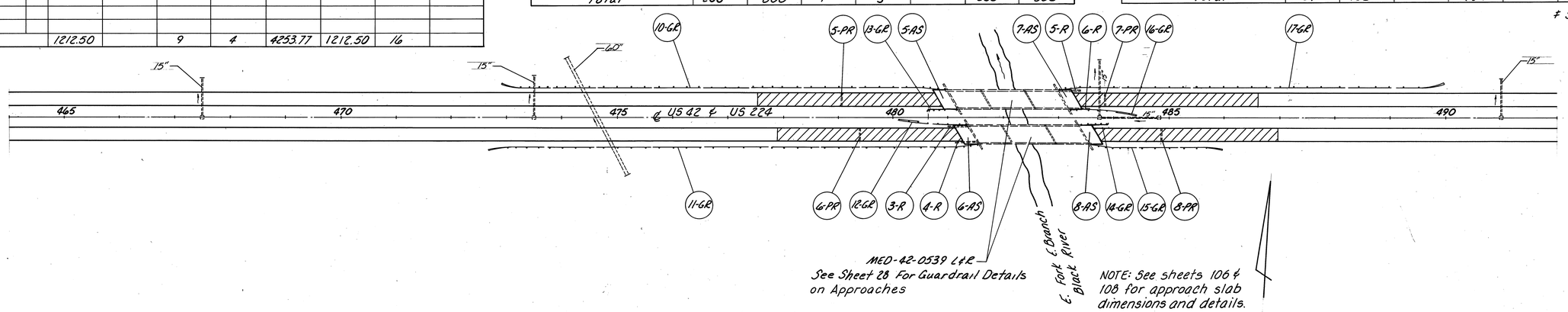

STA. 405+00 TO STA. 492+00

CALC. BY MED DATE 12-87	MED-42-1.89	OHIO	36/189
CHKD. BY AFS DATE 10-87	MED-224-10.45	FHWA REGION 5	

See Sheet 42A for guardrail and related work on approaches of S.R. 83 overpass.

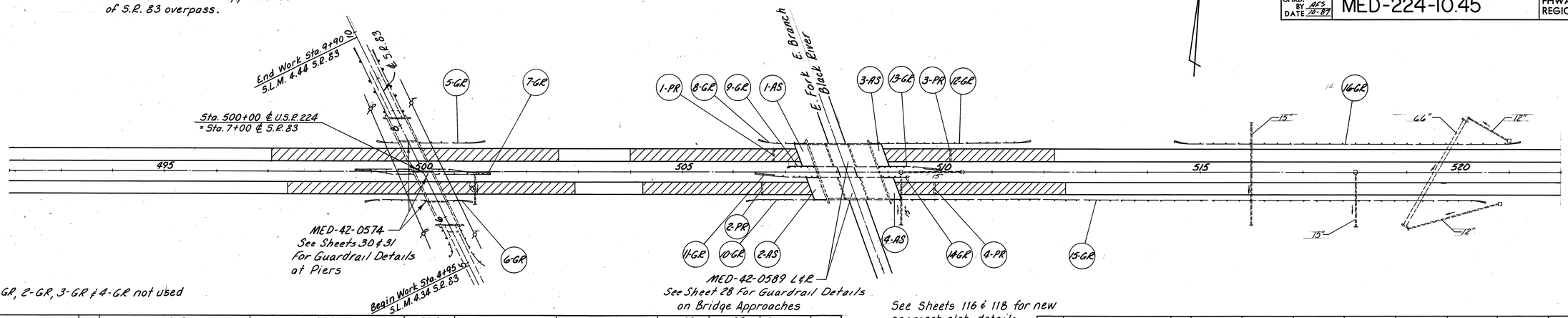

NOTE: 1-GR, 2-GR, 3-GR & 4-GR not used

See Sheets 116 & 118 for new approach slab details and dimensions.

Reference No.	Station Limits From	Station Limits To	Side	202 Guardrail Removed for Re-Use	202 Anchor Post Removed, As Per Plan	202 Guardrail Removed	606 Anchor Assembly, Type T	606 Guardrail, Type 5	606 Raising Guardrail, Type 5	606 Guardrail Rebuilt Type 5	202 Guardrail Removed, Barrier Design	606 Bridge Terminal Assembly Type B	606 Bridge Terminal Assembly Type A	203 Excavation Not Including Embankment Construction	203 Embankment	659 Seeding And Mulching	622 Concrete Barrier, Type D	Special Reshaping Berms	Reference No.
				Lin. Ft.	Each	Lin. Ft.	Ea.	L.F.	Lin. Ft.	Lin. Ft.	Lin. Ft.	Each	Each	Cu. Yd.	Cu. Yd.	Sq. Yd.	Lin. Ft.	Lin. Ft.	
5-GR	499+04±	501+17±	Lt.	50.0	1	112.5			25.0	50.0			1				70	43	5-GR
6-GR	498+83±	500+96±	Rt.	50.0	1	112.5			25.0	50.0			1				70	43	6-GR
7-GR	498+56±	501+44±	Med.	225.0		250.0		75		225.0	50.0			111	20	703			7-GR
8-GR	506+48±	507+41.34	Lt.	68.75						68.75		1							8-GR
9-GR	507+14±	507+57.36	Lt.	43.75			1			43.75		1							9-GR
10-GR	506+24±	507+80.65	Rt.	43.75	1				87.5	43.75		1							10-GR
11-GR	506+33±	507+64.64	Rt.	43.75	1				25.0	43.75		1							11-GR
12-GR	508+66.34	511+73±	Lt.	68.75	1				212.5	68.75		1							12-GR
13-GR	508+82.35	510+14±	Lt.	43.75	1				25.0	43.75		1							13-GR
14-GR	508+89.63	509+21±	Rt.	31.25			1			31.25		1							14-GR
15-GR	509+05.65	520+49±	Rt.	43.75					1075.0	43.75		1							15-GR
														111	20	703	140	86	Total
16-GR	514+50±	521+25±	Lt.		1				625.0										
17-GR	534+25±	540+25	Lt.		1				550.0										
18-GR	Co. Rd. 31	542+50±	Rt.		1				887.5										
Total				712.50	9	475.00	2	75	3537.50	712.50	50.0	8	2						

Reference No.	Station Limits From	Station Limits To	Side	202 Wearing Course Removed	203 Excavation Not Including Embankment & Construction	202 Pavement Removed, (Exist. Approach Slab)	605 Aggregate Drain, As Per Plan ‡	611 Reinforced Concrete Approach Slab (T=15")	202 Concrete Sign Foundation Removed	Special Full Depth Rigid Pav't Removal and Flexible Replacement ‡	604 Catch Basin, Adjusted To Grade	203 Subgrade Compaction.
				Sq. Yd.	Cu. Yd.	Sq. Yd.	Lin. Ft.	Sq. Yd.	Each	Sq. Yd.	Each	Sq. Yd.
	C.R. 31											
1-R	10+90.93	10+98.43		27								
2-R	9+01.57	9+09.07		27								
3-R	533+65±								1			
1-D	533+65		Lt.								1	
1-AS	507+25.96	507+50.96	Lt.		31	67		122				122
2-AS	507+49.26	507+74.26	Rt.		31	67		122				122
3-AS	508+72.74	508+97.74	Lt.		31	67		122				122
4-AS	508+96.04	509+21.04	Rt.		31	67		122				122
1-PR	506+81±		Lt.				13			8		
2-PR	506+55±		Rt.				13			8		
3-PR	510+27±		Lt.				13			8		
4-PR	509+90±		Rt.				13			8		
Total				54	124	268	52	488	1	32	1	488

‡ See Detail on Sheet 26

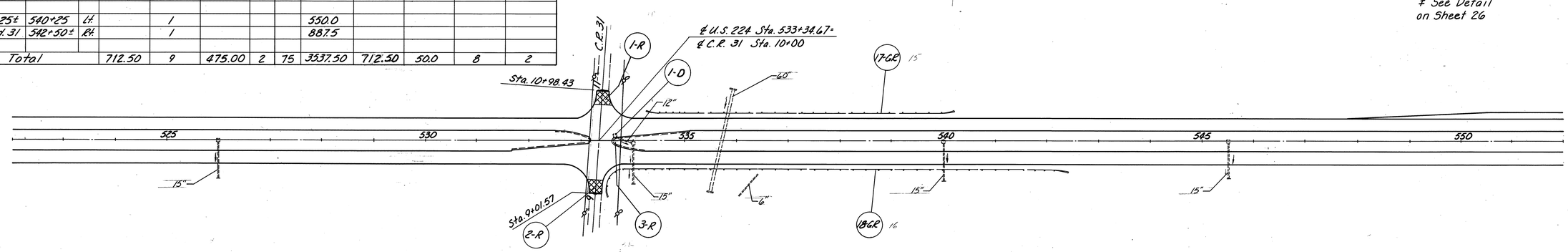

STA. 492+00 TO STA. 552+00

CALC. BY MED DATE 10-87	MED-42-1.89	OHIO
CHKD. BY AFS DATE 10-87	MED-224-10.45	FHWA REGION 5

Reference No.	Station Limits From	Station Limits To	Side	202 Guardrail Removed For Re-Use (Lin. Ft.)	202 Anchor Post Removed, As Per Plan (Each)	202 Guardrail Removed	202 Guardrail Removed, Barrier Design	606 Anchor Assembly, Type A	606 Raising Guardrail, Type 5 (Lin. Ft.)	606 Guardrail Rebuilt, Type 5 (Lin. Ft.)	606 Guardrail, Type 5 (Lin. Ft.)	606 Bridge Terminal Assembly	606 Bridge Terminal Assembly Type A (Each)	203 Excavation Not Including Embankment Construction (Cu. Yd.)	203 Embankment (Cu. Yd.)	659 Seeding And Mulching (Sq. Yd.)	622 Concrete Barrier, Type D (Lin. Ft.)	Special Reshaping Berms (Lin. Ft.)
1-GR	557+86±	560+11±	Rt.	50	1	125			25	50			1				85	40
2-GR	558+59±	561+59±	Med.	250		250	50			250	75			111	22	733		
3-GR	560+07±	562+32±	Rt.	50	1	125			25	50			1				85	40
	U.S. 42																	
4-GR	16+83±	18+08±	Lt.	100	1													
4-GR	16+80.85	18+06±	Lt.							100			1					
5-GR	17+22±	18+47±	Rt.	100	1													
5-GR	17+20.63	18+46±	Rt.							100			1					
6-GR	21+58±	22+83±	Lt.	100	1													
6-GR	21+54.37	22+79±	Lt.							100			1					
7-GR	21+94±	23+19±	Rt.	100	1			2										
7-GR	21+94.15	23+19±	Rt.							100			1					
8-GR	29+15±	31+53±	Lt.								237.5							
	Ramp D																	
9-GR	1+75±	5+00±	Rt.		1				262.5									
	Ramp B																	
10-GR	9+20±	10+70±	Rt.		1				87.5									
Total				750.00	8	500	50	2	400.00	750.00	312.50		6	111	22	733	170	80

Reference No.	Station Limits From	Station Limits To	Side	202 Wearing Course Removed (Sq. Yd.)	202 Curb Removed, As Per Plan (Lin. Ft.)	202 Median Pavement Removed, As Per Plan (Sq. Yd.)	604 Catch Basin, Adjusted To Grade (Each)	605 Aggregate Drain, As Per Plan (Lin. Ft.)		612 Concrete Median (Sq. Yd.)	Special Pressure Relief Joint, Type C. (Lin. Ft.)
	U.S.	42									
1-PR	17+60±							14			24
2-PR	22+80±							29			40
1-R	31+90	32+50		213							
	T.R.	149									
2-R	11+20.64	11+28.14		27							
3-R	9+24.63	9+32.13		27							
	RAMP B										
1-P	0+27	7+88.5	Lt.		766	146	3			293	
	RAMP C										
2-P	6+00	0+27 Ramp B	Lt.		800						
1-D	554+75±		Lt.				1				
2-D	573+11		Lt.				1				
Total				267	1566	146	5	43		293	64

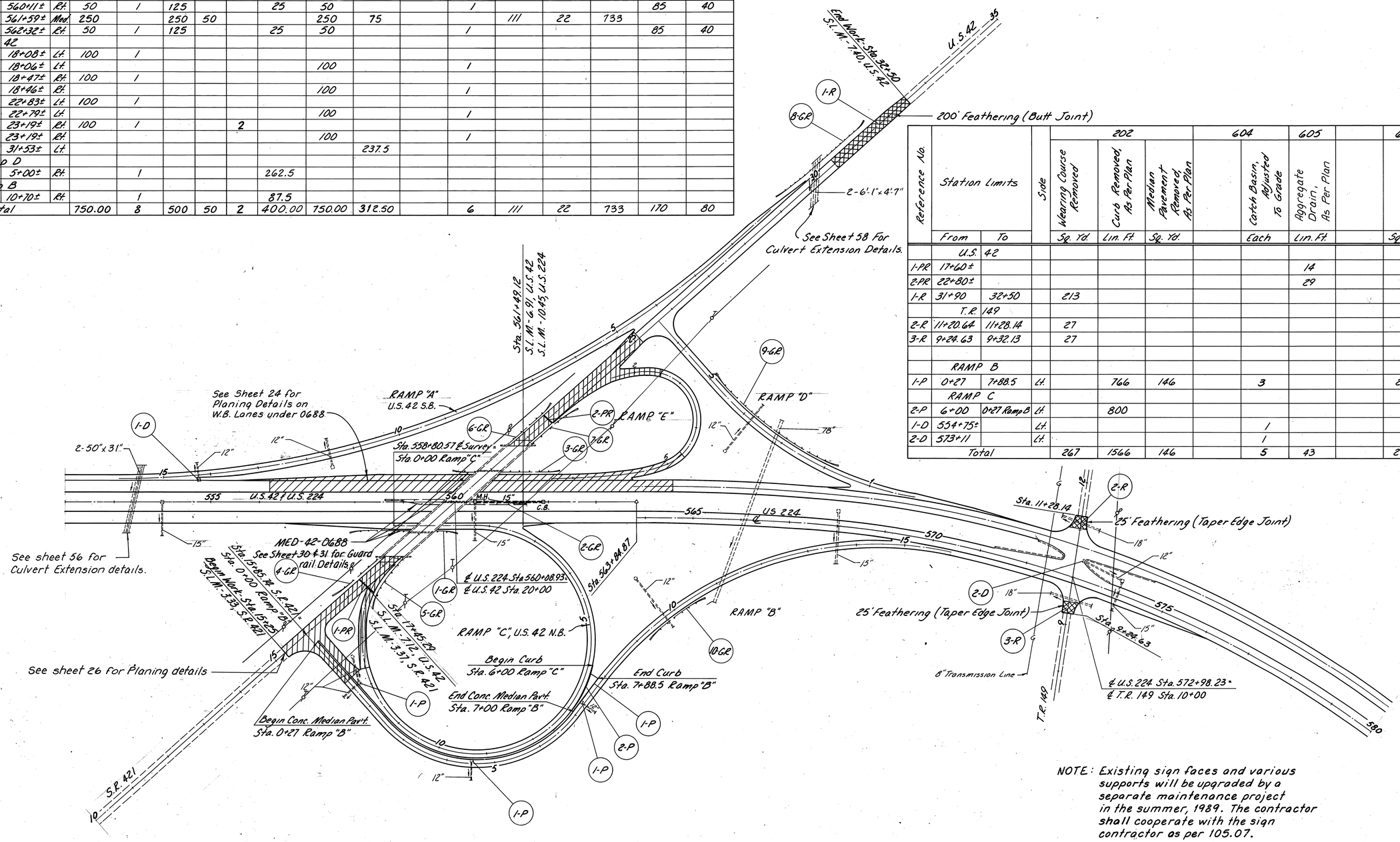

NOTE: Existing sign faces and various supports will be upgraded by a separate maintenance project in the summer, 1989. The contractor shall cooperate with the sign contractor as per 105.07.

STA. 552+00 TO STA. 580+00

CALC. BY MED DATE 10-87	MED-42-1.89	OHIO
CHKD. BY AFS DATE 10-87	MED-224-10.45	FHWA REGION 5

38/189

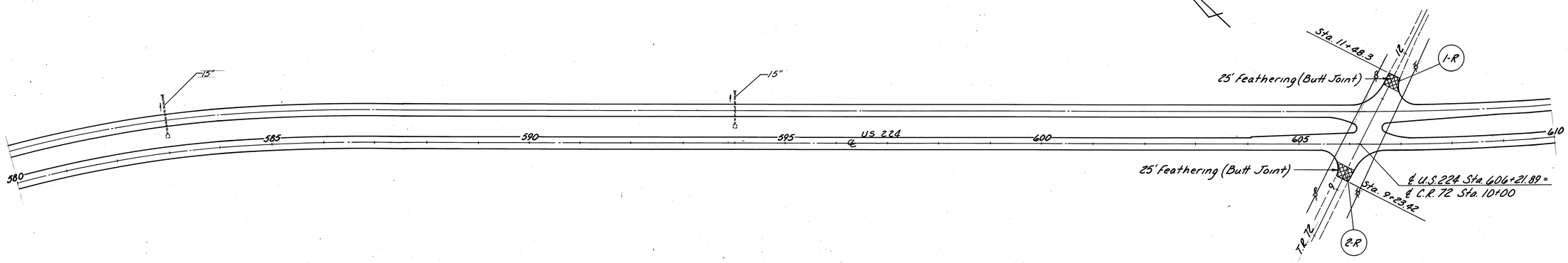

Reference No.	Station Limits From	Station Limits To	Side	Wearing Course Removed			
				202			
				Sq. Yd.			
	T.R.	72					
1-R	11+40.80	11+48.30		27			
2-R	9+23.42	9+30.92		27			
Total				54			

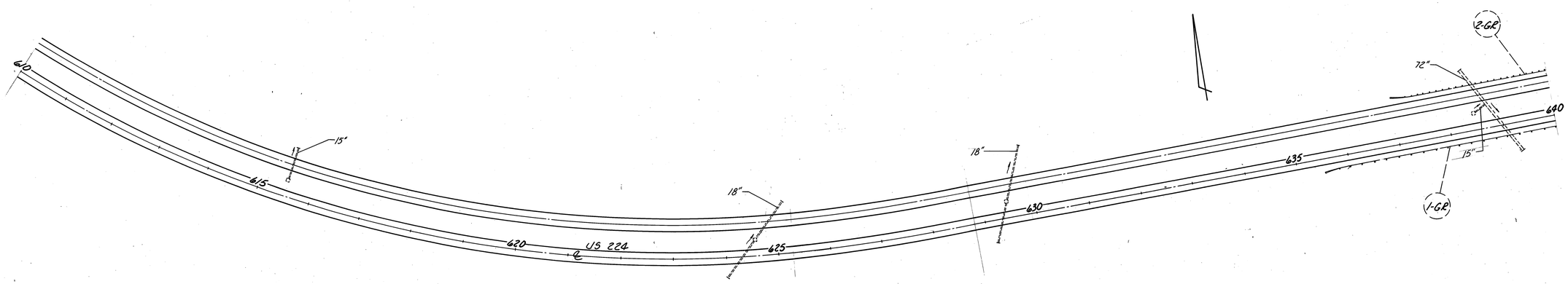

STA. 580+00 TO STA. 640+00

CALC. BY MCD DATE 10-87	MED-42-1.89	OHIO
CHKD. BY AFS DATE 10-87	MED-224-10.45	FHWA REGION 5

39 / 189

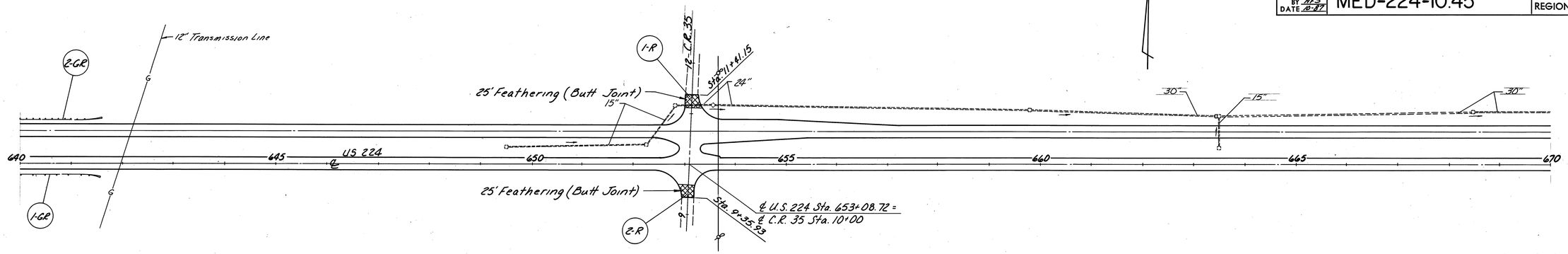

Reference No.	Station Limits From	Station Limits To	Side	202 Guardrail Removed For Re-Use	202 Anchor Post Removed, As Per Plan		606 Anchor Assembly, Type T	606 Raising Guardrail, Type 5	606 Guardrail Rebuilt, Type 5	606 Bridge Terminal Assembly Type B	
				Lin. Ft.	Each		Each	Lin. Ft.	Lin. Ft.	Each	
1-GR	635+50±	641+50±	Rt.		1			550.0			
2-GR	636+98±	641+60±	Lt.		1			412.50			
3-GR	678+42±	683+48.38	Rt.	68.75	1			412.50	68.75	1	
4-GR	680+36±	683+48.38	Lt.	62.50				225.0	62.50	1	
5-GR	682+17±	683+48.38	Lt.	31.25	1			25.0	31.25	1	
6-GR	682+98±	683+48.38	Lt.	50.00			1		50.00	1	
7-GR	684+79.63	686+11±	Lt.	68.75	1			37.50	68.75	1	
8-GR	684+79.63	685+30±	Lt.	50.00			1		50.00	1	
9-GR	684+79.63	686+11±	Lt.	31.25	1			25.0	31.25	1	
10-GR	684+79.63	693+55±	Rt.	62.50				787.50	62.50	1	
Total				425.00	6		2	2075.00	425.00	8	

Reference No.	Station Limits From	Station Limits To	Side	202 Wearing Course Removed	202 Pavement Removed	203 Excavation Not Including Embankment Construction	605 Aggregate Drain, As Per Plan	611 Reinforced Concrete Approach Slab (T=15")	203 Subgrade Compaction	Special Pressure Relief Joint, Type C
				Sq. Yd.	Sq. Yd.	Cu. Yd.	Lin. Ft.	Sq. Yd.	Sq. Yd.	Lin. Ft.
	C.R. 35									
1-R	11+33.65	11+41.15		27						
2-R	9+35.93	9+43.43		27						
1-AS	683+25.00	683+50.00	Lt.		67	26		111	111	
2-AS	683+25.00	683+50.00	℄		67	31		122	122	
3-AS	684+78.00	685+03.00	Lt.		67	26		111	111	
4-AS	684+78.00	685+03.00	℄		67	31		122	122	
1-PR	682+55±		Lt.				13			24
2-PR	682+54±		℄				13			24
3-PR	685+75±		Lt.				13			24
4-PR	685+74±		℄				15			24
Total				54	268	114	54	466	466	96

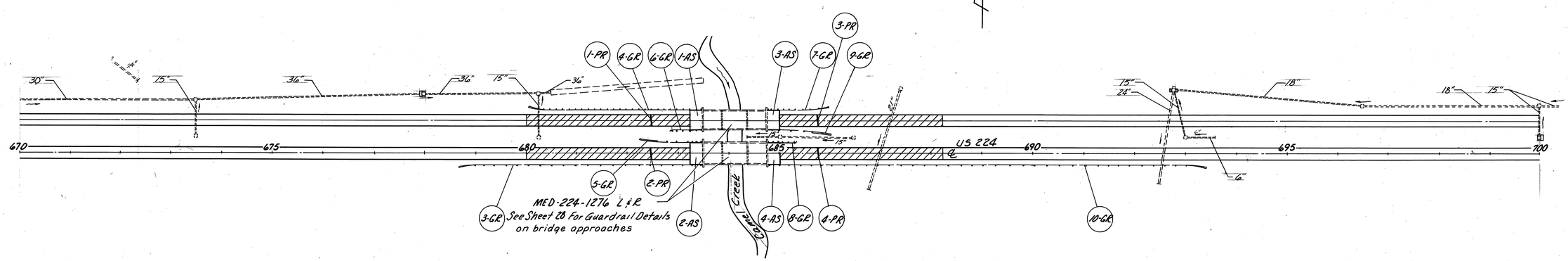

See Sheets 125, 127 & 128 for approach slab dimensions and details. See Sheet 25 for planing details on bridge approaches.

STA. 640+00 TO STA. 700+00

CALC. BY MED DATE 10-87	MED-42-1.89	OHIO
CHKD. BY AFS DATE 10-87	MED-224-10.45	FHWA REGION 5

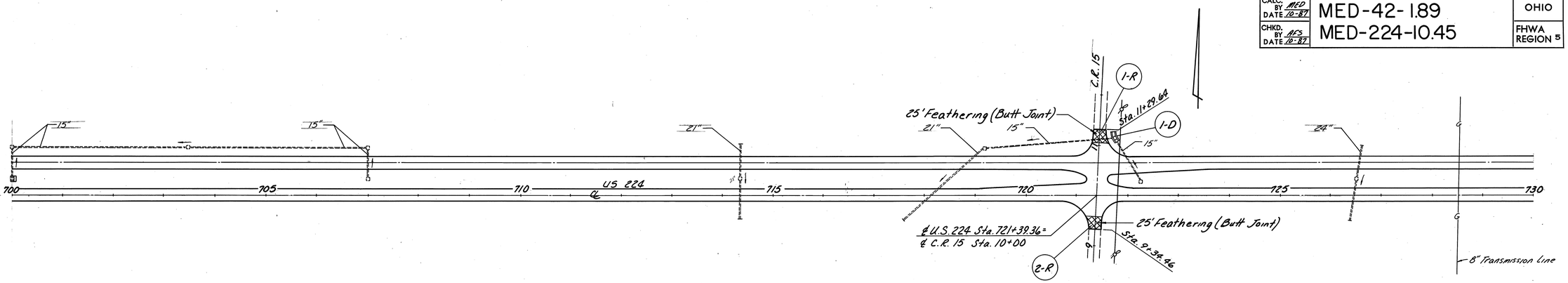

Reference No.	Station Limits From	Station Limits To	Side	202 Wearing Course Removed, Sq. Yd.		604 Catch Basin, No. 5, As Per Plan Each		
	C.R. 15							
1-R	11+22.14	11+29.64		27				
2-R	9+34.46	9+41.96		27				
	C.R. 57							
3-R	11+21.68	11+29.18		27				
4-R	9+46.97	9+54.47		27				
1-D	721+75		Lt.			1		
Total				108		1		

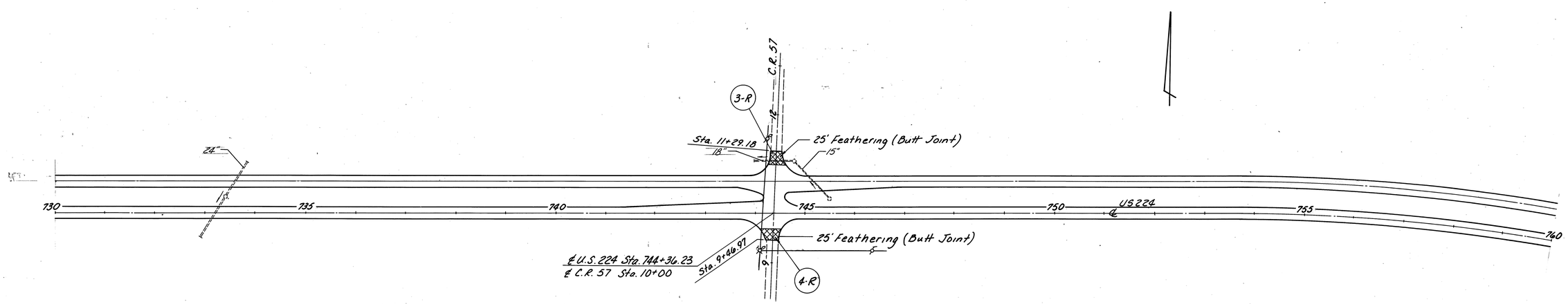

STA. 700+00 TO STA. 760+00

CALC. BY MED DATE 10-87	MED-42-1.89	OHIO
CHKD. BY AFS DATE 10-87	MED-224-10.45	FHWA REGION 5

41 / 189

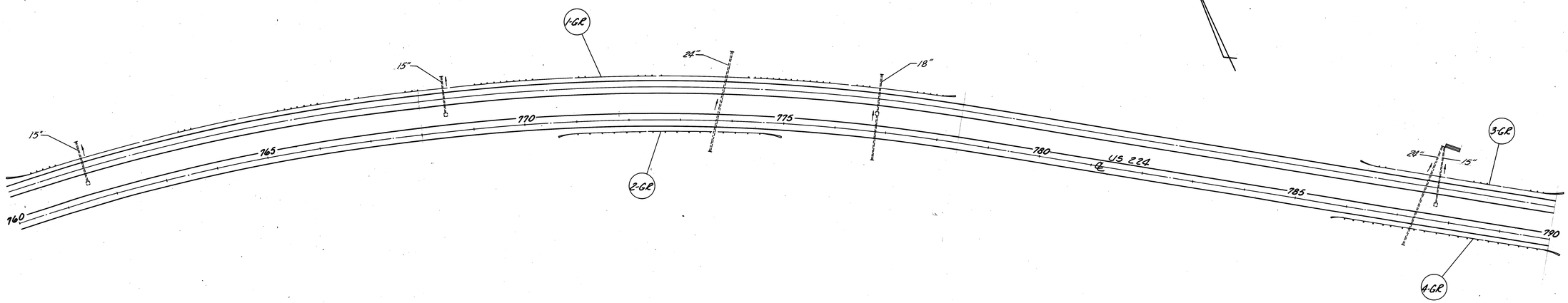

Reference No.	Station Limits From	Station Limits To	Side		202 Anchor Post Removed As Per Plan	605 Aggregate Drains, As Per Plan	SPECIAL Pressure Relief Joint, Type C	606 Raising Guardrail, Type 5
					Each	Lin. Ft.	Lin. Ft.	Lin. Ft.
1-GR	760+00±	777+87±	Lt.		1			1775.00
2-GR	770+65±	774+92±	Rt.		1			375.00
3-GR	786+13±	790+13±	Lt.		1			350.00
4-GR	785+75±	790+25±	Rt.		1			400.00
1-P	817+50		℄			10	24	
Total					4	10	24	2900.00

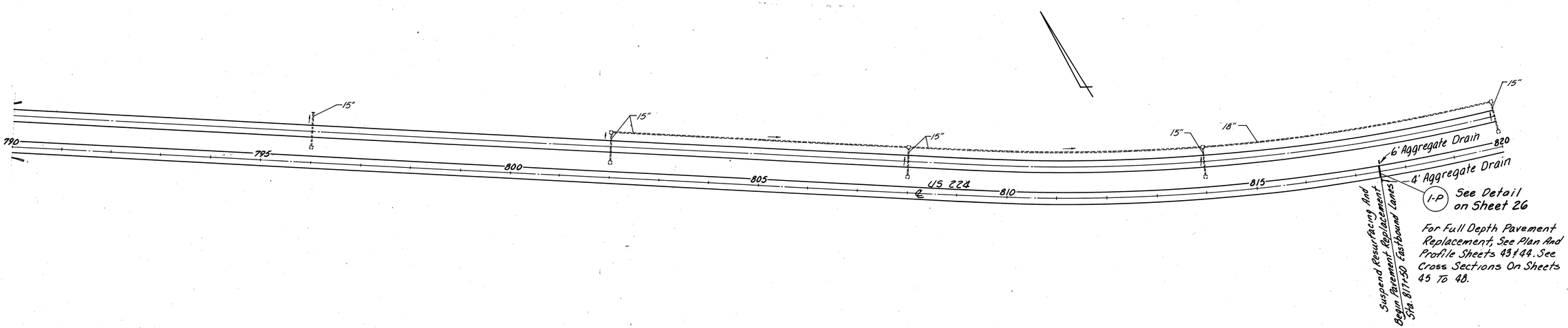

For Full Depth Pavement Replacement, See Plan And Profile Sheets 43 & 44. See Cross Sections On Sheets 45 To 48.

STA. 760+00 TO STA. 820+00

CALC. BY MCD DATE 10-87	MED-42-1.89	OHIO
CHKD. BY AFS DATE 10-87	MED-224-10.45	FHWA REGION 5

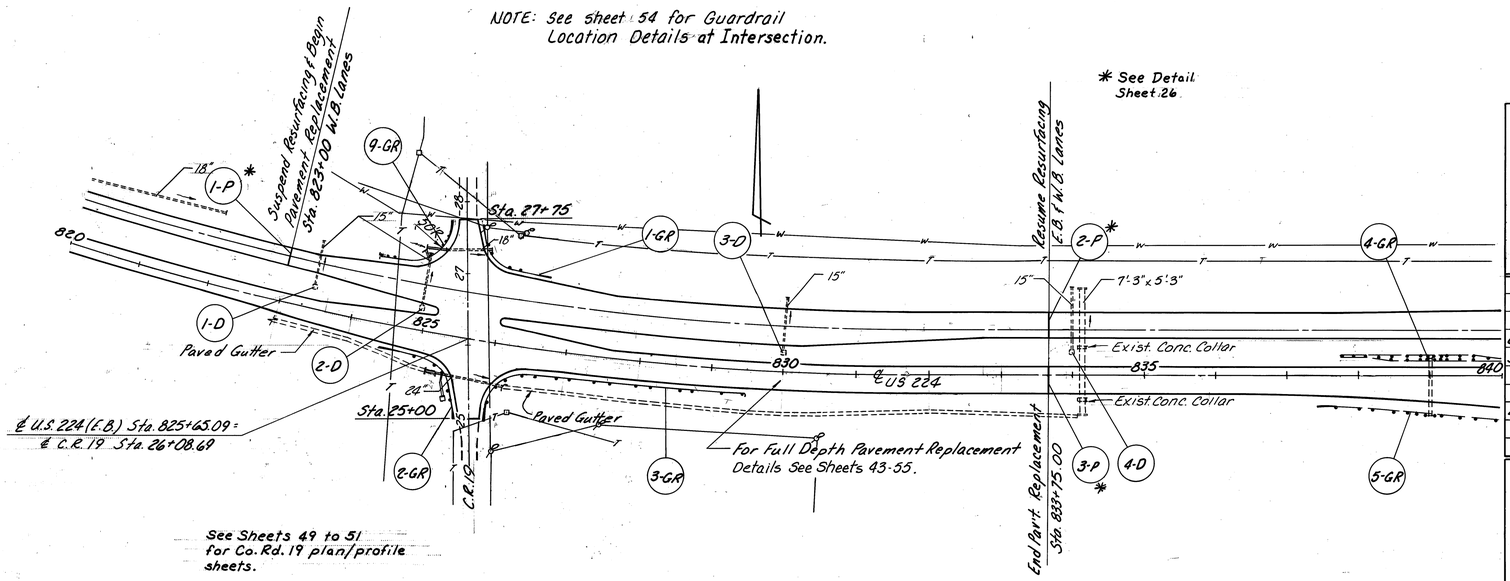

Reference No.	Station Limits From	Station Limits To	Side	Wearing Course Removed (202) Sq. Yd.
	Ramp	D		
1-R	12+01.82	14+01.82	Lt.	147
2-R	850+85.64	852+85.64	℄	240
3-R	852+49.93	854+49.93	Lt.	240
	Ramp	F		
4-R	14+03.08	14+28.08	Lt.	18
	Totals			645

Reference No.	Station Limits From	Station Limits To	Side	Guardrail Removed (202) Lin. Ft.	Guardrail Removed For Re-Use (202) Lin. Ft.	Anchor Post Removed As Per Plan (202) Each	Guardrail Removed, Barrier Design (202) Lin. Ft.	Guardrail Type 5 (606) Lin. Ft.	Anchor Assembly Type A (606) Each	Anchor Assembly Type T (606) Each	Excavation Not Including Embankment Construction (203) Cu. Yd.	Embankment (203) Cu. Yd.	Seeding And Mulching (659) Sq. Yd.	Intermediate Guardrail Posts (606) Each	Guardrail Rebuilt, Type 5 (606) Lin. Ft.	Raising Guardrail, Type 5 (606) Lin. Ft.
1-GR	27+66±	830+64±	Lt.	43.75	87.5											
1-GR	27+66±	826+70±	Lt.						2						87.5	
2-GR	824+80±	25+01±	Rt.	50	75											
2-GR	824+80±	25+01±	Rt.						2						75	
3-GR	24+86±	829+50±	Rt.	50	37.5											
3-GR	24+86±	829+50±	Rt.						1	1					37.5	
4-GR	837+75±	840+00±	Lt.											6		
9-GR	824+99±	27+70±	Lt.					62.5	1	1						
	Ramp	D														
5-GR	9+00±	14+02±	Rt.			1								3		
6-GR	843+94±	846+19±	Rt.	75	50	1									50	25
7-GR	844+18±	846+81±	Lt.	225	275		50	75			111	24	764		275	
	Ramp	F														
8-GR	13+77±	16+02±	Rt.	75	50	1									50	25
	Totals			912.50	912.50	3	50.00	137.50	6	2	111	24	764	9	912.50	50.00

END RESURFACING AND WORK
Sta. 854+49.93
W.B. LANES

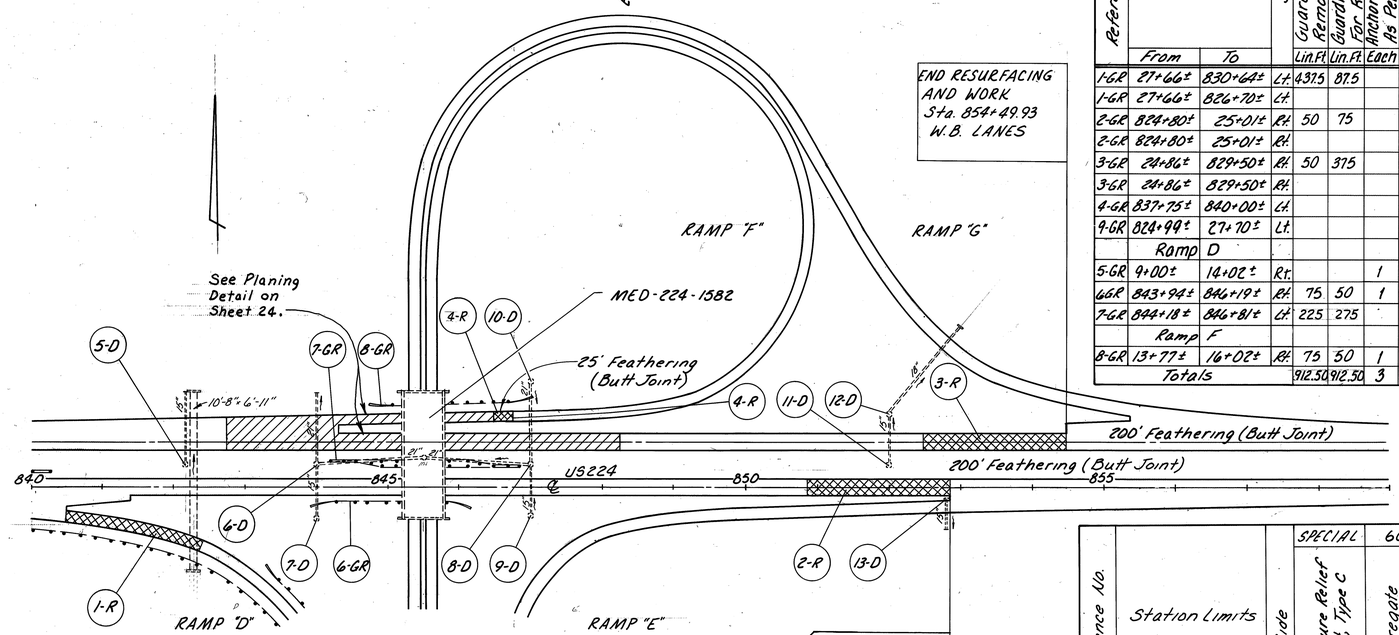

F-51(70)
END PROJECT
Sta. 852+85.84
E.B. LANES
S.L.M.-15.97, U.S. 224

See sheets 30 & 31 for guardrail details at MED-224-1582 Piers

NOTE: Existing Sign Fares and various supports will be upgraded by a separate maintenance project in the summer, 1989. The Contractor shall cooperate with the Sign Contractor as per 105.07.

Reference No.	Station Limits From	Station Limits To	Side	Catch Basin No. 5, With Grate B, As Per Plan (604) Each	Catch Basin No. 5, As Per Plan (604) Each	Catch Basin Adjusted To Grade (604) Each
1-D	823+44		Lt.	1		
2-D	824+94		Lt.	1		
3-D	830+00		Lt.	1		
4-D	834+00		Lt.	1		
5-D	842+17		Lt.	1		
6-D	844+00		Lt.	1		
7-D	844+00		Rt.		1	
8-D	847+00		Lt.	1		
9-D	847+00		Rt.		1	
10-D	847+00		Lt.		1	
11-D	852+00		Lt.	1		
12-D	852+00		Lt.		1	
13-D	852+80		Rt.			1
	Totals			8	4	1

Reference No.	Station Limits From	Station Limits To	Side	Pressure Relief Joint, Type C (SPECIAL) Lin. Ft.	Aggregate Drains As Per Plan (605) Lin. Ft.
1-P	823+00		Lt.	24	12
2-P	833+75		Lt.	36	12
3-P	833+75		℄	36	12
	Totals			96	36

STA. 820+00 TO STA. 859+00

Calc. By RJR 6/88
Chk'd. By RWS 6/88

MED-42-1.89
MED-224-10.45

42A
189

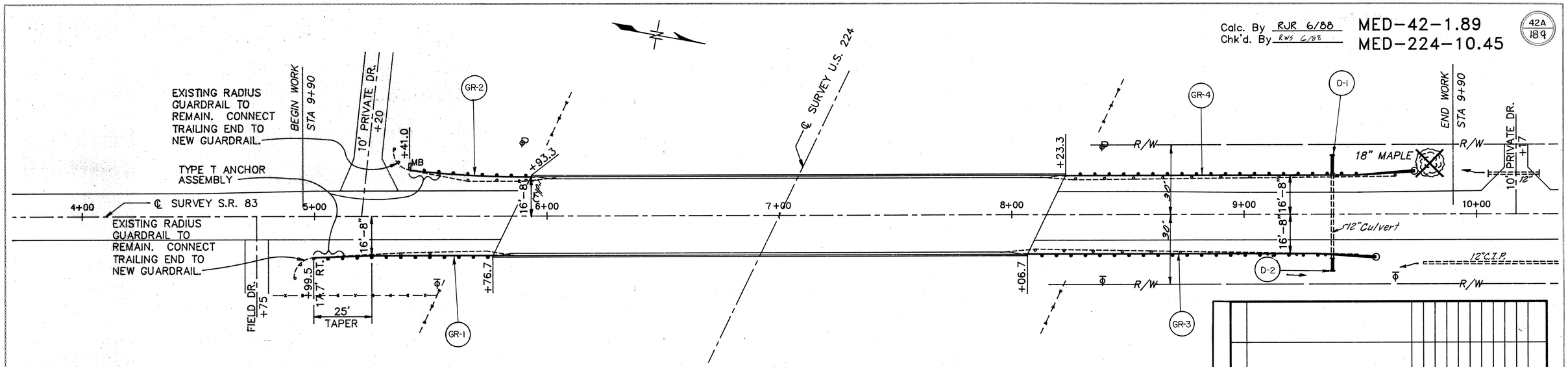

NOTE: NO EARTHWORK REQUIRED ON SHOULDERS FOR GUARDRAIL INSTALLATION AT SOUTH END OF BRIDGE.

B.M. – SPIKE IN TELEPHONE POLE @ STA. 4+20, RT. 30' ELEV. = 100.00 (ASSUMED)

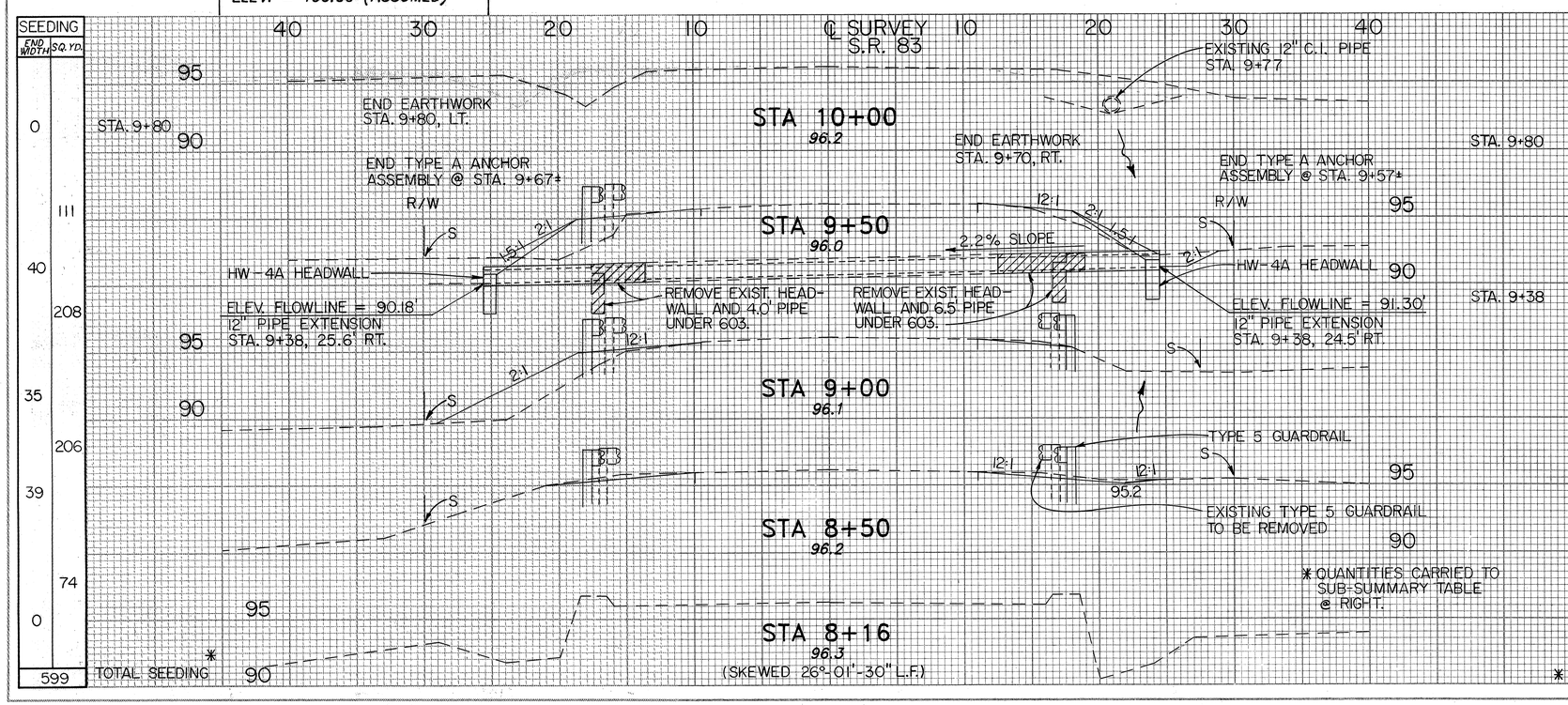

SEEDING END WIDTH	SQ. YD.
0	
40	111
	208
35	
	206
39	
	74
0	
	599

TOTAL SEEDING

EARTHWORK END AREA CUT	EARTHWORK END AREA FILL	EARTHWORK VOLUME CUT	EARTHWORK VOLUME FILL
0	0		
0	21	0	12
4	16	1	8
1	22	4	27
4	0	5	20
0	0	3	0
TOTALS		13	67

SUB-SUMMARY

603	12" CONDUIT, TYPE A	LIN.FT.					12.0	12.0			24.0
602	CONCRETE MASONRY	CU.YD.					0.21	0.21			0.42
606	BRIDGE TERMINAL ASSEMBLY, TYPE A	EACH	1	1	1	1					4
	ANCHOR ASSEMBLY, TYPE T		1	1							2
	ANCHOR ASSEMBLY, TYPE A				1	1					2
	GUARDRAIL, TYPE 5	LIN.FT.	64.70	39.80	125.00	125.00					354.50
659	SEEDING AND MULCHING	SQ.YD.									599
203	EXCAVATION NOT INCLUDING EMBANKMENT CONSTRUCTION	CU.YD.									13
	EMBANKMENT, AS PER PLAN										67
202	GUARDRAIL REMOVED	LIN.FT.	75.0	50.0	137.5	137.5					400.0
	STATION LIMITS OR LOCATION		GR-1 14+99.5 TO 5+76.7, RT.	GR-2 5+41.0 TO 5+93.3, LT.	GR-3 8+06.7 TO 9+56.7, RT.	GR-4 8+23.3 TO 9+72.3, LT.	D-1 9+38, LT.	D-2 9+38, RT.			
	REFERENCE MARK										

S.R. 83 OVERPASS GUARDRAIL

CALC. BY MED DATE 10-87	MED-42-1.89	OHIO	43
CHKD. BY AFS DATE 10-87	MED-224-10.45	FHWA REGION 5	189

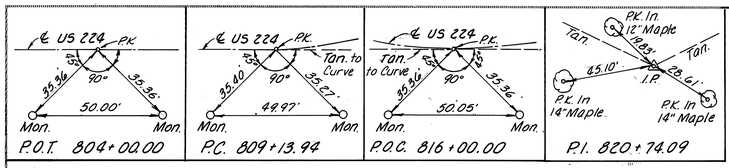

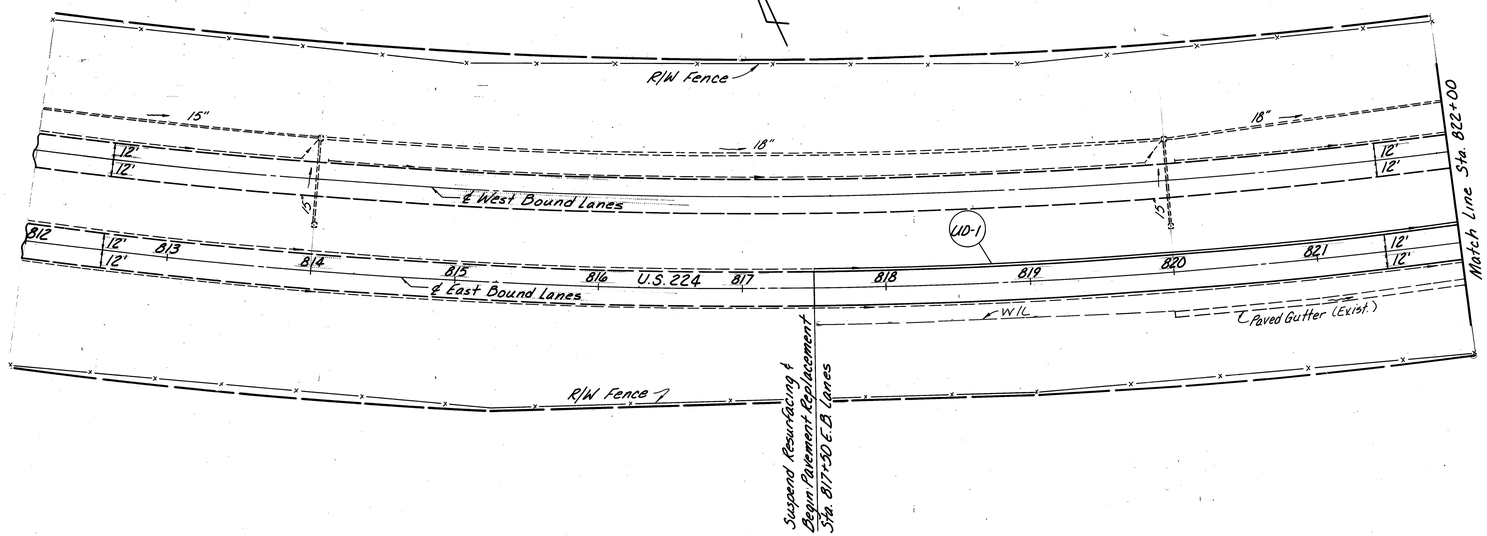

Reference No.	Station Limits From	Station Limits To	Side	605 6" Deep Pipe Underdrains As Per Plan Lin. Ft.		
UD-1	817+50	822+00	Lt.	450		
Totals				450		

See sheets 45-48 for Cross Sections

B.M. - Top of concrete monument at Sta. 815+75, 25' Rt. Elev. 1049.79

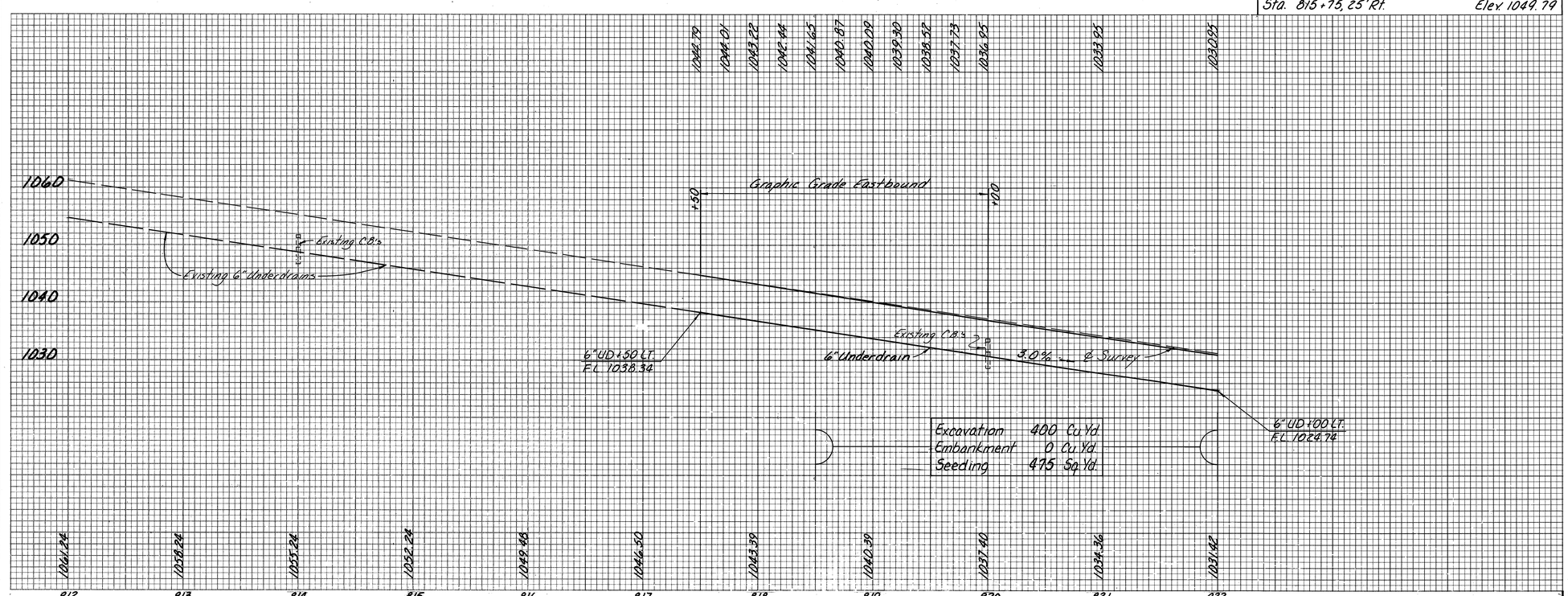

US. 224 STA. 812+00 TO STA. 822+00

CALC. BY MED DATE 10-87	MED-42-1.89	OHIO	44
CHKD. BY RFS DATE 10-87	MED-224-10.45	FHWA REGION 5	189

See sheet 50 for quantities for (1-P) (2-P) & (3-P)

CURVE DATA
P.I. = 820+74.09
Δ = 33°-04'-50" Lt.
D = 1°-28'
R = 3906.53'
T = 1160.15'
L = 2255.49'
E = 168.63'

*NOTE: Existing Signal System to be removed and replaced. See Sheets 182 to 189. See Sheet 13 for maintenance of traffic and signals during construction.

Place 1 Cu. Yd. R.C.P. Type C, With Filter (13'×1.5'×2.0') × 1/27 = 1.44 C.Y.

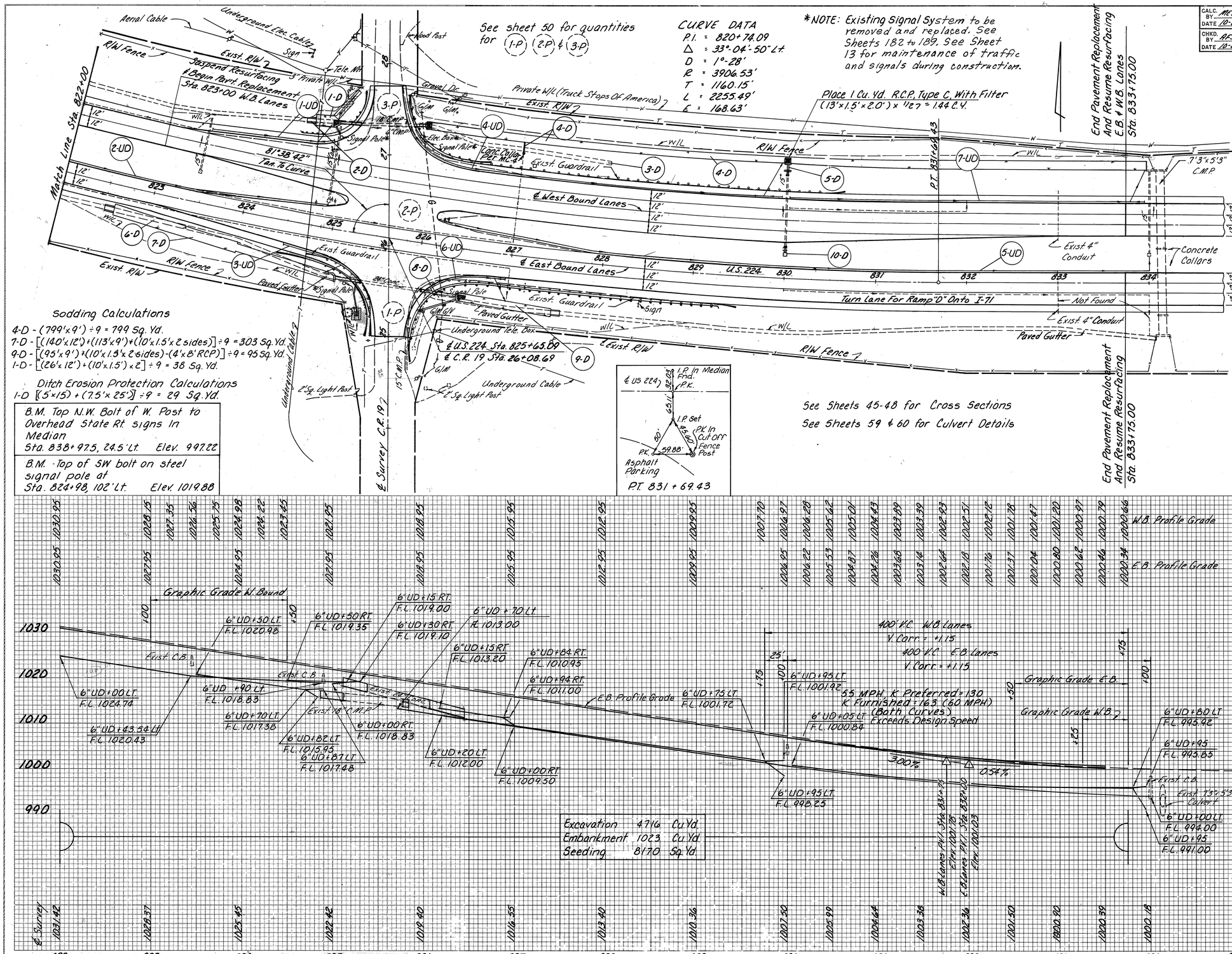

Sodding Calculations
4-D - (799'×9') ÷ 9 = 799 Sq. Yd.
7-D - [(140'×12') + (113'×9') + (10'×1.5'×2 sides)] ÷ 9 = 303 Sq. Yd.
9-D - [(95'×9') + (10'×1.5'×2 sides) - (4'×8' RCP)] ÷ 9 = 95 Sq. Yd.
1-D - [(26'×12') + (10'×1.5')×2] ÷ 9 = 38 Sq. Yd.

Ditch Erosion Protection Calculations
1-D [(5'×15) + (7.5'×25')] ÷ 9 = 29 Sq. Yd.

B.M. Top N.W. Bolt of W. Post to Overhead State Rt signs In Median
Sta. 838+97.5, 24.5' Lt. Elev. 997.22

B.M. Top of SW bolt on steel signal pole at Sta. 824+98, 102' Lt. Elev. 1019.88

Excavation 4716 Cu. Yd.
Embankment 1023 Cu. Yd.
Seeding 8170 Sq. Yd.

Reference No.	Station Limits From	Station Limits To	Side	Paved Gutter Removed Lin. Ft.	Catch Basin Or Inlet Removed Each	Paved Gutter Type 1-4 Lin. Ft.	Rock Channel Protection Type C, With Filter Cu. Yd.	Portions Of Structures Removed, Headwall Cu. Yd.	6" Conduit Type F Lin. Ft.	15" Conduit Type A, 106.01 Or 106.02 Lin. Ft.	Catch Basin As Noted As Per Plan Each	6" Shallow Pipe Underdrains As Per Plan Lin. Ft.	6" Underdrains As Per Plan Lin. Ft.	6" Deep Pipe Underdrains As Per Plan Lin. Ft.	Sodding Sq. Yd. 609	Ditch Erosion Protection Sq. Yd. 670	45° Branch Ea.	60° Branch Ea.	90° Branch Ea.
1-D	824+50	824+86	Lt.			10									38	29			
2-D	824+50	824+81	Lt.	31															
3-D	825+97	828+00	Lt.	203															
4-D	825+92	834+00	Lt.																
5-D	830+00		Lt.				1	0.3	10	12									
6-D	822+50	825+13	Rt.		263														
7-D	822+50	825+13	Rt.			10								799	303				
8-D	826+63	827+50	Rt.	87															
9-D	826+55	827+50	Rt.			10								95					
10-D	830+00		Lt.																
1-UD	823+50	824+88±	Lt.		1					8									1
2-UD	822+00	824+90±	Lt.						10									1	
3-UD	824+50	825+52±	Rt.						10										
4-UD	825+52±	829+15	Rt.						10										
5-UD	826+25	834+00	Lt.																
6-UD	826+15±	826+95	Rt.				1		10										
7-UD	830+05	833+95	Lt.			30	1	1	60	20		375	30	75	1235	29	1	1	7
Totals				584	1							905	45	993					

U.S. 224 STA. 822+00 TO STA. 835+00

Elev. 1 - 3-12-87 MED

CALC. BY: PLD DATE: 4/80	FED. RD. DIVISION	STATE	PROJECT	
CHKD. BY: SLM DATE: 7/80	2	OHIO		

45
183

MED-42-1.89
MED-224-10.45

SEEDING END WIDTH	SEEDING SQ. YDS.
3	
	33
3	
	111
17	
	189
17	
	94
17	
15	
10	

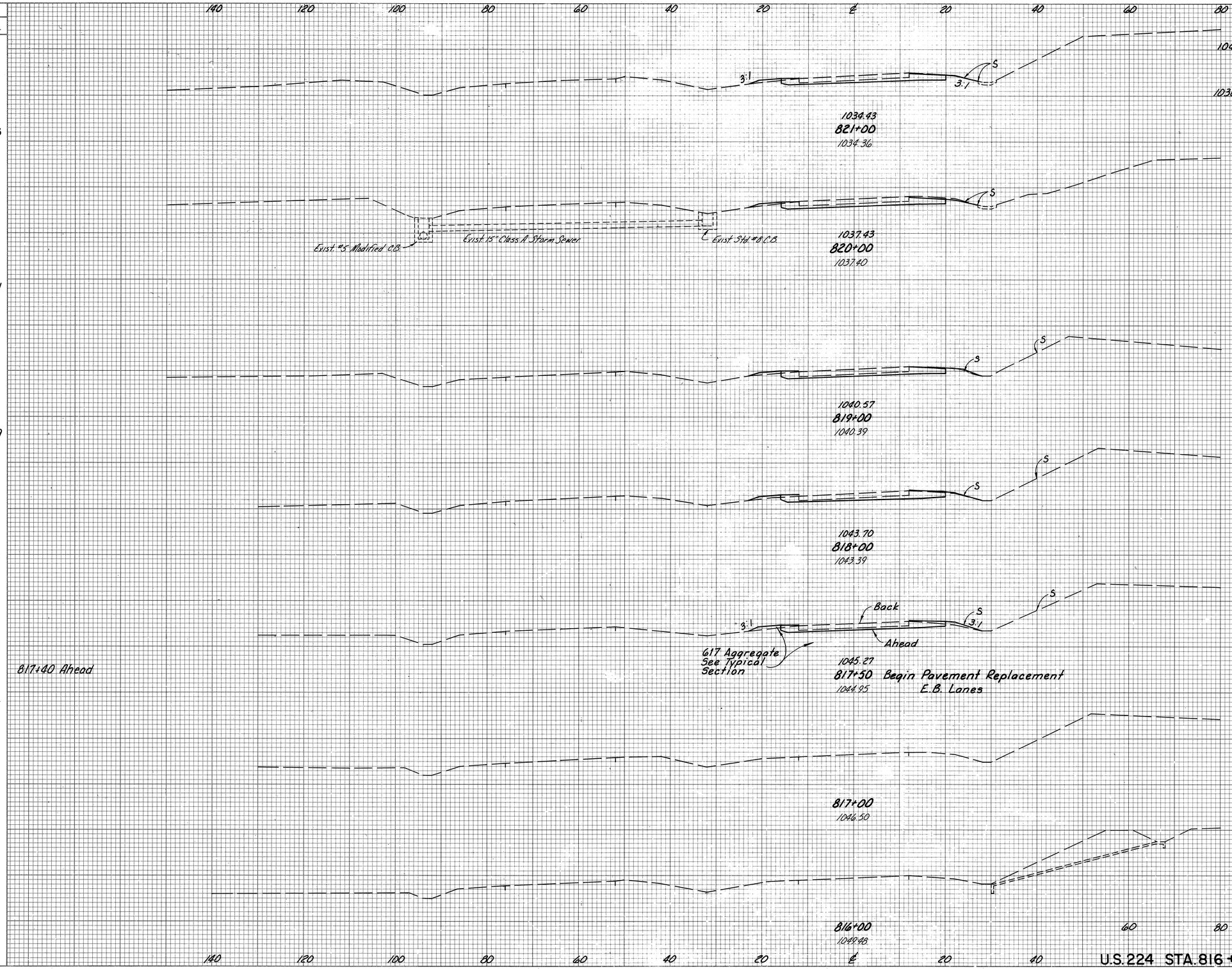

	END AREA CUT	END AREA FILL	VOLUME CUT	VOLUME FILL
	22	0		
			85	0
	24	0		
			89	0
	24	0		
			87	0
	23	0		
			22	0
Ahead	23	0		
Back	0	0		

BRUNING 44-131 38375

CALC. BY P.L.D. DATE 4/02	FED. RD. DIVISION	STATE	PROJECT	
CHKD. BY S.L.M. DATE 4/02	2	OHIO		

46/189

MED-42-1.89
MED-224-10.45

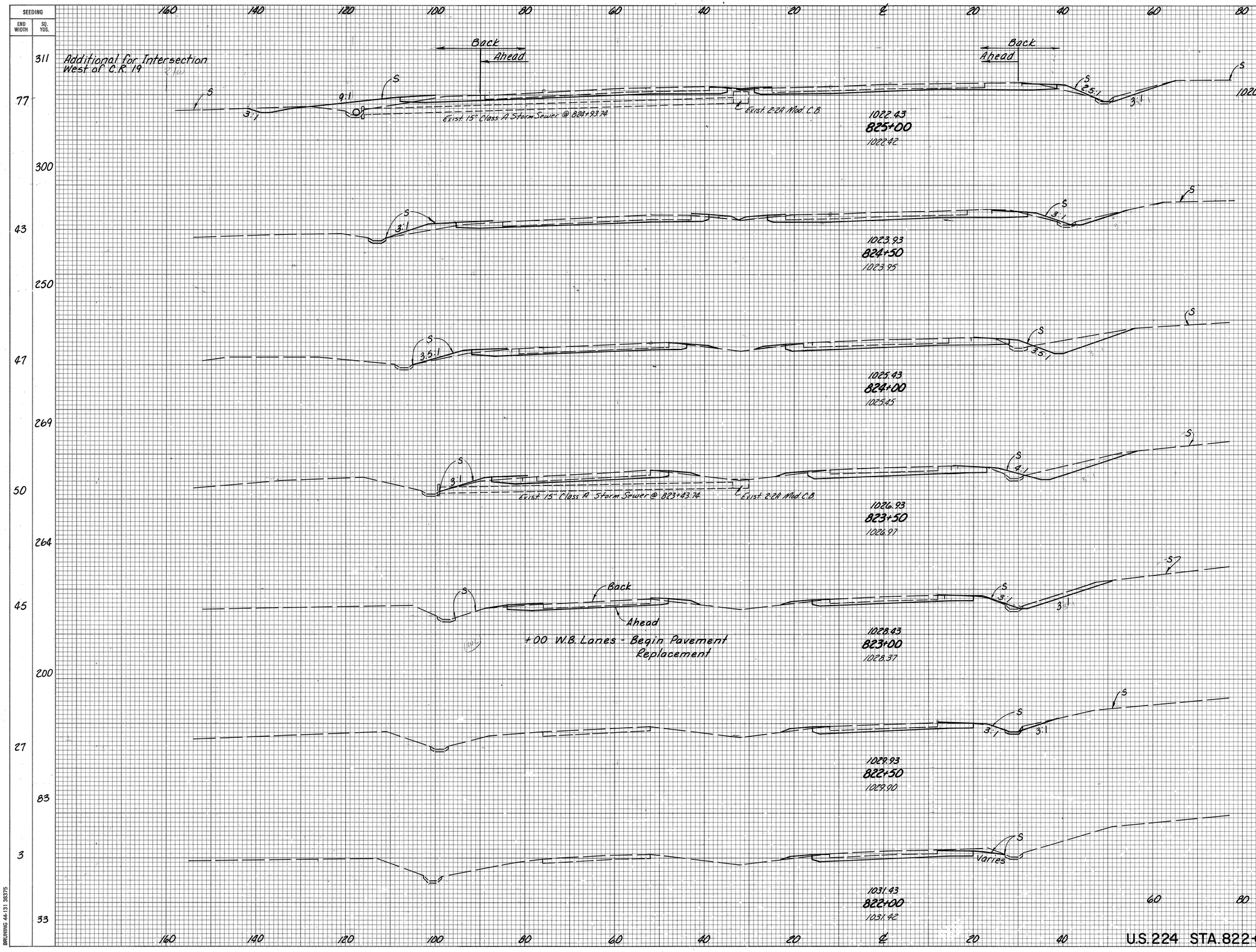

	END AREA CUT	END AREA FILL	VOLUME CUT	VOLUME FILL
Ahead	60	0		
Back	98	38		
			159	51
	74	17		
			161	24
	100	9		
			181	12
	96	4		
			146	4
Ahead	62	0		
Back	42	0		
			69	0
	32	0		
			68	0
	41	0		
			117	0

BRUNING 46-131 383715

CALC. BY PLD DATE 4/88	FED. RD. DIVISION	STATE	PROJECT	
CHKD. BY SLM DATE 4/88	2	OHIO		

47/189

MED-42-1.89
MED-224-10.45

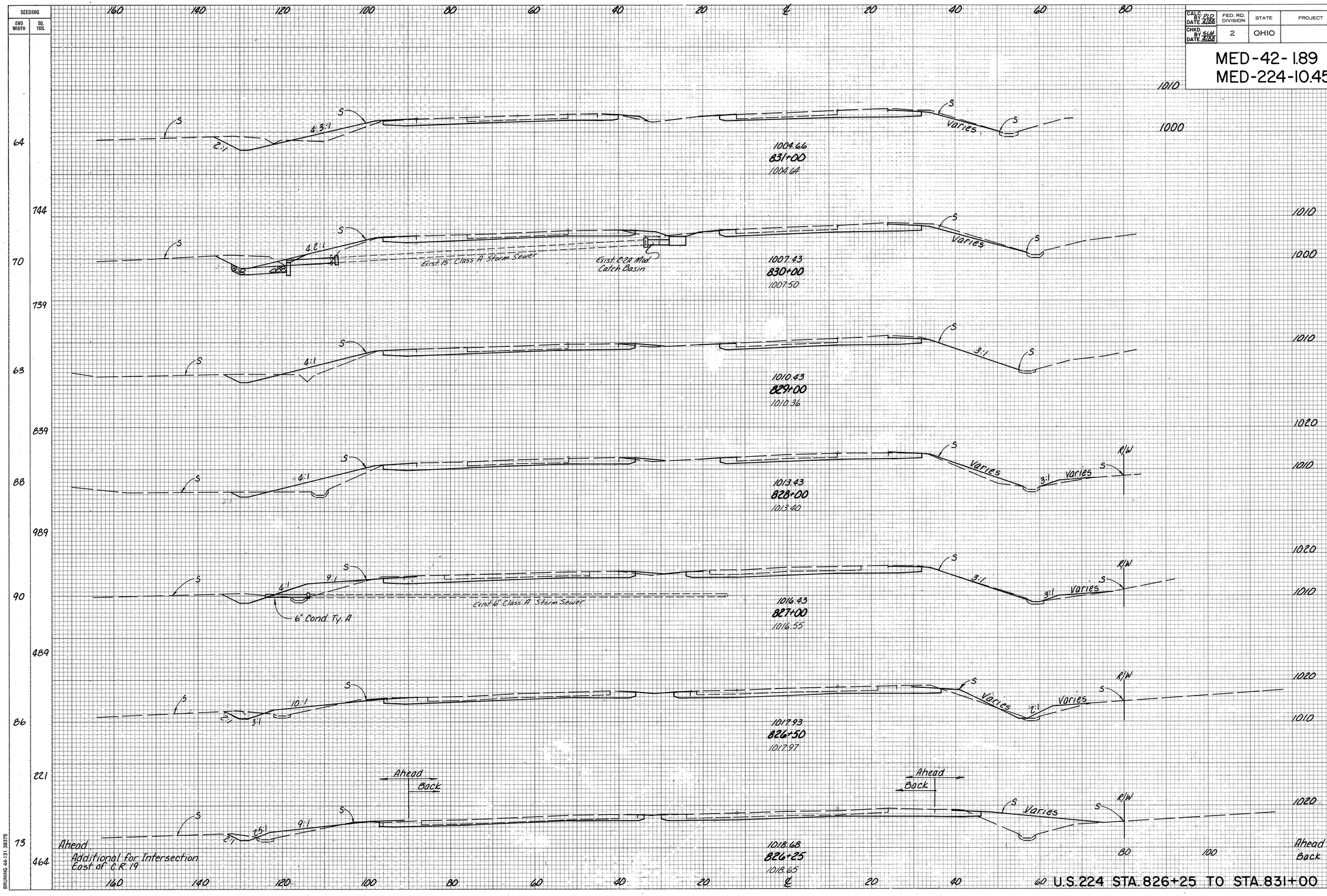

END AREA CUT	END AREA FILL	VOLUME CUT	VOLUME FILL
145	25		
		552	98
153	28		
		520	107
128	30		
		437	174
108	64		
		435	194
127	41		
		219	71
109	36		
		96	60
Ahead 98	94		
Back 72	0		
		305	0

BRUNING 46-131 38375

CALC. BY PLD DATE 4/06	FED. RD. DIVISION	STATE	PROJECT	
CHKD. BY SLM DATE 4/06	2	OHIO		

48/189

MED-42-1.89
MED-224-10.45

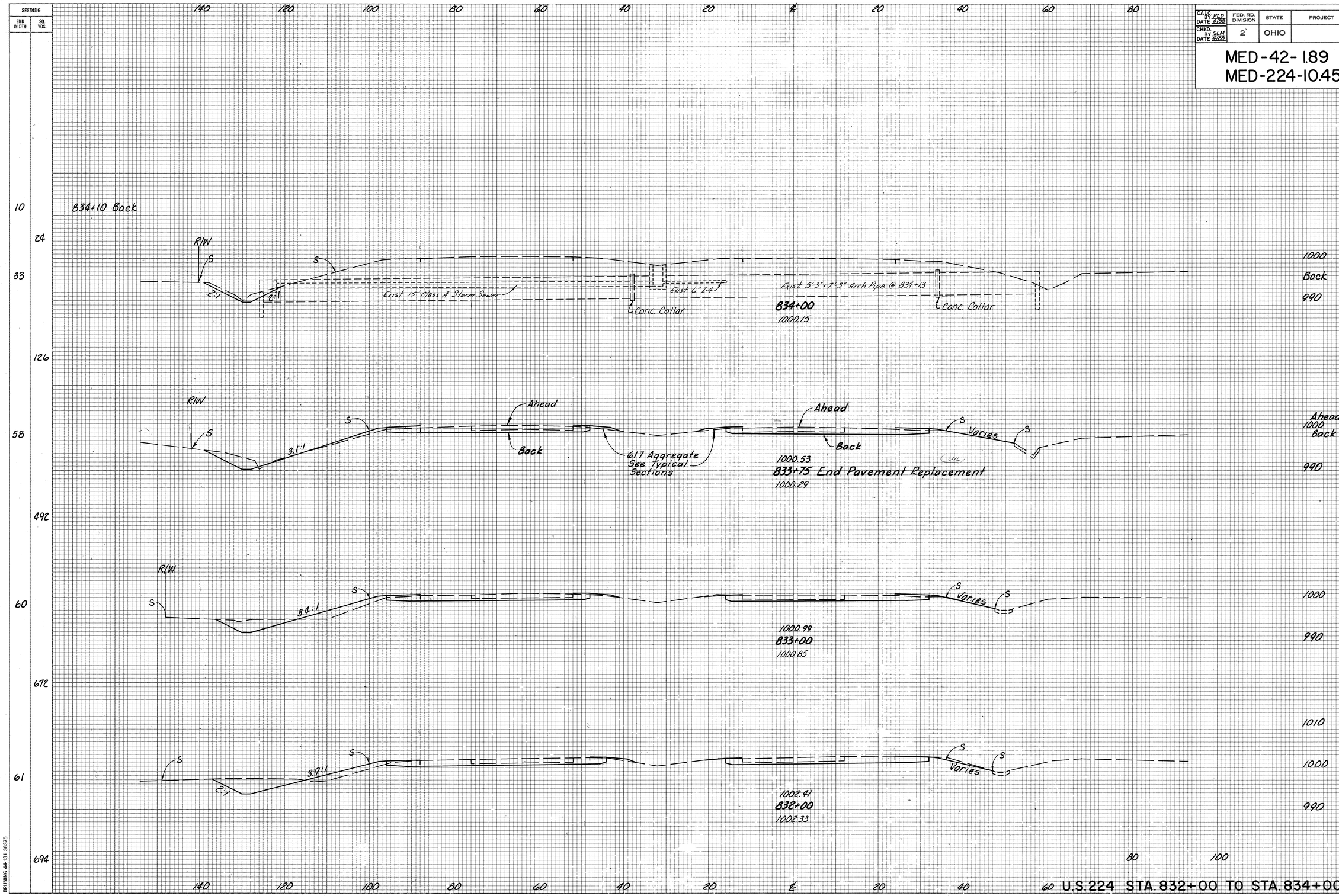

	END AREA CUT	END AREA FILL	VOLUME CUT	VOLUME FILL
1000 Back 990	15	0		
			52	4
Ahead 1000 Back 990	20 / 97	8 / 8		
			294	46
1000 990	115	25		
			483	89
1010 1000 990	146	23		
			539	89

BRUNING 44-131 38375

CALC. BY ____ DATE ____	MED-42-1.89	OHIO	49
CHKD. BY ____ DATE ____	MED-224-10.45	FHWA REGION 5	189

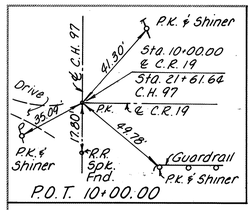

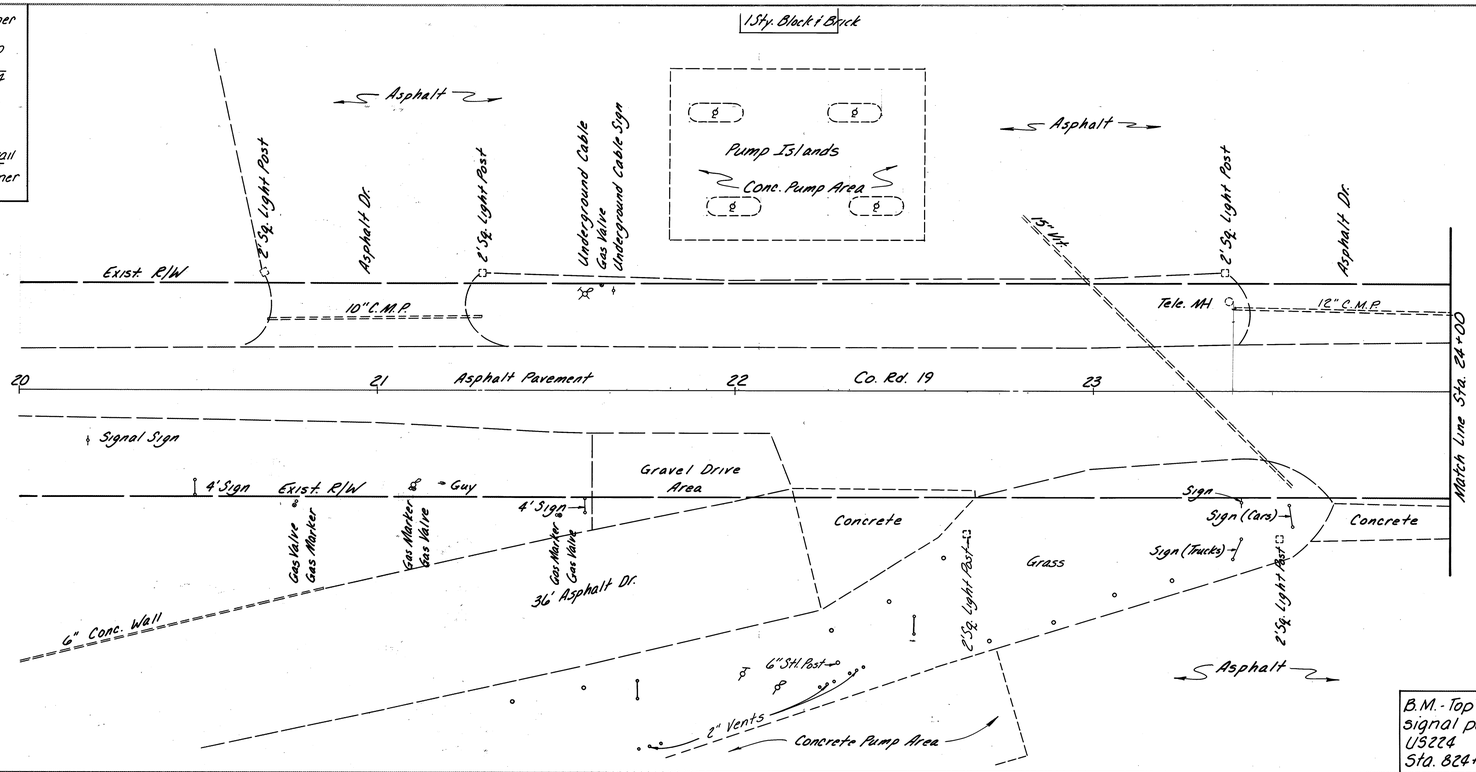

B.M. - Top of southwest bolt on steel signal pole
US224
Sta. 824+98, 102' Lt. Elev. 1019.88

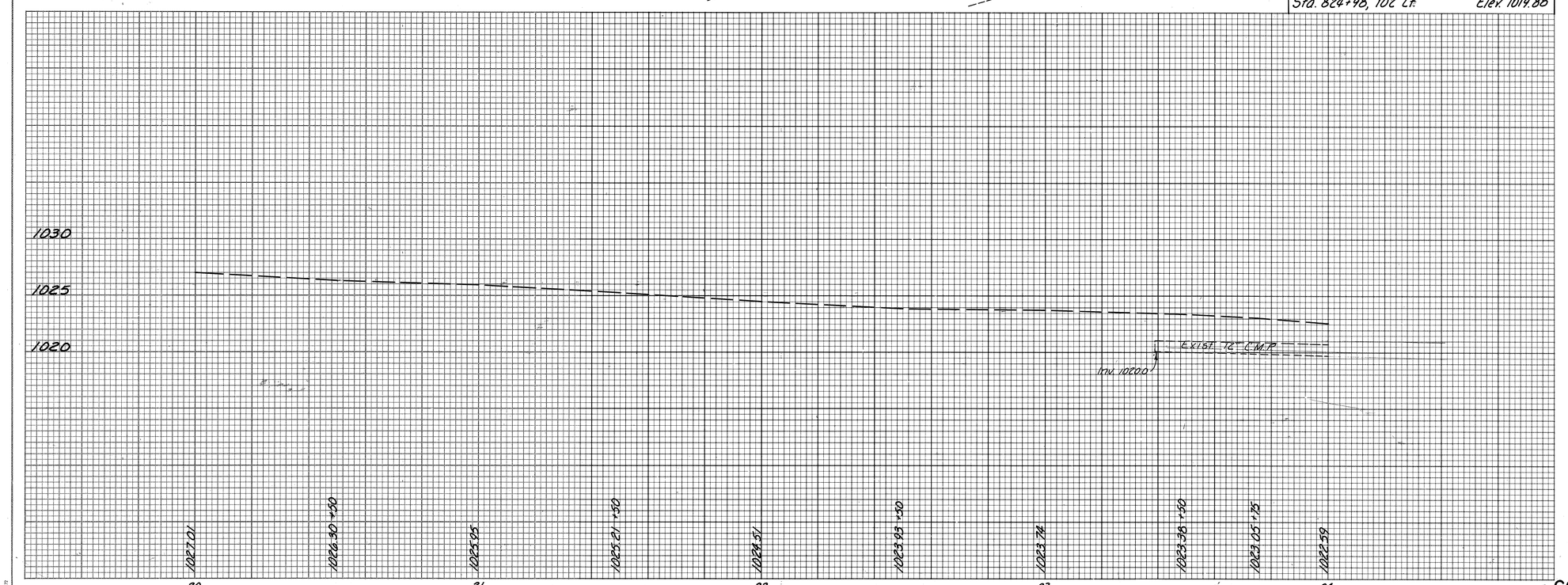

CO. RD. 19 STA. 20+00 TO STA. 24+00

CALC. BY MED DATE 10-87	MED-42-1.89	OHIO	50
CHKD. BY AFS DATE 10-87	MED-224-10.45	FHWA REGION 5	189

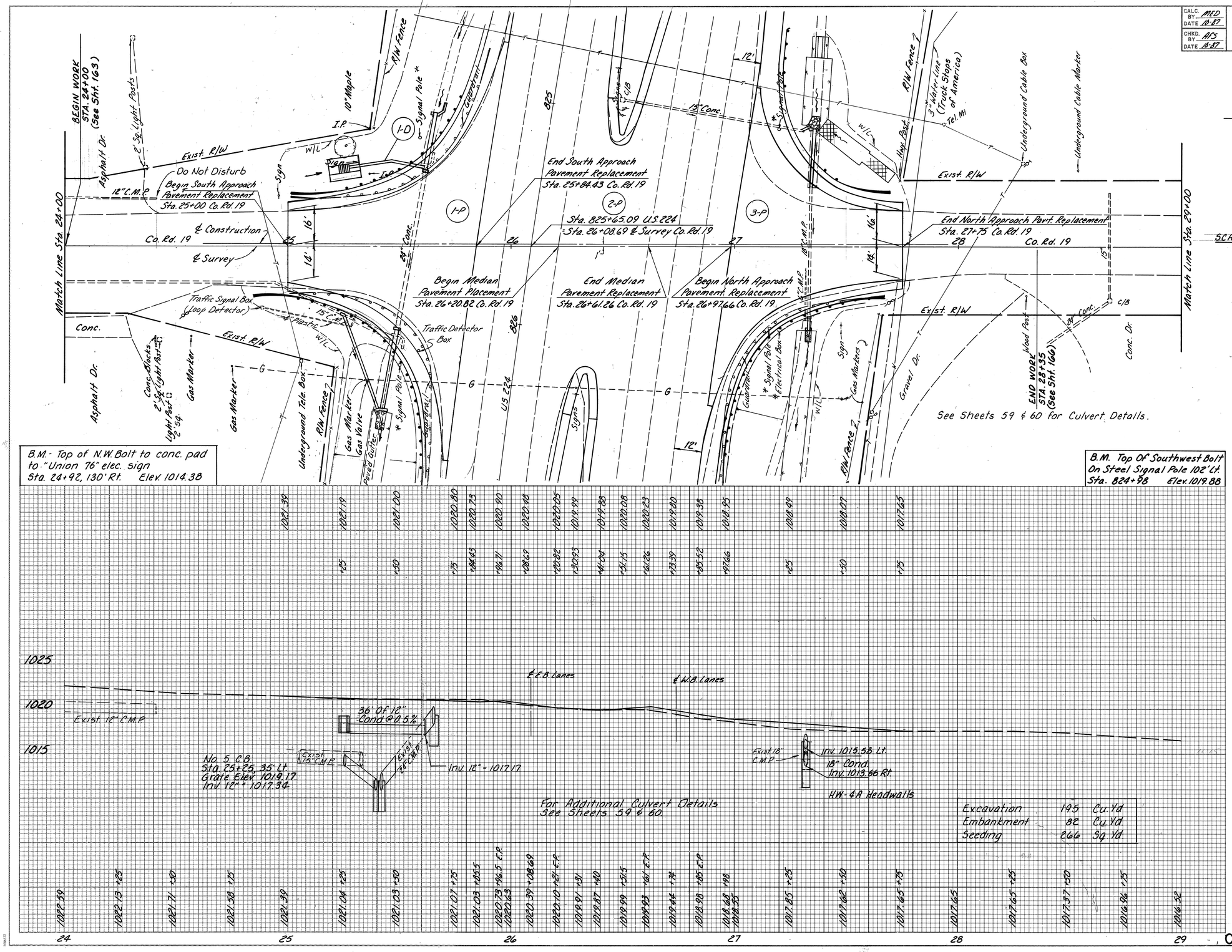

* NOTE: Existing signal system to be removed and replaced. See Sheets 182-189 for details and Sheet 13 for Maintenance of Traffic Requirements during construction phases.

SCALES FOR C.R. 19:

PLAN & PROFILE: Horizontal 0 10 20 40; Vertical 0 5 10

CROSS-SECTIONS: Horizontal 0 5 10; Vertical 0 5 10

Reference No.	Station Limits From	Station Limits To	Side	202 Pavement Removed Sq. Yd.	304 Aggregate Base, As Per Plan Cu. Yd.	451 18" Reinforced Concrete Pavement, As Per Plan Sq. Yd.	452 Var. Thickness Plain Conc. Pavement As Per Plan Sq. Yd.	607 Compacted Aggregate Cu. Yd.	603 12" Conduit Type A 706.01 or 706.02 Lin. Ft.	604 Catch Basin Alo 5 Each	
	C.R.	19									
1-P	25+00	25+84.43	South	447	135	636	176	8			
2-P	26+20.82	26+61.26	Med.	922	185	872	238	12	36	1	
3-P	26+97.66	27+75	North	446	108	493	155	7			
1-D	25+25±	25+61±	Lt.								
Totals				1815 ⊙	428 ⊙	2001 ⊙	569 ⊙	36 ⊙	36 ≠	1 ≠	

⊙ Quantities Carried To Calculations Sheet 18
≠ Quantities Carried To Sheet No. 16

Excavation	195	Cu. Yd.
Embankment	82	Cu. Yd.
Seeding	266	Sq. Yd.

CO. RD. 19 STA. 24+00 TO STA. 29+00

CALC. BY ____ DATE ____	MED-42-1.89	OHIO
CHKD. BY ____ DATE ____	MED-224-10.45	FHWA REGION 5

51
189

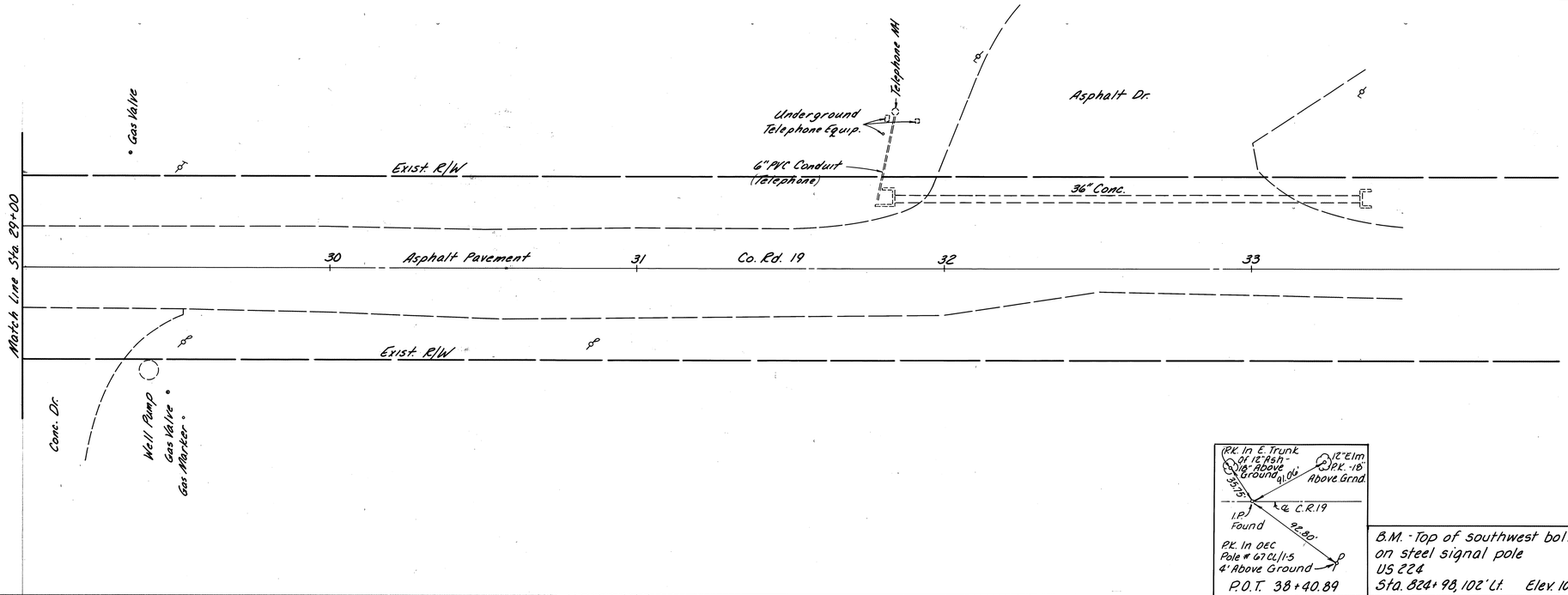

B.M. - Top of southwest bolt on steel signal pole US 224 Sta. 824+98, 102' Lt. Elev. 1019.88

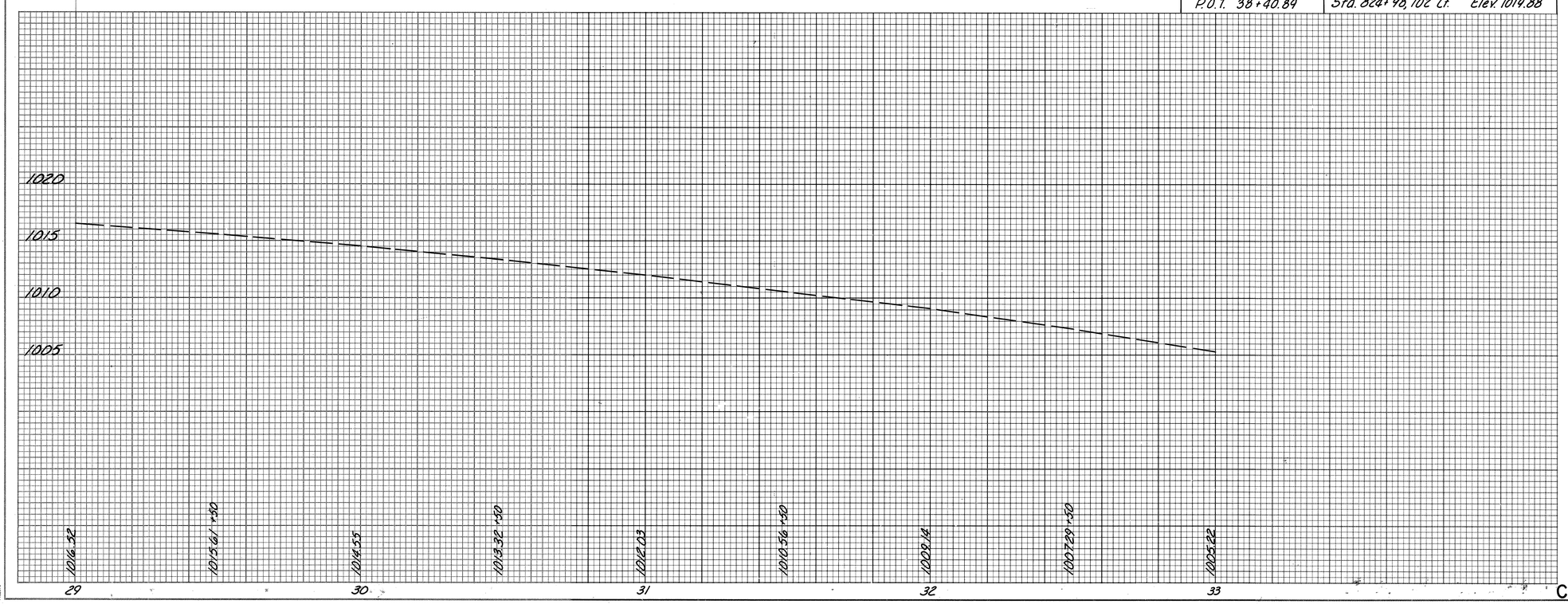

CO. RD. 19 STA. 29+00 TO STA. 34+00

CALC. BY PLD DATE 4/08	FED. RD. DIVISION	STATE	PROJECT	
CHKD. BY SLM DATE 4/08	2	OHIO		

52/189

MED-42-1.89
MED-224-10.45

SEEDING	
END WIDTH	SQ. YDS.
18	
106	
20	
58	
0	

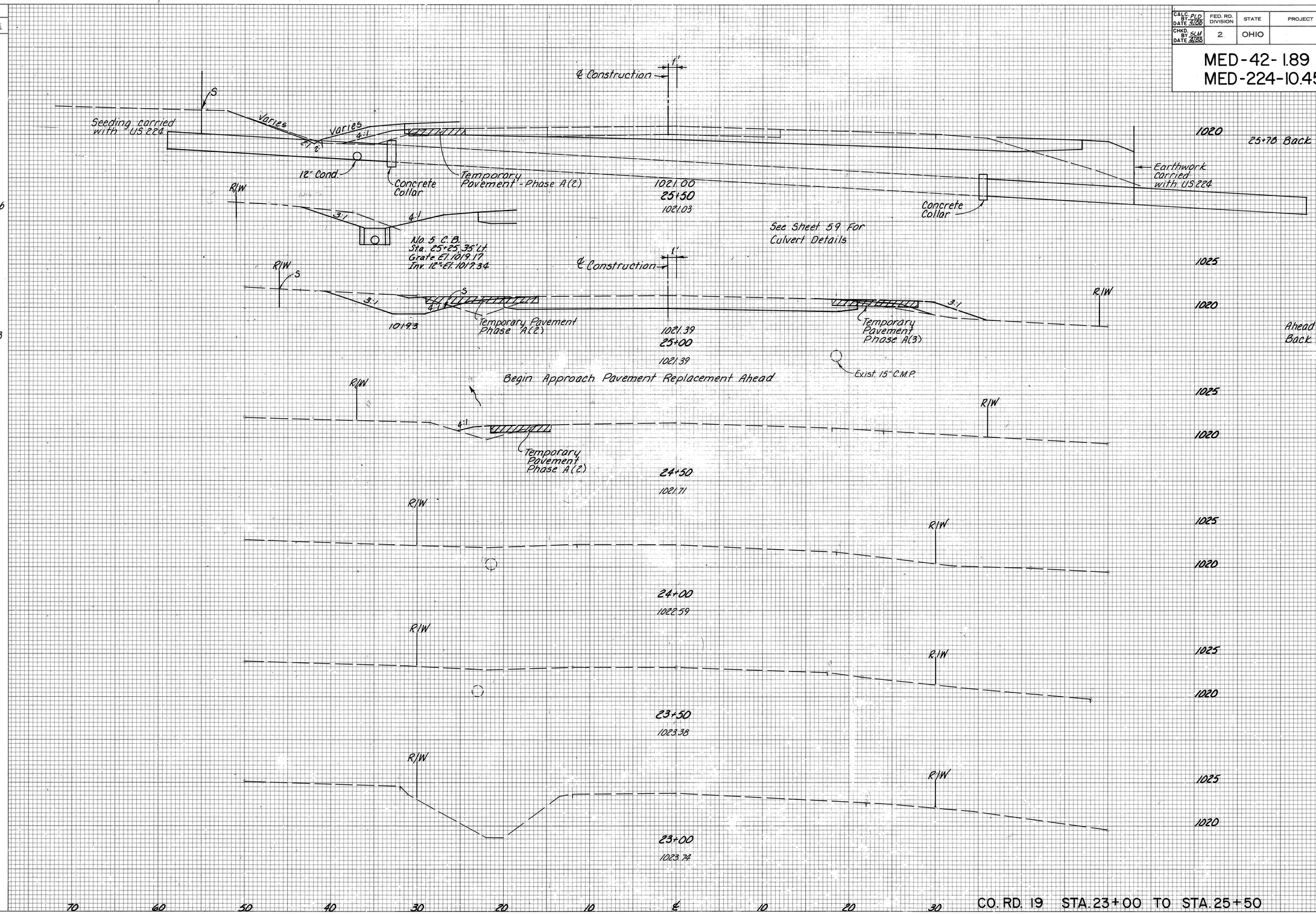

	END AREA CUT	END AREA FILL	VOLUME CUT	VOLUME FILL
25+78 Back	0	0		
			26	16
	50	30		
			93	37
Ahead	50	10		
Back	20	10		
			19	9
	0	0		

CO. RD. 19 STA. 23+00 TO STA. 25+50

BRUNING 44-131 38375

CALC. BY PLD DATE 4/03	FED. RD. DIVISION	STATE	PROJECT	
CHKD. BY SLM DATE 4/03	2	OHIO		

53/189

MED-42-1.89
MED-224-10.45

SEEDING	
END WIDTH	SQ. YDS.

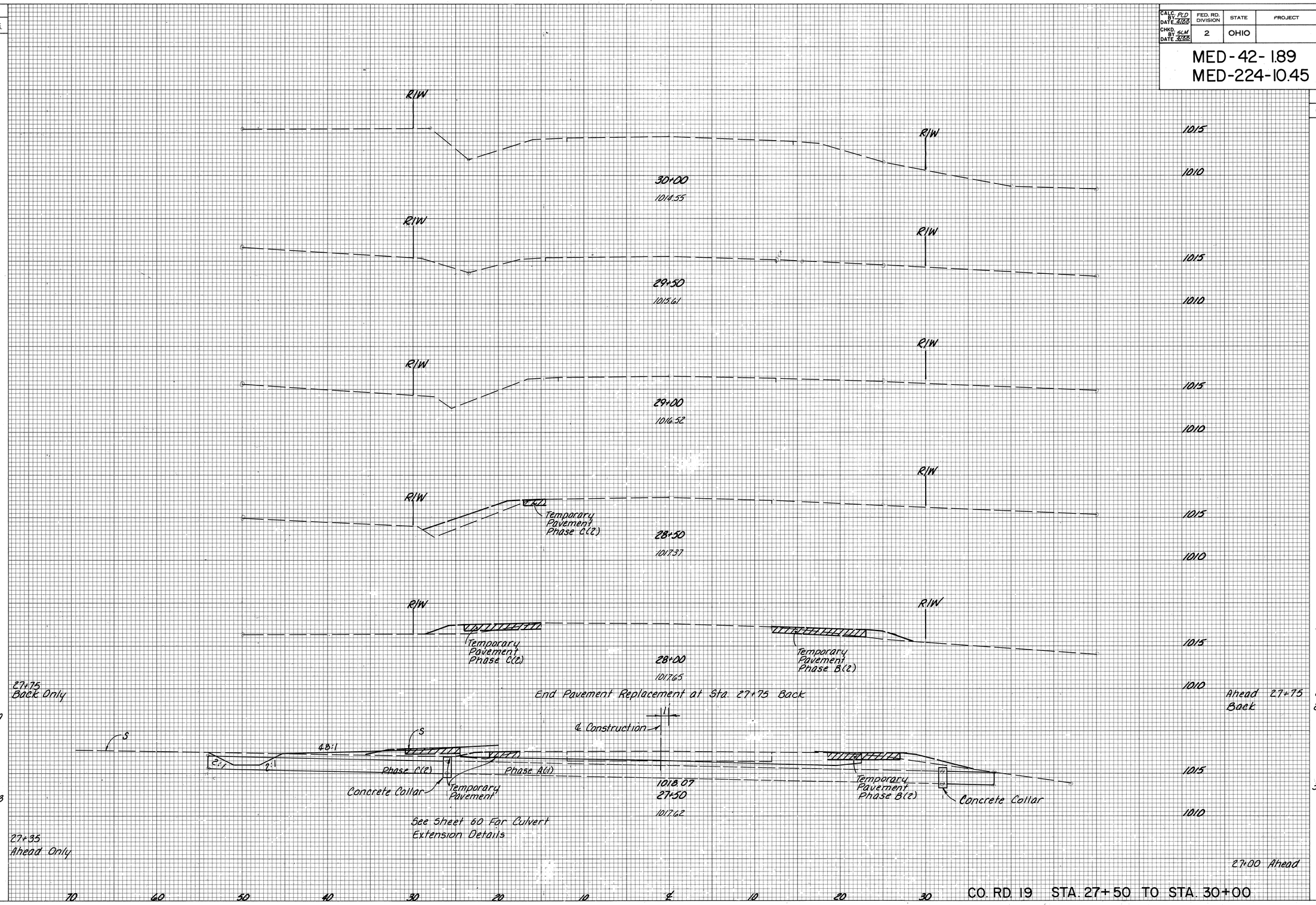

END AREA		VOLUME	
CUT	FILL	CUT	FILL
0	0		
26	11		
		27	10
32	11		
		30	10
0	0		

Ahead 27+75
Back
27+00 Ahead

CO. RD. 19 STA. 27+50 TO STA. 30+00

BRUNING 44-131 38375

CALC. BY ____ DATE ____	MED-42-1.89	OHIO	54
CHKD. BY ____ DATE ____	MED-224-10.45	FHWA REGION 5	189

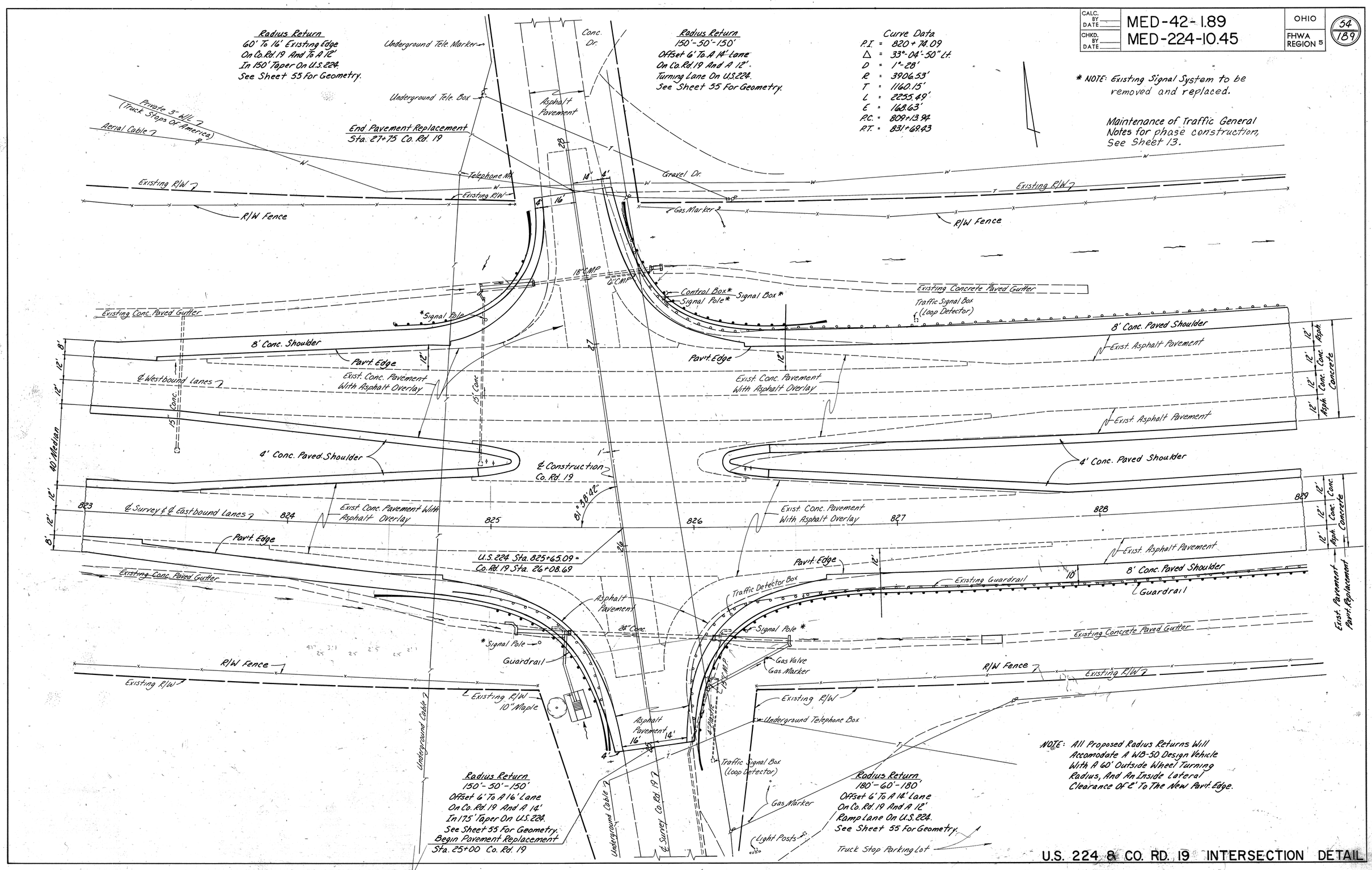

U.S. 224 & CO. RD. 19 INTERSECTION DETAIL

CALC. BY AFS DATE 12/87	MED-42-1.89	OHIO
CHKD. BY MED DATE 1/88	MED-224-10.45	FHWA REGION 5

55 / 189

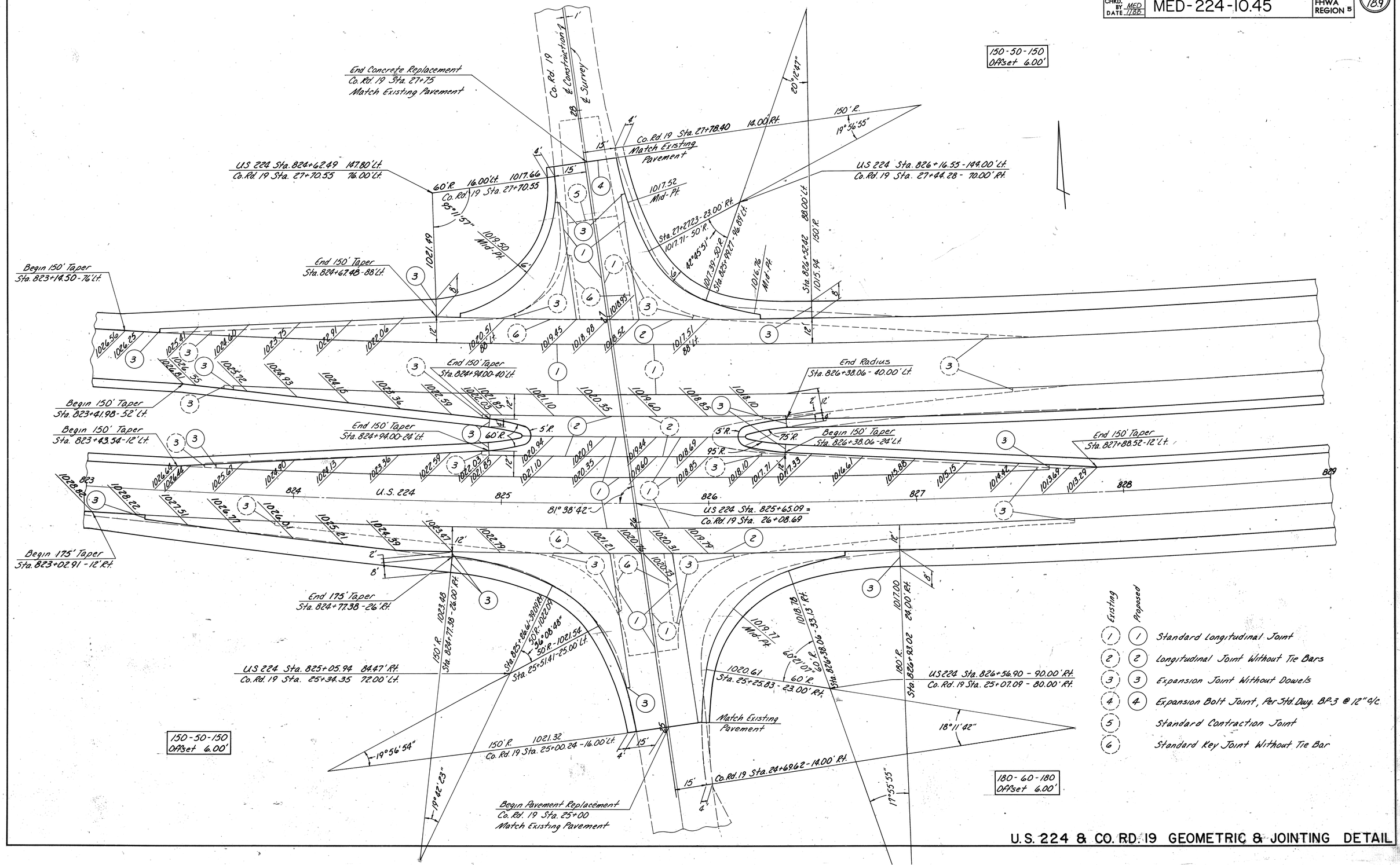

U.S. 224 & CO. RD. 19 GEOMETRIC & JOINTING DETAIL

CALC. BY AFS DATE 3/08	MED-42-1.89	OHIO	56
CHKD. BY PLD DATE 3/08	MED-224-10.45	FHWA REGION 5	189

554+35 = Zero Earthwork

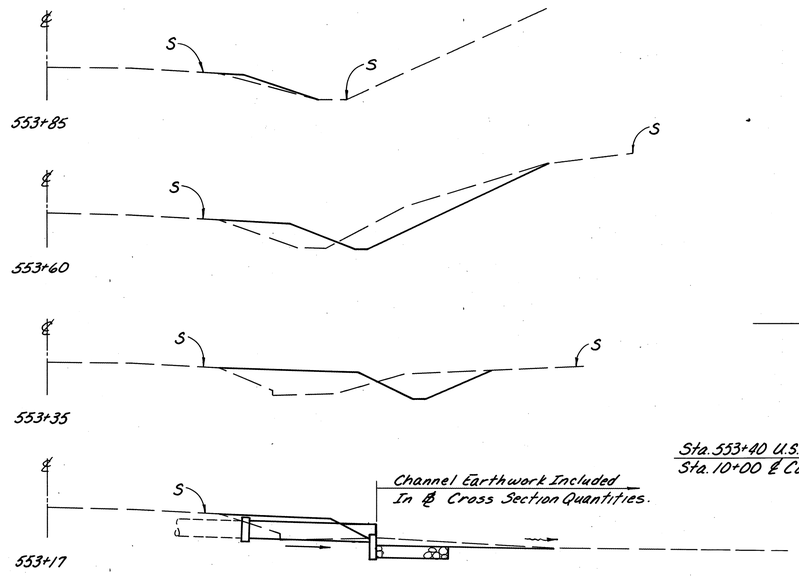

552+67 = Zero Earthwork

9+18 = Same Earthwork As 9+05

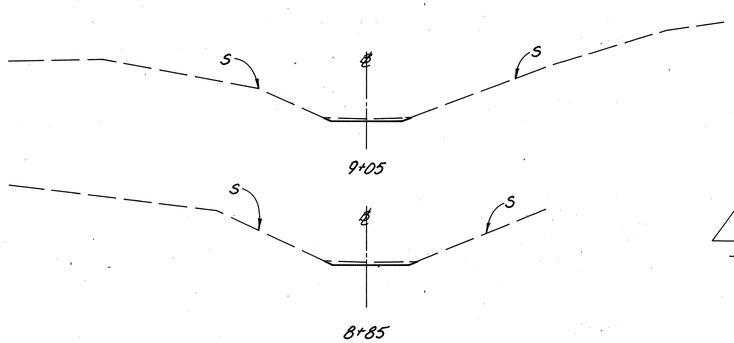

8+65 = Zero Earthwork

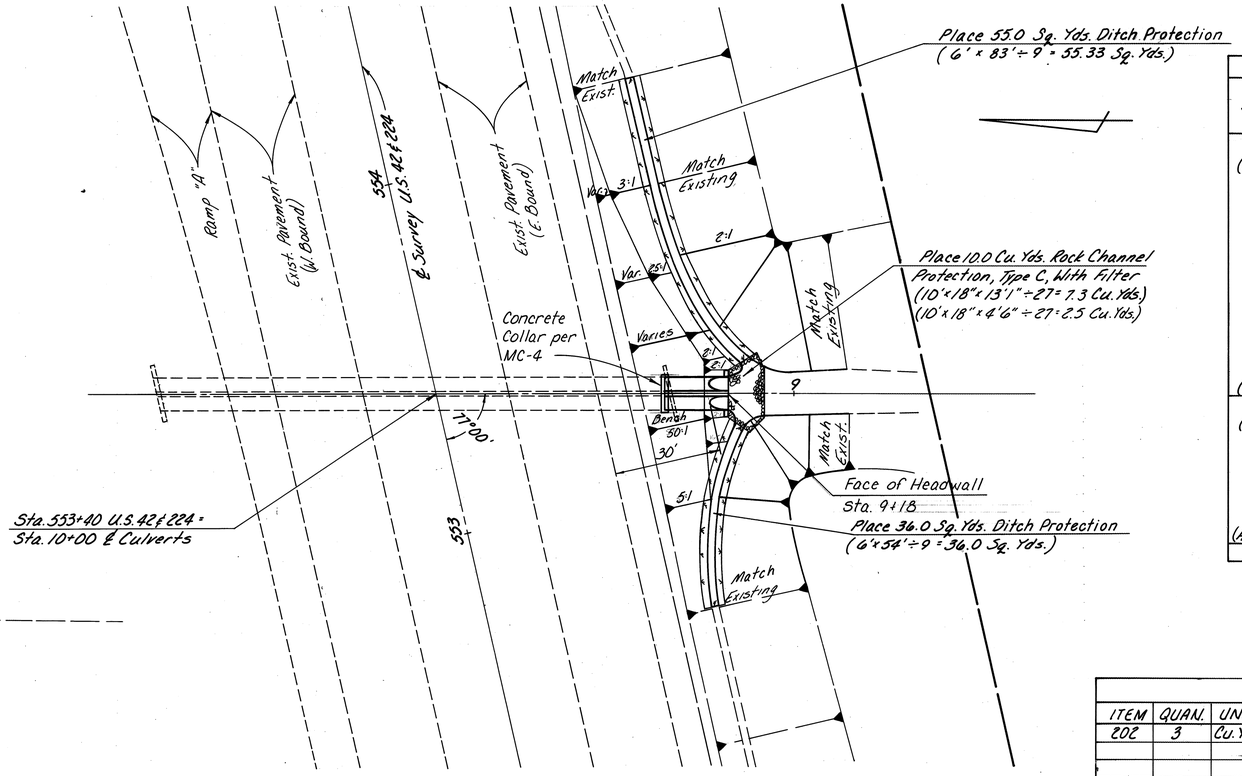

PLAN

0 10 20 40
Scale In Feet

EARTHWORK					SEEDING	
Station	End Area Cut	End Area Fill	Volume Cut	Volume Fill	End Width	Sq. Yds.
554+35 (Back Only)	0	0	0	24	0	56
553+85	0	5	80	75	20	117
553+60	57	27	221	186	64	167
553+35	37	52	112	157	56	80
553+17	29	41	166	103	24	99
552+92	42	3	99	7	47	65
552+67 (Ahead Only)	0	0			0	
9+18 (Back Only)	14	0	7	0	38	55
9+05	14	0	8	0	38	79
8+85	8	0	3	0	33	37
8+65 (Ahead Only)	0	0			0	
Total Cu. Yds.			696	552	Sub-Total — 755	
			Less Ditch Protection — 91			
			Less Rock Channel Protection — 20			
			Total Seeding — 644			

QUANTITIES			
ITEM	QUAN.	UNIT	DESCRIPTION
202	3	Cu. Yd.	Portions Of Structures Removed, Headwalls
203	696	Cu. Yd.	Excavation Not Including Embankment Constr.
203	552	Cu. Yd.	Embankment
601	10	Cu. Yd.	Rock Channel Protection, Type C, With Filter
602	1.5	Cu. Yd.	Concrete Masonry
603	36	Lin. Ft.	49"x33" Conduit, Type A, 707.05 (0.168)
659	644	Sq. Yd.	Seeding And Mulching
670	9.1	Sq. Yd.	Ditch Erosion Protection
Quantities Carried To Sheet 16			

For Additional Details See Standard Drawing HW-4A. Reinforcing Similar.

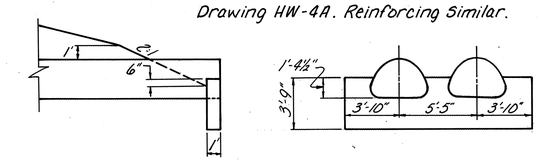

HEADWALL DETAIL

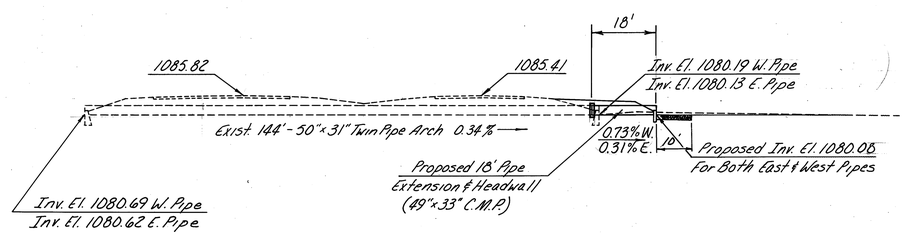

ELEVATION

0 10 20 40
Scale In Feet

Bench Mark: ODOT J-306
N.W. end of S.W. abutment of MED-42-0688 19' N.W. of ℄ of highway - about 1' above pavement. Elev. = 1117.29

From Std. Drwg. HW-4A
Quantity for 2 Headwalls = 2 x 0.90 = 1.80 Cu. Yd.
Deduct Additional Volume = 3'-9" x (3'-7" - 1'-4") x 1' x 1/27 = 0.31 Cu. Yd. In Center for 2 Headwalls
1.49 Cu. Yd. Use 1.5

STRUCTURE DETAIL STA. 553+40 U.S. 42 & 224

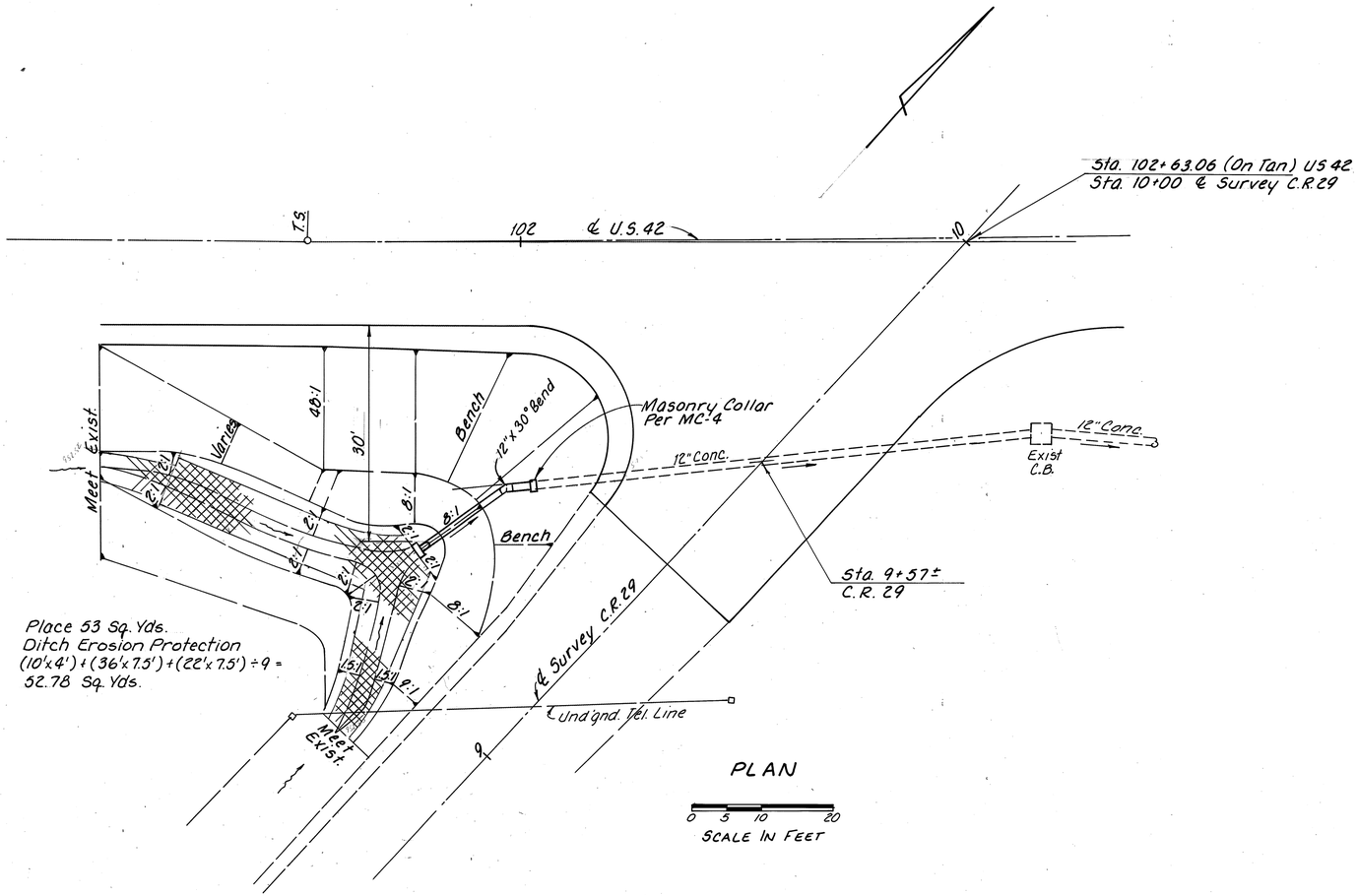

PLAN

0 5 10 20
SCALE IN FEET

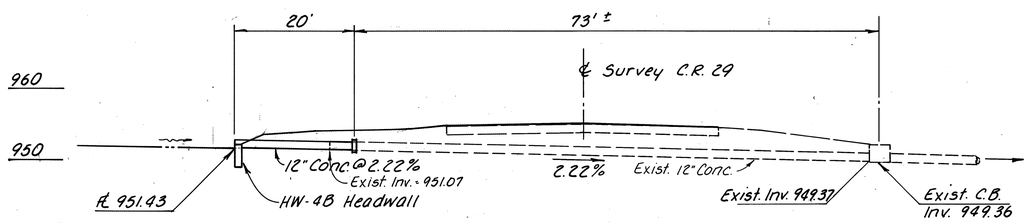

ELEVATION

0 5 10 20
SCALE IN FEET

Bench Mark: R.R. spike set in power pole on west side of C.R. 29 Sta. 8+10, 21' Lt.
Elev. = 956.20

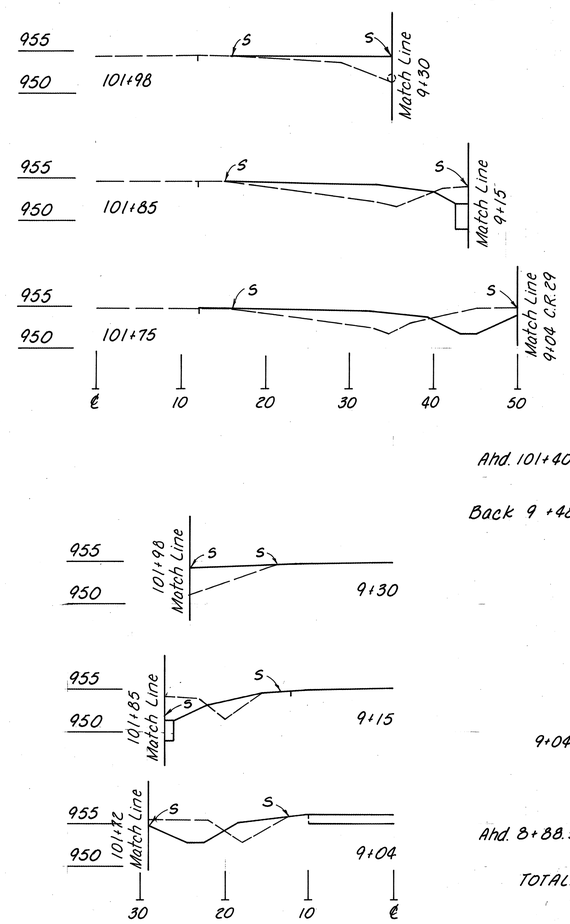

	EARTHWORK END AREA CUT	EARTHWORK END AREA FILL	EARTHWORK VOLUME CUT	EARTHWORK VOLUME FILL	SEEDING END WIDTH	SEEDING SQ. YDS.
Back 102+12	0	0			0	
			0	4		15
	0	17			19	
			2	11		35
	7	27			29	
			5	10		38
	20	26			40	
			13	17		136
Ahd. 101+40	0	0			30	
Back 9+48	0	0			0	
			0	5		10
	0	15			10	
			3	6		22
	10	7			16	
			5	3		20
9+04	16	10			17	
			5	3		30
Ahd. 8+88.5	0	0			18	
TOTALS			33	59		306

QUANTITIES - RS Funds

ITEM	QUANTITY	UNIT	DESCRIPTION
602	0.2	Cu. Yd.	Concrete Masonry
603	20	Lin. Ft.	*Conduit, Type A, 12" 706.01 or 706.02
203	33	Cu. Yd.	Excavation Not Including Embankment Constr.
203	59	Cu. Yd.	Embankment
659	306	Sq. Yd.	Seeding And Mulching
670	53	Sq. Yd.	Ditch Erosion Protection

* Includes 30° Bend

Quantities carried to sheet 16

STRUCTURE DETAIL STA. 9+57 C.R.29

CALC. BY AFS DATE 8/87	MED-42-1.89	OHIO
CHKD. BY MED DATE 8/87	MED-224-10.45	FHWA REGION 5

58 / 189

QUANTITIES			
ITEM	QUAN.	UNIT	DESCRIPTION
202	6.0	Cu. Yd.	Portions Of Structures Removed, Headwalls
203	20	Cu. Yd.	Excavation Not Including Embankment Constr.
203	146	Cu. Yd.	Embankment
670	32	Sq. Yd.	Ditch Erosion Protection
601	28	Cu. Yd.	Rock Channel Protection, Type B, With Filter
602	5.2	Cu. Yd.	Concrete Masonry
603	40	Lin. Ft.	*6'-1"x4'-7" Conduit, Type A, 707.03, As Per Plan
659	535	Sq. Yd.	Seeding And Mulching
660	97	Sq. Yd.	Sodding

Quantities Carried To Sheet 16

* See General Note on sheet 10.

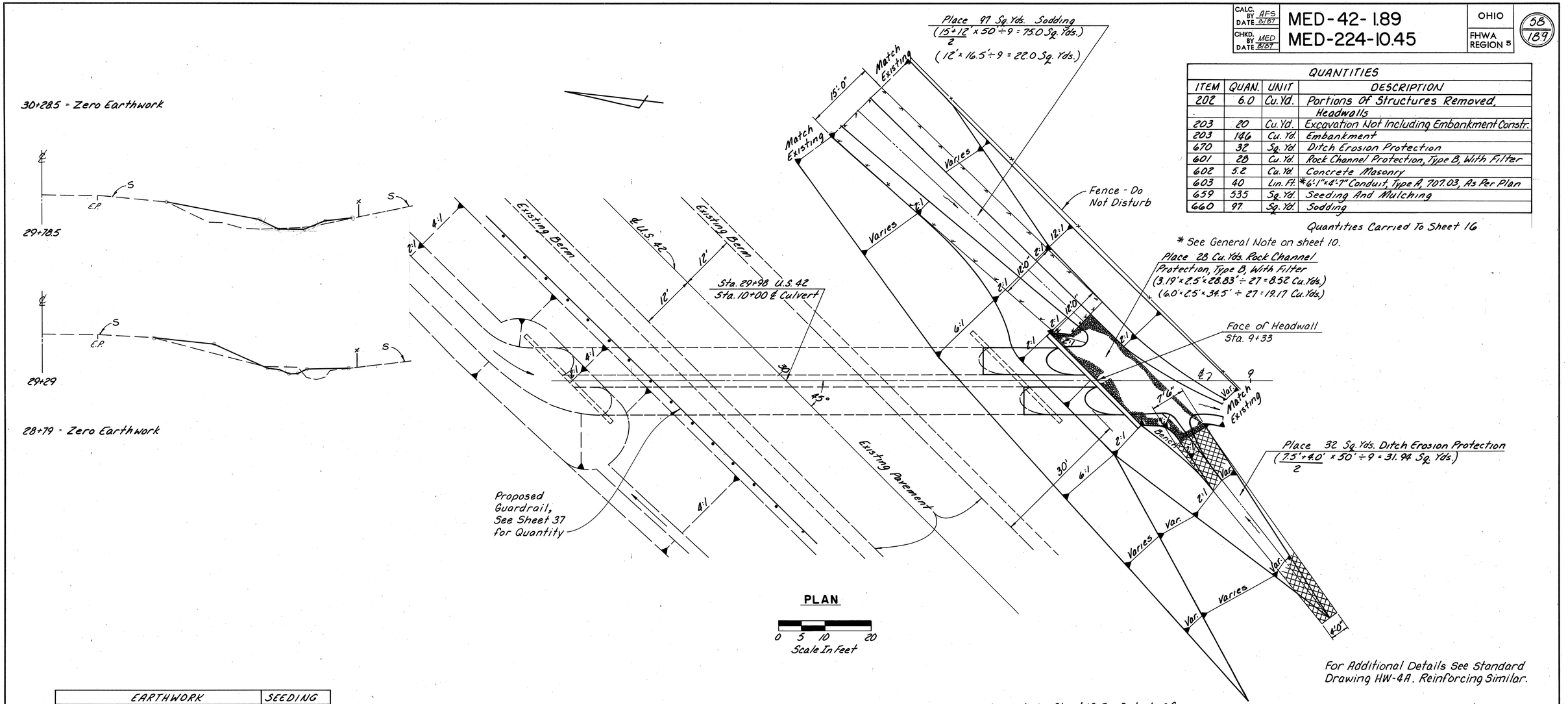

For Additional Details See Standard Drawing HW-4A. Reinforcing Similar.

EARTHWORK					SEEDING	
Station	End Area Cut	End Area Fill	Volume Cut	Volume Fill	End Width	Sq. Yds.
30+28.5 (Back Only)	0	0	2	44	0	181
29+78.5	2	47	10	72	65	344
29+29	9	32	8	30	60	167
28+79 (Ahead Only)	0	0			0	
Total Cu. Yds.			20	146	Sub-Total-	692
			Less Sodding			97
			Less Erosion Protection-			32
			Less Rock Channel Protection			28
					Total Seeding-	535

Quantities carried to Table on this sheet.

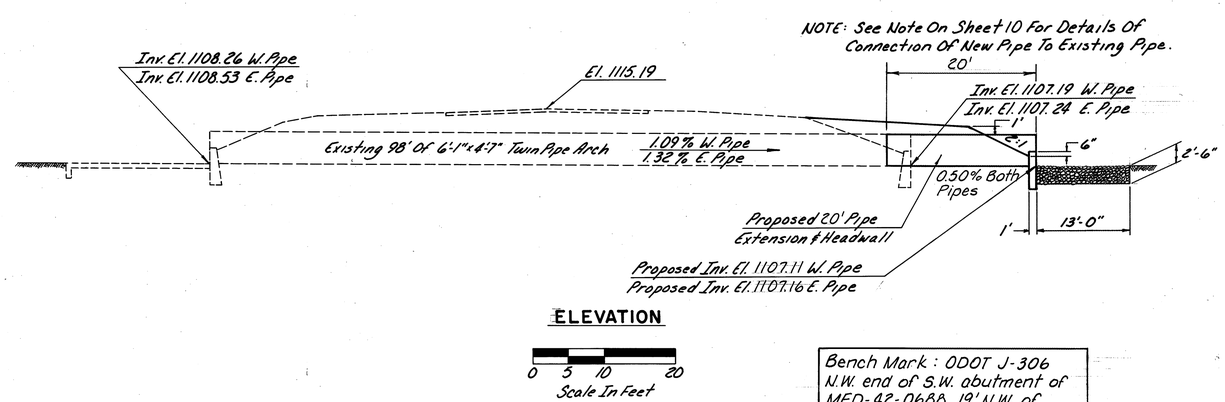

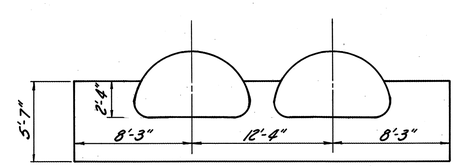

HEADWALL DETAIL

Bench Mark: ODOT J-306
N.W. end of S.W. abutment of MED-42-0688 19' N.W. of ℄ of highway - about 1' above pavement. Elev. = 1117.29

STRUCTURE DETAIL STA. 29+98 U.S. 42

CALC. BY PLD DATE 4/88	MED-42-1.89	OHIO	59
CHKD. BY AFS DATE 3/88	MED-224-10.45	FHWA REGION 5	189

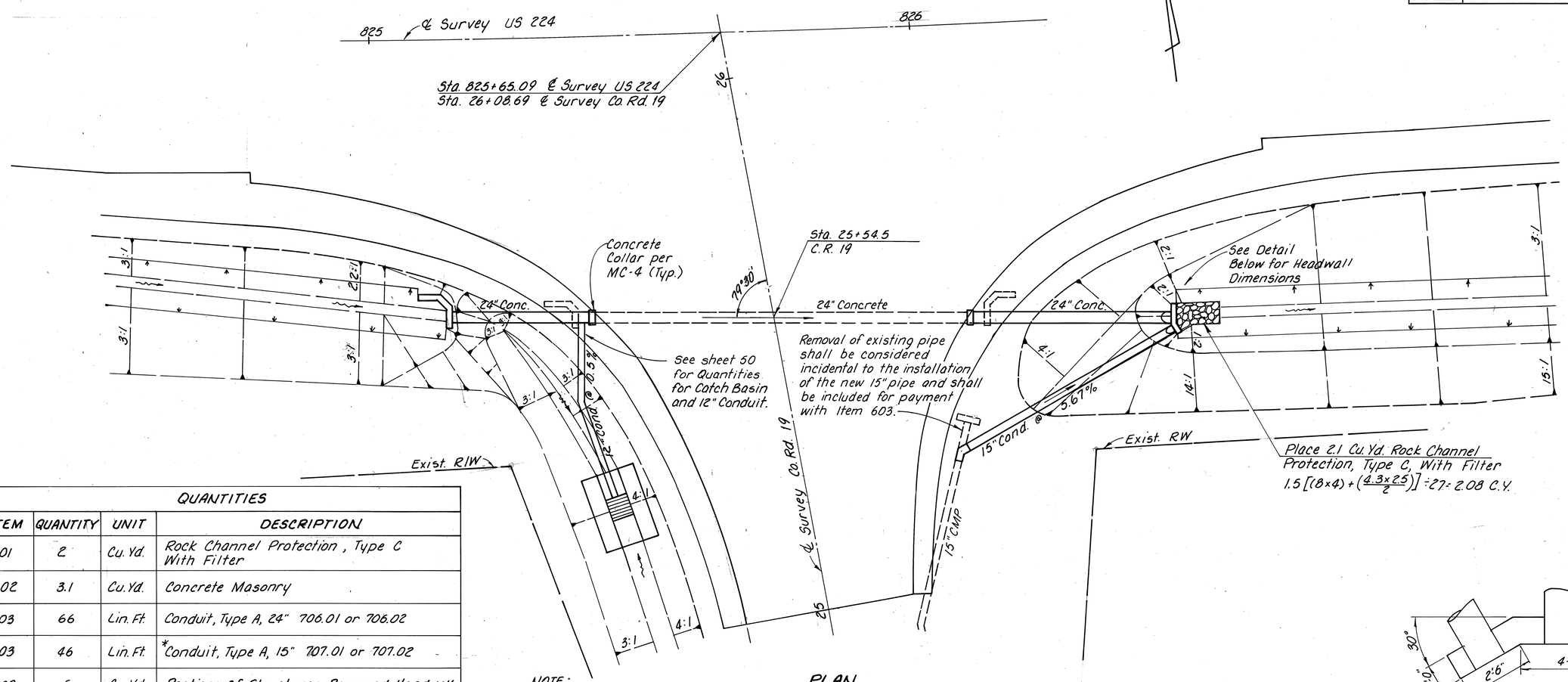

PLAN

0 5 10 20
SCALE IN FEET

NOTE:
12" Cond. & C.B. Quantities carried on sheet no. 50.

QUANTITIES

ITEM	QUANTITY	UNIT	DESCRIPTION
601	2	Cu. Yd.	Rock Channel Protection, Type C With Filter
602	3.1	Cu. Yd.	Concrete Masonry
603	66	Lin. Ft.	Conduit, Type A, 24" 706.01 or 706.02
603	46	Lin. Ft.	*Conduit, Type A, 15" 707.01 or 707.02
202	5	Cu. Yd.	Portions of Structures Removed, Headwalls
Quantities carried to sheet 16			

* Includes 45° Bend

Portions Of Structures Removed, Quantities:

HW-D	For 24" Conc. Inlet	2.30 C.Y.
HW-D	For 24" Conc. Outlet	2.30 C.Y.
HW-4A	For 15" Conc. Outlet	0.27 C.Y.
	Total =	4.87 Cu. Yd.

NOTE: Earthwork carried with U.S.224 And C.R. 19 X-sections.

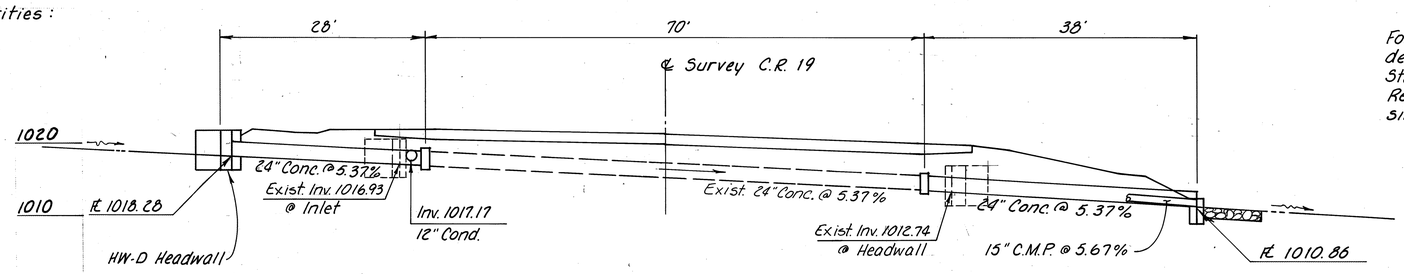

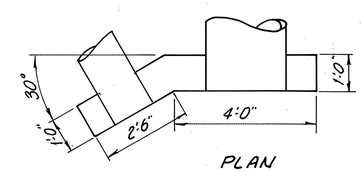

PLAN

For additional details See Std. Dwg. HW-4B. Reinforcing to be similar.

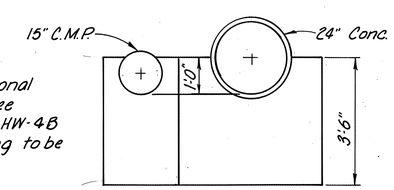

ELEVATION

Concrete Masonry Quantity:

HW-D	For 24" Conc.	2.30 C.Y.
HW-4B	For 24" Conc.	0.43 C.Y.
HW-4A	For 15" C.M.P.	0.27 C.Y.
Additional Areas:		
	4"/12 × 2.5' × 1 × 1/27 =	0.03 C.Y.
	2(1'/2 × 27') × 3.5' × 1/27 =	0.04 C.Y.
	Total =	3.07 Cu. Yd.

Bench Mark: Top of S.W. bolt on steel signal pole at Sta. 824+98, 102' Lt. Elev. = 1019.88

STRUCTURE DETAIL STA. 25+54.5 C.R. 19

CALC. BY PLD DATE 4/88	MED-42-1.89	OHIO	60
CHKD. BY AFS DATE 5/88	MED-224-10.45	FHWA REGION 5	189

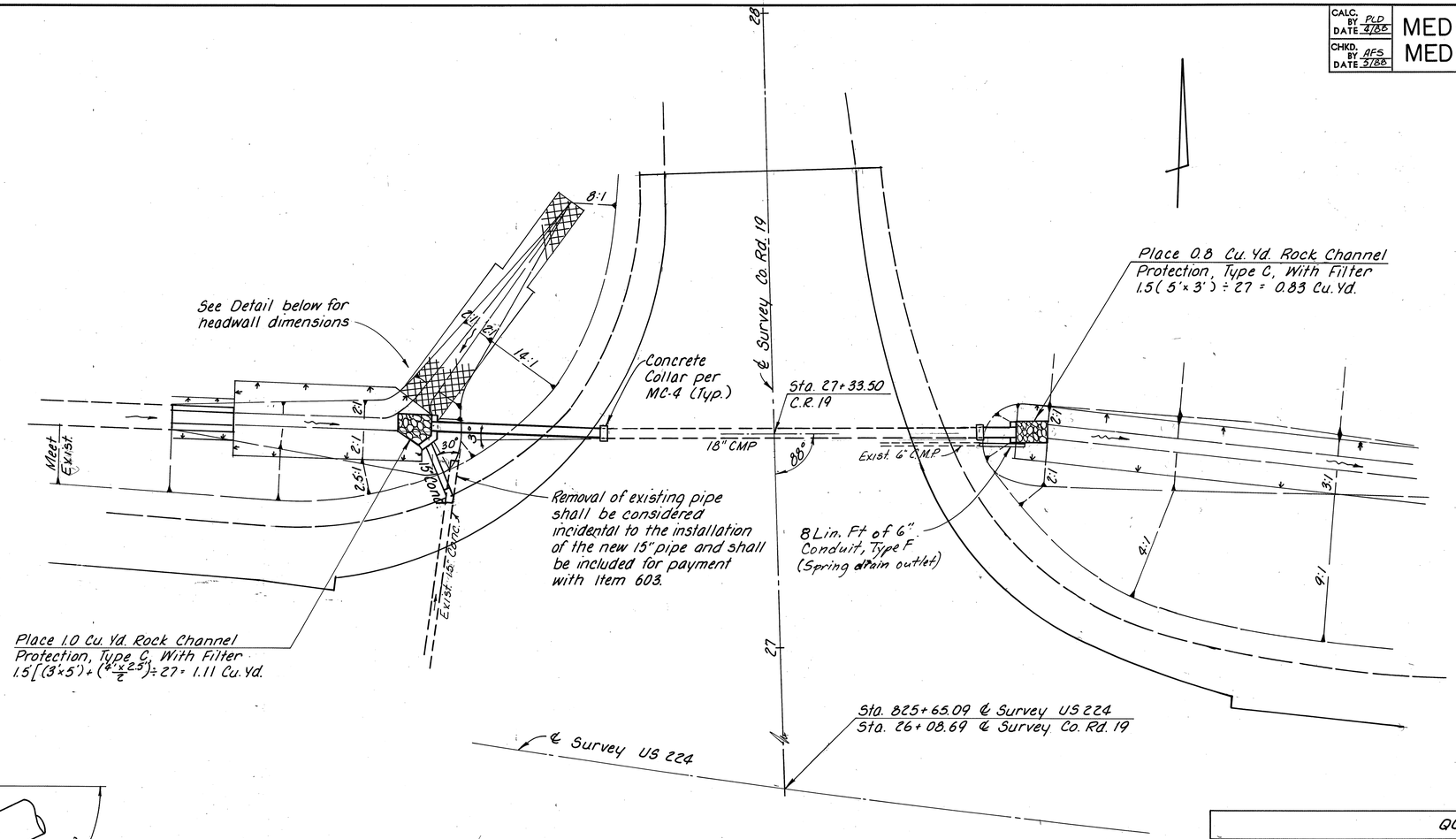

PLAN

0 5 10 20
SCALE IN FEET

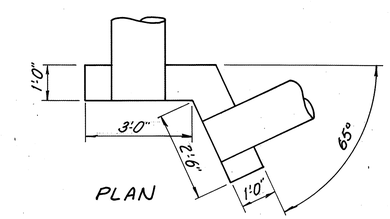

PLAN

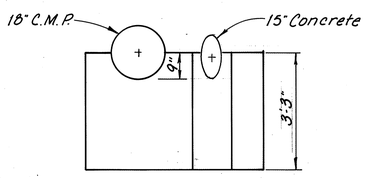

ELEVATION

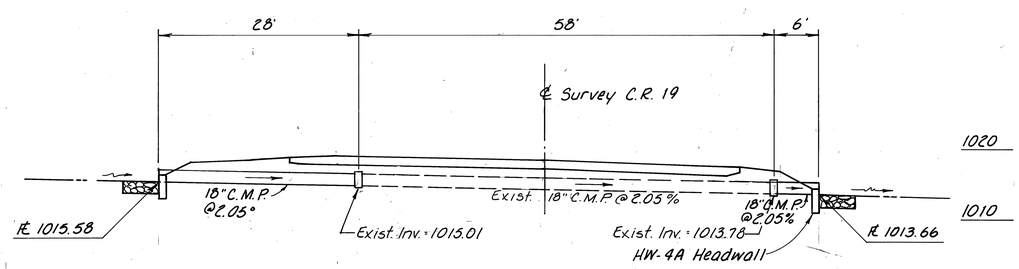

ELEVATION

0 5 10 20
SCALE IN FEET

For additional details see Std. Dwg. HW-4B
Reinforcing to be similar.

Concrete Masonry Quantity:

HW-4A For 18" C.M.P.	0.33 C.Y.
HW-4B For 15" Conc.	0.25 C.Y.
Additional Areas:	
1'/12 × 2.5' × 1 × 1/27 =	0.01 C.Y.
2(1'×.64'/2) × 3.25' × 1/27 =	0.08 C.Y.
Total =	0.67 Cu. Yd.

Bench Mark: Top of S.W. bolt on steel signal pole at Sta. 824+98, 102' Lt. Elev. = 1019.88

QUANTITIES

ITEM	QUANTITY	UNIT	DESCRIPTION
601	2	Cu. Yd.	Rock Channel Protection, Type C With Filter
602	1.0	Cu. Yd.	Concrete Masonry
603	34	Lin. Ft.	Conduit, Type A, 18" 707.01 or 707.02
603	10	Lin. Ft.	*Conduit, Type A, 15" 706.01 or 706.02
603	8	Lin. Ft.	6" Conduit, Type F
Quantities carried to sheet 16			

* Includes 30° Bend

Earthwork And Seeding Carried with US 224 and CR 19 x-sections.

STRUCTURE DETAIL STA. 27+33.50 C.R. 19

PAVEMENT MARKING SUB-SUMMARY

CALC. BY MED DATE 1/87	MED-42-1.89
CHKD. BY AFS DATE 1/87	MED-224-10.45

OHIO — FHWA REGION 5 — 61/189

SHEET NO.	SIDE	STATION FROM	STATION TO	621 LANE LINE	621 EDGE LINE WHITE	621 EDGE LINE YELLOW	621 CENTER-LINE SOLID DOUBLE	621 CENTER-LINE BROKEN SINGLE	621 CENTER-LINE BROKEN & SOLID DOUBLE	847 CHANNEL-IZING LINE	621 TRANS. LINE WHITE	621 TRANS. LINE YELLOW	847 947.02 STOP LINE	847 947.02 LANE ARROWS	847 947.02 WORD "ONLY" ON PAVEMENT 96"
				LIN. FT.	LIN. FT.	LIN. FT.	LIN. FT.	LIN. FT.	LIN. FT.	LIN. FT.	LIN. FT.	LIN. FT.	LIN. FT.	EACH	EACH
		RS-440 (11)													
		US 42													
63	℄	100+00	146+65				1265	2070	1170						
	Lt.	100+00	152+25		5225										
	Rt.	100+00	146+65		4665										
	℄	144+00	150+70				670					482			
	Rt.	115+70	118+45	100						315	159				
		Co. Rd. 29													
	℄	9+38.18	9+70				32						12		
	℄	10+30	10+61.87				32						12		
		Co. Rd. 80													
	℄	9+26.9	9+72				45						23		
63	℄	10+28	11+00.4				72						23		
		US 42 & US 224													
64	W.B.	152+25	161+36.58	1041	1012	1012									
64	E.B.	146+65	161+36.58	1591	1308	1471									
64	W.B.	146+65	152+25			605									
Totals				2732	12,210	3088	2116	2070	1170	315	159	482	70		
Grand Totals RS-440 (11)				2732	15,298			5356		315	641		70		
Quantities Carried To Sheet 15				0.52 Mi.	2.90 Mi.			1.01 Mi.		315 L.F.	641 L.F.		70 L.F.		
		F-51 (70)													
		US 42 & US 224													
64	W.B.	161+36.58	161+93.29 Bk.	57	57	57									
	W.B.	328+93.29 Ahd.	334+00	517	517	517									
	W.B.	334+00	340+00		250	600				600	466				
	E.B.	161+36.58	161+93.29 Bk.	57	57	57				120					
	E.B.	328+93.29 Ahd.	340+00	1534	1117	1117									
		RAMP "A"													
	Lt.	26+45	33+50		705										
	Rt.	26+45	33+50	100	90	390				385			20		
		RAMP "B"													
	Rt.	33+00	161+93.29 Bk. (US42)		1075										
	Lt.	33+00	35+35			145				130					
	Lt.	36+00	161+93.29 Bk. (US42)			690				105					
	Lt.	36+00	35+56 (SR 421)		175										
	Rt.	36+00	SR 421			200									
		RAMP "C"													
	Rt.	26+00	32+87		687										
	Lt.	26+00	27+80			45				135					
	Lt.	28+36	32+87			304				147					
	Rt.	28+36	SR 421			160									
	Lt.	27+80	SR 421		105										
		RAMP "D"													
	Lt.	0+50	10+15			875				90	46				
	Rt.	0+50	35+55 (SR 421)		995								30		
		US 224 & SR 421													
	Rt.	25+00	27+90	50	180					110	48				
	Rt.	28+20	33+10	60	480										
	Rt.	33+10	37+00		188					103	38				
	℄	25+00	37+00				1059								
	Lt.	25+00	27+75	120	275										
64	Lt.	28+30	37+00		870										
Totals Carried To Sheet 62				2495	7823	5157	1059			1925	598		50		

SHEET NO.	SIDE	STATION FROM	STATION TO	621 LANE LINE	621 EDGE LINE WHITE	621 EDGE LINE YELLOW	621 CENTER-LINE SOLID DOUBLE	621 CENTER-LINE BROKEN SINGLE	621 CENTER-LINE BROKEN & SOLID DOUBLE	847 CHANNEL-IZING LINE 947.02	621 TRANS. LINE (WHITE)	847 947.02 STOP LINE	847 947.02 LANE ARROWS	847 947.02 WORD "ONLY" ON PAVEMENT 96"
				LIN. FT.	LIN. FT.	LIN. FT.	LIN. FT.	LIN. FT.	LIN. FT.	LIN. FT.	LIN. FT.	LIN. FT.	EACH	EACH
		F-51 (70) Cont'd.												
		US 42 & US 224												
65	W.B.	340+00	423+68.72 Bk.	8324										
	W.B.	453+35.48 Ahd.	538+00	8379										
	W.B.	340+00	423+50±			8350								
	W.B.	453+50±	533+15±			7965								
	W.B.	533+55±	538+00		480	445				45			1	1
	W.B.	340+00	423+60±		8405									
	W.B.	453+45±	533+20±		8040					45			1	1
	E.B.	340+00	423+68.72 Bk.	8348										
	E.B.	453+35.48 Ahd.	538+00	8355										
	E.B.	340+00	423+50±			8350								
	E.B.	453+50±	533+15±			7965								
	E.B.	533+55±	538+00			445				45			1	1
	E.B.	340+00	423+50±	8380						45			1	1
	E.B.	453+40±	533+20±	8045										
	E.B.	533+40±	538+00	495										
		Co. Rd. 69												
	℄	9+01.7	9+45				43					22		
	℄	10+55	10+98.3				43					22		
		Co. Rd. 31												
	℄	9+01.57	9+47				45					22		
65	℄	10+54	10+98.43				44					22		
		US 42 & US 224												
66	Lt.	538+00	567+00	3304	2900	2900								
	Rt.	538+00	567+00	3010	2900	2900				182	36			
		SR 421 & US 42												
	Lt.	15+25	32+50	100	1345					190				
	Rt.	15+25	32+50				875		640					
	Rt.	15+25	32+50		1435					110	36			
		RAMP "A"												
	Rt.	1+50	15+91		1441									
	Lt.	3+40	15+91			765				406	131			
		RAMP "B"												
	Rt.	SR 421	567+00		1270									
	Lt.	SR 421	567+00			1235								
		RAMP "C"												
	Rt.	3+00	14+15		1115									
	Lt.	3+00	11+00			800								
	Lt. & ℄	11+00	SR 421			250						20		
	Lt.	12+05	14+15			105				165	54			
		RAMP "D"												
	Rt.	567+00	SR 421		390							40		
	Lt.	567+00	SR 421			410								
		RAMP "E"												
	Rt.	1+35	6+94		559									
66	Lt.	1+35	6+94			325				234				
Totals Carried To Sheet 62				56,740	30,280	43,210	1050		640	1547	237	148	4	4

PAVEMENT MARKING SUB-SUMMARY

CALC. BY MED DATE 1/89	MED-42-1.89	OHIO	62/189
CHKD. BY AFS DATE 1/89	MED-224-10.45	FHWA REGION 5	

SHEET NO.	SIDE	STATION FROM	STATION TO	LANE LINE	EDGE LINE WHITE	EDGE LINE YELLOW	CENTER-LINE SOLID DOUBLE	CENTER-LINE BROKEN SINGLE	CENTER-LINE BROKEN & SOLID DOUBLE	CHANNELIZING LINE 947.02	TRANS. LINE (WHITE)	STOP LINE	LANE ARROWS	WORD "ONLY" ON PAVEMENT 96"		
				621						847	621	847 947.02				
				LIN. FT.	LIN. FT.	LIN. FT.	LIN. FT.	LIN. FT.	LIN. FT.	LIN. FT.	LIN. FT.	LIN. FT.	EACH	EACH		
		F-51 (70) Cont'd. US 224														
67	W.B.	567+00	612+00	4363	50					140						
↓	W.B.	567+00	572+75			575										
	W.B.	573+15	606+15±			3300				45			1	1		
	W.B.	606+62±	612+00			538				45			1	1		
	W.B.	572+95±	606+80±		3455											
	W.B.	606+95	612+00		540											
	E.B.	567+00	612+00	4363												
	E.B.	567+00	572+75			575				45			1	1		
	E.B.	573+15	606+15±			3300				45			1	1		
	E.B.	606+62±	612+00			538										
	E.B.	573+25±	605+80±		3320											
	E.B.	605+95±	612+00		630											
		RAMP "B"														
	Rt.	567+00	573+00±		630											
	Lt.	567+00	570+00	130		170				177						
		RAMP "D"														
	Rt.	567+00	572+70±		635											
	Lt.	567+00	568+90	50		65				140	56					
		Co. Rd. 149														
	℄	9+24.63	9+60				35					33				
	℄	10+90	11+28.14				38					37				
		Co. Rd. 72														
↓	℄	9+23.42	9+76				53					14				
67	℄	10+95	11+48.3				53					18				
		US 224														
68	W.B.	612+00	635+05±		4150											
↓	W.B.	612+00	726+00	11,270						237			3	3		
	W.B.	612+00	652+90			4090										
	W.B.	653+30	721+21			6791										
	W.B.	721+61	726+00			439										
	W.B.	653+30	721+40±		6885											
	W.B.	721+65±	726+00		470											
	E.B.	612+00	652+95±		4125											
	E.B.	612+00	726+00	11,270						145			2	2		
	E.B.	612+00	652+90			4090										
	E.B.	653+30	721+21			6791										
	E.B.	721+61	726+00			439										
	E.B.	653+20±	721+25±		6880											
	E.B.	721+45±	726+00		495											
		Co. Rd. 35														
	℄	9+35.93	9+78				42					24				
	℄	10+96	11+41.15				45					16				
		Co. Rd. 15														
↓	℄	9+34.46	9+76				42					23				
68	℄	10+86	11+29.64				44					23				
Totals Carried To Second Column This Sheet				31,446	32,265	31,701	352			1019	56	188	9	9		

SHEET NO.	SIDE	STATION FROM	STATION TO	LANE LINE	EDGE LINE WHITE	EDGE LINE YELLOW	CENTER-LINE SOLID DOUBLE	CENTER-LINE BROKEN SINGLE	CENTER-LINE BROKEN & SOLID DOUBLE	CHANNELIZING LINE 947.02	TRANS. LINE (WHITE)	STOP LINE	LANE ARROWS	WORD "ONLY" ON PAVEMENT 96"		
				621						847	621	847 947.02				
				LIN. FT.	LIN. FT.	LIN. FT.	LIN. FT.	LIN. FT.	LIN. FT.	LIN. FT.	LIN. FT.	LIN. FT.	EACH	EACH		
		F-51 (70) Cont'd. US 224														
69	W.B.	726+00	744+40±		1870											
↓	W.B.	744+60±	825+30±		8170											
	W.B.	825+45±	835+00		1000											
	W.B.	726+00	744+18			1818										
	W.B.	744+58	825+10			8057				45			1	1		
	W.B.	825+98	835+00			900										
	W.B.	726+00	824+85	9820												
	W.B.	826+03	835+00	2091								57	3	2		
	E.B.	726+00	744+30±		1870											
	E.B.	744+50±	825+70±		8210											
	E.B.	825+90±	835+00		965											
	E.B.	726+00	744+18			1818				45			1	1		
	E.B.	744+58	825+10			8060				90			2	2		
	E.B.	825+98	835+00			900										
	E.B.	726+00	825+05	9840								60				
	E.B.	826+23	835+00	1754												
		Co. Rd. 57														
	℄	9+46.97	9+78				31					22				
	℄	10+86	11+29.18				43					24				
		Co. Rd. 19														
↓	℄	25+00	25+61				61					53				
69	℄	27+15	27+75				60					63				
		US 224														
70	W.B.	835+00	854+49.93	2120	1950	1950										
↓	E.B.	835+00	852+85.84	2026		1786				400						
	E.B.	835+00	837+50		250											
	E.B.	841+50	852+85.84		1136											
		RAMP "D"														
	Lt.	837+50 US224	12+52							350	710					
	Rt.	837+50 US224	12+52		350											
		RAMP "F"														
↓	Lt.	15+98	841+90 US224			50				240						
70	Rt.	15+98	841+90 US224		290											
				27,651	26,061	25,339	195			1170	710	279	7	6		
Totals Carried From First Column				31,446	32,265	31,701	352			1019	56	188	9	9		
Totals Carried From Sheet 61-1st Col.				2,495	7,823	5,157	1059			1925	598	50				
" " " " 61-2nd Col.				56,740	30,280	43,210	1050		640	1547	257	148	4	4		
Grand Totals F-51 (70)				118,332	201,836			3296		5661	1621	665	20	19		
Quantities Carried To Sheet 15				22.41 Mi.	38.23 Mi.			0.62 Mi.		5661 L.F.	1621 L.F.	665 L.F.	20 Each	19 Each		

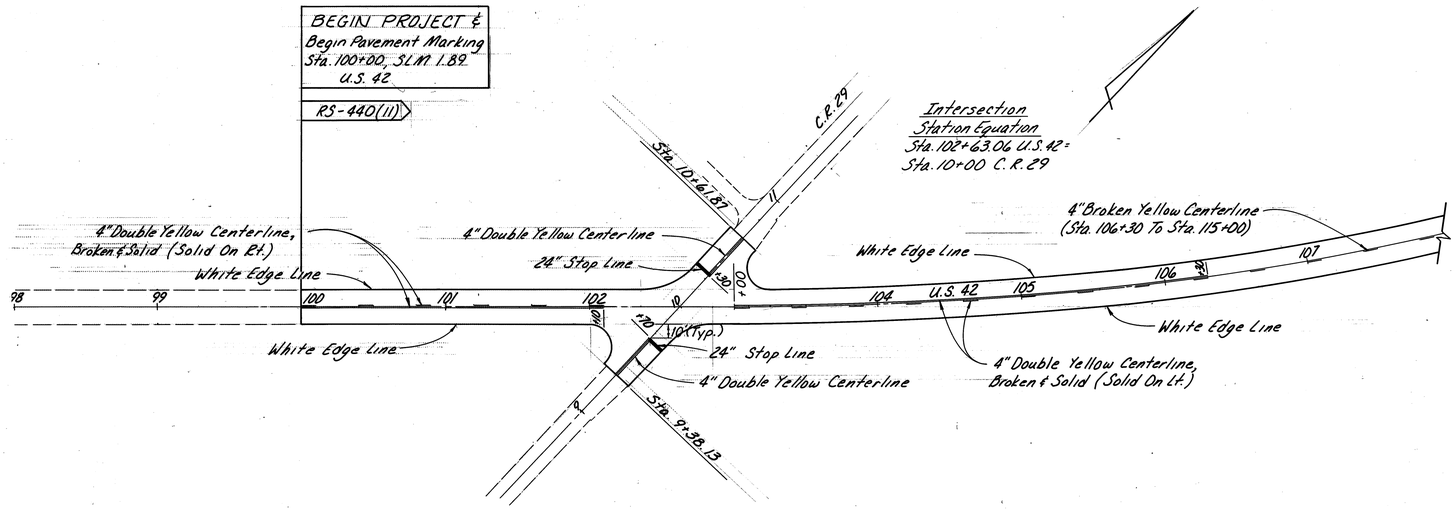

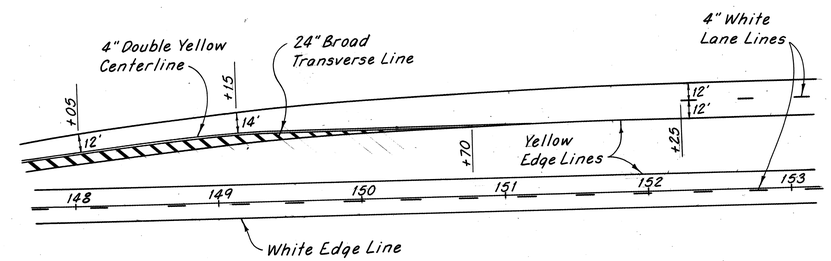

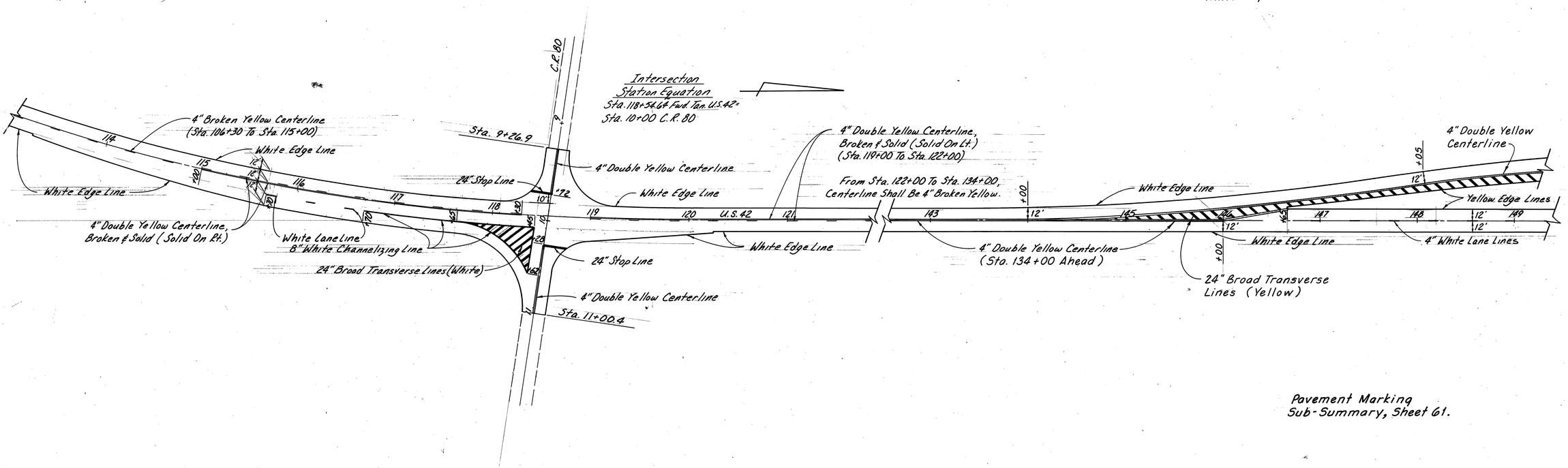

Pavement Marking
Sub-Summary, Sheet 61.

PAVEMENT MARKING C.R. 29 & C.R. 80

CALC. BY DATE	MED-42-1.89	OHIO
CHKD. BY DATE	MED-224-10.45	FHWA REGION 5

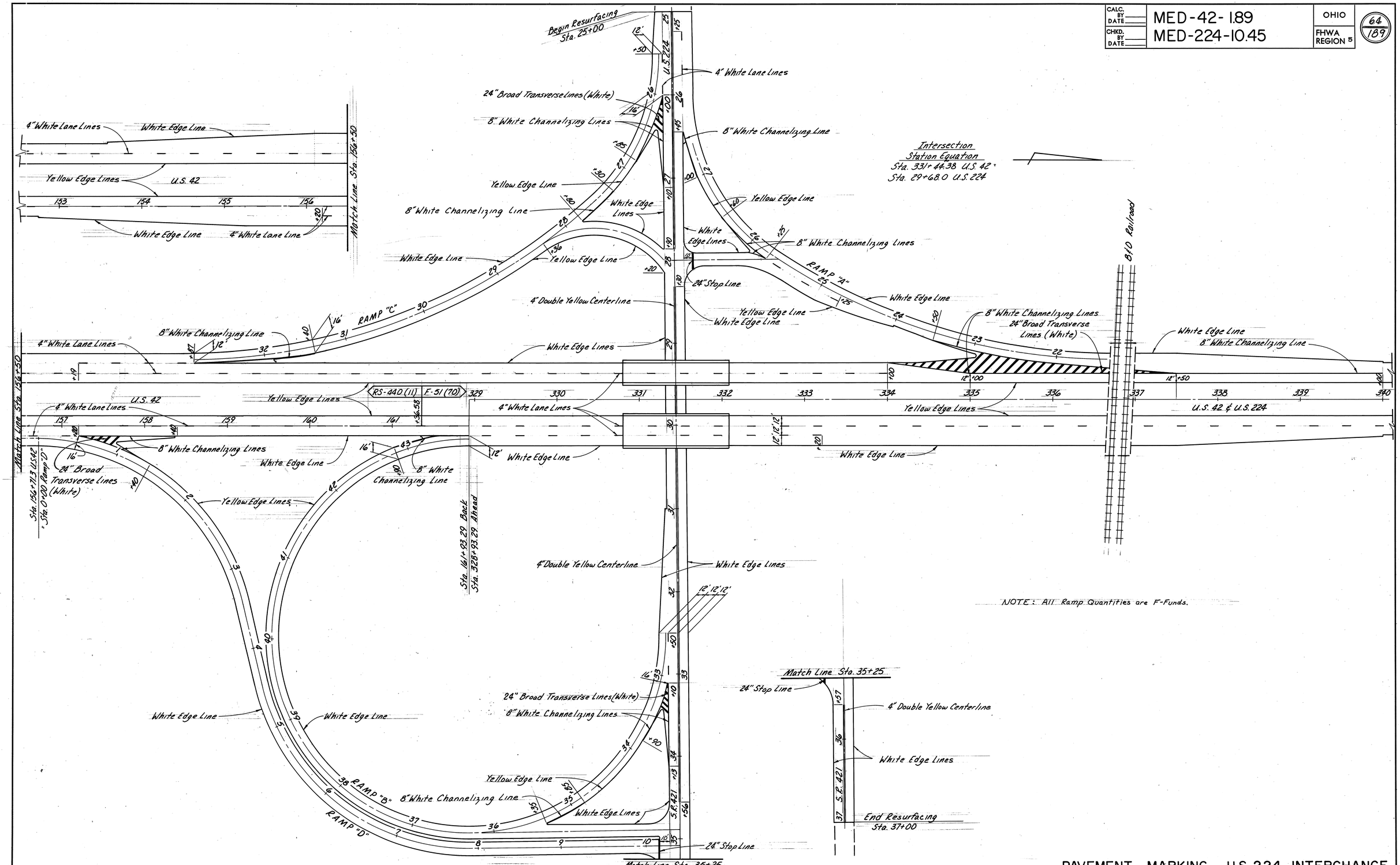

PAVEMENT MARKING U.S. 224 INTERCHANGE

CALC. BY ___ DATE ___	MED-42-1.89	OHIO
CHKD. BY ___ DATE ___	MED-224-10.45	FHWA REGION 5

65/189

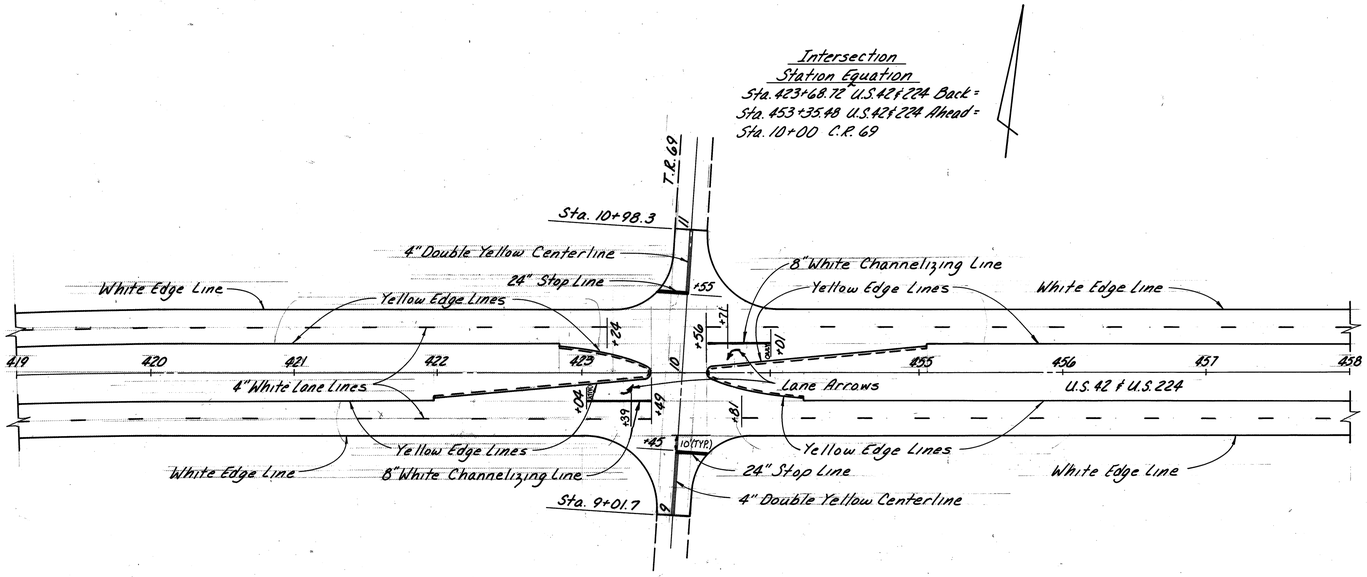

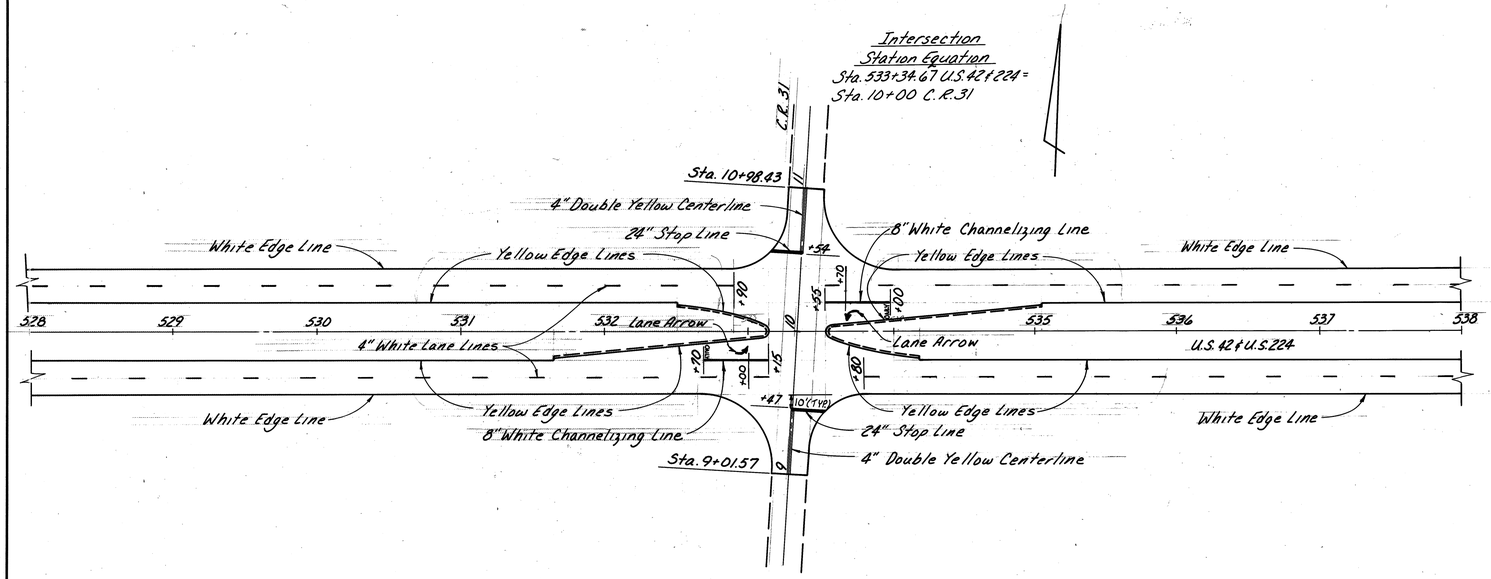

Pavement Marking Sub-summary
Sheet 61.

PAVEMENT MARKING T.R.69 & C.R.31

CALC. BY ____ DATE ____	MED-42-1.89	OHIO	66
CHKD. BY ____ DATE ____	MED-224-10.45	FHWA REGION 5	189

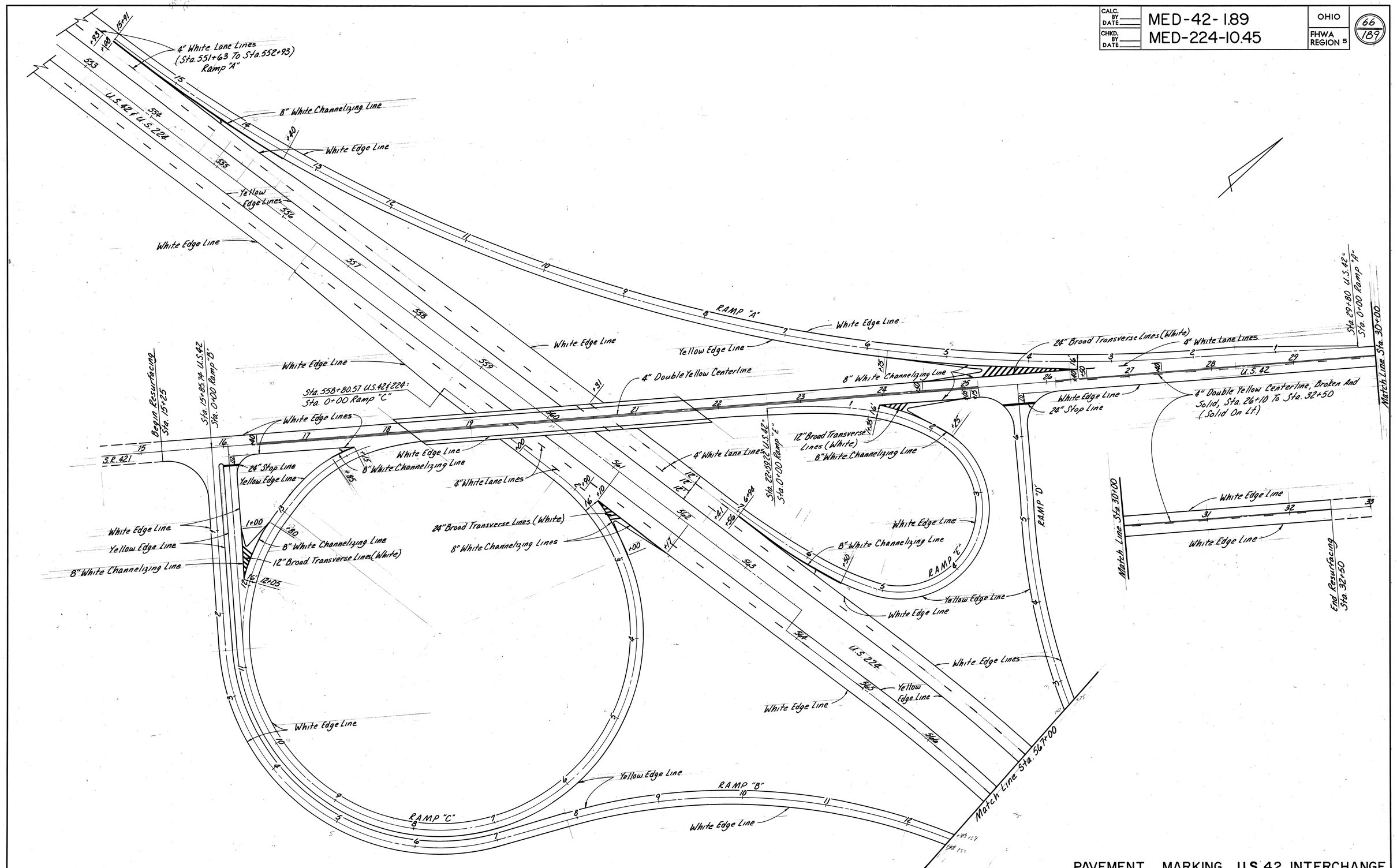

PAVEMENT MARKING U.S. 42 INTERCHANGE

CALC. BY DATE	MED-42-1.89	OHIO	67/189
CHKD. BY DATE	MED-224-10.45	FHWA REGION 5	

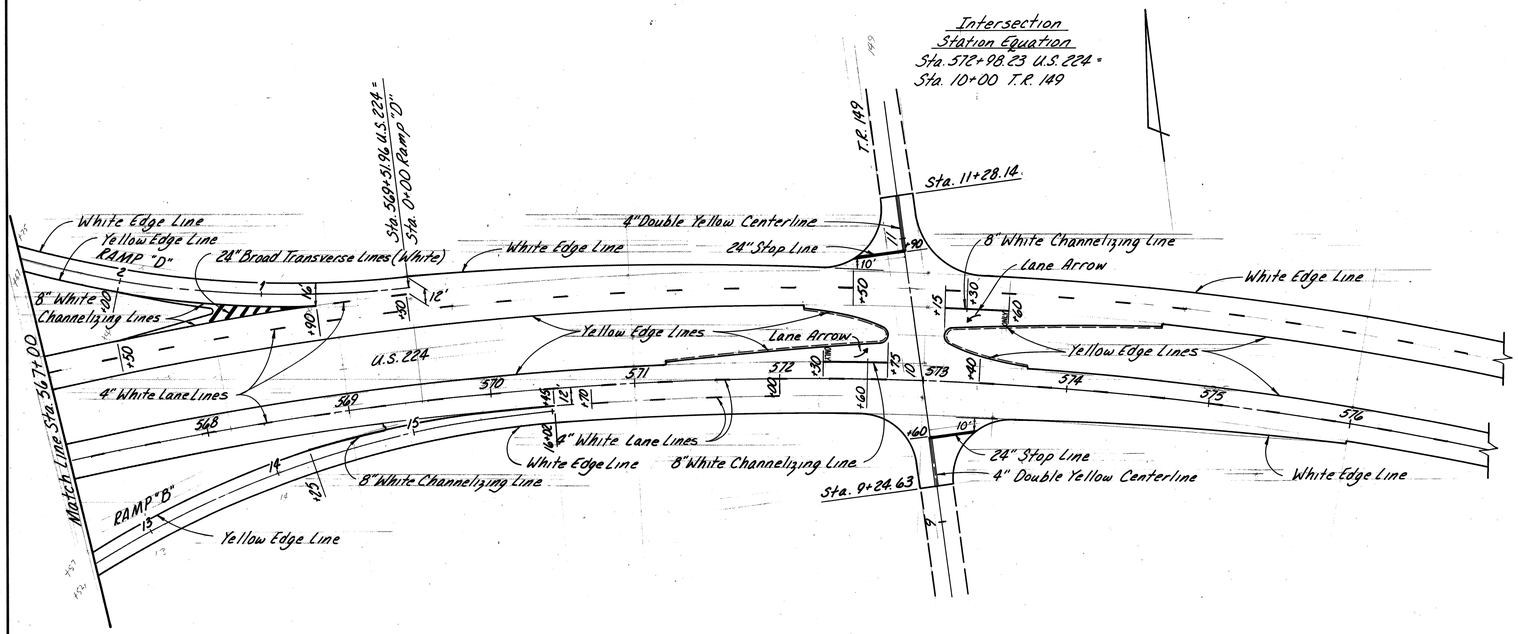

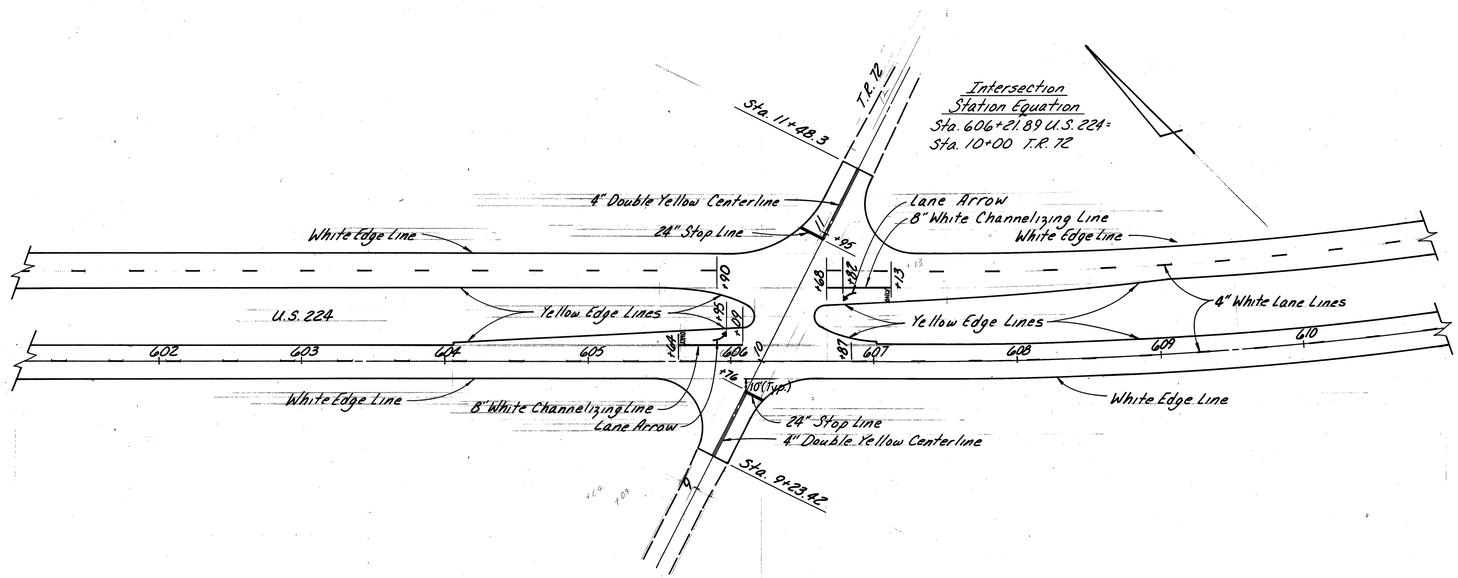

PAVEMENT MARKING T.R. 149 & T.R. 72

CALC. BY DATE	MED-42-1.89	OHIO
CHKD. BY DATE	MED-224-10.45	FHWA REGION 5

68/189

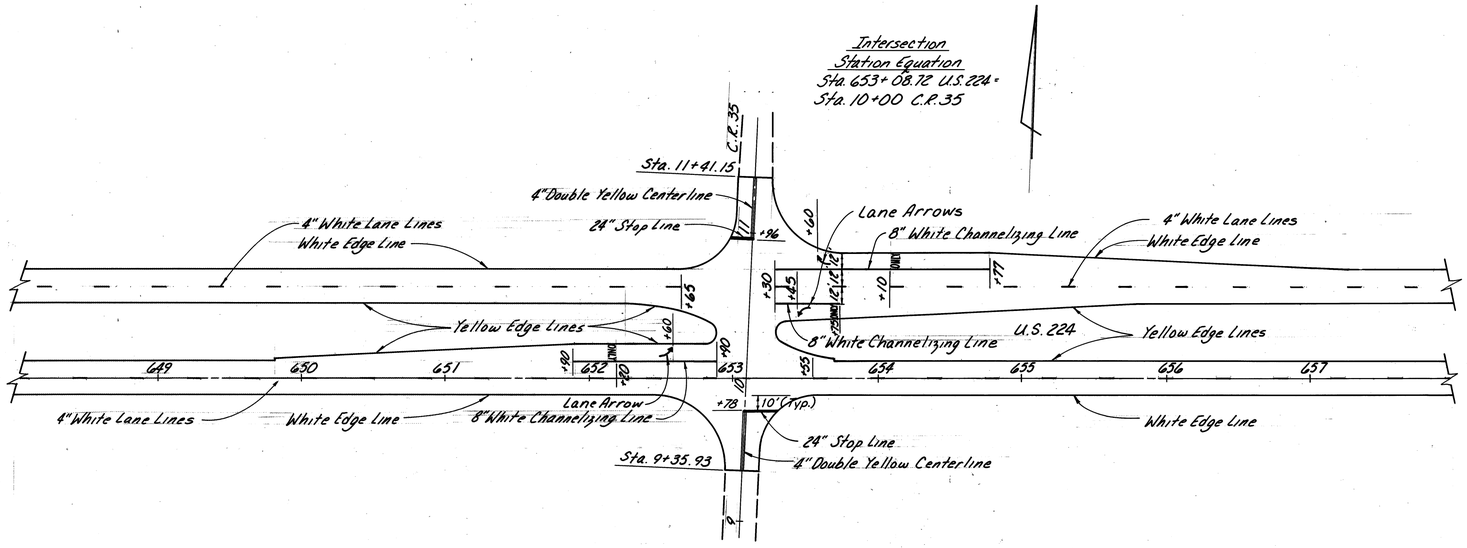

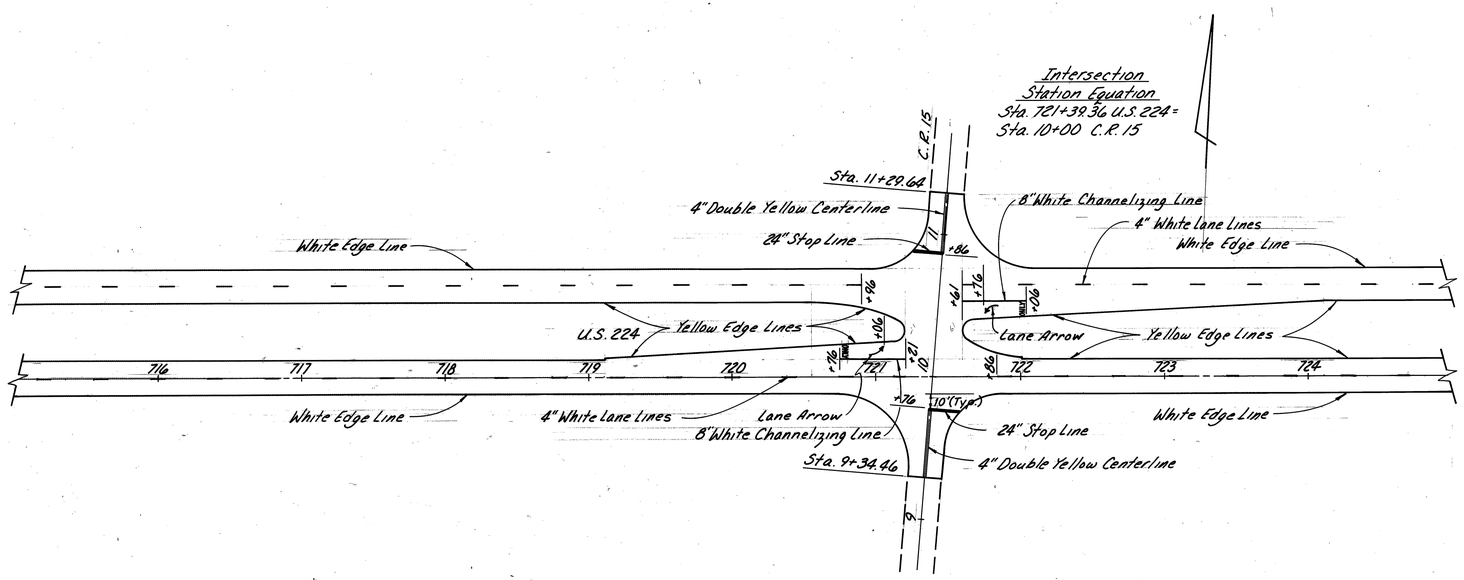

Pavement Marking
Sub-Summary, Sheet 62

PAVEMENT MARKING C.R. 35 & C.R. 15

CALC. BY DATE	MED-42-1.89	OHIO	69/189
CHKD. BY DATE	MED-224-10.45	FHWA REGION 5	

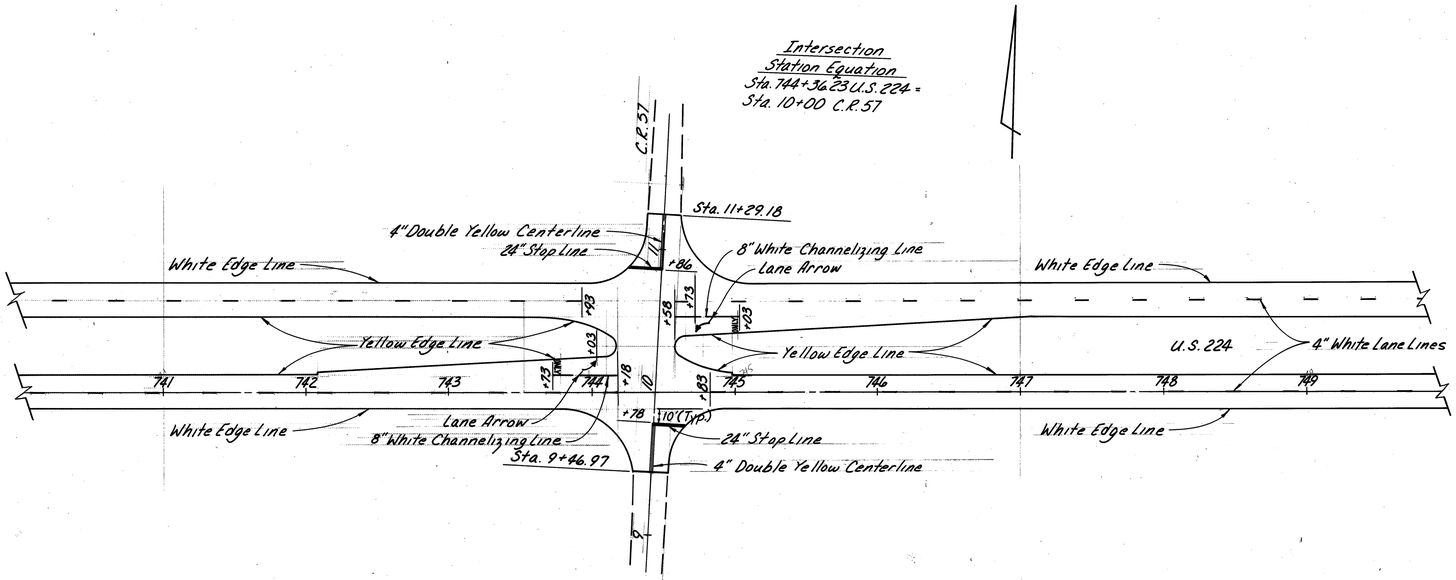

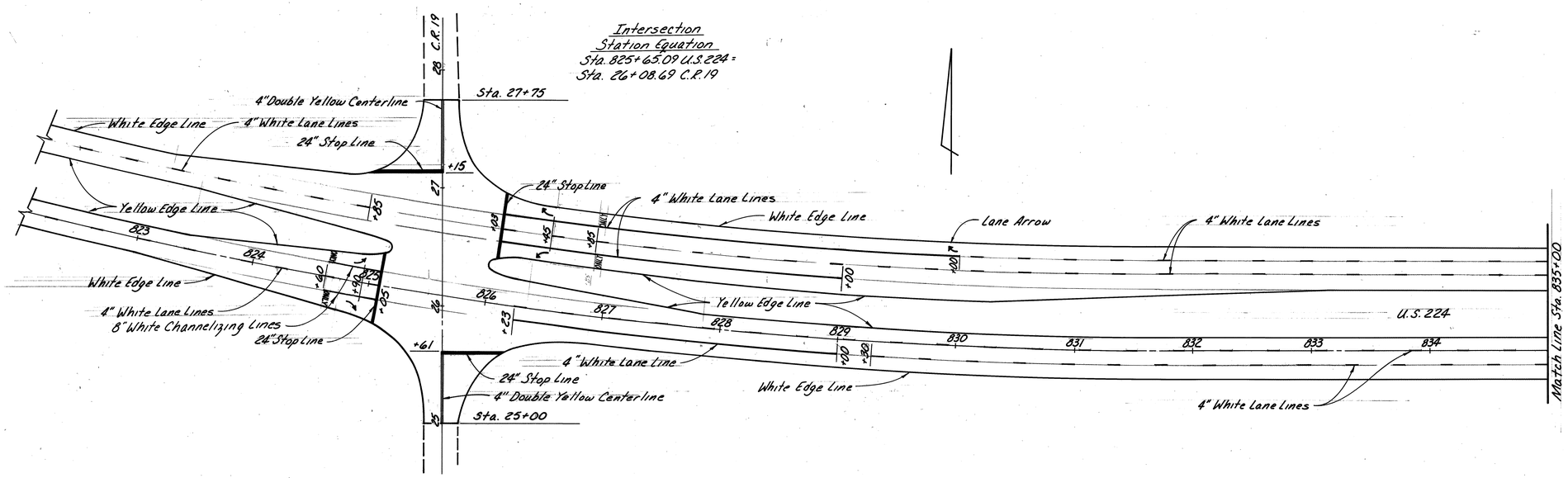

PAVEMENT MARKING C.R. 57 & C.R. 19

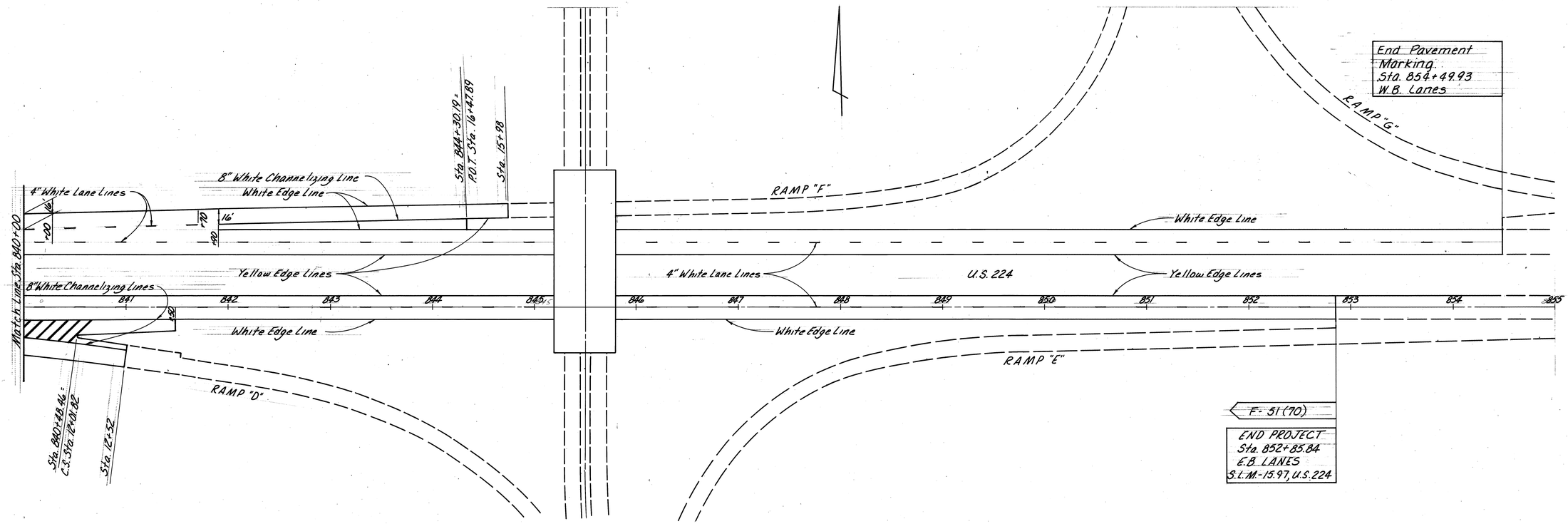

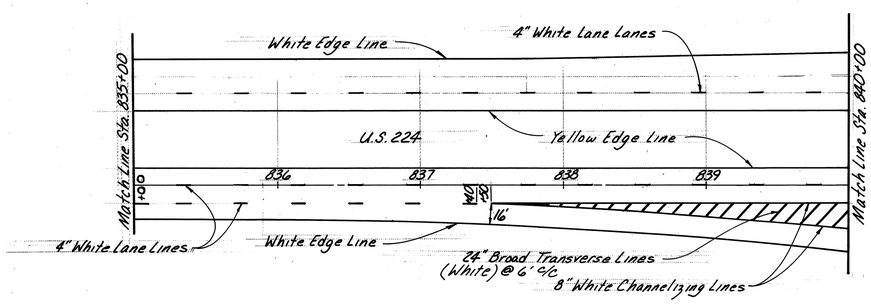

Pavement Marking Sub-summary
Sheet 62.

PAVEMENT MARKING I-71 INTERCHANGE

FENCING SUB-SUMMARY

ITEM	FROM SHEET NUMBER RS-440(11) 72	73		F-51(70) 73	74	75	76	77	78	79		ITEM	Quantities Carried To General Summary RS-440(11)	F-51(70)	Quantities Carried To Sub-Summary F-51(70)	UNIT	DESCRIPTION
202																	
601				8	24	154	14	4	57	61		601	—	—	322	Cu. Yd.	Rock Channel Protection, Type B, With Filter
607	12,193	1197		6453	17,857	15,821	6659	17,853	18,047	13,943		607	13,390	96,633		Lin. Ft.	Fence, Type 47, As Per Plan
607										815		607		815		Lin. Ft.	Fence, Type 47RA, As Per Plan
607	10			4	4	4	12	8	8	4		607				Each	E.P.A.
607	22	2		6	12	18	8	4	9	4		607				Each	C.P.A.
607	17	1		13	36	21	12	38	29	32		607				Each	I.A.P.A.
607	8			4	12	20			8			607				Each	A.C.A.
607	6			3	6	13	3	6	14	5		607				Each	Type 1 Crossing
607				1	3	4	1	1	5	5		607				Each	Type 2 Crossing
607					2			1		1		607				Each	Type 4 Crossing
607	2			1	2	2						607				Each	Type A Terminal
607						1	1	2		2		607				Each	Type B Terminal
607							1					607				Each	Type D Terminal
625	1			4	6	4	2	4	4			625	1	24		Each	Ground Rods

Fencing Abbrevations:

A.C.A. —— Abutment Connection Assembly
C.P.A. —— Corner Post Assembly
E.P.A. —— End Post Assembly
I.A.P.A. —— Intermediate Anchor Post Assembly
R.C.P. —— Rock Channel Protection

Legend

—Fence Grounding (625 Ground Rod)

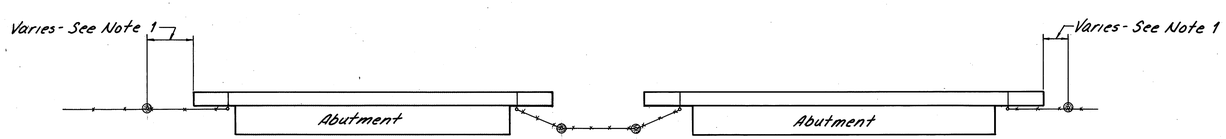

NOTES:

1. Locate Terminal Post To Provide For Attachment Of Full 3'-11" Height Of Woven Wire Fence.
2. Anchors, Concrete, Connecting Rods And Eyebolts Shall Meet Requirements Of Std. Dwg. F-5. Cost Of Furnishing These Items Shall Be Included In The Unit Price Bid Per Lin. Ft. Of Fence.

PLAN VIEW

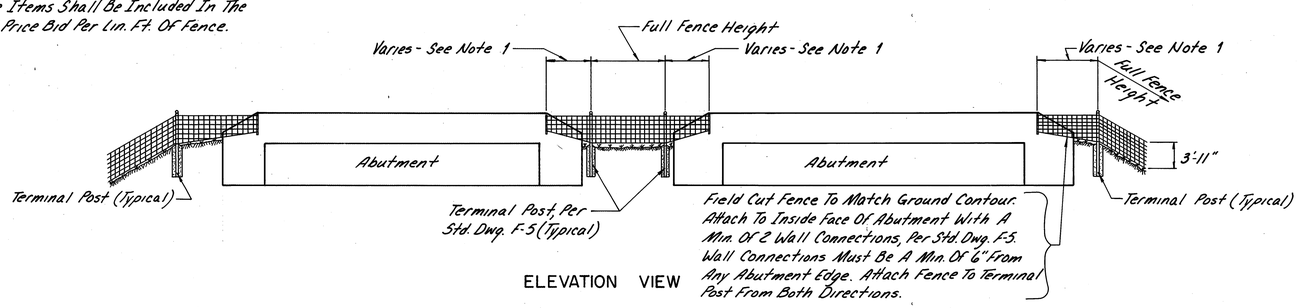

ELEVATION VIEW

ABUTMENT CONNECTION ASSEMBLY (A.C.A) DETAILS

CALC. BY MED DATE 12-87	MED-42-1.89	OHIO
CHKD. BY AFS DATE 12-87	MED-224-10.45	FHWA REGION 5

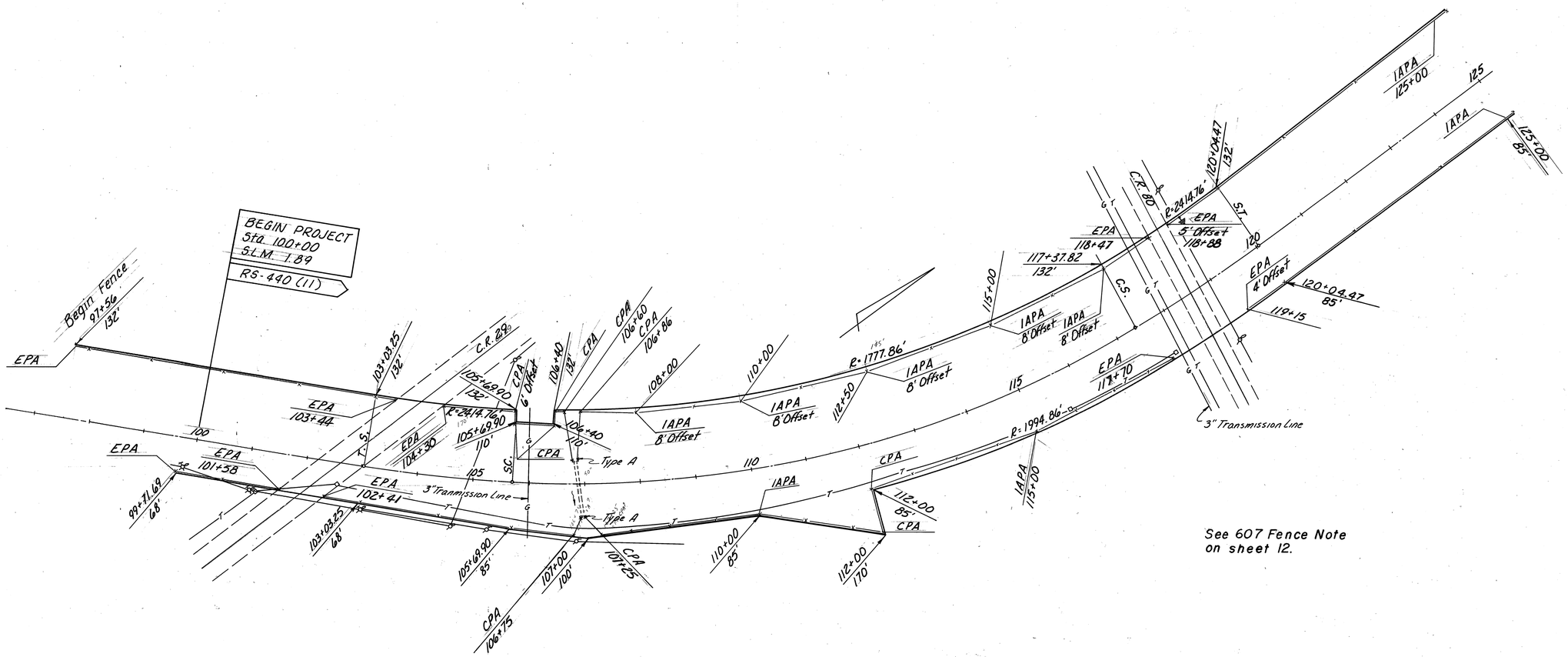

See 607 Fence Note on sheet 12.

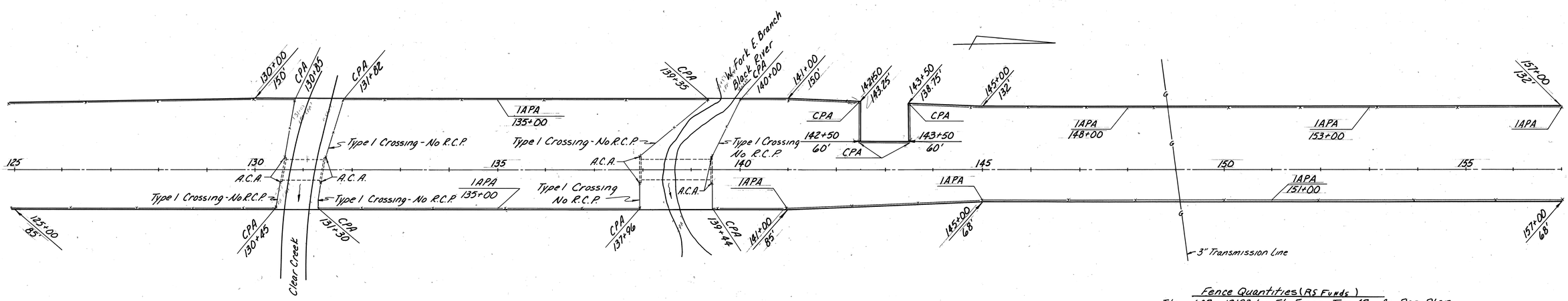

Fence Quantities (RS Funds)

Item 607 - 12,193 Lin. Ft. Fence, Type 47, As Per Plan

Item 625 - 1 Each Ground Rod

FENCE-STA. 97+56 TO STA. 157+00

CALC. BY MED DATE 12-87	MED-42-1.89	OHIO	73/189
CHKD. BY AFS DATE 12-87	MED-224-10.45	FHWA REGION 5	

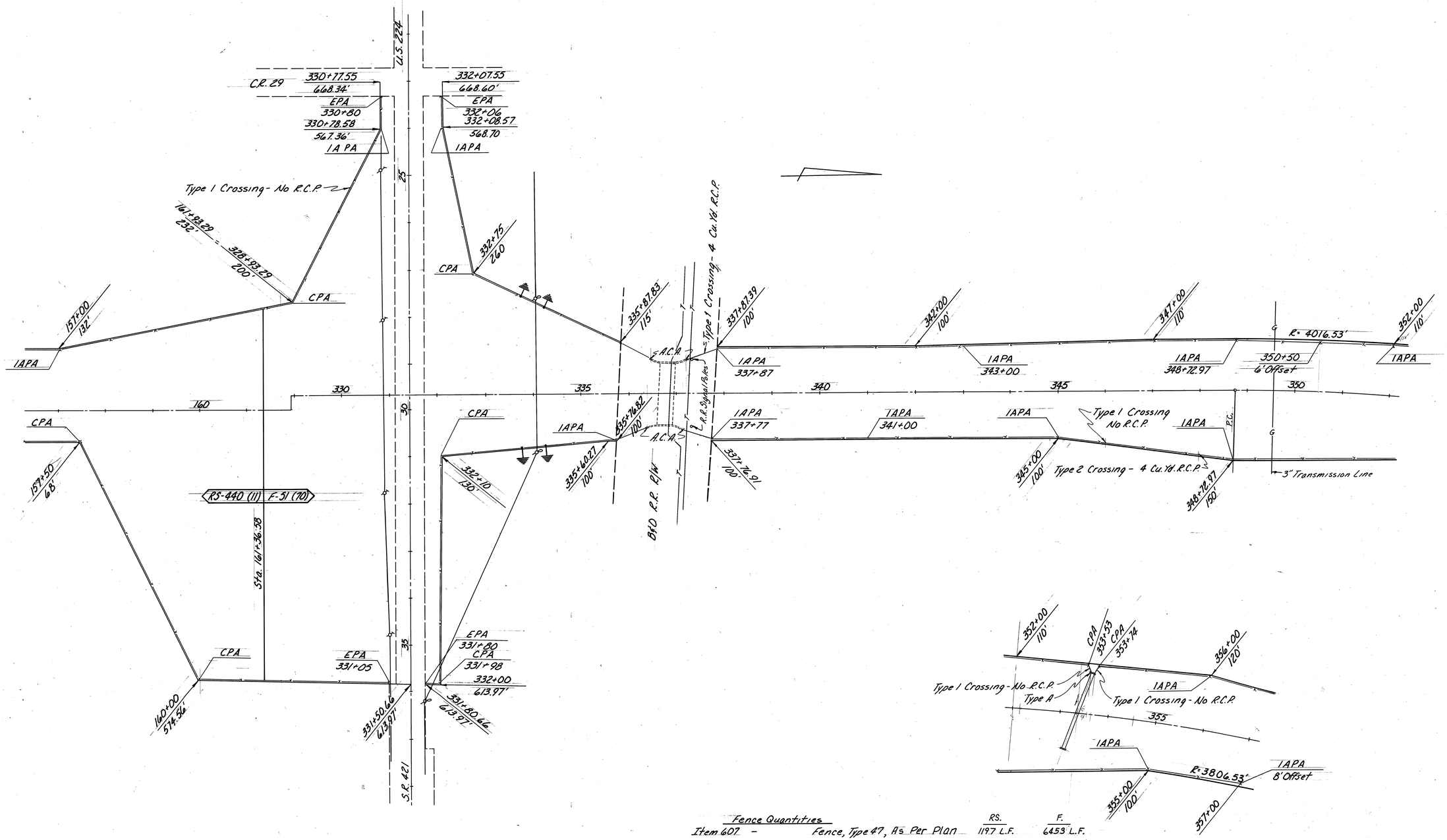

Fence Quantities			RS.	F.
Item 607	-	Fence, Type 47, As Per Plan	1197 L.F.	6453 L.F.
Item 601	-	Rock Channel Prot. Type B W/Filter	—	8 C.Y.
Item 625	-	Ground Rods	—	4 Ea.

FENCE – STA. 157+00 TO STA. 357+00

CALC. BY MED DATE 12-87	MED-42-1.89	OHIO
CHKD. BY RFS DATE 12-87	MED-224-10.45	FHWA REGION 5

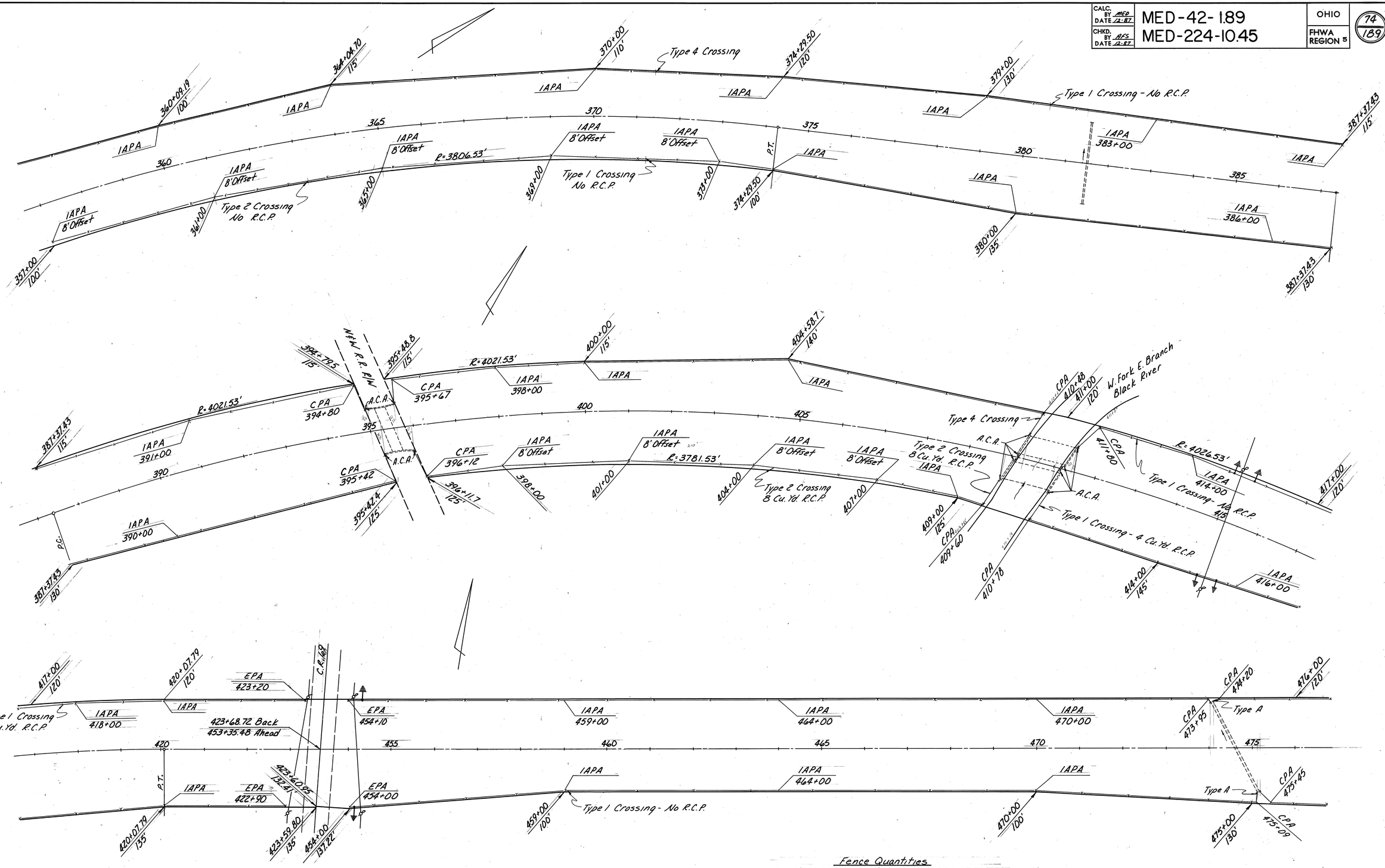

Fence Quantities

Item 607 - 17,857 Lin. Ft. Fence, Type 47, As Per Plan

Item 601 - 24 Cu. Yd. Rock Channel Protection, Type B W/Filter

Item 625 - 6 Each Ground Rods

FENCE-STA. 357+00 TO STA. 476+00

CALC. BY MKD DATE 12-87	MED-42-1.89	OHIO
CHKD. BY RFS DATE 12-87	MED-224-10.45	FHWA REGION 5

75 / 189

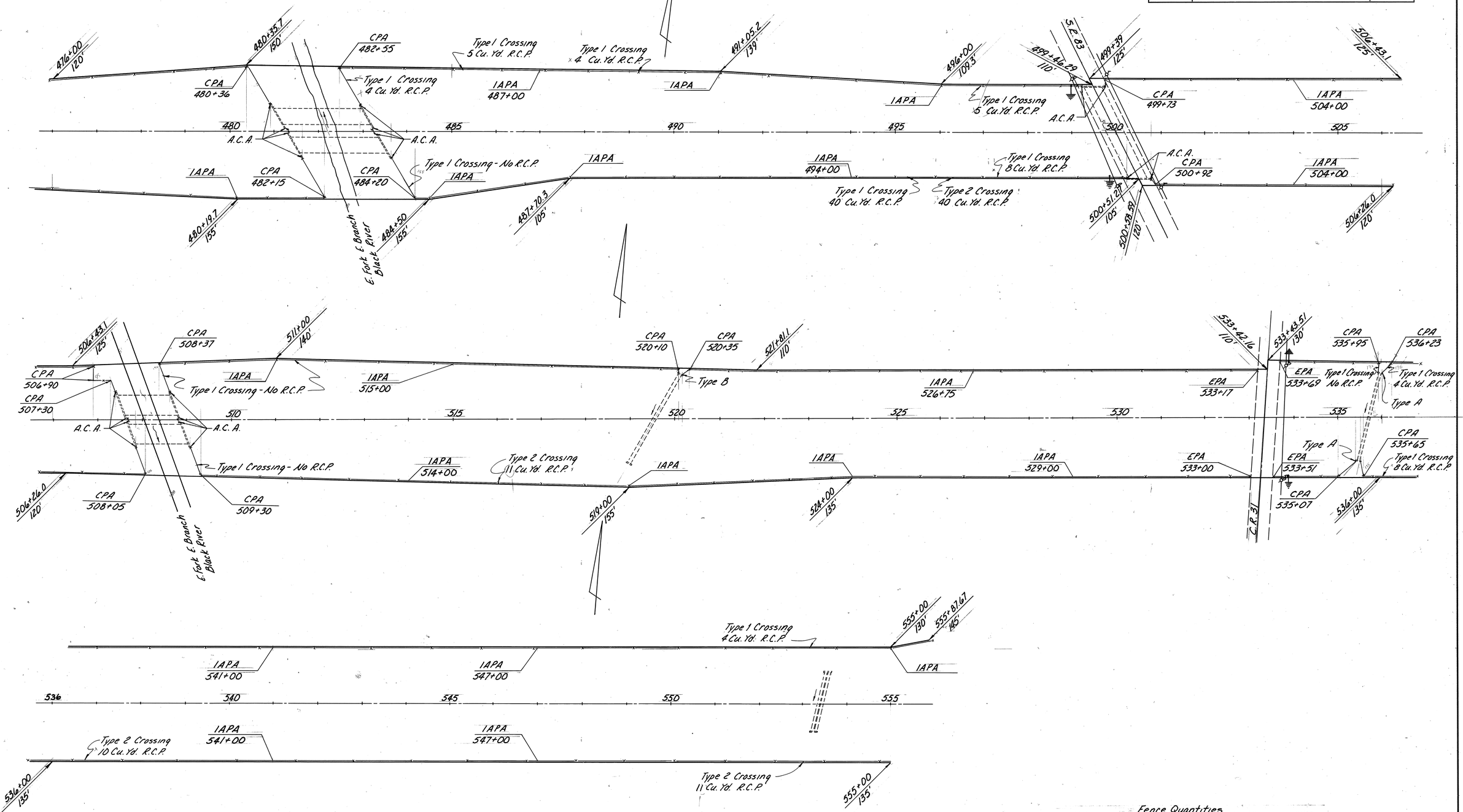

Fence Quantities

Item 607	15,821	Lin. Ft.	Fence, Type 47, As Per Plan
Item 601	154	Cu. Yd.	Rock Channel Protection, Type B W/Filter
Item 625	4	Each	Ground Rods

FENCE — STA. 476+00 TO STA. 555+00

CALC. BY MKD DATE 12-87	MED-42-1.89	OHIO	76
CHKD. BY AFS DATE 12-87	MED-224-10.45	FHWA REGION 5	189

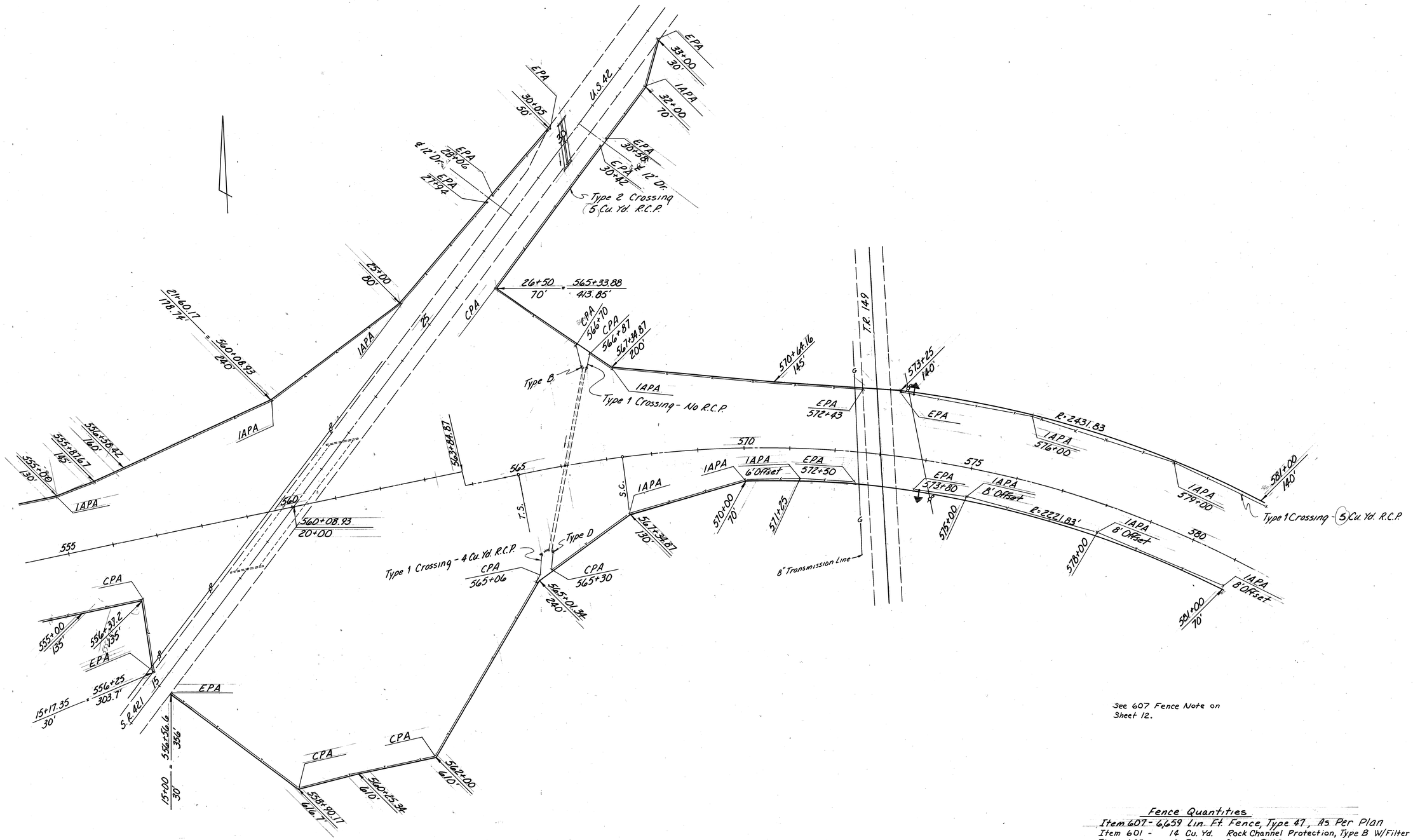

See 607 Fence Note on Sheet 12.

Fence Quantities

Item 607 - 6,659 Lin. Ft. Fence, Type 47, As Per Plan
Item 601 - 14 Cu. Yd. Rock Channel Protection, Type B W/Filter
Item 625 - 2 Each Ground Rod

FENCE-STA. 555+00 TO STA. 581+00

CALC. BY / DATE	MED-42-1.89	OHIO
CHKD. BY / DATE	MED-224-10.45	FHWA REGION 5

77 / 189

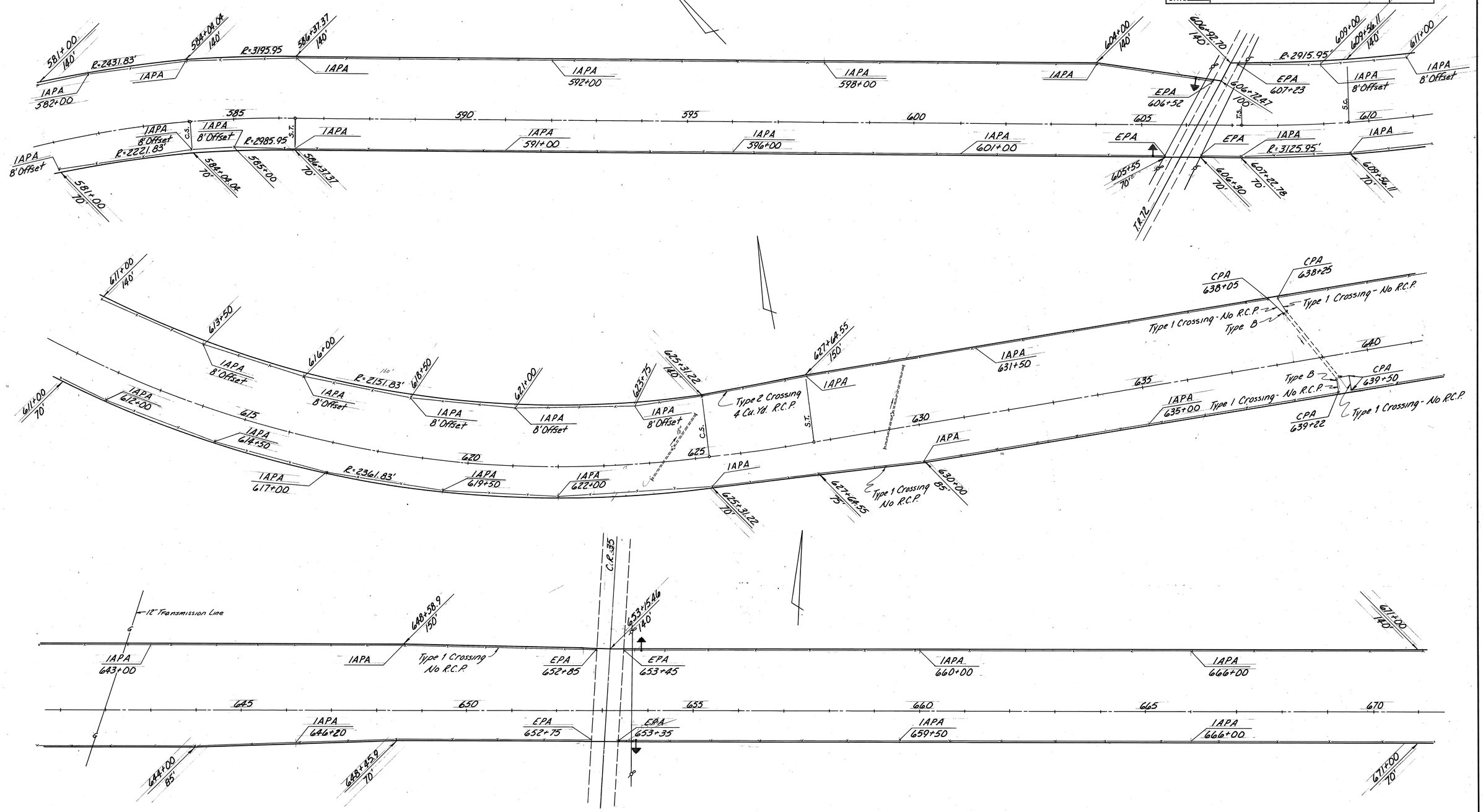

Fence Quantities

Item 607 - 17,853 Lin. Ft. Fence, Type 47, As Per Plan
Item 601 - 4 Cu. Yd. Rock Channel Protection, Type B W/Filter
Item 625 - 4 Each Ground Rods

FENCE-STA. 581+00 TO STA. 671+00

CALC. BY MED DATE 12-87	MED-42-1.89	OHIO	78/189
CHKD. BY AFS DATE 12-87	MED-224-10.45	FHWA REGION 5	

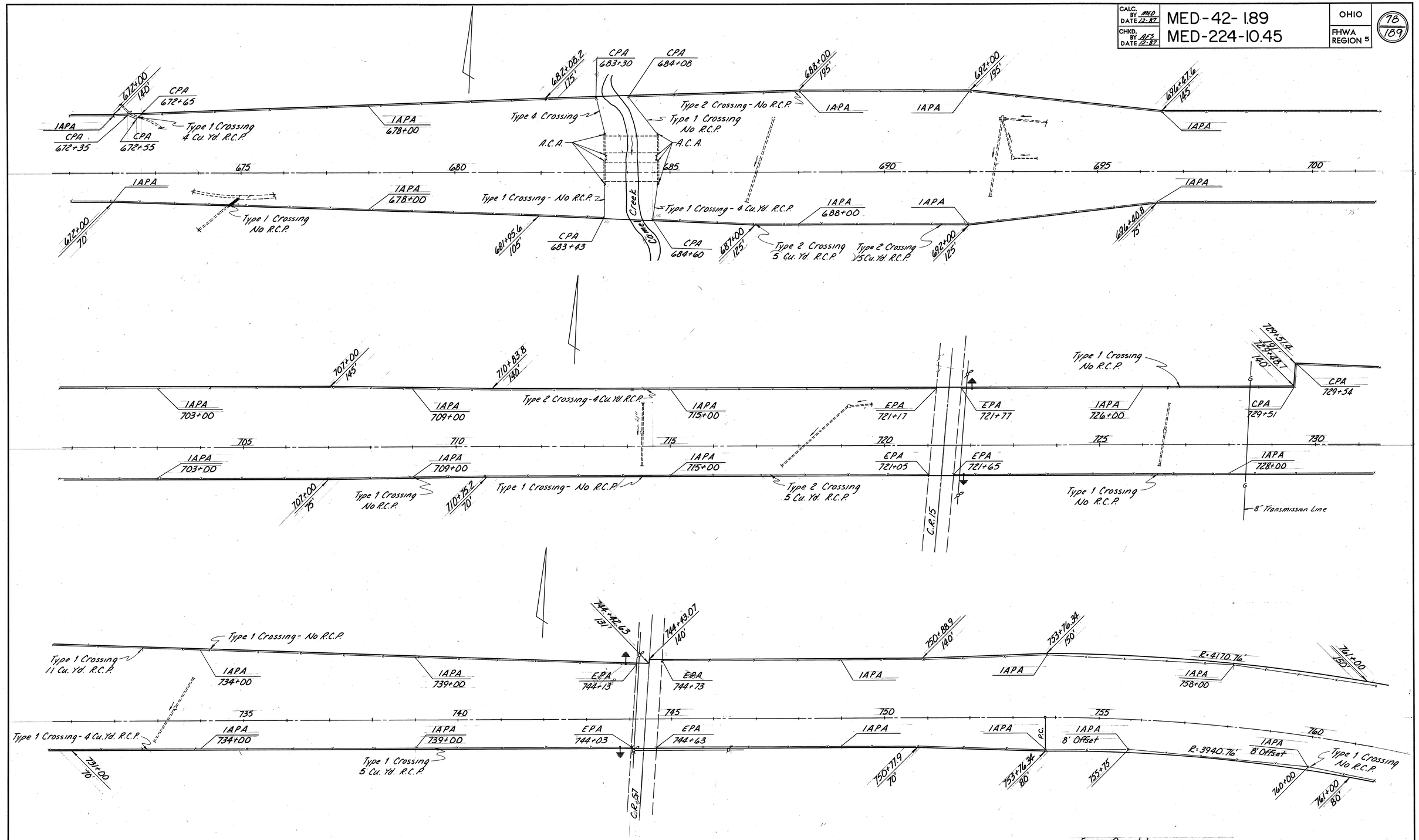

Fence Quantities

~~Item 607-18,047 Lin. Ft. Fence, Type 47~~, As Per Plan

Item 601- 57 Cu. Yd. Rock Channel Protection, Type B W/Filter

Item 625- 4 Each Ground Rods

FENCE-STA. 671+00 TO STA. 761+00

CALC. BY MKD DATE 12-87	MED-42-1.89	OHIO	79
CHKD. BY RFS DATE 12-87	MED-224-10.45	FHWA REGION 5	189

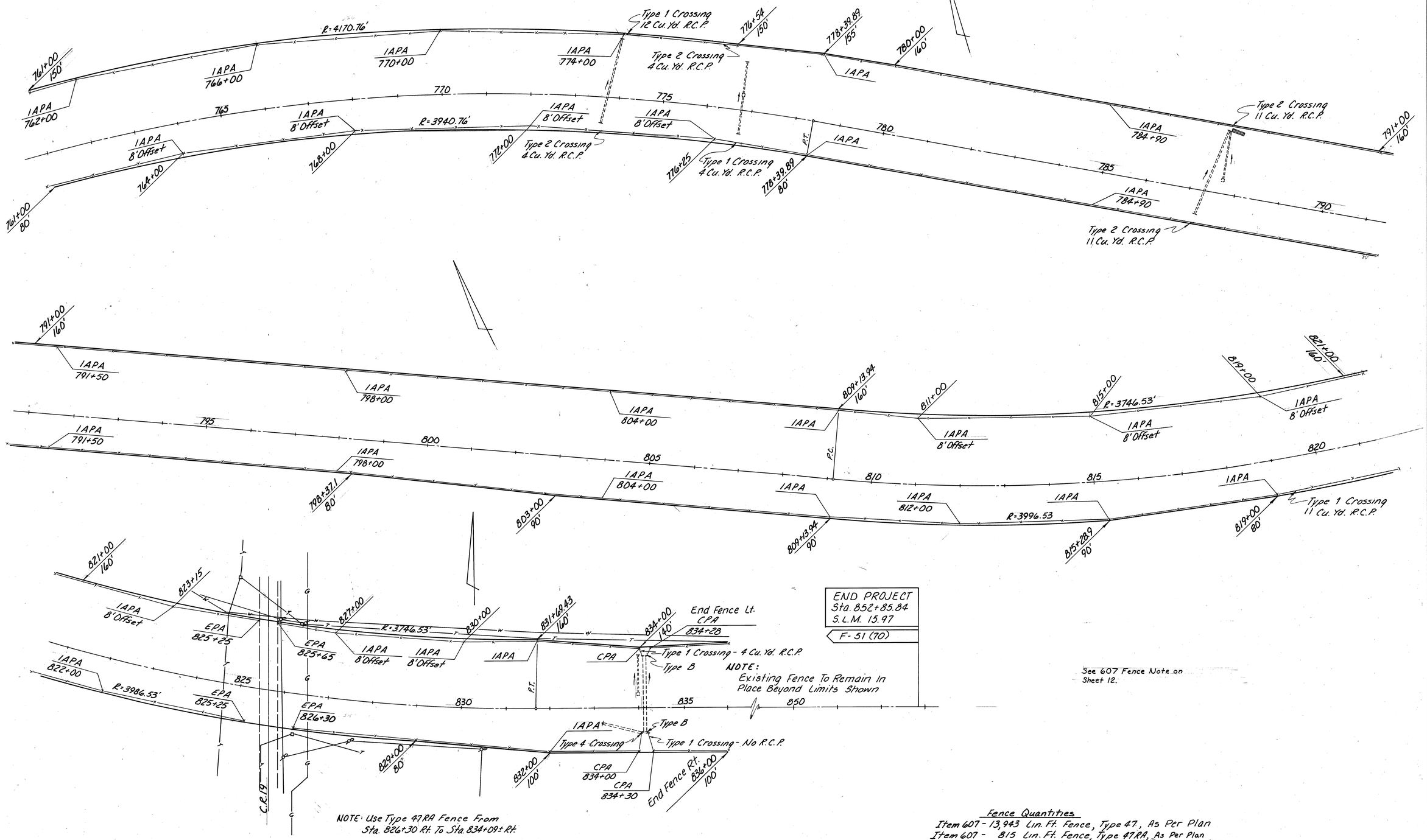

Fence Quantities

Item 607 - 13,943 Lin. Ft. Fence, Type 47, As Per Plan
Item 607 - 815 Lin. Ft. Fence, Type 47RA, As Per Plan
Item 601 - 61 Cu. Yd. Rock Channel Protection, Type B W/Filter

FENCE-STA. 761+00 TO STA. 836+00

STRUCTURE GENERAL NOTES

REFERENCE SHALL BE MADE TO:

Standard Drawings		&	Supplemental Specifications	
AS-1-81	Dated 11-27-81		824	Dated 10-08-82
DBR-2-73	Dated 4-10-73		845	Dated 5-31-88
SD-1-69	Dated 6-12-69		953	Dated 8-21-80
BR-1	Dated 5-29-79		849	Dated 12-24-85
			949	Dated 9-26-86
			850	Dated 5-31-88
			853	Dated 6-26-78
			956	Dated 6-26-78

VERIFICATION

Details and dimensions shown on these plans pertaining to the existing structures have been obtained from plans of the existing structures and/or from field observation and measurements. Consequently, they are indicative of the existing structures and the proposed work but they shall be considered tentative and approximate.

The original construction plans and standard drawings for the existing bridges are available upon request at the District 3 Office of the Ohio Department of Transportation in Ashland, Ohio.

Contract bid prices shall be based upon actual details and dimensions which have been verified by the Contractor in the field.

WORK LIMITATIONS

The Contractor shall schedule the work so that all deck overlays are placed after April 15.

If for some unforeseen circumstances the deck overlays or portions of deck overlays are not placed by October 15, regardless of the work remaining, the full depth repairs shall be completed as per Item 511 of the ODOT Construction and Material Specifications and the unfinished deck shall be resurfaced with Item 404 asphalt concrete and opened to traffic.

The Contractor shall place and maintain at his expense the asphalt wearing surface until removed at his expense the following spring when the deck overlay can be placed after April 15.

ASPHALT PAVEMENT PLANING ON BRIDGE DECKS

All asphalt pavement, seals, and waterproofing shall be planed from the bridge deck surfaces before any deck repair and overlay work may begin. The Contractor shall be ready to begin deck repair work within three (3) days after planing the bridge deck.

Scarifying the concrete deck surface as specified in Supplemental Specification 845 shall be a separate operation, and shall not be performed as a part of the asphalt planing.

See Item 254 for additional asphalt planing requirements.

Payment for all the above shall be included in the unit price bid per square yard which shall include all labor, equipment, materials, and incidentals necessary to complete the above work. Payment will be made at the contract price bid under:

ITEM	UNIT	DESCRIPTION
SPECIAL	SQ. YD.	ASPHALT PAVEMENT PLANING

PORTIONS OF STRUCTURES REMOVED

ABUTMENT BACKWALL REMOVAL: Abutment backwall concrete shall be removed on structures MED-42-0310 L/R, MED-42-0460 L/R MED-42-0539 L/R, MED-42-0589 L/R, and MED-224-1276 L/R. Concrete shall be removed by means of approved pneumatic hammers using blunt pointed chisel tools. The weight of the hammers shall not be more than thirty-five (35) lb.

DECK REMOVAL: Existing concrete decks shall be removed on structures MED-42-0539 L/R, MED-42-0574, and MED-42-0589 L/R. Removal shall include curbs, concrete parapets, and concrete railing end posts at each end of the bridges.

Care shall be taken not to damage the steel beams during removal of the concrete deck. A hoe ram will not be permitted to do any of the work. All imperfections and existing tack welds on the existing steel beams shall be ground smooth. Existing bolts and projections welded to the structural steel shall be cut 1-1/2" above the existing welds. Any damage done to the steel beams shall be repaired by the Contractor at his expense. The Contractor's method of repair shall be approved by the Director.

DECK EDGE REMOVAL: Edges of existing concrete decks shall be removed on structures MED-42-0248, MED-42-0265, MED-42-0460 L/R, and MED-224-1276 L/R to the limits shown on detail sheets in these plans.

CURB & PARAPET REMOVAL: Curbs, parapets, bulb angle gutters, drains, scuppers, bridge railings, concrete railing end posts, and miscellaneous appurtenances attached to the existing deck edges shall be removed as noted in the plans on structures MED-42-0310 L/R and MED-42-0688.

Deck edges, curbs, and parapets shall be removed by a hydraulic splitting method. A line of holes shall be drilled along the removal line and a hydraulic splitter shall be used as per the manufacturer's recommendations. Thirty-five (35) and fifteen (15) pound jack hammers may be used for the final finish work. A hoe ram will not be permitted to do any of the work.

All concrete removal shall be performed in a manner that prevents damage to the existing concrete which is to remain and which avoids cutting, elongating, or damaging existing reinforcing steel to be salvaged. If the concrete to remain is damaged or if existing reinforcing steel to be salvaged is damaged during removal operations, concrete repairs and dowelled reinforcing steel must be added at the Contractor's expense.

The accepted quantities of portions of structures removed and disposed of will be paid for at the price bid per unit as specified below, which prices shall be full compensation for removal and disposal of the above items, including all labor, equipment, materials and incidentals necessary to perform the work. Payment will be made at the contract prices bid under:

ITEM	UNIT	DESCRIPTION
202	CU. YD.	PORTIONS OF STRUCTURES REMOVED, ABUTMENT BACKWALLS, AS PER PLAN
202	LUMP SUM	PORTIONS OF STRUCTURES REMOVED, DECK, AS PER PLAN
202	LIN. FT.	PORTIONS OF STRUCTURES REMOVED, DECK EDGE, AS PER PLAN
202	LIN. FT.	PORTIONS OF STRUCTURES REMOVED, CURB & PARAPET, AS PER PLAN

PROTECTION OF TRAFFIC

When removing portions of structures on bridges over other highways, the Contractor shall close the lane under the work area. The lane closures shall be removed at the end of each working day. No materials shall be allowed to fall onto the highway below.

The Contractor shall submit a plan to the District 3 Construction Engineer and receive approval at least ten (10) days prior to any structure removal operations.

Payment for all of the above shall be included in the lump sum price bid for Item 614, Maintaining Traffic, which shall include all labor, equipment, materials and incidentals necessary to complete the above work.

STREAM POLLUTION

The Contractor shall make provisions during bridge repair operations not to allow any materials or equipment to fall into or enter the water. Portions of structures removed may be allowed to fall onto the stream bank if all of these materials are removed the same day.

All waste material from the structures or approaches shall be disposed of by the Contractor, but in no case shall the Contractor or his agent use the materials as fill at any location along the stream. The cost to comply with all of the these requirements shall be included in the respective bid items.

LATEX MODIFIED CONCRETE OVERLAY & SUPERPLASTICIZED DENSE CONCRETE OVERLAY

Construction and material specifications shall conform to Supplemental Specification 845 & 850 except that the coarse aggregate shall be limestone or slag.

TEMPORARY ASPHALT WEDGE

After the concrete overlay has been placed and before the bridge is opened to traffic a temporary asphalt wedge shall be installed to maintain traffic if the permanent asphalt is not in place.

The temporary wedge shall be 404 asphalt concrete built as per Standard Drawing BP-5, except that no tack coat will be required. The temporary wedge shall be feathered at the rate of one inch per twenty-five feet.

The temporary wedge shall be completely removed just before any new roadway asphalt is placed and in no case shall traffic be allowed to cross an end dam without an approved temporary wedge.

Payment for all of the above shall be included in the lump sum price bid for Item 614, Maintaining Traffic, which shall include all labor, equipment, materials and incidentals necessary to complete the above work.

STRUCTURE GENERAL NOTES

REPLACEMENT OF ABUTMENT BACKWALLS

Abutment backwalls shall be replaced on structures MED-42-0310 L/R, MED-42-0539 L/R, MED-42-0589 L/R, and MED-224-1276 L/R.

Before placing the new concrete, the existing surfaces against which the new concrete will placed and any exposed reinforcing steel shall be thoroughly cleaned by sandblasting. The existing concrete surfaces shall then be kept wet for at least one (1) hour before placing new concrete, and shall be approaching dryness at the time the new concrete is placed to facilitate bonding.

In lieu of the proportioning specified in ODOT Construction and Material Specification 499.03 and 511.02, the materials for this work shall conform to the plan specifications for Class S Concrete on sheet 4/45.

PATCHING CONCRETE STRUCTURES

This item shall be used to repair abutment seats, backwalls, wingwalls, and the undersides of bridge decks as shown in the plans or as directed by the Engineer.

The proposed work shall conform to ODOT Construction and Material Specification Item 519, except that surface preparation shall conform to the following.

Within twenty-four (24) hours before placing concrete, the existing surfaces against which the patching concrete will be placed and any exposed reinforcing steel shall be thoroughly cleaned by sandblasting. Sandblasting shall be at least equal to SAZ "THOROUGH BLAST CLEANING" as outlined in ASTM D-2200 or SSPC-SP6. All loose and deteriorated concrete and calcium carbonate deposits shall be removed with hand tools before sandblasting.

Payment for all the above shall be at the unit price bid per square foot which shall include all labor, equipment, materials and incidentals necessary to complete the above work. Payment will be made at the contract price bid under:

ITEM	UNIT	DESCRIPTION
519	SQ. FT.	PATCHING CONCRETE STRUCTURES, AS PER PLAN

DRILL ABUTMENT DRAIN HOLES

Drain holes shall be drilled into the abutments at structures MED-42-0248 and MED-42-0460 L/R. These holes shall be spaced at approximately five (5) foot centers to provide drainage for the keyway at the superstructure bearing seats of slab bridges.

Payment for drilling the holes shall be made at the unit price bid for each hole which shall include all labor, equipment, materials and incidentals necessary to complete the above work. Payment will be made at the contract price bid under:

ITEM	UNIT	DESCRIPTION
SPECIAL	EACH	DRILL ABUTMENT DRAIN HOLES

SEALING OF CONCRETE SURFACES

Edges of concrete decks and faces of deflector parapets shall be sealed using an epoxy sealer. Refer to detail plans for limits of treatment to be applied at each bridge.

See the proposal note for surface preparation requirements, application rates, material requirements, application procedures, description of the pay item, and units of measurement.

PILE ENCASEMENT

The pier piles on structures MED-42-0248 and MED-42-0460 L/R shall be encased with concrete as per details on sheet 10/45. Within forty-eight (48) hours before placing concrete, the surface of the existing piles against which the concrete shall be placed shall be thoroughly cleaned by sandblasting.

The encasement concrete shall be Class C as per Item 511 of ODOT Construction and Material Specifications. In lieu of the proportioning specified in 499.03 and 511.02, the following table shall be used to establish the quantities per cubic yard. Coarse aggregate shall be No. 8 limestone and shall be tested in accordance with the requirements of 703.02 of the specifications.

FINE AGG. (LB)	COARSE AGG. (LB)	TOTAL (LB)	CEMENT CONTENT (LB)	WATER/ CEMENT RATIO
1555	1100	2655	715	0.50

Air content shall be 8% plus or minus 2%

All other provisions of Item 511 shall remain in effect.

Reinforcing steel shall conform to Item 509 of the ODOT Construction and Material Specifications. The reinforcing steel embedded in the pile encasement concrete shall not be paid for separately, but shall be included in the price bid per unit quantity for the pile encasement.

Payment for the above work shall be at the unit price bid per linear foot which shall include excavating, backfill, all labor, equipment, materials and incidentals necessary to complete the above work. Payment will be made at the contract price bid under:

ITEM	UNIT	DESCRIPTION
SPECIAL	LIN. FT.	PILE ENCASEMENT

RESETTING ROCKER ASSEMBLIES

This work shall consist of furnishing necessary materials and labor to reset existing rocker assemblies at the abutments for structure MED-42-0688. Rockers shall be reset so that the they will stand in a vertical position at 60° F. Rocker assemblies shall be cleaned and painted in accordance with the details and specifications on sheet 7/8.

The Contractor shall field measure all necessary dimensions before resetting the rocker assemblies, and shall submit three (3) copies of the proposed work plan to the Director fifteen (15) days prior to beginning jacking operations and shall receive approval before proceeding with jacking operations.

Care shall be taken while jacking and during the resetting work so that other parts of the existing structure are not disturbed by this operation. Any portions of the structure which are damaged due to the work performed under this item shall be replaced or repaired by the Contractor to the satisfaction of the District 3 Bridge Engineer at the Contractor's expense.

Payment for all of the above work shall be made at the unit price bid for each reset rocker assembly which shall include all labor, equipment, materials and incidentals necessary to complete the above work. Payment will be made at the contract price bid under:

ITEM	UNIT	DESCRIPTION
SPECIAL	EACH	RESET ROCKER ASSEMBLY

TRIMMING BEAMS, REPAIRING AND MOVING END CROSSFRAMES

The existing beams on structures MED-42-0310 L/R, MED-42-0539 L/R, MED-42-0589 L/R, and MED-224-1276 L/R shall be trimmed and ground smooth to allow for movement of the proposed expansion joints.

End crossframes adjacent to trimmed beam ends shall be repaired and moved as detailed in these plans. Web connection plates, gusset plates, and replacement angles required by these plans shall be included for payment in the price bid to move and repair each end crossframe.

All structural steel required for these repairs shall be painted ASTM A36 steel conforming to Item 513 of the ODOT Construction and Material Specifications. Painting of the materials used for repairs shall be performed in accordance with details on sheets 3/8, 4/8, 6/8, & 8/8.

Structural steel required for this work will not require shop drawings prior to fabrication. The Contractor shall make necessary measurements and prepare sketches, drawings, tables, etc. The Engineer shall have authority and responsibility for ensuring that the fabricated steel is acceptable. Technical assistance will be provided on request by the Bureau of Bridges. Mill test reports and shipping documents shall be submitted to the Engineer for review and approval prior to incorporating steel items into the work, as required by 501.07. After fabrication the Contractor shall submit shop drawings to the Engineer for review and approval to ensure that the drawings depict the steel as actually incorporated into the work. The Engineer will then send one approved set to the Bureau of Bridges for information. The fabricator shall furnish a 35 millimeter microfilm copy of each shop drawing, which shall be mounted on an aperture card as specified in 501.05.

Payment for all of the above work, except for painting, shall be made at the unit price bid for each beam or end crossframe, which shall include all labor, equipment, materials and incidentals necessary to complete the above work. Payment will be made at the contract price bid under:

ITEM	UNIT	DESCRIPTION
SPECIAL	EACH	TRIM BEAMS
SPECIAL	EACH	REPAIR AND MOVE END CROSSFRAMES

BITUMINOUS CONCRETE GUTTER

A bituminous concrete gutter shall be built on spill through slopes and centered under scuppers designated to remain in service.

The gutter shall be constructed with 404 asphalt concrete as detailed on sheet 10/45. The asphalt concrete shall be compacted while hot using hand and mechanical tampers.

Payment for all of the above shall be at the unit price bid per lineal foot which shall include all labor, equipment, materials and incidentals necessary to complete the above work. Payment will be made at the contract price bid under:

ITEM	UNIT	DESCRIPTION
SPECIAL	LIN. FT.	BITUMINOUS CONCRETE GUTTER

STRUCTURE GENERAL NOTES

CALC. BY	MED-42-1.89	OHIO
CHKD. BY DATE	MED-224-10.45	FHWA REGION

82 / 189

REPLACING SLIDING BEARINGS WITH ELASTOMERIC BEARINGS

Structures MED-42-0539 L/R and MED-42-0589 L/R shall be raised at the abutments by jacking the steel beams to permit replacement of existing bearings with new elastomeric bearings. At structure MED-42-0539 L/R the beam seat elevations shall be adjusted upward with a fast setting epoxy grout before lowering the superstructure onto the new abutment bearings. This work shall be performed after the existing deck has been removed and prior to reconstruction of the new deck.

Work shall include jacking, temporarily supporting the superstructure, adjusting the abutment seat elevations as required, removing and disposing of the existing bearings, replacing the bearings, including new load plates, sole plates, and elastomeric shim pads as required, then lowering the superstructure onto the new abutment bearings.

Design calculations, plans, and procedures for raising and supporting the beams shall be prepared by a Registered Professional Engineer, and shall bear his registration number and signature or seal. The Contractor shall submit two (2) copies of the design calculations and three (3) copies of the proposed work plan to the Director fifteen (15) days prior to beginning jacking operations and shall receive approval before proceeding with jacking operations.

No temporary welded attachments shall be made to any structural members without the written approval of the Director. Care shall be taken while jacking and during the seat repair work so that other parts of the existing structure are not disturbed by this operation. Any portions of the structure which are damaged due to the work performed under this item shall be replaced or repaired by the Contractor to the satisfaction of the District 3 Bridge Engineer at the Contractor's expense.

Elastomeric bearings shall conform to ODOT Construction and Material Specification Item 516.

Epoxy grout used for adjusting the beam seat elevations shall be furnished by one of the following or an approved equal:

MANUFACTURER	GROUT DESIGNATION
CELTITE, INC. 150 CARLEY COURT GEORGETOWN, KENTUCKY 40324 TELEPHONE (800) 626-2948	CELTITE 42-76 HI-FILL
DURAL INTERNATIONAL CORP. 95 BROOK AVENUE DEER PARK, NEW YORK 11729 TELEPHONE (516) 586-1655	DURALITH
U.S. GROUT CORPORATION 401 STILLSON ROAD FAIRFIELD, CONNECTICUT 06430 TELEPHONE (203) 336-7900	FIVE STAR RAPID EPOXY GROUT

Payment for replacement of the bearings shall be made at the unit price bid for each elastomeric bearing which shall include jacking and supporting the superstructure, and all labor, equipment, materials and incidentals necessary to complete the work. Payment for adjusting the beam seat elevations shall be made at the lump sum price bid for this item which shall include all labor, equipment, materials and incidentals necessary to complete the the work. Payment will be made at the contract price bid under:

ITEM	UNIT	DESCRIPTION
516	EACH	LAMINATED ELASTOMERIC BEARINGS, AS PER PLAN
516	SQ. FT.	1/8" PREFORMED BEARING PADS, 711.21
SPECIAL	LUMP SUM	ADJUSTING BEAM SEAT ELEVATIONS

LAMINATED ELASTOMERIC BEARINGS

The laminated elastomeric bearing manufacturer shall proof load each laminated elastomeric bearing with a compressive load equal to 1.5 times the maximum design load as per Article 25.7, Bearing Tests and Acceptance Criteria, Division II, Construction of the 1985 Interim Specifications for the "Standard Specifications for Highway Bridges" adopted by the American Association of State Highway and Transportation Officials, Thirteenth Edition, 1983. The testing shall be included in the price bid for the bearings. Acceptance of the bearing shall be according to Level I acceptance criteria of Article 25.7 and 711.23 of the Construction and Material Specifications. The manufacturer shall furnish certified test data.

PARAPET JOINT SEALS

Parapet joints above the elastomeric strip seals shall be sealed as per details on sheets 7/45, 8/45, & 9/45.

The parapet joint seal shall be furnished by one of the following:

MANUFACTURER	SEAL DESIGNATION
E-POXY INDUSTRIES, INC. 14 WEST SHORE STREET RAVENA, NEW YORK 12143 TELEPHONE (518) 756-6193	EVAZOTE 50
THERMAL-CHEM INC. 1400 LOUIS AVENUE ELK GROVE VILLAGE, ILLINOIS 60007 TELEPHONE (323) 264-0364	E.V.A.

The seal shall be cemented into the joint with an adhesive recommended by the manufacturer of the joint seal. All laitancies or surface contaminants shall be removed to ensure maximum adhesion.

The thickness of the seal shall be great enough to ensure that the seal remains in compression in the temperature range 0°F to 100°F. The following minimum thickness of seal shall be provided:

STRUCTURE	T (inches)
MED-42-0310 L/R	6"
MED-42-0574	6"
MED-42-0688	7"

Payment for all of the above shall be at the unit price bid per linear foot which shall include the surface preparation, adhesive, and all labor, equipment, materials and incidentals necessary to complete the above work. Payment will be made at the contract price bid under:

ITEM	UNIT	DESCRIPTION
SPECIAL	LIN. FT.	PARAPET JOINT SEAL

SCUPPER EXTENSIONS

The existing scuppers on structure MED-42-0310 L/R shall be modified and extended vertically as per details on sheet 18/45.

Payment for this work shall be made at the unit price bid for each scupper which shall include all labor, equipment, materials and incidentals necessary to complete the above work. Payment will be made at the contract price bid under:

ITEM	UNIT	DESCRIPTION
SPECIAL	EACH	SCUPPER EXTENSION

POROUS BACKFILL

Porous backfill shall be enclosed in filter fabric as shown in the details in this plan. The filter fabric shall be Type B, as per ODOT Construction and Material Specification 712.09. During all periods of shipment and storage the cloth shall be wrapped in a heavy duty protective covering to protect it from direct sunlight, mud, dirt, dust, and other debris.

The filter fabric shall be continuous except at the center joint. All joints shall be lapped at a minimum of two (2) feet. Aggregate shall be No. 57 crushed gravel.

Payment for all of the above shall be at the unit price bid per cubic yard which shall include the removal and disposal of existing paved berm, subbase and embankment material, furnishing all labor, equipment, materials and incidentals necessary to complete the above work. Payment will be made at the contract price bid under:

ITEM	UNIT	DESCRIPTION
518	CU. YD.	POROUS BACKFILL, AS PER PLAN

DUMPED ROCK FILL

Dumped rock fill shall be used to restore the slope protection for the bridges over streams.

Dumped rock shall conform to Item 601 of the ODOT Construction and Material Specifications, except that the rock used shall consist of glacial boulders, sandstone, broken concrete, and carbonate stone which is free of shale, coal, shale stringers, or chert.

Payment for all of the above shall be at the unit price bid per cubic yard which shall include fill, excavation, backfill, disposal of surplus materials, furnishing all labor, equipment, materials and incidentals necessary to complete the above work. Payment will be made at the contract price bid under:

ITEM	UNIT	DESCRIPTION
601	CU. YD.	DUMPED ROCK FILL, TYPE C, AS PER PLAN

REINFORCING STEEL SAMPLES

Refer to ODOT Construction and Material Specification Sections 106.03, 700, 709.01 through 709.05 and 709.08. Sufficient additional reinforcing steel shall be provided for sampling. Random samples shall be replaced in the structures by the additional steel, spliced in accordance with 509.08.

DOWEL HOLES, AS PER PLAN
Dowel holes shall conform to CMS item 510 except that material and installation shall conform to supplemental specifications 853 and 956.

GENERAL NOTES

ITEM 511 – CLASS S CONCRETE, AS PER PLAN

IN LIEU OF THE PROPORTIONING SPECIFIED IN 499.03 AND 511.02, THE FOLLOWING TABLE SHALL BE USED TO ESTABLISH THE QUANTITIES PER CUBIC YARD FOR CONCRETE. THE COARSE AGGREGATE SHALL BE LIMESTONE.

QUANTITIES PER CUBIC YARD (USING NO. 8 LIMESTONE)

AGGREGATE FINE (LB)	AGGREGATE COARSE (LB)	AGGREGATE TOTAL (LB)	CEMENT CONTENT (LB)	WATER/ CEMENT RATIO
1591	1127	2718	715	0.40

AIR CONTENT – 8% PLUS OR MINUS 2%

HIGH RANGE WATER REDUCER (SUPERPLASTICIZER) MAY BE USED AT THE OPTION OF THE CONTRACTOR IF REQUIRED FOR PLACEMENT. THE DOSAGE RATE WILL BE DETERMINED BY THE CONTRACTOR BASED ON THE MANUFACTURERE'S RECOMMENDATION TO ACHIEVE THE DESIRED WORKABILITY LEVEL.

HIGH RANGE WATER REDUCER SHALL CONFORM TO 705.12, ASTM–C494 TYPE F AND SHALL NOT CONTAIN CALCIUM CHLORIDE.

TYPE A OR D CHEMICAL ADMIXTURE CONFORMING TO 705.12 ASTM TYPE F AND NOT CONTAINING CALCIUM CHLORIDE SHALL BE ADDED TO THE CONCRETE AT THE PLANT.

ALL ADDITIVES, INCLUDING AIR ENTRAINMENT, SHALL BE MANUFACTURED BY THE SAME COMPANY AND CERTIFIED AS COMPATIBLE BY THE MANUFACTURING COMPANY.

THE CEMENT CONTENT SHALL BE MAINTAINED AND A MAXIMUM WATER–CEMENT RATIO OF 0.40 SHALL NOT BE EXCEEDED. THE SLUMP OF THE UNPLASTICIZED CONCRETE DELIVERED TO THE JOB SITE SHALL BE 1–1/2" PLUS OR MINUS 1/2". THE SUPERPLASTICIZING ADMIXTURE SHALL BE ADDED AT THE JOB SITE AND MIXED A MINIMUM OF FIVE (5) MINUTES. AFTER THE SUPERPLASTICIZER HAS BEEN ADDED, THE SLUMP SHALL BE 6" PLUS OR MINUS 2". THE CONTACTOR SHALL FURNISH A VOLUMERIC DISPENSER FOR THE SUPERPLASTICIZER.

CONCRETE MIXTURES CONTAINING A HIGH RANGE WATER REDUCER SHALL MEET THE SAME REQUIREMENTS FOR ENTRAINED AIR CONTENT, MINIMUM STRENGTH, AND MAXIMUM WATER–CEMENT RATIO AS REQUIRED FOR THE RESPECTIVE GRADE OF CONCRETE WITHOUT A HIGH RANGE WATER REDUCER.

SAMPLING AND TESTING FOR ENTRAINED AIR CONTENT AND MINIMUM STRENGTH SHOULD BE TAKEN FROM THE CONCRETE THAT HAS BEEN TREATED WITH A HIGH RANGE WATER REDUCER.

ALL INITIAL TESTS SHALL BE THE RESPONSIBILITY OF THE CONTRACTOR. THESE TESTS SHALL BE PERFORMED BY A COMPETENT CONCRETE TECHNICIAN. THIS INFORMATION SHALL BE PROVIDED TO THE PROJECT ENGINEER. THE PROJECT ENGINEER SHALL MAKE ONLY THE FINAL TESTS AS THE CONCRETE IS PLACED ON THE DECK.

THE CONTRACTOR SHALL MAKE ONE OR MORE TRIAL BATCHES OF THE SUPERPLASTICIZED DENSE CONCRETE OF THE SIZE TO BE HAULED AT LEAST FOUR DAYS BEFORE THE DECK IS TO BE PLACED. HE SHALL CAST ONE OR MORE TEST SLABS, E.G. 8 FT. LONG X A WIDTH WHICH IS WIDE ENOUGH TO ACCOMODATE HIS TINING EQUIPMENT X 4 INCHES THICK, FOR TEXTURING ACCORDING TO 511.16 AND SHALL PREPARE OTHER SAMPLES AND SPECIMENS AS DIRECTED BY THE PROJECT ENGINEER. THE CONTRACTOR SHALL FURNISH THE REQUIRED MATERIALS AND SAMPLES WITHOUT CHARGE TO THE STATE AS PER 106.03. THE PROJECT ENGINEER SHALL BE NOTIFIED SEVEN (7) DAYS IN ADVANCE OF THE TEST BATCH PREPARATION AND HE WILL CONDUCT ALL OF THE REQUIRED TESTS.

CURING:

AN EVAPORATION RETARDANT AND FINISHING AID SHALL BE USED AT THE CONTRACTORS OPTION PRIOR TO THE TINING OPERATION. ANY PRODUCT USED FOR SUCH PURPOSE SHALL BE SPECIFICALLY MARKETED FOR SAID USE. (PLAIN WATER IS NOT ACCEPTABLE) THE APPLICATION RATE SHALL NOT EXCEED THE HOURLY SURFACE EVAPORATION RATE AS DETERMINED BY FIGURE 1.

IMMEDIATELY AFTER THE TINING OPERATION THE CONTRACTOR SHALL SPRAY AN EVAPORATION RETARDANT OVER THE TEXTURED AREA. THE APPLICATION RATE SHALL BE AS PER THE MANUFACTURER'S RECOMMENDATIONS. THE WET BURLAP CURE SHALL FOLLOW THIS OPERATION AS CLOSELY AS POSSIBLE.

CURING SHALL BE IN ACCORDANCE WITH 511.14 TYPE A WATER CURING. BY THE CONTINUOUS SPRINKLING METHOD ONLY. SUPPLEMENTAL SPECIFICATION 836 CONCRETE CURING MEMBRANE SHALL NOT BE USED FOR THIS ITEM.

PLACEMENT:

PLACEMENT OF CONCRETE SHALL BE COMPLETED UNDER FAVORABLE ATMOSPHERIC CONDITIONS. FAVORABLE ATMOSPHERIC CONDITIONS EXIST WHEN THE SURFACE EVAPORATION RATE AS AFFECTED BY THE AMBIENT AIR TEMPERATURE, CONCRETE TEMPERATURE, RELATIVE HUMIDITY, AND WIND VELOCITY IS 0.1 POUNDS PER SQUARE FOOT PER HOUR OR LESS. FIGURE (1) SHALL BE USED TO DETERMINE GRAPHICALLY THE SURFACE EVAPORATION RATE. FAVORABLE ATMOSPHERIC CONDITIONS MAY REQUIRE PLACEMENT AT NIGHT.

IF PACEMENT OF THE CLASS S CONCRETE IS TO BE MADE AT NIGHT, THE CONTRACTOR SHALL SUBMIT A PLAN WHICH PROVIDES ADEQUATE LIGHTING FOR THE WORK AREA AT LEAST FIFTEEN (15) CALENDER DAYS IN ADVANCE AND RECEIVE WRITTEN APPROVAL FROM THE ENGINEER BEFORE PLACING THE CONCRETE. THE LIGHTS SHALL BE SO DIRECTED THAT THEY DO NOT AFFECT OR DISTRACT APPROACHING TRAFFIC.

ALL OTHER PROVISIONS OF 511 SHALL REMAIN IN EFFECT.

PAYMENT FOR THE ABOVE COMPLETED AND ACCEPTED QUANTITIES WILL BE MADE AT THE CONTRACT BID PRICE FOR:

ITEM	UNIT	DESCRIPTION
511	CU.YD.	CLASS S CONCRETE, ABUTMENT, AS PER PLAN
511	CU.YD.	CLASS S CONCRETE, SUPERSTRUCTURE, AS PER PLAN

FIGURE NO. 1

TO USE THIS CHART:

1. ENTER WITH AIR TEMPERATURE, MOVE UP TO RELATIVE HUMIDITY.
2. MOVE RIGHT TO CONCRETE TEMPERATURE .
3. MOVE DOWN TO WIND VELOCITY.
4. MOVE LEFT, READ APPROX. RATE OF EVAPORATION.

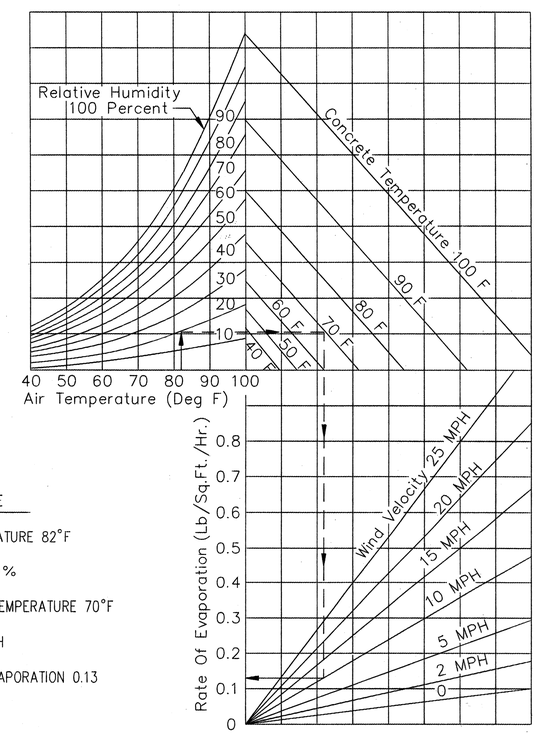

EXAMPLE

1. AIR TEMPERATURE 82°F
2. HUMIDITY 20 %
3. CONCRETE TEMPERATURE 70°F
4. WIND 10 MPH
5. RATE OF EVAPORATION 0.13

LATEST REVISION – 4/88

Item 516, Expansion Joints Including Elastomeric Strip Seals

DESCRIPTION. This item shall include the furnishing of all materials and labor necessary to fabricate, assemble, construct, galvanize, coat, and install structural expansion joints including elastomeric strip seals.

At each bridge, the existing expansion joint armor shall be modified or replaced to accommodate the installation of elastomeric strip seals.

At joints designated for replacement this shall include all work required to remove all of (or parts of) the existing expansion joints and replacing the joints with new armor and elastomeric strip seals.

MATERIALS. Materials shall conform to the following:

Structural Steel.
All structural steel in the joints shall be ASTM A36, A242, or A588.

Galvanizing.
All structural steel used in the expansion joints, except for the interior bonding surfaces of the seal retainers, shall be galvanized in accordance with Item 711.02 of the ODOT Construction and Material Specifications.

Strip Seal Retainer and Gland.
Strip seals shall have a minimum movement rating of 4 inches unless another rating is specified elsewhere on the plans. Elastomeric seals shall be furnished in one continuous piece. The steel retainer and elastomeric seal shall both be furnished by one of the following manufacturers or an approved equal:

Manufacturer	Seal Designation	Retainer * (1)	Retainer * (2)
Watson Bowman and Acme Corp. Amherst, New York	S-400	A	E
Structural Accessories Lenoir, North Carolina	40 SS	A	E
D. S. Brown Company North Baltimore, Ohio	SS400	A	E

(1) Type A retainers shall be used where expansion joints are to be rebuilt with new joint armor.

(2) Type E retainers shall be used where existing expansion joints are to be extended vertically.

* Optional split retainers used at changes in alignment shall be fastened with stainless steel set screws.

The preformed strip seal gland shall be extruded polychloroprene material meeting the requirements of ASTM D2628, except that recovery tests will not apply.

Physical properties of the elastomeric strip seal gland shall meet the following requirements:

Property	Requirement	ASTM Method
Tensile strength (psi)	2000 min.	D412
Elongation at Break (%)	250 min.	D412
Hardness (Type A Durometer)	50 min. 65 max.	D2240 (modified)
Oven aging, 70 hr. @ 212°F		
Tensile strength loss (%)	20 max.	D573
Elongation loss (%)	20 max.	
Hardness change, (points)	10 max.	
Ozone resistance @ 20% strain, 300 PPHM, in air at 104°F (wiped with Toluene to remove surface contamination)	No Cracks	D1149

Each lot of strip seal glands shall be tested by the manufacturer or an accredited laboratory to ensure compliance with these provisions. Two copies of the qualification test data indicating that the tested materials comply with these provisions shall be submitted to the testing laboratory. Sampling, when requested, shall be in accordance with ODOT Construction and Material Specification 106.03. If seals are furnished in a length requiring cutting in the field, the piece shall be at least 2'-0" longer than joint requirements so that the removed portion can be submitted to the laboratory for testing.

Each strip seal gland design, shape, width, depth and thickness shall be approved by the Director. Material acceptance will be based upon laboratory evaluation of certified test data and the TE-30 field inspection report.

Lubricant-Adhesive.
A lubricant-adhesive shall be used to install the preformed strip seals. The lubricant-adhesive shall be furnished by one of the following manufacturers or an approved equal:

Manufacturer	Adhesive
Sika Chemical Corporation Lyndhurst, New Jersey	SIKASTIX 360
Felt Products Manufacturing Company Skokie, Illinois	FEL-POXY FP-101

PREPARATIONS FOR INSTALLATION. All surfaces of elastomeric strip seal glands shall be cleaned with methyl ethyl ketone (MEK), toluene (T), or other approved solvent using clean disposable cloths. Precautions shall be taken to avoid subsequent contamination of the prepared surfaces.

The bonding surfaces of the steel retainers (the interior of the anchor grooves) shall be prepared to Grade SA 3, ASTM D2200. Preparation shall be accomplished not more than 24 hours prior to adhesive bonding.

INSTALLATION. Immediately prior to application of the lubricant-adhesive, bonding surfaces shall be clean, dry and warmer than 45°F, and they shall be maintained at or above this temperature until the adhesive has cured. Lubricant-adhesive shall be applied liberally to both steel and elastomeric bonding surfaces using a stiff brush if necessary to achieve a complete and relatively uniform coating. Then the bulbed edges of the elastomeric seal shall be inserted into the anchor grooves. After installation, excess lubricant-adhesive shall be removed from the exposed seal surfaces.

Seal glands shall be installed with equipment designed for, or specifically adapted for installing elastomeric joint seal glands. This equipment shall not elongate the seal gland or cause damage to the completed installation.

JOINTS IN END DAM ARMOR. Joint armor and steel retainers may have field joints as designated in these plans to accommodate stage construction. However, the elastomeric strip seals shall be furnished and installed in one continuous piece after all phases of joint armor construction are complete.

Superstructure armor shall be installed with one joint only at the crown of the roadway. One additional joint will be permitted on bridges with more than two roadway lanes. The transverse joints in the superstructure angles shall have complete penetration butt welds, and the welds in contact with steel retainers shall be ground flush.

Abutment armor may have more joints than permitted in the superstructure end dam. No segment of the abutment armor shall be less than six (6) feet in length. Joints shall be closely butted but need not be welded.

Steel retainers shall be butt welded on the top surfaces at all transverse joints in the retainers to ensure a watertight seal.

SHOP DRAWINGS. Shop Drawings for the expansion joints are required. The manufacturer of the expansion joints shall submit details of the proposed joint retainers prior to fabrication. Other structural steel required for this work will not require shop drawings prior to fabrication. The Contractor shall make the necessary measurements and prepare sketches, drawings, and tables showing the proposed work.

The Engineer shall have authority and responsibility for ensuring that the fabricated steel is acceptable. Technical assistance will be provided on request by the Bureau of Bridges. Mill test reports and shipping documents shall be submitted to the Engineer for review and approval prior to incorporating steel items into the work, as required by CMS 501.07.

After fabrication, the Contractor shall submit shop drawings to the Engineer for review and approval to ensure that the drawings depict the steel as actually incorporated into the work. The Engineer will then send one approved set to the Bureau of Bridges for information. The fabricator shall furnish a 35 millimeter microfilm copy of each shop drawing, which shall be mounted on an aperture card as specified in CMS 501.05

METHOD OF MEASUREMENT. The quantity shall be the actual number of lineal feet of sealed joint system, measured horizontally along the joint centerline between the outer limits of the fabricated joint.

BASIS OF PAYMENT. The accepted quantities of sealed joints will be paid for at the contract price per lineal foot, which price and payment shall be full compensation for all labor, materials and equipment necessary to complete the joint in place.

This payment shall include the cost of furnishing, cleaning and placing the strip seals, primers and adhesives, furnishing and installing steel retainers, shop welded anchors, steel plates, angles, bolts, temporary supports, end crossframe gusset plates, other miscellaneous metalwork, and all other incidentals necessary to complete this work according to the plans and this specification.

For vertically extended joints this shall include all work required to remove portions of existing expansion joints, extending the joints vertically, and installing elastomeric strip seals.

Removal of the existing joint or portions of the existing joint shall include trimming or removing existing angles, plates, bars, vertical extensions of the joint, anchor bars, and removing existing concrete adjacent to the joint as required by details in these plans.

Furnishing and placing Class S replacement concrete adjacent to the joint as noted in the plans shall be also be included with the joint for payment.

Payment shall be made at the contract price for:

ITEM	UNIT	DESCRIPTION
516	LIN. FT.	STRUCTURAL EXPANSION JOINTS, INCLUDING ELASTOMERIC STRIP SEAL, AS PER PLAN
516	LIN. FT.	VERTICAL EXTENSION OF STRUCTURAL EXPANSION JOINTS, INCLUDING ELASTOMERIC STRIP SEAL, AS PER PLAN

CALC. BY RLE DATE 3/87	MED-42-1.89	OHIO
CHKD. BY AFS DATE 3/87	MED-224-10.45	FHWA REGION 5

85/189

BRIDGE QUANTITIES

*50% Federal Participation

ITEM	RS-440(11) MED-42-0248	RS-440(11) MED-42-0265	RS-440(11) SUB-TOTAL	F-51(70) MED-42-0310 LT.	MED-42-0310 RT.	MED-42-0460 LT.	MED-42-0460 RT.	MED-42-0539 LT.	MED-42-0539 RT.	MED-42-0574	MED-42-0589 LT.	MED-42-0589 RT.	MED-42-0688	MED-224-1276 LT.	MED-224-1276 RT.	SHEET 11A/45	SUB-TOTAL	ITEM	ITEM EXT.	PLAN TOTAL	UNIT	DESCRIPTION
SPECIAL	389	721	1110	427	597	580	580						1152	569	626		4531	Special		5641	Sq. Yd.	Asphalt pavement planing
202	175	300	475			250	250	412.50	412.50		250	250		262.50	262.50		2350	202		2825	Lin. Ft.	Guardrail removed for reuse
202								Lump	Lump	Lump	Lump	Lump					LUMP	202		LUMP		Portions of structures removed, deck, as per plan
202	159	288	447			119	119							250	250		738	202		1185	Lin. Ft.	Portions of structures removed, deck edge, as per plan
202				250	250								699				1199	202		1199	Lin. Ft.	Portions of structures removed, curb & parapet, as per plan
202				24	31	3	3	20	20		19	19		18	19		176	202		176	Cu. Yd.	Portions of structures removed, abutment backwalls, as per plan
510				242	242	60	60			48			722				1374	510		1374	Each	Dowel holes, As per plan
824	4430	4094	8524	9470	10590	5703	5703	48529	48529	64078	36449	36449	15.595	5263	9302		295,660	509		304,184	Lbs.	Epoxy coated reinforcing steel, grade 60
845	389		389	459	624	580	580							551	606		3400	845		3789	Sq. Yd.	Latex modified concrete overlay, (1¼ inches thick), as per plan
845	15		15	9	12	6	6							6	12		51	845		66	Cu. Yd.	Latex modified concrete overlay, (variable thickness), as per plan
850	1		1	1	1										1		4	845		5	Cu. Yd.	Full depth repair
850		705	705										1261				1261	850		1966	Sq. Yd.	Superplasticized Dense Concrete Overlay (1¾ inches thick), as per plan
850		12	12										14				14	850		26	Cu. Yd.	Superplasticized Dense Concrete Overlay (Variable thickness), as per plan
		1	1										1				1	850		2	Cu. Yd.	Full depth repair
																		850		Lump	Sum	Test Slab
511	26	28	54	28	28	19	19	214	214	270	162	162	81	24	24		1245	511		1299	Cu. Yd.	Class S concrete, superstructure, as per plan
511				16	22			24	21	2	18	19	2	18	17		159	511		159	Cu. Yd.	Class C concrete, abutment, as per plan
SPECIAL								Lump	Lump								LUMP	Special		LUMP	Sum	Adjusting beam seat elevations
516	90		90															516		90	Lin. Ft.	Structural expansion joints including elastomeric compression seals (½" movement)
519	114	12	126			70	55			26			100				251	519		* 377	Sq. Ft.	Patching concrete structures, as per plan
SPECIAL	112		112			140	140										280	Special		392	Lin. Ft.	Pile encasement
SPECIAL	18		18			20	20										40	Special		58	Each	Drill abutment drain holes
SPECIAL	46	140	186	267	267	39	39	94	94	528	115	115	405	119	121	1082	3285	Special		3471	Sq. Yd.	Sealing of concrete surfaces, epoxy (see proposal note)
513								441	441	354							1236	513		1236	Each	Welded stud shear connectors
SPECIAL				10	12			10	10		12	12		10	12		88	Special		88	Each	Trim beams
SPECIAL				8	10			8	8		10	10		8	10		72	Special		72	Each	Repair and move end crossframes
SPECIAL													10				10	Special		10	Each	Reset rocker assembly
516								10	10								20	516		20	Each	Laminated elastomeric bearings, (2"x8"x10" elastomeric pad with ⅜"x9"x15" steel load plate), as per plan
516											12	12					24	516		24	Each	Laminated elastomeric bearings, (1⅛"x7"x8" elastomeric pad with ⅜"x9"x13" steel load plate), as per plan
											5	5					10	516		10	Sq. Ft.	⅛ inch preformed bearing pads, (7"x8"), 711.21
516				5	10									5	5		25	516		25	Lin. Ft.	PVC waterstop, as per plan
517	175	300	475			250	250	412.50	412.50		250	250		262.50	262.50		2350	517		2825	Lin. Ft.	Railing rebuilt (existing beam rail new steel tubular backup, new type 2 steel posts and bolts) (See proposal note)
609										48			48				96	609		96	Lin. Ft.	Curb, Type 6
516				73	97			83	83		94	94		80	88		692	516		692	Lin. Ft.	Structural expansion joints, including elastomeric strip seal, As Per Plan
516		88	88							35			100				135	516		223	Lin. Ft.	Extension of structural expansion joints, including elastomeric strip seal, As Per Plan.
518										8							8	518		8	Each	Scuppers, including supports
SPECIAL				8	8												16	Special		16	Each	Scupper extension
SPECIAL				108	108					56							272	Special		272	Lin. Ft.	Bituminous concrete gutter
518				29	29			32	32		22	22		31	26		223	518		223	Lin. Ft.	6 inch perforated, helical corrugated steel pipe, 707.01 including specials
518				15	20			19	18		10	10		14	14		120	518		120	Cu. Yd.	Porous backfill, as per plan
601	218	324	542			241	241	681	791		432	459		376	410		3631	601		4173	Cu. Yd.	Dumped rock fill, type C, as per plan
601				368	472					570			895				2305	601		2305	Sq. Yd.	Crushed aggregate slope protection

Rev. 2-2-89

CALC. BY ___ DATE ___	MED-42-1.89	OHIO	86
CHKD. BY ___ DATE ___	MED-224-10.45	FHWA REGION	189

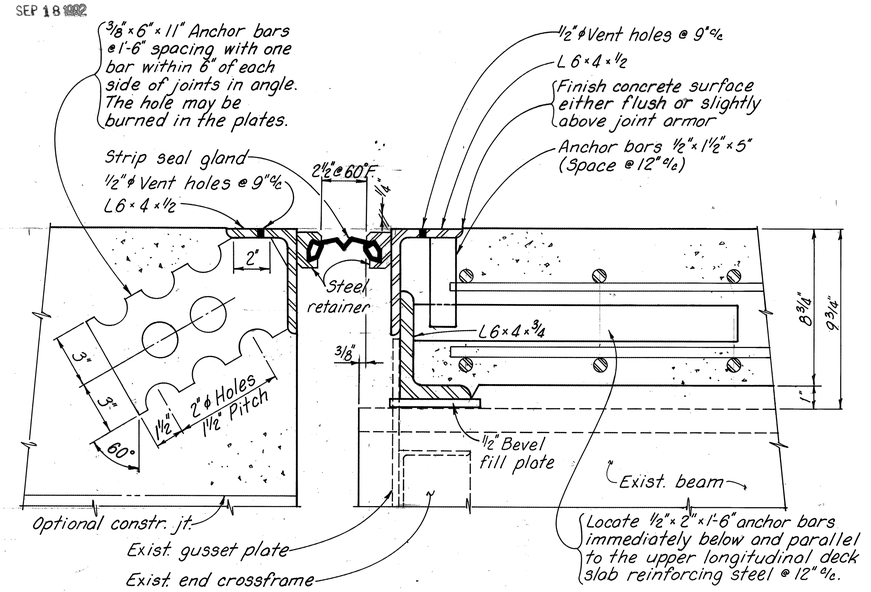

END DAM DETAILS

(MED-42-0539 L/R)
(MED-42-0589 L/R)

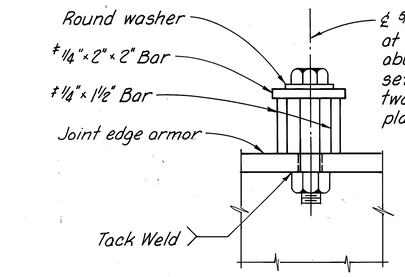

‡ Alternate parts may be used subject to the Director's approval

DETAIL - Z

(TYPICAL DETAIL)

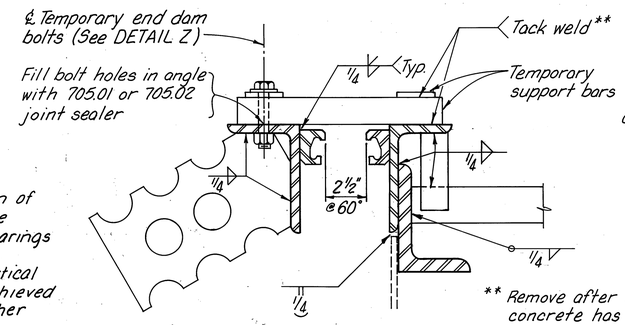

** Remove after abutment concrete has cured

WELDING & ADJUSTING * JOINT ARMOR

(TYPICAL DETAILS)

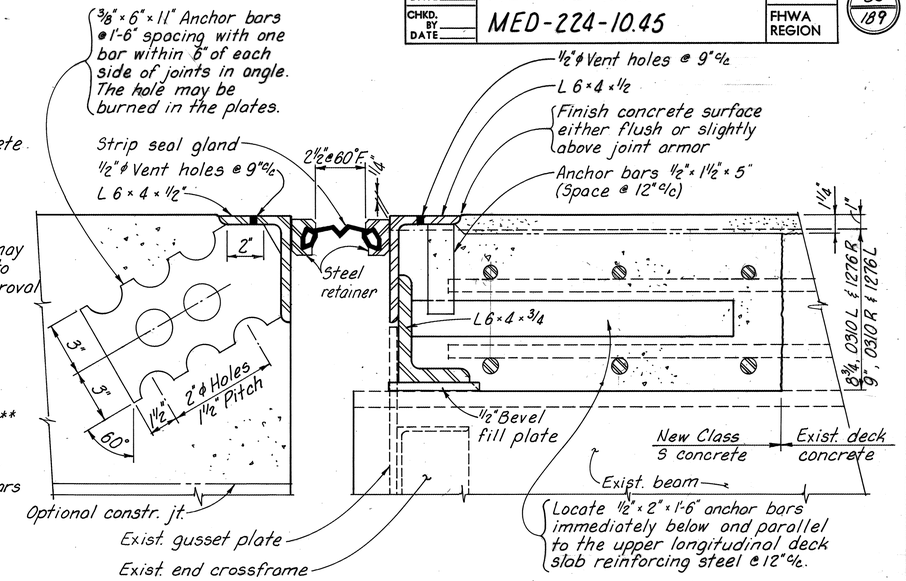

END DAM DETAILS

(MED-42-0310 L/R)
(MED-224-1276 L/R)

NOTES:

INSTALLATION OF ARMOR: During installation of the armor for the superstructure side of the expansion joint, the seating of beams on bearings shall be carefully observed to assure that positive bearing is maintained. Proper vertical fit of the armor on the beams shall be achieved by positioning of the bevel fill plates rather than by clamping force.

INSERTION OF ELASTOMERIC SEALS: Elastomeric seals shall be inserted into the steel retainers in one continuous piece after all phases of bridge construction are completed.

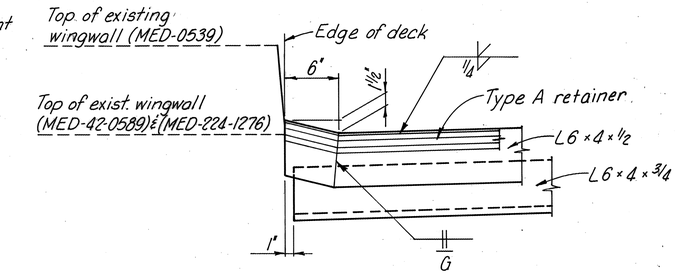

JOINT ARMOR DETAIL AT EDGE OF DECK

(MED-42-0539)(MED-42-0589)(MED-224-1276)

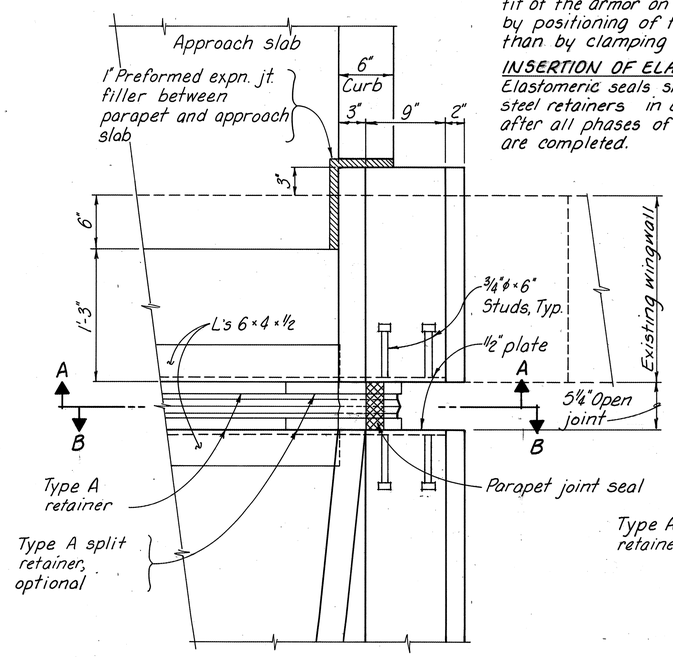

PARTIAL PLAN VIEW

(MED-42-0310 L/R)

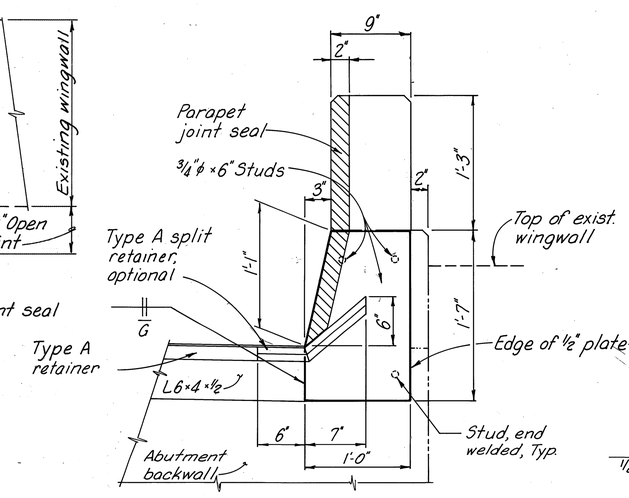

SECTION A-A

(MED-42-0310 L/R)

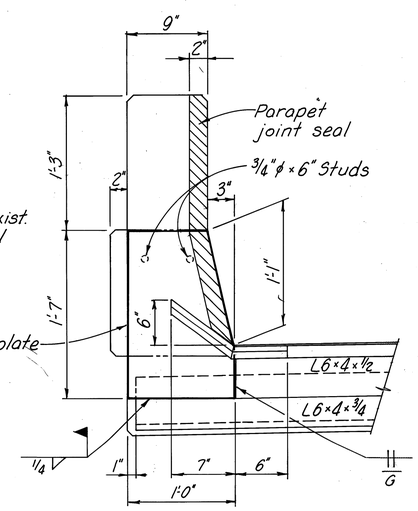

SECTION B-B

(MED-42-0310 L/R)

CONSTRUCTION PROCEDURES:

1. Abutment backwall concrete shall not be placed until after the superstructure concrete has been placed.
2. Place backwall concrete during stable or rising ambient temperature, and conclude placement at or immediately before the day's peak ambient temperature.
3. Not more than four hours prior to the day's peak ambient temperature, adjust the abutment expansion joint width as needed to result in a joint opening of 2 1/2 inches @ 60°F.
4. Loosen temporary joint armor bolts after initial set of concrete, preferably not later than two hours after conclusion of concrete placement.

REFERENCE: See the Bridge General Notes on sheet 5/45 for additional elastomeric seal notes and specifications.

7/45

ENGINEERING ASSOCIATES LTD.
CONSULTING ENGINEERS
700 WINKLER DR. WOOSTER, OHIO

EXPANSION JOINT DETAILS
MED-42-0310 L/R
MED-42-0539 L/R
MED-42-0589 L/R
MED-224-1276 L/R

DESIGNED	DRAWN	TRACED	CHECKED	REVIEWED	DATE	REVISED
DWS RLE	RLE	RLE	AFS	DBC	3/16/87	

MICROFILMED
SEP 18 1992

CALC. BY DATE	MED-42-1.89	OHIO	87
CHKD. BY DATE	MED-224-10.45	FHWA REGION	189

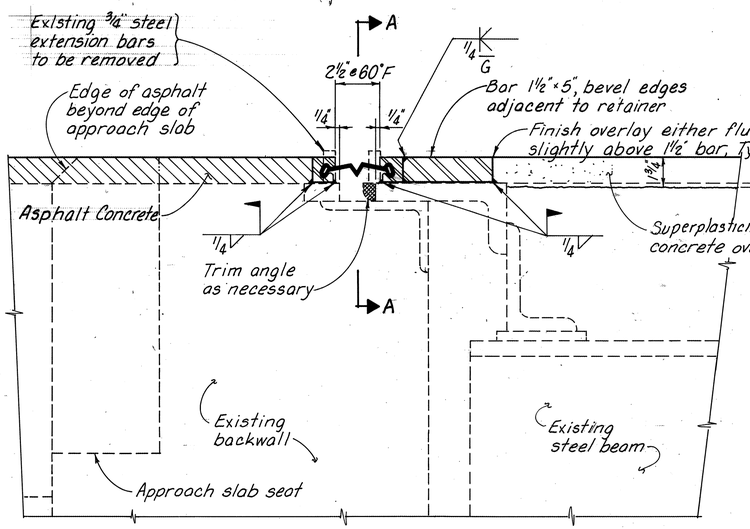

END DAM DETAIL
(MED-42-0265)
(MED-42-0688)

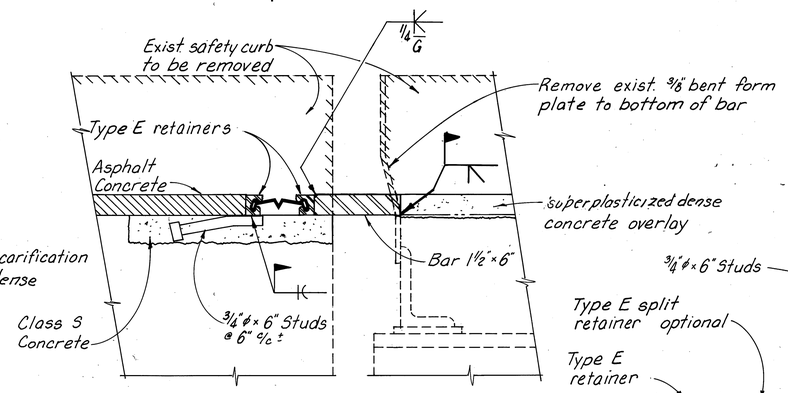

SECTION B-B
(MED-42-0688)

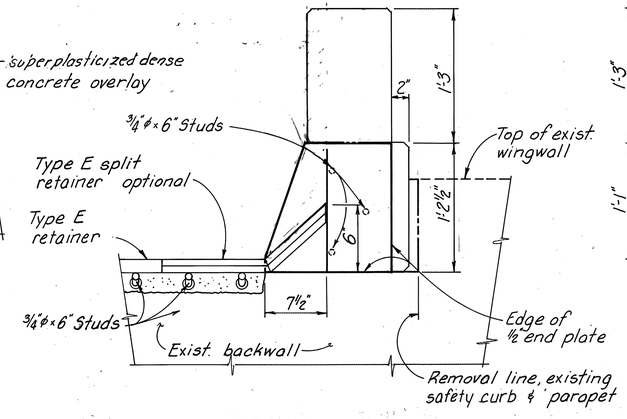

SECTION D-D
(MED-42-0688)

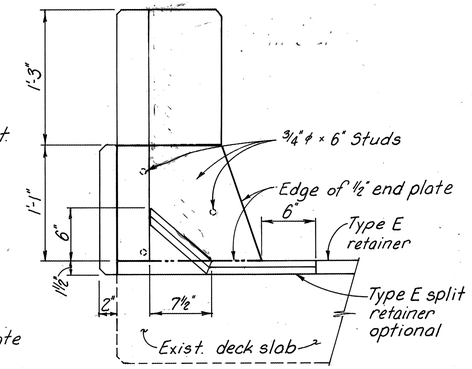

SECTION E-E
(MED-42-0688)

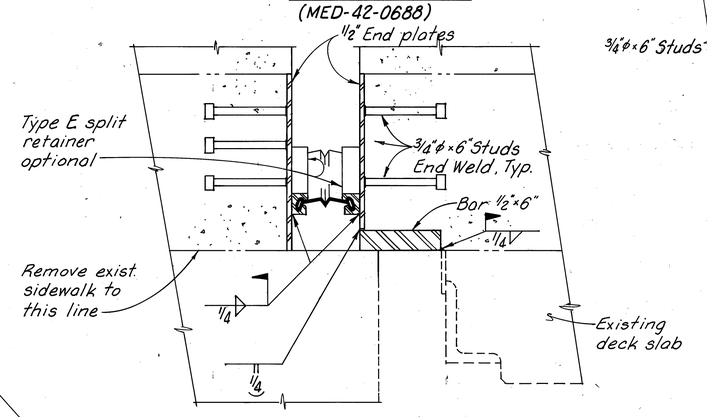

SECTION C-C
(MED-42-0688)

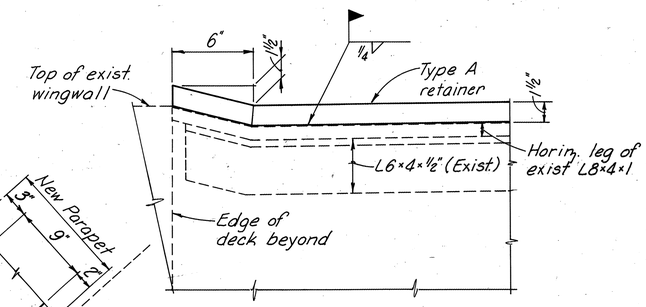

SECTION A-A
EDGE DETAIL FOR
(MED-42-0265 ONLY)

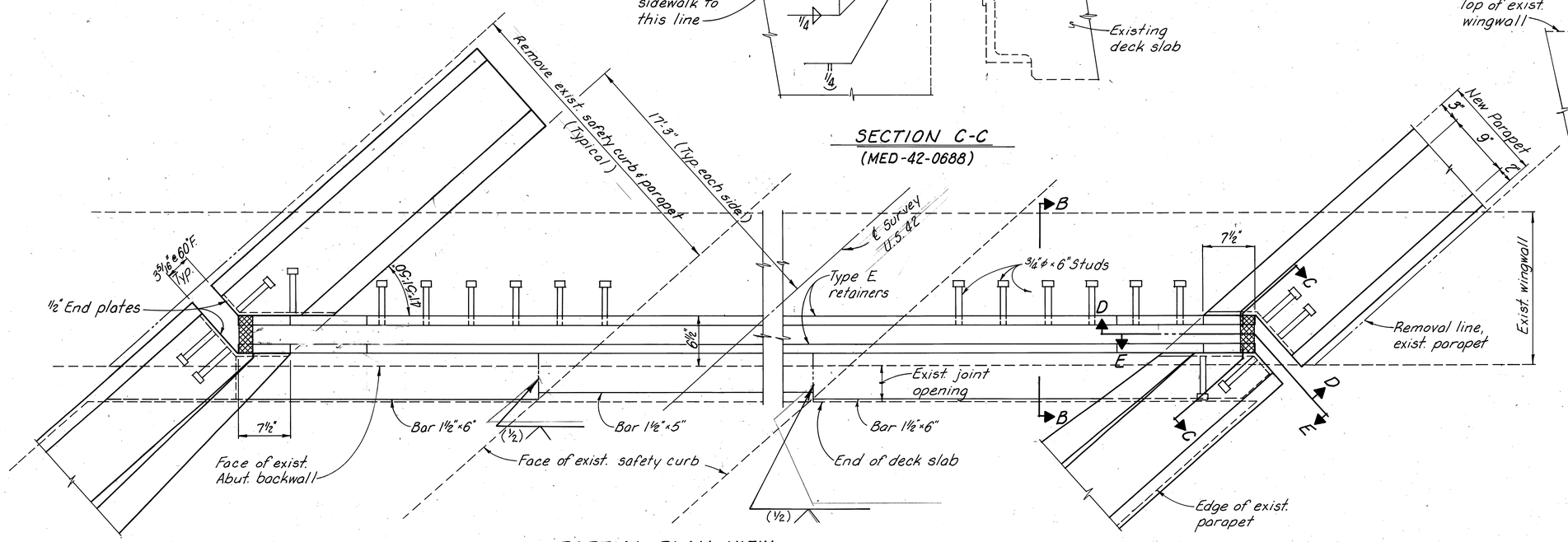

PARTIAL PLAN VIEW
(MED-42-0688)

8/45

ENGINEERING ASSOCIATES LTD.
CONSULTING ENGINEERS
700 WINKLER DR. WOOSTER, OHIO

EXPANSION JOINT DETAILS

MED-42-0265
MED-42-0688

DESIGNED	DRAWN	TRACED	CHECKED	REVIEWED	DATE	REVISED
DWS RLE	RLE	RLE	AFS	DBC	3/16/87	

CALC. BY DATE	MED-42-1.89	OHIO	88/189
CHKD. BY DATE	MED-224-10.45	FHWA REGION	

Note A: Locate anchors immediately below the upper deck slab reinforcing steel

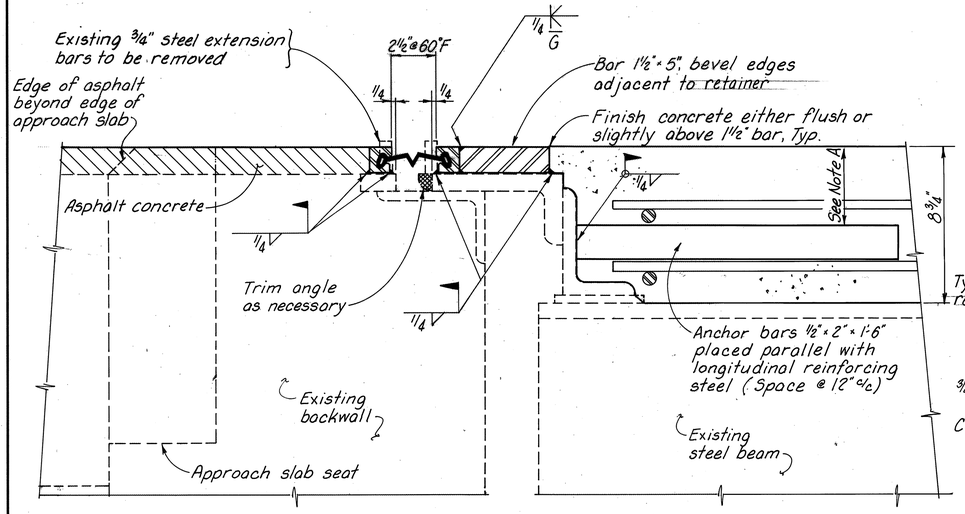

SECTION A-A
(MED-42-0574)

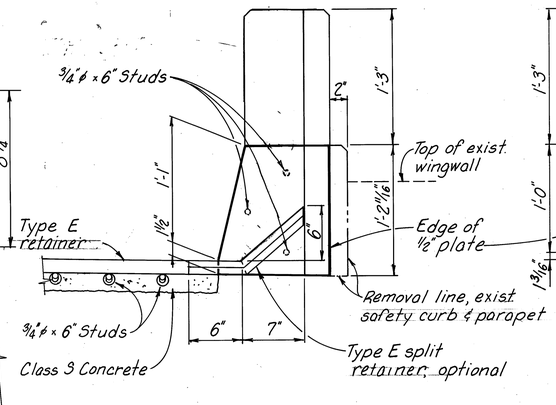

SECTION B-B
(MED-42-0574)

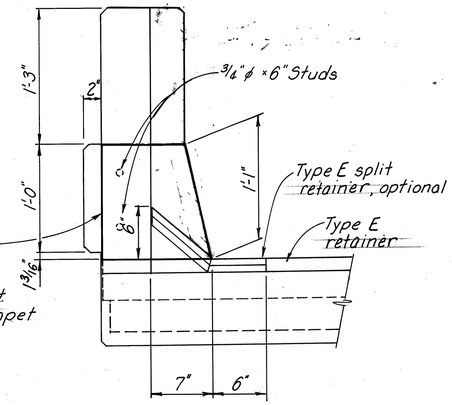

SECTION C-C
(MED-42-0574)

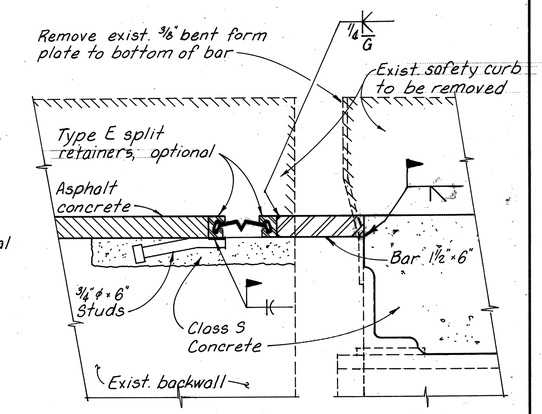

SECTION D-D
(MED-42-0574)

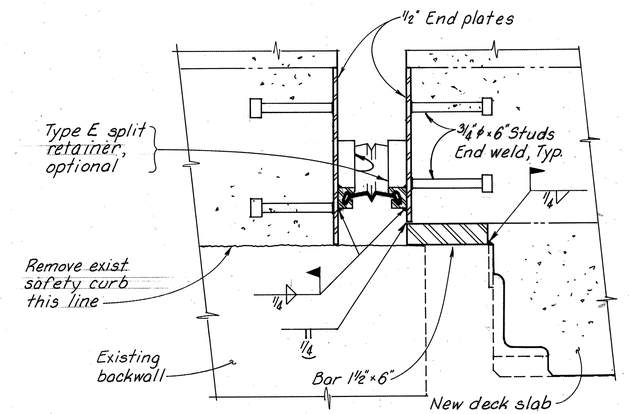

SECTION E-E
(MED-42-0574)

See General Notes, sheet 3/45 for parapet joint seal.

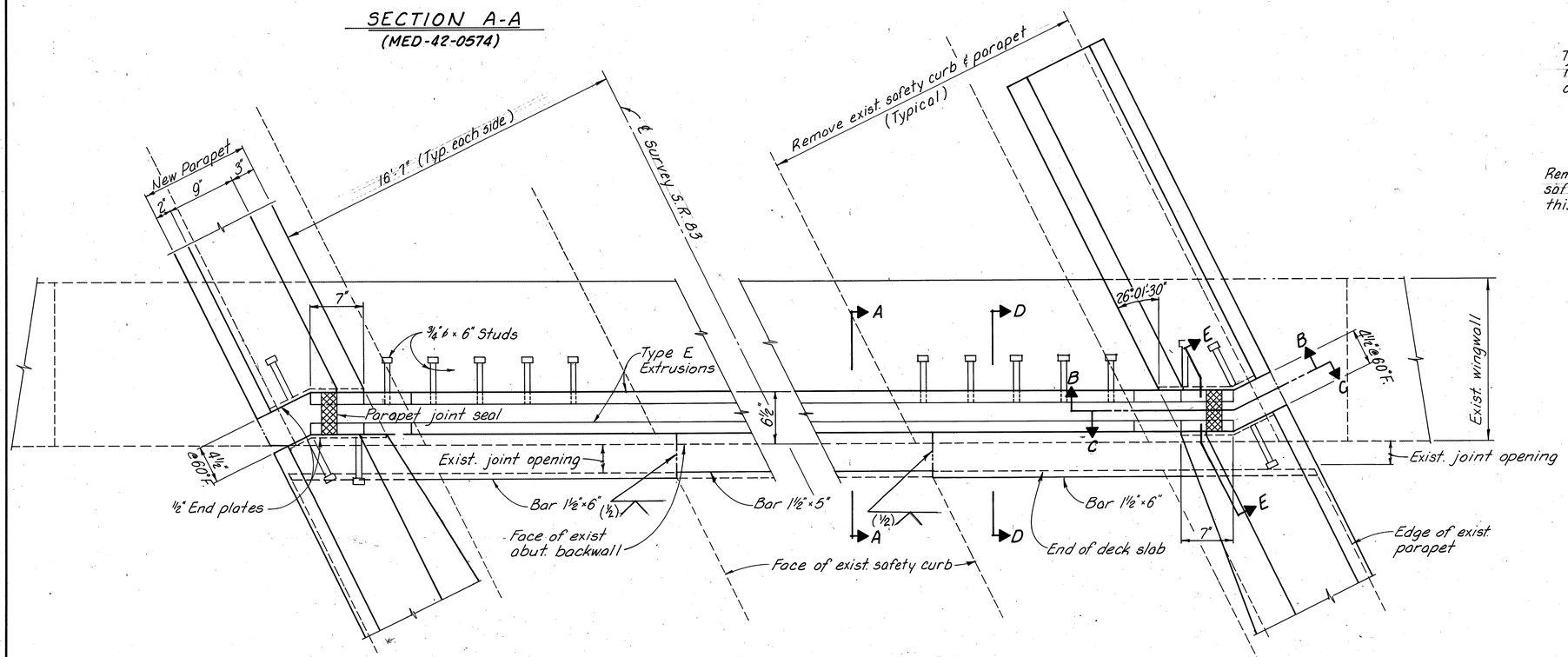

PARTIAL PLAN VIEW
(MED-42-0574)

9/45

ENGINEERING ASSOCIATES LTD.
CONSULTING ENGINEERS
700 WINKLER DR. WOOSTER, OHIO

EXPANSION JOINT DETAILS
MED-42-0574

DESIGNED	DRAWN	TRACED	CHECKED	REVIEWED	DATE	REVISED
DWS RLE	RLE	RLE	AFS	DBC	3/16/87	

CALC. BY DBC DATE 5/87	MED-42-1.89	OHIO	89
CHKD. BY AFS DATE 3/87	MED-224-10.45	FHWA REGION	189

For the first pour, the waterstop should be held securely in place by the use of split forms and tie wires. For the second pour the free end of the waterstop should be secured by tie wires. Alternate methods as approved by the Engineer may be used to ensure the correct positioning of the waterstop.

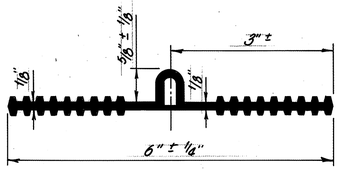

WATERSTOP DETAIL

W.R. Meadows Sealtight Duo-PVC No. 6180-D or No. 6180-ND or approved alternate

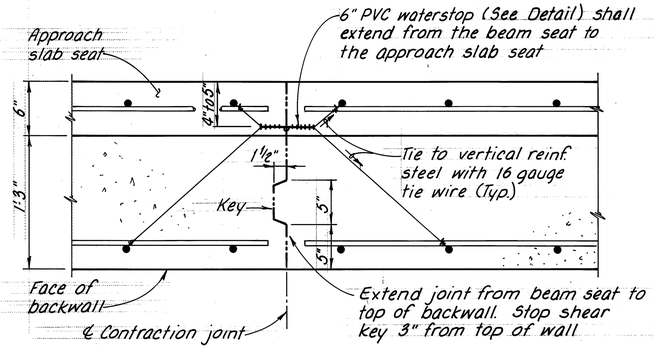

CONTRACTION JOINT DETAIL

(Reinforcing steel shall not extend through contraction joint)

ABUTMENT BACKWALL JOINT DETAILS

MED-42-0310 L/R MED-224-1276 L/R

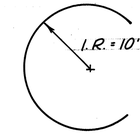

P402
Length = 3'-9"

Estimated Quantities Per Pile

Reinf. Steel (Lbs.)	Class "C" Concrete (Cu. Yd.)
85	0.68

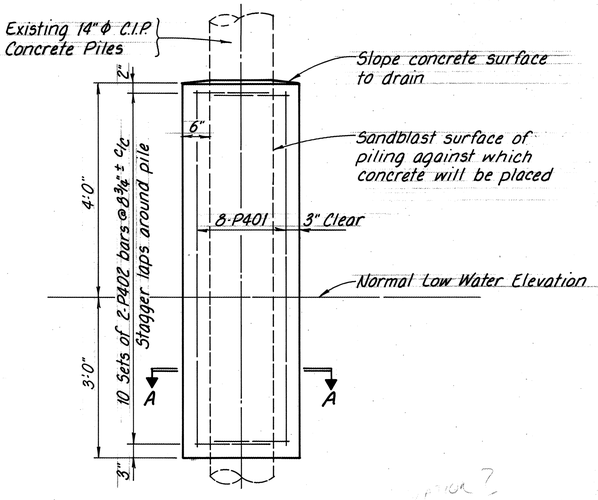

ELEVATION

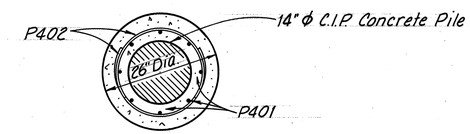

SECTION A-A

Concrete encasement deposited under water shall be carefully placed per 511, care being taken to remove all dirt between the pile and the form.

CAPPED PILE PIER ENCASEMENT DETAILS

MED-42-0248
MED-42-0460 L/R

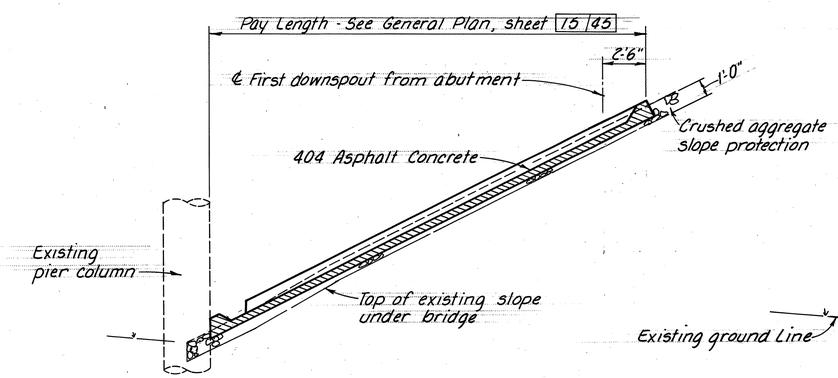

SECTION A-A

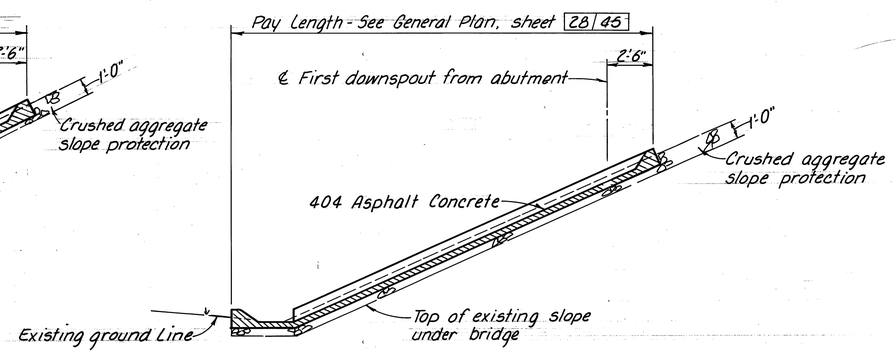

SECTION B-B

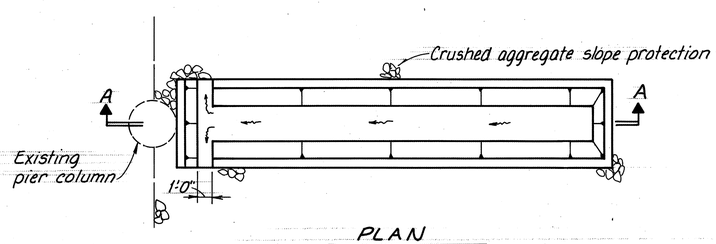

PLAN
MED-42-0310 L/R

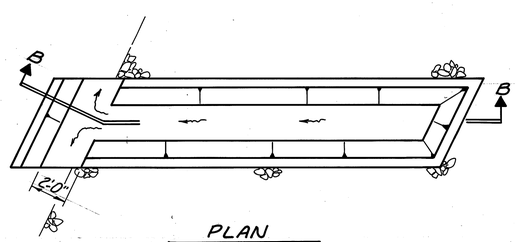

PLAN
MED-42-0574

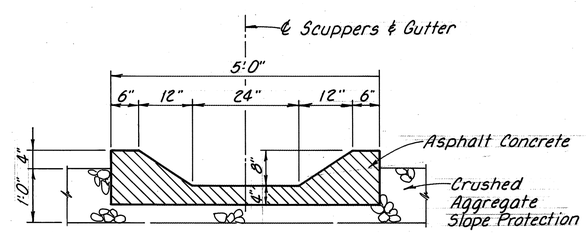

TYPICAL SECTION

BITUMINOUS CONCRETE GUTTER DETAILS

MED-42-0310 L/R & MED-42-0574

NOTES

ITEM SPECIAL, PILE ENCASEMENT: See Structure General Notes, sheet 2 45

ITEM SPECIAL, BITUMINOUS CONCRETE GUTTER: See Structure General Notes, Sheet 3 45

10 45

ENGINEERING ASSOCIATES LTD.
CONSULTING ENGINEERS
700 WINKLER DR. WOOSTER, OHIO

MISCELLANEOUS STRUCTURE DETAILS-1

DESIGNED	DRAWN	TRACED	CHECKED	REVIEWED	DATE	REVISED
RLE	RLE	PLD	DBC	DWS	3/20/87	

CALC. BY DATE	MED-42-1.89	OHIO	90
CHKD. BY DATE	MED-224-10.45	FHWA REGION	189

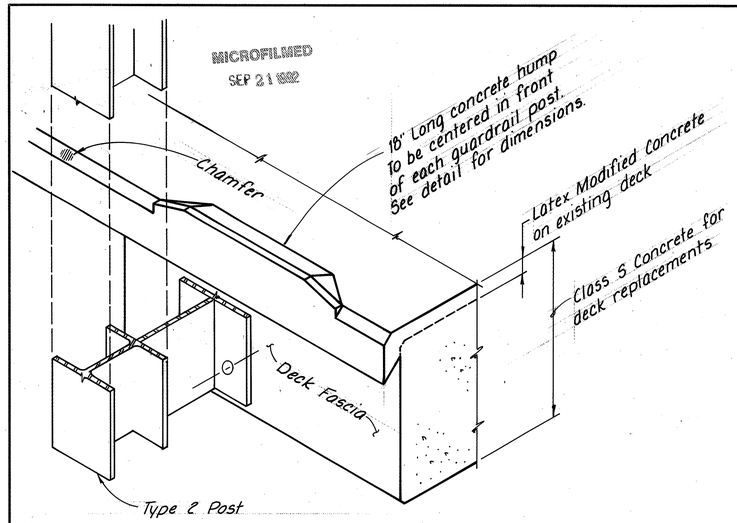

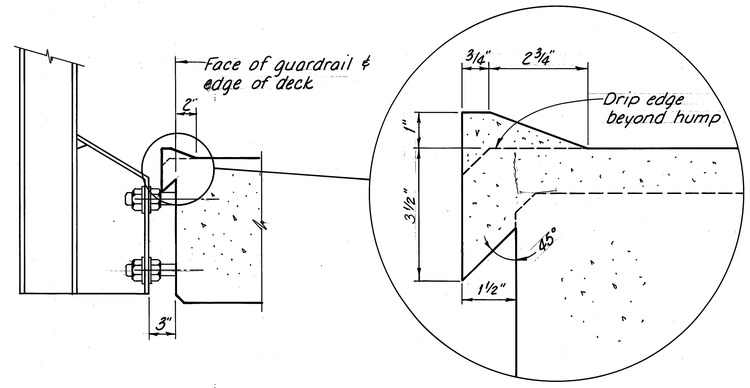

CONCRETE DRIP EDGE DETAILS

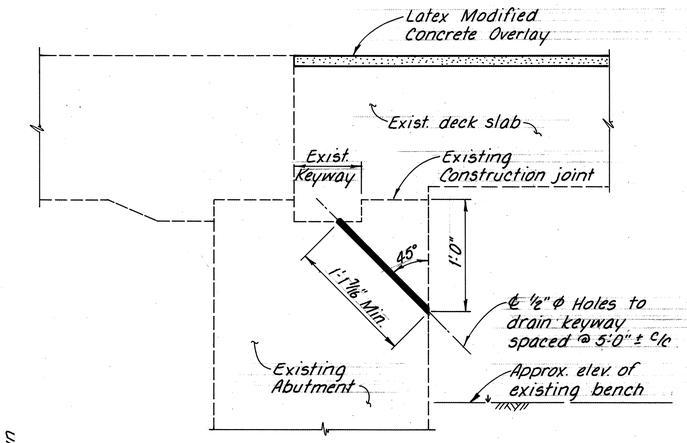

ABUTMENT KEYWAY DRAIN DETAIL

MED-42-0248 & MED-42-0460 L/R

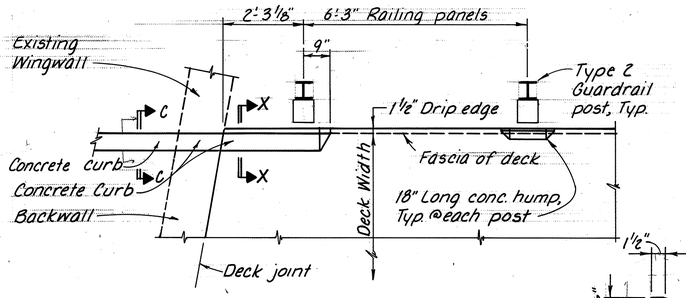

MED-42-0248

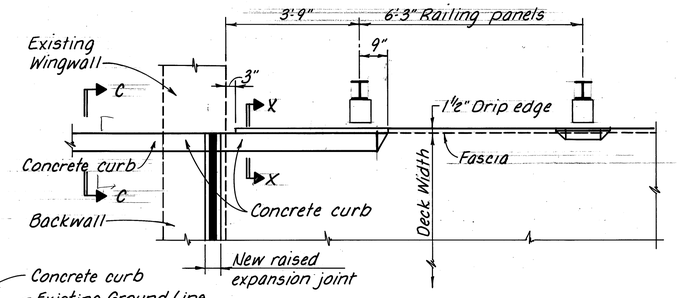

MED-42-0265

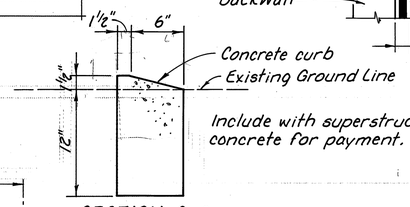

SECTION C-C

Include with superstructure concrete for payment.

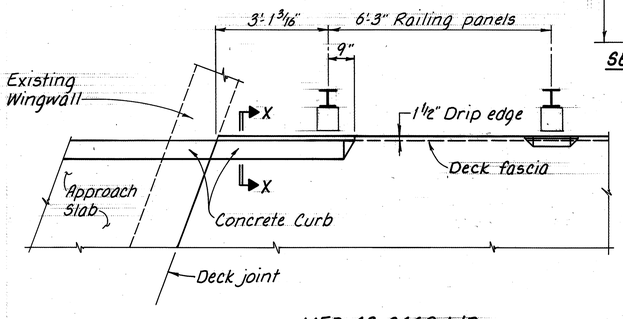

MED-42-0460 L/R

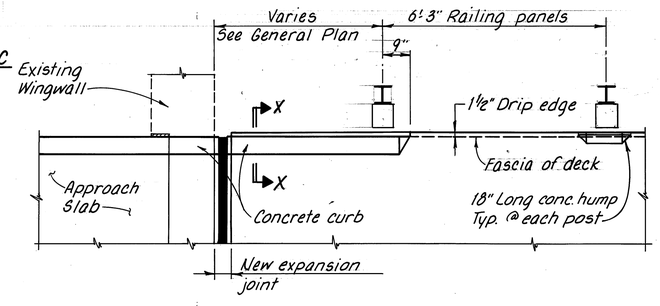

MED 224-1276 L/R DRAWN, MED-42-0539 L/R & MED 42-0589 L/R SIMILAR

SUPERSTRUCTURE EDGE DETAILS NEAR ABUTMENTS

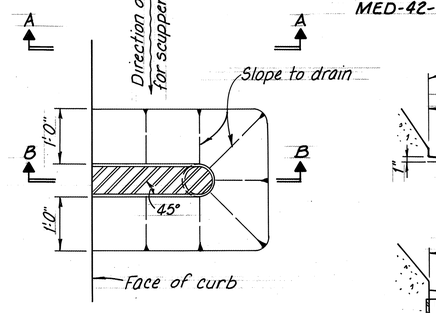

PART PLAN

Place scupper so the diagonal bars direct drainage flow toward the curb

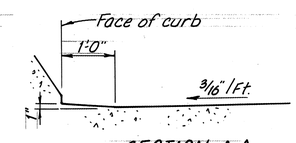

SECTION A-A

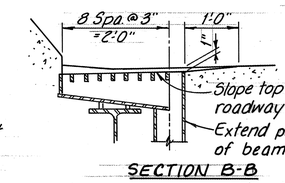

See Std. Dwg. SD-1-69 for further details

SECTION B-B

DRAINAGE DETAILS

MED-42-0574

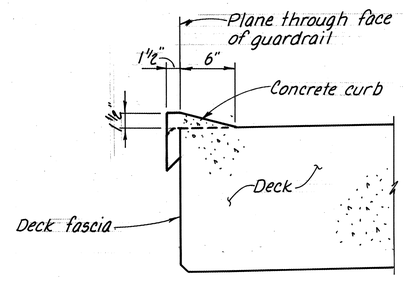

SECTION X-X
(Guardrail post not shown)

11/45

ENGINEERING ASSOCIATES LTD.
CONSULTING ENGINEERS
700 WINKLER DR. WOOSTER, OHIO

MISCELLANEOUS STRUCTURE DETAILS-2

DESIGNED	DRAWN	TRACED	CHECKED	REVIEWED	DATE	REVISED
RLE	RLE	PLD	DBC	DWS	3/20/87	

CALC. BY MED DATE 5/87	MED-42-1.89	OHIO	91
CHKD. BY AFS DATE 12/87	MED-224-10.45	FHWA REGION 5	189

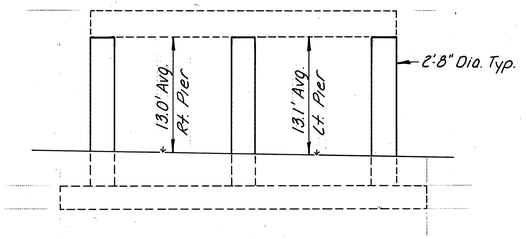

MED-42-0310 L

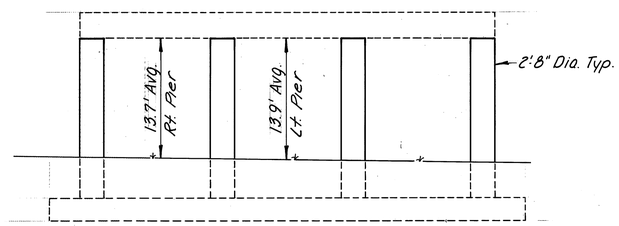

MED-42-0310 R

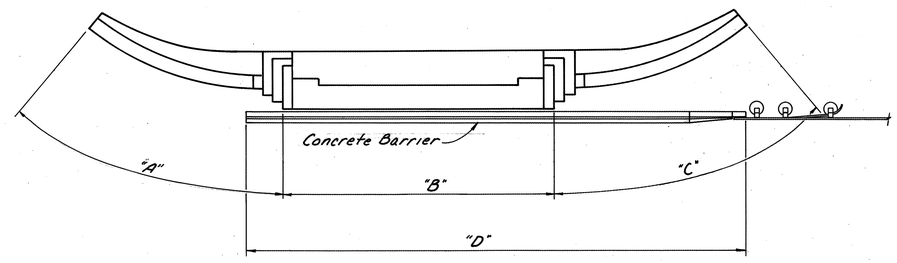

MED-42-0323 & 0432

PLAN

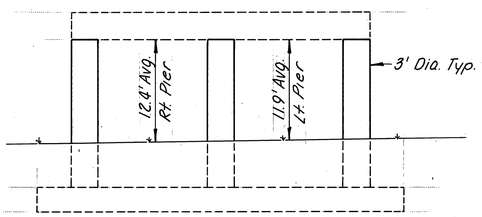

MED-42-0574

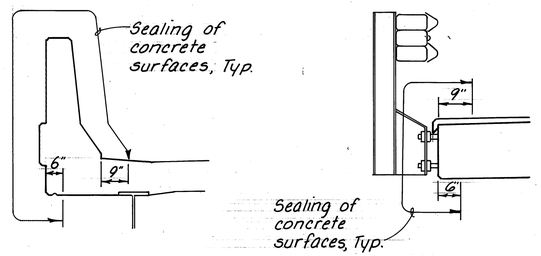

TYPICAL BRIDGE SEALING DETAILS
(Seal surfaces shown unless plans indicate otherwise)

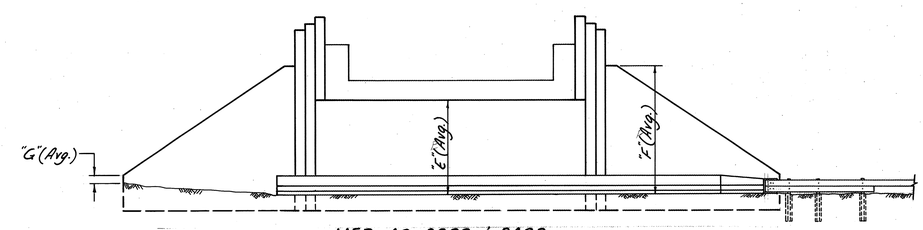

MED-42-0323 & 0432

ELEVATION

Bridge No.	Side	Dimensions "A"	"B"	"C"	"D"	"E"	"F"	"G"
MED-42-0323	Lt.	30'8"	40'0"	30'8"	80'	14'6"	19'6"	2'3"
MED-42-0323	Rt.	30'8"	40'0"	30'8"	70'	13'0"	18'0"	2'9"
MED-42-0432	Lt.	36'0"	23'0"	27'2"	55'	14'3"	20'0"	3'0"
MED-42-0432	Rt.	27'2"	23'0"	27'2"	100'	17'0"	23'0"	3'0"

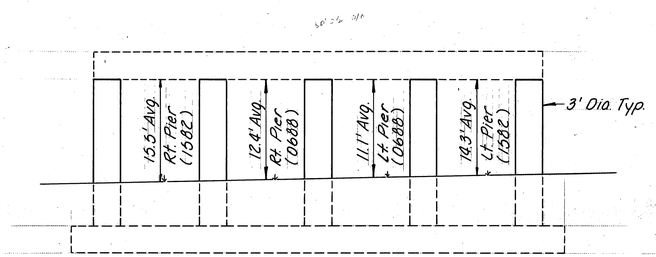

MED-42-0688 MED-224-1582

PIER ELEVATIONS

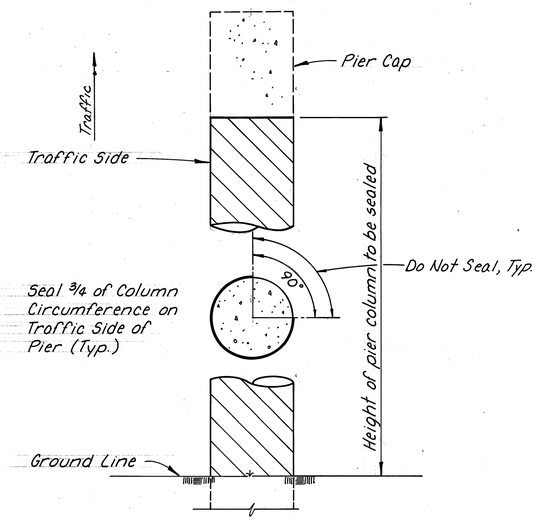

TYPICAL COLUMN SEALING DETAIL

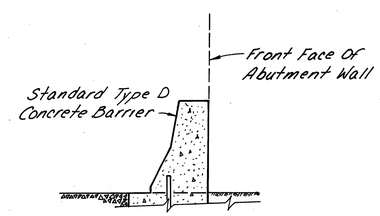

Bridge No.	Area To Be Sealed (Left)	Area To Be Sealed (Right)	Special: Sealing Of Concrete Surfaces
	Sq. Yd.	Sq. Yd.	Sq. Yd.
MED-42-0310L	27	27	54
MED-42-0310R	39	38	77
MED-42-0323	192	185	377
MED-42-0432	127	180	307
MED-42-0574	28	29	57
MED-42-0688	44	49	93
MED-224-1582	56	61	117
TOTAL			1082

11A/45

ENGINEERING ASSOCIATES LTD.
CONSULTING ENGINEERS
700 WINKLER DR. WOOSTER, OHIO

SEALING OF CONCRETE SURFACES

DESIGNED	DRAWN	TRACED	CHECKED	REVIEWED	DATE	REVISED
DBC	SLM	MED	AFS	DWS	3-20-87	

CALC. BY DATE	MED-42-1.89	OHIO	92
CHKD. BY DATE	MED-224-10.45	FHWA REGION	18.9

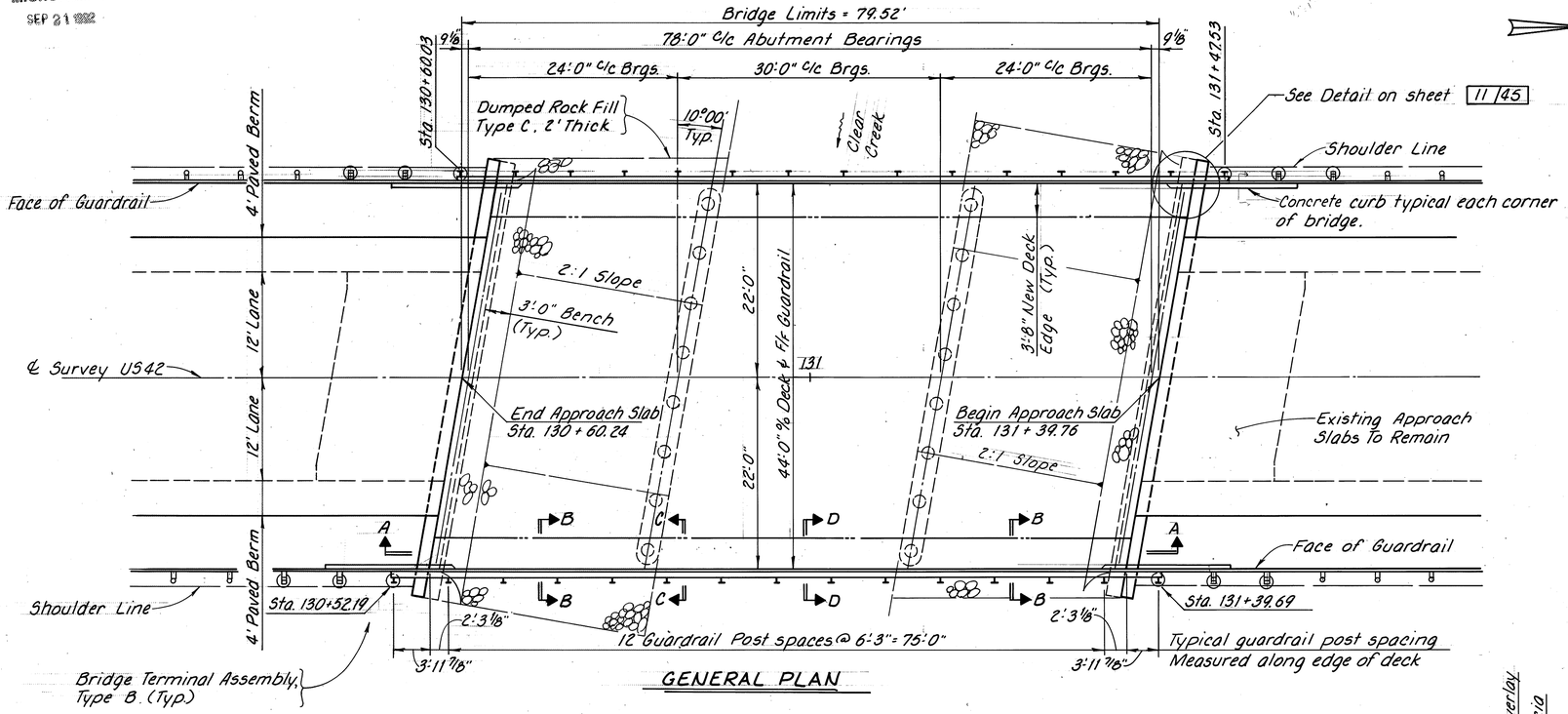

GENERAL PLAN

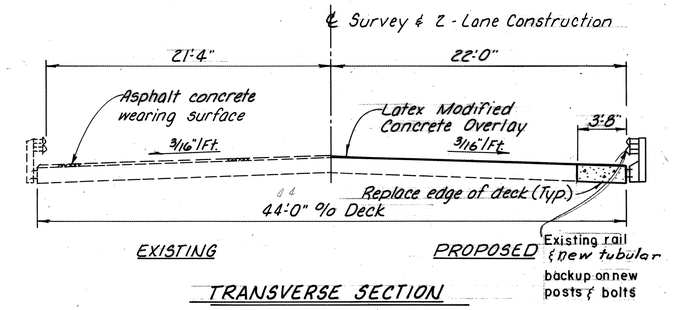

TRANSVERSE SECTION

MED-42-0248 REHABILITATION SUMMARY

Remove guardrail and store for reuse

Remove and dispose of existing guardrail posts, backup, anchor bolts and edges of the concrete deck as shown.

Repair the abutments and designated areas on the underside of the deck as directed by the Engineer in accordance with Item 519, Patching Concrete Structures.

Reconstruct the edges of the deck using Class S Concrete, as per plan. Provide new guardrail anchor bolts and Type 2 posts, tubular backup.
Install guardrail.

Repair the bridge deck and place a wearing surface overlay on the deck using Latex Modified Concrete.

Seal the joint between the deck and the approach slab at each end of the bridge as per sheet 13/45.

Seal the concrete surfaces at edges of the deck as shown in plan details on sheet 11A/45.

Drill drain holes at each abutment to provide drainage for the keyway at the joint between the superstructure and the abutments.

Encase the 14 inch cast-in-place piles at the piers.

Restore slope protection under the bridge, as directed by the Engineer.

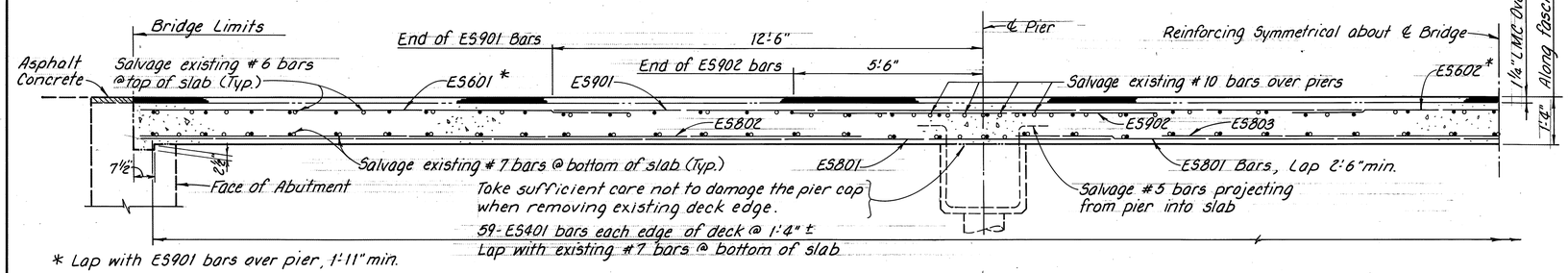

SECTION A-A

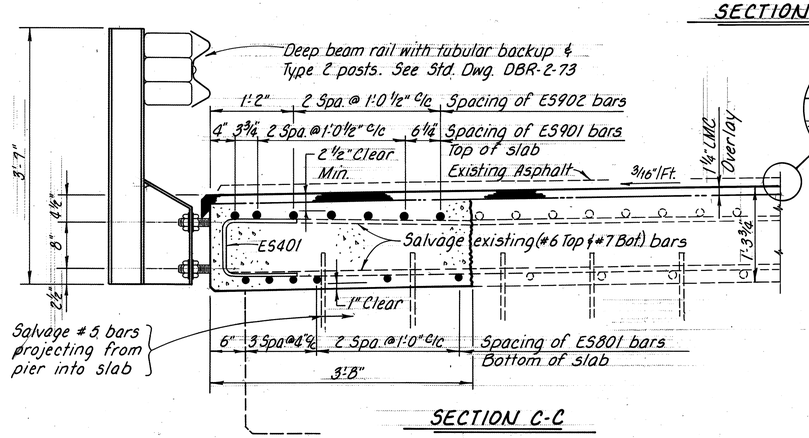

SECTION C-C

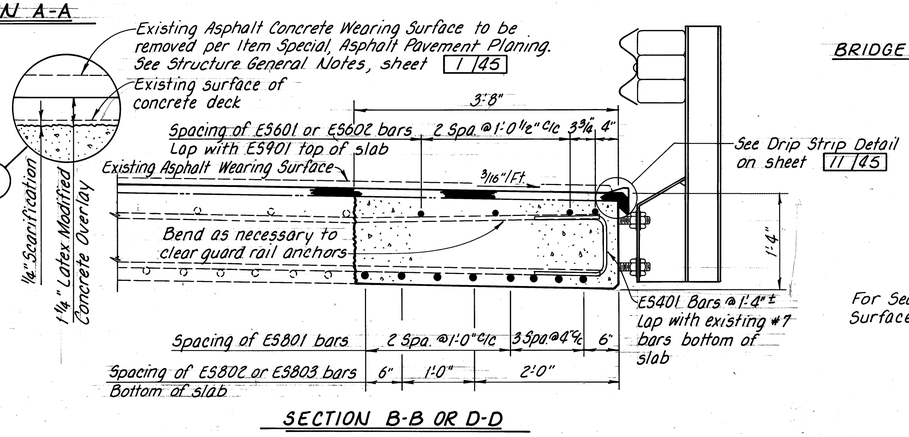

SECTION B-B OR D-D

BRIDGE GENERAL NOTES: See sheets 1/45 thru 5/45 and 12A/45.

For Sealing of Concrete Surfaces see sheet 11A/45

12/45

ENGINEERING ASSOCIATES LTD.
CONSULTING ENGINEERS
700 WINKLER DR. WOOSTER, OHIO

GENERAL PLAN AND REHAB SUMMARY
MED-42-0248
OVER CLEAR CREEK
STA. 130+60.24 TO 131+39.76
MEDINA COUNTY

DESIGNED	DRAWN	TRACED	CHECKED	REVIEWED	DATE	REVISED
DBC	DBC	PLD	AFS	DWS	3/20/87	

STRUCTURE NOTES

JOINT DETAILS: See sheet 13/45 for details of the joint between approach slabs and superstructure.

REINFORCING STEEL SCHEDULE: See sheet 13/45

PATCHING CONCRETE STRUCTURES, AS PER PLAN:

Rear Abutment, Front face & ends of slab seat	=	29 Sq. Ft.
Forward Abutment, Front face & ends of slab seat	=	27 Sq. Ft.
Bottom of Superstructure Slab		
Each End Span	=	24 Sq. Ft.
Center Span	=	10 Sq. Ft.

DUMPED ROCK FILL, TYPE C, AS PER PLAN:
Slope Protection at each abutment = 109 Cu. Yd.

CAPPED PILE PIER ENCASEMENT DETAILS:
See sheet 10/45

ABUTMENT KEYWAY DRAIN DETAIL: See sheet 11/45

SUPERSTRUCTURE EDGE DETAILS: See sheet 11/45

BRIDGE GENERAL NOTES: See sheets 1/45 through 5/45

GENERAL NOTES FOR MED-42-0248

REFERENCE:
Reference shall be made to the Bridge General Notes on sheets 1/45 through 5/45 and to the following:

Standard Drawings
DBR-2-73 Dated 4-10-73

Supplemental Specifications
824 Dated 10-08-82
845 Dated 5-31-88
953 Dated 8-21-80

DESIGN SPECIFICATIONS:
The modifications to this structure conform to "STANDARD SPECIFICATIONS FOR HIGHWAY BRIDGES" adopted by the American Association of State Highway and Transportation Officials, 1983 including the 1984 and 1985 INTERIM SPECIFICATIONS and the Ohio "SUPPLEMENT" to these specifications.

DESIGN DATA:

Design Loading (deck edge repair)	-	HS20-44 and the Alternate Military Loading
Concrete Class S (as per plan)	-	Superstructure (deck edge repair) Compressive Strength 4500 psi.
Patching Concrete	-	Superstructure and Substructures; CMS Item 519
Reinforcing Steel (deck edge repair)	-	ASTM A615, A616, A617, Grade 60 Minimum Yield Strength 60,000 psi
Deck Protection (deck edge repair)	-	Epoxy coated reinforcing steel in both mats and sealing of concrete surfaces
Wearing Surface	-	1 1/4" Latex Modified Concrete Overlay

REINFORCING STEEL SPLICES:
Unless shown otherwise, all reinforcing steel splices shall comply with the lap lengths specified in CMS section 509.08

ENGINEERING ASSOCIATES LTD.
CONSULTING ENGINEERS
700 WINKLER DR. WOOSTER, OHIO

STRUCTURE NOTES AND GENERAL NOTES
MED-42-0248
OVER CLEAR CREEK

DESIGNED	DRAWN	TRACED	CHECKED	REVIEWED	DATE	REVISED
DBC	DBC	PLD	AFS	DWS	3/20/87	

CALC. BY PLD DATE 12/86	MED-42-1.89	OHIO	94
CHKD. BY AFS DATE 3/87	MED-224-10.45	FHWA REGION	189

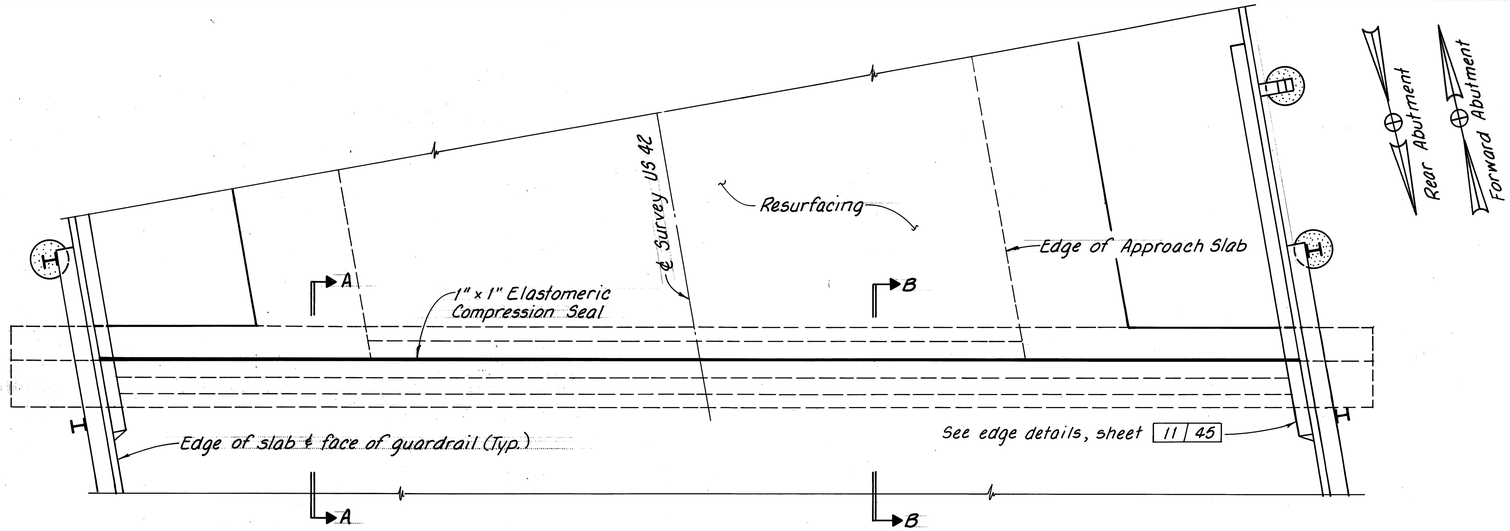

PARTIAL PLAN AT ABUTMENTS

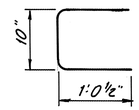

ES401

SUPERSTRUCTURE REINFORCING STEEL				
MARK	NO.	LENGTH	TYPE	WEIGHT
ES401	118	2'-9"	Bt.	223
ES601	16	14'-3"	Str.	342
ES602	8	12'-0"	Str.	144
ES801	18	28'-3"	Str.	1358
ES802	8	21'-0"	Str.	449
ES803	4	19'-6"	Str.	208
ES901	16	23'-6"	Str.	1278
ES902	12	10'-6"	Str.	428
		Total		4430

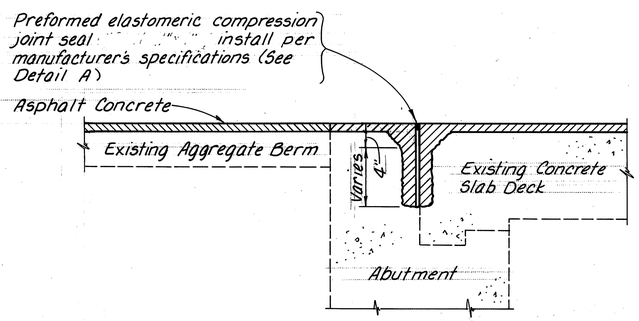

SECTION A-A

All deteriorated concrete shall be removed from the area to be repaired in such a manner and to such an extent as to expose a sound concrete surface. The depth of the patch shall not be less than 4 inches. Sound concrete (beneath the deteriorated concrete) shall be removed for a depth of not less than 1/4 inch and not more than 1 inch, provided that the above minimum depth of patch is maintained. Repair with Latex Modified Concrete Overlay (Variable thickness).

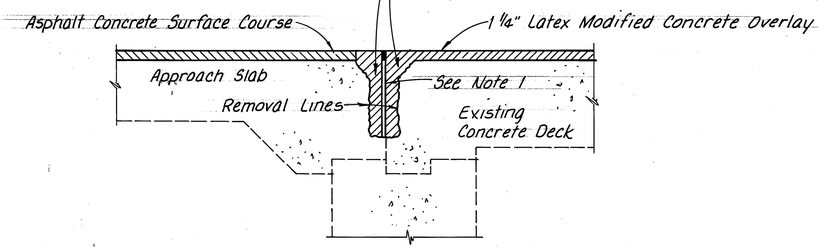

SECTION B-B

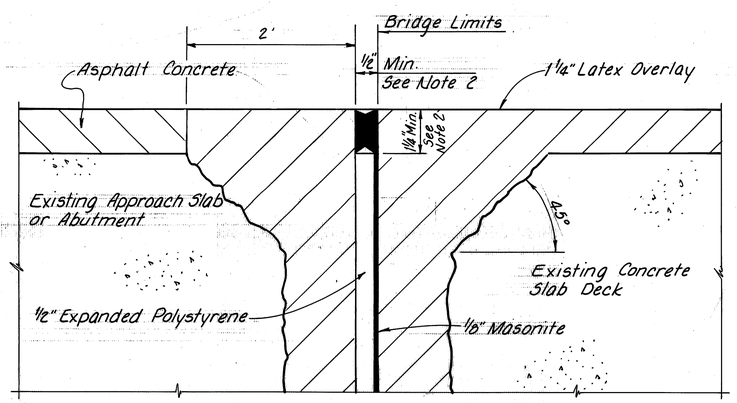

DETAIL A

NOTE 1: Glue *1/2" expanded polystyrene to 1/8" masonite. Install total depth of repaired area. Saw out enough masonite and polystyrene to install the compression seal after the joint has been repaired its full width. The joint seal shall be furnished and installed in one continuous piece. Include all of this w/ joint seal for payment.

*NOTE 2: Dimensions shown are for a Watson Bowman WB-1000 Seal. Seals provided by D.S. Brown or an approved alternate will be acceptable as long as the joint dimensions are adjusted to the dimensions of the Mfgrs. seal.

13 | 45

ENGINEERING ASSOCIATES LTD.
CONSULTING ENGINEERS
700 WINKLER DR. WOOSTER, OHIO

JOINT REPAIR DETAILS
NOTES AND
REINFORCING STEEL SCHEDULE
MED-42-0248
OVER CLEAR CREEK

DESIGNED	DRAWN	TRACED	CHECKED	REVIEWED	DATE	REVISED
DBC	DBC	PLD	AFS	DWS	3/20/87	

CALC. BY DATE	DBC 2/87	MED-42-1.89	OHIO	95
CHKD. BY DATE	AFS 3/87	MED-224-10.45	FHWA REGION	189

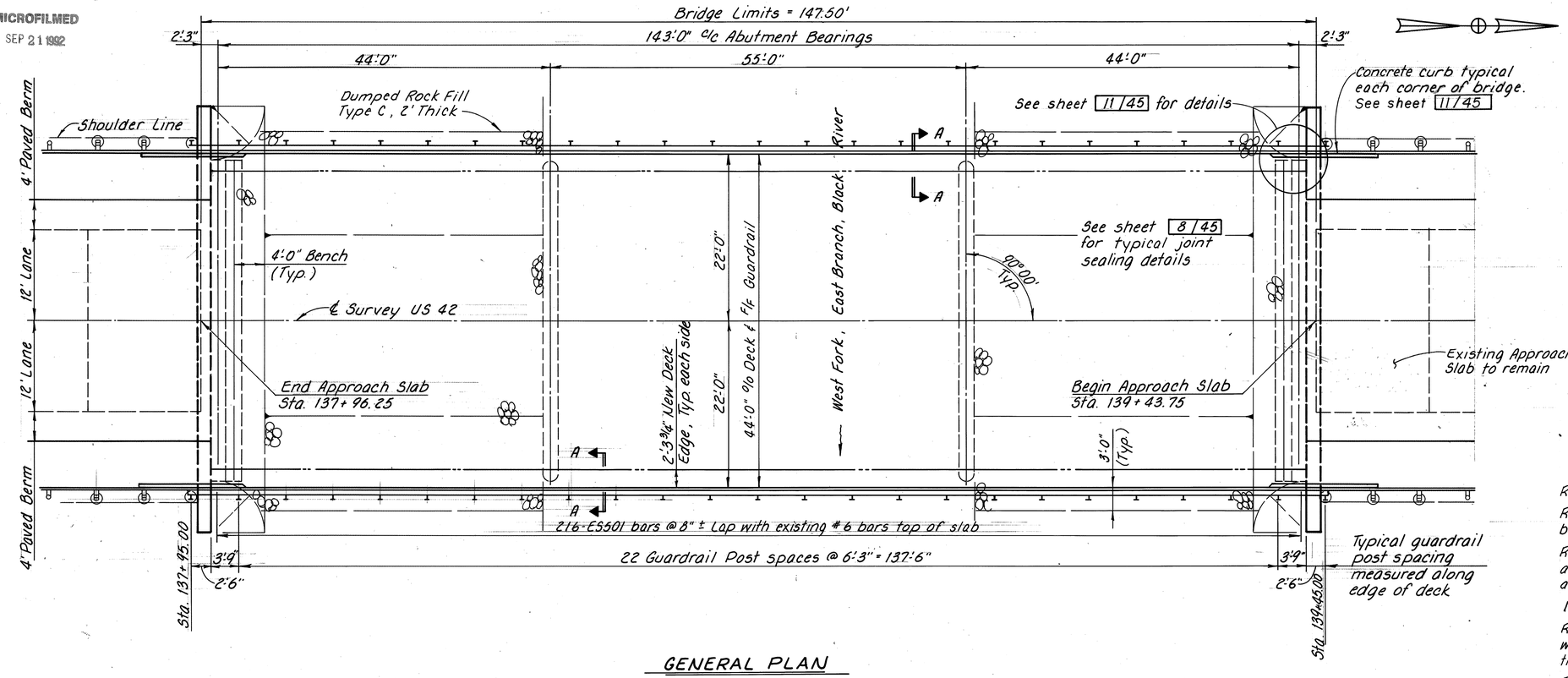

GENERAL PLAN

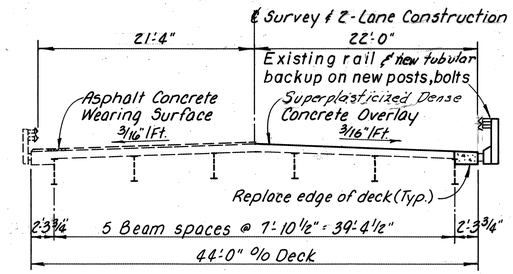

EXISTING PROPOSED

TRANSVERSE SECTION

MED-42-0265 REHABILITATION SUMMARY

Remove guardrail and store for reuse

Remove and dispose of existing guardrail posts, anchor bolts, and edges of the concrete deck as shown.

Reconstruct the edges of the deck using Class S concrete, as per plan. Provide new guardrail anchor bolts and Type 2 posts, tubular backup.

Install the guardrail.

Repair the abutment backwall surfaces in accordance with Item 519, Patching Concrete Structures. Modify the expansion joint armor.

Repair the bridge deck and place a wearing surface overlay on the deck using SDC.

Seal the deck expansion joints with strip seals.

Seal the concrete surfaces at edges of the deck as shown in plan details.

Restore slope protection under the bridge, as directed by the Engineer.

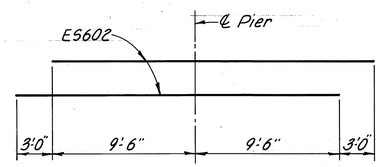

DIAGRAM SHOWING STAGGER OF ADDITIONAL TOP REINFORCEMENT OVER PIERS

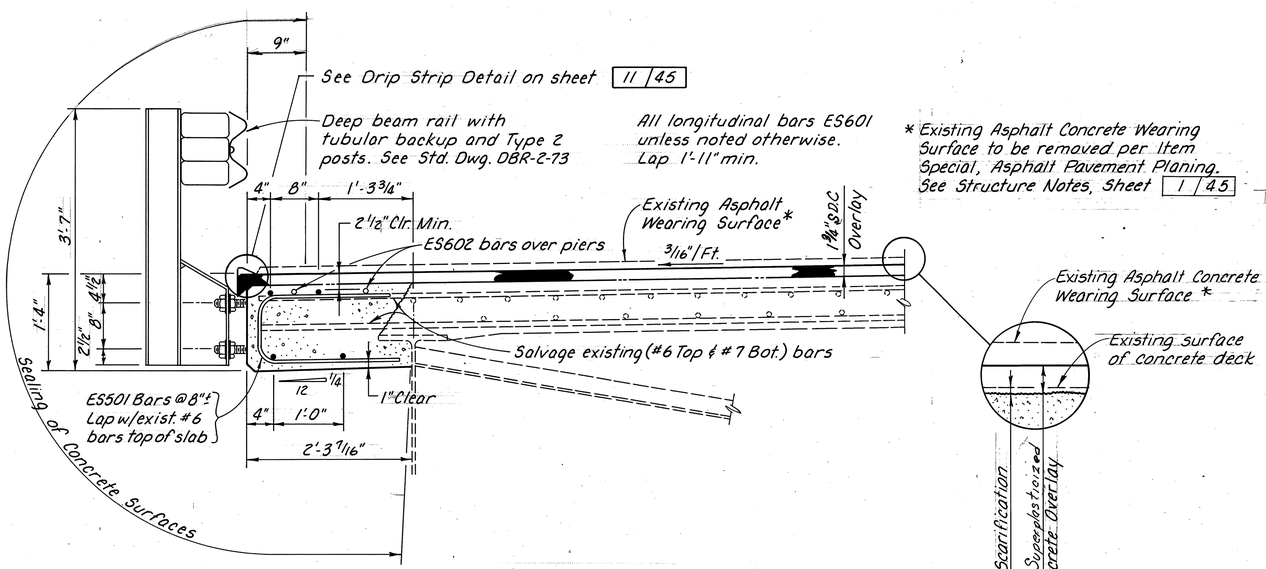

SECTION A-A

BRIDGE GENERAL NOTES: See sheets 1/45 thru 5/45 and 14A/45.

SUPERSTRUCTURE REINFORCING STEEL				
MARK	NO.	LENGTH	TYPE	WEIGHT
ES501	432	4'-6"	Bf.	2028
ES601	32	37'-6"	Str.	1802
ES602	8	22'-0"	Str.	264
		Total		4094

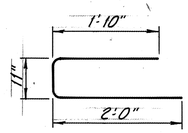

ES501

14/45

ENGINEERING ASSOCIATES LTD.
CONSULTING ENGINEERS
700 WINKLER DR. WOOSTER, OHIO

GENERAL PLAN AND REHAB SUMMARY
MED-42-0265
OVER BLACK RIVER
STA. 137+96.25 TO 139+43.75
MEDINA COUNTY

DESIGNED	DRAWN	TRACED	CHECKED	REVIEWED	DATE	REVISED
DBC	DBC PLD	PLD	AFS	DWS	3/23/87	

CALC. BY DBC DATE 2/87	MED-42-1.89	OHIO	96
CHKD. BY AFS DATE 3/87	MED-224-10.45	FHWA REGION	189

STRUCTURE NOTES

PATCHING CONCRETE STRUCTURES, AS PER PLAN:

Rear Abutment = 0 Sq. Ft.
Forward Abutment Backwall = 12 Sq. Ft.

DUMPED ROCK FILL, TYPE C, AS PER PLAN:

Slope Protection at each Abutment = 162 Cu. Yd.

DECK EXPANSION JOINT DETAILS: See sheet 8/45

BRIDGE GENERAL NOTES: See sheets 1/45 through 5/45

GENERAL NOTES FOR MED-42-0265

REFERENCE:

Reference shall be made to the Bridge General Notes on sheets 1/45 through 5/45 and to the following:

Standard Drawings

DBR-2-73 Dated 4-10-73

Supplemental Specifications
824 Dated 10-8-82
850 Dated 5-31-88
953 Dated 8-21-80

DESIGN SPECIFICATIONS:

The modifications to this structure conform to "STANDARD SPECIFICATIONS FOR HIGHWAY BRIDGES" adopted by the American Association of State Highway and Transportation Officials, 1983 including the 1984 and 1985 INTERIM SPECIFICATIONS and the Ohio "SUPPLEMENT" to these specifications.

DESIGN DATA:

Design Loading (deck edge repair)	HS20-44 and the Alternate Military Loading
Concrete Class S (as per plan)	Superstructure (deck edge repair) Compressive Strength 4500 psi.
Patching Concrete	Superstructure and substructures; CMS Item 519
Reinforcing Steel (deck edge repair)	ASTM A615, A616, A617, Grade 60 Minimum Yield Strength 60,000 psi
Deck Protection (deck edge repair)	Epoxy coated reinforcing steel in both mats and sealing of concrete surfaces
Wearing Surface	1 3/4" Superplasticized, Dense Concrete Overlay

REINFORCING STEEL SPLICES:

Unless shown otherwise, all reinforcing steel splices shall comply with the lap lengths specified in CMS section 509.08.

14A/45

ENGINEERING ASSOCIATES LTD.
CONSULTING ENGINEERS
700 WINKLER DR. WOOSTER, OHIO

STRUCTURE NOTES AND GENERAL NOTES
MED-42-0265
OVER BLACK RIVER

DESIGNED	DRAWN	TRACED	CHECKED	REVIEWED	DATE	REVISED
DBC	DBC PLD	PLD	AFS	DWS	3/23/87	

MICROFILMED
SEP 21 1992

CALC. BY DATE	MED-42-1.89	OHIO	97
CHKD. BY DATE	MED-224-10.45	FHWA REGION	189

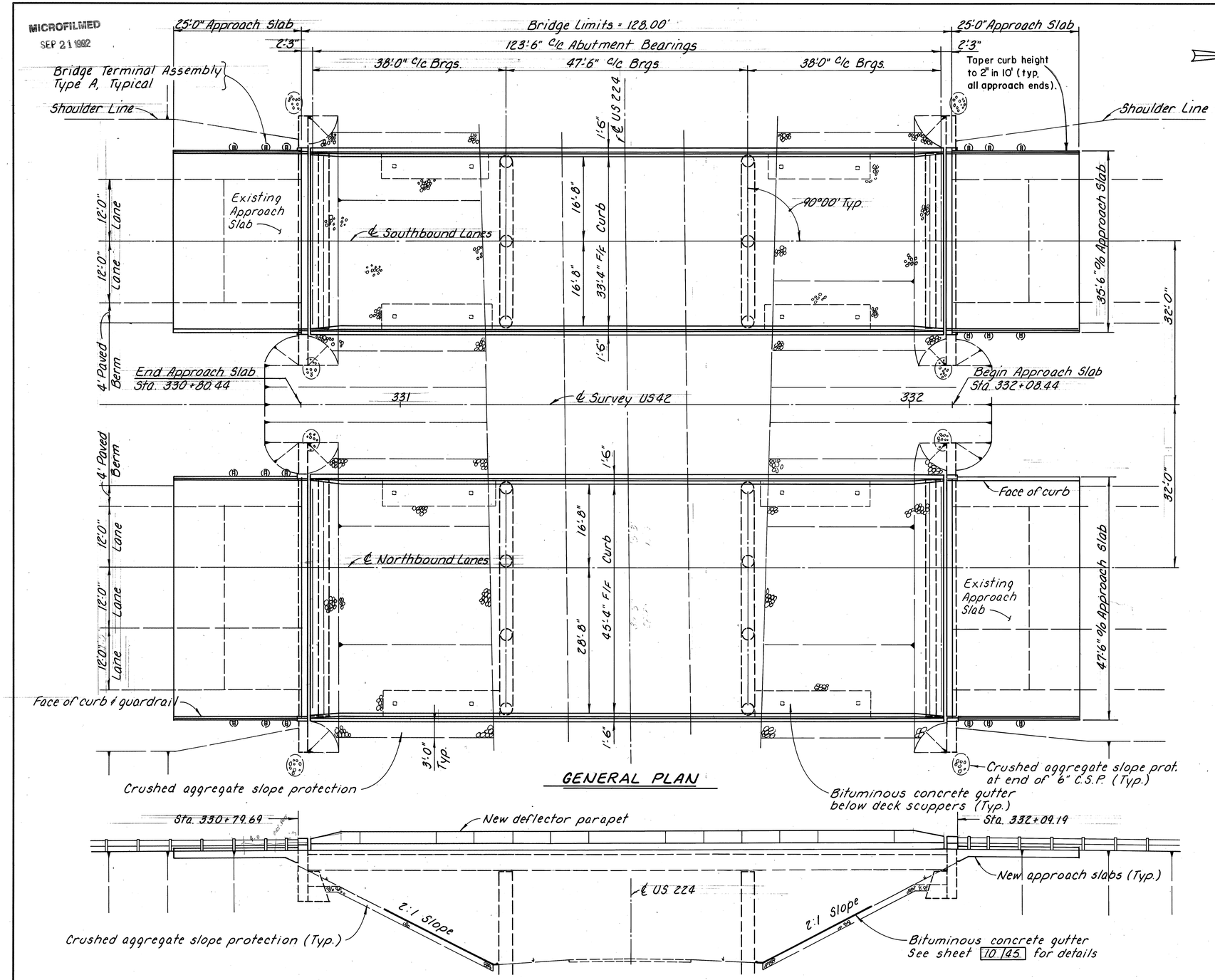

GENERAL PLAN

GENERAL ELEVATION

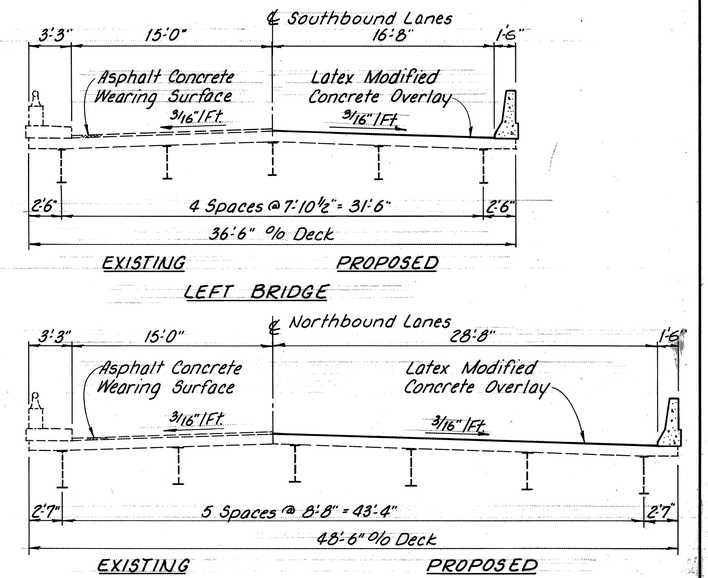

TRANSVERSE SECTIONS

MED-42-0310 L/R REHABILITATION SUMMARY

Remove and dispose of existing concrete safety curbs, parapets, bulb angles, bridge railing and abutment backwalls. See Roadway plans for removal of approach slabs.

Trim the ends of the beams to restore adequate expansion capacity. Move and repair the end crossframes and replace expansion joint armor.

Construct new deflector parapets using Class S Concrete, as per plan.

Modify existing scuppers to remain in service, and provide an asphalt gutter on the slope below the scupper outlets, as per plan.

Repair the bridge deck and place a wearing surface overlay on the deck using Latex Modified Concrete.

Reconstruct the abutment backwalls.

Seal the deck expansion joints with strip seals.

Seal the surfaces of the new deflector parapets as shown in the plan details.

Provide slope protection under the bridge, as directed by the Engineer.

See sheet 13B for removal details for sign on the west side of MED-42-0310L

15/45

ENGINEERING ASSOCIATES LTD.
CONSULTING ENGINEERS
700 WINKLER DR. WOOSTER, OHIO

GENERAL PLAN AND REHAB SUMMARY
MED-42-0310 L/R
OVER US 224
STA. 330+80.44 TO 332+08.44
MEDINA COUNTY

DESIGNED	DRAWN	TRACED	CHECKED	REVIEWED	DATE	REVISED
DWS	PLD	PLD SLM	AFS	DBC	3/20/87	

CALC. BY RLE DATE 2/87	MED-42-1.89	OHIO	98
CHKD. BY AFS DATE 3/87	MED-224-10.45	FHWA REGION	189

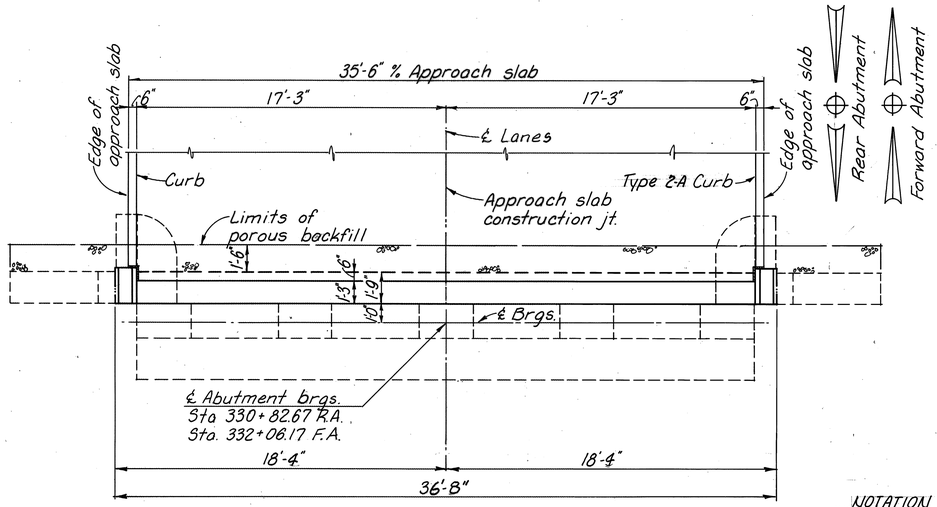

ABUTMENT PLAN - LEFT STRUCTURE

NOTATION
- F.F. - Front Face
- R.F. - Rear Face
- E.F. - Each Face
- R.A. - Rear Abutment
- F.A. - Forward Abutment

ABUTMENT REINFORCING STEEL								
MARK	NUMBER L.REAR	R.REAR	L.FWD.	R.FWD.	TOTAL	LENGTH	TYPE	WEIGHT
EA501	14	7	14	7	42	18'-3"	Str.	799
EA502	-	7	-	7	14	13'-9"	Str.	201
EA503	-	7	-	7	14	16'-3"	Str.	237
EA504	6	6	6	6	24	3'-3"	Bt.	81
EA505	6	6	6	6	24	2'-9"	Bt.	69
EA506	6	6	6	6	24	2'-7"	Bt.	65
EA507	6	6	6	6	24	2'-0"	Str.	50
EA508	24	24	24	24	96	1'-8"	Str.	167
EA601	36	49	36	49	170	3'-6"	Bt.	894
EA602	36	49	36	49	170	7'-3"	Bt.	1851
EA603	2	2	2	2	8	7'-9"	Bt.	94
ED801	24	32	24	32	112	4'-11"	Bt.	1470
						TOTAL		5978

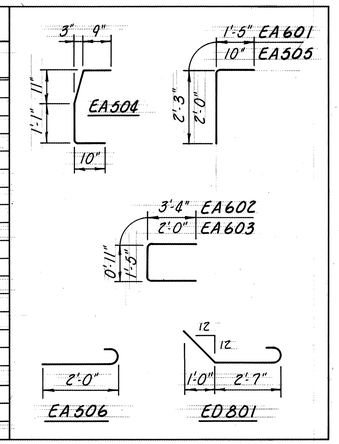

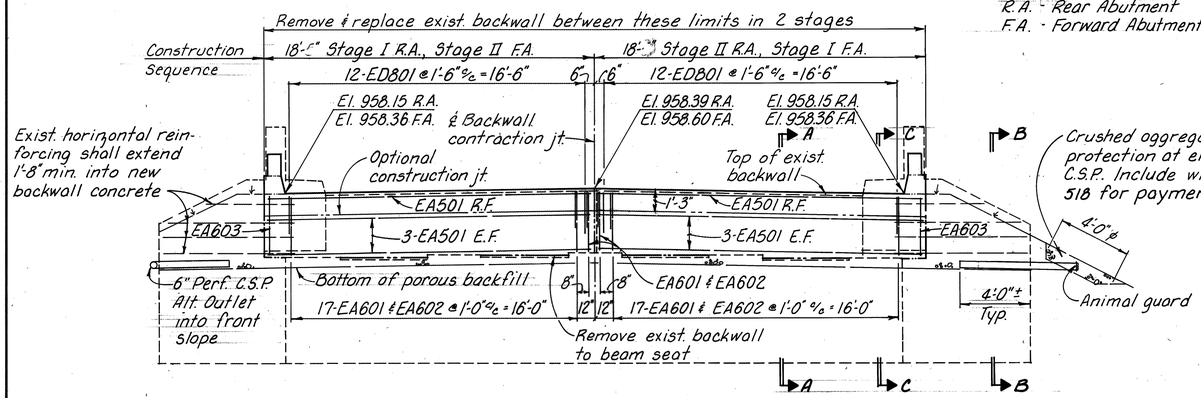

ABUTMENT ELEVATION - LEFT STRUCTURE

Rear Abutment drawn, drainage outlets Forward Abutment opposite hand.

ABUTMENT NOTES

DRAINAGE: Porous backfill, 1.5 ft. thick, enclosed in filter fabric shall extend up to the plane of the subgrade and laterally to the ends of the wingwalls. Maintain a minimum of 6 in. of cover over the filter fabric (See Section B-B)

The porous backfill shall be drained by 6" perforated C.S.P. extending straight out into the side slopes, terminating near the surface as shown. Where drainage thru the side slopes is either impossible or impractical, the C.S.P. shall extend beyond the wingwall, then be redirected (Labeled "Alt. outlet" in the plans) into the front slope, terminating in crushed aggregate as shown for the side slopes or the spill thru slope protection in front of the abutments where possible.

BACKWALL CONCRETE: In addition to the provisions of 511.08, backwall concrete above the optional construction joint at the approach slab seat shall not be placed until after the deck concrete has been placed. The steel expansion joint shall serve as a template for the top of the backwall.

CONTRACTION JOINT AND WATERSTOP DETAILS: See sheet 10/45.

END DAM DETAILS: See sheet 7/45.

CRUSHED AGGREGATE SLOPE PROTECTION:
Slope protection @ Ea. Abut. Lt. Structure = 184 Sq. Yds.
Slope protection @ Ea. Abut. Rt. Structure = 236 Sq. Yds.

ABUTMENTS/RIGHT STRUCTURE: See sheet 17/45.

BRIDGE GENERAL NOTES: See sheets 1/45 thru 5/45 and 20/45.

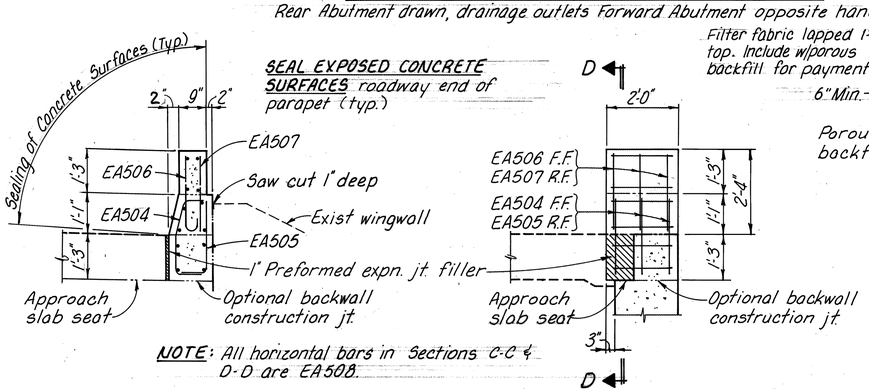

NOTE: All horizontal bars in Sections C-C & D-D are EA508.

SECTION D-D

SECTION C-C

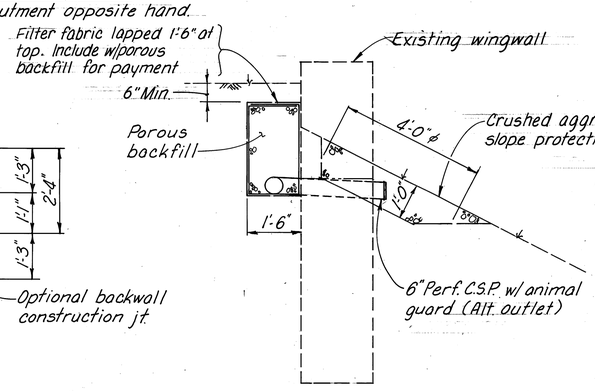

SECTION B-B

Right Structure with Alt. Outlet drawn

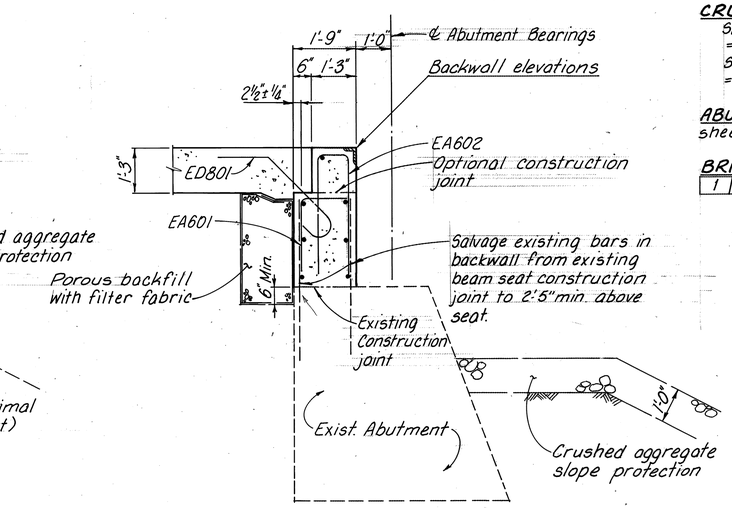

SECTION A-A

All bars normal to the Section are EA501

16/45

ENGINEERING ASSOCIATES LTD.
CONSULTING ENGINEERS
700 WINKLER DR. WOOSTER, OHIO

ABUTMENT REPAIR DETAILS, NOTES AND REINFORCING STEEL SCHEDULES

MED-42-0310 L/R
OVER U.S. 224

DESIGNED	DRAWN	TRACED	CHECKED	REVIEWED	DATE	REVISED
DWS	RLE	RLE	AFS	DBC	3/20/87	

MICROFILMED
SEP 21 1992

CALC. BY DATE	MED-42-1.89	OHIO
CHKD. BY DATE	MED-224-10.45	FHWA REGION

99 / 189

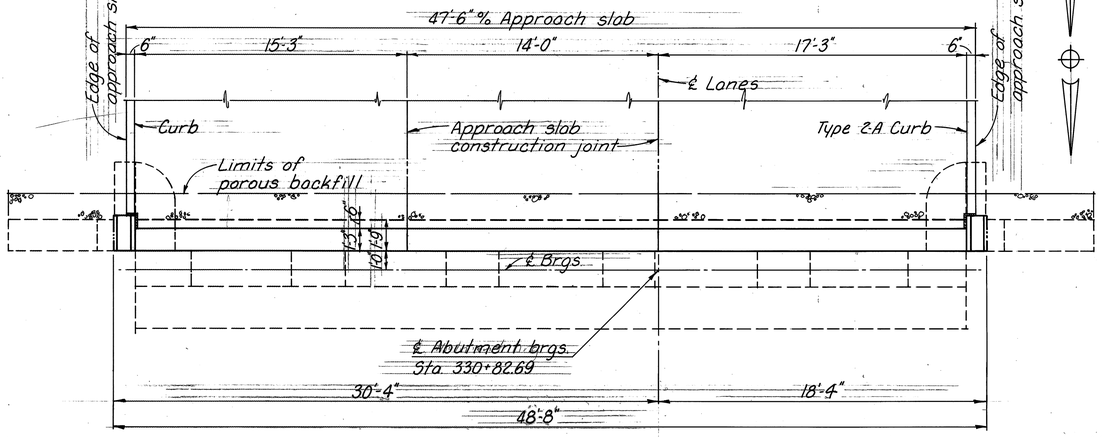

PLAN - RIGHT STRUCTURE - REAR ABUTMENT

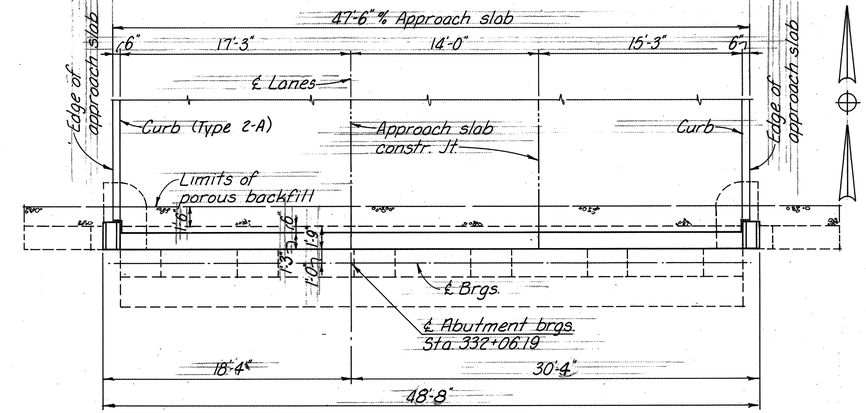

PLAN - RIGHT STRUCTURE - FORWARD ABUTMENT

NOTATION:
R.F. - Rear Face
E.F. - Each Face

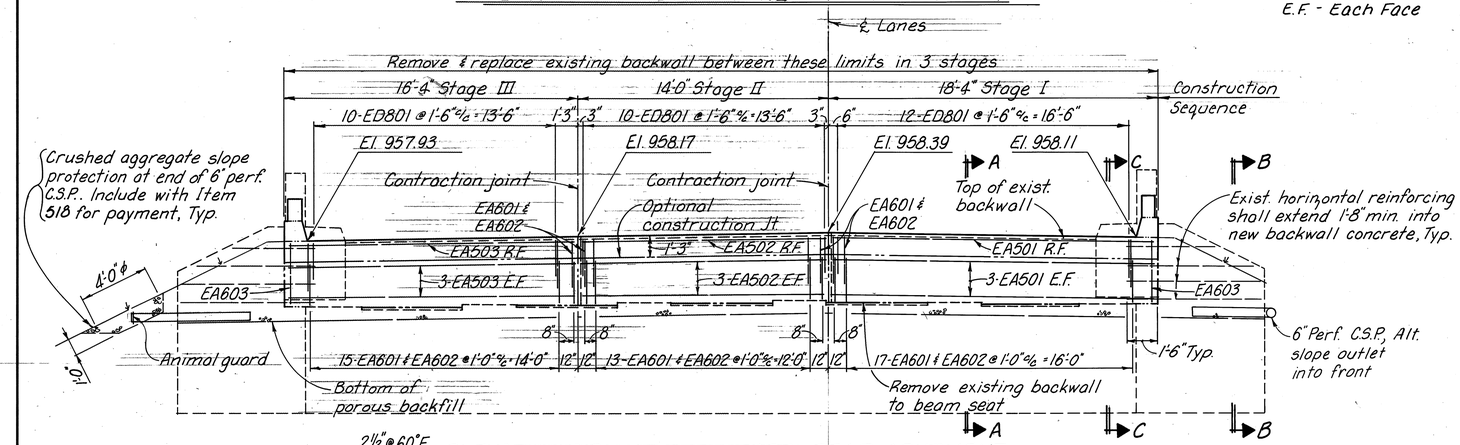

ELEVATION - RIGHT STRUCTURE - REAR ABUTMENT

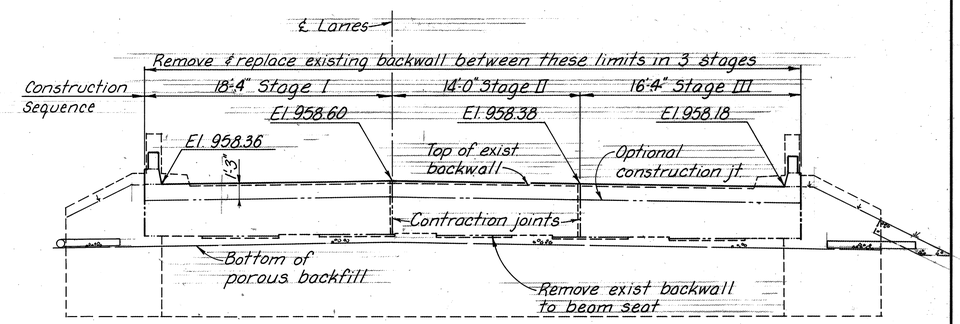

ELEVATION - RIGHT STRUCTURE - FORWARD ABUTMENT

Reinforcing steel for Forward Abutment is same as for Rear Abutment except opposite hand.

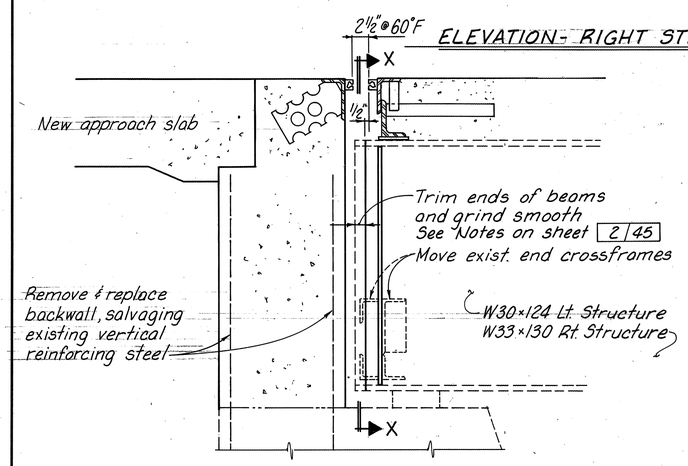

TRIM BEAMS AND MOVE END CROSSFRAMES

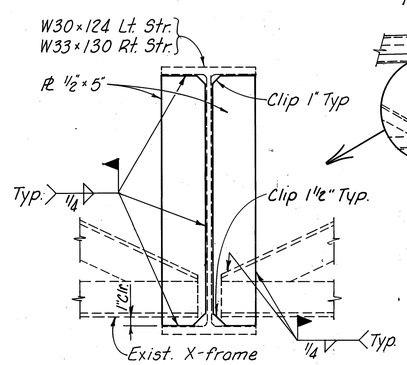

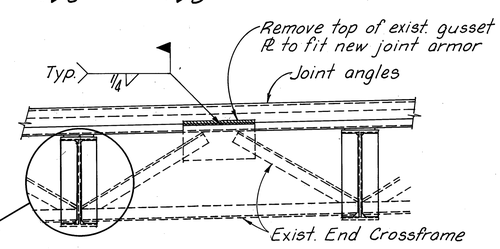

SECTION X-X

End Crossframe shown for beam spacing 8'-0" or less. See Standard Drawing CSB-1-55 for details of original construction.

ABUTMENT NOTES

SECTIONS A-A, B-B & C-C: See sheet 16/45.

ABUTMENTS / LEFT STRUCTURE: See sheet 16/45.

ABUTMENT REINFORCING STEEL SCHEDULE: See sheet 16/45

ADDITIONAL ABUTMENT NOTES: See sheet 16/45

See notes 4-7 on sheet 26/45 for additional repairing and moving end crossframe notes.

17/45

ENGINEERING ASSOCIATES LTD.
CONSULTING ENGINEERS
700 WINKLER DR. WOOSTER, OHIO

ABUTMENT / SUPERSTRUCTURE REPAIRS AND MODIFICATION

MED-42-0310 L/R OVER US 224

DESIGNED	DRAWN	TRACED	CHECKED	REVIEWED	DATE	REVISED
DWS	RLE	RLE	AFS	DBC	3/20/87	

CALC. BY / DATE	MED-42-1.89	OHIO	100
CHKD. BY / DATE	MED-224-10.45	FHWA REGION	189

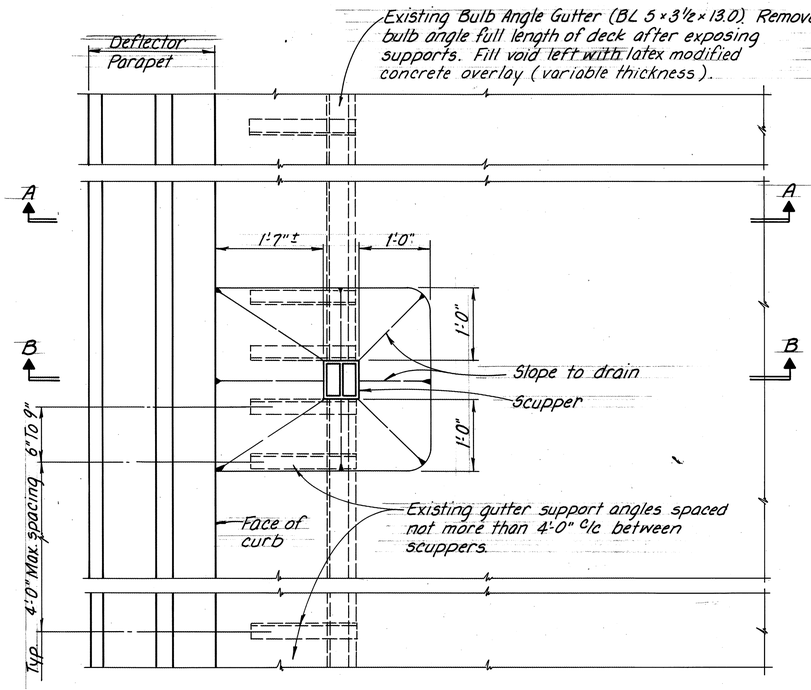

PLAN VIEW

Note A: Cut bars off as necessary to clear deflection joints by 2" min. See sheet 20/45.

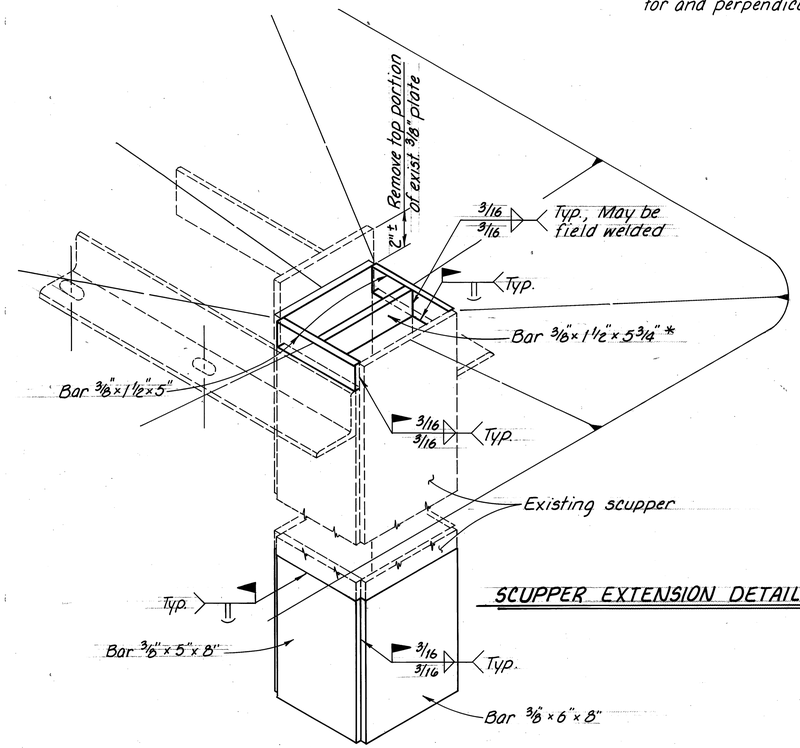

SCUPPER EXTENSION DETAILS

* Contractor may substitute @ 3/8" x 1 1/2" x 5" bar for and perpendicular to the 5 3/4" bar shown.

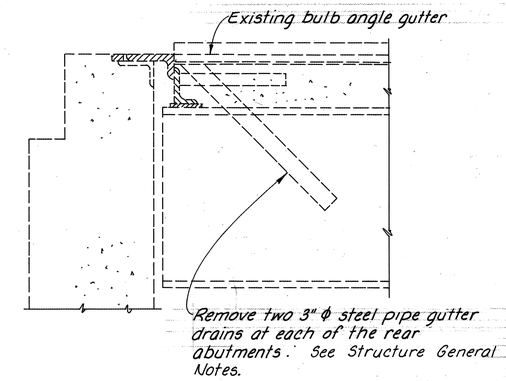

3" ϕ GUTTER DRAIN REMOVAL

See sheet 7/45 for expansion joint details.

NOTES

SCUPPER STRUCTURAL STEEL shall conform to ASTM-A36.

GENERAL NOTES: See sheets 1/45 through 5/45 and 20/45.

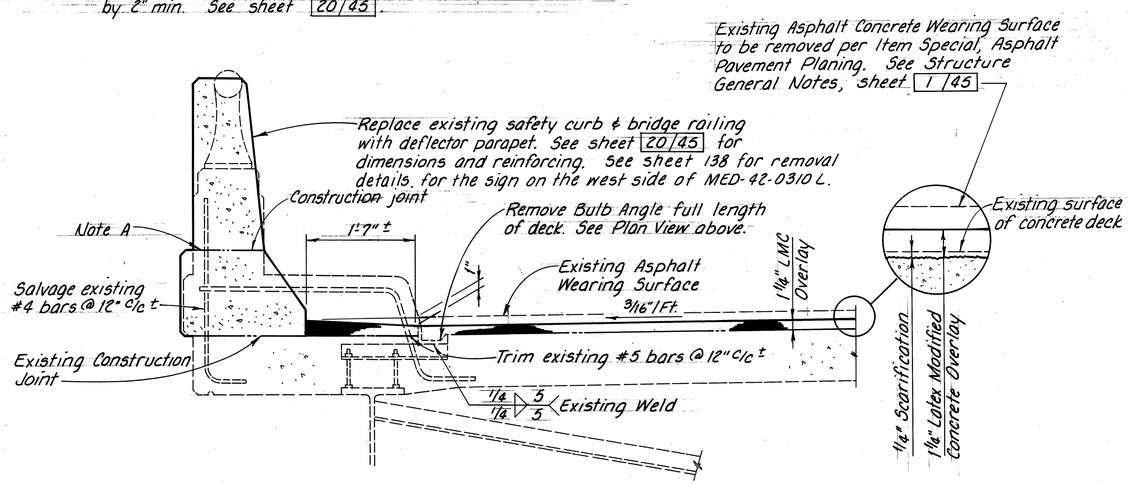

SECTION A-A

For Sealing of Concrete Surfaces see sheet 11A/45

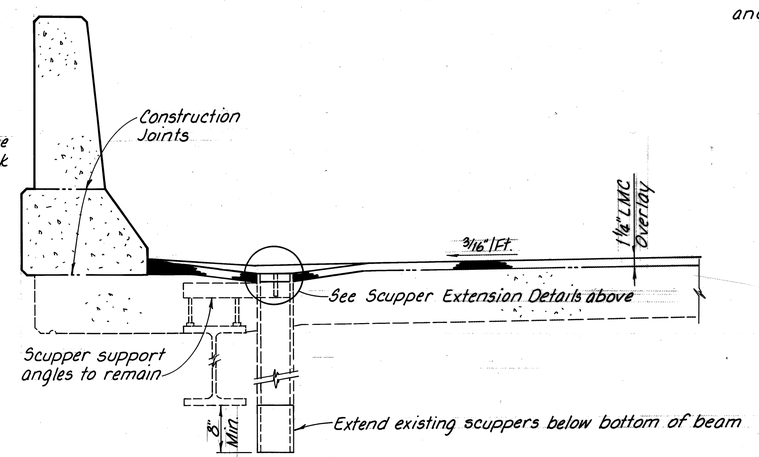

SECTION B-B

18/45

ENGINEERING ASSOCIATES LTD.
CONSULTING ENGINEERS
700 WINKLER DR. WOOSTER, OHIO

SUPERSTRUCTURE REMOVAL AND DRAINAGE DETAILS
MED-42-0310 L/R
OVER US 224

DESIGNED	DRAWN	TRACED	CHECKED	REVIEWED	DATE	REVISED
DBC	DBC	PLD	AFS	DWS	3/23/87	

CALC. BY PLD DATE 1/87	MED-42-1.89	OHIO	101
CHKD. BY DBC DATE 3/87	MED-224-10.45	FHWA REGION	189

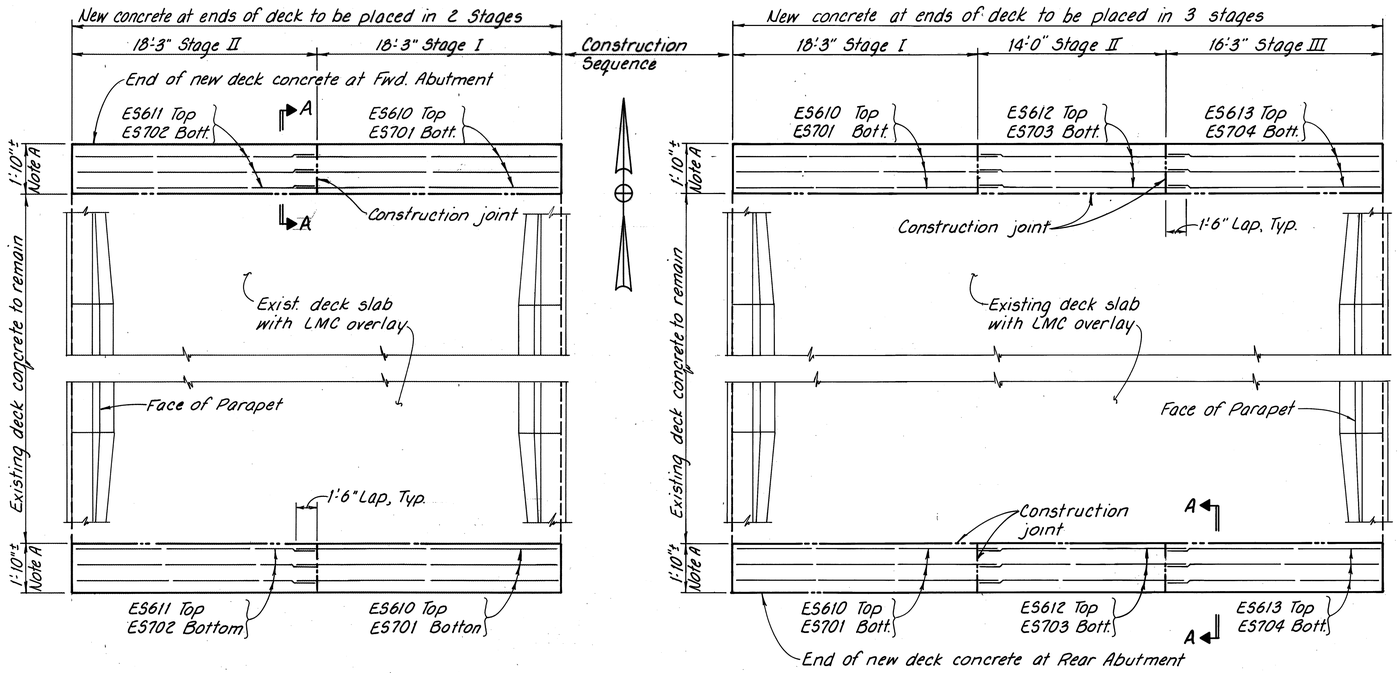

LEFT STRUCTURE

RIGHT STRUCTURE

PART PLANS-DECK SLAB

SUPERSTRUCTURE REINFORCING STEEL

MARK	NUMBER LT. STR.	NUMBER RT. STR.	NUMBER TOTAL	LENGTH	TYPE	WEIGHT
ES501	8	8	16	2'-6"	Bt.	42
ES502	24	24	48	2'-3"	Str.	113
ES503	40	40	80	26'-3"	Str.	2190
ES504	4	4	8	19'-0"	Str.	159
ES505	24	24	48	9'-3"	Str. *	463
ES506	36	36	72	14'-6"	Str.	1089
ES507	96	96	192	7'-0"	Str.	1042
ES601	4	4	8	2'-7"	Bt.	31
ES602	4	4	8	2'-7"	Bt.	31
ES603	4	4	8	2'-3"	Bt.	27
ES604	4	4	8	2'-3"	Bt.	27
ES605	4	4	8	2'-4"	Bt.	28
ES606	4	4	8	2'-5"	Bt.	29
ES607	24	24	48	2'-11"	Bt.	210
ES608	226	226	452	2'-6"	Bt.	1697
ES609	226	226	452	5'-7"	Bt.	2632
ES610	6	6	12	19'-7"	Str.	353
ES611	6	-	6	18'-1"	Str.	163
ES612	-	6	6	15'-6"	Str.	140
ES613	-	6	6	17'-7"	Str.	158
ES701	6	6	12	19'-7"	Str.	480
ES702	6	-	6	18'-1"	Str.	221
ES703	-	6	6	15'-6"	Str.	190
ES704	-	6	6	17'-7"	Str.	216
				TOTAL		11,737

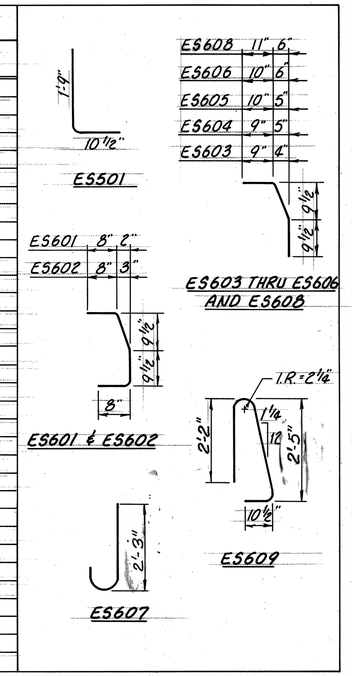

* Bend in field where necessary

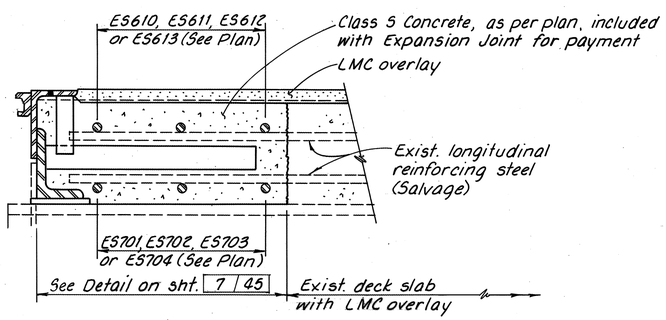

SECTION A-A

SUPERSTRUCTURE NOTES

STRUCTURAL STEEL MODIFICATIONS: See sheet 17/45 for details of trimming of existing beam ends and the repair and moving of cross-frames at the abutments.

DECK EXPANSION JOINT DETAILS: See sheet 7/45.

SUPERSTRUCTURE PARAPET DETAILS: See sheet 20/45.

BRIDGE GENERAL NOTES: See sheet 1/45 through 5/45 and 20/45.

19/45

ENGINEERING ASSOCIATES LTD.
CONSULTING ENGINEERS
700 WINKLER DR. WOOSTER, OHIO

SUPERSTRUCTURE DETAILS
AND
REINFORCING STEEL SCHEDULE
MED 42-0310 L/R
OVER US224

DESIGNED	DRAWN	TRACED	CHECKED	REVIEWED	DATE	REVISED
DBC	RLE	PLD	AFS	DWS	3/23/87	

CALC. BY DATE	MED-42-1.89	OHIO	102
CHKD. BY DATE	MED-224-10.45	FHWA REGION	189

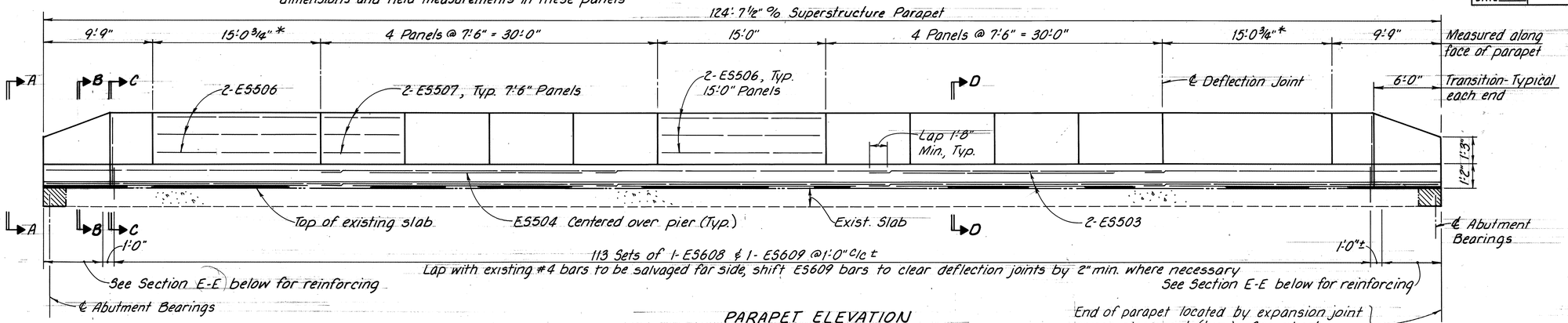

PARAPET ELEVATION

(All lengths are @ 60°F)

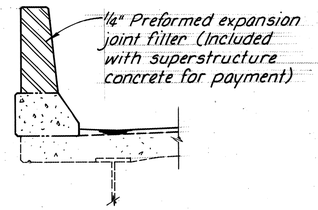

DETAIL A

Section thru deflection joint

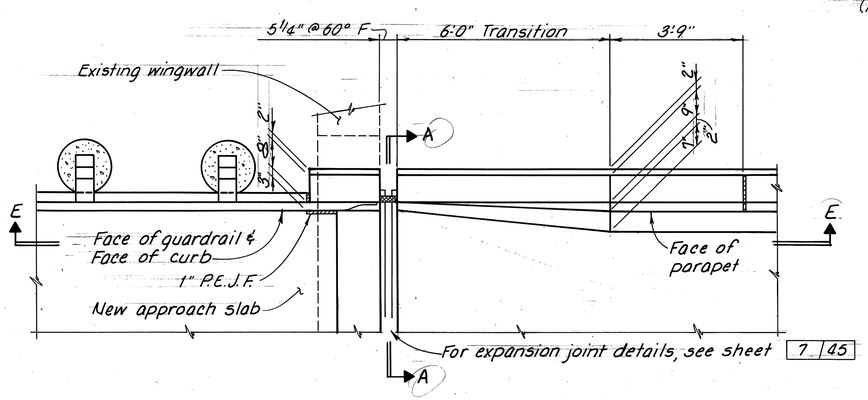

PART PLAN AT ABUTMENT

NOTE: All longitudinal bars in the lower part of the parapet are ES503 bars unless noted otherwise

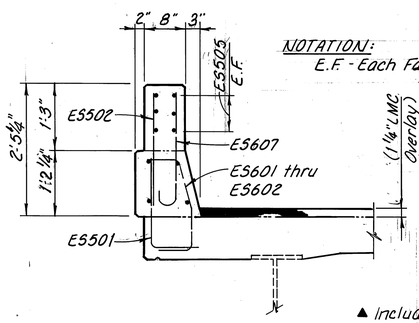

VIEW A-A

(Joint Armor & Parapet Joint Seal not shown)

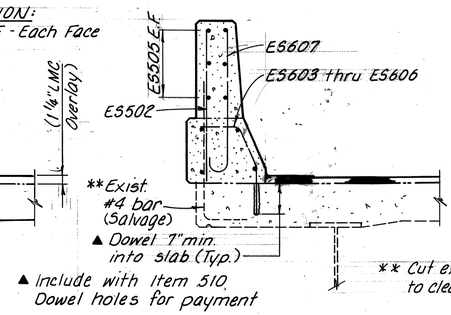

SECTION B-B

(For Sealing of Concrete surfaces see sheet 11A/45)

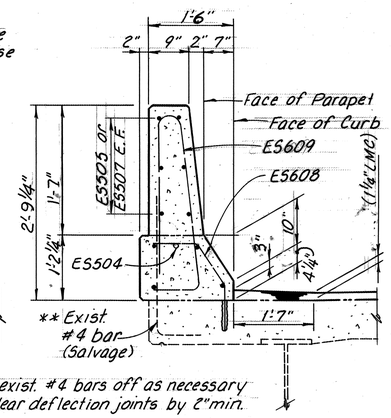

SECTIONS C-C & D-D

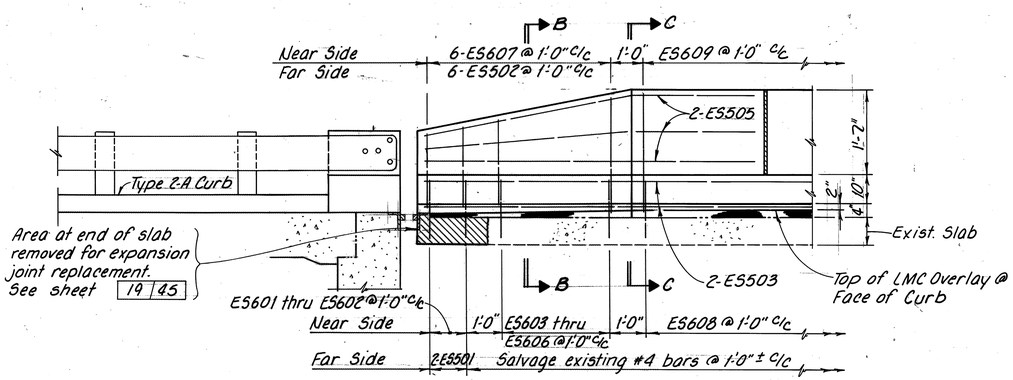

SECTION E-E

NOTES

DESIGN SPECIFICATIONS: "Standard Specifications for Highway Bridges" adopted by American Association of Highway and Transportation Officials, 1983, including the 1984 and 1985 Interim Specifications and the Ohio "Supplement" to these specifications.

DESIGN DATA: Concrete Class S, As Per Plan - $f_c' = 4500$ psi, $f_c = 1800$ psi (deflector parapet) Reinforcing Steel - ASTM A615, A616 or A617 Grade 60, $f_y = 60{,}000$ psi, $f_s = 24{,}000$ psi

PREFORMED EXPANSION JOINT FILLER in the parapet deflection joints may be either ¼" gray sponge rubber or ¼" gray cellular polyvinyl chloride (PVC) sponge. If rubber is used it shall meet the requirements of AASHTO M-153.

CONCRETE PARAPETS above upper construction joint shall be placed in alternate sections by the use of bulkheads. Closing sections shall be placed after removal of bulkheads and after placement of expansion joint filler. Exposed edges of the filler shall be flush with the surface of concrete and shall be free of mortar.

ABUTMENT PARAPET DETAILS: See sheet 16/45.

REINFORCING STEEL SCHEDULE: See sheet 19/45.

GENERAL NOTES: See sheets 1/45 thru 5/45 and 20/45.

Standard Drawings

AS-1-81	Dated 11-27-81	
SD-1-69	Dated 6-12-69	
BA-1	Dated 5-29-79	

Supplemental Specifications

824	Dated	10-8-82
845	Dated	5-31-88
953	Dated	8-21-80

20/45

ENGINEERING ASSOCIATES LTD.
CONSULTING ENGINEERS
700 WINKLER DR. WOOSTER, OHIO

SUPERSTRUCTURE PARAPET DETAILS
MED-42-0310 L/R OVER US 224

DESIGNED	DRAWN	TRACED	CHECKED	REVIEWED	DATE	REVISED
DBC	PLD	PLD	AFS	DWS	3/23/87	

CALC. BY DATE	MED-42-1.89	OHIO	103
CHKD. BY DATE	MED-224-10.45	FHWA REGION	18.9

CURVE DATA
P.I. Sta. 404+75.33
Δ = 47°57'55" Rt.
D = 1°28'
R = 3906.53'
T = 1737.88'
L = 3270.36'
E = 369.12'

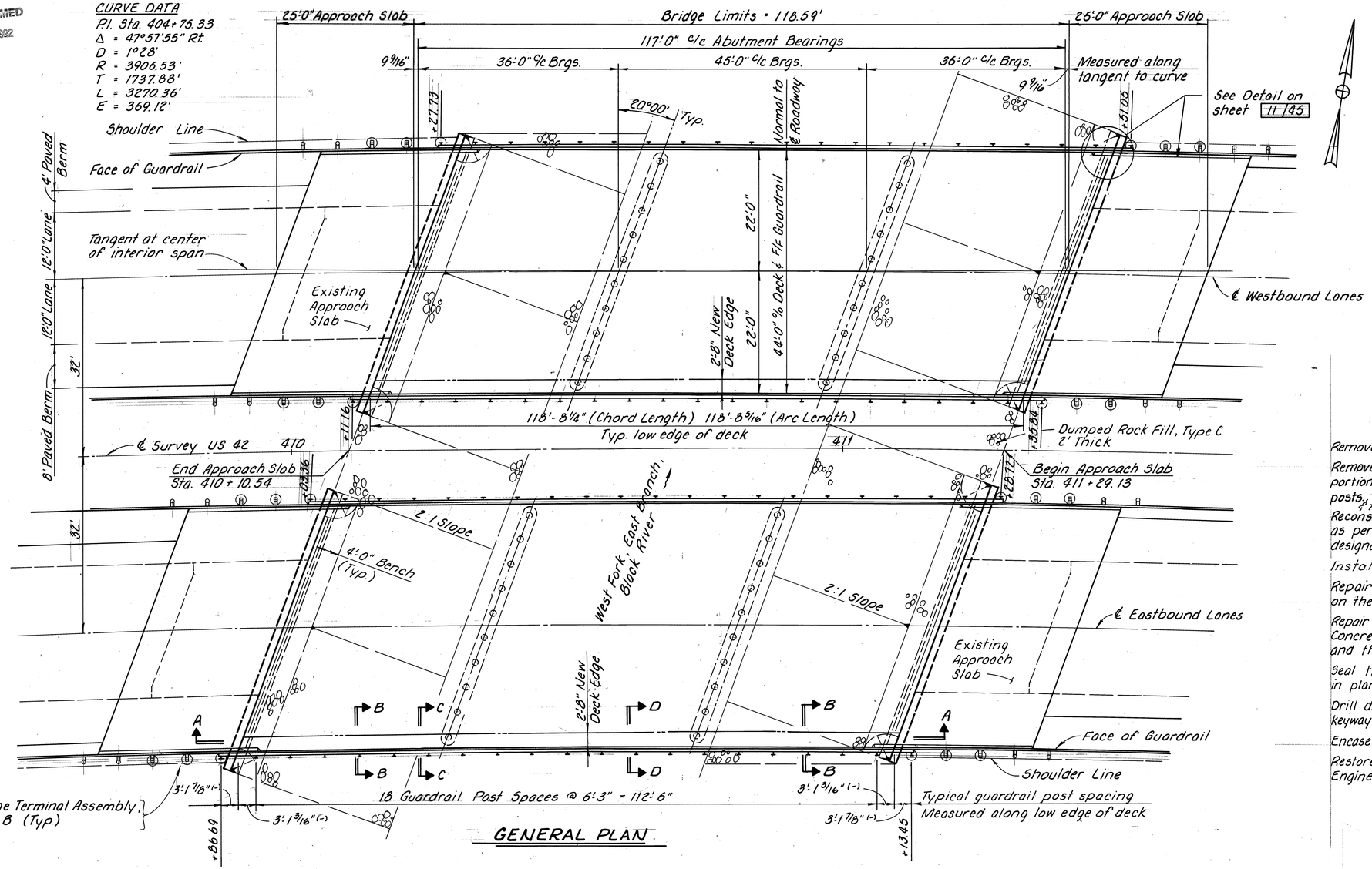

GENERAL PLAN

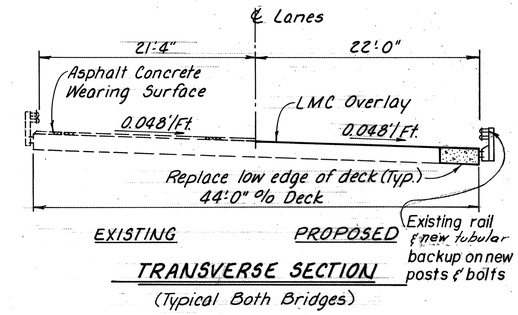

TRANSVERSE SECTION
(Typical Both Bridges)

MED-42-0460 L/R REHABILITATION SUMMARY

Remove guardrail and store for reuse.

Remove and dispose of the low edge of the concrete decks, portions of abutment backwalls, anchor bolts and all guardrail posts. See Roadway plans for removal of approach slabs.

Reconstruct the low edges of the decks using Class S concrete, as per plan. Provide new guardrail anchor bolts where designated and Type 2 guardrail posts, & tubular backup.

Install guardrail.

Repair the bridge decks and place a wearing surface overlay on the deck using Latex Modified Concrete.

Repair the abutments in accordance with Item 519, Patching Concrete Structures. Provide a joint seal between the deck and the approach slab at each end of the bridge.

Seal the concrete surfaces at edges of the decks as shown in plan details.

Drill drain holes at each abutment to provide drainage for the keyway at the joint between the superstructure and the abutments.

Encase the 14 inch cast-in-place piles at the piers.

Restore slope protection under the bridge, as directed by the Engineer.

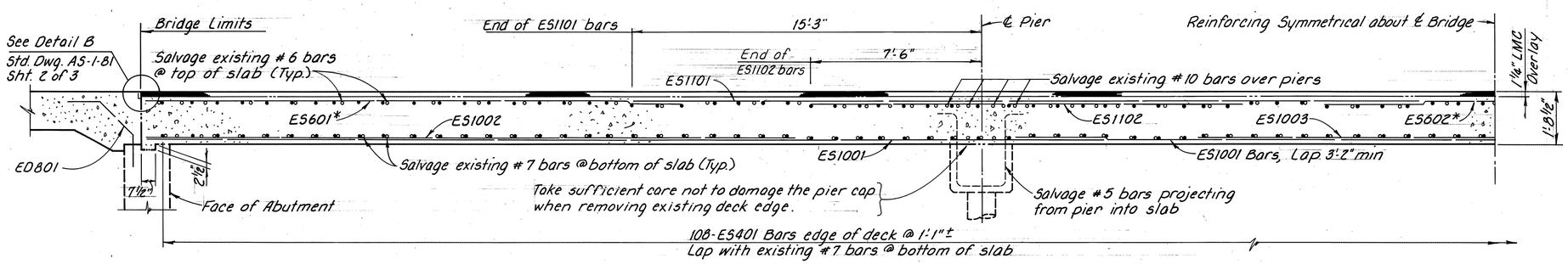

* Lap with ES1101 bars over piers, 1'-11" min.

SECTION A-A

SECTIONS B-B, C-C, & D-D : See sheet 22/45.
REINFORCING STEEL SCHEDULE : See sheet 22/45.
ADDITIONAL NOTES: See sheet 21A/45.

21/45

ENGINEERING ASSOCIATES LTD.
CONSULTING ENGINEERS
700 WINKLER DR. WOOSTER, OHIO

GENERAL PLAN AND REHAB SUMMARY
MED-42-0460 L/R
OVER BLACK RIVER
STA. 410+10.54 TO 411+29.13
MEDINA COUNTY

DESIGNED	DRAWN	TRACED	CHECKED	REVIEWED	DATE	REVISED
DBC	DBC PLD	PLD	AFS	DWS	3/24/87	

CALC. BY DBC DATE 2/87	MED-42-1.89	OHIO	104
CHKD. BY AFS DATE 3/87	MED-224-10.45	FHWA REGION	189

STRUCTURE NOTES

PATCHING CONCRETE STRUCTURES, AS PER PLAN:

Rear Abutment, Lt. Structure	= 26 Sq. Ft.
Forward Abutment, Lt. Structure	= 44 Sq. Ft.
Rear Abutment, Rt. Structure	= 32 Sq. Ft.
Forward Abutment, Rt. Structure	= 23 Sq. Ft.

DUMPED ROCK FILL, TYPE C, AS PER PLAN:

Slope Protection at Rear Abutment	= 241 Cu. Yd.
Slope Protection at Forward Abutment	= 241 Cu. Yd.

CAPPED PILE PIER ENCASEMENT DETAILS: See sheet 10/45

ABUTMENT KEYWAY DRAIN DETAIL: See sheet 11/45

SUPERSTRUCTURE EDGE DETAILS: See sheet 11/45

BRIDGE GENERAL NOTES: See sheets 1/45 through 5/45

GENERAL NOTES FOR MED-42-0460

REFERENCE:

Reference shall be made to the Bridge General Notes on sheets 1/45 through 5/45 and to the following:

Standard Drawings
- AS-1-81 Dated 11-27-81
- DBR-2-73 Dated 4-10-73

Supplemental Specifications
- 824 Dated 10-8-82
- 845 Dated 5-31-88
- 953 Dated 8-21-80

DESIGN SPECIFICATIONS:

The modifications to this structure conforms to "STANDARD SPECIFICATIONS FOR HIGHWAY BRIDGES" adopted by the American Association of State Highway and Transportation Officials, 1983 including the 1984 and 1985 INTERIM SPECIFICATIONS and the Ohio "Supplement" to these specifications.

DESIGN DATA:

Design Loading (deck edge repair)	-	HS20-44 and the Alternate Military Loading
Concrete Class S (as per plan)	-	Superstructure (deck edge repair) Compressive Strength 4500 psi
Patching Concrete	-	Superstructure and Substructures; CMS Item 519
Reinforcing Steel (deck edge repair)	-	ASTM A615, A616, A617, Grade 60 Minimum Yield Strength 60,000 psi
Deck Protection (deck edge repair)	-	Epoxy coated reinforcing steel in both mats and sealing of concrete surfaces
Wearing Surface	-	1 1/4" Latex Modified Concrete Overlay

REINFORCING STEEL SPLICES:

Unless shown otherwise, all reinforcing steel splices shall comply with the lap lengths specified in CMS section 509.08

21A/45

ENGINEERING ASSOCIATES LTD.
CONSULTING ENGINEERS
700 WINKLER DR. WOOSTER, OHIO

STRUCTURE NOTES AND GENERAL NOTES

MED-42-0460 LIR OVER BLACK RIVER

DESIGNED	DRAWN	TRACED	CHECKED	REVIEWED	DATE	REVISED
DBC	PLD	PLD	AFS	DWS	3-24-87	

MICROFILMED
SEP 21 1992

CALC. BY DBC DATE 2/87	MED-42-1.89	OHIO	105
CHKD. BY AFS DATE 3/87	MED-224-10.45	FHWA REGION	189

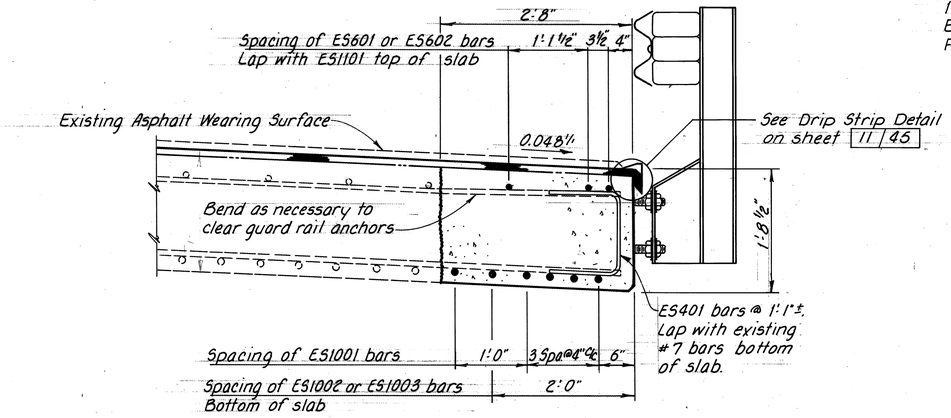

SECTION B-B or D-D

For Sealing of Concrete Surfaces see sheet 11A/45

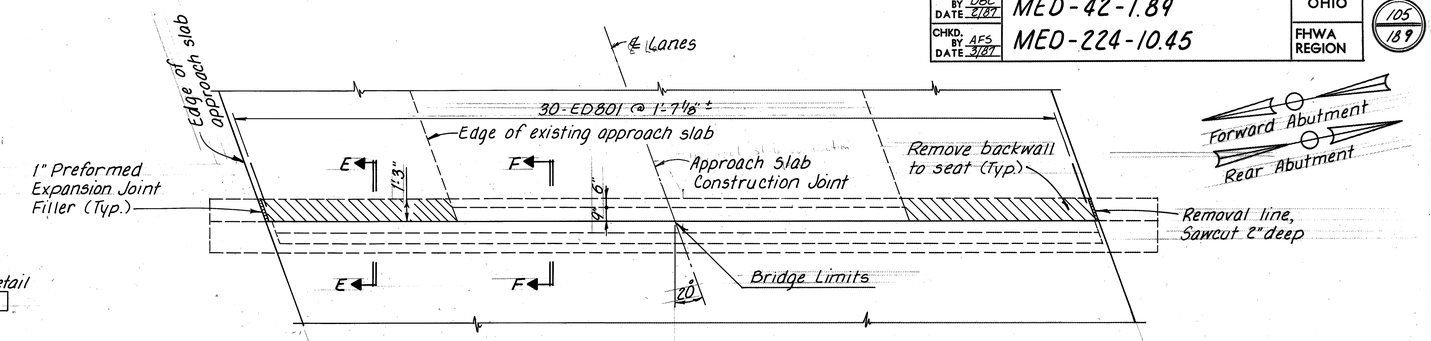

ABUTMENT PLAN

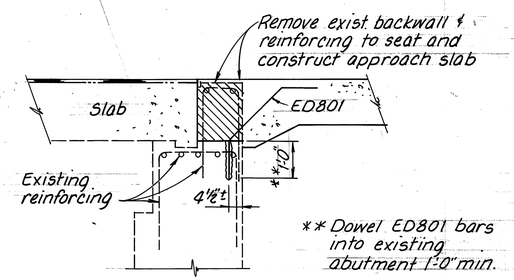

** Dowel ED801 bars into existing abutment 1'-0" min.

SECTION E-E

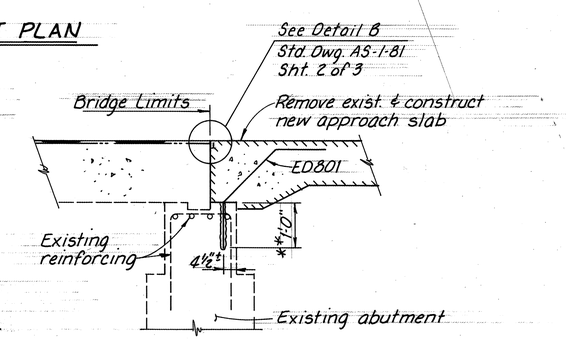

SECTION F-F

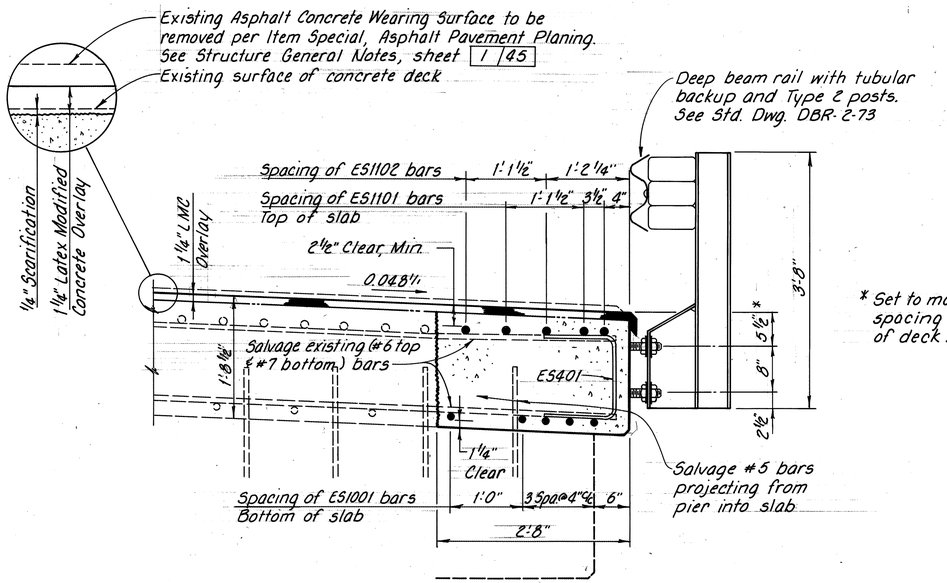

* Set to match existing anchor spacing on opposite side of deck.

SECTION C-C

Take care not to damage the pier cap when removing existing deck edge.

REINFORCING STEEL SCHEDULE

MARK	NUMBER LT. STR.	NUMBER RT. STR.	NUMBER TOTAL	LENGTH	TYPE	WEIGHT
ES401	108	108	216	3'-0"	Bt.	433
ES601	6	6	12	23'-6"	Str.	423
ES602	3	3	6	15'-0"	Str.	135
ES1001	15	15	30	41'-6"	Str.	5357
ES1002	2	2	4	28'-6"	Str.	491
ES1003	1	1	2	26'-0"	Str.	224
ES1101	6	6	12	34'-6"	Str.	2200
ES1102	4	4	8	19'-0"	Str.	808
ED801	60	60	120	4'-2"	Bt.	1335
				TOTAL		11,406

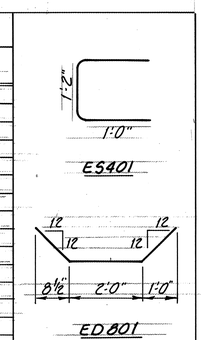

SECTIONS B-B, C-C & D-D are taken from sheet 21/45.

22/45

ENGINEERING ASSOCIATES LTD.
CONSULTING ENGINEERS
700 WINKLER DR. WOOSTER, OHIO

ABUTMENT/SUPERSTRUCTURE REPAIRS AND MODIFICATIONS
REINFORCING STEEL SCHEDULE
MED-42-0460 L/R
OVER BLACK RIVER

DESIGNED	DRAWN	TRACED	CHECKED	REVIEWED	DATE	REVISED
DBC	DBC	PLD	AFS	DWS	3/24/87	

CALC. BY DATE	MED-42-1.89	OHIO	106/189
CHKD. BY DATE	MED-224-10.45	FHWA REGION	

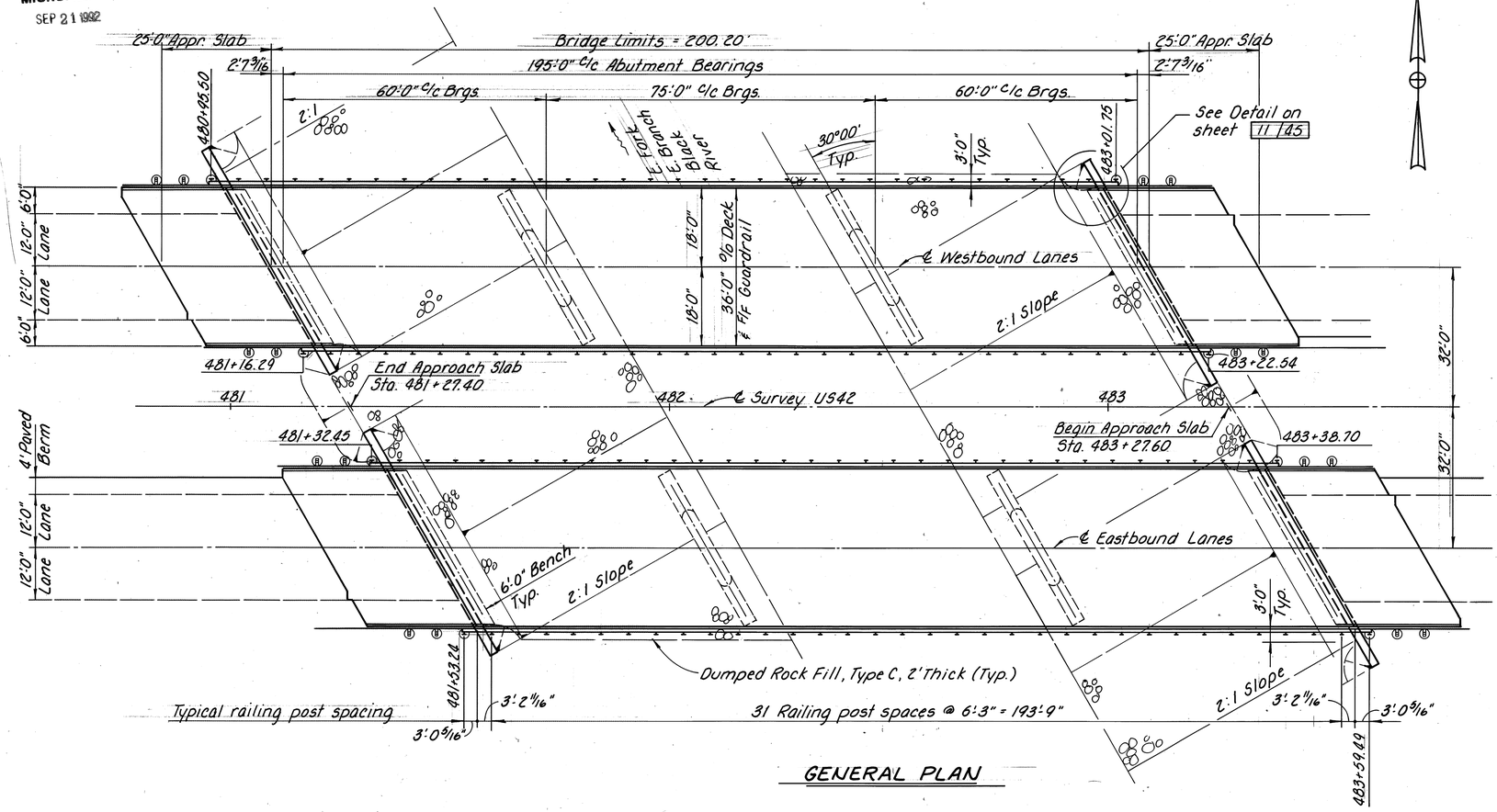

GENERAL PLAN

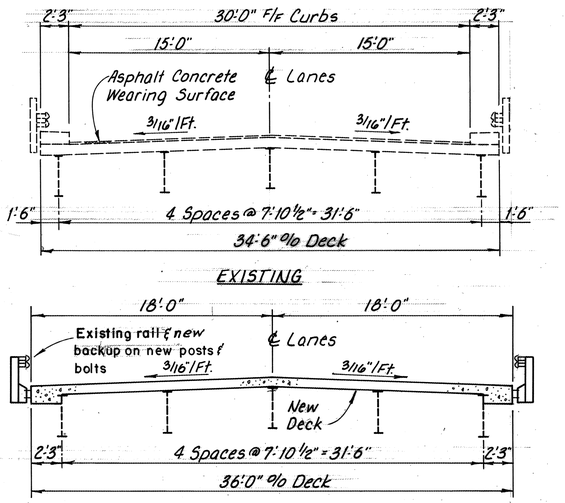

TRANSVERSE SECTIONS

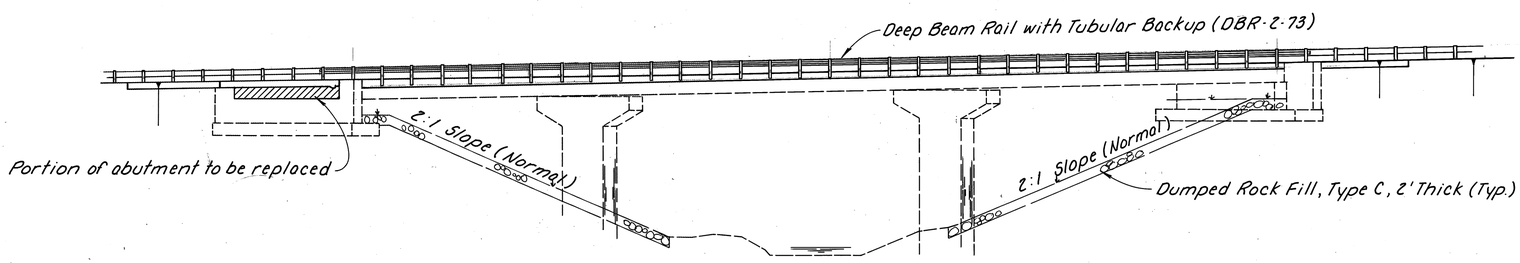

GENERAL ELEVATION

MED-42-0539 L/R RECONSTRUCTION SUMMARY

Remove guardrail and store for reuse.

Remove and dispose of existing concrete decks, safety curbs, bulb angles, handrails, guardrail posts, anchor bolts, scuppers and abutment backwalls. See Roadway Plans for removal of approach slabs.

Trim the ends of the beams to restore adequate expansion capacity. Move & tubular backup. and repair the end crossframes and replace expansion joint armor.

Repair beam seats and replace the bearings at the abutments and piers.

Construct new concrete decks on the ~~existing steel beams using~~ shear stud connectors and Class S Concrete, as per plan. Provide new guardrail anchor bolts and Type 2 posts, tubular backup.

Install guardrail.

Reconstruct the abutment backwalls.

Seal the deck expansion joints with strip seals.

Seal the concrete surfaces at edges of the deck as shown in plan details.

Restore slope protection under the bridge, as directed by the Engineer.

23/45

ENGINEERING ASSOCIATES LTD.
CONSULTING ENGINEERS
700 WINKLER DR. WOOSTER, OHIO

GENERAL PLAN AND REHAB SUMMARY
MED-42-0539 L/R
OVER BLACK RIVER
STA. 481+27.40 TO 483+27.60
MEDINA COUNTY

DESIGNED	DRAWN	TRACED	CHECKED	REVIEWED	DATE	REVISED
AFS	PLD	PLD	DWS	DBC	3/23/87	

CALC. BY RLE DATE 3/87	MED-42-1.89	OHIO	107/189
CHKD. BY AFS DATE 3/87	MED-224-10.45	FHWA REGION	

ABUTMENT REINFORCING STEEL

MARK	NUMBER R.REAR	L.REAR	R.FWD.	L.FWD.	TOTAL	LENGTH	TYPE	WEIGHT
EA501	14	14	14	14	56	21'-9"	Str.	1218
EA601	40	40	40	40	160	4'-0"	Bt.	961
EA602	40	40	40	40	160	8'-9"	Bt.	2103
ED801	24	24	24	24	96	4'-11"	Bt.	472
						TOTAL		4754

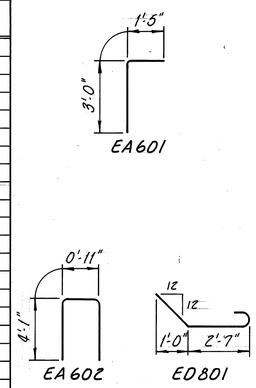

SUPERSTRUCTURE REINFORCING STEEL

MARK	NUMBER L.STR.	R.STR.	TOTAL	LENGTH	TYPE	WEIGHT
ES401	342	342	684	30'-0"	Str.	13707
ES402	43	43	86	24'-0"	Str.	1379
ES501	8	8	16	5'-6"	Str.	92
ES502	54	54	108	*6'-5" to 34'-9"	Str.	2316
ES503	281	281	562	35'-8"	Str.	20887
ES504	216	216	432	30'-0"	Str.	13504
ES505	36	36	72	26'-0"	Str.	1951
ES506	624	624	1248	3'-9"	Bt.	4877
ES601	8	8	16	5'-6"	Str.	132
ES602	54	54	108	*6'-7" to 34'-9"	Str.	3352
ES603	281	281	562	35'-8"	Str.	30107
				TOTAL		92,304

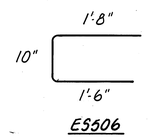

* 4 Sets of 27 bars, Vary each bar by 1'-1"

See sheet 26/45 for additional moving and repairing end crossframe notes and details.

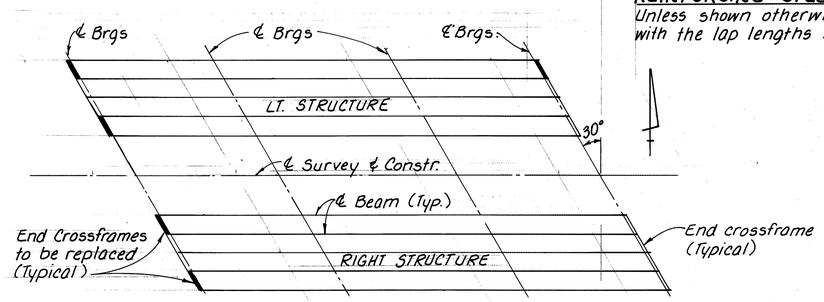

CROSSFRAME REPLACEMENT LOCATION

Cost to replace end crossframe to be included with price bid to move and repair end crossframes.

GENERAL NOTES FOR MED-42-0539 L/R

REFERENCE:

Reference shall be made to the Bridge General Notes on sheets 1/45 through 5/45 and to the following:

Standard Drawings
- AS-1-81 Dated 11-27-81
- DBR-2-73 Dated 4-10-73
- SD-1-69 Dated 6-12-69

Supplemental Specifications
- 824 Dated 10-08-82

DESIGN SPECIFICATIONS:

This structure conforms to "STANDARD SPECIFICATIONS FOR HIGHWAY BRIDGES" adopted by the American Association of State Highway and Transportation Officials, 1983 including the 1984 and 1985 INTERIM SPECIFICATIONS and the Ohio "SUPPLEMENT" to these specifications.

DESIGN DATA:

Design Loading	– HS20-44 Case II and the Alternate Military Loading
Concrete Class S (as per plan)	– Superstructure and Substructures; Compressive Strength 4500 psi.
Reinforcing Steel	– ASTM A615, A616, A617, Grade 60 Minimum Yield Strength 60,000 psi.
Structural Steel (existing)	– ASTM A373, Unit Stress 18,000 psi Assumed Yield Strength 33,000 psi
Deck Protection	– Epoxy coated reinforcing steel in both mats and sealing of concrete surfaces.
Wearing Surface	– Monolithic surface is assumed for design purposes to be 1 inch thick
Stud Shear Connectors	– ASTM A108, Minimum Yield Strength 50,000 p.s.i.

REINFORCING STEEL SPLICES:

Unless shown otherwise, all reinforcing steel splices shall comply with the lap lengths specified in CMS section 509.08.

ENGINEERING ASSOCIATES LTD.
CONSULTING ENGINEERS
700 WINKLER DR. WOOSTER, OHIO

GENERAL NOTES AND REINFORCING STEEL SCHEDULES
MED 42 0539 L/R
OVER BLACK RIVER

DESIGNED	DRAWN	TRACED	CHECKED	REVIEWED	DATE	REVISED
DWS RLE	SLM	SLM	AFS	DBC	3/23/87	

CALC. BY RLE DATE 3/87	MED-42-1.89	OHIO	108/189
CHKD. BY OBC DATE 3/87	MED-224-10.45	FHWA REGION	

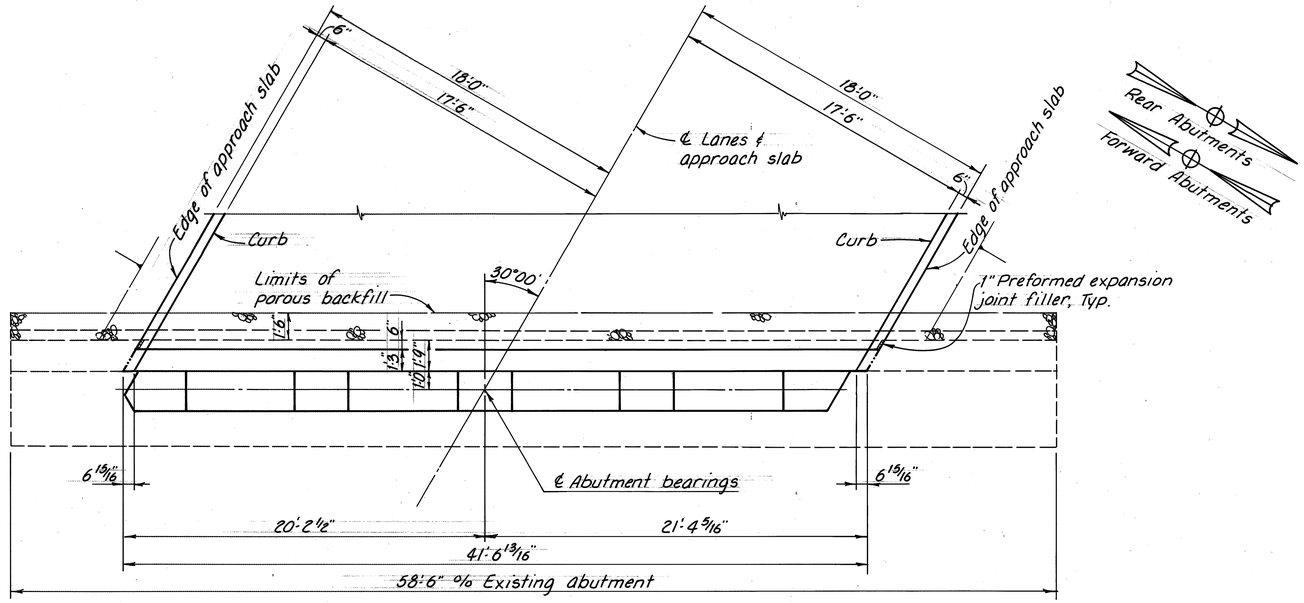

PLAN

(Left Structure, Forward Abutment is drawn; others are similar)

NOTATION:
R.F. - Rear Face
E.F. - Each Face

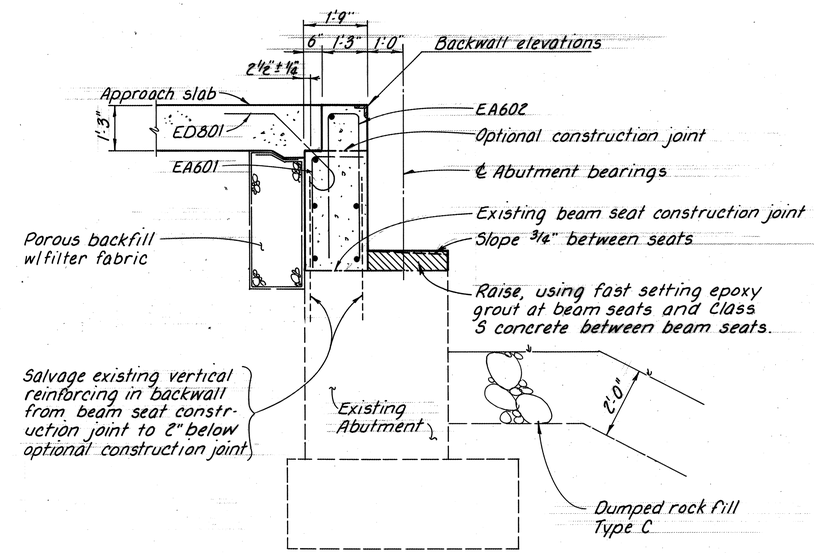

SECTION A-A

All bars normal to the section are EA501

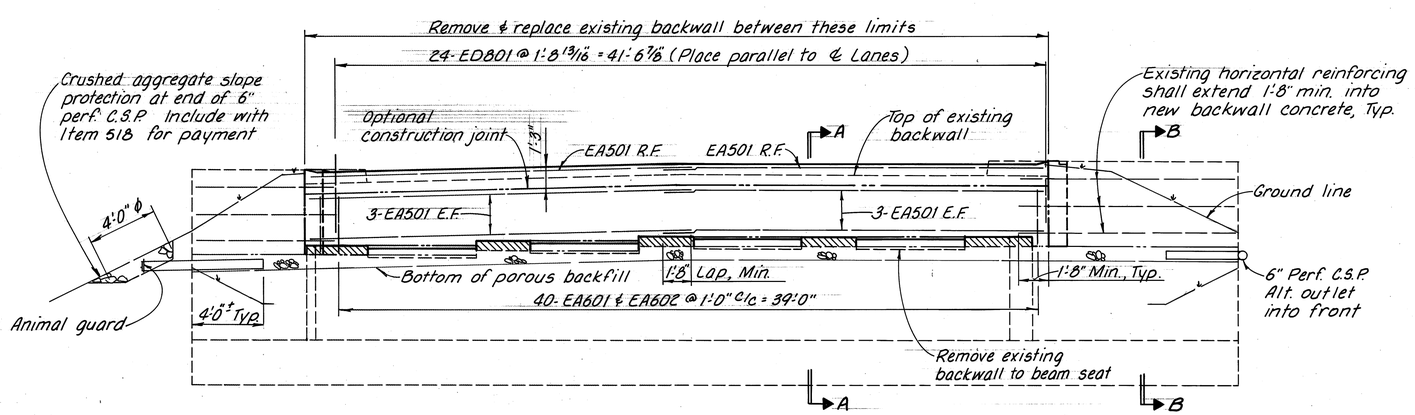

ELEVATION

Drainage details are same for Right Structure, Rear Abutment and opposite hand for Left Structure, Rear Abutment and Right Structure, Forward Abutment

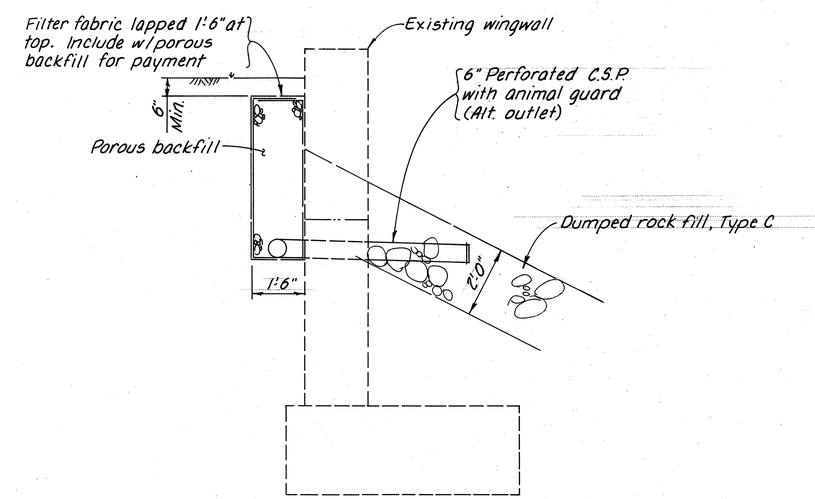

SECTION B-B

ABUTMENT NOTES

DRAINAGE: Porous backfill, 1.5 ft. thick, enclosed in filter fabric shall extend up to the plane of the subgrade and laterally to the ends of the wingwalls. Maintain a minimum of 6 in. of cover over the filter fabric. (See Section B-B)

The porous backfill shall be drained by 6" perforated C.S.P. extending straight out into the side slopes, terminating near the surface as shown. Where drainage thru the side slopes is either impossible or impractical, the C.S.P. shall extend beyond the wingwall, then be redirected (labeled "Alt. outlet" in the plans) into the front slope, terminating in crushed aggregate as shown for the side slopes or the spill thru slope protection in front of the abutments where possible.

BACKWALL CONCRETE: In addition to the provisions of 511.08, backwall concrete above the optional construction joint at the approach slab seat shall not be placed until after the deck concrete has been placed. The steel expansion joint shall serve as a template for the top of the backwall.

END DAM DETAILS: See sheet 7/45.

DUMPED ROCK FILL, TYPE C, AS PER PLAN:
Slope Protection @ Rear Abutment = 780 Cu. Yd.
Slope Protection @ Forward Abutment = 692 Cu. Yd.

ABUTMENT REINFORCING STEEL SCHEDULE: See sheet 24/45.

BRIDGE GENERAL NOTES: See sheets 1/45 thru 5/45 and 24/45.

25/45

ENGINEERING ASSOCIATES LTD.
CONSULTING ENGINEERS
700 WINKLER DR. WOOSTER, OHIO

ABUTMENT REPAIR DETAILS

MED-42-0539 L/R
OVER BLACK RIVER

DESIGNED	DRAWN	TRACED	CHECKED	REVIEWED	DATE	REVISED
RLE	RLE	PLD	AFS	DWS	3/25/87	

CALC. BY / DATE	MED-42-1.89	OHIO	109/189
CHKD. BY / DATE	MED-224-10.45	FHWA REGION	

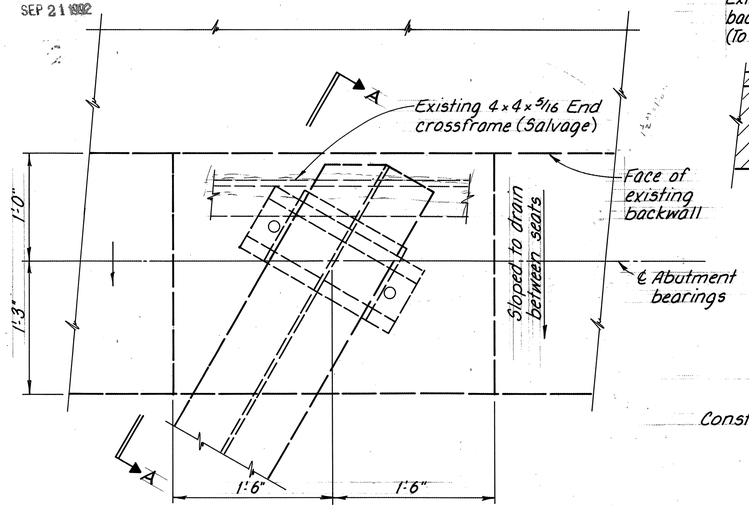

PLAN VIEW

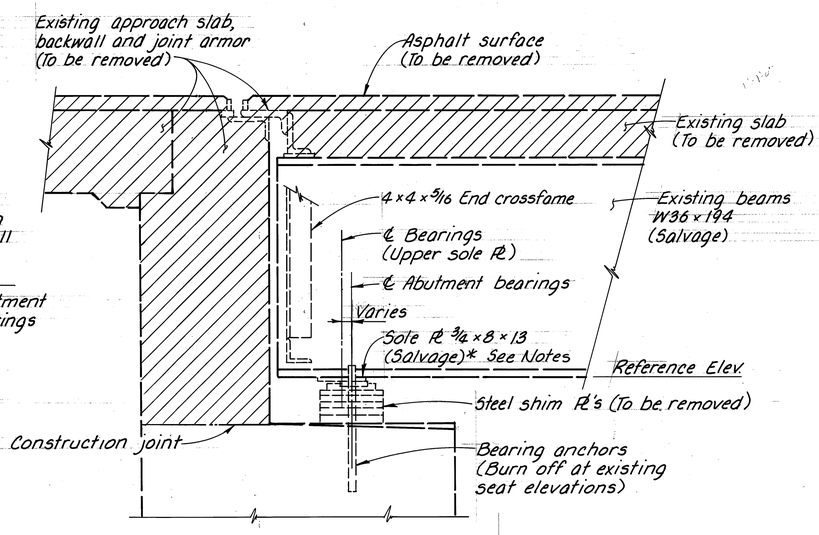

SECTION A-A

EXISTING ABUTMENT BEARING DETAILS

TABLE A- Beam Adjustment Dimensions		
Location	Dimension "X"	
	Left Bridge	Right Bridge
Rear Abut.	4 1/16"	2 3/4"
Fwd. Abut.	5 7/8"	4"

See Notes on sheet 2/45 for additional beam jacking information.

NOTES

1. Existing bearings at the rear and forward abutments shall be replaced after removing the existing deck slab and before placing the new concrete deck.
2. * Bearing Sole plates at the abutment bearings shall be salvaged on all interior beams, and shall be replaced on all fascia beams.
3. Existing elevations of the bottom flange of the beams at the abutments shall be used as reference elevations. The final elevations of the beams shall be adjusted upward as shown in Table A to compensate for settlement of the abutments.
4. End crossframe angles shall be cut loose from the beams approximately 1/2 inch from the face of the beam webs. Upper gusset plates shall also be cut loose from the existing end dams as shown.
5. End crossframe angles and gusset plates shall be reattached to the existing beams and new joint armor as detailed on this sheet. Care shall be taken to avoid damaging crossframe angles which are to be reused.
6. End crossframe angles and gusset plates which are not satisfactory for reuse due to damage caused by the contractor shall be replaced at the contractors expense.
7. See the Bridge General Notes on sheet 3/45 for additional notes and descriptions of the pay items.

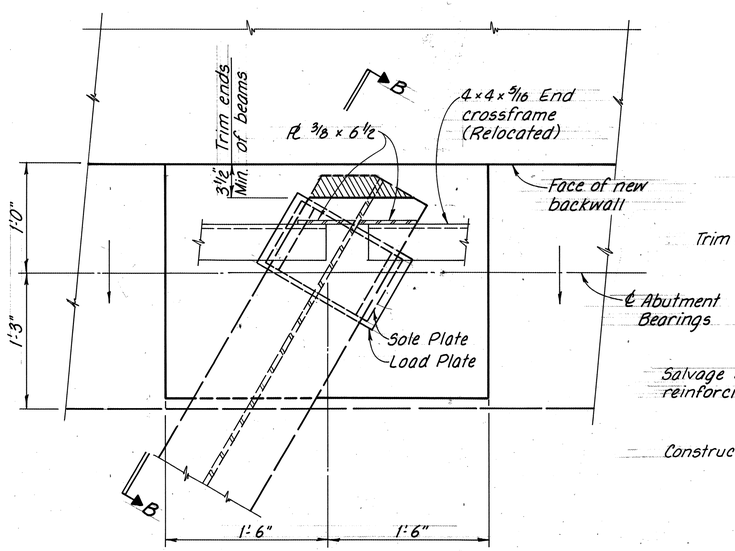

PLAN VIEW

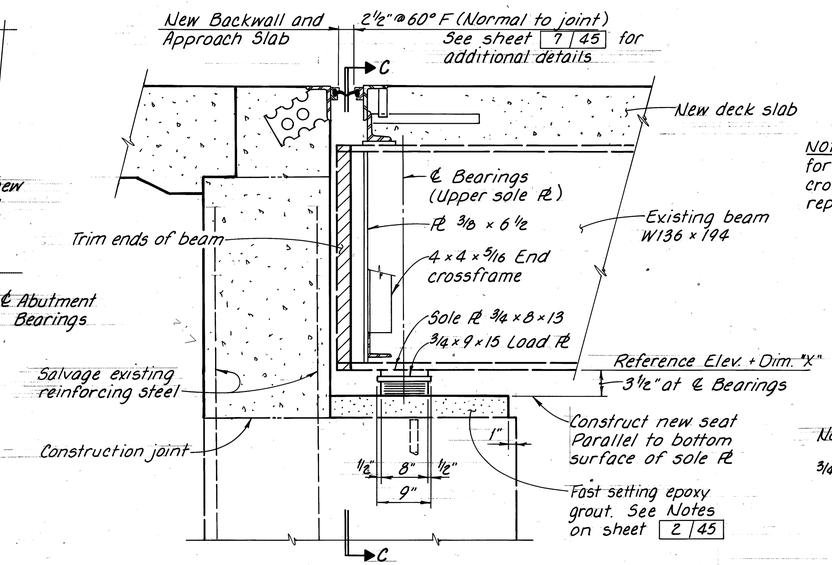

SECTION B-B

NOTE: See sheet 24/45 for locations of end crossframes to be replaced.

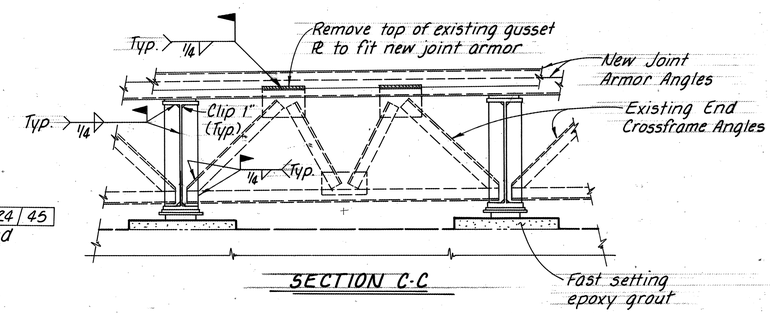

SECTION C-C

NOTE A: Pyrometric sticks or other temperature monitoring devices shall be used to limit steel surface temperature to less than 300° F during welding. Quenching to accelerate cooling is not permitted.

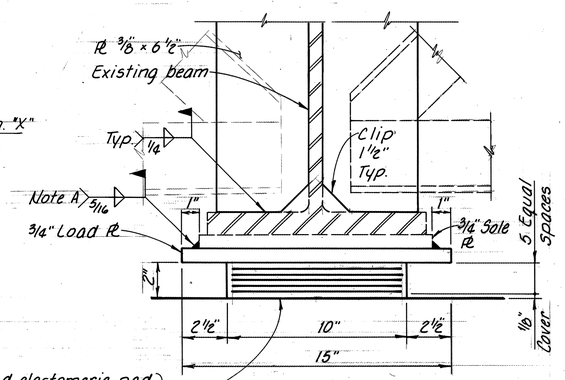

BEARING DETAIL

PROPOSED ABUTMENT BEARING AND END CROSSFRAME DETAILS

26/45

ENGINEERING ASSOCIATES LTD.
CONSULTING ENGINEERS
700 WINKLER DR. WOOSTER, OHIO

BEARING DETAILS AND END CROSSFRAME DETAILS

MED-42-0539 L/R
OVER BLACK RIVER

DESIGNED	DRAWN	TRACED	CHECKED	REVIEWED	DATE	REVISED
AFS DWS	DWS	PLD	RLE	DBC	3/24/87	

CALC. BY DATE	MED - 42 - 1.89 MED - 224 - 10.45	OHIO	110/189
CHKD. BY DATE		FHWA REGION	

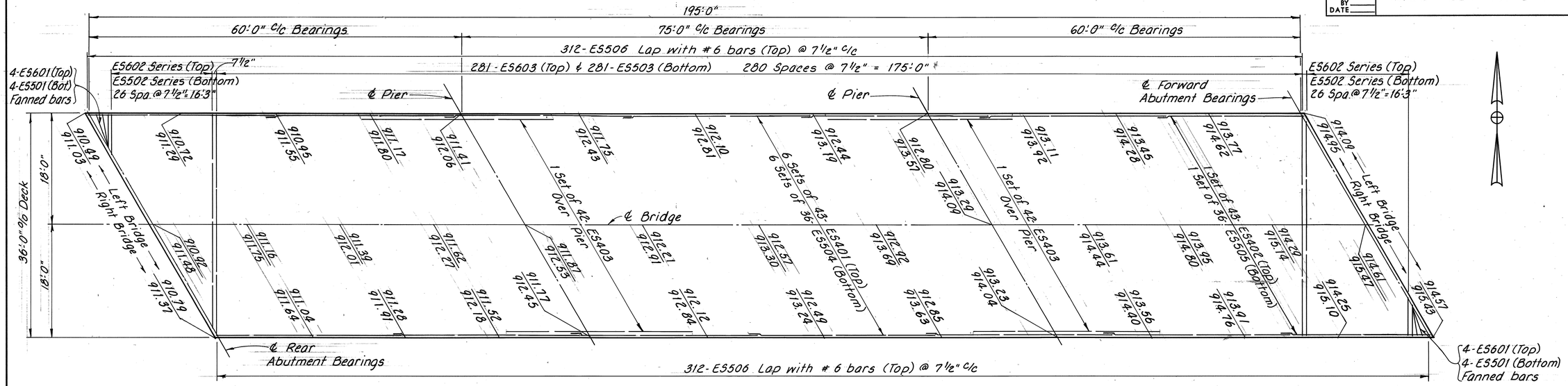

DECK ELEVATIONS shown are at top of slab and are the control elevations to which screeds must be set prior to placing deck concrete.

SLAB REINFORCING PLAN

(Reinforcing same on both bridges)

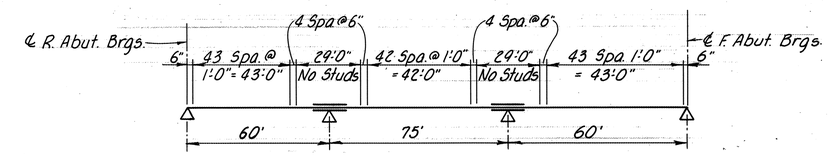

STUD SHEAR CONNECTOR SPACING

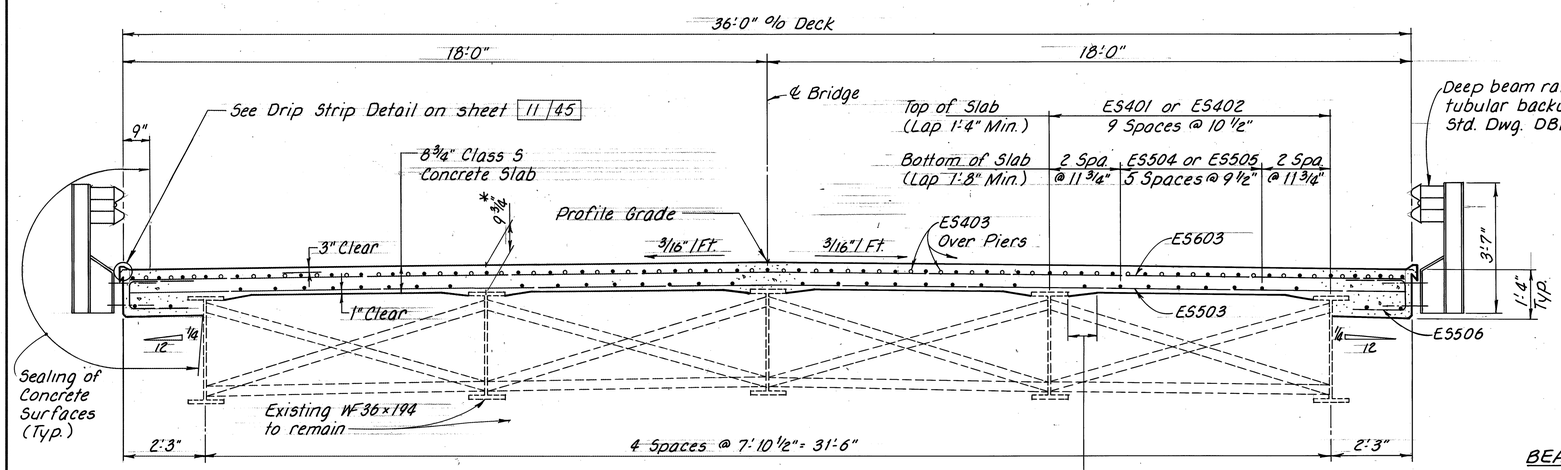

* DECK SLAB DEPTH: The distance shown from top of deck slab to top of steel beam is the design dimension. The quantity of deck concrete to be paid for shall be based on this dimension, even though deviation from it may be necessary because the top flange of the beam may not have the exact camber or conformation required to place it parallel to the finished grade.

TRANSVERSE SECTION

A HAUNCH WIDTH of 9" shall be used for computing quantity of concrete, however, the haunch width may vary between 6" and 12".

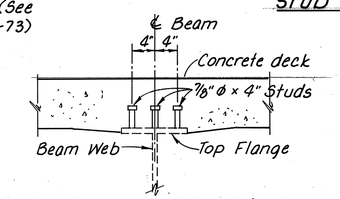

TYPICAL SECTION
SHEAR CONNECTOR DETAIL
Place studs in groups of three at spacing shown (Typ. each beam)

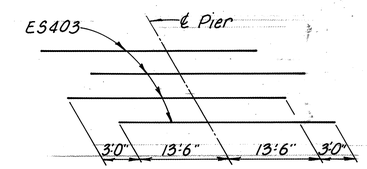

DIAGRAM SHOWING STAGGER OF ADDITIONAL REINFORCEMENT OVER PIERS

SUPERSTRUCTURE NOTES

BEARING DETAILS: See sheet 26/45

END CROSSFRAME DETAILS: See sheet 26/45

DECK EXPANSION JOINT DETAILS: See sheet 7/45

SUPERSTRUCTURE EDGE DETAILS: See sheet 11/45

SUPERSTRUCTURE REINFORCING STEEL SCHEDULE: See sheet 24/45

BRIDGE GENERAL NOTES: See sheets 1/45 thru 5/45 and 24/45

27/45

ENGINEERING ASSOCIATES LTD.
CONSULTING ENGINEERS
700 WINKLER DR. WOOSTER, OHIO

SUPERSTRUCTURE SLAB REPLACEMENT

MED-42-0539 L/R
OVER BLACK RIVER

DESIGNED	DRAWN	TRACED	CHECKED	REVIEWED	DATE	REVISED
AFS	PLO	PLO	RLE	DBC	3/24/87	

CALC. BY DATE	MED-42-1.89	OHIO	111/189
CHKD. BY DATE	MED-224-10.45	FHWA REGION	

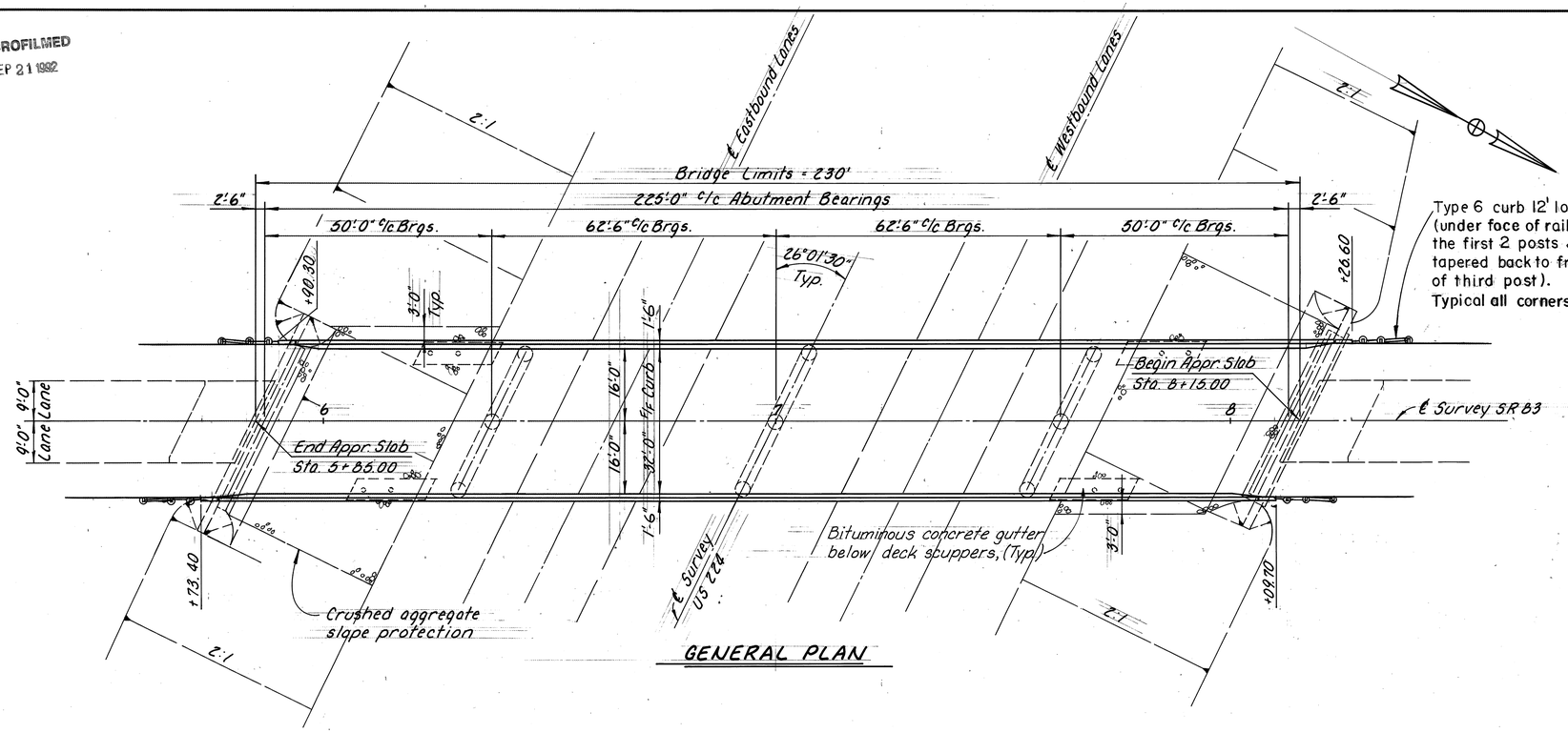

GENERAL PLAN

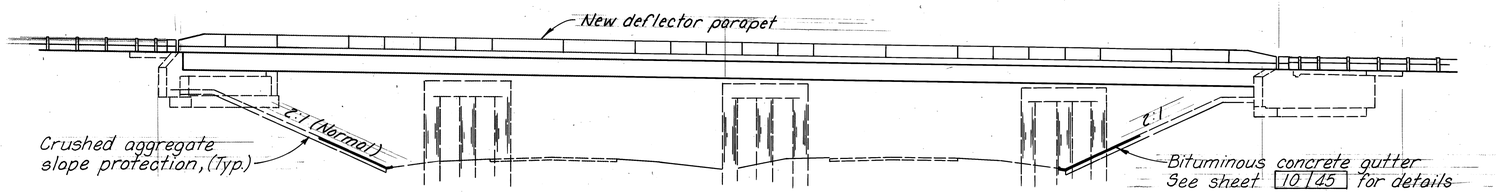

GENERAL ELEVATION

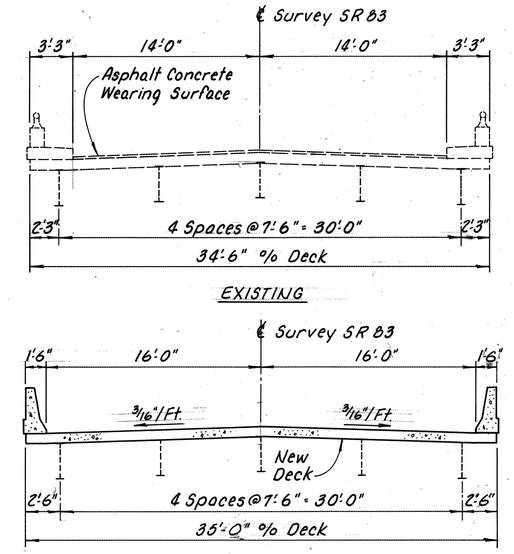

TRANSVERSE SECTION

MED-42-0574 RECONSTRUCTION SUMMARY

Remove and dispose of the existing concrete deck, safety curbs, bulb angles, parapets, bridge railing, and scuppers.

Repair abutment beam seats and backwalls in accordance with Item 519, Patching Concrete Structures. Modify the expansion joint armor.

Construct a new concrete deck and deflector parapets on the existing steel beams using stud shear connectors and Class S concrete, as per plan.

Seal the surfaces of the new deflector parapets as shown in the plan details.

Provide slope protection under the bridge, as directed by the Engineer.

Seal the deck expansion joints with strip seals.

28/45

ENGINEERING ASSOCIATES LTD.
CONSULTING ENGINEERS
700 WINKLER DR. WOOSTER, OHIO

GENERAL PLAN AND REHAB SUMMARY
MED-42-0574
UNDER SR 83
STA. 5+85.00 TO 8+15.00
MEDINA COUNTY

DESIGNED	DRAWN	TRACED	CHECKED	REVIEWED	DATE	REVISED
AFS	PLD	SLM	RLE	DBC	3/24/87	

CALC. BY RLE DATE 3/87	MED-42-1.89	OHIO	112/189
CHKD. BY AFS DATE 3/87	MED-224-10.45	FHWA REGION	

ABUTMENT REINFORCING STEEL

MARK	NUMBER REAR	NUMBER FWD.	NUMBER TOTAL	LENGTH	TYPE	WEIGHT
EA501	20	20	40	3'-8"	Str.	153
EA502	8	8	16	3'-6"	Str.	58
EA601	12	12	24	2'-11"	Bt.	105
EA602	12	12	24	2'-9"	Bt.	99
				TOTAL		415

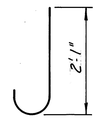

EA602

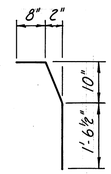

EA601

SUPERSTRUCTURE REINFORCING STEEL

MARK	NO.	LENGTH	TYPE	WEIGHT
ES501	314	34'-10"	Str.	11408
ES502	624	30'-0"	Str.	19525
ES503	114	25'-0"	Str.	2973
ES504	42	①6'-6" to 33'-10"	Str.	883
ES505	6	5'-10"	Str.	37
ES506	452	2'-4"	Bt.	1100
ES507	24	2'-1"	Str.	52
ES508	24	19'-6"	*Str.	488
ES509	24	9'-9"	Str.	244
ES510	156	7'-0"	Str.	1139
ES511	72	14'-6"	Str.	1089
ES601	314	34'-10"	Str.	16428
ES602	42	①6'-6" to 33'-10"	Str.	1272
ES603	6	5'-10"	Str.	53
ES604	4	2'-10"	Bt.	17
ES605	4	2'-10"	Bt.	17
ES606	4	2'-11"	Bt.	18
ES607	4	3'-0"	Bt.	18
ES608	4	3'-1"	Bt.	19
ES609	432	3'-2"	Bt.	2055
ES610	432	5'-7"	Bt.	3623
ES611	24	2'-9"	Bt.	99
		TOTAL		62,557

ES604	8"	2"
ES605	8"	3"
ES606	9"	4"
ES607	9"	5"
ES608	10"	6"
ES609	11"	6"

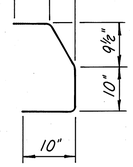

ES604 thru ES609

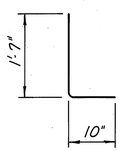

ES506

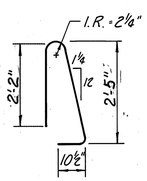

ES610

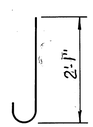

ES611

* Bend & shorten in field where necessary.
① 2 Sets of 21 bars, Vary each bar by 1'-4⅜"(±)

GENERAL NOTES FOR MED-42-0574

REFERENCE:
Reference shall be made to the Bridge General Notes on sheets 1/45 through 5/45 and to supplemental Specification 824 Dated 10-08-82.

DESIGN SPECIFICATIONS:
This structure conforms to "STANDARD SPECIFICATIONS FOR HIGHWAY BRIDGES" adopted by the American Association of State Highway and Transportation Officials, 1983 including the 1984 and 1985 INTERIM SPECIFICATIONS and the Ohio "SUPPLEMENT" to these specifications.

DESIGN DATA:

Design Loading	– HS20-44 Case II and the Alternate Military Loading
Concrete Class S (as per plan)	– Superstructure and Substructures; Compressive Strength 4500 psi.
Reinforcing Steel	– ASTM A615, A616, A617, Grade 60 Minimum Yield Strength 60,000 psi.
Structural Steel (existing)	– ASTM A373, Unit Stress 18,000 psi Assumed Yield Strength 33,000 psi.
Stud Shear Connectors	– ASTM A108, Minimum Yield Strength 50,000 psi.
Deck Protection	– Epoxy coated reinforcing steel in both mats and sealing of concrete surfaces.
Wearing Surface	– Monolithic surface is assumed for design purposes to be 1 inch thick.

REINFORCING STEEL SPLICES:
Unless shown otherwise, all reinforcing steel splices shall comply with the lap lengths specified in CMS section 509.08.

PREFORMED EXPANSION JOINT FILLER in the parapet deflection joints may be either 1/4" gray rubber or 1/4" gray cellular polyvinyl chloride (PVC) sponge. If rubber is used it shall meet the requirements of AASHTO M-153.

CONCRETE PARAPETS above the upper construction joint shall be placed in alternate sections by the use of bulkheads. Closing sections shall be placed after removal of bulkheads and after placement of expansion joint filler. Exposed edges of the filler shall be flush with the surface of concrete and shall be free of mortar.

29/45

ENGINEERING ASSOCIATES LTD.
CONSULTING ENGINEERS
700 WINKLER DR. WOOSTER, OHIO

GENERAL NOTES AND REINFORCING STEEL SCHEDULES
MED-42-0574
UNDER SR83

DESIGNED	DRAWN	TRACED	CHECKED	REVIEWED	DATE	REVISED
DWS RLE	SLM	SLM	PLO	DBC	3/24/87	

CALC. BY RLE DATE 3/87	MED-42-1.89	OHIO	113
CHKD. BY DBC DATE 3/87	MED-224-10.45	FHWA REGION	189

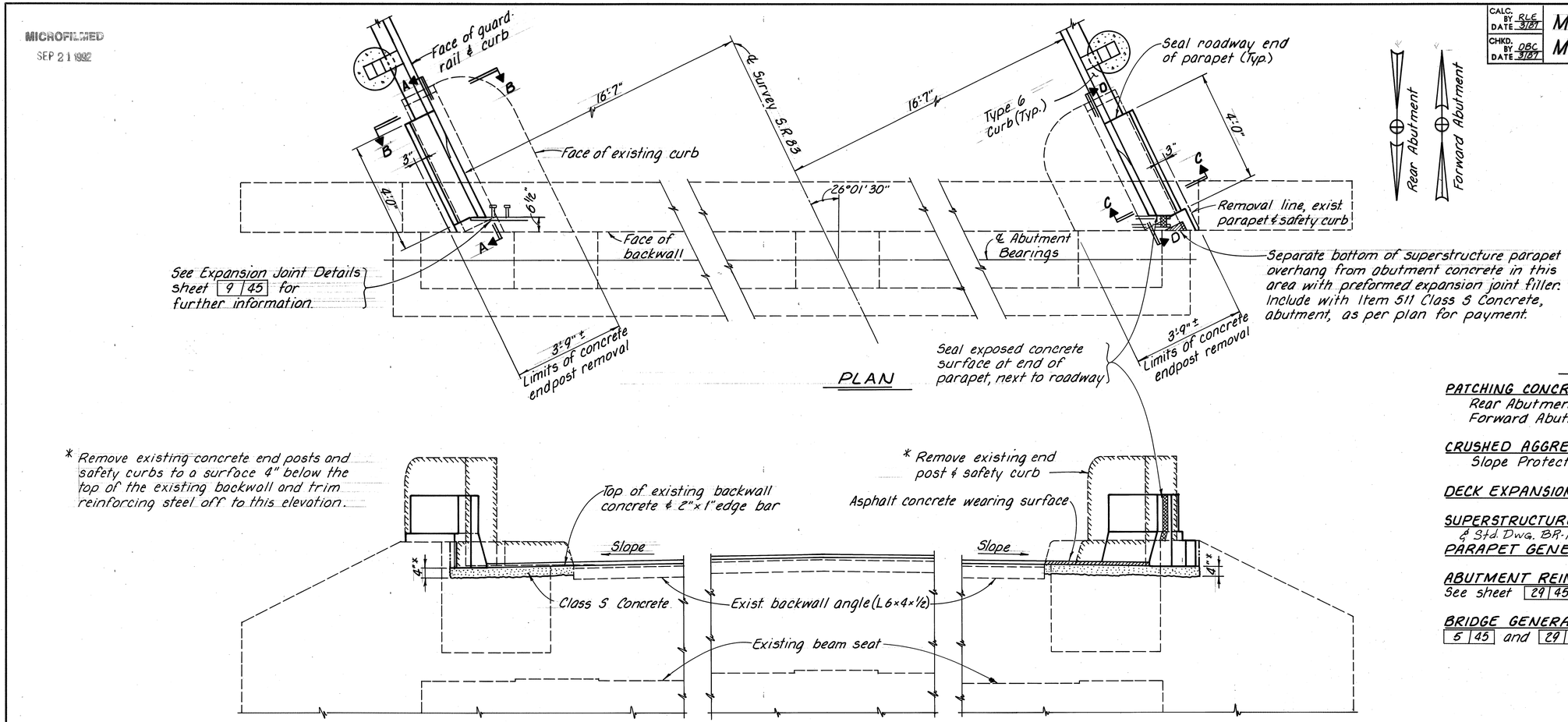

ABUTMENT NOTES

PATCHING CONCRETE STRUCTURES, AS PER PLAN:
Rear Abutment, between beam seats = 21 Sq. Ft.
Forward Abutment, between beam seats = 5 Sq. Ft.

CRUSHED AGGREGATE SLOPE PROTECTION:
Slope Protection @ Each Abutment = 285 Sq. Yd.

DECK EXPANSION JOINT DETAILS: See sheet 9 45

SUPERSTRUCTURE PARAPET DETAILS: See sheet 32 45
& Std. Dwg. BR-1 dated 5/29/79

PARAPET GENERAL NOTES: See sheet 29 45

ABUTMENT REINFORCING STEEL SCHEDULE:
See sheet 29 45

BRIDGE GENERAL NOTES: See sheets 1 45 thru 5 45 and 29 45

NOTATION

N.S. - Near Side
F.S. - Far Side

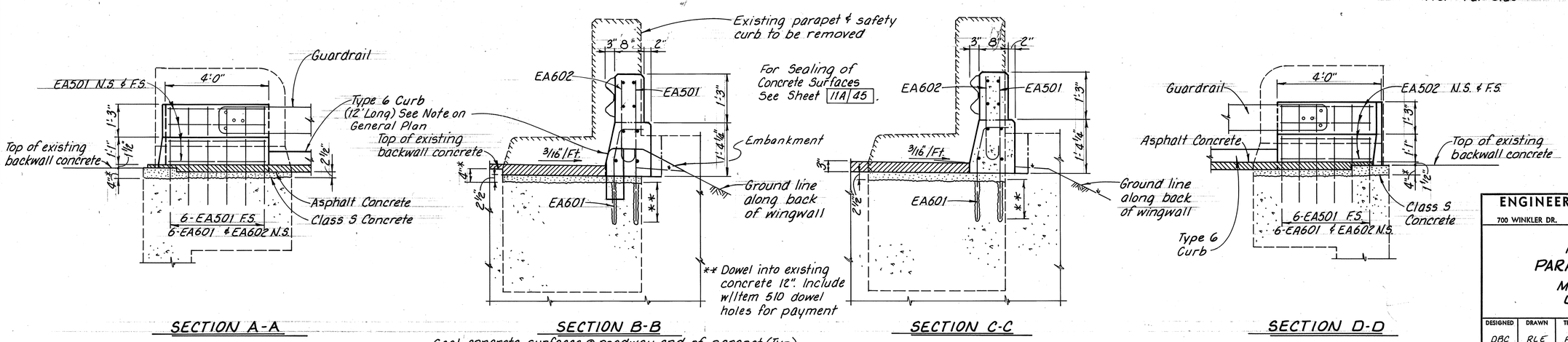

Seal concrete surfaces @ roadway end of parapet (Typ.)

30 45

ENGINEERING ASSOCIATES LTD.
CONSULTING ENGINEERS
700 WINKLER DR. WOOSTER, OHIO

ABUTMENT PARAPET DETAILS

MED-42-0574
UNDER SR83

DESIGNED	DRAWN	TRACED	CHECKED	REVIEWED	DATE	REVISED
DBC	RLE	PLD	AFS	DWS	3/26/87	

CALC. BY DATE	MED-42-1.89	OHIO	114/189
CHKD. BY DATE	MED-224-10.45	FHWA REGION	

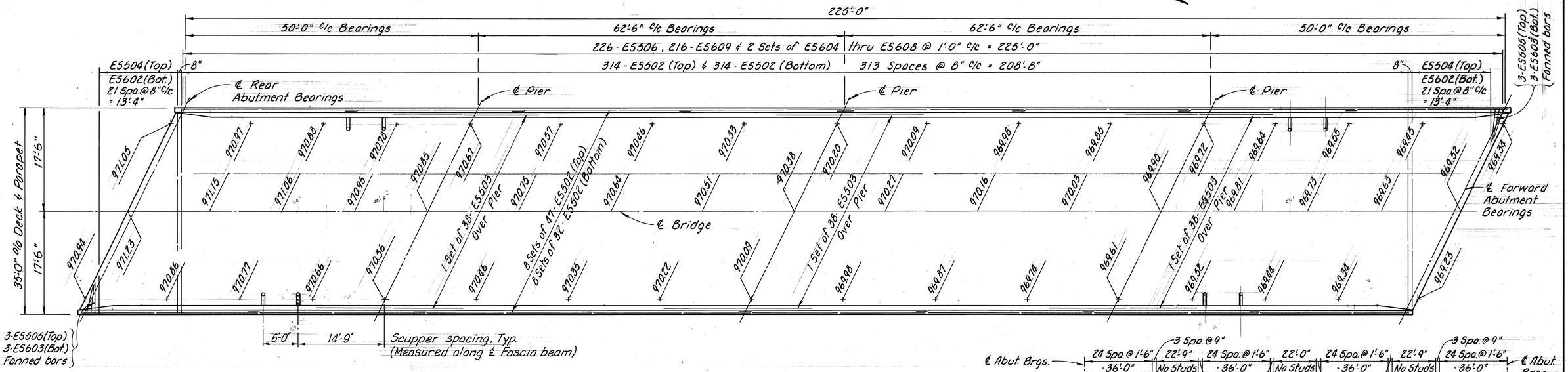

DECK ELEVATIONS shown are at top of slab and are the control elevations to which screeds must be set prior to placing deck concrete. Elevations shown are located at the bearings and quarter points of each span along the centerline of the bridge and fascia beams.

SLAB REINFORCING PLAN

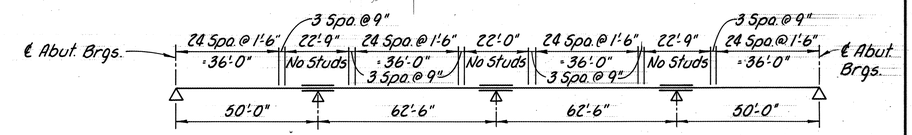

STUD SHEAR CONNECTOR SPACING

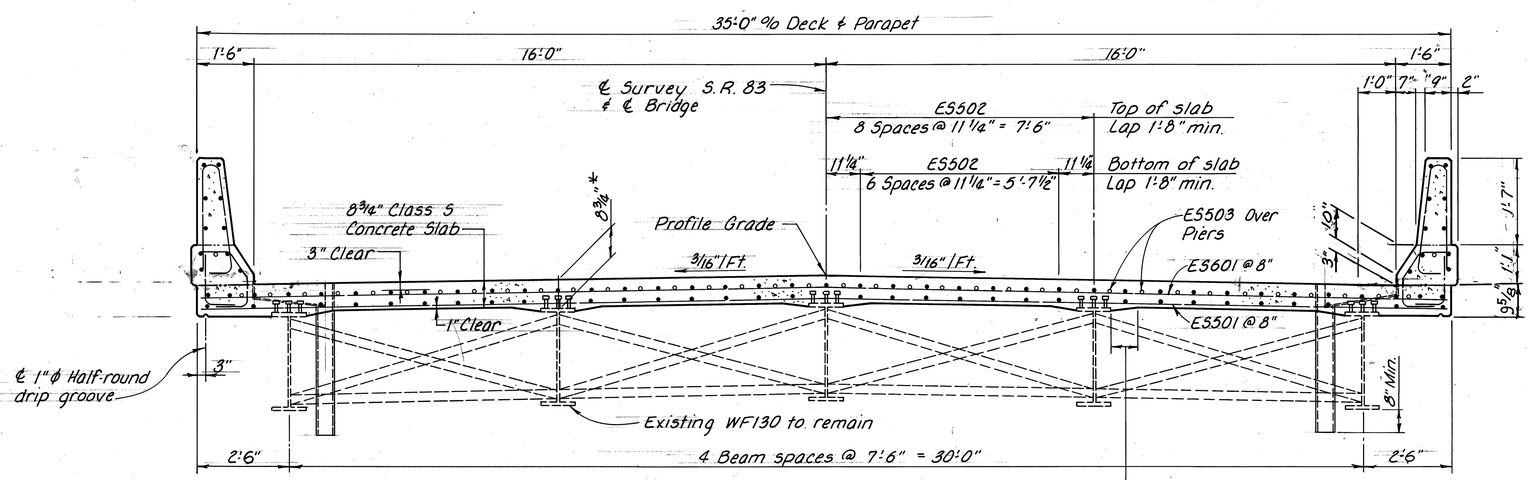

* DECK SLAB DEPTH: The distance shown from top of deck slab to top of steel beam is the design dimension. The quantity of deck concrete to be paid for shall be based on this dimension, even though deviation from it may be necessary because the top flange of the beam may not have the exact camber or conformation required to place it parallel to the finished grade.

TRANSVERSE SECTION

For Sealing of Concrete Surfaces see sheet 11A/45

A HAUNCH WIDTH of 9" shall be used for computing quantity of concrete. However, the haunch width may vary between 6" and 12".

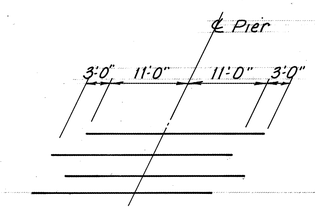

DIAGRAM SHOWING STAGGER OF ES503 BARS OVER PIERS

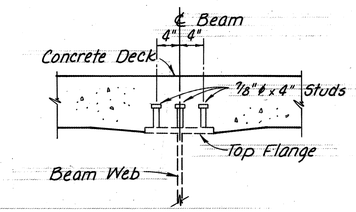

TYPICAL SECTION SHEAR CONNECTOR DETAIL

Place studs in groups of three at spacing shown (Typ. each beam)

SUPERSTRUCTURE NOTES

DECK EXPANSION JOINT DETAILS: See sheet 9/45

SCUPPER DETAILS: See sheet 11/45 and Standard Drawing SD-1-69.

SUPERSTRUCTURE PARAPET DETAILS: See sheet 32/45

SUPERSTRUCTURE REINFORCING STEEL SCHEDULE: See sheet 29/45

BRIDGE GENERAL NOTES: See sheets 1/45 thru. 5/45 and 29/45

31/45

ENGINEERING ASSOCIATES LTD.
CONSULTING ENGINEERS
700 WINKLER DR. WOOSTER, OHIO

SUPERSTRUCTURE SLAB REPLACEMENT

MED-42-0574
UNDER SR83

DESIGNED	DRAWN	TRACED	CHECKED	REVIEWED	DATE	REVISED
AFS	PLD	PLD	RLE	DBC	3/25/87	

CALC. BY / DATE	MED-42-1.89	OHIO	115/189
CHKD. BY / DATE	MED-224-10.45	FHWA REGION	

* Make up any difference in length between plan dimensions and field measurements in these plans

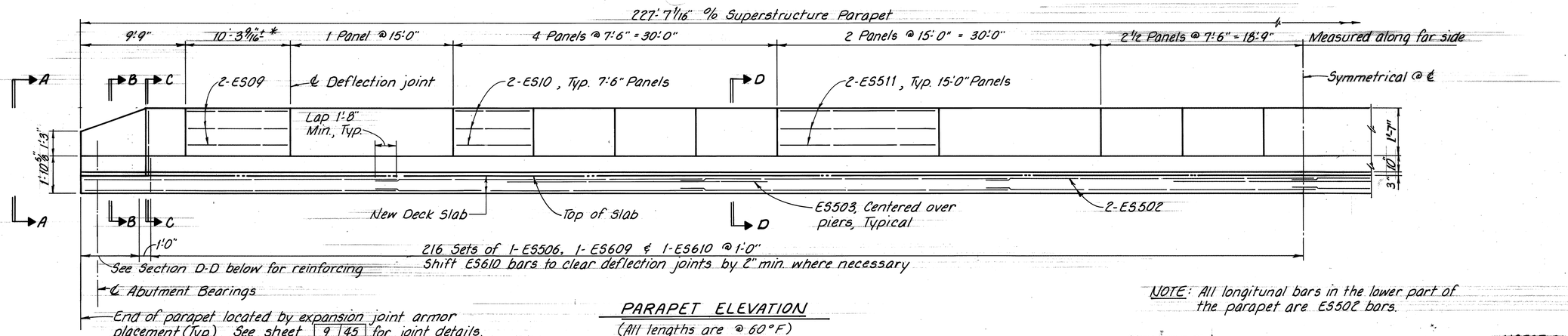

PARAPET ELEVATION

(All lengths are @ 60°F)

NOTE: All longitunal bars in the lower part of the parapet are ES502 bars.

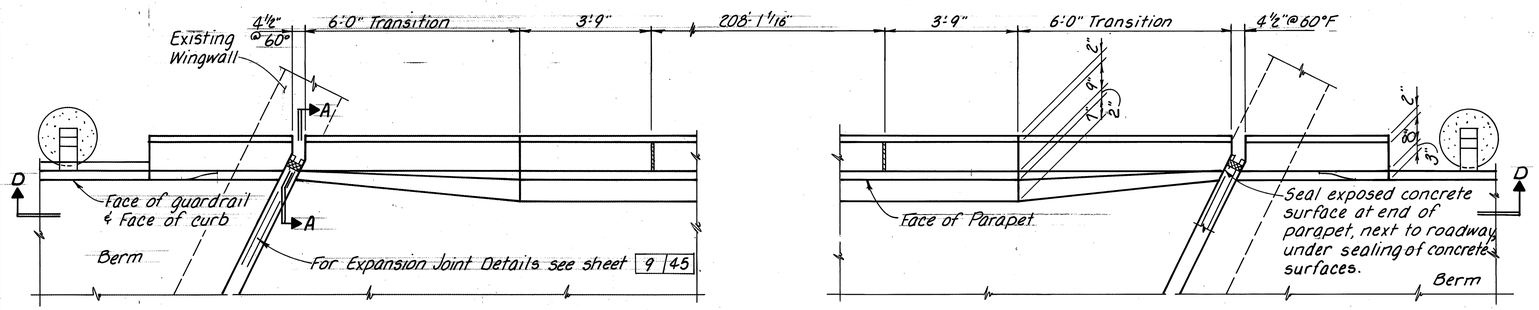

PART PLAN AT ABUTMENTS

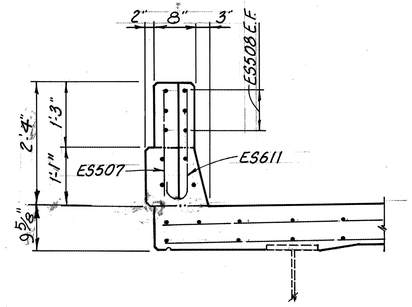

VIEW A-A

(Joint Armor & Parapet Joint Seal not shown)

NOTATION:
E.F. - Each Face

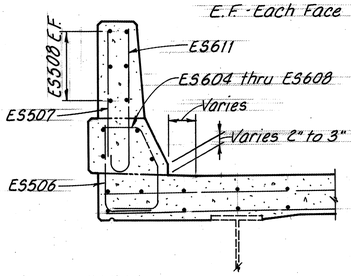

SECTION B-B

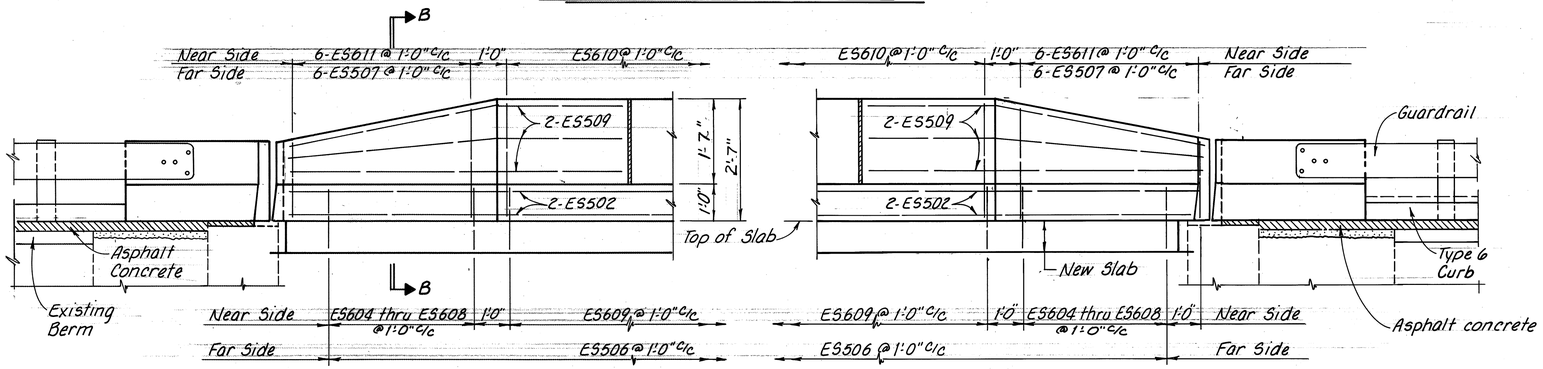

SECTION D-D

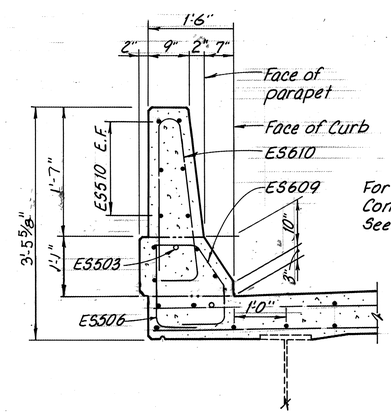

SECTIONS C-C & D-D

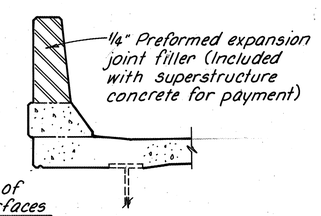

For Sealing of Concrete Surfaces See Sheet 11A/45

DETAIL A

Section thru deflection joint

NOTES

PARAPET GENERAL NOTES:	See Sheet	29/45
ABUTMENT PARAPET DETAILS:	See Sheet	30/45
REINFORCING STEEL SCHEDULE:	See Sheet	29/45
ADDITIONAL NOTES:	See Sheet	31/45

32/45

ENGINEERING ASSOCIATES LTD.
CONSULTING ENGINEERS
700 WINKLER DR. WOOSTER, OHIO

SUPERSTRUCTURE PARAPET DETAILS

MED-42-0574
UNDER SR 83

DESIGNED	DRAWN	TRACED	CHECKED	REVIEWED	DATE	REVISED
DBC	PLD	PLD	AFS	DWS	3/23/87	

CALC. BY DATE	MED-42-1.89	OHIO	116/189
CHKD. BY DATE	MED-224-10.45	FHWA REGION	

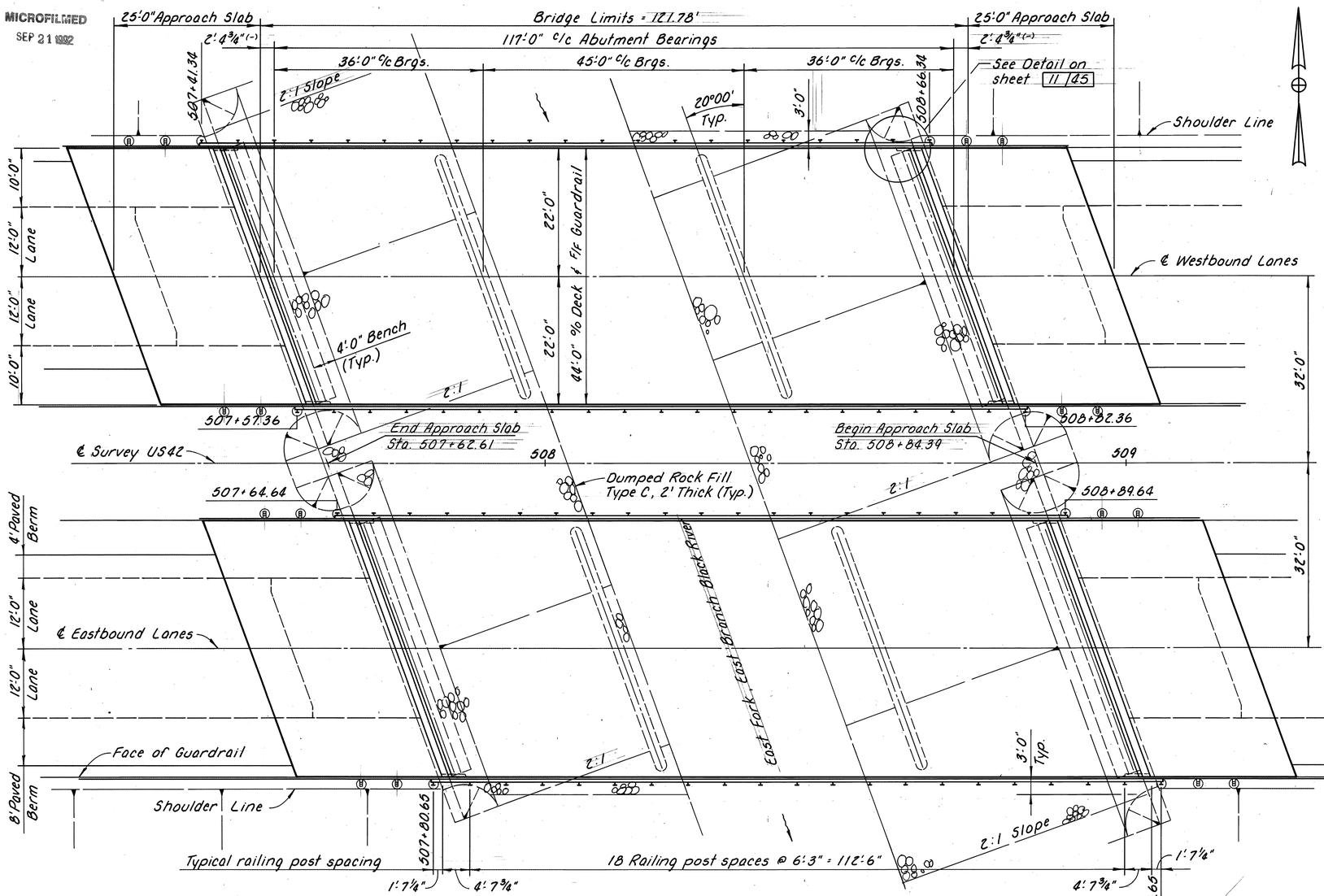

GENERAL PLAN

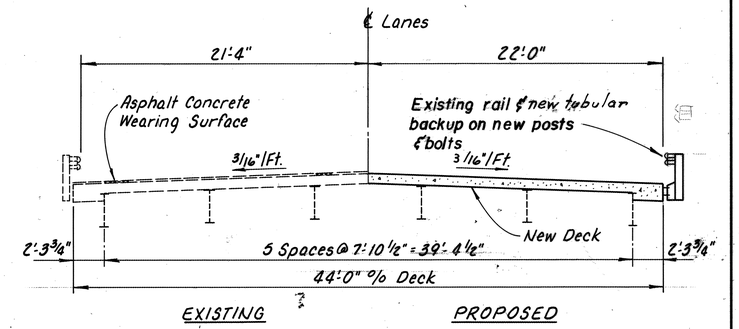

TRANSVERSE SECTION
(Typical Both Bridges)

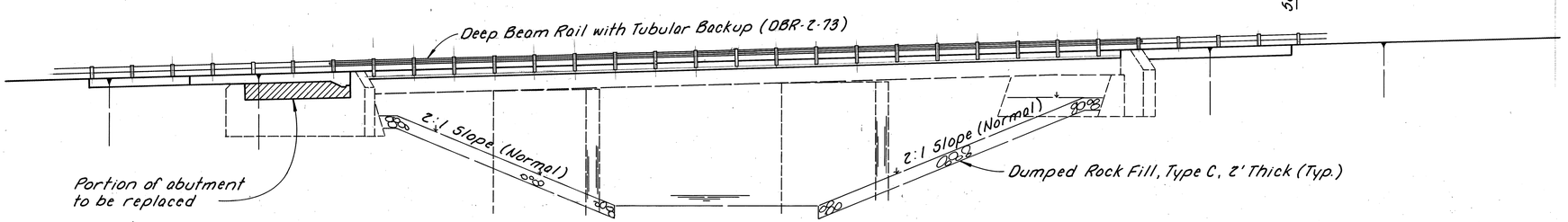

GENERAL ELEVATION

MED-42-0589 L/R RECONSTRUCTION SUMMARY

Remove guardrail and and store for reuse.

Remove and dispose of the existing concrete decks, guardrail posts, anchor bolts and abutment backwalls. See Roadway plans for removal of approach slabs. & tubular backup.

Trim the ends of the beams to restore adequate expansion capacity. Move and repair the end crossframes and replace expansion joint armor.

Replace the bearings at the abutments.

Construct new concrete decks on the existing steel beams with Class S concrete, as per plan. Provide new guardrail anchor bolts and Type 2 posts, tubular backup.

Install guardrail.

Reconstruct the abutment backwalls.

Seal the deck expansion joints with strip seals.

Seal the concrete surfaces at edges of the deck as shown in plan details.

Restore slope protection under the bridge, as directed by the Engineer.

33/45

ENGINEERING ASSOCIATES LTD.
CONSULTING ENGINEERS
700 WINKLER DR. WOOSTER, OHIO

GENERAL PLAN AND REHAB SUMMARY
MED-42-0589 L/R
OVER BLACK RIVER
STA. 507+62.61 TO 508+84.39
MEDINA COUNTY

DESIGNED	DRAWN	TRACED	CHECKED	REVIEWED	DATE	REVISED
AFS	PLD	SLM	DBC	DWS	3/25/87	

CALC. BY RLE DATE 12/86	MED-42-1.89	OHIO	117
CHKD. BY AFS DATE 3/87	MED-224-10.45	FHWA REGION	189

ABUTMENT REINFORCING STEEL

MARK	NUMBER R. REAR	L. REAR	R. FWD.	L. FWD.	TOTAL	LENGTH	TYPE	WEIGHT
EA501	14	14	14	14	56	24'-3"	Str.	1416
EA601	47	47	47	47	188	3'-3"	Bt.	918
EA602	47	47	47	47	188	6'-9"	Bt.	1906
ED801	30	30	30	30	120	4'-11"	Bt.	1575
						TOTAL		5815

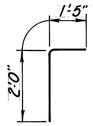

EA601

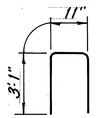

EA602

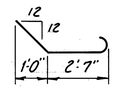

ED801

SUPERSTRUCTURE REINFORCING STEEL

MARK	NUMBER L. STR.	R. STR.	TOTAL	LENGTH	TYPE	WEIGHT
ES401	156	156	312	30'-0"	Str.	6252
ES402	52	52	104	32'-0"	Str.	2223
ES403	102	102	204	18'-0"	Str.	2453
ES501	6	6	12	5'-11"	Str.	74
ES502	42	42	84	*7'-7" to 41'-11"	Str.	2168
ES503	164	164	328	43'-8"	Str.	14,939
ES504	132	132	264	30'-0"	Str.	8261
ES505	44	44	88	33'-0"	Str.	3029
ES506	376	376	752	3'-9"	Bt.	2941
ES601	6	6	12	5'-11"	Str.	107
ES602	42	42	84	*7'-7" to 41'-11"	Str.	3123
ES603	164	164	328	43'-8"	Str.	21,513
				TOTAL		67,083

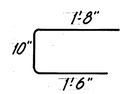

ES506

* 4 Sets of 21 bars, Vary each bar by 1'-8 9/16" (±)

GENERAL NOTES FOR MED-42-0589 L/R

REFERENCE:

Reference shall be made to the Bridge General Notes on sheets 1/45 through 5/45 and to the following:

Standard Drawings
- AS-1-81 Dated 11-27-81
- DBR-2-73 Dated 4-10-73
- SD-1-69 Dated 6-12-69
- BR-1 Dated 5-29-79

Supplemental Specifications
- 824 Dated 10-08-82

DESIGN SPECIFICATIONS:

This structure conforms to "STANDARD SPECIFICATIONS FOR HIGHWAY BRIDGES" adopted by the American Association of State Highway and Transportation Officials, 1983 including the 1984 and 1985 INTERIM SPECIFICATIONS and the Ohio "SUPPLEMENT" to these specifications.

DESIGN DATA:

Design Loading	–	HS20-44 Class II and the Alternate Military Loading.
Concrete Class S (as per plan)	–	Superstructure and Substructures; Compressive Strength 4500 psi.
Reinforcing Steel	–	ASTM A615, A616, A617, Grade 60 Minimum Yield Strength 60,000 psi.
Structural Steel (existing)	–	ASTM A373, Unit Stress 18,000 psi. Assumed Yield Strength 33,000 psi.
Deck Protection	–	Epoxy coated reinforcing steel in both mats and sealing of concrete surfaces.
Wearing Surface	–	Monolithic surface is assumed for design purposes to be 1 inch thick.

REINFORCING STEEL SPLICES:

Unless shown otherwise, all reinforcing steel splices shall comply with the lap lengths specified in CMS section 509.08.

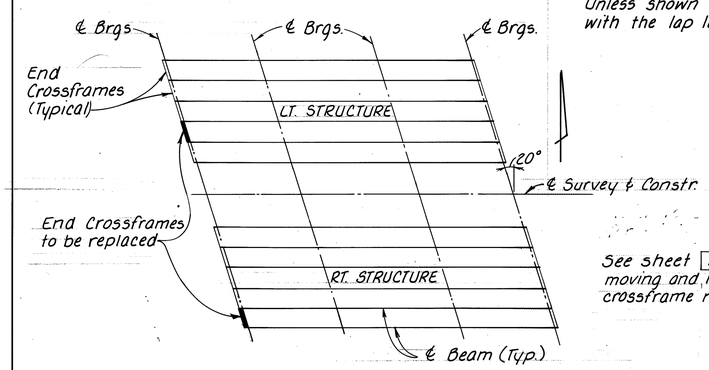

CROSSFRAME REPLACEMENT LOCATION

Cost to replace end crossframe to be included with price bid to move and repair end crossframes.

See sheet 36/45 for additional moving and repairing end crossframe notes and details.

ENGINEERING ASSOCIATES LTD.
CONSULTING ENGINEERS
700 WINKLER DR. WOOSTER, OHIO

GENERAL NOTES AND REINFORCING STEEL SCHEDULES
MED-42-0589 L/R
OVER BLACK RIVER

DESIGNED	DRAWN	TRACED	CHECKED	REVIEWED	DATE	REVISED
DWS RLE	SLM	SLM	PLD	DBC	3/25/87	

CALC. BY RLE DATE 3/87	MED-42-1.89	OHIO	118/189
CHKD. BY AFS DATE 3/87	MED-224-10.45	FHWA REGION	

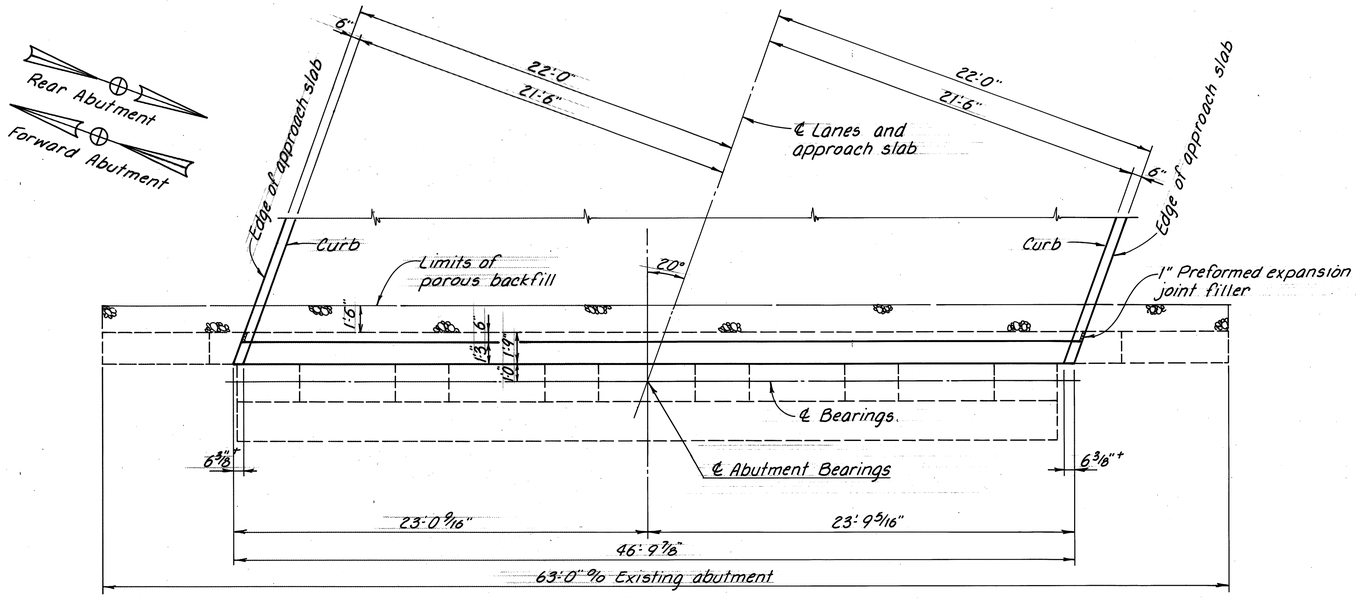

PLAN

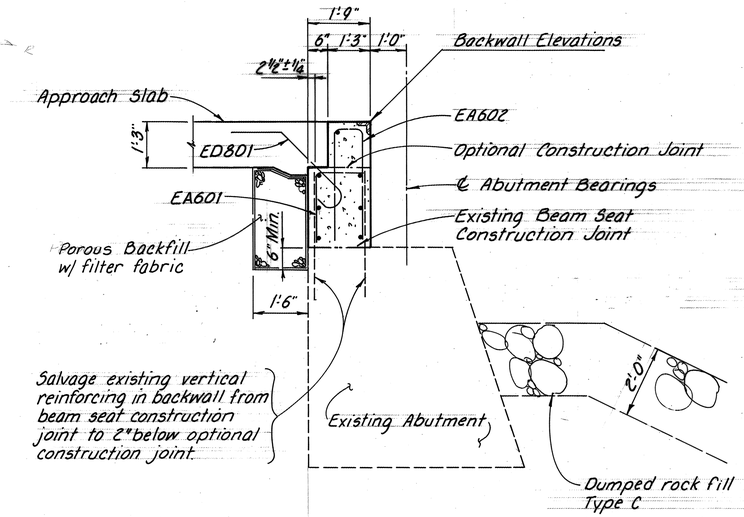

SECTION A-A

All bars normal to the section are EA501

NOTATION:
R.F. - Rear Face
E.F. - Each Face

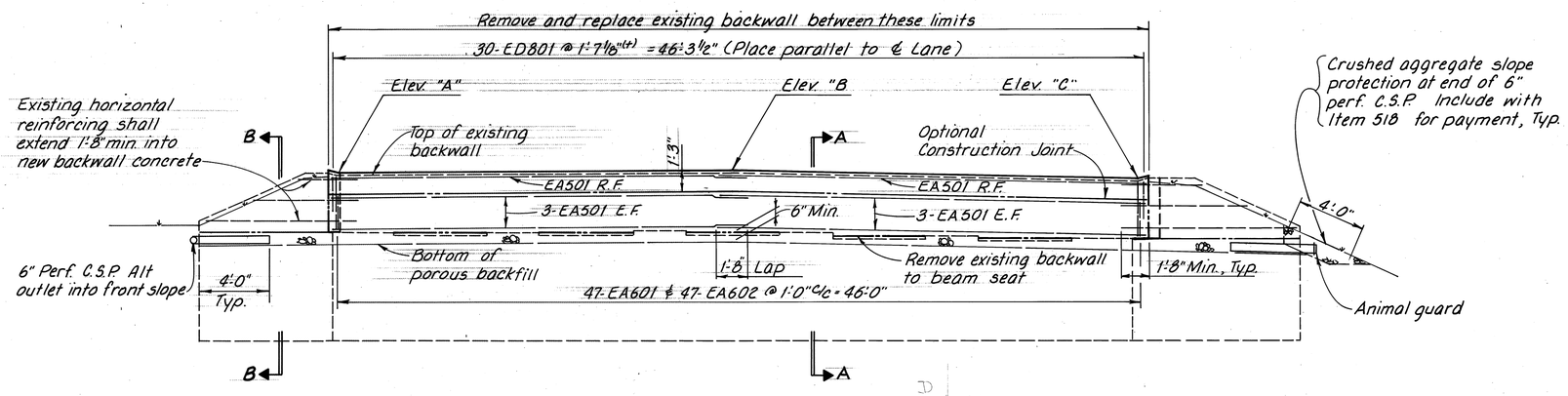

ELEVATION

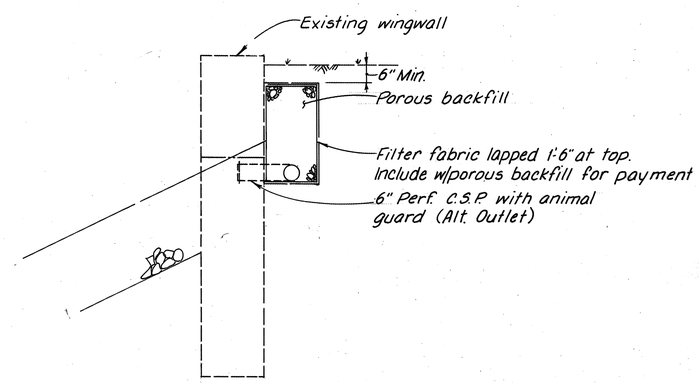

SECTION B-B

ABUTMENT ELEVATIONS			
LOCATION	ELEV. "A"	ELEV. "B"	ELEV. "C"
LEFT STRUCTURE - REAR ABUTMENT	960.46	960.60	960.07
LEFT STRUCTURE - FORWARD ABUTMENT	963.37	963.94	963.84
RIGHT STRUCTURE - REAR ABUTMENT	961.07	961.20	960.66
RIGHT STRUCTURE - FORWARD ABUTMENT	964.07	964.64	964.54

ABUTMENT NOTES

DRAINAGE: Porous backfill, 1.5 ft. thick, enclosed in filter fabric shall extend up to the plane of the subgrade and laterally to the ends of the wingwalls. Maintain a minimum of 6 in. of cover over the filter fabric. (See Section B-B)

The porous backfill shall be drained by 6" perforated C.S.P. extending straight out into the side slopes, terminating near the surface as shown. Where drainage thru the side slopes is either impossible or impractical, the C.S.P. shall extend beyond the wingwall, then be redirected (Labeled "Alt. outlet" in the plans) into the front slope, terminating in crushed aggregate as shown for the side slopes or the spill thru slope protection in front of the abutments where possible.

BACKWALL CONCRETE: In addition to the provisions of 511.08, backwall concrete above the optional construction joint at the approach slab seat shall not be placed until after the deck concrete has been placed. The steel expansion joint shall serve as a template for the top of the backwall.

END DAM DETAILS: See Sheet 7/45

ABUTMENT REINFORCING STEEL SCHEDULE: See Sheet 34/45

BRIDGE GENERAL NOTES: See Sheets 1/45 thru 5/45 and 34/45

DUMPED ROCK FILL, TYPE C, AS PER PLAN:
Slope Protection @ Rear Abutments = 441 Cu. Yd.
Slope Protection @ Forward Abutments = 450 Cu. Yd.

35/45

ENGINEERING ASSOCIATES LTD.
CONSULTING ENGINEERS
700 WINKLER DR. WOOSTER, OHIO

ABUTMENT REPAIR DETAILS

MED-42-0589 L/R
OVER BLACK RIVER

DESIGNED	DRAWN	TRACED	CHECKED	REVIEWED	DATE	REVISED
DWS	RLE	RLE	PLD	DBC	3/25/87	

CALC. BY ___ DATE ___	MED-42-1.89	OHIO	119/189
CHKD. BY ___ DATE ___	MED-224-10.45	FHWA REGION	

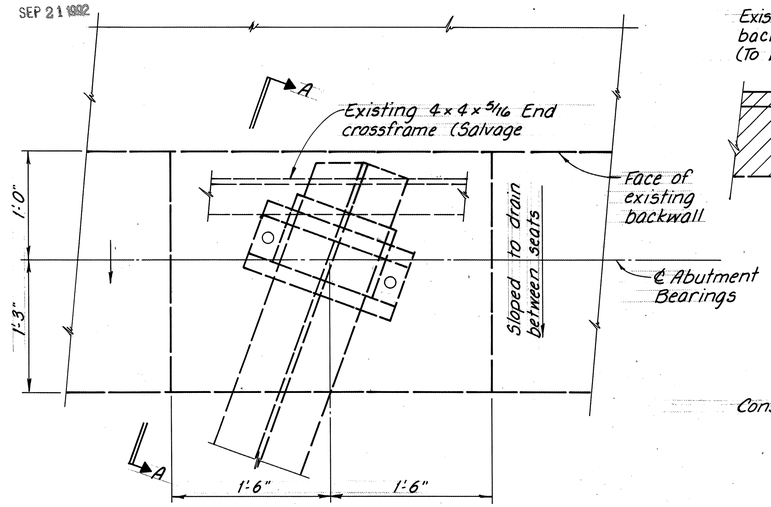

PLAN VIEW

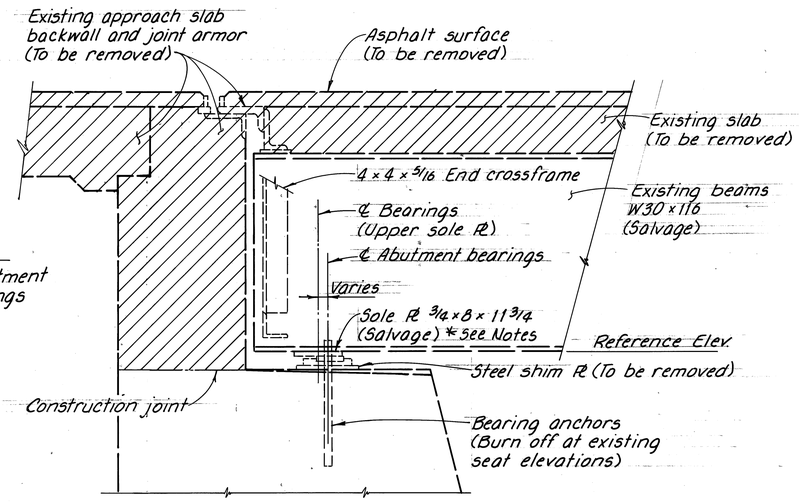

SECTION A-A

EXISTING ABUTMENT BEARING DETAILS

NOTES

1. Existing bearings at the rear and forward abutments shall be replaced after removing the existing deck slab and before placing the new concrete deck.
2. * Bearing Sole plates at the abutment bearings shall be salvaged on all interior beams, and shall be replaced on all fascia beams.
3. Existing elevations of the bottom flange of the beams at the abutments shall be used as reference elevations which are to be maintained after setting the new bearings. 1/8 inch preformed bearing pads shall be used as needed to maintain the beam reference elevations.

See sheet 3/45 and notes 4-7 on sheet 26/45 for additional repairing and moving end crossframe notes.

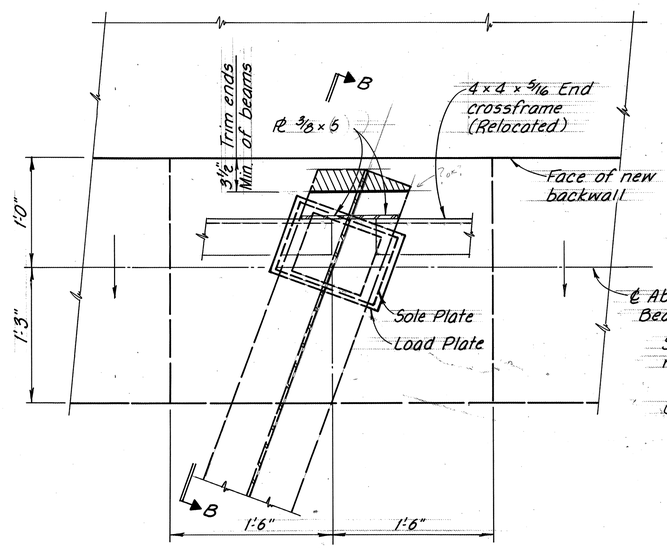

PLAN VIEW

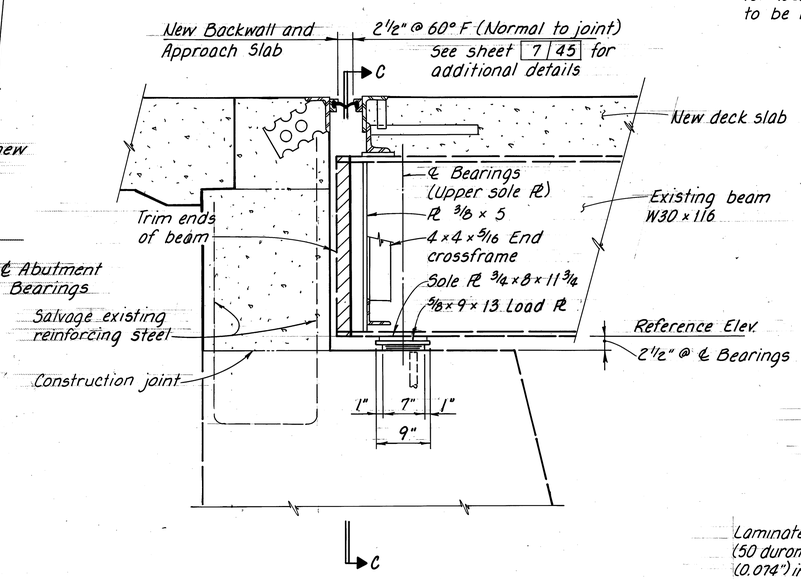

SECTION B-B

NOTE: See sheet 34/45 for locations of end crossframes to be replaced.

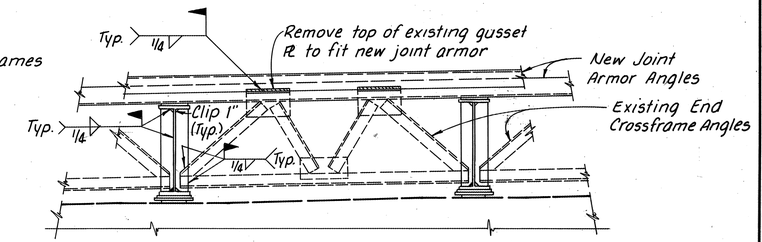

SECTION C-C

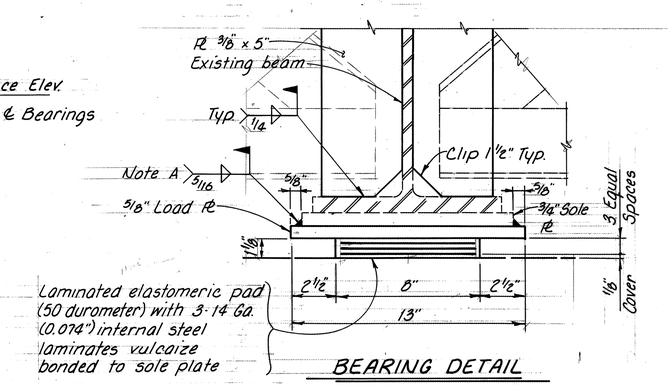

BEARING DETAIL

NOTE A: Pyrometric sticks or other temperature monitoring devices shall be used to limit steel surface temperature to less than 300° F during welding. Quenching to accelerate cooling is not permitted.

PROPOSED ABUTMENT BEARING AND END CROSSFRAME DETAILS

36/45

ENGINEERING ASSOCIATES LTD.
CONSULTING ENGINEERS
700 WINKLER DR. WOOSTER, OHIO

BEARING DETAILS AND END CROSSFRAME DETAILS

MED-42-0589 L/R
OVER BLACK RIVER

DESIGNED	DRAWN	TRACED	CHECKED	REVIEWED	DATE	REVISED
AFS DWS	DWS	PLD	RLE	DBC	3/24/87	

CALC. BY AFS DATE 3/87	MED-42-1.89	OHIO	120
CHKD. BY RLE DATE 3/87	MED-224-10.45	FHWA REGION	189

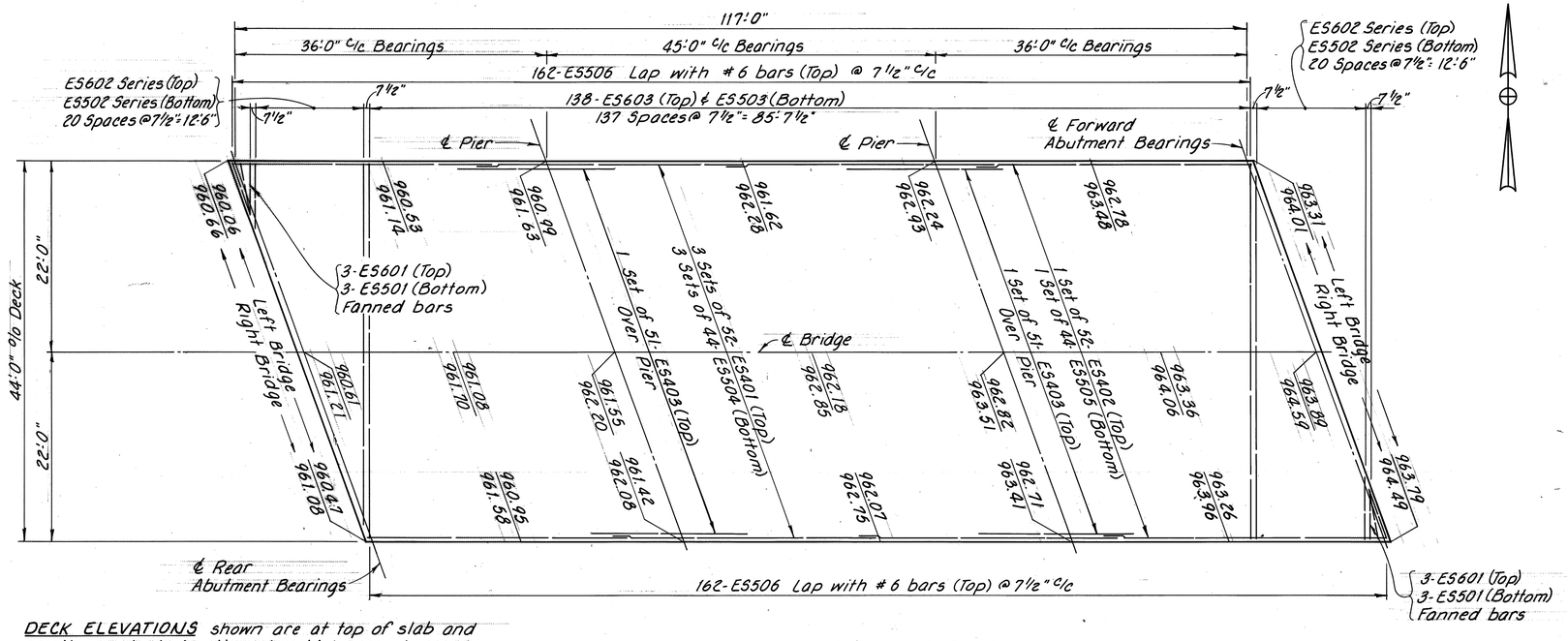

DECK ELEVATIONS shown are at top of slab and are the control elevations to which screeds must be set prior to placing deck concrete.

SLAB REINFORCING PLAN

(Reinforcing same on both bridges)

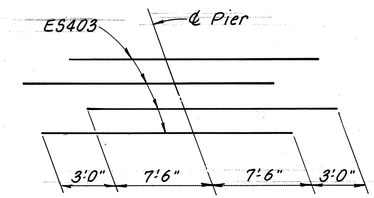

DIAGRAM SHOWING STAGGER OF ADDITIONAL REINFORCEMENT OVER PIERS

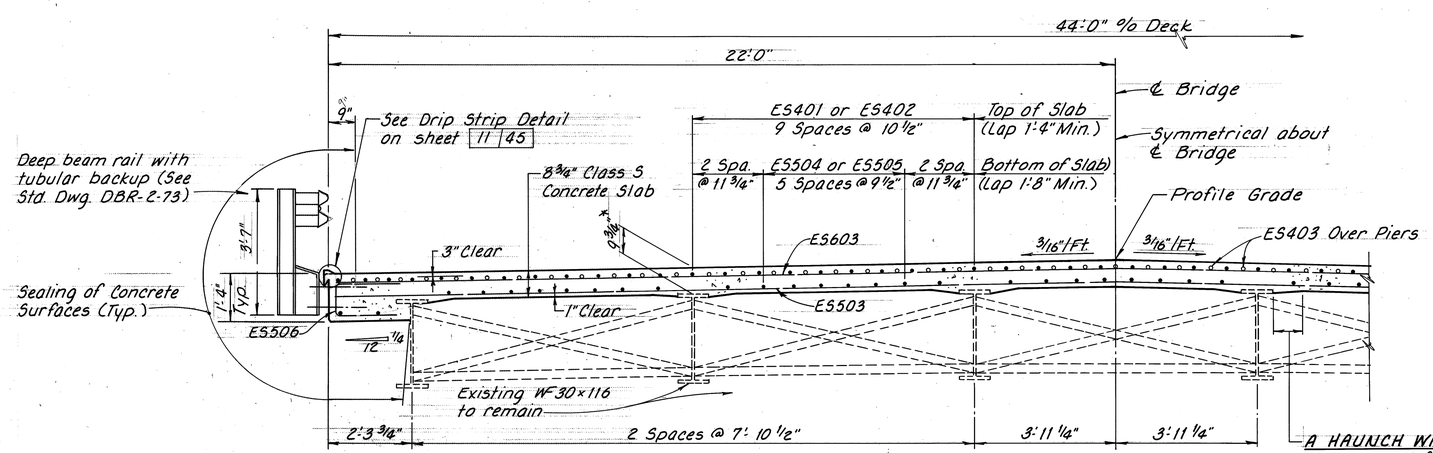

* DECK SLAB DEPTH: The distance shown from top of deck slab to top of steel beam is the design dimension. The quantity of deck concrete to be paid for shall be based on this dimension, even though deviation from it may be necessary because the top flange of the beam may not have the exact camber or conformation required to place it parallel to the finished grade.

HALF TRANSVERSE SECTION

A HAUNCH WIDTH of 9" shall be used for computing quantity of concrete, however, the haunch width may vary between 6" and 12".

37/45

ENGINEERING ASSOCIATES LTD.
CONSULTING ENGINEERS
700 WINKLER DR. WOOSTER, OHIO

SUPERSTRUCTURE SLAB REPLACEMENT

MED-42-0589 L/R
OVER BLACK RIVER

DESIGNED	DRAWN	TRACED	CHECKED	REVIEWED	DATE	REVISED
AFS	PLD	PLD	RLE	DBC	3/25/87	

CALC. BY DATE	MED-42-1.89	OHIO	121/189
CHKD. BY DATE	MED-224-10.45	FHWA REGION	

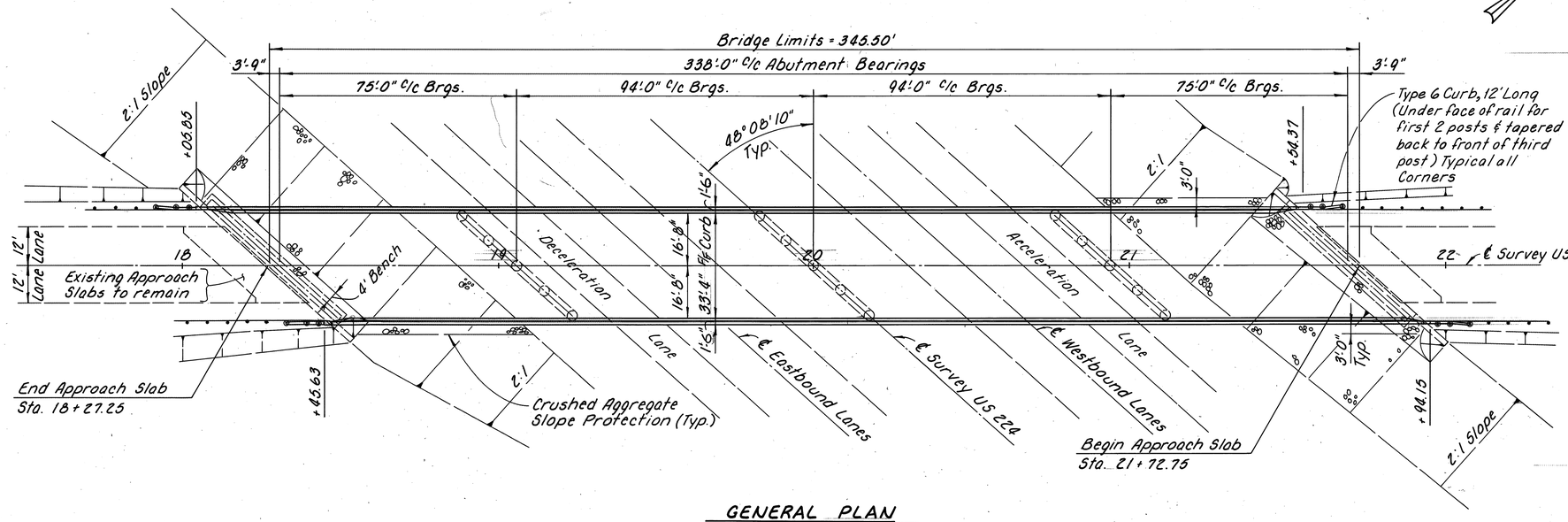

GENERAL PLAN

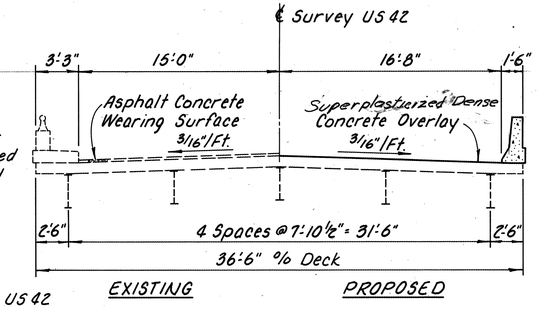

TRANSVERSE SECTION

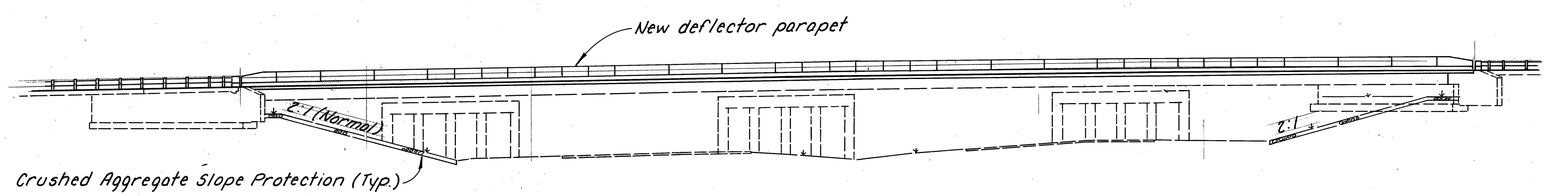

GENERAL ELEVATION

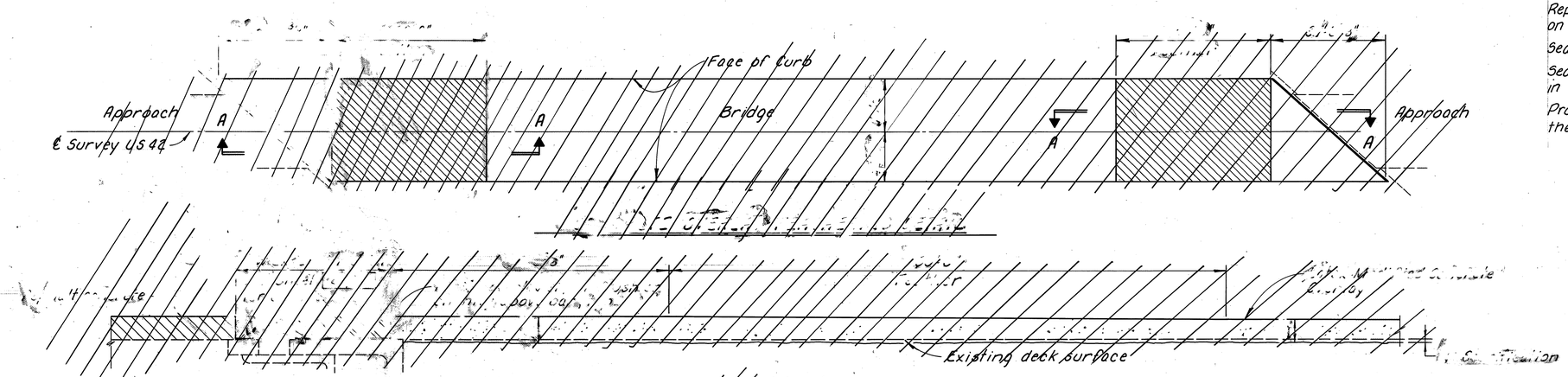

SECTION A-A

MED-42-0688 REHABILITATION SUMMARY

Remove and dispose of existing concrete safety curbs, parapets, bulb angles, and bridge railing.

Cut scupper pipes off below the deck and plug the openings with concrete.

Reset the rocker bearings. Repair the backwalls in accordance with Item 519, Patching Concrete Structures. Modify the expansion joint armor. Repair designated areas on the underside of the deck in accordance with Item 519, Patching Concrete Structures, as directed by the Engineer.

Construct new deflector parapets using Class S concrete, as per plan.

Repair the bridge deck and place a wearing surface overlay on the deck using SDC...

Seal the deck expansion joints with strip seals.

Seal the surfaces of the new deflector parapets as shown in the plan details.

Provide slope protection under the bridge, as directed by the Engineer.

38/45

ENGINEERING ASSOCIATES LTD.
CONSULTING ENGINEERS
700 WINKLER DR. WOOSTER, OHIO

GENERAL PLAN AND REHAB SUMMARY
MED-42-0688
OVER US 224
STA. 18+27.25 TO 21+72.75
MEDINA COUNTY

DESIGNED	DRAWN	TRACED	CHECKED	REVIEWED	DATE	REVISED
DBC	PLD	SLM	RLE	DWS	3/26/87	

CALC. BY RLE DATE 3/87	MED-42-1.89	OHIO	122
CHKD. BY DBC DATE 3/87	MED-224-10.45	FHWA REGION	189

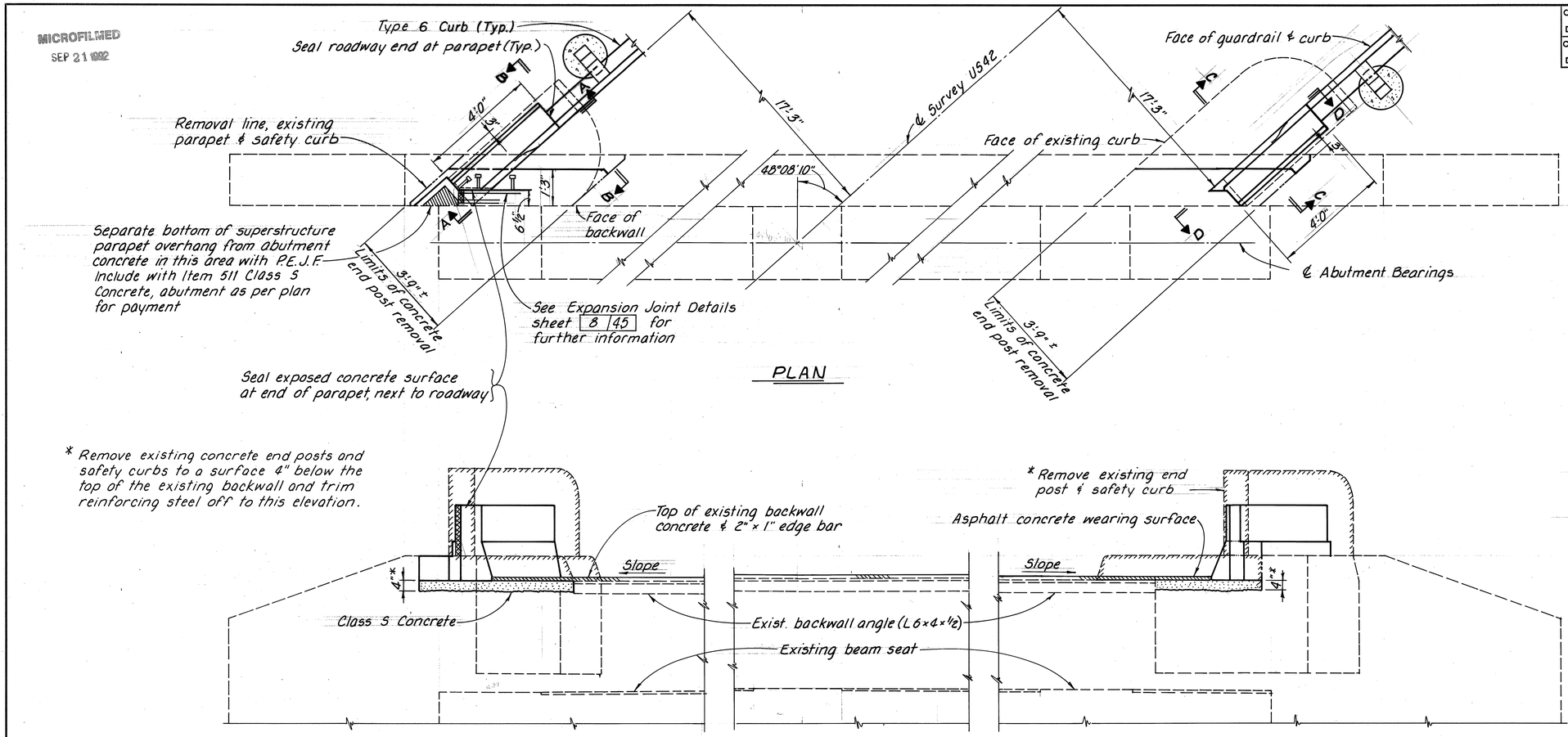

ABUTMENT NOTES

PATCHING CONCRETE STRUCTURES, AS PER PLAN:
Abutment Backwall and Breastwall
Rear Abutment = 64 Sq. Ft.
Forward Abutment = 14 Sq. Ft.
Bottom of Superstructure Slab
Forward End Span = 22 Sq. Ft.

CRUSHED AGGREGATE SLOPE PROTECTION:
Rear Abutment = 440 Sq. Yd.
Forward Abutment = 455 Sq. Yd.

DECK EXPANSION JOINT DETAILS: See Sheet 9/45.

SUPERSTRUCTURE PARAPET DETAILS: See Sheet 41/45.

PARAPET GENERAL NOTES: See Sheet 40/45

ABUTMENT REINFORCING STEEL SCHEDULE: See Sheet 40/45

BRIDGE GENERAL NOTES: See Sheets 1/45 through 5/45

NOTATION
N.S. - Near Side
F.S. - Far Side

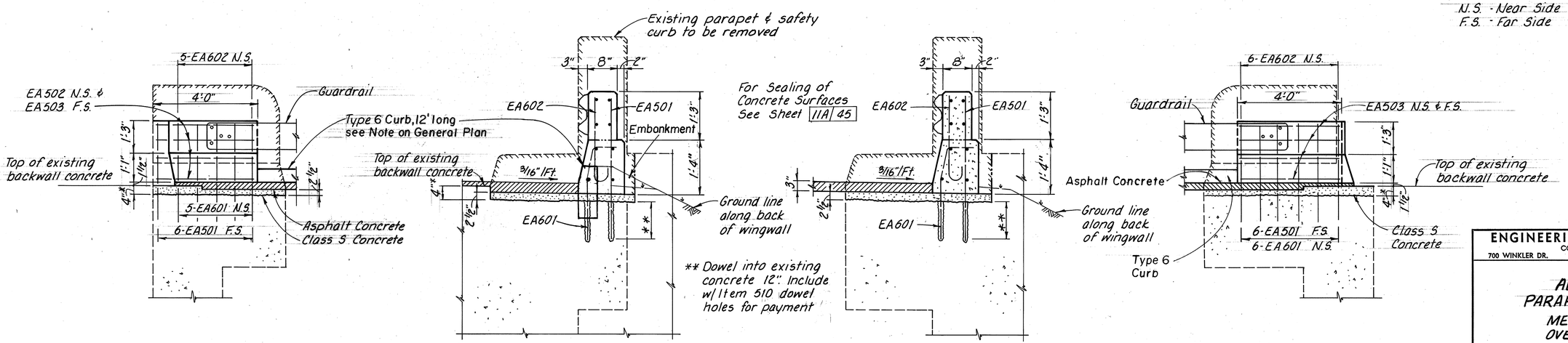

39/45

ENGINEERING ASSOCIATES LTD.
CONSULTING ENGINEERS
700 WINKLER DR. WOOSTER, OHIO

ABUTMENT PARAPET DETAILS
MED-42-0688 OVER US224

DESIGNED	DRAWN	TRACED	CHECKED	REVIEWED	DATE	REVISED
DBC	RLE	PLD	AFS	DWS	3/26/87	

CALC. BY DBC DATE 3/87	MED-42-1.89	OHIO	123
CHKD. BY RLE DATE 3/87	MED-224-10.45	FHWA REGION	189

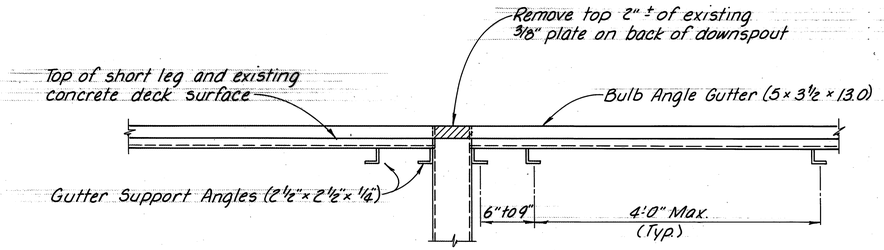

PARTIAL VIEW OF EXISTING DRAINAGE SYSTEM

(Looking towards curb with concrete not shown)

Note A: Cut bars off as necessary to clear deflection joints by 2" min. See sheet 41 | 45

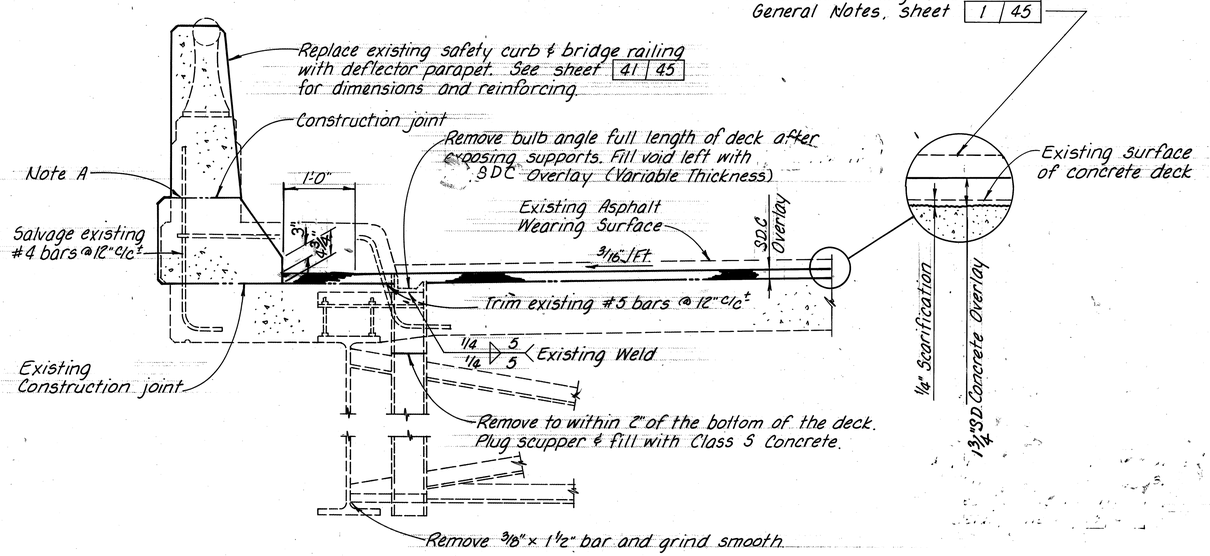

PARTIAL TRANSVERSE SECTION OF DECK

ABUTMENT REINFORCING STEEL

MARK	NUMBER REAR	NUMBER FWD.	NUMBER TOTAL	LENGTH	TYPE	WEIGHT
EA501	12	12	24	3'-8"	Str.	92
EA502	4	4	8	3'-0"	Str.	25
EA503	12	12	24	3'-6"	Str.	88
EA601	11	11	22	2'-11"	Bt.	96
EA602	11	11	22	2'-9"	Bt.	91
				TOTAL		392

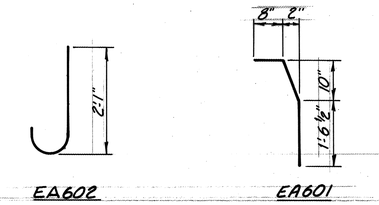

SUPERSTRUCTURE REINFORCING STEEL

MARK	NUMBER	LENGTH	TYPE	WEIGHT
ES501	2	2'-3"	Str.	5
ES502	22	2'-4"	Str.	53
ES503	96	30'-0"	Str.	3004
ES504	6	37'-6"	Str.	235
ES505	24	9'-3"	Str.*	232
ES506	24	11'-0"	Str.	275
ES507	240	7'-0"	Str.	1752
ES508	120	14'-6"	Str.	1815
ES601	4	2'-2"	Bt.	13
ES602	4	2'-2"	Bt.	13
ES603	4	2'-3"	Bt.	14
ES604	4	2'-4"	Bt.	14
ES605	4	2'-5"	Bt.	15
ES606	22	2'-11"	Bt.	105
ES607	656	2'-6"	Bt.	2463
ES608	656	5'-8"	Bt.	5587
		TOTAL		15595

* Bend and shorten in field where necessary

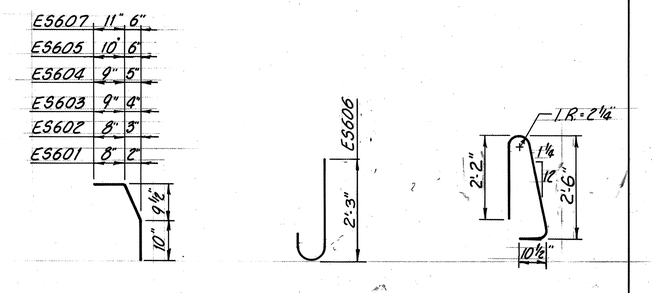

PARAPET AND MISCELLANEOUS STRUCTURAL NOTES

PARAPET GENERAL NOTES:

DESIGN SPECIFICATIONS: "Standard Specifications for Highway Bridges" adopted by American Association of Highway and Transportation Officials, 1983, including the 1984 and 1985 Interim Specifications and the Ohio "Supplement" to these specifications.

DESIGN DATA: Concrete Class S, As Per Plan - $f_c' = 4500$ psi, $f_c = 1800$ psi
(deflector parapet) Reinforcing Steel - ASTM A615, A616 or A617 Grade 60, $f_y = 60{,}000$ psi, $f_s = 24{,}000$ psi

PREFORMED EXPANSION JOINT FILLER in the parapet deflection joints may be either ¼" gray sponge rubber or ¼" gray cellular polyvinyl chloride (PVC) sponge. If rubber is used it shall meet the requirements of AASHTO M-153.

CONCRETE PARAPETS above upper construction joint shall be placed in alternate sections by the use of bulkheads. Closing sections shall be placed after removal of bulkheads and after placement of expansion joint filler. Exposed edges of the filler shall be flush with the surface of concrete and shall be free of mortar.

ABUTMENT AND SUPERSTRUCTURE PARAPET DETAILS: See Sheets 39 | 45 and 41 | 45.

DECK EXPANSION JOINT DETAILS: See Sheet 8 | 45

STRUCTURE GENERAL NOTES: See sheets 1 | 45 through 5 | 45

Supplemental Specifications: 860 Dated 5-31-88

40 | 45

ENGINEERING ASSOCIATES LTD.
CONSULTING ENGINEERS
700 WINKLER DR. WOOSTER, OHIO

SUPERSTRUCTURE REMOVAL NOTES AND REINFORCING STEEL SCHEDULES
MED-42-0688
OVER US 224

DESIGNED	DRAWN	TRACED	CHECKED	REVIEWED	DATE	REVISED
DBC	DBC	PLD	RLE	DWS	3/26/87	

CALC. BY / DATE	MED-42-1.89	OHIO	124 / 189
CHKD. BY / DATE	MED-224-10.45	FHWA REGION	

* Make up any difference in length between plan dimensions and field measurements in these panels

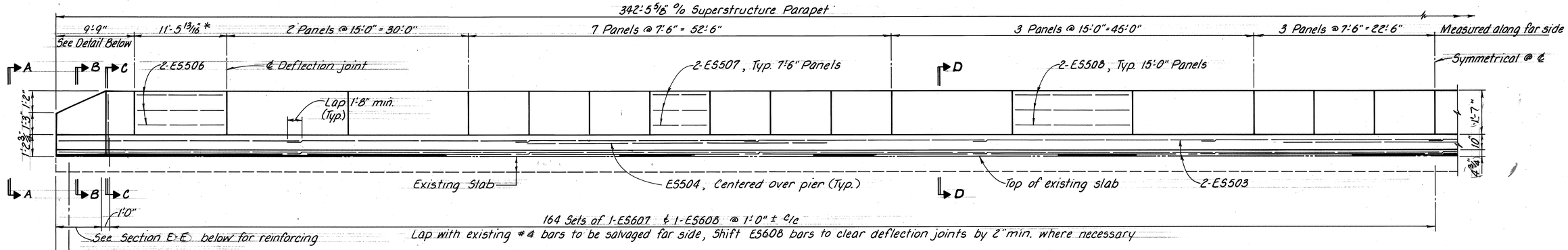

PARAPET ELEVATION

(All lengths are @ 60° F.)

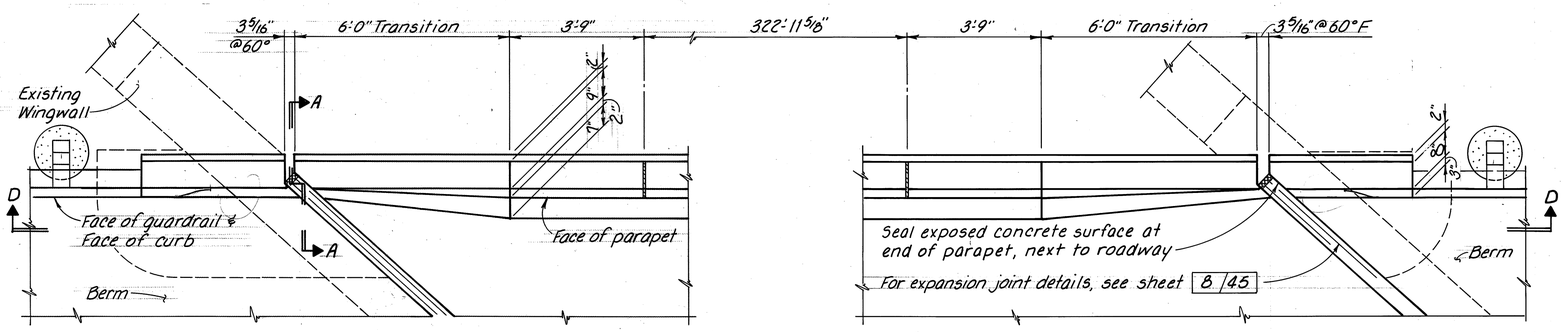

PART PLAN AT ABUTMENTS

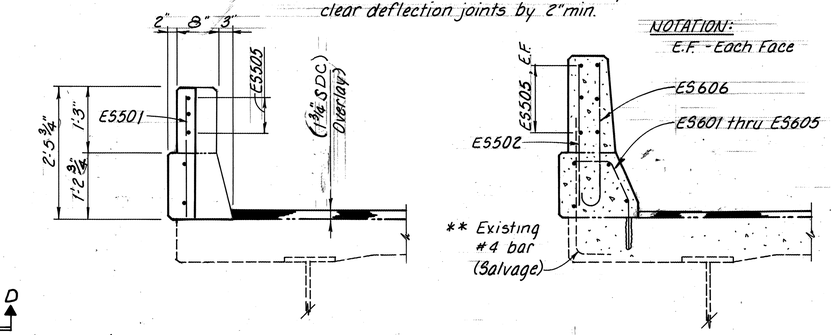

VIEW A-A

(Joint Armor & Parapet Joint Seal not shown)

SECTION B-B

NOTE: All longitudinal bars in the lower part of the parapet are ES503 bars unless noted otherwise.

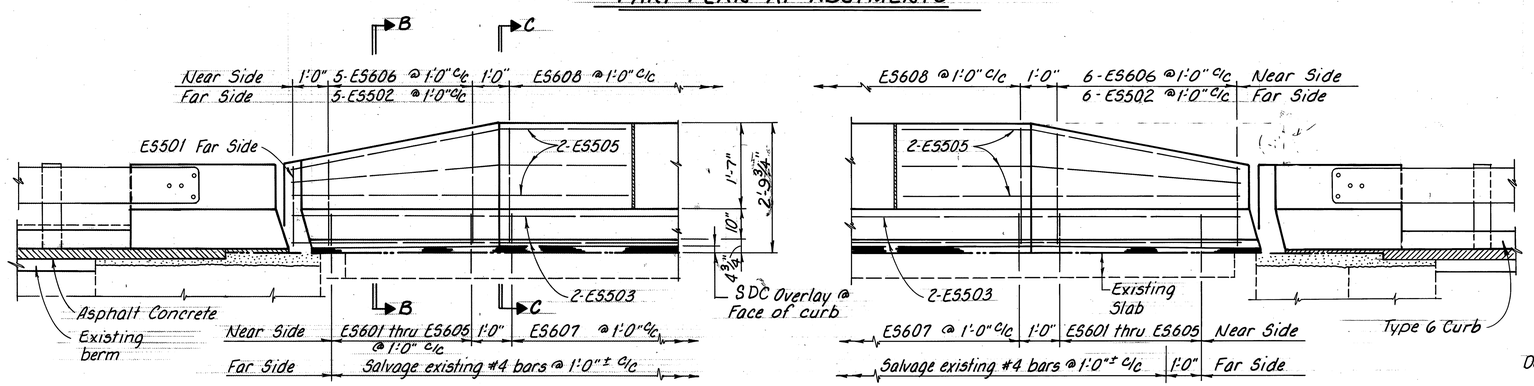

SECTION E-E

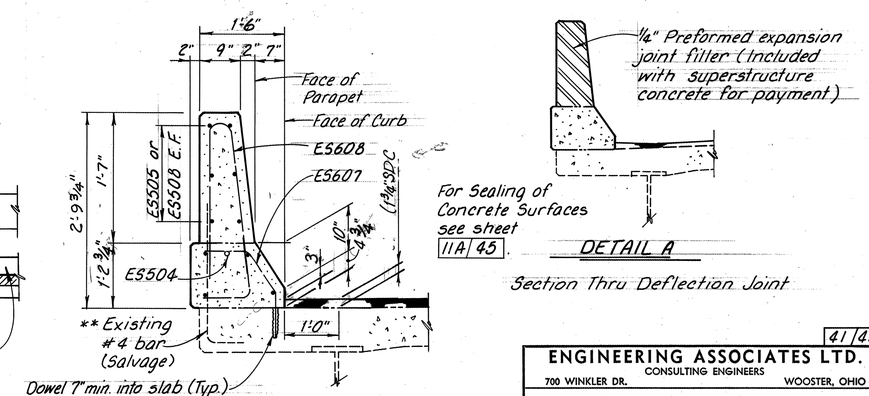

SECTIONS C-C & D-D

DETAIL A

Section Thru Deflection Joint

NOTES

PARAPET GENERAL NOTES:	See sheet	40/45
ABUTMENT PARAPET DETAILS:	See sheet	39/45
REINFORCING STEEL SCHEDULE:	See sheet	40/45
ADDITIONAL NOTES:	See sheet	40/45

41/45

ENGINEERING ASSOCIATES LTD.
CONSULTING ENGINEERS
700 WINKLER DR. WOOSTER, OHIO

SUPERSTRUCTURE PARAPET DETAILS
MED-42-0688
OVER US 224

DESIGNED	DRAWN	TRACED	CHECKED	REVIEWED	DATE	REVISED
DBC	PLD	PLD	AFS	DWS	3/26/87	

CALC. BY DATE	MED-42-1.89	OHIO	125/189
CHKD. BY DATE	MED-224-10.45	FHWA REGION	

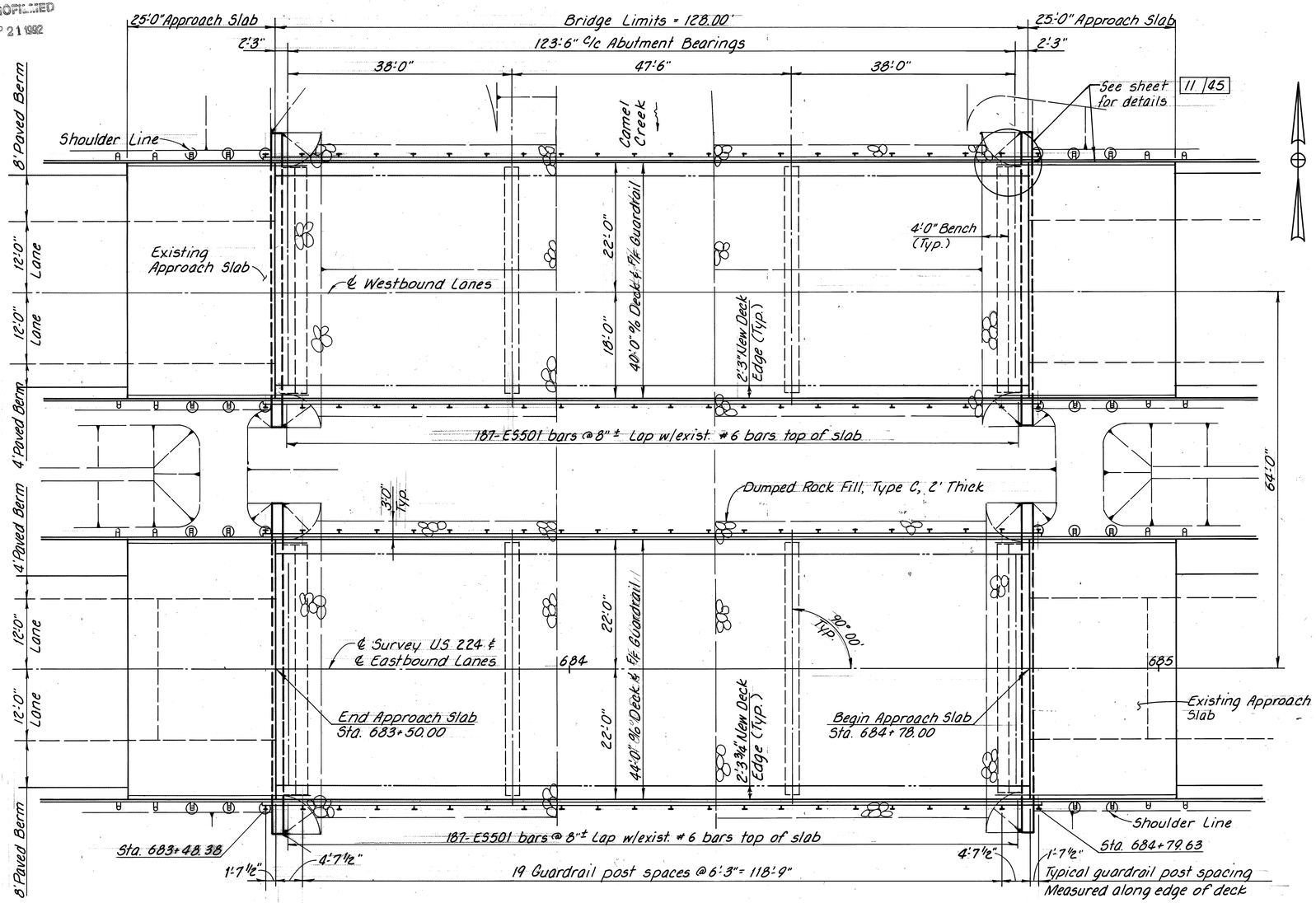

GENERAL PLAN

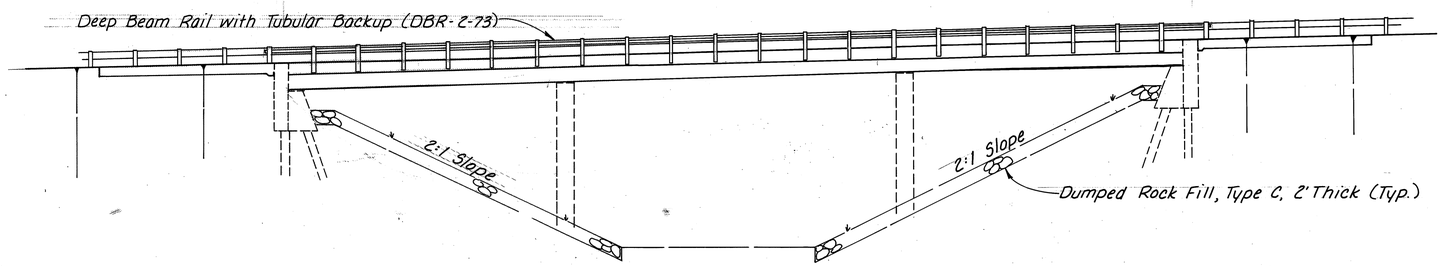

GENERAL ELEVATION

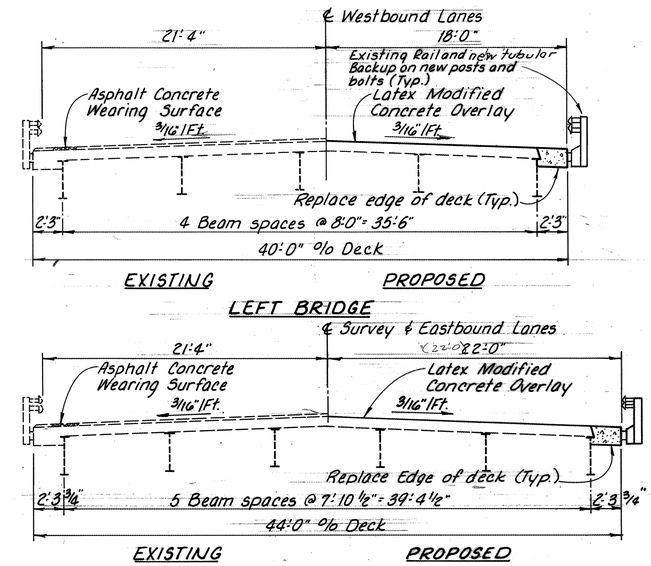

TRANSVERSE SECTIONS

MED-224-1276 L/R REHABILITATION SUMMARY

Remove guardrail and store for reuse.

Remove and dispose of existing guardrail posts, anchor bolts, edges of the concrete decks, and abutment backwalls. See Roadway Plans for removal of approach slabs.

Trim the ends of the beams to restore adequate expansion capacity. Move and repair the end crossframes and replace expansion joint armor.

Reconstruct the edges of the deck using Class S concrete, as per plan. Provide new guardrail anchor bolts and Type 2 posts & tubular backup.

Install the guardrail.

Repair the bridge deck and place a wearing surface overlay on the deck using Latex Modified Concrete.

Reconstruct the abutment backwalls.

Seal the deck expansion joints with strip seals.

Seal the concrete surfaces at edges of the deck as shown in plan details.

Restore slope protection under the bridge, as directed by the Engineer.

42/45

ENGINEERING ASSOCIATES LTD.
CONSULTING ENGINEERS
700 WINKLER DR. WOOSTER, OHIO

GENERAL PLAN AND REHAB SUMMARY
MED-224-1276 L/R
OVER CAMEL CREEK
STA. 683+50.00 TO 684+78.00
MEDINA COUNTY

DESIGNED	DRAWN	TRACED	CHECKED	REVIEWED	DATE	REVISED
DBC	PLD	PLD	AFS	DWS	3/26/87	

CALC. BY RLE DATE 3/87	MED-42-1.89	OHIO
CHKD. BY DBC DATE 3/87	MED-224-10.45	FHWA REGION

STRUCTURE NOTES

ABUTMENT NOTES

DRAINAGE: Porous backfill, 1.5 ft. thick, enclosed in filter fabric shall extend up to the plane of the subgrade and laterally to the ends of the wingwalls. Maintain a minimum of 6 inches of cover over the filter fabric (See Section B-B on sheet 44/45)

The porous backfill shall be drained by 6" perforated C.S.P. extending straight out into the side slopes, terminating near the surface as shown. Where drainage through the side slopes is either impossible or impractical, the C.S.P. shall extend beyond the wingwall, then be redirected (Labeled "Alt. Outlet" in the plans) into the front slope, terminating in crushed aggregate as shown for the side slopes or the spill thru slope protection in front of the abutments where possible.

BACKWALL CONCRETE: In addition to the provisions of 511.08, backwall concrete above the optional construction joint at the approach slab seat shall not be placed until after the deck concrete has been placed. The steel expansion joint shall serve as a template for the top of the backwall.

DUMPED ROCK FILL, TYPE C, AS PER PLAN:

Slope Protection at each Abutment, Left Structure	= 188 Cu. Yd.
Slope Protection at each Abutment, Right Structure	= 205 Cu. Yd.

ABUTMENTS / LEFT STRUCTURE: See sheet 43/45

ABUTMENTS / RIGHT STRUCTURE: See sheet 44/45

ABUTMENT REINFORCING STEEL SCHEDULE: See sheet 45/45

CONTRACTION JOINT AND WATERSTOP DETAILS: See sheet 10/45

DECK EXPANSION JOINT DETAILS: See sheet 7/45

STRUCTURE GENERAL NOTES: See sheets 1/45 through 5/45

SUPERSTRUCTURE NOTES

DECK EXPANSION JOINT DETAILS: See sheet 7/45

ADDITIONAL SUPERSTRUCTURE EDGE DETAILS: See sheet 11/45

STRUCTURE GENERAL NOTES: See sheets 1/45 through 5/45 and 42A/45.

GENERAL NOTES FOR MED-42-1276

REFERENCE:

Reference shall be made to the Bridge General Notes on sheets 1/45 through 5/45 and to the following:

Standard Drawings		Supplemental Specifications	
AS-1-81	Dated 11-27-81	824	Dated 10-8-82
DBR-2-73	Dated 4-10-73	845	Dated 5-31-88
		953	Dated 8-21-80

DESIGN SPECIFICATIONS:

The modifications to this structure conform to "STANDARD SPECIFICATIONS FOR HIGHWAY BRIDGES" adopted by the American Association of State Highway and Transportation Officials, 1983 including the 1984 and 1985 INTERIM SPECIFICATIONS and the Ohio "SUPPLEMENT" to these specifications.

DESIGN DATA:

Design Loading (deck edge repair)	-	H520-44 and the Alternate Military Loading
Concrete Class S (as per plan)	-	Superstructure and Substructures; Compressive Strength 4500 psi
Reinforcing Steel (deck edge repair)	-	ASTM A615, A616, A617, Grade 60 Minimum Yield Strength 60,000 psi
Deck Protection (deck edge repair)	-	Epoxy coated reinforcing steel in both mats and sealing of concrete surfaces
Wearing Surface	-	1 1/4" Latex Modified Concrete Overlay

REINFORCING STEEL SPLICES:

Unless shown otherwise, all reinforcing steel splices shall comply with the lap lengths specified in CMS section 509.08

42A/45

ENGINEERING ASSOCIATES LTD.
CONSULTING ENGINEERS
700 WINKLER DR. WOOSTER, OHIO

STRUCTURE NOTES AND GENERAL NOTES
MED-224-1276 L/R
OVER CAMEL CREEK

DESIGNED	DRAWN	TRACED	CHECKED	REVIEWED	DATE	REVISED
DBC	PLD	PLD	AFS	DWS	3-26-87	

CALC. BY RLE DATE 3/87	MED-42-1.89	OHIO	127/189
CHKD. BY AFS DATE 3/87	MED-224-10.45	FHWA REGION	

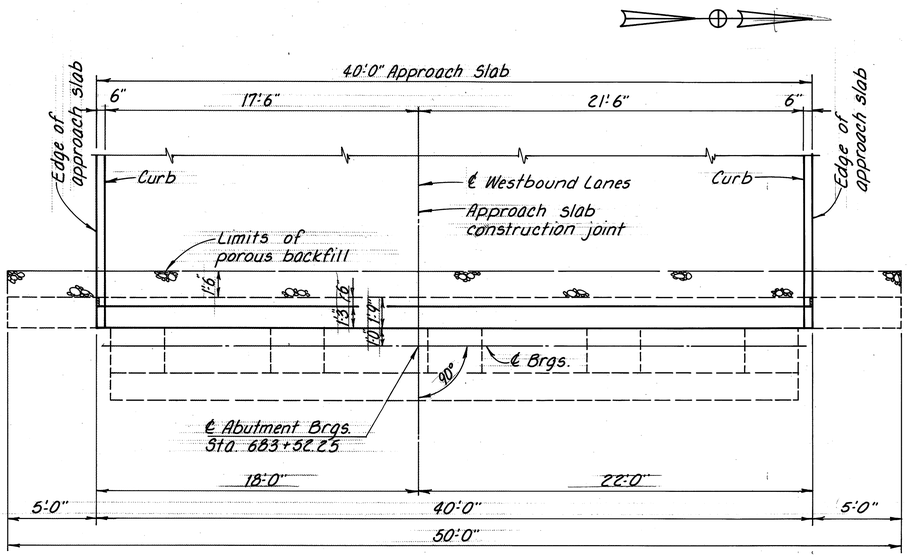

PLAN - LEFT STRUCTURE - REAR ABUTMENT

PLAN - LEFT STRUCTURE - FORWARD ABUTMENT

NOTATION:
R.F. - Rear Face
E.F. - Each Face

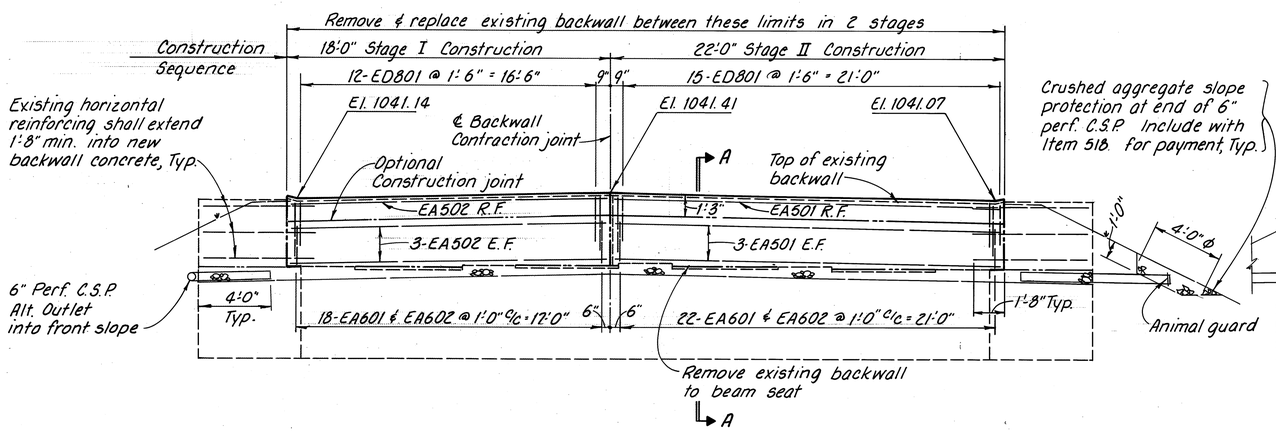

ELEVATION - LEFT STRUCTURE - REAR ABUTMENT

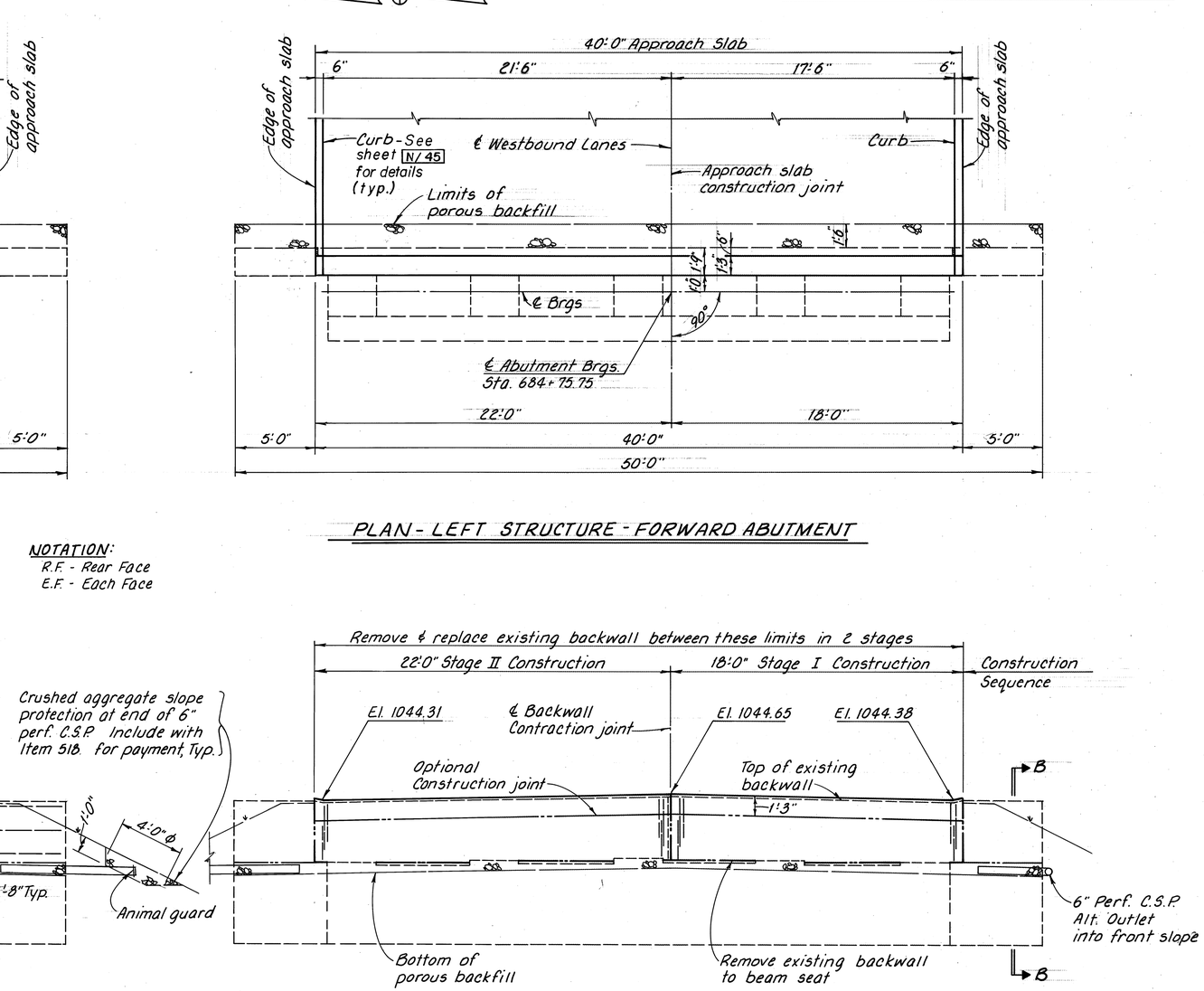

ELEVATION - LEFT STRUCTURE - FORWARD ABUTMENT

ABUTMENT REINFORCING STEEL

MARK	NUMBER L. REAR	R. REAR	L. FWD.	R. FWD.	TOTAL	LENGTH	TYPE	WEIGHT
EA501	7	14	7	14	42	21'-9"	Str.	953
EA502	7	-	7	-	14	17'-9"	Str.	259
EA601	40	-	40	-	80	3'-6"	Bt.	421
EA602	40	44	40	44	168	6'-9"	Bt.	1703
EA603	-	44	-	44	88	3'-3"	Bt.	430
ED801	27	30	27	30	114	4'-11"	Bt.	1497
						TOTAL		5263

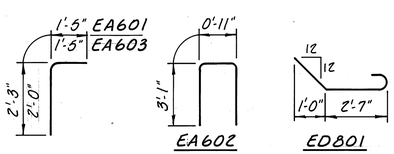

SECTIONS A-A & B-B: See Sheet 44/45.

43/45

ENGINEERING ASSOCIATES LTD.
CONSULTING ENGINEERS
700 WINKLER DR. WOOSTER, OHIO

ABUTMENT REPAIR DETAILS, NOTES AND REINFORCING STEEL SCHEDULE

MED-224-1276 L/R
OVER CAMEL CREEK

DESIGNED	DRAWN	TRACED	CHECKED	REVIEWED	DATE	REVISED
DWS	RLE	PLD	AFS	DBC	3/26/87	

CALC. BY / DATE	MED-42-1.89	OHIO	128/189
CHKD. BY / DATE	MED-224-10.45	FHWA REGION	

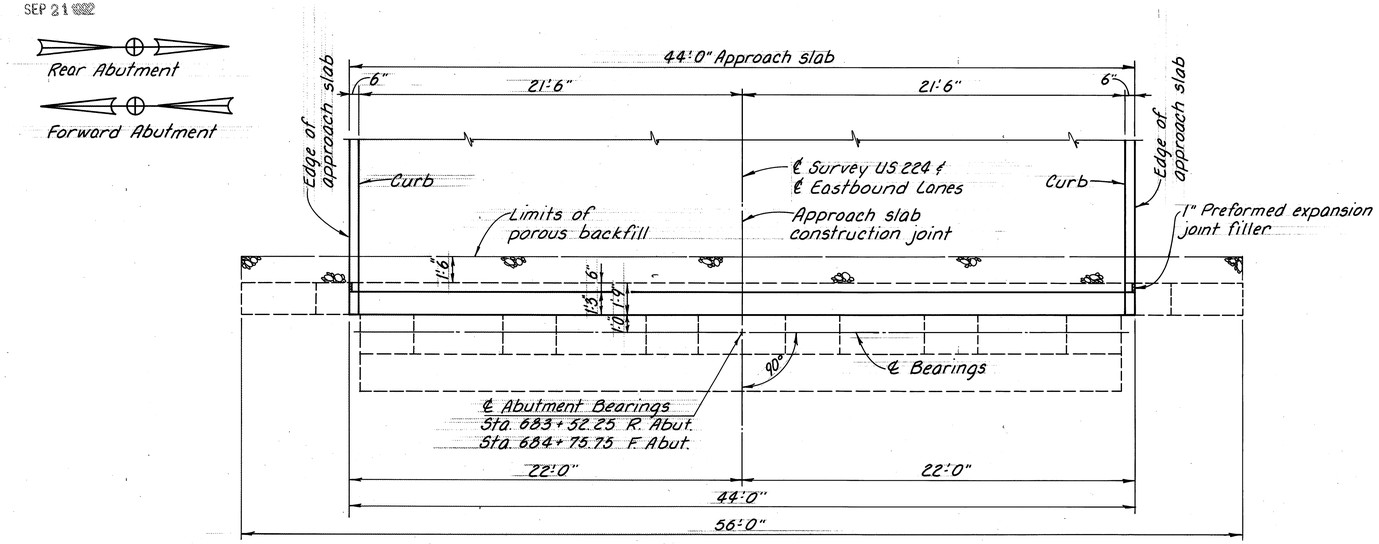

ABUTMENT PLAN- RIGHT STRUCTURE

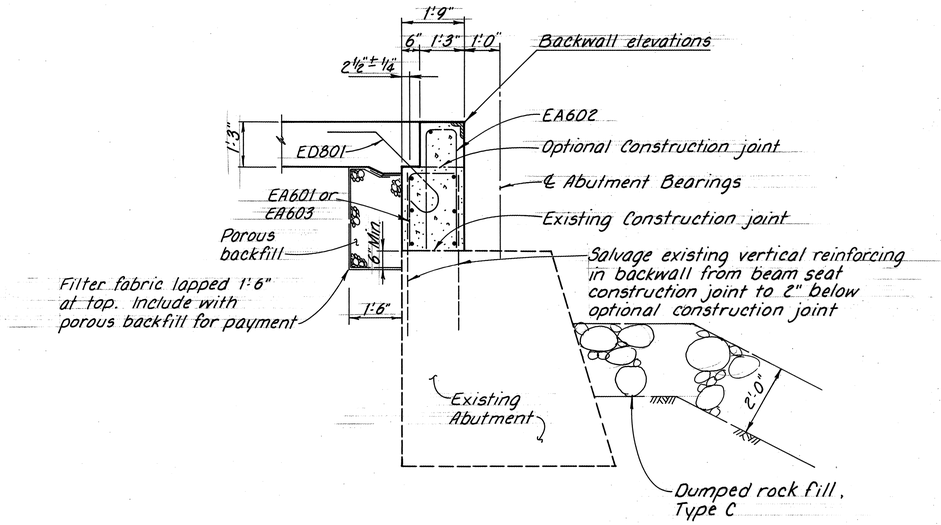

SECTION A-A

All bars normal to the Section are EA501

NOTATION:

R.F. - Rear Face
E.F. - Each Face
R.A. - Rear Abutment
F.A. - Forward Abutment

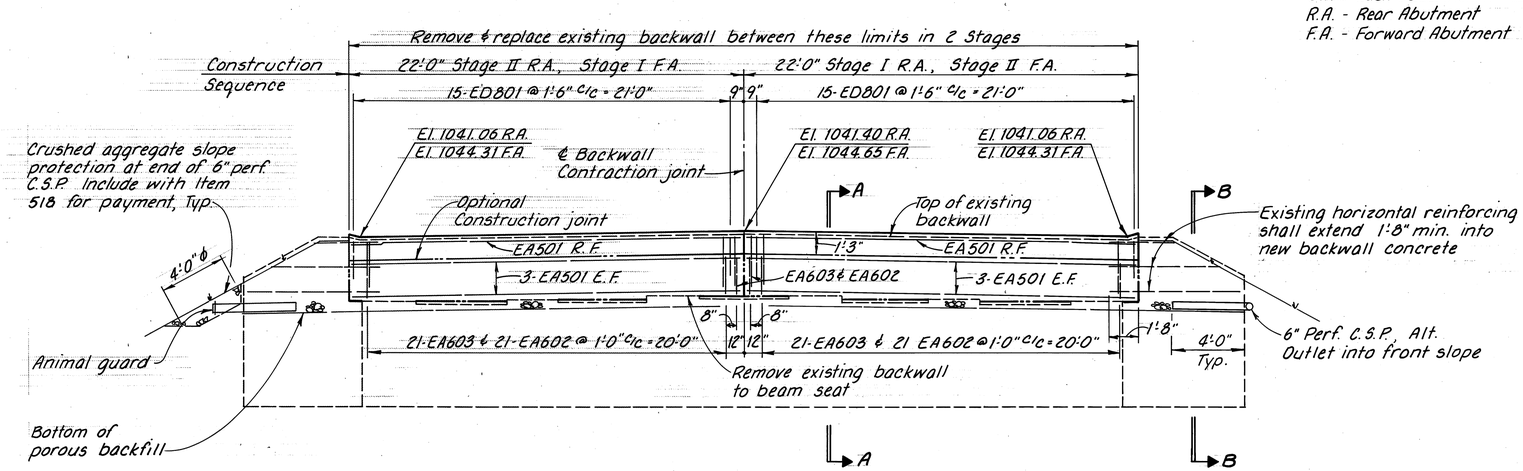

ABUTMENT ELEVATION- RIGHT STRUCTURE

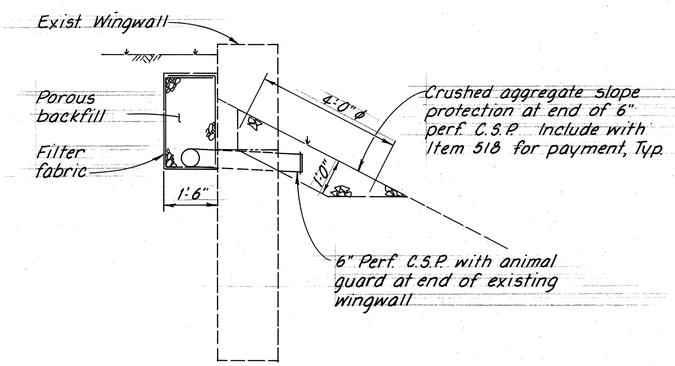

SECTION B-B

44/45

ENGINEERING ASSOCIATES LTD.
CONSULTING ENGINEERS
700 WINKLER DR. WOOSTER, OHIO

ABUTMENT REPAIR DETAILS

MED-224-1276 L/R
OVER CAMEL CREEK

DESIGNED	DRAWN	TRACED	CHECKED	REVIEWED	DATE	REVISED
DWS	RLE	PLD	AFS	DBC	3/26/87	

CALC. BY RLE DATE 3/87	MED-42-1.89	OHIO	129
CHKD. BY DBC DATE 3/87	MED-224-10.45	FHWA REGION	189

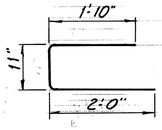

ES501

SUPERSTRUCTURE REINFORCING STEEL

MARK	NUMBER LT. STR.	NUMBER RT. STR.	NUMBER TOTAL	LENGTH	TYPE	WEIGHT
ES501	376	376	752	4'-6"	Bt.	3530
ES601	32	32	64	33'-9"	Str.	3244
ES602	12	12	24	19'-0"	Str.	685
ES603	0	6	6	23'-6"	Str.	212
ES604	6	6	12	21'-9"	Str.	392
ES605	6	0	6	19'-6"	Str.	176
ES701	0	6	6	23'-6"	Str.	288
ES702	6	6	12	21'-9"	Str.	533
ES703	6	0	6	19'-9"	Str.	242
				Total		9302

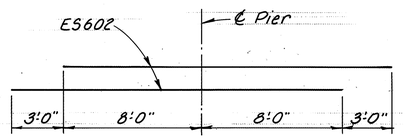

DIAGRAM SHOWING STAGGER OF ADDITIONAL TOP REINFORCEMENT OVER PIERS

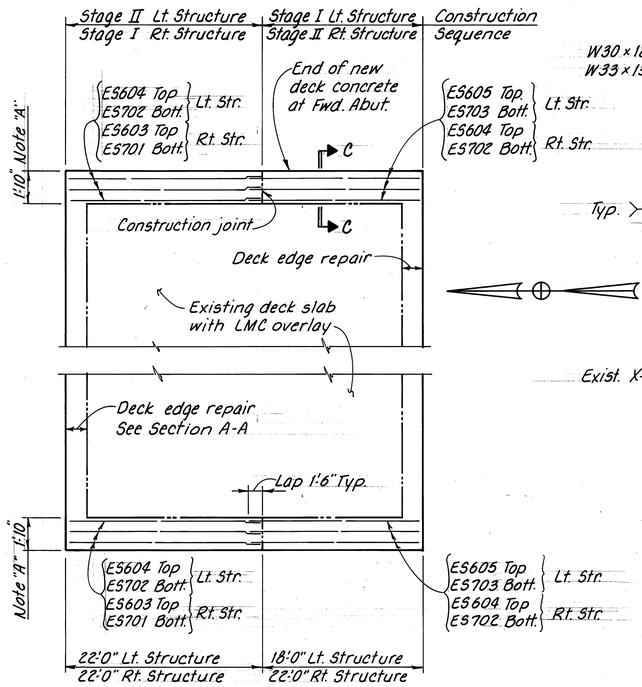

PART PLAN - DECK SLABS
(Left structure drawn - Right structure similar)

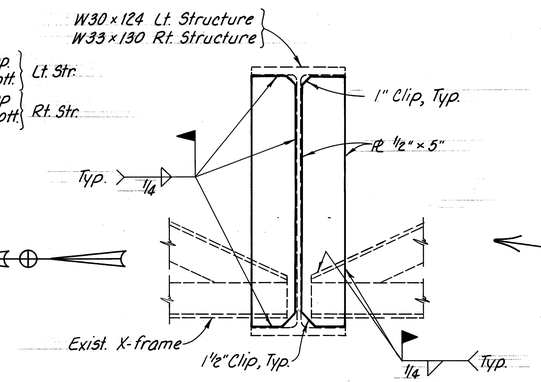

See notes 4-7 on sheet 26/45 for additional repairing and moving end crossframe notes.

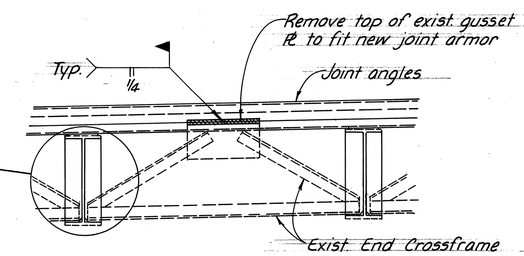

SECTION B-B

End crossframe shown for beam spacing 8'-0" or less. See Standard Drawing CSB-1-55 for Details of original construction.

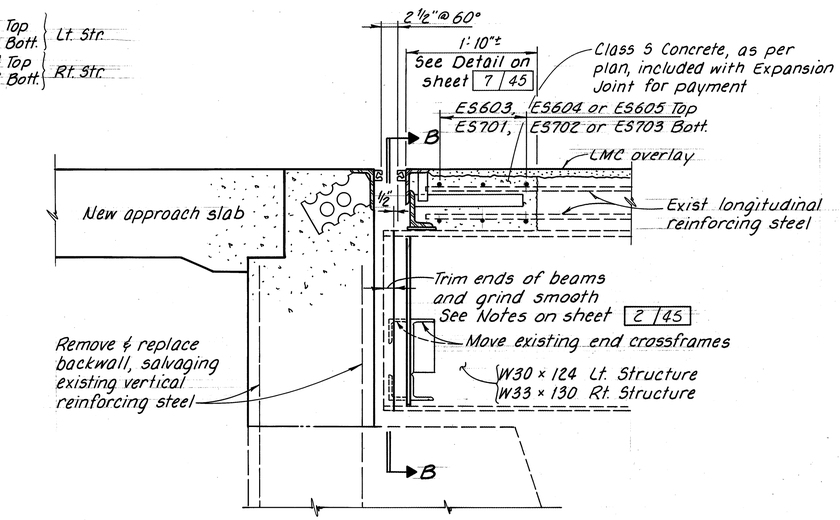

SECTION C-C
TRIM BEAMS AND MOVE END CROSSFRAMES

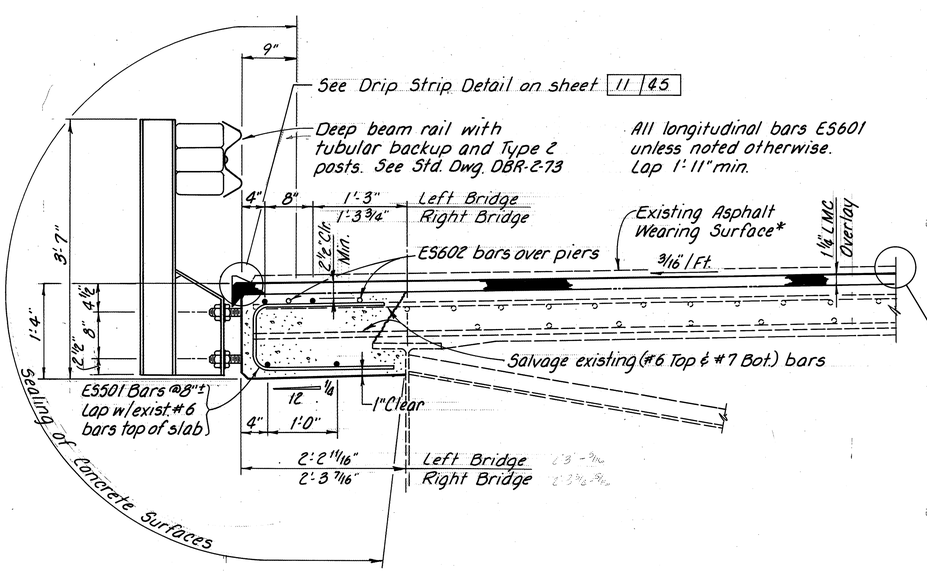

SECTION A-A

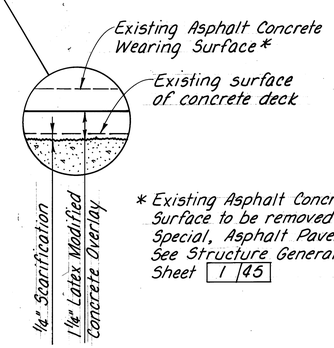

* Existing Asphalt Concrete Wearing Surface to be removed per Item Special, Asphalt Pavement Planing. See Structure General Notes, Sheet 1/45

See sheet 42A for additional notes.

45/45

ENGINEERING ASSOCIATES LTD.
CONSULTING ENGINEERS
700 WINKLER DR. WOOSTER, OHIO

SUPERSTRUCTURE REPAIR/MODIFICATION AND REINFORCING STEEL SCHEDULE

MED-224-1276 L/R
OVER CAMEL CREEK

DESIGNED	DRAWN	TRACED	CHECKED	REVIEWED	DATE	REVISED
DBC	RLE	PLD RLE	AFS	DWS	3/26/87	

CALC. BY RLE DATE 3/87	MED-42-1.89	OHIO
CHKD. BY OBC DATE 3/87	MED-224-10.45	FHWA REGION 5

PAINTING GENERAL SUMMARY

	REFERENCE	BRIDGE	SPECIAL — FIELD PAINTING OF EXISTING STEEL, SYSTEM OZEU: SURFACE PREPARATION	PRIME COAT	INTERMEDIATE COAT	FINISH COAT		
RS-440(11)	1	MED-42-0265	LUMP SUM	LUMP SUM	LUMP SUM	LUMP SUM		
		RS-TOTALS	LUMP SUM					
F-51(70)	2	MED-42-0310 L&R	LUMP SUM	LUMP SUM	LUMP SUM	LUMP SUM		
	3	MED-42-0539 L&R	LUMP SUM	LUMP SUM	LUMP SUM	LUMP SUM		
	4	MED-42-0574	LUMP SUM	LUMP SUM	LUMP SUM	LUMP SUM		
	5	MED-42-0589 L&R	LUMP SUM	LUMP SUM	LUMP SUM	LUMP SUM		
	6	MED-42-0688	LUMP SUM	LUMP SUM	LUMP SUM	LUMP SUM		
	7	MED-224-1276 L&R	LUMP SUM	LUMP SUM	LUMP SUM	LUMP SUM		
		F- TOTALS	LUMP SUM	LUMP SUM	LUMP SUM	LUMP SUM		

SEE PROPOSAL NOTE FOR
WORK REQUIREMENTS
FOR VARIOUS ITEMS

RS-440 SUB-TOTAL	F-51 SUB-TOTAL	ITEM	ITEM EXT	PLAN TOTAL	UNIT	DESCRIPTION
LUMP	LUMP	SPECIAL		LUMP		FIELD PAINTING OF EXISTING STEEL, SURFACE PREPARATION, SYSTEM OZEU
LUMP	LUMP	SPECIAL		LUMP		FIELD PAINTING OF EXISTING STEEL, PRIME COAT, SYSTEM OZEU
LUMP	LUMP	SPECIAL		LUMP		FIELD PAINTING OF EXISTING STEEL, INTERMEDIATE COAT, SYSTEM OZEU
LUMP	LUMP	SPECIAL		LUMP		FIELD PAINTING OF EXISTING STEEL, FINISH COAT, SYSTEM OZEU

CALC. BY RLE DATE 3/87	MED-42-1.89	OHIO	131
CHKD. BY DBC DATE 3/87	MED-224-10.45	FHWA REGION 5	189

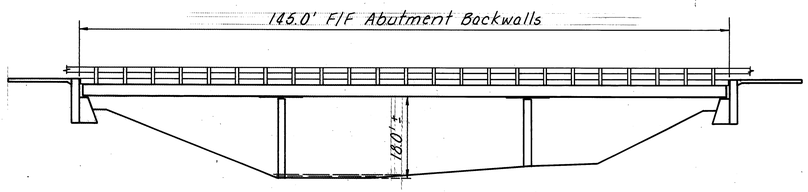

ELEVATION

ESTIMATED QUANTITIES		
ITEM	UNIT	DESCRIPTION
Special	Lump Sum	Field Painting of Existing Steel, Surface Preparation,*
Special	Lump Sum	Field Painting of Existing Steel, Prime Coat, *
Special	Lump Sum	Field Painting of Existing Steel, Intermediate Coat, *
Special	Lump Sum	Field Painting of Existing Steel, Finish Coat, *

* SYSTEM OZEU

APPROXIMATE SURFACE AREA = 9,300 Sq. Ft.

Quantities carried to sheet 1 8

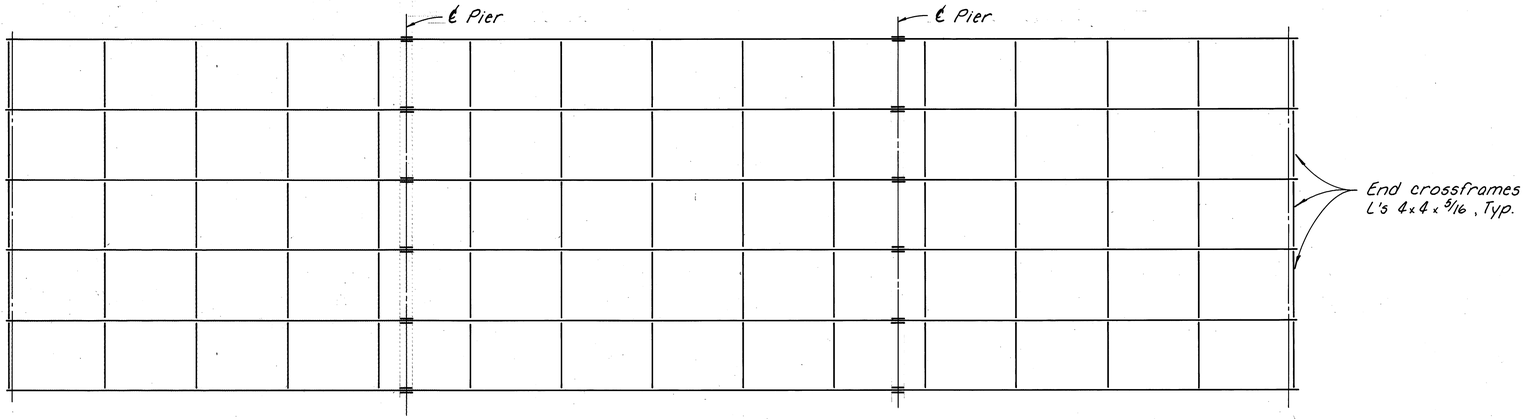

FRAMING PLAN
(All beams W 33 x 141)

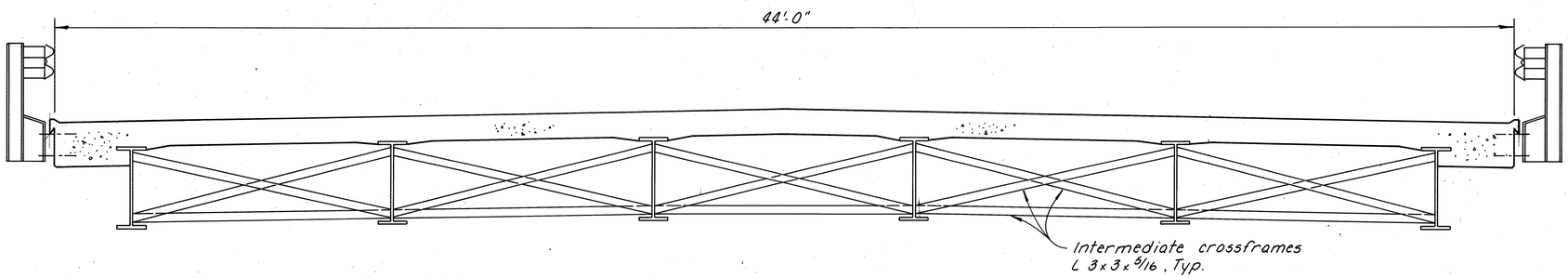

TRANSVERSE SECTION

CALC. BY RLE DATE 3/87	MED-42-1.89	OHIO
CHKD. BY DBC DATE 3/87	MED-224-10.45	FHWA REGION 5

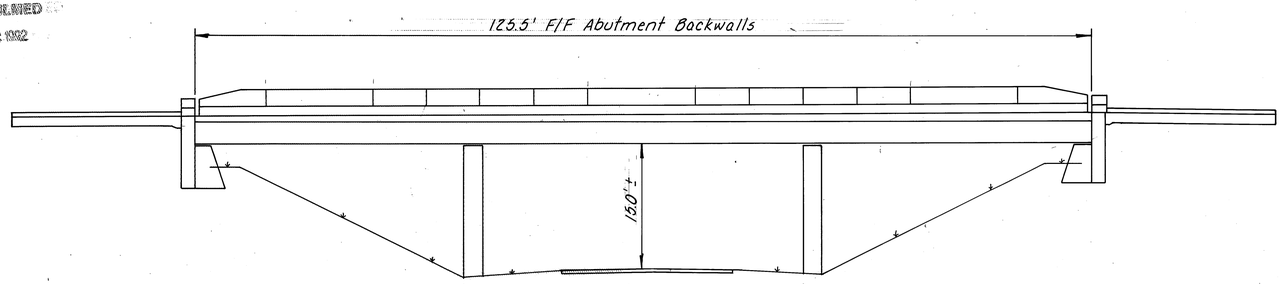

ELEVATION

ESTIMATED QUANTITIES		
ITEM	UNIT	DESCRIPTION
Special	Lump Sum	Field Painting of Existing Steel, Surface Preparation, *
Special	Lump Sum	Field Painting of Existing Steel, Prime Coat, *
Special	Lump Sum	Field Painting of Existing Steel, Intermediate Coat, *
Special	Lump Sum	Field Painting of Existing Steel, Finish Coat, *

* SYSTEM OZEU

APPROXIMATE SURFACE AREA = 6,300 Sq. Ft. L. Structure
8,500 Sq. Ft. R. Structure

Quantities carried to sheet 1/8

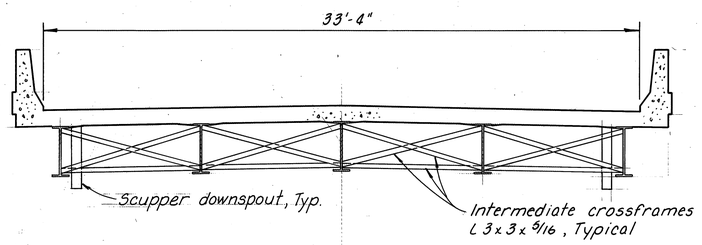

TRANSVERSE SECTION - L. STRUCTURE

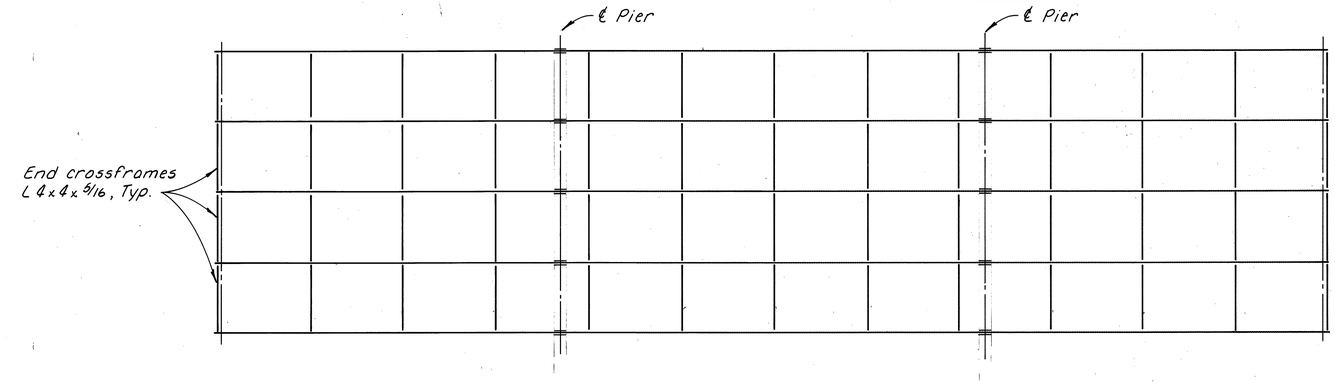

FRAMING PLAN - L. STRUCTURE

(All beams W 30 x 124)

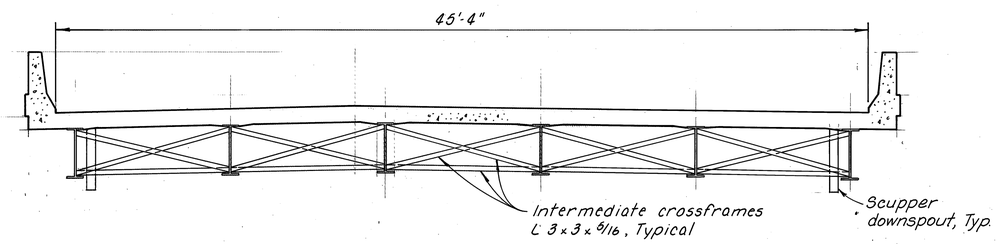

TRANSVERSE SECTION - R. STRUCTURE

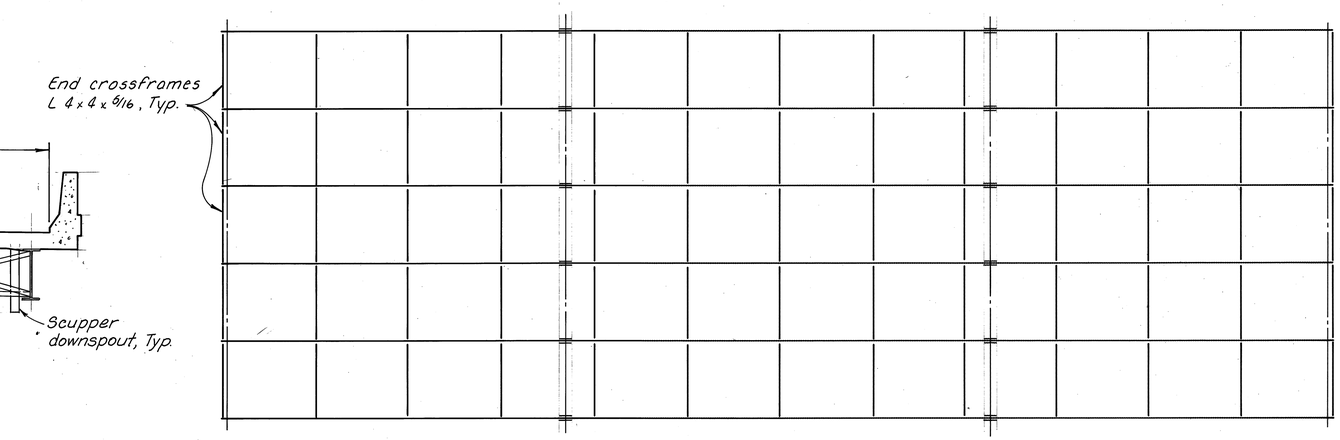

FRAMING PLAN - R. STRUCTURE

(All beams W 33 x 130)

CALC. BY RCE DATE 3/87	MED-42-1.89	OHIO	133
CHKD. BY DBC DATE 3/87	MED-224-10.45	FHWA REGION 5	189

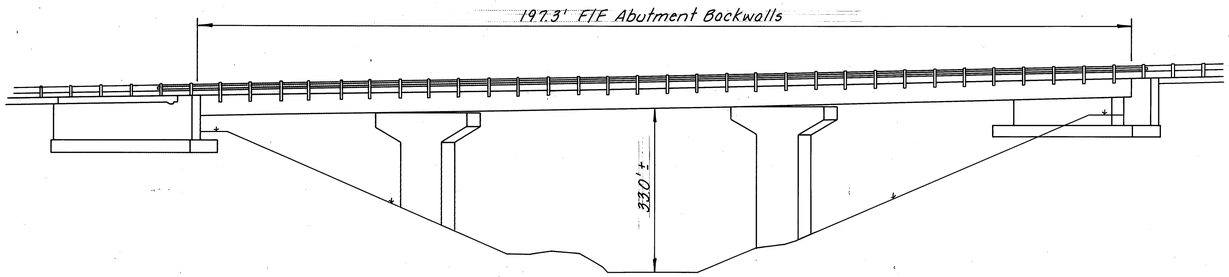

ELEVATION

ESTIMATED QUANTITIES		
ITEM	UNIT	DESCRIPTION
Special	Lump Sum	Field Painting of Existing Steel, Surface Preparation,*
Special	Lump Sum	Field Painting of Existing Steel, Prime Coat, *
Special	Lump Sum	Field Painting of Existing Steel, Intermediate Coat, *
Special	Lump Sum	Field Painting of Existing Steel, Finish Coat, *

*SYSTEM OZEU

APPROXIMATE SURFACE AREA = 11,300 Sq. Ft. L Structure
11,300 Sq. Ft. R Structure

Quantities carried to sheet 1/8

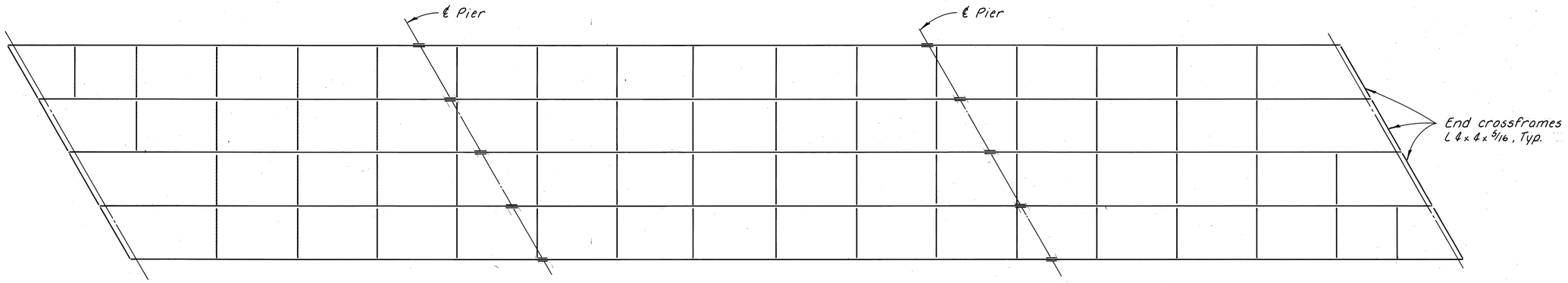

FRAMING PLAN L & R

(All beams W 36 x 194)

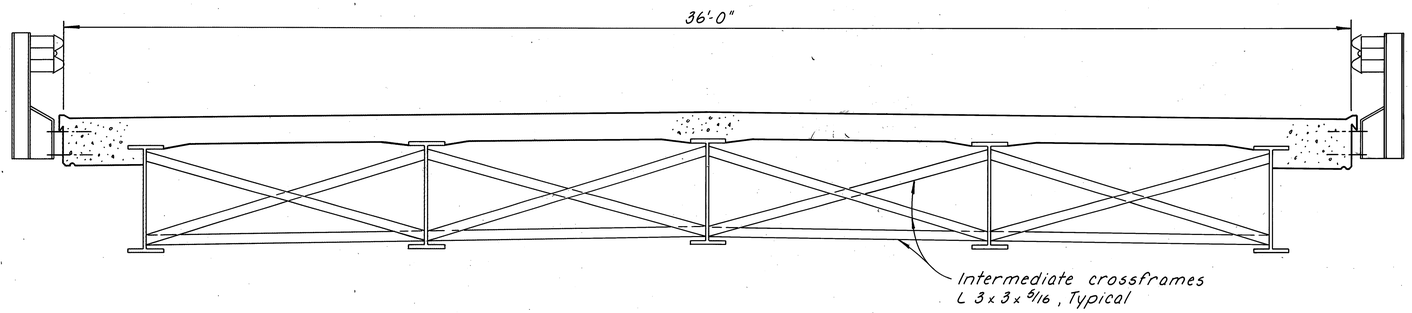

TRANSVERSE SECTION L & R STRUCTURES

CALC. BY RLE DATE 3/87	MED-42-1.89	OHIO
CHKD. BY DBC DATE 3/87	MED-224-10.45	FHWA REGION 5

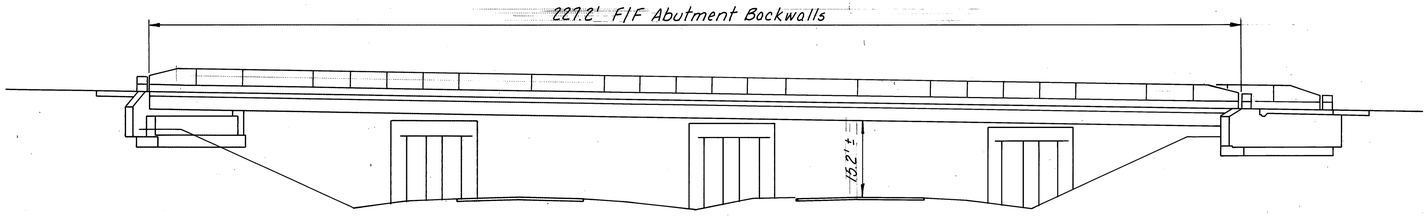

ELEVATION

ESTIMATED QUANTITIES		
ITEM	UNIT	DESCRIPTION
Special	Lump Sum	Field Painting of Existing Steel, Surface Preparation.*
Special	Lump Sum	Field Painting of Existing Steel, Prime Coat.*
Special	Lump Sum	Field Painting of Existing Steel, Intermediate Coat.*
Special	Lump Sum	Field Painting of Existing Steel, Finish Coat.*

*SYSTEM OZEU

APPROXIMATE SURFACE AREA = 11,900 Sq. Ft.

Quantities carried to sheet 1/8

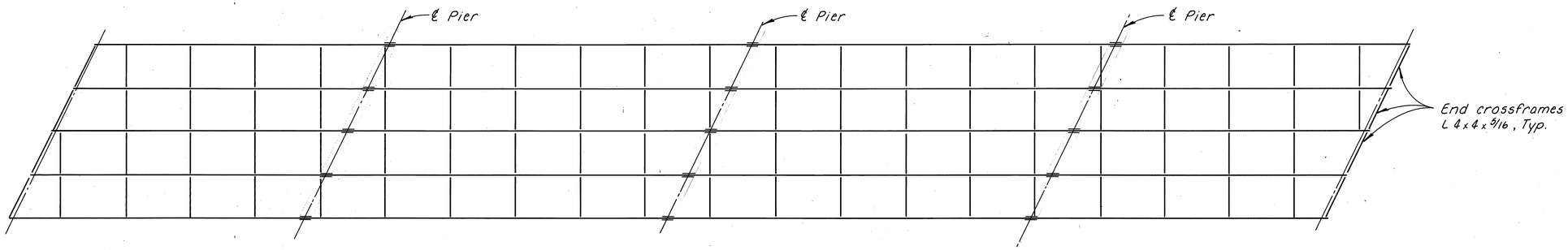

FRAMING PLAN

(All beams W 33 x 130)

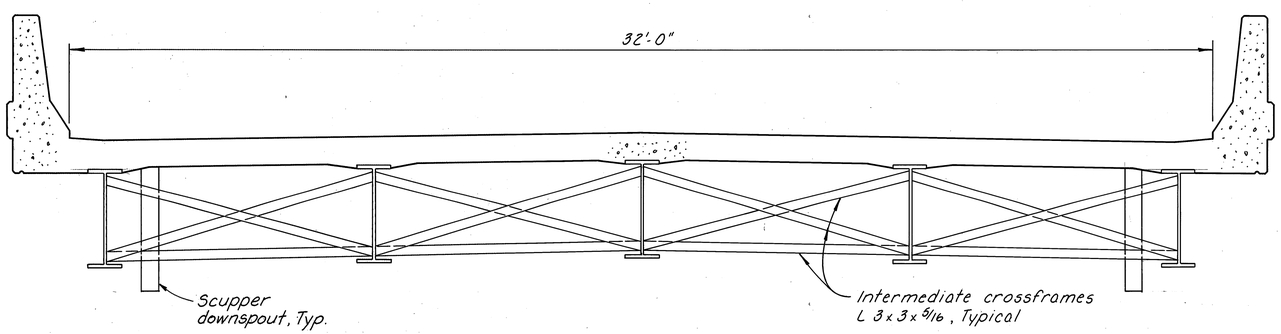

TRANSVERSE SECTION

CALC. BY RLE DATE 3/87	MED-42-1.89	OHIO
CHKD. BY DBC DATE 3/87	MED-224-10.45	FHWA REGION 5

135/189

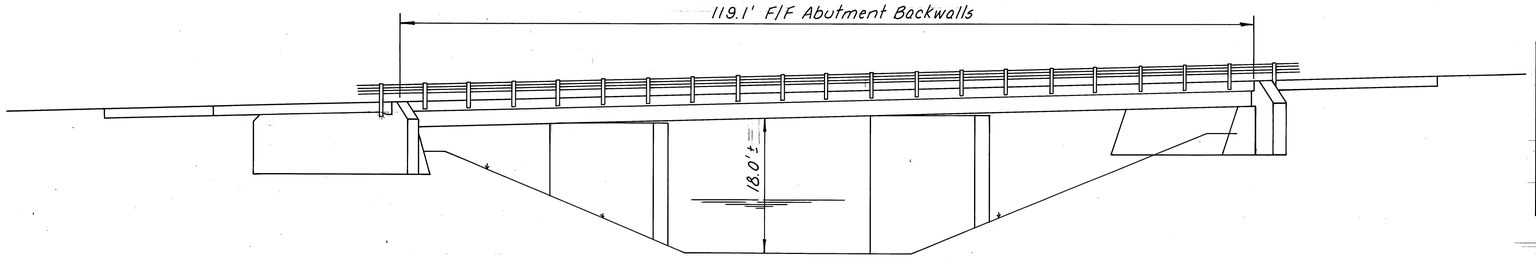

ELEVATION

ESTIMATED QUANTITIES		
ITEM	UNIT	DESCRIPTION
Special	Lump Sum	Field Painting of Existing Steel, Surface Preparation.*
Special	Lump Sum	Field Painting of Existing Steel, Prime Coat.*
Special	Lump Sum	Field Painting of Existing Steel, Intermediate Coat.*
Special	Lump Sum	Field Painting of Existing Steel, Finish Coat.*

*SYSTEM OZEU

APPROXIMATE SURFACE AREA = 7,200 Sq. Ft. L Structure
7,200 Sq. Ft. R Structure

Quantities carried to sheet 1/8

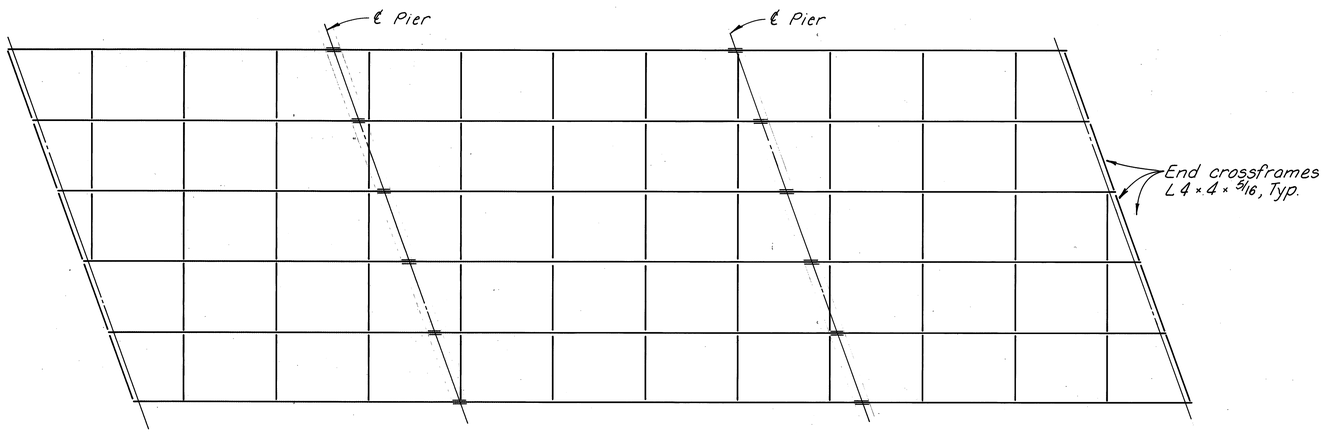

FRAMING PLAN L & R

(All beams W30x116)

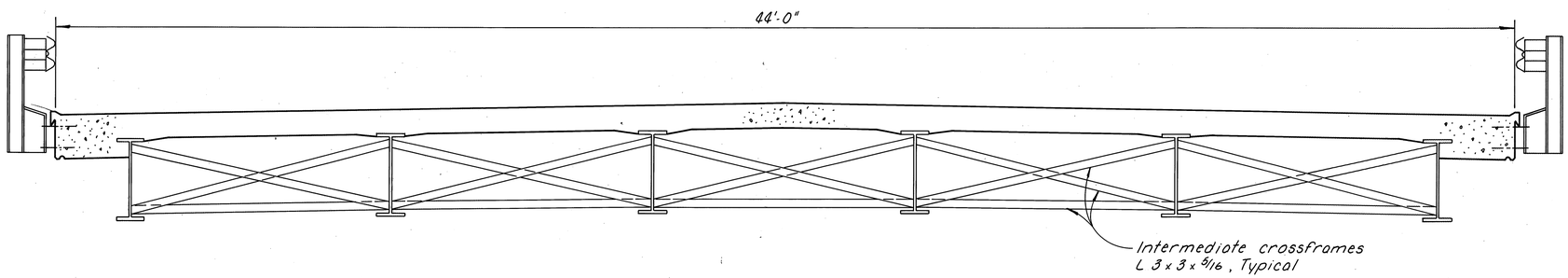

TRANSVERSE SECTION

MED-42-0589

6/8

CALC. BY RLE DATE 3/87	MED-42-1.89	OHIO	136
CHKD. BY DBC DATE 3/87	MED-224-10.45	FHWA REGION 5	189

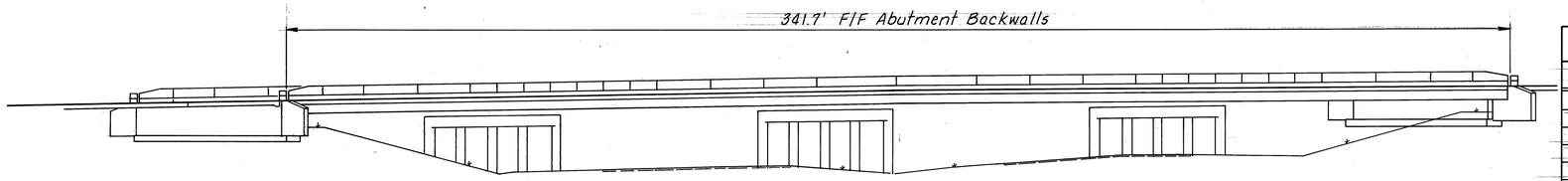

ELEVATION

ESTIMATED QUANTITIES		
ITEM	UNIT	DESCRIPTION
Special	Lump Sum	Field Painting of Existing Steel, Surface Preparation. *
Special	Lump Sum	Field Painting of Existing Steel, Prime Coat. *
Special	Lump Sum	Field Painting of Existing Steel, Intermediate Coat. *
Special	Lump Sum	Field Painting of Existing Steel, Finish Coat. *

* SYSTEM OZEU

APPROXIMATE SURFACE AREA = 20,900 Sq. Ft.

Additional Areas To Be Painted: Rocker Assemblies

Quantities carried to sheet 18

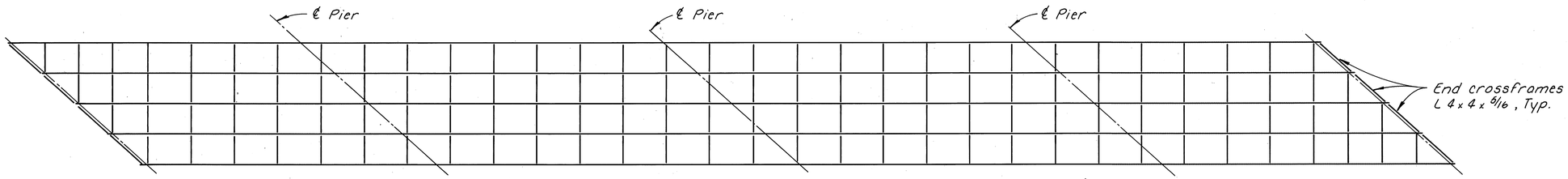

FRAMING PLAN

(All beams W36 x 280)

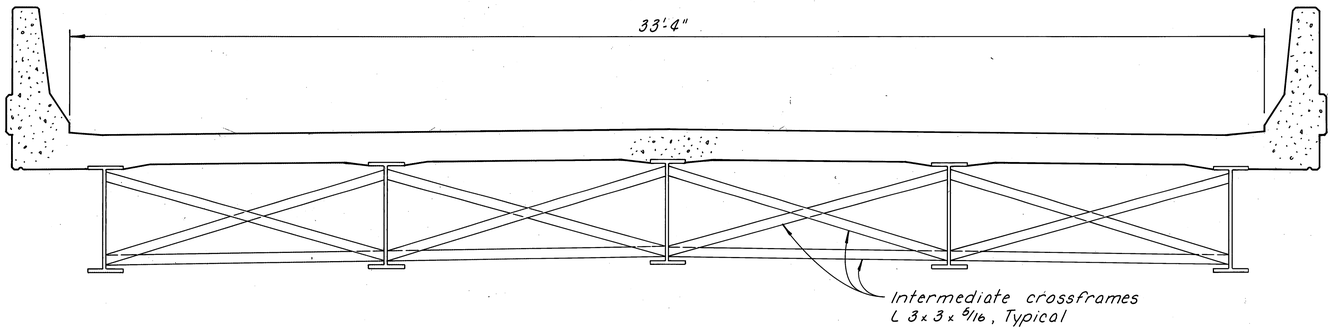

TRANSVERSE SECTION

CALC. BY RLE DATE 3/87	MED-42-1.89	OHIO	137
CHKD. BY DBC DATE 3/87	MED-224-10.45	FHWA REGION 5	189

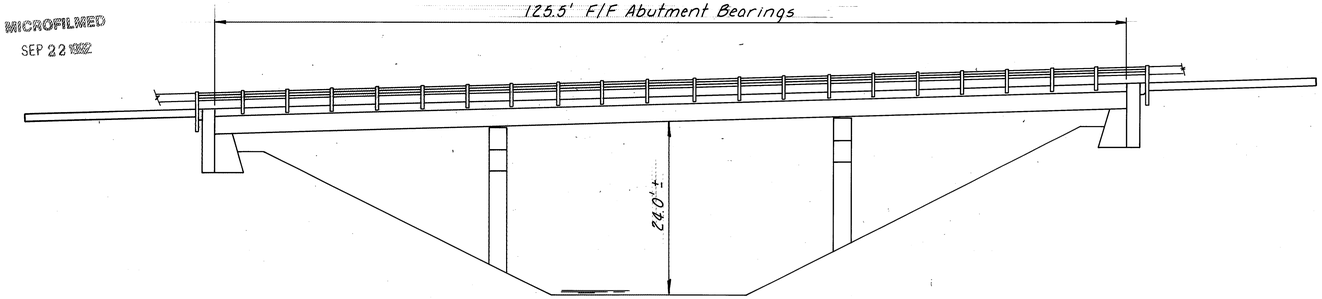

ELEVATION

ESTIMATED QUANTITIES		
ITEM	UNIT	DESCRIPTION
Special	Lump Sum	Field Painting of Existing Steel, Surface Preparation, *
Special	Lump Sum	Field Painting of Existing Steel, Prime Coat, *
Special	Lump Sum	Field Painting of Existing Steel, Intermediate Coat, *
Special	Lump Sum	Field Painting of Existing Steel, Finish Coat, *

* SYSTEM OZEU

APPROXIMATE SURFACE AREA = 6,900 Sq. Ft. L. Structure
7,700 Sq. Ft. R. Structure

Quantities carried to sheet 7 / 8

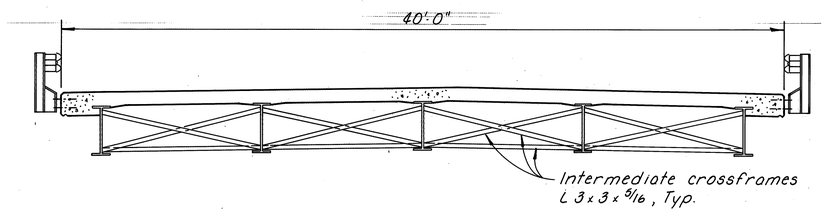

TRANSVERSE SECTION - L. STRUCTURE

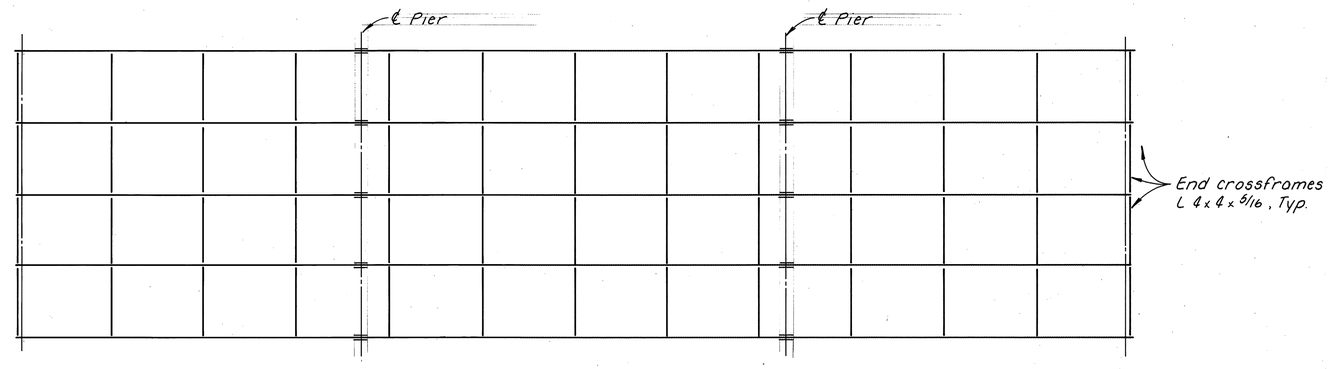

FRAMING PLAN - L. STRUCTURE
(All beams W33 x 130)

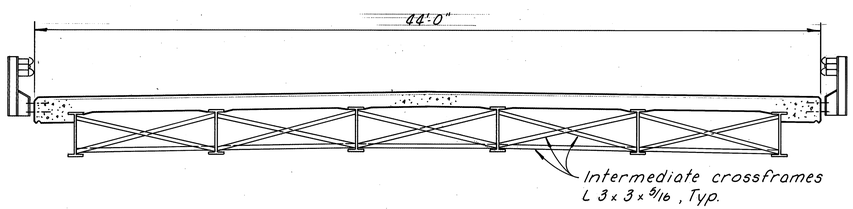

TRANSVERSE SECTION - R. STRUCTURE

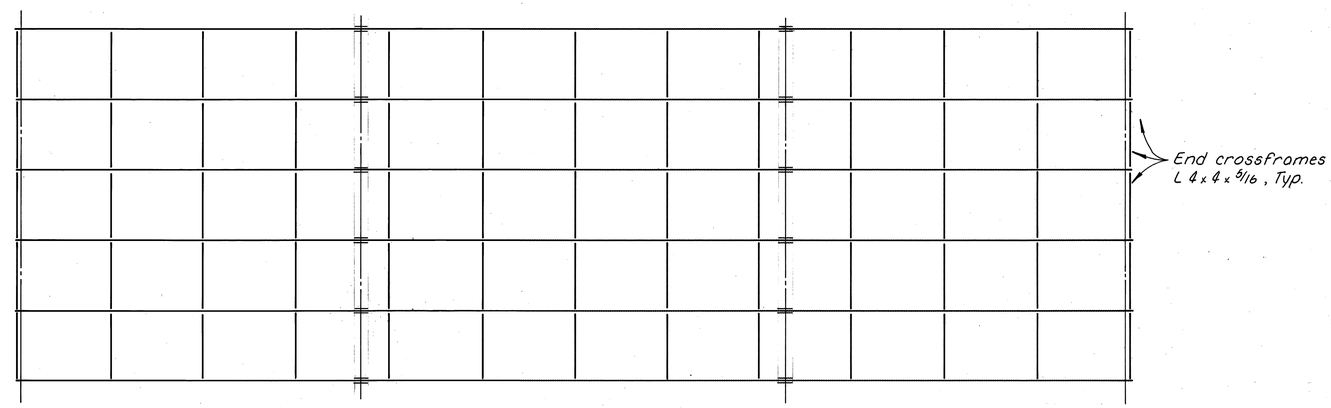

FRAMING PLAN - R. STRUCTURE
(All beams W30 x 124)

CALC. BY MEO DATE 5/88	MED-42-1.89	OHIO	138/189
CHKD. BY AFS DATE 5/88	MED-224-10.45	FHWA REGION 5	

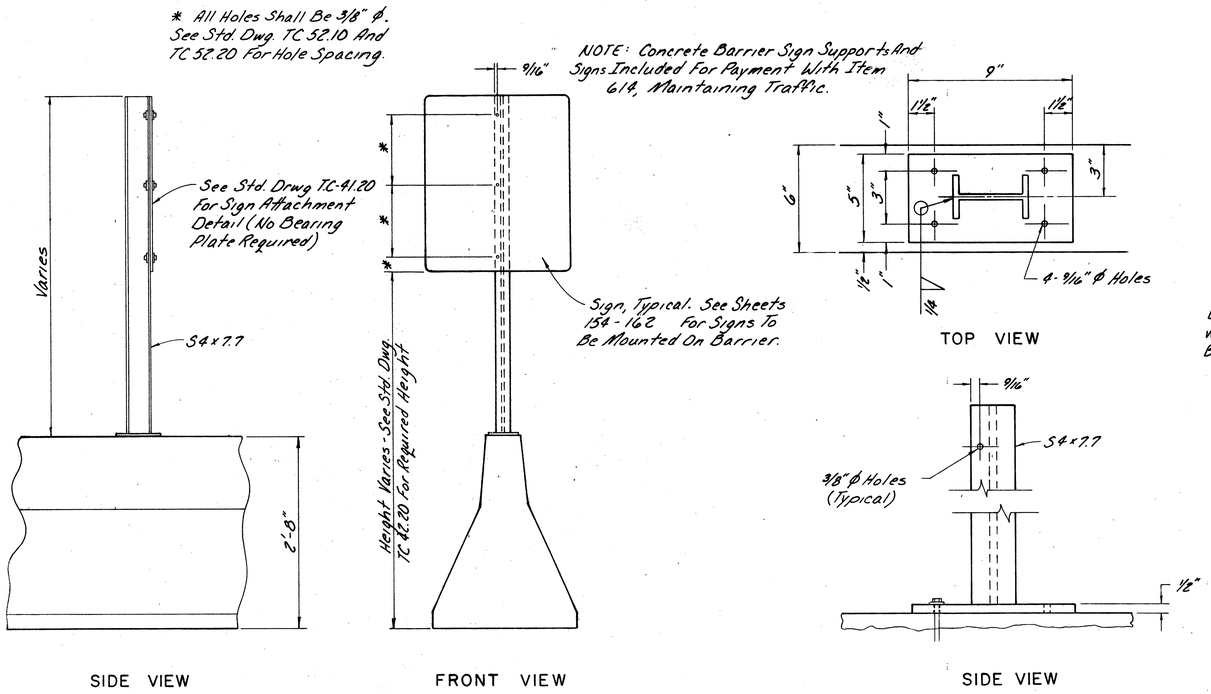

CONCRETE BARRIER SIGN SUPPORT DETAIL

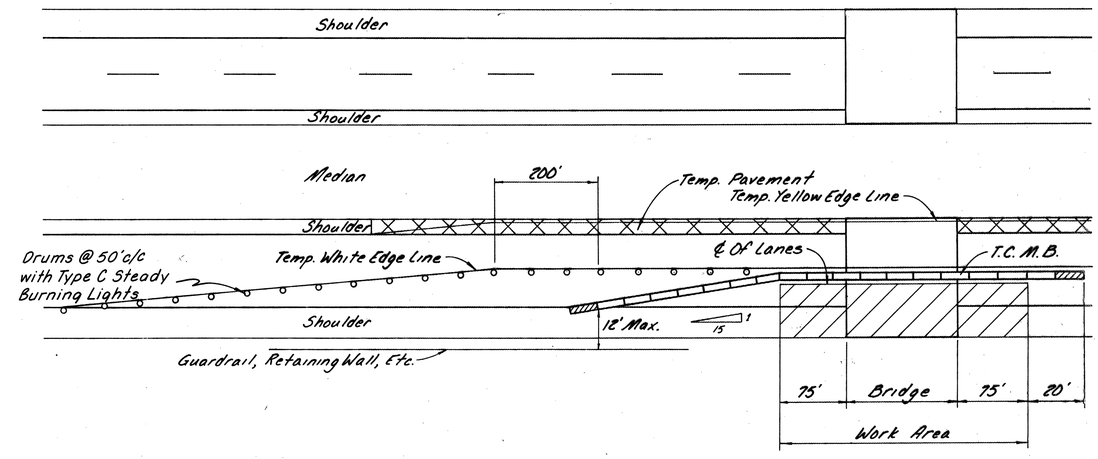

NOTES: 1. Work Area Protection shall be provided using Temporary Concrete Median Barrier and Drums as detailed on this sheet or at the Contractors option with Drums, as per the Notes on Sheet 139.
2. The Cost Of Work Area Protection Shall Be Included For Payment With Item 614 - Maintaining Traffic.
3. See Specific Bridge Maintenance Of Traffic Sheets For All Details Not Covered By This Drawing. Where Specific Bridge Maintenance Of Traffic Details Conflict With This Drawing, The Specific Details Shall Apply.

LEGEND

10' Tapered End Section

T.C.M.B. WORK AREA PROTECTION

NOTE: The Contractor Shall Remove The Bridge Mounted Sign Supports And Signs For Storage. State Forces Shall Reinstall The Bridge Mounted Signs, Upon Completion Of Parapet Replacement.

Payment For Above Shall Be Included In Item 630, Removal Of Bridge Mounted Signs And Storage.

NOTE: The Post Mounted Signs Shall Be In Place At All Times That The Bridge Mounted Sign Is Not In Place

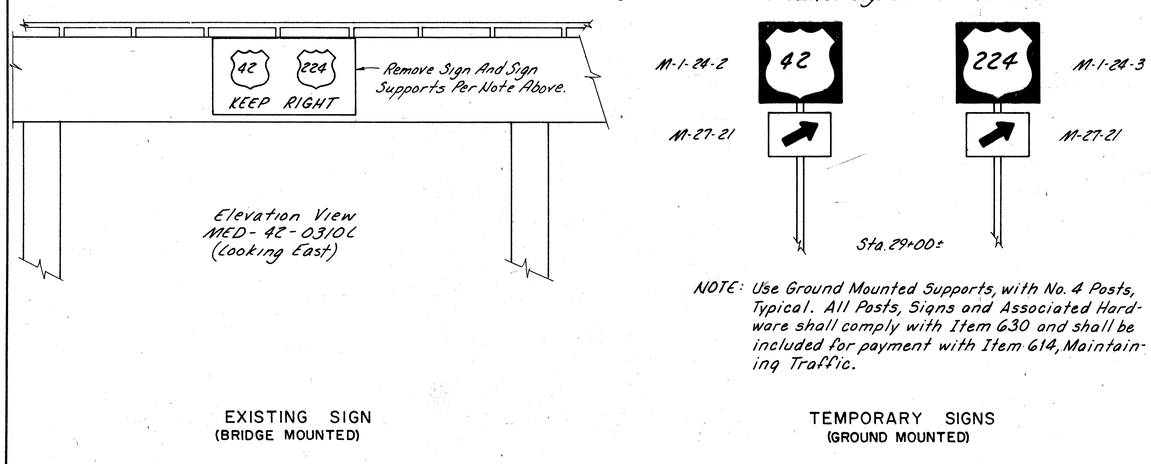

NOTE: Use Ground Mounted Supports, with No. 4 Posts, Typical. All Posts, Signs and Associated Hardware shall comply with Item 630 and shall be included for payment with Item 614, Maintaining Traffic.

EXISTING SIGN (BRIDGE MOUNTED)

TEMPORARY SIGNS (GROUND MOUNTED)

ADDITIONAL SIGNING FOR PARAPET REPLACEMENT

QUANTITIES FOR MAINTENANCE OF TRAFFIC

Funding Type	Location	Sheet No.	630 Removal of Overhd Str. Mounted Sign & Storage		614 Temporary* Edge Line, Class I (White)	614 Temporary* Edge Line, Class I (Yellow)	614 Temporary* Channelizing Line, Class I	614 Temporary* Lane Line, Class I	614 Temporary* Stop Line, Class I	614 Temporary* Centerline, Class I	615 Temporary Roads	615 Temporary Pavement, 6" Asphalt, As Per Plan	615 Temporary Pavement, 9" Asphalt, As Per Plan	615 Temporary Pavement, 10" Concrete, As Per Plan	622 Temp. Conc. Barrier, Bridge Rtx, As Per R.M.	622 Temporary Conc. Barrier, As Per Plan
			Each		Lin. Ft.	Lin. Ft.	Lin. Ft.	Lin. Ft.	Lin. Ft.	Lin. Ft.	Lump	Sq. Yds.	Sq. Yds.	Sq. Yds.	Lin. Ft.	Lin. Ft.
RS-440(11)	MED-42-0248	140							24	300	Lump	776			90	350
	MED-42-0265	140							24	300	Lump	776			90	350
	Total								48	600	Lump	1552			180	700
	Miles									0.11						
F-51 (70)	MED-42-0310	141/145	1		5011	6218	1250				Lump	1114			~~130~~ 130	~~320~~ 760
	MED-42-0460	146			4876	4876					Lump		2492			
	MED-224-1276	146			4912	4912					Lump		2492			
	MED-42-0539	147			17,760	17,972					Lump		8391			4060
	MED-42-0589	150													350	350
	MED-42-0688	151/152							28	300	Lump	361				
	-Co. Rd. 19-															
	Phase "A"	153 to 170			5783	6354		4677	74	255	Lump		3492	884		1950
	Phase "B"				1799	1924		1049	75	122	Lump		99	206		
	Phase "C"				5104	4105		3180	48	328	Lump		2500			
	Total		1		45,245	46,361	1250	8906	225	1005	Lump	1475	21,466	1090	610	7440
	Miles				17.35			1.69		0.19						
												Total 24,031 Sq. Yd.				

* Temporary Pavement Markings shall be 947.03, Type C Preformed Material or 621.02 paint applied using the following criteria: All Temporary Markings installed on a New Bridge Deck or on Permanent Pavement shall be 947.03, Type C Preformed Material. Paint may be used for Temporary Markings installed on Existing Bridge Decks to be replaced or overlayed, or on Existing Pavement that will be Resurfaced.

Quantities carried to sheets 14 & 15

Revised 3-11-89

MAINTENANCE OF TRAFFIC DETAILS

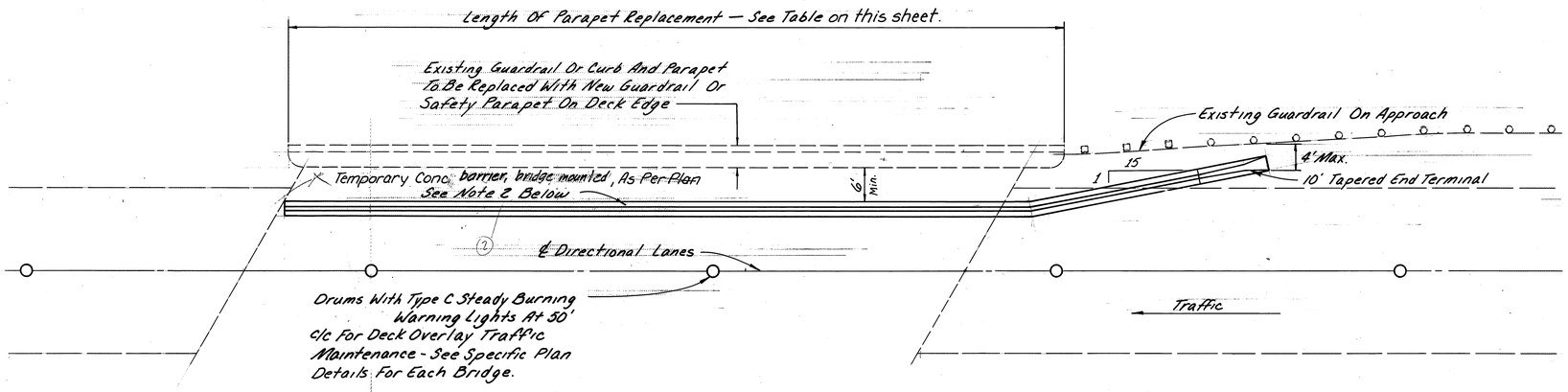

TYPICAL DETAIL FOR PLACEMENT OF TEMPORARY CONCRETE BARRIER, BRIDGE MOUNTED, AS PER PLAN TO PROTECT TRAFFIC DURING REPLACEMENT OF GUARDRAIL OR PARAPET

NOTE: Barrier Reflector, Type "B" - Mount At 50' Spacing, Alternating With Type "C" Steady Burning Warning Lights. See Sheet 176 For Reflector Details.

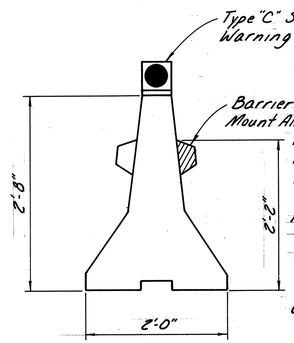

Barrier Reflector color shall be similar to appropriate edge line color.

NOTE: Cost Of Barricade Warning Lights And Barrier Reflectors To Be Included For Payment With Item 622, Temporary Concrete Barrier, as per plan & bridge mounted, as per plan.

NOTES:

1. Temporary Concrete Barrier, Bridge Mounted, As Per Plan shall be used to protect traffic during the removal and replacement of the existing guardrail or curb and parapet, and shall remain in place until the new guardrail or new safety parapet is completed. See Sheet 177.

2. The lateral location of the Temporary Barrier, bridge mounted, as per plan, shall be at least 6' from the face of the existing guardrail or curb and parapet to be replaced and shall be placed within the limits of the area of the Deck Overlay Closure. The approach end of the barrier shall be tapered back to the existing guardrail and an End Terminal provided. After the parapet or guardrail replacement work is complete the contractor may at his option remove the temporary barrier and complete the bridge deck overlay work using drum protection as detailed. If this method is chosen all material & equipment shall be removed from the work area when work is not being performed. (See Sht. 138 for additional notes & payment)

~~Item 622 Temporary Concrete Barrier, As Per Plan~~

~~Estimated length of temporary concrete barrier, as per plan, are provided in order for the Contractor to anticipate schedule for the Guardrail or Parapet replacement work (and corresponding deck overlay) on the bridge listed. The actual physical length required for the entire projects, based on one time usage only and not the actual purchase quantity. The actual length of temp. conc. barrier will depend on the contractor procedure. The cost of furnishing and placing Temporary Concrete Barrier, As Per Plan shall be paid for under unit price bid, per Lin. Ft.~~

Bridge No.	Length Of Bridge Parapet Or Guardrail Replacement Lin. Ft.
MED-42-0248	87.5±
MED-42-0265	150.0±
MED-42-0310 L&R	128.5±
MED-42-0460 L&R	124.7±
MED-42-0539 L&R	206.3±
MED-42-0574	236.3±
MED-42-0589 L&R	125.0±
MED-42-0688	348.5±
MED-224-1276 L&R	131.3±

ITEM 622 - TEMPORARY CONCRETE BARRIER, ~~AS PER PLAN~~ & BRIDGE MOUNTED, AS PER PLAN.

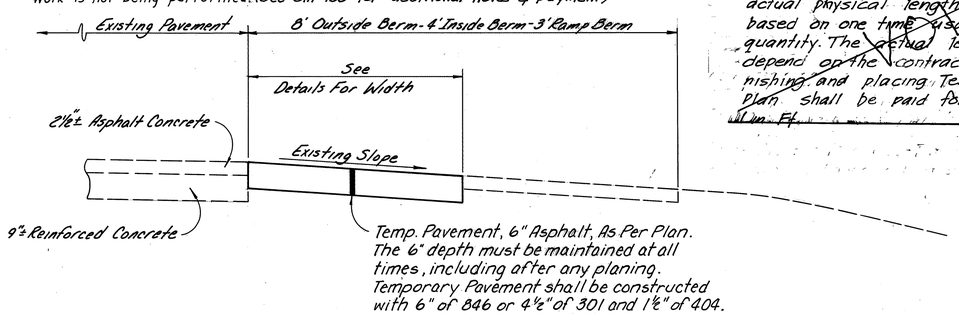

TYPICAL SECTION FOR TEMPORARY PAVEMENT

Revised 3-11-89

TEMPORARY PAVEMENT & TEMPORARY CONCRETE BARRIER DETAILS

NOTE: For Additional Details (Signs, Signals, Luminaires, Etc.), Not Shown, See Signalized Closing Of One Lane Of A Two Lane Highway - Sheets 172-174.

NOTE: Typical Section For Temporary Pavement, 6" Asphalt, As Per Plan See Detail On Sheet 139.

NOTE: Only One Of These Structures (MED-42-0248 Or MED-42-0265) May Be Worked On At One Time.

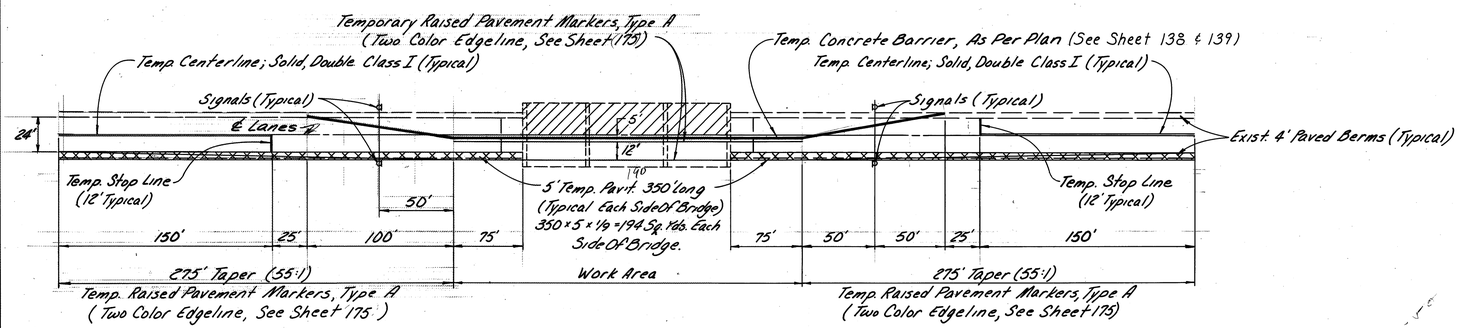

PHASE "A"
MED-42-0248 MED-42-0265

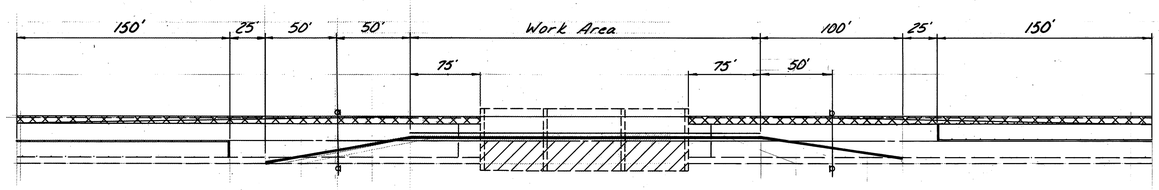

PHASE "B"
MED-42-0248 MED-42-0265

BRIDGE NO. AND PHASE	615	622		614	
	Temporary Pavement, 6" Asphalt, As Per Plan	Temp. Conc. Barrier, Bridge Mtd., As Per Plan	Temporary Concrete barrier, as per plan	Temporary Centerlines Class I *	Temporary Stop Lines Class I *
	Sq. Yds.	Lin. Ft.	Lin. Ft.	Lin. Ft.	Lin. Ft.
MED-42-0248					
Phase "A"	388	90	350	300'	24'
Phase "B"	388				
MED-42-0265					
Phase "A"	388	90	350	300'	24'
Phase "B"	388				
TOTALS	1552	180	700	600'	48'

Quantities Carried To Sheet No. 138.
For Temporary Raised Pavement Marker Quantities-See Sheet 175.

* Temporary Pavement Markings Shall Be 947.03 Type C Preformed Material Or 621.02 Paint Applied Using The Following Criteria:
All Temporary Markings Installed On A New Bridge Deck Or On Permanent Pavement Shall Be 947.03, Type C. Paint May Be Used For Temporary Markings Installed On Existing Bridge Decks To Be Replaced Or Overlayed, Or On Existing Pavement That Will Be Resurfaced.

BRIDGE DECK REPAIR

PHASES "A" & "B"
MED-42-0248 & 0265
MAINTENANCE OF TRAFFIC

Revised 3-11-89

CALC. BY MED DATE 3-88	MED-42-1.89	OHIO
CHKD. BY AFS DATE 3-88	MED-224-10.45	FHWA REGION 5

141 / 189

NOTE: Items Not Dimensioned Or Identified In Detail Are To Be Same As Below.

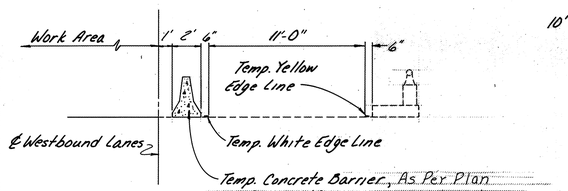

SECTION A-A

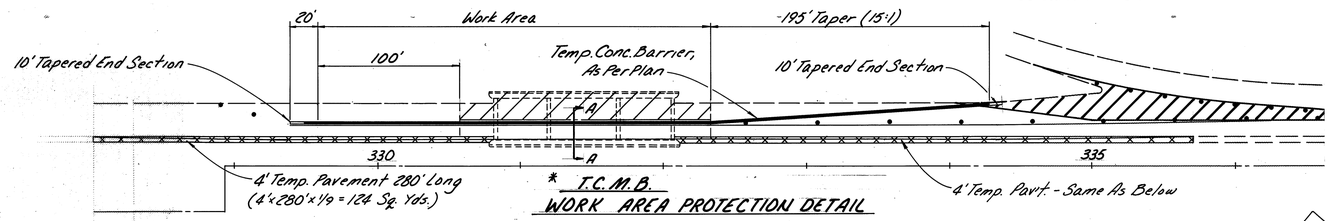

* T.C.M.B.
WORK AREA PROTECTION DETAIL

NOTE: Existing Transverse And Channelizing Lines, At Ramp "A", To Remain During Phase "A".

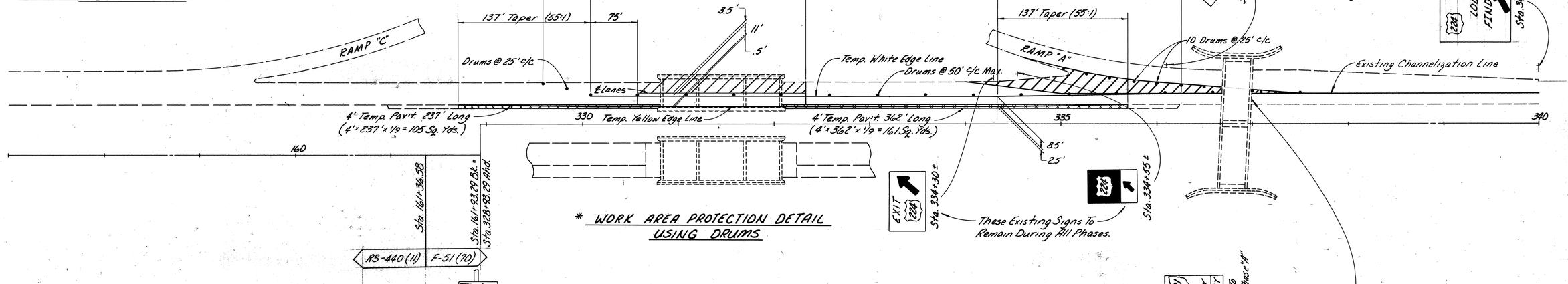

* WORK AREA PROTECTION DETAIL USING DRUMS

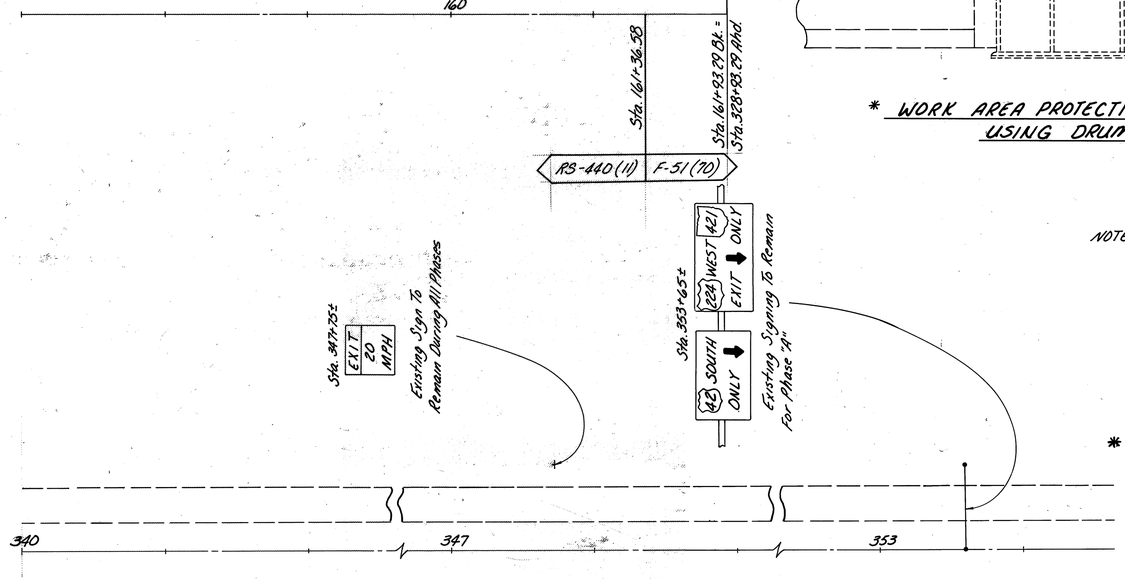

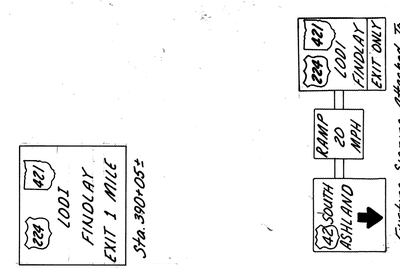

NOTES:

1. All Drums For Phases A & B Shall Have Type "C" Steady Burning Warning Lights Attached.
2. For Additional Details, Notes And Signing, See Sheet No. 180
3. Quantities For Phase "A" Carried On Sheet No. 145.
4. All Temporary Pavement, 6" Asphalt, As Per Plan Is To Remain In Place As New Paved Berm.
* 5. Work Area Protection Shall Be Provided Using Drums As Detailed Above Or At The Contractors Option With Drums As Detailed Above And As Per The Notes On Sheet 139.

The Cost Of Work Area Protection Shall Be Included For Payment With Item 614, Maintaining Traffic.

6. All Quantities Are F51 (70)

Item 622 Temporary Concrete Barrier, As Per Plan - - - 320 Lin. Ft.
ITEM 622 TEMPORARY CONCRETE BARRIER, BRIDGE MOUNTED, AS PER PLAN - - - - - - - - - 130 Lin. Ft.

PHASE "A"
MED-42-0310L

Revised 3-11-89

MAINTENANCE OF TRAFFIC

*NOTE: For T.C.M.B. Work Area Protection Detail See Sheet 138.

NOTE: Existing Transverse And Channelizing Lines At Ramp "A" Are To Be Removed For Phase "B".

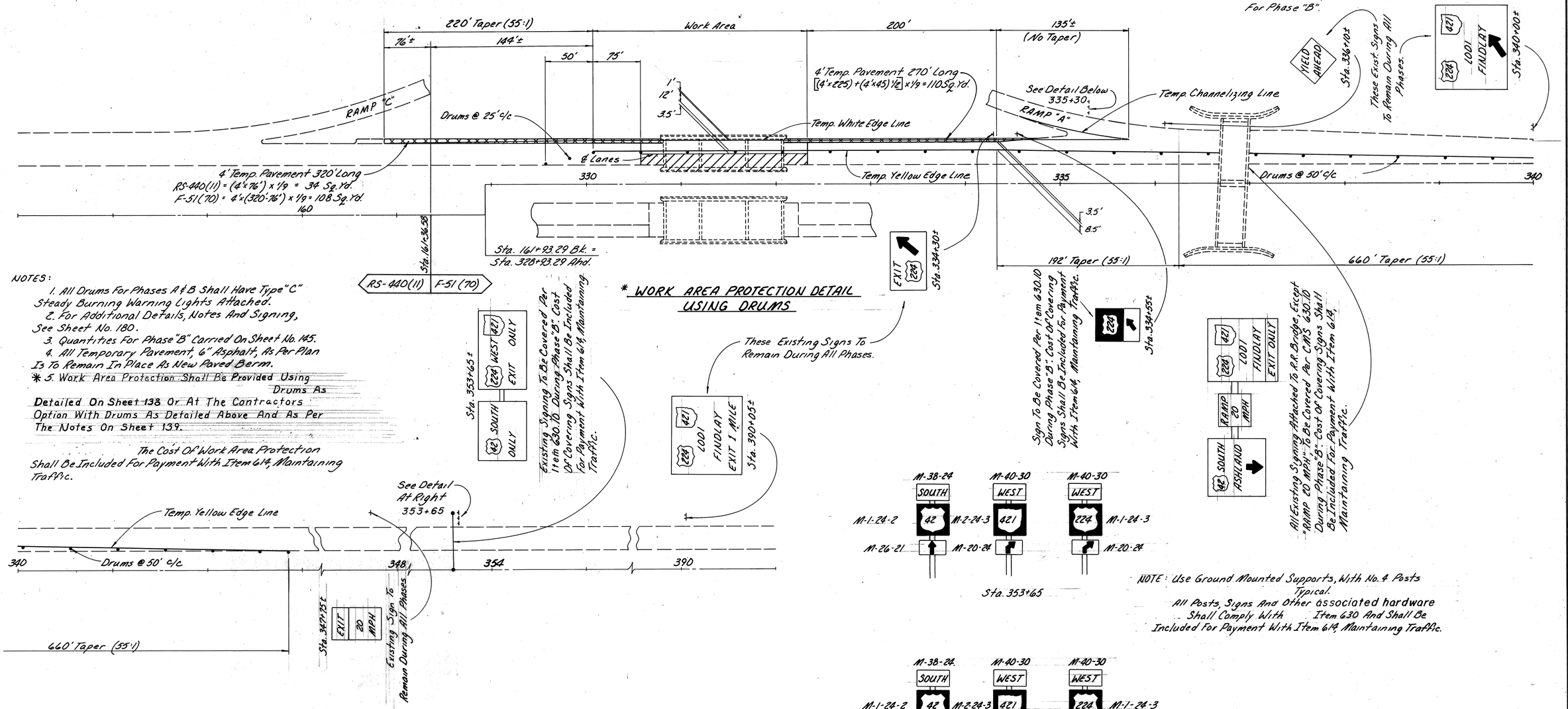

NOTES:

1. All Drums For Phases A & B Shall Have Type "C" Steady Burning Warning Lights Attached.
2. For Additional Details, Notes And Signing, See Sheet No. 180.
3. Quantities For Phase "B" Carried On Sheet No. 145.
4. All Temporary Pavement, 6" Asphalt, As Per Plan Is To Remain In Place As New Paved Berm.
5. ~~Work Area Protection Shall Be Provided Using Drums As Detailed On Sheet 138 Or At The Contractors Option With Drums As Detailed Above And As Per The Notes On Sheet 139.~~ *

The Cost Of Work Area Protection Shall Be Included For Payment With Item 614, Maintaining Traffic.

* WORK AREA PROTECTION DETAIL USING DRUMS

PHASE "B"
MED-42-0310L

Revised 3-11-89

MAINTENANCE OF TRAFFIC

CALC. BY MED DATE 3-88	MED-42-1.89	OHIO
CHKD. BY AFS DATE 3-88	MED-224-10.45	FHWA REGION 5

143/189

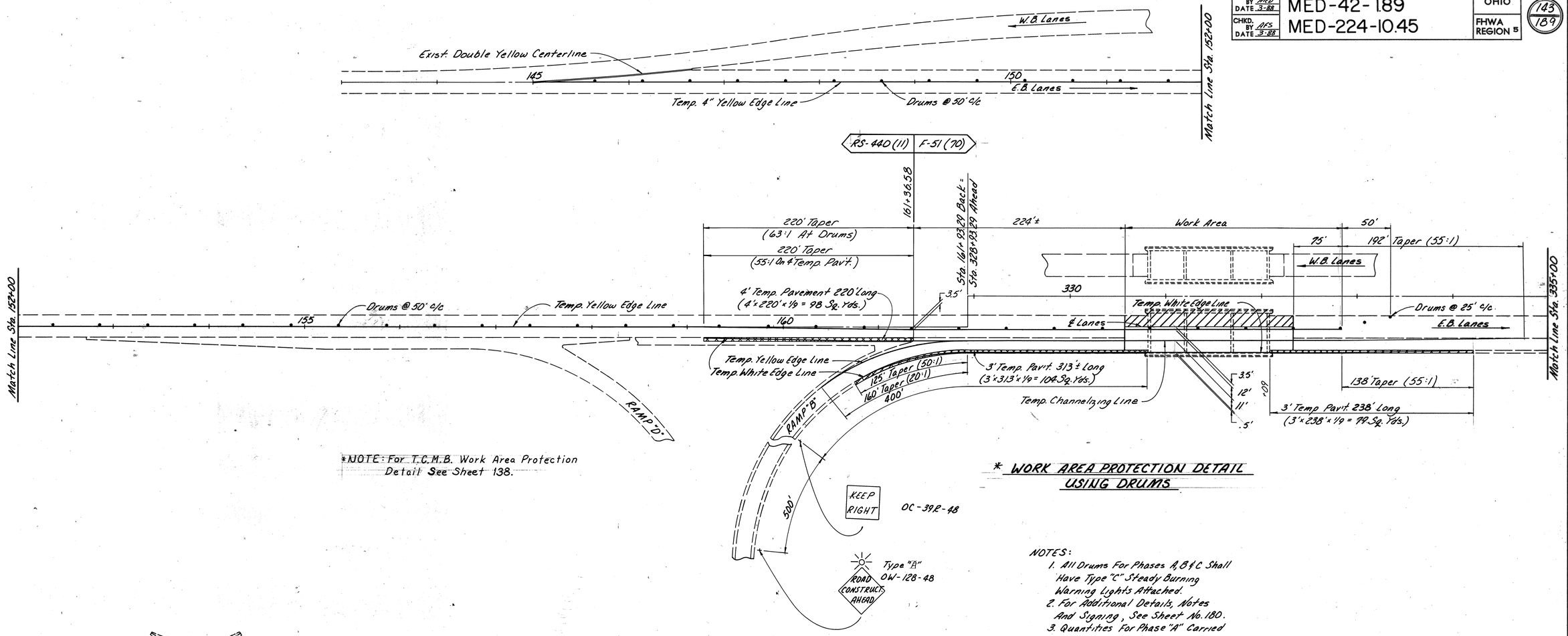

*NOTE: For T.C.M.B. Work Area Protection Detail See Sheet 138.

* WORK AREA PROTECTION DETAIL USING DRUMS

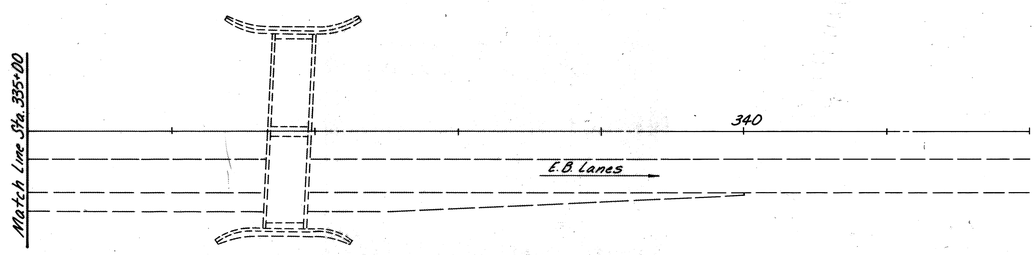

NOTES:

1. All Drums For Phases A, B & C Shall Have Type "C" Steady Burning Warning Lights Attached.
2. For Additional Details, Notes And Signing, See Sheet No. 180.
3. Quantities For Phase "A" Carried On Sheet No. 185.
4. All Temporary Pavement, 6" Asphalt, As Per Plan Is To Remain In Place As New Paved Berm.
5. Contractor To Remove Or Cover All Divided Highway Signs For Phases A, B & C.
6. * Work Area Protection Shall Be Provided Using Drums As Detailed On Sheet 138 Or At The Contractors Option With Drums As Detailed Above And As Per The Notes On Sheet 139.

The Cost Of Work Area Protection Shall Be Included For Payment With Item 614, Maintaining Traffic.

PHASE "A"
MED-42-0310R

Revised 3-11-89

MAINTENANCE OF TRAFFIC

CALC. BY MED DATE 3-88	MED-42-1.89	OHIO	144
CHKD. BY AES DATE 3-88	MED-224-10.45	FHWA REGION 5	189

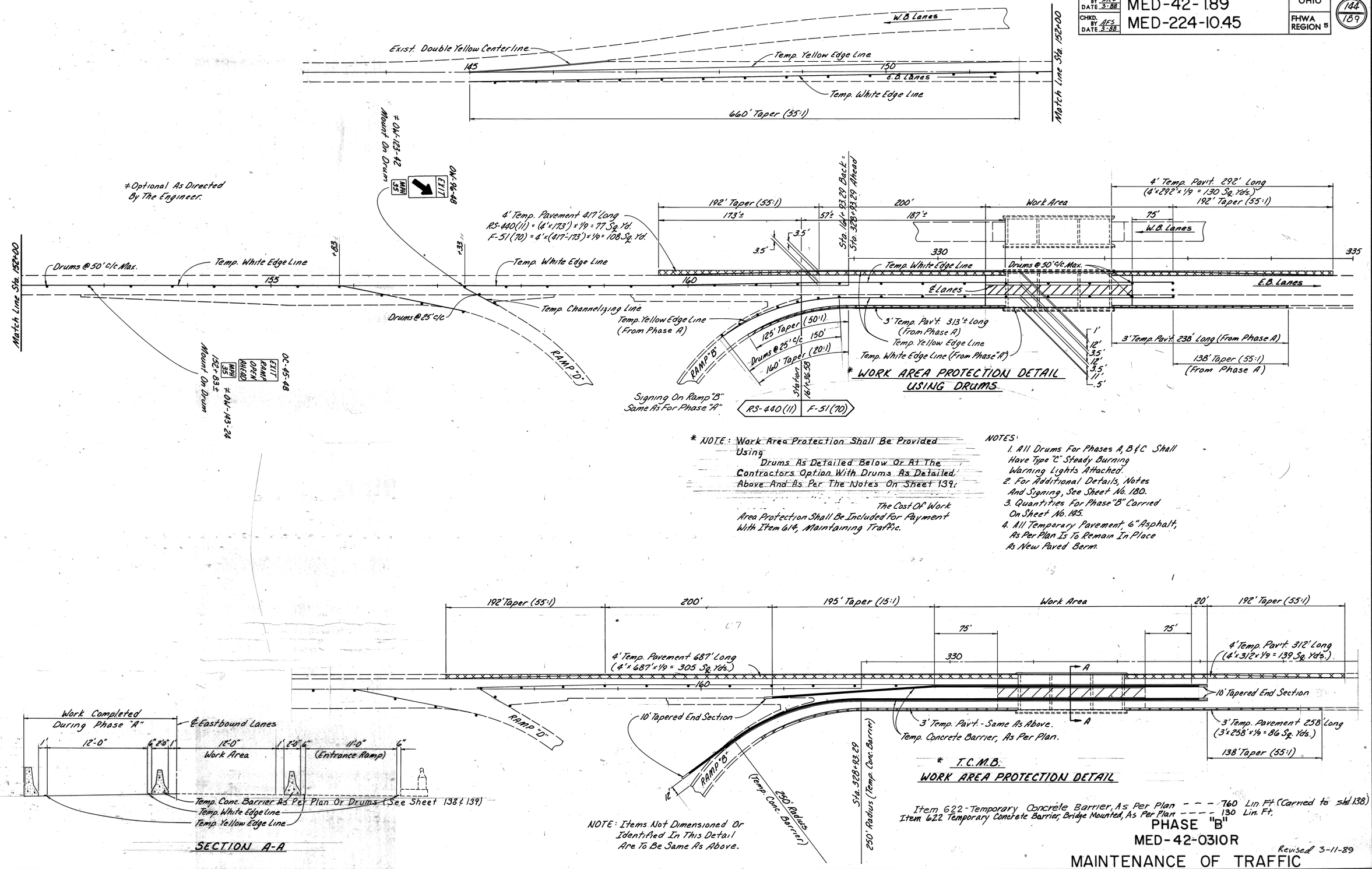

* WORK AREA PROTECTION DETAIL USING DRUMS

* NOTE: Work Area Protection Shall Be Provided Using Drums As Detailed Below Or At The Contractors Option With Drums As Detailed Above And As Per The Notes On Sheet 139.

The Cost Of Work Area Protection Shall Be Included For Payment With Item 614, Maintaining Traffic.

NOTES:

1. All Drums For Phases A, B & C Shall Have Type "C" Steady Burning Warning Lights Attached.
2. For Additional Details, Notes And Signing, See Sheet No. 180.
3. Quantities For Phase "B" Carried On Sheet No. 145.
4. All Temporary Pavement, 6" Asphalt, As Per Plan Is To Remain In Place As New Paved Berm.

NOTE: Items Not Dimensioned Or Identified In This Detail Are To Be Same As Above.

* T.C.M.B.

WORK AREA PROTECTION DETAIL

Item 622-Temporary Concrete Barrier, As Per Plan - - - 760 Lin. Ft. (Carried to Sht. 138)
Item 622 Temporary Concrete Barrier, Bridge Mounted, As Per Plan - - - 130 Lin. Ft.

PHASE "B"

MED-42-0310R

Revised 3-11-89

MAINTENANCE OF TRAFFIC

CALC. BY MED DATE 3-88 / CHKD. BY AES DATE 3-88	MED-42-1.89 MED-224-10.45	OHIO FHWA REGION 5	145/189

Funding Type	BRIDGE NO. AND PHASE	614 Temporary Edge Lines Class I ★ (White)	614 Temporary Edge Lines Class I ★ (Yellow)	614 Temporary Channelizing Lines Class I ★	615 Temp. Pavt., 6" Asphalt, As Per Plan	
		Lin. Ft.	Lin. Ft.	Lin. Ft.	Sq. Yd.	
RS-440(11)	MED-42-0310 L					
	Phase "B"	76			34	
	MED-42-0310 R					
	Phase "A"	220	1637		98	
	Phase "B"	1637	833	50	77	
	Total	1933	2470	50	209	
F-51(70)	MED-42-0310 L					
	Phase "A"	645	727		266	
	Phase "B"	732	1305	120	218	
	MED-42-0310 R					
	Phase "A"	736	637	607	183	
	Phase "B"	472	1079		238	
	Phase "C"	493		473		
	Total	3078	3748	1200	905	

Quantities Carried To Sheet No. 138.

★ Temporary Pavement Markings Shall Be 947.03 Type C Preformed Material Or 621.02 Paint Applied Using The Following Criteria:
All Temporary Markings Installed On A New Bridge Deck Or On Permanent Pavement Shall Be 947.03, Type C.
Paint May Be Used For Temporary Markings Installed On Existing Bridge Decks To Be Replaced Or Overlayed, Or On Existing Pavement That Will Be Resurfaced.

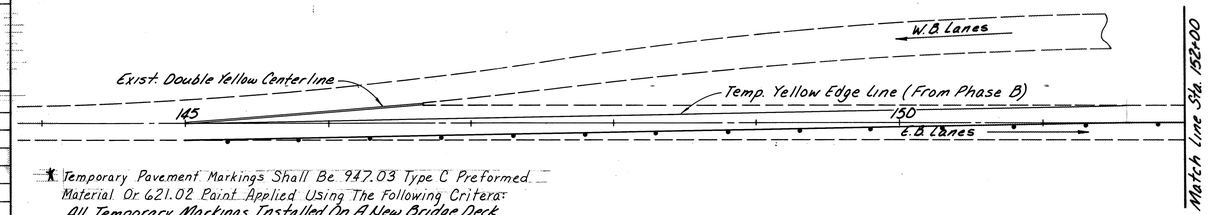

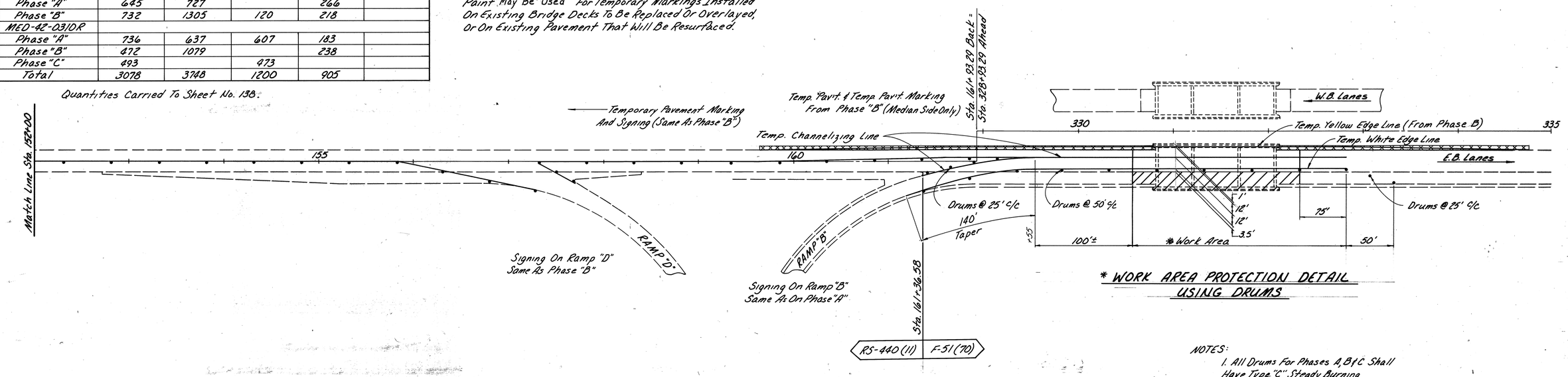

* WORK AREA PROTECTION DETAIL USING DRUMS

NOTES:

1. All Drums For Phases A, B & C Shall Have Type "C" Steady Burning Warning Lights Attached.
2. For Additional Details, Notes And Signing, See Sheet No. 180.
3. Quantities For Phase "C" Carried On Sheet No. 145.
4. All Temporary Pavement, 6" Asphalt, As Per Plan Is To Remain In Place As New Paved Berm.
5. ★ Work Area Protection Shall Be Provided Using Drums As Detailed Or At The Contractors Option With Drums As Detailed Above And As Per The Notes On Sheet 139. The Cost Of Work Area Protection Shall Be Included For Payment With Item 614, Maintaining Traffic.

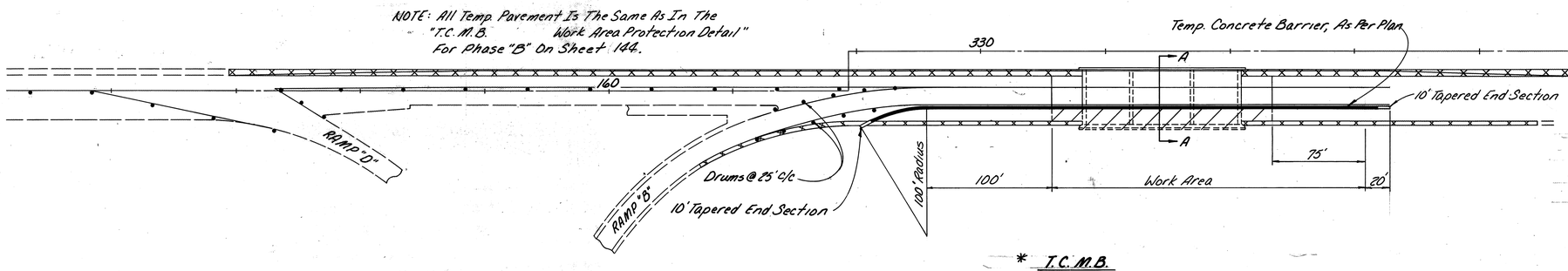

* T.C.M.B. WORK AREA PROTECTION DETAIL

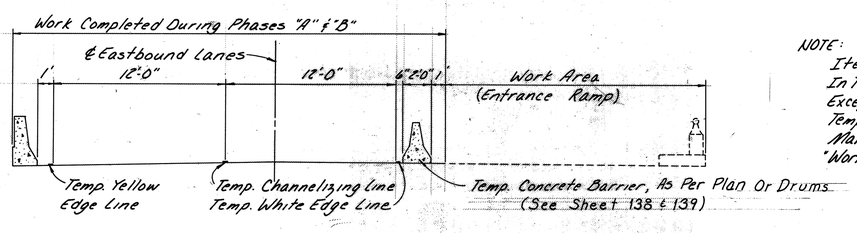

SECTION A-A

NOTE:
Items Not Dimensioned Or Identified In This Detail Are To Be Same As Above, Except For Temporary Pavement. All Temporary Pavement And Temp. Pavt. Markings Are To Be The Same As In The "Work Area Protection Detail" For Phase "B".

PHASE "C"
MED-42-0310R
Revised 3-11-89
MAINTENANCE OF TRAFFIC

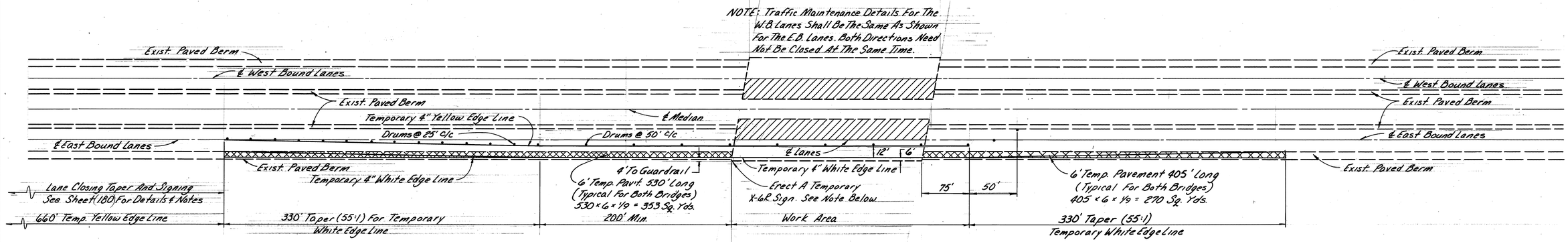

* WORK AREA PROTECTION DETAIL USING DRUMS

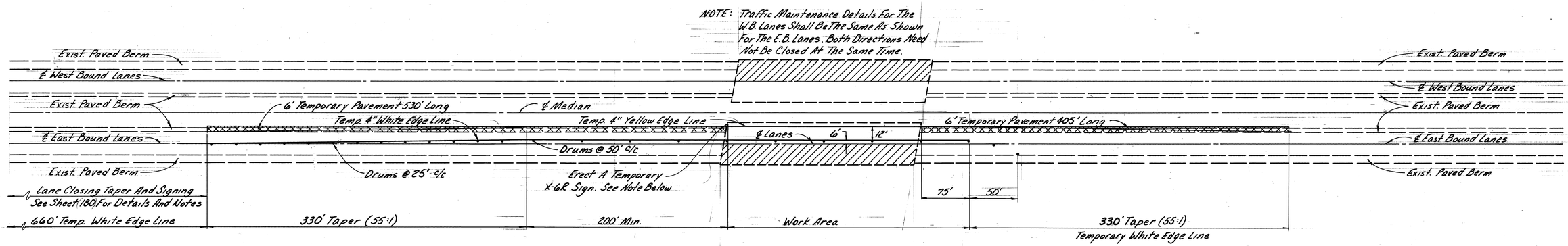

* WORK AREA PROTECTION DETAIL USING DRUMS

NOTES

1. Erect Temporary X-6R (L) Sign, If Not Already Existing, To Approach Corners Of The Bridge Parapets. Cost Included In Item 614, Maintaining Traffic.
2. The Temporary Pavements Shall Remain In Place As Paved Berm.

* 3. Work Area Protection Shall Be Provided Using Drums As Detailed On Sheet 138 Or At The Contractors Option With Drums As Detailed Above And As Per The Notes On Sheet 139.
The Cost Of Work Area Protection Shall Be Included For Payment With Item 614, Maintaining Traffic.

★ Temporary Pavement Markings Shall Be 947.03 Type C Preformed Material Or 621.02 Paint Applied Using The Following Critera:
All Temporary Markings Installed On A New Bridge Deck Or On Permanent Pavement Shall Be 947.03, Type C. Paint May Be Used For Temporary Markings Installed On Existing Bridge Decks To Be Replaced Or Overlayed, Or On Existing Pavement That Will Be Resurfaced.

NOTE: For T.M.B.C. Work Area Protection Detail See Sheet 138.

BRIDGE NO. AND PHASE	614		615		
	Temporary Edge Lines Class I ★ (White)	Temporary Edge Lines Class I ★ (Yellow)	Temporary Pavement, 9" Asphalt, As Per Plan		
	Lin. Ft.	Lin. Ft.	Sq. Yd.		
MED-42-0460 L/R					
Phase "A"	2108	2768	1246		
Phase "B"	2768	2108	1246		
MED-224-1276 L/R					
Phase "A"	2126	2786	1246		
Phase "B"	2786	2126	1246		
	9788	9788	4984		

Quantities Carried To Sheet No. 138

MED-42-0460 & MED-224-1276 PHASES "A" & "B"
MAINTENANCE OF TRAFFIC

Revised 3-11-89

CALC. BY MED DATE 3-88	MED-42-1.89	OHIO	147/189
CHKD. BY AFS DATE 3-88	MED-224-10.45	FHWA REGION 5	

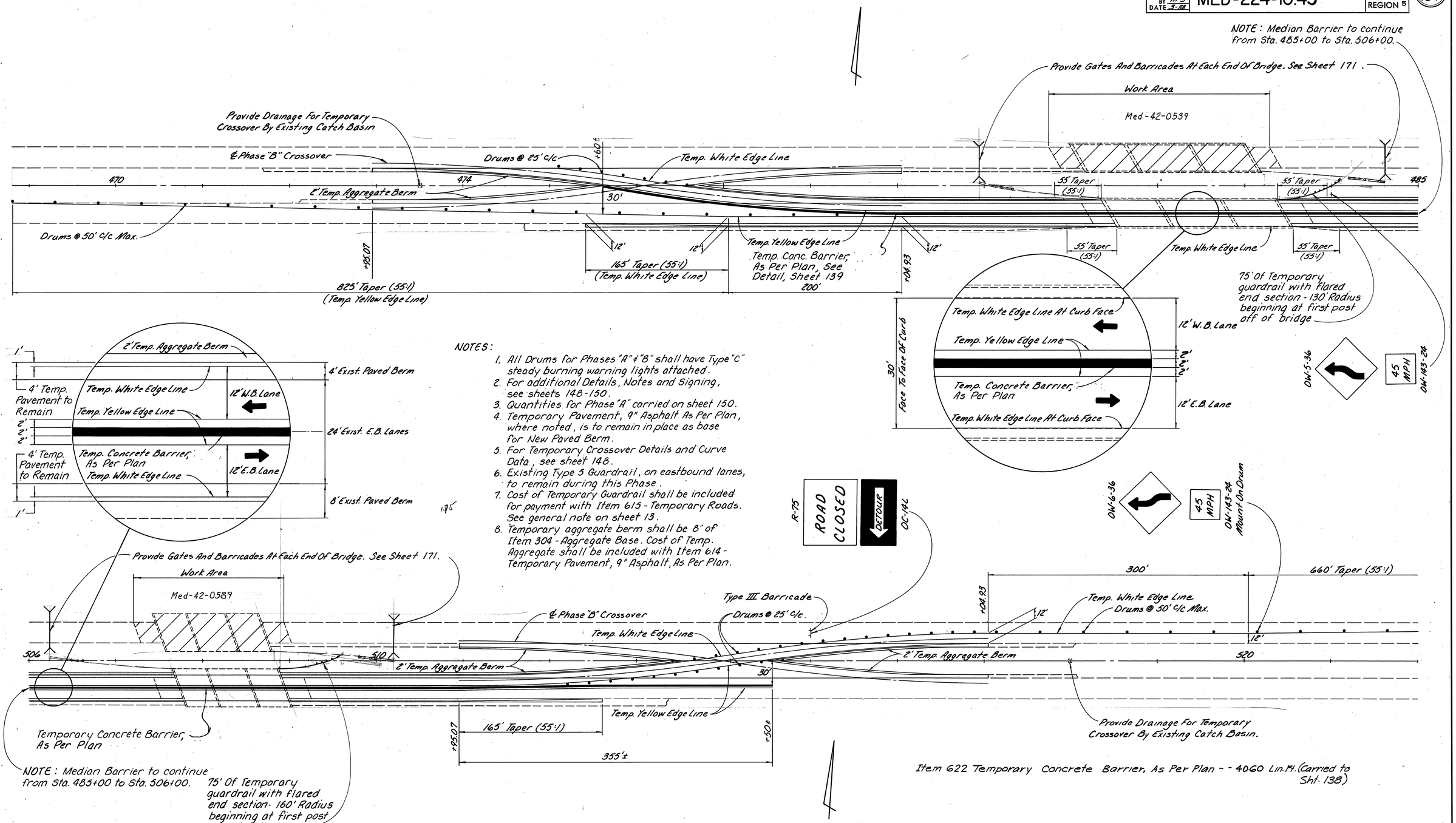

NOTES:

1. All Drums for Phases "A" & "B" shall have Type "C" steady burning warning lights attached.
2. For additional Details, Notes and Signing, see sheets 148-150.
3. Quantities for Phase "A" carried on sheet 150.
4. Temporary Pavement, 9" Asphalt As Per Plan, where noted, is to remain in place as base for New Paved Berm.
5. For Temporary Crossover Details and Curve Data, see sheet 148.
6. Existing Type 5 Guardrail, on eastbound lanes, to remain during this Phase.
7. Cost of Temporary Guardrail shall be included for payment with Item 615 - Temporary Roads. See general note on sheet 13.
8. Temporary aggregate berm shall be 8" of Item 304 - Aggregate Base. Cost of Temp. Aggregate shall be included with Item 614 - Temporary Pavement, 9" Asphalt, As Per Plan.

Item 622 Temporary Concrete Barrier, As Per Plan - - 4060 Lin.Ft. (Carried to Sht. 138)

PHASE "A"
MED-42-0539 & MED-42-0589
MAINTENANCE OF TRAFFIC

Revised 3-11-89

CALC. BY / DATE	MED-42-1.89	OHIO
CHKD. BY / DATE	MED-224-10.45	FHWA REGION 5

148/189

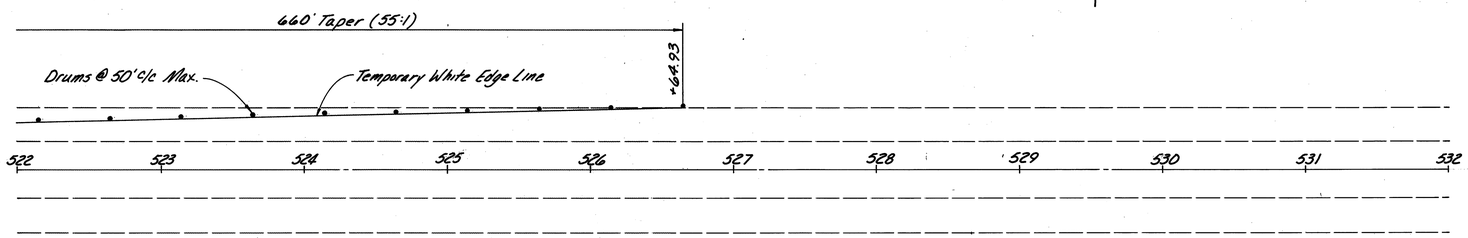

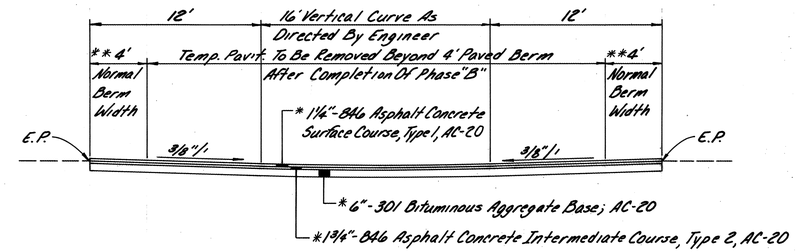

SECTION THRU TEMPORARY CROSS-OVER

* Included In Item 615 - Temporary Pavement, 9" Asphalt, As Per Plan.
** Pavement To Be Left In Place As Base For New Paved Berm.

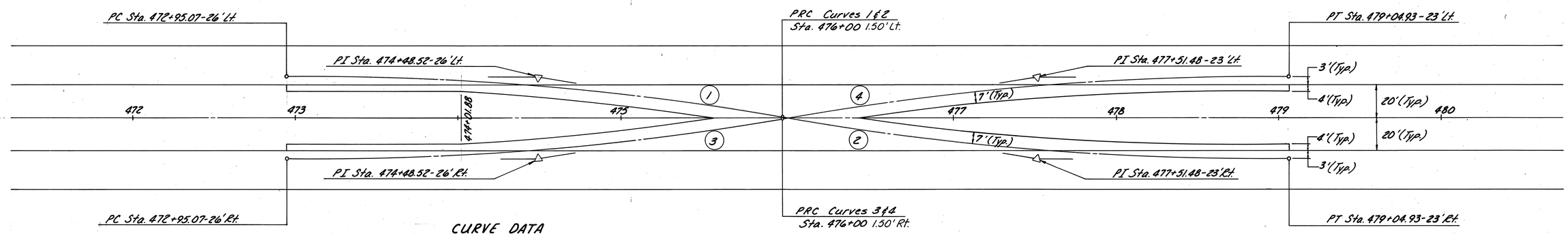

CURVE DATA

	1	2	3	4	5	6	7	8
Dc =	3°-00'							
Δ =	9°-11'-14"							
R =	1909.86'							
L =	306.24'							
T =	153.45'							
E =	6.15'							

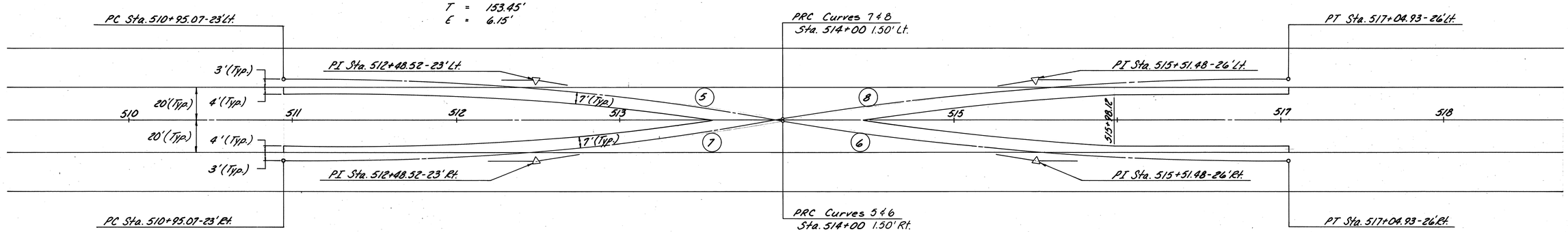

TEMPORARY CROSS-OVER DETAILS

MED-42-0539 & 0589 TRAFFIC MAINTENANCE-PHASE "A"

12,762 ft²

CALC. BY MED DATE 3-88	MED-42-1.89	OHIO	149/189
CHKD. BY AFS DATE 3-88	MED-224-10.45	FHWA REGION 5	

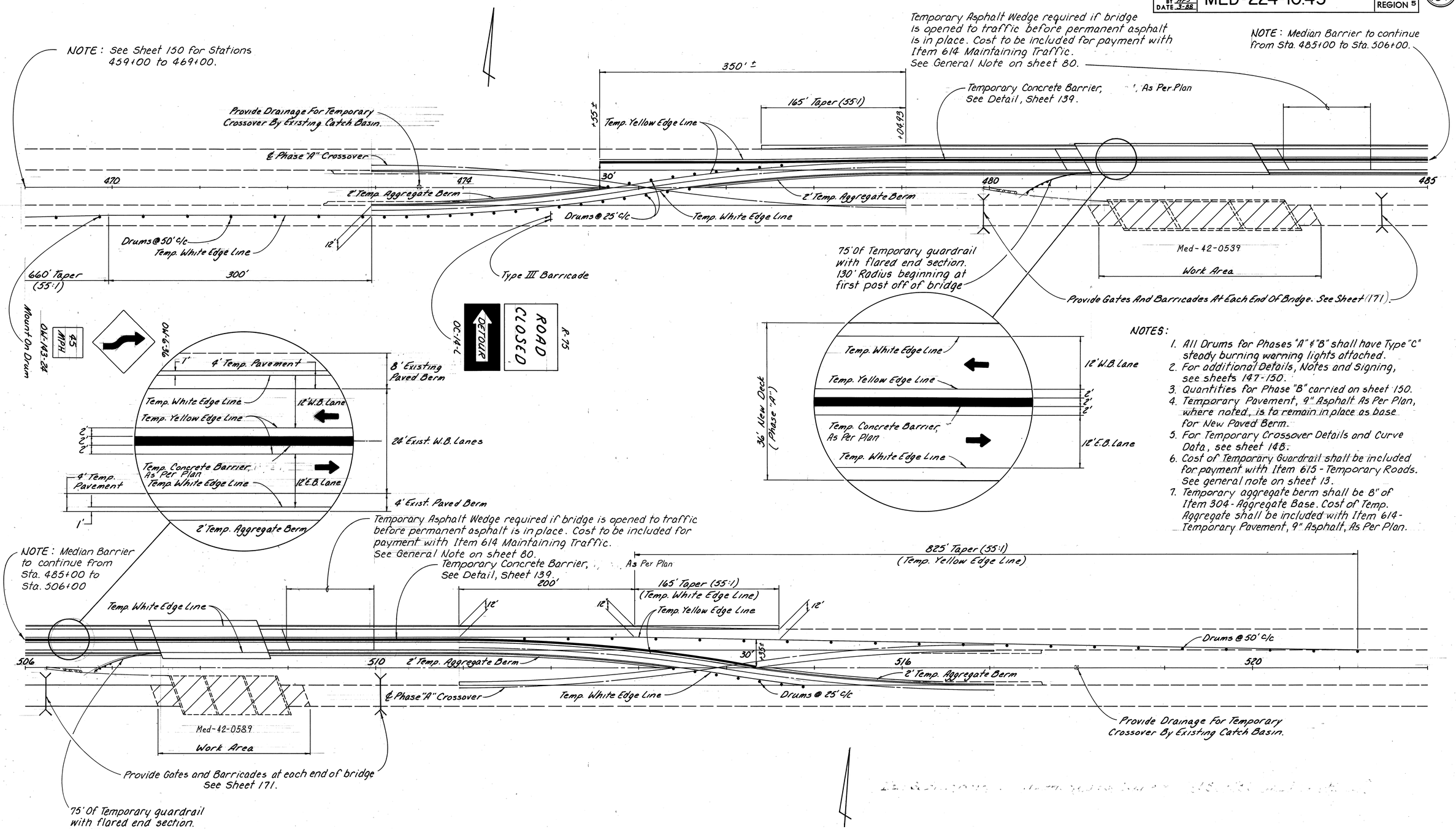

NOTES:

1. All Drums for Phases "A" & "B" shall have Type "C" steady burning warning lights attached.
2. For additional Details, Notes and Signing, see sheets 147-150.
3. Quantities for Phase "B" carried on sheet 150.
4. Temporary Pavement, 9" Asphalt As Per Plan, where noted, is to remain in place as base for New Paved Berm.
5. For Temporary Crossover Details and Curve Data, see sheet 148.
6. Cost of Temporary Guardrail shall be included for payment with Item 615 - Temporary Roads. See general note on sheet 13.
7. Temporary aggregate berm shall be 8" of Item 304 - Aggregate Base. Cost of Temp. Aggregate shall be included with Item 614 - Temporary Pavement, 9" Asphalt, As Per Plan.

PHASE "B"
MED-42-0539 & MED-42-0589
MAINTENANCE OF TRAFFIC

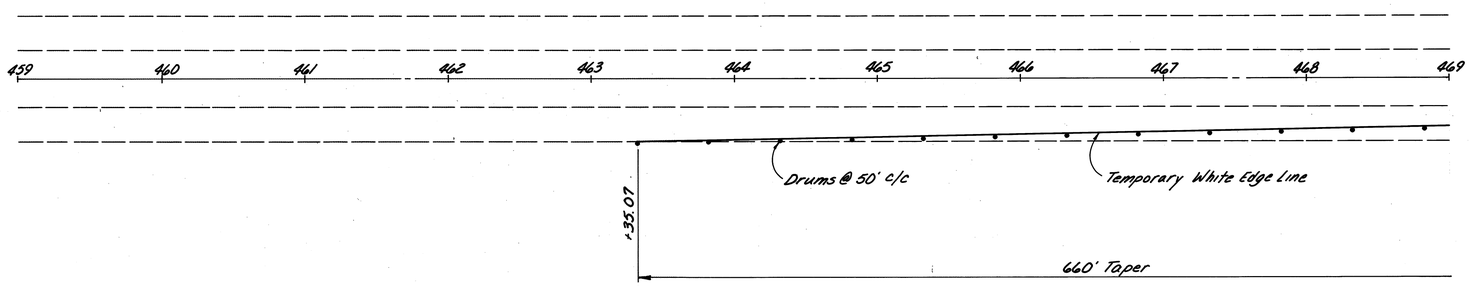

NOTE: See sheet 149 for Stations 469+00 to 522+00

BRIDGE NO. AND PHASE	614					615		
		Temporary Edge Lines Class I (Yellow) *	Temporary Edge Lines Class I (White) *			Temporary Pavement 9" Asphalt As Per Plan		
		Lin. Ft.				Sq. Yd.		
MED-42-0539 & 0589 Phase A		8992	8880			4189		
MED-42-0539 & 0589 Phase B		8980	8880			4202		
TOTALS		17,972	17,760			8391		

Quantities Carried To Sheet No. 138

* Temporary Pavement Markings Shall Be 947.03 Type C Preformed Material Or 621.02 Paint Applied Using The Following Critera:
All Temporary Markings installed on a new bridge deck or on Permanent Pavement shall be 947.03, Type C. Paint may be used for Temporary Markings installed on existing bridge decks to be replaced or overlayed or on existing pavement that will be resurfaced.

Revised 3-11-89

MED-42-0539 & 0589 TRAFFIC MAINTENANCE-PHASE "B"

CALC. BY MED DATE 3-88	MED-42-1.89	OHIO	151
CHKD. BY AFS DATE 3-88	MED-224-10.45	FHWA REGION 5	189

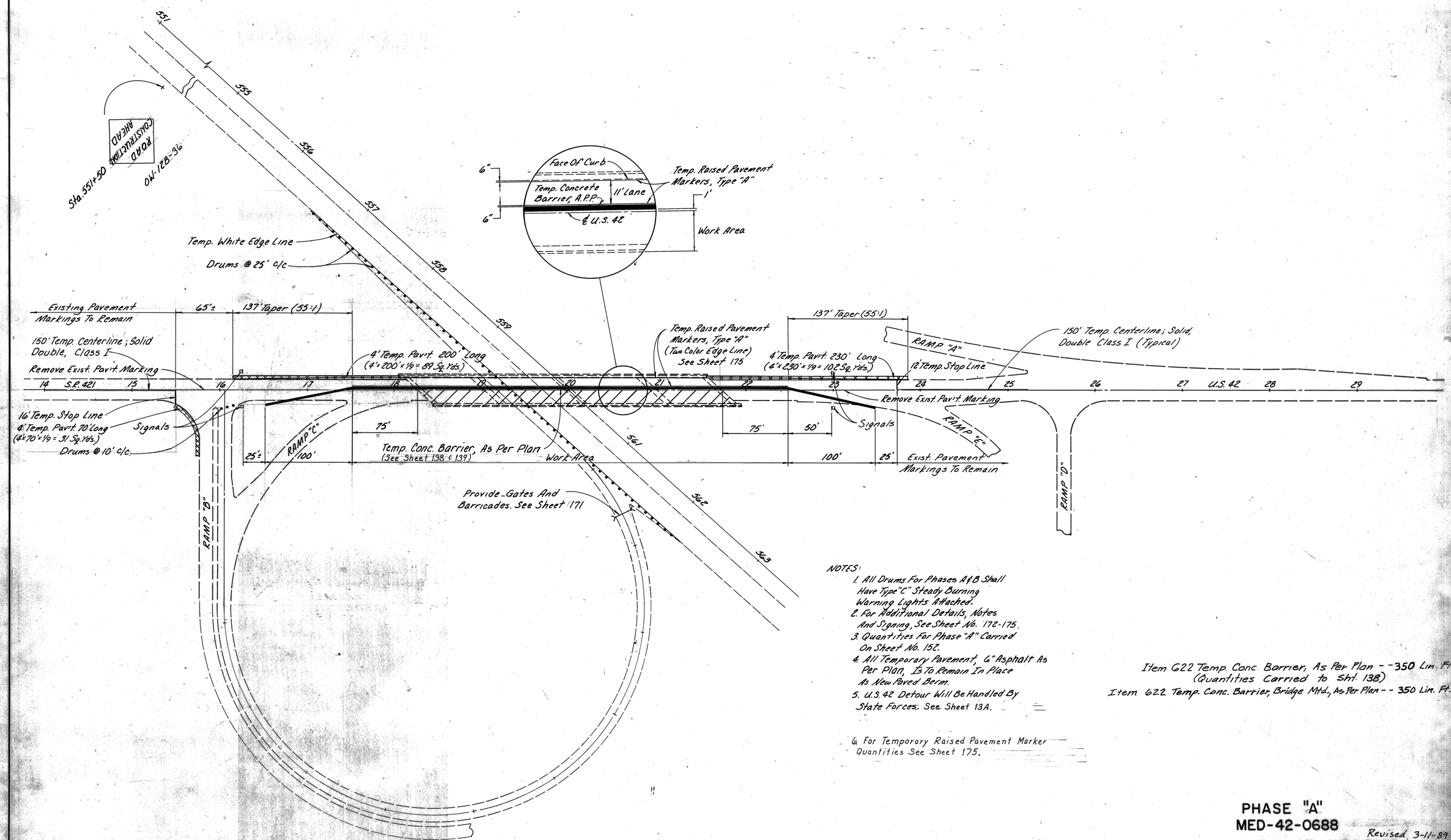

NOTES:

1. All Drums For Phases A & B Shall Have Type "C" Steady Burning Warning Lights Attached.
2. For Additional Details, Notes And Signing, See Sheet No. 172-175.
3. Quantities For Phase "A" Carried On Sheet No. 152.
4. All Temporary Pavement, 6" Asphalt As Per Plan, Is To Remain In Place As New Paved Berm.
5. U.S. 42 Detour Will Be Handled By State Forces. See Sheet 13A.

6. For Temporary Raised Pavement Marker Quantities See Sheet 175.

Item 622 Temp. Conc Barrier, As Per Plan - - 350 Lin. Ft.
(Quantities Carried to Sht. 138)
Item 622 Temp. Conc. Barrier, Bridge Mtd., As Per Plan - - 350 Lin. Ft.

PHASE "A"
MED-42-0688
Revised 3-11-89
MAINTENANCE OF TRAFFIC

BRIDGE NO. AND PHASE	614				615
			Temporary Centerlines Class I *	Temporary Stop Lines Class I *	Temporary Pavement, 6" Asphalt, As Per Plan
			Lin. Ft.	Lin. Ft.	Sq. Yd.
MED-42-0688					
Phase "A"			300	28	222
Phase "B"					139
TOTALS			300	28	361

* See note sheet 138

NOTE: For Signing At Sta. 551+50, See Sheet 151.

Quantities Carried To Sheet 138

For Temporary Raised Marker Quantities See Sheet 175.

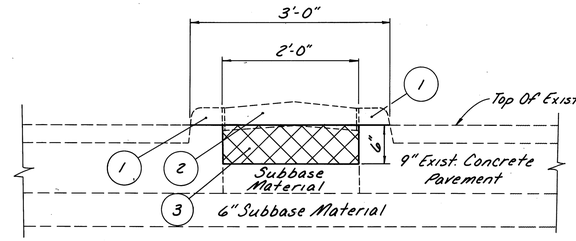

1. Item 202, Curb Removed, As Per Plan
2. Item 202, Median Pavement Removed, As Per Plan
3. Item 615, Temporary Pavement, 6" Asphalt, As Per Plan

TEMPORARY MEDIAN PAVEMENT CONSTRUCTION DETAIL

NOTES:
1. Subbase Removal, Disposal And Leveling Shall Be Included With Item 202, Median Pavement Removed, As Per Plan, For Payment.
2. See Standard Drawing MC-6 For All Other Details.
3. Item 615, Temporary Pavement, 6" Asphalt As Per Plan Includes All Additional Costs For Additional Subbase Removal And Disposal, Beyond That Paid For With Item 202, Median Pavement Removed, As Per Plan. See Detail Sht. (27).
4. When Temporary Pavement Is No Longer Required, 1" Of Asphalt Shall Be Removed And Item 612, Concrete Median, Installed As Per Detail On Sheet 27.
5. Quantities for Item 202-Curb Removed As Per Plan and Item 202-Median Pavement Removed, As Per Plan Carried on Sheet 37.

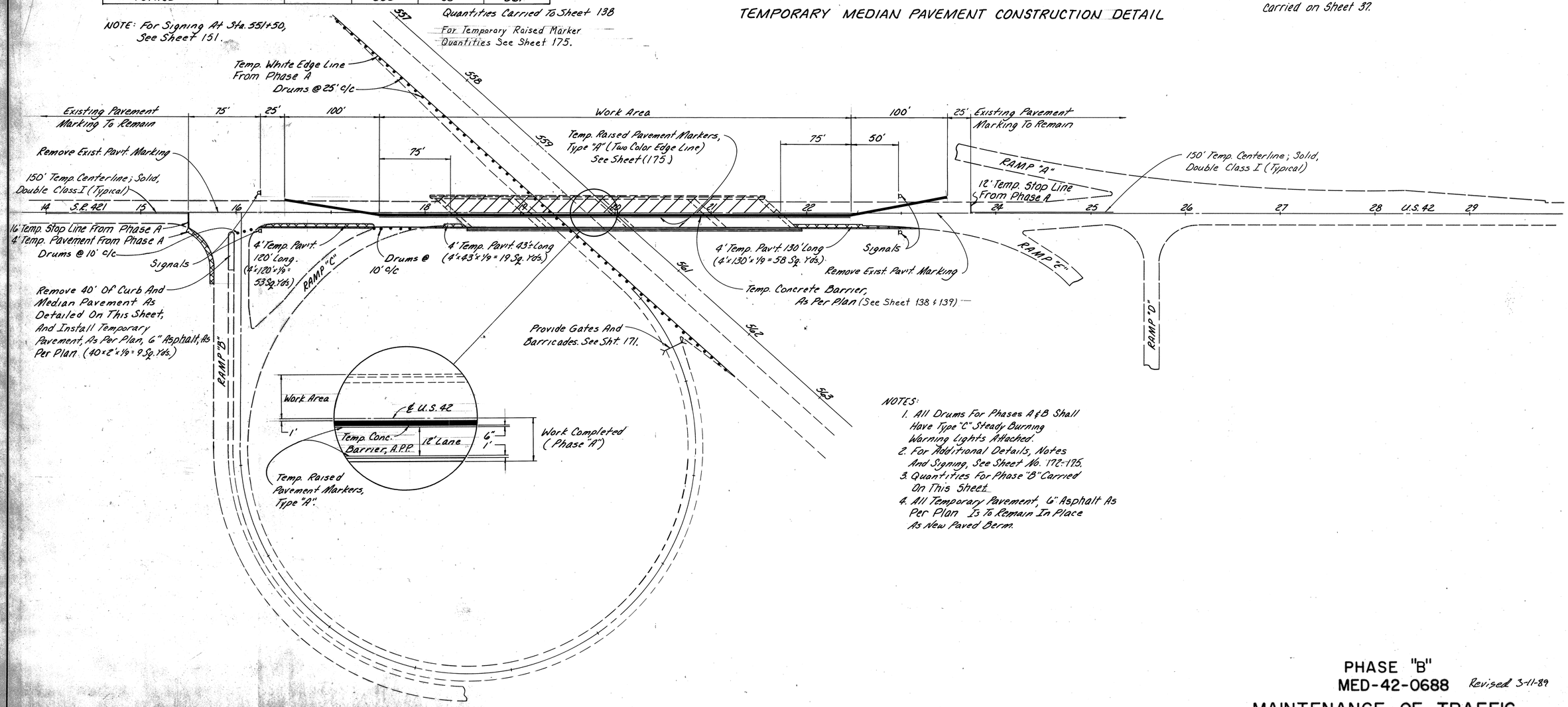

NOTES:
1. All Drums For Phases A & B Shall Have Type "C" Steady Burning Warning Lights Attached.
2. For Additional Details, Notes And Signing, See Sheet No. 172-175.
3. Quantities For Phase "B" Carried On This Sheet.
4. All Temporary Pavement, 6" Asphalt As Per Plan Is To Remain In Place As New Paved Berm.

PHASE "B"
MED-42-0688 Revised 3-11-89
MAINTENANCE OF TRAFFIC

MAINTENANCE OF TRAFFIC NOTES (MED-224 AT C.R. 19)

PHASE A(1) :

1. CONSTRUCT THE MEDIAN CROSSOVERS AND THE TEMPORARY ASPHALT PAVEMENT ALONG BOTH SIDES OF THE WESTBOUND LANES OF U.S. 224 AND THEN INSTALL THE TEMPORARY CONCRETE BARRIER AND TEMPORARY IMPACT ATTENUATORS. SEE SHEETS 154 - 156. EXTEND THE WEST END OF THE CULVERT AT C.R. 19 STA. 27+33.50 (SEE SHEET 60 FOR DETAILS) AND THEN INSTALL PORTION OF THE NEW GUARDRAIL OVER THE CULVERT EXTENSION SHOWN ON SHEET 163, AND THE TEMPORARY ASPHALT PAVEMENT ALONG THE SOUTHBOUND LANE OF C.R. 19 (NORTH LEG). TRAFFIC CONTROL FOR THIS CONSTRUCTION SHALL BE AS PER STANDARD DRAWING MT-97.10 & SHEET 180.
2. MAINTAIN U.S. 224 EASTBOUND TRAFFIC BY CLOSING THE EASTBOUND LANES OF U.S. 224 AND ROUTING EASTBOUND TRAFFIC THROUGH THE MEDIAN CROSSOVERS. MAINTAIN U.S. 224 WESTBOUND TRAFFIC ON THE TEMPORARY WESTBOUND LANES. MAINTAIN U.S. 224 EASTBOUND AND WESTBOUND TRAFFIC IN THIS MANNER THROUGHOUT PHASE A. SEE SHEET 163.
3. CONSTRUCT NEW CONCRETE PAVEMENT AND SHOULDERS FOR THE EASTBOUND LANES OF U.S. 224 FROM STA. 817+50 TO STA. 824+94 AND FROM STA. 826+37 TO STA. 833+75.
4. CONSTRUCT TEMPORARY CONCRETE PAVEMENT ALONG THE MEDIAN SIDE OF THE EASTBOUND LANES OF U.S. 224 FROM STA. 823+04.56 TO STA. 824+15.79 AND STA. 826+53.91 TO STA. 833+75. SEE SHEET 163

PHASE A(2) :

1. EXTEND THE WEST END OF THE CULVERT AT C.R. 19 STA. 25+54.5 (SEE SHEET 59 FOR DETAILS) AND THEN CONSTRUCT THE TEMPORARY ASPHALT PAVEMENT ALONG THE WEST SIDE OF C.R. 19 (SOUTH LEG). SEE SHEET 163.
2. INSTALL THE PORTION OF THE NEW GUARDRAIL OVER THE CULVERT EXTENSION CONSTRUCTED IN PHASE A(2)1 AS SHOWN ON SHEET 163, AND THEN SHIFT C.R. 19 TRAFFIC TO THE WEST SIDE OF THE INTERSECTION. CONSTRUCT THE CULVERT EXTENSION AT THE EAST END OF THE CULVERT AT C.R. 19 STA. 25+54.5 (SEE SHEET 59 FOR DETAILS) AND THEN CONSTRUCT THE NEW CONCRETE PAVEMENT AND SHOULDERS FOR THE NORTHBOUND LANE OF C.R. 19 FROM STA. 25+00 TO STA. 25+84.43 AND THE EASTBOUND LANES OF U.S. 224 FROM STA. 825+64 TO STA. 826+37.

PHASE A(3) :

1. CONSTRUCT TEMPORARY ASPHALT PAVEMENT ALONG THE EAST SIDE OF C.R. 19 (SOUTH LEG). SEE SHEET 164.
2. MOVE DRUMS IN THE INTERSECTION AREA AND SHIFT C.R. 19 TRAFFIC TO THE EAST SIDE OF THE INTERSECTION.
3. CONSTRUCT THE CLOSING PORTIONS OF THE NEW CONCRETE PAVEMENT AND SHOULDERS FOR THE EASTBOUND LANES OF U.S. 224 FROM STA. 824+94 TO STA. 825+64 AND THE SOUTHBOUND LANE OF C.R. 19 FROM STA. 25+00 TO STA. 25+84.43. SEE SHEET 164.

PHASE B(1) :

1. COMPLETE THE INSTALLATION OF THE NEW GUARDRAIL ALONG THE EASTBOUND LANES OF U.S. 224 AND THE SOUTH SIDE OF C.R. 19, AS SHOWN ON SHEETS 163 AND 164. PLACE DRUMS FOR THE TEMPORARY EASTBOUND LANES OF U.S. 224 AS SHOWN ON SHEETS 158 AND 159. MAINTAIN U.S. 224 EASTBOUND TRAFFIC BY ROUTING THE EASTBOUND TRAFFIC TO THE OUTSIDE LANES OF THE NEW EASTBOUND PAVEMENT OF U.S. 224. MAINTAIN WESTBOUND U.S. 224 TRAFFIC ON THE TEMPORARY WESTBOUND LANES CONSTRUCTED IN PHASE A(1)1. MAINTAIN U.S. 224 EASTBOUND AND WESTBOUND TRAFFIC IN THIS MANNER THROUGHOUT PHASE B.
2. MOVE DRUMS IN THE INTERSECTION AREA AND SHIFT C.R. 19 TRAFFIC TO THE WEST SIDE OF THE INTERSECTION.
3. CONSTRUCT NEW CONCRETE PAVEMENT IN THE EAST MEDIAN PORTION OF THE INTERSECTION AREA AND PART OF THE WESTBOUND LANES OF U.S. 224. SEE SHEET 165.

PHASE B(2) :

1. EXTEND THE EAST END OF THE CULVERT AT C.R. 19 STA. 27+33.50 (SEE SHEET 60 FOR DETAILS) AND INSTALL THE PORTION OF THE NEW GUARDRAIL SHOWN ON SHEET 166 AND THEN CONSTRUCT THE TEMPORARY ASPHALT PAVEMENT ALONG THE EAST SIDE OF C.R. 19 (NORTH LEG). SEE SHEET 166.
2. MOVE DRUMS IN THE INTERSECTION AREA AND SHIFT C.R. 19 TRAFFIC TO THE EAST SIDE OF C.R. 19.
3. CONSTRUCT NEW CONCRETE PAVEMENT IN THE WEST MEDIAN PORTION OF THE INTERSECTION AREA AND PART OF THE WESTBOUND LANES OF U.S. 224. CONSTRUCT TEMPORARY CONCRETE PAVEMENT ALONGSIDE THE TEMPORARY CONCRETE PAVEMENT CONSTRUCTED IN PHASE A(1)3. SEE SHEET 166.

PHASE C(1) :

1. CONSTRUCT THE MEDIAN CROSSOVERS AND THE TEMPORARY ASPHALT PAVEMENT ALONG THE MEDIAN EDGE OF THE EASTBOUND LANES OF U.S. 224 AND THEN INSTALL THE TEMPORARY CONCRETE BARRIER AND TEMPORARY IMPACT ATTENUATORS AS SHOWN ON SHEETS 160 - 162.
2. MAINTAIN U.S. 224 WESTBOUND TRAFFIC BY CLOSING THE WESTBOUND LANES OF U.S. 224 AND ROUTING THE WESTBOUND TRAFFIC THROUGH THE MEDIAN CROSSOVERS. CONTINUE MAINTAINING U.S. 224 EASTBOUND TRAFFIC ON THE OUTSIDE LANES OF THE NEW EASTBOUND PAVEMENT THE SAME AS DURING PHASE B. MAINTAIN U.S. 224 EASTBOUND AND WESTBOUND IN THIS MANNER THROUGHOUT PHASE C. MAINTAIN C.R. 19 TRAFFIC ACCORDING TO PHASE B(2)2.
3. CONSTRUCT NEW CONCRETE PAVEMENT AND SHOULDERS FOR THE WESTBOUND LANES OF U.S. 224 FROM STA. 823+00 TO STA. 825+64 AND FROM STA. 826+37 TO STA. 833+75 AND THE SOUTHBOUND LANE OF C.R. 19 FROM STA. 26+97.66 TO STA. 27+75. SEE SHEET 167.

PHASE C(2) :

1. CONSTRUCT TEMPORARY ASPHALT PAVEMENT ALONG THE WEST SIDE OF C.R. 19 (NORTH LEG). SEE SHEET 168.
2. MOVE DRUMS IN THE INTERSECTION AREA AND SHIFT C.R. 19 TRAFFIC TO THE WEST SIDE OF THE INTERSECTION.
3. CONSTRUCT THE CLOSING PORTIONS OF THE NEW CONCRETE PAVEMENT AND SHOULDERS FOR THE WESTBOUND LANES OF U.S. 224 FROM STA. 825+64 TO STA. 826+37 AND C.R. 19 FROM STA. 26+97.66 TO STA. 27+75.
4. REMOVE ALL TEMPORARY PAVEMENTS, PLACE PERMANENT PAVEMENT MARKINGS, COMPLETE ALL NEW GUARDRAIL AND OPEN THE COMPLETED PAVEMENT TO TRAFFIC.

ADDITIONAL MAINTENANCE OF TRAFFIC NOTES:

1. DURING INITIAL SETUP AND TEAR DOWN PERIODS, AND WHERE SUBSTANTIAL SHIFTS OCCUR BETWEEN DIFFERENT PHASES OF TRAFFIC CONTROL, TRAFFIC WILL BE MAINTAINED ACCORDING TO THE PROVISIONS OF SHEET 180 - CLOSING ONE LANE OF A FOUR-LANE HIGHWAY. IN ADDITION, A UNIFORMED SPECIAL DUTY LAW ENFORCEMENT OFFICER (LEOS) AND AN OFFICIAL PATROL CAR WITH EMERGENCY FLASHERS OPERATING WILL BE REQUIRED DURING THESE SAME PERIODS. SEE THE GENERAL NOTES ON SHEET 12 FOR ADDITIONAL DETAILS ABOUT THE LEOS.

INDEX OF MED-224 AND C.R. 19 MAINTENANCE OF TRAFFIC SHEETS

NOTES
MAINTENANCE OF TRAFFIC AT CO. RD. 19

CALC. BY DATE	MED-42-1.89	OHIO
CHKD. BY DATE	MED-224-10.45	FHWA REGION 5

153A / 189

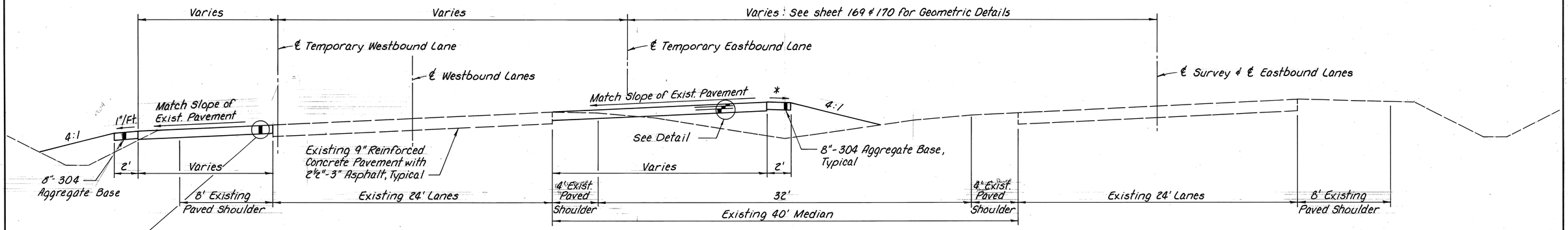

TEMPORARY PAVEMENT, 9" ASPHALT, AS PER PLAN
ADJACENT TO EXISTING PAVEMENT

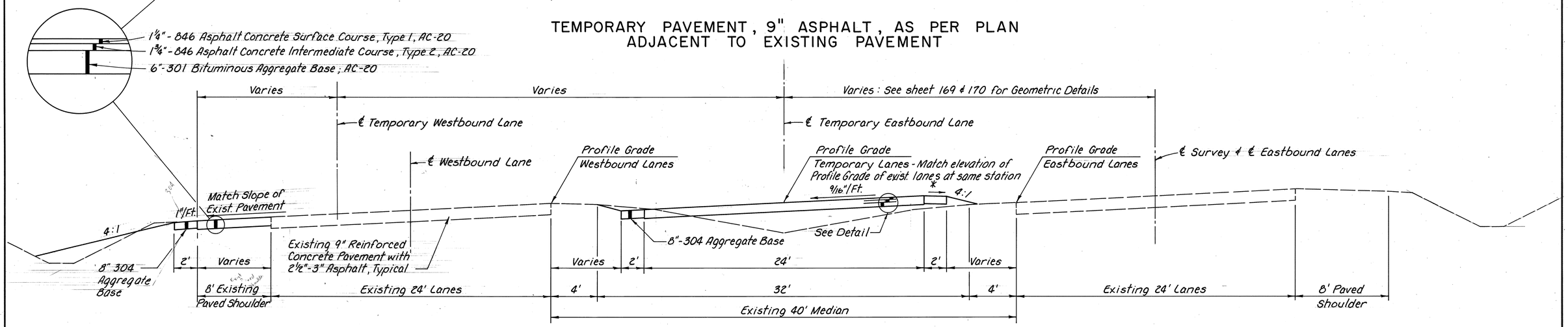

TEMPORARY PAVEMENT, 9" ASPHALT, AS PER PLAN
BETWEEN EXISTING PAVEMENT

* Slope Varies ½"/Ft. to ¼"/Ft.
(Break shall not exceed 7%)

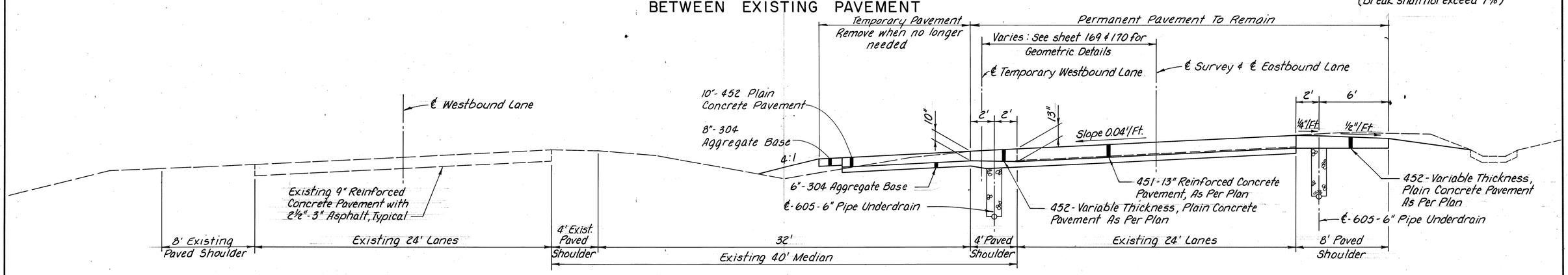

TEMPORARY PAVEMENT, 10" CONCRETE, AS PER PLAN
ADJACENT TO NEW PAVEMENT

TEMPORARY PAVEMENT TYPICAL SECTIONS

Co. Rd. 19 Maintenance Of Traffic Quantities

Location	Sheet No.	614 Temporary Edge Lines, Class I (White)* Lin. Ft.	614 Temporary Edge Lines, Class I (Yellow)* Lin. Ft.	614 Temporary Lane Lines, Class I* Lin. Ft.	614 Temporary Stop Lines, Class I* Lin. Ft.	614 Temporary Center Lines, Class I* Lin. Ft.		615 Temporary Roads Lump	615 Temporary Pavement, 9" Asphalt, As Per Plan Sq. Yd.	615 Temporary Pavement, 10" Concrete, As Per Plan Sq. Yd.		622 TEMPORARY CONCRETE BARRIER, As Per Plan LIN. FT.
Phase A	158/156	5783	6354	4677	74	255		Lump	5492	884		1950
Phase B	157/159	1799	1924	1049	75	122		Lump	99	206		
Phase C	140/142	5104	4105	3180	48	328		Lump	2500			
Totals		12,686	12,383	8906	197	705		Lump	8091	1090		1950
		2.40 Mi.	2.35 Mi.	1.69 Mi.								

* Temporary Pavement Markings shall be 947.03, Type C Preformed Material or 621.02 paint applied using the following criteria: All Temporary Markings installed on a New Bridge Deck or on Permanent Pavement shall be 947.03, Type C Preformed Material. Paint may be used for Temporary Markings installed on Existing Bridge Decks to be replaced or overlayed, or on Existing Pavement that will be Resurfaced.

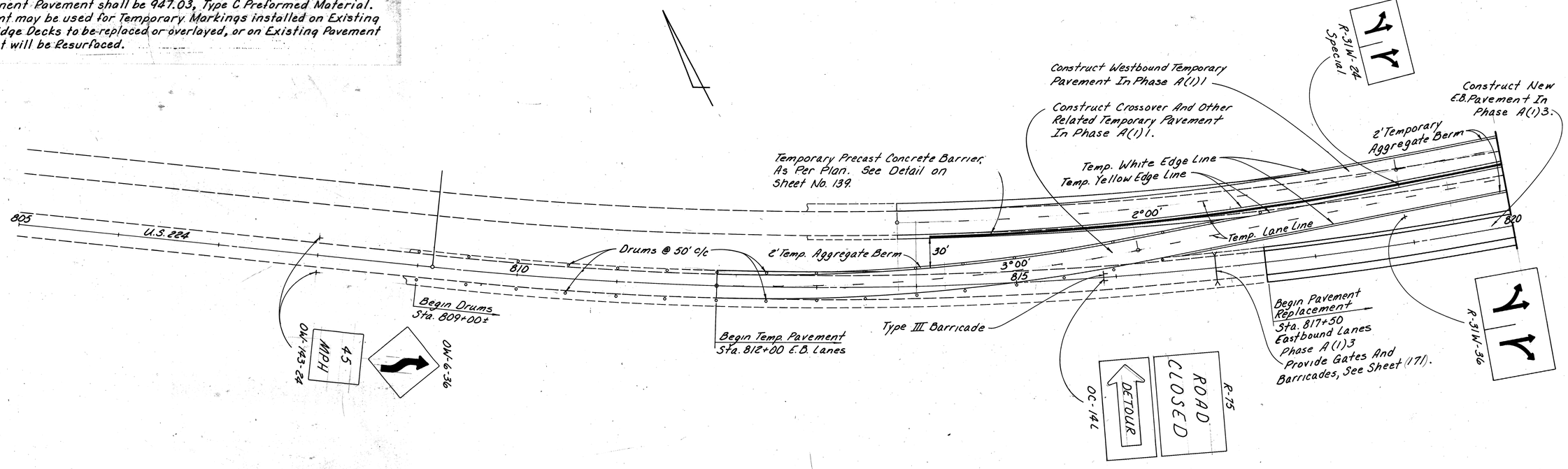

Revised 3-11-89

PHASES A(1), A(2) & A(3)
MAINTENANCE OF TRAFFIC AT CO. RD. 19

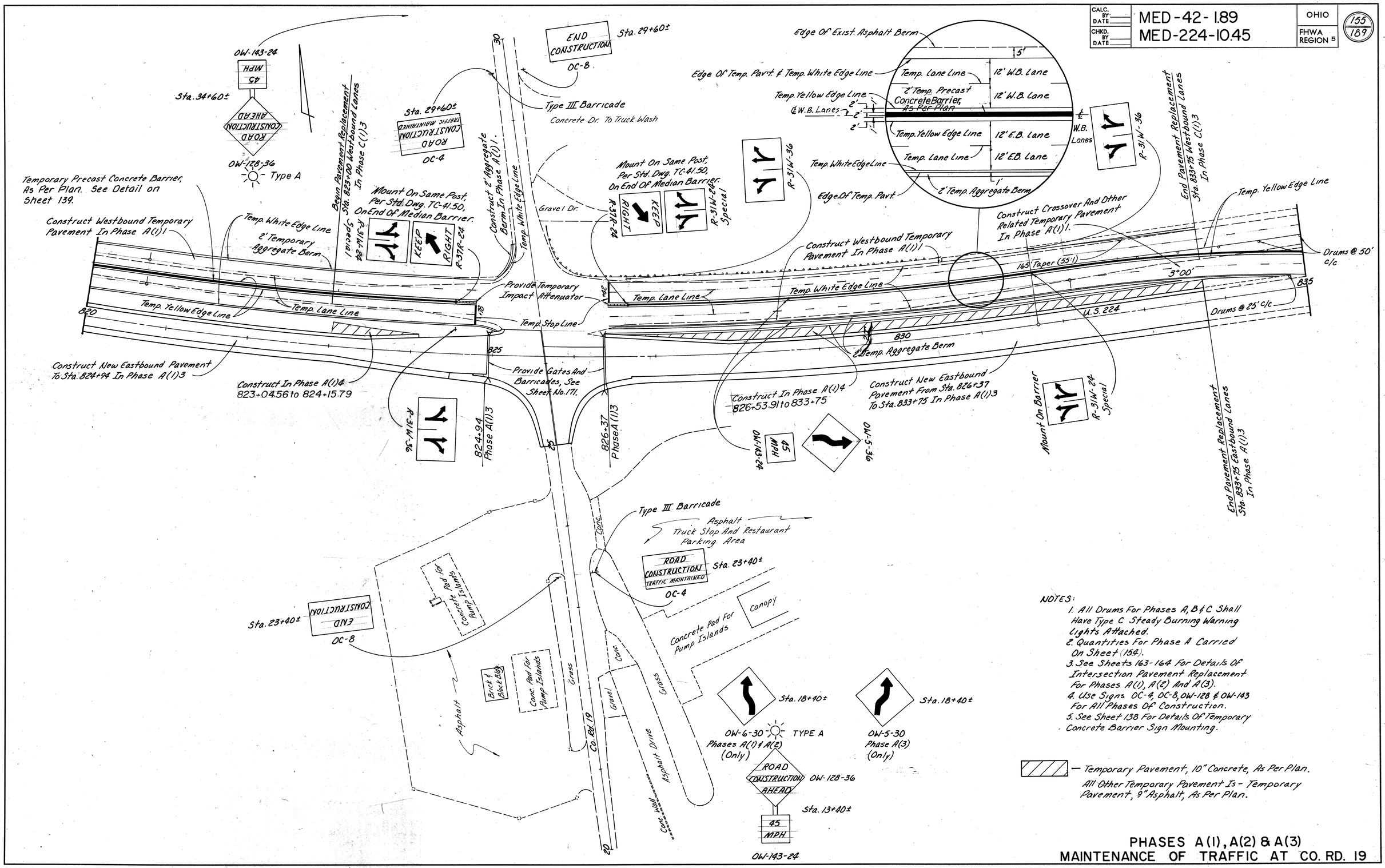

NOTES:

1. All Drums For Phases A, B & C Shall Have Type C Steady Burning Warning Lights Attached.
2. Quantities For Phase A Carried On Sheet (154).
3. See Sheets 163-164 For Details Of Intersection Pavement Replacement For Phases A(1), A(2) And A(3).
4. Use Signs OC-4, OC-8, OW-128 & OW-143 For All Phases Of Construction.
5. See Sheet 138 For Details Of Temporary Concrete Barrier Sign Mounting.

— Temporary Pavement, 10" Concrete, As Per Plan.
All Other Temporary Pavement Is - Temporary Pavement, 9" Asphalt, As Per Plan.

PHASES A(1), A(2) & A(3)
MAINTENANCE OF TRAFFIC AT CO. RD. 19

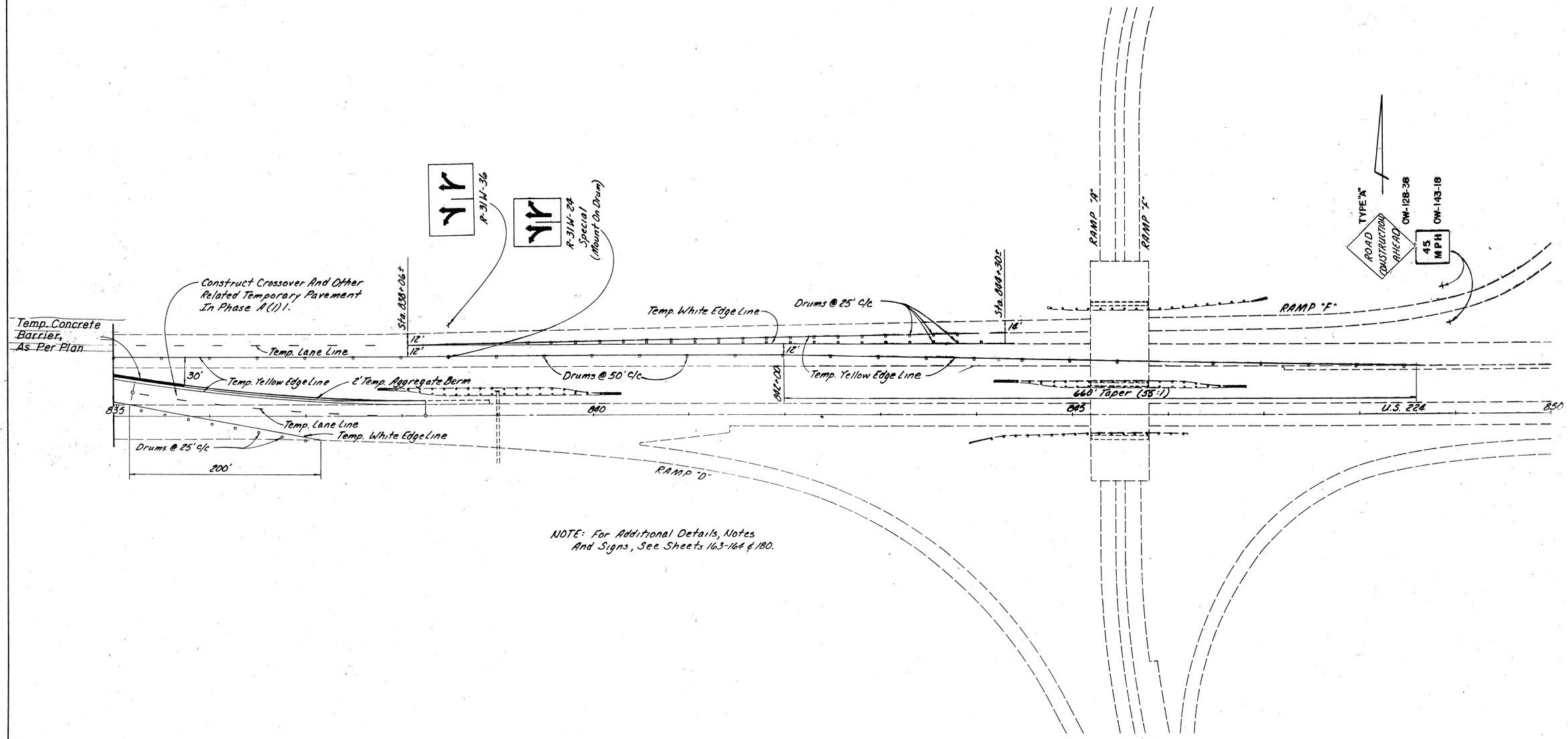

NOTE: For Additional Details, Notes And Signs, See Sheets 163-164 & 180.

Item 622 Temp. Conc. Barrier, As Per Plan - - - 1950 Lin. Ft.
(Total Phase A- Carried to 154)

Revised 3-11-89

PHASES A(1), A(2) & A(3)
MAINTENANCE OF TRAFFIC AT CO. RD. 19

CALC. BY DATE	MED-42-1.89	OHIO	157
CHKD. BY DATE	MED-224-10.45	FHWA REGION 5	189

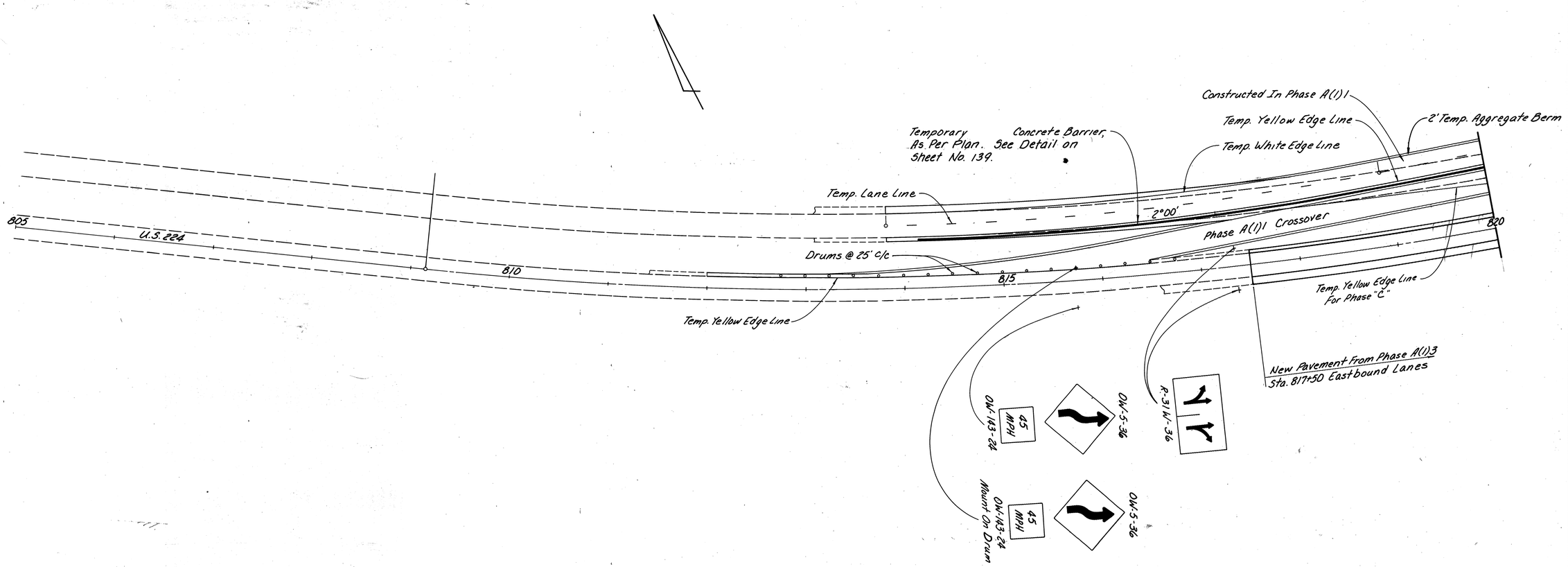

PHASES B(1) & B(2)
MAINTENANCE OF TRAFFIC AT CO. RD. 19

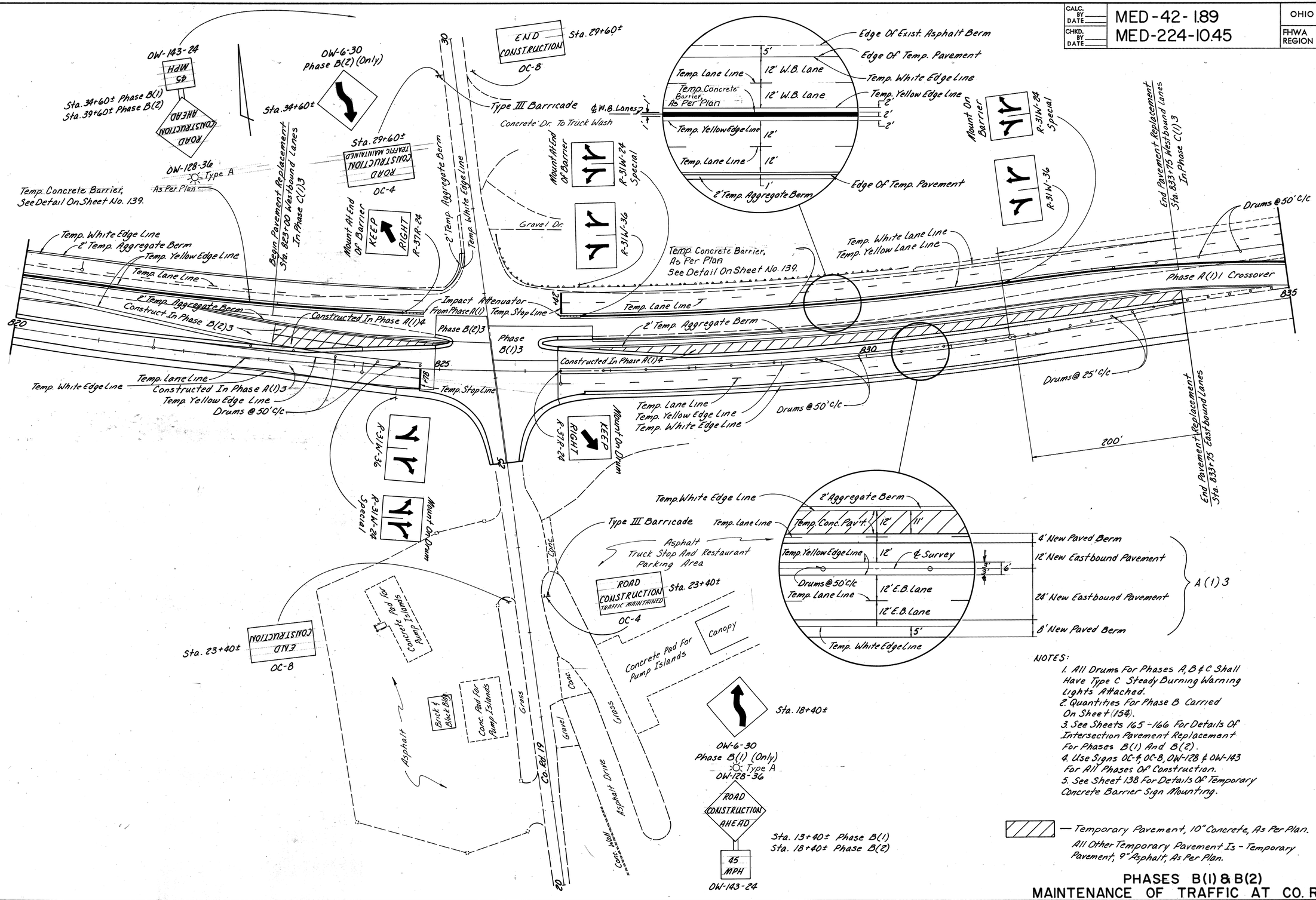

NOTES:

1. All Drums For Phases A, B & C Shall Have Type C Steady Burning Warning Lights Attached.
2. Quantities For Phase B Carried On Sheet (154).
3. See Sheets 165-166 For Details Of Intersection Pavement Replacement For Phases B(1) And B(2).
4. Use Signs OC-4, OC-8, OW-128 & OW-143 For All Phases Of Construction.
5. See Sheet 138 For Details Of Temporary Concrete Barrier Sign Mounting.

— Temporary Pavement, 10" Concrete, As Per Plan.

All Other Temporary Pavement Is - Temporary Pavement, 9" Asphalt, As Per Plan.

PHASES B(1) & B(2) MAINTENANCE OF TRAFFIC AT CO. RD. 19

CALC. BY DATE	MED-42-1.89	OHIO	159
CHKD. BY DATE	MED-224-10.45	FHWA REGION 5	189

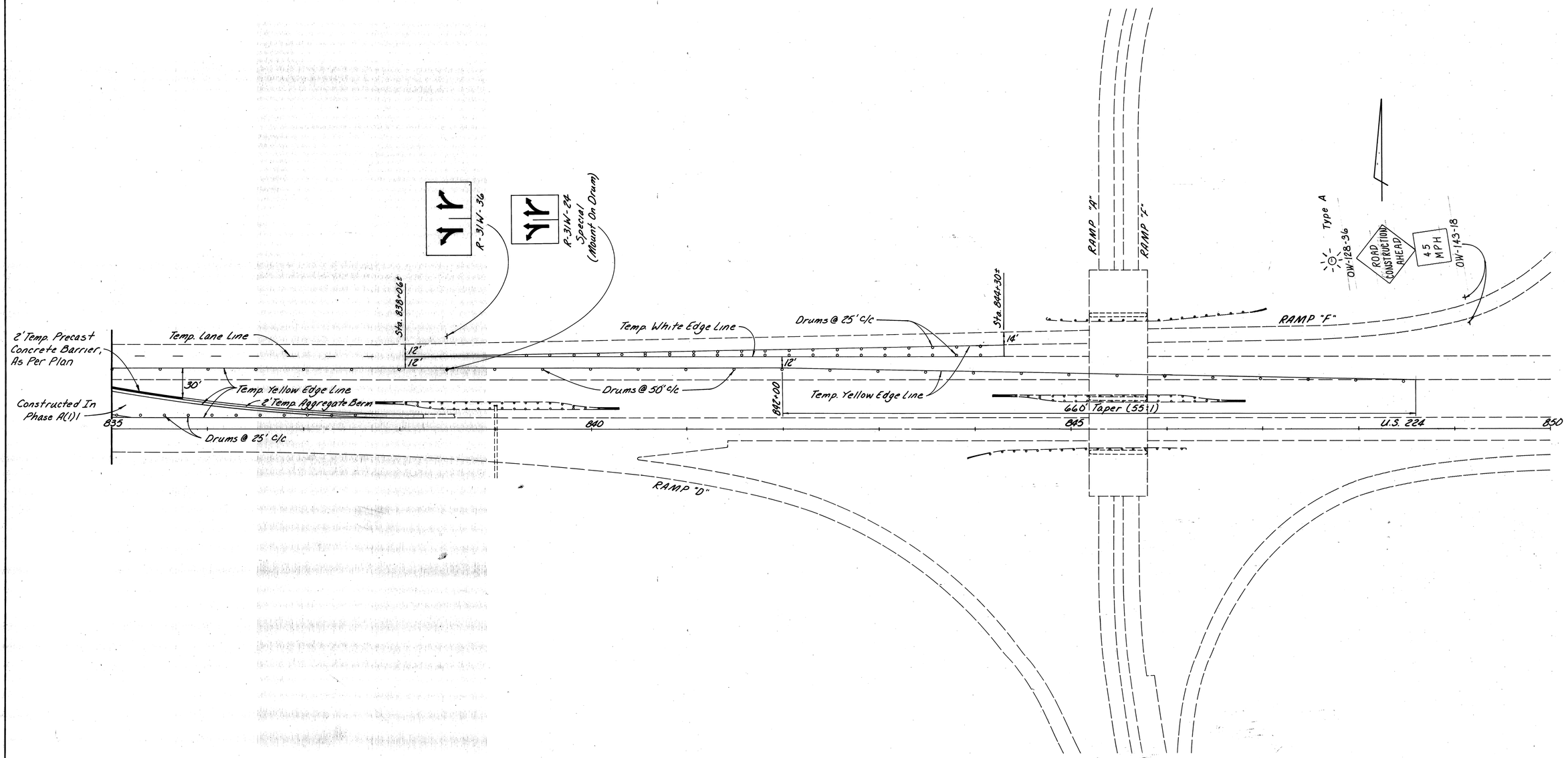

PHASES B(1) & B(2)
MAINTENANCE OF TRAFFIC AT CO. RD. 19

CALC. BY ____ DATE ____	MED-42-1.89	OHIO	160
CHKD. BY ____ DATE ____	MED-224-10.45	FHWA REGION 5	189

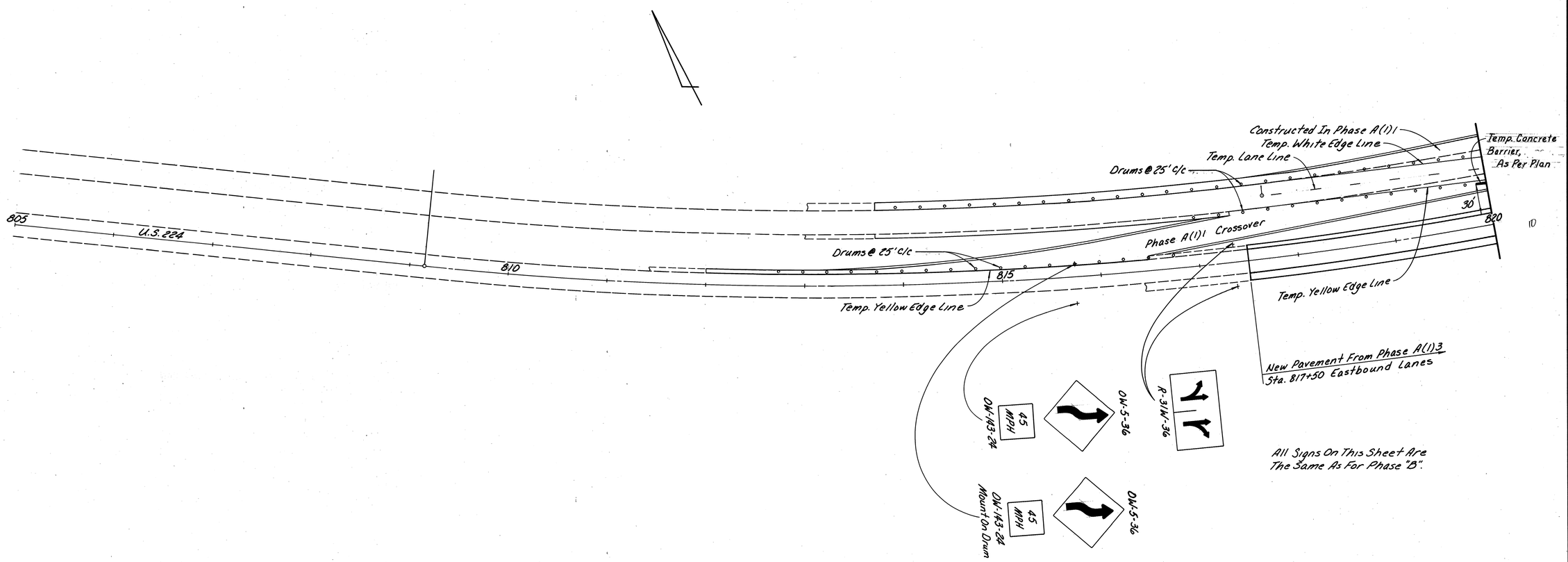

PHASES C(1) & C(2)
MAINTENANCE OF TRAFFIC AT CO. RD. 19

CALC. BY ____ DATE ____	MED-42-1.89	OHIO	161
CHKD. BY ____ DATE ____	MED-224-10.45	FHWA REGION 5	189

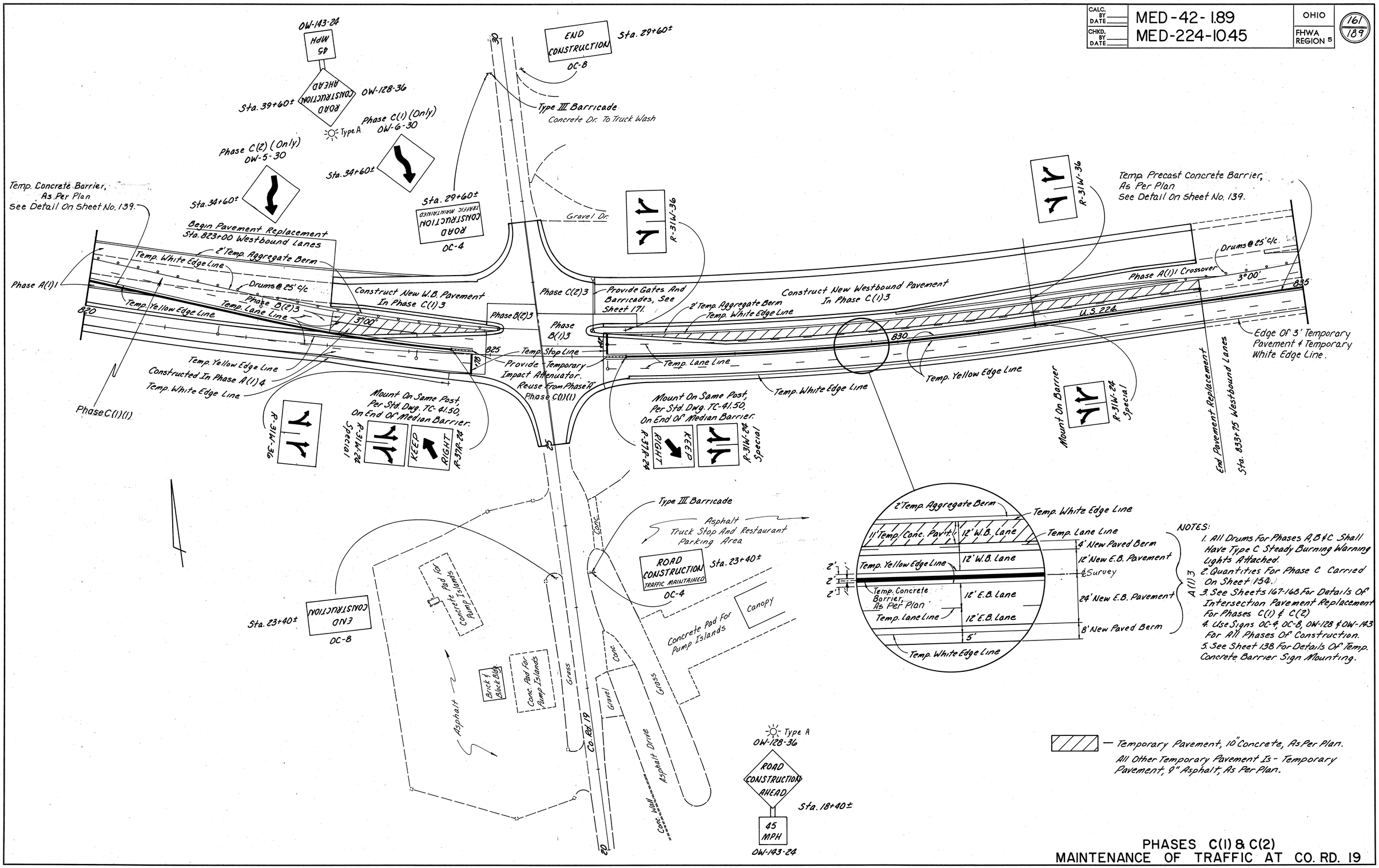

PHASES C(1) & C(2)
MAINTENANCE OF TRAFFIC AT CO. RD. 19

CALC. BY ____ DATE ____	MED-42-1.89	OHIO	162/189
CHKD. BY ____ DATE ____	MED-224-10.45	FHWA REGION 5	

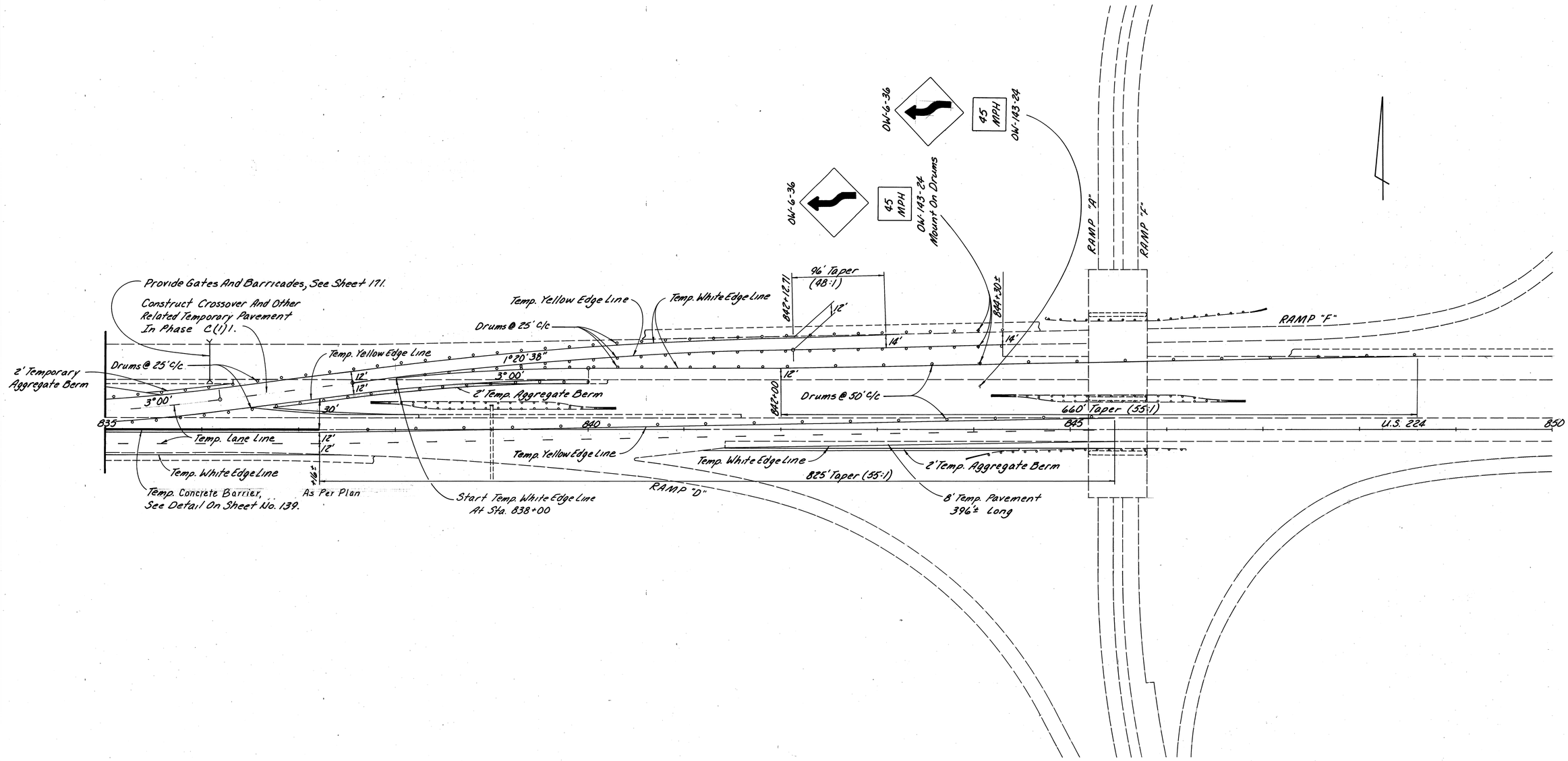

Revised 3-11-89

PHASES C(1) & C(2)
MAINTENANCE OF TRAFFIC AT CO. RD. 19

CALC. BY ___ DATE ___	MED-42-1.89	OHIO	163
CHKD. BY ___ DATE ___	MED-224-10.45	FHWA REGION 5	189

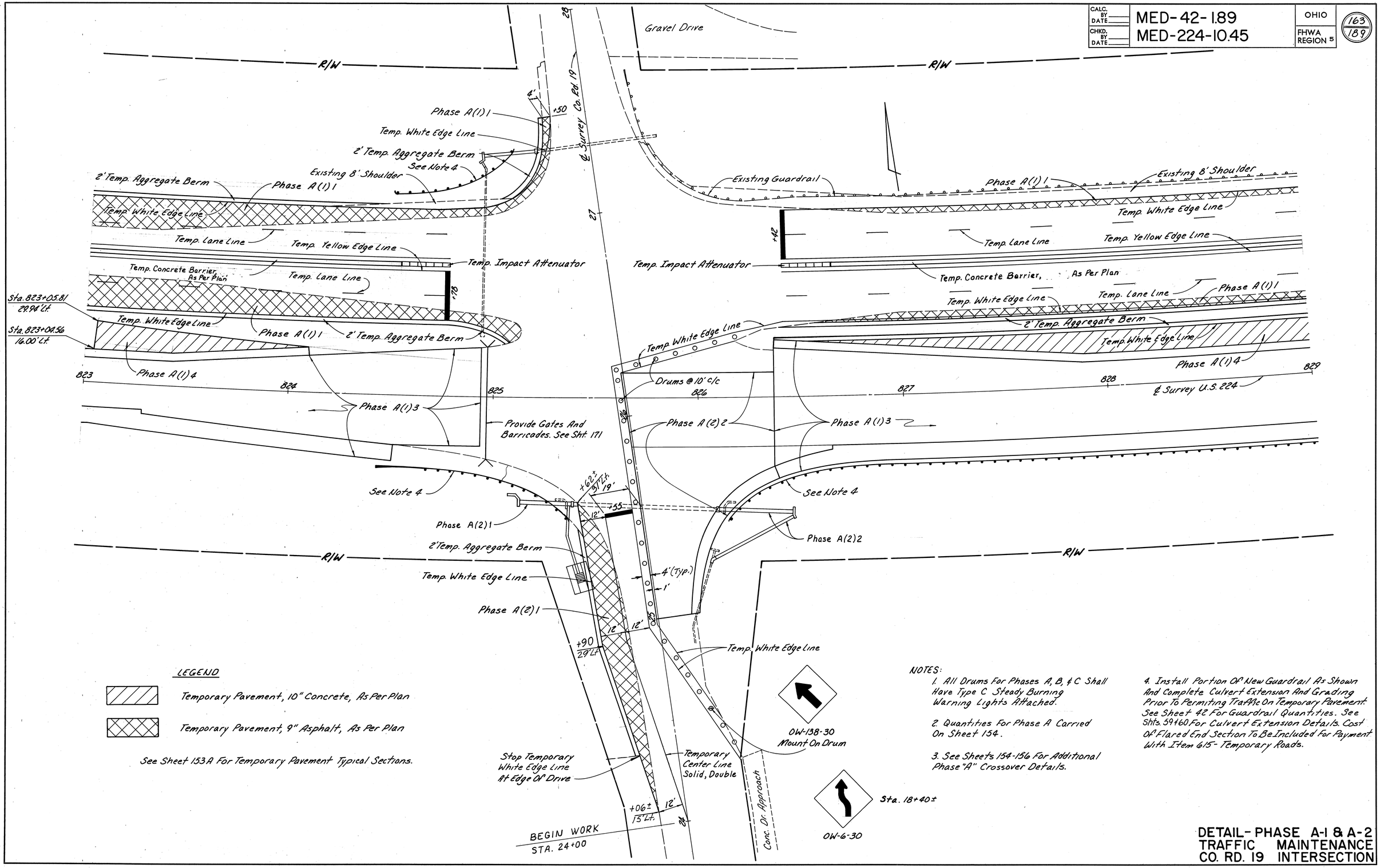

DETAIL- PHASE A-1 & A-2
TRAFFIC MAINTENANCE
CO. RD. 19 INTERSECTION

CALC. BY ___ DATE ___	MED-42-1.89	OHIO	164/189
CHKD. BY ___ DATE ___	MED-224-10.45	FHWA REGION 5	

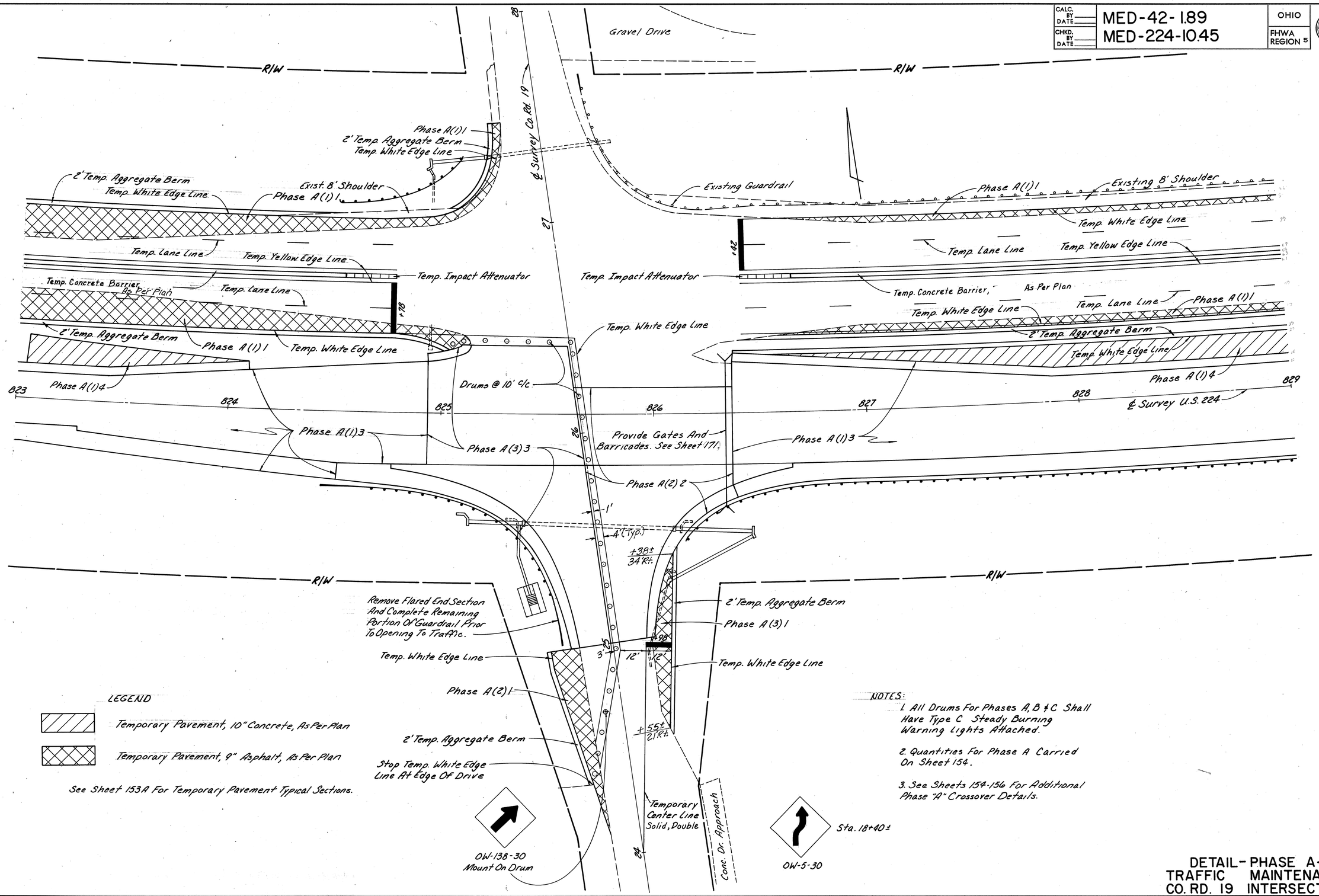

DETAIL - PHASE A-3
TRAFFIC MAINTENANCE
CO. RD. 19 INTERSECTION

CALC. BY ____ DATE ____	MED-42-1.89	OHIO	165/189
CHKD. BY ____ DATE ____	MED-224-10.45	FHWA REGION 5	

LEGEND

Temporary Pavement, 10" Concrete, As Per Plan

Temporary Pavement, 9" Asphalt, As Per Plan

See Sheet 153A For Temporary Pavement Typical Sections.

NOTES:

1. All Drums For Phases A, B & C Shall Have Type C Steady Burning Warning Lights Attached.
2. Quantities For Phase B Carried On Sheet 154.
3. See Sheets 157-159 For Additional Phase B Crossover Details.

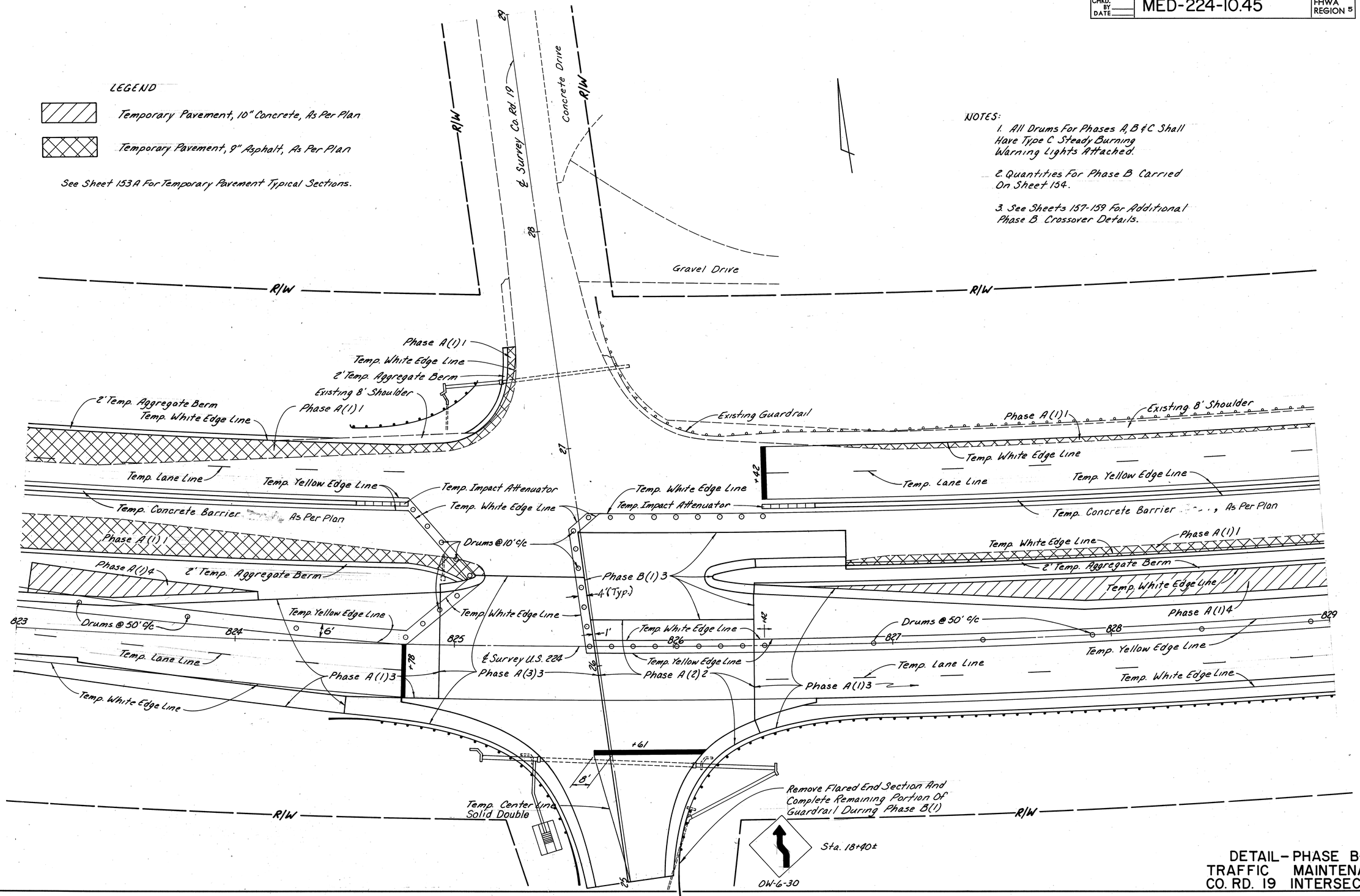

DETAIL - PHASE B-1
TRAFFIC MAINTENANCE
CO. RD. 19 INTERSECTION

CALC. BY ___ DATE ___	MED-42-1.89	OHIO	166
CHKD. BY ___ DATE ___	MED-224-10.45	FHWA REGION 5	189

LEGEND

Temporary Pavement, 10" Concrete, As Per Plan

Temporary Pavement, 9" Asphalt, As Per Plan

See Sheet 153A For Temporary Pavement Typical Sections.

NOTES:

1. All Drums for Phases A, B & C shall have Type C Steady Burning Warning Lights attached.
2. Quantities for Phase A carried on sheet 154.
3. See Sheets 154-156 for additional Phase "A" Crossover Details.
4. Install portion of New Guardrail as shown and complete Culvert Extension and Grading prior to permiting traffic on Temporary Pavement. See sheet 60 for Culvert Extension Details. Cost of Flared End Section to be included for payment with Item 615 - Temporary Roads.

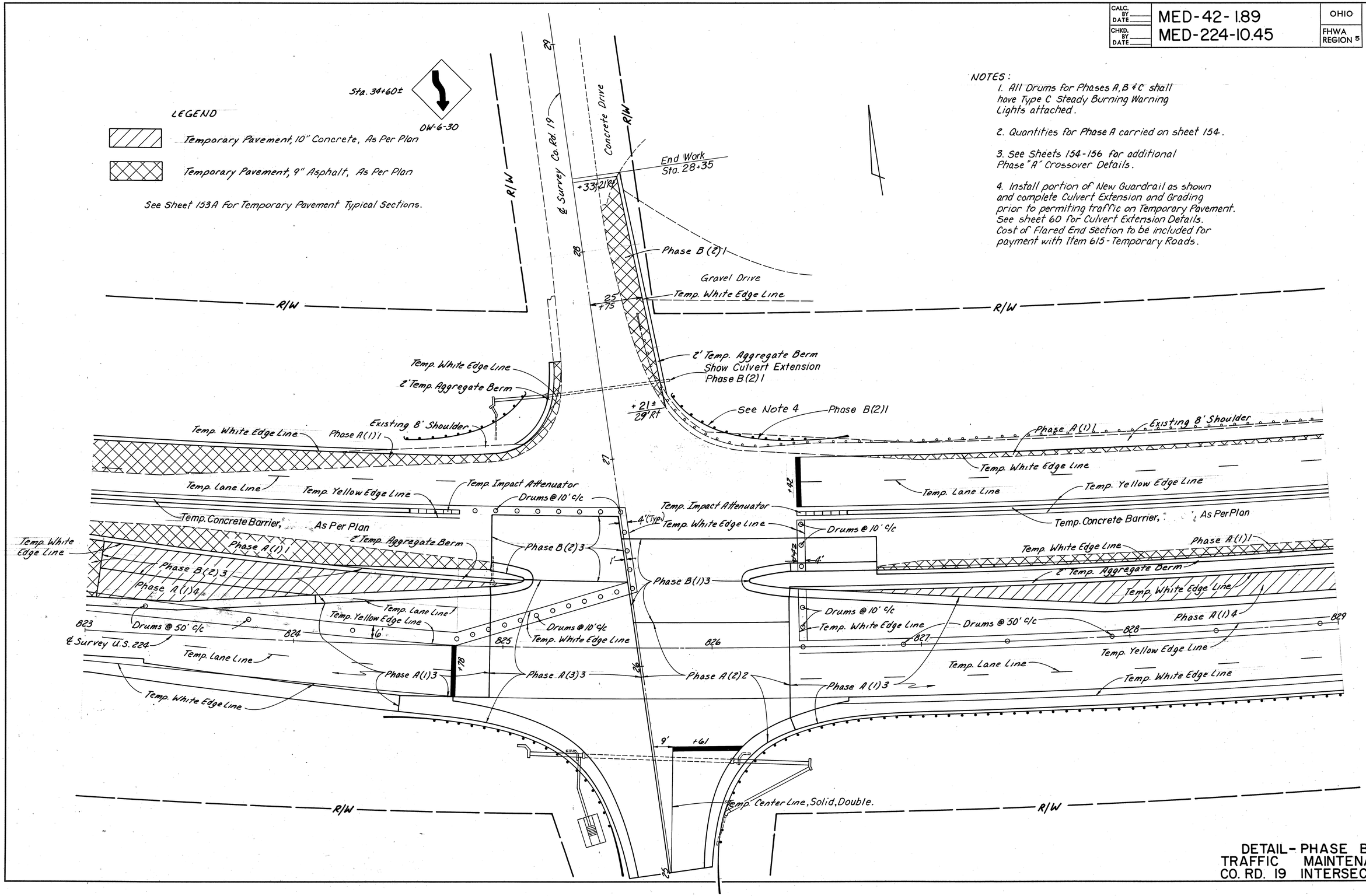

DETAIL - PHASE B-2
TRAFFIC MAINTENANCE
CO. RD. 19 INTERSECTION

CALC. BY DATE	MED-42-1.89	OHIO	167
CHKD. BY DATE	MED-224-10.45	FHWA REGION 5	189

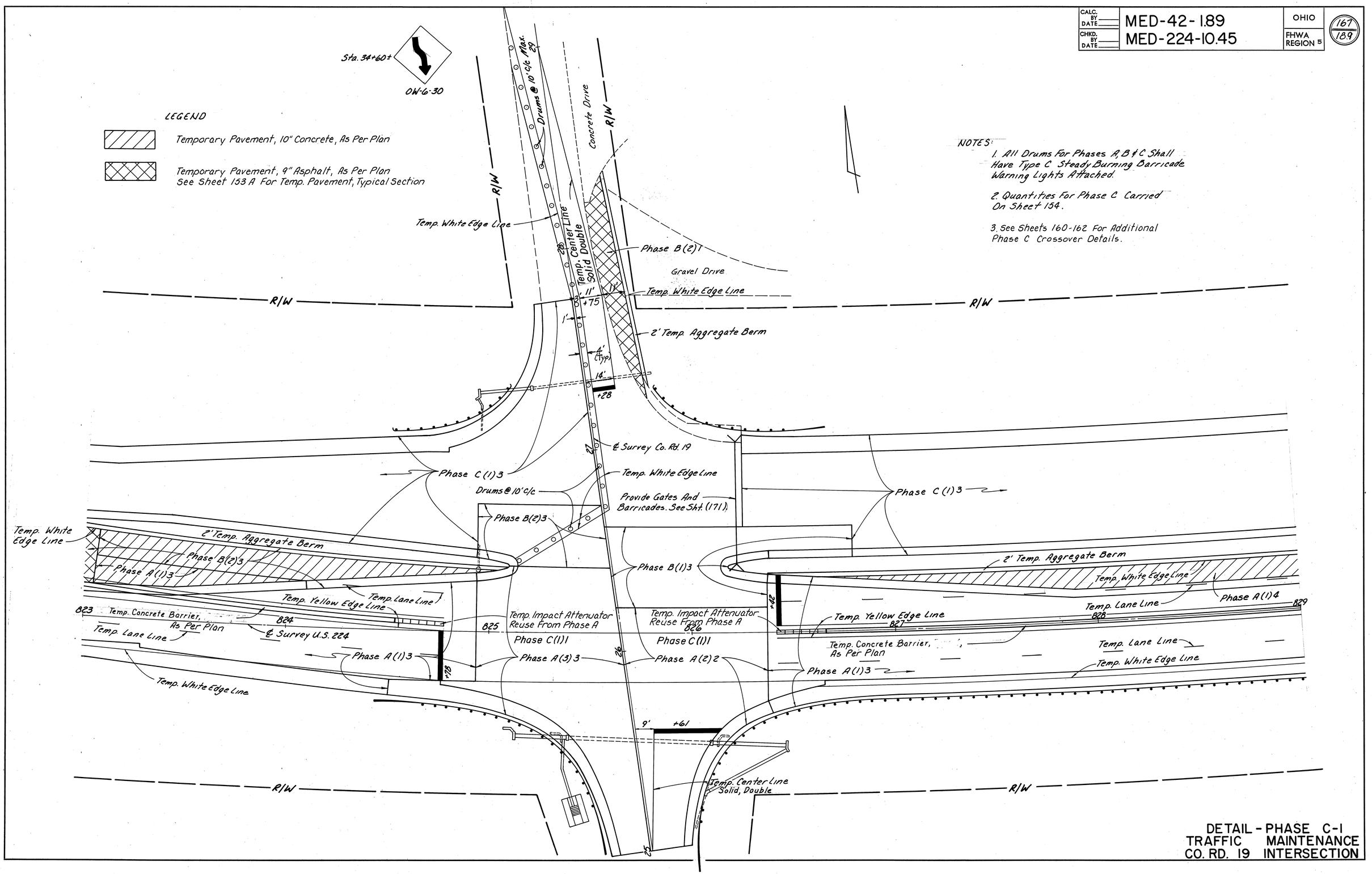

NOTES:

1. All Drums For Phases A, B & C Shall Have Type C Steady Burning Barricade Warning Lights Attached.
2. Quantities For Phase C Carried On Sheet 154.
3. See Sheets 160-162 For Additional Phase C Crossover Details.

DETAIL - PHASE C-1
TRAFFIC MAINTENANCE
CO. RD. 19 INTERSECTION

CALC. BY ____ DATE ____	MED-42-1.89	OHIO	168
CHKD. BY ____ DATE ____	MED-224-10.45	FHWA REGION 5	189

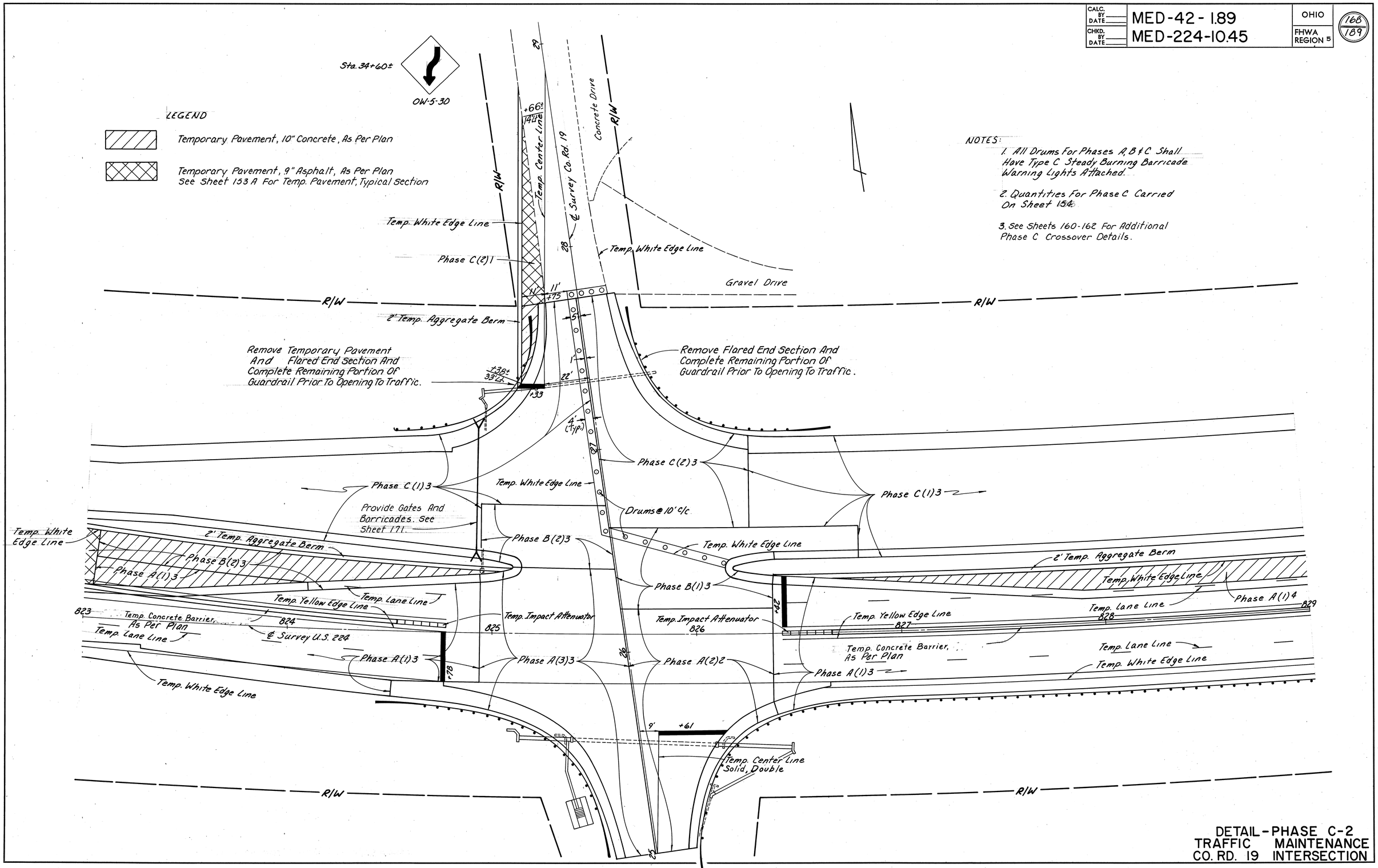

DETAIL - PHASE C-2
TRAFFIC MAINTENANCE
CO. RD. 19 INTERSECTION

CALC. BY DATE	MED-42-1.89	OHIO
CHKD. BY DATE	MED-224-10.45	FHWA REGION 5

169 / 189

CURVE DATA

	①	②	③ & ④	⑤
Dc =	3°00'	2°00'	3°00'	3°00
Δ =	12°43'11"	10°02'57"	9°11'14"	7°00'04"
R =	1909.86'	2864.79'	1909.86'	1909.86'
L =	423.99'	502.46'	306.24'	233.37'
T =	212.87'	251.87'	153.45'	116.83'
E =	11.83'	11.05'	6.15'	3.57'

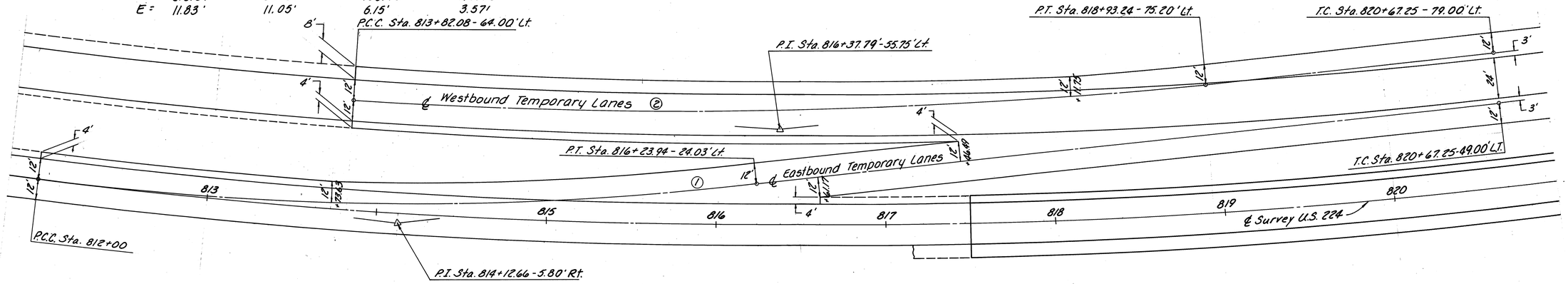

TEMPORARY CROSS-OVER
PHASE "A"
(WEST OF CO. RD. 19)

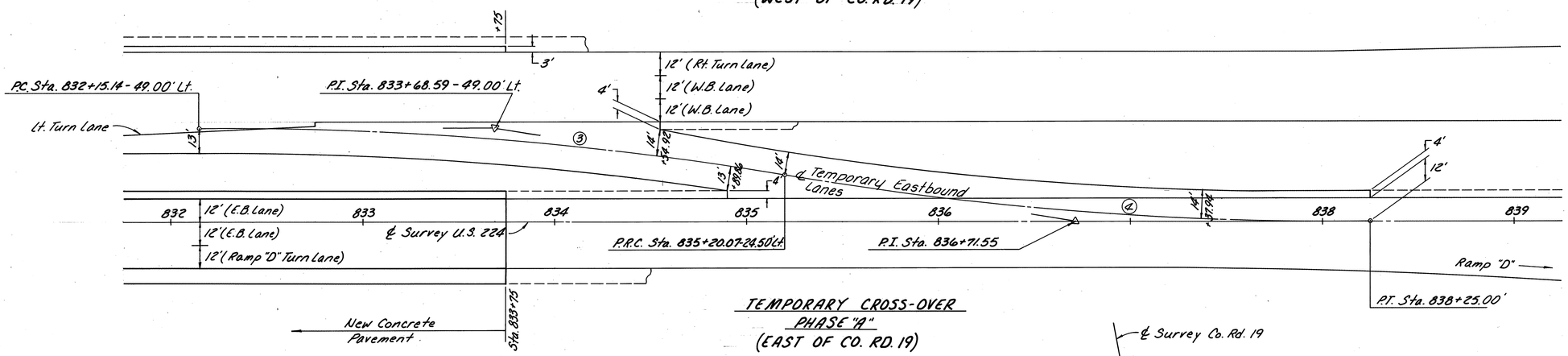

TEMPORARY CROSS-OVER
PHASE "A"
(EAST OF CO. RD. 19)

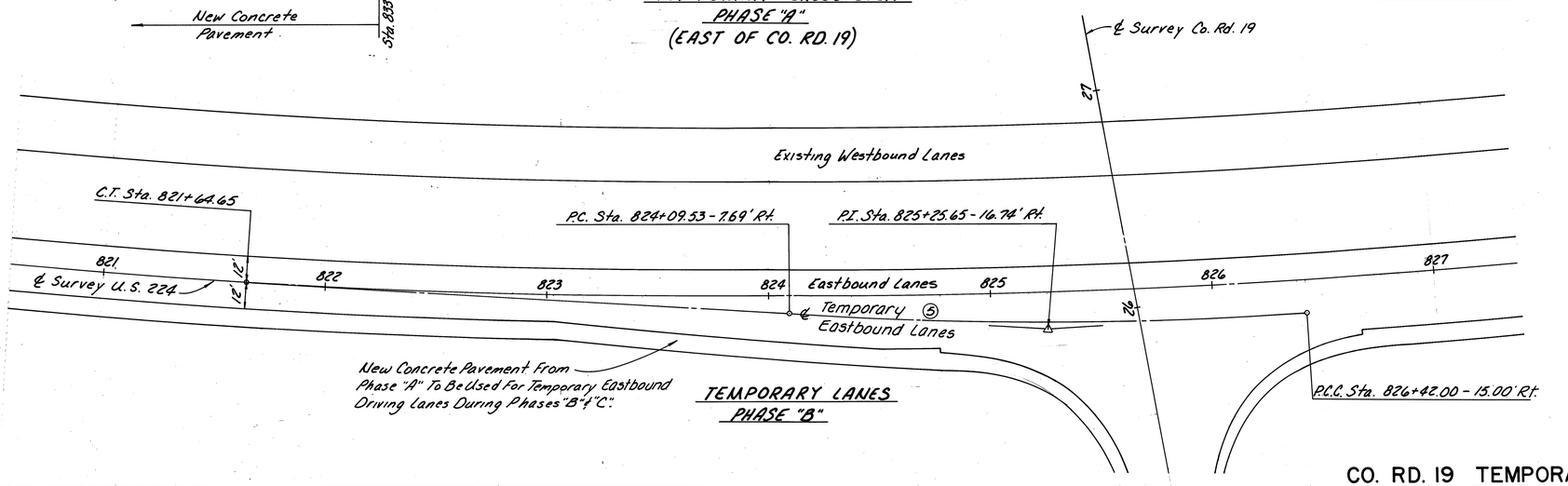

TEMPORARY LANES
PHASE "B"

CO. RD. 19 TEMPORARY CROSS-OVER DETAILS

CALC. BY / DATE	MED-42-1.89	OHIO	170
CHKD. BY / DATE	MED-224-10.45	FHWA REGION 5	189

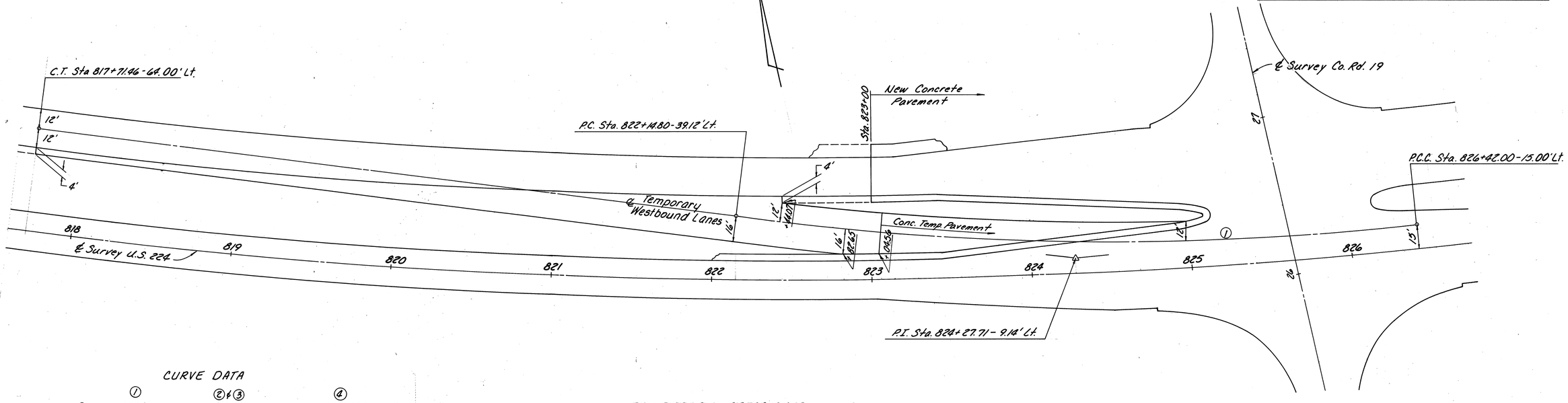

CURVE DATA

	①	②&③	④
Dc =	3°00'	3°00'	1°20'38"
Δ =	12°46'04"	7°21'40"	6°10'03"
R =	1909.86'	1909.86'	4263.08'
L =	425.60'	245.37'	458.89'
T =	213.68'	122.85'	229.67'
E =	11.92'	3.95'	6.18'

TEMPORARY CROSS-OVER
PHASE "C"

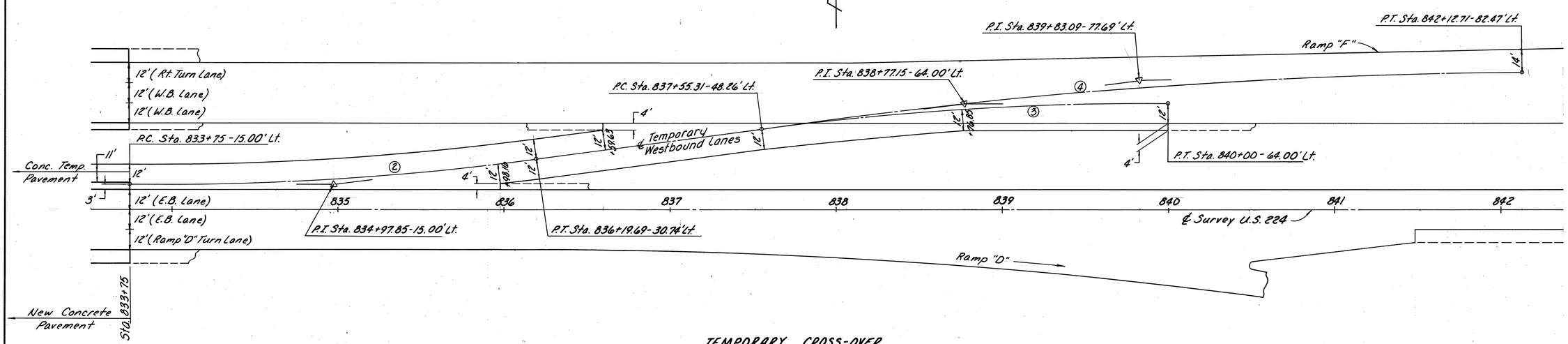

TEMPORARY CROSS-OVER
PHASE "C"
(EAST OF CO. RD. 19)

CO. RD. 19 TEMPORARY CROSS-OVER DETAILS

MOVABLE GATE

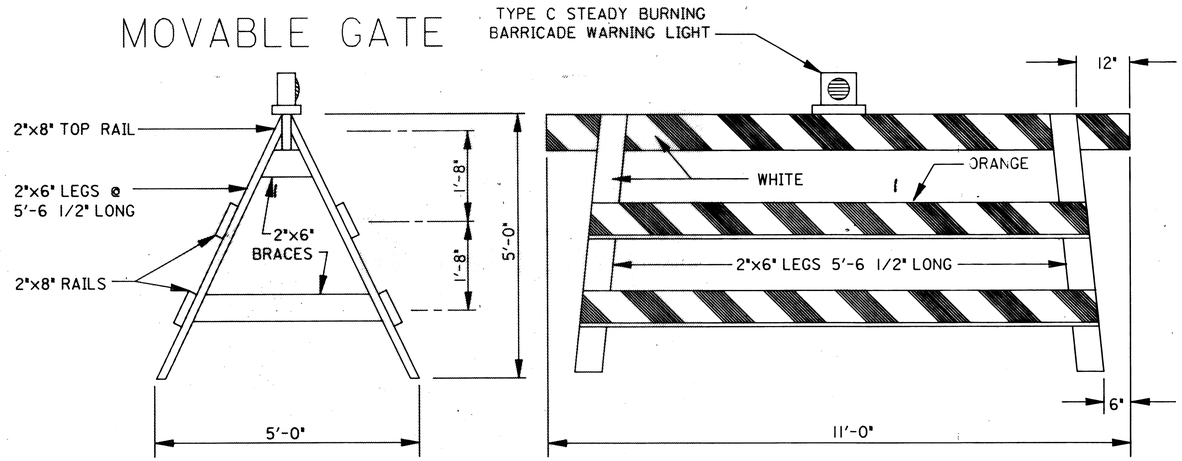

GATES SHALL BE WELL SPIKED USING SPIKES LONG ENOUGH TO CLINCH.

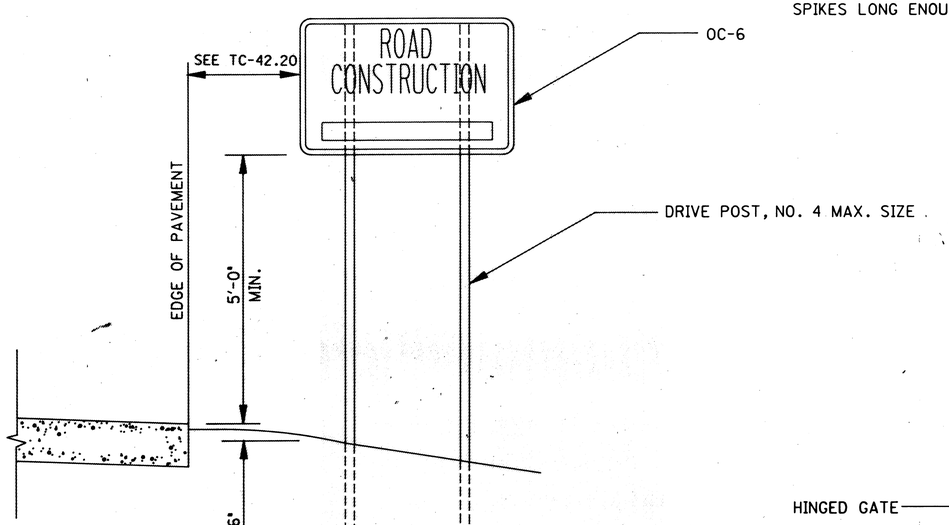

-NOTES-

① BARRICADES: BARRICADES SHALL BE CONSTRUCTED ACCORDING TO DETAILS SHOWN. WHEN THE ROAD IS CLOSED TO TRAFFIC, BARRICADES AND GATES SHALL BE USED TO EFFECTIVELY CLOSE THE ENTIRE ROADWAY INCLUDING THE MEDIAN OF DIVIDED HIGHWAYS. IN URBAN AREAS AND AT LOCATIONS WHERE IT IS IMPRACTICAL TO EXTEND THE BARRICADE TO THE RIGHT-OF-WAY LINE BECAUSE OF A SIDEWALK OR OTHER OBSTRUCTION, THE ENDS OF THE BARRICADE SHALL BE LOCATED AS DIRECTED BY THE ENGINEER TO EFFECT THE DESIRED CLOSING OF THE HIGHWAY.

② PAINTING AND REFLECTORIZATION: ALL RAILS OF THE BARRCADES AND GATES SHALL BE REFLECTORIZED WITH ORANGE AND WHITE REFLECTORIZED TYPE G SHEETING IN 6" WIDE ALTERNATE STRIPES WHICH SLOPE DOWNWARD TOWARD THE CENTER LINE OF THE ROAD AT AN ANGLE OF 45 . ALL THREE RAILS OFTHE ROAD CLOSED BARRICADE SHALL BE STRIPED ON THE SIDE FACING TRAFFIC. ALL GATE RAILS SHALL BE STRIPED ON BOTH SIDES. ALL POSTS, BRACES, GATE LEGS, AND ANY UNSTRIPED RAILS SHALL BE PAINTED WHITE.

③ GATES: ONE GATE SHALL BE ERECTED FOR EACH TRAFFIC LANE. GATES SHALL BE CHAINED AND PADLOCKED TO ONE ANOTHER AND TO ADJACENT POSTS OF THE BARRICADES. CHAINS SHALL BE 1/4" STOCK OR LARGER WITH WELDED LINKS.

A HINGED GATE MAY BE USED AND SHALL BE AN APPROVED 12'x4' STEEL FRAME FARM TYPE, OR A TYPE APPROVED BY THE ENGINEER THE GATE SHALL BE HUNG ON HINGE SCREW HOOKS, OR AS OTHERWISE APPROVED. STRIPING SIMILAR TO THATUSED ON THE MOVEABLE GATE SHALL BE ACCOMPLISHED WITH 1"x8" LUMBER OR WITH METAL STRIPS FASTENED TO THE GATE. THE GATE SHALL BE SUPPORTED AT THE CENTER IN AN APPROVED MANNER.

④ TYPE C STEADY BURNING BARRICADE WARNING LIGHTS: EACH GATE SHALL BE EQUIPPED WITH A TYPE C STEADY BURNING BARRICADE WARNING LIGHT, CONSPICUOUSLY VISABLE AT ALL DISTANCES UP TO 1000' UNDER NORMAL ATMOSPHERIC CONDITIONS. THE LIGHT SHALL BE IN OPERATION AT ALL TIMES BETWEEN SUNSET AND SUNRISE DURING THE PERIOD THE HIGHWAY IS CLOSED.

⑤ SIGNS: WHERE THE ROAD IS CLOSED TO TRAFFIC BY THE ERECTION OF GATES AND BARRICADES, ROAD CLOSED SIGNS (R-75) SHALL BE MOUNTED ON THE GATES AS SHOWN.

WHERE TRAFFIC IS MAINTAINED, A ROAD CONSTRUCTION AHEAD SIGN (OW-128) SHALL BE USED ON THE RIGHT SHOULDER ON THE APPROACHES APPROXIMATELY 500 FEET IN ADVANCE OF THE PROJECT. A ROAD CONSTRUCTION NEXT__MILES SIGN (OC-6) SHALL BE USED ONTHE RIGHT SHOULDER ON THE APPROACHES TO ANY MAJOR CONSTRUCTION OR MAINTENANCE JOB OF TWO (2) MILES OR MORE IN LENGTH. AN END CONSTRUCTION SIGN (OC-8) SHALL BE ERECTED FACING TRAFFIC LEAVING THE CONSTRUCTION SECTION. THE SIGNS SHALL BE ERECTED AS DETAILED HEREON. DUAL MOUNTED SIGNS ARE REQUIRED FOR A FOUR LANE FACILITY.

⑥ LUMBER: LUMBER USED IN THE CONSTRUCTION OF THE GATES AND BARRICADES SHALL BE NO. 1 COMMON YELLOW PINE OR NO. 1 COMMON DOUGLAS FIR, SURFACED ON FOUR SIDES STANDARD, OR OTHER MATERIALS APPROVED BY THE ENGINEER. ALL SIZES ARE NOMINAL.

⑦ POSTS: POSTS SHALL BE SOUND 4"x4" SAWED OR 4-1/2" ROUND. RAILS OF THE BARRICADE SHALL BE BOLTED TO THE POSTS WITH 5/8" BOLTS.

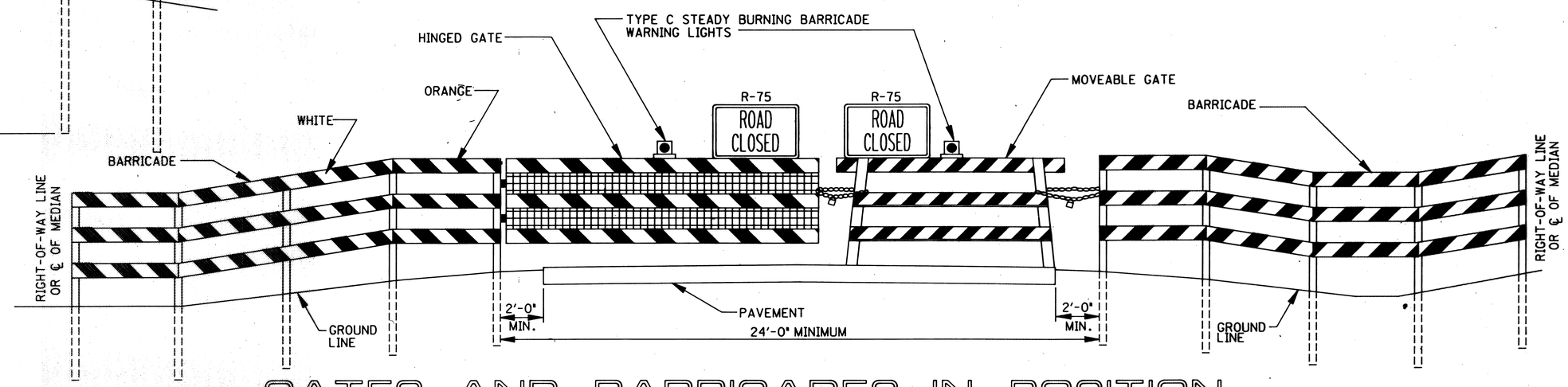

GATES AND BARRICADES IN POSITION

STANDARD D3-01 06-05-87

DETAILS FOR POSITIONING GATES AND BARRICADES

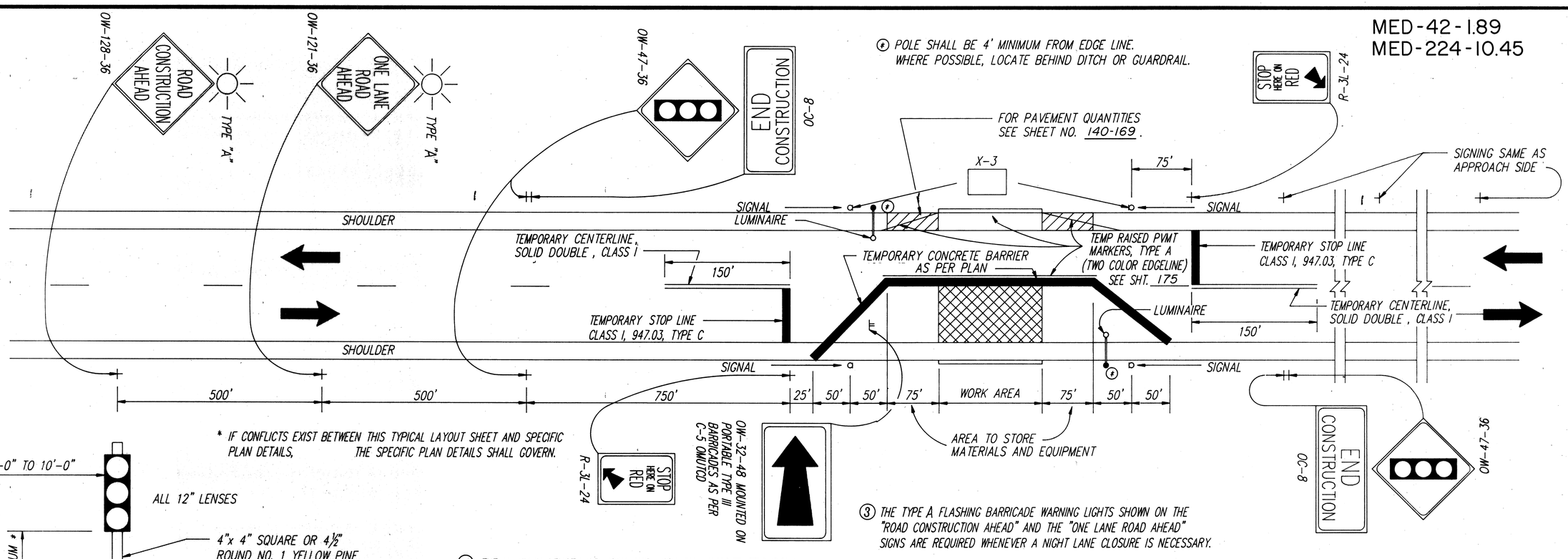

* IF CONFLICTS EXIST BETWEEN THIS TYPICAL LAYOUT SHEET AND SPECIFIC PLAN DETAILS, THE SPECIFIC PLAN DETAILS SHALL GOVERN.

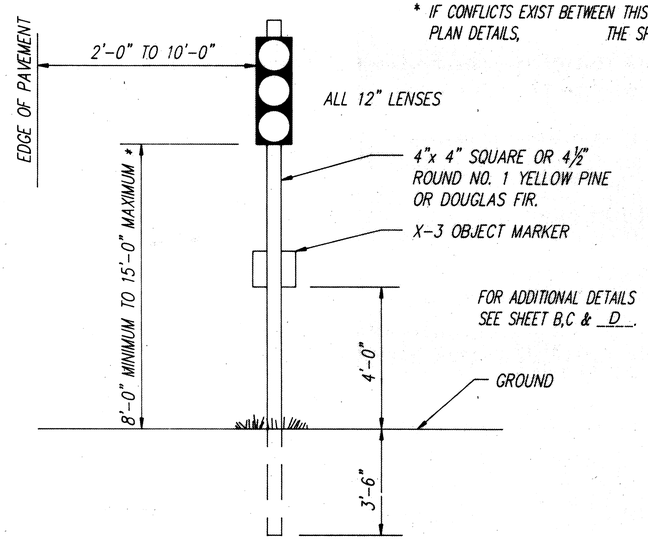

TYPICAL POLE SUPPORTED SIGNAL

* ABOVE GRADE OF ROADWAY CENTER LINE

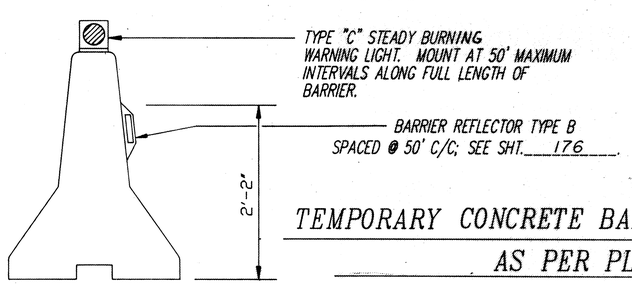

TEMPORARY CONCRETE BARRIER AS PER PLAN

(1) THE MAXIMUM LENGTH OF WORK AREA FOR ONE-WAY TRAFFIC SIGNAL CONTROL IS DETERMINED BY THE CAPACITY REQUIRED TO HANDLE THE PEAK HOUR DEMAND. PRACTICAL MAXIMUM LENGTH OF WORK AREA AND STORAGE AREA IS 400 FEET.

(2) A TWO-PHASE CONTROLLER WITH CABINET, CAPABLE OF BEING SET WITH THE FOLLOWING SPLITS SHALL BE FURNISHED AT MED-42-0248 & MED-42-0265: CYCLE LENGTH 70 SECONDS

	GREEN	AMBER	RED
PHASE A	22	3	10
PHASE B	22	3	10

THE ABOVE TIMIMG MAY BE CHANGED WITH APPROVAL OF THE ENGINEER. THE SIGNALS SHALL BE INSTALLED AND OPERATED IN ACCORDANCE WITH THE REQUIREMENTS OF PART 6 OF THE OHIO MANUAL OF UNIFORM TRAFFIC CONTROL DEVICES. IN ADDITION, ALL TRAFFIC SIGNALS AND EQUIPMENT USED IN THIS TRAFFIC SIGNAL INSTALLATION, SUCH AS SIGNAL CABLE AND SIGNAL HEADS, SHALL BE IN CONFORMANCE WITH SPECIFICATIONS 632 AND 732. HOWEVER, THE PERFORMANCE TEST PROVISION NOTED IN SPECIFICATION 632.27, PARAGRAPH 6, AND THE WORKING DRAWING REQUIREMENTS OF 632.03 ARE WAIVED. THE CONTROLLER, FLASHERS, LOAD SWITCHES, CONFLICT MONITOR, AND OTHER CONTROLLER ACCESSORIES SHALL COMPLY WITH SPECIFICATIONS 633 AND 733, EXCEPT THAT THE REQUIREMENTS OF 633.03 AND 633.05 ARE WAIVED, AS WELL AS THE REQUIREMENTS OF 733.01 FOR EXPANSIBLE THREE DIAL UNITS AND TWELVE CIRCUITS FOR PRETIMED CONTROLLERS. USED EQUIPMENT MEETING CURRENT O.D.O.T. SPECIFICATIONS IS ACCEPTABLE.

CONFLICT MONITORS SHALL BE FURNISHED AT ALL LOCATIONS UNLESS AN ELECTROMECHANICAL PRETIMED CONTROLLER WITH CAM SHAFT IS PROVIDED.

WHEN THE SIGNAL IS CHANGED TO A FLASH CONDITION EITHER MANUALLY OR AUTOMATICALLY, RED SHALL BE FLASHED TO BOTH APPROACHES.

(3) THE TYPE A FLASHING BARRICADE WARNING LIGHTS SHOWN ON THE "ROAD CONSTRUCTION AHEAD" AND THE "ONE LANE ROAD AHEAD" SIGNS ARE REQUIRED WHENEVER A NIGHT LANE CLOSURE IS NECESSARY.

(4) ADEQUATE AREA ILLUMINATION TO CLEARLY IDENTIFY BOTH ENDS OF THE WORK AREA AT NIGHT SHALL BE PROVIDED BY USING 150 WATT MINIMUM HIGH PRESSURE SODIUM LUMINAIRES OR 250 WATT MINIMUM MERCURY VAPOR LUMINAIRES. THE LUMINAIRES SHALL BE LOCATED ADJACENT TO ONE SIGNAL FOR EACH DIRECTION OF TRAFFIC AS SHOWN ABOVE. THE MOUNTING HEIGHT FOR THE LUMINAIRES SHALL BE A MINIMUM OF 27 FEET ABOVE THE PAVEMENT AND MOUNTED ON A SUPPORT OF ADEQUATE STRENGTH TO PROVIDE A SATISFACTORY INSTALLATION. THE OVERHEAD CONDUCTOR CLEARANCE SHALL BE A MINIMUM OF 18 FEET ABOVE THE PAVEMENT. THE LUMINAIRE ARMS SHALL BE OF SUFFICIENT LENGTH TO EXTEND TO THE EDGE OF THE PAVEMENT.

(5) TEMPORARY CENTERLINE: SOLID, DOUBLE, AS SHOWN ABOVE, SHALL BE INSTALLED AND MAINTAINED WHERE NO PASSING LINES ARE NOT ALREADY IN PLACE. 12" STOP LINES SHALL ALSO BE INSTALLED. TEMPORARY RAISED PAVEMENT MARKERS, TYPE A (TWO COLOR EDGELINE) (WHITE/YELLOW) SHALL BE USED AS SHOWN. **EXISTING CONFLICTING PAVEMENT MARKINGS BETWEEN THE WORK AREA AND THE STOP LINE, AND ON THE EXISTING PAVEMENT ADJACENT TO THE WIDENING SHALL BE REMOVED.** IF RAISED PAVEMENT MARKERS ARE EXISTING ALONG THE EDGE LINE, THE REFLECTORS SHALL BE REMOVED ALONG THE TEMPORARY PAVEMENT.

AFTER COMPLETION OF THE WORK, TEMPORARY MARKINGS SHALL BE REMOVED IN ACCORDANCE WITH 621.134 AND THE ORIGINAL MARKINGS AND RAISED PAVEMENT MARKER REFLECTORS SHALL BE RESTORED.

(6) THE HORIZONTAL OR VERTICAL ALIGNMENT OF THE ROADWAY MAY REQUIRE ADJUSTMENTS IN THE LOCATION OF THE ADVANCE WARNING SIGNS (THE DISTANCES SHOWN FOR ADVANCE WARNING SIGN SPACING

(NOTE NO. 6 CONTINUED IN NEXT COLUMN)

ARE MINIMUMS). THE VERTICAL ALIGNMENT OF THE ROADWAY MAY REQUIRE ADJUSTMENTS IN THE HEIGHT OF THE SIGNAL HEADS WITHIN THE RANGE SPECIFIED IN THE TYPICAL POLE SUPPORTED SIGNAL DETAIL.

(7) THE TEMPORARY CONCRETE BARRIER, AS PER PLAN, SHALL BE PLACED AS SHOWN ABOVE AND ON SHEET NO. 138-168 BEFORE ANY BRIDGE WORK IS STARTED. THE BARRIER SHALL COMPLETELY CLOSE THE ROADWAY & SHOULDER AS SHOWN. PROVISIONS SHALL BE MADE BY THE CONTRACTOR TO GET ACCESS TO THE WORK AREA. THE BARRIER SECTIONS SHALL BE TIED TOGETHER WITH CONNECTING PINS IN ACCORDANCE WITH STANDARD DRAWING MC-9A OR AS SHOWN ON SHEET F IF ATTACHED. TONGUE AND GROOVE SECTIONS WILL NOT BE PERMITTED ON THIS PROJECT.

(8) PAYMENT FOR ALL OF THE ABOVE, EXCEPT THE TEMPORARY CONCRETE BARRIER, AS PER PLAN, AND OTHER ITEMS ITEMIZED SEPERATELY SHALL BE INCUDED IN ITEM 614 MAINTAINING TRAFFIC. PAYMENT FOR THE TEMPORARY CONCRETE BARRIER, AS PER PLAN, SHALL BE LUMP SUM, WHICH SHALL INCLUDE ALL COSTS OF PROVIDING, MAINTAINING, REPOSITIONING THE BARRIER SECTIONS FOR ALL CONSTRUCTION PHASES, AND SUBSEQUENTLY REMOVING THE TEMPORARY BARRIER.

STATE OF OHIO
DEPARTMENT OF TRANSPORTATION
DISTRICT THREE

SIGNALIZED CLOSING OF ONE LANE OF A TWO LANE HIGHWAY

(A)

DRAWN

REV: 11-87
STANDARD NO D3-02A1

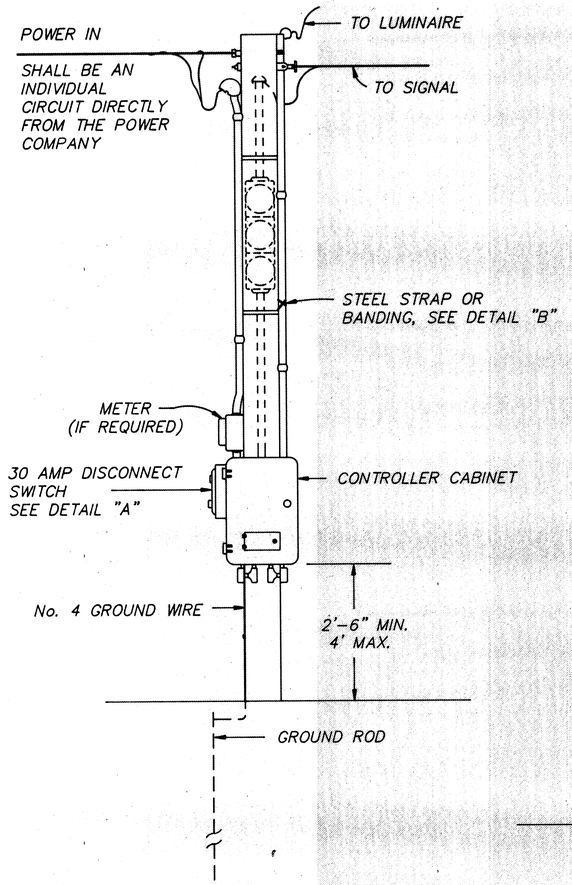

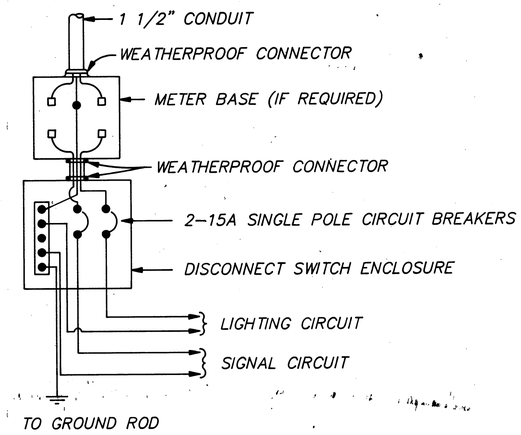

DETAIL "A"

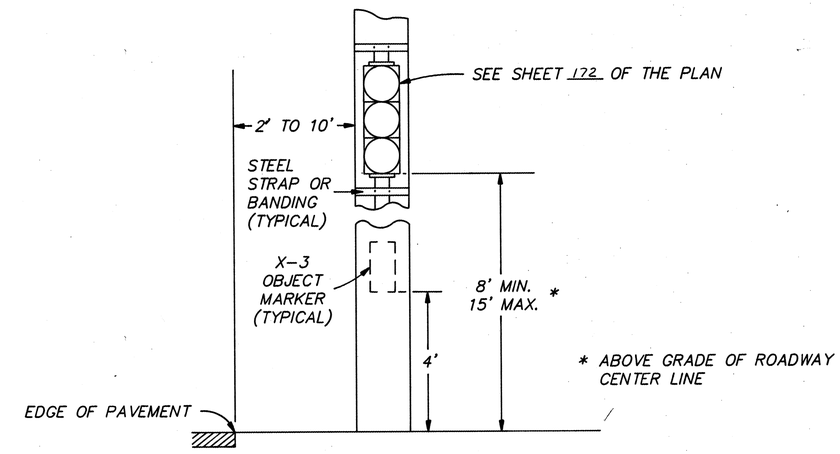

DETAIL "B"

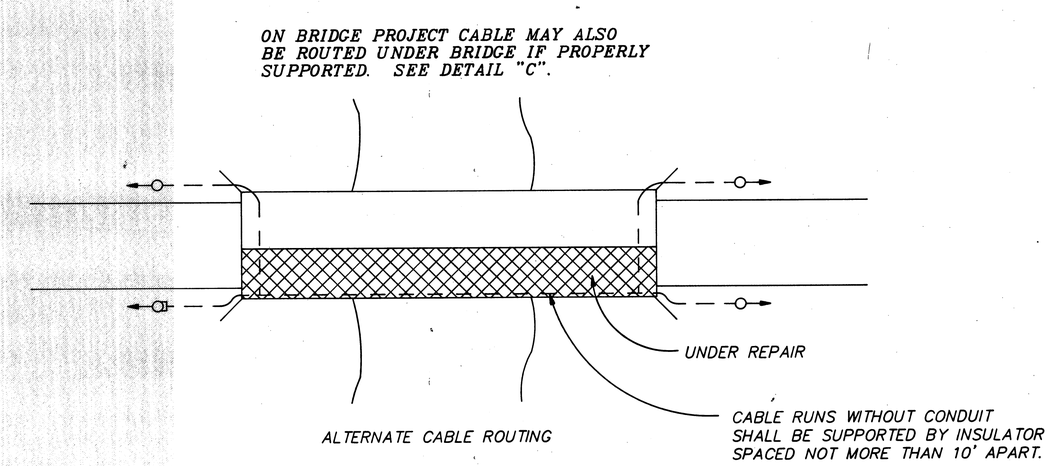

DETAIL "C"

TYPICAL SERVICE, LUMINAIRE, SIGNAL HEAD AND CONTROLLER CABINET INSTALLATION

STATE OF OHIO
DEPARTMENT OF TRANSPORTATION
DISTRICT THREE

SIGNALIZED CLOSING OF ONE LANE OF A TWO LANE HIGHWAY (B)

DRAWN

REV: 5-87

STANDARD NO. D3-02B

CABLE SHALL BE 4-CONDUCTOR No. 14 COPPER SIGNAL CABLE, COLOR CODED AND STRANDED. ALL ELECTRICAL CONNECTIONS TO BE MADE AT TERMINAL BLOCKS USING TERMINAL LOCK FORKS. SPLICES IN SIGNAL CABLE SHOULD BE AVOIDED BUT IF NECESSARY SPLICE KITS SHALL BE USED. ALL CONNECTIONS AT SPLICE POINTS SHALL BE SOLDERED.

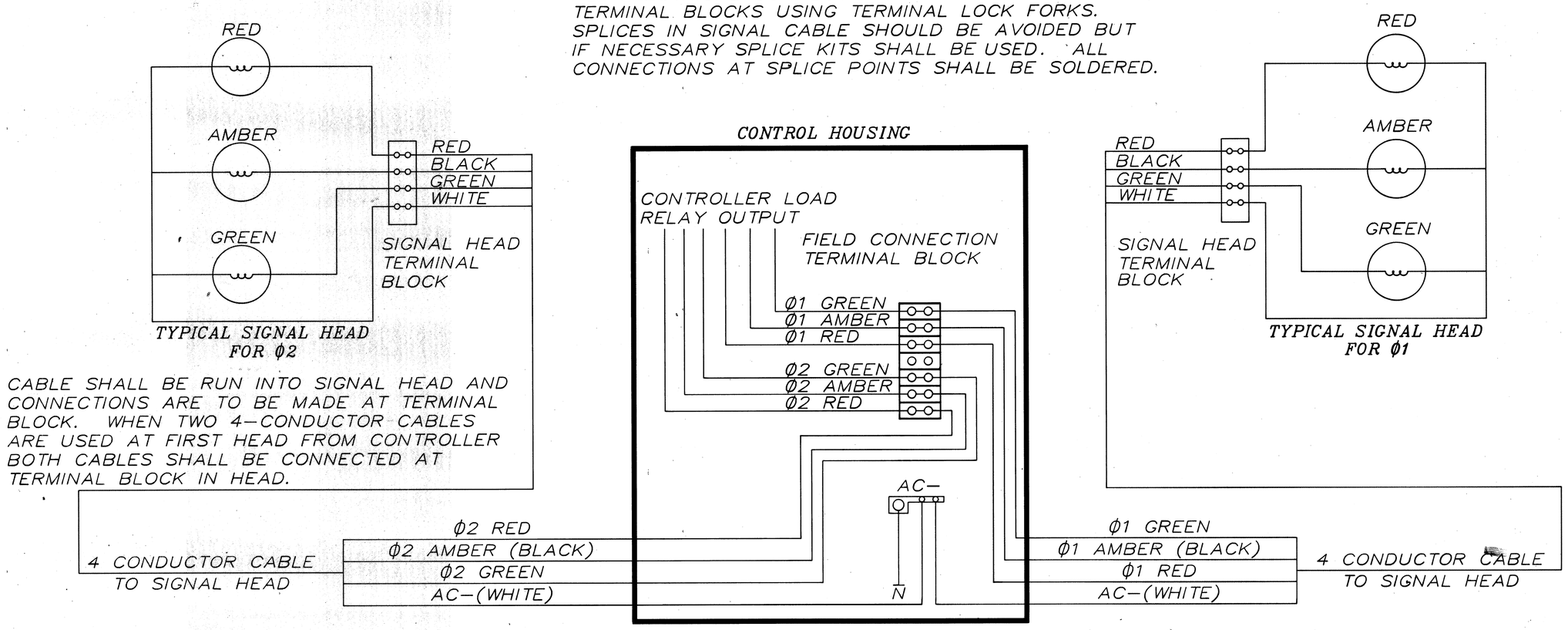

TYPICAL SIGNAL HEAD HOOK-UP

STATE OF OHIO
DEPARTMENT OF TRANSPORTATION
DISTRICT THREE

SIGNALIZED CLOSING OF ONE LANE OF A TWO LANE HIGHWAY (C)

DRAWN	REV: 5-87
	STANDARD NO. D3-02C

614 TEMPORARY RAISED PAVEMENT MARKERS

CALC. BY MED DATE 2/88	MED-42-1.89	OHIO	175
CHKD. BY AFS DATE 3/88	MED-224-10.45	FHWA REGION 5	189

THIS ITEM OF WORK SHALL CONSIST OF FURNISHING, INSTALLING, MAINTAINING, AND SUBSEQUENTLY REMOVING TEMPORARY RAISED PAVEMENT MARKERS (TRPM'S). THE TRPM'S SHALL BE YELLOW OR WHITE, AS DESCRIBED IN THE PLAN.

MATERIAL

ALL UNITS SHALL BE OF SUFFICIENT STRENGTH AND PROPERLY SHAPED SO AS NOT TO BE DISLODGED OR BROKEN, OR THE REFLECTOR DISLODGED OR BROKEN, OR THE REFLECTOR DISLODGED OR DAMAGED BY IMPACTS FROM VEHICLES TIRES, INCLUDING THOSE OF HIGH PRESSURE TRUCK TIRES LOADED TO 4500 POUNDS.

RETROREFLECTORS SHALL BE PROVIDED IN ONE OR TWO DIRECTIONS ON EACH UNIT AS REQUIRED BY THE USAGE AND SHALL RETURN WHITE OR YELLOW LIGHT AS IS APPROPRIATED FOR THE APPLICATION.

THE REFLECTOR SHALL HAVE AN EFFECTIVE AREA OF 0.35 SQUARE INCH FOR TYPE A OR 3.0 SQUARE INCH FOR TYPE B. ITS BRIGHTNESS OR SPECIFIC INTENSITY (WHEN TESTED AT 0.2 DEGREE ANGLE OF OBSERVATION AND THE FOLLOWING ANGLES OF INCIDENCE) SHALL MEET OR EXCEED THE FOLLOWING:

SPECIFIC INTENSITY

INCIDENCE ANGLE (DEGREES)	TYPE A WHITE	TYPE A YELLOW
0	1.0	0.6
20	0.4	0.24
45	–	–

	TYPE B WHITE	TYPE B YELLOW
0	3.0	1.8
20	1.2	0.72
45	0.3	0.2

ANGLE OF INCIDENCE FORMED BY A RAY FROM LIGHT SOURCE TO THE MARKER AND THE NORMAL TO THE LEADING EDGE OF THE MARKER FACE (ALSO HORIZONTAL ENTRANCE ANGLE).

ANGLE OF OBSERVATION FORMED BY A RAY FROM LIGHT SOURCE TO THE MARKER AND THE RETURNED RAY FROM THE MARKER TO THE MEASURING RECEPTOR.

SPECIFIC INTENSITY IS THE MEAN CANDLEPOWER OF THE REFLECTED LIGHT (AT GIVEN INCIDENCE AND DIVERGENCE ANGLES) FOR EACH FOOT-CANDLE AT THE REFLECTOR (ON A PLANE PERPENDICULAR TO THE INCIDENT LIGHT).

TYPE A UNITS ARE INTENDED TO PROVIDE HIGH VISIBILITY BOTH AT NIGHT AND DURING DAYLIGHT. THEIR DAY TIME VISIBILITY SHALL BE ASSURED BY SIZE, SHAPE AND COLOR AS FOLLOWS:

1) THE UNITS SHALL BE A HIGH VISIBILITY YELLOW OR WHITE COLOR WHICH WILL NOT DEGRADE SUBSTANTIALLY DUE TO TRAFFIC WEAR AND WHICH WILL MATCH THE COLOR OF THE REFLECTOR.

2) WHEN VIEWED FROM ABOVE, THE UNITS SHALL HAVE A VISIBLE AREA OF NOT LESS THAN 14 SQUARE INCHES.

3) WHEN VIEWED FROM THE FRONT, PARALLEL TO THE PAVEMENT, AS FROM APPROACHING TRAFFIC, THE UNIT SHALL HAVE A WIDTH OF APPROXIMATELY 4 INCHES AND A VISIBLE AREA OF NOT LESS THAN 1.5 SQUARE INCHES.

TYPE B UNITS ARE INTENDED TO PROVIDE HIGH VISIBILITY AT NIGHT BY RETRO-REFLECTING AUTOMOTIVE HEADLIGHT BACK TO THE DRIVER.

INSTALLATION: THEY SHALL BE ATTACHED TO CLEAN, DRY PAVEMENT BY A BUTYL ADHESIVE PAD, A BITUMINOUS ADHESIVE OR OTHER CONSTRUCTION GRADE ADHESIVES (SUCH AS FRANKLIN PANEL AND METAL ADHESIVE) SUITABLE TO ANCHOR THE UNIT UNDER THE ABOVE CONDITIONS. WHEN IT IS NECESSARY TO ATTACH UNITS TO NEW CONCRETE WITH CURING COMPOUND REMAINING, THE CURING COMPOUND MEMBRANE SHALL BE REMOVED BY SANDBLASTING OR OTHER MECHANICAL CLEANING METHOD. THEY SHALL BE INSTALLED IN ACCORDANCE WITH THE MANUFACTURER'S RECOMMENDATIONS.

THE CONTRACTOR SHALL IMMEDIATELY REPLACE, AT HIS COST, ANY UNITS WHICH FAIL (BROKEN HOUSING, HOUSING WORN TO THE EXTENT THAT DAYTIME VISIBILITY IS SIGNIFICANTLY DIMINISHED OR OF AN UNACCEPTABLE COLOR, DETACHED OR BROKEN REFLECTOR, HOUSING DETACHED FROM ADHESIVE).

TRPM'S ARE LIKELY TO BE REMOVED BY SNOW PLOWING OPERATIONS, THUS THEY ARE NOT CONSIDERED SUITABLE FOR USE DURING THE PERIOD FROM OCTOBER 15 UNTIL APRIL 30. THE CONTRACTOR IS ADVISED TO SCHEDULE HIS WORK AND/OR THE USE OF THESE DEVICES TO AVOID THIS PERIOD. SHOULD THE CONTRACTOR CHOOSE TO USE TRPM'S DURING THIS PERIOD AND THEY ARE SUBSEQUENTLY REMOVED OR DESTROYED BY SNOW AND ICE CONTROL ACTIVITIES, THE CONTRACTOR SHALL IMMEDIATELY, AT HIS COST, PROVIDE A SUBSTITUTE TRAFFIC GUIDANCE SYSTEM EFFECTIVE DURING LIGHT AND DARK AND WHICH IS ACCEPTABLE TO THE ENGINEER.

THE UNITS SHALL BE PLACED ACCURATELY TO DEPICT STRAIGHT OR UNIFORMLY CURVING LINES. WHEN USED TO SUPPLEMENT TEMPORARY PAVEMENT MARKINGS, THEY MAY BE PLACED ON OR IMMEDIATELY ADJACENT TO THE PAVEMENT MARKING. LOCATIONS SHALL BE ADJUSTED UP TO ONE FOOT LONGITUDINALLY OR SIX INCHES LATERALLY TO AVOID PLACEMENT ON JOINTS, CRACKED OR DETERIORATED PAVEMENT. THEY SHALL NOT BE PLACED DIRECTLY ON PAVEMENT MARKINGS IF THIS WILL DETRACT FROM THEIR ABILITY TO REMAIN ATTACHED TO THE PAVEMENT.

APPLICATION

1) WHEN REQUIRED TO SUPPLEMENT PAVEMENT MARKING; THEY SHALL BE PLACED AS FOLLOWS:

LINE	TYPE	SPACING
EDGE LINE	A OR B	20' C/C
LANE LINE	A OR B	40' C/C*
CENTER LINE (SINGLE/BROKEN)	A OR B	40' C/C *
CENTER LINE (DOUBLE/SOLID)	A OR B	2 UNITS SIDE BY SIDE 4 INCHES APART 20' C/C
CHANNELIZING LINE (INCLUDES EXIT GORE NOSE)	A OR B	10' C/C

* CENTERED IN GAP

2) WHEN USED TO SIMULATE (REPLACE) PAVEMENT MARKING THEY SHALL BE PLACED AS FOLLOWS:

LINE	TYPE	SPACING
EDGE LINE	A	5' C/C
LANE LINE	A	4@3.33' C/C 30' GAP (40' CYCLE)
CENTER LINE (DOUBLE SOLID)	A	2 UNITS SIDE BY SIDE 5' C/C
CENTER LINE (SINGLE BROKEN)	A	4@3.33' C/C 30' GAP (40' CYCLE)
CHANNELIZING LINE (INCLUDES EXIT GORE NOSE)	A	5' C/C
EDGE LINE (TWO COLOR) (WHITE/YELLOW)	A	BACK TO BACK 5' C/C

YELLOW TRPM'S USED TO SEPARATE OPPOSITE FLOWS OF TRAFFIC (CENTER LINES) SHALL INCLUDE REFLECTIONS FOR BOTH DIRECTIONS. ALL OTHER YELLOW TRPM'S AND WHITE TRPM'S SHALL PROVIDE RETROREFLECTIVITY FOR ONE DIRECTION.

REMOVAL

REMOVAL SHALL BE ACCOMPLISHED IN A MANNER THAT LITTLE OR NONE OF THE ADHESIVE REMAINS ON THE PAVEMENT AND PERMANENT PAVEMENT SURFACES SHALL NOT BE SCARRED, BROKEN OR ROUGHENED SIGNIFICANTLY.

PAYMENT

BASIS OF PAYMENT SHALL BE AT THE CONTRACT UNIT PRICE PER EACH TRPM AND SHALL INCLUDE ALL LABOR, EQUIPMENT, HARDWARE AND INCIDENTALS REQUIRED TO PERFORM THE WORK. IT SHALL ALSO INCLUDE REPLACEMENT AT NO ADDITIONAL COST OF ALL TRPM'S WHICH, IN THE JUDGEMENT OF THE ENGINEER, FAIL FOR ANY REASON, EXCEPT DUE TO FAILURE OF THE PAVEMENT TO WHICH THEY ARE ATTACHED.

ITEM	UNIT	DESCRIPTION
614	EACH	TEMPORARY RAISED PAVEMENT MARKERS

	STATIONING (FROM-TO) (SIDE)	SPACING	TYPE A W	TYPE A Y	TYPE A Y/Y		TYPE B W	TYPE B Y	TYPE B Y/Y		REMARKS (LINE TYPE)
RS-440 (40)	MED-42-0248										
	Phase "A"										
	129+85± To 132+14± Rt.	5' C/C	47	47							Edge Line (Two Color)
	127+10± To 134+89± Rt.	5' C/C	157	157							Edge Line (Two Color)
	Phase "B"										
	127+10± To 134+89± Lt.	5' C/C	157	157							Edge Line (Two Color)
	129+85± To 132+14± Lt.	5' C/C	47	47							Edge Line (Two Color)
	MED-42-0265										
	Phase "A"										
	137+21± To 140+18± Rt.	5' C/C	61	61							Edge Line (Two Color)
	134+46± To 142+93± Rt.	5' C/C	171	171							Edge Line (Two Color)
	Phase "B"										
	134+46± To 142+93± Lt.	5' C/C	171	171							Edge Line (Two Color)
	137+21± To 140+18± Lt.	5' C/C	61	61							Edge Line (Two Color)
	TOTALS		872	872							
			1,744								
F-51 (70)	MED-42-0688										
	Phase "A"										
	16+17± To 23+86± Lt.	5' C/C	155	155							Edge Line (Two Color)
	17+52± To 22+47± Lt.	5' C/C	100	100							Edge Line (Two Color)
	Phase "B"										
	17+52± To 22+47± Rt.	5' C/C	100	100							Edge Line (Two Color)
	16+22± To 23+08± Rt.	5' C/C	138	138							Edge Line (Two Color)
	TOTALS		493	493							
			986								
			2,730								

Quantities carried to General Summary sheet 15.

STATE OF OHIO
DEPARTMENT OF TRANSPORTATION
DISTRICT THREE

614 TEMPORARY RAISED PAVEMENT MARKERS

STANDARD NO. D3-2D (D)

DESIGNED	DRAWN	CHECKED	REVIEWED	DATE	REVISED
					5-87

614 BARRIER REFLECTORS

CALC. BY ____ DATE ____
CHKD. BY ____ DATE ____

MED-42-1.89
MED-224-10.45

OHIO
FHWA REGION 5

176/189

THIS ITEM SHALL CONSIST OF FURNISHING AND INSTALLING BARRIER REFLECTORS (TYPE A) ON GALVANIZED STEEL GUARDRAIL AND/OR BARRIER REFLECTORS (TYPE B) ON CONCRETE BARRIERS IN ACCORDANCE WITH PLANS AND SPECIFICATIONS.

MATERIAL

THE BARRIER REFLECTOR SHALL BE AS MANUFACTURED BY STIMSONITE, REFLEXITE OR AN APPROVED FUNCTIONAL EQUIVALENT AS DESCRIBED BELOW:

STIMSONITE– MODEL 965 (WHITE & YELLOW) OR
REFLEXITE– MODEL 650 (WHITE & YELLOW)

THE ADHESIVE SHALL BE FRANKLIN PANEL AND METAL FRAMING ADHESIVE AS MANUFACTURED BY FRANKLIN CHEMICAL INDUSTRIES, PR–365 AS MANUFACTURED BY PRODUCTS RESEARCH AND CHEMICAL CORPORATION OR AN APPROVED EQUAL.

ALL ADHESIVES SHALL HAVE A SHELF LIFE OF 6 MONTHS AT 75 DEGREES F STORAGE MINIMUM GUARANTEED.

LAYOUT

THE CONTRACTOR SHALL LAYOUT ALL LOCATIONS TO ASSURE PROPER PLACEMENT. THE LAYOUT SHALL BE APPROVED BY THE ENGINEER BEFORE INSTALLATIONS ARE STARTED. THE LAYOUT SHALL BE INCIDENTAL TO THE INSTALLATION OPERATION.

INSTALLATION

1) ON CONCRETE BARRIERS THE HEIGHT OF THE TOP OF THE REFLECTOR SHALL BE 26 INCHES ABOVE THE NEAR EDGE OF PAVEMENT, BUT IN NO CASE SHALL THE TOP OF THE REFLECTOR BE LESS THAN 3 INCHES BELOW THE TOP OF THE CONCRETE BARRIER. ATTACHMENT SHALL BE BY THE ABOVE REFERENCED ADHESIVE AND APPLIED PER MANUFACTURER'S RECOMMENDATION.

2) GUARDRAIL REFLECTORS SHALL BE INSTALLED WITHIN THE CONCAVE SURFACE OF THE GUARDRAIL. ATTACHMENT MAY BE BY BRACKET WHICH FITS UNDER THE HEAD OF THE CENTER GUARDRAIL BOLT OR BY THE ABOVE REFERENCED ADHESIVE AND APPLIED PER MANUFACTURER'S RECOMMENDATION.

3) THE ABOVE REFERENCED ADHESIVE SHALL BE FLASHED WHEN APPLIED TO ACHIEVE MAXIMUM BONDING STRENGTH.

4) WHEN MOUNTED ON A FLAT SURFACE, THE REFLECTOR SHOULD BE TILTED UPWARD FROM THE VERTICAL OR PLUMB POSITION 2–3 DEGREES TO FACILITATE "RAIN WASHING" OF THE REFLECTOR FACE.

5) TWO–LANE HIGHWAY – WHITE UNITS SHALL BE PLACED ON THE RIGHT SIDE OF APPROACHING TRAFFIC.

FOUR–LANE DIVIDED HIGHWAY – WHITE UNITS SHALL BE PLACED ON THE RIGHT SIDE OF APPROACHING TRAFFIC AND YELLOW ON THE LEFT.

BASIS OF PAYMENT

MATERIAL AND INSTALLATION TO BE SPECIFIED ABOVE.

COST OF BARRIER REFLECTORS, TYPE "B" AND TYPE "C" STEADY BURNING WARNING LIGHTS, TO BE INCLUDED FOR PAYMENT IN THE LUMP SUM BID FOR ITEM 622 - TEMPORARY CONCRETE BARRIER, TYPE 1 OR TYPE 2, AS PER PLAN.

STATIONING (FROM–TO) (SIDE)	SPACING	TYPE A		TYPE B RURAL		TYPE B CITY				REMARKS
		W	Y	W	Y	W	Y			
TOTALS										

614 BARRIER REFLECTORS
THESE REFLECTORS AND THEIR MOUNTING SHALL CONFORM TO SUPPLEMENTAL SPECIFICATION 802.
ON THIS PROJECT THEIR PAYMENT IS INCLUDED WITH ITEM 614 MAINTAINING TRAFFIC LUMP SUM.

STATE OF OHIO
DEPARTMENT OF TRANSPORTATION
DISTRICT THREE

614 BARRIER
REFLECTORS

STANDARD NO. D3–2E
Ⓔ

DESIGNED	DRAWN	CHECKED	REVIEWED	DATE	REVISED
					7–87

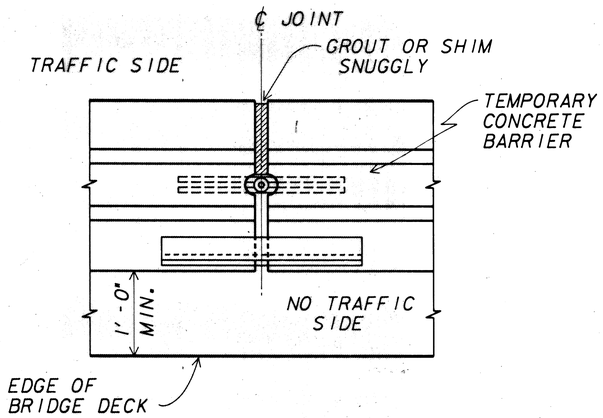

PLAN AT JOINT

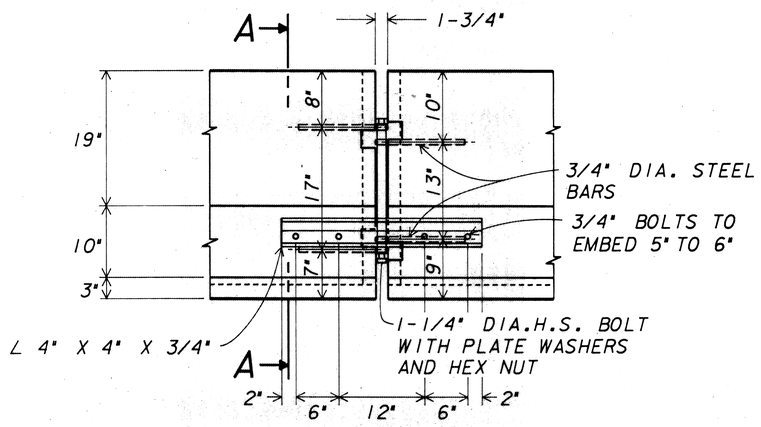

ELEVATION AT JOINT

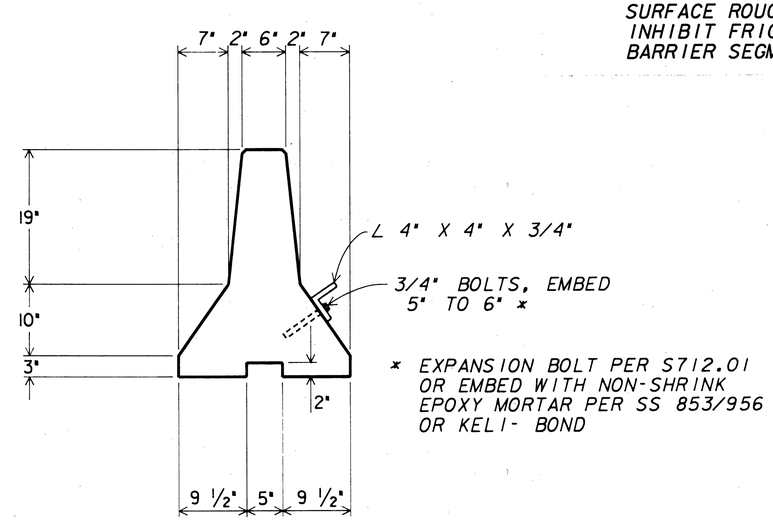

SECTION A-A

BRIDGE DECK SURFACE PREPARATION:

THE FOLLOWING PROCEDURES MUST BE FOLLOWED WHEN INSTALLING TEMPORARY PRECAST CONCRETE BARRIERS, ON BRIDGE DECKS.

A. THE BRIDGE DECK SURFACE AREA ON WHICH THE PRECAST CONCRETE BARRIERS WILL REST, SHALL BE CLEARED OF ALL LOOSE SAND, GRAVEL, DIRT AND DEBRIS.

B. ANY IRREGULARITIES IN THE BRIDGE DECK AREA, UNLESS JUDGED BY THE ENGINEER TO BE INCONSEQUENTIAL, SHALL BE LEVELED WITH GROUT AND/OR ASPHALT.

C. ASPHALT ROLL ROOFING SHALL BE PLACED ON THOSE BRIDGE DECK AREAS, AS JUDGED BY THE ENGINEER, TO HAVE A SURFACE ROUGHNESS WHICH WOULD INHIBIT FRICTION CONTACT BETWEEN BARRIER SEGMENTS AND DECK.

TEMPORARY CONCRETE BARRIER, BRIDGE MOUNTED, AS PER PLAN

Revised 3-11-89

STATE OF OHIO
DEPARTMENT OF TRANSPORTATION
DISTRICT THREE

MODIFIED BARRIER

F

DESIGNED	DRAWN	CHECKED	REVIEWED	DATE	REVISED
			STANDARD NO. D3-2F		

179
189

MED-42-1.89
MED-224-10.45

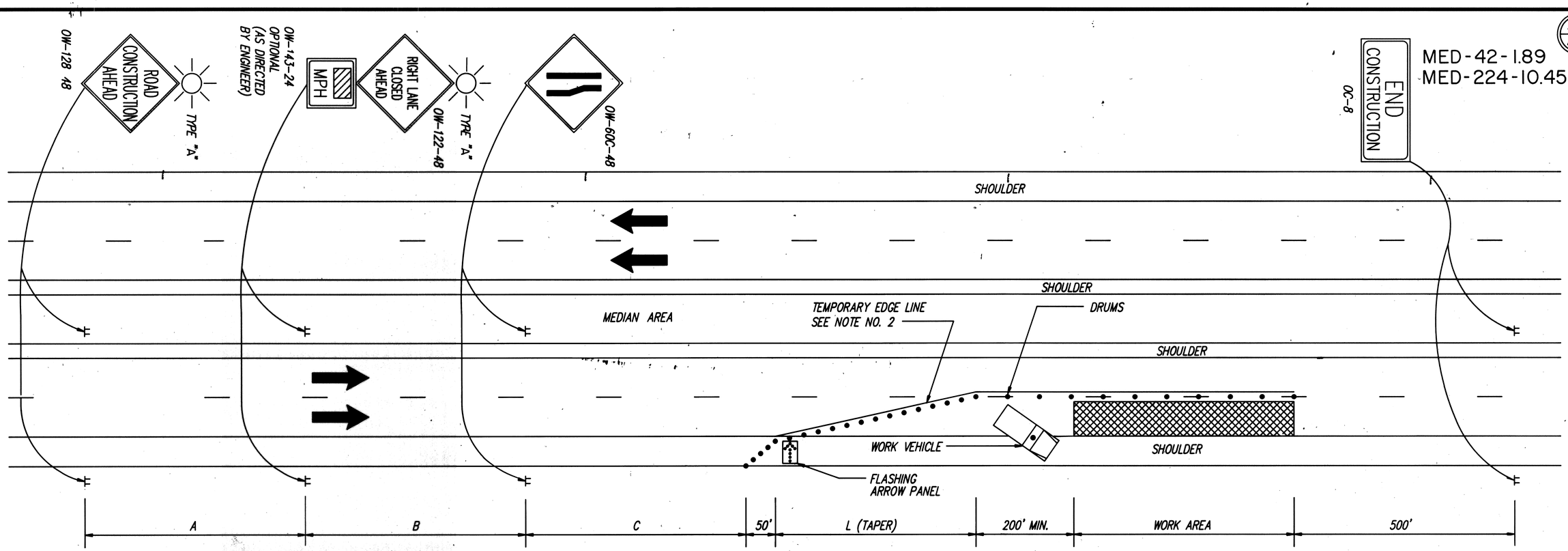

1. THE TAPER LENGTH (L) SHALL BE IN ACCORDANCE WITH SECTION 7F-17 OF THE OMUTCD. THE LOCATION OF THE TRANSITION TAPER AND LOCATION OF THE ADVANCE WARNING SIGNS SHOULD BE ADJUSTED TO PROVIDE FOR ADEQUATE SIGHT DISTANCE FOR THE EXISTING VERTICAL AND HORIZONTAL ROADWAY ALIGNMENT. IN ORDER TO DETERMINE THE MINIMUM NUMBER OF CHANNELIZING DEVICES FOR THE TRANSITION TAPER SEE TABLE 7-5 OMUTCD. FOR A 55 MPH PREVAILING SPEED AND A 12 FT. LANE, NOT LESS THAN THIRTEEN (13) DRUMS SHALL BE USED TO FORM THE LANE TRANSITION TAPER IN ADVANCE OF THE WORK AREA. NOT LESS THAN FIVE (5) DRUMS SHALL BE USED TO FORM THE TAPER ON THE SHOULDER. DRUMS SHALL BE SPACED AT 50' CENTER TO CENTER ALONG THE WORK AREA. CONES HAVING A MINIMUM HEIGHT OF 28 INCHES MAY BE SUBSTITUTED FOR DRUMS FOR DAY TIME LANE CLOSURES. PROVISIONS SHALL BE MADE TO STABILIZE THE CONES TO PREVENT THEM FROM BLOWING OVER. IF THIS CANNOT BE ACHIEVED, DRUMS SHALL BE USED.

2. IF THE CONSTRUCTION OPERATION REQUIRES THE LANE CLOSURE FOR MORE THAN ONE DAY, THEN THE EXISTING CONFLICTING PAVEMENT MARKINGS AND REFLECTORS FROM THE RAISED PAVEMENT MARKERS SHALL BE REMOVED AND THE APPROPRIATE COLOR TEMPORARY EDGE LINES SHALL BE APPLIED. PAVEMENT MARKING TAPE MAY BE USED. AFTER COMPLETION OF THE WORK, TEMPORARY MARKINGS SHALL BE REMOVED IN ACCORDANCE WITH 621.134 AND THE ORIGINAL MARKINGS AND RAISED PAVEMENT MARKER REFLECTORS SHALL BE RESTORED.

3. THE MAJOR STANDARD LEVEL (36") WARNING SIGNS MAY BE USED ON DIVIDED STREETS OR HIGHWAYS THAT ARE NOT CLASSIFIED AS FREEWAYS OR EXPRESSWAYS.

4. WHEN WORK IS BEING PERFORMED IN THE LANE ADJACENT TO THE MEDIAN ON A DIVIDED HIGHWAY, AN OW-143-48 SIGN(S) SHALL BE SUBSTITUTED FOR THE OW-122-48 SIGN(S) AND AN OW-60D-48 SIGN(S) SHALL BE SUBSTITUTED FOR THE OW-60C-48 SIGN(S). NOTE NO.2 IS APPLICABLE FOR THIS CLOSURE ALSO.

5. THE WORK VEHICLE SHOWN AT THE BEGINNING OF THE WORK AREA SHALL BE IN PLACE AND UNOCCUPIED WHENEVER WORKERS ARE IN THE WORK AREA. THIS WORK VEHICLE SHALL BE REMOVED FROM THE PAVEMENT WHENEVER WORKERS ARE NOT IN THE WORK AREA. OTHER PROTECTIVE DEVICES MAY BE USED IN LIEU OF THE WORK VEHICLE SHOWN WHEN APPROVED BY THE ENGINEER. THE VEHICLE SHALL BE EQUIPPED WITH A 360° ROTATING OR FLASHING AMBER BEACON CLEARLY VISIBLE FOR A MINIMUM OF ONE-QUARTER (1/4) MILE. A TRUCK MOUNTED IMPACT ATTENUATOR MAY BE EMPLOYED.

6. THE FLASHING ARROW PANEL SHALL MEET THE REQUIREMENTS OF STANDARD DRAWING TC-35.10.

7. TYPE "C" STEADY BURNING BARRICADE WARNING LIGHTS SHALL BE ERECTED ON DRUMS FOR NIGHT LANE CLOSURES. THE MAXIMUM SPACING SHALL BE IDENTICAL TO THE CHANNELIZING DEVICE SPACING REQUIREMENTS DESCRIBED IN NOTE 1.

8. THE TYPE "A" FLASHING BARRICADE WARNING LIGHTS SHOWN ON THE "ROAD CONSTRUCTION AHEAD" AND THE "ONE LANE ROAD AHEAD" SIGNS ARE REQUIRED WHENEVER A NIGHT LANE CLOSURE IS NECESSARY.

9. THE OC-8 SIGNS ARE ONLY REQUIRED FOR LANE CLOSURES OF MORE THAN ONE DAY AND MAY BE OMITTED IF IT FALLS WITHIN THE LIMITS OF A CONSTRUCTION PROJECT.

10. SOME WORK AREA LOCATIONS MAY REQUIRE MORE THAN JUST STATIC OR CONVENTIONAL SIGNS TO ENHANCE COMMUNICATION WITH THE DRIVER. AT THESE LOCATIONS PORTABLE CHANGEABLE MESSAGE SIGNS (PCMS) UNITS ARE RECOMMENDED. THESE DEVICES SHOULD BE LOCATED APPROXIMATELY 2000 FEET IN ADVANCE OF A LANE CLOSURE OR OTHER POINT OF REQUIRED ACTION. SEE SECTION 7G-8.1, OMUTCD FOR FURTHER GUIDANCE ON USE OF PCMS UNITS. THESE UNITS, IF REQUIRED, WILL BE SPECIFICALLY CALLED FOR IN THE PLANS AND PAID FOR SEPARATELY.

11. PAYMENT FOR ALL OF THE ABOVE, UNLESS ITEMIZED SEPARATELY, SHALL BE INCLUDED IN "ITEM 614 – MAINTAINING TRAFFIC".

MINIMUM DISTANCE	A	B	C
	FEET	FEET	FEET
MAJOR STANDARD	500	500	500
URBAN FREEWAY AND EXPRESSWAY	500 to 1000	500 to 1000	500 to 1000
RURAL FREEWAY AND EXPRESSWAY	2600	1600	1000

STATE OF OHIO
DEPARTMENT OF TRANSPORTATION
DISTRICT THREE

CLOSING ONE LANE of a FOUR-LANE DIVIDED HIGHWAY

REV.	DRAWN	DATE 12/82
6/87		STANDARD DRAWING D3-4

MED-42-1.89
MED-224-10.45

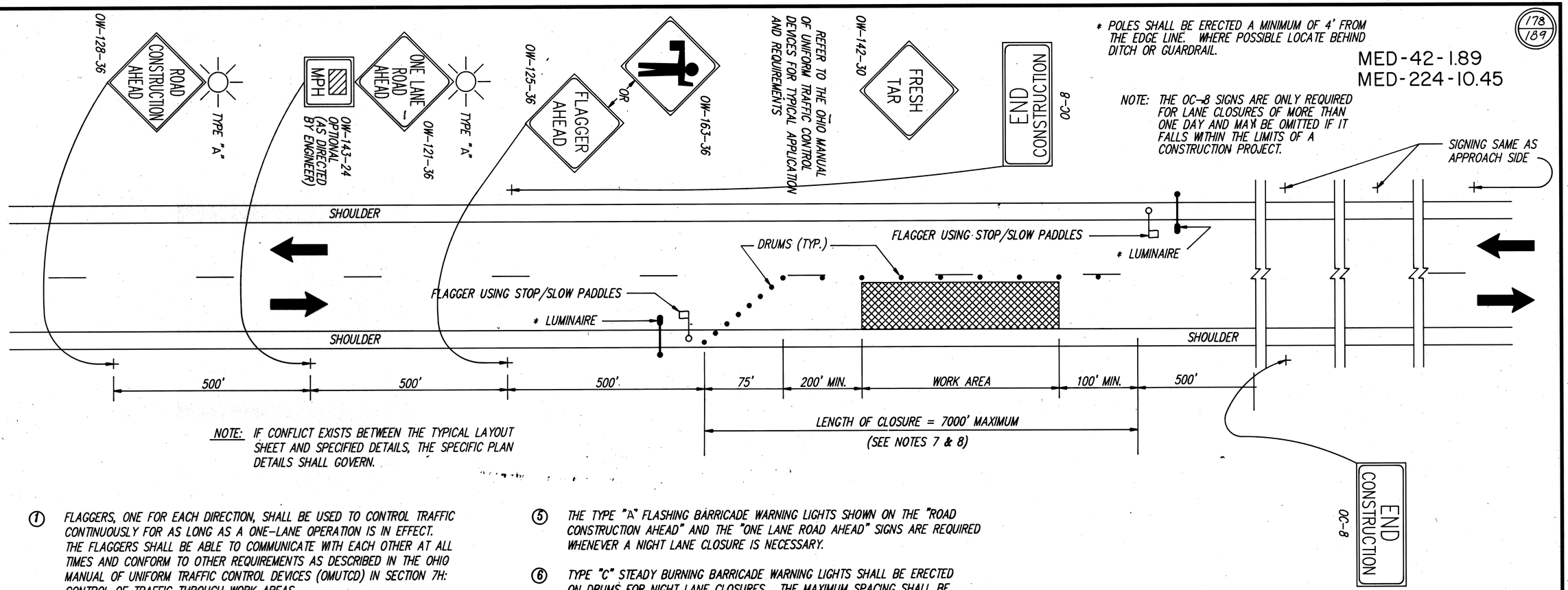

NOTE: IF CONFLICT EXISTS BETWEEN THE TYPICAL LAYOUT SHEET AND SPECIFIED DETAILS, THE SPECIFIC PLAN DETAILS SHALL GOVERN.

1. FLAGGERS, ONE FOR EACH DIRECTION, SHALL BE USED TO CONTROL TRAFFIC CONTINUOUSLY FOR AS LONG AS A ONE-LANE OPERATION IS IN EFFECT. THE FLAGGERS SHALL BE ABLE TO COMMUNICATE WITH EACH OTHER AT ALL TIMES AND CONFORM TO OTHER REQUIREMENTS AS DESCRIBED IN THE OHIO MANUAL OF UNIFORM TRAFFIC CONTROL DEVICES (OMUTCD) IN SECTION 7H: CONTROL OF TRAFFIC THROUGH WORK AREAS.

2. DRUMS SHALL BE SPACED AT 50' CENTER TO CENTER ALONG THE CLOSURE. DRUMS ON THE ADVANCE TAPER SHALL BE SPACED AT 10' CENTER TO CENTER. CONES HAVING A MINIMUM HEIGHT OF 28" MAY BE SUBSTITUTED FOR DRUMS FOR DAYTIME LANE CLOSURES. PROVISIONS SHALL BE MADE TO STABILIZE THE CONES TO PREVENT THEM FROM BLOWING OVER.

3. ADEQUATE AREA ILLUMINATION TO CLEARLY IDENTIFY THE FLAGGER STATION AT NIGHT SHALL BE PROVIDED BY USING 150 WATT MINIMUM HIGH PRESSURE SODIUM LUMINAIRES OR 250 WATT MINIMUM MERCURY VAPOR LUMINAIRES. THE LUMINAIRES SHALL BE LOCATED ADJACENT TO THE FLAGGER STATION FOR EACH DIRECTION OF TRAFFIC AS SHOWN ABOVE. THE MOUNTING HEIGHT FOR THE LUMINAIRES SHALL BE A MINIMUM OF 27 FEET ABOVE THE PAVEMENT AND MOUNTED ON A SUPPORT OF ADEQUATE STRENGTH TO PROVIDE A SATISFACTORY INSTALLATION. THE OVERHEAD CONDUCTOR CLEARANCE SHALL BE A MINIMUM OF 15 FEET ABOVE THE PAVEMENT.

   THE LUMINAIRE ARMS SHALL BE OF SUFFICIENT LENGTH TO EXTEND TO THE EDGE OF THE PAVEMENT.

4. THE LOCATION OF THE ADVANCE WARNING SIGNS SHOULD BE ADJUSTED TO PROVIDE FOR ADEQUATE SIGHT DISTANCE FOR THE EXISTING VERTICAL AND HORIZONTAL ROADWAY ALIGNMENT. THE DISTANCES SHOWN ARE MINIMUMS.

5. THE TYPE "A" FLASHING BARRICADE WARNING LIGHTS SHOWN ON THE "ROAD CONSTRUCTION AHEAD" AND THE "ONE LANE ROAD AHEAD" SIGNS ARE REQUIRED WHENEVER A NIGHT LANE CLOSURE IS NECESSARY.

6. TYPE "C" STEADY BURNING BARRICADE WARNING LIGHTS SHALL BE ERECTED ON DRUMS FOR NIGHT LANE CLOSURES. THE MAXIMUM SPACING SHALL BE IDENTICAL TO THE CHANNELIZING DEVICE SPACING REQUIREMENTS DESCRIBED IN NOTE 2.

7. WITHIN THE LENGTH OF CLOSURE, PROVISIONS SHALL BE MADE TO CONTROL TRAFFIC ENTERING FROM INTERSECTING STREETS AND MAJOR DRIVES AS NECESSARY TO PREVENT WRONG WAY MOVEMENTS AND TO KEEP VEHICLES OFF OF NEW PAVEMENT NOT READY FOR TRAFFIC.

8. WHEN THE AMBIENT TEMPERATURE EXCEEDS 80 DEGREES F., THE ENGINEER MAY INCREASE THE LENGTH OF CLOSURE TO ALLOW FOR SUFFICIENT COOLING OF THE NEW PAVEMENT.
   THE ENGINEER MAY SHORTEN THE MAXIMUM ALLOWABLE LENGTH OF CLOSURE TO RELIEVE EXCESSIVE TRAFFIC BACKUPS.
   ALL TRAFFIC CONTROL SIGNS, CHANNELIZING DEVICES, THE FLAGGER SHALL BE MOVED FORWARD BEFORE THE CLOSURE REACHES THE MAXIMUM ALLOWABLE LENGTH. ONLY ONE SIDE OF THE ROAD SHALL BE CLOSED AT ANY ONE TIME.

9. PAYMENT FOR ALL OF THE ABOVE, UNLESS ITEMIZED SEPARATELY, SHALL BE INCLUDED IN "ITEM 614 – MAINTAINING TRAFFIC".

STATE OF OHIO
DEPARTMENT OF TRANSPORTATION
DISTRICT THREE

FLAGGER CLOSING ONE LANE OF A TWO LANE HIGHWAY

PAVING OPERATIONS

REV.	DRAWN	DATE 12-82
6-87		STANDARD DRAWING D3-03A

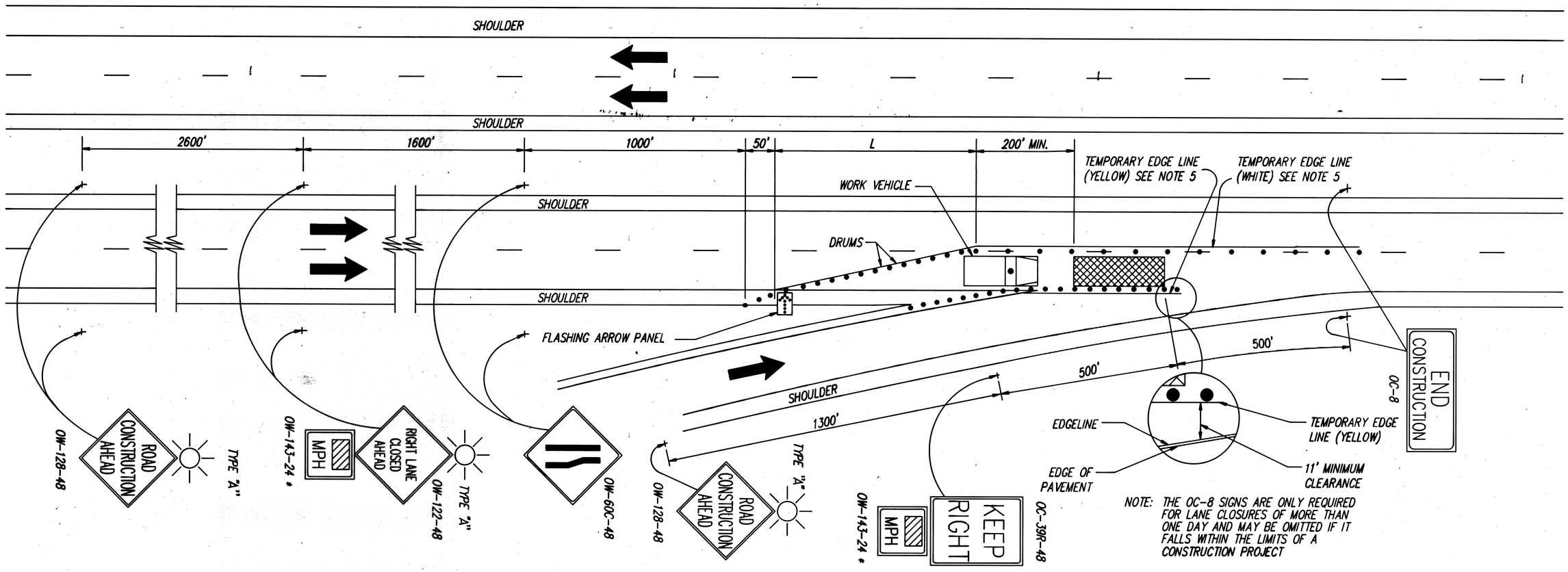

NOTE: THE OC-8 SIGNS ARE ONLY REQUIRED FOR LANE CLOSURES OF MORE THAN ONE DAY AND MAY BE OMITTED IF IT FALLS WITHIN THE LIMITS OF A CONSTRUCTION PROJECT

1. THIS WORK AREA TRAFFIC CONTROL APPLICATION SHALL BE EMPLOYED WHEN THE LATERAL CLEARANCE BETWEEN THE CHANNELIZING DEVICES AT THE RIGHT EDGE OF THE WORK AREA AND THE EDGE OF THE RAMP PAVEMENT IS 11 FEET OR MORE.

2. THE TAPER LENGTH (L) SHALL BE IN ACCORDANCE WITH SECTION 7F-17 OF THE OMUTCD. THE LOCATION OF THE ADVANCE WARNING SIGNS SHOULD BE ADJUSTED TO PROVIDE FOR ADEQUATE SIGHT DISTANCE FOR THE EXISTING VERTICAL AND HORIZONTAL ROADWAY ALIGNMENT. IN ORDER TO DETERMINE THE MINIMUM NUMBER OF CHANNELIZING DEVICES FOR THE TRANSITION TAPER SEE TABLE 7-5 OMUTCD. FOR A 55 MPH PREVAILING SPEED AND A 12 FOOT LANE, NOT LESS THAN THIRTEEN (13) DRUMS SHALL BE USED TO FORM THE LANE TRANSITION TAPER IN ADVANCE OF THE WORK AREA. NOT LESS THAN FIVE (5) DRUMS SHALL BE USED TO FORM THE TAPER IN THE SHOULDER AREA . DRUMS SHALL BE LOCATED AS SHOWN TO SEPARATE THE RAMP TRAFFIC FROM THE WORK AREA. DRUMS SHALL BE SPACED 50' CENTER TO CENTER. CONES HAVING A MINIMUM HEIGHT OF 28 INCES MAY BE SUBSTITUTED FOR DRUMS FOR DAY-TIME LANE CLOSURES. PROVISIONS SHALL BE MADE TO STABILIZE THE CONES TO PREVENT THEM FROM BLOWING OVER. IF THIS CANNOT BE ACHIEVED, DRUMS SHALL BE USED.

3. THE SPACING BETWEEN CONSTRUCTION SIGNS SHOWN ON THIS DETAIL MAY REQUIRE ADJUSTMENTS (INCREASES OR DECREASES) TO ASSURE THAT THEY ARE POSITIONED NO CLOSER THAN 200 FEET TO EXISTING SIGNS OR AS DETERMINED BY THE ENGINEER.

4. RAMP SIGNS SHALL BE DUAL MOUNTED ON MULTILANE RAMPS.

5. IF THE CONSTRUCTION OPERATION REQUIRES THE LANE CLOSURE FOR MORE THAN ONE DAY, THEN THE EXISTING CONFLICTING PAVEMENT MARKINGS AND REFLECTORS FROM THE RAISED PAVEMENT MARKERS SHALL BE REMOVED AND THE APPROPRIATE COLOR TEMPORARY EDGE LINES SHALL BE APPLIED. PAVEMENT MARKING TAPE MAY BE USED. AFTER COMPLETION OF THE WORK, TEMPORARY MARKINGS SHALL BE REMOVED IN ACCORDANCE WITH 621.134 AND THE ORIGINAL MARKINGS AND RAISED PAVEMENT MARKER REFLECTORS SHALL BE RESTORED.

6. THE WORK VEHICLE SHOWN AT THE BEGINNING OF THE WORK AREA SHALL BE IN PLACE AND UNOCCUPIED WHENEVER WORKERS ARE IN THE WORK AREA. THIS WORK VEHICLE SHALL BE MOVED FROM THE PAVEMENT WHENEVER WORKERS ARE NOT IN THE WORK AREA. OTHER PROTECTIVE DEVICES MAY BE USED IN LIEU OF THE WORK VEHICLE SHOWN WHEN APPROVED BY THE ENGINEER. THE VEHICLE SHALL BE EQUIPPED WITH A 360° ROTATING OR FLASHING AMBER BEACON CLEARLY VISIBLE FOR A MINIMUM OF ONE-QUARTER (1/4) MILE. A TRUCK MOUNTED IMPACT ATTENUATOR MAY BE EMPLOYED.

7. THE FLASHING ARROW PANEL SHALL MEET THE REQUIREMENTS OF STANDARD DRAWING TC-35.10.

8. TYPE "C" STEADY BURNING BARRICADE WARNING LIGHTS SHALL BE ERECTED ON DRUMS FOR NIGHT LANE CLOSURES. THE MAXIMUM SPACING SHALL BE IDENTICAL TO THE CHANNELIZING DEVICE SPACING REQUIREMENTS DESCRIBED IN NOTE 2.

9. TYPE "A" FLASHING BARRICADE WARNING LIGHTS SHOWN ON THE "ROAD CONSTRUCTION AHEAD" AND THE "RIGHT LANE CLOSED AHEAD" SIGNS ARE REQUIRED WHENEVER A NIGHT LANE CLOSURE IS NECESSARY.

10. SOME WORK AREA LOCATIONS MAY REQUIRE MORE THAN JUST STATIC OR CONVENTIONAL SIGNS TO ENHANCE COMMUNICATION WITH THE DRIVER. AT THESE LOCATIONS PORTABLE CHANGEABLE MESSAGE SIGNS (PCMS) UNITS ARE RECOMMENDED. THESE DEVICES SHOULD BE LOCATED APPROXIMATELY 2000 FEET IN ADVANCE OF A LANE CLOSURE OR OTHER POINT OF REQUIRED ACTION. SEE SECTION 7G-8.1, OMUTCD FOR FURTHER GUIDANCE ON USE OF PCMS UNITS. THESE UNITS, IF REQUIRED, WILL BE SPECIFICALLY CALLED FOR IN THE PLANS AND PAID FOR SEPARATELY.

11. PAYMENT FOR ALL OF THE ABOVE, UNLESS ITEMIZED SEPARATELY, SHALL BE INCLUDED IN "ITEM 614 - MAINTAINING TRAFFIC".

* OPTIONAL - AS DIRECTED BY THE ENGINEER

STATE OF OHIO
DEPARTMENT OF TRANSPORTATION
DISTRICT THREE

LANE CLOSURE AT ENTRANCE RAMP: PLAN A

REV.	DRAWN	DATE 7/1/86
6/87		STANDARD DRAWING D3-7

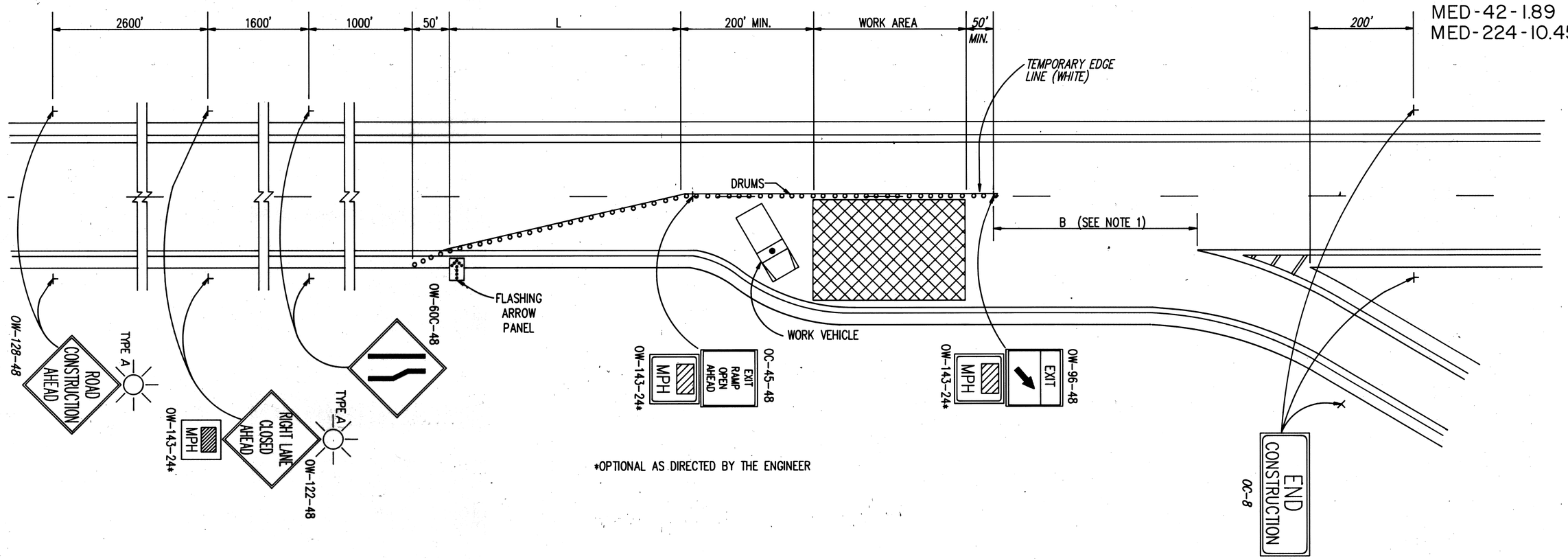

*OPTIONAL AS DIRECTED BY THE ENGINEER

1) THIS WORK AREA TRAFFIC CONTROL APPLICATION SHALL BE USED WHEN THE DISTANCE "B" IS 100 FEET OR GREATER.

2) THE TAPER LENGTH (L) SHALL BE IN ACCORDANCE WITH SECTION 7F-17 OF THE OMUTCD. THE LOCATION OF THE ADVANCE WARNING SIGNS SHOULD BE ADJUSTED TO PROVIDE FOR ADEQUATE SIGHT DISTANCE FOR THE EXISTING VERTICAL AND HORIZONTAL ROADWAY ALIGNMENT. IN ORDER TO DETERMINE THE MINIMUM NUMBER OF CHANNELIZING DEVICES FOR THE TRANSITION TAPER SEE TABLE 7-5 OMUTCD. FOR A 55 MPH PREVAILING SPEED AND A 12 FOOT LANE, NOT LESS THAN THIRTEEN (13) DRUMS SHALL BE USED TO FORM THE LANE TRANSITION TAPER IN ADVANCE OF THE WORK AREA. NOT LESS THAN FIVE (5) DRUMS SHALL BE USED TO FORM THE TAPER IN THE SHOULDER AREA. DRUMS SHALL BE SPACED 50' CENTER TO CENTER. CONES HAVING A MINIMUM HEIGHT OF 28 INCHES MAY BE SUBSTITUTED FOR DRUMS FOR DAYTIME LANE CLOSURES. PROVISIONS SHALL BE MADE TO STABILIZE THE CONES TO PREVENT THEM FROM BLOWING OVER. IF THIS CANNOT BE ACHIEVED, DRUMS SHALL BE USED.

3) THE SPACINGS BETWEEN CONSTRUCTION SIGNS SHOWN ON THIS DETAIL MAY REQUIRE ADJUSTMENTS (INCREASES OR DECREASES) TO ASSURE THAT THEY ARE POSITIONED NO CLOSER THAN 200 FEET TO EXISTING SIGNS OR AS DETERMINED BY THE ENGINEER.

4) IF THE CONSTRUCTION OPERATION REQUIRES THE LANE CLOSURE FOR MORE THAN ONE DAY, THEN THE EXISTING CONFLICTING PAVEMENT MARKINGS AND REFLECTORS FROM THE RAISED PAVEMENT MARKERS SHALL BE REMOVED AND THE APPROPRIATE COLOR TEMPORARY EDGE LINES LINES SHALL BE APPLIED. PAVEMENT MARKING TAPE MAY BE USED. AFTER COMPLETION OF THE WORK, TEMPORARY MARKINGS SHALL BE REMOVED IN ACCORDANCE WITH 621.134 AND THE ORIGINAL MARKINGS AND RAISED PAVEMENT MARKER REFLECTORS SHALL BE RESTORED.

5) THE WORK VEHICLE SHOWN AT THE BEGINNING OF THE WORK AREA SHALL BE IN PLACE AND UNOCCUPIED WHENEVER MEN ARE WORKING WITHIN THE WORK AREA. THIS VEHICLE SHALL BE MOVED FROM THE PAVEMENT WHENEVER WORKMEN ARE NOT IN THE WORK AREA. OTHER PROTECTIVE DEVICES MAY BE USED IN LIEU OF THE WORK VEHICLE SHOWN WHEN APPROVED BY THE ENGINEER. THE VEHICLE SHALL BE EQUIPPED WITH A 360° ROTATING OR FLASHING AMBER BEACON CLEARLY VISIBLE FOR A MINIMUM OF ONE-QUARTER (1/4) MILE. A TRUCK MOUNTED IMPACT ATTENUATOR MAY BE EMPLOYED.

6) THE FLASHING ARROW PANEL SHALL MEET THE REQUIREMENTS OF STANDARD DRAWING TC-35.10.

7) TYPE C STEADY BURN BARRICADE WARNING LIGHTS SHALL BE ERECTED ON THE DRUMS FOR NIGHT LANE CLOSURES. THE MAXIMUM SPACING SHALL BE IDENTICAL TO THE CHANNELIZING DEVICE SPACING REQUIREMENTS DESCRIBED IN NOTE NO. 2.

8) THE TYPE A FLASHING BARRICADE WARNING LIGHTS SHOWN ON THE "ROAD CONSTRUCTION AHEAD" AND THE "ONE LANE ROAD AHEAD" SIGNS ARE REQUIRED WHENEVER A NIGHT LANE CLOSURE IS NECESSARY.

9) THE OC-8 SIGNS ARE ONLY REQUIRED FOR LANE CLOSURES OF MORE THAN ONE DAY AND MAY BE OMITTED IF THEY FALL WITHIN THE LIMITS OF A CONSTRUCTION PROJECT.

10) SOME WORK AREA LOCATIONS MAY REQUIRE MORE THAN JUST STATIC OR CONVENTIONAL SIGNS TO ENHANCE COMMUNICATION WITH THE DRIVER. AT THESE LOCATIONS PORTABLE CHANGEABLE MESSAGE SIGNS (PCMS) UNITS ARE RECOMMENDED. THESE DEVICES SHOULD BE LOCATED APPROXIMATELY 2,000 FEET IN ADVANCE OF A LANE CLOSURE OR OTHER POINT OF REQUIRED ACTION. SEE SECTION 7G-8.1, OMUTCD FOR FURTHER GUIDANCE ON USE OF PCMS UNITS. THSE UNITS, IF REQUIRED, WILL BE SPECIFICALLY CALLED FOR IN THE PLANS AND PAID FOR SEPARATELY.

11) PAYMENT FOR ALL OF THE ABOVE, UNLESS ITEMIZED SEPARATELY, SHALL BE INCLUDED IN ITEM 614, MAINTAINING TRAFFIC.

STATE OF OHIO
DEPARTMENT OF TRANSPORTATION
DISTRICT THREE

LANE CLOSURE BEFORE EXIT GORE

REV.	DRAWN	
6/87		STANDARD NO. D3-8

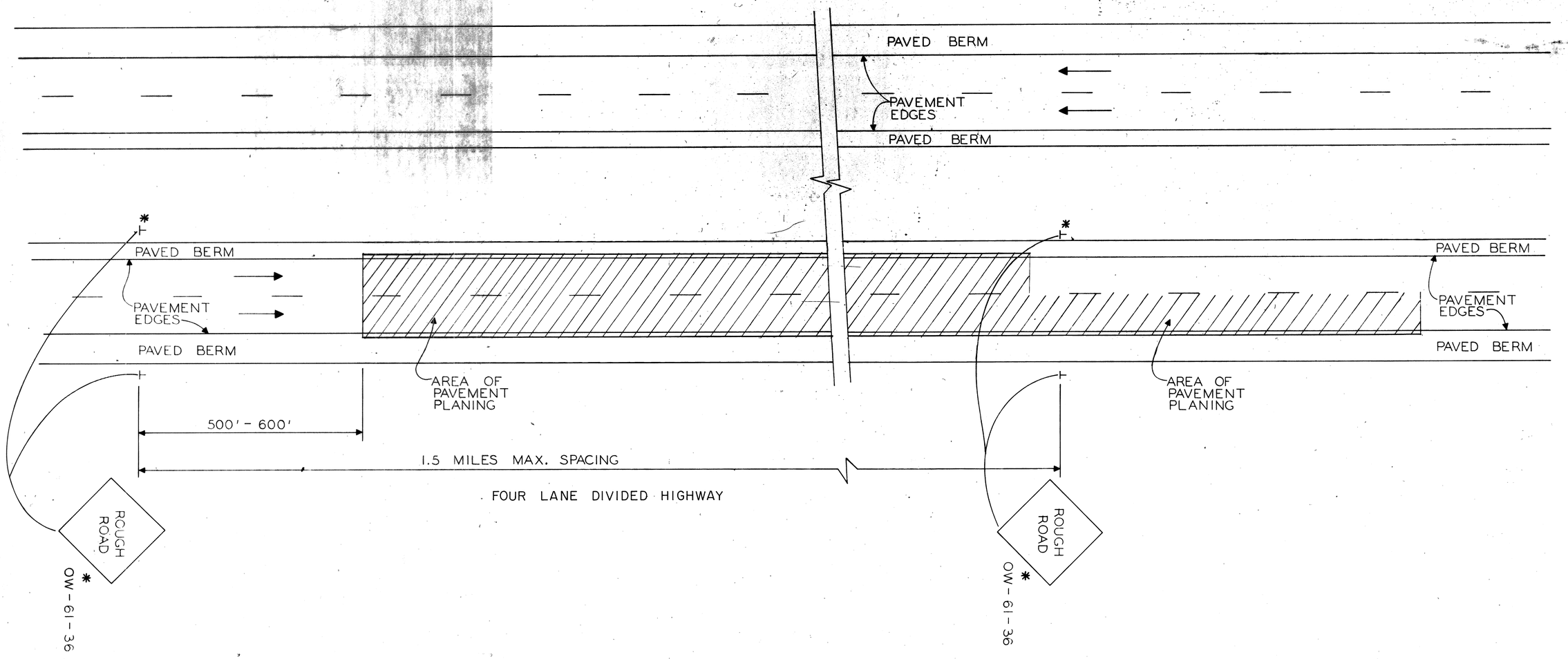

NOTE: Same details shall apply for two-lane highway except one OW-61-36 shall be mounted on the right side of the highway only.

GENERAL NOTES

1. THE DUAL MOUNTED OW-61-36 ROUGH ROAD SIGNS SHALL BE IN PLACE PRIOR OF ANY PAVEMENT PLANING SURFACE BEING OPENED TO TRAFFIC.
2. ADDITIONAL SIGNS SHALL BE MOUNTED AT THE SPACINGS SHOWN.
3. AN OW-61-36 ROUGH ROAD SIGN SHALL ALSO BE MOUNTED ON THE ENTRANCE RAMP FROM A SIDE ROAD WHEN EITHER THE RAMP PAVEMENT OR THE MAINLINE PAVEMENT HAS BEEN PLANED.
4. AS THE RESURFACING PROGRESSES, THE ROUGH ROAD SIGNS SHALL BE RELOCATED OR COVERED AS NECESSARY.
5. PAYMENT FOR ALL THE ABOVE SHALL BE INCLUDED IN ITEM 614, MAINTAINING TRAFFIC.

* FOR SIGNS ALONG THE INSIDE LANE IN AREAS OF THE EXISTING CONCRETE BARRIER, A BRACKET (SEE SHEET 138) WILL BE REQUIRED TO ATTACH TO THE CONCRETE BARRIER. SIGNS ON THE BARRIER SHALL BE 24" WITH AMBER REFLECTORS ON THE BACKSIDE OF THE SIGNS FOR OPPOSING TRAFFIC.

WARNING SIGNS FOR PLANED PAVEMENT

GENERAL NOTES

TRAFFIC CONTROL STANDARD CONSTRUCTION DRAWINGS:
REFERENCES TO SUPPLEMENTAL SPECIFICATIONS 857, 858, 861, 957, 958, AND 961 ON THE TRAFFIC CONTROL STANDARD CONSTRUCTION DRAWINGS IN THESE PLANS SHALL BE CONSIDERED TO READ AS RESPECTIVE REFERENCES TO ITEMS 630, 631, 633, 730, 731 AND 733.

ITEM 614 MAINTAINING TRAFFIC:
THE CONTRACTOR SHALL MAINTAIN TRAFFIC AT ALL TIMES IN ACCORDANCE WITH THE REQUIREMENTS OF ITEM 614. TWO-WAY TRAFFIC SHALL BE MAINTAINED AT ALL TIMES, EXCEPT AS NOTED HEREIN.

1.) WHEN IT IS NECESSARY TO CLOSE ONE LANE OF PAVEMENT, THE CLOSURE SHALL BE ACCOMPLISHED BY THE APPLICATION OF TRAFFIC CONTROL DEVICES, IN ACCORDANCE WITH THE OHIO MANUAL OF UNIFORM TRAFFIC CONTROL DEVICES – LATEST REVISION.

2.) PARTICULAR ATTENTION SHALL BE GIVEN TO ASSURE CONFORMANCE WITH FIGURES C-10 THRU C-13, C-18, AND C-30 OF THE OHIO MANUAL OF UNIFORM TRAFFIC CONTROL DEVICES LATEST REVISIONS.

ALL ADVANCE WARNING SIGNS FOR ANY CONDITION WHICH RESTRICTS TRAFFIC SHALL BE ERECTED BEFORE ANY SUCH RESTRICTION IS PUT INTO EFFECT. ALL SUCH SIGNS SHALL BE COVERED OR REMOVED FROM THE VIEW OF TRAFFIC WHEN THEY ARE NOT APPLICABLE, AS DETERMINED BY THE ENGINEER.

IF THE CONTRACTOR FAILS TO COMPLY WITH THE PROVISIONS FOR TRAFFIC CONTROL AS SET FORTH IN THESE PLANS OR WITH PROVISIONS OF THE MANUAL, AND SUCH FAILURE RESULTS IN A CONDITION AT THE WORK SITE WHICH IS UNSAFE FOR TRAFFIC, THE ENGINEER SHALL SUSPEND WORK UNTIL THE CONTRACTOR COMPLIES WITH THE NECESSARY REQUIREMENTS.

ITEM 633 FLASHER CONTROLLER, AS PER PLAN:
THIS ITEM OF WORK SHALL CONFORM TO THE REQUIREMENTS OF 633.10 AND 733.06 EXCEPT THAT A CABINET WILL NOT BE REQUIRED. THE FLASHER CONTROLLER SHALL BE MOUNTED WITHIN THE TRAFFIC SIGNAL CONTROLLER CABINET IN SUCH A MANNER THAT IT IS CLEARLY VISIBLE, READILY ACCESSIBLE AND EASILY REMOVABLE FOR MAINTENANCE PURPOSES. FLASHER HOOK-UP SHALL BE AS DETAILED ON SHEET 186.

PAYMENT SHALL BE AT THE UNIT PRICE BID PER EACH. **ITEM 633 FLASHER CONTROLLER, AS PER PLAN** AND SHALL INCLUDE THE FLASHER CONTROLLER COMPLETELY WIRED AND TESTED AND ALL LABOR AND MATERIAL TO TO INSTALL THE UNIT IN THE TRAFFIC SIGNAL CONTROLLER CABINET.

ITEM 632 STEEL STRAIN POLE, 7-1/2" DIAM. 10-1/2" BOLT CIRCLE, 11 GAUGE, 15', AS PER PLAN:
THIS ITEM OF WORK SHALL INCLUDE THE FURNISHING AND INSTALLATION OF A STEEL STRAIN POLE WITH DIMENSIONS AS SPECIFIED AND SHALL CONFORM TO THE REQUIREMENTS OF 632.15 AND 730.02 THRU 730.08. IN ADDITION, THIS ITEM SHALL INCLUDE THE MOUNTING BRACKETS, POLE CLAMPS, ALUMIMNUM TRANSFORMER BASE AT-X, AND ALL HARDWARE AS DETAILED ON SHEET 186.

PAYMENT SHALL BE AT THE UNIT PRICE BID PER EACH **ITEM 632 STEEL STRAIN POLE, 7-1/2" DIAM., 10-1/2" BOLT CIRCLE, 11 GAUGE, 15', AS PER PLAN.**

ITEM 625, SIGN POLE FOUNDATION, 24" x 6' DEEP, AS PER PLAN:
THIS ITEM OF WORK SHALL CONFORM TO THE REQUIREMENTS OF 625.06. THE FOUNDATIONS SHALL BE CONSTRUCTED TO ACCEPT THE ALUMINUM TRANSFORMER BASES SUPPLIED UNDER OTHER ITEMS OF WORK.

PAYMENT SHALL BE AT THE UNIT PRICE BID PER EACH, **ITEM 625, SIGN POLE FOUNDATION, 24"x 6' DEEP, AS PER PLAN.**

ITEM 631 SIGN FLASHER ASSEMBLY AS PER PLAN:
IN LIEU OF ITEM 631.15, THIS ITEM OF WORK SHALL CONSIST OF THE FURNISHING AND INSTALLATION OF A FLASHING BEACON WITH DOWNLIGHT AS PER 732.01. THE BEACON SHALL CONSIST OF A SINGLE 12" SIGNAL HEAD WITH AMBER LENS AND A NOMINAL 150 WATT INCANDESCENT SIGNAL LAMP IN ACCORDANCE WITH 732.04. INSTALLATION SHALL BE AS DETAILED ON SHEET 186.

PAYMENT SHALL BE AT UNIT BID PRICE PER EACH **ITEM 631 SIGN FLASHER ASSEMBLY AS PER PLAN** AND SHALL INCLUDE DOWNLIGHT AND LAMPS, BEACON WITH LAMPS AND ALL MOUNTING HARDWARE.

ITEM 631, PHOTOELECTRIC CONTROL:
THIS ITEM OF WORK SHALL CONFORM TO ITEM 631.12 AND 713.19, PART 14. IT SHALL CONSIST OF FURNISHING AND INSTALLING A PHOTOELECTRIC DEVICE FOR CONTROLLING THE DOWNLIGHTS (SIGN ILLUMINATION) FOR THE FLASHING SIGN INSTALLATIONS AS DETAILED ON SHEET 186.

PAYMENT SHALL BE AT THE UNIT PRICE BID PER EACH **ITEM 631 PHOTOELECTRIC CONTROL,** AS PER PLAN.

GENERAL NOTES

ITEM 633 CONTROLLER, ACTUATED, THREE PHASE, SOLID STATE DIGITAL MICROPROCESSOR AS PER PLAN:
THE OVERLAP PROGRAMMING SHALL BE BY USE OF AN INTERCHANGEABLE PLUG-IN PRINTED CIRCUIT BOARD ASSEMBLY AS DESCRIBED IN PART 14 OF TS-1 1983. IN ADDITION TO NEMA REQUIREMENTS. THE CONFLICT MONITOR SHALL ALSO HAVE EXTENDED MONITORING IN ACCORDANCE WITH 733.04 PART 3B. APPROACH MONITORING SHALL BE REQUIRED AS SHOWN ON THE DETAIL ON SHEET 188. THE CONTROLLER CABINET SHALL BE PAINTED YELLOW FEDERAL STANDARD 595 COLOR 13655. CONTROLLER CABINET SIZE SHALL COMPLY TO THE REQUIREMENTS OF NEMA TS-1 SECTION 14. THE NEW CABINET FOUNDATION AND CABINET SHALL BE ORIENTED WITH RESPECT TO THE INTERSECTION IN A MANNER THAT WILL PROVIDE MAINTENANCE PERSONNEL WITH A VIEW OF THE INTERSECTION WHILE WORKING ON THE CONTROLLER.

PAYMENT SHALL BE AT THE UNIT PRICE BID PER EACH **ITEM 633 CONTROLLER, ACTUATED, THREE PHASE, SOLID STATE DIGITAL MICROPROCESSOR AS PER PLAN** IN PLACE INCLUDING ALL CONNECTIONS TESTED AND ACCEPTED.

TRAFFIC CONTROL SYSTEM GUARANTEE:
CUSTOMARY MANUFACTURER'S GUARANTEES FOR THE FOREGOING ITEMS SHALL BE TURNED OVER TO THE STATE OR THE MAINTAINING AGENCY FOLLOWING ACCEPTANCE OF THE EQUIPMENT.

THE COST OF GUARANTEEING THE TRAFFIC CONTROL SYSTEM WILL BE INCIDENTAL TO AND INCLUDED IN THE CONTRACT UNIT PRICE OF THE VARIOUS ITEMS MAKING UP THE SYSTEM.

POWER SUPPLY FOR TRAFFIC SIGNALS:
ELECTRIC POWER SHALL BE OBTAINED AT THE LOCATION INDICATED ON THE PLANS. POWER SUPPLIED SHALL BE 120 VOLTS AC.

ITEM 614 TEMPORARY MAINTENANCE OF EXISTING SIGNALS:
INCIDENTAL TO THE REQUIREMENTS FOR MAINTAINING TRAFFIC IN ACCORDANCE WITH 614.03, THE EXISTING SIGNAL SHALL BE TEMPORARILY MAINTAINED UNTIL THE NEW TRAFFIC SIGNAL INSTALLATION IS IN OPERATION.

1.) THE ABOVE SHALL BE PERFORMED WITH EITHER THE EXISTING CONTROLLER OR A PORTION OF THE NEW INSTALLATION.

2.) THE SIGNAL SHALL BE INOPERATIVE FOR NOT MORE THAN SIX (6) HOURS.

ANY COSTS FOR THE TEMPORARY MAINTENANCE OF EXISTING SIGNALS SHALL BE INCLUDED IN THE LUMP SUM BID FOR **ITEM 614 MAINTAINING TRAFFIC.**

ITEM 632 LOOP DETECTOR UNITS, BY TYPE, AS PER PLAN:
IN ADDITION TO THE REQUIREMENTS OF 632 AND 732.07 OR 732.08, LOOP DETECTOR UNITS SHALL HAVE THE FOLLOWING REQUIREMENTS OR FEATURES:

1.) THE OUTPUT DEVICE SHALL BE A RELAY, AND ALL CONTACTS SHALL BE INCLUDED IN THE WIRING HARNESS.

2.) THE UNIT SHALL BE SELF-TUNING.

3.) THE UNIT'S ELECTRICAL CONNECTION PLUGS OR WIRING HARNESS SHALL ALLOW READY REPLACEMENT WITH SINGLE CHANNEL AMPLIFIERS AS DESCRIBED IN THE FINAL PARAGRAPH OF 732.07.

STRAIN POLE FOUNDATION ELEVATIONS:
ELEVATIONS SHOWN IN THE PLANS FOR STRAIN POLE FOUNDATIONS ARE FOR COMPUTATIONAL PURPOSES ONLY. THE ACTUAL ELEVATION OF THE FOUNDATION SHALL BE IN ACCORDANCE WITH TC-21.20 PROVIDED THE EXISTING SLOPE IS LESS THAN 6:1. AT LOCATIONS WHERE THE SLOPE IS GREATER THAN 6:1 THE FOUNDATION ELEVATION SHALL BE IN ACCORDANCE WITH DETAIL A, SHOWN BELOW ON THIS SHEET.

UNDERDRAINS FOR PULL BOXES:
UNDERDRAINS FOR PULLBOXES SHALL BE AS DETAILED IN HL-10. AN ESTIMATED QUANTITY OF "100 LINEAR FEET" OF ITEM 603, 4 INCH CONDUIT, TYPE "E" IS INCLUDED IN THE GENERAL SUMMARY FOR THIS PURPOSE.

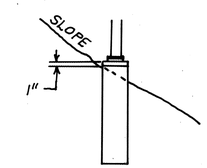

DETAIL A

ITEM 632 REMOVAL OF TRAFFIC SIGNAL INSTALLATION, AS PER PLAN
TRAFFIC SIGNAL INSTALLATIONS, INCLUDING SIGNAL HEADS, CABLE, MESSENGER WIRE, STRAIN POLES, CABINET, CONTROLLER, ETC., SHALL BE REMOVED IN ACCORDANCE WITH 632.25 AND AS ON THE PLANS. REMOVED ITEMS SHALL BECOME THE PROPERTY OF THE CONTRACTOR TO BE DISPOSED OF IN A PROPER MANNER. THE EXISTING "SIGNAL AHEAD" FLASHING SIGN ASSEMBLIES (LOCATIONS NOTED ON SHEET 187) SHALL ALSO BE REMOVED WITH THE EXISTING SIGNAL INSTALLATION.

GENERAL NOTES

ITEM 632 (CABLE BY TYPE), DIRECT BURIAL, AS PER PLAN:

CABLE DESIGNATED AS DIRECT BURIAL SHALL BE INSTALLED BY VIBRATORY CABLE PLOW OR BY TRENCHING TO A DEPTH OF 18" TO 24" BELOW GRADE. IF TRENCHED, THE FIRST 3 INCHES OF COVER SHALL BE SAND OR OTHER BACKFILL WITH NO PARTICLES LARGER THAN 3/8 INCH. SIGNAL CABLE USED FOR DIRECT BURIAL SHALL BE RATED SUITABLE FOR DIRECT BURIAL SUCH AS, IMSA 19-5, 19-6, 20-5, 20-6 OR TYPE UF CABLE. SOLID CONDUCTORS WILL BE PERMITTED ONLY IN UNDERGROUND APPLICATIONS. LOOP DETECTOR LEAD-IN CABLE SHALL MEET THE REQUIREMENTS OF 733.19 OR IMSA 19-6 OR 20-6. SPLICES BETWEEN DIRECT BURIAL AND STANDARD LOOP DETECTOR LEAD-IN CABLE SHALL HAVE SOLDERED CONNECTIONS. ALL CABLE SPLICES SHALL BE ENCAPSULATED WITH POURED WATERPROOF EPOXY INSULATION IN ACCORDANCE WITH 713.15 .

SIGNAL QUANTITIES

CALC. BY T.W. 4/98
CHK'D. BY D.L. 4/98

MED-42-1.89
MED-224-10.45

(185/189)

STATION	REFERENCE	632 Vehicular Signal Head, 3-Section, 12 inch Lens, One-Way	632 Vehicular Signal Head, 3-Section, 12 Inch Lens, Two-Way	632 Loop Detector units, As Per Plan	632 Loop Detector Pavement Cutting	632 Concrete For Anchor Base Foundations	632 Strain Pole, Type TC-81.10, Design 11, 32'	632 Strain Pole, Type TC-81.10, Design 11, 38' Modified	632 Cable Support Assembly	632 Messenger, 7-Strand, 3/8" Diameter With Accessories	632 Signal Cable 5-Conductor #14AWG	632 Signal Cable 3-Conductor #12AWG	632 Covering Of Vehicular Signal Head	632 Loop Detector Wire, Type E	632 Loop Detector Lead-in Cable	632 Power Cable, 2-Conductor #6AWG	632 Power Service	632 Signal Cable 3/C #12AWG, Direct Burial, As Per Plan	608 4" Concrete Walk For Controller Foundation Work Pad	632 Signal Cable 7-Conductor #14AWG	633 Concrete For Cabinet Foundation, TC-83.20, Type 2	633 Controller Actuated, Solid-State Digital Microprocessor Type, 3 Phase	633 Flasher Controller, As Per Plan			603 4" Conduit, Type E	625 Pullbox, 18 Inch 713.08 (Concrete)	625 Ground Rods	625 Trench	625 Conduit, 1", 713.04	625 Conduit, 3", 713.04	625 Conduit Jacked or Drilled Under Pavement 3", 713.04	632 Connector Kit, 713.15, TYPE XIII	632 Steel Strain Pole, 7 1/2" Diam. x 40 1/2" Bolt Circle, 11 Gauge, 15', As Per Plan	625 Sign Pole Foundation, As Per Plan (24"x6')	632 Removal of Traffic Signal Installation, As Per Plan	630 Signs Flatsheet	630 Sign Hanger Assembly, Span Wire	631 Sign Flasher Assembly, As Per Plan	631 Photoelectric Control As Per Plan	
		EACH			LIN FT	CU YD	EACH				LIN FT		EACH		LIN FT		EACH	LIN FT	SQ FT		CU YD	EACH				L.F.	EACH		LIN FT						EACH			SQ FT	EACH		
95+91/145'Lt. To 826+00/142'Lt.	CGM To P-1			9							48	21			105	16	1		10.44	16	1.85	1	1					1	7		7									1	
826+00/142' Lt. To 825+241/65' Rt.	P-1 To P-2	6	2			5.76	1	1	2	220	535	288	8		1,465	42				210								2									5/5	2		
825+91/145' Lt. To 825+73/140' Lt.	CGM To PB-1											30			150												1		18		18										
825+73/140' Lt. To 826+35/105' Lt.	PB-1 To PB-2											77			231												1		72	72											
826+35/105' Lt. To 827+70/105' Lt.	PB-2 To PB-3											140			280												1		135	135											
827+70/105' Lt. To 829+04/105' Lt.	PB-3 To PB-3A											139			278												1		134	134											
829+04 Lt.	PB-3A To L-3A&L-4A				89									274																											
829+04/105' Lt. To 830+24/105' Lt.	PB-3A To PB-4											125			125												1		120	120											
830+24/105' Lt.	PB-4 To L-3&L-4				89									274																											
829+05/105' Lt. To 833+70/105'Lt	PB-4 To PB-15											351						351									1		346												
833+70/105' Lt. To 833+75/105'Lt.	PB-15 To FS-3											24																1	5		5		1	1	1		16		1	
833+70/105' Lt. To 833+70/30' Lt.	PB-15 To PB-16											85															1		15		15	60									
833+70/30' Lt. To 833+75/30' Lt.	PB-16 To FS-4											24																1	5		5		1	1	1		16		1	
826+35/105' Lt. To 826+35/32' Lt	PB-2 To PB-5														78												1		13		13	60									
826 + 35 Lt.	PB-5 To L-6				62									134																											
825+73/140' Lt. To 825+08/132' Lt.	PB-1 To PB-6														140												1		15		15	50									
825 + 08 Lt.	PB-6 To L-9				92									194																											
825 + 08 Lt.	PB-6 To L-10				87									184																											
825+24/65' Rt. To 825+28/53' Rt.	P-2 To PB-7											24			95												1		12		12										
825+28/53' Rt. To 824+97/41' Rt.	PB-7 To PB-8											37			111												1		32	32											
824+97/41' Rt. To 823+50/30' Rt.	PB-8 To PB-9											152			304												1		147	147											
823+50/30' Rt. To 822+17/28'Rt.	PB-9 To PB-9A											138			276												1		133	133											
822+17/28' Rt.	PB-9A To L-1A&L-2A				77									226																											
822+17/28' Rt. To 820+97/28' Rt.	PB-9A To PB-10											125			125												1		120	120											
820+97/28' Rt.	PB-10 To L-1&L-2				77									226																											
822+10/28' Rt. To 817+52/28' Rt.	PB-10 To PB-13											350						350									1		345												
817+52/28' Rt. To 817+47/28' Rt.	PB-13 To FS-1											24																1	5		5		1	1	1		16		1	
817+52/28' Rt. To 817+52/52' Lt.	PB-13 To PB-14											60															1		14		14	36									
817+52/22' Lt. To 817+47/22' Lt.	PB-14 To FS-2											24																1	5		5		1	1	1		16		1	
824+97/41' Rt. To 824+97/31' Lt.	PB-8 To PB-11														77												1		8		8	64									
824 + 97 Lt.	PB-11 To L-5				64									138																											
825+28/53' Rt. To 826+15/68' Rt.	PB-7 To PB-12														97												1		18		18	72									
826 + 15 Rt.	PB-12 To L-7				100									210																											
826 + 15 Rt.	PB-12 To L-8				87									184																											
General Notes	Sheet 183																									100										1					
TOTALS		6	2	9	824	5.76	1	1	2	220	583	2,238	8	2,044	3,937	58	1	701	10.44	226	1.85	1	1			100	18	7	1,724	893	140	342	4	4	4	1	74	2	4	1	

SIGNING QUANTITIES

FLASHING SIGN INSTALLATION DETAIL

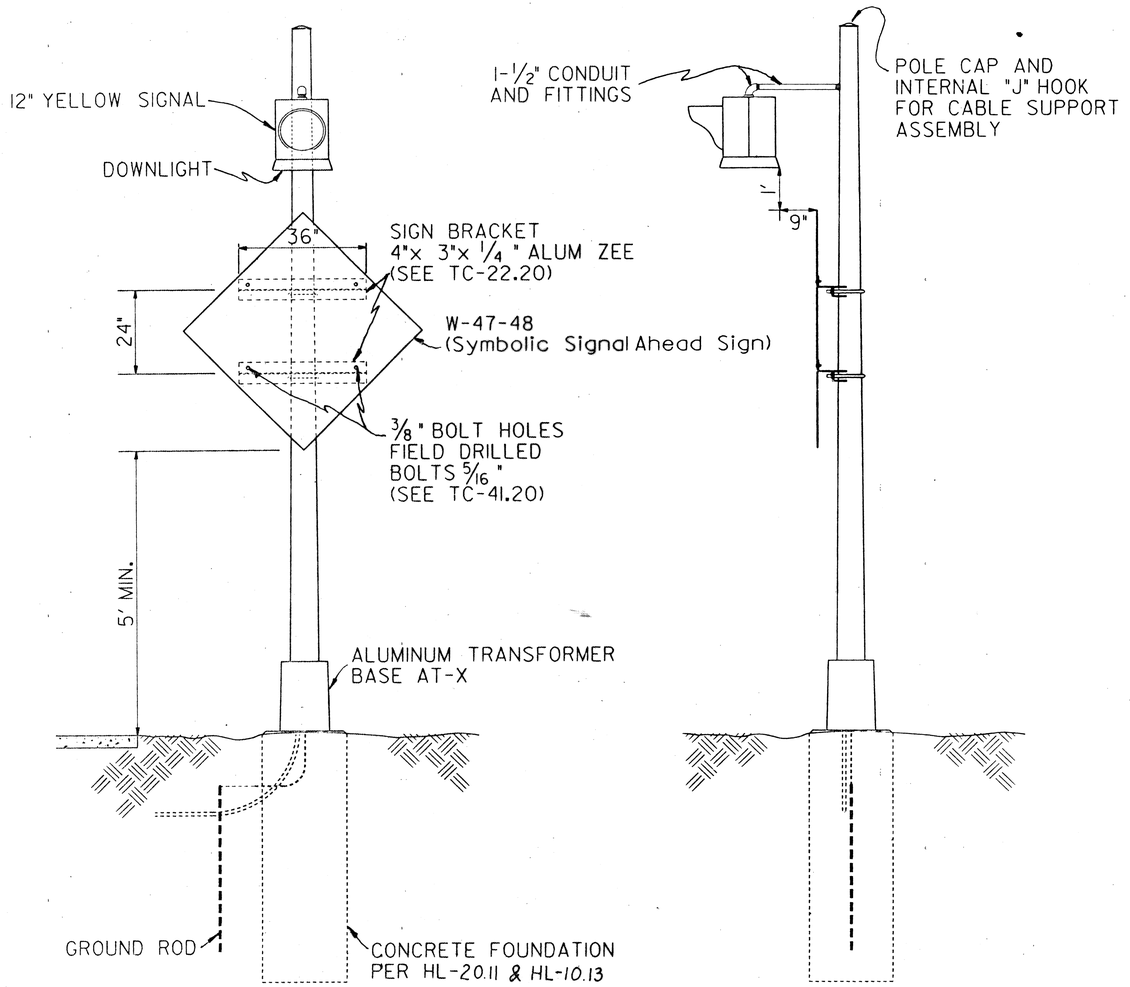

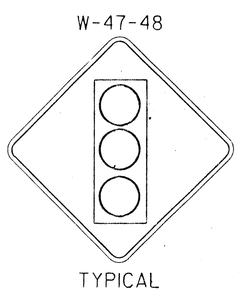

NOTES: Make electrical connections inside AT-X Base with 15Amp fused 713.15 Type VIII connector kit in line with kit in neutral unfused Type VIII.

Contact between aluminum and galvanized parts shall be prevented with a minimum 1/16" thick chloroprene gasket or approved substitute. Gaskets are not required between stainless steel and aluminum.

Ground all spare conductors at controller only.

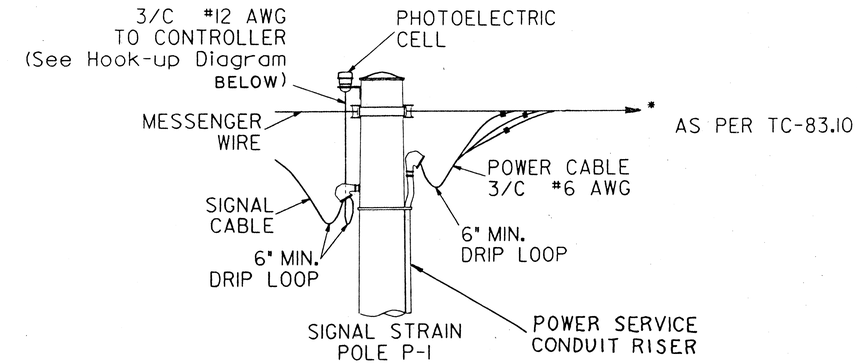

PHOTOELECTRIC CELL MOUNTING DETAIL

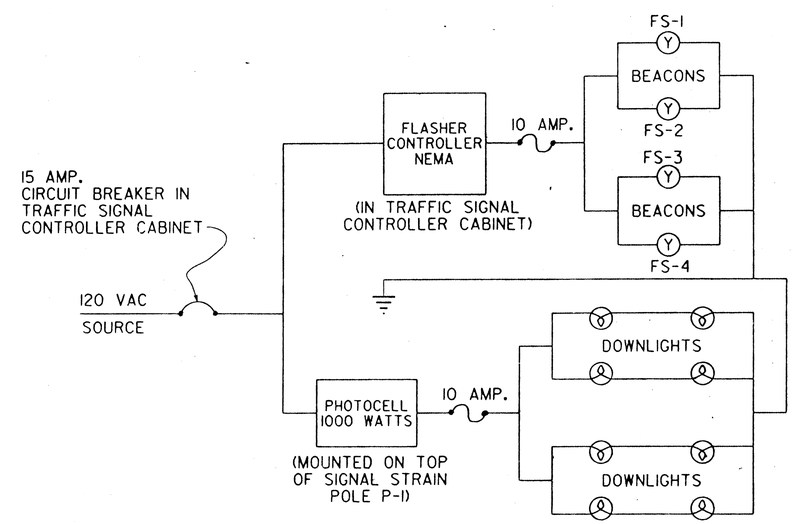

CIRCUIT DIAGRAM FOR FLASHING "SIGNAL AHEAD" SIGNS

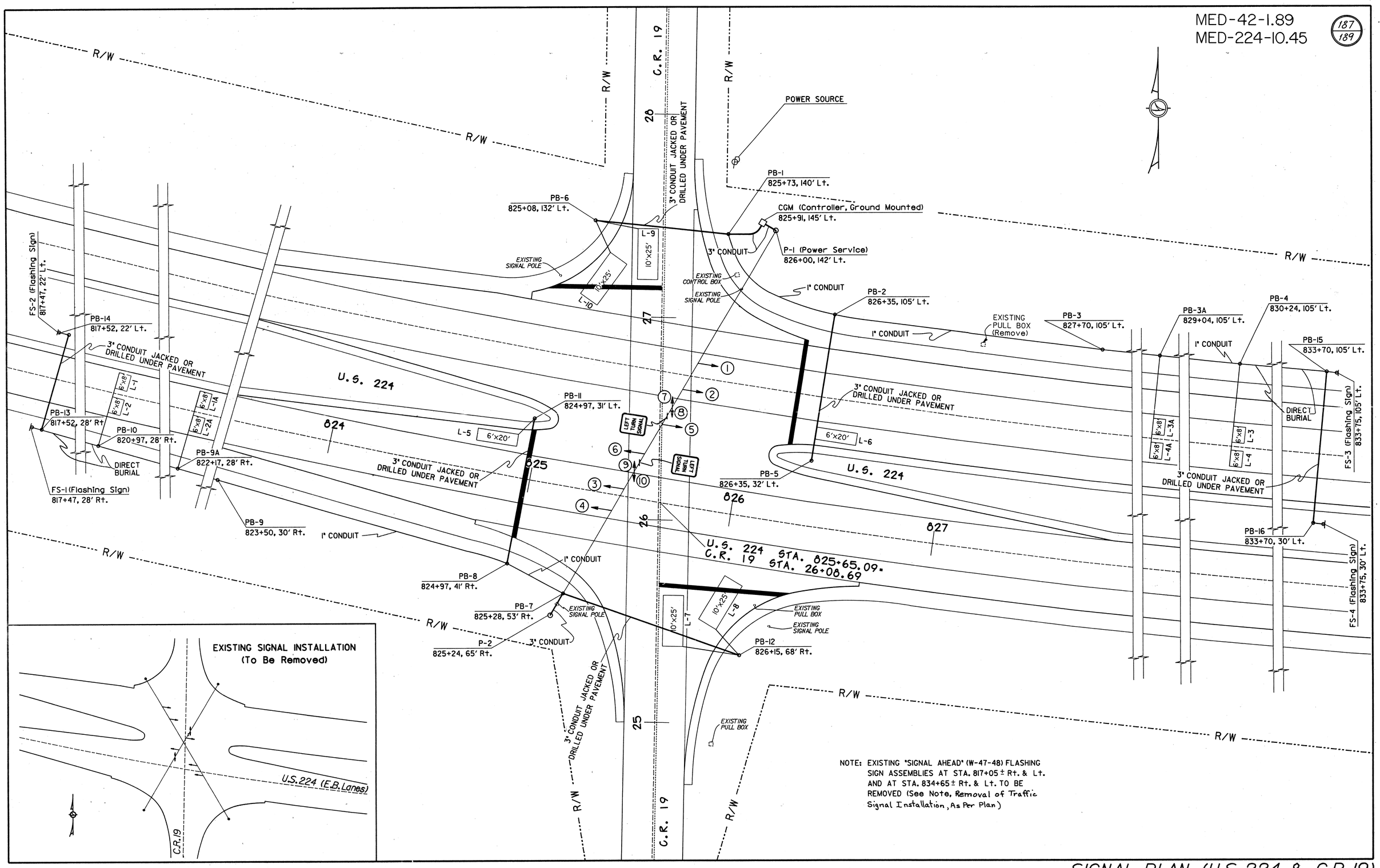

SIGNAL PLAN (U.S.224 & C.R.19)

MED-42-1.89
MED-224-10.45

188
189

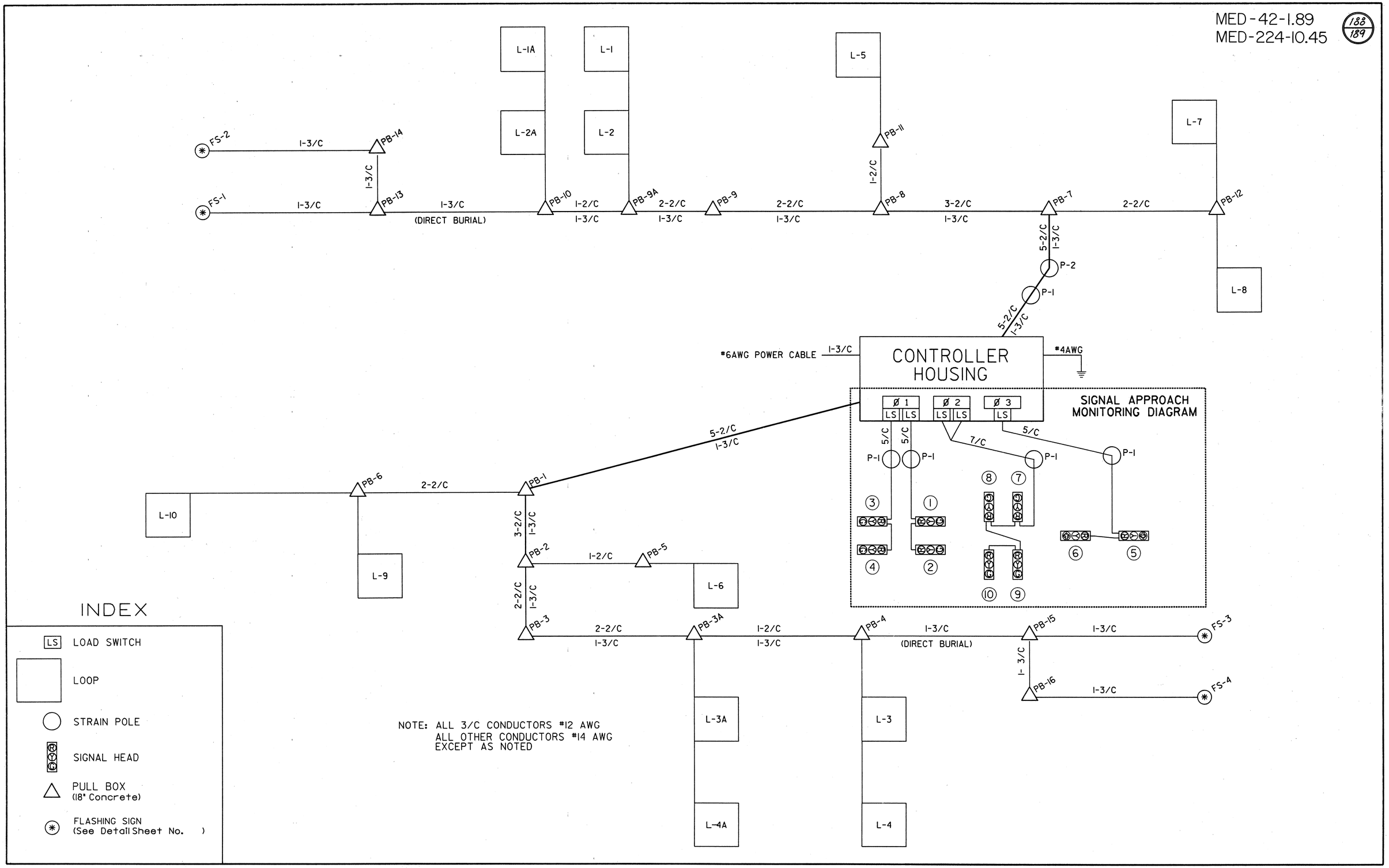

CABLE ROUTING DIAGRAM

SIGNAL INDICATION CHART

PHASE	SIGNAL HEAD 1	2	3	4	5	6	7	8	9	10
1	G	G	G	G	R	R	R	R	R	R
	Y	Y	Y	Y	R	R	R	R	R	R
	R	R	R	R	R	R	R	R	R	R
2	R	R	R	R	R	R	G	G	G	G
	R	R	R	R	R	R	Y	Y	Y	Y
	R	R	R	R	R	R	R	R	R	R
3	R	R	R	R	~~G~~	~~G~~	R	R	R	R
	R	R	R	R	Y	Y	R	R	R	R
	R	R	R	R	R	R	R	R	R	R
FLASH	Y	Y	Y	Y	Y	Y	R	R	R	R

SIGNAL TIMING CHART

INTERVAL	PHASE 1	2	3
MIN. GREEN	18	10	15
EXTENSION	3.0	4.0	4.0
MAX. GREEN	60	40	40
YELLOW	4.0	4.0	4.0
ALL RED	5	10	10

SIGNAL PHASING DIAGRAM

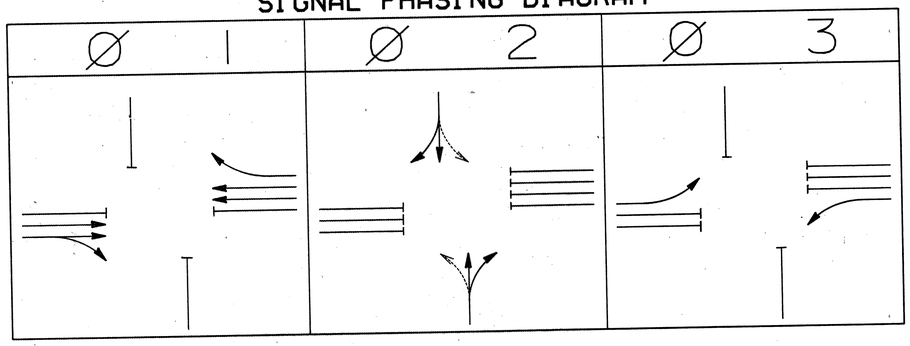

TRAFFIC SIGNAL DETECTORS MED-42-1.89, MED-224-10.45

LOOP	SIZE	NO. OF TURNS	PULSE OR PRESENCE	CALLING RELAY	DELAY OR EXTENSION (SEC.)	CONNECT TO DETECTOR UNIT #	ASSOCIATED CONTROLLER PHASE
L-1	6'x8'	3	PULSE	NO	0	1	Ø 1
L-2	6'x8'	3	PULSE	NO	0	1	Ø 1
L-1A	6'x8'	3	PULSE	NO	0	2	Ø 1
L-2A	6'x8'	3	PULSE	NO	0	2	Ø 1
L-3	6'x8'	3	PULSE	NO	0	3	Ø 1
L-4	6'x8'	3	PULSE	NO	0	3	Ø 1
L-3A	6'x8'	3	PULSE	NO	0	4	Ø 1
L-4A	6'x8'	3	PULSE	NO	0	4	Ø 1
L-5	6'x20'	2	PRESENCE	NO	0	5	Ø 3
L-6	6'x20'	2	PRESENCE	NO	0	5	Ø 3
L-7	10'x25'	2	PRESENCE	NO	10 SEC.	6	Ø 2
L-8	10'x25'	2	PRESENCE	NO	10 SEC.	7	Ø 2
L-9	10'x25'	2	PRESENCE	NO	10 SEC.	8	Ø 2
L-10	10'x25'	2	PRESENCE	NO	10 SEC.	9	Ø 2

189/189

189 of 189 MED-42-1.89 | MED-224-10.45

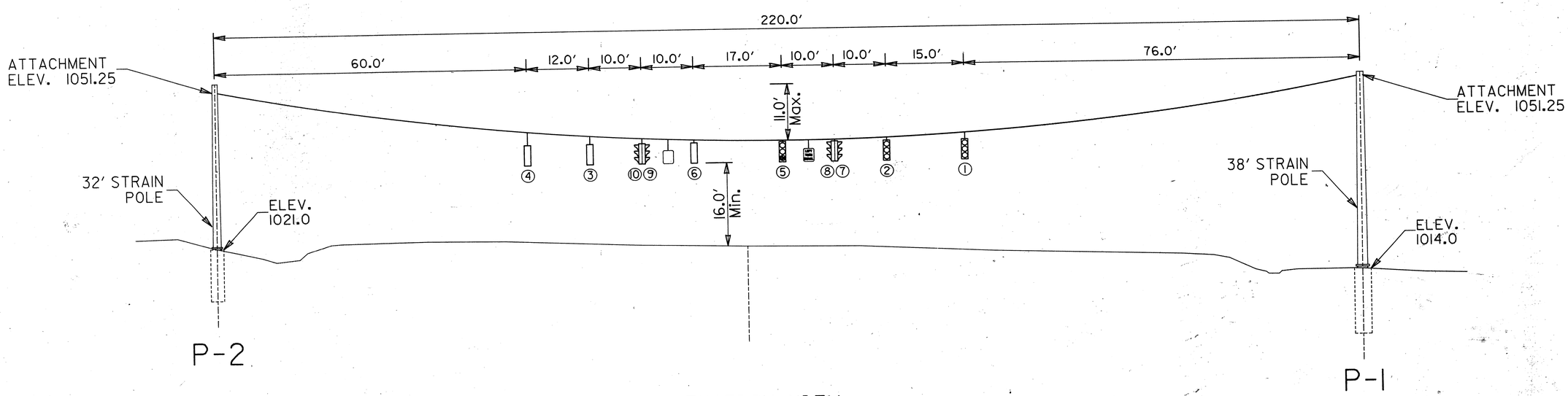

ELEVATION VIEW
(LOOKING NORTHWEST)

TRAFFIC SIGNAL DETAILS