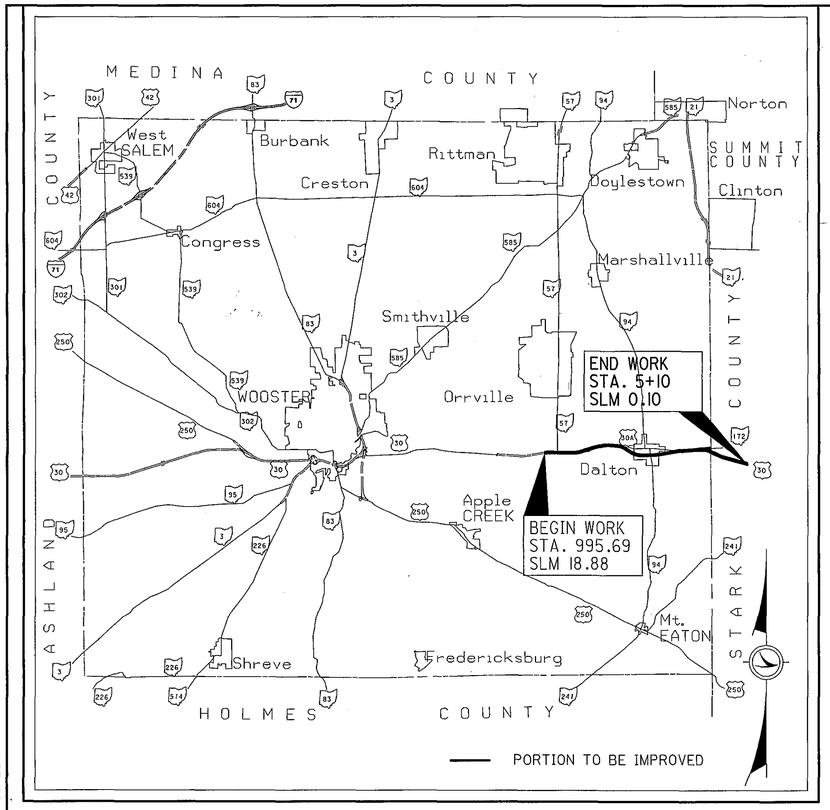

STATE OF OHIO
DEPARTMENT OF TRANSPORTATION

WAY-30-18.88
(STA-30-0.00)

VILLAGE OF DALTON
EAST UNION TOWNSHIP
SUGAR CREEK TOWNSHIP
WAYNE COUNTY
(TUSCARAWAS TOWNSHIP)
(STARK COUNTY)

INDEX OF SHEETS:

TITLE SHEET	1
GENERAL NOTES	2-6*
GENERAL SUMMARY	7
MISC. SIGNING DETAILS	8
PLAN SHEETS	9-29 *
SIGN ELEVATIONS	30-39
SIGNING SUBSUMMARIES	40-56

* SHEET NUMBERS NOT USED 16 & 6

PROJECT DESCRIPTION

SIGNING UPGRADE:
ON USR 30 BEGINNING WEST OF SR 57, AND ENDING AT SLM 0.10 IN STARK COUNTY.

PROJECT EARTH DISTURBED AREA = N/A (MAINTENANCE PROJECT)
ESTIMATED CONTRACTOR EARTH DISTURBED AREA = N/A (MAINTENANCE PROJECT)
NOTICE OF INTENT EARTH DISTURBED AREA = N/A (MAINTENANCE PROJECT)

LIMITED ACCESS

THIS IMPROVEMENT IS ESPECIALLY DESIGNED FOR THROUGH TRAFFIC AND HAS BEEN DECLARED A LIMITED ACCESS HIGHWAY OR FREEWAY BY ACTION OF THE DIRECTOR IN ACCORDANCE WITH THE PROVISIONS OF SECTION 5511.02 OF THE OHIO REVISED CODE.

2002 SPECIFICATIONS

THE STANDARD SPECIFICATIONS OF THE STATE OF OHIO, DEPARTMENT OF TRANSPORTATION, INCLUDING CHANGES AND SUPPLEMENTAL SPECIFICATIONS LISTED IN THE PROPOSAL SHALL GOVERN THIS IMPROVEMENT.

I HEREBY APPROVE THESE PLANS AND DECLARE THAT THE MAKING OF THIS IMPROVEMENT WILL NOT REQUIRE THE CLOSING TO TRAFFIC OF THE HIGHWAY, AND THAT PROVISIONS FOR THE MAINTENANCE AND SAFETY OF TRAFFIC WILL BE AS SET FORTH ON THE PLANS AND ESTIMATES

UNDERGROUND UTILITIES
TWO WORKING DAYS
BEFORE YOU DIG
CALL 1-800-362-2764 (TOLL FREE)
OHIO UTILITIES PROTECTION SERVICE
NON-MEMBERS
MUST BE CALLED DIRECTLY

PLAN PREPARED BY:

DISTRICT THREE - PRODUCTION DEPARTMENT

ENGINEERS SEAL:

STATE OF OHIO
RICHARD JAMES RONEY
E-50593
REGISTERED PROFESSIONAL ENGINEER

SIGNED: Richard J. Roney
DATE: 8-30-04

STANDARD CONSTRUCTION DRAWINGS					SUPPLEMENTAL SPECIFICATIONS	
TC-7.65	7-18-03	MT-35.10	4-20-01			
TC-18.24	1-18-02	MT-95.30	7-16-04		832	4-17-04
TC-21.20	1-19-01	MT-95.31	7-16-04		833	2-12-03
TC-22.10	1-19-01	MT-95.32	7-16-04		1075	4-19-02
TC-22.20	1-19-01	MT-97.10	4-19-02			
TC-31.21	4-20-01	MT-98.12	4-19-02			
TC-41.10	1-19-01	MT-98.13	4-19-02			
TC-41.20	1-19-01	MT-98.14	4-19-02			
TC-41.40	7-16-04	MT-98.15	7-16-04			
TC-41.50	7-16-04	MT-98.16	4-19-02			
TC-42.10	1-19-01	MT-105.10	10-18-02			
TC-42.20	7-16-04	MT-105.11	10-18-02			
TC-51.11	4-20-01					
TC-51.12	4-20-01					
TC-52.10	4-20-01	DM-4.3	7-19-02			
TC-52.20	4-20-01	DM-4.4	7-19-02			

APPROVED Thomas M. O'Leary
DATE 9-2-4 DISTRICT DEPUTY DIRECTOR

APPROVED Gordon Proctor
DATE 9-16-04 DIRECTOR, DEPARTMENT OF TRANSPORTATION

FEDERAL PROJECT NO. **STATE**
PID NO. **77267**
CONSTRUCTION PROJECT NO.
RAILROAD INVOLVEMENT **NONE**
WAY-30-18.88

REVISED 8/26/04

WAY - USR 30-18.88/0.00
040608 PID - 77267
Dist 3 11/17/2004
DESIGN FILE: I:\projects\77267\TitleSht.dgn
WORKSTATION: eellison DATE: 8/30/2004

CONVERSION OF STANDARD CONSTRUCTION DRAWINGS

THE METRIC STANDARD DRAWINGS REFERENCED IN THIS PLAN SHALL BE CONVERTED TO ENGLISH UNITS USING THE SI (METRIC) TO ENGLISH CONVERSION FACTORS PROVIDED IN TABLE 109.021 OF THE 2002 CONSTRUCTION AND MATERIALS SPECIFICATIONS. THE APPENDIX OF ASTM E 380 SHALL BE UTILIZED FOR ANY ADDITIONAL CONVERSION FACTORS REQUIRED. CONVERSIONS SHALL BE APPROPRIATELY PRECISE AND SHALL REFLECT STANDARD INDUSTRY ENGLISH VALUES WHERE SUITABLE.

CONTINGENCY QUANTITIES

THE CONTRACTOR SHALL NOT ORDER MATERIALS OR PERFORM WORK LISTED IN THE GENERAL SUMMARY FOR ITEMS DESIGNATED BY PLAN NOTE TO BE USED "AS DIRECTED BY ENGINEER" UNLESS OTHERWISE AUTHORIZED BY THE ENGINEER. THE ACTUAL WORK LOCATIONS AND QUANTITIES USED AT THE ENGINEER'S DISCRETION SHALL BE MADE A MATTER OF RECORD BY INCORPORATION INTO THE FINAL CHANGE ORDER GOVERNING COMPLETION OF THIS PROJECT.

UNDERGROUND UTILITIES

THE LOCATIONS OF THE UNDERGROUND UTILITIES SHOWN ON THE PLANS ARE AS OBTAINED FROM THE OWNERS OF THE UTILITY AS REQUIRED BY SECTION 153.64 OF THE OHIO REVISED CODE.

UTILITIES OWNERSHIP

THE FOLLOWING UTILITIES MAY HAVE UNDERGROUND INSTALLATIONS ALONG THE VARIOUS ROUTES AFFECTED BY THIS PROJECT. THIS IS NOT TO BE CONSTRUED AS A COMPLETE LIST BUT RATHER A DIRECTORY OF THE MOST FREQUENTLY ENCOUNTERED COMPANIES.

ELECTRIC

OHIO EDISON COMPANY 1910 WEST MARKET STREET, BLDG 1 AKRON, OH 44313 330-384-4702 (JEFF KNAPP)	CITY OF ORRVILLE – ELECTRIC 207 NORTH MAIN STREET ORRVILLE, OH 44667 330-684-5100 (BOB BELTZ)
OHIO POWER COMPANY (AEP) 301 CLEVELAND AVENUE SW CANTON, OH 44701 330-438-7061 (KATHY MOSSBERGER)	

GAS & PIPELINE

COLUMBIA GAS OF OHIO 1120 WESR FOURTH STREET MANSFIELD, OH 44901 419-528-1114 (BARTH SMITH)	NORTHEAST OHIO NATURAL GAS 9081 USR 250 STRASBURG, OH 44680 330-878-5589 (CHAD WALLACE)
DOMINION EAST OHIO 1000 WEST WILBETH ROAD AKRON, OH 44314 330-798-7104 (GEORGE TURNER)	GATHERCO 6273 FRANK AVENUE NW NORTH CANTON, OH 44720 330-498-9553 (TONY KROVACEVICH)
GREAT LAKES ENERGY PARTNERS P.O. BOX 550 HARTVILLE, OH 44632 330-877-6747 (SUE BARCLAY)	

VILLAGE & CITY UTILITIES

CITY OF ORRVILLE – UTILITIES 207 NORTH MAIN STREET ORRVILLE, OH 44667 330-684-5040 (DAN GLOMB)	VILLAGE OF DALTON P.O. BOX 493 1 WEST MAIN STREET DALTON, OH 44618 330-828-2221 (KIRT DENNING)

RURAL WATER & SEWER

CITY OF ORRVILLE – UTILITIES 207 NORTH MAIN STREET ORRVILLE, OH 44667 330-684-5040 (DAN GLOMB)	VILLAGE OF DALTON P.O. BOX 493 1 WEST MAIN STREET DALTON, OH 44618 330-828-2221 (KIRT DENNING)
WAYNE COUNTY ENGINEER 3151 WEST OLD LINCOLN WAY WOOSTER, OH 44691 330-287-5500 (ROGER TERRILL)	

TELEPHONE

AT&T 229 WEST 7TH STREET, 10TH FLOOR CINCINNATI, OH 45202 513-784-3238 (JEFF BALLINGER)	SBC 50 WEST BOWERY STREET, 6TH FLOOR AKRON, OH 44308 330-384-8057 (RICK DELEGRANGE)
SPRINT 2025 AKRON ROAD WOOSTER, OH 44691 330-262-1107 (RICHARD BENNINGER)	

CABLE TV

ARMSTRONG UTILITIES 1141 LAFAYETTE ROAD MEDINA, OH 44256 330-722-3141 (BUB BARNETT)	

RURAL TRAFFIC SIGNALS

OHIO DEPT. OF TRANSPORTATION DISTRICT 3 906 NORTH CLARK STREET ASHLAND, OH 44805 419-207-2822 (KEVIN CAPIZZI)	

RURAL LIGHTING

OHIO DEPT. OF TRANSPORTATION DISTRICT 4 705 OAKWOOD STREET RAVENNA, OH 44266 330-297-0801 X 305 (KEN GREENE)	

THE AFOREMENTIONED UTILITY COMPANIES AND AGENCIES HAVE VARIOUS FACILITIES IN THE AREA THAT WILL REMAIN IN PLACE DURING CONSTRUCTION. EXTREME CAUTION SHOULD BE EXERCISED IN AREAS WITH UTILITIES. SECTIONS 105.07 AND 107.16 OF THE 2002 DEPARTMENT OF TRANSPORTATION CONSTRUCTION AND MATERIALS SPECIFICATIONS REQUIRE, AMONG OTHER THINGS, THAT THE CONTRACTOR COOPERATE WITH ALL UTILITIES LOCATED WITHIN THE LIMITS OF THE CONSTRUCTION PROJECT AND TAKE RESPONSIBILITY FOR THE PROTECTION OF THE UTILITY PROPERTY AND SERVICES.

CERTIFIED DRAWING

THE CONTRACTOR SHALL CERTIFY THAT ALL TRAFFIC CONTROL ITEMS FURNISHED ON THIS PROJECT SHALL BE IN CONFORMANCE TO THE CONTRACT REQUIREMENTS PER CMS 625.04 AND 630.03. THE CONTRACTOR SHALL SUBMIT EIGHT (8) SETS OF SIGN LEGEND CERTIFIED DRAWINGS AND CATALOG CUTS TO THE OHIO DEPARTMENT OF TRANSPORTATION, DISTRICT 3 CONSTRUCTION ENGINEER, 906 NORTH CLARK STREET, ASHLAND, OHIO 44805, FOR APPROVAL. CERTIFIED SHOP DRAWINGS AND CATALOG CUTS SHALL BE SUBMITTED TO THE ENGINEER PRIOR TO FABRICATION AND INSTALLATION.

IN ADDITION TO THE REQUIREMENTS OF 625.04 AND 630.03, ALL DESIGN QUESTIONS OR COMMENTS ORIGINATING FROM THE CONTRACTOR OR MANUFACTURER REGARDING THE SHOP DRAWINGS AND CATALOG CUTS SHALL BE FORWARDED TO THE ENGINEER FOR REVIEW PRIOR TO CERTIFICATION BY THE CONTRACTOR. THE ENGINEER RESERVES THE RIGHT TO ACCEPT THE CONTRACTORS' CERTIFIED DRAWINGS OR REQUEST FURTHER REVIEW AND ACCEPTANCE BY THE DISTRICT 3 PRODUCTION DEPARTMENT PRIOR TO INSTALLATION OF THE TRAFFIC CONTROL ITEMS.

SIGN REPLACEMENTS

WITH RESPECT TO THE REPLACEMENT OF EXISTING SIGNS THE CONTRACTOR SHALL IN NO CASE REMOVE A SIGN UNLESS THE APPLICABLE REPLACEMENT CAN BE ERECTED WITHIN THE SAME WORKING DAY.

LAYOUT OF WORK

PRIOR TO REMOVING OR ERECTING SIGNS OR SIGN SUPPORTS, THE CONTRACTOR SHALL FIELD LAYOUT AND IDENTIFY, BY TYPE OF WORK, SIGNS AND SIGN SUPPORTS TO BE ERECTED OR REMOVED. THIS LAYOUT MAY BE ACCOMPLISHED BY STAKING OR BY PLACING CLEARLY DISCERNABLE PAINTED MARKINGS ON THE EDGE OF PAVEMENT OR BY OTHER METHODS APPROVED BY THE ENGINEER. IN NO CASE SHALL THE CONTRACTOR PLACE ANY PERMANENT MARKINGS ON ANY EXISTING SIGN OR SIGN SUPPORT.

RESTORATION OF DISTURBED AREAS

THE CONTRACTOR SHALL RESTORE ALL SEEDED AND SODDED AREAS, PAVED BERMS, AND OTHER DISTURBED AREAS TO A CONDITION EQUAL TO OR BETTER TO THAT EXISTING BEFORE THIS WORK WAS STARTED. ALL RESTORATION WORK SHALL BE DONE IN ACCORDANCE WITH THE PERTINENT SPECIFICATION ITEM AND AS DIRECTED BY THE ENGINEER. PAYMENT FOR ALL RESTORATION WORK, INCLUDING MATERIALS AND LABOR SHALL BE INCLUDED WITH THE UNIT PRICE BID FOR THE VARIOUS 630 AND 631 ITEMS IN THIS PLAN.

ITEM 201 - CLEARING AND GRUBBING

ALTHOUGH THERE ARE NO TREES AND STUMPS SPECIFICALLY MARKED FOR REMOVAL WITHIN THE LIMITS OF THE PROJECT, A LUMP SUM QUANTITY HAS BEEN INCLUDED IN THE GENERAL SUMMARY FOR ITEM 201, CLEARING AND GRUBBING. AL PROVISIONS AS SET FORTH IN THE SPECIFICATIONS UNDER THIS ITEM SHALL BE INCLUDED IN THE LUMP SUM PRICE BID FOR ITEM 201, CLEARING AND GRUBBING.

CLEARING AND GRUBBING SHALL BE PERFORMED IN AREAS AS DIRECTED BY THE ENGINEER TO PROVIDE ADEQUATE CLEAR SITE DISTANCE TO SIGNS ERECTED AS PART OF THIS PLAN. SEE SHEET NO. 8 FOR CLEARING AND GRUBBING GUIDE DETAIL. THE FOLLOWING QUANTITY IS INCLUDED IN THE GENERAL SUMMARY TO COMPLETE THE ABOVE DESCRIBED WORK:

201 – CLEARING AND GRUBBING LUMP

ITEM 630 - SIGNING, MISC.: SIGN DATA COLLECTION:

THIS ITEM OF WORK SHALL CONSIST OF COLLECTING AND RECORDING INFORMATION FOR ANY WORK INVOLVING PERMANENT SIGNING INCLUDING SIGN REMOVAL, SIGN RELOCATION OR NEW SIGN INSTALLATION ON THIS PROJECT. DISTRICT THREE HAS A SIGN INVENTORY SYSTEM IN OPERATION. WORK PERFORMED ON EXISTING SIGNS AND INSTALLATION OF NEW SIGNS WILL AFFECT THE ACCURACY OF THE INVENTORY. ALL EXISTING SIGNS HAVE A BAR CODE STICKER. THE BAR CODE STICKER NUMBER FOR ANY SIGNS REMOVED ON THE PROJECT SHALL BE RECORDED COMPLETELY AND ACCURATELY SO THEY CAN BE REMOVED FROM THE INVENTORY. THE BAR CODE STICKER NUMBER FOR ANY SIGNS THAT ARE NEW OR RELOCATED SHALL ALSO BE RECORDED COMPLETELY AND ACCURATELY. NEW SIGNS REQUIRE NEW BAR CODE STICKERS WHICH WILL BE SUPPLIED TO THE CONTRACTOR AT THE PRECONSTRUCTION MEETING. ANY STICKERS NOT USED ARE TO BE RETURNED TO ODOT DISTRICT 3 TRAFFIC DEPARTMENT.

THE INFORMATION SHALL BE COLLECTED FROM ALL SIGNS REMOVED, RELOCATED OR INSTALLED ON THE PROJECT AND RECORDED COMPLETELY AND ACCURATELY BY A PERSON FAMILIAR WITH SIGNING TERMINOLOGY. THE INFORMATION REQUIRED APPEARS ON A FORM WHICH WILL BE SUPPLIED TO THE CONTRACTOR AT THE PRECONSTRUCTION MEETING. ALL SECTIONS OF THE FORM SHALL BE COMPLETED FROM THE INFORMATION COLLECTED FOR

EACH SIGN. NOTE THAT THE STRAIGHT LINE MILEAGE LOG POINT OF THE SIGN REMOVAL, RELOCATION OR INSTALLATION IS TO BE PROVIDED. PROJECT STATIONING IS NOT ACCEPTABLE. AFTER THE FORM IS COMPLETED, IT SHALL BE RETURNED TO ODOT DISTRICT 3 TRAFFIC DEPARTMENT. A COPY OF THIS FORM IS AVAILABLE UPON REQUEST FOR THE CONTRACTOR TO REVIEW FOR BIDDING PURPOSES. FOR A COPY OF THIS FORM PLEASE CALL 1-419-207-7045, ROADWAY SERVICES MANAGER. ALL COMPLETED FORMS FOR THE PROJECT ARE TO BE PROVIDED TO THE ENGINEER NOT LATER THAN 30 CALENDAR DAYS AFTER COMPLETION OF SIGNING WORK ITEMS.

PAYMENT FOR THE LABOR, MATERIALS AND EQUIPMENT NECESSARY TO PERFORM THE ABOVE WORK WHICH INCLUDES COLLECTION OF INFORMATION, COMPLETION OF THE FORMS SUPPLIED TO THE CONTRACTOR, INSTALLATION OF BAR CODE STICKERS, MEASURING OF THE SIGNS AND ANY OTHER WORK IN ORDER TO COMPLETE THE FORM SHALL BE INCLUDED IN THE COST OF ITEM 630 - SIGNING, MISC.: SIGN DATA COLLECTION PER EACH.

ITEM 630 – SIGN, FLAT SHEET, AS PER PLAN

THE HINGED SIGN W-68-48 "WATCH FOR ICE ON BRIDGE" SHALL BE PROVIDED BY THE CONTRACTOR AT LOCATIONS SHOWN IN THE PLANS. SEE SHEET NO. 8 FOR ADDITIONAL NOTES AND DETAILS. AS PER THE REQUIREMENTES OF 630.04, REFLECTIVE SHEETING SHALL BE TYPE G IN ACCORDANCE 730.19.

PAYMENT FOR THIS ITEM SHALL BE AT THE UNIT PRICE BID PER SQUARE FOOT FOR ITEM 630, SIGN, FLAT SHEET, AS PER PLAN AND SHALL INCLUDE ALL LABOR, EQUIPMENT, HARDWARE, AND MATERIALS NECESSARY TO PERFORM THE WORK.

BRIDGE LOCATION MARKER SIGN

THE BRIDGE LOCATION MARKER SIGN INDICATES THE COUNTY, THE ROUTE, AND THE STRAIGHT LINE MILEAGE OF THE STRUCTURE. THE CONTRACTOR SHALL REMOVE THE EXISTING BRIDGE LOCATION MARKER SIGNS FOR REERECTION ON EXISTING OR NEW SUPPORTS AS SHOWN IN THE PLANS. IF THERE ARE ANY QUESTIONS ABOUT THE LOCATION, PLEASE CONTACT THE DISTRICT 3 BRIDGE ENGINEER @ 1-419-207-7149.

MILE MARKER LOCATION

THE LOCATION OF MILE MARKERS ON THE PLANS ARE APPROXIMATE AND A MORE PRECISE LOCATION WILL BE PROVIDED BY THE DEPARTMENT. THE CONTRACTOR SHALL NOTIFY THE ENGINEER AT LEAST 30 DAYS IN ADVANCE OF PLANNED DATE OF MARKER INSTALLATION. THE ENGINEER SHALL CONTACT THE OFFICE OF TECHNICAL SERVICES WHICH SHALL LOCATE THE LONGITUDINAL POSITIONS OF THE MILE MARKERS BY MEANS OF A PAINT MARK ON THE PAVEMENT EDGE. ALTERNATE MARKS WILL NOT BE PROVIDED ON DIVIDED HIGHWAYS AND THE CONTRACTOR SHALL SET MARKERS FOR THE OPPOSITE ROADWAY ACROSS FROM THE PROVIDED MARK. DELINEATORS WHOSE NORMAL POSITIONS FALL WITHIN 50 FEET OF A MILE MARKER SHALL BE OMITTED.

MAINTAINING TRAFFIC

THE INTENT IS TO PERFORM THE REQUIRED WORK WITH THE LEAST INCONVENIENCE TO, AND THE MAXIMUM SAFETY TO, THE CONTRACTOR AND THE TRAVELING PUBLIC.

PROCEDURES FOR MAINTAINING TRAFFIC SHALL BE IN COMPLIANCE WITH THE OHIO MANUAL OF UNIFORM TRAFFIC CONTROL DEVICES AND STANDARD CONSTRUCTION DRAWINGS AS LISTED ON THE TITLE SHEET OF THIS PLAN. WORK ON OR BEYOND THE SHOULDER SHALL BE IN ACCORDANCE WITH PLATES 2003 OMUTCD CHAPTER 6H. FLAGGING PROCEDURES SHALL BE IN ACCORDANCE WITH 2003 OMUTCD CHAPTER 6E.

THE CONTRACTOR SHALL MAINTAIN TRAFFIC AT ALL TIMES IN ACCORDANCE WITH THE REQUIREMENTS OF ITEM 614. TWO-WAY TRAFFIC SHALL BE MAINTAINED AT ALL TIMES, EXCEPT AS NOTED HEREIN.

THE CONTRACTOR WILL BE REQUIRED TO PROVIDE, ERECT, AND MAINTAIN IN PROPER POSITION, CLEAN, LEGIBLE DEVICES IN GOOD WORKING CONDITION AND SUBSEQUENTLY REMOVE ALL LIGHTS, SIGNS, BARRICADES, CONES, AND ALL OTHER TRAFFIC CONTROL DEVISES NECESSARY FOR THE MAINTENANCE OF TRAFFIC. ALL SIGNS SHALL BE REFLECTORIZED WITH TYPE G REFLECTIVE SHEETING.

PLACEMENT OF ALL TRAFFIC CONTROL DEVICES SHALL START AND PROCEED IN THE DIRECTION OF THE FLOW OF TRAFFIC. REMOVAL OF TRAFFIC CONTROL DEVICES SHALL START AT THE END OF THE CONSTRUCTION AREA AND PROCEED TOWARD THE ONCOMING TRAFFIC. THE CONTRACTOR SHALL PROVIDE FOR INSTALLATION OF ALL NECESSARY TRAFFIC CONTROL DEVICES BEFORE BEGINNING WORK. THE CONTRACTOR SHALL IMMEDIATELY REMOVE ALL OF THE BEFORE MENTIONED TRAFFIC CONTROL DEVICES AS SOON AS WORK IS SUSPENDED OR COMPLETED. ADVANCE WARNING SIGNS MAY BE COVERED FROM VIEW OF TRAFFIC WHEN THEY ARE NOT APPLICABLE, AS DETERMINED BY THE ENGINEER.

LANE CLOSURES (TAPERS AND TRANSITIONS) MAY BE ACCOMPLISHED BY THE USE OF TRAFFIC CONES, WITH A 28" MINIMUM HEIGHT. WITH THE APPROVAL OF THE ENGINEER, CONES MAY BE USED FOR SHORT TIME CLOSURES. THE CONES SHALL BE SPACED CENTER TO CENTER FROM THE BEGINNING OF THE FIRST LANE CLOSURE THROUGH THE WORK AREA(S) AS PER THE STANDARD CONSTRUCTION DRAWINGS. REFLECTORIZED BARRICADES OR DRUMS MAY BE USED IN LIEU OF TRAFFIC CONES, IF DESIRED.

NO LANE CLOSURES SHALL OCCUR ON ANY ROAD FROM 12:00 NOON THE DAY PRECEDING A STATE HOLIDAY THROUGH 6:00 PM THE DAY AFTER. NO TRAFFIC CLOSURES WILL OCCUR ON SATURDAY OR SUNDAY WITHOUT THE APPROVAL OF THE ENGINEER.

ON TWO-LANE HIGHWAYS, ONE-LANE CLOSURES SHALL BE OPERATED BY USE OF FLAGERS AND WILL BE REQUIRED WHENEVER TRAFFIC IS RESTRICTED TO LESS THAN THE NORMAL WIDTH OF THE TWO-LANE PAVEMENT AS PER STANDARD CONSTRUCTION DRAWING MT-97.10.

ON THREE-LANE HIGHWAYS, RIGHT-LANE CLOSURES SHALL BE OPERATED AS PER STANDARD CONSTRUCTION DRAWING MT-95.6.

A FLASHING ARROW PANEL SHALL BE REQUIRED WHENEVER ANY WORK IS BEING DONE UPON ANY TRAVELED PORTION OF A MULTI-LANE HIGHWAY. SEE STANDARD CONSTRUCTION DRAWING MT-35.10 FOR FLASHING ARROW PANEL SIZE.

IF THE CONTRACTOR FAILS TO COMPLY WITH THE PROVISIONS FOR TRAFFIC CONTROL AS SET FORTH IN THESE PLANS OR WITH PROVISIONS OF THE OMUTCD, AND SUCH FAILURE RESULTS IN A CONDITION AT THE WORK SITE WHICH IS UNSAFE FOR TRAFFIC, THE ENGINEER SHALL SUSPEND WORK UNTIL THE CONTRACTOR COMPLIES WITH THE NECESSARY REQUIREMENTS.

PAYMENT FOR ALL OF THE ABOVE INCLUDING PROVIDING, ERECTING, MAINTAINING, AND REMOVING ALL LIGHTS, SIGNS BARRICADES, DRUMS CONES AND ALL OTHER TRAFFIC CONTROL DEVICES, SHALL BE INCLUDED IN THE LUMP SUM BID FOR THIS ITEM.

SIGN LAYOUT FOR DESIGNABLE SIGNS

THE LEVEL, TYPE AND DESIGN LAYOUT FOR DESIGNABLE SIGNS WILL BE PROVIDED TO ASSIST WITH PREPARATION OF WORKING DRAWINGS. THESE SIGNS WERE DESIGNED USING GUIDESIGN 3.1 PRODUCED BY TRANSSOFT SOLUTIONS. DIMENSIONS ARE SPECIFIED TO FIT EXISTING SUPPORTS WHERE SHOWN. ELECTRONIC VERSIONS AND/OR PRINTOUTS OF THESE DESIGN FILES WILL BE MADE AVAILABLE TO THE SUCCESSFUL BIDDER UPON REQUEST.

ITEM 631 – REMOVAL OF SIGN LIGHTING, AS PER PLAN

THIS WORK SHALL INCLUDE THE REMOVAL OF SIGN LIGHTING LUMINAIRES, LUMINAIRE SUPPORT ASSEMBLIES, CABLE, SIGN SERVICE, SERVICE DISCONNECT SWITCH, AND ANY RELATED INCIDENTALS PER SIGN. ALL ITEMS SHALL BE REMOVED FOR DISPOSAL. BASIS OF PAYMENT WILL BE AT THE CONTRACT BID PRICE PER EACH COMPLETE SIGN LIGHTING INSTALLATION REMOVED.

GROUND MOUNTED SIGN SHEETING MATERIAL

THE BACKGROUNDS OF GROUND MOUNTED PERMANENT TRAFFIC CONTROL SIGNS SHALL BE REFLECTORIZED WITH TYPE G REFLECTIVE SHEETING. REFLECTORIZED LEGENDS, SHIELDS, AND SYMBOLS (E.G. ROUTE SHIELDS, HAZARDOUS CARGO PLAQUE, AIRPORT SYMBOL, ARROWS, BORDERS) USED ON GROUND MOUNTED PERMANENT TRAFFIC CONTROL SIGNS SHALL BE OF TYPE G REFLECTIVE SHEETING. ALL REFLECTIVE SHEETING MATERIALS SHALL BE CONTAINED ON THE ODOT LIST OF PREQUALIFIED SIGN SHEETING MATERIALS.

BASIS OF PAYMENT SHALL BE AT THE UNIT PRICE BID PER SQ. FT FOR:

ITEM 630, SIGN, GROUND MOUNTED EXTRUSHEET
ITEM 630, SIGN, FLAT SHEET

OVERHEAD MOUNTED SIGN SHEETING MATERIAL

THE BACKGROUNDS OF OVERHEAD MOUNTED PERMANENT TRAFFIC CONTROL SIGNS SHALL BE REFLECTORIZED WITH TYPE G REFLECTIVE SHEETING. REFLECTORIZED LEGENDS, SHIELDS, AND SYMBOLS USED ON OVERHEAD MOUNTED PERMANENT TRAFFIC CONTROL SIGNS SHALL BE OF TYPE H OR TYPE J REFLECTIVE SHEETING. ALL REFLECTIVE SHEETING MATERIALS SHALL BE CONTAINED ON THE ODOT LIST OF PREQUALIFIED SIGN SHEETING MATERIALS.

BASIS OF PAYMENT SHALL BE AT THE UNIT PRICE BID PER SQ. FT. FOR:

ITEM 630, SIGN, OVERHEAD EXTRUSHEET, AS PER PLAN.

ITEM 630 – SIGN ATTACHMENT ASSEMBLY, AS PER PLAN

WHERE NEW SIGN ATTACHMENT ASSEMBLIES ARE SPECIFIED IN THE PLAN, THE WORK SHALL INCLUDE REMOVAL OF THE EXISTING SIGN ATTACHMENT ASSEMBLIES.

NOTE SHEET REVISED 8-30-04 RJR

CALC BY RJR 8/04
CHKD BY

SIGNING GENERAL NOTES

WAY-30-18.88

FILE: I:\projects\72987\SignNotes_WAY30_REVISED.doc

PROTECTIVE COATING OF OVERHEAD SIGN SUPPORT SECTIONS
GENERAL

OVERHEAD SIGN SUPPORTS CAN BE SEPARATED INTO MAJOR SECTIONS SUCH AS END FRAMES, TRUSSES, VERTICAL POLES AND CANTILEVER ARMS. FOR THE IMPLEMENTATION OF THIS WORK ITEM IT WILL BE BENEFICIAL TO REFER TO THE MAJOR SECTIONS OF THE OVERHEAD SIGN SUPPORTS RATHER THAN THE WHOLE SUPPORT. MORE SPECIFIC INSTRUCTIONS AND FLEXIBILITY CAN BE GIVEN BASED UPON THE UNIT OF MEASURE AND PAYMENT PER MAJOR SUPPORT SECTION.

THE PROTECTIVE COATING OF OVERHEAD SIGN SUPPORT SECTIONS SHALL BE A FOUR PART PROCESS TO INCLUDE SURFACE PREPARATION FOLLOWED BY A THREE COAT PAINT SYSTEM. THIS THREE COAT SYSTEM SHALL CONSIST OF AN EPOXY PRIME COAT, AN EPOXY INTERMEDIATE COAT AND A URETHANE TOP COAT, WITH EACH COAT BEING A DIFFERENT COLOR. FOR AN EXPLANATION OF THE MATERIALS TO BE USED SEE NOTE ENTITLED "COATING SYSTEM." THE PURPOSE OF THIS COATING IS TO PROVIDE PROTECTION FOR NEW (UNWEATHERED) AND OLDER (WEATHERED) GALVANIZED STEEL SUPPORT SECTIONS FROM CORROSIVE ELEMENTS IN THE ATMOSPHERE. COATING AND SURFACE PREPARATION OF NEW GALVANIZED SUPPORT SECTIONS SHOULD BE DONE BY THE MANUFACTURER.

IN THE FIELD, THE CONTRACTOR SHALL TAKE ALL NECESSARY PRECAUTIONS TO COMPLY WITH POLLUTION LAWS, RULES OR REGULATIONS OF FEDERAL, STATE OR LOCAL AGENCIES. THE COATING MATERIALS SPECIFIED FOR THE WORK CAN BE HAZARDOUS TO THE HEALTH OF THE APPLICATOR IF NOT APPLIED AS PER MANUFACTURER'S INSTRUCTION. THE CONTRACTOR SHALL FOLLOW THE DATA SHEET AND THE LABEL ON THE PAINT CONTAINERS. THESE PRECAUTIONS SHALL INCLUDE THE USE OF RESPIRATORS AND EYE AND SKIN PROTECTION AS SPECIFIED. THE CONTRACTOR SHALL ALSO INSURE THAT HIS PAINTING OPERATIONS AND LOCATIONS WILL NOT ENDANGER OR ADVERSELY AFFECT THE PUBLIC IN GENERAL.

THE PROPOSED CLEANING AND COATING OPERATIONS SHALL BE PREFORMED ONLY WHEN THE AMBIENT TEMPERATURE IS 50 DEGREES F OR ABOVE. PAINT SHALL NOT BE APPLIED DURING RAIN, FOG OR MIST, OR WHEN THE STEEL SURFACE TEMPERATURE IS LESS THAN 5 DEGREES F ABOVE THE DEW POINT. PAINT SHALL NOT BE APPLIED TO WET OR DAMP SURFACES OR ON FROSTED OR ICE-COATED SURFACES. PAINT SHALL NOT BE APPLIED WHEN THE RELATIVE HUMIDITY IS GREATER THAN 85%. ALL STEEL SURFACES OF TRUSSES AND END FRAMES INCLUDING THE WELDED AREAS, BALLAST ENCLOSURE MOUNTING BRACKET AND BASEPLATE ARE TO BE CLEANED AND COATED. BEFORE EACH COATING IS APPLIED, IT SHALL BE MIXED WITH AN APPROVED POWER MECHANICAL MIXER TO A UNIFORM CONSISTENCY WHICH SHALL BE MAINTAINED DURING ITS APPLICATION. EACH COAT SHALL BE APPLIED IN A WORKMANLIKE MANNER AS A CONTINUOUS FILM OF UNIFORM THICKNESS WHICH IS FREE OF HOLIDAYS, PORES, RUNS OR SAGS. ALL COATS SHALL BE APPLIED BY BRUSH. THINNING OF PAINT IS STRICTLY PROHIBITED. PAINT NOT CAPABLE OF BEING APPLIED AS SPECIFIED SHALL NOT BE USED. THE COATING SHALL PENETRATE ALL JOINTS AND CONNECTIONS. THE ENGINEER SHALL BE NOTIFIED 24 HOURS PRIOR TO ANY CLEANING OR COATING OPERATIONS SO THAT INSPECTION SERVICES CAN BE PROVIDED.

COATING SYSTEM : THE COATING SYSTEM SHALL CONSIST OF A POLYAMIDE-CURED EPOXY PRIME COAT, A POLYAMIDE-CURED INTERMEDIATE COAT AND AN ALIPHATIC POLYURETHANE TOP COAT. THE COATING MATERIALS USED SHALL BE THOSE AS LISTED FROM ONE OF THE FOLLOWING MANUFACTURERS:

1) AMERON
210 NORTH BERRY STREET
BREA, CALIFORNIA 92621
LOCAL TELEPHONE CONTACT: (216) 896-3602
PRIME COAT: AMERCOAT 71
INTERMEDIATE COAT : AMERLOCK 400 (LIGHT GREY)
TOP COAT: AMERCOAT 450 HS (MED. GREY)

2) THE GLIDDEN COMPANY
16651 SPRAGUE ROAD
STRONGSVILLE, OHIO 44136
LOCAL TELEPHONE CONTACT: (216) 826-5528
PRIME COAT: GLID-GUARD CORROSION RESISTANT HS EPOXY NO. 5465
INTERMEDIATE COAT: GLID-GUARD CORROSION RESISTANT HS EPOXY NO 5466
TOP COAT: GLID-THANE II POLYURETHANE NO. 6200 SERIES

3) PORTER PAINT CO.
400 SOUTH 13TH STREET
LOUISVILLE, KY. 40201
LOCAL TELEPHONE CONTACT: (216) 562-6709
PRIME COAT: PORTER PAINTS MCR 4300
INTERMEDIATE COAT: PORTER PAINTS MCR 4300 (OFF WHITE)
TOP COAT: PORTER PAINTS HYTHANE

4) POLY-CARB INC.
33095 BAINBRIDGE ROAD
CLEVELAND, OHIO 44139
LOCAL TELEPHONE CONTACT: (216) 248-1223
PRIME COAT: MARK-60 ULTRAPOX
INTERMEDIATE COAT: MARK-60 ULTRAPOX (LIGHT GREY)
TOP COAT: MARK-73 ULTRAKOTE (MED GREY)

5) SHERWIN WILLIAMS COMPANY
761 BETA DRIVE
MAYFIELD VILLAGE, OHIO 44143
LOCAL TELEPHONE CONTACT: (216) 461-8287
PRIME COAT: TILE-CLAD II HI-BILD PRIMER
INTERMEDIATE COAT: HI-SOLIDS CATALYZED EPOXY (PURE WHITE)
TOP COAT: HI-BILD ALIPHATIC POLYURETHANE ENAMEL (GREY)

ALL THREE COATS SHALL BE MANUFACTURED BY THE SAME COMPANY TO INSURE COMPATIBILITY AMONG COATS.

SURFACE PREPARATION, EXISTING SUPPORT SECTIONS : EXISTING, WEATHERED GALVANIZED SUPPORT SECTIONS SHOULD HAVE THEIR SURFACE PREPARATION AS WELL AS THEIR PROTECTIVE COATING DONE UNDER CONDITIONS OF TEMPERATURE AND HUMIDITY WITHIN THE SAME RANGE AS SPECIFIED BY THE MANUFACTURER OF THE EPOXY-PRIME COAT MATERIAL TO BE USED IMMEDIATELY AFTER THIS CLEANING OPERATION. THE SUPPORT SECTIONS SHALL BE PREPARED FOR COATING BY SSPC-SP1 (SOLVENT CLEANING) FOLLOWED BY SSPC-SP6 (COMMERCIAL BLAST CLEANING). BEFORE THE PREPARED SURFACE DEGRADES FROM THE PRESCRIBED STANDARDS, THE PRIME COAT SHALL
BE APPLIED. IN EVERY CASE, THE SURFACE SHALL BE COATED WITH EPOXY PRIME COAT ON THE SAME DAY AS THE SURFACE PREPARATION. CAREFUL HANDLING AND STORAGE WILL BE REQUIRED TO PREVENT ANY SCRAPING, MARRING, OR OTHER DAMAGE TO THE PREPARED SURFACE. PAYMENT SHALL INCLUDE ALL LABOR, EQUIPMENT, HANDLING, TRANSPORTATION, COSTS AND MATERIAL NECESSARY TO ACCOMPLISH THIS ITEM OF WORK PER MAJOR SUPPORT SECTION.

BASIS OF PAYMENT WILL BE AS FOLLOWS:

ITEM SPECIAL - SURFACE PREPARATION, EXISTING SUPPORT SECTIONS AT CONTRACT BID PRICE PER EACH MAJOR SUPPORT SECTION.

SURFACE PREPARATION, NEW SUPPORT SECTIONS: NEW, UNWEATHERED GALVANIZED SUPPORT SECTIONS SHOULD HAVE THEIR SURFACE PREPARATION AS WELL AS THEIR PROTECTIVE COATING DONE AT THE MANUFACTURER OF THE SUPPORT SECTIONS.

THE SUPPORT SECTIONS SHALL BE PREPARED FOR COATING BY SSPC-SP1 (SOLVENT CLEANING) FOLLOWED BY SSPC-SP7 (BRUSH-OFF BLAST). BEFORE THE PREPARED SURFACE DEGRADES FROM THE PRESCRIBED STANDARDS, THE PRIME COAT SHALL BE APPLIED. IN EVERY CASE, THE SURFACE SHALL BE COATED WITH EPOXY PRIME COAT ON THE SAME DAY AS THE SURFACE PREPARATION. CAREFUL HANDLING AND STORAGE WILL BE REQUIRED TO PREVENT ANY SCRAPING, MARRING, OR OTHER DAMAGE TO THE PREPARED SURFACE. PAYMENT SHALL INCLUDE ALL LABOR, EQUIPMENT, HANDLING, TRANSPORTATION COSTS AND MATERIAL NECESSARY TO ACCOMPLISH THIS ITEM OF WORK PER MAJOR SUPPORT SECTION.

BASIS OF PAYMENT WILL BE AS FOLLOWS:

ITEM SPECIAL - SURFACE PREPARATION, NEW SUPPORT SECTIONS AT CONTRACT BID PRICE PER EACH MAJOR SUPPORT SECTION.

COATING, EPOXY-PRIME COAT, SUPPORT SECTIONS

THIS ITEM SHALL CONSIST OF THE APPLICATION OF ONE (1) COAT OF AN EPOXY PRIMER TO SUPPORT SECTIONS. THE TOTAL DRY FILM THICKNESS OF THIS COAT SHALL BE BETWEEN .0381 TO .0508 mm. IF MORE THAN ONE PASS IS NECESSARY TO OBTAIN THE REQUIRED THICKNESS, THAT COST SHALL BE BORNE BY THE CONTRACTOR. THE COLOR OF THIS COAT SHALL BE NOTICEABLY DIFFERENT FROM THE BASE MATERIAL AND OTHER PROPOSED COATS. THIS COAT SHALL IN ALL CASES BE APPLIED OVER SURFACES THAT WERE PREPARED EARLIER THE SAME DAY. THE THINNING OF THE EPOXY MATERIAL IS STRICTLY PROHIBITED. MATERIAL NOT CAPABLE OF BEING APPLIED AS SPECIFIED SHALL NOT BE USED. WHEN THE AVERAGE DRY FILM THICKNESS OF THIS COAT OVER THE ENTIRE SUPPORT SECTION IS LESS THAN THE SPECIFIED .0381 TO .0508 mm. BUT AT LEAST.0318 mm., THE CONTRACTOR BID PRICE FOR THIS ITEM SHALL BE REDUCED IN DIRECT PROPORTION TO THE PERCENT DEFICIENCY OF COATING UP TO 16 - 2/3%. IF THE DEFICIENCY OF COATING IS MORE THAN 16 - 2/3% (I.E., THE AVERAGE DRY THICKNESS IS LESS THAN.0318 mm) THE WORK FOR THIS ITEM SHALL BE CONSIDERED UNSATISFACTORY AND SHALL BE RECOATED AT THE FULL EXPENSE OF THE CONTRACTOR, INCLUDING ALL LABOR, EQUIPMENT AND MATERIAL.

THE EPOXY PRIME COAT CHOSEN BY THE CONTRACTOR SHALL BE ONE OF THE FOLLOWING TWO-COMPONENT COMPOSITIONS CONFORMING TO ITS LISTED PROPERTIES:

1) AMERCOAT 71:
% SOLIDS BY VOLUME: 47% ± 3%
POT LIFE: 8 HRS. @ 77 DEGREES F.
DRYING TIME: 4 HRS @ 77 DEGREES F.

2) GLID-GUARD CORROSION RESISTANT
HS EPOXY NO.5465:
% SOLIDS BY VOLUME: 54% ± 2%
POT LIFE: 4 HRS. @ 70 DEGREES F.
DRYING TIME: 1-2 HRS. TO TOUCH, 7 HRS TO RECOAT @ 70 DEGREES F., 50% RELATIVE HUMIDITY
VISCOSITY: 95 - 100 KU
% SOLIDS BY WEIGHT: 71% ± 2%

3) MCR-4301 EPOXY PRIMER:
% SOLIDS BY VOLUME: 48% ± 2%
POT LIFE: 30 HRS. @ 50-60 DEGREES F 16 HRS. @ 80-100 DEGREES F.
DRYING TIME: 4-6 HRS @ 50-60 DEGREES F.

4) MARK-60 ULTRAPOX:
% SOLIDS BY VOLUME: 50% ± 5%
% SOLIDS BY WEIGHT: 52% ± 5%
POT LIFE: 6 HRS. @ 75 DEGREES F
DRYING TIME: 2-3 HRS @ 75 DEGREES F.
VISCOSITY: 300-500 CPS @ 75 DEGREES F.

5) TILE-CLAD II HI-BILD PRIMER:
% SOLIDS BY VOLUME: 48% ± 2%
% SOLIDS BY WEIGHT: 63% ± 2%
POT LIFE: 8 HRS. @ 77 DEGREES F
DRYING TIME: 1 HR. TO TOUCH, 6 HRS. TO RECOAT @ 77 DEGREES F.

FOR NEW SUPPORT SECTIONS THE PRIME COAT SHOULD BE DONE AT THE MANUFACTURER OF THE SUPPORT SECTIONS. VERIFICATION BY THE MANUFACTURER OF THE COATING MATERIAL FOR THE PRIME COAT WILL BE REQUIRED. CAREFUL HANDLING AND STORAGE WILL BE REQUIRED TO PREVENT ANY SCRAPING, MARRING, OR OTHER DAMAGE TO THE PRIME COAT. PAYMENT SHALL INCLUDE ALL LABOR, EQUIPMENT, HANDLING, TRANSPORTATION COSTS AND MATERIAL NECESSARY TO ACCOMPLISH THIS ITEM OF WORK. THIS PRIME COAT SHALL BE MANUFACTURED BY THE COMPANY SUPPLYING THE INTERMEDIATE AND TOP COATS. A PROPERLY CALIBRATED DRY FILM THICKNESS INSTRUMENT WILL BE USED TO CHECK THE COATING.

BASIS OF PAYMENT WILL BE AS FOLLOWS:

ITEM SPECIAL - COATING, EPOXY PRIME COAT, SUPPORT SECTIONS AT CONTRACT BID PRICE PER EACH MAJOR SUPPORT SECTION.

COATING, EPOXY INTERMEDIATE COAT, SUPPORT SECTIONS

THIS ITEM SHALL CONSIST OF THE APPLICATION OF ONE (1) COAT OF EPOXY TO SUPPORT SECTIONS. THE TOTAL DRY FILM THICKNESS OF THIS COAT SHALL NOT BE LESS THAN (.153mm). IF MORE THAN ONE PASS IS NECESSARY TO OBTAIN THE REQUIRED THICKNESS, THAT COST SHALL BE BORNE BY THE CONTRACTOR. THINNING OF THE EPOXY MATERIAL IS STRICTLY PROHIBITED. MATERIAL NOT CAPABLE OF BEING APPLIED AS SPECIFIED SHALL NOT BE USED. THE COLOR OF THIS COAT SHALL BE LIGHT GREY. WHEN THE AVERAGE DRY FILM THICKNESS OF THIS COAT OVER THE ENTIRE SUPPORT SECTION IS LESS THAN THE SPECIFIED (.153mm), BUT IS AT LEAST(.127 mm), THE CONTRACT PRICE FOR THIS ITEM SHALL BE REDUCED IN DIRECT PROPORTION TO THE PERCENT DEFICIENCY OF COATING UP TO 16-2/3%. IF THE DEFICIENCY OF COATINGS MORE THAN 16-2/3%, (I.E. THE AVERAGE DRY FILM THICKNESS IS LESS THAN .127 mm), THE WORK FOR THIS ITEM SHALL BE CONSIDERED UNSATISFACTORY AND SHALL BE RECOATED AT THE FULL EXPENSE OF THE CONTRACTOR, INCLUDING ALL LABOR, EQUIPMENT AND MATERIAL. THE EPOXY INTERMEDIATE COAT CHOSEN BY THE CONTRACTOR SHALL BE ONE OF THE FOLLOWING TWO-COMPONENT COMPOSITIONS CONFORMING TO ITS LISTED PROPERTIES:

1) AMERLOCK 400:
   % SOLIDS BY VOLUME: 83% ± 2%
   POT LIFE: 2-1/2 HRS. 70 DEGREES F.
   DRYING TIME: 20 HRS. @ 70 DEGREES F.

2) GLID-GUARD CORROSION RESISTANT HS EPOXY
   NO. 5466:
   % SOLIDS BY VOLUME: 54% ± 2%
   POT LIFE: 4 HRS. @ 70 DEGREES F.
   DRYING TIME: 1-2 HRS. TO TOUCH 7 HRS. TO RECOAT AT 70 DEGREES F., 50% RELATIVE HUMIDITY
   VISCOSITY: 95-100 KU
   % SOLIDS BY WEIGHT: 71% ± 2%

3) MCR 4361 HIGH BUILD EPOXY:
   % SOLIDS BY VOLUME: 49.4% ± 2%
   POT LIFE: 30 HRS. @ 50-60 DEGREES F. 16 HRS. @ 80-100 DEGREES F.
   DRYING TIME: 1-2 HRS. @ 60-80 DEGREES F.

4) MARK-60 ULTRAPOX:
   % SOLIDS BY VOLUME: 50% ± 5%
   %SOLIDS BY WEIGHT: 52% ± 5%
   POT LIFE: 6 HRS. 2 75 DEGREES F.
   DRYING TIME: 2-3 HRS. INITIAL SET @75 DEGREES F.
   VISCOSITY: 300-500 CPS 75 @ DEGREES F.

5) HI-SOLIDS CATALYZED EPOXY:
   % SOLIDS BY VOLUME: 61% ± 2%
   % SOLIDS BY WEIGHT: 77% ± 2%
   POT LIFE: 1 HR. TO TOUCH, 4 HRS. TACK FREE, 6 HRS. TO RECOAT @ 77 DEGREES F. & 50% R.H.

AT LEAST 24 HOURS BUT NO MORE THAN THREE (3) DAYS SHALL ELAPSE AFTER THE APPLICATION OF THE EPOXY PRIME COAT AND BEFORE THE APPLICATION OF THE EPOXY INTERMEDIATE COAT. SURFACES SHALL IN ALL CASES BE CLEAN BEFORE THE INTERMEDIATE COAT IS APPLIED.

FOR NEW SUPPORT SECTIONS, THIS INTERMEDIATE COAT SHOULD BE DONE AT THE MANUFACTURER OF THE SUPPORT SECTIONS. VERIFICATION BY THE MANUFACTURER FOR THE INTERMEDIATE COAT WILL BE REQUIRED. CAREFUL HANDLING AND STORAGE WILL BE REQUIRED TO PREVENT ANY SCRAPING, MARRING OR OTHER SURFACE DAMAGE TO THE INTERMEDIATE COAT.

PAYMENT SHALL INCLUDE ALL LABOR, EQUIPMENT, HANDLING COST AND MATERIAL NECESSARY TO ACCOMPLISH THIS ITEM OF WORK. THIS INTERMEDIATE COAT SHALL BE MANUFACTURED BY THE SAME COMPANY SUPPLYING THE PRIME AND TOP COATS. A PROPERLY CALIBRATED DRY FILM THICKNESS INSTRUMENT WILL BE USED TO CHECK THE COATING.

BASIS OF PAYMENT WILL BE AS FOLLOWS:

ITEM SPECIAL-COATING, EPOXY INTERMEDIATE COAT, SUPPORT SECTIONS AT CONTRACT BID PRICE PER EACH MAJOR SUPPORT SECTION.

COATING, URETHANE TOP COAT, SUPPORT SECTIONS

THIS ITEM SHALL CONSIST OF THE APPLICATION OF ONE (1) COAT OF URETHANE TO SUPPORT SECTIONS. THE TOTAL DRY FILM THICKNESS OF THIS COAT SHALL NOT BE LESS THAN .0381 mm. IF MORE THAN ONE PASS IS NECESSARY TO OBTAIN THE REQUIRED THICKNESS, THAT COST SHALL BE BORNE BY THE CONTRACTOR. THINNING OF THE URETHANE MATERIAL IS STRICTLY PROHIBITED. MATERIAL NOT CAPABLE OF BEING APPLIED AS SPECIFIED SHALL NOT BE USED. THE COLOR OF THE COAT SHALL BE MEDIUM GREY. WHEN THE AVERAGE DRY FILM THICKNESS OF THIS COAT OVER THE ENTIRE SUPPORT SECTION IS LESS THAN THE SPECIFIED .0381 mm BUT IS AT LEAST .0254 mm. THE CONTRACT PRICE FOR THIS ITEM SHALL BE REDUCED IN DIRECT PROPORTION TO THE PERCENT DEFICIENCY OF COATING UP TO 33-1/3%. IF THE DEFICIENCY OF COATING IS MORE THAN 33-1/3%, (I.E. THE AVERAGE DRY FILM THICKNESS IS LESS THAN .0254 mm.), THE WORK FOR THIS ITEM SHALL CONSIDERED UNSATISFACTORY AND SHALL BE RECOATED AT THE FULL EXPENSE OF THE CONTRACTOR, INCLUDING ALL LABOR, EQUIPMENT AND MATERIAL. THE URETHANE TOP COAT CHOSEN BY THE CONTRACTOR SHALL BE ONE OF THE FOLLOWING MATERIALS CONFORMING TO ITS LISTED PROPERTIES:

1) AMERLACK 400:
   % SOLIDS BY VOLUME: 66% ± 3%
   POT LIFE: 4 HRS. @ 70 DEGREES F.
   DRYING TIME: 8 HRS. @ 70 DEGREES F. DRY-THROUGH

2) GLID-THANE II POLYURETHANE NO. 6200:
   % SOLIDS BY VOLUME: 40.3% ± 2%
   POT LIFE: 8 HRS.
   DRYING TIME: 1 HR. TO TOUCH, 3 HRS. TO RECOAT AT 77 DEGREES F., 50% RELATIVE HUMIDITY
   % SOLIDS BY WEIGHT: 57.8% ± 2%

3) HYTHEN 4610 ALIPHATIC POLYURETHANE:
   % SOLIDS BY VOLUME: 43.4% ± 2%
   POT LIFE: 12 HRS. @ 75 DEGREES F.
   DRYING TIME: 3/4 HRS. TO TOUCH @ 75 DEGREES F.

4) MARK-73 ULTRAKOTE:
   % SOLIDS BY VOLUME: 51%
   POT LIFE: 5 ½ HRS. @ 75 DEGREES F.
   DRYING TIME: 4-5 HRS. @ 75 DEGREES F .TACK FREE
   VISCOSITY: 1000-1500 CPS @ 75 DEGREES F.
   % SOLIDS BY WEIGHT: 64%

5) HI-BILD ALIPHATIC POLYURETHANE ENAMEL:
   % SOLIDS BY VOLUME: 40% ± 2%
   % SOLIDS BY WEIGHT: 48% ± 2%
   POT LIFE: 6 HRS. @ 77 DEGREES F.
   DRYING TIME: 30 MIN. TO TOUCH, 4 HRS. TACK FREE, 18 HRS. MINIMUM, 72 HRS. MAXIMUM TO RECOAT.

AT LEAST 24 HOURS BUT NO MORE THAN THREE (3) DAYS SHALL ELAPSE AFTER THE APPLICATION OF TH EPOXY INTERMEDIATE COAT AND BEFORE THE APPLICATION OF THE URETHANE TOP COAT. SURFACES SHALL IN ALL CASED BE CLEAN BEFORE THE TOP COAT IS APPLIED.

FOR NEW SUPPORT SECTIONS, THIS TOP COAT SHOULD BE DONE BY THE MANUFACTURER OF THE SUPPORT SECTIONS. VERIFICATION BY THE MANUFACTURER FOR THE TOP COAT WILL BE REQUIRED. CAREFUL HANDLING AND STORAGE WILL BE REQUIRED TO PREVENT ANY SCRAPING, MARRING OR OTHER SURFACE DAMAGE TO THE TOP COAT.

PAYMENT SHALL INCLUDE ALL LABOR, EQUIPMENT, HANDLING COST AND MATERIALS NECESSARY TO ACCOMPLISH THIS ITEM OF WORK. THIS TOP COAT SHALL BE MANUFACTURED BY THE SAME COMPANY SUPPLYING THE PRIME AND INTERMEDIATE COATS. A PROPERLY CALIBRATED, DRY FILM THICKNESS INSTRUMENT WILL BE USED THE CHECK THE COATING.

BASIS OF PAYMENT WILL BE AS FOLLOWS:

ITEM SPECIAL - COATING, URETHANE TOP COAT, SUPPORT SECTIONS AT CONTRACT BID PRICE PER EACH MAJOR SUPPORT SECTION.

PREQUALIFICATION

PRIOR TO USE, THE CONTRACTOR SHALL SUBMIT TO THE DIRECTOR COPIES OF THE MANUFACTURER'S CERTIFIED TEST DATA SHOWING THAT THE MATERIAL COMPLIES WITH THE REQUIREMENTS OF THIS SPECIFICATION. THE TEST DATA SHALL INCLUDE THE BRAND NAME OF THE PAINT, NAME OF MANUFACTURER, NUMBER OF THE LOT TESTED AND DATE OF MANUFACTURE. WHEN THE PAINT HAS BEEN APPROVED BY THE DIRECTOR, FURTHER PERFORMANCE TESTING BY THE MANUFACTURER WILL NOT BE REQUIRED UNLESS THE FORMULATION OF MANUFACTURING PROCESS HAS BEEN CHANGED. IN WHICH CASE NEW CERTIFIED TEST RESULTS WILL BE REQUIRED.

SIGN NO.	STATION	END FRAMES	VERTICAL POLES	TRUSSES	CANTILEVER ARM
		2			

THE TOTAL NUMBER OF MAJOR SUPPORT SECTIONS THAT SHALL RECEIVE PROTECTING COATING= 2

PAYMENT WILL BE MADE UNDER:

TOTAL	ITEM	EXTENSION	UNIT	DESCRIPTION
2	630	09100	EACH	SPECIAL – SURFACE PREP, EXISTING SUPPORT
2	630	09104	EACH	SPECIAL – COATING, EPOXY PRIME COAT, SUPPORT SECTION
2	630	09106	EACH	SPECIAL – COATING, EPOXY INTEMEDIATE COAT, SUPPORT SECTION
2	630	09108	EACH	SPECIAL – COATING, URETHANE TOP COAT, SUPPORT SECTION

NOTE SHEET REVISED 8-30-04 RJR

CALC BY RJR 8/04
CHK'D BY

SIGNING GENERAL NOTES

WAY-30-18.88

FILE: i:\projects\77267\SignNotes_WAY30_REVISED.doc

GENERAL SUMMARY

SHEET NUMBER 5		40	41	42	43	44	45	46	47	48	49	50	51	52	53	54	55	56	ITEM	ITEM EXT.	TOTAL	UNIT	DESCRIPTION	"SHT" REF NO.
																							ROADWAY	
																			201	11000	LUMP	LUMP	CLEARING AND GRUBBING	2, 8
																							TRAFFIC CONTROL	
										4									620	40300	4	EACH	REFLECTOR, TYPE D	
		214.5	232.0	326.0	337.0	269.0	88.0	351.5	220.5	176.0	211.0	138.0	143.0	312.0	273.0	231.5	320.5	129.8	630	02100	3973.3	FT	GROUND MOUNTED SUPPORT, NO. 2 POST	
		200.3	**270.8**	**417.2**	**287.8**	**290.7**	**391.6**	**347.5**	**232.9**	**306.6**	**331.6**	**308.1**	**391.3**	**316.8**	**432.9**	**373.8**	**115.5**	261.6	630	03100	**5277.0**	FT	GROUND MOUNTED SUPPORT, NO. 3 POST	
				14.5		15.5	15.5		15.5		15.5		15.5	31.3					630	04101	123.3	FT	GROUND MOUNTED SUPPORT, NO. 4 POST, AS PER PLAN	
										40.7									630	06100	40.7	FT	GROUND MOUNTED SUPPORT, NO. 6 POST	
		65.4	**31.1**	**34.2**			**28.8**	**25.9**	**30.2**	**32.1**	**31.6**	**32.6**	**30.7**			**29.2**	**72.8**	35.2	630	06400	**479.8**	FT	GROUND MOUNTED SUPPORT, S4 X 7.7 BEAM	
		32.2	28.3							**70.4**									630	06500	**130.9**	FT	GROUND MOUNTED SUPPORT, W6 X 9 BEAM	
							55.6		41.4								41.1		630	07000	138.1	FT	GROUND MOUNTED SUPPORT, W8 X 18 BEAM	
		49.4							56.1										630	07500	105.5	FT	GROUND MOUNTED SUPPORT, W10 X 22 BEAM	
			35.4				48.5		111.4			51.1	42.1			45.7	50.3		630	07600	384.5	FT	GROUND MOUNTED SUPPORT, W10 X 12 BEAM	
							56.6					57.5							630	08000	114.1	FT	GROUND MOUNTED SUPPORT, W12 X 30 BEAM	
		30.0			32.5	32.5	30.0						62.5		32.5	15.0		30.0	630	08004	265.0	FT	ONE-WAY SUPPORT NO. 3 POST	
		8	**6**	**2**			**8**	**2**	**12**	**6**	**2**	**6**	**4**			**4**	**8**	2	630	09000	**70**	EACH	BREAKAWAY BEAM CONNECTION	
2																			630	09100	2	EACH	SURFACE PREPARATION, EXISTING SUPPORT SECTION	4
2																			630	09104	2	EACH	COATING, EPOXY PRIME COAT, SUPPORT SECTION	4
2																			630	09106	2	EACH	COATING, EPOXY INTERMEDIATE COAT, SUPPORT SECTION	5
2																			630	09108	2	EACH	COATING, URETHANE TOP COAT, SUPPORT SECTION	5
									6										630	75001	6	EACH	SIGN ATTACHMENT ASSEMBLY, AS PER PLAN	3
		212.7	179.4	255.8	221.7	217.7	240.4	242.8	165.8	207.6	227.3	219.0	254.1	254.3	260.7	205.1	184.2	177.8	630	80100	3726.4	SQ FT	SIGN, FLAT SHEET	3
				16.0												16.0		16.0	630	80101	48.0	SQ FT	SIGN, FLAT SHEET, AS PER PLAN (HINGED)	3, 8
		198.5	148.0	75.0	42.0	48.0	326.0	55.5	506.0	**186.0**	66.0	273.0	94.5	48.0	69.0	133.0	234.5	15.0	630	80200	**2518.0**	SQ FT	SIGN, GROUND MOUNTED EXTRUSHEET	3
									280.0										630	80225	280.0	SQ FT	SIGN, OVERHEAD EXTRUSHEET, AS PER PLAN	3
		1					1					1					1		630	82000	4	EACH	SIGN BACKING ASSEMBLY	
		8	**6**	**2**			**8**	**2**	**12**	**6**	**2**	**6**	**4**			**4**	**8**	2	630	84500	**70**	EACH	GROUND MOUNTED BEAM SUPPORT FOUNDATION	
		23	20	6	12	16	29	17	17	20	17	16	27	19	7	11	19	27	630	84900	303	EACH	REMOVAL OF GROUND MOUNTED SIGN & DISPOSAL	
			1							1									630	85100	2	EACH	REMOVAL OF GROUND MOUNTED SIGN & REERECTION	
		3					2		4			1	1						630	85400	11	EACH	REMOVAL OF GROUND MOUNTED MAJOR SIGN & DISPOSAL	
		20	19	4	13	17	28	19	19	22	18	18	29	17	9	9	22	24	630	86002	307	EACH	REMOVAL OF GROUND MOUNTED POST SUPPORT & DISPOSAL	
		2					6		10	2		2	2						630	86102	24	EACH	REMOVAL OF GROUND MOUNTED BEAM SUPPORT & DISPOSAL	
									2										630	87400	2	EACH	REMOVAL OF OVERHEAD MOUNTED SIGN & DISPOSAL	
		59	51	44	43	48	68	51	53	**49**	50	48	65	56	43	46	51	52	630	97700	**877**	EACH	SIGNING, MISC.: SIGN DATA COLLECTION	2,3
									2										631	94420	2	EACH	REMOVAL MISC.: REMOVAL OF SIGN LIGHTING, AS PER PLAN	3
																							MAINTENANCE OF TRAFFIC	
																			614	11000	LUMP	LUMP	MAINTAINING TRAFFIC	3
																			623	10000	LUMP	LUMP	CONSTRUCTION LAYOUT STAKES	
																			624	10000	LUMP	LUMP	MOBILIZATION	

CALC BY BAH
CHK'D By ____

GENERAL SUMMARY

WAY-30-18.88

GENERAL SUMMARY SHEET REVISED 9-1-04 BAH

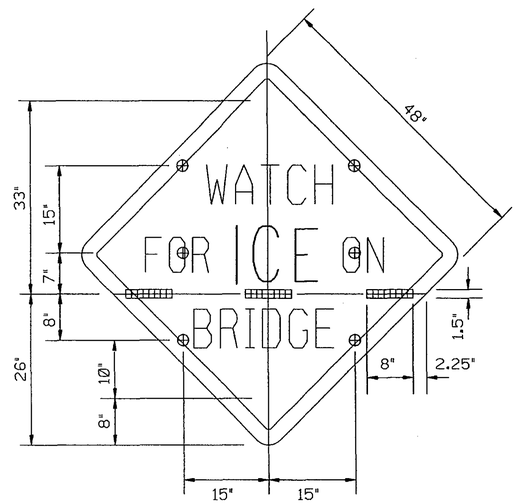

W8-H22-48 HINGED SIGN DETAIL

1) THE SIGN SHALL BE JOINED WITH AN 8" LONG BY 1-1/2" WIDE HINGE WHICH IS RIVETED TO EACH SECTION OF THE SIGN AND THEN COVERED WITH YELLOW REFLECTIVE SHEETING (TYPE F-730.18) TO MATCH THE BACKGROUND OF THE SIGN. USE STAINLESS STEEL HINGES.

2) TO FOLD THE SIGN DOWN, REMOVE THE TOP TWO BOLTS, FOLD THE UPPER PART OF THE SIGN DOWN AND INSERT A BOLT THROUGH THE LOWEST HOLE IN THE SIGN AND INTO THE POST. FASTEN THE BOLT TO PREVENT THE SIGN FROM FLOPPING IN THE WIND AND SUSTAINING DAMAGE.

3) MOUNT ON TWO NO. 3 SIGN SUPPORTS.

HOLES DRILLED AS PER TC-52.10

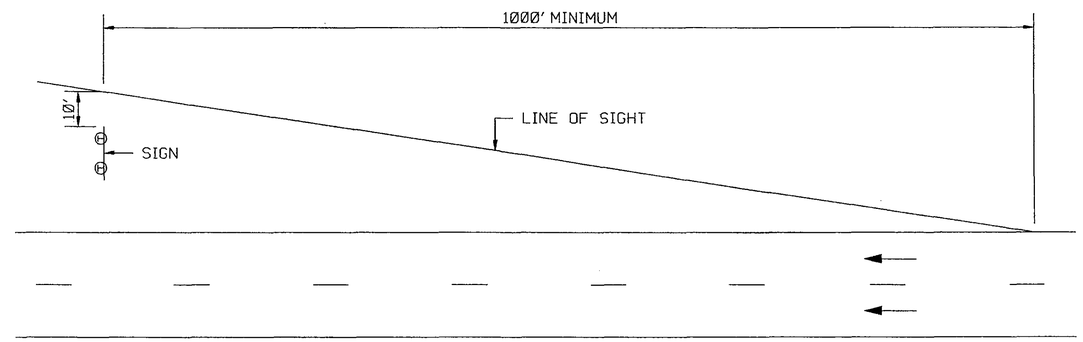

GUIDE FOR CLEARING AND GRUBBING

NOTE: THE R3-H4A AND R3-4 SIGNS SHALL BE ERECTED BACK TO BACK AT APPROXIMATELY THE MIDPOINT OF THE MEDIAN WIDTH AT A 45 DEGREE ANGLE TO THE TRAFFIC FLOW.

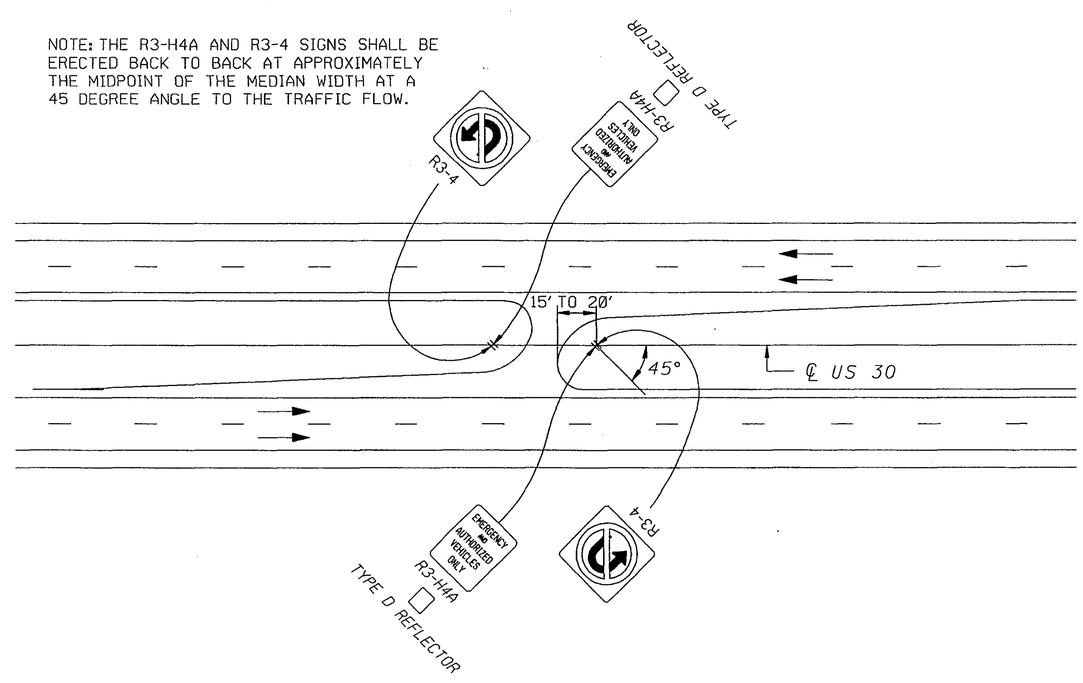

STANDARD SIGNING FOR U-TURN MEDIAN CROSSOVER

SIGN DETAILS

WAY-30-18.88

DESIGN FILE: I:\projects\77267\SignDetail.dgn
WORKSTATION: eellison DATE: 8/18/2004

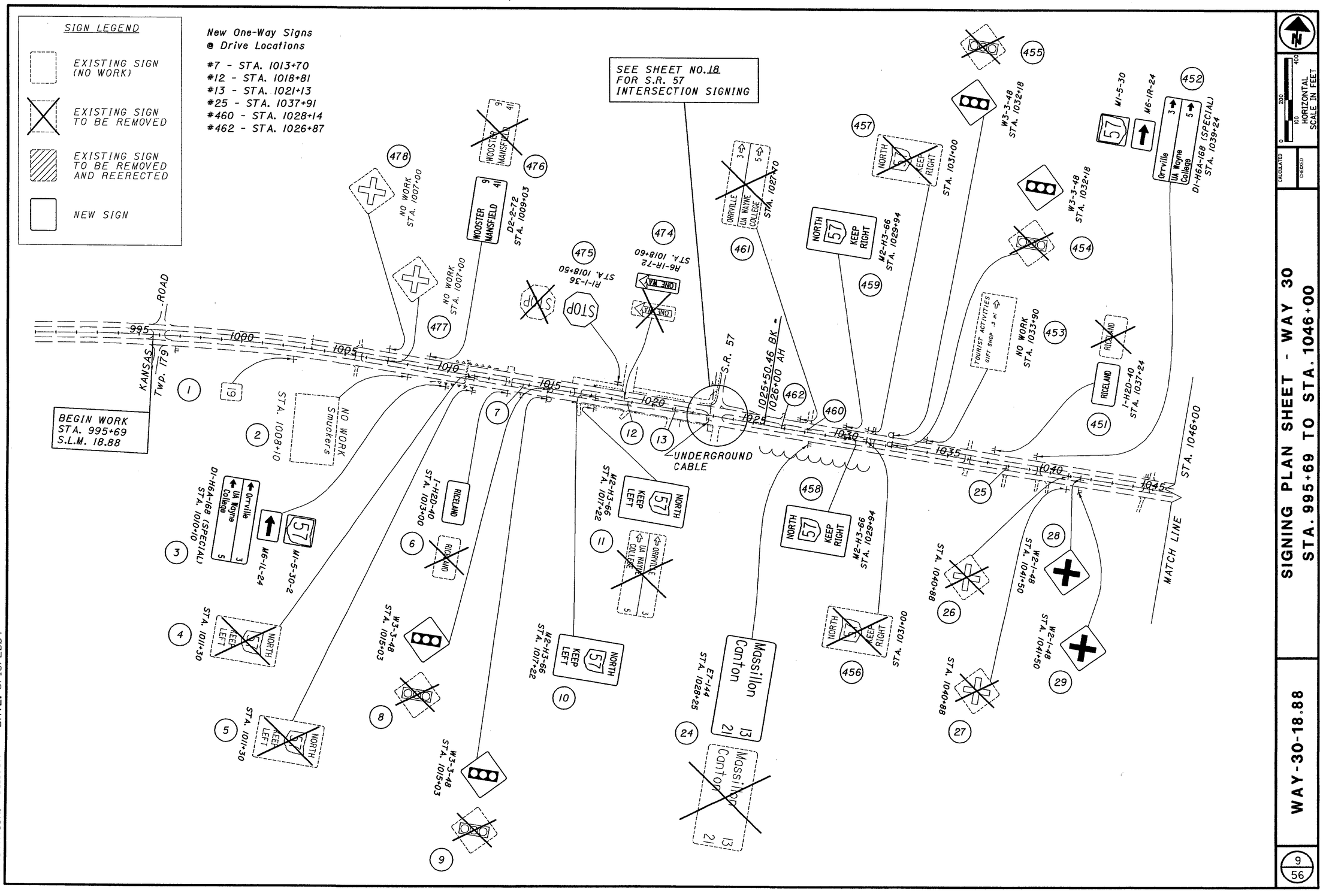
SIGN LEGEND
EXISTING SIGN (NO WORK)
EXISTING SIGN TO BE REMOVED
EXISTING SIGN TO BE REMOVED AND REERECTED
NEW SIGN
New One-Way Signs @ Drive Locations
#7 - STA. 1013+70
#12 - STA. 1018+81
#13 - STA. 1021+13
#25 - STA. 1037+91
#460 - STA. 1028+14
#462 - STA. 1026+87
SEE SHEET NO. 18 FOR S.R. 57 INTERSECTION SIGNING
BEGIN WORK STA. 995+69 S.L.M. 18.88
KANSAS ROAD
Twp. 179
NO WORK STA. 1007+00
WOOSTER MANSFIELD
D2-2-72 STA. 1009+03
R1-1-36 STA. 1018+50
R6-1R-72 STA. 1018+60
ONE WAY
STOP
ORRVILLE UA WAYNE COLLEGE
STA. 1027+70
NORTH 57 KEEP RIGHT
M2-H3-66 STA. 1029+94
STA. 1031+00
W3-3-48 STA. 1032+18
W1-5-30
M6-1R-24
Orrville UA Wayne College
D1-H6A-16B (SPECIAL) STA. 1039+24
NO WORK STA. 1033+90
TOURIST ACTIVITIES GIFT SHOP .5 mi
RICELAND
I-H2D-40 STA. 1037+24
S.R. 57
1025+50.46 BK = 1026+00 AH
UNDERGROUND CABLE
NO WORK Smuckers
STA. 1008+10
D1-H6A-16B (SPECIAL) STA. 1010+10
M6-1L-24
W1-5-30-2
I-H2D-40 STA. 1013+00
W3-3-48 STA. 1015+03
M2-H3-66 STA. 1017+22
KEEP LEFT
STA. 1011+30
Massillon Canton
E7-144 STA. 1028+25
STA. 1031+00
STA. 1040+88
W2-1-48 STA. 1041+50
MATCH LINE
STA. 1046+00
DESIGN FILE: I:\projects\77267\W30SHT_1.dgn
WORKSTATION: eellison
DATE: 8/18/2004
CALCULATED
CHECKED
HORIZONTAL SCALE IN FEET
0 100 200 400
SIGNING PLAN SHEET - WAY 30
STA. 995+69 TO STA. 1046+00
WAY-30-18.88
9
56

DESIGN FILE:	I:\projects\77267\W30SHT_2.dgn
WORKSTATION:	eellison
DATE:	8/18/2004

CALCULATED

CHECKED

0 100 200 400 HORIZONTAL SCALE IN FEET

SIGNING PLAN SHEET - WAY 30
STA. 1046+00 TO STA. 1095+00

WAY-30-18.88

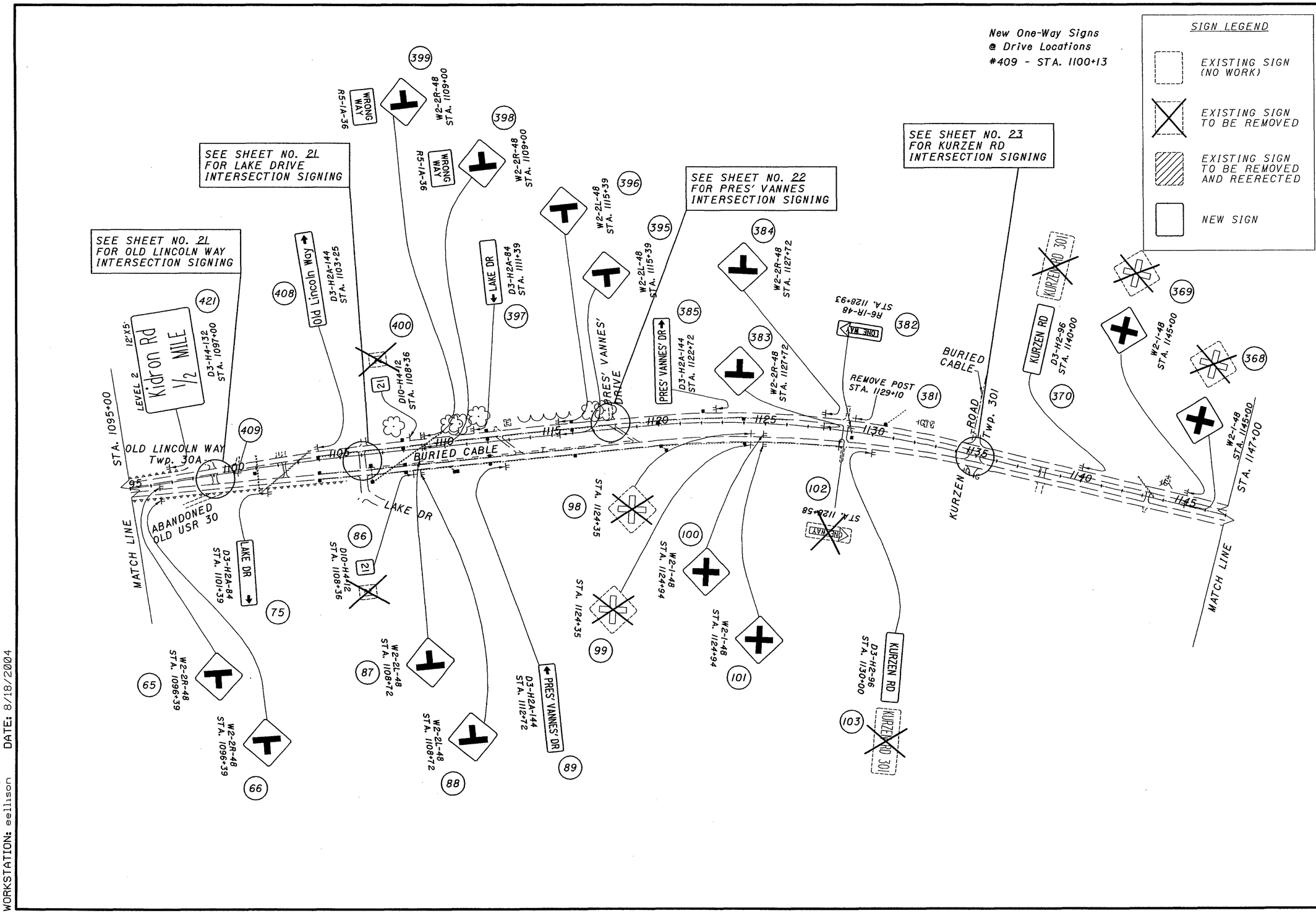

DESIGN FILE: h:\projects\77267\W30SHT_3.dgn
WORKSTATION: eellison DATE: 8/18/2004

DESIGN FILE: I:\projects\77267\W30SHT_4.dgn
WORKSTATION: eellison DATE: 8/18/2004

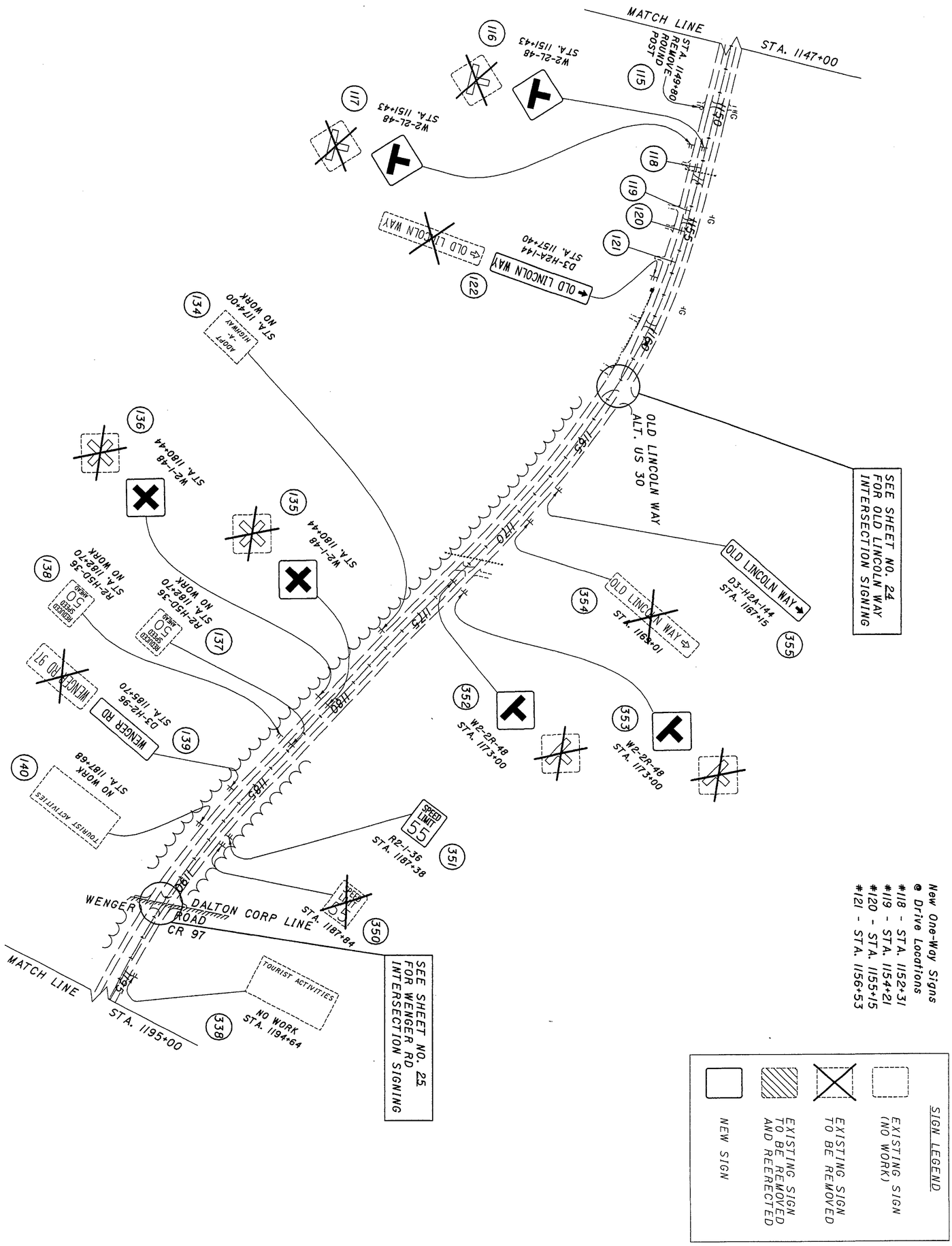

12/56	WAY-30-18.88	SIGNING PLAN SHEET - WAY 30 STA. 1147+00 TO STA. 1195+00	CALCULATED / CHECKED 0 100 200 400 HORIZONTAL SCALE IN FEET

DESIGN FILE: I:\projects\77267\W30SHT_5.dgn
WORKSTATION: eellison DATE: 8/18/2004

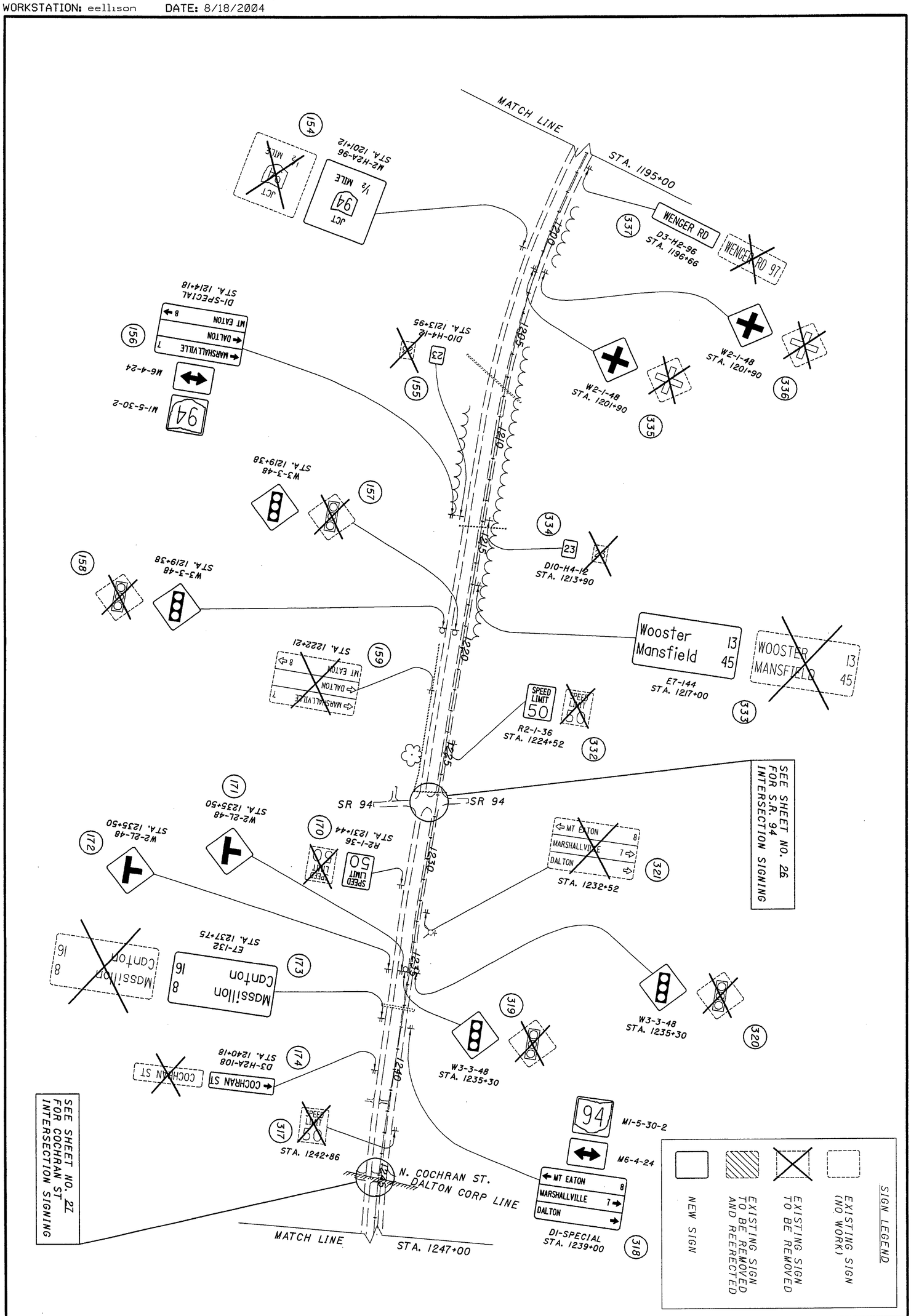

13/56	WAY-30-18.88	SIGNING PLAN SHEET - WAY 30 STA. 1195+00 TO STA. 1247+00	CALCULATED / CHECKED 0 100 200 400 HORIZONTAL SCALE IN FEET

DESIGN FILE: h:\projects\77267\W30SHT_6.dgn
WORKSTATION: eellison DATE: 8/18/2004

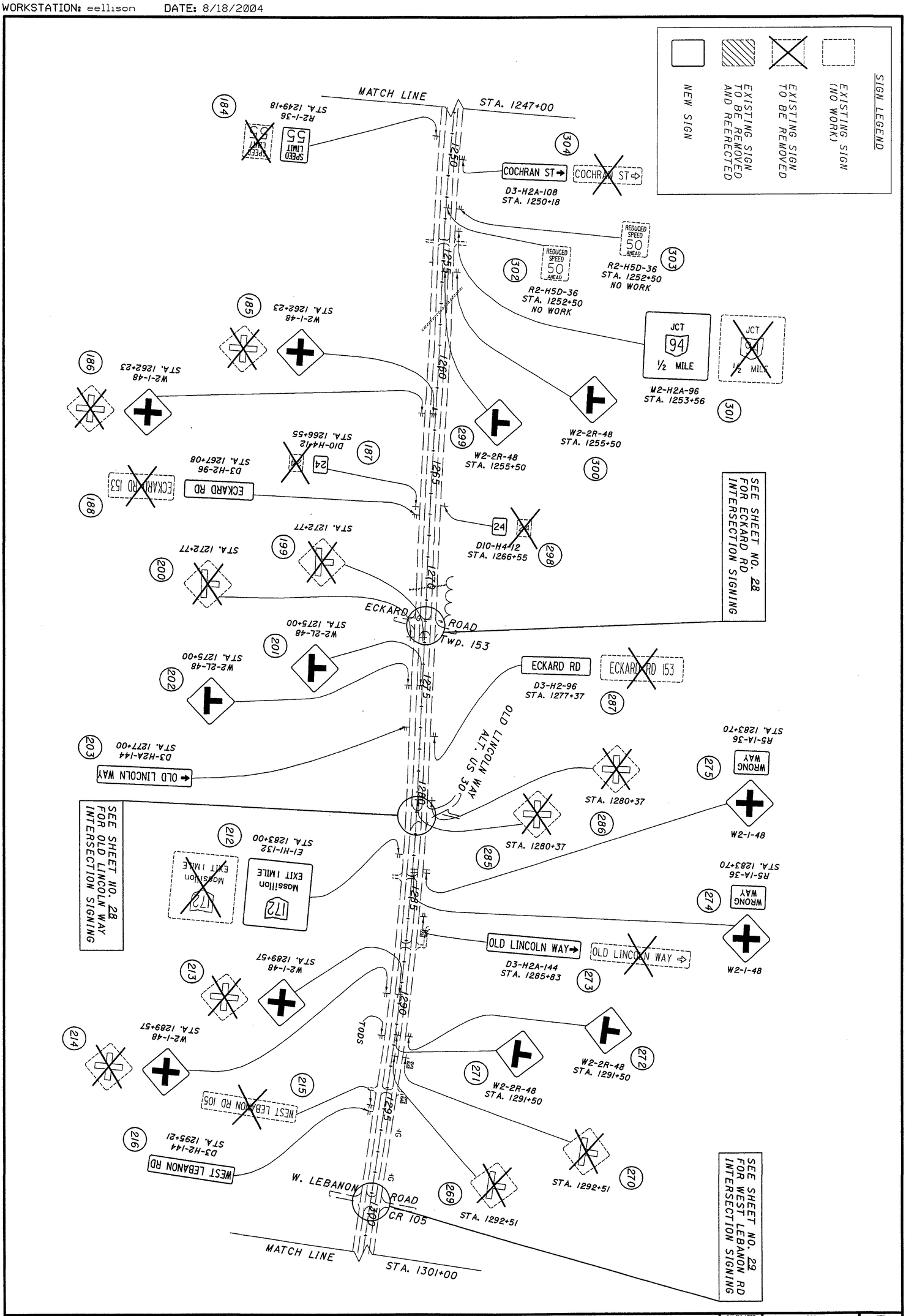

14/56	WAY-30-18.88	SIGNING PLAN SHEET - WAY 30 STA. 1247+00 TO STA. 1301+00	CALCULATED CHECKED 0 200 100 400 HORIZONTAL SCALE IN FEET

DESIGN FILE: I:\projects\77267\W30SHT_7.dgn
WORKSTATION: eellison DATE: 9/10/2004

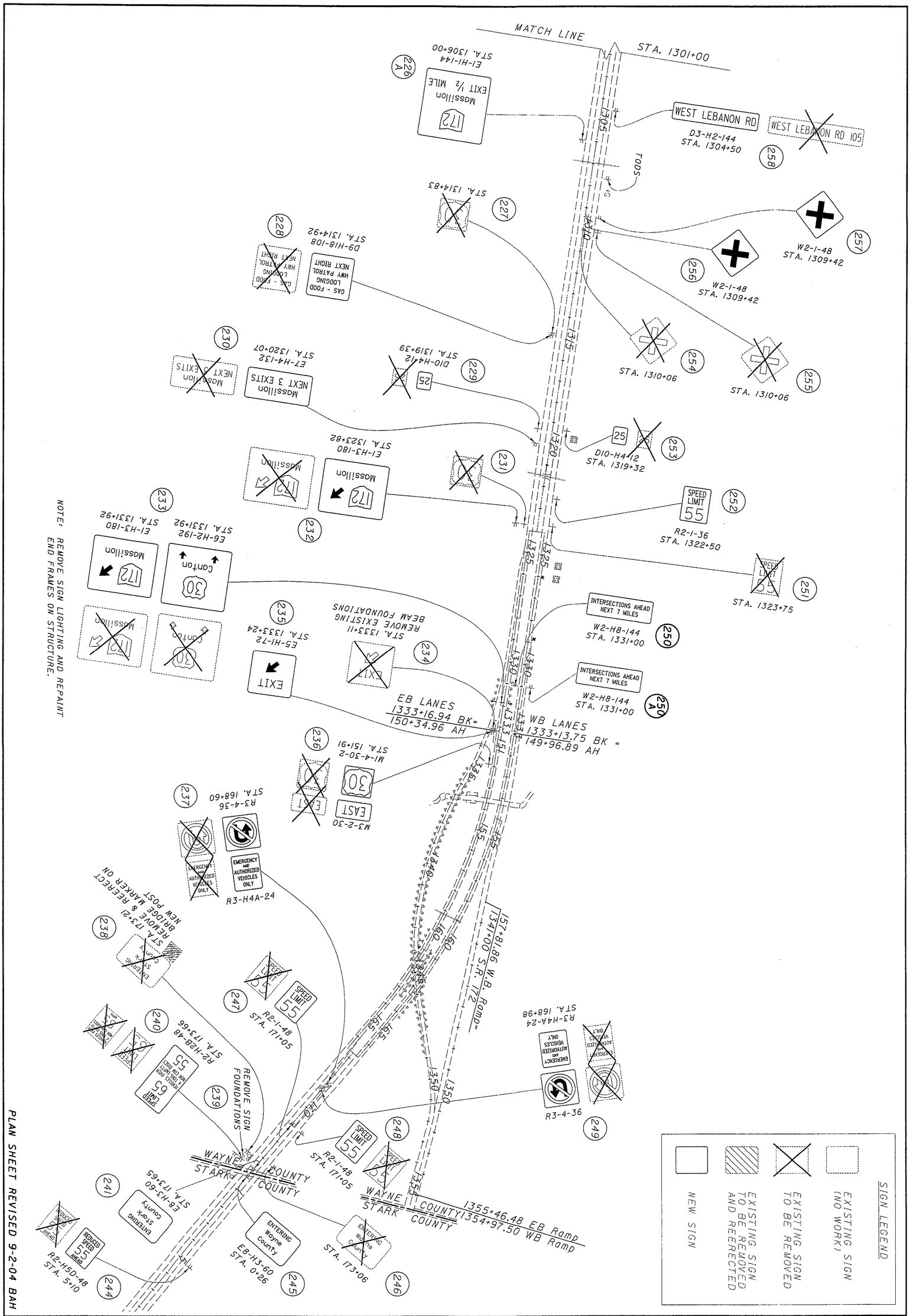

15 / 56	WAY-30-18.88	SIGNING PLAN SHEET - WAY 30 STA. 1301+00 TO COUNTY LINE	CALCULATED / CHECKED 0 100 200 400 HORIZONTAL SCALE IN FEET

DESIGN FILE: I:\projects\77267\W30SHT_7.dgn
WORKSTATION: eellison DATE: 8/18/2004

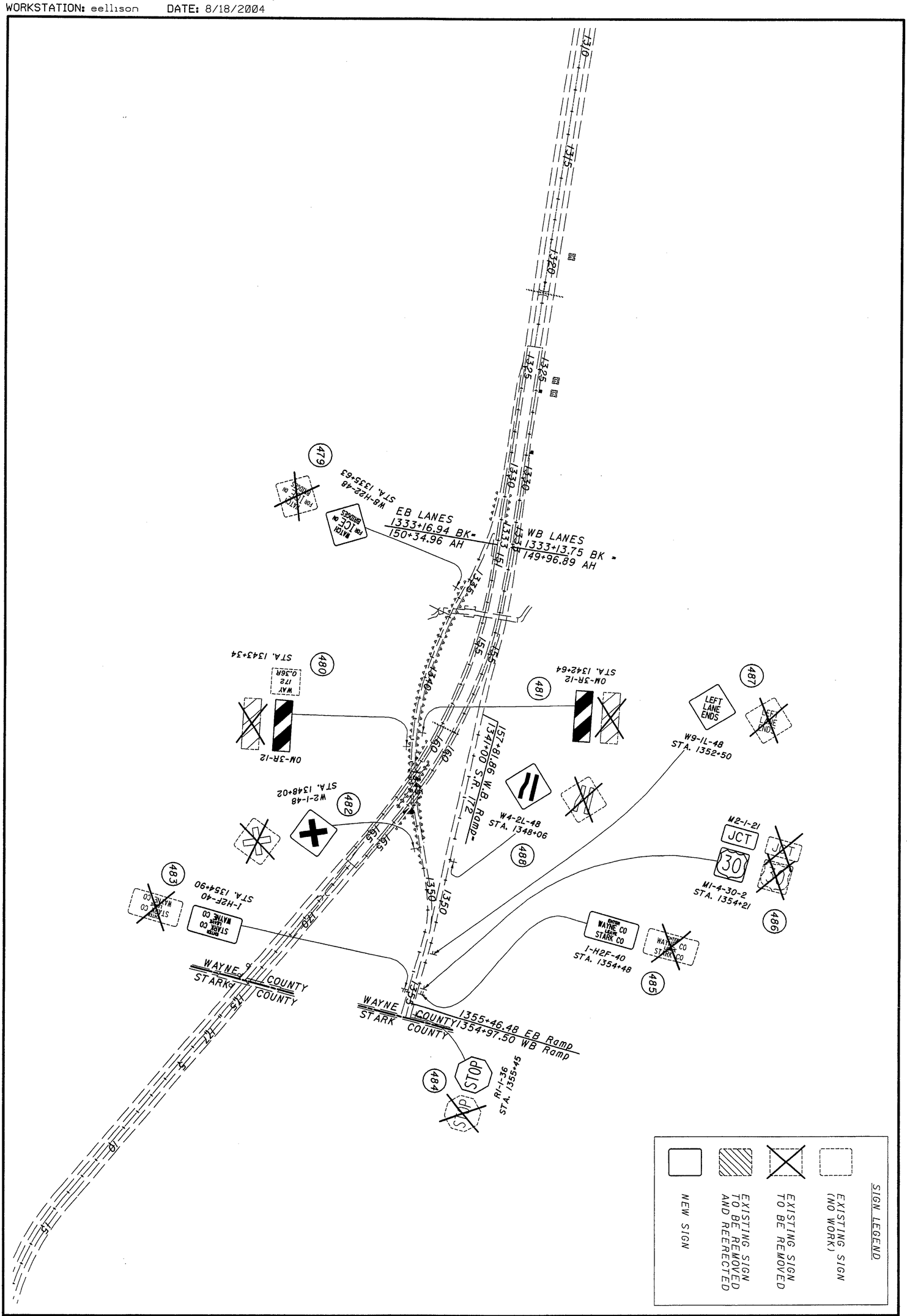

IT 56	WAY-30-18.88	SIGNING PLAN SHEET - WAY 30 SR 172 INTERCHANGE	CALCULATED CHECKED 0 200 100 400 HORIZONTAL SCALE IN FEET

DESIGN FILE: I:\projects\77267\W30SR57.dgn
WORKSTATION: eellison DATE: 8/18/2004

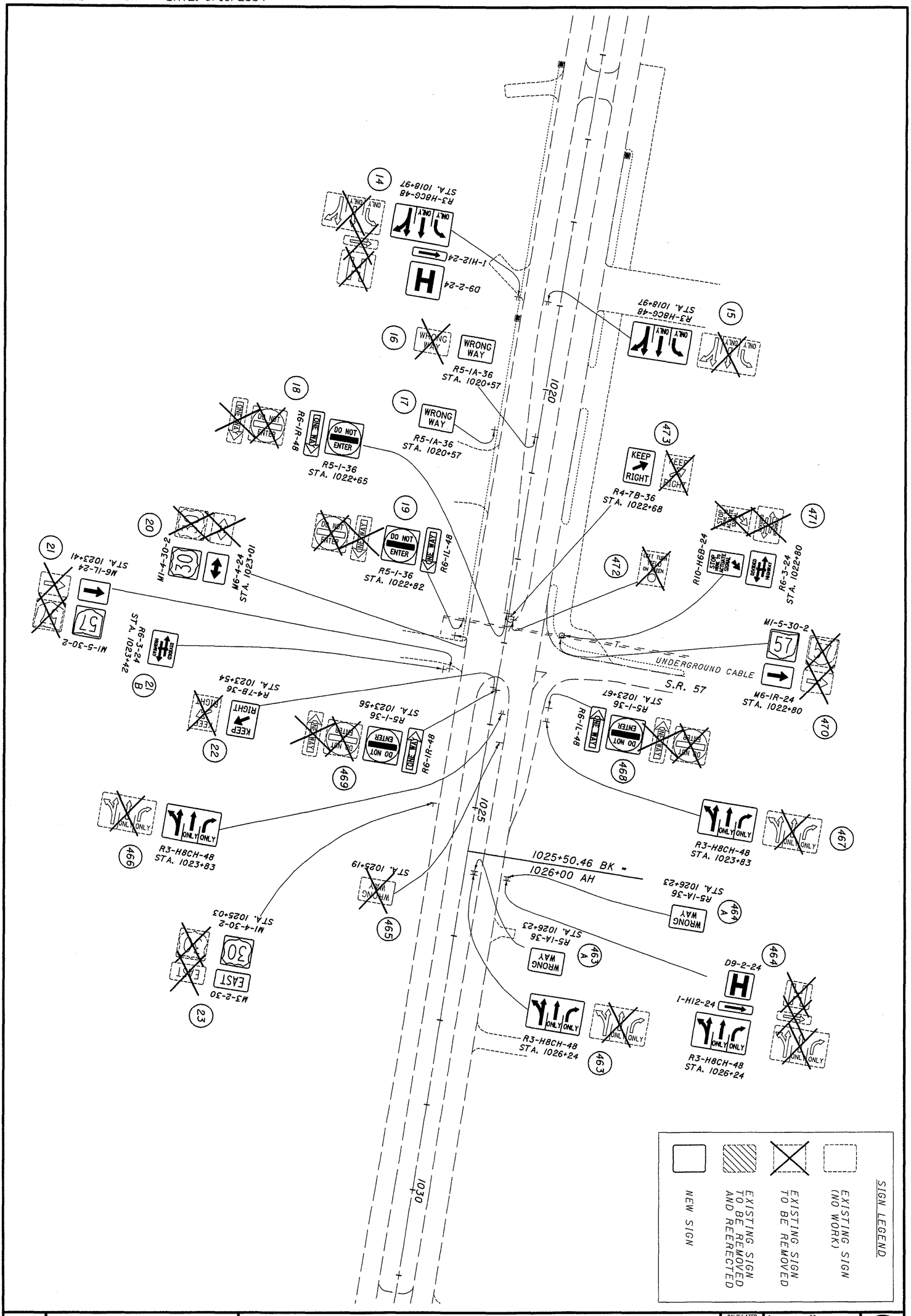

18/56	WAY-30-18.88	SIGNING PLAN SHEET - WAY 30 S. R. 57 INTERSECTION	CALCULATED CHECKED 0 25 50 100 HORIZONTAL SCALE IN FEET

DESIGN FILE: I:\projects\77267\W30KohlerRd.dgn
WORKSTATION: eellison DATE: 8/18/2004

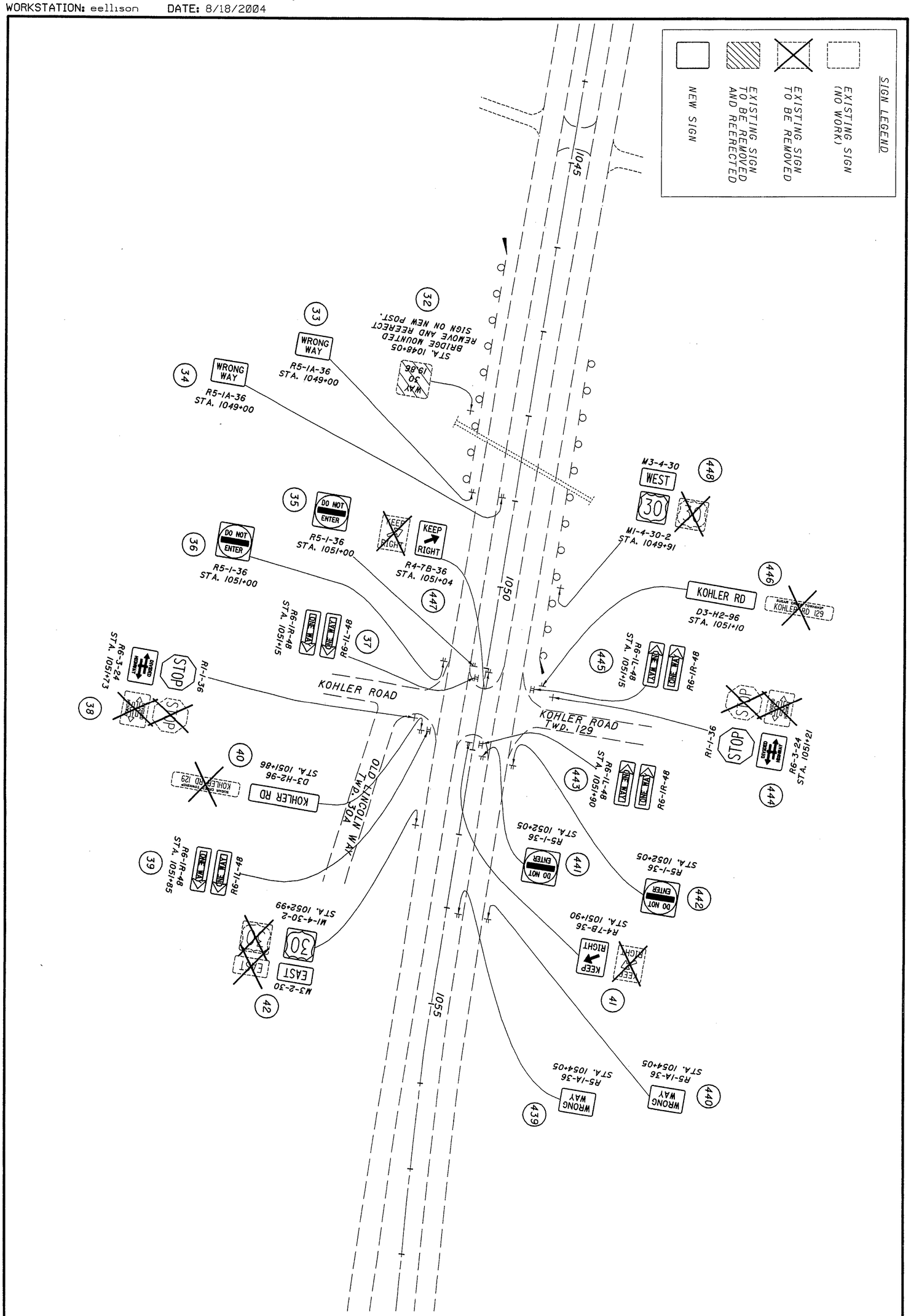

19/56	WAY-30-18.88	SIGNING PLAN SHEET - WAY 30 KOHLER RD INTERSECTION	CALCULATED CHECKED 0 25 50 100 HORIZONTAL SCALE IN FEET

DESIGN FILE: I:\projects\77267\W30KidronRd.dgn
WORKSTATION: eellison DATE: 8/18/2004

CALCULATED
CHECKED

HORIZONTAL SCALE IN FEET
0 25 50 100

SIGNING PLAN SHEET - WAY 30
KIDRON RD INTERSECTION

WAY-30-18.88

DESIGN FILE: I:\projects\77267\W30LakeDr.dgn
WORKSTATION: eellison DATE: 8/18/2004

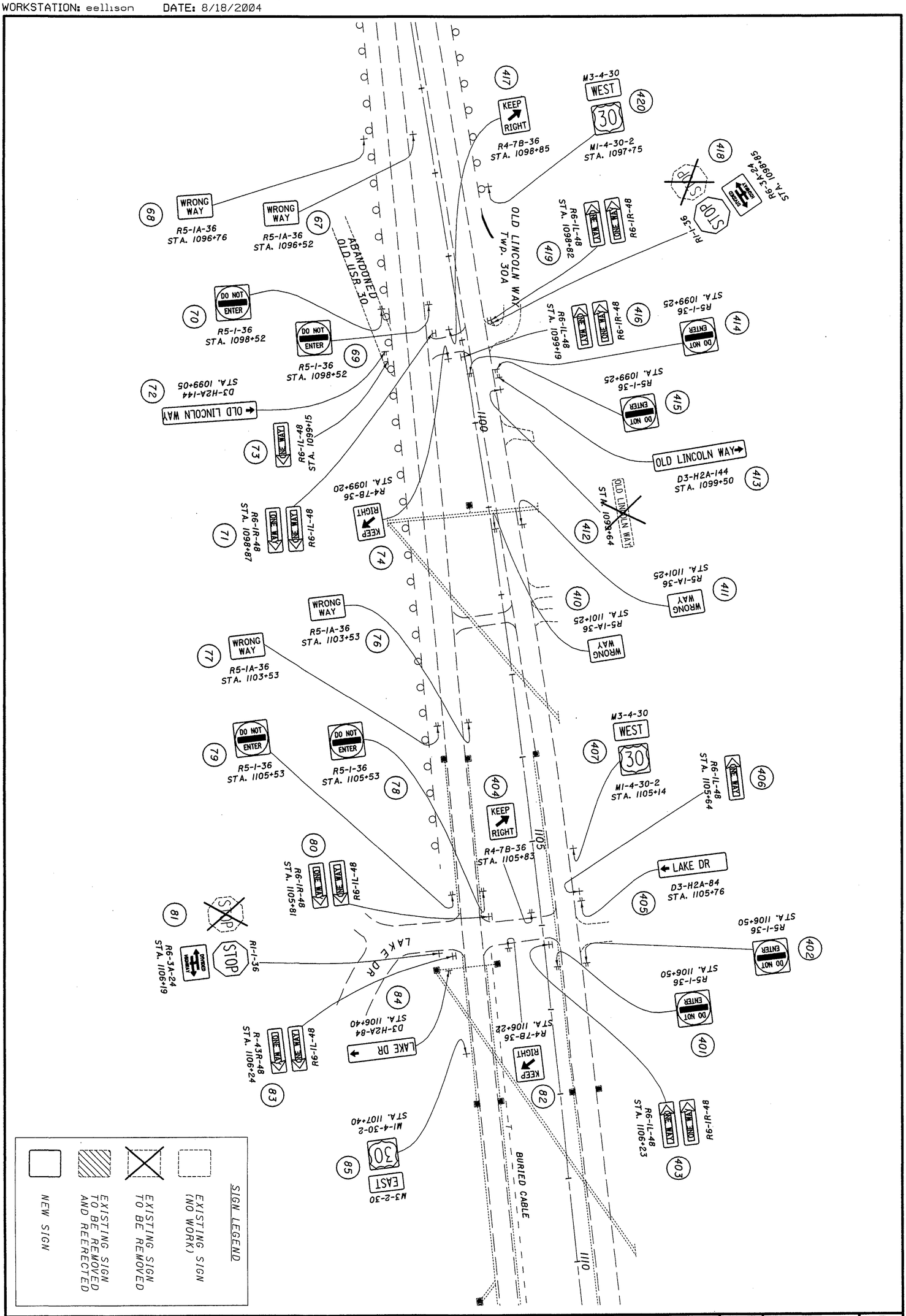

21/56	WAY-30-18.88	SIGNING PLAN SHEET - WAY 30 OLD LINCOLN WAY AND LAKE DR INTERSECTIONS	CALCULATED CHECKED 0 25 50 100 HORIZONTAL SCALE IN FEET

DESIGN FILE: I:\projects\77267\W30Pres.dgn
WORKSTATION: eellison DATE: 8/18/2004

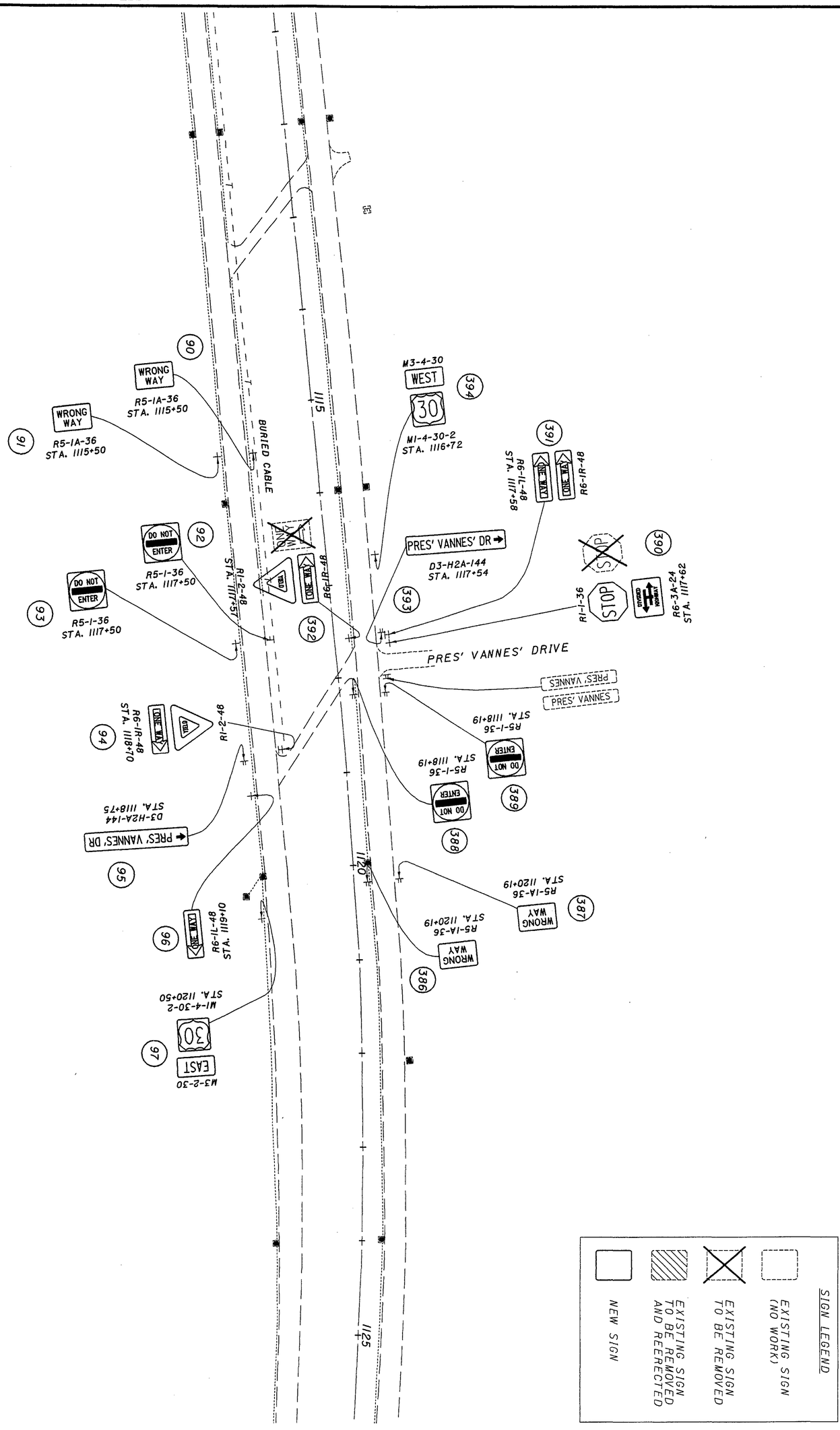

22/56	WAY-30-18.88	SIGNING PLAN SHEET - WAY 30 PRES VANNES INTERSECTION	CALCULATED CHECKED 0 50 25 100 HORIZONTAL SCALE IN FEET

DESIGN FILE: I:\projects\77267\W30KurzenRd.dgn
WORKSTATION: eellison DATE: 8/18/2004

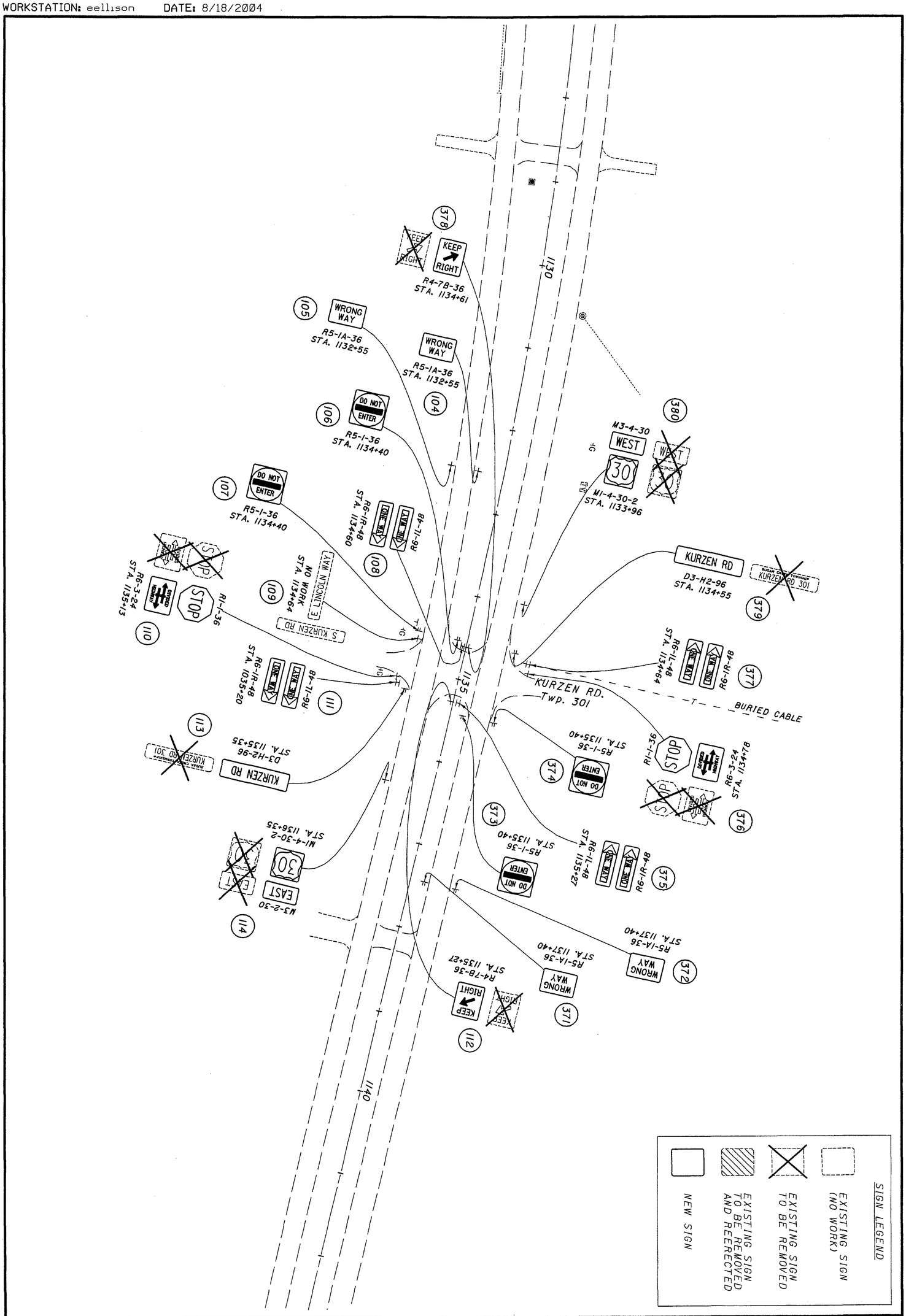

SIGN LEGEND

- EXISTING SIGN (NO WORK)
- EXISTING SIGN TO BE REMOVED
- EXISTING SIGN TO BE REMOVED AND REERECTED
- NEW SIGN

23/56	WAY-30-18.88	SIGNING PLAN SHEET - WAY 30 KURZEN RD INTERSECTION	CALCULATED CHECKED 0 25 50 100 HORIZONTAL SCALE IN FEET

DESIGN FILE: I:\projects\77267\W30WAlt30.dgn
WORKSTATION: ellison DATE: 8/18/2004

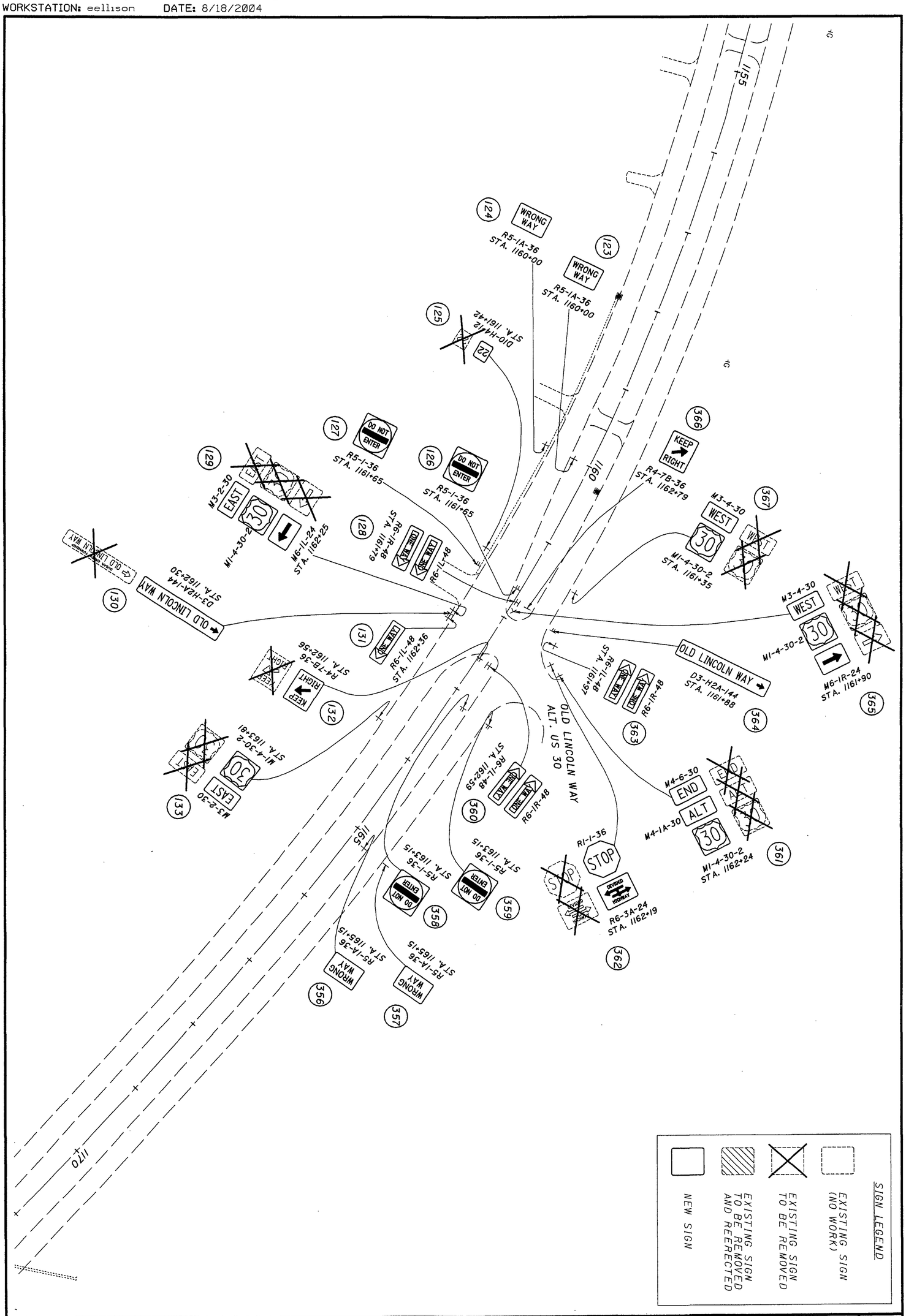

24/56	WAY-30-18.88	SIGNING PLAN SHEET - WAY 30 OLD LINCOLN WAY INTERSECTION	CALCULATED CHECKED 0 50 25 100 HORIZONTAL SCALE IN FEET

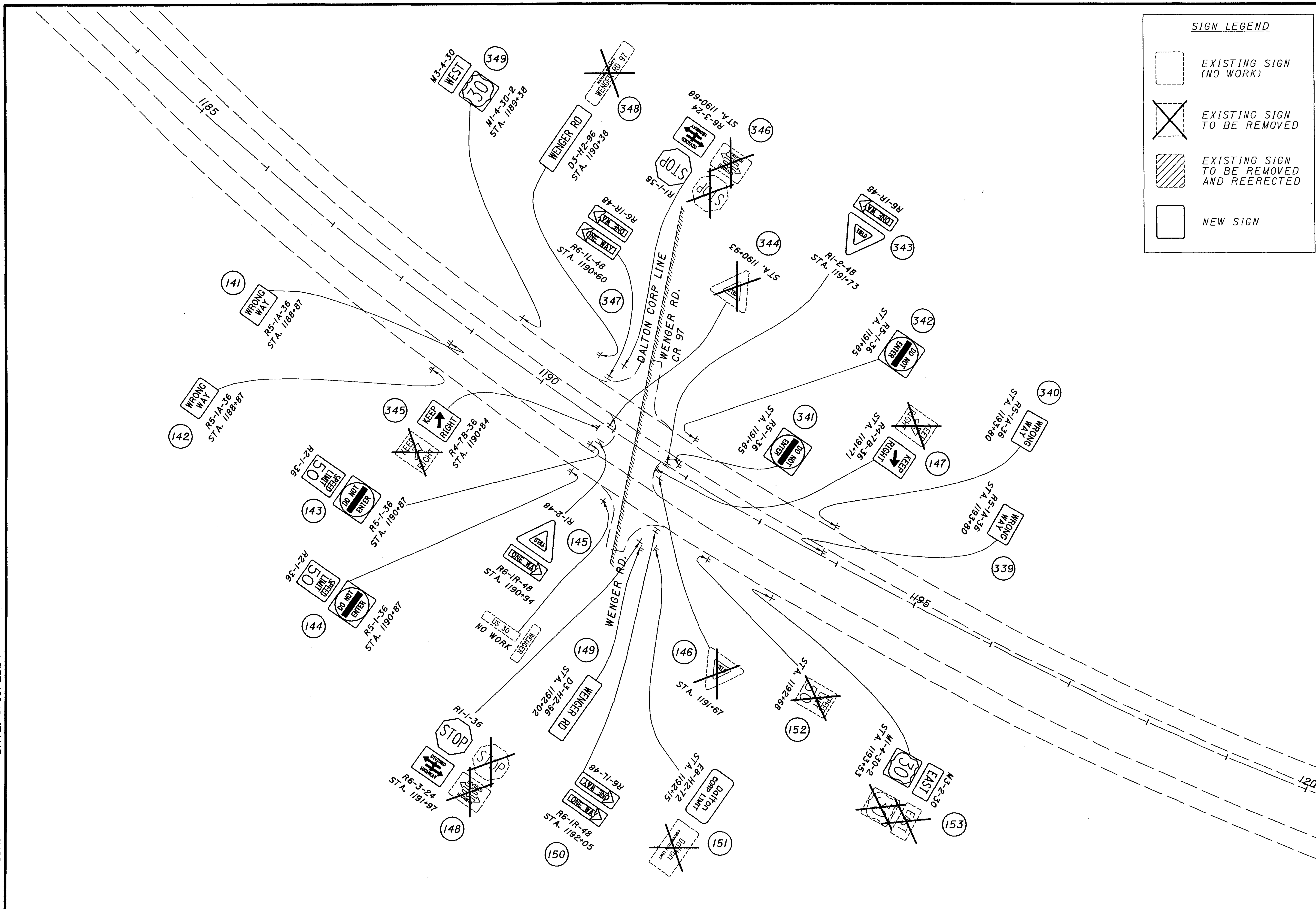

HORIZONTAL SCALE IN FEET 0 25 50 100

CALCULATED | CHECKED

SIGNING PLAN SHEET - WAY 30
WENGER RD INTERSECTION

WAY-30-18.88

25/56

DESIGN FILE: i:\projects\77267\W30WengerRd.dgn
WORKSTATION: eellison DATE: 8/18/2004

DESIGN FILE: I:\projects\77267\W30SR94.dgn
WORKSTATION: eellison DATE: 8/18/2004

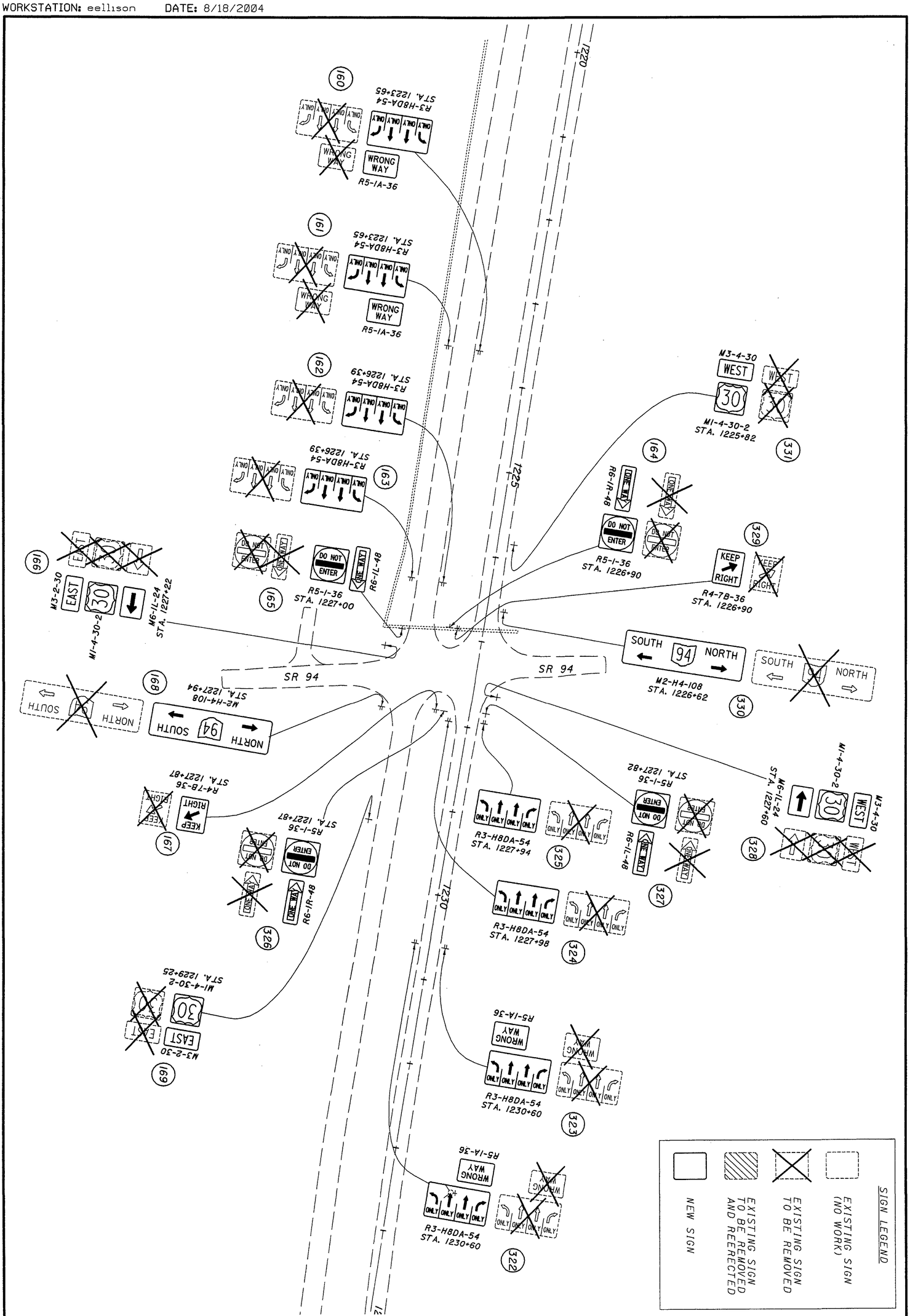

26/56	WAY-30-18.88	SIGNING PLAN SHEET - WAY 30 S.R. 94 INTERSECTION	CALCULATED CHECKED 0 25 50 100 HORIZONTAL SCALE IN FEET

DESIGN FILE: I:\projects\77267\W30CochranSt.dgn
WORKSTATION: eellison DATE: 8/18/2004

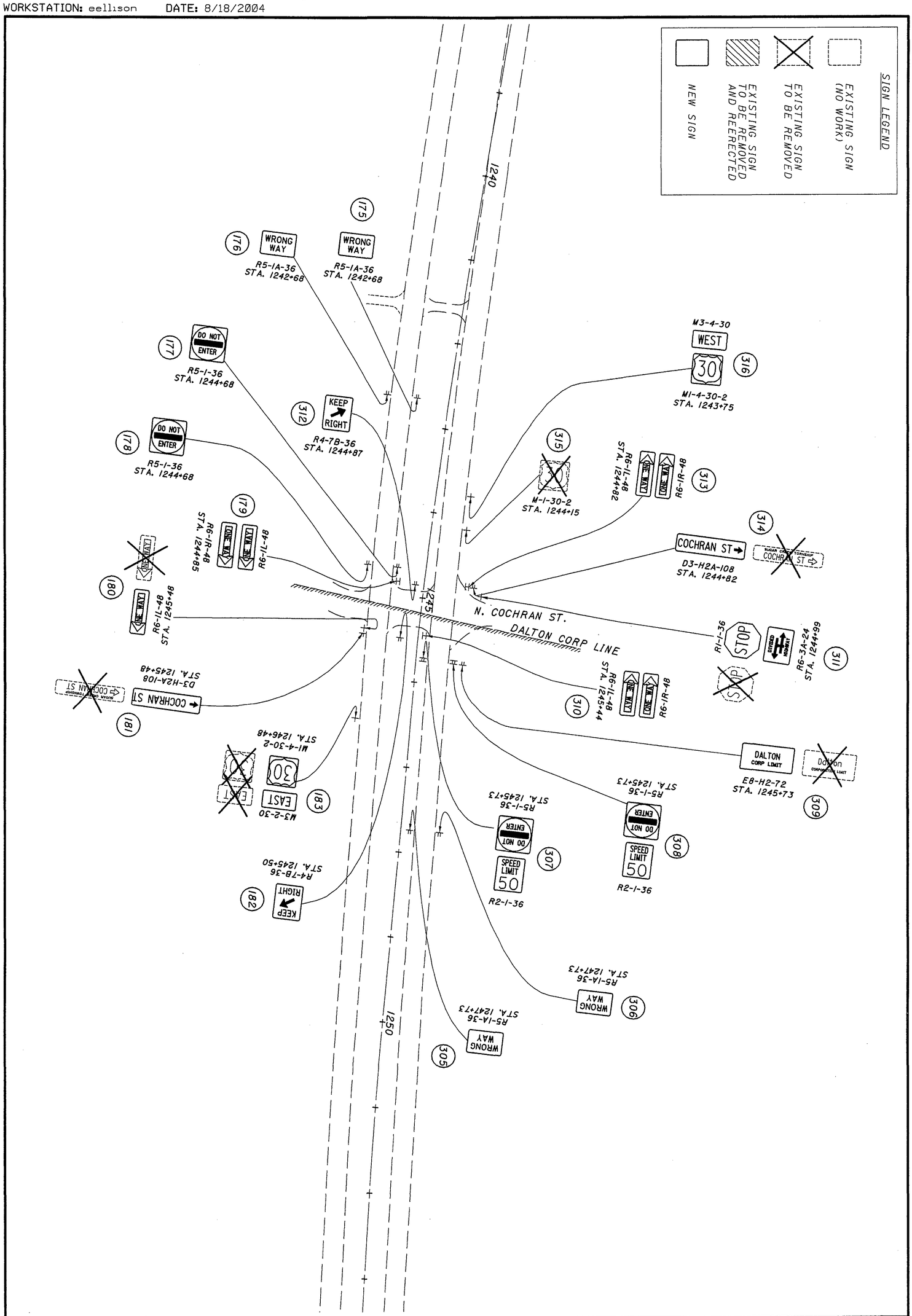

27/56	WAY-30-18.88	SIGNING PLAN SHEET - WAY 30 COCHRAN ST INTERSECTION	CALCULATED / CHECKED 0 25 50 100 HORIZONTAL SCALE IN FEET

DESIGN FILE: I:\projects\77267\W30EckardRd.dgn
WORKSTATION: eellison DATE: 8/18/2004

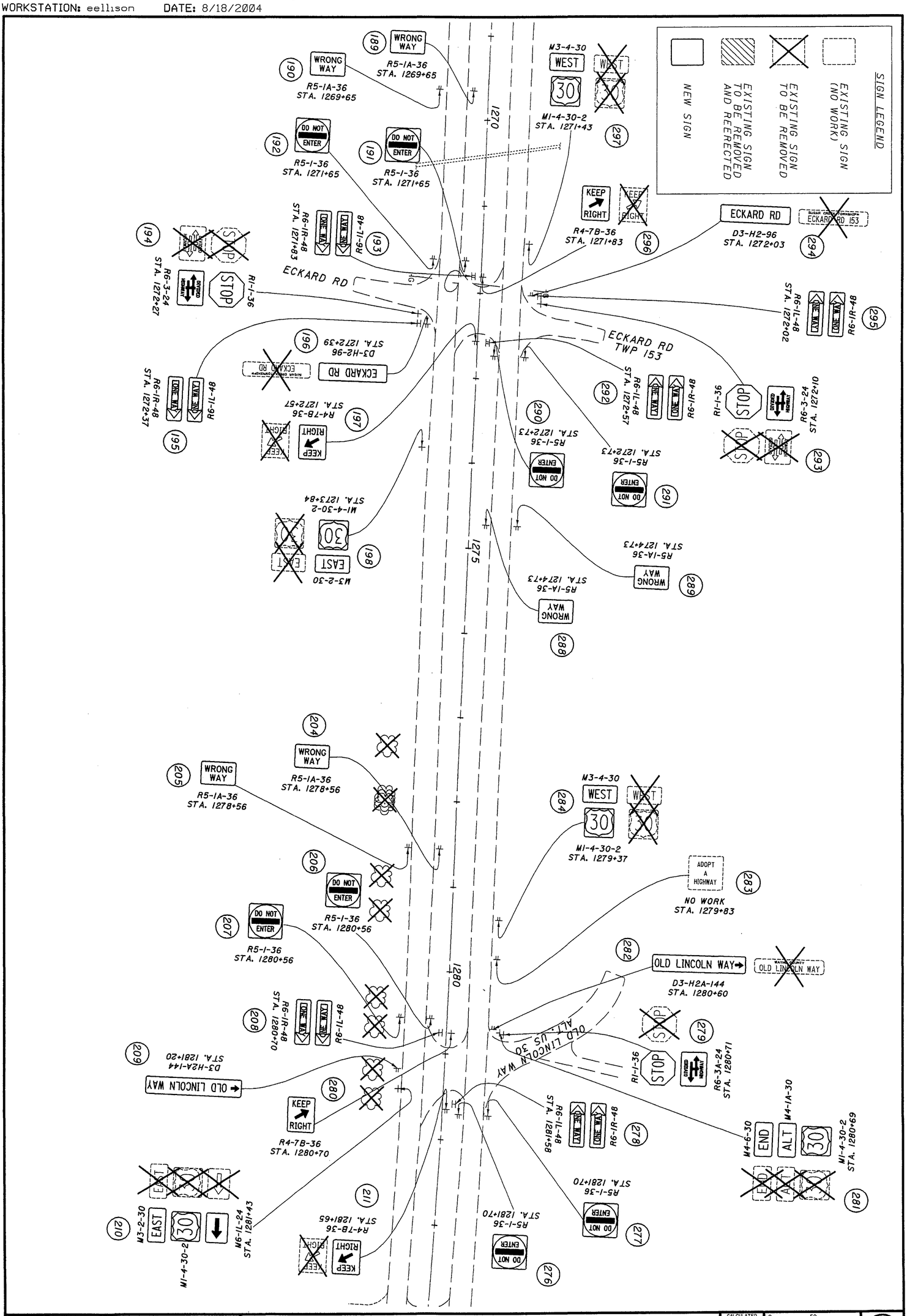

28/56	WAY-30-18.88	SIGNING PLAN SHEET - WAY 30 ECKARD RD AND OLD LINCOLN WAY INTERSECTIONS	CALCULATED CHECKED 0 25 50 100 HORIZONTAL SCALE IN FEET

DESIGN FILE: I:\projects\77267\W30LebanonRd.dgn
WORKSTATION: eellison DATE: 8/18/2004

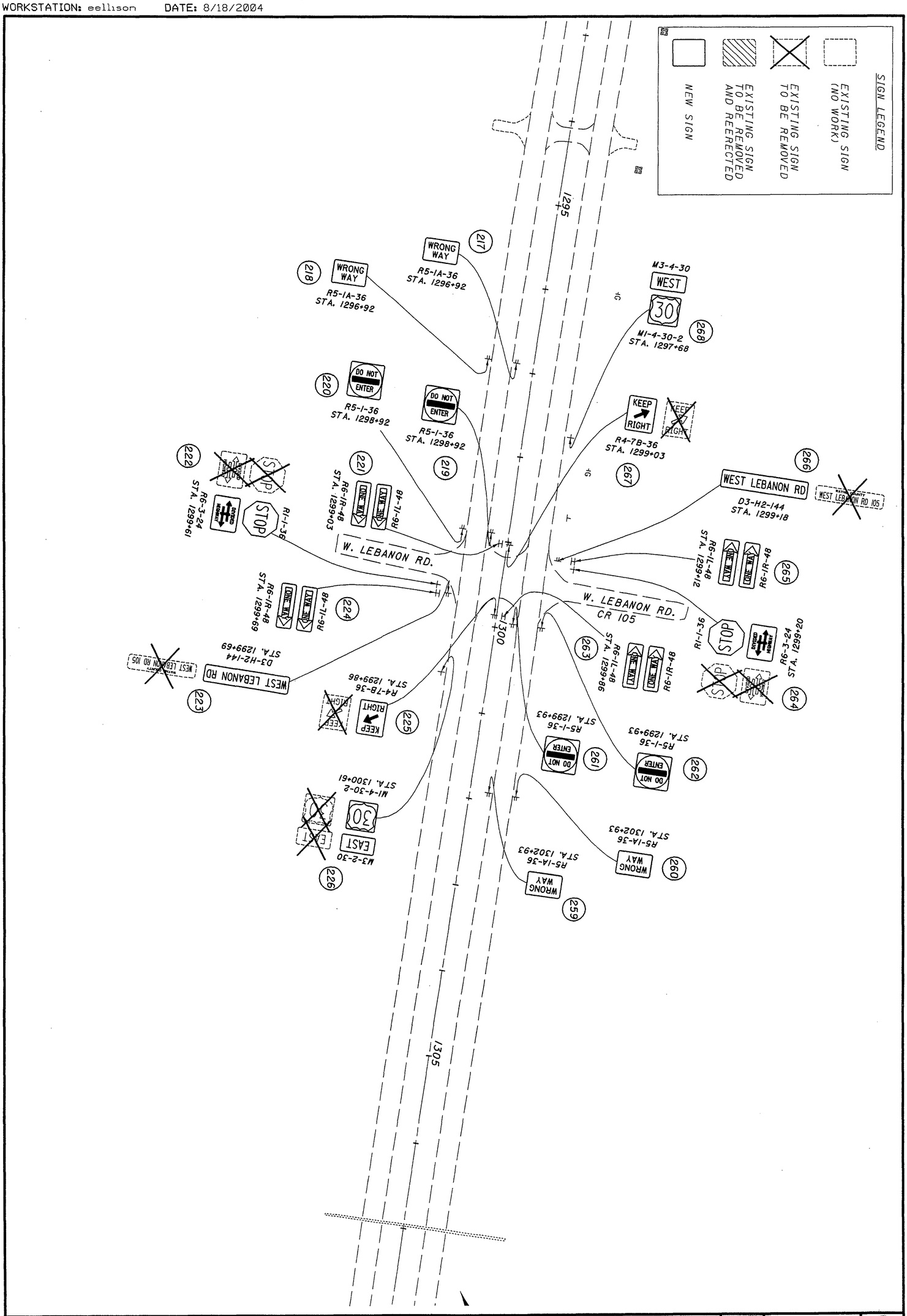

29/56	WAY-30-18.88	SIGNING PLAN SHEET - WAY 30 LEBANON RD INTERSECTION	CALCULATED CHECKED 0 50 25 100 HORIZONTAL SCALE IN FEET

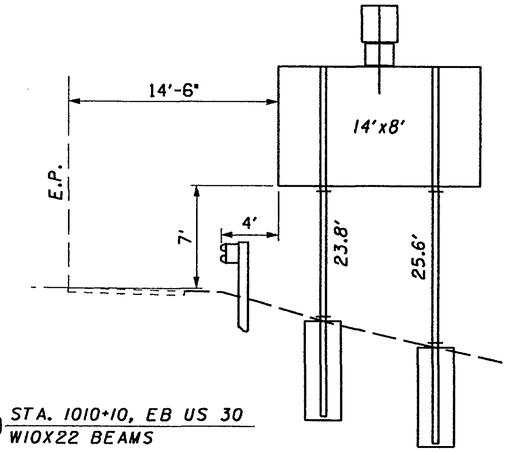

(3) STA. 1010+10, EB US 30
W10X22 BEAMS

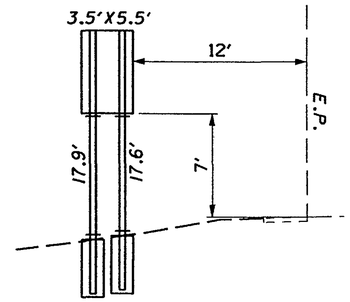

(10) STA. 1017+22, EB (MED) US 30
S4X7.7 BEAMS

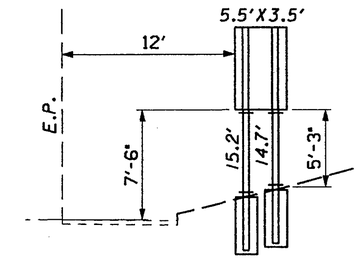

(11) STA. 1017+22, EB US 30
S4X7.7 BEAMS

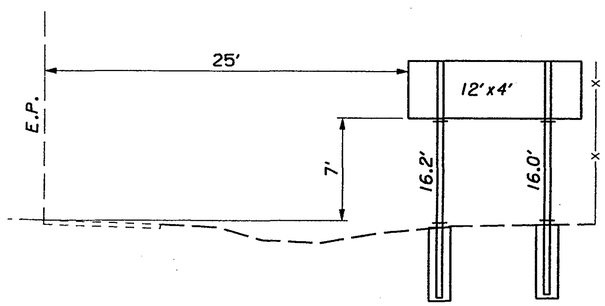

(24) STA. 1028+25, EB US 30
W6X9 BEAMS

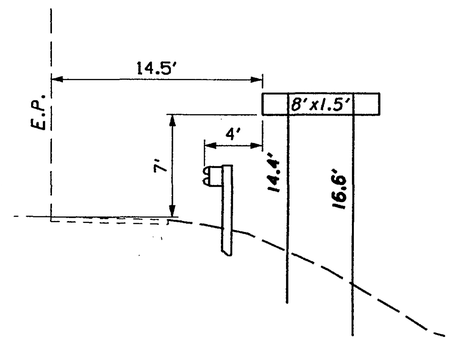

(31) STA. 1047+10, EB US 30
2 - #3 POSTS

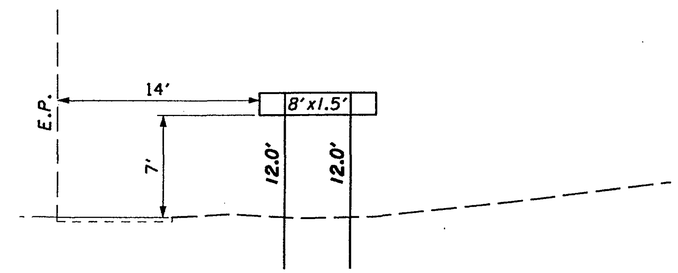

(40) STA. 1051+86, EB US 30
2 - #3 POSTS

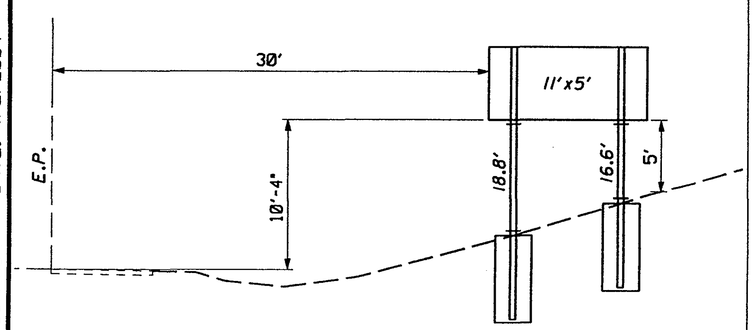

(44) STA. 1055+80 RT, EB US 30
W10X12 BEAMS

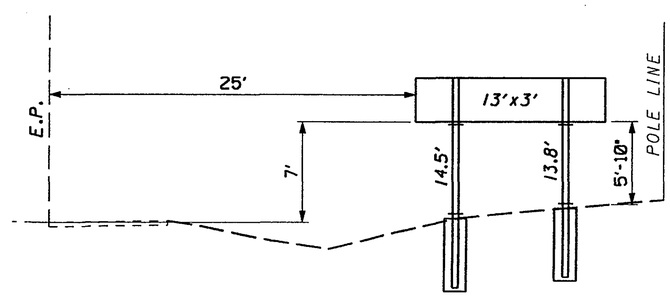

(45) STA. 1062+00, EB US 30
W6X9 BEAMS

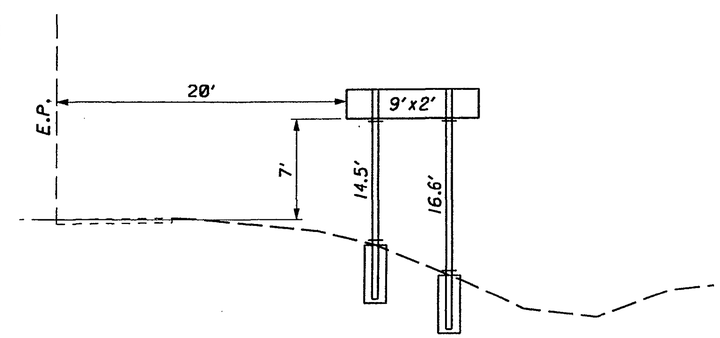

(51) STA. 1071+25, EB US 30
S4X7.7 BEAMS

ELEVATION SHEET REVISED 9-1-04 BAH

CALCULATED
CHECKED

SIGN ELEVATIONS

WAY-30-18.88

DESIGN FILE: I:\projects\77267\W30Elevevations.dgn
WORKSTATION: eellison DATE: 9/2/2004

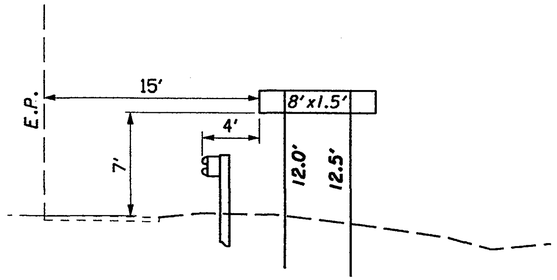

(57) STA. 1076+79, EB US 30
2 - #3 POSTS

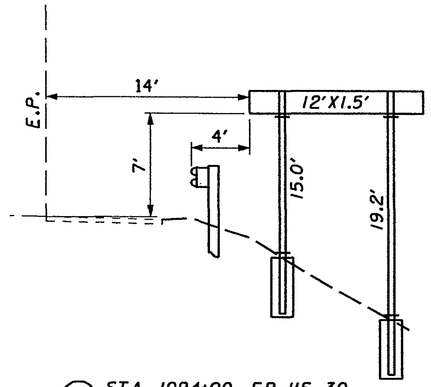

(64) STA. 1094+00, EB US 30
S4X7.7 BEAMS

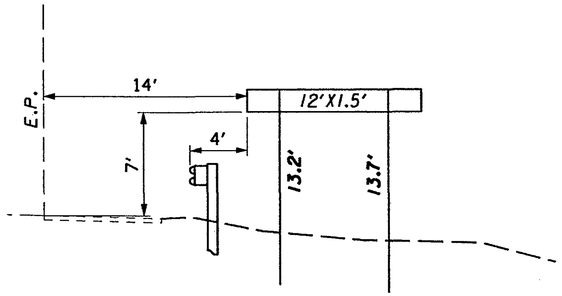

(72) STA. 1099+05, EB US 30
2 - #3 POSTS

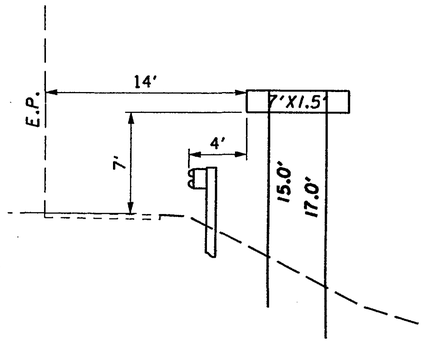

(75) STA. 1101+39, EB US 30
2 - #3 POSTS

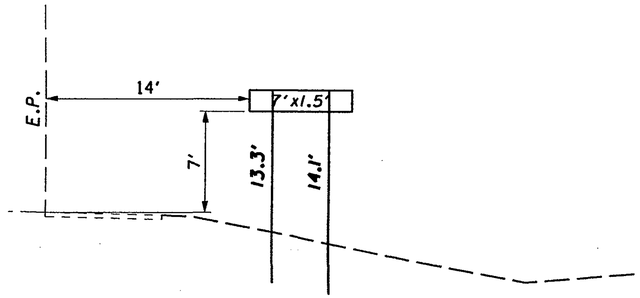

(84) STA. 1106+40, EB US 30
2 - #3 POSTS

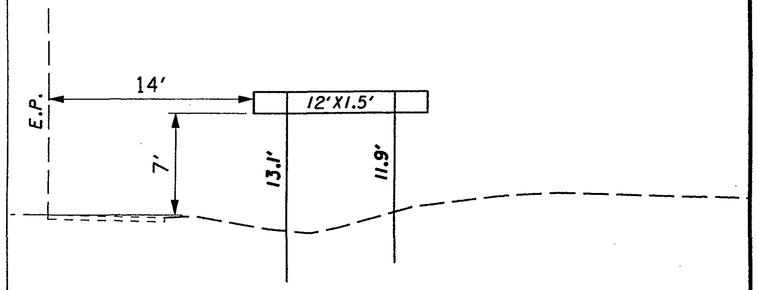

(89) STA. 1112+72, EB US 30
2 - #3 POSTS

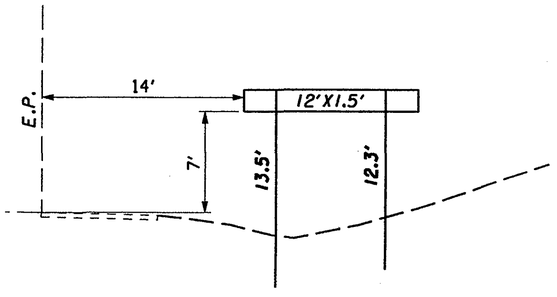

(95) STA. 1118+75, EB US 30
2 - #3 POSTS

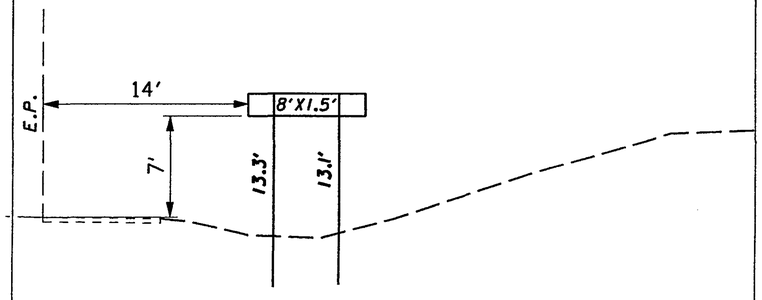

(103) STA. 1130+00, EB US 30
2 - #3 POSTS

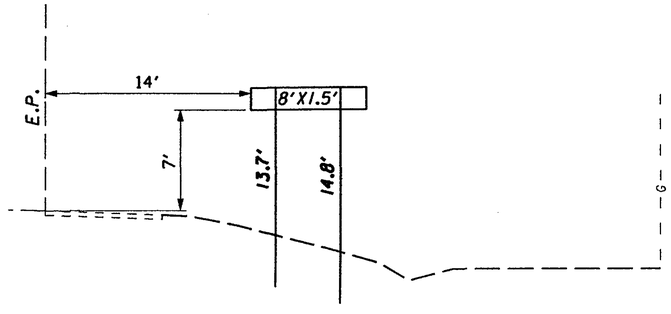

(113) STA. 1135+35, EB US 30
2 - #3 POSTS

ELEVATION SHEET REVISED 9-1-04 BAH

CALCULATED
CHECKED

SIGN ELEVATIONS

WAY-30-18.88

DESIGN FILE: I:\projects\77267\W30Elevevations.dgn
WORKSTATION: eellison DATE: 9/2/2004

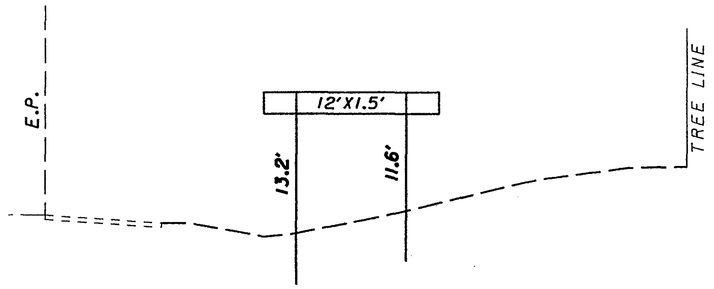

(122) STA. 1157+40, EB US 30
2 - #3 POSTS

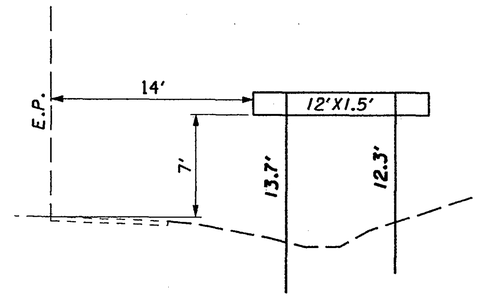

(130) STA. 1162+30, EB US 30
2 - #3 POSTS

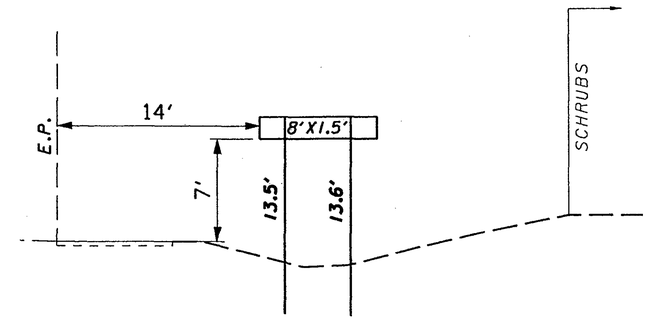

(139) STA. 1185+70, EB US 30
2 - #3 POSTS

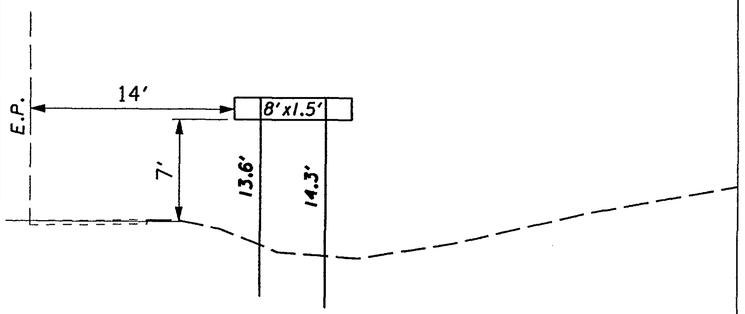

(149) STA. 1192+02, EB US 30
2 - #3 POSTS

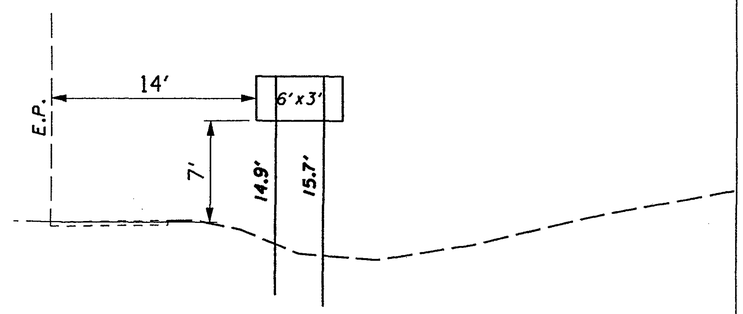

(151) STA. 1192+02, EB US 30
2 - #3 POSTS

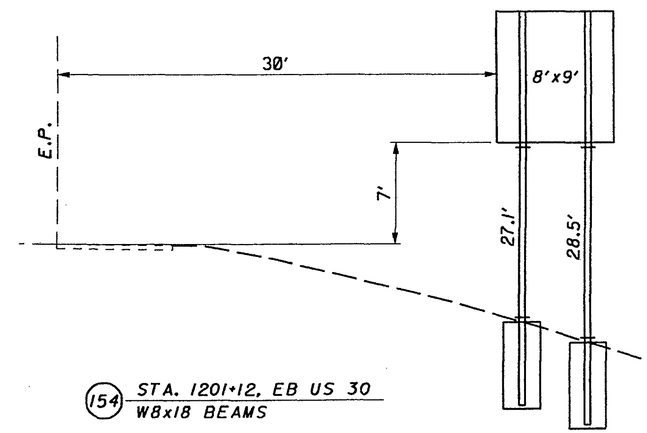

(154) STA. 1201+12, EB US 30
W8x18 BEAMS

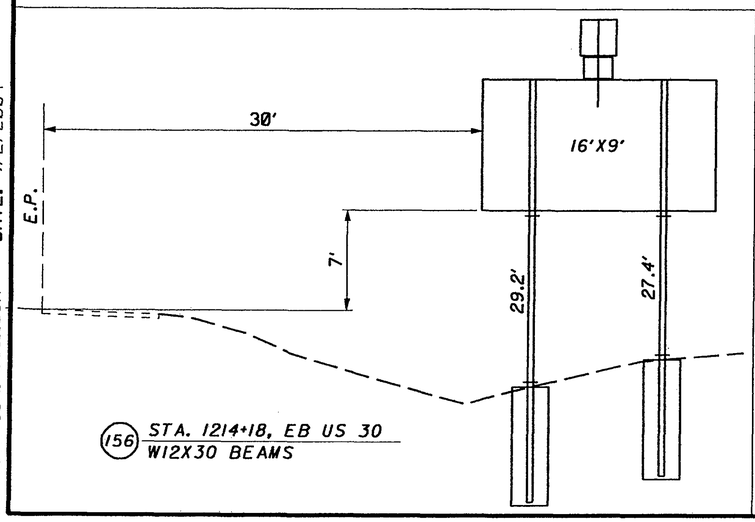

(156) STA. 1214+18, EB US 30
W12X30 BEAMS

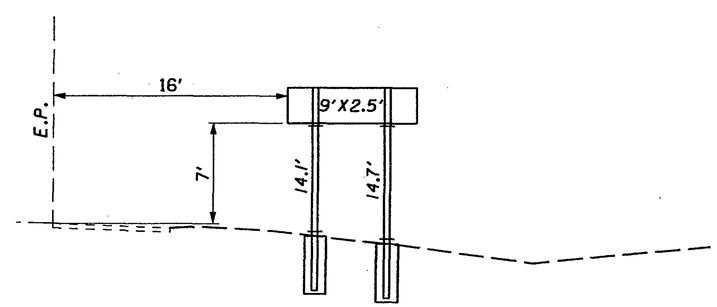

(168) STA. 1227+94, EB US 30
S4X7.7 BEAMS

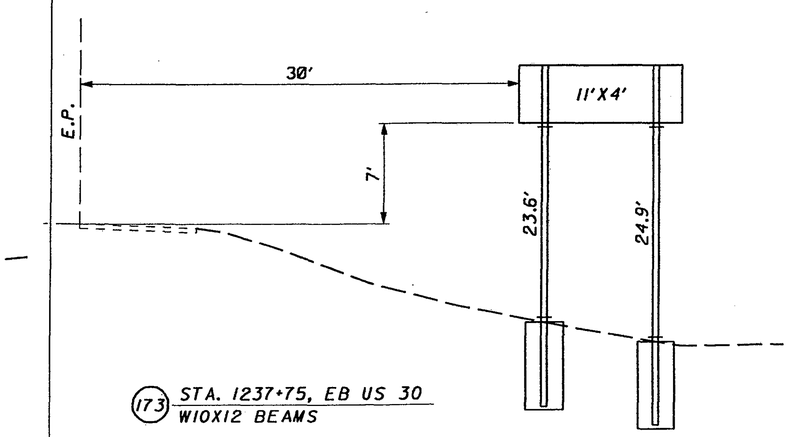

(173) STA. 1237+75, EB US 30
W10X12 BEAMS

ELEVATION SHEET REVISED 9-1-04 BAH

CALCULATED
CHECKED

SIGN ELEVATIONS

WAY-30-18.88

DESIGN FILE: I:\projects\77267\W30Elevevations.dgn
WORKSTATION: eellison DATE: 9/2/2004

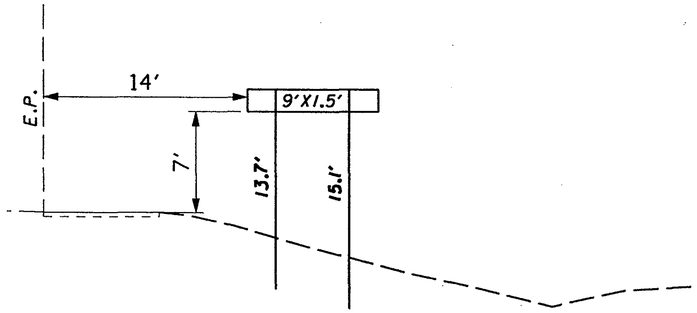

(174) STA. 1240+18, EB US 30
2 - #3 POSTS

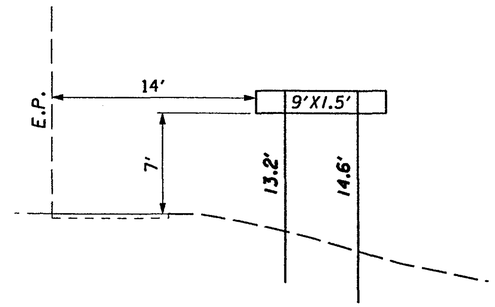

(181) STA. 1245+48, EB US 30
2 - #3 POSTS

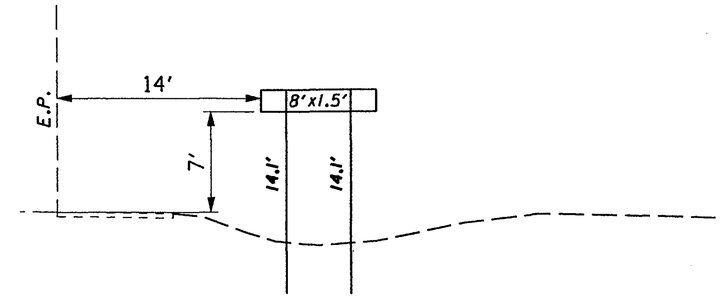

(188) STA. 1267+08, EB US 30
2 - #3 POSTS

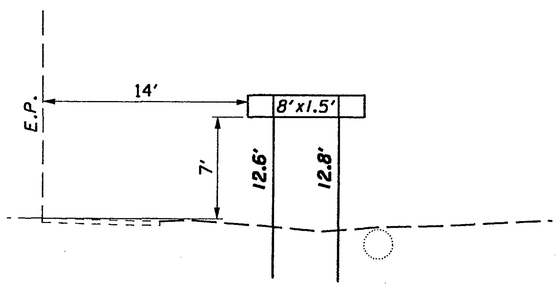

(196) STA. 1272+39, EB US 30
2 - #3 POSTS

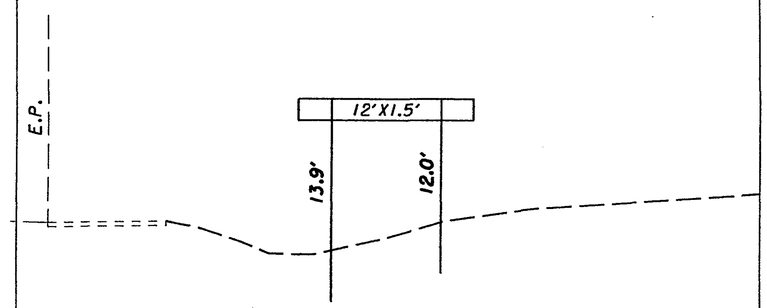

(203) STA. 1277+00, EB US 30
2 - #3 POSTS

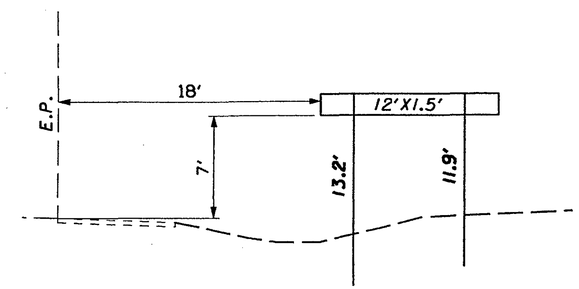

(209) STA. 1281+20, EB US 30
2 - #3 POSTS

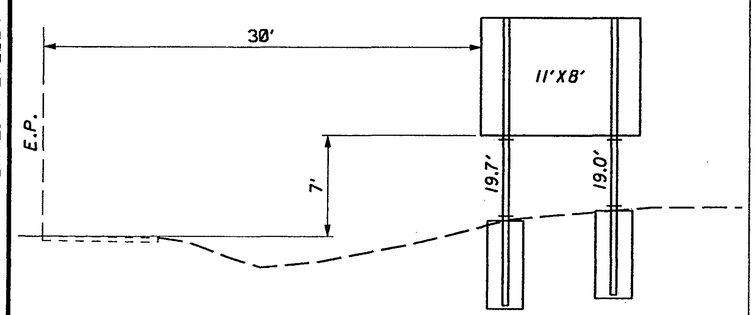

(212) STA. 1283+00, EB US 30
W10X12 BEAMS

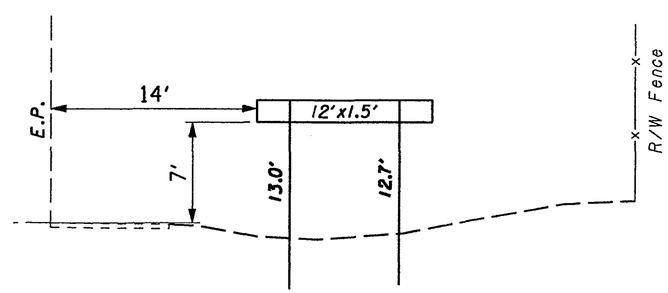

(216) STA. 1295+21, EB US 30
2 - #3 POSTS

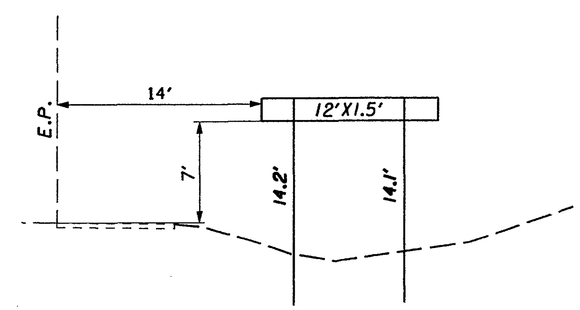

(223) STA. 1299+69, EB US 30
S4X7.7 BEAMS

ELEVATION SHEET REVISED 9-1-04 BAH

CALCULATED
CHECKED

SIGN ELEVATIONS

WAY-30-18.88

DESIGN FILE: I:\projects\77267\W30Elevations.dgn
WORKSTATION: eellison DATE: 9/2/2004

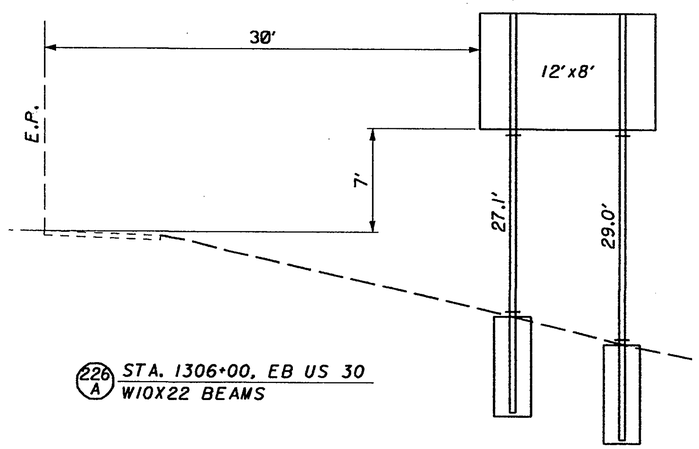

226 A STA. 1306+00, EB US 30
W10X22 BEAMS

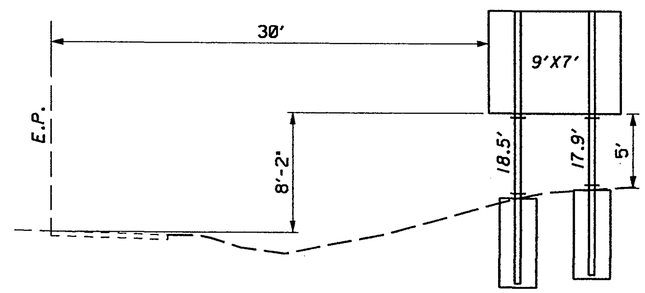

228 STA. 1314+92, EB US 30
W10X12 BEAMS

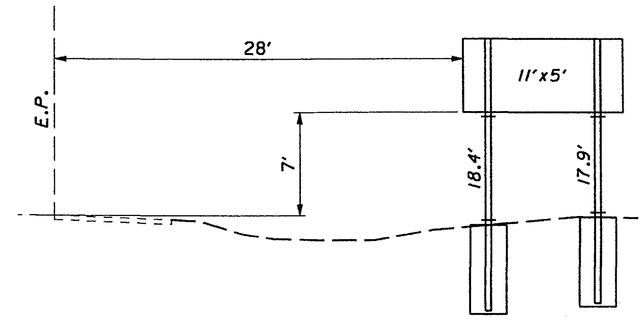

230 STA. 1320+07, EB US 30
W10X12 BEAMS

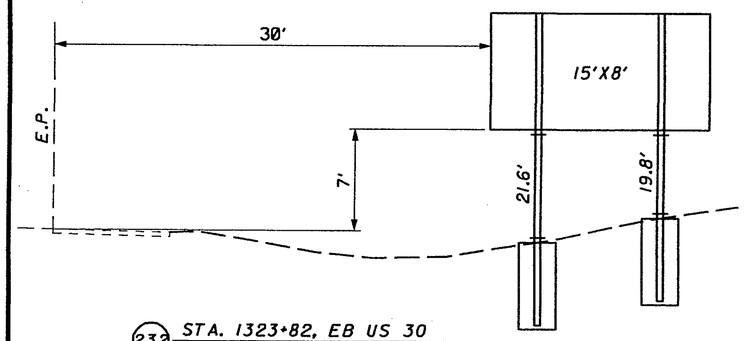

232 STA. 1323+82, EB US 30
W8X18 BEAMS

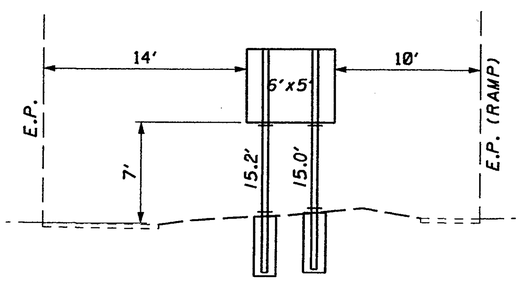

235 STA. 1333+24, EB US 30
S4X7.7 BEAMS

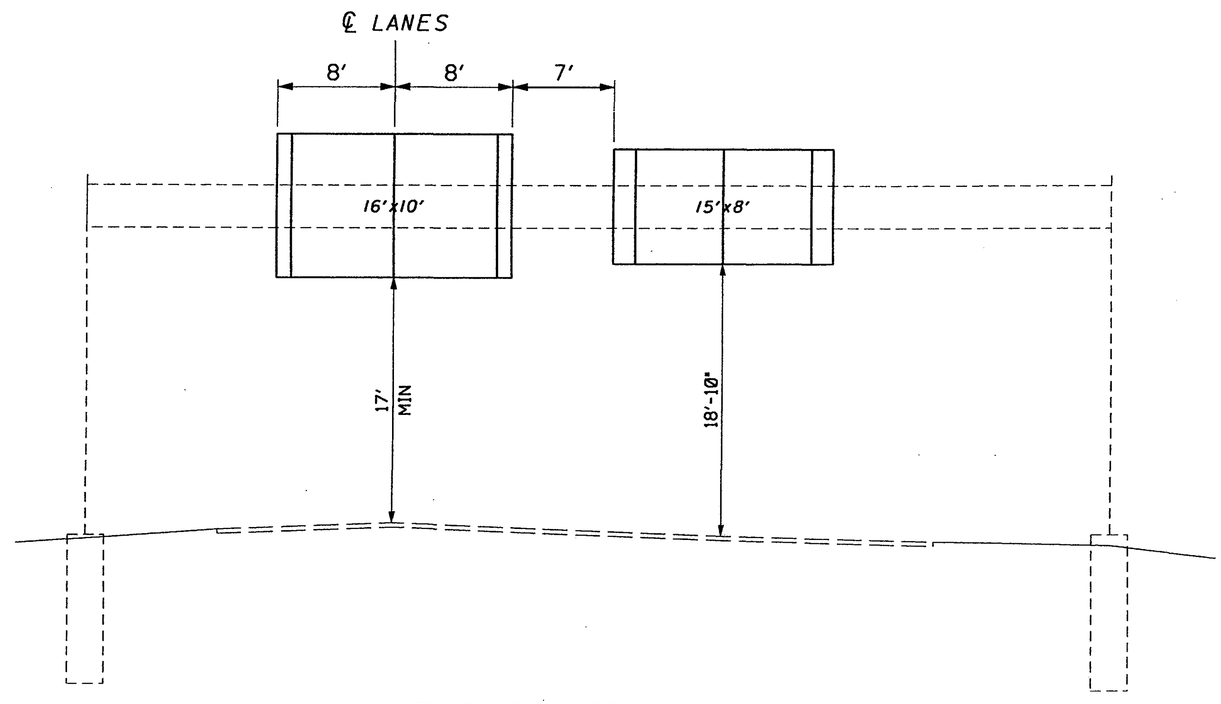

233 STA. 1331+92, EB US 30
EXISTING SUPPORTS

NOTE: 1) REMOVE SIGN LIGHTING - SEE GEN. NOTE ON SHEET NO. 3
2) REPAINT END FRAMES PER GEN. NOTE ON SHEET NO. 4-6

ELEVATION SHEET REVISED 9-1-04 BAH

CALCULATED
CHECKED

SIGN ELEVATIONS

WAY-30-18.88

DESIGN FILE: I:\projects\77267\W30Elevevations.dgn
WORKSTATION: eellison DATE: 9/2/2004

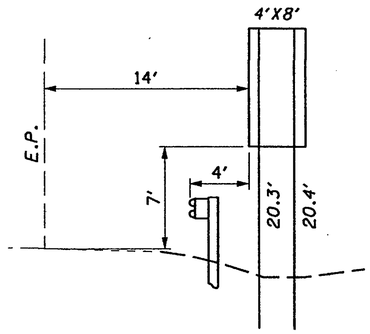

240 STA. 173+66, EB US 30
2-#6 POSTS

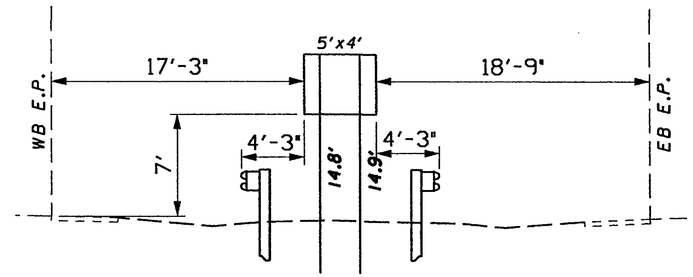

241 STA. 173+65, EB (MED) US 30
2 - #3 POSTS

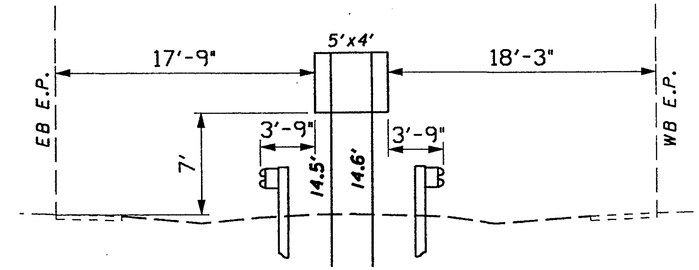

245 STA. 0+26, WB (MED) US 30 (STARK COUNTY)
2 - #3 POSTS

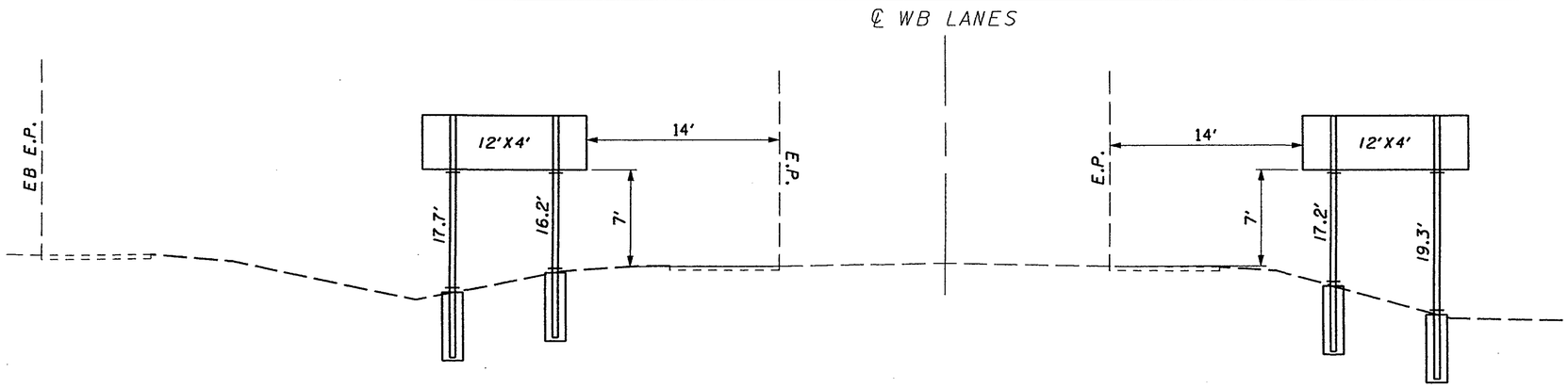

250 STA. 1331+00, WB US 30
W6X9 BEAMS

250 A STA. 1331+00, WB US 30
W6X9 BEAMS

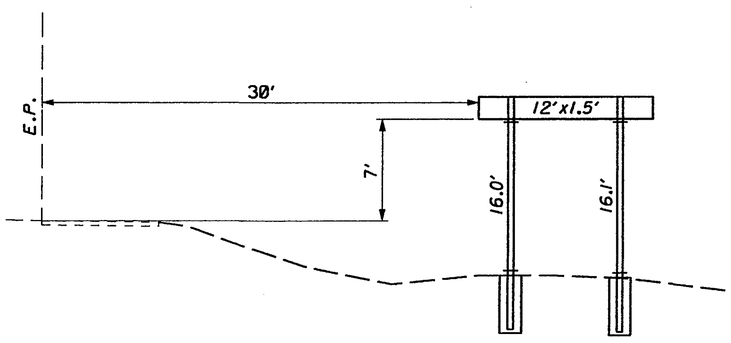

258 STA. 1304+50, WB US 30
S4X7.7 BEAMS

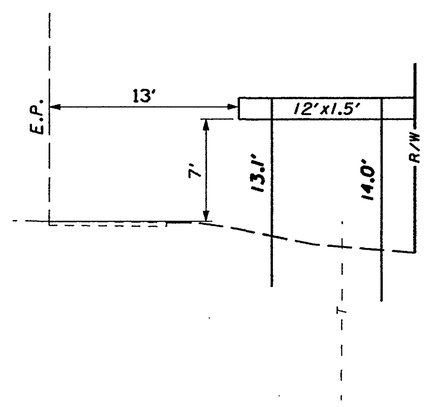

266 STA. 1299+18, WB US 30
2 - #3 POSTS

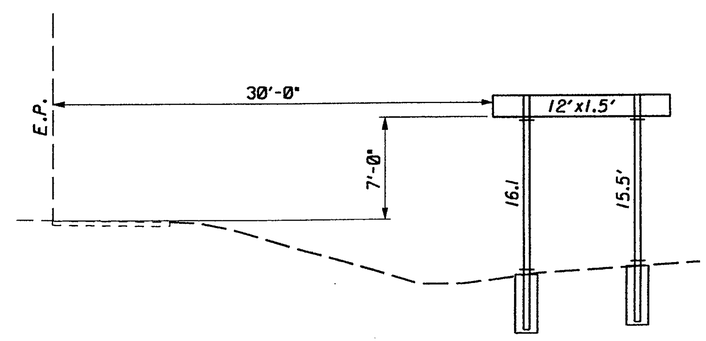

273 STA. 1285+83, WB US 30
S4X7.7 BEAMS

ELEVATION SHEET REVISED 9-1-04 BAH

CALCULATED
CHECKED

SIGN ELEVATIONS

WAY-30-18.88

DESIGN FILE: I:\projects\77267\W30Elevevations.dgn
WORKSTATION: eellison DATE: 9/2/2004

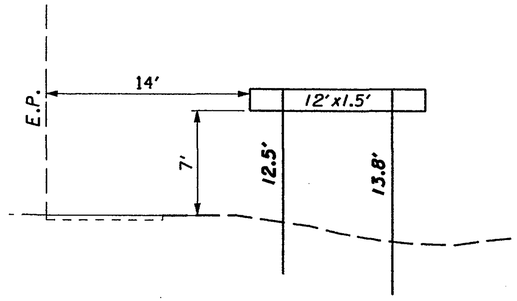

282 STA. 1280+60, WB US 30
2 - #3 POSTS

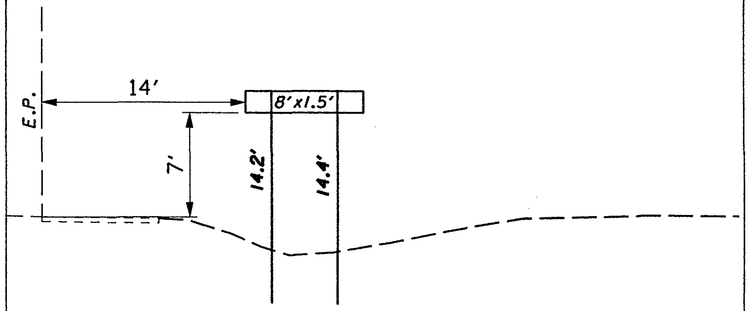

287 STA. 1277+37, WB US 30
2 - #3 POSTS

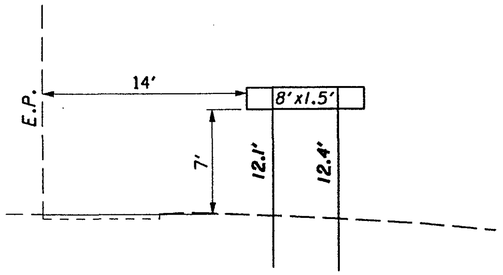

294 STA. 1272+03, WB US 30
2 - #3 POSTS

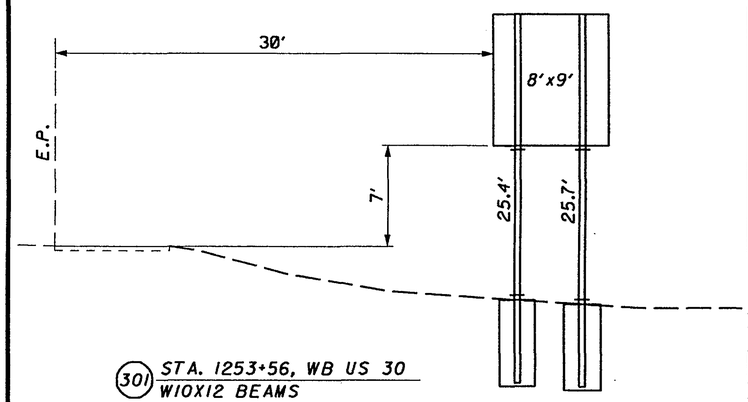

301 STA. 1253+56, WB US 30
W10X12 BEAMS

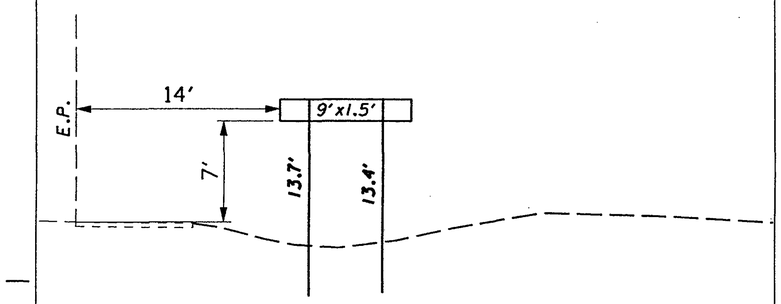

304 STA. 1250+18, WB US 30
2 - #3 POSTS

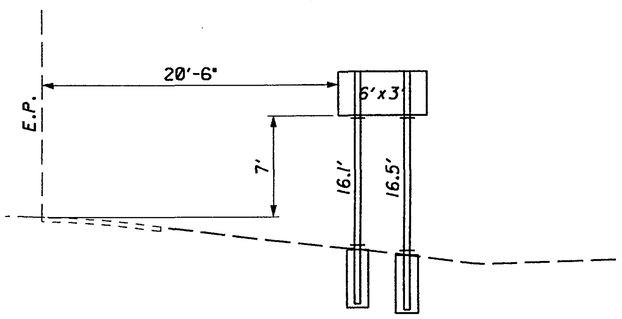

309 STA. 1245+73, WB US 30
S4X7.7 BEAMS

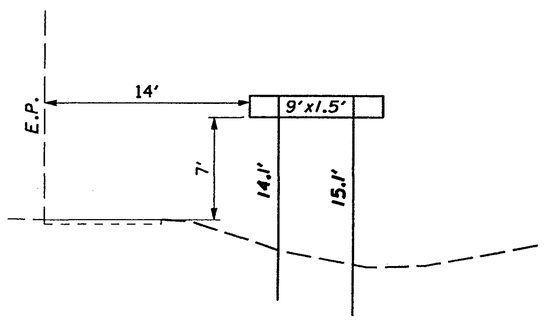

314 STA. 1244+82, WB US 30
2 - #3 POSTS

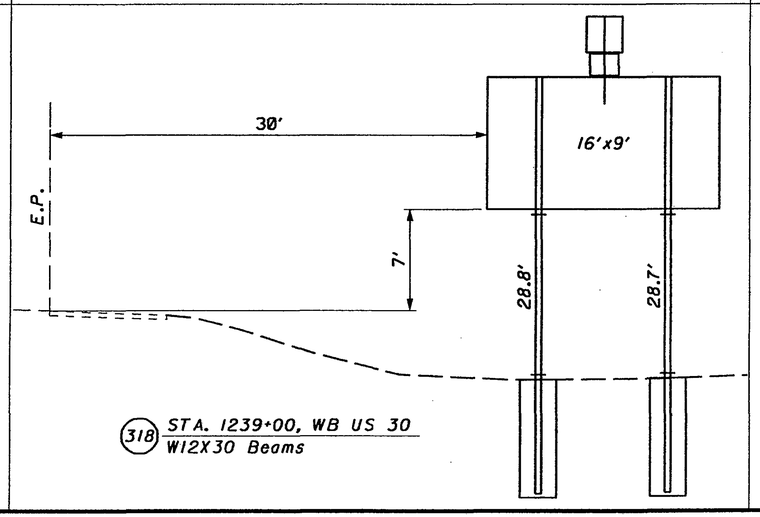

318 STA. 1239+00, WB US 30
W12X30 Beams

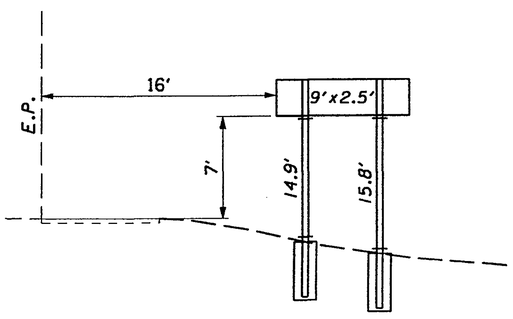

330 STA. 1226+62, WB US 30
S4X7.7 BEAMS

ELEVATION SHEET REVISED 9-1-04 BAH

CALCULATED
CHECKED

SIGN ELEVATIONS

WAY-30-18.88

DESIGN FILE: I:\projects\7726T\W30Elevevations.dgn
WORKSTATION: eellison DATE: 9/2/2004

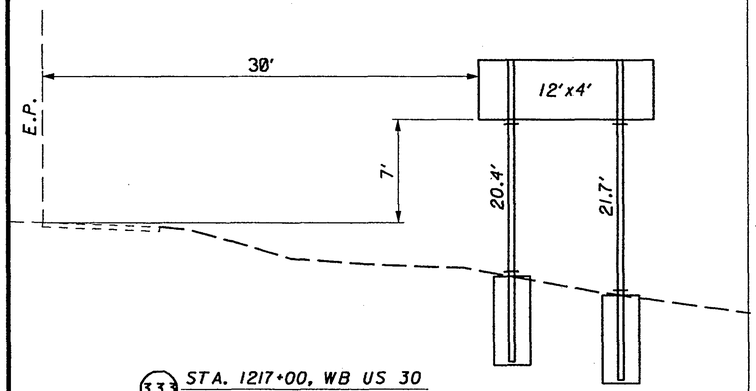

333 STA. 1217+00, WB US 30
W10X12 BEAMS

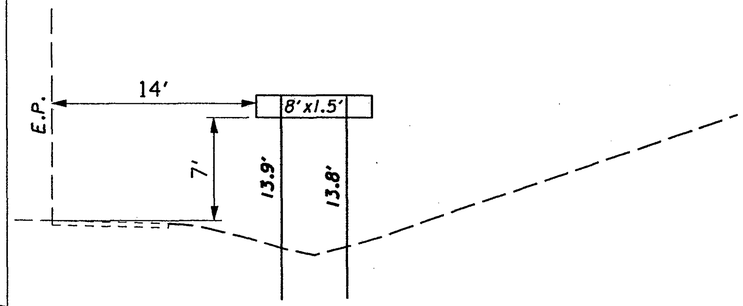

337 STA. 1196+66, WB US 30
2 - #3 POSTS

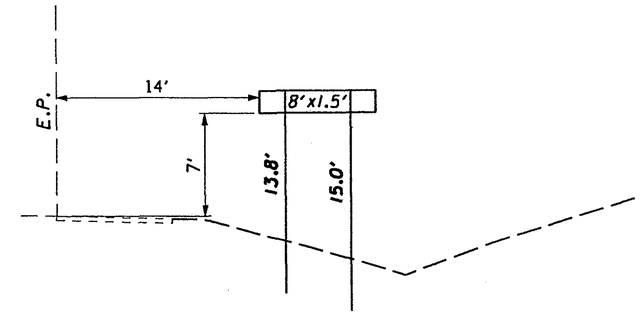

348 STA. 1190+38, WB US 30
2 - #3 POSTS

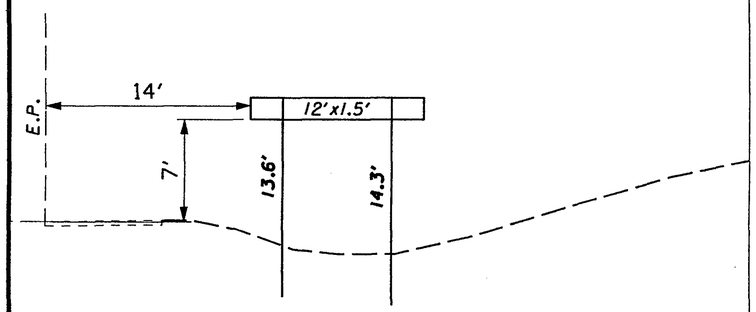

355 STA. 1167+15, WB US 30
2 - #3 POSTS

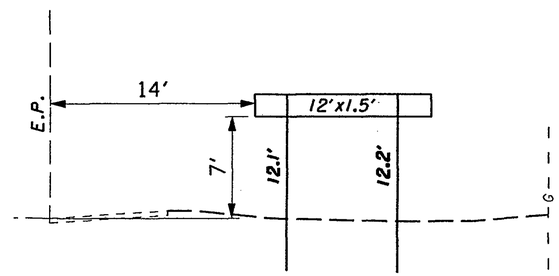

364 STA. 1161+88, WB US 30
2 - #3 POSTS

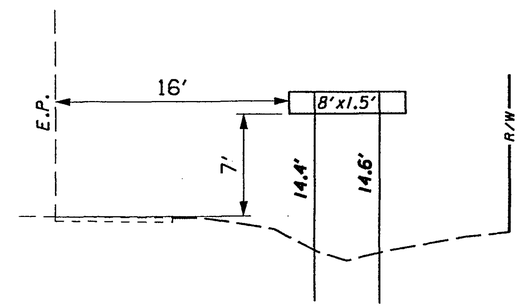

370 STA. 1140+00, WB US 30
2 - #3 POSTS

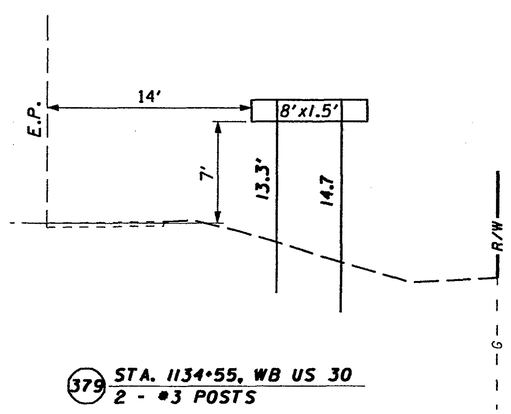

379 STA. 1134+55, WB US 30
2 - #3 POSTS

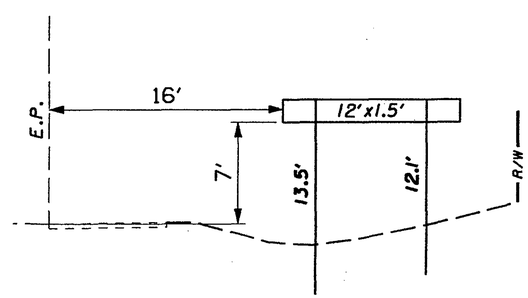

385 STA. 1122+72, WB US 30
2 - #3 POSTS

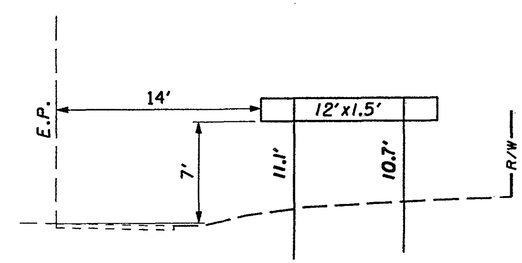

393 STA. 1117+54, WB US 30
2 - #3 POSTS

ELEVATION SHEET REVISED 9-1-04 BAH

CALCULATED
CHECKED

SIGN ELEVATIONS

WAY-30-18.88

DESIGN FILE: I:\projects\77267\W30Elevevations.dgn
WORKSTATION: eellison DATE: 9/2/2004

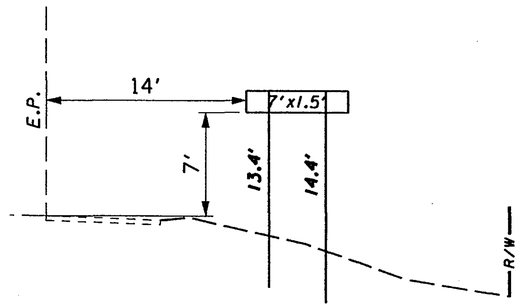

397 STA. 1111+39, WB US 30
2 - #3 POSTS

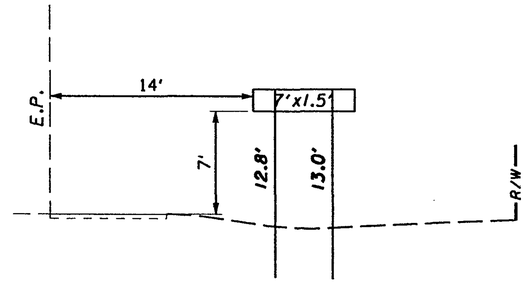

405 STA. 1105+76, WB US 30
2 - #3 POSTS

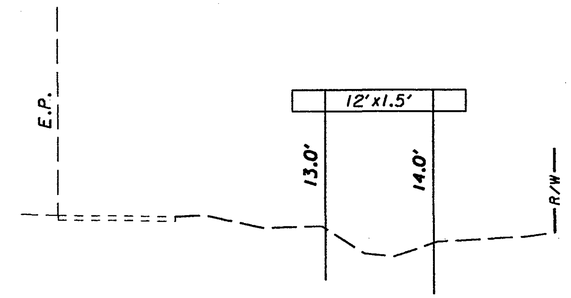

408 STA. 1103+25, WB US 30
2 - #3 POSTS

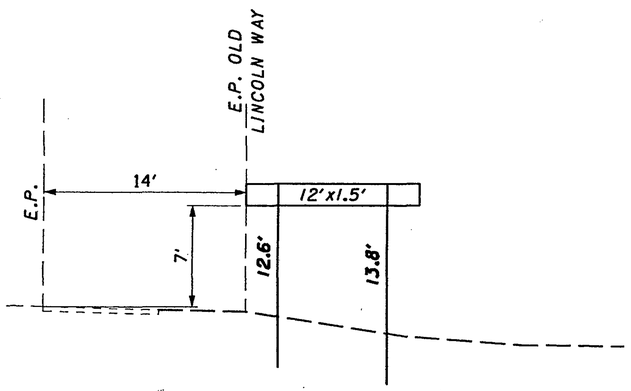

413 STA. 1099+50, WB US 30
2 - #3 POSTS

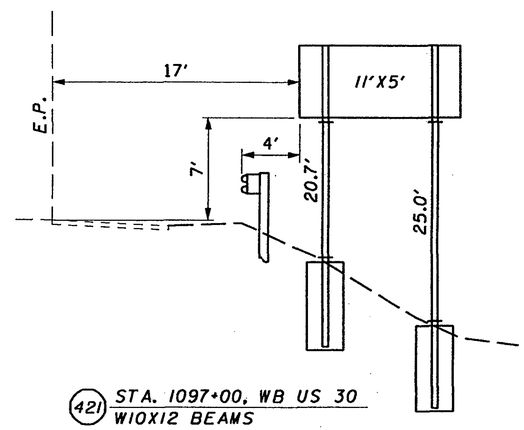

421 STA. 1097+00, WB US 30
W10X12 BEAMS

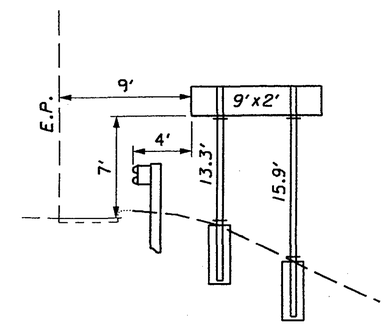

426 STA. 1080+60, WB US 30
S4X7.7 BEAMS

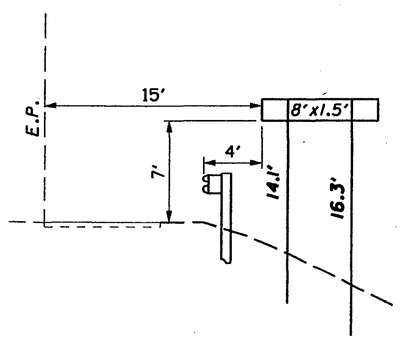

429 STA. 1076+01, WB US 30
2 - #3 POSTS

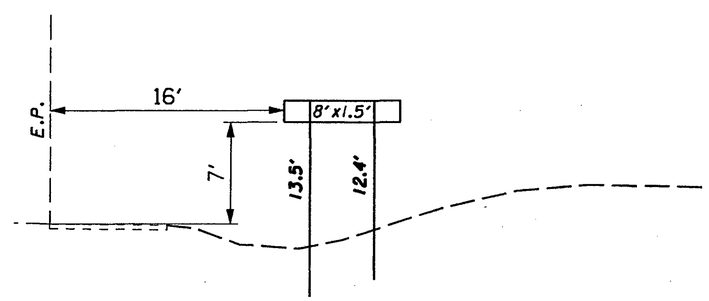

436 STA. 1056+50, WB US 30
2 - #3 POSTS

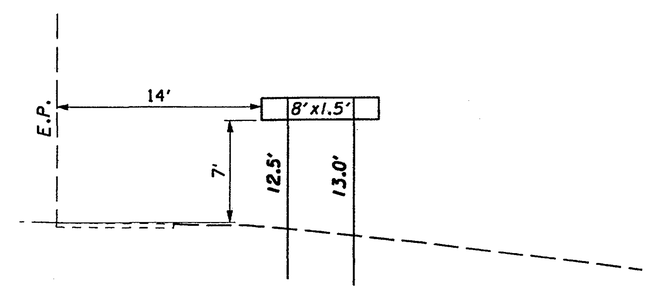

446 STA. 1051+10, WB US 30
2 - #3 POSTS

ELEVATION SHEET REVISED 9-1-04 BAH

CALCULATED
CHECKED

SIGN ELEVATIONS

WAY-30-18.88

DESIGN FILE: I:\projects\77267\W30Elevevations.dgn
WORKSTATION: eellison DATE: 9/2/2004

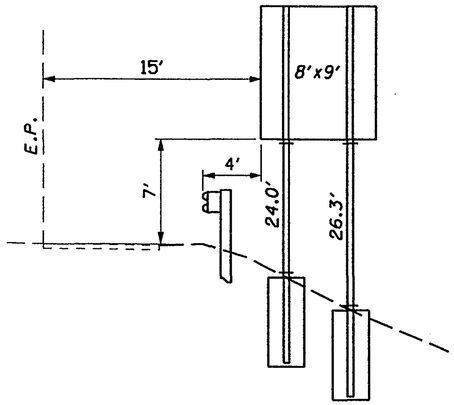

449 STA. 1048+34, WB US 30
W10X12 BEAMS

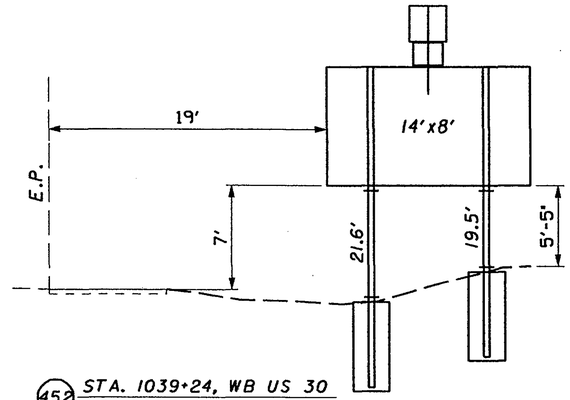

452 STA. 1039+24, WB US 30
W8X18 BEAMS

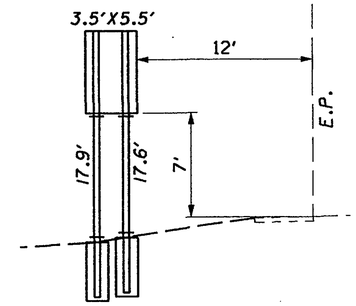

458 STA. 1029+94, WB MED US 30
S4X7.7 BEAMS

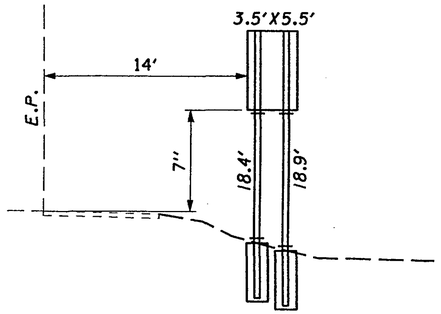

459 STA. 1029+94, WB US 30
S4X7.7 BEAMS

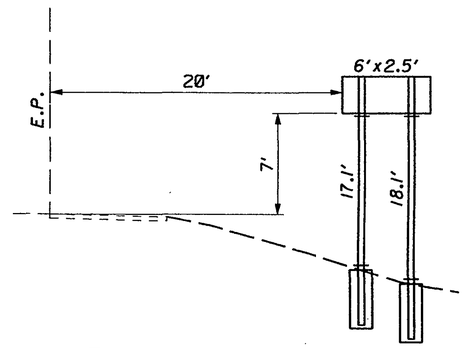

476 STA. 1009+03, WB US 30
S4X7.7 BEAMS

ELEVATION SHEET REVISED 9-1-04 BAH

CALCULATED
CHECKED

SIGN ELEVATIONS

WAY-30-18.88

DESIGN FILE: I:\projects\77267\W30Elevevations.dgn
WORKSTATION: eellison DATE: 9/2/2004

Plan Sheet Reference No.	Elevation Sheet No.	Sign Number	Location	Station	Code Number	Sign Size (Inches)	SIGNS: Ground Mounted Extrusheet	SIGNS: Overhead Extrusheet, As Per Plan	SIGNS: Flat Sheet	SIGNS: Flat Sheet, As Per Plan (Hinged)	Removal of Ground Mounted Support and Disposal: Post	Removal of Ground Mounted Support and Disposal: Beam	Removal of Ground Mounted Sign and Disposal: Minor	Removal of Ground Mounted Sign and Disposal: Major	Removal of Ground Mounted Sign and Reerection	Removal of Overhead Mounted Sign and Disposal	630 GROUND MOUNTED SUPPORTS: One-Way No. 3	No. 2 Post	No. 3 Post	No. 4 Post,As Per Plan	No. 6 Post	S4 x 7.7 Beam	W6 x 9 Beam	W10 x 12 Beam	W8 x 18 Beam	W10 x 22 Beam	W12 x 30 Beam		Sign Backing Assembly	Sign Attachment Assembly, As Per Plan		Ground Mounted Beam Support Foundation	Breakaway Beam Connection	Sign Data Collection	620 Reflectors, Type "D"	631 Removal Misc: Removal of Sign Lighting, As Per Plan	CALC BY _BAH_ CHK'D By _RJR_
							SQ FT				EACH							FOOT											Each	Each		Each	Each	Each	Each	Each	
9		1	USR 30, EB	1002+50	NO WORK																																
9		2	USR 30, EB	1008+10	NO WORK																																
9	30	3	USR 30, EB	1010+10	M1-5-30-2 M6-1L-24 D1-H6A-SPECIAL	30X30 24X18 168X96	112.0		6.3 3.0																	23.8 | 25.6			1			2	2	3			
9		4	USR 30, EB	1011+30 (MEDIAN)							2		1																					1			
9		5	USR 30, EB	1011+30							2		1																					1			
9		6	USR 30, EB	1013+00	I-H2D-40	40X20			5.6		1		1					12.5 | 12.5																2			
9		7	USR 30, EB	1013+70 (MEDIAN)	R6-1R-48	48X18			6.0									12.5 | 12.5																1			
9		8	USR 30, EB	1015+03 (MEDIAN)	W3-3-48	48X48			16.0				1																					2			
9		9	USR 30, EB	1015+03	W3-3-48	48X48			16.0				1																					2			
9	30	10	USR 30, EB	1017+22 (MEDIAN)	M2-H3-66	42X66	19.3															17.9 | 17.6									2	2	1			
9	30	11	USR 30, EB	1017+22	M2-H3-66	42X66	19.3				2			2								15.2 | 14.7									2	2	3			
9		12	USR 30, EB	1018+81 (MEDIAN)	R6-1R-48	48X18			6.0									12.5 | 12.5																1			
9		13	USR 30, EB	1021+13 (MEDIAN)	R6-1R-48	48X18			6.0									12.5 | 12.5																1			
18		14	USR 30, EB	1018+97	D9-2-24 I-H12-24 R3-H8CG-48	24X24 24X6 48X30			4.0 1.0 10.0		2		3						20.0 | 13.0															6			
18		15	USR 30, EB	1018+97 (MEDIAN)	R3-H8CG-48	48X30			10.0		2		1					13.5 | 13.0																2			
18		16	USR 30, EB	1020+57 (MEDIAN)	R5-1A-36	36X24			6.0		1		1					13.0 | 12.5																2			
18		17	USR 30, EB	1020+57	R5-1A-36	36X24			6.0									13.0 | 12.5																1			
18		18	USR 30, EB	1022+65 (MEDIAN)	R5-1-36 R6-1R-48	36X36 48X18			9.0 6.0		1		2				15.0		13.5															4			
18		19	USR 30, EB	1022+82	R5-1-36 R6-1L-48	36X36 48X18			9.0 6.0		1		2				15.0		13.5															4			
18		20	USR 30, EB	1023+01	M1-4-30-2 M6-4-24	30X30 24X18			6.3 3.0		1		2						14.5															4			
18		21	USR 30, EB	1023+41	M1-5-30-2 M6-1L-24	30X30 24X18			6.3 3.0		1		2						14.5															4			
18		21B	USR 30, WB	1023+42	R6-3-24	24X18			3.0									12.0																1			
18		22	USR 30, EB	1023+54 (MEDIAN)	R4-7B-36	36X48			12.0		1		1						14.5 | 14.5															2			
18		23	USR 30, EB	1025+03	M3-2-30 M1-4-30-2	30X15 30X30			3.1 6.3		1		2						14.5															4			
9	30	24	USR 30, EB	1028+25	E7-144	144X48	48.0					2		1									16.2 | 16.0								2	2	2			
9		25	USR 30, EB	1037+91 (MEDIAN)	R6-1R-48	48X18			6.0									12.5 | 12.5																1			
9		26	USR 30, EB	1040+88 (MEDIAN)							1		1																					1			
9		27	USR 30, EB	1040+88							1		1																					1			
9		28	USR 30, EB	1041+50 (MEDIAN)	W2-1-48	48X48			16.0										17.2 | 16.7															1			
9		29	USR 30, EB	1041+50	W2-1-48	48X48			16.0										16.7 | 17.2															1			
SUBTOTALS							198.5		212.7		20	2	23	3			30.0	214.5	200.3			65.4	32.2			49.4			1			8	8	59			40 / 56

SIGN SUB-SUMMARY - REFERENCE NUMBERS

WAY-30-18.88

SUB-SUMMARY SHEET REVISED 9-1-04 BAH

SIGN SUB-SUMMARY - REFERENCE NUMBERS

CALC BY _BAH_
CHK'D By _RJR_

Plan Sheet Reference No.	Elevation Sheet No.	Sign Number	Location	Station	Code Number	Sign Size (Inches)	SIGNS: Ground Mounted Extrusheet	SIGNS: Overhead Extrusheet, As Per Plan	SIGNS: Flat Sheet	SIGNS: Flat Sheet, As Per Plan (Hinged)	Removal of Ground Mounted Support and Disposal: Post	Removal of Ground Mounted Support and Disposal: Beam	Removal of Ground Mounted Sign and Disposal: Minor	Removal of Ground Mounted Sign and Disposal: Major	Removal of Ground Mounted Sign and Rerection	Removal of Overhead Mounted Sign and Disposal	630 GROUND MOUNTED SUPPORTS: One-Way No. 3	No. 2 Post	No. 3 Post	No. 4 Post, As Per Plan	No. 6 Post	S4 x 7.7 Beam	W6 x 9 Beam	W10 x 12 Beam	W8 x 18 Beam	W10 x 22 Beam	W12 x 30 Beam		Sign Backing Assembly	Sign Attachment Assembly, As Per Plan		Ground Mounted Beam Support Foundation	Breakaway Beam Connection	Sign Data Collection	620 Reflectors, Type "D"	631 Removal Misc: Removal of Sign Lighting, As Per Plan
							SQ FT				EACH						FOOT											Each	Each		Each	Each	Each	Each	Each
10		30	USR 30, EB	1046+40							2		1																				1		
10	30	31	USR 30, EB	1047+10	D3-H2-96	96X18	12.0												14.4 | 16.6														1		
19		32	USR 30, EB	1048+05	BRIDGE MARKER										1			11.5															1		
19		33	USR 30, EB	1049+00	R5-1A-36	36X24			6.0									13.0 | 12.5															1		
19		34	USR 30, EB	1049+00 (MEDIAN)	R5-1A-36	36X24			6.0									12.5 | 13.0															1		
19		35	USR 30, EB	1051+00 (MEDIAN)	R5-1-36	36X36			9.0									14.0 | 13.5															1		
19		36	USR 30, EB	1051+00	R5-1-36	36X36			9.0									13.5 | 14.0															1		
19		37	USR 30, EB	1051+15 (MEDIAN)	R6-1L-48 R6-1R-48	48X18 48X18			6.0 6.0									12.5 | 12.5															2		
19		38	USR 30, EB	1051+73	R1-1-36 R6-3-24	36X36 24X18			9.0 3.0		1		2						13.5														4		
19		39	USR 30, EB	1051+85	R6-1L-48 R6-1R-48	48X18 48X18			6.0 6.0									12.5 | 12.5															2		
19	30	40	USR 30, EB	1051+86	D3-H2-96	96X18	12.0				2		1						12.0 | 12.0														2		
19		41	USR 30, EB	1051+90 (MEDIAN)	R4-7B-36	36X48			12.0		2		1						14.5 | 14.5														2		
19		42	USR 30, EB	1052+99	M3-2-30 M1-4-30-2	30X15 30X30			3.1 6.3		1		2						14.5														4		
10		43	USR 30, EB	1055+80	D10-H4-12	12X12			1.0		1		1					12.0															2		
10	30	44	USR 30, EB	1055+80	D3-H4-132	132X60	55.0																	18.8 | 16.6							2	2	1		
10	30	45	USR 30, EB	1062+00	D1-H5A-156	156X36	39.0																14.5 | 13.8								2	2	1		
10		46	USR 30, EB	1063+00 (MEDIAN)	W2-2R-48	48X48			16.0										17.2 | 16.7														1		
10		47	USR 30, EB	1063+00	W2-2R-48	48X48			16.0										16.7 | 17.2														1		
10		48	USR 30, EB	1066+27 (MEDIAN)							1		1																				1		
10		49	USR 30, EB	1066+27							1		1																				1		
10		50	USR 30, EB	1066+48	NO WORK																														
10	30	51	USR 30, EB	1071+25	D3-H3A-108	108X24	18.0															14.5 | 16.6									2	2	1		
10		52	USR 30, EB	1071+40							2		2																				2		
20		53	USR 30, EB	1074+21	R3-H8CB-48 R5-1A-36	48X30 36X24			10.0 6.0		1		1						13.0 | 13.5														3		
20		54	USR 30, EB	1075+67	R3-H8CB-48	48X30			10.0		1		1						13.0 | 13.5														2		
20		55	USR 30, EB	1075+78	R5-1-36	36X36			9.0									13.5 | 14.0															1		
20		56	USR 30, EB	1076+74	R1-1-36 R6-3A-24	36X36 24X18			9.0 3.0		1		2						13.5														4		
20	31	57	USR 30, EB	1076+79	D3-H2A-96	96X18	12.0				2		2						12.0 | 12.5														3		
20		58	USR 30, EB	1076+84	R6-1L-48 R6-1R-48	48X18 48X18			6.0 6.0									12.5 | 12.5															2		
20		59	USR 30, EB	1077+07							1		2																				2		
SUBTOTALS							148.0		179.4		19		20		1			232.0	270.8			31.1	28.3	35.4							6	6	51		

WAY-30-18.88

41

56

SUB-SUMMARY SHEET REVISED 9-1-04 BAH

Plan Sheet Reference No.	Elevation Sheet No.	Sign Number	Location	Station	Code Number	Sign Size (Inches)	SIGNS: Ground Mounted Extrusheet	SIGNS: Overhead Extrusheet, As Per Plan	SIGNS: Flat Sheet	SIGNS: Flat Sheet, As Per Plan (Hinged)	Removal of Ground Mounted Support and Disposal: Post	Removal of Ground Mounted Support and Disposal: Beam	Removal of Ground Mounted Sign and Disposal: Minor	Removal of Ground Mounted Sign and Disposal: Major	Removal of Ground Mounted Sign and Rerection	Removal of Overhead Mounted Sign and Disposal	630 GROUND MOUNTED SUPPORTS: One-Way No. 3	No. 2 Post	No. 3 Post	No. 4 Post, As Per Plan	No. 6 Post	S4 x 7.7 Beam	W6 x 9 Beam	W10 x 12 Beam	W8 x 18 Beam	W10 x 22 Beam	W12 x 30 Beam		Sign Backing Assembly	Sign Attachment Assembly, As Per Plan		Ground Mounted Beam Support Foundation	Breakaway Beam Connection	Sign Data Collection	620 Reflectors, Type "D"	631 Removal Misc: Removal of Sign Lighting, As Per Plan
							SQ FT				EACH											FOOT						Each	Each		Each	Each	Each	Each	Each
20		60	USR 30, EB	1077+26 (MEDIAN)	R4-7-36	36X48			12.0		1		1							14.5													2		
20		61	USR 30, EB	1077+79	M3-2-30 M1-4-30-2	30X15 30X30			3.1 6.3										14.5														2		
10		62	USR 30, EB	1079+92	W8-H22-48	48X48				16.0	1		1						17.2 | 17.7														2		
10		62A	USR 30, EB	1081+31	OM-3R-12	12X36			3.0				1																				2		
10		62B	USR 30, EB	1085+95	OM-3R-12	12X36			3.0				1																				2		
10		63	USR 30, EB	1089+00	W2-2L-48	48X48			16.0										17.2 | 17.7														1		
10	31	64	USR 30, EB	1094+00	D3-H2A-144	144X18	18.0															15.0 | 19.2									2	2	1		
11		65	USR 30, EB	1096+39 (MEDIAN)	W2-2R-48	48X48			16.0										17.2 | 16.7														1		
11		66	USR 30, EB	1096+39	W2-2R-48	48X48			16.0										16.7 | 17.2														1		
21		67	USR 30, EB	1096+52	R5-1A-36	36X24			6.0									13.0 | 12.5															1		
21		68	USR 30, EB	1096+76	R5-1A-36	36X24			6.0									13.0 | 13.5															1		
21		69	USR 30, EB	1098+52 (MEDIAN)	R5-1-36	36X36			9.0									14.0 | 13.5															1		
21		70	USR 30, EB	1098+52	R5-1-36	36X36			9.0									14.0 | 14.5															1		
21		71	USR 30, EB	1098+87 (MEDIAN)	R6-1L-48 R6-1R-48	48X18 48X18			6.0 6.0									12.5 | 12.5															2		
21	31	72	USR 30, EB	1099+05	D3-H2A-144	144X18	18.0												13.2 | 13.7														1		
21		73	USR 30, EB	1099+15	R6-1L-48	48X18			6.0									12.5 | 12.5															1		
21		74	USR 30, EB	1099+20 (MEDIAN)	R4-7B-36	36X48			12.0										14.5 | 14.5														1		
11	31	75	USR 30, EB	1101+39	D3-H2A-84	84X18	10.5												15.0 | 17.0														1		
21		76	USR 30, EB	1103+53 (MEDIAN)	R5-1A-36	36X24			6.0									13.0 | 12.5															1		
21		77	USR 30, EB	1103+53	R5-1A-36	36X24			6.0									12.5 | 13.0															1		
21		78	USR 30, EB	1105+53 (MEDIAN)	R5-1-36	36X36			9.0									14.0 | 13.5															1		
21		79	USR 30, EB	1105+53	R5-1-36	36X36			9.0									13.5 | 14.0															1		
21		80	USR 30, EB	1105+81 (MEDIAN)	R6-1L-48 R6-1R-48	48X18 48X18			6.0 6.0									12.5 | 12.5															2		
21		81	USR 30, EB	1106+19	R1-1-36 R6-3A-24	36X36 24X18			9.0 3.0		1		1						13.5														3		
21		82	USR 30, EB	1106+22 (MEDIAN)	R4-7B-36	36X48			12.0										14.5 | 14.5														1		
21		83	USR 30, EB	1106+24	R6-1L-48 R6-1R-48	36X36 24X18			9.0 3.0									12.5 | 12.5															2		
21	31	84	USR 30, EB	1106+40	D3-H2A-84	84x18	10.5												13.3 | 14.1														1		
21		85	USR 30, EB	1107+40	M3-2-30 M1-4-30-2	30X15 30X30			3.1 6.3										14.5														2		
11		86	USR 30, EB	1108+36	D10-H4-12	12X12			1.0		1		1					12.0															2		
11		87	USR 30, EB	1108+72 (MEDIAN)	W2-2L-48	48X48			16.0										17.2 | 16.7														1		
11		88	USR 30, EB	1108+72	W2-2L-48	48X48			16.0										16.7 | 17.2														1		
11	31	89	USR 30, EB	1112+72	D3-H2A-144	144X18	18.0												13.1 | 11.9														1		
SUBTOTALS							75.0		255.8	16.0	4		6					326.0	417.2	14.5		34.2									2	2	44		

CALC BY _BAH_
CHK'D By _RJR_

SIGN SUB-SUMMARY - REFERENCE NUMBERS

WAY-30-18.88

42

56

SUB-SUMMARY SHEET REVISED 9-1-04 BAH

Plan Sheet Reference No.	Elevation Sheet No.	Sign Number	Location	Station	Code Number	Sign Size (Inches)	SIGNS: Ground Mounted Extrusheet	SIGNS: Overhead Extrusheet, As Per Plan	SIGNS: Flat Sheet	SIGNS: Flat Sheet, As Per Plan (Hinged)	Removal of Ground Mounted Support and Disposal: Post	Removal of Ground Mounted Support and Disposal: Beam	Removal of Ground Mounted Sign and Disposal: Minor	Removal of Ground Mounted Sign and Disposal: Major	Removal of Ground Mounted Sign and Reerection	Removal of Overhead Mounted Sign and Disposal	630 GROUND MOUNTED SUPPORTS: One-Way No. 3	No. 2 Post	No. 3 Post	No. 4 Post, As Per Plan	No. 6 Post	S4 x 7.7 Beam	W6 x 9 Beam	W10 x 12 Beam	W8 x 18 Beam	W10 x 22 Beam	W12 x 30 Beam		Sign Backing Assembly	Sign Attachment Assembly, As Per Plan		Ground Mounted Beam Support Foundation	Breakaway Beam Connection	Sign Data Collection	620 Reflectors, Type "D"	631 Removal Misc: Removal of Sign Lighting, As Per Plan
							SQ FT				EACH						FOOT											Each	Each		Each	Each	Each	Each	Each
22		90	USR 30, EB	1115+50 (MEDIAN)	R5-1A-36	36X24			6.0									13.0 | 12.5															1		
22		91	USR 30, EB	1115+50	R5-1A-36	36X24			6.0									12.5 | 13.0															1		
22		92	USR 30, EB	1117+50 (MEDIAN)	R5-1-36	36X36			9.0									14.0 | 13.5															1		
22		93	USR 30, EB	1117+50	R5-1-36	36X36			9.0									13.5 | 14.0															1		
22		94	USR 30, EB	1118+70 (MEDIAN)	R1-2-48 R6-1R-48	48X48X48 48X18			6.9 6.0								16.5 | 16.0															2		
22	31	95	USR 30, EB	1118+75	D3-H2A-144	144X18	18.0												13.5 | 12.3														1		
22		96	USR 30, EB	1119+10	R6-1L-48	48X18			6.0									12.5 | 12.5															1		
22		97	USR 30, EB	1120+50	M3-2-30 M1-4-30-2	30X15 30X30			3.1 6.3										14.5														2		
11		98	USR 30, EB	1124+35 (MEDIAN)							1		1																				1		
11		99	USR 30, EB	1124+35							1		1																				1		
11		100	USR 30, EB	1124+94 (MEDIAN)	W2-1-48	48X48			16.0										17.2 | 16.7														1		
11		101	USR 30, EB	1124+94	W2-1-48	48X48			16.0										16.7 | 17.2														1		
11		102	USR 30, EB	1128+58							1		1																				1		
11	31	103	USR 30, EB	1130+00	D3-H2-96	96X18	12.0				2		1						13.3 | 13.1														2		
23		104	USR 30, EB	1132+55 (MEDIAN)	R5-1A-36	36X24			6.0									13.0 | 12.5															1		
23		105	USR 30, EB	1132+55	R5-1A-36	36X24			6.0									12.5 | 13.0															1		
23		106	USR 30, EB	1134+40 (MEDIAN)	R5-1-36	36X36			9.0									14.0 | 13.5															1		
23		107	USR 30, EB	1134+40	R5-1-36	36X36			9.0									13.5 | 14.0															1		
23		108	USR 30, EB	1134+60 (MEDIAN)	R6-1L-48 R6-1R-48	48X18 48X18			6.0 6.0									12.5 | 12.5															2		
23		109	USR 30, EB	1134+64	NO WORK																															
23		110	USR 30, EB	1135+13	R1-1-36 R6-3-24	36X36 24X18			9.0 3.0		1		2						13.5														4		
23		111	USR 30, EB	1035+20	R6-1L-48 R6-1R-48	48X18 48X18			6.0 6.0									12.5 | 12.5															2		
23		112	USR 30, EB	1135+27 (MEDIAN)	R4-7B-36	36x48			12.0		1		1						14.5 | 14.5														2		
23	31	113	USR 30, EB	1135+35	D3-H2-96	96X18	12.0				2		1						13.7 | 14.8														2		
23		114	USR 30, EB	1136+35	M3-2-30 M1-4-30-2	30X15 30X30			3.1 6.3		1		2						14.5														4		
12		115	USR 30, EB	1149+80							1																									
12		116	USR 30, EB	1151+43 (MEDIAN)	W2-2L-48	48X48			16.0		1		1						17.2 | 16.7														2		
12		117	USR 30, EB	1151+43	W2-2L-48	48X48			16.0		1		1						16.7 | 17.2														2		
12		118	USR 30, EB	1152+31 (MEDIAN)	R6-1R-48	48X18			6.0									12.5 | 12.5															1		
12		119	USR 30, EB	1154+21 (MEDIAN)	R6-1R-48	48X18			6.0									12.5 | 12.5															1		
SUBTOTALS							42.0		221.7		13		12				32.5	337.0	287.8														43		

CALC BY _BAH_
CHK'D By _RJR_

SIGN SUB-SUMMARY - REFERENCE NUMBERS

WAY-30-18.88

43
56

SUB-SUMMARY SHEET REVISED 9-1-04 BAH

Plan Sheet Reference No.	Elevation Sheet No.	Sign Number	Location	Station	Code Number	Sign Size (Inches)	630 SIGNS: Ground Mounted Extrusheet	Overhead Extrusheet, As Per Plan	Flat Sheet	Flat Sheet, As Per Plan (Hinged)	Removal of Ground Mounted Support and Disposal: Post	Beam	Removal of Ground Mounted Sign and Disposal: Minor	Major	Removal of Ground Mounted Sign and Reerection	Removal of Overhead Mounted Sign and Disposal	GROUND MOUNTED SUPPORTS: One-Way No. 3	No. 2 Post	No. 3 Post	No. 4 Post, As Per Plan	No. 6 Post	S4 x 7.7 Beam	W6 x 9 Beam	W10 x 12 Beam	W8 x 18 Beam	W10 x 22 Beam	W12 x 30 Beam		Sign Backing Assembly	Sign Attachment Assembly, As Per Plan		Ground Mounted Beam Support Foundation	Breakaway Beam Connection	Sign Data Collection	620 Reflectors, Type "D"	631 Removal Misc: Removal of Sign Lighting, As Per Plan
							SQ FT				EACH							FOOT											Each	Each		Each	Each	Each	Each	Each
12		120	USR 30, EB	1155+15 (MEDIAN)	R6-1R-48	48X18			6.0									12.5 | 12.5																1		
12		121	USR 30, EB	1156+53 (MEDIAN)	R6-1R-48	48X18			6.0									12.5 | 12.5																1		
12	32	122	USR 30, EB	1157+40	D3-H2A-144	144X18	18.0				2		1						13.2 | 11.6															2		
24		123	USR 30, EB	1160+00 (MEDIAN)	R5-1A-36	36X24			6.0									13.0 | 12.5																1		
24		124	USR 30, EB	1160+00	R5-1A-36	36X24			6.0									12.5 | 13.0																1		
24		125	USR 30, EB	1161+42	D10-H4-12	12X12			1.0		1		1					12.0																2		
24		126	USR 30, EB	1161+65 (MEDIAN)	R5-1-36	36X36			9.0									14.0 | 13.5																1		
24		127	USR 30, EB	1161+65	R5-1-36	36X36			9.0									13.5 | 14.0																1		
24		128	USR 30, EB	1161+79 (MEDIAN)	R6-1L-48 R6-1R-48	48X18 48X18			6.0 6.0									12.5 | 12.5																2		
24		129	USR 30, EB	1162+25	M3-2-30 M1-4-30-2 M6-1L-24	30X15 30X30 24X18			3.1 6.3 3.0		1		3							15.5															6		
24	32	130	USR 30, EB	1162+30	D3-H2A-144	144X18	18.0				2		1						13.7 | 12.3															2		
24		131	USR 30, EB	1162+36	R6-1L-48	48X18			6.0									12.5 | 12.5																1		
24		132	USR 30, EB	1162+56 (MEDIAN)	R4-7B-36	36X48			12.0		2		1						14.5 | 14.5															2		
24		133	USR 30, EB	1163+81	M3-2-30 M1-4-30-2	30X15 30X30			3.1 6.3		1		2						14.5															4		
12		134	USR 30, WB	1174+00	NO WORK																															
12		135	USR 30, EB	1180+44 (MEDIAN)	W2-1-48	48X48			16.0		1		1						17.2 | 16.7															2		
12		136	USR 30, EB	1180+44	W2-1-48	48X48			16.0		1		1						16.7 | 17.2															2		
12		137	USR 30, EB	1182+70 (MEDIAN)	NO WORK																															
12		138	USR 30, EB	1182+70	NO WORK																															
12	32	139	USR 30, EB	1185+70	D3-H2-96	96X18	12.0				2		1						13.5 | 13.6															2		
12		140	USR 30, EB	1187+68	NO WORK																															
25		141	USR 30, EB	1188+87 (MEDIAN)	R5-1A-36	36X24			6.0									13.0 | 12.5																1		
25		142	USR 30, EB	1188+87	R5-1A-36	36X24			6.0									12.5 | 13.0																1		
25		143	USR 30, EB	1190+87 (MEDIAN)	R5-1-36 R2-1-36	36X36 36X48			9.0 12.0										15.0 | 14.5															2		
25		144	USR 30, EB	1190+87	R5-1-36 R2-1-36	36X36 36X48			9.0 12.0										14.5 | 15.0															2		
25		145	USR 30, EB	1190+94 (MEDIAN)	R1-2-48 R6-1R-48	48X48X48 48X18			6.9 6.0								16.5 | 16.0																	2		
25		146	USR 30, EB	1191+67 (MEDIAN)							1		1																					1		
25		147	USR 30, EB	1191+71 (MEDIAN)	R4-7B-36	36X48			12.0		2		1						14.5 | 14.5															2		
25		148	USR 30, EB	1191+97	R1-1-36 R6-3-24	36X36 24X18			9.0 3.0		1		2						13.5															4		
SUBTOTALS							48.0		217.7		17		16				32.5	269.0	290.7	15.5														48		

CALC BY _BAH_
CHK'D By _RJR_

SIGN SUB-SUMMARY - REFERENCE NUMBERS

WAY-30-18.88

44
56

SUB-SUMMARY SHEET REVISED 9-1-04 BAH

Plan Sheet Reference No.	Elevation Sheet No.	Sign Number	Location	Station	Code Number	Sign Size (Inches)	SIGNS: Ground Mounted Extrusheet	SIGNS: Overhead Extrusheet, As Per Plan	SIGNS: Flat Sheet	SIGNS: Flat Sheet, As Per Plan (Hinged)	Removal of Ground Mounted Support and Disposal: Post	Removal of Ground Mounted Support and Disposal: Beam	Removal of Ground Mounted Sign and Disposal: Minor	Removal of Ground Mounted Sign and Disposal: Major	Removal of Ground Mounted Sign and Reerection	Removal of Overhead Mounted Sign and Disposal	630 GROUND MOUNTED SUPPORTS: One-Way No. 3	No. 2 Post	No. 3 Post	No. 4 Post, As Per Plan	No. 6 Post	S4 x 7.7 Beam	W6 x 9 Beam	W10 x 12 Beam	W8 x 18 Beam	W10 x 22 Beam	W12 x 30 Beam		Sign Backing Assembly	Sign Attachment Assembly, As Per Plan		Ground Mounted Beam Support Foundation	Breakaway Beam Connection	Sign Data Collection	620 Reflectors, Type "D"	631 Removal Misc: Removal of Sign Lighting, As Per Plan
							SQ FT				EACH											FOOT							Each	Each		Each	Each	Each	Each	Each
25	32	149	USR 30, EB	1192+02	D3-H2-96	96X18	12.0												13.6 | 14.3															1		
25		150	USR 30, EB	1192+05	R6-1L-48 R6-1R-48	48X18 48X18			6.0 6.0									12.5 | 12.5																2		
25	32	151	USR 30, EB	1192+15	E8-H2-72	72x36	18.0				2	2	1						14.9 | 15.7															2		
25		152	USR 30, EB	1192+68							2		1																					1		
25		153	USR 30, EB	1193+53	M3-2-30 M1-4-30-2	30X15 30X30			3.1 6.3		1		2						14.5															4		
13	32	154	USR 30, EB	1201+12	M2-H2A-96	96X108	72.0					2		1											27.1 | 28.5							2	2	2		
13		155	USR 30, EB	1213+95	D10-H4-12	12X12			1.0		1		1					12.0																2		
13	32	156	USR 30, EB	1214+18	M1-5-30-2 M6-4-24 D1-SPECIAL	30X30 24X18 192X108	144.0		6.3 3.0																		29.2 | 27.4		1			2	2	3		
13		157	USR 30, EB	1219+38 (MEDIAN)	W3-3-48	48X48			16.0				1																					2		
13		158	USR 30, EB	1219+38	W3-3-48	48X48			16.0				1																					2		
13		159	USR 30, EB	1222+21							2		3																					3		
26		160	USR 30, EB	1223+65 (MEDIAN)	R3-H8DA-54 R5-1A-36	54X30 36X24			11.3 6.0		2		2						15.0 | 15.5															4		
26		161	USR 30, EB	1223+65 (MEDIAN)	R3-H8DA-54 R5-1A-36	54X30 36X24			11.3 6.0		2		2						15.0 | 15.5															4		
26		162	USR 30, EB	1226+39 (MEDIAN)	R3-H8DA-54	54X30			11.3		2		1						15.0 | 15.5															2		
26		163	USR 30, EB	1226+39	R3-H8DA-54	54X30			11.3		2		1						15.0 | 15.5															2		
26		164	USR 30, EB	1226+90 (MEDIAN)	R5-1-36 R6-1R-48	36X36 48X18			9.0 6.0		1		2				15.0		13.5															4		
26		165	USR 30, EB	1227+00	R5-1-36 R6-1R-48	36X36 48X18			9.0 6.0		1		2				15.0		13.5															4		
26		166	USR 30, EB	1227+22	M3-2-30 M1-4-30-2 M6-1L-24	30X15 30X30 24X18			3.1 6.3 3.0		1		3							15.5															6		
26		167	USR 30, EB	1227+87 (MEDIAN)	R4-7B-36	36X48			12.0		2		1						14.5 | 14.5															2		
26	32	168	USR 30, EB	1227+94	M2-H4-108	108X30	22.5				2		1									14.1 | 14.7										2	2	2		
26		169	USR 30, EB	1229+25	M3-2-30 M1-4-30-2	30X15 30X30			3.1 6.3		1		2						14.5															4		
13		170	USR 30, EB	1231+44	R2-1-36	36X48			12.0		2		1						14.5 | 15.0															2		
13		171	USR 30, EB	1235+50 (MEDIAN)	W2-2L-48	48X48			16.0										17.2 | 16.7															1		
13		172	USR 30, EB	1235+50	W2-2L-48	48X48			16.0										16.7 | 17.2															1		
13	32	173	USR 30, EB	1237+75	E7-132	132X48	44.0					2		1										23.6 | 24.9								2	2	2		
13	33	174	USR 30, EB	1240+18	D3-H2A-108	108X18	13.5				2		1						13.7 | 15.1															2		
27		175	USR 30, EB	1242+68 (MEDIAN)	R5-1A-36	36X24			6.0									13.0 | 12.5																1		
27		176	USR 30, EB	1242+68	R5-1A-36	36X24			6.0									12.5 | 13.0																1		
SUBTOTALS							326.0		240.4		28	6	29	2			30.0	88.0	391.6	15.5		28.8		48.5	55.6		56.6		1			8	8	68		

CALC BY _BAH_
CHK'D By _RJR_

SIGN SUB-SUMMARY - REFERENCE NUMBERS

WAY-30-18.88

45
56

SUB-SUMMARY SHEET REVISED 9-1-04 BAH

SIGN SUB-SUMMARY - REFERENCE NUMBERS

CALC BY _BAH_
CHK'D By _RJR_

Plan Sheet Reference No.	Elevation Sheet No.	Sign Number	Location	Station	Code Number	Sign Size (Inches)	SIGNS: Ground Mounted Extrusheet	SIGNS: Overhead Extrusheet, As Per Plan	SIGNS: Flat Sheet	SIGNS: Flat Sheet, As Per Plan (Hinged)	Removal of Ground Mounted Support and Disposal: Post	Removal of Ground Mounted Support and Disposal: Beam	Removal of Ground Mounted Sign and Disposal: Minor	Removal of Ground Mounted Sign and Disposal: Major	Removal of Ground Mounted Sign and Reerection	Removal of Overhead Mounted Sign and Disposal	630 GROUND MOUNTED SUPPORTS: One-Way No. 3	No. 2 Post	No. 3 Post	No. 4 Post, As Per Plan	No. 6 Post	S4 x 7.7 Beam	W6 x 9 Beam	W10 x 12 Beam	W8 x 18 Beam	W10 x 22 Beam	W12 x 30 Beam	Sign Backing Assembly	Sign Attachment Assembly, As Per Plan	Ground Mounted Beam Support Foundation	Breakaway Beam Connection	Sign Data Collection	620 Reflectors, Type "D"	631 Removal Misc: Removal of Sign Lighting, As Per Plan
							SQ FT				EACH						FOOT											Each	Each	Each	Each	Each	Each	Each
27		177	USR 30, EB	1244+68 (MEDIAN)	R5-1-36	36X36			9.0									14.0	13.5													1		
27		178	USR 30, EB	1244+68	R5-1-36	36X36			9.0									13.5	14.0													1		
27		179	USR 30, EB	1244+85 (MEDIAN)	R6-1L-48 R6-1R-48	48X18 48X18			6.0 6.0									12.5	12.5													2		
27		180	USR 30, EB	1245+48	R6-1L-48	48X18			6.0		1		1					12.5	12.5													2		
27	33	181	USR 30, EB	1245+48	D3-H2A-108	108X18	13.5				2		1						13.2	14.6												2		
27		182	USR 30, EB	1245+50 (MEDIAN)	R4-7B-36	36X48			12.0										14.5	14.5												1		
27		183	USR 30, EB	1246+48	M3-2-30 M1-4-30-2	30X15 30X30			3.1 6.3		1		2						14.5													4		
14		184	USR 30, EB	1249+18	R2-1-36	36X48			12.0		2		1						14.5	15.0												2		
14		185	USR 30, EB	1262+23 (MEDIAN)	W2-1-48	48X48			16.0		1		1						17.2	16.7												2		
14		186	USR 30, EB	1262+23	W2-1-48	48X48			16.0		1		1						16.7	17.2												2		
14		187	USR 30, EB	1266+55	D10-H4-12	12X12			1.0		1		1					12.0														2		
14	33	188	USR 30, EB	1267+08	D3-H2-96	96X18	12.0				2		1						14.1	14.1												2		
28		189	USR 30, EB	1269+65 (MEDIAN)	R5-1A-36	36X24			6.0									13.0	12.5													1		
28		190	USR 30, EB	1269+65	R5-1A-36	36X24			6.0									12.5	13.0													1		
28		191	USR 30, EB	1271+65 (MEDIAN)	R5-1-36	36X36			9.0									14.0	13.5													1		
28		192	USR 30, EB	1271+65	R5-1-36	36X36			9.0									13.5	14.0													1		
28		193	USR 30, EB	1271+83 (MEDIAN)	R6-1L-48 R6-1R-48	48X18 48X18			6.0 6.0									12.5	12.5													2		
28		194	USR 30, EB	1272+27	R1-1-36 R6-3-24	36X36 24X18			9.0 3.0		1		2						13.5													4		
28		195	USR 30, EB	1272+37	R6-1L-48 R6-1R-48	48X18 48X18			6.0 6.0									12.5	12.5													2		
28	33	196	USR 30, EB	1272+39	D3-H2-96	96X18	12.0				2		1									12.8	13.1							2	2	2		
28		197	USR 30, EB	1272+57 (MEDIAN)	R4-7B-36	36X48			12.0		2		1						14.5	14.5												2		
28		198	USR 30, EB	1273+84	M3-2-30 M1-4-30-2	30X15 30X30			3.1 6.3		1		2						14.5													4		
14		199	USR 30, EB	1272+77 (MEDIAN)							1		1																			1		
14		200	USR 30, EB	1272+77							1		1																			1		
14		201	USR 30, EB	1275+00 (MEDIAN)	W2-2L-48	48X48			16.0										17.2	16.7												1		
14		202	USR 30, EB	1275+00	W2-2L-48	48X48			16.0										16.7	17.2												1		
14	33	203	USR 30, EB	1277+00	D3-H2A-144	144X18	18.0												13.9	12.0												1		
28		204	USR 30, EB	1278+56 (MEDIAN)	R5-1A-36	36X24			6.0									13.0	12.5													1		
28		205	USR 30, EB	1278+56	R5-1A-36	36X24			6.0									12.5	13.0													1		
28		206	USR 30, EB	1280+56 (MEDIAN)	R5-1-36	36X36			9.0									14.0	13.5													1		
SUBTOTALS							55.5		242.8		19		17					351.5	347.5			25.9								2	2	51		

WAY-30-18.88

46

56

SUB-SUMMARY SHEET REVISED 9-1-04 BAH

SIGN SUB-SUMMARY - REFERENCE NUMBERS

Plan Sheet Reference No.	Elevation Sheet No.	Sign Number	Location	Station	Code Number	Sign Size (Inches)	SIGNS: Ground Mounted Extrusheet	SIGNS: Overhead Extrusheet, As Per Plan	SIGNS: Flat Sheet	SIGNS: Flat Sheet, As Per Plan (Hinged)	Removal of Ground Mounted Support and Disposal: Post	Removal of Ground Mounted Support and Disposal: Beam	Removal of Ground Mounted Sign and Disposal: Minor	Removal of Ground Mounted Sign and Disposal: Major	Removal of Ground Mounted Sign and Reerection	Removal of Overhead Mounted Sign and Disposal	630 GROUND MOUNTED SUPPORTS: One-Way No. 3	No. 2 Post	No. 3 Post	No. 4 Post, As Per Plan	No. 6 Post	S4 x 7.7 Beam	W6 x 9 Beam	W10 x 12 Beam	W8 x 18 Beam	W10 x 22 Beam	W12 x 30 Beam	Sign Backing Assembly	Sign Attachment Assembly, As Per Plan	Ground Mounted Beam Support Foundation	Breakaway Beam Connection	Sign Data Collection	620 Reflectors, Type "D"	631 Removal Misc: Removal of Sign Lighting, As Per Plan
							SQ FT				EACH							FOOT										Each	Each	Each	Each	Each	Each	Each
28		207	USR 30, EB	1280+56	R5-1-36	36X36			9.0									13.5 | 14.0														1		
28		208	USR 30, EB	1280+70 (MEDIAN)	R6-1L-48 R6-1R-48	48X18 48X18			6.0 6.0									12.5 | 12.5														2		
28	33	209	USR 30, EB	1281+20	D3-H2A-144	144X18	18.0												13.2 | 11.9													1		
28		210	USR 30, EB	1281+43	M3-2-30 M1-4-30-2 M6-1L-24	30X15 30X30 24X18			3.1 6.3 3.0		1		3							15.5												3		
28		211	USR 30, EB	1281+65 (MEDIAN)	R4-7B-36	36X24			12.0		2		1						14.5 | 14.5													2		
14	33	212	USR 30, EB	1283+00	E1-H1-132	132X96	88.0					2		1										19.7 | 19.0						2	2	2		
14		213	USR 30, EB	1289+57 (MEDIAN)	W2-1-48	48X48			16.0		1		1						17.2 | 16.7													2		
14		214	USR 30, EB	1289+57	W2-1-48	48X48			16.0		1		1						16.7 | 17.2													2		
14		215	USR 30, EB	1294+91							2		1																			1		
14	33	216	USR 30, EB	1295+21	D3-H2-144	144X18	18.0												13.0 | 12.7													1		
29		217	USR 30, EB	1296+92 (MEDIAN)	R5-1A-36	36X24			6.0									13.0 | 12.5														1		
29		218	USR 30, EB	1296+92	R5-1A-36	36X24			6.0									12.5 | 13.0														1		
29		219	USR 30, EB	1298+92 (MEDIAN)	R5-1-36	36X36			9.0									14.0 | 13.5														1		
29		220	USR 30, EB	1298+92	R5-1-36	36X36			9.0									13.5 | 14.0														1		
29		221	USR 30, EB	1299+03 (MEDIAN)	R6-1L-48 R6-1R-48	48X18 48X18			6.0 6.0									12.5 | 12.5														2		
29		222	USR 30, EB	1299+61	R1-1-36 R6-3-24	36X36 24X18			9.0 3.0		1		2						13.5													4		
29	33	223	USR 30, EB	1299+69	D3-H2-144	144X18	18.0				2		1						14.2 | 14.1													2		
29		224	USR 30, EB	1299+69	R6-1L-48 R6-1R-48	48X18 48X18			6.0 6.0									12.5 | 12.5														2		
29		225	USR 30, EB	1299+86 (MEDIAN)	R4-7B-36	36X48			12.0		2		1						14.5 | 14.5													2		
29		226	USR 30, EB	1300+61	M3-2-30 M1-4-30-2	30X15 30X30			3.1 6.3		1		2						14.5													4		
15	34	226A	USR 30, EB	1306+00	E1-H1-144	144X96	96.0																		27.1 | 29.0						2	2	1		
15		227	USR 30, EB	1314+83							1		1																			1		
15	34	228	USR 30, EB	1314+92	D9-H18-108	108X84	63.0				3			1										18.5 | 17.9						2	2	2		
15		229	USR 30, EB	1319+39	D10-H4-12	12X12			1.0		1		1					12.0														1		
15	34	230	USR 30, EB	1320+07	E7-H4-132	132X60	55.0					2		1										18.4 | 17.9						2	2	2		
15		231	USR 30, EB	1323+82							1		1																			1		
15	34	232	USR 30, EB	1323+82	E1-H3-180	180X96	120.0					2		1											21.6 | 19.8						2	2	2		
15	34	233	USR 30, EB	1331+92	E6-H2-192 E1-H3-180	192X120 180X96		160.0 120.0								2													6				4		2
15		234	USR 30, EB	1333+11								4	1																			1		
15	34	235	USR 30, EB	1333+24	E5-H1-72	72X60	30.0															15.2 | 15.0								2	2	1		
SUBTOTALS							506.0	280.0	165.8		19	10	17	4		2		220.5	232.9	15.5		30.2		111.4	41.4	56.1			6		12	12	53		2

CALC BY _BAH_
CHK'D By _RJR_

WAY-30-18.88

47

56

SUB-SUMMARY SHEET REVISED 9-1-04 BAH

Plan Sheet Reference No.	Elevation Sheet No.	Sign Number	Location	Station	Code Number	Sign Size (Inches)	SIGNS: Ground Mounted Extrusheet	SIGNS: Overhead Extrusheet, As Per Plan	SIGNS: Flat Sheet	SIGNS: Flat Sheet, As Per Plan (Hinged)	Removal of Ground Mounted Support and Disposal: Post	Removal of Ground Mounted Support and Disposal: Beam	Removal of Ground Mounted Sign and Disposal: Minor	Removal of Ground Mounted Sign and Disposal: Major	Removal of Ground Mounted Sign and Rearrection	Removal of Overhead Mounted Sign and Disposal	630 GROUND MOUNTED SUPPORTS: One-Way No. 3	No. 2 Post	No. 3 Post	No. 4 Post, As Per Plan	No. 6 Post	S4 x 7.7 Beam	W6 x 9 Beam	W10 x 12 Beam	W8 x 18 Beam	W10 x 22 Beam	W12 x 30 Beam		Sign Backing Assembly	Sign Attachment Assembly, As Per Plan		Ground Mounted Beam Support Foundation	Breakaway Beam Connection	Sign Data Collection	620 Reflectors, Type "D"	631 Removal Misc: Removal of Sign Lighting, As Per Plan
							SQ FT				EACH						FOOT											Each	Each		Each	Each	Each	Each	Each
15		236	USR 30, EB	151+91	M3-2-30 M1-4-30-2	30X15 30X30			3.1 6.3		1		2						14.5														4		
15		237	USR 30, EB	168+60 (MEDIAN)	R3-4-36 R3-H4A-24	30X30 24X30			6.3 5.0		1		2						13.5														4	2	
15		238	USR 30, EB	173+21	BRIDGE MARKER						2		1		1			8.0															2		
15		239	REMOVE SIGN FOUNDATIONS									2																							
15	35	240	USR 30, EB	173+66	R2-H2B-48	48X96	32.0				2		2								20.3	20.4											2		
15	35	241	USR 30, EB	173+65	E8-H3-60	60X48	20.0												14.8	14.9													1		
15		244	USR 30, WB	5+10 (STARK CO.)	R2-H5D-48	48X66			22.0		2		1						16.0	16.5													2		
15	35	245	USR 30, WB	0+26 (STARK CO.)	E8-H3-60	60X48	20.0												14.5	14.6													1		
15		246	USR 30, WB	173+06							2		1																				1		
15		247	USR 30, WB	171+05 (MEDIAN)	R2-1-48	48X60			20.0		2		1						16.0	15.5													2		
15		248	USR 30, WB	171+05	R2-1-48	48X60			20.0		2		1						15.5	16.0													2		
15		249	USR 30, WB	168+98 (MEDIAN)	R3-4-36 R3-H4A-24	36X36 24X30			9.0 5.0		1		2						13.5														4	2	
15	35	250	USR 30, WB	1331+00 (MEDIAN)	W2-H8-144	144X48	48.0																17.7	16.2							2	2	1		
15	35	250A	USR 30, WB	1331+00	W2-H8-144	144X48	48.0																17.2	19.3							2	2	1		
15		251	USR 30, WB	1323+75							1		1																				1		
15		252	USR 30, WB	1322+50	R2-1-36	36X48			12.0										14.5	15.0													1		
15		253	USR 30, WB	1319+32	D10-H4-12	12X12			1.0		1		1					12.0															2		
15		254	USR 30, WB	1310+06 (MEDIAN)							1		1																				1		
15		255	USR 30, WB	1310+06							1		1																				1		
15		256	USR 30, WB	1309+42 (MEDIAN)	W2-1-48	48X48			16.0										17.2	16.7													1		
15		257	USR 30, WB	1309+42	W2-1-48	48X48			16.0										16.7	17.2													1		
15	35	258	USR 30, WB	1304+50	D3-H2-144	144X18	18.0				2		1									16.0	16.1								2	2	2		
29		259	USR 30, WB	1302+93 (MEDIAN)	R5-1A-36	36X24			6.0									12.5	13.0														1		
29		260	USR 30, WB	1302+93	R5-1A-36	36X24			6.0									13.0	12.5														1		
29		261	USR 30, WB	1299+93 (MEDIAN)	R5-1-36	36X36			9.0									13.5	14.0														1		
29		262	USR 30, WB	1299+93	R5-1-36	36X36			9.0									14.0	13.5														1		
29		263	USR 30, WB	1299+86 (MEDIAN)	R6-1L-48 R6-1R-48	48X18 48X18			6.0 6.0									12.5	12.5														2		
29		264	USR 30, WB	1299+20	R1-1-36 R6-3-24	36X36 24X18			9.0 3.0		1		2						13.5														4		
29		265	USR 30, WB	1299+12	R6-1L-48 R6-1R-48	48X18 48X18			6.0 6.0									12.5	12.5														2		
SUBTOTALS							186.0		207.6		22	2	20		1			176.0	306.6		40.7	32.1	70.4								6	6	49	4	

CALC BY _BAH_
CHK'D By _RJR_

SIGN SUB-SUMMARY - REFERENCE NUMBERS

WAY-30-18.88

48

56

SUB-SUMMARY SHEET REVISED 9-1-04 BAH

Plan Sheet Reference No.	Elevation Sheet No.	Sign Number	Location	Station	Code Number	Sign Size (Inches)	SIGNS: Ground Mounted Extrusheet	SIGNS: Overhead Extrusheet, As Per Plan	SIGNS: Flat Sheet	SIGNS: Flat Sheet, As Per Plan (Hinged)	Removal of Ground Mounted Support and Disposal: Post	Removal of Ground Mounted Support and Disposal: Beam	Removal of Ground Mounted Sign and Disposal: Minor	Removal of Ground Mounted Sign and Disposal: Major	Removal of Ground Mounted Sign and Rerection	Removal of Overhead Mounted Sign and Disposal	630 GROUND MOUNTED SUPPORTS: One-Way No. 3	No. 2 Post	No. 3 Post	No. 4 Post, As Per Plan	No. 6 Post	S4 x 7.7 Beam	W6 x 9 Beam	W10 x 12 Beam	W8 x 18 Beam	W10 x 22 Beam	W12 x 30 Beam		Sign Backing Assembly	Sign Attachment Assembly, As Per Plan		Ground Mounted Beam Support Foundation	Breakaway Beam Connection	Sign Data Collection	620 Reflectors, Type "D"	631 Removal Misc: Removal of Sign Lighting, As Per Plan	CALC BY _BAH_ CHK'D By _RJR_
							SQ FT				EACH											FOOT						Each	Each		Each	Each	Each	Each	Each	SIGN SUB-SUMMARY - REFERENCE NUMBERS
29	35	266	USR 30, WB	1299+18	D3-H2-144	144X18	18.0				2		1						13.1 | 14.0														2		
29		267	USR 30, WB	1299+03 (MEDIAN)	R4-7B-36	36X48			12.0		2		1						14.5 | 14.5														2		
29		268	USR 30, WB	1297+68	M3-4-30 M1-4-30-2	30X15 30X30			3.1 6.3										14.5														2		
14		269	USR 30, WB	1292+51 (MEDIAN)							1		1																				1		
14		270	USR 30, WB	1292+51							1		1																				1		
14		271	USR 30, WB	1291+50 (MEDIAN)	W2-2R-48	48X48			16.0										17.2 | 16.7														1		
14		272	USR 30, WB	1291+50	W2-2R-48	48X48			16.0										16.7 | 17.2														1		
14	35	273	USR 30, WB	1285+83	D3-H2A-144	144X18	18.0				2		1									16.1 | 15.5									2	2	2		
14		274	USR 30, WB	1283+70 (MEDIAN)	W2-1-48 R5-1A-36	48X48 36X24			16.0 6.0										17.2 | 16.7														2		
14		275	USR 30, WB	1283+70	W2-1-48 R5-1A-36	48X48 36X24			16.0 6.0										16.7 | 17.2														2		
28		276	USR 30, WB	1281+70 (MEDIAN)	R5-1-36	36X36			9.0									14.0 | 13.5															1		
28		277	USR 30, WB	1281+70	R5-1-36	36X36			9.0									13.5 | 14.0															1		
28		278	USR 30, WB	1281+58 (MEDIAN)	R6-1L-48 R6-1R-48	48X18 48X18			6.0 6.0									12.5 | 12.5															2		
28		279	USR 30, WB	1280+71	R1-1-36 R6-3A-24	36X36 24X18			9.0 3.0		1		1						13.5														3		
28		280	USR 30, WB	1280+70 (MEDIAN)	R4-7B-36	36X48			12.0										14.5 | 14.5														1		
28		281	USR 30, WB	1280+69	M4-6-30 M4-1A-30 M1-4-30-2	30X15 30X15 30X30			3.1 3.1 6.3		1		3							15.5														6		
28	36	282	USR 30, WB	1280+60	D3-H2A-144	144X18	18.0				2		1						12.5 | 13.8														2		
28		283	USR 30, WB	1279+83	NO WORK																															
28		284	USR 30, WB	1279+37	M3-4-30 M1-4-30-2	30X15 30X30			3.1 6.3		1		2						14.5														4		
14		285	USR 30, WB	1280+37 (MEDIAN)							1		1																				1		
14		286	USR 30, WB	1280+37							1		1																				1		
14	36	287	USR 30, WB	1277+37	D3-H2-96	96X18	12.0				2		1						14.2 | 14.4														2		
28		288	USR 30, WB	1274+73 (MEDIAN)	R5-1A-36	36X24			6.0									13.0 | 12.5															1		
28		289	USR 30, WB	1274+73	R5-1A-36	36X24			6.0									12.5 | 13.0															1		
28		290	USR 30, WB	1272+73 (MEDIAN)	R5-1-36	36X36			9.0									14.0 | 13.5															1		
28		291	USR 30, WB	1272+73	R5-1-36	36X36			9.0									13.5 | 14.0															1		
28		292	USR 30, WB	1272+57 (MEDIAN)	R6-1L-48 R6-1R-48	48X18 48X18			6.0 6.0									12.5 | 12.5															2		
28		293	USR 30, WB	1272+10	R1-1-36 R6-3-24	36X36 24X18			9.0 3.0		1		2						13.5														4		
SUBTOTALS							66.0		227.3		18		17					211.0	331.6	15.5		31.6									2	2	50			WAY-30-18.88

SUB-SUMMARY SHEET REVISED 9-1-04 BAH

Plan Sheet Reference No.	Elevation Sheet No.	Sign Number	Location	Station	Code Number	Sign Size (Inches)	SIGNS: Ground Mounted Extrusheet	SIGNS: Overhead Extrusheet, As Per Plan	SIGNS: Flat Sheet	SIGNS: Flat Sheet, As Per Plan (Hinged)	Removal of Ground Mounted Support and Disposal: Post	Removal of Ground Mounted Support and Disposal: Beam	Removal of Ground Mounted Sign and Disposal: Minor	Removal of Ground Mounted Sign and Disposal: Major	Removal of Ground Mounted Sign and Reerection	Removal of Overhead Mounted Sign and Disposal	630 GROUND MOUNTED SUPPORTS: One-Way No. 3	No. 2 Post	No. 3 Post	No. 4 Post, As Per Plan	No. 6 Post	S4 x 7.7 Beam	W6 x 9 Beam	W10 x 12 Beam	W8 x 18 Beam	W10 x 22 Beam	W12 x 30 Beam		Sign Backing Assembly	Sign Attachment Assembly, As Per Plan		Ground Mounted Beam Support Foundation	Breakaway Beam Connection	620 Sign Data Collection	631 Reflectors, Type "D"	Removal Misc: Removal of Sign Lighting, As Per Plan
							SQ FT				EACH											FOOT							Each	Each		Each	Each	Each	Each	Each
28	36	294	USR 30, WB	1272+03	D3-H2-96	96X18	12.0				2		1						12.1 | 12.4															2		
28		295	USR 30, WB	1272+02	R6-1L-48 R6-1R-48	48X18 48X18			6.0 6.0									12.5 | 12.5																2		
28		296	USR 30, WB	1271+83 (MEDIAN)	R4-7B-36	36X48			12.0		2		1						14.5 | 14.5															2		
28		297	USR 30, WB	1271+43	M3-4-30 M1-4-30-2	30X15 30X30			3.1 6.3		1		2						14.5															4		
14		298	USR 30, WB	1266+55	D10-H4-12	12X12			1.0		1		1					12.0																2		
14		299	USR 30, WB	1255+50 (MEDIAN)	W2-2R-48	48X48			16.0										17.2 | 16.7															1		
14		300	USR 30, WB	1255+50	W2-2R-48	48X48			16.0										16.7 | 17.2															1		
14	36	301	USR 30, WB	1253+56	M2-H2A-96	96X108	72.0					2		1										25.4 | 25.7								2	2	2		
14		302	USR 30, WB	1252+50 (MEDIAN)	NO WORK																															
14		303	USR 30, WB	1252+50	NO WORK																															
14	36	304	USR 30, WB	1250+18	D3-H2A-108	108X18	13.5				2		1						13.7 | 13.4															2		
27		305	USR 30, WB	1247+73 (MEDIAN)	R5-1A-36	36X24			6.0									13.0 | 12.5																1		
27		306	USR 30, WB	1247+73	R5-1A-36	36X24			6.0									12.5 | 13.0																1		
27		307	USR 30, WB	1245+73 (MEDIAN)	R5-1-36 R2-1-36	36X36 36X48			9.0 12.0										15.0 | 14.5															2		
27		308	USR 30, WB	1245+73	R5-1-36 R2-1-36	36X36 36X48			9.0 12.0										14.5 | 15.0															2		
27	36	309	USR 30, WB	1245+73	E8-H2-72	72X36	18.0				2		1									16.1 | 16.5										2	2	2		
27		310	USR 30, WB	1245+44 (MEDIAN)	R6-1L-48 R6-1R-48	48X18 48X18			6.0 6.0									12.5 | 12.5																2		
27		311	USR 30, WB	1244+99	R1-1-36 R6-3A-24	36X36 24X18			9.0 3.0		1		1						13.5															3		
27		312	USR 30, WB	1244+87 (MEDIAN)	R4-7B-36	36X48			12.0										14.5 | 14.5															1		
27		313	USR 30, WB	1244+82	R6-1L-48 R6-1R-48	48X18 48X18			6.0 6.0									12.5 | 12.5																2		
27	36	314	USR 30, WB	1244+82	D3-H2A-108	108X18	13.5				2		1						14.1 | 15.1															2		
27		315	USR 30, WB	1244+15							1		1																					1		
27		316	USR 30, WB	1243+75	M3-4-30 M1-4-30-2	30X15 30X30			3.1 6.3										14.5															2		
13		317	USR 30, WB	1242+86							2		1																					1		
13	36	318	USR 30, WB	1239+00	M1-5-30-2 M6-4-24 D1-SPECIAL	30X30 24X18 192X108	144.0		6.3 3.0																	28.8 | 28.7		1			2	2	3		
13		319	USR 30, WB	1235+30 (MEDIAN)	W3-3-48	48X48			16.0				1																					1		
13		320	USR 30, WB	1235+30	W3-3-48	48X48			16.0				1																					1		
13		321	USR 30, WB	1232+52							2		3																					3		
SUBTOTALS							273.0		219.0		18	2	16	1				138.0	308.1			32.6		51.1			57.5		1			6	6	48		

CALC BY _BAH_
CHK'D By _RJR_

SIGN SUB-SUMMARY - REFERENCE NUMBERS

WAY-30-18.88

50

56

SUB-SUMMARY SHEET REVISED 9-1-04 BAH

Plan Sheet Reference No.	Elevation Sheet No.	Sign Number	Location	Station	Code Number	Sign Size (Inches)	SIGNS: Ground Mounted Extrusheet	SIGNS: Overhead Extrusheet, As Per Plan	SIGNS: Flat Sheet	SIGNS: Flat Sheet, As Per Plan (Hinged)	Removal of Ground Mounted Support and Disposal: Post	Removal of Ground Mounted Support and Disposal: Beam	Removal of Ground Mounted Sign and Disposal: Minor	Removal of Ground Mounted Sign and Disposal: Major	Removal of Ground Mounted Sign and Reerection	Removal of Overhead Mounted Sign and Disposal	630 GROUND MOUNTED SUPPORTS: One-Way No. 3	No. 2 Post	No. 3 Post	No. 4 Post, As Per Plan	No. 6 Post	S4 x 7.7 Beam	W6 x 9 Beam	W10 x 12 Beam	W8 x 18 Beam	W10 x 22 Beam	W12 x 30 Beam	Sign Backing Assembly	Sign Attachment Assembly, As Per Plan	Ground Mounted Beam Support Foundation	Breakaway Beam Connection	620 Sign Data Collection	631 Reflectors, Type "D"	631 Removal Misc: Removal of Sign Lighting, As Per Plan
							SQ FT				EACH											FOOT						Each	Each		Each	Each	Each	Each	Each
26		322	USR 30, WB	1230+60 (MEDIAN)	R3-H8DA-54 R5-1A-36	54X30 36X24			11.3 6.0		2		2						13.5 | 14.0													4		
26		323	USR 30, WB	1230+60	R3-H8DA-54 R5-1A-36	54X30 36X24			11.3 6.0		2		2						14.0 | 13.5													4		
26		324	USR 30, WB	1227+98 (MEDIAN)	R3-H8DA-54	54X30			11.3		2		1						13.5 | 14.0													2		
26		325	USR 30, WB	1227+94	R3-H8DA-54	54X30			11.3		2		1						14.0 | 13.5													2		
26		326	USR 30, WB	1227+87 (MEDIAN)	R5-1-36 R6-1R-48	36X36 48X18			9.0 6.0		1		2				15.0		13.5													4		
26		327	USR 30, WB	1227+82	R5-1-36 R6-1L-48	36X36 48X18			9.0 6.0		1		2				15.0		13.5													4		
26		328	USR 30, WB	1227+60	M3-4-30 M1-4-30-2 M6-1L-24	30X15 30X30 24X18			3.1 6.3 3.0		1		3							15.5													6		
26		329	USR 30, WB	1226+90 (MEDIAN)	R4-7B-36	36X48			12.0		2		1						14.5 | 14.5													2		
26	36	330	USR 30, WB	1226+62	M2-H4-108	108X30	22.5				2		1									14.9 | 15.8								2	2	2		
26		331	USR 30, WB	1225+82	M3-4-30 M1-4-30-2	30X15 30X30			3.1 6.3		1		2						14.5													4		
13		332	USR 30, WB	1224+52	R2-1-36	36X48			12.0		2		1						14.5 | 15.0													2		
13	37	333	USR 30, WB	1217+00	E7-144	144x48	48.0					2		1									20.4 | 21.7							2	2	2		
13		334	USR 30, WB	1213+90	D10-H4-12	12X12			1.0		1		1					12.0														2		
13		335	USR 30, WB	1201+90 (MEDIAN)	W2-1-48	48X48			16.0		1		1						17.2 | 16.7													2		
13		336	USR 30, WB	1201+90	W2-1-48	48X48			16.0		1		1						16.7 | 17.2													2		
13	37	337	USR 30, WB	1196+66	D3-H2-96	96X18	12.0				2		1						13.9 | 13.8													2		
12		338	USR 30, WB	1194+64	NO WORK																													
25		339	USR 30, WB	1193+80 (MEDIAN)	R5-1A-36	36X24			6.0									13.0 | 12.5														1		
25		340	USR 30, WB	1193+80	R5-1A-36	36X24			6.0									12.5 | 13.0														1		
25		341	USR 30, WB	1191+85 (MEDIAN)	R5-1-36	36X36			9.0									14.0 | 13.5														1		
25		342	USR 30, WB	1191+85	R5-1-36	36X36			9.0									13.5 | 14.0														1		
25		343	USR 30, WB	1191+73 (MEDIAN)	R1-2-48 R6-1R-48	48X48X48 48X18			6.9 6.0								16.5 | 16.0															2		
25		344	USR 30, WB	1190+93 (MEDIAN)							1		1																			1		
25		345	USR 30, WB	1190+84 (MEDIAN)	R4-7B-36	36X48			12.0		2		1						14.5 | 14.5													2		
25		346	USR 30, WB	1190+68	R1-1-36 R6-3-24	36X36 24X18			9.0 3.0		1		2						13.5													4		
25		347	USR 30, WB	1190+60	R6-1L-48 R6-1R-48	48X18 48X18			6.0 6.0									12.5 | 12.5														2		
25	37	348	USR 30, WB	1190+38	D3-H2-96	96X18	12.0				2		1						13.8 | 15.0													2		
25		349	USR 30, WB	1189+38	M3-4-30 M1-4-30-2	30X15 30X30			3.1 6.3										14.5													2		
SUBTOTALS							94.5		254.1		29	2	27	1			62.5	143.0	391.3	15.5		30.7		42.1						4	4	65		

CALC BY _BAH_
CHK'D By _RJR_

SIGN SUB-SUMMARY - REFERENCE NUMBERS

WAY-30-18.88

51
56

SUB-SUMMARY SHEET REVISED 9-1-04 BAH

Plan Sheet Reference No.	Elevation Sheet No.	Sign Number	Location	Station	Code Number	Sign Size (Inches)	SIGNS: Ground Mounted Extrusheet	SIGNS: Overhead Extrusheet, As Per Plan	SIGNS: Flat Sheet	SIGNS: Flat Sheet, As Per Plan (Hinged)	Removal of Ground Mounted Support and Disposal: Post	Removal of Ground Mounted Support and Disposal: Beam	Removal of Ground Mounted Sign and Disposal: Minor	Removal of Ground Mounted Sign and Disposal: Major	Removal of Ground Mounted Sign and Reerection	Removal of Overhead Mounted Sign and Disposal	630 GROUND MOUNTED SUPPORTS: One-Way No. 3	No. 2 Post	No. 3 Post	No. 4 Post, As Per Plan	No. 6 Post	S4 x 7.7 Beam	W6 x 9 Beam	W10 x 12 Beam	W8 x 18 Beam	W10 x 22 Beam	W12 x 30 Beam		Sign Backing Assembly	Sign Attachment Assembly, As Per Plan		Ground Mounted Beam Support Foundation	Breakaway Beam Connection	620 Sign Data Collection	Reflectors, Type "D"	631 Removal Misc: Removal of Sign Lighting, As Per Plan
							SQ FT				EACH						FOOT											Each	Each		Each	Each	Each	Each	Each
12		350	USR 30, WB	1187+84							2		1																				1		
12		351	USR 30, WB	1187+38	R2-1-36	36X48			12.0										14.5 | 15.0														1		
12		352	USR 30, WB	1173+00 (MEDIAN)	W2-2R-48	48X48			16.0		2		1						17.2 | 16.7														2		
12		353	USR 30, WB	1173+00	W2-2R-48	48X48			16.0		2		1						16.7 | 17.2														2		
12		354	USR 30, WB	1169+01							2		1																				1		
12	37	355	USR 30, WB	1167+15	D3-H2A-144	144X18	18.0												13.6 | 14.3														1		
24		356	USR 30, WB	1165+15 (MEDIAN)	R5-1A-36	36X24			6.0									13.0 | 12.5															1		
24		357	USR 30, WB	1165+15	R5-1A-36	36X24			6.0									12.5 | 13.0															1		
24		358	USR 30, WB	1163+15 (MEDIAN)	R5-1-36	36X36			9.0									14.0 | 13.5															1		
24		359	USR 30, WB	1163+15	R5-1-36	36X36			9.0									13.5 | 14.0															1		
24		360	USR 30, WB	1162+59 (MEDIAN)	R6-1L-48 R6-1R-48	48X18 48X18			6.0 6.0									12.5 | 12.5															2		
24		361	USR 30, WB	1162+24	M4-6-30 M4-1A-30 M1-4-30-2	30X15 30X15 30X30			3.1 3.1 6.3		1		3							15.5													6		
24		362	USR 30, WB	1162+19	R1-1-36 R6-3A-24	36X36 24X18			9.0 3.0		1		2						13.5														4		
24		363	USR 30, WB	1161+97	R6-1L-48 R6-1R-48	48X18 48X18			6.0 6.0									12.5 | 12.5															2		
24	37	364	USR 30, WB	1161+88	D3-H2A-144	144X18	18.0												12.1 | 12.2														1		
24		365	USR 30, WB	1161+90 (MEDIAN)	M3-4-30 M1-4-30-2 M6-1R-24	30X15 30X30 24X18			3.1 6.3 3.0		1		3							15.8													6		
24		366	USR 30, WB	1162+79 (MEDIAN)	R4-7B-36	36X48			12.0										14.5 | 14.5														1		
24		367	USR 30, WB	1161+35	M3-4-30 M1-4-30-2	30X15 30X30			3.1 6.3		1		2						14.5														4		
11		368	USR 30, WB	1145+00 (MEDIAN)	W2-1-48	48X48			16.0		1		1						17.2 | 16.7														2		
11		369	USR 30, WB	1145+00	W2-1-48	48X48			16.0		1		1						16.7 | 17.2														2		
11	37	370	USR 30, WB	1140+00	D3-H2-96	96X18	12.0				2		1						14.4 | 14.6														2		
23		371	USR 30, WB	1137+40 (MEDIAN)	R5-1A-36	36X24			6.0									13.0 | 12.5															1		
23		372	USR 30, WB	1137+40	R5-1A-36	36X24			6.0									12.5 | 13.0															1		
23		373	USR 30, WB	1135+40 (MEDIAN)	R5-1-36	36X36			9.0									14.0 | 13.5															1		
23		374	USR 30, WB	1135+40	R5-1-36	36X36			9.0									13.5 | 14.0															1		
23		375	USR 30, WB	1135+27 (MEDIAN)	R6-1L-48 R6-1R-48	48X18 48X18			6.0 6.0									12.5 | 12.5															2		
23		376	USR 30, WB	1134+78	R1-1-36 R6-3-24	36X36 24X18			9.0 3.0		1		2						13.5														4		
23		377	USR 30, WB	1134+64	R6-1L-48 R6-1R-48	48X18 48X18			6.0 6.0									12.5 | 12.5															2		
SUBTOTALS							48.0		254.3		17		19					312.0	316.8	31.3													56		

CALC BY _BAH_
CHK'D By _RJR_

SIGN SUB-SUMMARY - REFERENCE NUMBERS

WAY-30-18.88

52
56

SUB-SUMMARY SHEET REVISED 9-1-04 BAH

SIGN SUB-SUMMARY - REFERENCE NUMBERS

CALC BY _BAH_
CHK'D By _RJR_

Plan Sheet Reference No.	Elevation Sheet No.	Sign Number	Location	Station	Code Number	Sign Size (Inches)	SIGNS: Ground Mounted Extrusheet	SIGNS: Overhead Extrusheet, As Per Plan	SIGNS: Flat Sheet	SIGNS: Flat Sheet, As Per Plan (Hinged)	Removal of Ground Mounted Support and Disposal: Post	Removal of Ground Mounted Support and Disposal: Beam	Removal of Ground Mounted Sign and Disposal: Minor	Removal of Ground Mounted Sign and Disposal: Major	Removal of Ground Mounted Sign and Reerection	Removal of Overhead Mounted Sign and Disposal	630 GROUND MOUNTED SUPPORTS: One-Way No. 3	No. 2 Post	No. 3 Post	No. 4 Post, As Per Plan	No. 6 Post	S4 x 7.7 Beam	W6 x 9 Beam	W10 x 12 Beam	W8 x 18 Beam	W10 x 22 Beam	W12 x 30 Beam	Sign Backing Assembly	Sign Attachment Assembly, As Per Plan	Ground Mounted Beam Support Foundation	Breakaway Beam Connection	Sign Data Collection	620 Reflectors, Type "D"	631 Removal Misc: Removal of Sign Lighting, As Per Plan
							SQ FT				EACH							FOOT										Each	Each		Each	Each	Each	Each	Each
23		378	USR 30, WB	1134+61 (MEDIAN)	R4-7B-36	36X48			12.0		2		1						14.5 14.5														2		
23	37	379	USR 30, WB	1134+55	D3-H2-96	96X18	12.0				2		1						13.3 14.7														2		
23		380	USR 30, WB	1133+96	M3-4-30 M1-4-30-2	30X15 30X30			3.1 6.3		1		2						14.5														4		
11		381	USR 30, WB	1129+10							1																								
11		382	USR 30, WB	1128+93 (MEDIAN)	R6-1R-48	48X18			6.0									12.5 12.5															1		
11		383	USR 30, WB	1127+72 (MEDIAN)	W2-2R-48	48X48			16.0										17.2 16.7														1		
11		384	USR 30, WB	1127+72	W2-2R-48	48X48			16.0										16.7 17.2														1		
11	37	385	USR 30, WB	1122+72	D3-H2A-144	144X18	18.0												13.5 12.1														1		
22		386	USR 30, WB	1120+19 (MEDIAN)	R5-1A-36	36X24			6.0									13.0 12.5															1		
22		387	USR 30, WB	1120+19	R5-1A-36	36X24			6.0									12.5 13.0															1		
22		388	USR 30, WB	1118+19 (MEDIAN)	R5-1-36	36X36			9.0									14.0 13.5															1		
22		389	USR 30, WB	1118+19	R5-1-36	36X36			9.0									13.5 14.0															1		
22		390	USR 30, WB	1117+62	R1-1-36 R6-3A-24	36X36 24X18			9.0 3.0		1		1						13.5														3		
22		391	USR 30, WB	1117+58	R6-1L-48 R6-1R-48	48X18 48X18			6.0 6.0									12.5 12.5															2		
22		392	USR 30, WB	1117+57 (MEDIAN)	R1-2-48 R6-1R-48	48X48X48 48X18			6.9 6.0		1		1				16.5 16.0																3		
22	37	393	USR 30, WB	1117+54	D3-H2A-144	144X18	18.0												11.1 10.7														1		
22		394	USR 30, WB	1116+72	M3-4-30 M1-4-30-2	30X15 30X30			3.1 6.3										14.5														2		
11		395	USR 30, WB	1115+39 (MEDIAN)	W2-2L-48	48X48			16.0										17.2 16.7														1		
11		396	USR 30, WB	1115+39	W2-2L-48	48X48			16.0										16.7 17.2														1		
11	38	397	USR 30, WB	1111+39	D3-H2A-84	84X18	10.5												13.4 14.4														1		
11		398	USR 30, WB	1109+00 (MEDIAN)	W2-2R-48 R5-1A-36	48X48 36X24			16.0 6.0										17.2 16.7														2		
11		399	USR 30, WB	1109+00	W2-2R-48 R5-1A-36	48X48 36X24			16.0 6.0										16.7 17.2														2		
11		400	USR 30, WB	1108+36	D10-H4-12	12X12			1.0		1		1					12.0															2		
21		401	USR 30, WB	1106+50 (MEDIAN)	R5-1-36	36X36			9.0									14.0 13.5															1		
21		402	USR 30, WB	1106+50	R5-1-36	36X36			9.0									13.5 14.0															1		
21		403	USR 30, WB	1106+23 (MEDIAN)	R6-1L-48 R6-1R-48	48X18 48X18			6.0 6.0									12.5 12.5															2		
21		404	USR 30, WB	1105+83 (MEDIAN)	R4-7B-36	36X48			12.0										14.5 14.5														1		
21	38	405	USR 30, WB	1105+76	D3-H2A-84	84X18	10.5												12.8 13.0														1		
21		406	USR 30, WB	1105+64	R6-1L-48	48X18			6.0									12.5 12.5															1		
SUBTOTALS							69.0		260.7		9		7				32.5	273.0	432.9														43		

WAY-30-18.88

53

56

SUB-SUMMARY SHEET REVISED 9-1-04 BAH

Plan Sheet Reference No.	Elevation Sheet No.	Sign Number	Location	Station	Code Number	Sign Size (Inches)	SIGNS: Ground Mounted Extrusheet	SIGNS: Overhead Extrusheet, As Per Plan	SIGNS: Flat Sheet	SIGNS: Flat Sheet, As Per Plan (Hinged)	Removal of Ground Mounted Support and Disposal: Post	Removal of Ground Mounted Support and Disposal: Beam	Removal of Ground Mounted Sign and Disposal: Minor	Removal of Ground Mounted Sign and Disposal: Major	Removal of Ground Mounted Sign and Rerection	Removal of Overhead Mounted Sign and Disposal	630 GROUND MOUNTED SUPPORTS: One-Way No. 3	No. 2 Post	No. 3 Post	No. 4 Post, As Per Plan	No. 6 Post	S4 x 7.7 Beam	W6 x 9 Beam	W10 x 12 Beam	W8 x 18 Beam	W10 x 22 Beam	W12 x 30 Beam		Sign Backing Assembly	Sign Attachment Assembly, As Per Plan		Ground Mounted Beam Support Foundation	Breakaway Beam Connection	620 Sign Data Collection	Reflectors, Type "D"	631 Removal Misc: Removal of Sign Lighting, As Per Plan
							SQ FT				EACH							FOOT										Each	Each		Each	Each	Each	Each	Each
21		407	USR 30, WB	1105+14	M3-4-30 M1-4-30-2	30X15 30X30			3.1 6.3										14.5														2		
11	38	408	USR 30, WB	1103+25	D3-H2A-144	144X18	18.0												13.0 14.0														1		
11		409	USR 30, WB	1100+13 (MEDIAN)	R6-1R-48	48X18			6.0									12.5 12.5															1		
21		410	USR 30, WB	1101+25 (MEDIAN)	R5-1A-36	36X24			6.0									13.0 12.5															1		
21		411	USR 30, WB	1101+25	R5-1A-36	36X24			6.0									12.5 13.0															1		
21		412	USR 30, WB	1099+64							1		1																				1		
21	38	413	USR 30, WB	1099+50	D3-H2A-144	144X18	18.0												12.6 13.8														1		
21		414	USR 30, WB	1099+25 (MEDIAN)	R5-1-36	36X36			9.0									14.0 13.5															1		
21		415	USR 30, WB	1099+25	R5-1-36	36X36			9.0									13.5 14.0															1		
21		416	USR 30, WB	1099+19 (MEDIAN)	R6-1L-48 R6-1R-48	48X18 48X18			6.0 6.0									12.5 12.5															2		
21		417	USR 30, WB	1098+85 (MEDIAN)	R4-7B-36	36X48			12.0										14.5 14.5														1		
21		418	USR 30, WB	1098+85	R1-1-36 R6-3A-24	36X36 24X18			9.0 3.0		1		1						13.5														3		
21		419	USR 30, WB	1098+82	R6-1L-48 R6-1R-48	48X18 48X18			6.0 6.0									12.5 12.5															2		
21		420	USR 30, WB	1097+75	M3-4-30 M1-4-30-2	30X15 30X30			3.1 6.3										14.5														2		
11	38	421	USR 30, WB	1097+00	D3-H4-132	132X60	55.0																	20.7 25.0							2	2	1		
10		422	USR 30, WB	1094+91	NO WORK																														
10		423	USR 30, WB	1092+89	NO WORK																														
10		424	USR 30, WB	1089+66	W8-H22-48	48X48				16.0	1		1						16.7 17.2														2		
10		425	USR 30, WB	1087+94	W2-2L-48	48X48			16.0		1		1						16.7 17.2														2		
10		425A	USR 30, WB	1087+39	OM-3R-12	12X36			3.0				1																				2		
10		425B	USR 30, WB	1083+76	OM-3R-12	12X36			3.0				1																				2		
10	38	426	USR 30, WB	1080+60	D3-H3A-108	108X24	18.0															13.3 15.9									2	2	1		
20		427	USR 30, WB	1078+85	R5-1A-36	36X24			6.0									12.5 13.0															1		
20		428	USR 30, WB	1076+85	R5-1-36 R6-1L-48	36X36 48X18			9.0 6.0								15.0		13.5														2		
20	38	429	USR 30, WB	1076+01	D3-H2A-96	96X18	12.0				2		2						14.1 16.3														3		
20		430	USR 30, WB	1075+92	R6-1L-48	48X18			6.0									12.5 12.5															1		
20		431	USR 30, WB	1073+95 (MEDIAN)	R4-7B-36	36X48			12.0		1		1						14.5 14.5														2		
20		432	USR 30, WB	1073+50	M3-4-30 M1-4-30-2	30X15 30X30			3.1 6.3										14.5														2		
10		433	USR 30, WB	1070+65	NO WORK																														
10		434	USR 30, WB	1061+75 (MEDIAN)	W2-1-48	48X48			16.0		1		1						17.2 16.7														2		
10		435	USR 30, WB	1061+75	W2-1-48	48X48			16.0		1		1						16.7 17.2														2		
10	38	436	USR 30, WB	1056+50	D3-H2-96	96X18	12.0												13.5 12.4														1		
SUBTOTALS							133.0		205.1	16.0	9		11				15.0	231.5	373.8			29.2		45.7							4	4	46		

CALC BY _BAH_
CHK'D By _RJR_

SIGN SUB-SUMMARY - REFERENCE NUMBERS

WAY-30-18.88

54

56

SUB-SUMMARY SHEET REVISED 9-1-04 BAH

Plan Sheet Reference No.	Elevation Sheet No.	Sign Number	Location	Station	Code Number	Sign Size (Inches)	SIGNS: Ground Mounted Extrusheet	SIGNS: Overhead Extrusheet, As Per Plan	SIGNS: Flat Sheet	SIGNS: Flat Sheet, As Per Plan (Hinged)	Removal of Ground Mounted Support and Disposal: Post	Removal of Ground Mounted Support and Disposal: Beam	Removal of Ground Mounted Sign and Disposal: Minor	Removal of Ground Mounted Sign and Disposal: Major	Removal of Ground Mounted Sign and Reerection	Removal of Overhead Mounted Sign and Disposal	630 GROUND MOUNTED SUPPORTS: One-Way No. 3	No. 2 Post	No. 3 Post	No. 4 Post, As Per Plan	No. 6 Post	S4 x 7.7 Beam	W6 x 9 Beam	W10 x 12 Beam	W8 x 18 Beam	W10 x 22 Beam	W12 x 30 Beam		Sign Backing Assembly	Sign Attachment Assembly, As Per Plan		Ground Mounted Beam Support Foundation	Breakaway Beam Connection	Sign Data Collection	620 Reflectors, Type "D"	631 Removal Misc: Removal of Sign Lighting, As Per Plan
							SQ FT				EACH						FOOT											Each	Each		Each	Each	Each	Each	Each
10		437	USR 30, WB	1056+35							2		1																				1		
10		438	USR 30, WB	1055+80	D10-H4-12	12X12			1.0		1		1					12.0																2		
19		439	USR 30, WB	1054+05 (MEDIAN)	R5-1A-36	36X24			6.0									13.0 | 12.5																1		
19		440	USR 30, WB	1054+05	R5-1A-36	36X24			6.0									12.5 | 13.0																1		
19		441	USR 30, WB	1052+05 (MEDIAN)	R5-1-36	36X36			9.0									14.0 | 13.5																1		
19		442	USR 30, WB	1052+05	R5-1-36	36X36			9.0									13.5 | 14.0																1		
19		443	USR 30, WB	1051+90 (MEDIAN)	R6-1L-48 R6-1R-48	48X18 48X18			6.0 6.0									12.5 | 12.5																2		
19		444	USR 30, WB	1051+21	R1-1-36 R6-3-24	36X36 24X18			9.0 3.0		1		2						13.5															4		
19		445	USR 30, WB	1051+15	R6-1L-48 R6-1R-48	48X18 48X18			6.0 6.0									12.5 | 12.5																2		
19	38	446	USR 30, WB	1051+10	D3-H2-96	96X18	12.0				2		1						12.5 | 13.0															2		
19		447	USR 30, WB	1051+04 (MEDIAN)	R4-7B-36	36X48			12.0		2		1						14.5 | 14.5															2		
19		448	USR 30, WB	1049+91	M3-4-30 31-4-30-2	30X15 30X30			3.1 6.3		1		1						14.5															3		
10	39	449	USR 30, WB	1048+34	M2-H2A-96	96X108	72.0				2		1											24.0 | 26.3								2	2	2		
9		451	USR 30, WB	1037+24	I-H2D-40	40X20			5.6		1		1					12.5 | 12.5																2		
9	39	452	USR 30, WB	1039+24	M1-5-30 M6-1R-24 1-H6A-168 SPECIA	30X30 24X18 168X96	112.0		6.3 3.0																21.6 | 19.5			1			2	2	3		
9		453	USR 30, WB	1033+90	NO WORK																															
9		454	USR 30, WB	1032+18 (MEDIAN)	W3-3-48	48X48			16.0				1																					2		
9		455	USR 30, WB	1032+18	W3-3-48	48X48			16.0				1																					2		
9		456	USR 30, WB	1031+00 (MEDIAN)							2		1																					1		
9		457	USR 30, WB	1031+00							2		1																					1		
9	39	458	USR 30, WB	1029+94 (MEDIAN)	M2-H3-66	42X66	19.3															17.9 | 17.6									2	2	1		
9	39	459	USR 30, WB	1029+94	M2-H3-66	42X66	19.3															18.4 | 18.9									2	2	1		
9		460	USR 30, WB	1028+14 (MEDIAN)	R6-1R-48	48X18			6.0									12.5 | 12.5																1		
9		461	USR 30, WB	1027+70							2		2																					2		
9		462	USR 30, WB	1026+87 (MEDIAN)	R6-1R-48	48X18			6.0									12.5 | 12.5																1		
18		463	USR 30, WB	1026+24 (MEDIAN)	R3-H8CH-48	48X30			10.0		2		1					13.5 | 13.0																2		
18		463A	USR 30, WB	1026+23 (MEDIAN)	R5-1A-36	36X24			6.0									13.0 | 12.5																1		
18		464	USR 30, WB	1026+24	D9-2-24 I-H12-24 R3-H8CH-48	24X24 24X6 48X30			4.0 1.0 10.0		2		3						20.0 | 13.0																6		
18		464A	USR 30, WB	1026+23	R5-1A-36	36X24			6.0									12.5 | 13.0																1		
SUBTOTALS							234.5		184.2		22		19					320.5	115.5			72.8		50.3	41.1				1			8	8	51		

CALC BY _BAH_
CHK'D By _RJR_

SIGN SUB-SUMMARY - REFERENCE NUMBERS

WAY-30-18.88

55

56

SUB-SUMMARY SHEET REVISED 9-1-04 BAH

Plan Sheet Reference No.	Elevation Sheet No.	Sign Number	Location	Station	Code Number	Sign Size (Inches)	SIGNS: Ground Mounted Extrusheet	SIGNS: Overhead Extrusheet, As Per Plan	SIGNS: Flat Sheet	SIGNS: Flat Sheet, As Per Plan (Hinged)	Removal of Ground Mounted Support and Disposal: Post	Removal of Ground Mounted Support and Disposal: Beam	Removal of Ground Mounted Sign and Disposal: Minor	Removal of Ground Mounted Sign and Disposal: Major	Removal of Ground Mounted Sign and Reerection	Removal of Overhead Mounted Sign and Disposal	630 GROUND MOUNTED SUPPORTS: One-Way No. 3	No. 2 Post	No. 3 Post	No. 4 Post, As Per Plan	No. 6 Post	S4 x 7.7 Beam	W6 x 9 Beam	W10 x 12 Beam	W8 x 18 Beam	W10 x 22 Beam	W12 x 30 Beam	Sign Backing Assembly	Sign Attachment Assembly, As Per Plan	Ground Mounted Beam Support Foundation	Breakaway Beam Connection	620 Sign Data Collection	Reflectors, Type "D"	631 Removal Misc: Removal of Sign Lighting, As Per Plan
							SQ FT				EACH											FOOT						Each	Each		Each	Each	Each	Each	Each
18		465	USR 30, WB	1025+19 (MEDIAN)							1		1																				1		
18		466	USR 30, WB	1023+83 (MEDIAN)	R3-H8CH-48	48X30			10.0		2		1					13.5 | 13.0															2		
18		467	USR 30, WB	1023+83	R3-H8CH-48	48X30			10.0		2		1					13.0 | 13.5															2		
18		468	USR 30, WB	1023+67	R5-1-36 R6-1L-48	36X36 48X18			9.0 6.0		1		2				15.0		13.5														4		
18		469	USR 30, WB	1023+56 (MEDIAN)	R5-1-36 R6-1R-48	36X36 48X18			9.0 6.0		1		2				15.0		13.5														4		
18		470	USR 30, WB	1022+80	M1-5-30-2 M6-1R-24	30X30 24X18			6.3 3.0		1		2						14.5														4		
18		471	USR 30, WB	1022+80	R10-H6B-24 R6-3-24	24X36 24X18			6.0 3.0				2						15.0														4		
18		472	USR 30, WB	1022+68 (MEDIAN)							1		1																				1		
18		473	USR 30, WB	1022+68 (MEDIAN)	R4-7B-36	36X48			12.0		1		1						14.5 | 14.5														2		
9		474	USR 30, WB	1018+60	R6-1R-48	48X18			6.0		1		1					12.5 | 12.5															2		
9		475	USR 30, WB	1018+50	R1-1-36	36X36			9.0		1		1						13.0														2		
9	39	476	USR 30, WB	1009+03	D2-2-72	72X30	15.0				2		1									17.1 | 18.1								2	2	2		
9		477	USR 30, WB	1007+00 (MEDIAN)	NO WORK																														
9		478	USR 30, WB	1007+00	NO WORK																														
17		479	SR 172, RAMP	1335+63	W8-H22-48	48X48				16.0	1		1						16.7 | 17.2														2		
17		480	SR 172, RAMP	1343+34	OM-3R-12	12X36			3.0				1																				2		
17		481	SR 172, RAMP	1342+64	OM-3R-12	12X36			3.0				1																				2		
17		482	SR 172, RAMP	1348+02	W2-1-48	48X48			16.0		1		1						16.7 | 17.2														2		
17		483	SR 172	1354+90	I-H2F-40	40X20			5.6		2		1					12.7 | 13.2															2		
17		484	SR 172	1355+45	R1-1-36	36X36			9.0		1		1						13.0														2		
17		485	SR 172	1354+48	I-H2F-40	40X20			5.6		2		1					12.7 | 13.2															2		
17		486	SR 172	1354+21	M2-1-21 M1-4-30-2	21X15 30X30			2.2 6.3		1		2						14.5														4		
17		487	SR 172	1352+50	W9-1L-48	48X48			16.0		1		1						16.7 | 17.2														2		
17		488	SR 172	1348+06	W4-2L-48	48X48			16.0		1		1						16.7 | 17.2														2		
SUBTOTALS							15.0		177.8	16.0	24		27				30.0	129.8	261.6			35.2								2	2	52		

CALC BY _BAH_
CHK'D By _RJR_

SIGN SUB-SUMMARY - REFERENCE NUMBERS

WAY-30-18.88

56

56

SUB-SUMMARY SHEET REVISED 9-1-04 BAH