STATE OF OHIO
DEPARTMENT OF TRANSPORTATION

WAY-30-20.64

SUGAR CREEK TOWNSHIP
WAYNE COUNTY

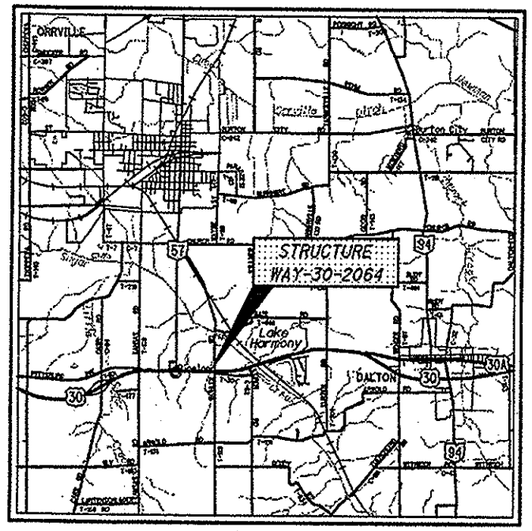

LOCATION MAP

LATITUDE: N40°47'48" LONGITUDE: W81°45'24"

SCALE IN MILES

0 1 2 3 4

N

PORTION TO BE IMPROVED
INTERSTATE HIGHWAY
STATE & FEDERAL ROUTES
COUNTY & TOWNSHIP ROADS
OTHER ROADS

DESIGN DESIGNATION

CURRENT ADT (2010)	19,650
DESIGN YEAR ADT (2030)	20,940
DESIGN HOURLY VOLUME (2030)	2,094
DIRECTIONAL DISTRIBUTION	53%
TRUCKS (24 HOUR B&C)	22%
DESIGN SPEED	55 MPH
LEGAL SPEED	55 MPH

DESIGN FUNCTIONAL CLASSIFICATION:
RURAL PRINCIPAL ARTERIAL

NHS PROJECT ..... YES

DESIGN EXCEPTIONS

NONE

UNDERGROUND UTILITIES
CONTACT BOTH SERVICES
CALL TWO WORKING DAYS
BEFORE YOU DIG
CALL
1-800-362-2764
(TOLL FREE)
OHIO UTILITIES PROTECTION SERVICE
NON-MEMBERS
MUST BE CALLED DIRECTLY
OIL & GAS PRODUCERS PROTECTIVE
SERVICE CALL: **1-800-925-0988**

PLAN PREPARED BY:
ODOT DISTRICT THREE
OFFICE OF PRODUCTION
906 N. CLARK STREET
ASHLAND, OHIO 44805

INDEX OF SHEETS:

TITLE SHEET	1
SCHEMATIC PLAN	2
GENERAL NOTES AND SUMMARY	3
STRUCTURE DETAILS	4-7
RIGHT-OF-WAY	8-13

PROJECT DESCRIPTION

REHABILITATION OF EXISTING TWIN 72" REINFORCED CONCRETE PIPES WITH PIPE LINING AND NEW HEADWALLS.

MAINTENANCE PROJECT

PROJECT EARTH DISTURBED AREA:	N/A
ESTIMATED CONTRACTOR EARTH DISTRUBED AREA:	N/A
NOTICE OF INTENT EARTH DISTURBED AREA:	N/A

2008 SPECIFICATIONS

THE STANDARD SPECIFICATIONS OF THE STATE OF OHIO, DEPARTMENT OF TRANSPORTATION, INCLUDING CHANGES AND SUPPLEMENTAL SPECIFICATIONS LISTED IN THE PROPOSAL SHALL GOVERN THIS IMPROVEMENT.

ENGINEER'S SEAL:

STATE OF OHIO
RONALD D. NUSSBAUM
E-46400
REGISTERED
PROFESSIONAL ENGINEER

SIGNED: Ronald D. Nussbaum
DATE: 7-23-09

STANDARD CONSTRUCTION DRAWINGS

DM-4.3	7/19/02
DM-4.4	7/19/02
F-2.1	7/28/00
F-3.4	7/28/00
MT-35.10	4/20/01
MT-95.30	9/05/06
MT-95.50	9/05/06
MT-105.10	10/18/02
MT-105.11	10/18/02

SUPPLEMENTAL SPECIFICATIONS

800-2008	7/17/09
832	5/5/09
837	4/18/08

SPECIAL PROVISIONS

NWP #3	1/2/09

I HEREBY APPROVE THESE PLANS AND DECLARE THAT THE MAKING OF THIS IMPROVEMENT WILL NOT REQUIRE THE CLOSING TO TRAFFIC OF THE HIGHWAY AND THAT PROVISIONS FOR THE MAINTENANCE AND SAFETY OF TRAFFIC WILL BE AS SET FORTH ON THE PLANS AND ESTIMATES.

APPROVED J. L. Hart
DATE 7/24/09 DISTRICT DEPUTY DIRECTOR

APPROVED Jolene M. Molitoris Jr.
DATE 8-21-09 DIRECTOR, DEPARTMENT OF TRANSPORTATION

FEDERAL PROJECT NO. **NON-FEDERAL**

PID NO. **82824**

CONSTRUCTION PROJECT NO.

RAILROAD INVOLVEMENT **NONE**

WAY-30-20.64

WAY - US-30-20.64
090480 PID - 82824
Dist 3 10/21/2009

DESIGN FILE: I:\projects\82824\roadway\sheets\82824
WORKSTATION:hyoryanh DATE: 7/23/2009

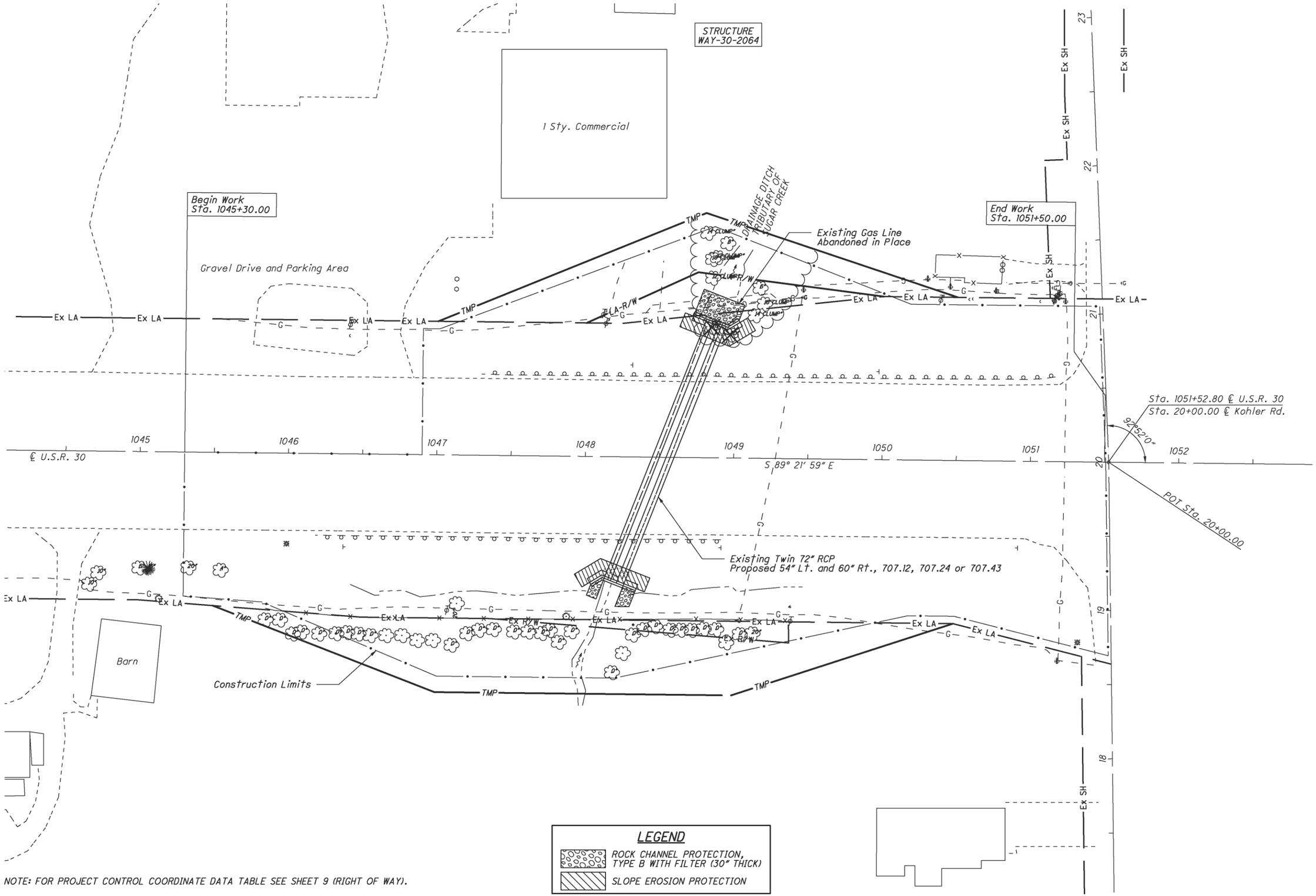

NOTE: FOR PROJECT CONTROL COORDINATE DATA TABLE SEE SHEET 9 (RIGHT OF WAY).

HORIZONTAL SCALE IN FEET
0 15 30 60

SCHEMATIC PLAN

WAY-30-20.64

DESIGN FILE: I:\projects\82824\roadway\sheets\82824GB001.dgn
WORKSTATION:hyaryanh DATE: 7/22/2009

UTILITIES

LISTED BELOW ARE ALL UTILITIES LOCATED WITHIN THE PROJECT CONSTRUCTION LIMITS TOGETHER WITH THEIR RESPECTIVE OWNERS.

GAS
Dominion East Ohio
320 Springside Drive, Suite 320
Akron, OH 44333
330-266-2136

ELECTRIC
American Electric Power
301 Cleveland Avenue SW
Canton, Ohio 44701
330-438-7061

TELEPHONE
Embarq
2025 Akron Road
Wooster, Ohio 44691
330-262-1132

CABLE T.V.
Clear Picture Inc.
P.O. Box 917
Wooster, Ohio 44691
330-345-5110, ext. 226 or x.202

THE LOCATION OF THE UNDERGROUND UTILITIES SHOWN ON THE PLANS ARE AS OBTAINED FROM THE OWNERS AS REQUIRED BY SECTION 153.64 O.R.C.

THE CONTRACTOR IS REFERRED TO THE DOMINION EAST OHIO SPECIFICATION DRAWING #A4215JG FOR TRAFFICKING ACROSS NATURAL GAS PIPELINES BY HEAVY (GREATER THAN 17 TONS GVWR) WEIGHTED VEHICLES OR EQUIPMENT ON WHEELED AXELS (EXCLUDING VEHICLES ON TRACKS, SUCH AS BULLDOZERS AND TRACKHOES).

EXISTING PLANS

EXISTING PLANS ENTITLED WAY-30-17.03 MAY BE INSPECTED IN THE ODOT DISTRICT 3 OFFICE IN ASHLAND.

ELEVATION DATUM

ALL ELEVATIONS ARE ORTHOMETRIC HEIGHTS USING THE NORTH AMERICAN VERTICAL DATUM OF 1988 (NAVD 88) AND THE GEOID03 GEOID. HORIZONTAL POSITIONS ARE BASED ON THE OHIO STATE PLANE NORTH ZONE, A LAMBERT CONFORMAL CONIC MAP PROJECTION, THE NORTH AMERICAN DATUM OF 1983 ADJUSTED TO THE NATIONAL SPATIAL REFERENCE SYSTEM OF 2007 (NAD 83 (NSRS 2007)), AND THE GRS80 ELLIPSOID.

WORK LIMITS

THE WORK LIMITS SHOWN ON THESE PLANS ARE FOR PHYSICAL CONSTRUCTION ONLY. THE INSTALLATION AND OPERATION OF ALL TEMPORARY TRAFFIC CONTROL AND TEMPORARY TRAFFIC CONTROL DEVICES REQUIRED BY THESE PLANS SHALL BE PROVIDED BY THE CONTRACTOR WHETHER INSIDE OR OUTSIDE THESE WORK LIMITS.

ITEM 201 - CLEARING AND GRUBBING

ALTHOUGH THERE ARE NO TREES OR STUMPS SPECIFICALLY MARKED FOR REMOVAL WITHIN THE LIMITS OF THE PROJECT, A LUMP SUM QUANTITY HAS BEEN INCLUDED IN THE GENERAL SUMMARY FOR ITEM 201, CLEARING AND GRUBBING. ALL PROVISIONS AS SET FORTH IN THE SPECIFICATIONS UNDER THIS ITEM SHALL BE INCLUDED IN THE LUMP SUM PRICE BID FOR ITEM 201, CLEARING AND GRUBBING.

ITEM 201 - TREE REMOVAL RESTRICTIONS

THIS PROJECT IS WITHIN THE KNOWN SUMMER BREEDING RANGE OF THE FEDERAL ENDANGERED INDIANA BROWN BAT AND MAY IMPACT THAT SPECIES HABITAT. THE SUMMER ROOSTING AND BROOD REARING HABITAT OF THIS SPECIES IS IN LIVING OR STANDING DEAD TREES OR SNAGS WITH EXFOLIATING, PEELING, OR LOOSE BARK, SPLIT TRUNKS AND/OR BRANCHES, OR CAVITIES. ANY UNAVOIDABLE CUTTING OF SUCH TREES SHALL BE PERFORMED ONLY BEFORE APRIL 15 OR AFTER SEPTEMBER 15 WHEN THIS SPECIES WOULD NOT BE USING SUCH HABITAT.

ITEM 202 - REMOVAL MISC.: CONCRETE PAD

THIS ITEM SHALL BE USED TO REMOVE THE CONCRETE PAD AT THE LOCATION SHOWN IN THE PLANS ON SHEET 4. ALL LABOR, EQUIPMENT AND INCIDENTALS REQUIRED TO REMOVE THE CONCRETE PAD SHALL BE INCLUDED IN THE LUMP SUM PRICE BID FOR ITEM 202, REMOVAL MISC.: CONCRETE PAD.

CONDUIT FABRICATION AND APPROVAL

PRIOR TO ORDERING ANY MATERIALS, THE CONTRACTOR SHALL VERIFY THE ITEM 837, LINER PIPE, SPECIFIED IN THESE PLANS, CAN PHYSICALLY BE INSTALLED INSIDE THE EXISTING STRUCTURE. THE CONTRACTOR SHALL COORDINATE THIS EFFORT WITH THE PROJECT ENGINEER. ALL COSTS ASSOCIATED WITH THESE REQUIREMENTS SHALL BE CONSIDERED INCIDENTAL TO THE COST OF THE PERTINENT CONDUIT.

MAINTAIN INTEGRITY OF EXISTING STRUCTURE

THE EXISTING STRUCTURE IS TO REMAIN. THE CONTRACTOR SHALL BE HELD RESPONSIBLE TO MAINTAIN THE STABILITY AND INTEGRITY OF THE EXISTING STRUCTURE TO THE SATISFACTION OF THE PROJECT ENGINEER DURING THE CONSTRUCTION OF THE PROPOSED WORK. IF THE EXISTING STRUCTURE BECOMES UNSTABLE OR DAMAGED DURING CONSTRUCTION, THE CONTRACTOR SHALL STOP CONSTRUCTION AND MAKE THE PROJECT ENGINEER AWARE OF THE SITUATION. THE CONTRACTOR SHALL BE REQUIRED TO RESOLVE THE SITUATION TO THE SATISFACTION OF THE PROJECT ENGINEER. ALL COSTS REQUIRED TO MAINTAIN, STABILIZE OR REPAIR DAMAGES SHALL BE THE RESPONSIBILITY OF THE CONTRACTOR.

DESIGN DATA

CONCRETE CLASS C - COMPRESSIVE STRENGTH 4000 PSI (FOOTING AND WINGWALLS)

REINFORCING STEEL - ASTM A615 OR A996, GRADE 60, MINIMUM YIELD STRENGTH 60,000 PSI

ITEM 511 - CLASS C CONCRETE, AS PER PLAN, WINGWALL, ABOVE FT
ITEM 511 - CLASS C CONCRETE, FOOTING, AS PER PLAN

THE COARSE AGGREGATE FOR THESE ITEMS SHALL BE LIMESTONE.

BASIS OF PAYMENT: ALL LABOR, EQUIPMENT AND INCIDENTALS REQUIRED TO CONSTRUCT THE FOOTING, CUTOFF WALL, WINGWALLS AND HEADWALL SHALL BE INCLUDED WITH THE ABOVE LISTED ITEM 511 - CLASS C CONCRETE ITEMS. PAYMENT FOR REINFORCING STEEL SHALL BE INCLUDED WITH ITEM 509 - EPOXY COATED REINFORCING STEEL.

ITEM 614, MAINTAINING TRAFFIC

TWO LANES OF TRAFFIC IN EACH DIRECTION SHALL BE MAINTAINED AT ALL TIMES EXCEPT THAT ONE LANE OF TRAFFIC MAY OCCUR AS PER STANDARD DRAWING MT-95.30.

GUARDRAIL SHALL REMAIN IN PLACE AT ALL TIMES EXCEPT THAT FOR SHORT DURATION A PORTION WITHIN THE WORK ZONE MAY BE DISMANTLED TO PROVIDE WORK SITE ACCESS, AND FOR WHICH DURATION OF ONE LANE OF TRAFFIC SHALL OCCUR AS PER STANDARD DRAWING MT-95.30. GUARDRAIL SHALL BE REASSEMBLED BY THE END OF EACH WORKING DAY AND REMAIN IN PLACE DURING ALL NON-WORKING PERIODS. ALTERNATELY, THE CONTRACTOR MAY CHOOSE TO LEAVE THE GUARDRAIL WITHIN A WORK ZONE DISASSEMBLED FOR LONGER DURATION FOR WHICH ONE LANE OF TRAFFIC SHALL OCCUR AS PER STANDARD DRAWING 95.40 AND AT NO ADDITIONAL COST TO THE STATE. IT IS THE INTENT TO MINIMIZE ROADSIDE HAZARDS FOR PROTECTION OF THE TRAVELING PUBLIC.

LENGTH AND DURATION OF LANE CLOSURES AND RESTRICTIONS SHALL BE AT THE APPROVAL OF THE ENGINEER. IT IS THE INTENT TO MINIMIZE THE IMPACT TO THE TRAVELING PUBLIC. LANE CLOSURES OR RESTRICTIONS OVER SEGMENTS OF THE PROJECT IN WHICH NO WORK IS ANTICIPATED WITHIN A REASONABLE TIME FRAME, AS DETERMINED BY THE ENGINEER, SHALL NOT BE PERMITTED. THE LEVEL OF UTILIZATION OF MAINTENANCE OF TRAFFIC DEVICES SHALL BE COMMENSURATE WITH THE WORK IN PROGRESS.

ALL WORK AND TRAFFIC CONTROL DEVICES SHALL BE IN ACCORDANCE WITH CMS 614 AND OTHER APPLICABLE PORTIONS OF THE SPECIFICATIONS, AS WELL AS THE OHIO MANUAL OF UNIFORM TRAFFIC CONTROL DEVICES. PAYMENT FOR ALL LABOR, EQUIPMENT, AND MATERIALS SHALL BE INCLUDED IN THE LUMP SUM CONTRACT PRICE FOR ITEM 614, MAINTAINING TRAFFIC, UNLESS SEPARATELY ITEMIZED IN THE PLAN.

ITEM 202 - FENCE REMOVED FOR REUSE, AS PER PLAN

THIS ITEM SHALL BE USED TO REMOVE THE FENCE IF NECESSARY AND AS DIRECTED BY THE ENGINEER TO PROVIDE EQUIPMENT ACCESS AT THE LOCATIONS SHOWN IN THE PLANS ON SHEET 4. THIS ITEM SHALL ALSO INCLUDE THE FENCE REINSTALLATION. ALL LABOR, EQUIPMENT AND INCIDENTALS REQUIRED TO REMOVE AND REINSTALL THE FENCE SHALL BE INCLUDED IN THE UNIT PRICE BID PER FOOT FOR ITEM 202, FENCE REMOVED FOR REUSE, AS PER PLAN.

ITEM	ITEM EXT.	GRAND TOTAL	UNIT	DESCRIPTION	SEE SHEET
				ROADWAY	
201	11000	LUMP		CLEARING AND GRUBBING	3
202	75201	353	FT	FENCE REMOVED FOR REUSE, AS PER PLAN	3
604	40520	3	EACH	RIGHT-OF-WAY MONUMENT	9
				EROSION CONTROL	
832	30000	10000	EACH	EROSION CONTROL	
				STRUCTURES (20' AND UNDER)	
				FOR STRUCTURE WAY-30-2064 QUANTITIES	4
614	11000	LUMP		MAINTAINING TRAFFIC	3
623	10000	LUMP		CONSTRUCTION LAYOUT STAKES	
624	10000	LUMP		MOBILIZATION	

CALCULATED HYH CHECKED DCM

GENERAL NOTES AND SUMMARY

WAY-30-20.64

DESIGN FILE: I:\projects\82824\roadway\sheets\82824GN001.dgn
WORKSTATION: hyaryanh DATE: 7/22/2009

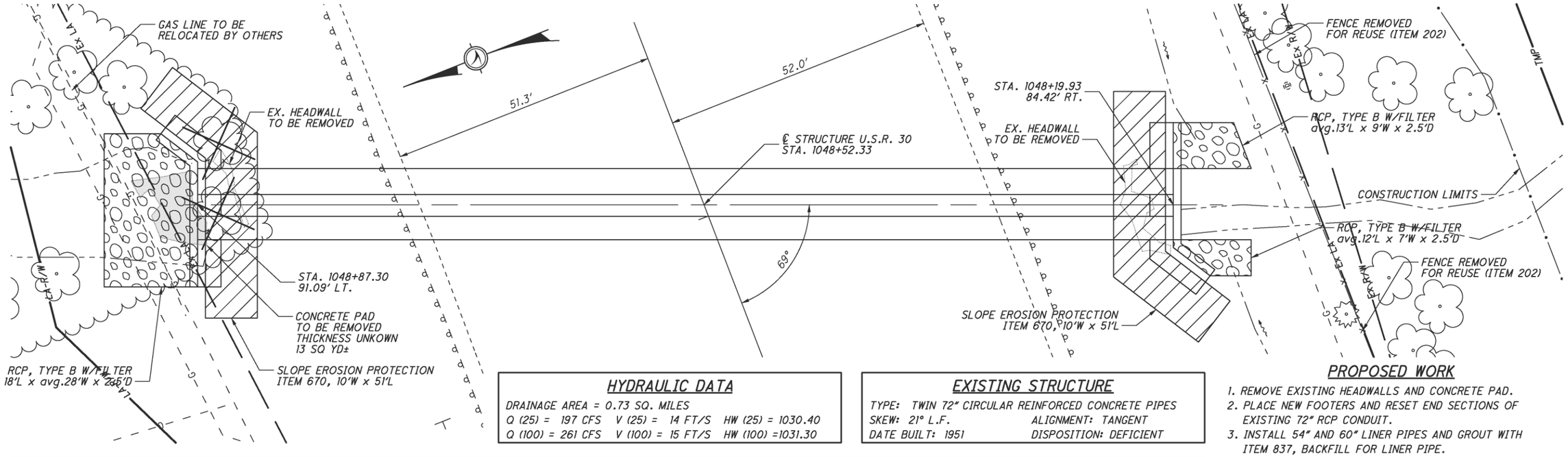

HYDRAULIC DATA

DRAINAGE AREA = 0.73 SQ. MILES
Q (25) = 197 CFS V (25) = 14 FT/S HW (25) = 1030.40
Q (100) = 261 CFS V (100) = 15 FT/S HW (100) =1031.30

EXISTING STRUCTURE

TYPE: TWIN 72" CIRCULAR REINFORCED CONCRETE PIPES
SKEW: 21° L.F. ALIGNMENT: TANGENT
DATE BUILT: 1951 DISPOSITION: DEFICIENT

PROPOSED WORK

1. REMOVE EXISTING HEADWALLS AND CONCRETE PAD.
2. PLACE NEW FOOTERS AND RESET END SECTIONS OF EXISTING 72" RCP CONDUIT.
3. INSTALL 54" AND 60" LINER PIPES AND GROUT WITH ITEM 837, BACKFILL FOR LINER PIPE.
4. PLACE NEW HEADWALLS AND WINGWALLS (SEE SHEET 2/4) AND SEAL ALL EXPOSED FACES (EPOXY URETHANE).
5. RESTORE EMBANKMENT AND PLACE ITEM 670, SLOPE EROSION PROTECTION, AS SHOWN ON PLANS.
6. PLACE ITEM 601, ROCK CHANNEL PROTECTION TYPE B WITH FILTER, AS SHOWN ON PLANS.

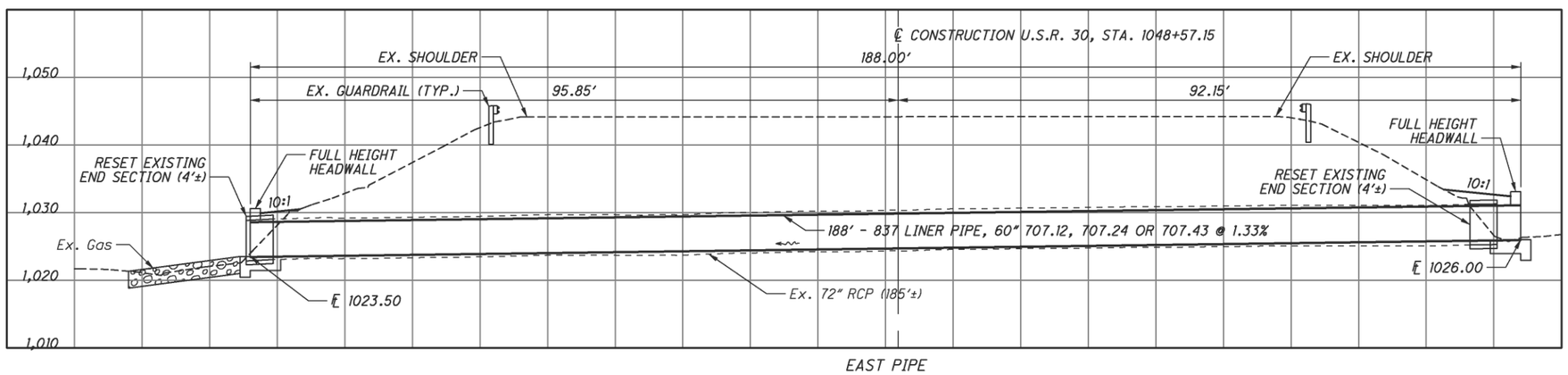

EAST PIPE

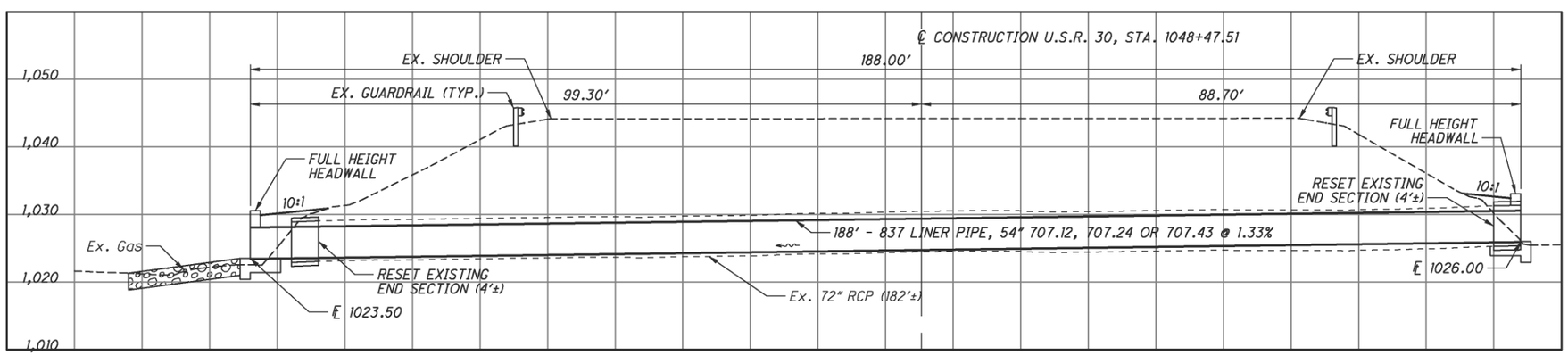

WEST PIPE

ESTIMATED STRUCTURE QUANTITIES

ITEM	EXT.	QTY.	UNIT	DESCRIPTION
202	20010	2	EACH	HEADWALL REMOVED
202	98000	LUMP		REMOVAL MISC.: CONCRETE PAD
203	20000	35	CU YD	EMBANKMENT
503	11100	LUMP		COFFERDAMS, CRIBS AND SHEETING
503	21300	LUMP		UNCLASSIFIED EXCAVATION (WINGWALL/FOOTING)
509	10000	3434	POUND	EPOXY COATED REINFORCING STEEL
511	46001	18	CU YD	CLASS C CONCRETE, AS PER PLAN, WINGWALL, ABOVE FT
511	46501	36	CU YD	CLASS C CONCRETE, FOOTING, AS PER PLAN
512	10100	55	SQ YD	SEALING OF CONCRETE SURFACES (EPOXY URETHANE)
518	21230	LUMP		POROUS BACKFILL WITH FILTER FABRIC
601	32100	66	CU YD	ROCK CHANNEL PROTECTION, TYPE B WITH FILTER
603	96500	16	FT	CONDUIT RECONSTRUCTED, 72" RCP
670	00500	114	SQ YD	SLOPE EROSION PROTECTION
837	10000	188	FT	LINER PIPE, 54" 707.12, 707.24 OR 707.43
837	10000	188	FT	LINER PIPE, 60" 707.12, 707.24 OR 707.43
837	20000	116	CU YD	BACKFILL FOR LINER PIPE

DESIGN AGENCY
DISTRICT THREE
OFFICE OF PRODUCTION

DESIGNED	CHECKED	DRAWN	REVISED	REVIEWED	DATE	STRUCTURE FILE NUMBER
HYH	DCM	HYH	HYH	RDN	7-11-08	8502242

STA. 1048+44.51
STA. 1048+60.21

SITE PLAN
WAY-30-2064
DRAINAGE DITCH

WAY-30-20.64

DESIGN FILE: I:\projects\82824\roadway\sheets\82824DP001.dgn
WORKSTATION:hyaryanh DATE: 7/22/2009

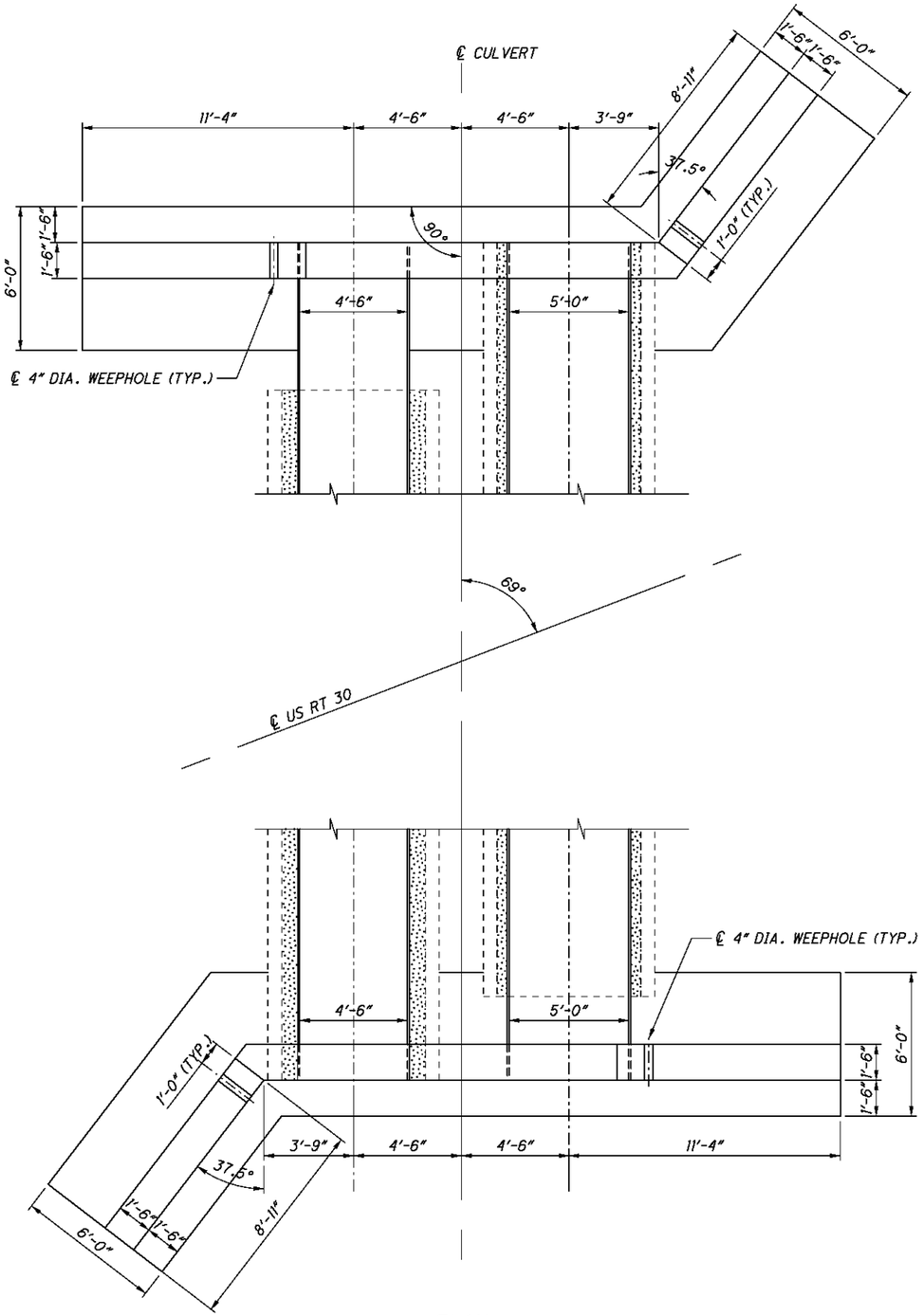

PLAN

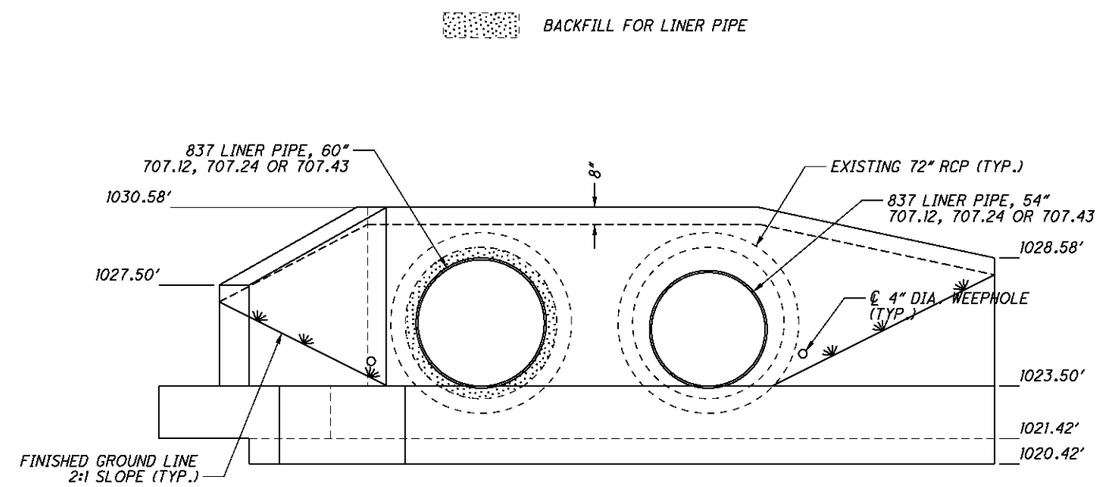

OUTLET ELEVATION

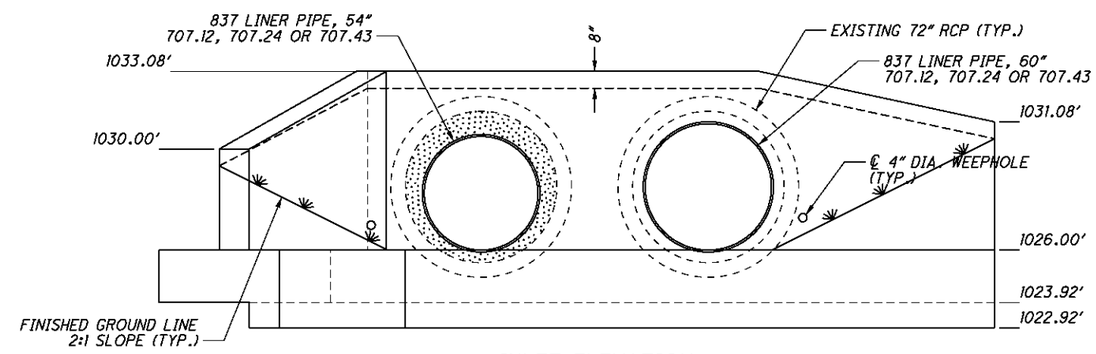

INLET ELEVATION

NOTES

1. THE PROPOSED HEADWALL IS PERPENDICULAR TO THE CULVERT ALIGNMENT AND FLUSH WITH THE ENDS OF THE PROPOSED PIPE LINERS. DUE TO THE EXISTING CULVERT SKEW AND PIPE LENGTHS, THE PIPE LINER WILL EXTEND A FEW FEET BEYOND THE EXISTING END OF ONE PIPE ON EACH END.

2. THE ELEVATIONS SHOWN ARE APPROXIMATE AND DEPEND ON THE FLOWLINES OF THE PIPE LINERS INSTALLED AFTER THE EXISTING CONCRETE PIPE ENDS HAVE BEEN RESET.

POROUS BACKFILL WITH FILTER FABRIC 1'-6" THICK SHALL BE PLACED BEHIND THE WINGWALLS ONLY AND SHALL EXTEND TO 12" BELOW THE EMBANKMENT SURFACE. GEOTEXTILE FABRIC SHALL BE PLACED BETWEEN THE POROUS BACKFILL AND REPLACED EXCAVATION ADJACENT TO THE STRUCTURE. IT SHALL TURN UNDER THE BOTTOM OF THE POROUS BACKFILL AND RETURN 6" ABOVE THE TOP ELEVATION OF THE WEEPHOLE.

WEEPHOLES SHALL BE PLACED 6" TO 12" ABOVE THE NORMAL WATER ELEVATION OR GROUND LINE.

DESIGN AGENCY
DISTRICT 3
OFFICE OF PRODUCTION

DESIGNED	DRAWN	REVIEWED	DATE
HYH	HYH	RDN	7-11-08
CHECKED	REVISED	STRUCTURE FILE NUMBER	
DCM	HYH	8502242	

CULVERT LAYOUT AND ELEVATION
WAY-30-2064
DRAINAGE DITCH

WAY-30-20.64

DESIGN FILE: I:\projects\82824\roadway\sheets\82824DC001.dgn
WORKSTATION: hyaryanh DATE: 7/22/2009

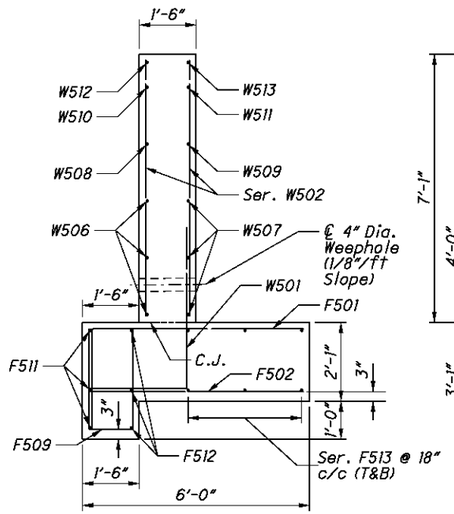

SECTION B-B

(POROUS BACKFILL NOT SHOWN FOR CLARITY)

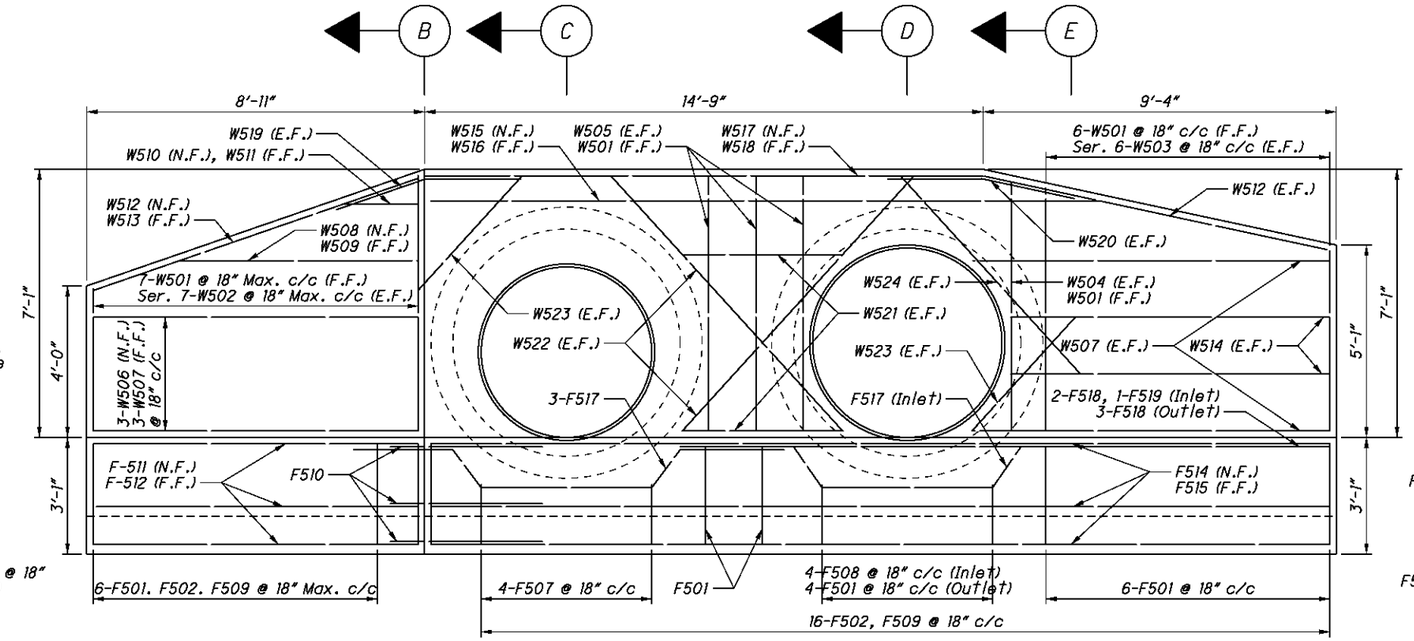

SECTION A-A

(INLET SHOWN, OUTLET SIMILAR)

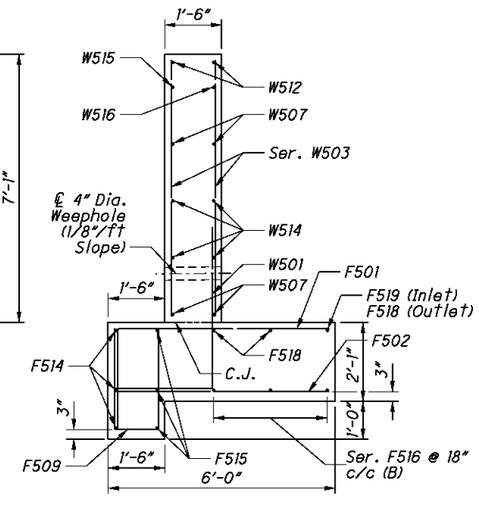

SECTION E-E

(POROUS BACKFILL NOT SHOWN FOR CLARITY)

LEGEND

C.J.	Construction Joint	Ser.	Series
Clr.	Clear	(T)	Top
E.F.	Each Face	(B)	Bottom
F.F.	Far Face	(T&B)	Top and Bottom
N.F.	Near Face	(T&M&B)	Top and Middle and Bottom
Max.	Maximum	Typ.	Typical

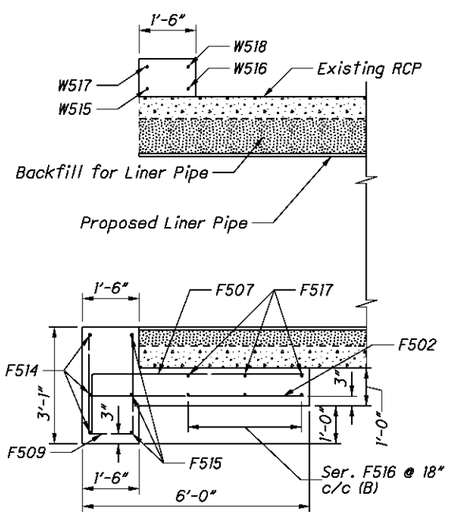

SECTION C-C

(INLET SHOWN, OUTLET SIMILAR)

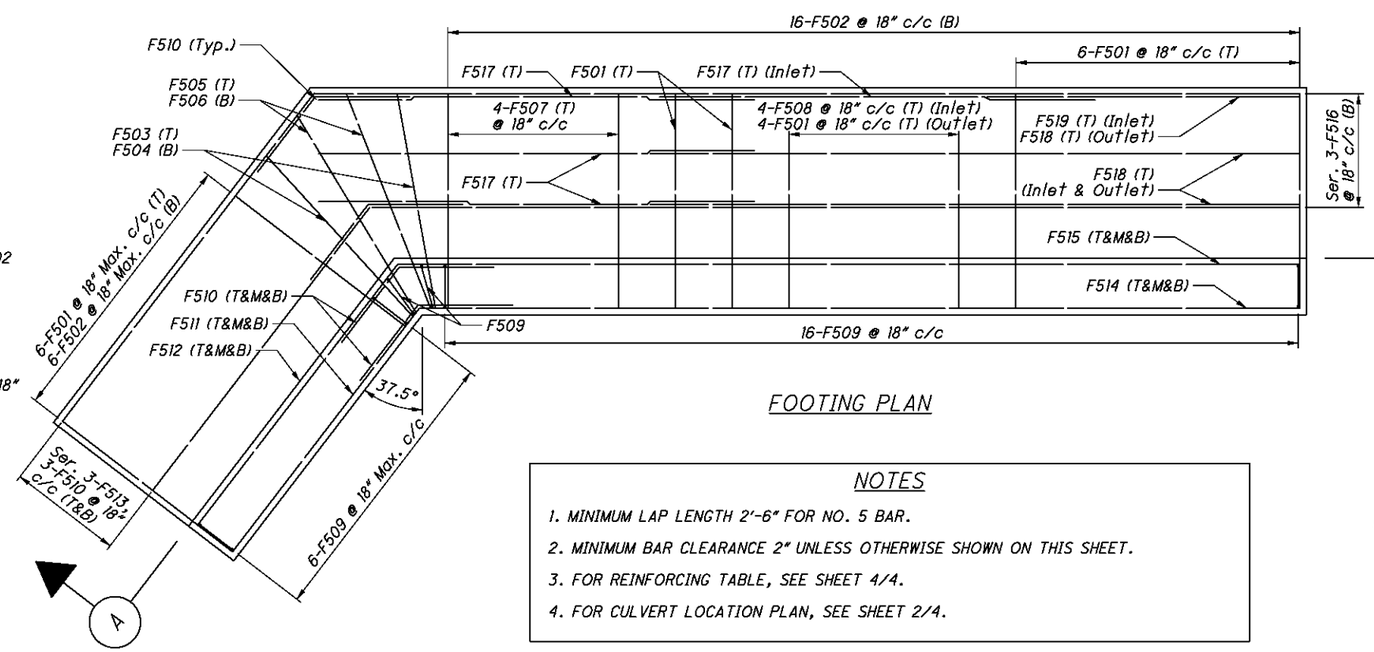

FOOTING PLAN

NOTES

1. MINIMUM LAP LENGTH 2'-6" FOR NO. 5 BAR.
2. MINIMUM BAR CLEARANCE 2" UNLESS OTHERWISE SHOWN ON THIS SHEET.
3. FOR REINFORCING TABLE, SEE SHEET 4/4.
4. FOR CULVERT LOCATION PLAN, SEE SHEET 2/4.

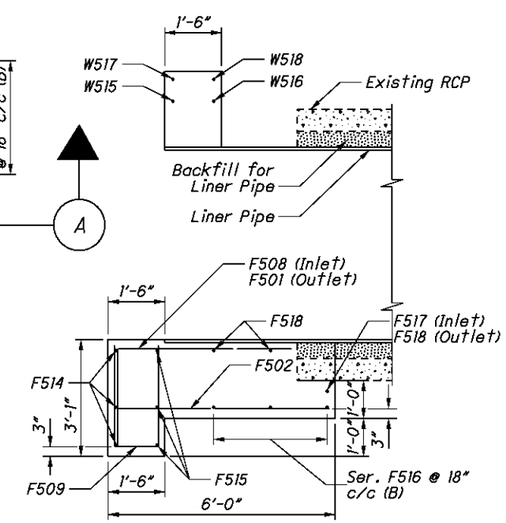

SECTION D-D

(INLET SHOWN, OUTLET SIMILAR)

DESIGN FILE: I:\projects\82824\roadway\sheets\82824DC002.dgn
WORKSTATION: hyaryanh DATE: 7/23/2009

DESIGN AGENCY
DISTRICT 3
OFFICE OF PRODUCTION

DESIGNED	DRAWN	REVIEWED	DATE
HYH	HYH	RDN	7-11-08
CHECKED	REVISED	STRUCTURE FILE NUMBER	
DCM	HYH	8502242	

WINGWALL AND FOOTING DETAILS
WAY-30-2064
DRAINAGE DITCH

WAY-30-20.64

3 / 4

6 / 13

MARK	NUMBER INLET	NUMBER OUTLET	NUMBER TOTAL	LENGTH	WEIGHT	TYPE	DIMENSIONS A	B	C	D			INC
W501	17	17	34	6'-10"	242	1	2'-8"	4'-4"					
	2 SR	2 SR	4 SR	3'-9"									
W502	OF	OF	OF	TO	153	STR							0'-6"
	7	7	7	6'-9"									
	2 SR	2 SR	4 SR	4'-9"									
W503	OF	OF	OF	TO	140	STR							0'-4"
	6	6	6	6'-5"									
W504	2	2	4	6'-7"	27	STR							
W505	6	6	12	6'-9"	84	STR							
W506	3	3	6	8'-10"	55	STR							
W507	7	7	14	9'-5"	138	STR							
W508	1	1	2	6'-7"	14	STR							
W509	1	1	2	7'-2"	15	STR							
W510	1	1	2	2'-3"	5	STR							
W511	1	1	2	2'-10"	6	STR							
				SUB-TOTAL	879								
W512	3	3	6	9'-4"	58	STR							
W513	1	1	2	10'-0"	21	STR							
W514	4	4	8	8'-5"	70	STR							
W515	1	1	2	17'-11"	37	STR							
W516	1	1	2	18'-5"	38	STR							
W517	1	1	2	14'-10"	31	STR							
W518	1	1	2	15'-4"	32	STR							
W519	2	2	4	4'-11"	21	3	2'-6"	1'-5"	2'-0"				
W520	2	2	4	4'-11"	21	3	2'-6"	2'-5"	0'-6"				
W521	4	4	8	4'-3"	35	STR							
W522	4	4	8	9'-1"	76	STR							
W523	4	4	8	4'-1"	34	STR							
W524	2	2	4	7'-1"	30	STR							
				SUB-TOTAL	504								

MARK	NUMBER INLET	NUMBER OUTLET	NUMBER TOTAL	LENGTH	WEIGHT	TYPE	DIMENSIONS A	B	C	D			INC
F501	14	18	32	8'-2"	273	1	2'-8"	5'-8"					
F502	22	22	44	5'-8"	260	STR							
F503	2	2	4	8'-3"	34	1	2'-8"	5'-9"					
F504	2	2	4	5'-9"	24	STR							
F505	2	2	4	8'-7"	36	1	2'-8"	6'-1"					
F506	2	2	4	6'-1"	25	STR							
F507	4	4	8	7'-1"	59	1	1'-7"	5'-8"					
F508	4	-	4	7'-1"	30	1	2'-7"	4'-8"					
F509	24	24	48	6'-3"	313	2	2'-8"	1'-2"	2'-8"				
F510	12	12	24	4'-11"	123	3	2'-6"	1'-6"	2'-0"				
F511	3	3	6	8'-1"	51	STR							
F512	3	3	6	8'-8"	54	STR							
	2 SR	2 SR	4 SR	9'-5"									
F513	OF	OF	OF	TO	127	STR							0'-9"
	3	3	3	10'-11"									
				SUB-TOTAL	1409								
F514	3	3	6	23'-3"	145	STR							
F515	3	3	6	23'-10"	149	STR							
	1 SR	1 SR	2 SR	24'-6"									
F516	OF	OF	OF	TO	158	STR							0'-9"
	3	3	3	26'-0"									
F517	4	3	7	12'-6"	91	4	4'-6"	0'-9"	2'-9"	1'-1"			
F518	2	3	5	17'-2"	90	STR							
F519	1	-	1	8'-3"	9	STR							
				SUB-TOTAL	642								

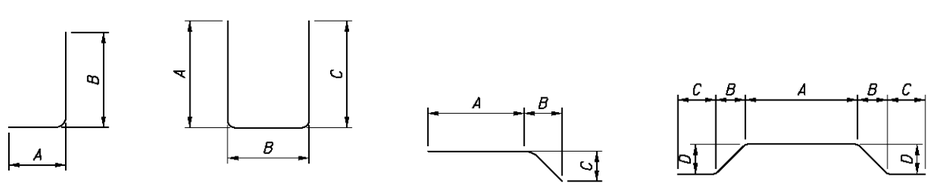

NOTES

1. THE BAR SIZE NUMBER IS SPECIFIED ON THE PLANS IN THE BAR MARK COLUMN. THE FIRST DIGIT INDICATES THE BAR SIZE NUMBER. FOR EXAMPLE, W501 IS A NO. 5 BAR. THE BAR DIMENSIONS SHOWN ARE OUT TO OUT. ALL REINFORCING STEEL SHALL BE EPOXY COATED.

2. TOTAL QUANTITY CARRIED TO STRUCTURE SUMMARY.

DESIGN AGENCY
DISTRICT 3
OFFICE OF PRODUCTION

DESIGNED	CHECKED	DRAWN	REVISED	REVIEWED	DATE	STRUCTURE FILE NUMBER
HYH	DCM	HYH	HYH	RDN	7-11-08	8502242

REINFORCING SCHEDULE
WAY-30-2064
DRAINAGE DITCH

WAY-30-20.64

DESIGN FILE: I:\projects\82824\roadway\sheets\82824DC003.dgn
WORKSTATION: hyaryanh DATE: 7/22/2009

UTILITY OWNERS	
GAS	DOMINION EAST NORTH CANTON 7015 FREEDOM AVENUE NW NORTH CANTON, OHIO 44720 330-266-2136
ELECTRIC	AMERICAN ELECTRIC POWER 301 CLEVELAND AVENUE SW CANTON, OHIO 44701 330-438-7061
TELEPHONE	EMBARQ 2025 AKRON ROAD WOOSTER, OHIO 44691 330-262-1132
CABLE TV	CLEAR PICTURE, INC. P.O.BOX 917 WOOSTER, OHIO 44691 330-345-5110

NOTES: THE LOCATION OF THE UNDERGROUND UTILITIES SHOWN ON THE PLANS ARE OBTAINED FROM THE OWNER OF THE UTILITIES AS REQUIRED BY SECTION 153.64 O.R.C.

RIGHT OF WAY LEGEND SHEET
WAY-30-20.60

WAYNE COUNTY
SUGAR CREEK TOWNSHIP
SECTION 7, T-16N, R-11W

INDEX OF SHEETS:

LEGEND SHEET	1
ROJECT COORDINATES	2
PROPERTY MAP	3
SUMMARY OF ADDITIONAL R/W SHEETS	4
R/W DETAIL SHEETS	5 & 6

PROJECT DESCRIPTION

REHABILITATION OF EXISTING TWIN 72" REINFORCED CONCRETE PIPES WITH PIPE LINING AND NEW HEADWALLS.

PROJECT CONTROL

PROJECT ADJUSTED COORDINATES (US SURVEY FEET) RELATIVE TO OHIO STATE PLANE GRID, NORTH ZONE, NAD83 (CORS) DATUM BY A UNITLESS PROJECT ADJUSTMENT FACTOR = 1.000099910
THE METRIC GRID TO US SURVEY FEET PROJECT ADJUSTMENT MULTIPLIER EQUALS 3.28116121.

PLANS PREPARED BY:

FIRM NAME: ODOT DISTRICT THREE
PLANS PREPARED BY: MIKE ALLEMAN
FIELD REVIEW BY: MIKE ALLEMAN
DATE COMPLETED : AUGUST 29, 2008
OWNERSHIP VERIFIED BY: NORTHWEST REGION
DATE COMPLETED : APRIL 18,2008
DATE COMPLETED : NOVEMBER 25, 2008

STRUCTURE KEY

- RESIDENTIAL
- COMMERCIAL
- OUT-BUILDING

PARCEL LEGEND:

WL = FEE SIMPLE WITH LIMITATION OF ACCESS
WD = WARRANTY DEED
BS = BILL OF SALE
PRW = PROPERTY RIGHT FEE SIMPLE
SH = STANDARD HIGHWAY EASEMENT
LA = LIMITED ACCESS EASEMENT
T = TEMPORARY EASEMENT
SL = SLOPE EASEMENT
S = SEWER EASEMENT
CH = CHANNEL EASEMENT

BASIS OF BEARINGS

ALL BEARINGS SHOWN ARE FOR PROJECT USE ONLY. THE BEARINGS REFERENCED HEREIN ARE RELATIVE TO GRID NORTH OF THE OHIO STATE PLANE COORDINATE SYSTEM, NORTH ZONE (3401), NAD 83(2007) DATUM AS DETERMINED FROM GPS MEASUREMENTS OBSERVED IN AUGUST, 2007 BY THE OHIO DEPARTMENT OF TRANSPORTATION DISTRICT THREE SURVEY SECTION AND ARE FOR THE PURPOSE OF INDICATING DIRECTIONAL VARIATIONS.

MONUMENT LEGEND

- EXISTING R/W MONUMENT BOX
- PROPOSED R/W MONUMENT BOX
- EXISTING CONCRETE MONUMENT
- PROPOSED CONCRETE MONUMENT
- RAILROAD SPIKE FOUND
- RAILROAD SPIKE SET
- IRON PIN FOUND
- IRON PIN FOUND W/ ID CAP
- IRON PIN SET W/ ID CAP
- IRON PIPE FOUND
- IRON PIPE SET
- P.K. NAIL FOUND
- P.K. NAIL SET

CONVENTIONAL SYMBOLS

Center Line & Lot Lines
Right of Way (Ex) — Ex R/W
Fence Line (Ex) — (Pr)
Standard Highway Ease. — Ex SH
Utility Ease. (Ex) — Ex U
Construction Limits
Edge of Pavement (Ex)
Edge of Shoulder (Ex)
Tree Line (Ex)
Ownership Hook Symbol, Example
Property Line Symbol, Example
Break Line Symbol, Example
Ex. Gas Line — G
Ex. Water Line — W
Limited Access R/W — LA
Limited Access R/W (Ex.) — Ex LA

Tree (Pr), Tree (Ex), Shrub (Ex)
Tree (Remove), Shrub (Remove)
Evergreen (Ex), Evergreen (Remove)
Stump (Ex), Stump (Remove)
Post (Ex), Mailbox (Ex), Mailbox (Pr)
Light (Ex), Telephone Marker (Ex) TEL
Fire Hydrant (Ex), Water Meter (Ex)
Water Valve (Ex)
Utility Valve Unknown (Ex.)
Telephone Pole (Ex), Power Pole (Ex)
Light Pole (Ex), Gas Valve (Ex)
Gas Line Marker (Ex) G, Gas Line Vent (Ex) G

I, SHANE L. QUEER, P.S., HAVE CONDUCTED A SURVEY OF THE EXISTING CONDITIONS FOR THE OHIO DEPARTMENT OF TRANSPORTATION ON NOVEMBER 2007. THE RESULTS OF THAT SURVEY ARE CONTAINED HEREIN. THE HORIZONTAL COORDINATES EXPRESSED HEREIN ARE BASED ON THE OHIO STATE PLANE CORDINATES SYSTEM, NORTH ZONE BY TIES TO THE ODOT CORS NETWORK USING STATIONS, WOOS, OHTU AND OHPO THE UNITLESS PROJECT ADJUSTMENT FACTOR USED FOR THIS PROJECT IS 1.000099910. FURTHER MORE; I HAVE CALCULATED THE PROPOSED PROPERTY LINES , GROSS TAKE, PRESENT ROAD OCCUPIED, NET TAKE AND NET RESIDUE; AS WELL AS PREPARED THE LEGAL DESCRIPTIONS NECESSARY TO ACQUIRE THESE PARCELS AS SHOWN HEREIN. AS PART OF THIS PROJECT I HAVE DETERMINED THE LOCATIONS OF THE EXISTING PROPERTY LINES FOR PROPERTY TAKES CONTAINED HEREIN. I HAVE ALSO SET MONUMENTS AT THE PROPOSED PROPERTY CORNERS, SECTION CORNERS AND OTHER POINTS SHOWN HEREIN, AS CONDUCTED IN ACCORDANCE WITH OHIO ADMINISTRATIVE CODE 4733-37 COMMONLY KNOWN AS MINIMUM STANDARDS FOR BOUNDARY SURVEY IN THE STATE OF OHIO UNLESS SO NOTED. THE WORDS I AND MY AS USED HEREIN ARE TO MEAN THAT EITHER MYSELF OR SOMEONE WORKING FOR ME UNDER MY DIRECT CONTROL OR SUPERVISION.

11-25-08 Shane L. Queer
DATE SHANE L. QUEER, P.S., OHIO LIC. #8134

SURVEYORS SEAL

STATE OF OHIO
SHANE L. QUEER 8134
REGISTERED PROFESSIONAL SURVEYOR

SIGNED: Shane L. Queer
DATE: Nov. 25, 2008

FEDERAL PROJECT NO.
PID NO. 82824
CALCULATED MGA
CHECKED SLQ
RIGHT OF WAY LEGEND SHEET
WAY-30-20.64
1/6
8/13

PROJECT GROUND COORDINATES - US SURVEY FEET
PRIMARY PROJECT CONTROL POINTS

PROJECT COORDINATES (FEET) ARE RELATIVE TO STATE PLANE GRID COORDINATES (METERS)
BY A PROJECT ADJUSTMENT FACTOR (PAF) MULTIPLIER OF 3.281134588816121

	CENTERLINE R/W USR 30		PLAN WAY-30-17.03 USED FOR ALIGNMENT			
NAME	STATION	OFFSET(ft)	NORTH(ft)	EAST(ft)	ELEVATION(ft)	FEATURE
CP01	1053+01.02	100.43	412440.7028	2175045.7520	1049.87	IPINS
CP02	1048+78.02	-49.91	412595.7114	2174624.4380	1044.39	MAGS
CP03	1048+36.82	51.92	412494.3432	2174582.1180	1044.51	MAGS
MN01			412571.7425	2172295.3390	1063.53	CMON
MN07			413890.8776	2174879.3610	1013.99	1" IPF
CP26	1051+84.54	1353.13	411189.3745	2174915.428	1090.08	IPIN

USR 30 MONUMENTATION/ALIGNMENT

	CENTERLINE R/W USR 30		PLAN WAY-30-17.03 USED FOR ALIGNMENT			
NAME	STATION	OFFSET(ft)	NORTH(ft)	EAST(ft)	ELEVATION(ft)	FEATURE
MN02	1035+00.00	0.00	412561.0459	2173245.9500	1058.82	CMON
MN03	1044+99.92	-0.03	412550.0212	2174245.8080	1046.34	CMON
MN04	1053+87.86	0.00	412540.1712	2175133.6910	1040.42	CMON

STATE PLANE GRID COORDINATES - METERS
PRIMARY PROJECT CONTROL POINTS

HORIZONTAL DATUM - NAD83(2007), OHIO NORTH ZONE (3401) FROM CORS
VERTICAL DATUM - NAVD88 (GPS DERIVED FROM CORS)

NAME	NORTH(m)	EAST(m)	ORTHO HT(m)	DESCRIPTION
CP01	125699.6190	662889.0420	320.001	3/4" REBAR WITH 3-1/2" ALUMINUM DISK SET
CP02	125746.8610	662760.6380	318.332	"MAG" NAIL SET IN BERM WB
CP03	125715.9670	662747.7401	318.367	"MAG" NAIL SET IN BERM EB
MN01	125739.5560	662050.7981	324.166	CONCRETE MONUMENT FOUND
MN07	126141.5890	662838.3309	309.065	1" IRON PIPE FOUND NE CORNER NW QTR SEC 7
CP26	125318.2515	662849.3231	332.256	5/8" REBAR FOUND CENTER SECTION 7

USR 30 MONUMENTATION/ALIGNMENT

HORZ. DATUM - NAD83(1995), OHIO NORTH ZONE VERT. DATUM - NAVD88 GPS DERIVED

NAME	NORTH(m)	EAST(m)	ORTHO HT(m)	DESCRIPTION
MN02	125736.2960	662340.5160	322.730	CONCRETE MONUMENT FOUND & USED FOR STATIONING & LINE
MN03	125732.9360	662645.2429	318.926	CONCRETE MONUMENT FOUND
MN04	125729.9340	662915.8431	317.120	CONCRETE MONUMENT FOUND & USED FOR LINE

TOTAL MONUMENTS - QUANTITY CARRIED TO GENERAL SUMMARY

PROJECT GROUND COORDINATES - US SURVEY FEET
PROPERTY MONUMENTS, EXISTING & PROPOSED R/W POINTS

PROJECT COORDINATES (FEET) ARE RELATIVE TO STATE PLANE GRID COORDINATES (METERS)
BY A PROJECT ADJUSTMENT FACTOR (PAF) MULTIPLIER OF 3.281161121

	CENTERLINE R/W USR 30		PLAN WAY-30-17.03 USED FOR ALIGNMENT			
NAME	STATION	OFFSET(ft)	NORTH(ft)	EAST(ft)	ELEVATION(ft)	FEATURE
CP21	1041+13.12	99.25	412455.0201	2173857.934	1062.04	IPIN
CP22	1044+66.75	100.09	412450.2708	2174211.533	1055.43	IPIN
CP23	1045+66.15	100.6	412448.6586	2174310.922	1050.30	IPIN
CP24	1045+16.42	198.59	412351.2268	2174260.115	1051.65	IPIN
CP25	1044+73.23	284.18	412266.1181	2174215.981	1051.57	IPIN
CP27	1051+61.02	390.77	412151.9373	2174902.548	1058.75	RSPK
CP28	1051+30.97	390.5	412152.5316	2174872.507	1061.12	IPIN
CP29	1049+44.89	388.77	412156.3256	2174686.452	1057.84	IPIN
RE02	1037+04.50	-80.00	412638.7798	2173451.3221	0.00	
RE03	1040+00.00	-90.00	412645.5117	2173746.9146	0.00	
RE04	1044+83.50	-90.00	412640.1655	2174230.3850	0.00	
RE05	1046+62.00	-90.00	412638.1918	2174408.8741	0.00	
RE06	1048+24.50	-90.00	412636.3949	2174571.3642	0.00	
RE07	1050+00.00	-110.00	412654.4531	2174747.0746	0.00	
RE08	1051+49.00	-110.00	412652.8056	2174896.0655	0.00	
RE09	1051+48.82	-110.00	412652.8075	2174895.8902	0.00	
RE10	1035+00.00	70.00	412491.0502	2173245.1760	0.00	
RE11	1036+59.00	70.00	412489.2921	2173404.1663	0.00	
RE12	1037+34.00	77.50	412480.9632	2173479.0787	0.00	
RE13	1038+09.50	85.00	412472.6288	2173554.4912	0.00	
RE14	1039+59.50	100.00	412455.9712	2173704.3162	0.00	
RE15	1041+10.00	100.00	412454.3070	2173854.8070	0.00	
RE16	1045+00.00	100.00	412449.9947	2174244.7831	0.00	
RE17	1046+50.00	110.00	412438.3367	2174394.6634	0.00	
RE18	1049+00.00	110.00	412435.5723	2174644.6481	0.00	
RE19	1050+08.00	110.00	412434.3781	2174752.6415	0.00	
RE20	1050+49.00	110.00	412433.9248	2174793.6390	0.00	
RE21	1051+55.50	136.00	412406.7488	2174899.8450	0.00	
RE22	1051+54.83	135.84	412406.9207	2174899.1730	0.00	
RP01	1047+00.00	-90.00	412637.7716	2174446.8718	0.00	IPINS
RP02	1048+80.00	-165.00	412710.7767	2174627.6901	0.00	IPINS
RP03	1050+50.00	-110.00	412653.9003	2174797.0716	0.00	IPINS
RP04	1045+50.00	103.33	412446.1087	2174294.7432	0.00	IPINS
RP05	1047+00.00	160.00	412387.7869	2174444.1075	0.00	IPINS
RP06	1049+00.00	160.00	412385.5754	2174644.0952	0.00	IPINS
RP07	1050+49.00	110.00	412433.9248	2174793.6390	0.00	IPINS
RP08	1051+49.00	-110.00	412652.8056	2174896.0655	0.00	IPINS
RP09	1048+00.00	-90.00	412636.6658	2174546.8657	0.00	IPINS
RP10	1048+75.00	-125.00	412670.8344	2174622.2481	0.00	IPINS
RP11	1050+00.00	-110.00	412654.4531	2174747.0746	0.00	IPINS
RP12	1051+55.50	136.00	412406.7488	2174899.8450	0.00	IPINS
RP13	1048+24.50	-90.00	412636.3949	2174571.3642	0.00	IPINS
RP14	1046+50.00	110.00	412438.3367	2174394.6634	0.00	IPINS
RP15	1049+38.79	146.98	412398.1630	2174683.0285	0.00	IPINS
RP16	1049+37.86	110.00	412435.1537	2174682.5065	0.00	IPINS

STATE PLANE GRID COORDINATES - METERS
PROPERTY MONUMENTS, EXISTING & PROPOSED R/W POINTS

HORIZONTAL DATUM - NAD83(2007), OHIO NORTH ZONE (3401) FROM CORS
VERTICAL DATUM - NAVD88 (GPS DERIVED FROM CORS)

NAME	NORTH(m)	EAST(m)	ORTHO HT(m)	DESCRIPTION	RIGHT OF WAY MONUMENTS TO BE POSSIBLY RESET 604
CP21	125703.9825	662527.0305	323.710	5/8" REBAR W/ CAP MARKED " SJL"	
CP22	125702.5350	662634.7970	321.696	5/8" REBAR W/ CAP MARKED " SJL"	
CP23	125702.0437	662665.0877	320.134	5/8" REBAR W/ CAP MARKED " SJL"	
CP24	125672.3494	662649.6032	320.544	5/8" REBAR W/ CAP MARKED " SJL"	
CP25	125646.4108	662636.1524	320.520	5/8" REBAR W/ CAP MARKED " SJL"	
CP27	125611.6119	662845.3977	322.707	5/8" REBAR W/ CAP MARKED " SJL"	
CP28	125611.7930	662836.2420	323.429	5/8" REBAR W/ CAP MARKED " SJL"	
CP29	125612.9493	662779.5382	322.431	5/8" REBAR W/ CAP MARKED " SJL"	
RE02	125759.9870	662403.1073		EXISTING RIGHT OF WAY	
RE03	125762.0386	662493.1951		EXISTING RIGHT OF WAY	
RE04	125760.4093	662640.5424		EXISTING RIGHT OF WAY	
RE05	125759.8078	662694.9406		EXISTING RIGHT OF WAY	
RE06	125759.2601	662744.4627		EXISTING RIGHT OF WAY	
RE07	125764.7637	662798.0140		EXISTING RIGHT OF WAY	
RE08	125764.2616	662843.4220		EXISTING RIGHT OF WAY	
RE09	125764.2622	662843.3686		EXISTING RIGHT OF WAY	
RE10	125714.9634	662340.2801		EXISTING RIGHT OF WAY	
RE11	125714.4276	662388.7356		EXISTING RIGHT OF WAY	
RE12	125711.8892	662411.5667		EXISTING RIGHT OF WAY	
RE13	125709.3491	662434.5502		EXISTING RIGHT OF WAY	
RE14	125704.2724	662480.2124		EXISTING RIGHT OF WAY	
RE15	125703.7652	662526.0775		EXISTING RIGHT OF WAY	
RE16	125702.4509	662644.9305		EXISTING RIGHT OF WAY	
RE17	125698.8979	662690.6096		EXISTING RIGHT OF WAY	
RE18	125698.0554	662766.7975		EXISTING RIGHT OF WAY	
RE19	125697.6914	662799.7106		EXISTING RIGHT OF WAY	
RE20	125697.5533	662812.2054		EXISTING RIGHT OF WAY	
RE21	125689.2708	662844.5739		EXISTING RIGHT OF WAY	
RE22	125689.3232	662844.3690		EXISTING RIGHT OF WAY	
RP01	125759.6797	662706.5211			
RP02	125781.9295	662761.6292			
RP03	125764.5952	662813.2516			
RP04	125701.2666	662660.1569			
RP05	125683.4918	662705.6787			
RP06	125682.8178	662766.6289			
RP07	125697.5533	662812.2054			
RP08	125764.2616	662843.4220			
RP09	125759.3427	662736.9963		3/4" IRON PIN W/ 2" ALUMINUM CAP MARKED " ODOT R/W - DISTRICT 3 "	1
RP10	125769.7562	662759.9706		3/4" IRON PIN W/ 2" ALUMINUM CAP MARKED " ODOT R/W - DISTRICT 3 "	1
RP11	125764.7637	662798.0140		3/4" IRON PIN W/ 2" ALUMINUM CAP MARKED " ODOT R/W - DISTRICT 3 "	1
RP12	125689.2708	662844.5739			
RP13	125759.2601	662744.4627			
RP14	125698.8979	662690.6096			
RP15	125686.6541	662778.4947			
RP16	125697.9278	662778.3356			
				TOTAL RIGHT OF WAY MONUMENT RESET CARRIED TO GENERAL SUMMARY (ITEM 604)	3

NOTE: THE CENTERLINE OF RIGHT OF WAY ALIGNMENT, EXISTING R/W WIDTH AND LOCATION WERE DETERMINED USING ODOT RIGHT OF WAY PLAN WAY-30-17.03. CENTERLINE LOCATION PLAN RECORDED AS PLAT VOL. 4, PAGE 55 (1950) OF THE WAYNE COUNTY RECORDER'S RECORDS.

THE PROPOSED RIGHT OF WAY SHALL BE REFERENCED FROM THE CENTERLINE OF RIGHT OF WAY.

THE PLACING OF MONUMENTS SHALL BE UNDER THE DIRECTION OF A SURVEYOR REGISTERED IN THE STATE OF OHIO. THE CENTERLINE MONUMENT ASSEMBLY BOX(S) WILL BE INSTALLED BY THE HIGHWAY CONTRACTOR AT THE TIME OF CONSTRUCTION. THE IRON PIN WITH CAP MARKING THE ACTUAL CENTERLINE STATION POINT AND ANY REFERENCE MONUMENTS ARE TO BE SET BY THE RIGHT OF WAY DESIGN CONSULTANT.

CHANGES OR ALTERATIONS TO THE LOCATION OF ANY MONUMENTS SHOWN ON THIS PLAT, REQUIRES PRIOR APPROVAL OF THE DISTRICT REAL ESTATE ADMINISTRATOR OF THE OHIO DEPARTMENT OF TRANSPORTATION. A REVISED CENTERLINE PLAT WITH THE NEW LOCATIONS SHALL BE RECORDED IN THE APPLICABLE COUNTY RECORDS AND THE OHIO DEPARTMENT OF TRANSPORTATION. SPECIFICATIONS FOR CENTERLINE MONUMENTS, REFERENCE MONUMENTS AND RIGHT OF WAY MONUMENTS ARE SHOWN ON STANDARD CONSTRUCTION DRAWING RM-1.1 OF THE OHIO DEPARTMENT OF TRANSPORTATION.

PROJECT ADJ. FACTOR = 3.281161121 (METRIC GRID TO PROJECT GROUND FEET) UNITLESS FACTOR = 1.000099910 MEAN PROJECT LATITUDE - 40° 47' 46" (SCALE FACTOR - 0.999950316) MEAN PROJECT ELVATION - 1050.00
ENG./METRIC CONV.= 3.280833333 US SURVEY FOOT CONVERSION FACTOR

STATE PLANE GRID COORDINATES DERIVED THROUGH A SERIES OF STATIC, RAPID STATIC, & VRS GPS OBSERVATIONS. POINTS HAVING PREFIX 'CP' ARE PROJECT CONTROL POINTS. POINT CP01 (PROJECT BASE POINT) LOCATED BY MEANS OF AVERAGING MULTIPLE 2+ HOUR STATIC GPS SESSIONS, SOLVED THROUGH THE NATIONAL GEODETIC SURVEY'S ONLINE POSITIONING USER SERVICE (OPUS). SUBSEQUENT CONTROL POINTS POSITIONED BY OVERLAPPING RAPID STATIC GPS OBSERVATIONS WITH STATIC BASE SESSIONS AND THROUGH TRIMBLE GEOMATICS OFFICE (TGO) SOFTWARE RADIATING VECTORS FROM CP01 TO ALL CONTROL POINTS. GRID VALUES MULTIPLIED BY THE PAF TO OBTAIN GROUND VALUES IN FEET. POINTS WITH PREFIX 'MB' and 'MN' ARE CENTERLINE & REFERENCE MONUMENTS LOCATED. POINTS WITH PREFIX 'RE' ARE EXISTING RIGHT OF WAY CORNERS FROM PLAN WAY-30-17.03.

WAYNE COUNTY
SUGAR CREEK TOWNSHIP
SECTION 7, T-16N, R-11W

LOT 32
LOT 31
LOT 30
LOT 29
LOT 33
LOT 34
LOT 35
LOT 36
LOT F
LOT 28
LOT 27
LOT 26
LOT 25
LOT 24
LOT 23
LOT 50
LOT 48
LOT 47
LOT 46
LOT 45
LOT 8
LOT 7
LOT 6
LOT 5

EXISTING HIGHWAY EASEMENT
D.V. 290, PAGE 447

30' COMMON ACCESS DRIVE
O.R.V. 0380, PG. 1708-1712
PLAT VOL. 25, PAGE 455
HACKETT SUBDIVISION NO.2

POND

ROADWAY DEDICATION
PLAT VOL. 25, PAGE 454

SECTION LINE

BLANKET EASEMENT FOR
OHIO POWER COMPANY,
AN OHIO CORPORATION
O.R.V. 0421, PAGE 0937

(11)
HACKETT ASSOCIATION, INC.
LOT 49
47-00487.010

30' COMMON ACCESS DRIVE
O.R.V. 0380, PG. 1708-1712
PLAT VOL. 25, PAGE 455
HACKETT SUBDIVISION NO.2

HACKETT SUBDIVISION NO. 3
PLAT VOL. 28, PAGE. 228

T.M.P. "D"

HACKETT SUBDIVISION NO. 1
PLAT VOL. 6, PAGE. 81

T.M.P. "X"

TOWNSHIP ROAD 129 (KOHLER ROAD)
(VARIABLE R/W WIDTH)

SECTION LINE

T.M.P. = TAX MAP PARCEL

BLANKET EASEMENT
FOR OHIO POWER
COMPANY, AN OHIO
CORPORATION
D.V. 371, PAGE 693

(12)
CAROL ANN GERBER
AKA
CAROL A. GERBER
47-00421.000
1.530 ACRES

EXISTING HIGHWAY
EASEMENT
D.V. 289, PAGE 423

℄ R/W U.S.R. 30 (OLD LINCOLN WAY)
(VARIABLE R/W WIDTH)

1038+00
1038+00
1040+00
1042+00
1044+00
1046+00
1048+00
1050+00
1052+00

(13)
WAYNE COUNTY COMMISSIONERS

(10)
MAR GROUP, LTD., AN OHIO
LIMITED LIABILITY COMPANY
47-00066.000
32.837 ACRES

10' UTILITY EASEMENT
PER EAST OHIO GAS COMPANY
D.V. 418, PG. 23

EXISTING HIGHWAY EASEMENT
D.V. 288, PAGE 536

BEGIN WORK
STA. 1045+30.00

DRAINAGE DITCH
TRIBUTARY OF
SUGAR CREEK

EXISTING HIGHWAY EASEMENT
D.V. 289, PAGE 425

(10)
MAR GROUP, LTD., AN OHIO
LIMITED LIABILITY COMPANY
47-01299.000
4.610 ACRES

EXISTING HIGHWAY
EASEMENT
D.V. 288, PAGE 537

END WORK
STA. 1051+50.00

REV. BY	DATE	DESCRIPTION
DATE COMPLETED		11-25-2008

HORIZONTAL SCALE IN FEET
0 50 100 200

PID NO. 82824

R/W DESIGNER MGA
R/W REVIEWER SLQ

PROPERTY MAP

WAY-30-20.64

3 / 6

10 / 13

TOTAL NUMBER OF :

4 OWNERSHIPS 0 TOTAL TAKES

4 PARCELS 0 OWNERSHIPS W/ STRUCTURES INVOLVED

RECORD AREA - TOTAL PRO - NET TAKE = NET RESIDUE

ALL AREAS IN ACRES

PARCEL NO.	OWNER	SHEET NO.	OWNERS RECORD BOOK	OWNERS RECORD PAGE	AUDITOR'S PARCEL	RECORD AREA	TOTAL P.R.O.	GROSS TAKE	P.R.O. IN TAKE	NET TAKE	STRUCTURE	NET RESIDUE LEFT	NET RESIDUE RIGHT	TYPE FUND	REMARKS	AS ACQUIRED BOOK	AS ACQUIRED PAGE
1 - 9	NOT USED																
10-LA	MAR GROUP, LTD., AN OHIO LIMITED	3, 6	O.R.V. 210	712	47-01299.000	4.610	2.602	0.069	0.000	0.069	NO	1.939			TAX MAP PARCEL NUMBER C		
10-T	LIABILITY COMPANY							0.208	0.000	0.208							
															PLACE PIPE LINER AND GRADING		
															EXISTING HIGHWAY EASEMENT D.V. 288, PG. 536		
															EXISTING HIGHWAY EASEMENT D.V. 289, PG. 425		
															EXISTING HIGHWAY EASEMENT D.V. 288, PG. 537		
		3, 6			47-00066.000	32.837	1.998	0.000	0.000	0.000		30.839			TAX MAP PARCEL NUMBER B		
	TOTAL					37.447	4.600										
11-T	HACKETT ASSOCIATION, INC.	3, 5, 6	O.R.V. 0380	1706	47-00487.010	12.532	0.021	0.317	0.000	0.317	NO		12.194		LOT 49 HACKETT SUBDIVISION NO. 3 SEE PLAT		
			O.R.V. 0584	2110											VOL. 28, PAGE 228		
															EXISTING HIGHWAY EASEMENT D.V. 290, PG. 447		
															PLACE PIPE LINER AND GRADING		
12-T	CAROL ANN GERBER AKA CAROL A.	3, 6	O.R.V. 0516	1943	47-00421.000	1.530	0.302	0.047	0.000	0.047	NO		1.181		EXISTING HIGHWAY EASEMENT D.V. 289, PG. 423		
	GERBER		O.R.V. 0341	1450											PLACE PIPE LINER AND GRADING		
															TAX MAP PARCEL NUMBER X		
13	WAYNE COUNTY COMMISSIONERS		PLAT VOL. 25	454	—	1.801	1.801	—	—	—			0.000		ROADWAY DEDICATION BY PLAT		
															HACKETT SUBDIVISION NO. 2		

NOTE: ALL TEMPORARY PARCELS TO BE OF 6 MONTH DURATION.

NOTE: UNDER NO CIRCUMSTANCES ARE TEMPORARY EASEMENTS TO BE USED FOR STORAGE OF MATERIAL OR EQUIPMENT BY THE CONTRACTOR UNLESS NOTED OTHERWISE.

D.V. = DEED VOLUME
O.R.V. = OFFICIAL RECORD VOLUME

PARCEL LEGEND:
WD = WARRANTY DEED
SH = STANDARD HIGHWAY EASEMENT
SL = SLOPE EASEMENT
CH = CHANNEL EASEMENT
PR = PROPERTY RIGHT
TMP = TEMPORARY
LA = LIMITED ACCESS EASEMENT

REV. BY	DATE	DESCRIPTION

FIELD REVIEW BY MIKE ALLEMAN DATE: 8-29-2008

OWNERSHIP VERIFIED BY NORTHWEST REGION DATE: 4-18-2008

DATE COMPLETED 11-25-2008

FEDERAL PROJECT NO.

PID NO. 82824

STATE JOB NO. 437628

R/W DESIGNER MGA R/W REVIEWER SLQ

SUMMARY OF ADDITIONAL RIGHT OF WAY PARCELS 10-13

WAY-30-20.64

REV. BY	DATE	DESCRIPTION
DATE COMPLETED		11-25-2008

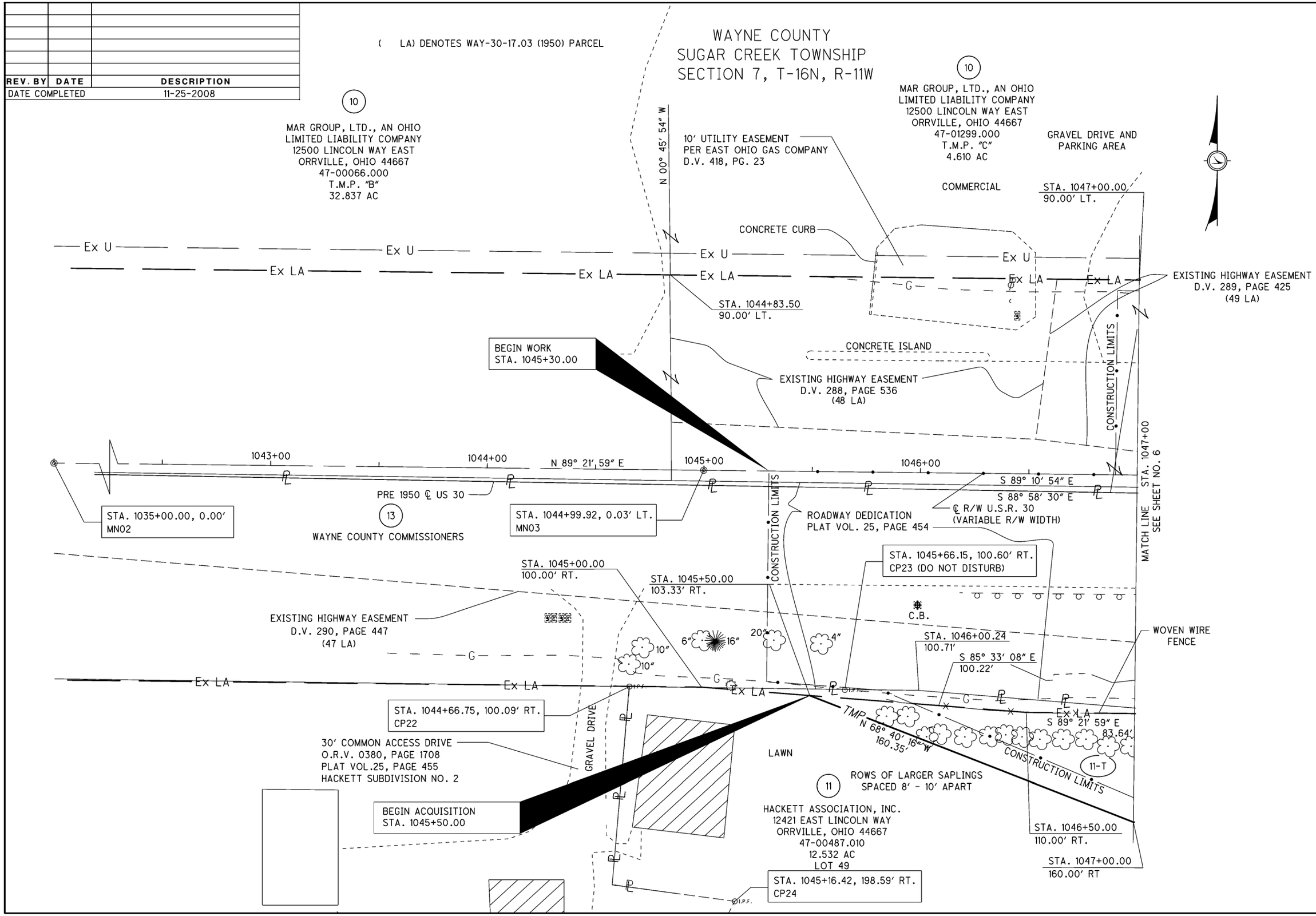

PID NO. 82824

R/W DESIGNER MGA
R/W REVIEWER SLQ

RIGHT OF WAY PLAN
STA. 1042+00 TO STA. 1047+00

WAY-30-20.64

5/6

12/13

WAYNE COUNTY
SUGAR CREEK TOWNSHIP
SECTION 7, T-16N, R-11W

MN07

COMMERCIAL

STA. 1048+80.00
165.00' LT.

N 89° 21' 59" W
100.00'

S 81° 52' 21" E

STA. 1048+75.00
125.00' LT.

DRAINAGE DITCH TRIBUTARY OF SUGAR CREEK

TMP

S 71° 26' 19" E 178.68'

N 68° 00' 49" E 195.00'

CONSTRUCTION LIMITS

RCP TYPE B W/ FILTER

BUSINESS SIGN

N 09° 18' 07" E

STA. 1047+00.00
90.00' LT.

N 65° 37' 00" E 82.76'

S 82° 31' 25" E 125.90'

10-LA

10-T

14" CLUMP
8"
12" CLUMP
18" CLUMP
12" CLUMP
6"
16" CLUMP
14" CLUMP

Ex U
Ex LA
Ex R/W
LA-R/W

8" CLAY
STA. 1048+00.00
90.00' LT.

N 89° 21' 59" W
24.50'

CONC. PAD TO BE REMOVED

SLOPE EROSION PROTECTION

EX. HEADWALL TO BE REMOVED

18" X 18" CONC. SQUARE

S 84° 07' 56" W
176.64'

STA. 1050+00.00
110.00' LT.

10

MAR GROUP, LTD., AN OHIO
LIMITED LIABILITY COMPANY
12500 LINCOLN WAY EAST
ORRVILLE, OHIO 44667
47-01299.000
T.M.P. "C"
4.610 AC.

STA. 1050+50.00
110.00' LT.

GAS METER STATION

GRAVEL DRIVE

N 89° 21' 59" W
148.82'

N 89° 21' 59" W
50.00'

END ACQUISITION
STA. 1050+50.00

(50 A)

22+00

S 00° 45' 54" E 1,238.18'

STA. 1051+48.82
110.00' LT.

10' UTILITY EASEMENT
PER EAST OHIO GAS COMPANY
D.V. 418, PG. 23

END WORK
STA. 1051+50.00

STA. 1051+52080 ℄ U.S.R. 30
STA. 20+00.00 ℄ KOHLER ROAD
(TWP. RD. 129)

STA. 1053+87.86, 0.00'
MN04

STA. 1048+24.50
90.00' LT.

EXISTING HIGHWAY EASEMENT
D.V. 289, PAGE 425
(49 LA)

S 09° 18' 07" W

PROPOSED 54" LT. AND 60" RT.

EX. TWIN 72" CMP

EXISTING HIGHWAY EASEMENT
D.V. 288, PAGE 537
(50 LA)

STA. 1047+67.28
5.84' RT.

1048+00

1049+00

1050+00

N 89° 21' 59" E 1051+00
151.51'

S 89° 10' 54" E

STA. 1047+67.95
8.75' RT.

S 74° 19' 35" E

℄ R/W U.S.R. 30
(VARIABLE R/W WIDTH)

℄ STRUCTURE U.S.R. 30
STA. 1048+52.33

EXISTING HIGHWAY EASEMENT D.V. 280, PAGE 447 (47 LA)

13

WAYNE COUNTY COMMISSIONERS

SLOPE EROSION PROTECTION

EX. HEADWALL TO BE REMOVED

STA. 1049+36.62
51.35'

ROADWAY DEDICATION
PLAT VOL. 25, PAGE 454

N 00° 48' 30" W
13.41'

STA. 1049+38.57
124.28' RT.

RCP TYPE B W/ FILTER

EXISTING HIGHWAY EASEMENT D.V. 280, PAGE 447 (47 LA)

WOVEN WIRE 20" FENCE

17' DIA. BUSH

6" CAST IRON DRAIN

EXISTING HIGHWAY EASEMENT
D.V. 289, PAGE 423
CONSTRUCTION LIMIT

S 89° 21' 59" E
110.78'

20"

205.42'

S 85° 22' 53" E

S 89° 21' 59" E
83.64'

STA. 1047+33.64
110.00' RT.

11-T

12-T

ROWS OF SAPLINGS SPACED 8' - 10' APART

CONSTRUCTION LIMITS

S 72° 05' 00" W 115.91'

STA. 1049+38.22
110.00' RT.

STA. 1050+49.00
110.00' RT.

STA. 1050+08.00
110.00' RT.

C.B.

(49 A)

STA. 1051+84.54, 1,353.13' RT.
CP26

STA. 1051+54.5
104.00' RT.

CONSTRUCTION LIMITS 20+00

KOHLER ROAD (TWP. RD. 129)
(VARIABLE R/W WIDTH)

19+00

21+00

S 00° 44' 55" E
22.60'

N 89° 21' 59" W
200.00'

11

HACKETT ASSOCIATION, INC.
12421 EAST LINCOLN WAY
ORRVILLE, OHIO 44667
47-00487.000
LOT 49
12.532 AC.

FALLOW

STA. 1047+00.00
160.00' RT.

STA. 1049+00.00
160.00' RT.

S 72° 05' 00" W
41.26'

N 00° 44' 55" W
36.89'

STA. 1049+39.11
146.87' RT.

12

CAROL ANN GERBER
AKA CAROL A. GERBER
71 SOUTH KOHLER ROAD,
ORRVILLE, OHIO 44667
47-00421.000
T.M.P. "X"
1.530 AC.

LAWN

STA. 1051+55.50
136.00' RT.

5/8" REBAR

MATCH LINE STA. 1047+00 SEE SHEET NO. 5

REV. BY	DATE	DESCRIPTION

DATE COMPLETED 11-25-2008

R/W DESIGNER MGA
R/W REVIEWER SLQ

HORIZONTAL SCALE IN FEET 0 10 20 40

PID NO. 82824

RIGHT OF WAY PLAN
STA. 1047+00 TO STA. 1052+00

WAY-30-20.64

6/6

13/13