FED. RD.	STATE	PROJECT	
2	OHIO		

202/294

MAH-80-3.37

LEGEND

- LIGHT POLE WITH 15'ARM TYPE III DISTR.
- LIGHT POLE WITH 10'ARM TYPE II DISTR.
- LIGHT POLE WITH 10'ARM TYPE III DISTR.(FUT.)
- LIGHT POLE WITH 10'ARM TYPE III DISTR. (BRIDGE)
- FUTURE (FUT.) LIGHT POLE
- 657+55℄ STATIONING DESIGNATION OF LIGHT, ALIGNED @ 90° NORMAL TO ℄ OF ROADWAY OR RAMP
- 11.5'*1(6) DESIGNATION OF LIGHT, OR PULL BOX; 11.5' INDICATES THE OFFSET FROM EDGE OF PAV'T, *1 THE CKT. NO., (6) THE POLE NO.
- DUCT-CABLE.
- LIGHTING CKT. CABLE 2-1/c CABLES (PAIR) IN 2" ALLOY COND. FOR PROTECTION UP SLOPE @ BRIDGE
- FUTURE DUCT-CABLE.
- 18" FIBRE PULL BOX
- 3" W.I. OR ALLOY STEEL CROSSOVER CONDUIT
- STRUCTURE GROUND
- GUARDRAIL
- SERVICE POLE
- SIGNS (ELECTRICALLY LIGHTED)

Note: Circuit #A becomes Br. Circuit #1, #2, and #3. Circuit #B becomes Br. Circuit #4, #5, and #6.

SIGN No	SIGN LOCATION	PULL BOX LOCATION	SIGN LOAD WATTS
3	638+75 E.B.	638+85 E.B.	250
4	645+75 E.B.	645+85 E.B.	1,275
6	661+80 W.B.	661+70 W.B.	425
7	665+00 E.B.	665+10 E.B.	425
8	668+50 W.B.	668+40 W.B.	850

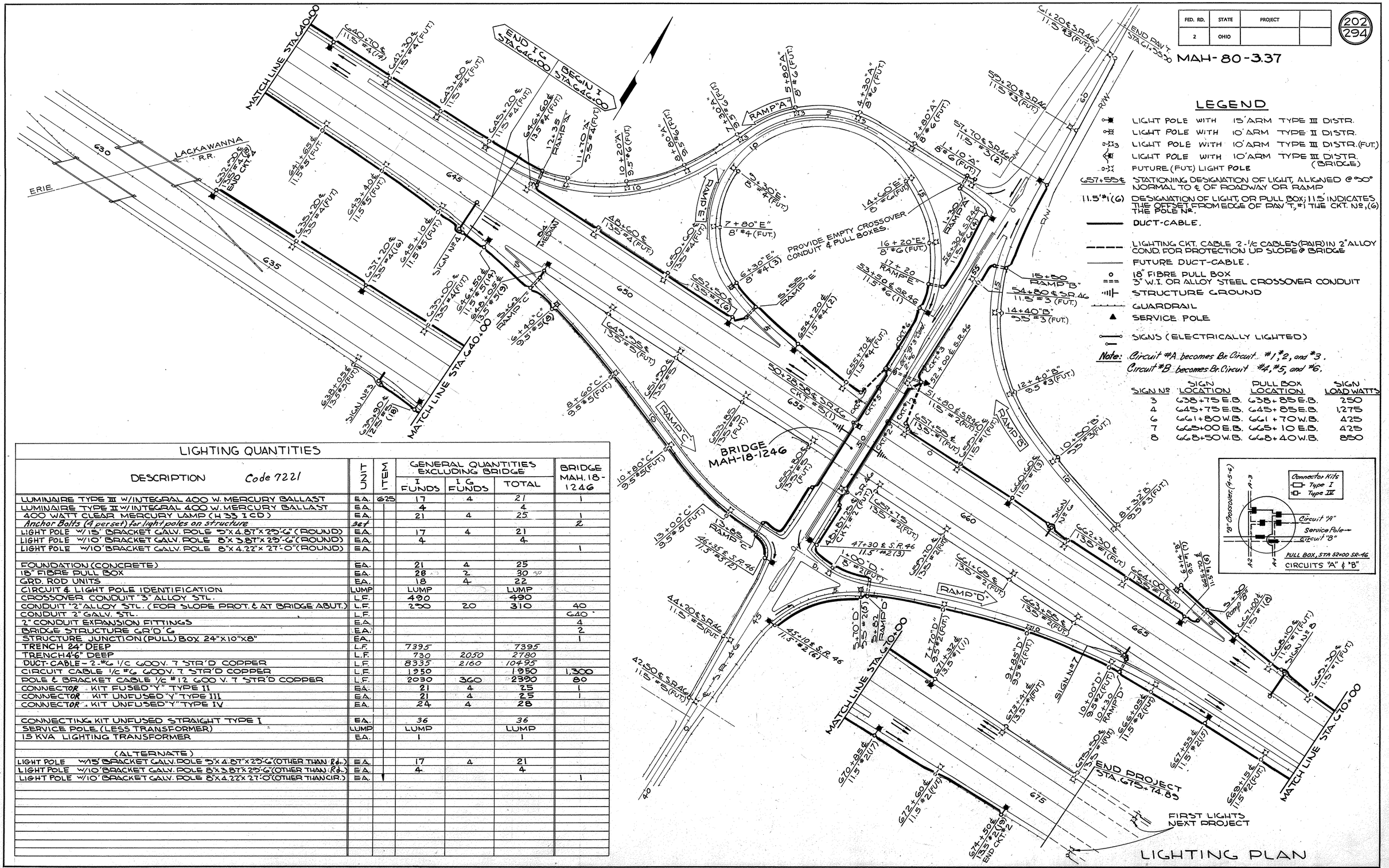

LIGHTING PLAN

LIGHTING QUANTITIES

DESCRIPTION Code 7221	UNIT	ITEM	GENERAL QUANTITIES EXCLUDING BRIDGE I FUNDS	GENERAL QUANTITIES EXCLUDING BRIDGE I G FUNDS	GENERAL QUANTITIES EXCLUDING BRIDGE TOTAL	BRIDGE MAH.18-1246
LUMINAIRE TYPE III W/INTEGRAL 400 W. MERCURY BALLAST	EA.	625	17	4	21	1
LUMINAIRE TYPE II W/INTEGRAL 400 W. MERCURY BALLAST	EA.		4		4	
400 WATT CLEAR MERCURY LAMP (H 33 1 CD)	EA.		21	4	25	1
Anchor Bolts (4 per set) for light poles on structure	set					2
LIGHT POLE W/15' BRACKET GALV. POLE 5"X 4.87"X 25'-6" (ROUND)	EA.		17	4	21	
LIGHT POLE W/10' BRACKET GALV. POLE 8"X 3.87"X 29'-6" (ROUND)	EA.		4		4	
LIGHT POLE W/10' BRACKET GALV. POLE 8"X 4.22"X 27'-0" (ROUND)	EA.					1
FOUNDATION (CONCRETE)	EA.		21	4	25	
18" FIBRE PULL BOX	EA.		28	2	30	
GRD. ROD UNITS	EA.		18	4	22	
CIRCUIT & LIGHT POLE IDENTIFICATION	LUMP		LUMP		LUMP	
CROSSOVER CONDUIT 3" ALLOY STL.	L.F.		490		490	
CONDUIT 2" ALLOY STL. (FOR SLOPE PROT. & AT BRIDGE ABUT.)	L.F.		290	20	310	40
CONDUIT 2" GALV. STL.	L.F.					640
2" CONDUIT EXPANSION FITTINGS	EA.					4
BRIDGE STRUCTURE GR'D'G	EA.					2
STRUCTURE JUNCTION (PULL) BOX 24"X10"X8"	EA.					1
TRENCH 24" DEEP	L.F.		7395		7395	
TRENCH 4'-6" DEEP	L.F.		730	2050	2780	
DUCT-CABLE - 2-#6 1/C 600V. 7 STR'D COPPER	L.F.		8335	2160	10495	
CIRCUIT CABLE 1/c #6 600V. 7 STR'D COPPER	L.F.		1950		1950	1,300
POLE & BRACKET CABLE 1/c #12 600 V. 7 STR'D COPPER	L.F.		2030	360	2390	80
CONNECTOR - KIT FUSED "Y" TYPE II	EA.		21	4	25	1
CONNECTOR - KIT UNFUSED "Y" TYPE III	EA.		21	4	25	1
CONNECTOR - KIT UNFUSED "Y" TYPE IV	EA.		24	4	28	
CONNECTING KIT UNFUSED STRAIGHT TYPE I	EA.		36		36	
SERVICE POLE (LESS TRANSFORMER)	LUMP		LUMP		LUMP	
15 KVA LIGHTING TRANSFORMER	EA.		1		1	
(ALTERNATE)						
LIGHT POLE W/15' BRACKET GALV. POLE 5"X 4.87"X 25'-6" (OTHER THAN Rd.)	EA.		17	4	21	
LIGHT POLE W/10' BRACKET GALV. POLE 8"X 3.87"X 29'-6" (OTHER THAN Rd.)	EA.		4		4	
LIGHT POLE W/10' BRACKET GALV. POLE 8"X 4.22"X 27'-0" (OTHER THAN CIR.)	EA.					1

FED. RD.	STATE	PROJECT	
2	OHIO		

203/294

MAH. 80-3.37

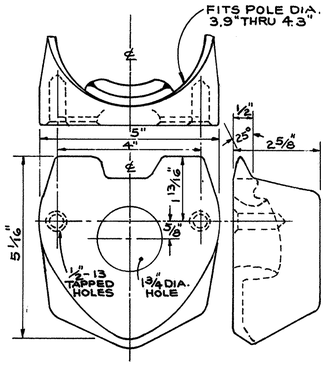

(CAST STEEL)

POLE PLATE

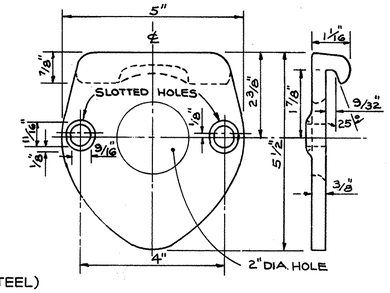

BRACKET ARM PLATE

BRACKET ARM ATTACHMENT

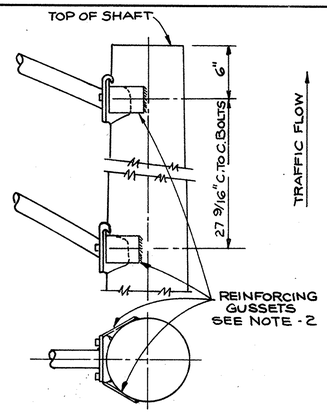

REINFORCING GUSSETS

SILVER-WHITE REFLECTIVE ADHESIVE TYPE DECALS, W/ CIRCUIT Nº AND POLE Nº AS SHOWN ON LIGHTING PLAN.

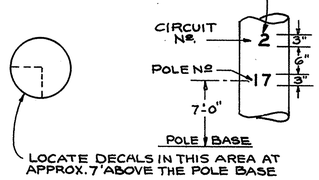

REFLECTIVE NUMBERS (SPECIFICATION MIL-R-13689A) SERIES "B" NUMBERS W/ SPACING AS PER AA.S.H.O. SPECIFICATIONS.

LIGHT POLE CIRCUIT IDENTIFICATION

NOTES:

1. THE PRINCIPAL DIMENSIONS OF POLE PLATES AND BRACKET ARM PLATES MUST BE SUCH THAT THE BRACKET ARM ASSEMBLY'S ARE INTERCHANGEABLE; ONLY THE OUTLINE DIMENSIONS AFFECTING PHYSICAL APPEARANCE MAY VARY.
2. REINFORCING GUSSETS SHALL BE PROVIDED ON 11 GA. SHAFTS WITH POLE TOP DIAMETERS LARGER THAN 4.4"; OTHERWISE PROVIDE SEPARATE STEEL CASTINGS MODIFIED TO FIT SHAFT DIAMETER USED.

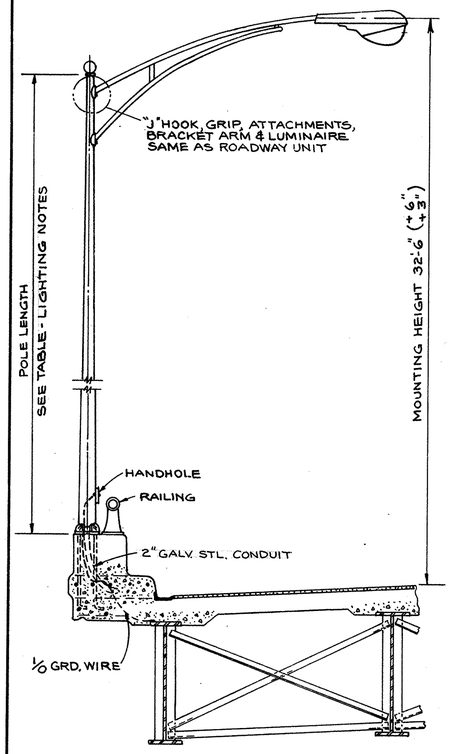

TYPICAL
BRIDGE LIGHTING UNIT
SCALE 3/8"=1'-0"

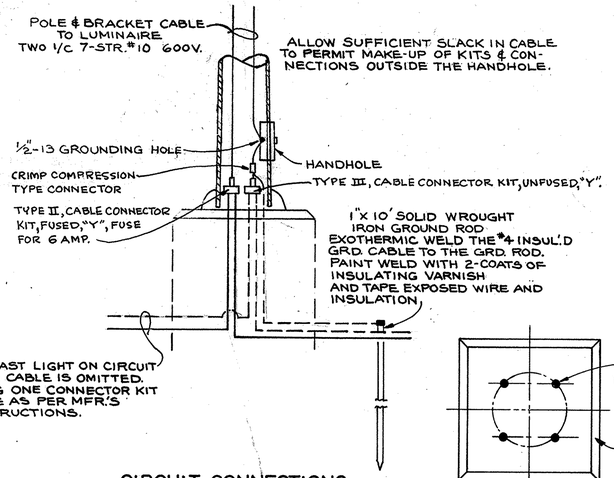

CIRCUIT CONNECTIONS
AT LIGHT POLE
FOR 1Φ 480 VOLT MULTIPLE CKT.

HANDHOLE:
4"X 10" WITH STL. REINFORCED FRAME & COVER. COVER HELD CAPTIVE BY TWO (2) ¼-20 S.S. R.H. MACHINE SCREW, AND RETAINED TO POLE BY #35 S.S. SASH CHAIN. RIVET CHAIN TO COVER WITH 3/16" RIVET & ATTACH TO BOTTOM OF FRAME WITH 3/16"X ½" PHILLIPS HD. S.S. SCREW.
HANDHOLE LOCATION-
ROADWAY & RAMP - 180° OPPOSITE BRACKET
BRIDGE - SAME SIDE AS BRACKET

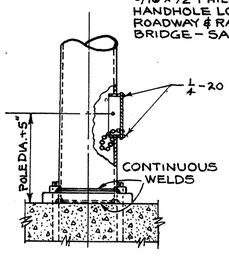

PLATE STEEL BASE

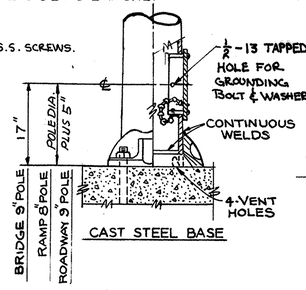

CAST STEEL BASE

POLE ANCHOR BASE
DETAIL "A"

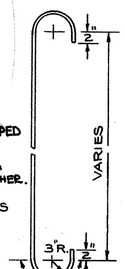

BAR

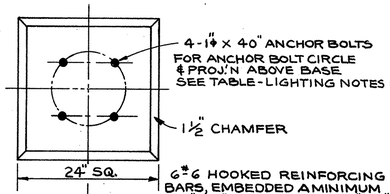

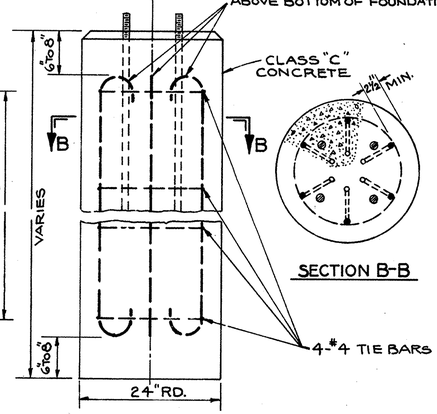

SECTION B-B

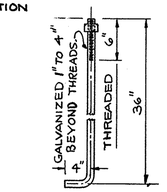

ANCHOR BOLT 1"Φ x 40"

REINFORCING BARS-CONC. FOUNDATION
SCALE 1"=1'-0"

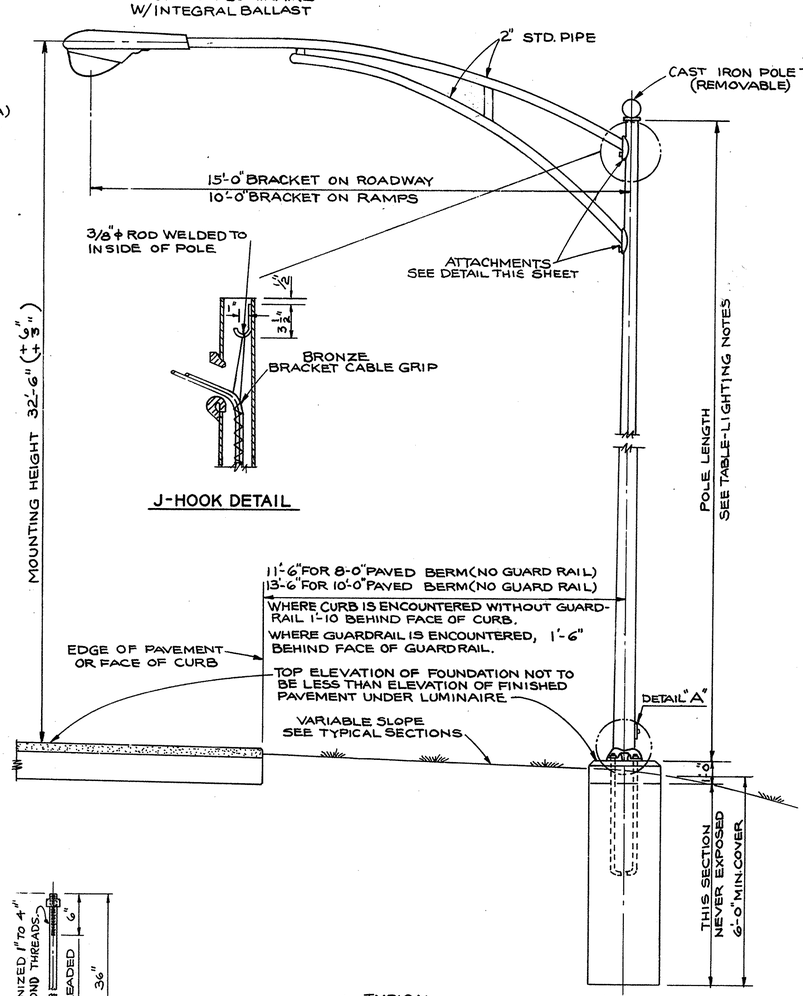

TYPICAL
ROADWAY & RAMP LIGHTING UNIT
SCALE ½"=1'-0"

FED. RD.	STATE	PROJECT	
2	OHIO		

204/294

MAH. 80-3.37

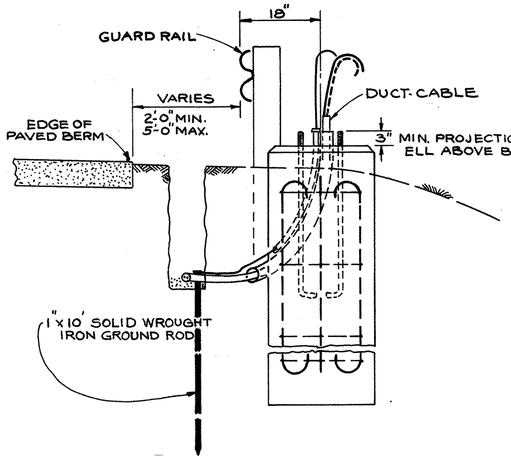

ELEVATION B-B

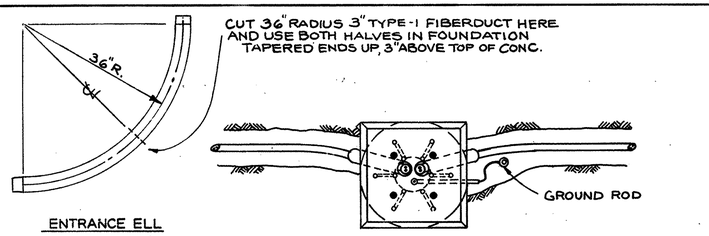

PLAN Nº 2
(Alternate Trench)

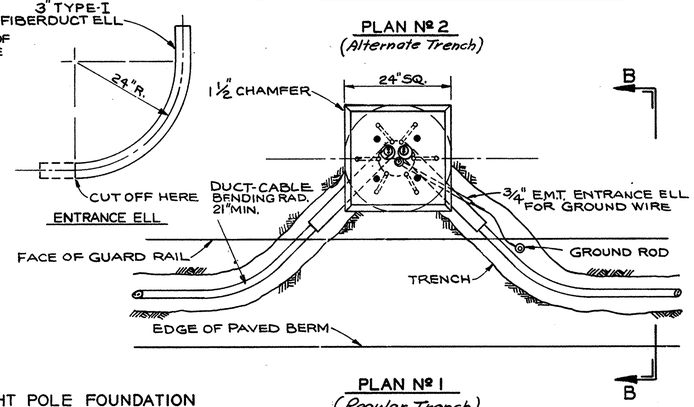

PLAN Nº 1
(Regular Trench)

LIGHT POLE FOUNDATION
DUCT-CABLE ENTRY & GRD'G DETAILS
SCALE ¾"=1'-0"

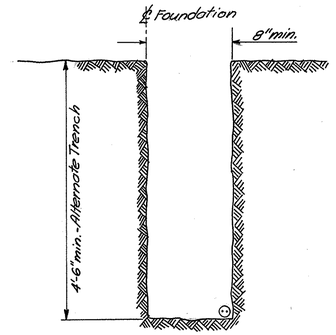

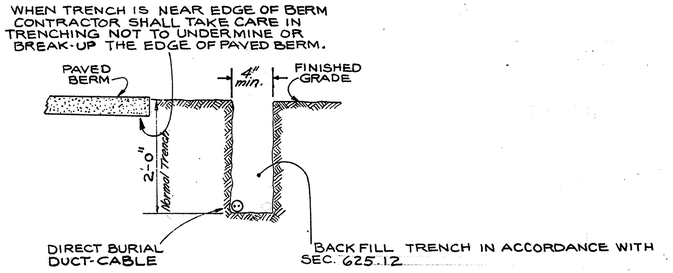

DUCT-CABLE TRENCH

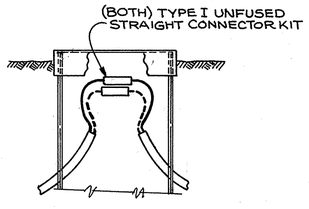

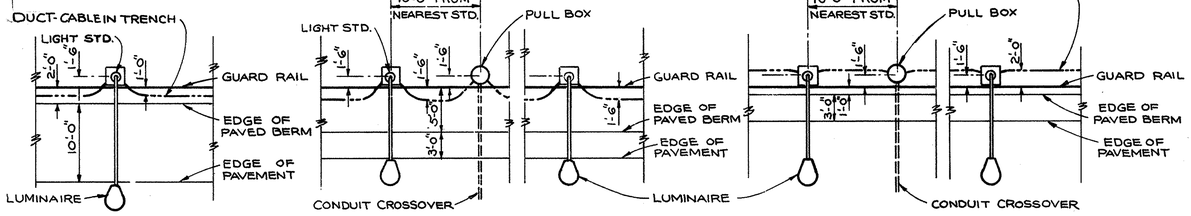

ROADWAY | LOW SIDE OF RAMP | HIGH SIDE OF RAMP

DUCT-CABLE & PULLBOX LOCATIONS

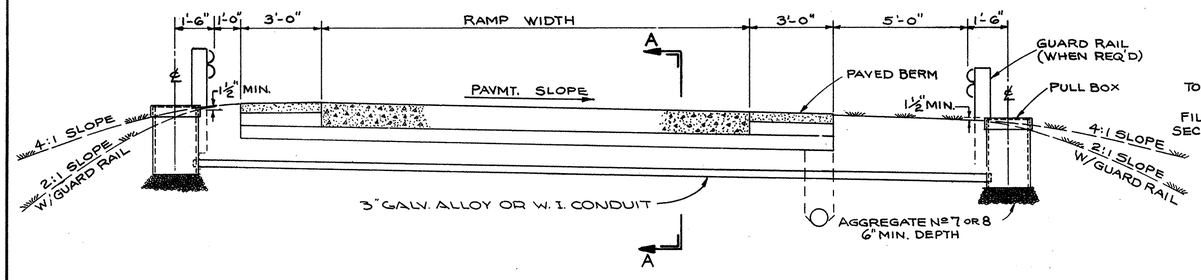

CONDUIT CROSSOVER DETAILS
SCALE ⅜"=1'-0"

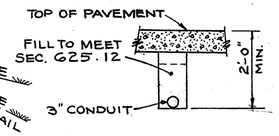

SECTION A-A

TYPICAL CONNECTIONS
THRU WITHOUT TAP

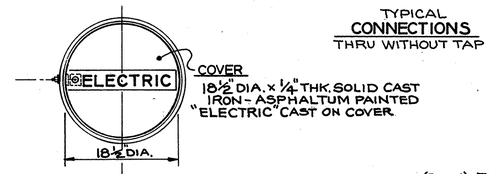

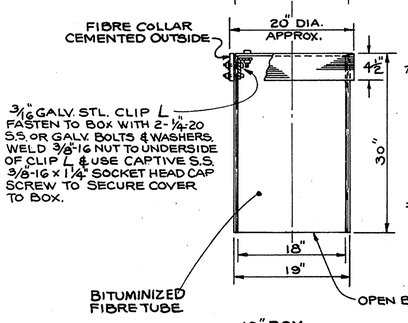

18" BOX

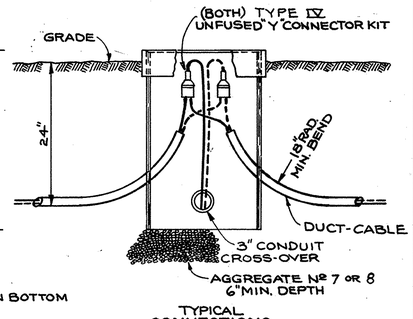

TYPICAL CONNECTIONS

DETAILS - FIBRE PULL BOX
SCALE 1"=1'-0"

MISCELLANEOUS LIGHTING DETAILS

FED. RD.	STATE	PROJECT	
2	OHIO		

205
254

MAH.80-3.37

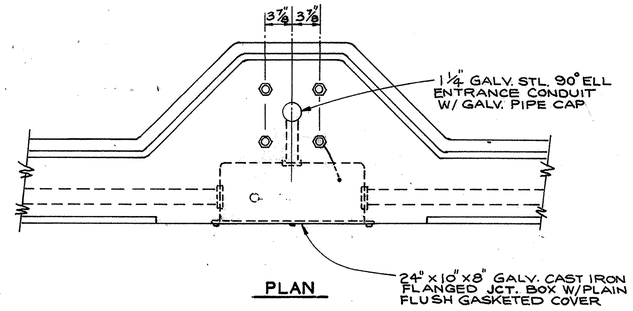

PLAN

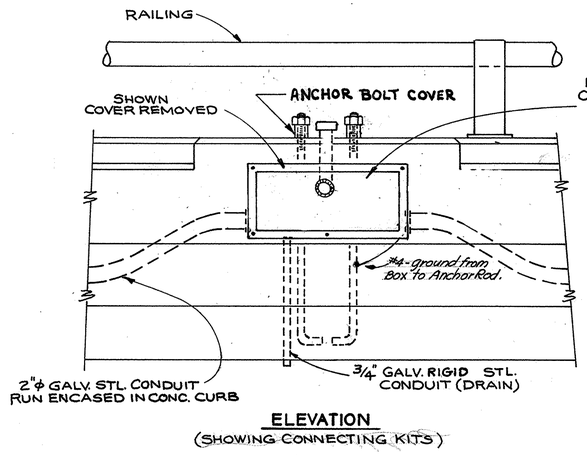

ELEVATION
(SHOWING CONNECTING KITS)

TABLE-STRUCTURE GROUNDING

BRIDGE Nº	TYPE STRUCTURE	GROUNDING DETAILS
MAH-18-1246	STEEL BEAM	SPIRAL COIL 25' OF CABLE UNDER FIXED PIER #2 (CTR. PIERS) 2-GRD'G SYSTEMS, ONE EA. HALF.

DETAIL-MTG. OF PULL BOX & POLE BOLTS
@ STA. 48+87.25 SR-46

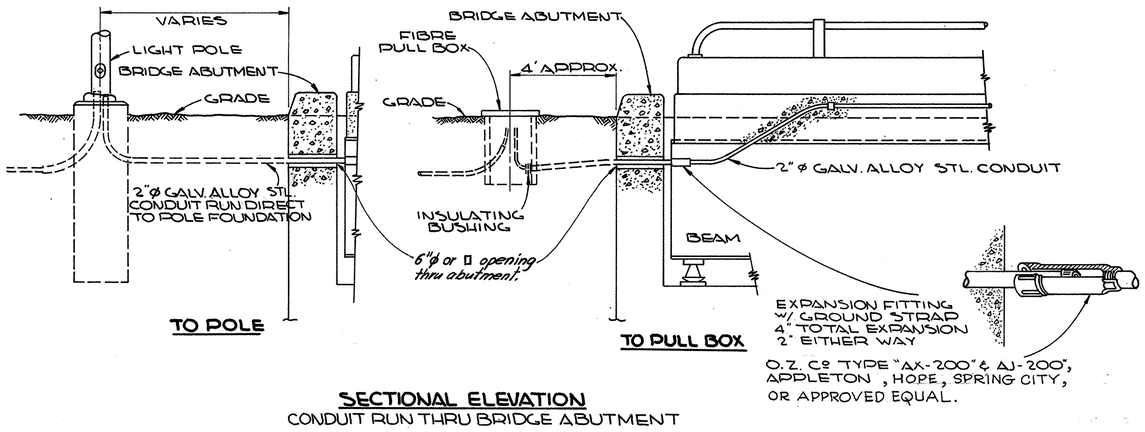

SECTIONAL ELEVATION
CONDUIT RUN THRU BRIDGE ABUTMENT

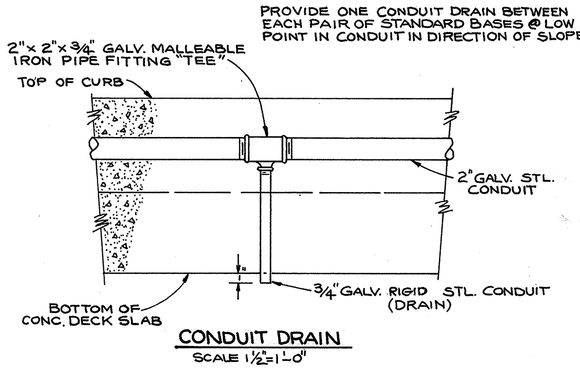

CONDUIT DRAIN
SCALE 1½"=1'-0"

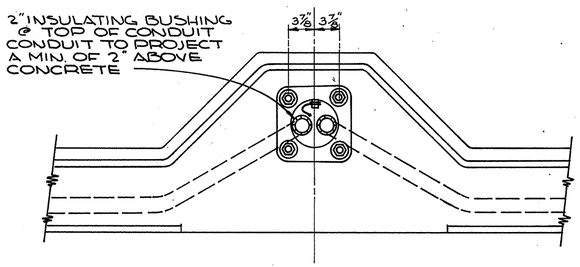

DETAIL-MTG. OF LIGHT POLE
WITH 2" CONDUIT RUN DIRECTLY INTO POLE BASE

FED. RD.	STATE	PROJECT	
2	OHIO		

206
294

MAH. 80-3.37

LIGHTING TRANSFORMER STATION

1. TRANSFORMER SHALL BE THE CONVENTIONAL TYPE SINGLE PHASE, OISC, POLE MT'D WITH PRIMARY TAPS 2½% - 2 ABOVE 2 BELOW. WESTINGHOUSE TYPE S, G.E. CO TYPE HS, LINE MATERIAL CO OR APPROVED EQUAL. TRANSFORER SHALL BE FURNISHED & INSTALLED AS A SEPARATE PAY ITEM.

2. COMBINATION FUSED SWITCH AND LIGHTING CONTACTOR SHALL BE 60 AMP. 600 VOLT, 3 POLE W/ACCESSORIES, FUSED CONTROL TRSF., HAND-OFF-AUTO SELECTOR SWITCH, IN A NEMA-4 ENCLOSURE OF STAINLESS STEEL (AISI Nº 302 OR 303). MOUNT TO POLE WITH 3/16" x 1½" GALV. STL. STRAPS. USE ALL CORROSION-PROOF HDWE., & SEAL ALL CONDUITS TO PREVENT INGRESS OF WATER. COMB. SWITCH AND CONTACTOR SHALL BE; G.E. CO, COLUMBUS ELECTRIC WORKS, SQ D CLASS 8903 TYPE W339 FAG10A OR AN APPROVED EQUAL.

3. THE LIGHTING CONTACTOR SHALL HAVE A SEPERATE MOUNTED PHOTO-ELECTRIC CONTROLLER FOR IT'S AUTOMATIC OPERATION. CONTROLLER SHALL BE NORMALLY CLOSED, CLOSED AT NIGHT, W/FACTORY SET TURN-ON FOR 3 FOOT-CANDLES, BE FAIL SAFE AND HAVE BUILT-IN TIME DELAY TO AVOID ERRONEOUS OPERATION. PHOTO ELECTRIC CONTROLLER SHALL BE FISHER-PIERCE SERIES 6600 A, G.E. CO CAT. 402 G 200 SERIES, TORK Nº 2000 SERIES, OR APPROVED EQUAL. A HAND-OFF-AUTO. (H.O.A.) SELECTOR SWITCH IN MAIN CONTACTOR ENCLOSURE WILL PROVIDE MANUAL OPERATION OF LIGHTING AS WELL.

4. ALL POLE HARDWARE SHALL BE HOT-DIPPED GALVANIZED. CONSTRUCTION PRACTICES AND ALL MATERIALS SHALL BE IN ACCORDANCE WITH THE STANDARDS OF THE OHIO EDISON CO (O.E. CO). THE CONTRACTOR SHALL PREPARE A LAYOUT DRAWING WITH DIMENSIONS, TYPICAL FOR THE LIGHTING TRSF. STATION HE INTENDS TO INSTALL, AND SUBMIT SAME TO THE DIRECTOR & THE O.E. CO. APPROVAL OF THE DRAWING(S) SHALL BE OBTAINED FROM THE DIRECTOR, BEFORE ANY MATERIALS ARE PROCURED, OR THE FABRICATION IS BEGUN.

5. THE CONTRACTOR SHALL MAKE ALL NECESSARY ARRANGEMENTS FOR POWER WITH THE OHIO EDISON CO.

6. PAYMENT FOR ITEM 625 15 KVA LIGHTING TRANSFORMER STN. (LESS TRSF.) WILL BE MADE AT A LUMP SUM PRICE. INCLUDED IS POLE, FURNISHED AND SET IN PLACE, WITH EQUIPMENT AS FOLLOWS: LIGHTNING ARRESTOR, FUSED CUTOUT AND FUSE, 2" GALV. CONDUIT AND WIRE TO CONTACTOR COMBINATION SWITCH AND LIGHTING CONTACTORS WITH ACCESSORIES, PHOTO-CONTROLLER W/MTG. BRACKET AND CONDUIT, ONE (1) 18" FIBRE PULL BOX, WITH ALL WIRING, CONNECTORS, GROUNDINGS, HARDWARE & 3" GALV. ALLOY CONDUITS TO BASE OF POLE.

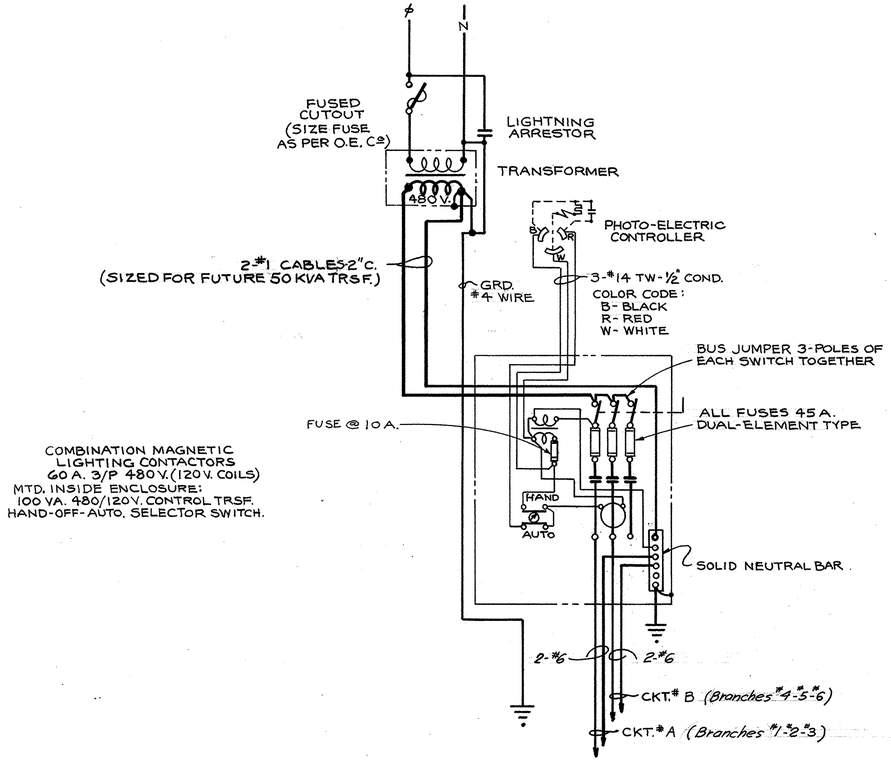

WIRING DIAGRAM
1 Φ 480V. MULTIPLE LIGHTING CIRCUIT

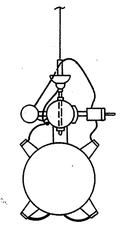

TOP VIEW

NOTE:
O.E. Co PRIMARY SYSTEM ON S.R. #46
IS 8320/4800 V. 3 Φ 4W. WYE
SINGLE PHASE VOLTS - 4800

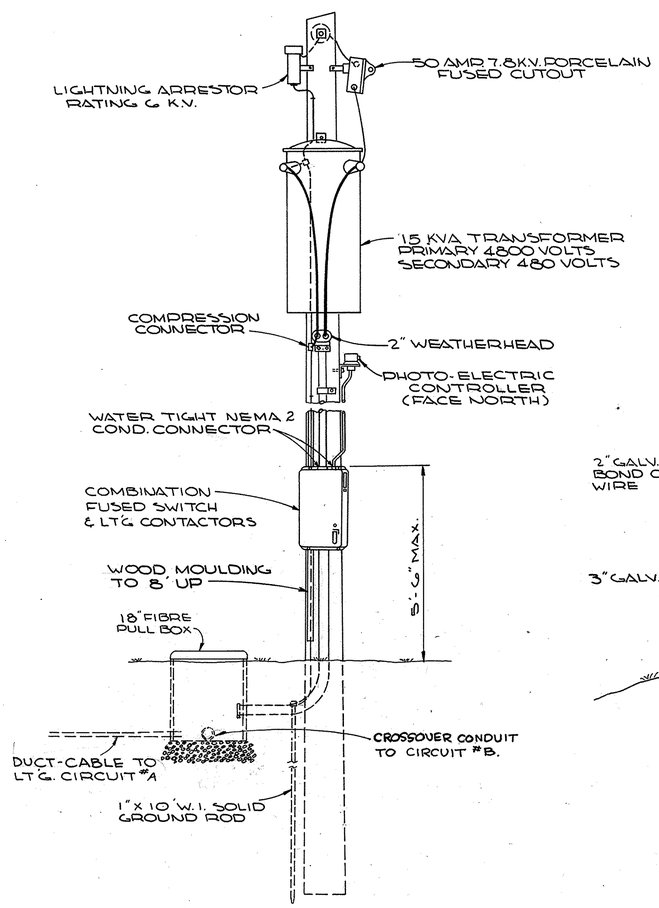

FRONT VIEW

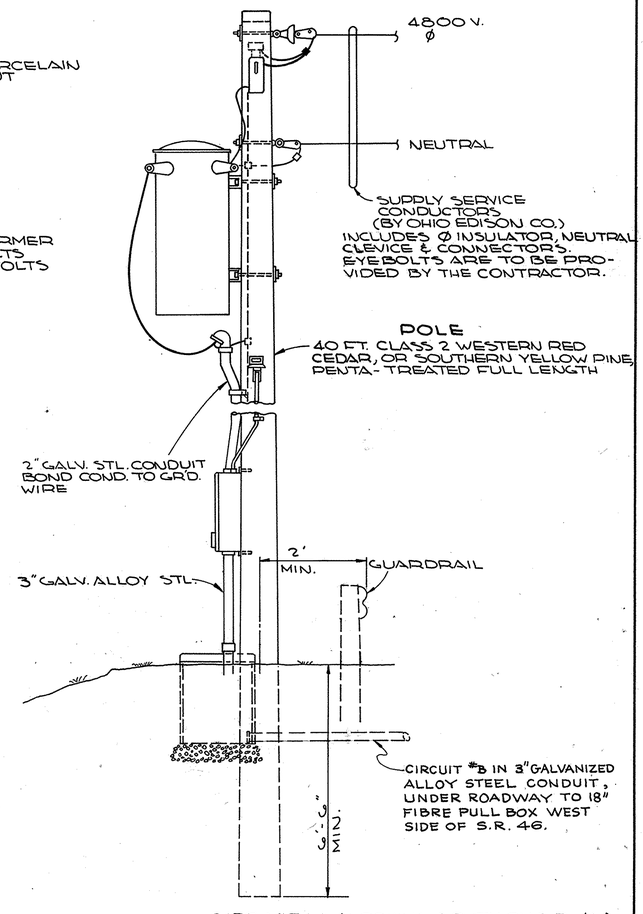

SIDE VIEW (LOOKING SOUTH ON S.R.-46)

(SERVICE POLE)
POLE MT'D LIGHTING TRANSFORMER STATION
SCALE ½" = 1'-0"

LIGHTING- SERVICE POLE

STRUCTURAL GENERAL NOTES

MICROFILMED
APR 7 1966

FED. RD.	STATE	PROJECT	
2	OHIO		

MAH-18-9.89

207
294

1. **DESIGN SPECIFICATIONS**

THIS STRUCTURE CONFORMS TO THE REQUIREMENTS OF " DESIGN SPECIFICATIONS FOR HIGHWAY STRUCTURES " OF THE STATE OF OHIO, DEPARTMENT OF HIGHWAYS, DATED 9/1/57, TOGETHER WITH CURRENT REVISIONS THEREOF.

2. **DESIGN LOADING** - SEE SITE PLANS

CONCRETE CLASS C - BASIC UNIT STRESS 1,333 p.s.i.
CONCRETE CLASS E - BASIC UNIT STRESS 1,133 p.s.i.

STRUCTURAL STEEL - ALL STRUCTURAL STEEL SHALL BE A S T M A 36
ASTM A36 - BASIC UNIT STRESS 20,000 p.s.i.

REINFORCING STEEL - ASTM A15, A16, A160, DEFORMED, INTERMEDIATE OR HARD GRADE. BASIC UNIT STRESS 20,000p.s.i. EXCEPT, SPIRAL REINFORCEMENT MAY BE PLAIN, STRUCTURAL GRADE WITH BASIC UNIT STRESS OF 18,000 p.s.i.

3. **REFERENCE**

REFERENCE SHALL BE MADE TO STANDARD DRAWINGS:
BR-1-65 SHEET I DATED 2-1-65
SD-1-63, SHEET NO. 2, 3, & 4. DATED 11/12/63
FSB-1-62, REVISED 1/15/63
AS-1-54, REVISED 8-10-65
808 - SUPPLEMENTAL SPEC., DATED 7/14/65
811 - SUPPLEMENTAL SPEC. DATED 3/29/65
RB-1-55 REV. 2/2/59
SUPPLEMENTAL SPEC. No. 825 of 4-22-65

4. **EXCAVATION QUANTITY**

EXCAVATION QUANTITY INCLUDES THE REMOVAL OF FILL MATERIAL REQUIRED FOR CONSTRUCTION OF THE ABUTMENTS.

5. **EXCAVATION QUANTITY**

EXCAVATION QUANTITY FOR THE ABUTMENTS, IN ADDITION TO THAT OUTLINED IN ITEM 503.10 INCLUDES THE REMOVAL OF MATERIAL BOUNDED BY THE PROPOSED BENCH, BY THE FRONT VERTICAL PLANE DESCRIBED IN ITEM 503.10 AND BY THE FINISHED SLOPE OF THE CUT.

6. **PROCEDURE**

THE EMBANKMENT SHALL BE PLACED AND COMPACTED UP TO THE FINISHED SPILL-THRU SLOPE AND TO THE LEVEL OF THE SUB-GRADE AFTER WHICH EXCAVATION SHALL BE MADE FOR THE ABUTMENTS AND FOR PIERS THAT ARE SET IN THE FILLED AREA (AND PILES DRIVEN).

6-A. **PROCEDURE**

AFTER THE PEDESTALS HAVE BEEN CONSTRUCTED THE EARTH FILL SHALL BE PLACED AND COMPACTED UP TO THE HEIGHT OF THE EARTH BENCH OR THE FINISHED SPILL-THRU SLOPE AND TO THE LEVEL OF THE SUBGRADE, AFTER WHICH EXCAVATION SHALL BE MADE FOR THE CROSSBEAM.

6-B. **PROCEDURE**

THE EMBANKMENT SHALL BE PLACED AND COMPACTED UP TO THE FINISHED SPILL-THRU SLOPE AND TO THE LEVEL OF THE SUBGRADE FOR A DISTANCE OF 200 FEET BACK OF THE ABUTMENTS, AFTER WHICH EXCAVATION SHALL BE MADE FOR THE ABUTMENT AND FOR PIERS THAT ARE SET IN THE FILLED AREA.

7. **FOOTINGS INTO ROCK**

FOOTINGS SHALL EXTEND A MINIMUM OF 3" INTO UNDISTURBED ROCK OR TO THE ELEVATION SHOWN, WHICHEVER IS LOWER.

8. **PILES**

PILES SHALL BE 12" OR 18" CAST-IN-PLACE CONCRETE AND SHALL BE DRIVEN TO A MINIMUM BEARING CAPACITY AS FOLLOWS:

BRIDGE NO.	CAPACITY IN TONS PER PILE	
	ABUTS	PIERS
MAH - 18- 1013	12" dia.-40 Tons	18"dia.-60 Tons

9. **PILES**

PILES SHALL BE DRIVEN TO FIRM CONTACT WITH ROCK. IF THE LENGTH OF PENETRATIONS IS APPROXIMATELY EQUAL TO THE DEPTH TO ROCK ACCORDING TO THE BRIDGE FOUNDATION INVESTIGATION REPORT. THE FIRM CONTACT SHALL BE CONSIDERED AS ATTAINED WHEN THE CAPACITY ACCORDING TO THE FORMULA IN ITEM 507.05 IS NOT LESS THAN THE FOLLOWING VALUE FOR A PILE HAMMER OF THE INDICATED ENERGY RATING.

"A" TONS PER PILE USING A 7,000 FT. LB. HAMMER
"B" TONS PER PILE USING A11,000 FT. LB. HAMMER
"C" TONS PER PILE USING A15,000 FT. LB. HAMMER

IF THE ENERGY RATING OF THE HAMMER IS BETWEEN THE RATINGS AS SHOWN ABOVE, THE REQUIRED FORMULA CAPACITY SHALL BE DETERMINED BY INTERPOLATION.
THE DESIGN LOAD IS "D" TONS PER PILE

BRIDGE NO. SUBSTR. UNIT	MAH 18 - 1178 ABUTS 1R, 2R, 2L	MAH 18 - 1197 ABUTS. NO. 1, 2	MAH 18-1246 ABUTS. NO.1
"A"	--	--	--
"B"	50	48	45
"C"	45	41	40
"D"	35	35	30

10. **FOUNDATION BEARING PRESSURE**

FOOTINGS ARE DESIGNED FOR A MAXIMUM BEARING PRESSURE OF "A" TONS PER SQ. FT.

BRIDGE NO.	SUBSTR. UNIT	A
MAH 18-1112	ABUTS PIERS	6 6
MAH 18-1178	ABUTS 1L PIERS	6 6
MAH 18 - 1197	PIERS	6
MAH 18-1246	ABUT '2 PIERS	6 6

11. **WELDING**

WELDING OF STRUCTURAL STEEL SHALL BE CLASS "A" EXCEPT AS OTHERWISE SHOWN. WELDS SHOWN AS FIELD WELD MAY, AT THE OPTION OF THE CONTRACTOR, BE MADE IN THE SHOP. CLASS "B" WELDS ARE SHOWN THUS (B)

13. **INTERMEDIATE CROSSFRAME ANGLES**

INTERMEDIATE CROSS FRAME ANGLES, 3 x 3 x 5/16 WELD BOTH SIDES OF VERTICAL LEG AND TOP SIDE OF HORIZONTAL LEG TO BEAM WITH 1/4" CONTINUOUS FILLET WELD.

15. **CONSTRUCTION JOINTS**

MAH.-18-1112 L / R

ONE CONSTRUCTION JOINT IN BRIDGE SLAB MAY BE PLACED ON TRANSVERSE CENTERLINE OF EITHER INTERIOR SPAN. ONE LONGITUDINAL JOINT WILL BE PERMITTED ON CENTERLINE OF ROADWAY.

MAH.-18-1178 L / R

ONE CONSTRUCTION JOINT IN BRIDGE SLAB MAY BE PLACED ON TRANSVERSE CENTERLINE OF MIDDLE SPAN. ONE LONGITUDINAL JOINT WILL BE PERMITTED ON CENTERLINE OF ROADWAY.

16. **DECK SLAB HAUNCH**

THE HAUNCH IN THE SUPERELEVATED DECK SLAB ADJACENT TO THE TOP OF STEEL BEAMS, WHICH IS SHOWN AS 9" WIDE, MAY VARY FROM THIS DIMENSION BETWEEN THE LIMITS OF 6" AND 12" ON THE LOW SIDE AND BETWEEN 9" AND 12" ON THE HIGH SIDE. EXCEPT ON THE HIGH SIDE, THE MAXIMUM SLOPE SHALL NOT EXCEED 3 INCHES PER FOOT. PAYMENT FOR DECK SLAB CONCRETE SHALL BE BASED ON THE 9" WIDTH.

17. **DECK SLAB HAUNCH**

THE HAUNCH IN THE DECK SLAB ADJACENT TO THE TOP OF STEEL BEAMS, WHICH IS SHOWN AS 9" WIDE, MAY VARY FROM THIS DIMENSION BETWEEN THE LIMITS OF 6" AND 12", EXCEPT THAT THE MAXIMUM SLOPE SHALL NOT EXCEED 3 INCHES PER FOOT. PAYMENT FOR DECK SLAB CONCRETE SHALL BE BASED ON THE 9" WIDTH.

18. **SLAB THICKNESS OVER BEAMS**

THIS IS A NOMINAL DIMENSION. THE QUANTITY OF DECK CONCRETE TO BE PAID FOR SHALL BE BASED ON THIS DIMENSION, EVEN THOUGH DEVIATION FROM IT MAY BE NECESSARY BECAUSE THE TOP FLANGE OF THE BEAM MAY NOT HAVE THE EXACT CAMBER OR CONFORMATION REQUIRED TO PLACE IT PARALLEL TO THE FINISHED GRADE.

19. **CONCRETE DECK PLACING**

IN ORDER TO FACILITATE WATER CURING OF THE CONCRETE OF THE DECK SLAB, THE PLACING OF CONCRETE SHALL PROGRESS UPGRADE. THIS SLAB MAY BE PLACED IN SECTIONS, BETWEEN TRANSVERSE CONSTRUCTION JOINTS WHICH ARE PARALLEL TO TRANSVERSE REINFORCING STEEL AND ARE LOCATED NEAR THE CENTER OF ANY SPAN.

20. **MACHINE FINISH**

THE CONCRETE DECK SHALL BE FINISHED BY THE USE OF A FINISHING MACHINE.

21. **SURFACE FINISH OF CONCRETE**

THE REQUIREMENTS OF SEC. S-1.02, RUBBED FINISH, SHALL APPLY TO THE FOLLOWING EXPOSED CONCRETE SURFACES:

A. THE ENTIRE SUPERSTRUCTURE EXCEPT THE TOP AND BOTTOM SURFACES OF SIDEWALKS AND ROADWAYS.

STATE OF OHIO
DEPARTMENT OF HIGHWAYS
BUREAU OF BRIDGES

BEISWENGER & HOCH, Consulting Engineers
AKRON, OHIO

STRUCTURAL GENERAL NOTES

PROJECT MAH-18-9.89

MAHONING COUNTY

DESIGNED	DRAWN	TRACED	CHECKED	REVIEWED	DATE	REVISED
			RBH	RBH	1-6-65	

STRUCTURAL GENERAL NOTES

MICROFILM
APR 7 19

FED. RD.	STATE	PROJECT	
2	OHIO		

MAH-18-9.89

208
294

22. **ABUTMENT BACKWALL**

THE CONCRETE IN THE ABUTMENT BACKWALL SHALL NOT BE PLACED UNTIL AFTER THE STEEL WORK IS ERECTED, BUT SHALL BE PLACED BEFORE THE DECK SLAB IS POURED.

23. POROUS BACKFILL

POROUS BACKFILL, 1'-6" THICK, FULL LENGTH OF ABUTMENTS SHALL EXTEND UP TO THE UNDERSIDE OF THE APPROACH SLAB, OR TO THE FINISHED GROUND SURFACE UNLESS OTHERWISE SHOWN.

24. RIDGE SEAT REINFORCING

SPECIAL CARE SHALL BE TAKEN IN PLACING REINFORCING STEEL IN THE VICINITY OF THE BRIDGE SEAT SO AS TO AVOID INTERFERENCE WITH THE DRILLING OF ANCHOR BAR HOLES.

25. PARAPET WALL

1/4" GRAY SPONGE RUBBER PREFORMED EXPANSION JOINT FILLER MEETING THE REQUIREMENTS OF ITEM 705.03 (AASHO M-153) (INCLUDE WITH ITEM 517 FOR PAYMENT.)

26. RAILING

VOID

TYPE "A" ALUMINUM RAILING SHALL BE IN LENGTHS OF NOT LESS THAN TWO PANELS AT ABUTMENTS AND AT ENDS OF SUPERSTRUCTURE AND OF NOT LESS THAN THREE PANELS ELSEWHERE.

27. PLATE GIRDER DETAILS

ALL INTERMEDIATE STIFFENERS SHALL BE IN PAIRS AND SHALL NOT BE WELDED TO THE FLANGES. IN SHOP PAINTING CARE SHALL BE TAKEN TO MAKE CERTAIN THAT PAINT IS FORCED THROUGH FROM ONE SIDE TO THE OTHER OF THE 1/8" OPENING BETWEEN THE GIRDER FLANGE AND INTERMEDIATE STIFFENERS.

THE CONTRACTOR SHALL SUBMIT, TO THE DIRECTOR FOR HIS APPROVAL, 3 PRINTS SHOWING THE CONTRACTORS PROPOSED ERECTION PROCEDURE FOR THE PLATE GIRDERS.

28. HIGH-STRENGTH STEEL BOLTS, NUTS AND WASHERS

UNDER ITEM S-7.10, PARAGRAPH TWO (2), SHALL BE COMPLETELY REVISED AND THE LAST SENTENCE OF PARAGRAPH FOUR (4) REVISED TO READ AS FOLLOWS:

"IN THE FINAL ASSEMBLY OF THE PARTS TO BE BOLTED, DRIFT PINS SHALL BE PLACED IN A SUFFICIENT NUMBER OF HOLES (NOT LESS THAN 25 PERCENT FOR FIELD ERECTION) TO PROVIDE AND MAINTAIN ACCURATE ALIGNMENT OF HOLES AND PARTS AND SUFFICIENT BOLTS SHALL BE INSTALLED AND BROUGHT TO A SNUG TIGHT CONDITION TO BRING THE PARTS INTO COMPLETE CONTACT. BOLTS SHALL THEN BE INSTALLED IN ANY REMAINING OPEN HOLES AND TIGHTENED TO A SNUG TIGHT FIT, AFTER WHICH ALL BOLTS SHALL BE TIGHTENED COMPLETELY BY CALIBRATED WRENCHES OR BY THE TURN-OF-NUT METHOD. DRIFT PINS SHALL THEN BE REPLACED WITH BOLTS, TIGHTENED IN THE SAME MANNER.

"BOLT LENGTHS DETERMINED BY THE USE OF TABLE No 1 SHALL BE ADJUSTED TO THE NEXT 1/4-INCH LENGTH INCREMENT."

STATE OF OHIO
DEPARTMENT OF HIGHWAYS
BUREAU OF BRIDGES

BEISWENGER & HOCH, Consulting Engineers
AKRON, OHIO

STRUCTURAL GENERAL NOTES

PROJECT MAH-18-9.89

MAHONING COUNTY

DESIGNED	DRAWN	TRACED	CHECKED	REVIEWED	DATE	REVISED
			RDH	RDH	1-6-65	

FED. RD.	STATE	PROJECT	
2	OHIO		

209
294

MAH-18-9.89

℄ I-80 (S.R.-18) CURVE DATA

P.I. STA. 513+25.78
Δ = 17°-08'-31" LT.
D = 1°-28'-00"
R = 3,906.53'
T = 588.78'
L = 1,168.77'
E = 44.12

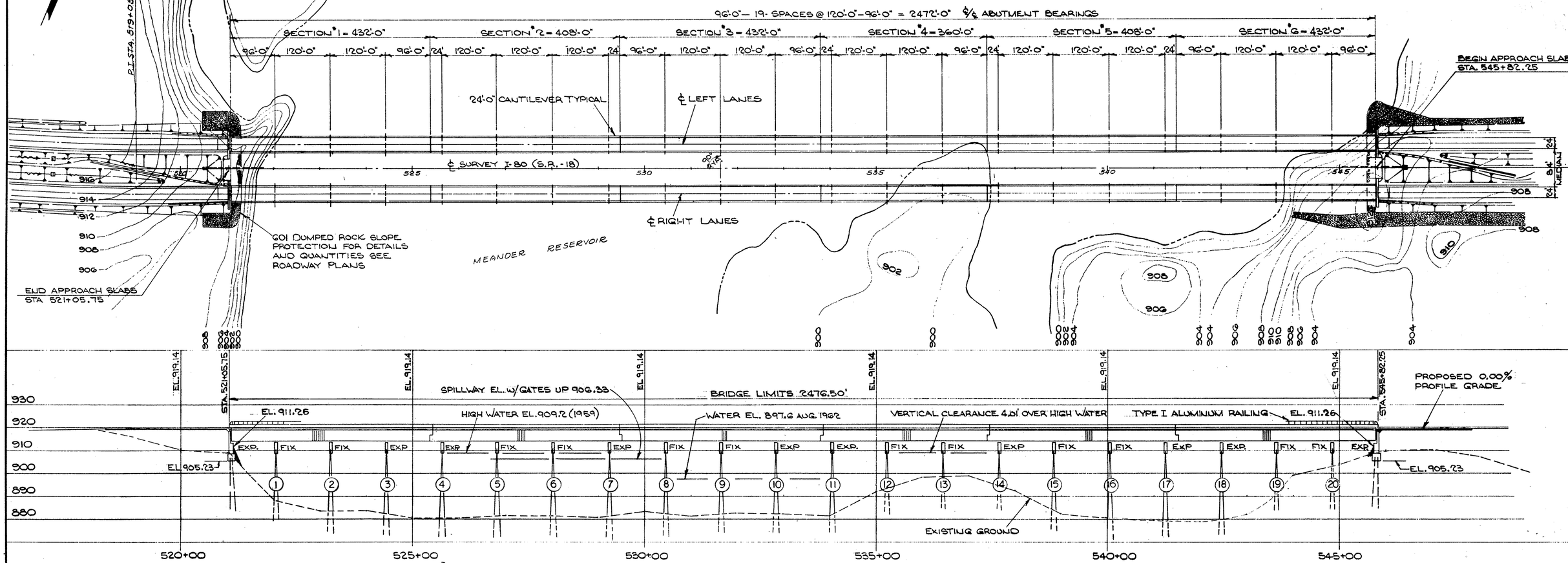

AVERAGE ESTIMATED PILE LENGTHS
ABUTMENTS
12" ϕ C.I.P. CONC. — 100'
PIERS
18" ϕ C.I.P. CONC. — 130'

TRAFFIC: 24,830 ADT (1975)

PROPOSED STRUCTURE

TYPE: CONTINUOUS STEEL GIRDERS WITH HINGES AND REINFORCED CONCRETE DECK.
SUBSTR: REINFORCED CONC. PIER CAP ON 18 ϕ CAST-IN-PLACE CONC. PILES
SPANS: 96'-0" - 19 SPANS @ 120'-0" - 96'-0" = 2472'-0"
SKEW: 0°-00'-00"
ROADWAY: 30'-0" F/F OF 2'-0" SAFETY CURBS
LOAD FREQUENCY: CF-2,000 ADEQUATE FOR A.A.S.H.O. ALTERNATE LOADING
WEARING SURFACE: 1" MONOLITHIC
APPROACH SLABS: 25' LONG (AS-I-54)
ALIGNMENT: TANGENT
SUPERELEVATION: NONE
SLOPE PROTECTION: 601 DUMPED ROCK

STATE OF OHIO
DEPARTMENT OF HIGHWAYS
BUREAU OF BRIDGES

BEISWENGER & HOCH, Consulting Engineers
AKRON, OHIO

SITE PLAN
BRIDGE Nº MAH-18-1013 L & R
OVER MEANDER RESERVOIR
MAHONING COUNTY
STA 521+05.75 TO STA 545+82.25

DESIGNED	DRAWN	TRACED	CHECKED	REVIEWED	DATE	REVISED
KKJ	JWW		[illegible]	RDH	12-28-69	

FED. RD.	STATE	PROJECT	
2	OHIO		

MAH-18-9.89

MICROFILMED
APR 7 1965

210
294

2472'-0" ℄ TO ℄ ABUTMENT BEARINGS
432'-0" - SECTION #1

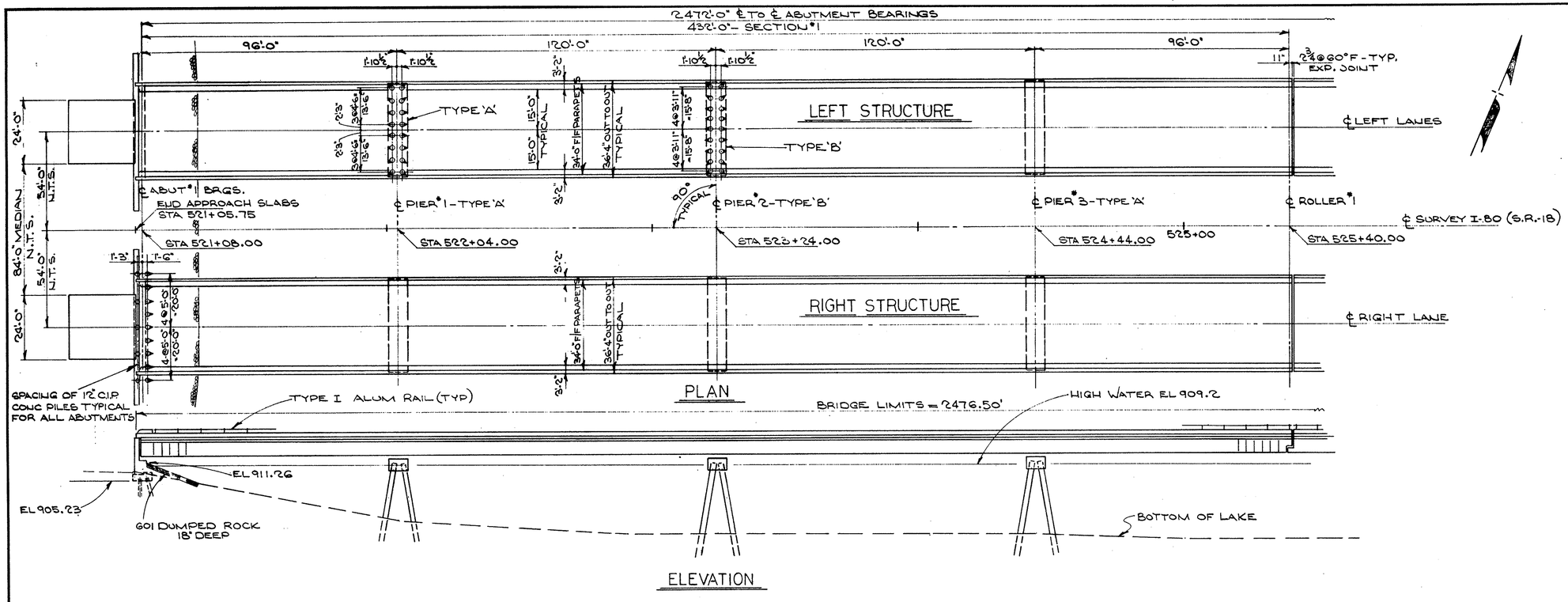

ELEVATION

408'-0" - SECTION #2

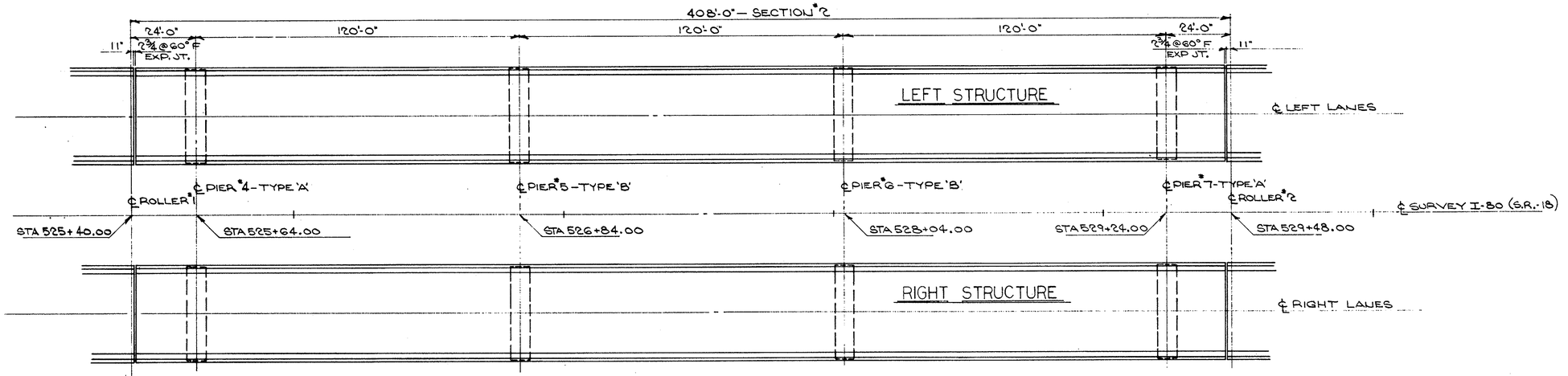

PLAN

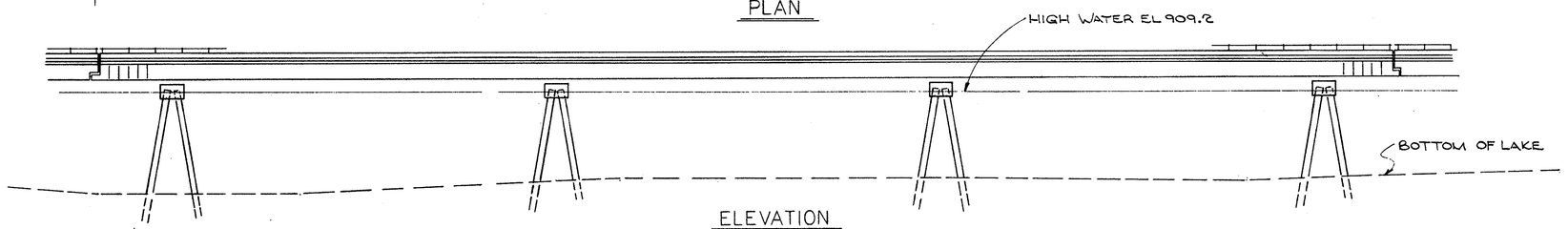

ELEVATION

NOTES
N.T.S. DENOTES NOT TO SCALE.
SEE SHT Nº 207 & 208 FOR STRUCTURAL GENERAL NOTES Nºs 1-4, 6, 8, 17, 18, 20 THRU 27

STATE OF OHIO
DEPARTMENT OF HIGHWAYS
BUREAU OF BRIDGES

BEISWENGER & HOCH, Consulting Engineers
AKRON, OHIO

GENERAL PLAN & ELEVATION

BRIDGE Nº MAH-18-1013 L & R
OVER MEANDER RESERVOIR
MAHONING COUNTY
STA 521+05.75 TO STA 545+82.25

DESIGNED	DRAWN	TRACED	CHECKED	REVIEWED	DATE	REVISED
KKJ	JWW		11/27 JWW	RDH	12-28-64	

FED. RD.	STATE	PROJECT	
2	OHIO		

211
294

MAH-18-9.89

MICROFILM
APR 7 19

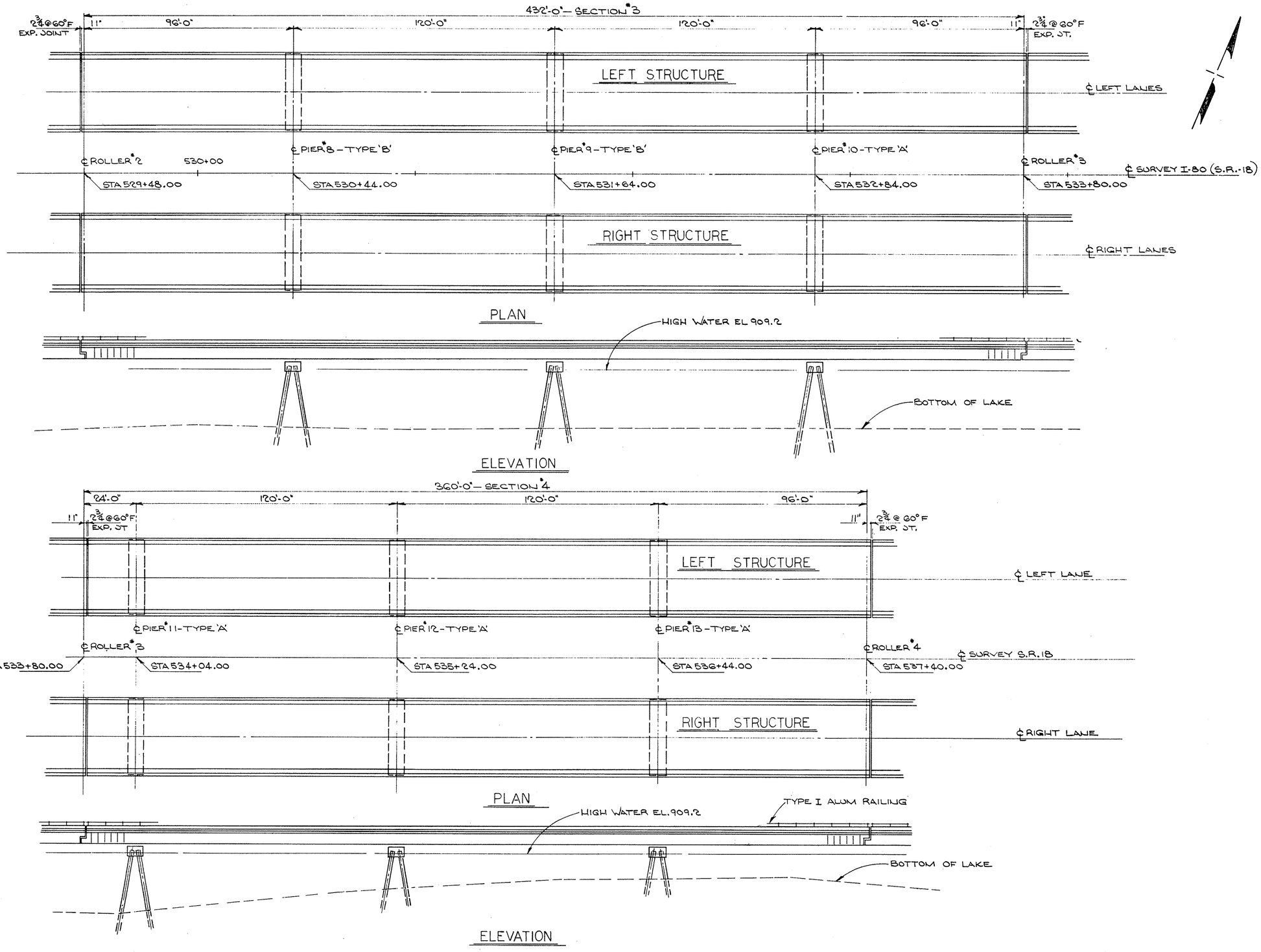

STATE OF OHIO
DEPARTMENT OF HIGHWAYS
BUREAU OF BRIDGES

BEISWENGER & HOCH, Consulting Engineers
AKRON, OHIO

GENERAL PLAN & ELEVATION
BRIDGE Nº MAH-18-1013 L & R
OVER MEANDER RESERVOIR
MAHONING COUNTY
STA 521+05.75 TO STA 545+82.25

DESIGNED	DRAWN	TRACED	CHECKED	REVIEWED	DATE	REVISED
KKJ	JWW		9/27/64	RDH	12-28-64	

MICROFILMED
APR 7 1967

FED. RD.	STATE	PROJECT	
2	OHIO		

MAH-18-9.89

212
294

408'-0" - SECTION #5

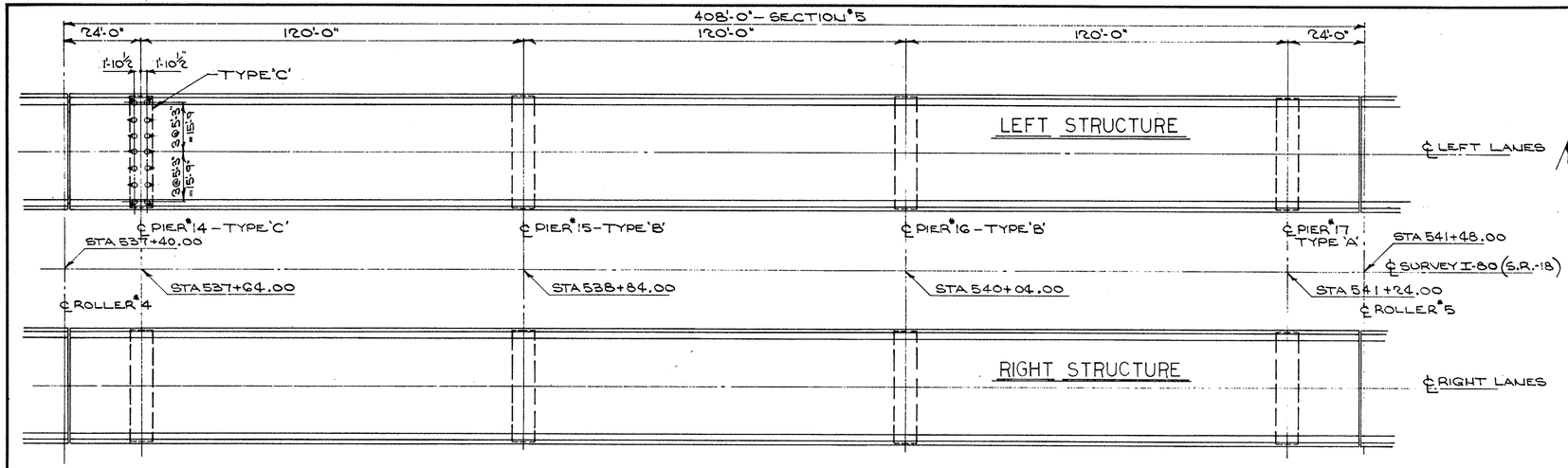

PLAN

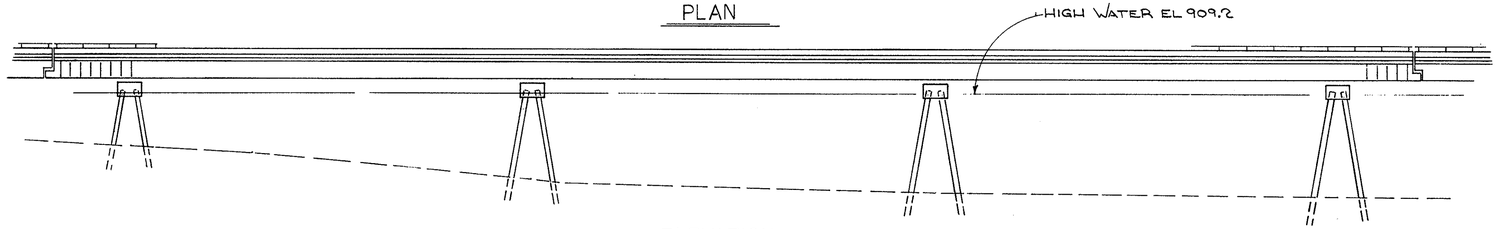

ELEVATION

2,472'-0" ℄ TO ℄ ABUTMENT BEARINGS
432'-0" - SECTION #6

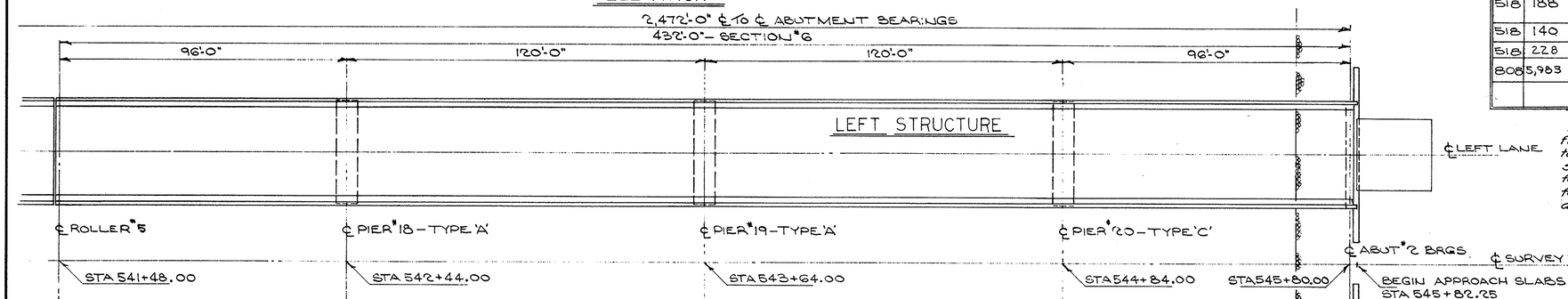

PLAN

BRIDGE LIMITS - 2476.50'

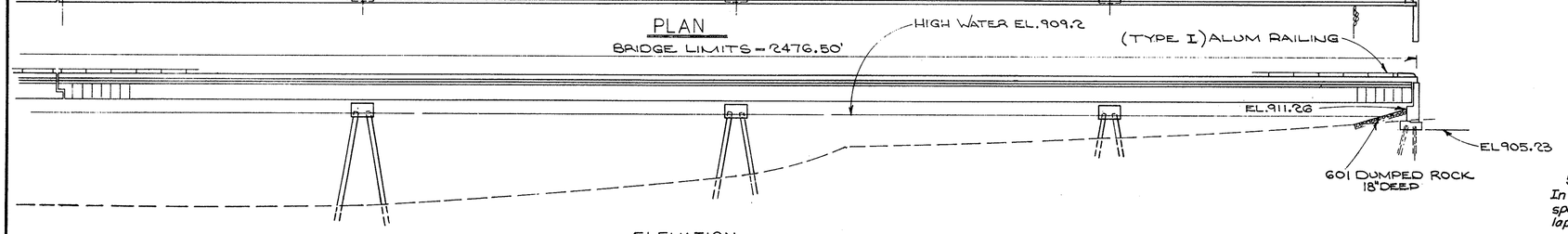

ELEVATION

ESTIMATED QUANTITIES (2 BRIDGES)

ITEM	TOTAL	UNIT	DESCRIPTION	SUPER	ABUTS	PIERS	GEN
Special	Lump	Sum	Access for Bridge Construction				Lump
503	435	CU.YDS	UNCLASSIFIED EXCAVATION		435		
825	22,385	Sq. Yds.	Concrete Surface Treatment	22,385			
511	5983	CU.YDS.	CLASS 'C' CONC. SUPERSTRUCTURE	5983			
511	203	CU.YDS.	CLASS 'E' CONC. ABUTS ABOVE FOOTINGS		203		
511	1635	CU.YDS.	CLASS 'C' CONC. PIER CAPS			1635	
511	137	CU.YDS	CLASS 'E' CONC. ABUT. FOOTINGS		137		
512	41	LIN.FT.	PREMOLDED SEALING STRIP		41		
509	1,789,475	LBS	REINFORCING STEEL	1,637,025	20,465	131,985	
513	7,293,447	LBS	STRUCTURAL STEEL	7,293,447			
514	7,293,447	LBS	FIELD PAINTING OF STRUCTURAL STEEL	7,293,447			
517	9,903.17	LIN.FT.	RAILING (TYPE I)	9,903.17			
505	LUMP	SUM	FIRST TEST PILE (18" C.I.P.)				LUMP
506	LUMP	SUM	FIRST PILE TEST LOAD (18" C.I.P.)				LUMP
506	3	EACH	SUBSEQUENT PILE TEST LOAD				3
507	5600	LIN FT	12" ϕ CAST-IN-PLACE REINFORCED CONC. PILES		5600		
507	85,800	LIN.FT	18" ϕ CAST-IN-PLACE REINFORCED CONC. PILES		85,800		
518	115	CU.YDS	POROUS BACKFILL		115		
518	188	LIN.FT.	6" PERFORATED HELICAL C.M.P. 707.06 INCLUDING SPECIALS		188		
518	140	LIN.FT.	6" HELICAL 707.06 NON-PERFORATED		140		
518	228	EACH	SCUPPERS (INCLUDING SUPPORTS)	228			
808	5,983	EACH	WATER REDUCING SET RETARDING ADMIXTURE	5,983			

ITEM, SPECIAL, "Access for Bridge Construction" shall include the furnishing and the subsequent removal from the site, of any temporary facilities (such as earthwork, pavement, bridges and other structures, floating equipment, staging area, etc.) necessary to satisfactorily construct the Bridge. The contract lump sum price bid for this item shall include the cost of all materials, labor, tools, and equipment and incidentals required by the foregoing.

18" Cast-in-place Reinforced Concrete Piles:
The manufacturers of cylindrical pipe piles or tapered fluted shells shall furnish the Engineer with a certified mill report showing the properties of the metal in the furnished piles.
Cylindrical pipe piles shall meet the requirements for Grade 2 of the current Specifications for Welded and Seamless Steel Pipe Piles, ASTM Designation: A252.
Tapered fluted shells shall be made from steel conforming to SAE 1010 or SAE 1015 Specifications. The minimum yield strength of the steel in the fabricated shells, as determined by standard tests, shall be 50,000 p.s.i.
For a distance of 65 feet below the cut-off elevation of the piles, the thickness of metal in the cylindrical pipe piles and the fluted shells shall be a minimum of three (3) gage and shall consist of 18" diameter straight sections with no taper.
All welded splices shall be made by a qualified welder using a class of electrode compatable with grade of steel for the pile.

506.02 (Paragraph One) Application of Load:
In lieu of the 72 hour time lapse required by the specifications, the Director may require that the time lapse be increased to 240 hours.

STATE OF OHIO
DEPARTMENT OF HIGHWAYS
BUREAU OF BRIDGES

BEISWENGER & HOCH, Consulting Engineers
AKRON, OHIO

GENERAL PLAN & ELEVATION

BRIDGE Nº MAH - 18 - 1013 L & R
OVER MEANDER RESERVOIR
MAHONING COUNTY
STA 521+05.75 TO STA 545+82.25

DESIGNED	DRAWN	TRACED	CHECKED	REVIEWED	DATE	REVISED
K.K.J	J.W.W		9/27/64	R.B.H	12-28-64	2-3-66

MICROFILMED
APR 7 196

FED. RD.	STATE	PROJECT	
2	OHIO		

213
294

MAH-18-9.89

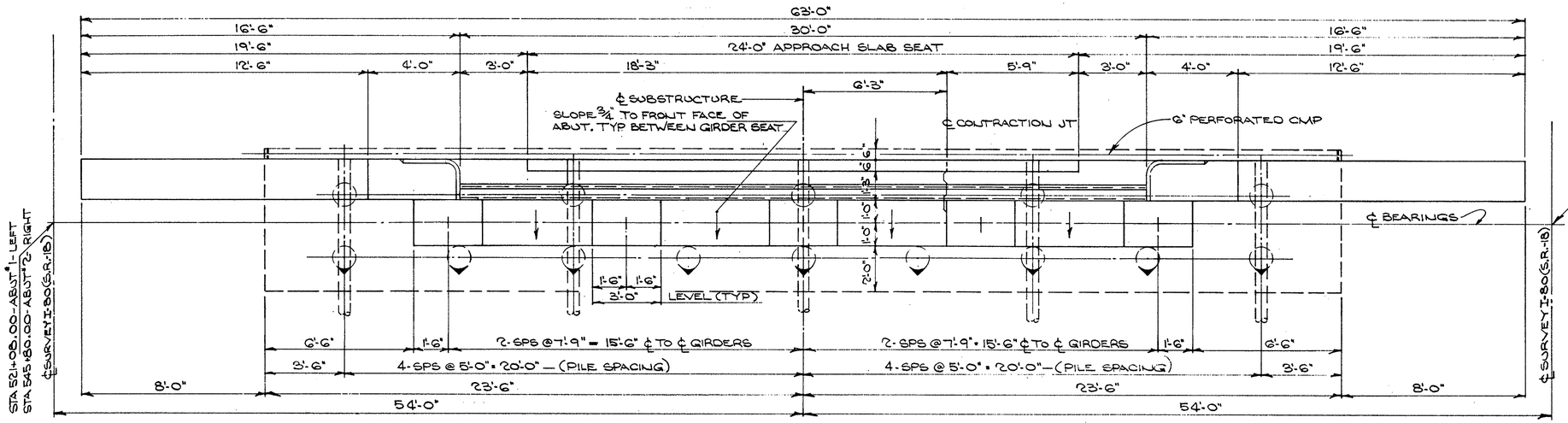

PLAN ABUTMENT 1 & 2 RIGHT & LEFT

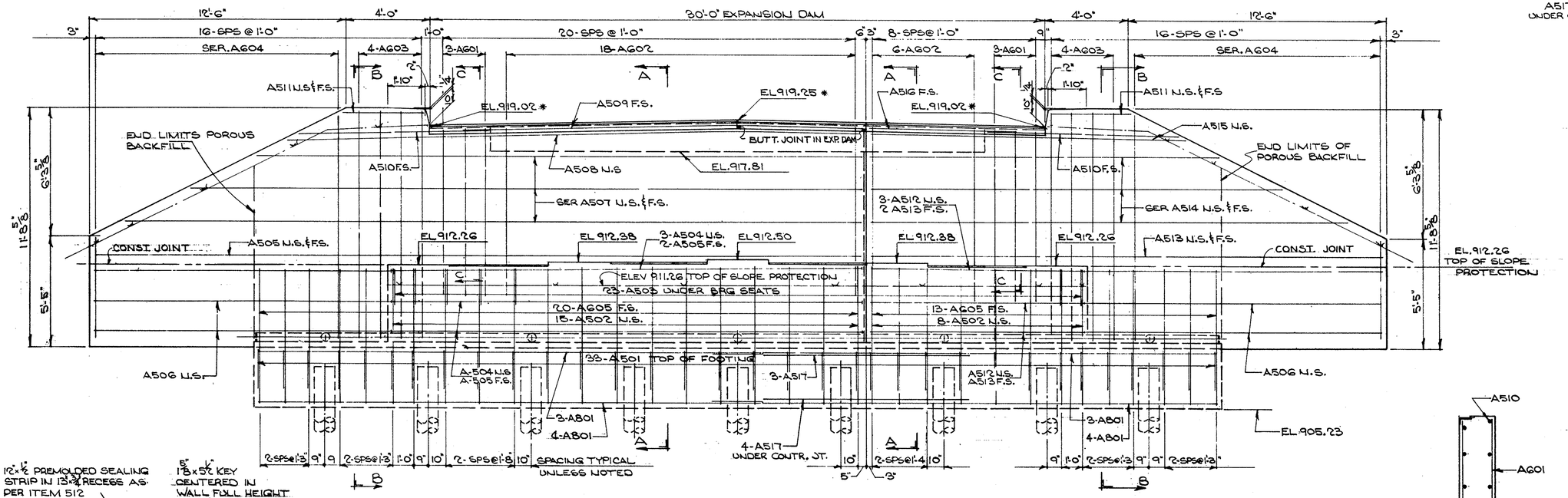

ELEVATION ABUTMENT 1 & 2 RIGHT & LEFT

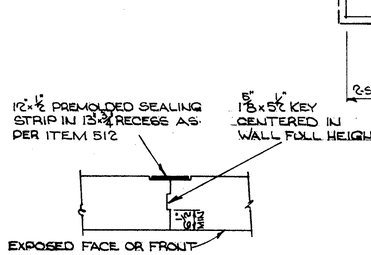

CONTRACTION JOINT DETAIL

*DENOTES ELEVATION GIVEN TO HEEL OF ANGLE

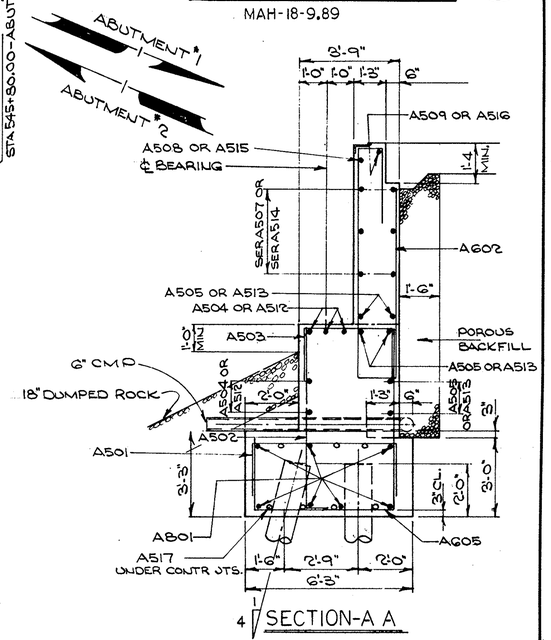

4 SECTION-A A

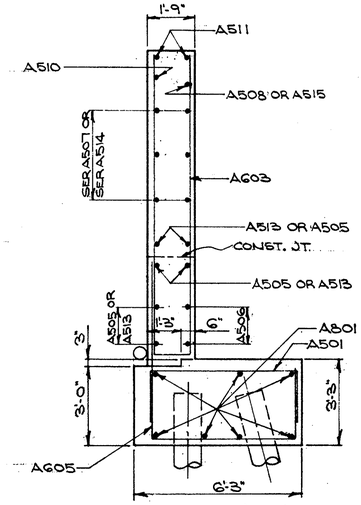

SECTION-B-B

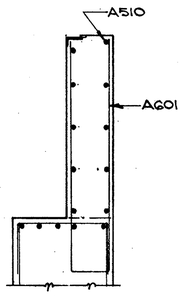

SECTION-C-C

STATE OF OHIO
DEPARTMENT OF HIGHWAYS
BUREAU OF BRIDGES

BEISWENGER & HOCH, Consulting Engineers
AKRON, OHIO

ABUTMENT 1 & 2 R. & L. DETAILS

BRIDGE N° MAH-18-1013 L & R
OVER MEANDER RESERVOIR
MAHONING COUNTY
STA 521+05.75 TO STA 545+82.25

DESIGNED	DRAWN	TRACED	CHECKED	REVIEWED	DATE	REVISED
KRJ	JWW		9/17/64	RDH	12-28-64	

MICROFILMED
APR 7 19..

FED. RD.	STATE	PROJECT	
2	OHIO		

214
294

MAH-18-9.89

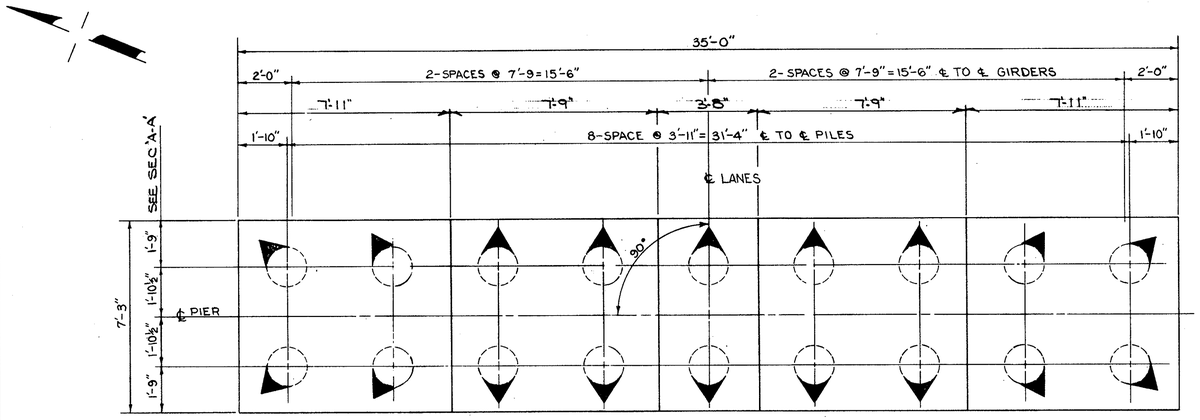

PLAN OF TYPE "B" PIER

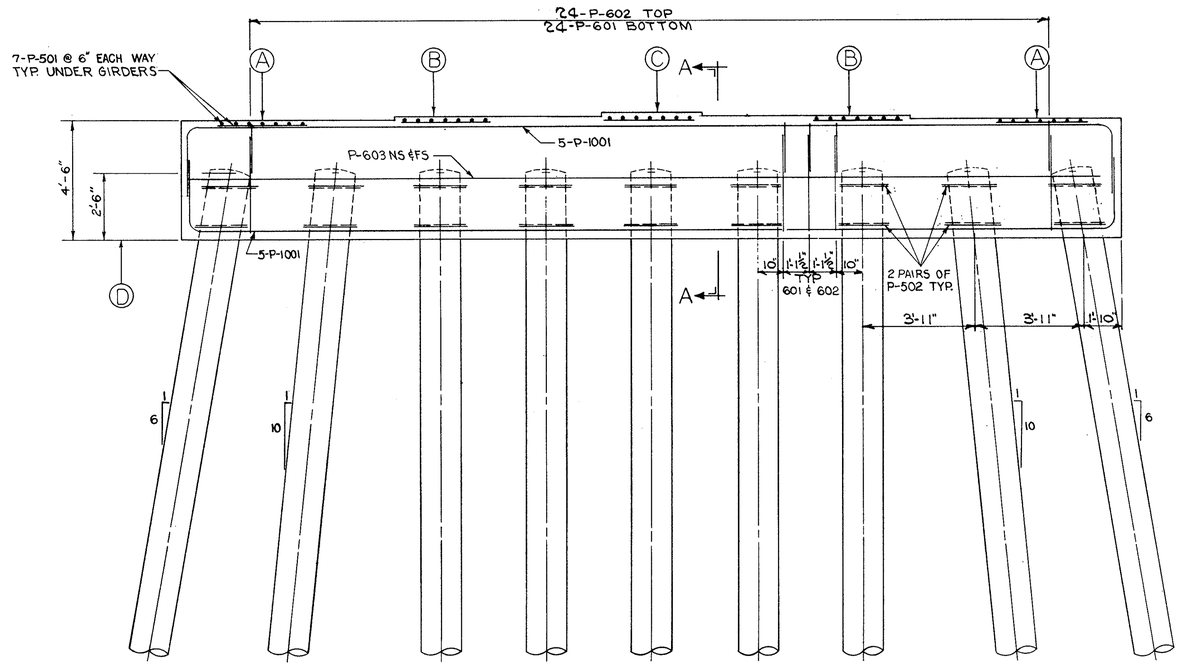

ELEVATION OF TYPE "B" PIER-TYPICAL FOR PIERS NO. 2, 5, 6, 8, 9, 15 & 16 L. & R.

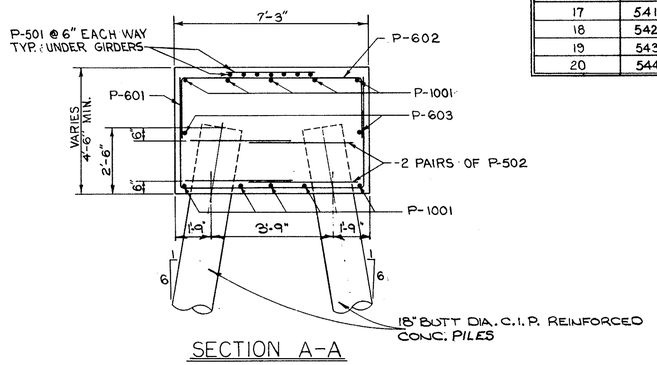

SECTION A-A

ELEVATION TABLE

PIER NO.	℄ STATION	ELEVATIONS			
LEFT & RIGHT		A	B	C	D
1	522+04.00	911.62	911.74	911.86	907.12
2	523+24.00	"	"	"	"
3	524+44.00	"	"	"	"
4	525+64.00	"	"	"	"
5	526+84.00	"	"	"	"
6	528+04.00	"	"	"	"
7	529+24.00	"	"	"	"
8	530+44.00	"	"	"	"
9	531+64.00	"	"	"	"
10	532+84.00	"	"	"	"
11	534+04.00	"	"	"	"
12	535+24.00	911.61	911.73	911.85	907.11
13	536+44.00	911.62	911.74	911.86	907.12
14	537+64.00	"	"	"	"
15	538+84.00	"	"	"	"
16	540+04.00	"	"	"	"
17	541+24.00	"	"	"	"
18	542+44.00	"	"	"	"
19	543+64.00	"	"	"	"
20	544+84.00	"	"	"	"

STATE OF OHIO
DEPARTMENT OF HIGHWAYS
BUREAU OF BRIDGES

BEISWENGER & HOCH, Consulting Engineers
AKRON, OHIO

PIER DETAILS

BRIDGE NO. MAH-18-1013 L & R
OVER MEANDER RESERVOIR

I-80 (S. R. 18) MAHONING COUNTY
STA. 521+05.75 TO STA. 545+82.25

DESIGNED	DRAWN	TRACED	CHECKED	REVIEWED	DATE	REVISED
K K J	BMR		7/27/64	RAH	12-28-64	2-3-66

MICROFILMED APR 7 196

FED. RD.	STATE	PROJECT	
2	OHIO		

215
294

MAH-18-9.89

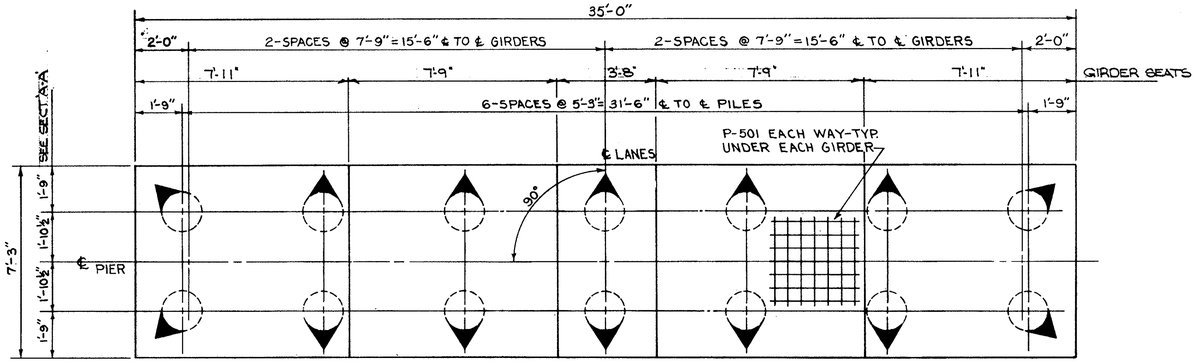

PLAN OF TYPE "C" PIER

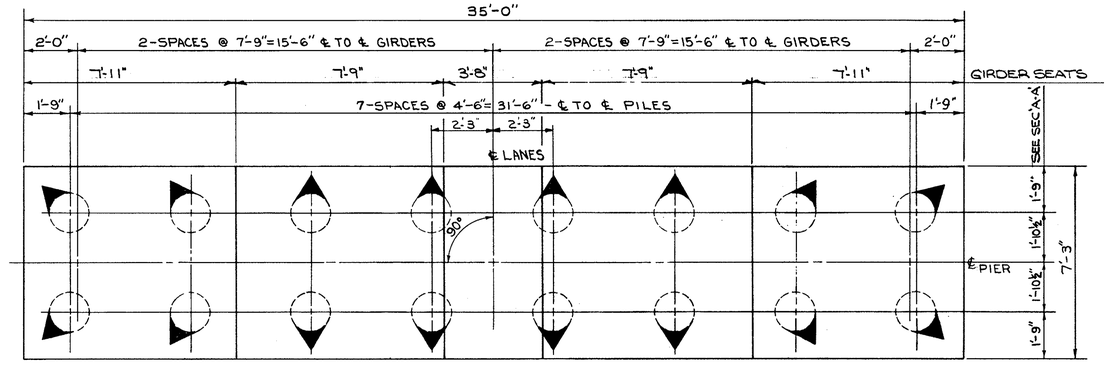

PLAN OF TYPE "A" PIER

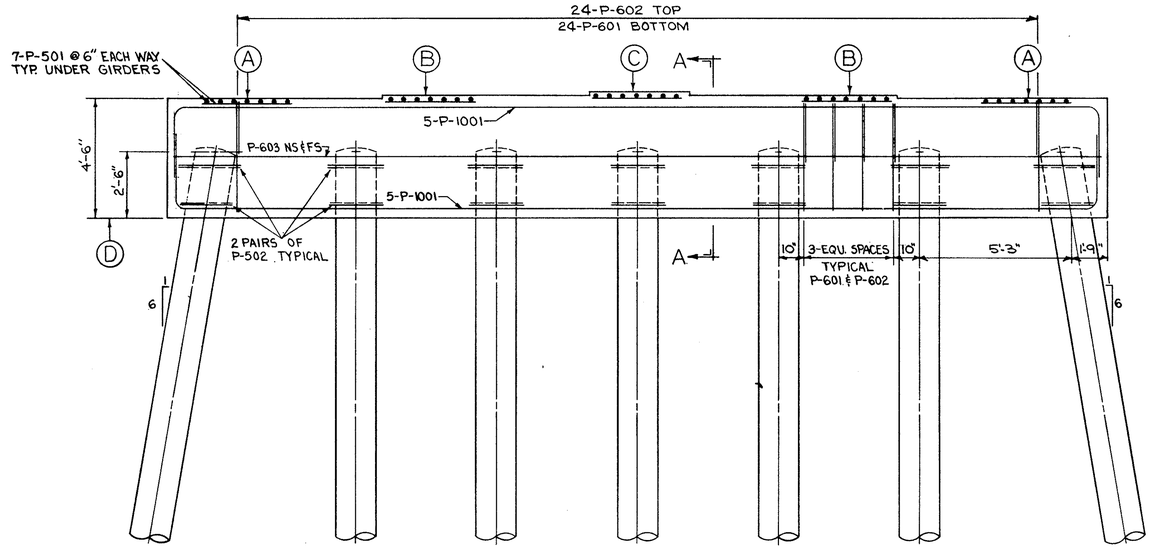

ELEVATION OF TYPE "C" PIER-TYPICAL FOR PIERS NO. 14 & 20 L. & R.

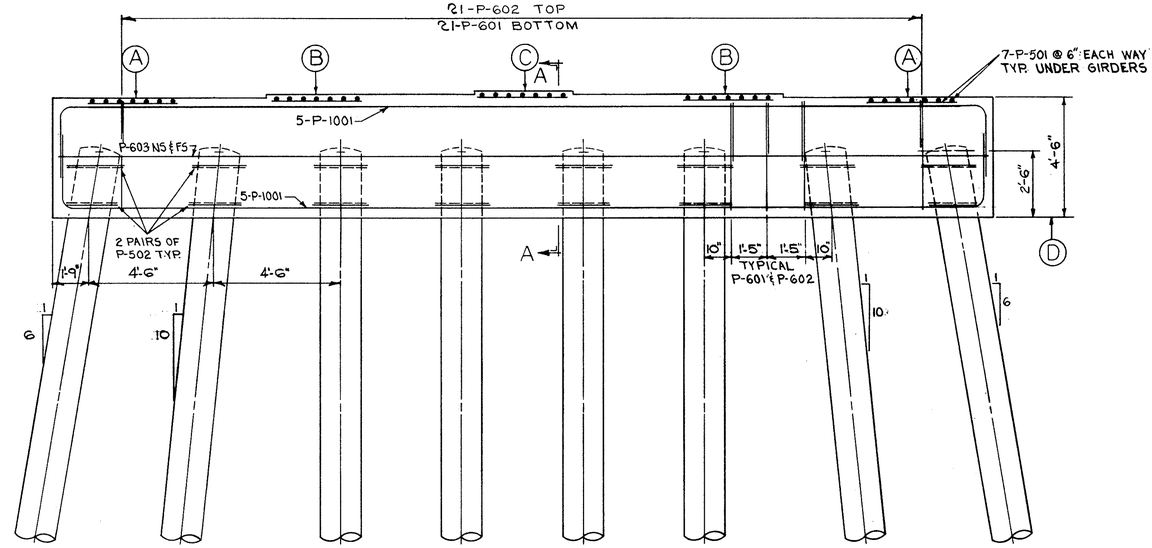

ELEVATION OF TYPE "A" PIER TYPICAL FOR PIERS NO. 1, 3, 4, 7, 10, 11, 12, 13, 17, 18, & 19 L. & R.

NOTE: FOR ADDITIONAL PIER DATA. SEE SHEET NO. 214

STATE OF OHIO
DEPARTMENT OF HIGHWAYS
BUREAU OF BRIDGES

BEISWENGER & HOCH, Consulting Engineers
AKRON, OHIO

PIER DETAILS

BRIDGE NO. MAH-18-1013 L & R
OVER MEANDER RESERVOIR
I 80 (S. R. 18) MAHONING COUNTY
STA. 521+05.75 TO STA. 545+82.25

DESIGNED	DRAWN	TRACED	CHECKED and 8/31/64	REVIEWED	DATE	REVISED
K.K.J.	B.M.R.			R.D.W.	12-28-64	

MICROFILM
APR 7 19

FED. RD.	STATE	PROJECT	
2	OHIO		

MAH-18-9.89

216
294

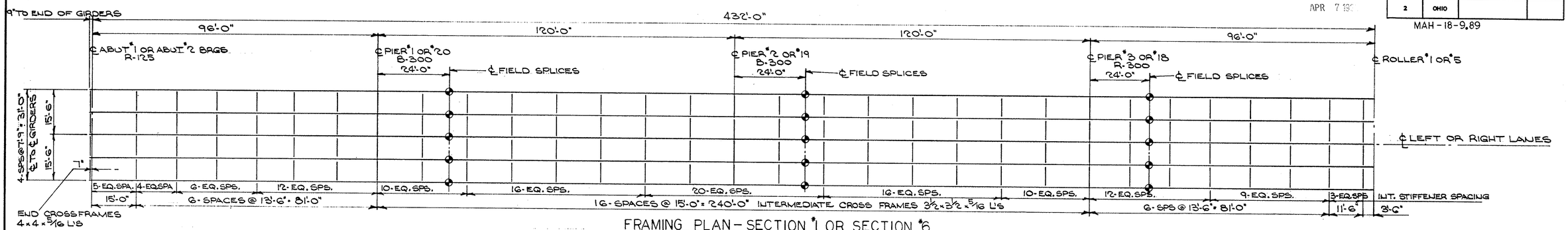

FRAMING PLAN – SECTION #1 OR SECTION #6

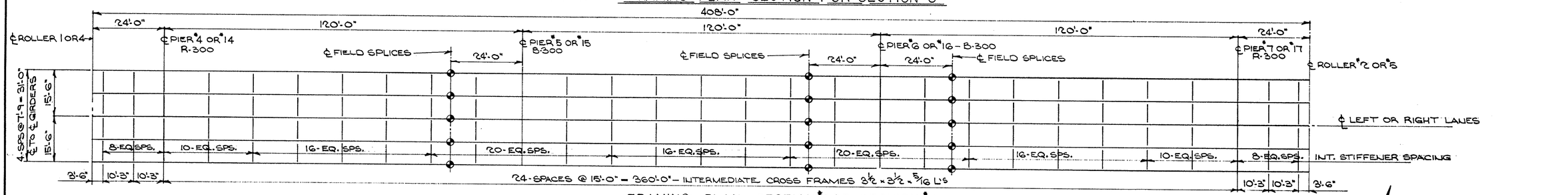

FRAMING PLAN – SECTION #2 OR SECTION #5

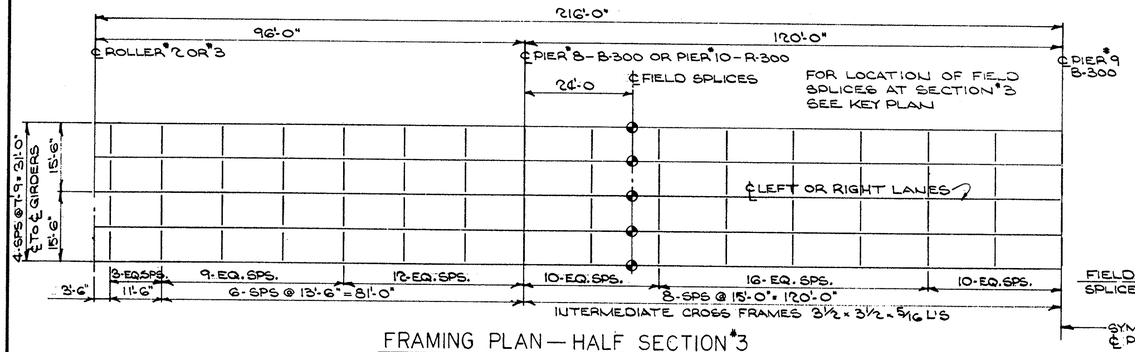

FRAMING PLAN – HALF SECTION #3

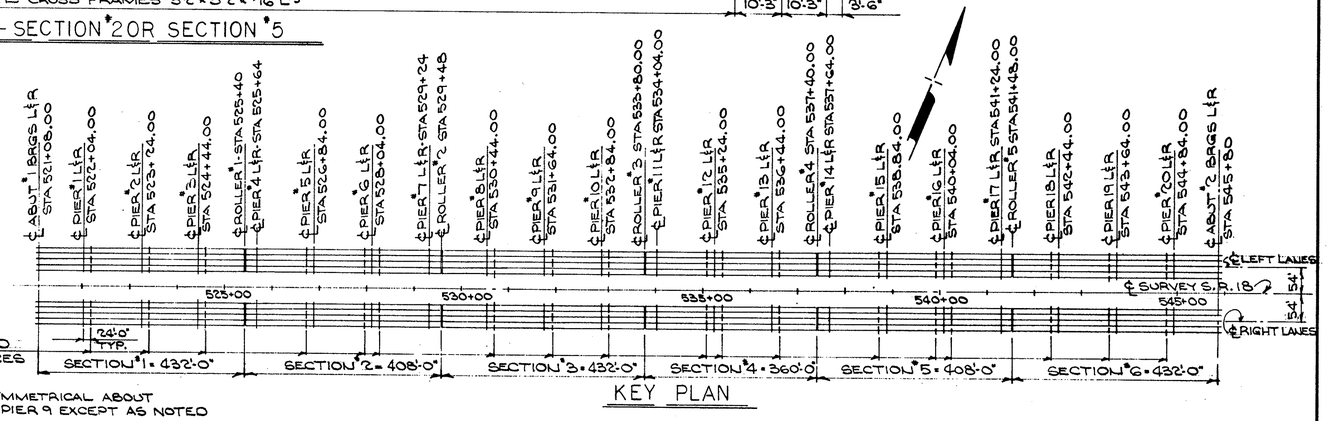

KEY PLAN

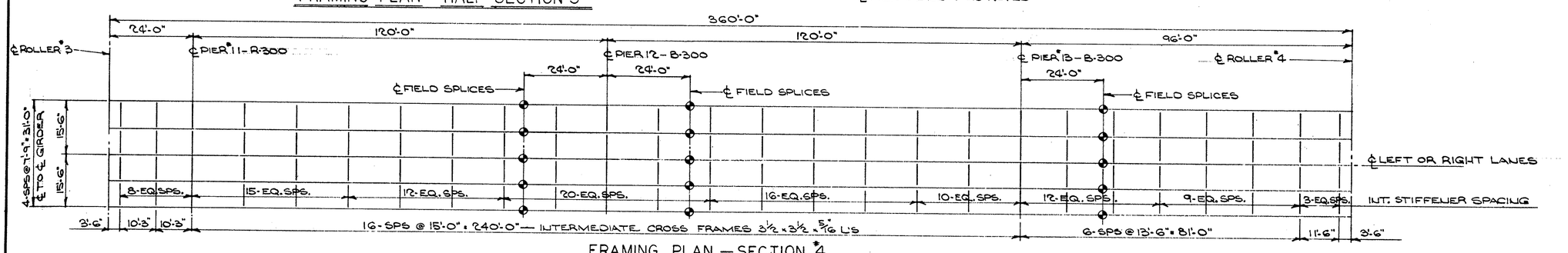

FRAMING PLAN – SECTION #4

STATE OF OHIO
DEPARTMENT OF HIGHWAYS
BUREAU OF BRIDGES

BEISWENGER & HOCH, Consulting Engineers
AKRON, OHIO

FRAMING PLAN

BRIDGE N° MAH-18-1013 L & R
OVER MEANDER RESERVOIR
MAHONING COUNTY
STA 521+05.75 TO STA. 545+82.25

DESIGNED	DRAWN	TRACED	CHECKED	REVIEWED	DATE	REVISED
K.K.J	J.W.W		11/17/64	R.B.H	12-28-64	

FED. RD.	STATE	PROJECT	
2	OHIO		

MAH-18-9.89

217
294

433'-8" — SECTION #1 & #6 — 433'-10" SECTION #3 OUT TO OUT WELDED STEEL PLATE GIRDER

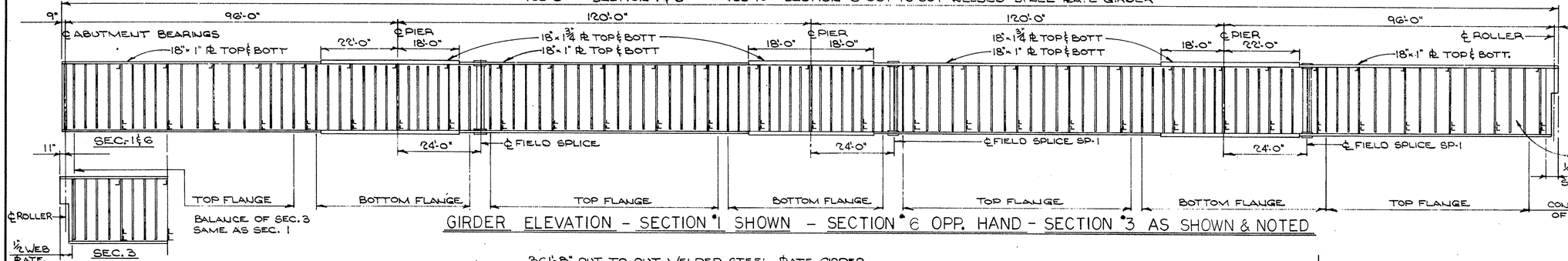

GIRDER ELEVATION - SECTION #1 SHOWN - SECTION #6 OPP. HAND - SECTION #3 AS SHOWN & NOTED

NOTE: BEARING STIFFENERS ARE
8 1/2 x 1/2 PL AT ABUTMENTS
8 1/2 x 1 PL AT PIERS
INTERMEDIATE STIFFENERS 6 x 3/8 PL
AT FIELD SPLICES USE 5 x 3 1/2 x 3/8 ANGLE
INSTEAD OF 6 x 3/8 PL

ALL BOLTS SHALL BE
7/8 ϕ HIGH STRENGTH
STEEL BOLTS

361'-8" OUT TO OUT WELDED STEEL PLATE GIRDER

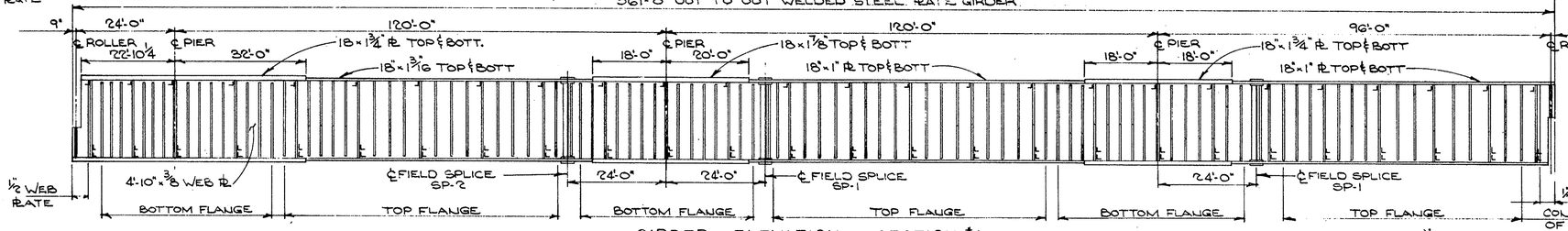

GIRDER ELEVATION — SECTION #4

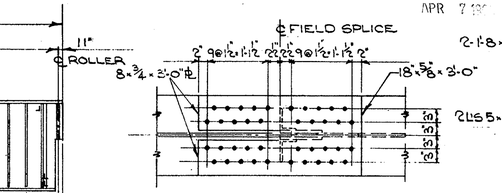

SECTION A-A FOR 18"x 1" FLANGE PL (SP-1)

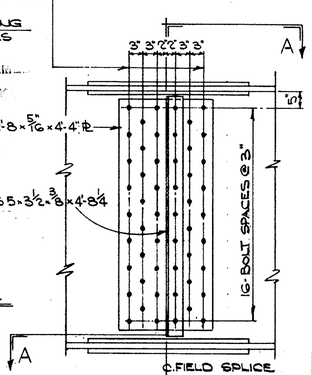

ELEVATION
TYPICAL WEB-SPLICE
FOR ALL SECTIONS

409'-6" OUT TO OUT WELDED STEEL PLATE GIRDER

SYMMETRICAL ABOUT ℄ MIDDLE SPAN
EXCEPT FIELD SPLICES
SEE KEY PLAN

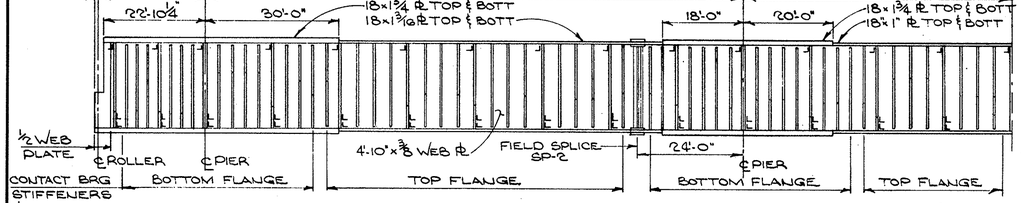

GIRDER ELEVATION HALF SECTION #2 & #5

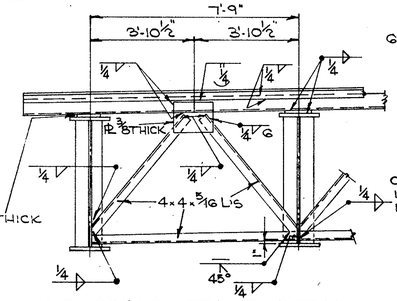

END CROSS FRAME DETAIL

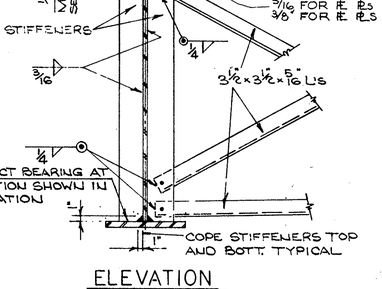

ELEVATION
STIFFENER DETAIL

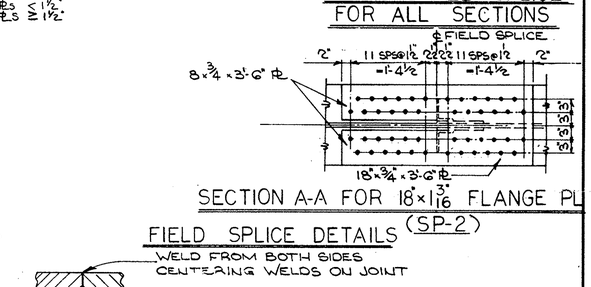

BEARING STIFFENER DETAIL

NOTE: ALL INTERMEDIATE STIFFENERS SHALL BE IN PAIRS AND SHALL NOT BE WELDED TO THE FLANGES, ~~EXCEPT WHERE CROSS FRAMES ARE CONNECTED TO THE STIFFENERS, AT WHICH POINTS BOTH THE TOP AND BOTTOM OF THE STIFFENER SHALL BE WELDED TO THE~~ TOP AND BOTTOM FLANGE WITH 5/16 WELD.
IN SHOP PAINTING CARE SHALL BE TAKEN TO MAKE CERTAIN THAT PAINT IS FORCED THROUGH FROM ONE SIDE TO THE OTHER OF THE 1/8 OPENING BETWEEN THE GIRDER FLANGE AND INTERMEDIATE STIFFENERS.

DEFLECTION AND CAMBER — TYPICAL FOR ALL GIRDERS

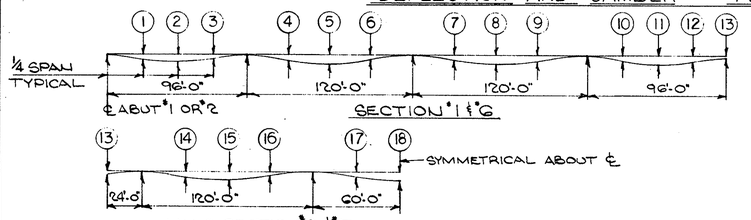

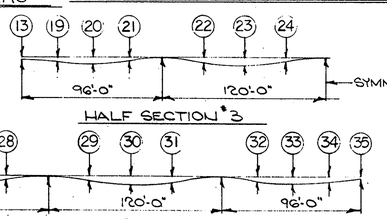

FIELD SPLICE DETAILS (SP-2)

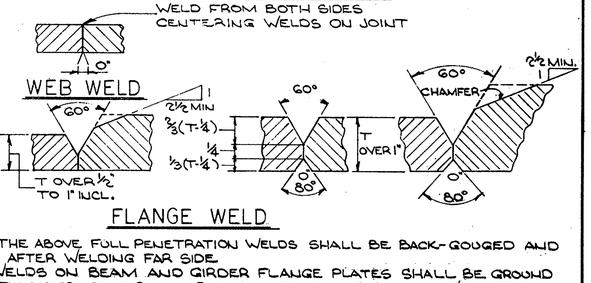

FLANGE WELD

ALL OF THE ABOVE FULL PENETRATION WELDS SHALL BE BACK-GOUGED AND WELDED AFTER WELDING FAR SIDE.
BUTT WELDS ON BEAM AND GIRDER FLANGE PLATES SHALL BE GROUND FLUSH FINISH GRINDING BEING PARALLEL TO THE DIRECTION OF STRESS

JOINT PREPARATION FOR SUBMERGED ARC WELDMENTS

LOCATION	1	2	3	4	5	6	7	8	9	10	11	12	13	14	15	16	17	18	19	20	21	22	23	24	25	26	27	28	29	30	31	32	33	34	35
	SECTIONS #1 & #6												SECTION #2 & #5						SECTION #3						SECTION #4										
DEFLECTION DUE TO WEIGHT OF STEEL	.13	.15	.05	.09	.18	.09	.09	.18	.09	.08	.22	.21	.04	.12	.21	.11	.07	.15	.21	.22	.08	.09	.18	.09	.05	.10	.19	.08	.06	.16	.03	.08	.19	.19	.05
DEFLECTION DUE TO REMAINING DEAD LOAD	.41	.45	.16	.27	.57	.27	.27	.57	.27	.17	.47	.47	.14	.37	.64	.33	.20	.47	.47	.47	.17	.27	.57	.27	.13	.31	.55	.25	.16	.44	.11	.22	.54	.55	.13
CONVEXITY REQUIRED FOR VERTICAL CURVE	-	-	-	-	-	-	-	-	-	-	-	-	-	-	-	-	-	-	-	-	-	-	-	-	0	-	-	-	-	-	-	-	-	-	-
SUM OF DEFLECTION AND CONVEXITY	.54	.60	.21	.36	.75	.36	.36	.75	.36	.25	.69	.68	.18	.49	.85	.44	.27	.62	.68	.69	.25	.36	.75	.36	.18	.41	.74	.33	.22	.60	.14	.30	.73	.74	.18
REQUIRED: CAMBER	1/2"	5/8"	3/16"	3/8"	3/4"	3/8"	3/8"	3/4"	3/8"	1/4"	11/16"	11/16"	3/16"	1/2"	7/8"	7/16"	1/4"	5/8"	11/16"	11/16"	1/4"	3/8"	3/4"	3/8"	3/16"	7/16"	3/4"	5/16"	1/4"	5/8"	1/8"	5/16"	3/4"	3/4"	3/16"

STATE OF OHIO
DEPARTMENT OF HIGHWAYS
BUREAU OF BRIDGES

BEISWENGER & HOCH, Consulting Engineers
AKRON, OHIO

FRAMING DETAILS
BRIDGE Nº MAH-18-1013 L & R.
OVER MEANDER RESERVOIR
MAHONING COUNTY
STA 521+05.75 TO STA 545+82.25

DESIGNED	DRAWN	TRACED	CHECKED	REVIEWED	DATE	REVISED
KKJ	JWW		11/1764	RBH	12-28-64	3-30-66

FED. RD.	STATE	PROJECT	
2	OHIO		

218
294

MAH-18-9.89

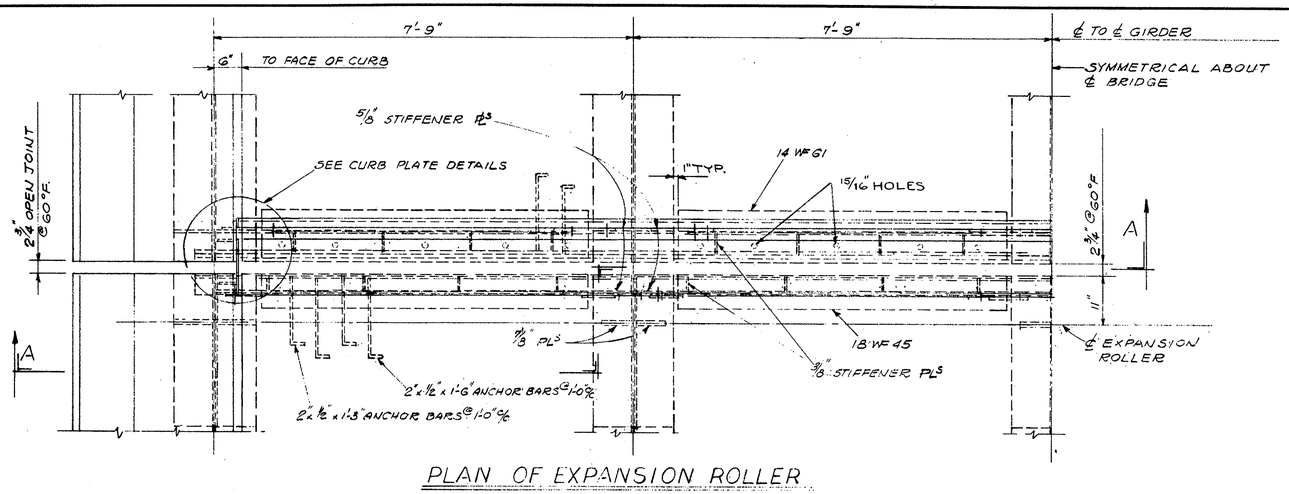

PLAN OF EXPANSION ROLLER

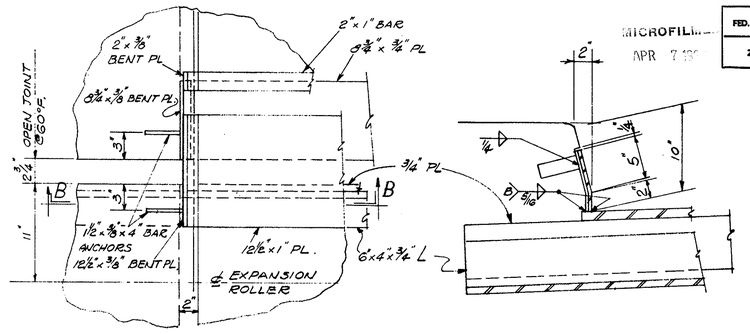

PLAN

SECTION B-B

CURB PLATE DETAILS

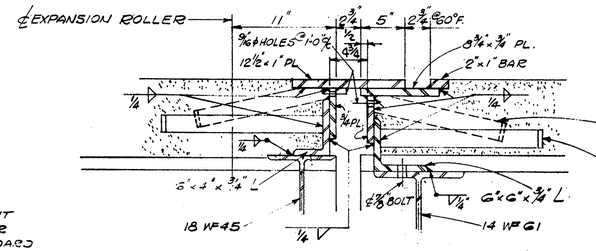

2"x½"x1'-3" ANCHOR BARS @ 1'-0" ℄ STAGGERED WITH 2"x½"x1'-6" ANCHOR BARS

2"x½"x1'-6" ANCHOR BARS @ 1'-0" ℄ STAGGERED WITH 2"x½"x1'-3" ANCHOR BARS.

NOTE: THE EXPANSION JOINT SLIDING CONTACT SURFACES SHALL NOT BE PAINTED, BUT SHALL BE LUBRICATED WITH FLAKE GRAPHITE PRIOR TO PLACING OF CONCRETE.

EXPANSION DAM DETAIL

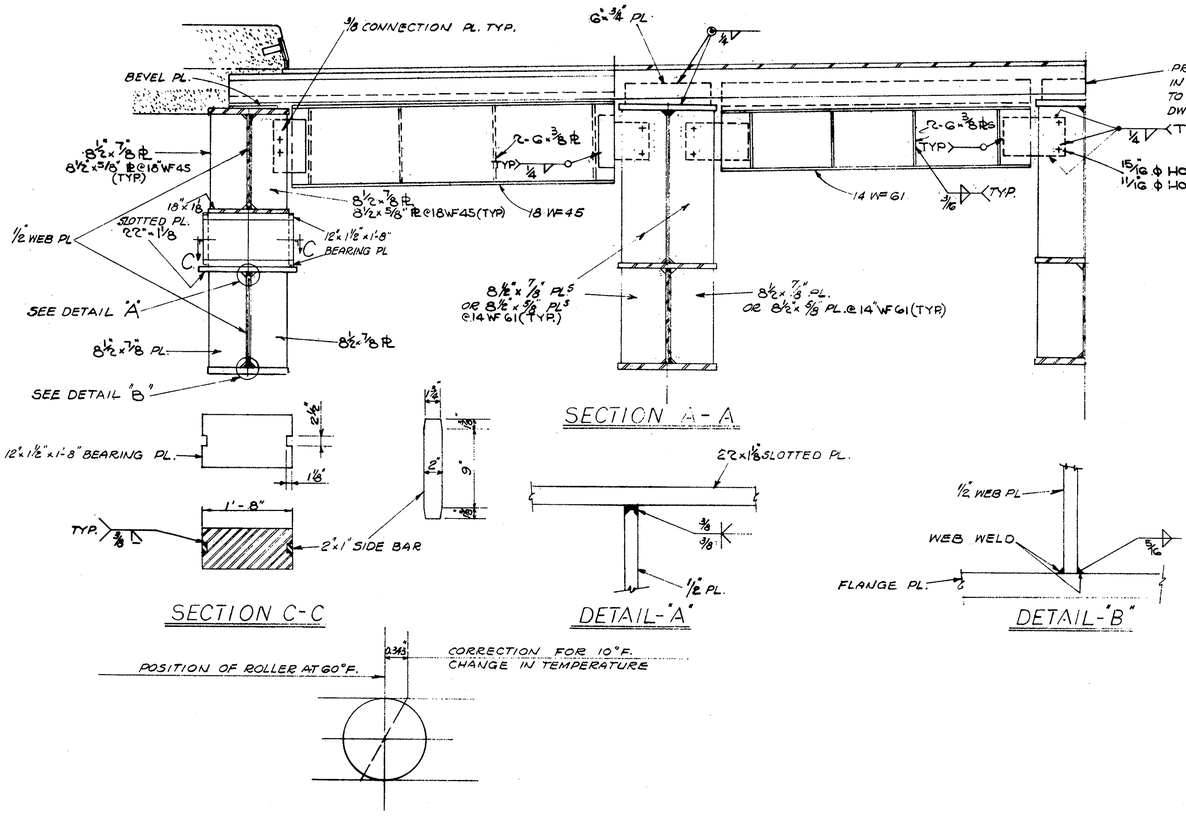

SECTION A-A

SECTION C-C

DETAIL-"A"

DETAIL-"B"

CORRECTION DUE TO TEMPERATURE FOR EXPANSION ROLLER AND JOINT PLACEMENT.

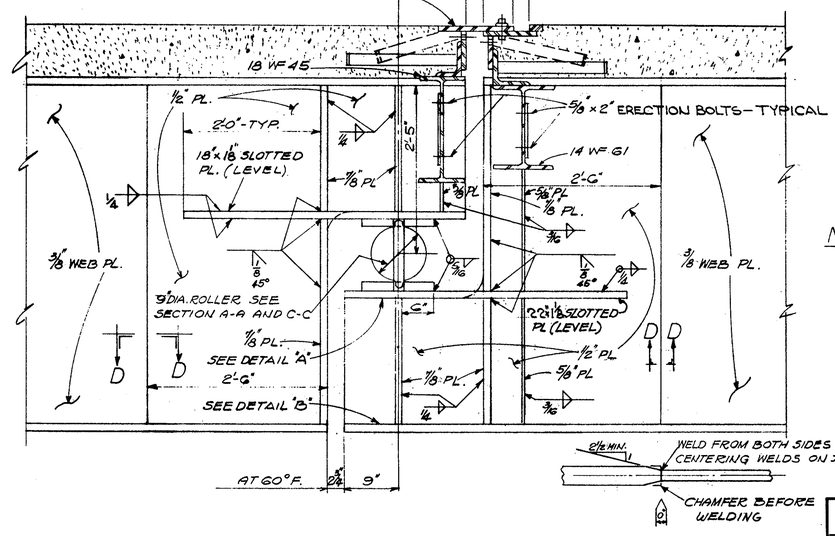

SECTION D-D

NOTE: EXPANSION DAM DETAILS AT THE ABUTMENTS SHALL CONFORM TO STD. DWG. SD-1-63 SHEET 2

EXPANSION JOINT DETAILS

STATE OF OHIO
DEPARTMENT OF HIGHWAYS
BUREAU OF BRIDGES

BEISWENGER & HOCH, Consulting Engineers
AKRON, OHIO

EXPANSION JOINT DETAILS

BRIDGE NO MAH-18-1013 L & R
OVER MEANDER RESERVOIR
MAHONING COUNTY
STA. 521+05.75 TO STA. 545+82.25

DESIGNED	DRAWN	TRACED	CHECKED	REVIEWED	DATE	REVISED
KKJ	JWW		11-22-61	12BH	12-28-61	

MICROFILM
APR 7 '15

FED. RD.	STATE	PROJECT	
2	OHIO		

MAH - 18-9.89

219
294

433'-5¼" - SECTION 1 & 6 — 433'-8½" - SECTION 3 - OUT TO OUT SLAB

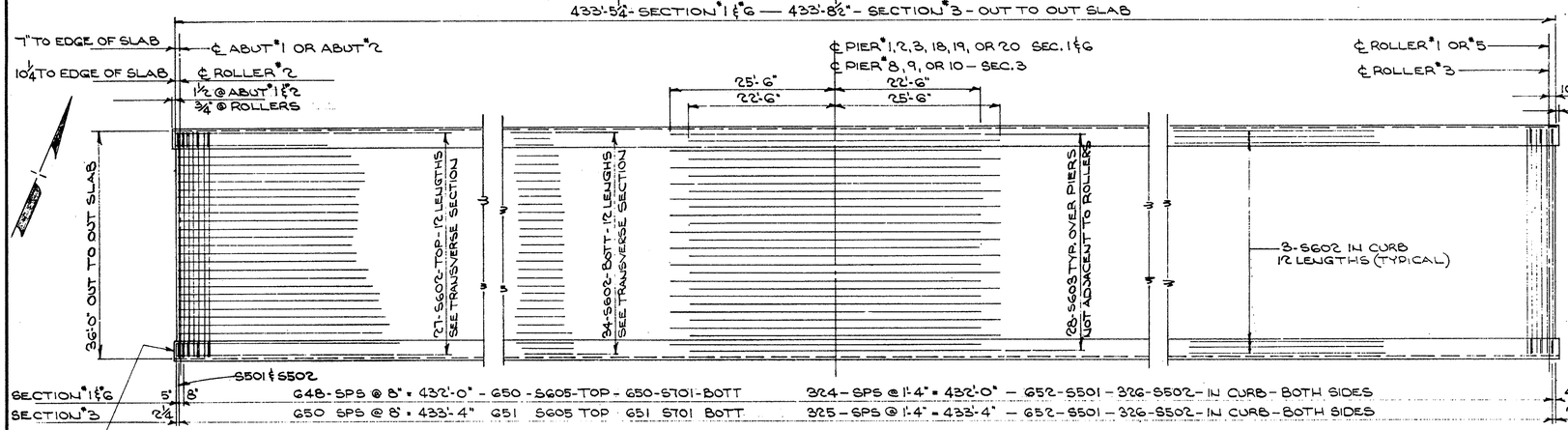

SECTION 1 & 6 — 648-SPS @ 8" = 432'-0" - 650-S605-TOP - 650-S701-BOTT — 324-SPS @ 1'-4" = 432'-0" — 652-S501 - 326-S502 - IN CURB - BOTH SIDES

SECTION 3 — 650 SPS @ 8" = 433'-4" 651 S605 TOP 651 S701 BOTT — 325-SPS @ 1'-4" = 433'-4" — 652-S501 - 326-S502 - IN CURB - BOTH SIDES

PARTIAL SLAB REINFORCING PLAN SECTION 1, 3 & 6 LEFT STRUCTURE SHOWN RIGHT STRUCTURE SIMILAR

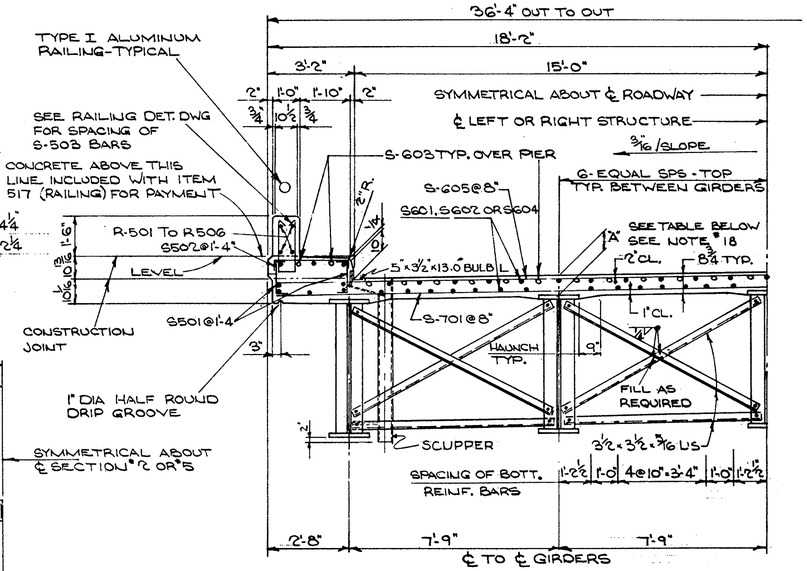

HALF TRANSVERSE SECTION

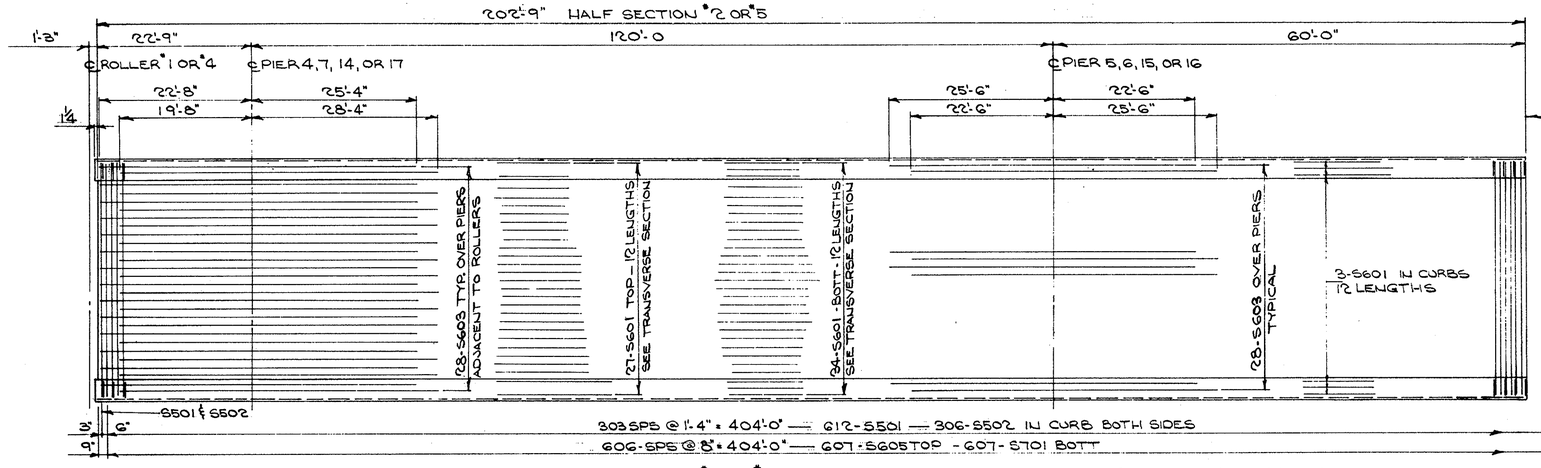

303 SPS @ 1'-4" = 404'-0" — 612-S501 — 306-S502 IN CURB BOTH SIDES

606-SPS @ 8" = 404'-0" — 607-S605 TOP - 607-S701 BOTT

SLAB REINFORCING PLAN — HALF SECTION 2 OR 5 — LEFT STRUCTURE SHOWN — RIGHT STRUCTURE SIMILAR

SLAB THICKNESS OVER ℄ GIRDERS

DIMENSION "A"	THICKNESS OF FLANGE ℄
8¾"	1⅞"
8⅞"	1¾"
9 1/16"	1 3/16"
9⅜"	1"

THIS SLAB MAY BE PLACED IN SECTIONS BETWEEN TRANSVERSE CONSTRUCTION JOINTS WHICH ARE PARALLEL TO TRANSVERSE REINFORCING STEEL AND ARE LOCATED NEAR THE CENTER OF ANY SPAN.

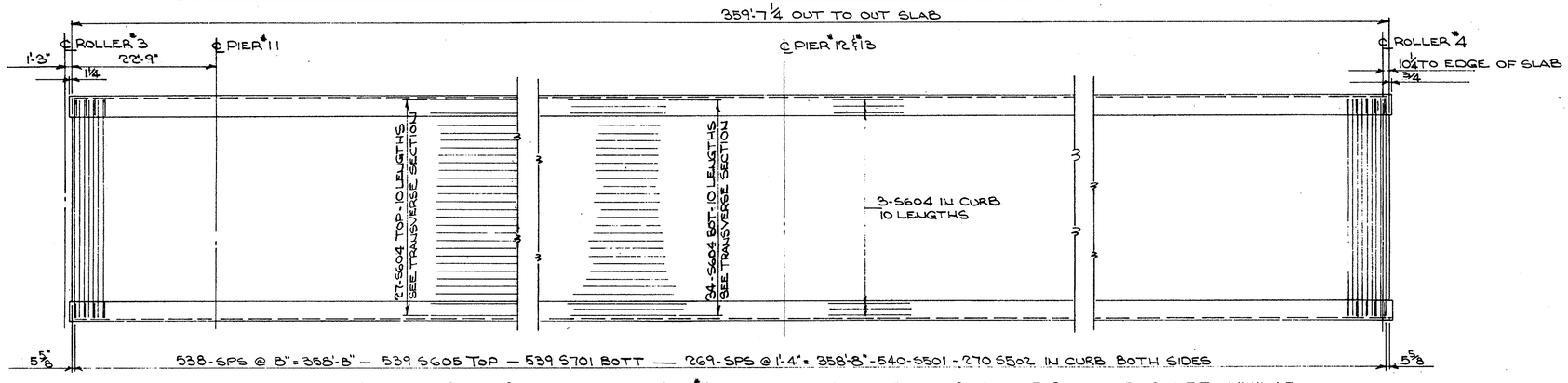

538-SPS @ 8" = 358'-8" — 539 S605 TOP — 539 S701 BOTT — 269-SPS @ 1'-4" = 358'-8" - 540-S501 - 270 S502 IN CURB BOTH SIDES

PARTIAL SLAB REINFORCING PLAN SECTION 4 — LEFT STRUCTURE SHOWN — RIGHT STRUCTURE SIMILAR

STATE OF OHIO
DEPARTMENT OF HIGHWAYS
BUREAU OF BRIDGES

BEISWENGER & HOCH, Consulting Engineers
AKRON, OHIO

SLAB DETAILS

BRIDGE N° MAH - 18 - 1013 L & R
OVER MEANDER RESERVOIR
MAHONING COUNTY
STA 521+05.75 TO STA 545+82.25

DESIGNED	DRAWN	TRACED	CHECKED	REVIEWED	DATE	REVISED
KKJ	JWW		awl 12/27/64	RDH	12-28-64	

FED. RD.	STATE	PROJECT	
2	OHIO		

MAH-18-9.89

MICROFILM
APR 7 19

220
294

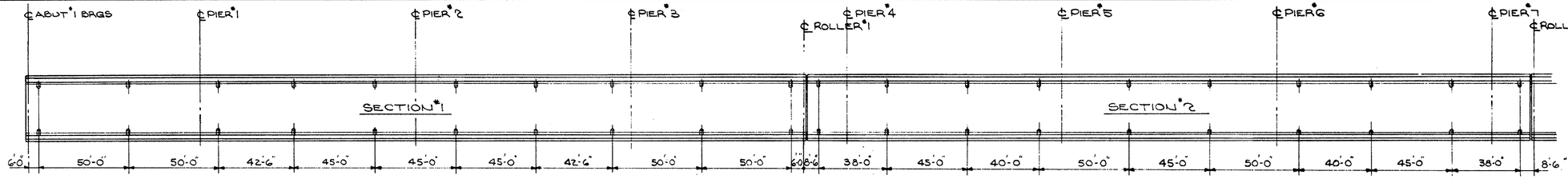

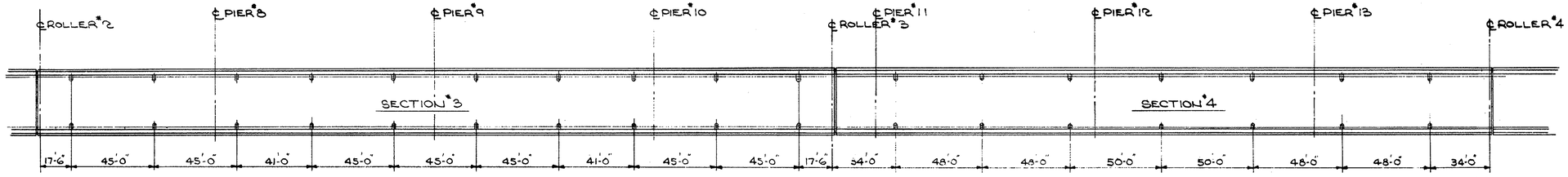

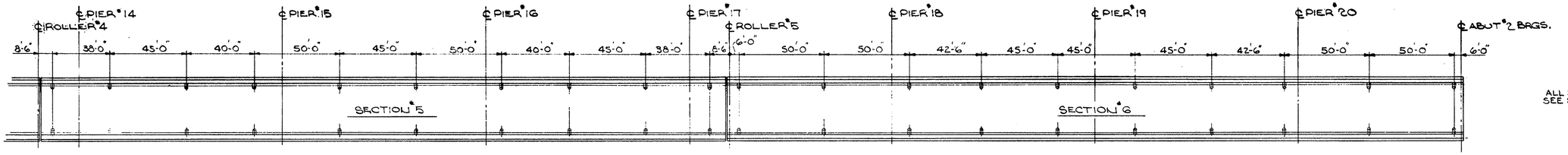

ALL SCUPPERS ARE TYPE II
SEE STD. DWG. SD-1-63 SH. #3 FOR DETAILS

DRAINAGE PLAN — LEFT STRUCTURE SHOWN — RIGHT STRUCTURE SIMILAR

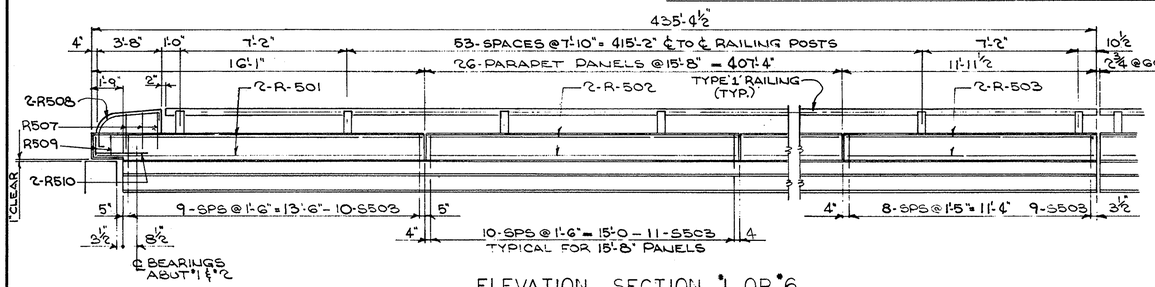

ELEVATION SECTION #1 OR #6

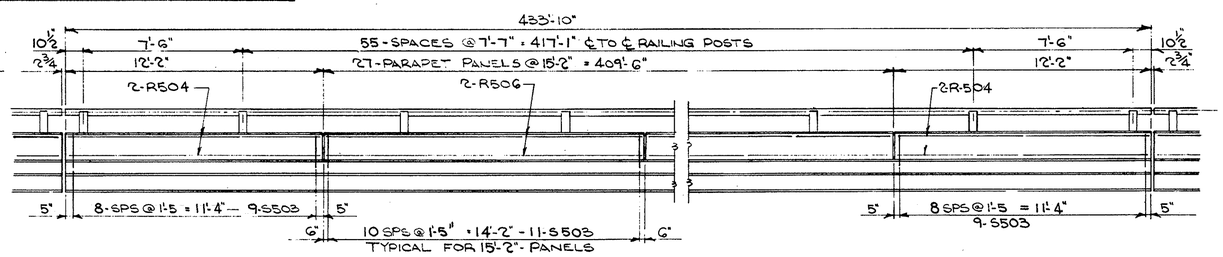

ELEVATION SECTION #3

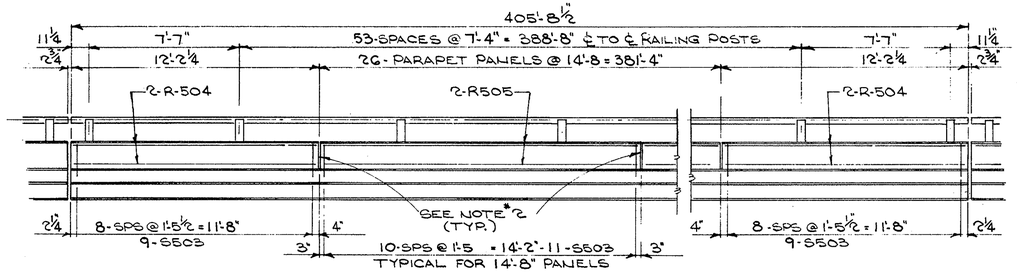

ELEVATION SECTION #2 OR #5

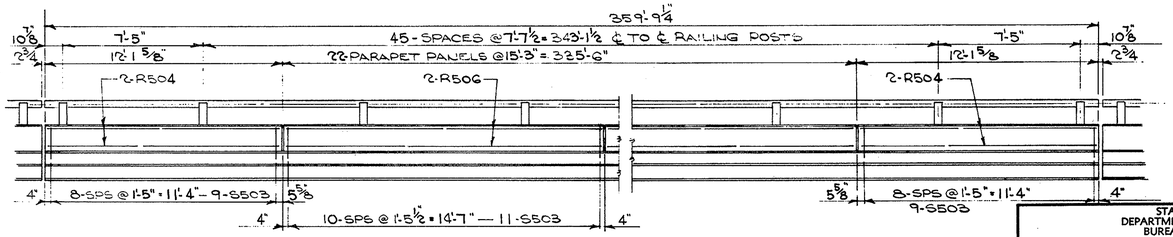

ELEVATION SECTION #4

STATE OF OHIO
DEPARTMENT OF HIGHWAYS
BUREAU OF BRIDGES

BEISWENGER & HOCH, Consulting Engineers
AKRON, OHIO

RAILING & DRAINAGE DETAILS

BRIDGE N°MAH-18-1013 L & R
OVER MEANDER RESERVOIR
MAHONING COUNTY
STA 521+05.75 TO STA 545+82.25

DESIGNED	DRAWN	TRACED	CHECKED	REVIEWED	DATE	REVISED
KKJ	JWW		8/7/64	RAH	12-28-64	

MARK	NO. REQ'D	LENGTH	TYPE	DIMENSIONS A	B	C	D	SERIES INCREMENTS	WEIGHT LBS.
ABUTMENTS 1 & 2 RIGHT & LEFT									
A-501	132	9'-2"	3	5'-5"	2'-0"				1262
A-502	92	7'-0"	1	6"	6'-7"				672
A-503	92	7'-2"	3	3'-5"	2'-0"				688
A-504	20	22'-10"	ST						476
A-505	24	37'-5"	ST						937
A-506	16	16'-0"	ST						267
SERIES A-507	8 SETS OF 3= 24 BARS	29'-5" TO 35'-9"	ST					3'-2"	1631
A-508	4	27'-10"	ST						116
A-509	4	19'-8"	ST						82
A-510	8	9'-3"	ST						77
A-511	16	3'-6"	ST						58
A-512	20	10'-4"	ST						216
A-513	24	24'-10"	ST						622
SERIES A-514	8 SETS OF 3 = 24 BARS	16'-11" TO 23'-3"	ST					3'-2"	503
A-515	4	15'-4"	ST						64
A-516	4	7'-2"	ST						30
A-517	28	10'-0"	ST						292
A-601	24	17'-10"	3	1'-5"	8'-4"				643
A-602	96	19'-8"	7	6'-10"	1'-5"	8'-4	11"		2836
A-603	32	23'-8"	3	1'-5"	11'-3				1138
SERIES A-604	8 SETS OF 13= 52 BARS	11'-4" TO 23'-4"	3	1'-5"	5'-1 TO 11'-1"			6"	1354
A-605	132	14'-3"	4	6'-7"	5'-5"	2'-6"			2825
A-801	56	24'-7"	ST						3,676
TOTAL ABUTMENTS 1 & 2 RIGHT & LEFT									20,465
SUPERSTRUCTURE RIGHT & LEFT									
S-501	14,864	2'-1"	3	1'-4"	6"				32,298
S-502	7,432	3'-3"	3	2'-6"	6"				25,193
S-503	7172	5'-3"	5	8"	2'-0"	5			39,272
S-601	3216	35'-7"	ST						171,883
S-602	4824	37'-11"	ST						274,731
S-603	1120	48'-0"	ST						80,748
S-604	1340	37'-9"	ST						75979
S-605	7408	35'-8	ST						396,857
S-701	7408	35'-8	ST						540,064
SUPERSTRUCTURE RIGHT & LEFT TOTAL 1,637,025									

MARK	NO. REQ'D	LENGTH	TYPE	DIMENSIONS A	B	C	D	SERIES INCREMENTS	WEIGHT LBS.
PIERS #1 THRU #20 RIGHT & LEFT									
P-501	2,800	3'-4"	ST						9,734
P-502	1,320	9'-2"	3	1'-11"	3'-9"				12,620
P-601	894	14'-6"	3	6'-11"	3'-11"				19,670
P-602	894	11'-2"	3	6'-11"	2'-3"				14,995
P-603	180	34'-8	ST						4,166
P-1001	400	41'-3"	3	34'-8"	3'-7"				71,000
PIERS #1 THRU #20 RIGHT & LEFT TOTAL 131,985									

MARK	NO. REQ'D	LENGTH	TYPE	DIMENSIONS A	B	C	D	SERIES INCREMENTS	WEIGHT LBS.
RAILING ⊛									
R-501	32	15'-9"	ST						
R-502	832	15'-4"	ST						
R-503	32	11'-7"	ST						
R-504	128	11'-9"	ST						
R-505	832	14'-4"	ST						
R-506	784	14'-10	ST						
R-507	24	4'-2"	BT						
R-508	16	5'-4"	BT						
R-509	16	3'-5	5	8"	1'-1"	5"			
R-510	16	3'-0"	ST						
REPLACEMENT BARS									
RE-501	7	5'-7"	ST						
RE-601	53	5'-11"	ST						
RE-701	27	6'-2"	ST						
RE-801	1	6'-6"	ST						
RE-1001	4	7'-2"	ST						

GRAND TOTAL 1789,475 LBS

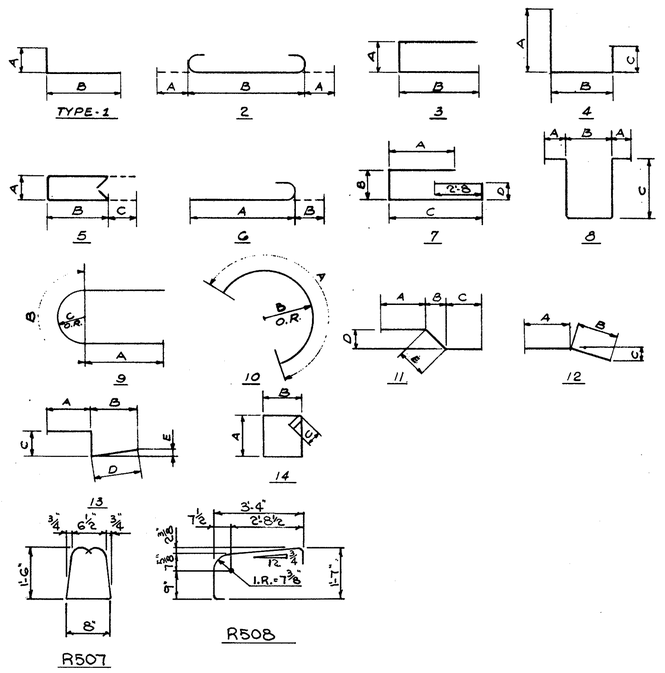

BAR SIZE IS INDICATED IN THE BAR MARK. THE FIRST DIGIT WHERE THREE DIGITS ARE USED AND THE FIRST TWO DIGITS WHERE FOUR ARE USED INDICATE THE BAR SIZE NUMBER. FOR EXAMPLE A-601 IS A NO. 6 SIZE BAR AND P-1001 IS A NO 10 SIZE BAR.

⊛ RAILING REINFORCEMENT BARS WILL BE INCLUDED AS PART OF ITEM 517 FOR PAYMENT

FED. RD.	STATE	PROJECT	
2	OHIO		

MAH-18-9.89

221
294

MICROFILMED APR 7 1969

STATE OF OHIO
DEPARTMENT OF HIGHWAYS
BUREAU OF BRIDGES

BEISWENGER & HOCH, Consulting Engineers
AKRON, OHIO

REINFORCING SCHEDULE

BRIDGE N° MAH-18-1013 L & R
OVER MEANDER RESERVOIR
MAHONING COUNTY
STA 521+05.75 TO STA 545+82.25

DESIGNED	DRAWN	TRACED	CHECKED	REVIEWED	DATE	REVISED
KKJ	JWJ		9/27/67	RBM	12-28-68	

MICROFILM APR 7 19

FED. RD.	STATE	PROJECT	
2	OHIO		

222
294

MAH-18-9.89

TURNER RD. CURVE DATA

P.I.-STA 52+66.04 T=183.68'
Δ = 138°02'-15" RT. Lc= 325.94'
D = 4°-0' E = 9.32'
R = 1432.39'

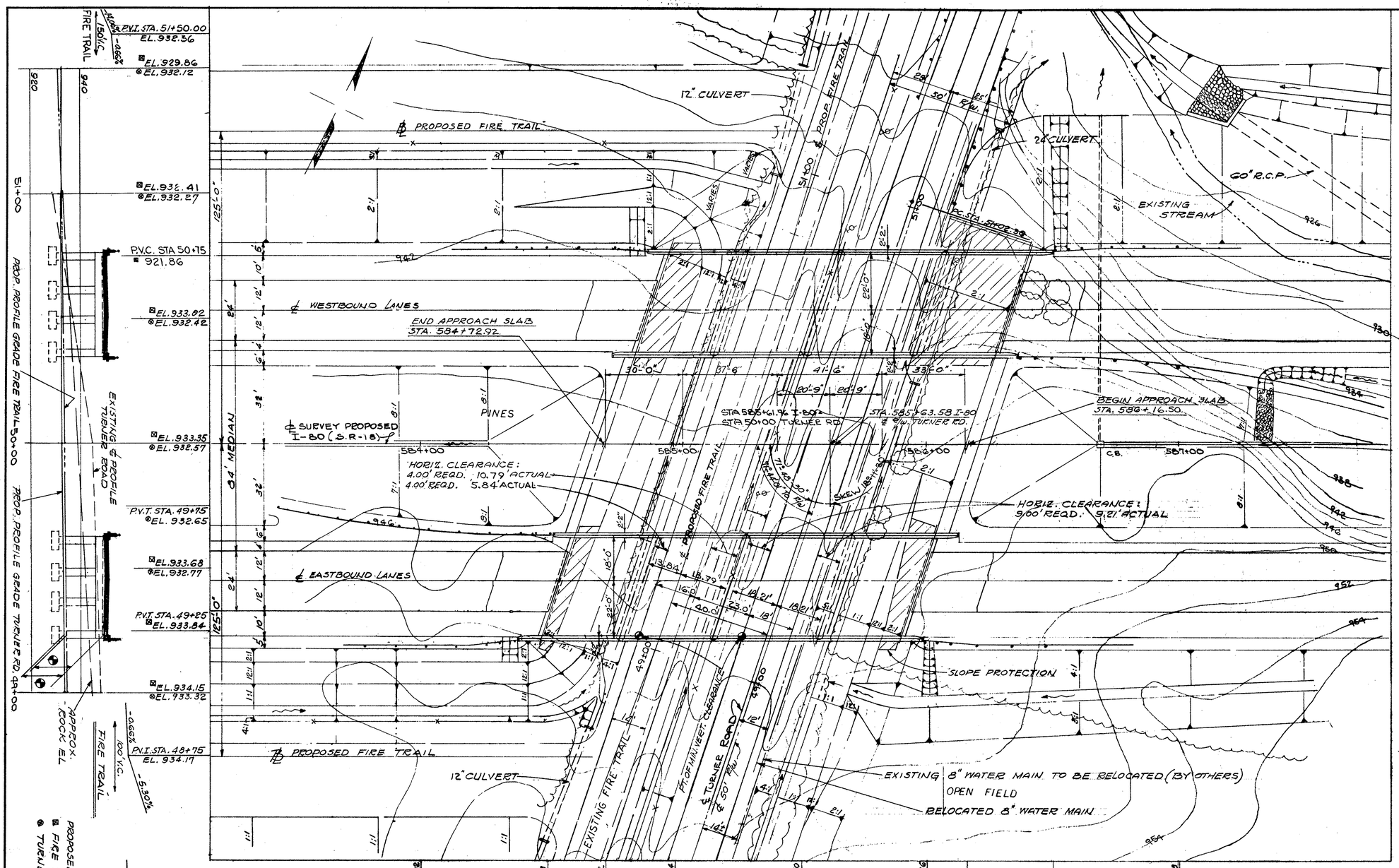

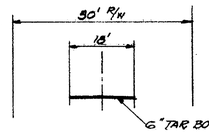

TYPICAL SECTION EXISTING TURNER RD.

PROPOSED STRUCTURE

TYPE: CONTINUOUS REINFORCED CONCRETE SLAB WITH REINFORCED CONCRETE SUBSTRUCTURES.
SKEW: 18°-11'-30" L.F.
SPAN: 30'-0", 37'-6"-41'-6"-33'-0" ℄ ASSUMED BEARINGS
ROADWAY: 40'-0" F/F PARAPETS
WEARING SURFACE: 1" MONOLITHIC
LOAD FREQUENCY: CF 2000 ADEQUATE FOR AASHO. ALT. LOADING
APPROACH SLABS: 25' LONG (AS-1-54)
ALIGNMENT: STRAIGHT
SUPERELEVATION: NONE
SLOPE PROTECTION: 601 CRUSHED AGGREGATE.

TRAFFIC: TURNER RD. 678 ADT (1975)
MAINLINE 24,830 ADT (1975)

◐ VERTICAL CLEARANCE:
FIRE TRAIL: 13.00' DESIGN; 13.02 ACTUAL.
TURNER ROAD: 14.50' DESIGN; 14.50 ACTUAL.

STATE OF OHIO
DEPARTMENT OF HIGHWAYS
BUREAU OF BRIDGES

BEISWENGER & HOCH, Consulting Engineers
AKRON, OHIO

SITE PLAN

BRIDGE NO MAH-18-1112 L & R
OVER TURNER ROAD
I-80 (S.R-18) MAHONING COUNTY
STA. 584+72.26 TO STA 586+17.16

DESIGNED	DRAWN	TRACED	CHECKED	REVIEWED	DATE	REVISED
K.K.J.	CEMISSY DEMYSS			RBW	1-6-65	

MICROFILM
APR 7 19

FED. RD.	STATE	PROJECT	
	OHIO		

223
294

MAH.-18- 9.89

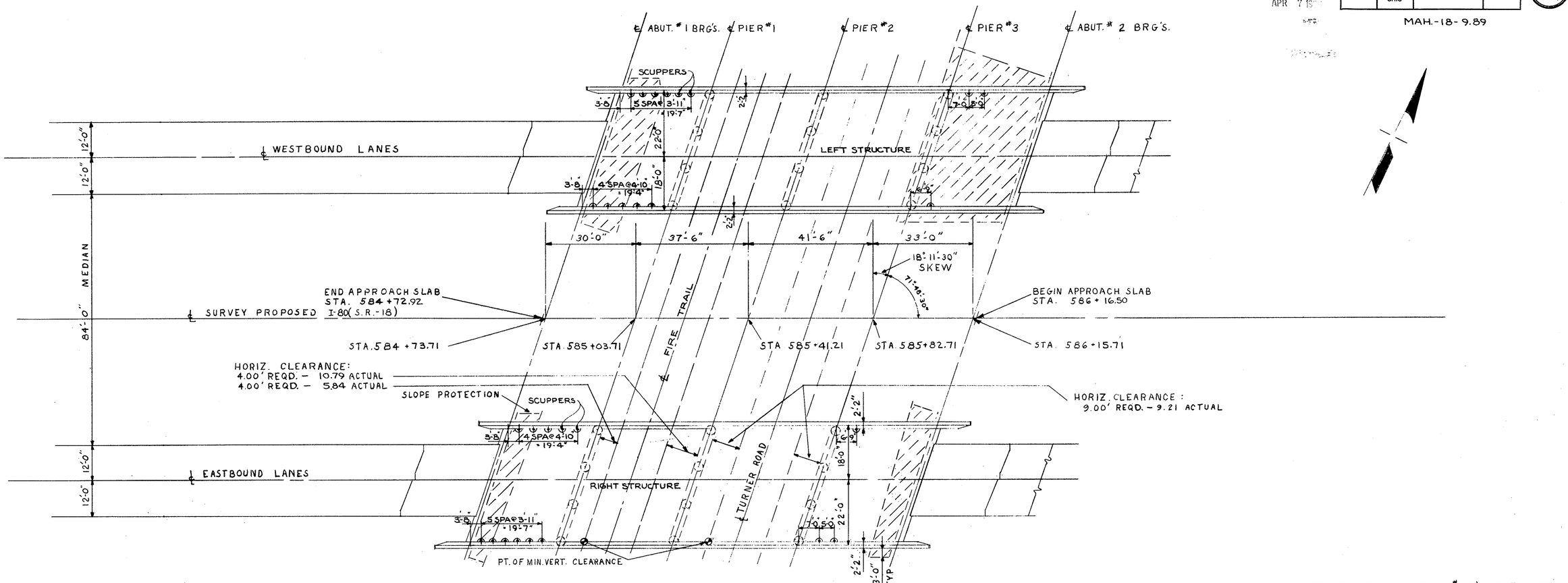

PLAN

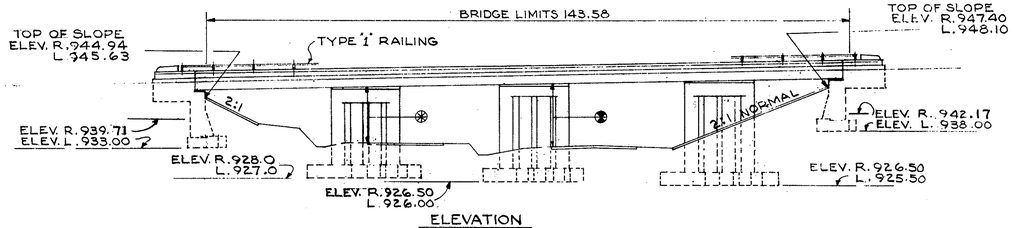

ELEVATION

SEE GENERAL NOTE SH. #207 & 208 FOR NOTES
#1, 2, 3, 4, 6-A, 7, 10, 15, 20, 23, 25

MIN. VERTICAL CLEARANCE @ RIGHT STRUCTURE
- DESIGN - 13.00', ACTUAL - 13.02'
- DESIGN - 14.50, ACTUAL - 14.50

ESTIMATED QUANTITIES (2 BRIDGES)

ITEM	TOTAL	UNIT	DESCRIPTION	SUPER	ABUTS	PIERS	GEN.
503	421	CU.YDS.	UNCLASSIFIED EXCAVATION		421		
503	452	CU.YDS.	EXCAVATION - ROCK		11	441	
511	742	CU.YDS.	CLASS "C" CONC. SUPERSTRUCTURE	742			
511	40	CU.YDS.	CLASS "E" CONC. ABUTS. ABOVE FTGS. "1-R" & "2-R"		40		
511	59	CU.YDS.	CLASS "C" CONC. ABUTS. ABOVE FTGS. "1-L" & "2-L"		59		
511	179	CU.YDS.	CLASS "C" CONC. PIERS ABOVE FOOTINGS			179	
511	289	CU.YDS.	CLASS "E" CONC. PIER & ABUT. FOOTINGS		53	236	

ITEM	TOTAL	UNIT	DESCRIPTION	SUPER	ABUTS	PIERS	GEN.
509	339202	LBS	REINFORCING STEEL	188,594	22,129	128,479	
516	220	SQ.FT.	1/16". SHEET ASBESTOS PACKING		220		
517	645.63	LIN.FT.	RAILING (TYPE 1)	574.30	71.33		

ITEM	TOTAL	UNIT	DESCRIPTION	SUPER	ABUTS	PIERS	GEN.
518	41	CU.YDS.	POROUS BACKFILL		41		
518	28	EACH	6" GALVANIZED STEEL OR WROUGHT IRON SCUPPERS	28			
518	184	LIN.FT.	6" ϕ PERF. HELICAL CMP TOT. OG				
			INCLUDING SPECIALS		184		
518	108	LIN.FT.	6" ϕ HELICAL CMP TOT. OG NON-PERF.		108		
825	1490	SQ.Yds.	Concrete Surface Treatment	1490			
601	410	SQ.YDS.	CRUSHED AGGREGATE SLOPE PROTECTION		410		
808	742	EACH	WATER REDUCING SET RETARDING ADMIXTURE	742			

STATE OF OHIO
DEPARTMENT OF HIGHWAYS
BUREAU OF BRIDGES

BEISWENGER & HOCH, Consulting Engineers
AKRON, OHIO

GENERAL PLAN & ELEVATION

BRIDGE Nº MAH-18-1112 L & R.
OVER TURNER ROAD
I-80 (S.R.-18) MAHONING COUNTY
STA. 584+72.26 To STA. 586+17.16

DESIGNED	DRAWN	TRACED	CHECKED	REVIEWED	DATE	REVISED
K.K.S.	J.L.H.		Cw	R.D.K.	1-6-65	

FED. RD.	STATE	PROJECT	
2	OHIO		

224
294

MAH-18-9.89

ABUT. #1

ABUT. #2

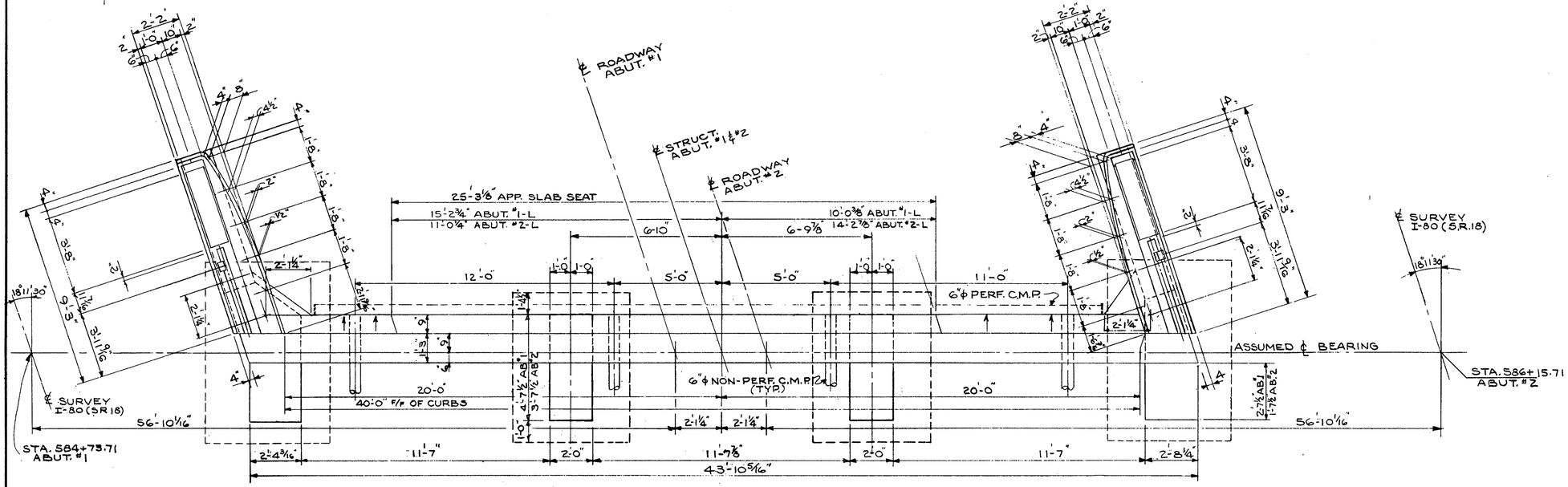

PLAN ~ ABUTMENT #1-L SHOWN

ABUTMENT Nº 2 L SIMILAR EXCEPT AS NOTED

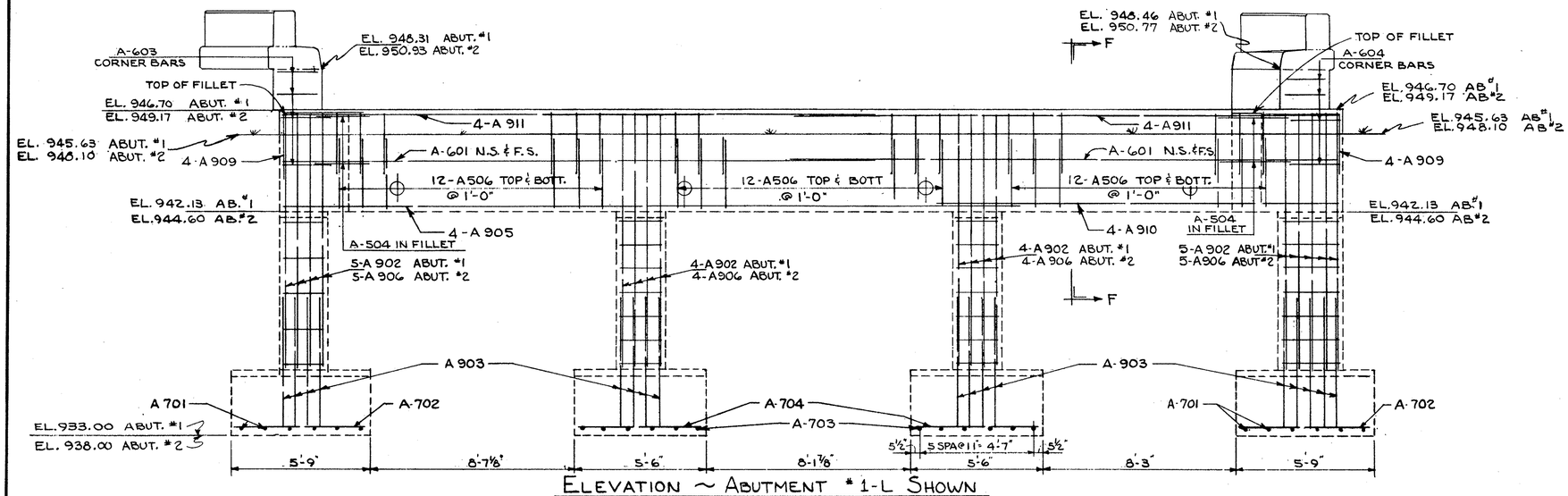

ELEVATION ~ ABUTMENT #1-L SHOWN

ABUTMENT #2-L SIMILAR EXCEPT AS NOTED

STATE OF OHIO
DEPARTMENT OF HIGHWAYS
BUREAU OF BRIDGES

BEISWENGER & HOCH, Consulting Engineers
AKRON, OHIO

ABUTMENTS LEFT STRUCTURE

BRIDGE Nº MAH-18-1112 L&R
OVER TURNER ROAD
I-80 (SR.18) MAHONING COUNTY
STA. 584+72.26 TO STA. 586+17.16

DESIGNED	DRAWN	TRACED	CHECKED	REVIEWED	DATE	REVISED
KKJ	JLH		aw	RDA	1-6-65	

FED. RD.	STATE	PROJECT	
2	OHIO		

225
294

MICROFILMED
APR 7 1965

MAH-18-9.89

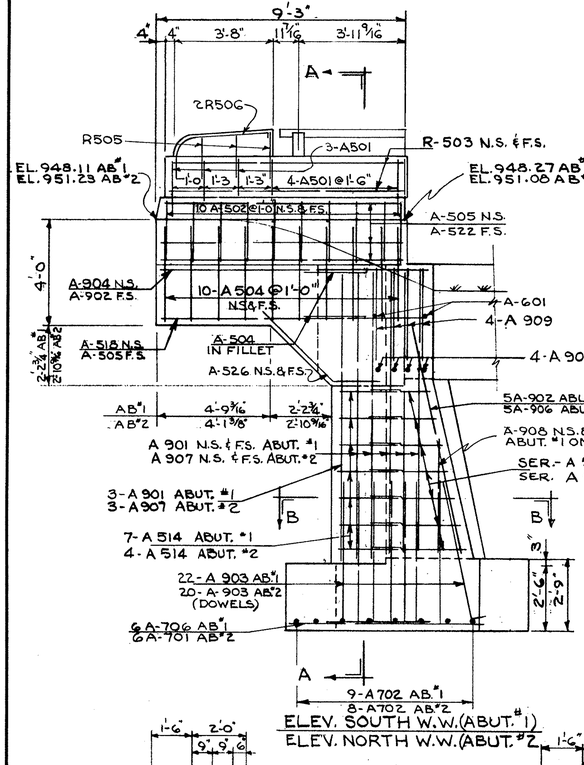

ELEV. SOUTH W.W.(ABUT.#1)
ELEV. NORTH W.W.(ABUT.#2)

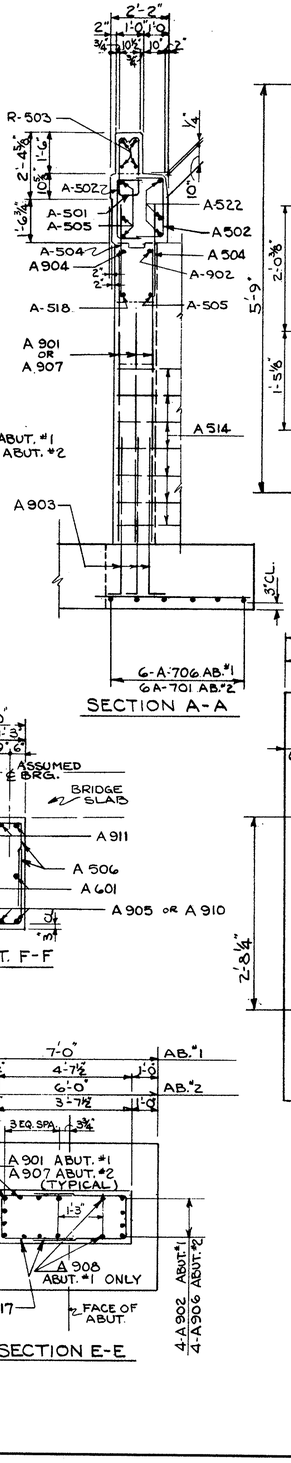

SECTION A-A

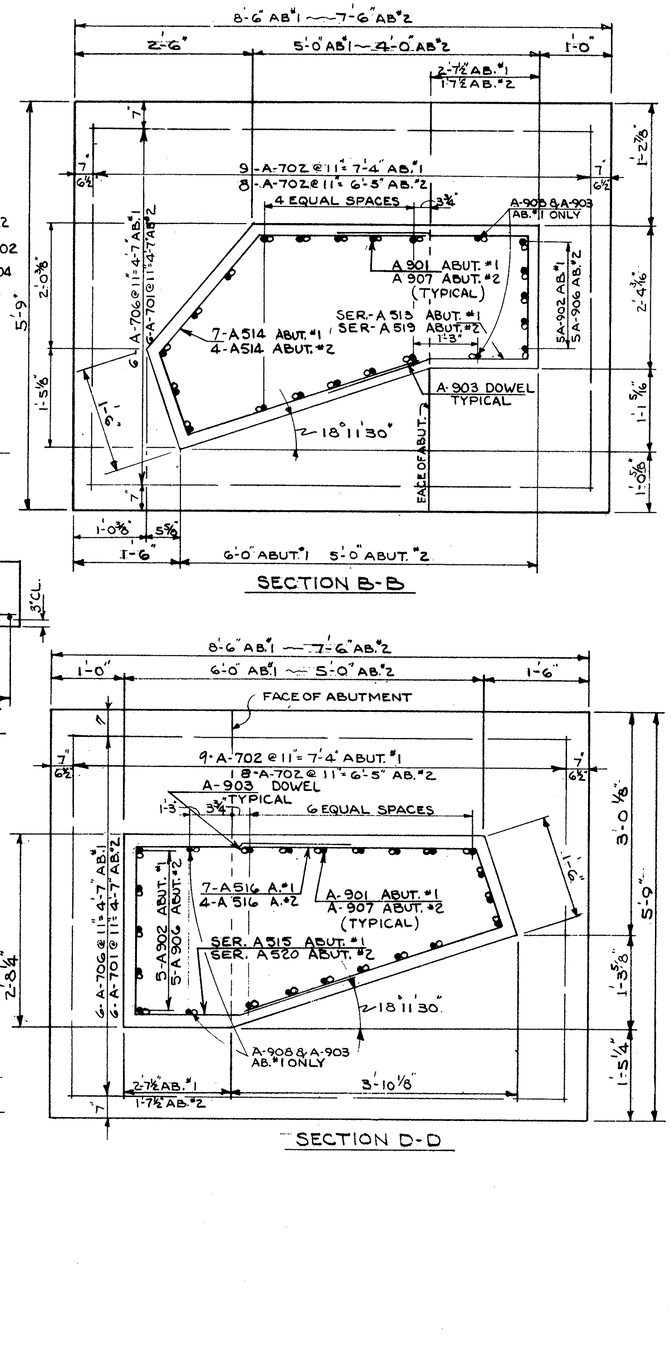

SECTION B-B

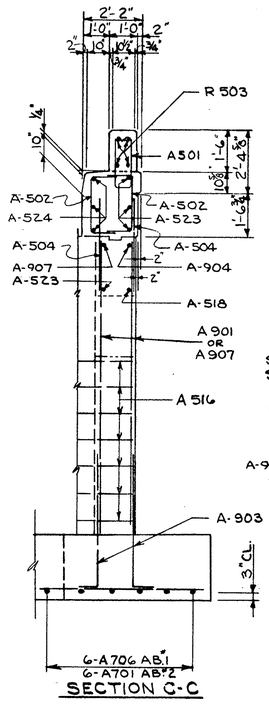

SECTION C-C

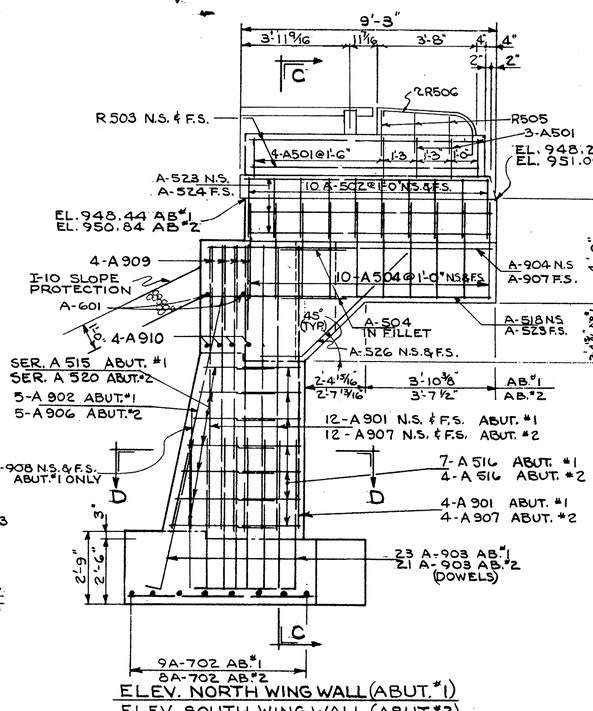

ELEV. NORTH WING WALL (ABUT.#1)
ELEV. SOUTH WING WALL (ABUT.#2)

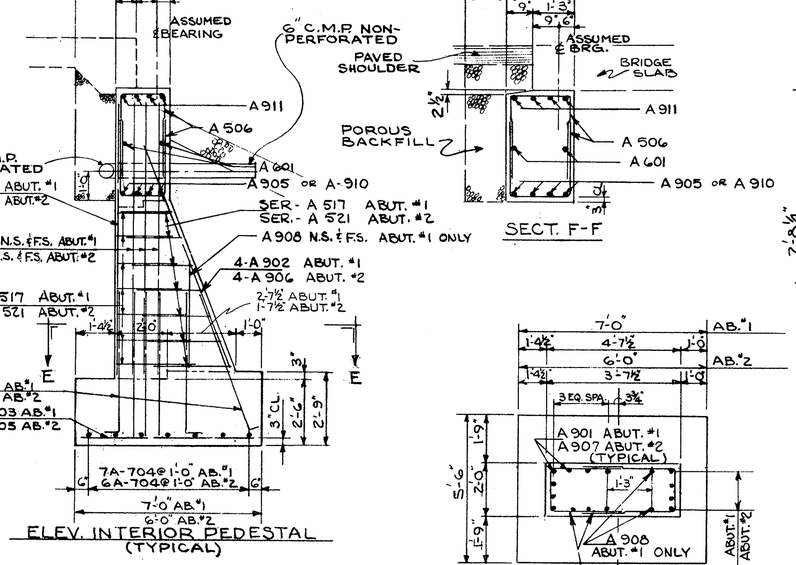

ELEV. INTERIOR PEDESTAL (TYPICAL)

SECTION D-D

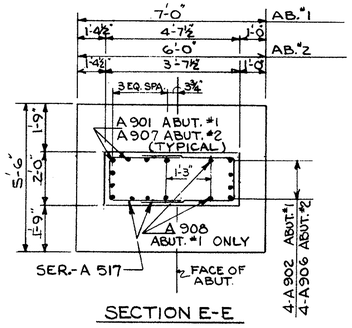

SECTION E-E

STATE OF OHIO
DEPARTMENT OF HIGHWAYS
BUREAU OF BRIDGES

BEISWENGER & HOCH, Consulting Engineers
AKRON, OHIO

ABUTMENTS
LEFT STRUCTURE

BRIDGE Nº MAH-18-1112 L & R
OVER TURNER ROAD
I-80 (SR.18) MAHONING COUNTY
STA. 584+72.26 TO STA. 586+17.16

DESIGNED	DRAWN	TRACED	CHECKED	REVIEWED	DATE	REVISED
KKJ	JLH		11/11/64	RBH	1-6-65	

MICROFILMED
APR 7 1966

FED. RD.	STATE	PROJECT	
2	OHIO		

226
294

MAH.-18- 9.89

— ELEVATIONS —

	ABUT. "1	ABUT "2
A	947.61	950.35
C	947.89	950.07
D	946.01	948.47
E	944.94	947.40
F	939.71	942.17
G	947.58	950.34
H	947.42	950.50
J	947.87	950.04
K	947.71	950.20

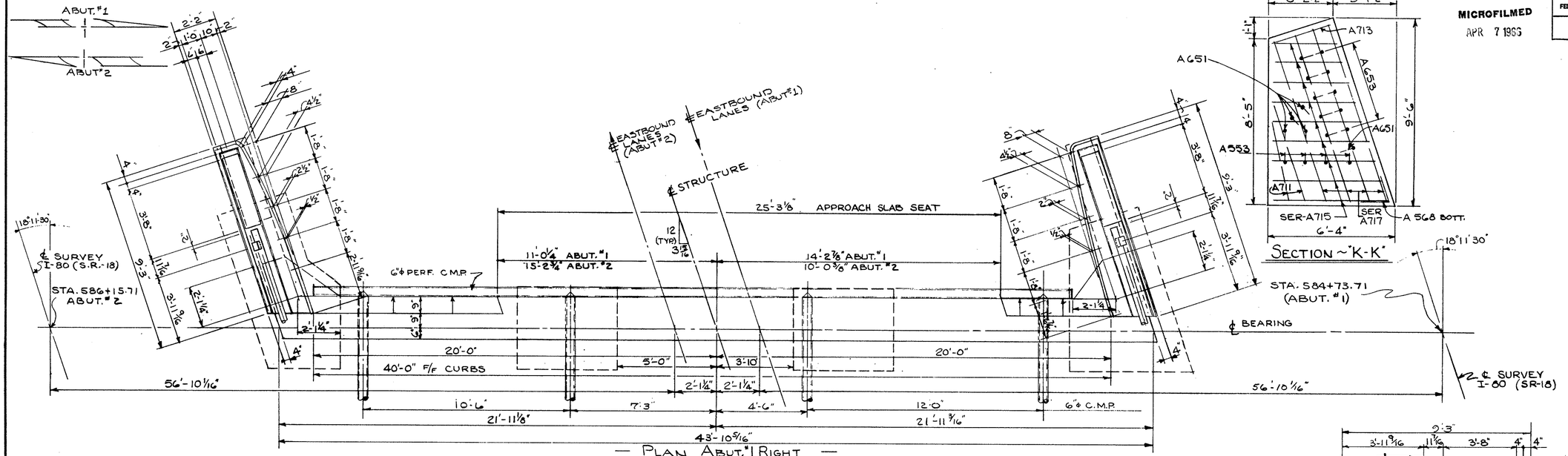

— PLAN ABUT."1 RIGHT —
ABUT"2 RIGHT SIMILAR EXCEPT AS SHOWN.

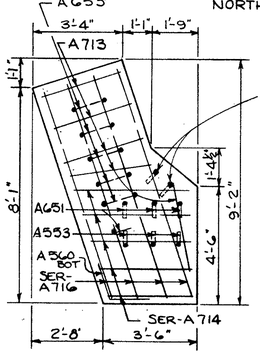

SECTION ~"J-J"

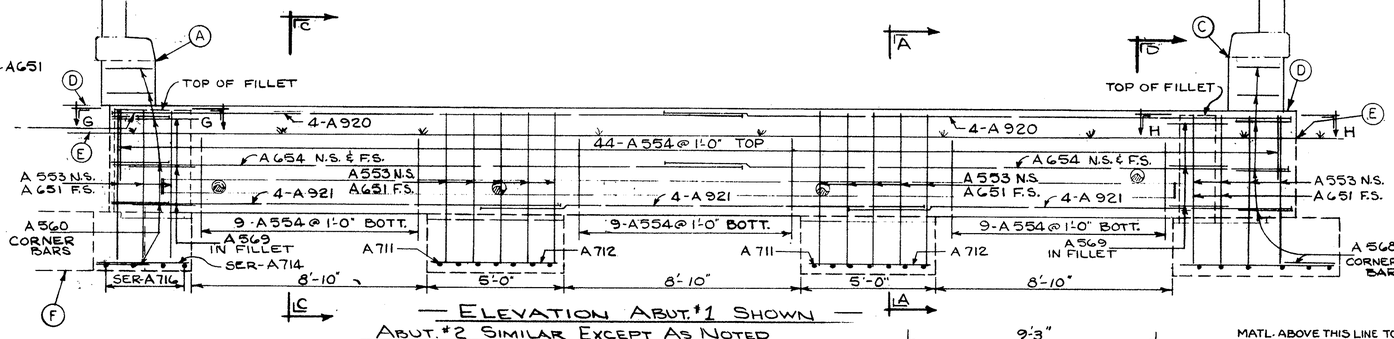

— ELEVATION ABUT."1 SHOWN —
ABUT."2 SIMILAR EXCEPT AS NOTED

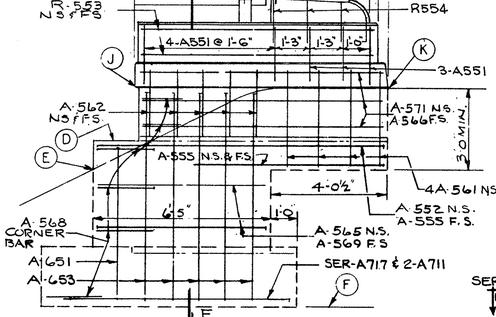

SECTION ~"K-K"

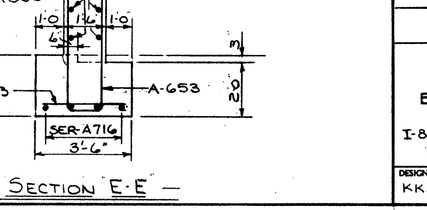

— ELEVATION NORTH WINGWALL ABUT."1 —
— SOUTH WINGWALL ABUT."2 SIMILAR —

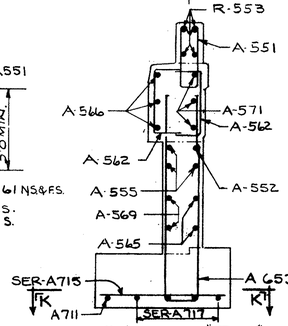

— SECTION F-F —
SEE SECTION E-E FOR DIMENSIONS NOT SHOWN.

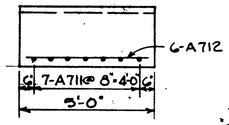

SECTION ~"B-B"

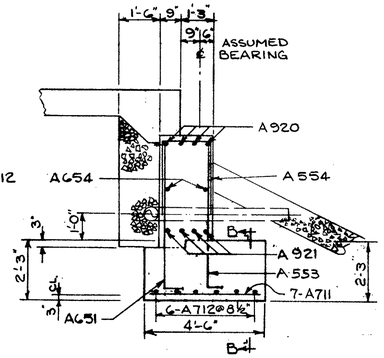

SECTION ~"A-A"

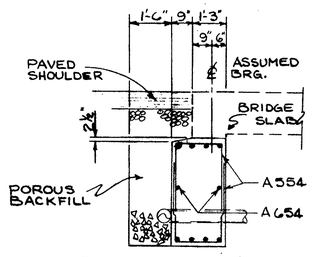

SECTION ~"C-C" OR "D-D"
SEE SECTION "A-A" FOR BAR NOS. AND DIMENSIONS NOT SHOWN

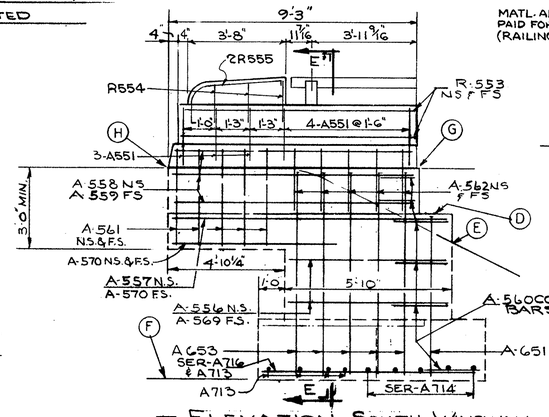

— ELEVATION SOUTH WINGWALL ABUT."1 —
— NORTH WINGWALL ABUT."2 SIMILAR —

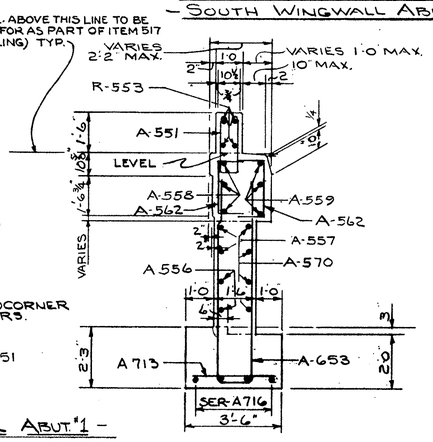

— SECTION E-E —

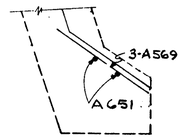

SECTION G-G
SHOWING BARS IN FILLET

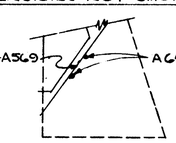

SECTION H-H
SHOWING BARS IN FILLET

STATE OF OHIO
DEPARTMENT OF HIGHWAYS
BUREAU OF BRIDGES

BEISWENGER & HOCH, Consulting Engineers
AKRON, OHIO

ABUTMENTS RIGHT STRUCTURE

BRIDGE Nº MAH.-18-1112 L&R
OVER TURNER ROAD
I-80 (SR.18) MAHONING COUNTY
STA. 584+72.26 TO STA. 586+17.16

DESIGNED	DRAWN	TRACED	CHECKED	REVIEWED	DATE	REVISED
KKJ	JP			RDN	1-6-65	

MICROFILMED
APR 7 1966

FED. RD.	STATE	PROJECT	
2	OHIO		

227
294

MAH.-18- 9.89

TABLE						
LOCATION	ELEVATION A	ELEVATION B	DIMENSION C	SPACING D	VERT. REINF MARK *	SPIRALS MARK
PIER #1 L.	947.25	927.00	4'-3"	9 SPA @ 1'-6	P-1113	SP-401
PIER #1 R.	946.55	928.00	12'-6 5/8"	8 SPA @ 1'-6	P-1114	SP-402
PIER #2 L	947.89	926.00	15'-10 11/16"		P-1115	SP-403
PIER #2 R	947.20	926.50	14'-8 7/16"		P-1116	SP-404
PIER #3 L	948.61	925.50	17'-1 3/8"	11 SPA @ 1'-6	P-1117	SP-405
PIER #3 R	947.91	926.50	15'-5"	10 SPA @ 1'-6	P-1118	SP-406

* EXCEPT AS SHOWN IN ELEVATION

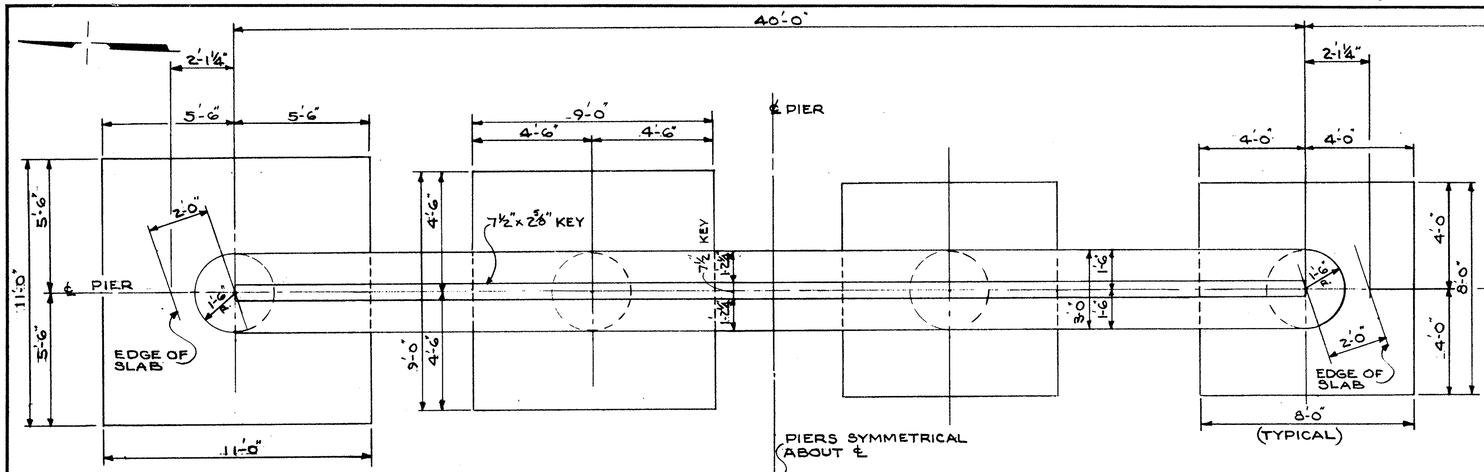

HALF PLAN
TYPICAL FOR PIERS №1&3

HALF PLAN
PIER №2

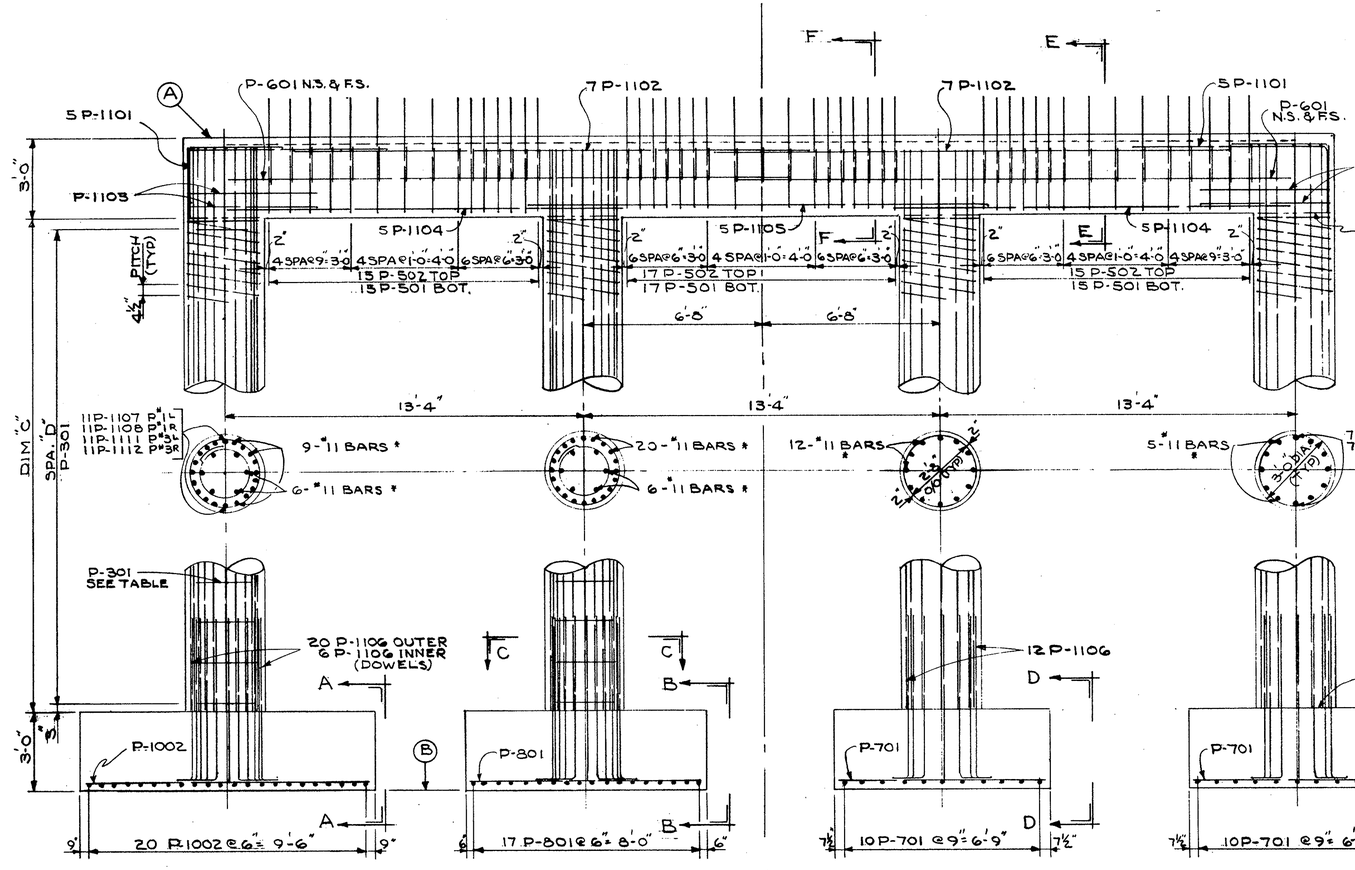

HALF ELEVATION
TYPICAL FOR PIERS №1 & №3

LEFT & RIGHT PIERS ARE SIMILAR EXCEPT AS NOTED.

HALF ELEVATION
PIER №2

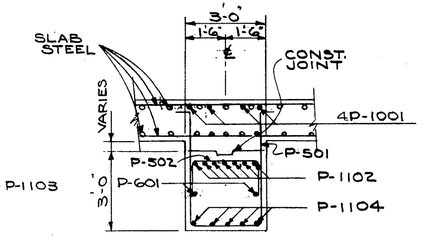

SECTION E-E

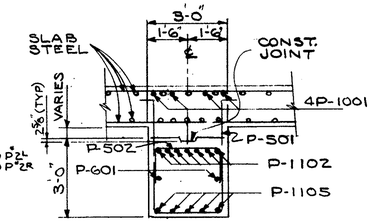

SECTION F-F

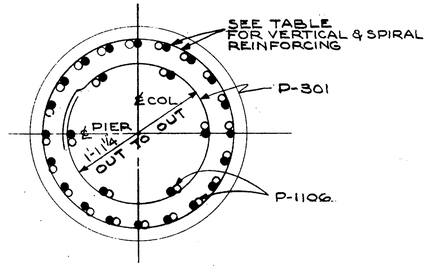

SECTION C-C
TYP. FOR PIER №1 & №3 ONLY

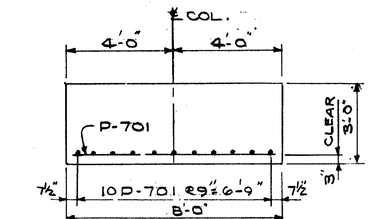

SECTION D-D

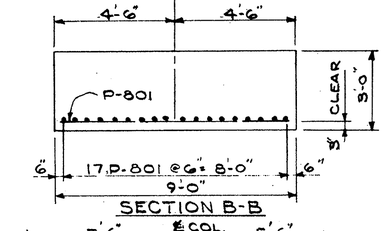

SECTION B-B

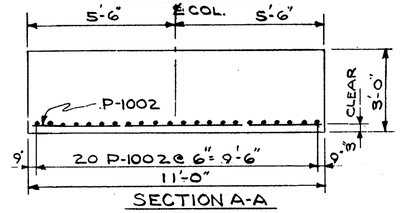

SECTION A-A

STATE OF OHIO
DEPARTMENT OF HIGHWAYS
BUREAU OF BRIDGES

BEISWENGER & HOCH, Consulting Engineers
AKRON, OHIO

PIERS

BRIDGE № MAH-18-1112 L&R
OVER TURNER ROAD
I-80 (SR. №18) MAHONING COUNTY
STA. 584+72.26 TO STA. 586+17.16

DESIGNED	DRAWN	TRACED	CHECKED	REVIEWED	DATE	REVISED
KKJ	JLH		11/14/64	RBH	1-6-65	

FED. RD.	STATE	PROJECT	
2	OHIO		

228
294

143'-6 15/16" SLAB

30'-0" | 37'-6" | 41'-6" | 33'-0"

℄ BEARINGS ABUT. #1 L&R | ℄ PIER #1 L&R | ℄ PIER #2 L&R | ℄ PIER #3 L&R | ℄ BEARINGS ABUT. #2 L&R.

MAH-18-9.89

9 7/16"

S-501 | S-901 | S-502 | S-901 | S-503 | S-901 | S-504

26 SPA@1'-0"=26'-0" | 8 SPA@6"=4'-0" | 8 SPA@6"=4'-0" | 29 SPA@1'-0"=29'-0" | 9 SPA@6"=4'-6" | 9 SPA@6"=4'-6" | 33 SPA@1'-0"=33'-0" | 8 SPA@6"=4'-0" | 8 SPA@6"=4'-0" | 29 SPA@1'-0"=29'-0"

168 S-506 & 168 S-507 (STEEL IN CURB)

42'-4" FACE TO FACE CURBS | 2'-2" | 38'-0" | 2'-2" | 2'-0" | 17'-0"

S-603 (2 LENGTHS) | SERIES OF S-601 @ 2'-0" | S-1008 | S-1009 | S-1010 | S-604 @ 2'-0" | S-1008 | S-1009 | S-1010 | S-605 @ 2'-0" | S-1010 | S-1009 | S-1008 | SERIES OF S-602 @ 2'-0"

STEEL IN TOP OF SLAB

SLAB REINFORCING PLAN

LEFT HALF SHOWN- RIGHT HALF SIMILAR

A | ℄ ROADWAY | A

S-1003 @ 2'-3" | S-1002 @ 2'-3" | S-1004 @ 2'-3" | S-1005 @ 2'-3" | S-1004 | S-1005 | S-1001 | S-1001 @ 1-1/2" | S-1006 @ 2'-3"

S-701 (2 LENGTHS) | S-1001 @ 1'-1/2"

STEEL IN BOTTOM OF SLAB

S-501 | S-901 | S-502 | S-901 | S-1001 | S-503 | S-901 | S-1007 @ 2'-3" | S-504

26 SPA@1'-0"=26'-0" | 8 SPA@6"=4'-0" | 8 SPA@6"=4'-0" | 29 SPA@1'-0"=29'-0" | 9 SPA@6"=4'-6" | 9 SPA@6"=4'-6" | 33 SPA@1'-0"=33'-0" | 8 SPA@6"=4'-0" | 8 SPA@6"=4'-0" | 29 SPA@1'-0"=29'-0"

168 S-506 & 168 S-507 (STEEL IN CURB)

B | C | B | C

1'-6 3/4" INCLUDES 1" MONOLITHIC WEARING SURFACE.

93 S-603 (2 LENGTHS) | 2@1'-0"=2'-0" | 11 SPA@2'-0"=22'-0" | 6@1'-0"=6'-0" | 6@1'-0"=6'-0" | 1'-9" | 11 SPA@2'-0"=22'-0" | 1'-9" | 6@1'-0"=6'-0" | 6@1'-0"=6'-0" | 1'-9" | 13 SPA@2'-0"=26'-0" | 12 SPA@2'-0"=24'-0" | 3@1'-0"=3'-0"

S-1008 | S-1009 | S-1010 | SER. S-601 | S-604 | S-605 | SER. S-602

S-1003 | S-1002 | S-1001 | S-1004 | S-1005 | S-1001 | S-1004 | S-1005 | P-1001 PIER STEEL (TYPICAL) 11" | S-1001 | S-1006 | S-1007

4@7"=2'-4" | 9 1/4" | 22 SPA@1'-2"=25'-8" | 4@7"=2'-4" | 9" | 29 SPA@1'-2"=33'-10" | 9" | 4@7"=2'-4" | 11" | 32 SPA@1'-2"=37'-4" | 4@7"=2'-4" | 9" | 24 SPA@1'-2"=28'-0" | 9" | 4@7"=2'-4"

135 S-701 (2 LENGTHS)

* SLAB THICKNESS SHOWN INCLUDES 1" FOR MONOLITHIC WEARING SURFACE.

SECTION A-A

42'-0" % SLAB | 38'-0" | 21'-0" | 17'-0"

2" | 1'-0" | 1'-0" | 2" | 3/4" | 10" | 10" | 2" | 2" | 1'-0" | 1'-0" | 2"

S-505 | R-501 OR R-502 | 2"R | S-901 | S-507 | S-506 | 3'-11 3/8" | 1'-6" | 10" | 1'-6" | 1'-0"

S-603 | S-701 | 43 S-1008 @ 1'-0" | 3/16"/FT. SLOPE | ℄ ROADWAY | 3/16"/FT. SLOPE | S-1010 @ 2'-0" | S-1009 @ 2'-0" | CONST. JOINTS | 2" | S-505 SEE RAILING DWG. FOR SPACING | R-501 OR R-502 | S-507 | 5 S-901 | S-506 | 2 1/4 CL. | 1" CL.

1 1/4 HALF ROUND DRIP GROOVE (TYPICAL) | 3" | S-1005 @ 2'-3" | S-1004 @ 2'-3" | 37 SPA. @ 1'-1 1/2" = 41'-7 1/2" | 38 S-1001. (4 LENGTHS)

SECTION B-B

18'-3" | 10'-7" | 3'-3" | 14'-5" | 6'-2" | 4'-5" | 42'-0" | S-1008 | S-1009 | S-1010 | ℄ PIER #1 | ℄ PIER #3 | 4'-5" | 6'-2" | 14'-5" | 3'-3" | 10'-7" | 18'-3"

PLACEMENT DIAG. FOR BARS S-1008, S-1009 & S-1010 AT PIER Nº1 & Nº3

CONCRETE ABOVE THIS POINT TO BE PAID FOR AS PART OF ITEM 517 (RAILING)

S-505 SEE RAILING DWG. FOR SPACING | R-501 OR R-502 | S-507 | 55 S-901 | S-506 | 2" | 2'-0" | 38'-0" F/F CURBS | ℄ ROADWAY | 21'-0" | 3/16"/FT. SLOPE | 3/16"/FT. SLOPE | 17'-0" | 2'-0" | 2" | S-505 | R-501 OR R-502 | S-507 | S-501 | S-506 | 3'-11 7/8" | CONST. JTS. | S-1008 @ 1'-0" | S-1010 @ 2'-0" | S-1009 @ 2'-0" | S-605 @ 2'-0" | S-603 | S-701 | 1" CL. | 2 1/4 CL. | S-603 | S-701 | S-506 | S-1005 @ 2'-3" | S-1004 @ 2'-3" | 37 SPA @ 1'-1 1/2" = 41'-7 1/2" | 38 S-1001 (4 LENGTHS)

SECTION C-C

ASSUMED ℄ BEARING | APPROACH SLAB | 9" | 6" | 9" | VARIES | 1'-6 3/4" | 1/16" SHEET ASBESTOS PACKING AS PER ITEM 516 SEC. 711.22

SLAB BEARING DETAIL

CAMBER OF 1/800 OF THE SPAN SHALL BE PROVIDED IN EACH SPAN (IN ADDITION TO ANY REQUIRED FOR CONFORMANCE WITH THE PROFILE OF THE HIWAY) TO ALLOW FOR DEAD LOAD DEFLECTION. THIS IS THE AMOUNT OF CAMBER REQUIRED BEFORE FALSEWORK IS RELEASED. TO OBTAIN THIS, PROPER ALLOWANCE SHALL BE MADE FOR THE DEFLECTION OF FALSEWORK MEMBERS.

* SEE PLACEMENT DIAGRAM FOR THESE BARS.

STATE OF OHIO
DEPARTMENT OF HIGHWAYS
BUREAU OF BRIDGES

BEISWENGER & HOCH, Consulting Engineers
AKRON, OHIO

SLAB DETAILS

BRIDGE Nº MAH.-18-1112 L&R
OVER TURNER ROAD
I-80 (S.R. 18) MAHONING COUNTY
STA. 584+72.26 TO STA. 586+17.16

DESIGNED	DRAWN	TRACED	CHECKED	REVIEWED	DATE	REVISED
KKJ	JLH		11/19/64	RDH	1-6-65	

MICROFILMED
APR 7 1966

MICROFILMED
APR 7 1965

FED. RD.	STATE	PROJECT	
2	OHIO		

229
294

MAH-18-9.89

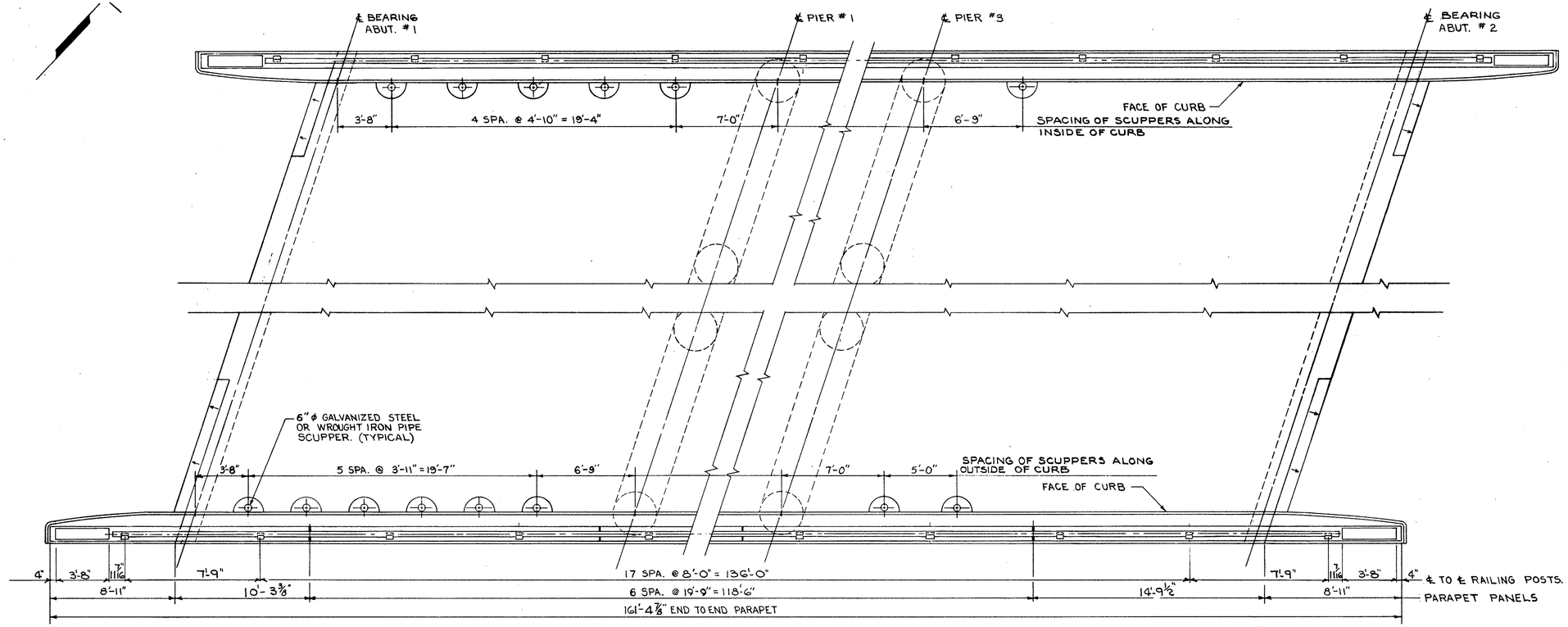

—PARTIAL DECK PLAN—RIGHT STRUCTURE SHOWN—
—LEFT STRUCTURE SIMILAR—

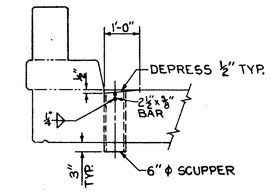

—SCUPPER DETAIL—TYP.—

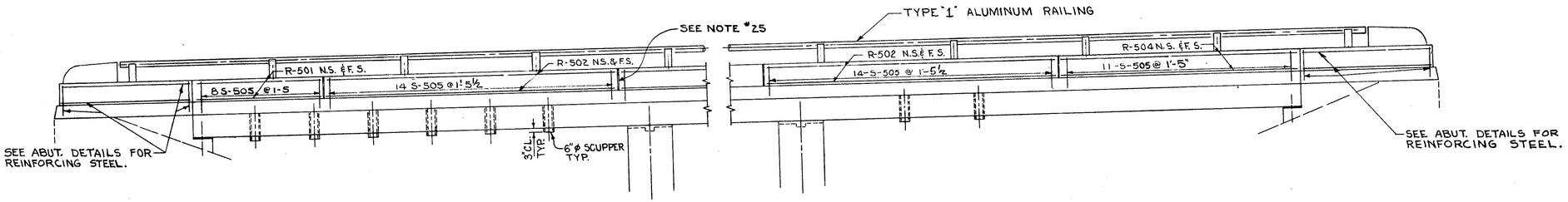

—ELEVATION—SOUTH PARAPET SHOWN—
—NORTH PARAPET SIMILAR—

STATE OF OHIO
DEPARTMENT OF HIGHWAYS
BUREAU OF BRIDGES

BEISWENGER & HOCH, Consulting Engineers
AKRON, OHIO

RAILING & DRAINAGE DETAILS

BRIDGE NO. MAH-18-1112 L. & R.
OVER TURNER ROAD
I-80 (S. R. 18) MAHONING COUNTY
STA. 584+72.26 TO STA. 586+10.16

DESIGNED	DRAWN	TRACED	CHECKED	REVIEWED	DATE	REVISED
KKJ	BMR		11/19/64	RBH	1-6-65	

MICROFILMED
NOV 7 1995

FED. RD.	STATE	PROJECT	
2	OHIO		

230
294

MAH-18-9.89

MARK	NO. REQ'D	LENGTH	TYPE	DIMENSIONS A	B	C	D	INC.	WEIGHT LBS.
ABUTMENTS Nº 1 LEFT & Nº 2 LEFT									
A-501	28	5'-7"	5	8"	2'-2"	5"			170
A-502	80	3'-8"	3	2'-1"	11"				306
A-503					OPEN				
A-504	88	3'-8"	ST						337
A-505	8	8'-11"	ST						74
A-506	144	7'-1"	3	1'-8"	2'-10"				1064
A-507					OPEN				
A-508					OPEN				
A-509					OPEN				
A-510					OPEN				
A-511					OPEN				
A-512					OPEN				
SERIES OF A-513	1 SET OF 7= 77 BARS	VARIES 9'-10" TO 5'-10"	16	VARIES 2'-4" TO 4"	VARIES 4'-0" TO 2'-0"			4"	57
A-514	11	9'-0"	17	2'-4"	2'-2"	1'-3"	3'-6"		103
SERIES OF A-515	1 SET OF 7= 77 BARS	VARIES 10'-4" TO 6'-4"	18	VARIES 2'-4" TO 4"	VARIES 4'-0" TO 2'-0"			4"	61
A-516	11	8'-2"	19	3'-4"	1'-2½"	3'-10"			94
SERIES OF A-517	4 SETS OF 7= 28 BARS	VARIES 7'-3" TO 5'-3"	3	1'-8"	VARIES 2'-11" TO 1'-11"			2"	182
A-518	4	10'-0"	ST						42
SERIES OF A-519	1 SET OF 4= 4 BARS	VARIES 7'-10" TO 5'-10"	16	VARIES 1'-4" TO 4"	VARIES 3'-0" TO 2'-0"			4"	29
SERIES OF A-520	1 SET OF 4= 4 BARS	VARIES 8'-4" TO 6'-4"	18	VARIES 1'-4" TO 4"	VARIES 3'-0" TO 2'-0"			4"	31
SERIES OF A-521	4 SETS OF 4= 16 BARS	VARIES 6'-9" TO 5'-3"	3	1'-8	VARIES 2'-3" TO 1'-11"			2"	96
A-522	6	9'-5"	14	9'-4"	1'-8"	2'-8"			59
A-523	8	8'-7"	ST						72
A-524	6	8'-3"	14	8'-2"	1'-8"	1'-4"			52
A-525					OPEN				
A-526	8	7'-5"	11	2'-0"	5'-6"	3'-10⅜"			62
A-601	8	22'-9"	ST						273
A-602					OPEN				
A-603	8	3'-7"	11	1'-8"	2'-0"	7½"			43
A-604	8	3'-7"	12	1'-8"	2'-0"	7½"			43
A-701	12	7'-0"	ST						172
A-702	34	5'-3"	ST						365
A-703	12	6'-6"	ST						159
A-704	26	5'-0"	ST						266
A-705	12	5'-6"	ST						135
A-706	12	8'-0"	ST						196
A-901	51	10'-8"	ST						1850
A-902	20	9'-0"	ST						612
A-903	146	6'-1"	1	1'-0"	5'-4"				3020
A-904	4	10'-0"	ST						136
A-905	8	30'-0"	ST						816
A-906	18	6'-6"	ST						398
A-907	53	8'-2"	ST						1472
A-908	8	4'-0"	ST						109
A-909	16	7'-9"	1	4'-0"	4'-0"				422
A-910	8	16'-6"	ST						449
A-911	16	20'-7	ST						1120
TOTAL ABUTMENTS Nº 1 LEFT & Nº 2 LEFT =									14,947#
ABUTMENTS Nº 1 RIGHT & Nº 2 RIGHT									
A-551	28	5'-7"	5	8"	2'-2"	5"			163
A-552	2	10'-0"	ST						21
A-553	34	6'-8"	1	1'-0"	5'-9				236
A-554	142	7'-1"	3	1'-8"	2'-10"				1049
A-555	6	7'-10"	ST						49
A-556	4	5'-3"	ST						22
A-557	2	10'-1"	ST						21
A-558	6	8'-11"	ST						56
A-559	6	9'-5"	14	9'-4"	1'-8"	2'-8"			59
A-560	12	3'-3"	11	1'-8"	1'-8"	7"			41
A-561	36	5'-1"	1	3'-6"	11"				191
A-562	40	3'-8"	3	2'-1"	11"				118
A-563					OPEN				
A-564					OPEN				
A-565	4	5'-10"	ST						24

MARK	NO. REQ'D	LENGTH	TYPE	DIMENSIONS A	B	C	D	INC.	WEIGHT LBS.
ABUTMENTS Nº 1 RIGHT & Nº 2 RIGHT (CONT.)									
A-566	6	8'-3"	14	8'-2"	1'-8"	1'-4"			52
A-567		OPEN							
A-568	12	3'-3"	12	1'-8"	1'-8"	7"			41
A-569	20	4'-4"	ST						90
A-570	6	9'-2"	ST						57
A-571	6	8'-7"	ST						54
A-651	42	6'-8"	1	1'-0"	5'-9"				421
A-652					OPEN				
A-653	20	13'-7"	3	1'-2"	7'-4"				468
A-654	8	21'-2"	ST						254
A-711	32	4'-0"	ST						262
A-712	24	4'-6"	ST						221
A-713	12	3'-0"	ST						74
SERIES OF A-714	2 SETS OF 5= 10 BARS	VARIES 4'-4" TO 3'-0"	ST					4"	75
SERIES OF A-715	2 SETS OF 9= 18 BARS	VARIES 5'-10" TO 3'-2"	ST					4"	166
SERIES OF A-716	2 SETS OF 4= 8 BARS	VARIES 9'-0" TO 8'-0"	ST					4"	139
SERIES OF A-717	2 SETS OF 4= 8 BARS	VARIES 9'-6" TO 8'-6"	ST					4"	147
A-920	16	23'-3"	ST						1265
A-921	24	16'-6"	ST						1346
TOTAL ABUTMENTS Nº 1 RIGHT & Nº 2 RIGHT =									7182#
PIERS									
P-301	168	7'-0"	10	(SEE DIAGRAM)					442
P-501	282	11'-0"	8	6"	2'-8"	3'-11"			3235
P-502	282	5'-9"	3	2'-8"	1'-8"				1691
P-601	24	21'-0"	ST						757
P-701	160	7'-8"	ST						2507
P-801	272	8'-8"	ST						6294
P-1001	48	23'-6"	ST						4854
P-1002	320	10'-6"	ST						14458
P-1101	60	9'-10"	1	2'-9"	7'-4"				3135
P-1102	84	19'-3"	ST						8591
P-1103	24	11'-0"	9	3'-9"	3'-6"	1'-2⅜"			1403
P-1104	60	15'-1"	ST						4808
P-1105	30	16'-10"	ST						2683
P-1106	512	7'-0"	1	1'-0"	6'-3"				19042
P-1107	22	17'-9"	1	1'-0"	17'-0"				2075
P-1108	22	16'-0"	1	1'-0"	15'-3"				1870
P-1109	14	19'-4"	1	1'-0"	18'-7"				1438
P-1110	14	18'-2"	1	1'-0"	17'-5"				1351
P-1111	22	20'-7"	1	1'-0"	19'-10				2409
P-1112	22	18'-11"	1	1'-0"	18'-2"				2211
P-1113	82	16'-9"	ST						7297
P-1114	82	15'-0"	ST						6535
P-1115	34	18'-4"	ST						3312
P-1116	34	17'-2"	ST						3101
P-1117	82	19'-7"	ST						8532
P-1118	82	17'-11"	ST						7806
SPIRALS									6642
TOTAL PIERS =									128,479#
SLAB									
S-501	12	20'-4"	ST						254
S-502	12	17'-5"	ST						218
S-503	12	21'-5"	ST						268
S-504	12	23'-4"	ST						292
S-505	412	5'-7"	5	8"	2'-2"	5"			2398
S-506	672	6'-2"	15	6"	1'-6"	2'-1"			4332

MARK	NO. REQ'D	LENGTH	TYPE	DIMENSIONS A	B	C	D	INC.	WEIGHT LBS.
SLAB (CONT.)									
S-507	672	2'-3"	3	1'-6"	6"				1577
SERIES OF S-601	2 SETS OF 22= 44 BARS	VARIES 18'-2" TO 14'-8"	ST					2"	1085
SERIES OF S-602	2 SETS OF 22= 44 BARS	VARIES 21'-2" TO 17'-8"	ST					2"	1283
S-603	372	22'-11"	ST						12,805
S-604	44	9'-8"	ST						639
S-605	44	13'-8"	ST						903
S-701	540	23'-1"	ST						25,478
S-901	60	23'-5"	ST						4777
S-1001	304	38'-3"	ST						50,035
S-1002	38	25'-5"	6	24'-0"	1'-5"				4156
S-1003	36	22'-5"	6	21'-0"	1'-5"				3472
S-1004	76	25'-10"	ST						8448
S-1005	72	18'-4"	ST						5680
S-1006	38	28'-8"	6	27'-3"	1'-5"				4657
S-1007	36	25'-1"	6	23'-8"	1'-5"				3886
S-1008	258	32'-2"	ST						35,711
S-1009	126	17'-1"	ST						9262
S-1010	126	12'-10"	ST						6958
TOTAL SLAB =									188,594#
RAILING									
R501	16	9'-10"	ST						
R502	96	19'-5"	ST						
R503	16	8'-7"	ST						
R504	16	14'-4"	ST						
R505	12	4'-2"	21						
R506	8	5'-4"	20						
R553	16	8'-7"	ST						
R554	12	4'-2"	21						
R555	8	5'-4"	20						
REPLACEMENT BARS									
RE-301	1	5'-0"	10	5'-0"	11 5/8"				
RE-401	1	5'-3"	10	5'-8"	1'-4"				
RE-501	2	5'-6"							
RE-601	2	6'-0"							
RE-701	2	6'-3"							
RE-801	1	6'-6"							
RE-901	1	6'-10"							
RE-1001	8	7'-3"							
RE-1101	5	7'-9"							

SPIRAL REINFORCING SCHEDULE

MARK	NO. REQ'D	CORE DIA. OF SPIRAL	LENGTH OF SPIRAL	PITCH	NO. OF TURNS	WEIGHT LBS.
SP-401	4	2'-8"	14'-3"	4½"	41	903
SP-402	4	2'-8"	12'-6⅝"	4½"	36	793
SP-403	4	2'-8"	15'-10½"	4½"	45	992
SP-404	4	2'-8"	14'-8½"	4½"	42	925
SP-405	4	2'-8"	17'-1⅜"	4½"	49	1080
SP-406	4	2'-8"	15'-5"	4½"	44	970
SPACERS						979
TOTAL SPIRALS						6642 #

GRAND TOTAL 339,202 LBS.

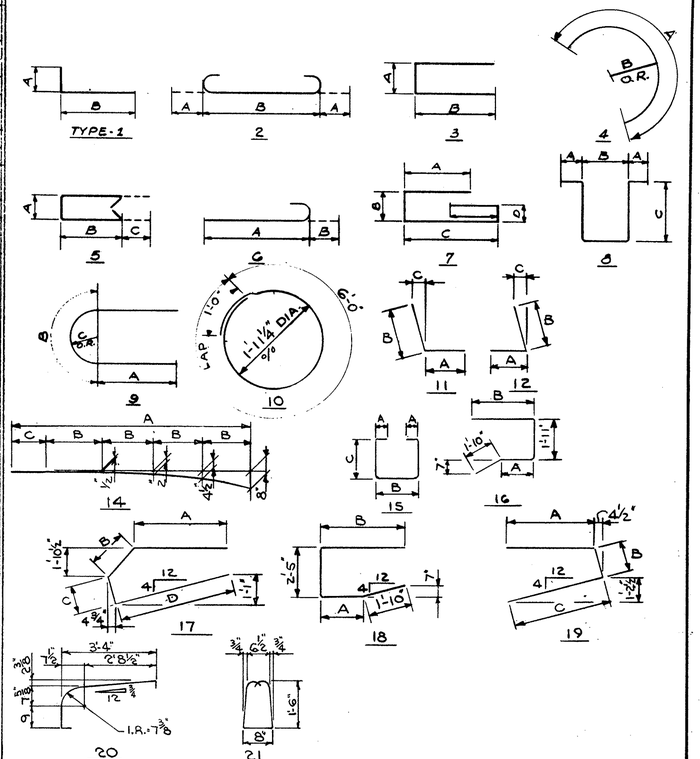

REINFORCING NOTES

THE LENGTH SHOWN IN THE STEEL SCHEDULE FOR THE SPIRAL BARS IS THE DISTANCE FROM THE TOP OF THE FOOTING TO THE BOTTOM OF THE PIER CAP. THE NUMBER OF TURNS SHOWN IN THE STEEL SCHEDULE FOR SPIRAL BARS IS THE LENGTH DIVIDED BY THE PITCH PLUS THREE TURNS (TOTAL NUMBER OF CLOSED COILS) EXPRESSED AS THE NEAREST WHOLE NUMBER. SPIRAL REINFORCING BARS SHALL NOT HAVE DEFORMATIONS, BUT SHALL IN OTHER RESPECTS CONFORM TO ITEM 509. ONE AND ONE HALF CLOSED COILS SHALL BE PROVIDED AT THE ENDS OF EACH SPIRAL UNIT. FOUR (4) STEEL CHANNEL, TEE OR ANGLE SPACERS WEIGHING APPOX. 0.66 LBS. PER LINEAL FT. OF SPACERS SHALL BE PROVIDED FOR EACH SPIRAL UNIT. THEY SHALL BE EQUALLY SPACED ALONG THE PERIPHERY OF EACH COIL. THE NUMBER OF POUNDS OF THESE SPACERS BASED ON 0.66 LBS. PER LINEAL FT. WILL BE PAID FOR AS REINFORCING STEEL AND IS INCLUDED IN THE TABULATED QUANTITY OF SPIRAL BARS.

BAR SIZE IS INDICATED IN THE BAR MARK. THE FIRST DIGIT WHERE THREE DIGITS ARE USED AND THE FIRST TWO DIGITS WHERE FOUR ARE USED INDICATE THE BAR SIZE NUMBER. FOR EXAMPLE A-601 IS A NO. 6 SIZE BAR AND P-1001 IS A NO. 10 SIZE BAR.

⊗ RAILING REINFORCEMENT BARS WILL BE INCLUDED AS PART OF ITEM 517 FOR PAYMENT.

STATE OF OHIO
DEPARTMENT OF HIGHWAYS
BUREAU OF BRIDGES

BEISWENGER & HOCH, Consulting Engineers
AKRON, OHIO

REINFORCING SCHEDULE

BRIDGE Nº MAH-18-11.12 L&R
OVER TURNER ROAD
I-80 (S.R.-18) · MAHONING COUNTY
STA. 584+72.26 TO STA. 586+17.16

DESIGNED	DRAWN	TRACED	CHECKED	REVIEWED	DATE	REVISED
KKJ	JLH		am 11/15/64	RBH	1-6-65	

MICROFILMED

FED. RD.	STATE	PROJECT	
2	OHIO		

231
294

MAH-18-9.89

I-80 (SR-18) ℄ CURVE DATA

Δ = 27° 27'-17" RT.
Dc = 0°-48'-00"
R = 7161.97'
T = 1749.52'
Lc = 3431.84'
E = 210.59'
PC. STA. 595+46.25
P.I. STA. 612+95.77
PT. STA. 629+78.09

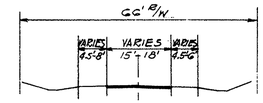

TYPICAL SECTION
EXISTING OHLTOWN ROAD

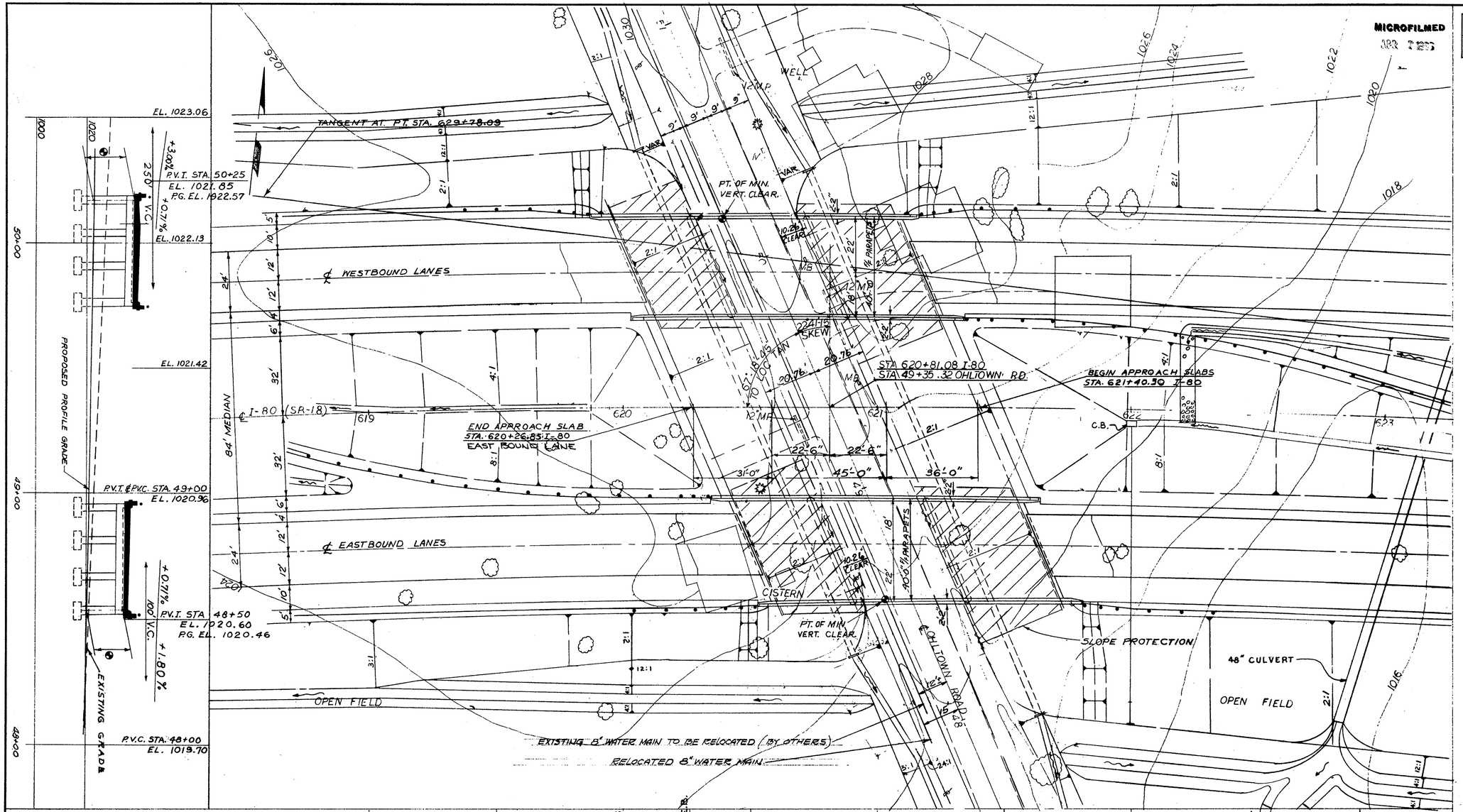

● VERTICAL CLEARANCE:
DESIGN: 14.50'
ACTUAL: WB. 14.54'
EB. 14.93'

AVERAGE ESTIMATED PAY LENGTH FOR PILES:
ABUTMENT NO. 1 RT. 12' 10BP42
ABUTMENT NO. 2 RT. 15' 10BP42
ABUTMENT NO. 2 LT. 19' 10BP42

PROPOSED STRUCTURE

TYPE: CONTINUOUS REINFORCED CONCRETE SLAB WITH REINFORCED CONCRETE SUBSTRUCTURE.
SKEW: 22°-41'-15" RF (TO LOCAL TAN)
SPANS: 31'-0"-45'-0"-36'-0" ℄ BEARINGS.
ROADWAY 40'-0" T/F PARAPETS.
LOAD FREQUENCY: CF 2000 (57) ADEQUATE FOR AASHO. ALTERNATE LOADING.
WEARING SURFACE: 1" MONOLITHIC.
APPROACH SLABS: 25' LONG (AS.-1-54)
ALIGNMENT: 0°48' CURVE RT.
SUPERELEVATION: .026'/FT.
SLOPE PROTECTION: 601 CRUSHED AGGREGATE

TRAFFIC COUNT: 1587 A.D.T. 1975 OHLTOWN
MAINLINE 24,830 A.D.T. (1975)

STATE OF OHIO
DEPARTMENT OF HIGHWAYS
BUREAU OF BRIDGES

BEISWENGER & HOCH, Consulting Engineers
AKRON, OHIO

SITE PLAN

BRIDGE NO MAH-18-1178 L & R
OVER OHLTOWN ROAD
I-80 (SR-18) MAHONING COUNTY
STA. 620+26.78 TO STA. 621+40.38

DESIGNED	DRAWN	TRACED	CHECKED	REVIEWED	DATE	REVISED
KJ	KENESSY ROSE		CW	RDK	1-6-65	

FED. RD.	STATE	PROJECT	
2	OHIO		

232/294

MAH-18-9.89

MICROFILMED
MAR 7 1969

⊗ RADIAL DIMENSIONS

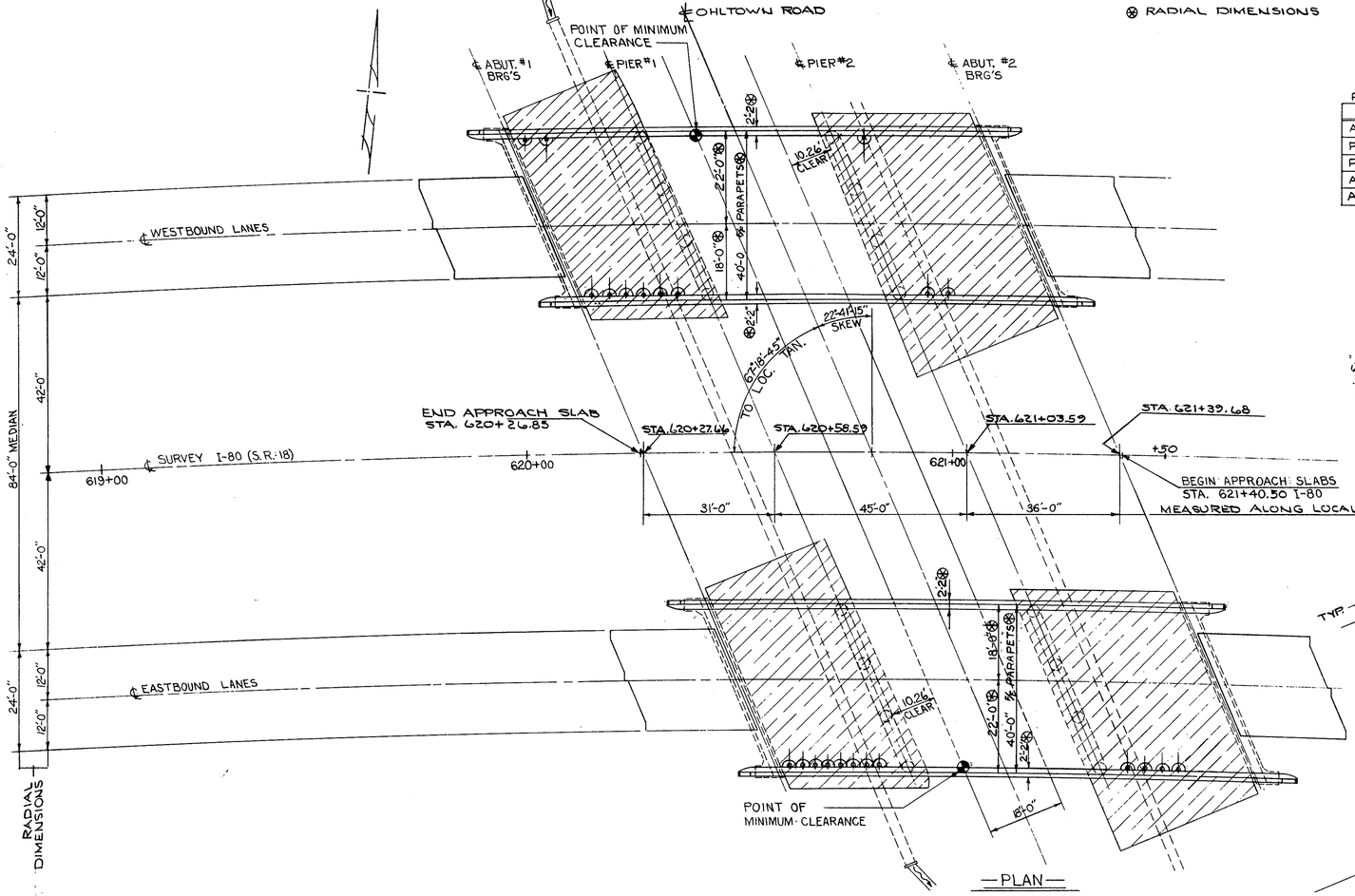

— PLAN —

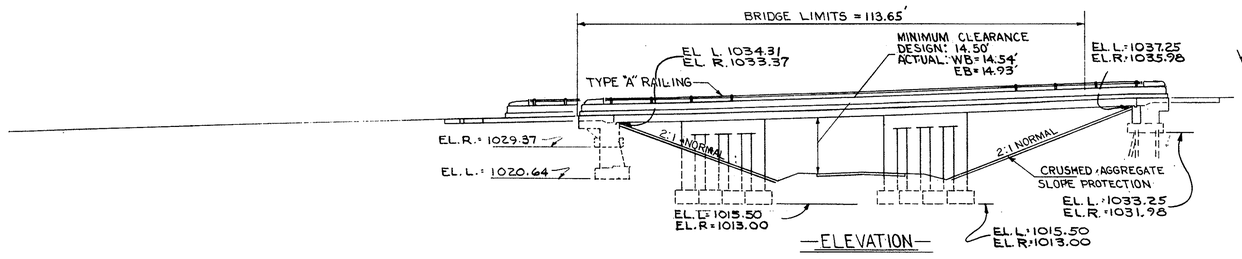

— ELEVATION —

PILE CUT-OFF ELEVATIONS

LOCATION	ELEV.
ABUT. #1-R	1031.33
PIERS #1-L & #2-L	1016.50
PIERS #1-R & #2-R	1014.00
ABUT. #2-L	1034.77
ABUT. #2-R	1034.04

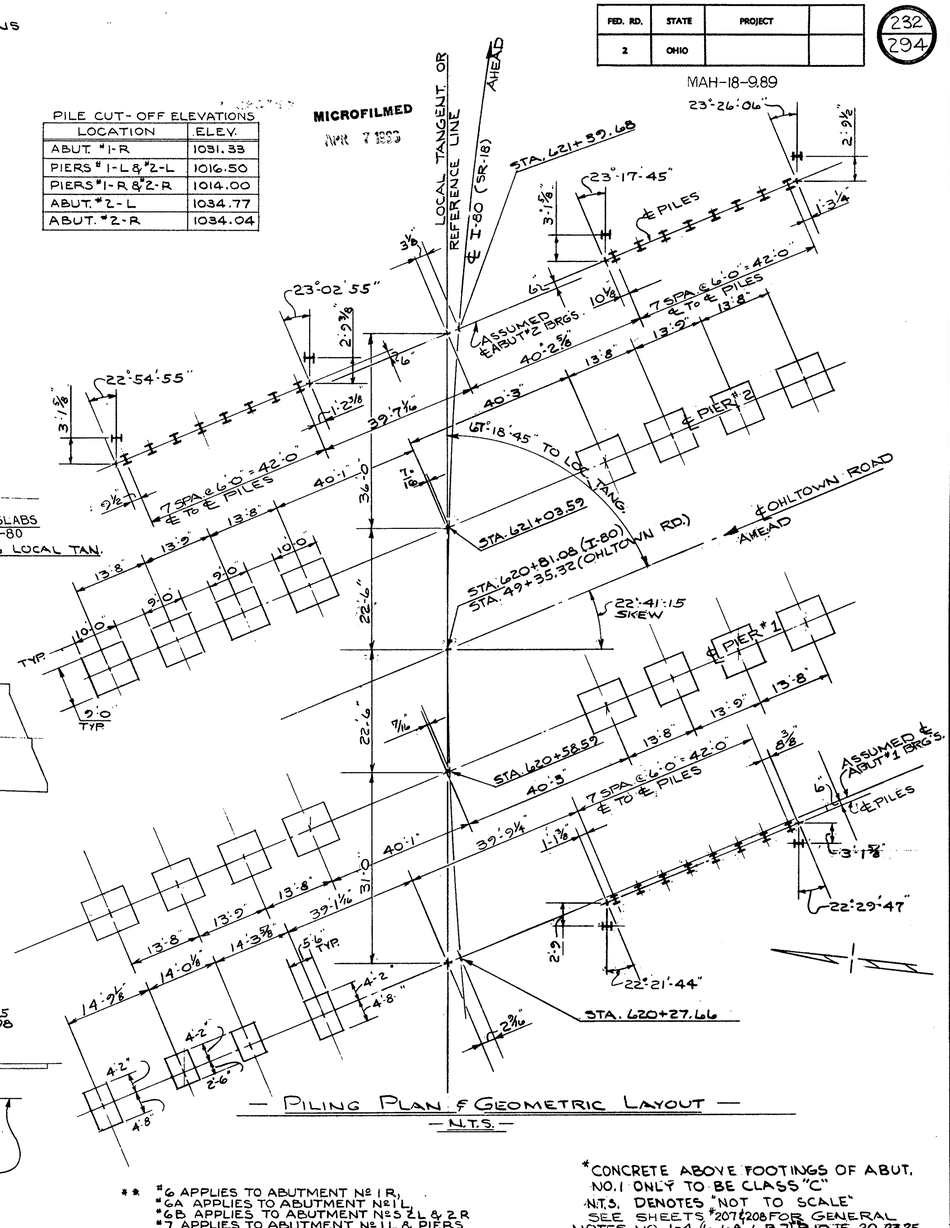

— PILING PLAN & GEOMETRIC LAYOUT —
— N.T.S. —

** #6 APPLIES TO ABUTMENT Nº 1 R.
#6A APPLIES TO ABUTMENT Nº 1 L
#6B APPLIES TO ABUTMENT Nºs 2 L & 2 R
#7 APPLIES TO ABUTMENT Nº 1 L & PIERS
⊗ AASHO Specs. M-183

*CONCRETE ABOVE FOOTINGS OF ABUT. NO.1 ONLY TO BE CLASS "C"
N.T.S. DENOTES "NOT TO SCALE"
SEE SHEETS #207 & 208 FOR GENERAL NOTES NO. 1-4, (6, 6A, 6B, 7), 9, 10, 15, 20, 23, 25

— ESTIMATED QUANTITIES — (2 BRIDGES) —

ITEM	TOTAL	UNIT	DESCRIPTION	SUPER	ABUTS.	PIERS	GEN.
503	673	CU. YDS.	UNCLASSIFIED EXCAVATION		318	355	
503	157	CU. YDS.	EXCAVATION - ROCK		12	145	
511	661	CU. YDS.	CLASS "C" CONC. SUPERSTRUCTURE	661			
511	31	CU. YDS.	CLASS "C" CONC. ABUT. ABOVE FOOTINGS *		31		
511	35	CU. YDS.	CLASS "E" CONC. ABUT. ABOVE FOOTINGS		35		
511	125	CU. YDS.	CLASS "C" CONC. PIERS ABOVE FOOTINGS			125	
511	221	CU. YDS.	CLASS E CONC. PIERS & ABUT. FOOTINGS.		69	152	
512	6	LIN. FT.	PREMOLDED SEALING STRIP.		6		

ITEM	TOTAL	UNIT	DESCRIPTION	SUPER	ABUTS.	PIERS	GEN.
509	259,662	LBS.	REINFORCING STEEL	165,137	19,323	75,202	
516	124	SQ. FT.	1" PREFORMED EXP. JOINT FILLER ⊗		124		
516	57	SQ. FT.	SHEET ASBESTOS PACKING		57		
517	524.15	LIN. FT.	RAILING - TYPE "I"	454.82	69.33		
505	LUMP	SUM	FIRST TEST PILE				L.S.
507	490	LIN. FT.	10" BP 42 STEEL "H" PILES		490		

ITEM	TOTAL	UNIT	DESCRIPTION	SUPER	ABUTS.	PIERS	GEN.
518	153	LIN. FT.	6" PERF. HELICAL C.M.P. TOT. 00 (INCLUDING SPECIALS)		153		
518	44	LIN. FT.	6" HELICAL C.M.P. TOT. 0 NON-PERF.		44		
518	32	CU. YDS.	POROUS BACKFILL		32		
518	23	each	6" scuppers, wrought iron or galvanized steel pipe	23			
601	1180	SQ. YDS.	CRUSHED AGGREGATE SLOPE PROTECTION		1180		
825	1180	Sq. Yds.	Concrete Surface Treatment	1180			
808	661	EACH	WATER REDUCING SET RETARDING ADMIXTURE	661			

STATE OF OHIO
DEPARTMENT OF HIGHWAYS
BUREAU OF BRIDGES

BEISWENGER & HOCH, Consulting Engineers
AKRON, OHIO

GENERAL PLAN & ELEVATION

BRIDGE NO. MAH-18-1178 L & R
OVER OHLTOWN ROAD
I-80 (S.R. 18) MAHONING COUNTY
STA. 620+26.78 TO STA. 621+40.38

DESIGNED	DRAWN	TRACED	CHECKED	REVIEWED	DATE	REVISED
KJ	BMR		11/11/64	RDH	1-6-65	

FED. RD.	STATE	PROJECT	
2	OHIO		

233
294

MAH-18-9.89

MICROFILMED
APR 7 1995

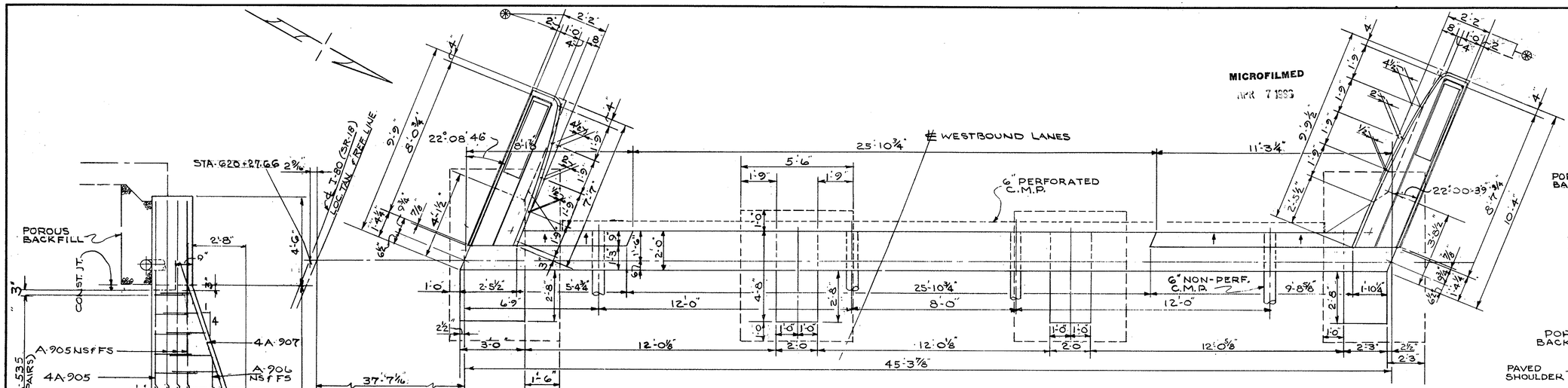

— PLAN ABUTMENT #1 (LEFT) —

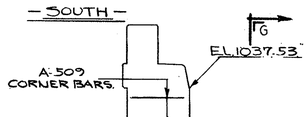

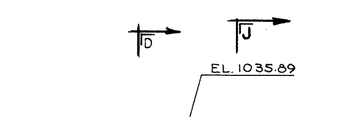

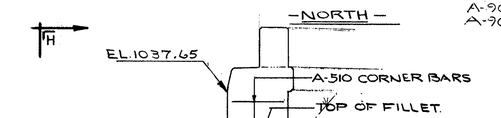

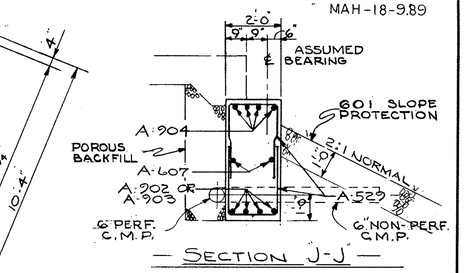

— SECTION J-J —

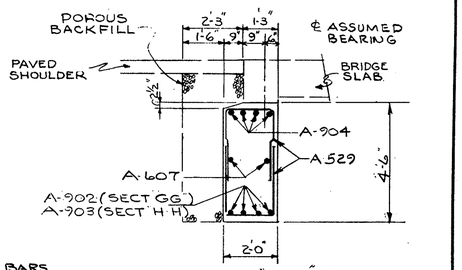

— SECTION G-G SHOWN —
SECTION H-H SIMILAR EXCEPT AS SHOWN OR NOTED

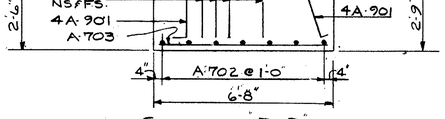

— SECTION D-D —
SEE SECTION J-J FOR HORIZONTAL REINFORCING BARS NOT SHOWN.

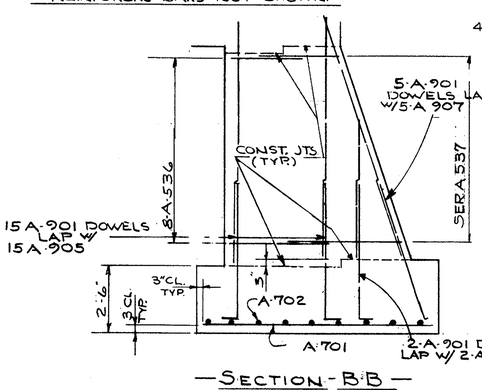

— SECTION B-B —

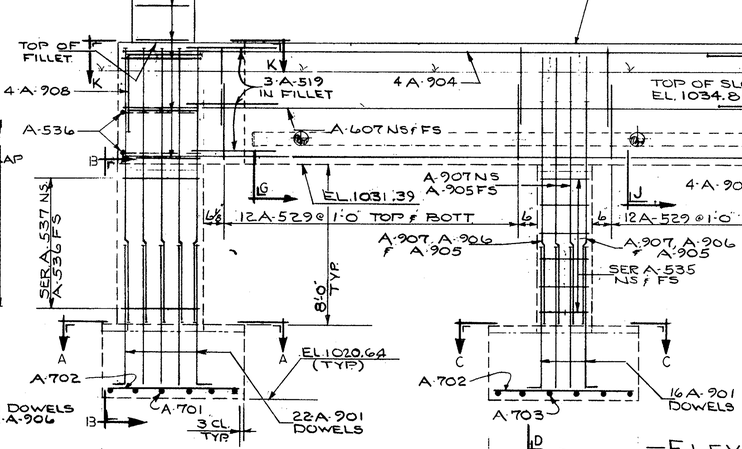

— ELEVATION —

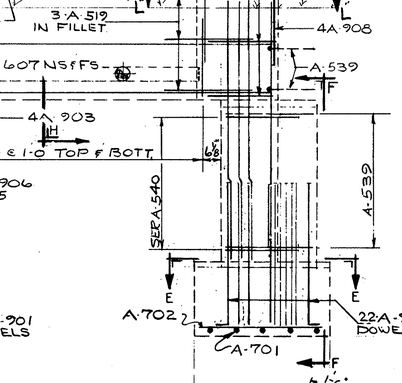

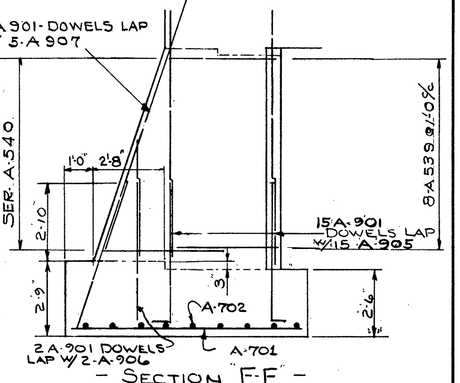

— SECTION F-F —

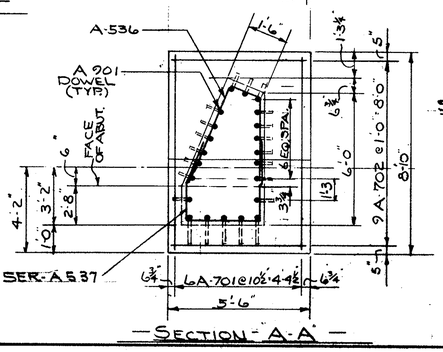

— SECTION A-A —

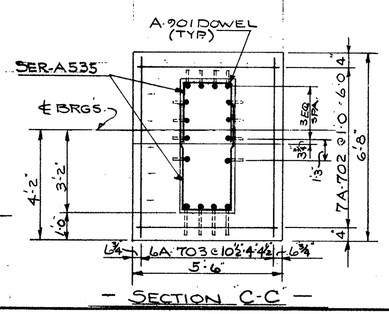

— SECTION C-C —

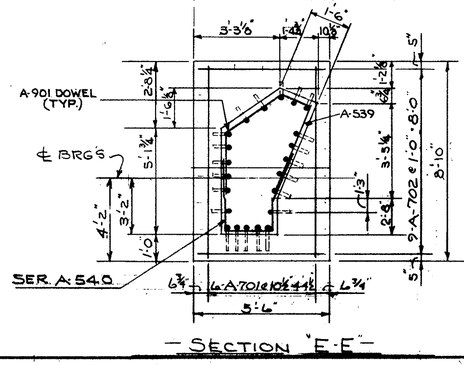

— SECTION E-E —

SEE SHEET # 234 FOR SECTIONS K-K & L-L

⊛ INDICATES RADIAL DIMENSIONS
SEE STRUCTURAL GENERAL NOTE № 6A.

STATE OF OHIO
DEPARTMENT OF HIGHWAYS
BUREAU OF BRIDGES

BEISWENGER & HOCH, Consulting Engineers
AKRON, OHIO

ABUTMENT #1-L DETAILS

BRIDGE № MAH-18-1178 L & R.
OVER OHLTOWN ROAD
I-80 (SR-18) MAHONING COUNTY
STA. 620+26.78 To STA. 621+40.38

DESIGNED	DRAWN	TRACED	CHECKED	REVIEWED	DATE	REVISED
KJ	LNP		CW 11/94	RDH	1-6-95	

MICROFILMED
APR 7 1993

FED. RD.	STATE	PROJECT	
2	OHIO		

MAH-18-9.89

234
294

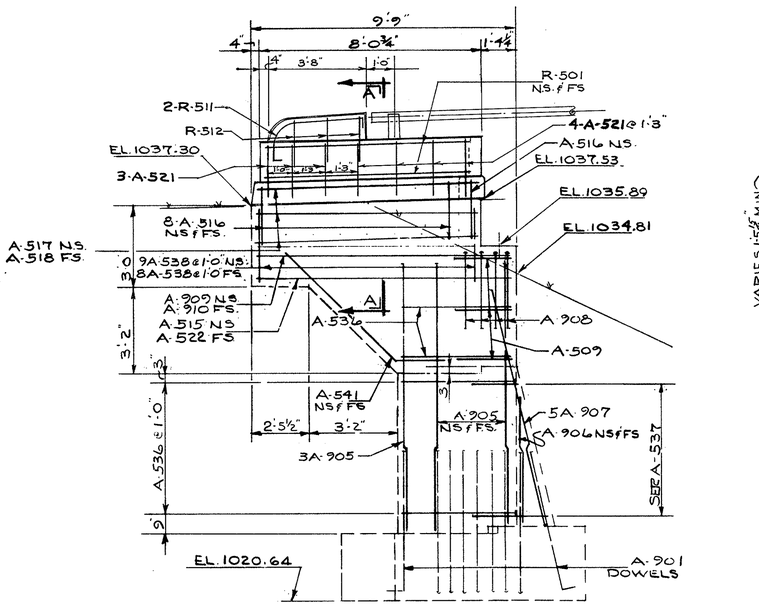

— ELEVATION SOUTH WINGWALL ABUT. #1 LEFT. —

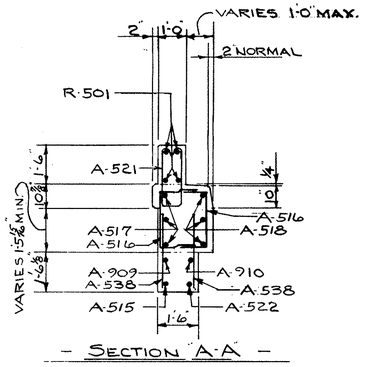

— SECTION A-A —

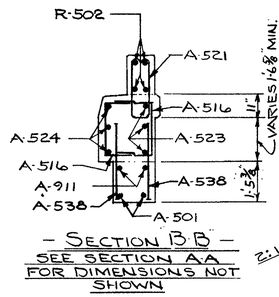

— SECTION B B —
SEE SECTION AA FOR DIMENSIONS NOT SHOWN

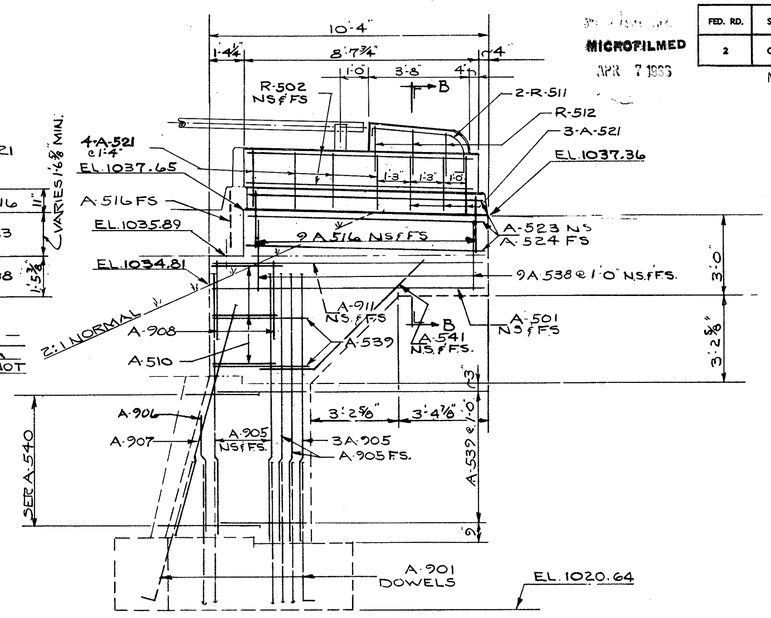

— ELEVATION NORTH WINGWALL ABUT. #1 LEFT. —

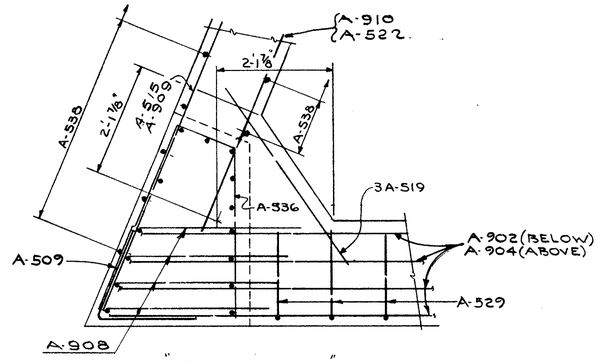

"SECTION K-K"

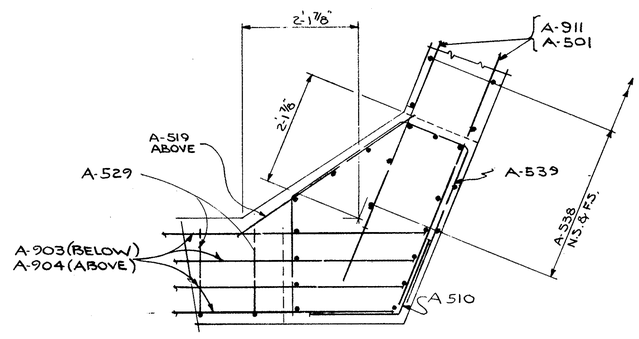

"SECTION L L"

SEE RAILING AND DRAINAGE DETAILS FOR RAILING POST SPACING.

STATE OF OHIO
DEPARTMENT OF HIGHWAYS
BUREAU OF BRIDGES

BEISWENGER & HOCH, Consulting Engineers
AKRON, OHIO

ABUTMENT # 1-L. DETAILS

BRIDGE Nº MAH-18-1178 L. & R.
OVER OHLTOWN ROAD
I-80 (S.R.-18) MAHONING COUNTY
STA. 620+26.78 To STA. 621+40.38

DESIGNED	DRAWN	TRACED	CHECKED	REVIEWED	DATE	REVISED
KJ	JNP		11/13/64	RBH	1-6-65	

FED. RD.	STATE	PROJECT	
2	OHIO		

MAH-18-9.89

235/294

MICROFILMED APR 8 1969

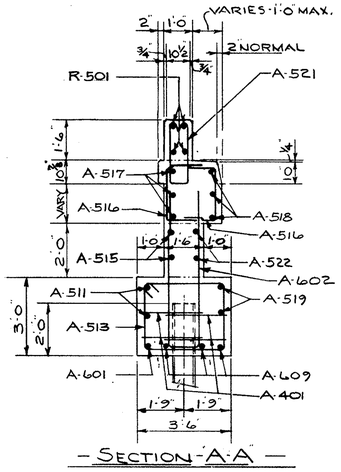

— SECTION A-A —

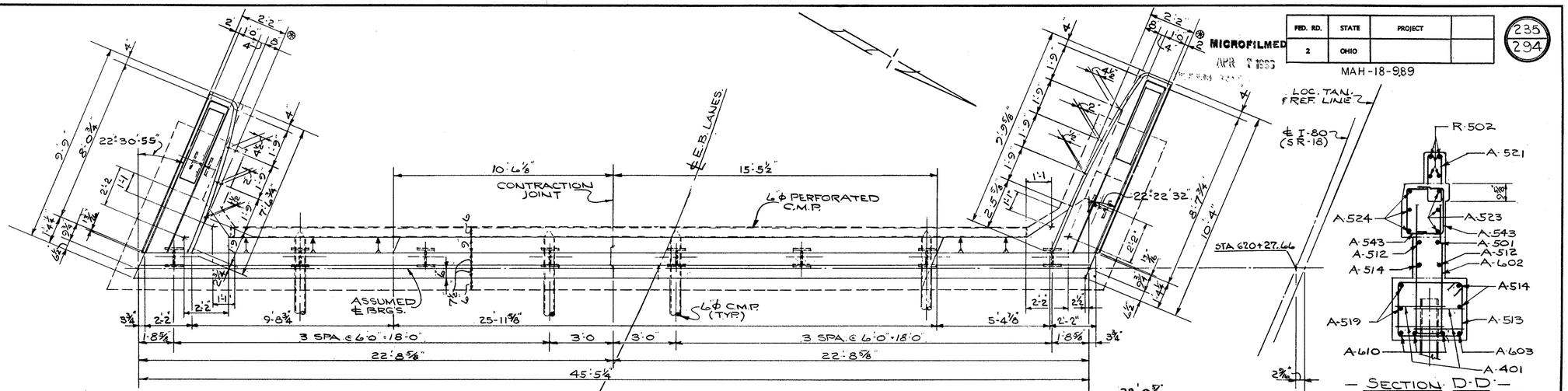

— PLAN ABUTMENT #1 (RIGHT) —

— SECTION D-D —

SEE SECTION A-A FOR DIMENSIONS NOT SHOWN.

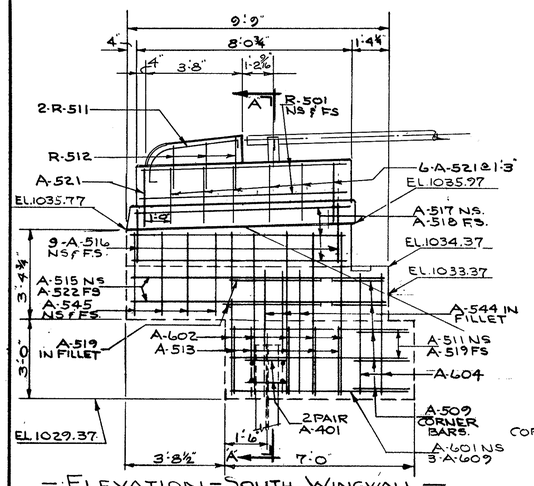

— ELEVATION - SOUTH WINGWALL —

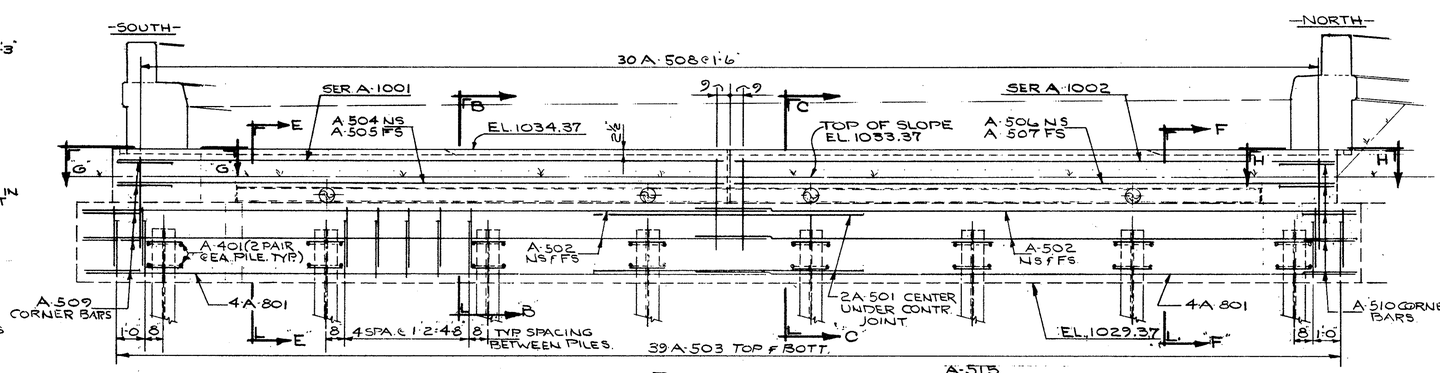

— ELEVATION —

— ELEVATION - NORTH WINGWALL —

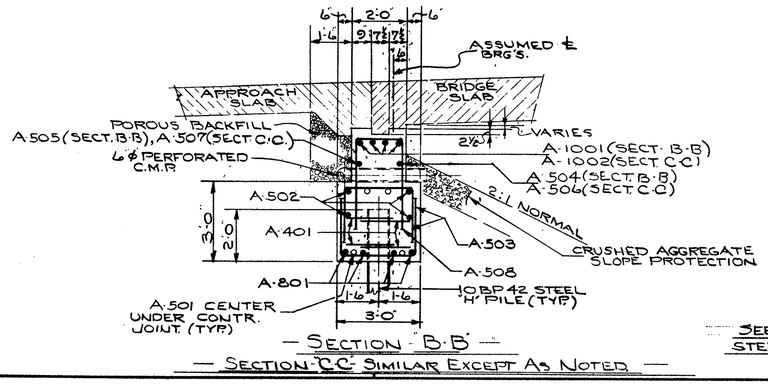

— SECTION B-B —

— SECTION C-C SIMILAR EXCEPT AS NOTED —

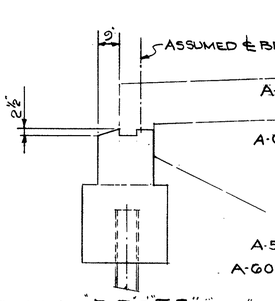

— SECTION E-E & F-F —

SEE SECTION B-B & C-C FOR REINFORCING STEEL, DETAILS & DIMENSIONS NOT SHOWN

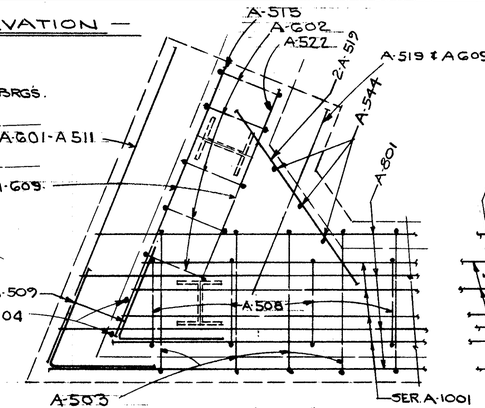

— SECTION G-G —

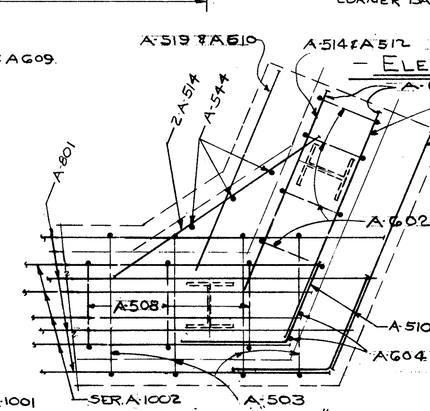

— SECTION H-H —

⊛ INDICATES RADIAL DIMENSIONS.
SEE RAILING AND DRAINAGE DETAILS FOR RAILING POST SPACING.
SEE STRUCTURAL GENERAL NOTE NO. 6.

STATE OF OHIO
DEPARTMENT OF HIGHWAYS
BUREAU OF BRIDGES

BEISWENGER & HOCH, Consulting Engineers
AKRON, OHIO

ABUTMENT #1-R. DETAILS

BRIDGE № MAH-18-1178 L. & R.
OVER OHLTOWN ROAD
I-80 (S.R.-18) MAHONING COUNTY
STA. 620+26.78 To STA. 621+40.38

DESIGNED	DRAWN	TRACED	CHECKED	REVIEWED	DATE	REVISED
KJ	LAF		11/24/64	RDH	1-6-65	

MICROFILMED

FED. RD.	STATE	PROJECT	
2	OHIO		

MAH-18-9.89

236
294

— SECTION A-A —

— PLAN - ABUTMENT #2 LEFT SHOWN —
— ABUTMENT #2 RIGHT SIMILAR EXCEPT AS NOTED —

— SECTION D-D —
SEE SECTION A-A FOR DIMENSIONS — NOT SHOWN —

— ELEVATION —
— NORTH WINGWALL ABUT. #2 LEFT SHOWN —
— NORTH WINGWALL ABUT. #2 RIGHT SIMILAR — EXCEPT AS SHOWN OR NOTED —

— ELEVATION —

— ELEVATION —
— SOUTH WINGWALL ABUT. #2 LEFT SHOWN —
— SOUTH WINGWALL ABUT. #2 RIGHT SIMILAR, EXCEPT AS SHOWN OR NOTED —

ABUTMENT CONTRACTION JOINT DETAIL

— SECTION B-B —
— SECTION C-C SIMILAR EXCEPT AS NOTED —

— SECTION E-E —
SEE SECTIONS B-B & C-C FOR REINFORCING STEEL, DETAILS & DIMENSIONS NOT SHOWN

— SECTION F-F —

— SECTION G-G —

⊛ INDICATES RADIAL DIMENSIONS
SEE RAILING AND DRAINAGE DETAILS FOR RAILING POST SPACING.
SEE STRUCTURAL GENERAL NOTE NO. 6B

— ELEVATIONS —

	ABUTMENT #2 - LEFT	ABUTMENT #2 RIGHT
A	1038.25	1036.98
B	1037.25	1035.98
C	1033.25	1031.98
D	1039.99	1039.31
E	1040.18	1039.53
F	1039.89	1038.62
G	1040.07	1038.82

STATE OF OHIO
DEPARTMENT OF HIGHWAYS
BUREAU OF BRIDGES

BEISWENGER & HOCH, Consulting Engineers
AKRON, OHIO

ABUTMENT # 2 L & R. DETAILS

BRIDGE Nº MAH-18-1178 L & R.
OVER OHLTOWN ROAD
I-80 (SR-18) MAHONING COUNTY
STA. 620+26.78 To STA. 621+40.38

DESIGNED	DRAWN	TRACED	CHECKED	REVIEWED	DATE	REVISED
KJ	LNF		11/24/64	RBH	1-6-65	

MICROFILMED
APR 7 1989

FED. RD.	STATE	PROJECT	
2	OHIO		

237
294

MAH-18-9.89

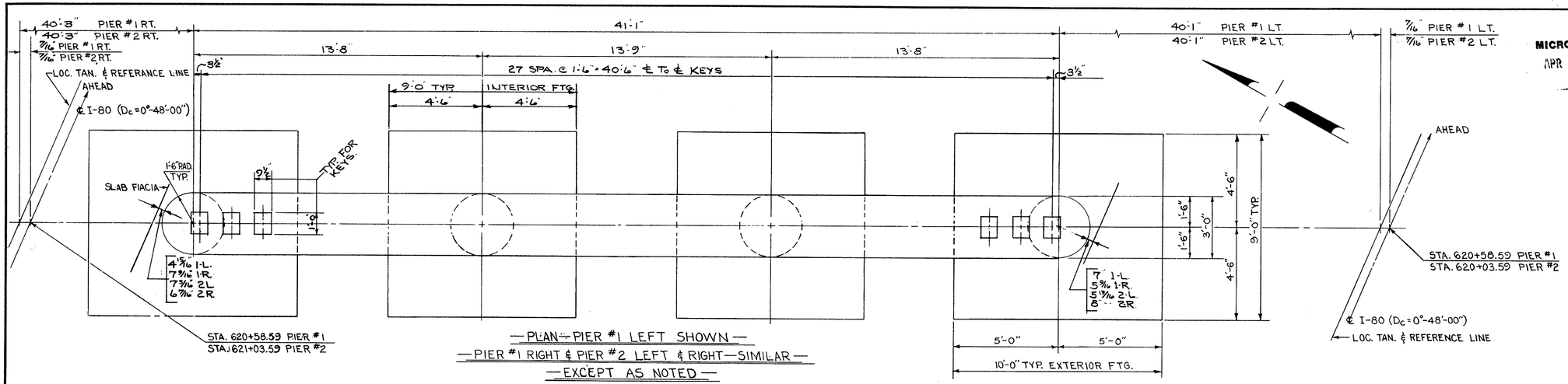

—PLAN—PIER #1 LEFT SHOWN—
—PIER #1 RIGHT & PIER #2 LEFT & RIGHT—SIMILAR—
—EXCEPT AS NOTED—

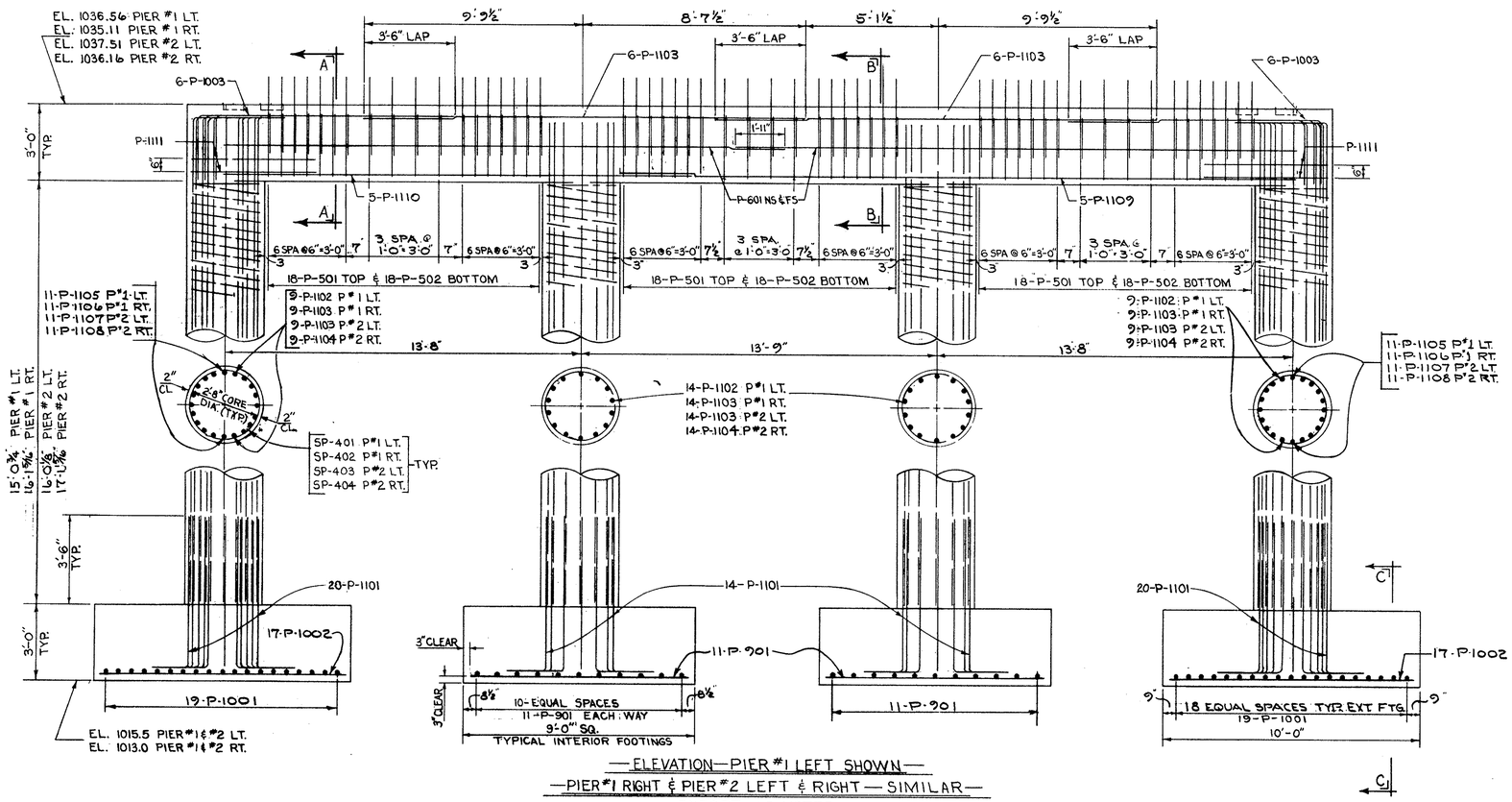

—ELEVATION—PIER #1 LEFT SHOWN—
—PIER #1 RIGHT & PIER #2 LEFT & RIGHT—SIMILAR—
—EXCEPT AS NOTED—

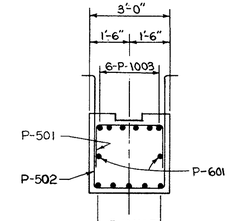

—SECTION "A-A"—

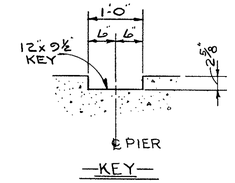

—KEY—

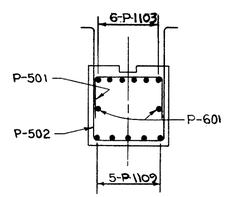

—SECTION "B-B"—

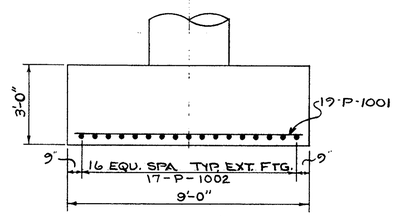

SECTION "C-C"

STATE OF OHIO
DEPARTMENT OF HIGHWAYS
BUREAU OF BRIDGES

BEISWENGER & HOCH, Consulting Engineers
AKRON, OHIO

PIER DETAILS

BRIDGE NO. MAH-18-1178 L & R
OVER OHLTOWN ROAD
I-80 (S.R.) MAHONING COUNTY
STA. 620+26.78 TO STA. 621+40.38

DESIGNED	DRAWN	TRACED	CHECKED	REVIEWED	DATE	REVISED
K.J	BMR		11/16/87	RDH	12-6-65	

MICROFILMED
APR 7 1965

FED. RD.	STATE	PROJECT	
2	OHIO		

MAH-18-9.89

238
294

℄ SURVEY FOR RIGHT STRUCTURE

℄ ASSUMED BRG. ABUT. № 1

℄ PIER № 1

℄ PIER № 2

℄ ASSUMED BRG. ABUT. № 2

LENGTH OF SLAB (ALONG EDGE)
113'-5" FOR LEFT STRUCT.
113'-8⅜" FOR RIGHT STRUCT.

R = 7161.97'

56'-0" RADIAL

S-1101 15'-1" | 19'-10" | S-1101 14'-7" | 20'-4"
S-1102 7'-5" | 11'-11" | S-1102 6'-8" | 12'-8"
S-1103 4'-9" | 10'-0" | S-1103 4'-9" | 10'-0"

BARS IN THIS CURB SAME AS OTHER SIDE

2"

RADIAL DIM.

2'-2"

EDGE OF SLAB

END OF SLAB

SER. S-601 (20 BARS)

1'-11" LAP | 19 S-1102 | 1'-11" LAP | 20 S-602 | 1'-11" LAP | 19 S-1102 | 1'-11" LAP | SER. S-603 20 BARS

END OF SLAB

MEASURED PARALLEL TO TANGENT AT ℄ SURVEY

72 S-604 (2 LENGTHS)

6 S-1010 (2 LENGTHS)

STEEL IN TOP OF SLAB

39 S-1101 | 19 S-1103 | 39 S-1101 | 6 S-1010 (2 LENGTHS) | 19 S-1103

31'-0" SPAN-1 | 45'-0" SPAN-2 | 36'-0" SPAN-3

℄ STRUCTURE

19'-0"

38'-0" OVERALL ℄ OF CURBS

42'-4" OVERALL ℄ OF CURBS

9" FOR L & R STRUCT.

42 S-1002 | 42 S-1003 | 42 S-1009

21 S-1003 | 21 S-1007 | 21 S-1005

20 S-1004 | 20 S-1008 CENTER IN MIDDLE SPAN | 20 S-1006

3'-2" LAP | 3'-2" LAP

9" (TYP)

114 S-701 (2 LENGTHS)

STEEL IN BOTTOM OF SLAB

3 S-504 | 5 S-1001 CENTERED OVER PIER | 3 S-505 | 5 S-1001 CENTERED OVER PIER | 3 S-506

129 S-502
129 S-503

56'-0" RADIAL

2"

2'-2"

7196.80'R. (LEFT STRUCT.)
7184.80'R. (RIGHT STRUCT.)

℄ SURVEY FOR LEFT STRUCTURE

SPAC'G OF S-502 & S-503 IN CURB

S-1103 10'-0" | 4'-9" | 6'-8" | 14'-7"
S-1102 12'-8" | 20'-4"
S-1101

PLAN

S-1101 | 19'-10" | 11'-11" | 7'-5" | S-1103 | 15'-1" | S-1102 | S-1101

27 SPA. @ 1'-0" = 27'-0" | 8 SPA. @ 6" | 8 SPA. @ 6" | 37 SPA. @ 1'-0" = 37'-0" | 8 SPA. @ 6" | 8 SPA. @ 6" | 32 SPA. @ 1'-0" = 32'-0"

LENGTH OF SLAB (ALONG EDGE) 113'-6⅜" ℄ FOR LEFT STRUCT, 113'-10⅜" FOR RIGHT STRUCT.

R = 7161.97'

SPAC'G OF S-604 | 2 SPA. @ 1'-0" | 1'-6" | 10 SP. @ 2'-0" = 20'-0" | 1'-6" | 4 SP. @ 1'-0" | 2'-0" | 2'-0" | 4 SP. @ 1'-0" | 1'-6" | 15 SP. @ 2'-0" = 30'-0" | 1'-6" | 4 SP. @ 1'-0" | 2'-0" | 2'-0" | 4 SP. @ 1'-0" | 1'-6" | 14 SP. @ 2'-0" = 28'-0" | 2 SP. @ 1'-0"

SERIES S-601 LAP WITH ALT. S-1101 | S-602 LAP WITH ALT. S-1101 | SER. S-603 LAP WITH ALT. S-1101

S-1101 S-1102 S-1103 | 1'-7½" * | S-1103 S-1102 S-1101

SPAC'G. OF S-701 | 11" | 4 SPA @ 6½" = 2'-2" | 24 SP. @ 1'-1" = 26'-0" | 38 SPACES @ 1'-1" = 41'-2" | 29 SP. @ 1'-1" = 31'-5" | 8" | 4 SPA @ 6½" = 2'-2"

S-1004 | S-1003 | S-1002 | S-1008 | S-1007 | S-1009 | S-1006 | S-1005

SEE DETAIL "G" | SEE DETAIL "G"

SECTION "A-A"

NOTE~ CROWN APPLIES TO LEFT STRUCTURE ONLY

42'-4" | 38'-0" | 19'-0" | 2'-2"

9'-0" | 10'-0" | 19 SPA. @ 2'-2" = 41'-2" (20 S-602)

SLOPE .032'/' | SLOPE .026'/'

℄ STRUCT.

19 SPA. @ 2'-0" = 38'-0" (20 S-1008)
20 SPA. @ 2'-0" = 40'-0" (21 S-1007)
41 SPA. @ 1'-0" = 41'-0" (42 S-1009)

SEE DETAIL "H"

SECTION "B-B"

2'-2" | 1'-0" | 1'-0" | 2"

S-501 SEE RAIL'G DWG. FOR SPAC'G

S-504 S-505 OR S-506 | S-503 | S-1001 OVER PIERS | S-502 | 6" ℄ PIPE SCUPPERS

See Rail'G Dwg For Bar Nos

CONST. JT. LEVEL | CONST. JT.

1'-7½" | 10⅞" | 3" | 2" | 3"

1" ℄ HALF RD. DRIP GROOVE

DETAIL "H"

SECTION "C-C" (HALF)

42'-4"

2'-2" | 38'-0" | 19'-0" | 2'-2"

19 SPA. @ 2'-2" = 41'-2" (SER. S-603)

.022'/FT.

38 SPA. @ 1'-1" = 41'-2" (39 S-1101)
18 SPA. @ 2'-2" = 39'-0" (19 S-1102)
18 SPA. @ 2'-2" = 39'-0" (19 S-1103)

1'-7½" *

9⅝" | 10⅞"

19 SPA. @ 2'-0" = 38'-0" (20 S-1006)
20 SPA. @ 2'-0" = 40'-0" (21 S-1005)
41 SPA. @ 1'-0" = 41'-0" (42 S-1002)

41 SPA. @ 1'-0" = 41'-0" (42 S-1009)

SEE DET. "H"

℄ STRUCTURE

SECTION "D-D" (HALF)

1'-0" (4 SPACES) | 11" | 1'-1" | 1'-1" | 11" | 1'-0" (4 SPACES)

2½ CL | 1¼ CL

S-604 (2 LENGTHS) | S-1010 (2 LENGTHS) | S-701 (2 LENGTHS) | 1'-7½" *

VARIES

1'-1" SPAC'G | 11" OR | 4 @ 6½" | 10" OR | 2½" | 1'-1" SPAC'G

PIER CAP | 3'-0" | NORMAL TO ℄ PIER

℄ PIERS

DETAIL "G"

9" | 1'-3"

APPROACH SLAB

1'-7½" SLAB | VARIES

9" | 6" | 1/16" SHEET ASBESTOS AS PER ITEM 516 SEC. 711.22

2'-0"

ABUT.

ASSUMED ℄ OF BRG.

SECTION "E-E"

AT ABUT. № 1 LEFT STRUCT. ONLY

1'-3"

APPROACH SLAB

1'-7½" SLAB | VARIES

7½" | 7½" | 6" | ASSUMED ℄ OF BEAR'G

ABUT. 2'-0"

SECTION "F-F"

AT ABUT. № 1 RIGHT STRUCT. AND ABUT. № 2, L & R STRUCT.

CAMBER OF 1/800 OF THE SPAN SHALL BE PROVIDED IN EACH SPAN (IN ADDITION TO ANY REQUIRED FOR CONFORMANCE WITH THE PROFILE OF THE HIGHWAY) TO ALLOW FOR DEAD LOAD DEFLECTION. THIS IS THE AMOUNT OF CAMBER REQUIRED BEFORE FALSEWORK IS RELEASED. TO OBTAIN THIS, PROPER ALLOWANCE SHALL BE MADE FOR THE DEFLECTION OF FALSEWORK MEMBERS.

* SLAB THICKNESS SHOWN INCLUDES 1" FOR MONOLITHIC WEARING SURFACE.

STATE OF OHIO
DEPARTMENT OF HIGHWAYS
BUREAU OF BRIDGES

BEISWENGER & HOCH, Consulting Engineers
AKRON, OHIO

SLAB L.& R. DETAILS

BRIDGE № MAH-18-1178 L.& R.
OVER OHLTOWN ROAD
I-80 (SR.-18) MAHONING COUNTY
STA. 620+26.78 To STA. 621+40.38

DESIGNED	DRAWN	TRACED	CHECKED	REVIEWED	DATE	REVISED
K.J.	Hagen		WWH	RDH	1-6-65	

FED. RD.	STATE	PROJECT	
2	OHIO		

MAH-18-9.89

239
294

MICROFILMED
APR 7 1993

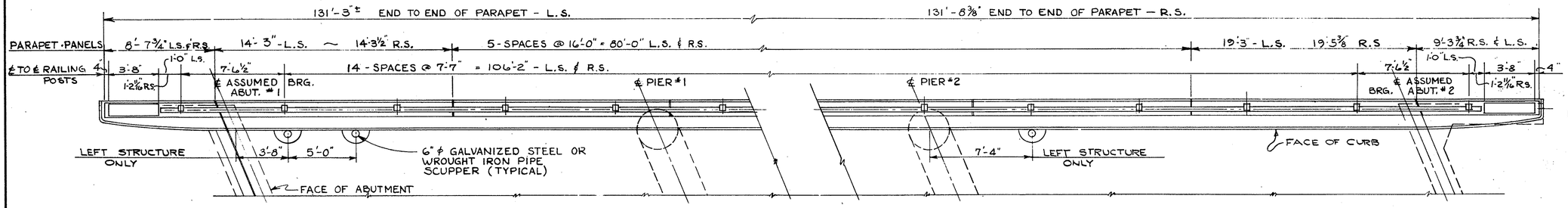

PLAN ~ NORTH RAILING L.S. SHOWN

NORTH RAILING R.S. SIMILAR

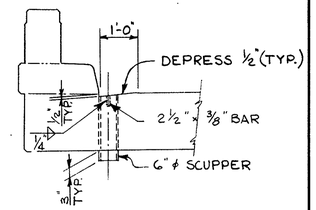

SCUPPER DETAIL-TYP.

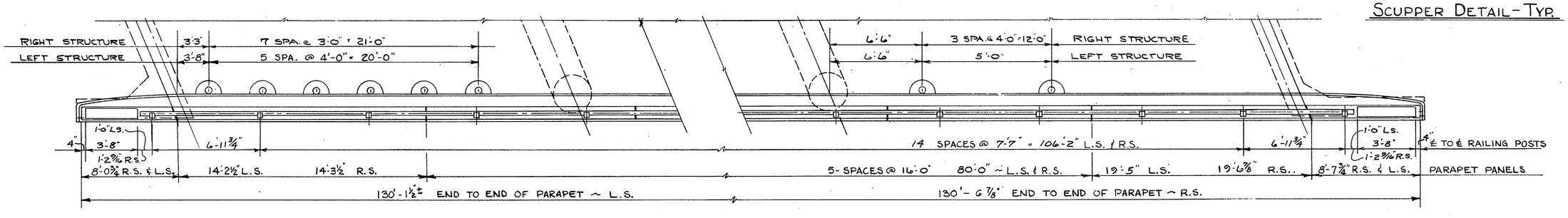

PLAN ~ SOUTH RAILING R.S. SHOWN

SOUTH RAILING L.S. SIMILAR

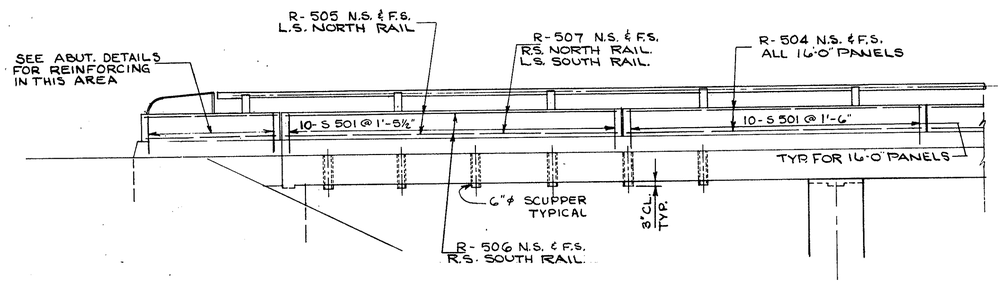

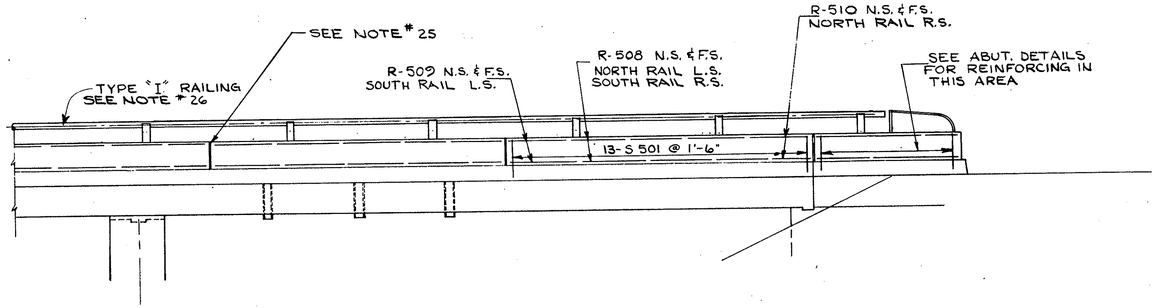

ELEVATION ~ SOUTH RAILING R.S. SHOWN

SOUTH RAILING L.S. SIMILAR

L.S. DENOTES LEFT STRUCTURE
R.S. DENOTES RIGHT STRUCTURE
N.S. DENOTES NEAR SIDE
F.S. DENOTES FAR SIDE

STATE OF OHIO
DEPARTMENT OF HIGHWAYS
BUREAU OF BRIDGES

BEISWENGER & HOCH, Consulting Engineers
AKRON, OHIO

RAILING & DRAINAGE

BRIDGE Nº MAH-18-1178 L.& R.
OVER OHLTOWN ROAD
I-80 (SR-18) MAHONING COUNTY
STA. 620+26.78 To STA. 621+40.38

DESIGNED	DRAWN	TRACED	CHECKED	REVIEWED	DATE	REVISED
KJ	JFP		11/4/64	RDH	1-6-65	

MARK	NO. REQ'D	LENGTH	TYPE	DIMENSIONS A	B	C	D	SERIES INCREMENTS	WEIGHT LBS.
ABUTMENT #1 & #2 - LEFT & RIGHT.									
A-401	120	5'-5"	3	1'-9"	1'-11"				434
A-501	17	10'-0"	ST.						177
A-502	8	24'-4"	ST.						203
A-503	234	6'-7"	3	2'-8"	2'-1"				1607
A-504	3	22'-4"	ST.						70
A-505	3	21'-10"	ST.						69
A-506	1	22'-2"	ST.						23
A-507	3	22'-10"	ST.						70
A-508	90	7'-11"	3	1'-8"	3'-3"				743
A-509	20	3'-1"	15	1'-8"	1'-8"	7½"			64
A-510	20	3'-1"	16	1'-8"	1'-8"	7½"			64
A-511	8	6'-6"	ST.						54
A-512	OPEN								
A-513	27	11'-8"	14	2'-7"	3'-2"	4"			329
A-514	21	4'-9"	ST.						104
A-515	14	9'-8"	ST.						135
A-516	112	3'-8"	3	2'-1"	11"				428
A-517	6	7'-10"	ST.						49
A-518	6	7'-3"	17	1'-2"	2"	1'-9"			46
A-519	24	4'-0"	ST.						100
A-520	OPEN								
A-521	56	5'-7"	5	8"	2'-2"	5"			326
A-522	3	7'-4"	ST.						23
A-523	12	8'-7"	ST.						107
A-524	12	9'-2"	17	2'-1"	2'-1"	1'-9"			115
A-525	16	24'-6"	ST.						409
A-526	2	22'-6"	ST.						47
A-527	1	10'-6"	ST.						11
A-528	7	8'-6"	17	8'-5"	1'-5"	1'-7"			63
A-529	72	7'-3"	3	1'-8"	2'-11"				524
A-530	OPEN								
A-531	OPEN								
A-532	OPEN								
A-533	2	30'-0"	ST.						63
A-534	OPEN								
SERIES OF A-535	4 SETS OF 8 BARS	4'-9" TO 7'-1"	3	1'-8"	1'-8" TO 2'-10" @ 2" INC.			4"	197
A-536	10	8'-2"	19	4'-7"	1'-2"	3'-2"	1'-3"		85
SERIES OF A-537	1 SET OF 8 BARS	5'-10" TO 10'-6"	20	1'-9"	0" TO 2'-4" @ 4" INC.	2'-8"	1'-9" TO 4'-1" @ 4" INC.	8"	110
A-538	35	2'-8"	ST.						97
A-539	10	9'-3"	21	3'-6"	1'-3"	2'-6"	2'-3"		97
SERIES OF A-540	4 SET OF 8 BARS	5'-1" TO 9'-9"	22	1'-9" TO 4'-1" @ 4" INC.	1'-11"	0" TO 2'-4" @ 4" INC.		8"	83
A-541	4	6'-6"	16	1'-7"	5'-0"	1'-1½"			27
A-542	10	5'-3"	16	1'-7"	3'-9"	8½"			55
A-543	18	4'-3"	3	2'-8"	11"				80
A-544	18	4'-11"	1	6"	4'-6"				92
A-545	58	4'-4"	1	1'-0"	3'-5"				262
A-601	3	6'-4"	ST.						29
A-602	27	14'-2"	3	1'-2"	6'-8"				575
A-603	3	4'-9"	ST.						21
A-604	12	5'-6"	1	1'-0½"	4'-7"				99
A-605	OPEN								
A-606	OPEN								
A-607	4	23'-6"	ST.						141
A-608	13	2'-0"	ST.						39
A-609	9	3'-8"	ST.						50
A-610	9	4'-0"	ST.						54
A-701	12	8'-4"	ST.						204
A-702	32	5'-0"	ST.						327
A-703	12	6'-2"	ST.						151

MARK	NO. REQ'D	LENGTH	TYPE	DIMENSIONS A	B	C	D	SERIES INCREMENTS	WEIGHT LBS.
ABUTMENT #1 & #2 - LEFT & RIGHT (CONT'D.)									
A-801	8	24'-10"	ST.						530
A-802	16	25'-0"	ST.						1068
A-901	76	6'-1"	1	1'-0"	5'-4"				1572
A-902	4	31'-10"	ST.						433
A-903	4	16'-0"	ST.						218
A-904	8	23'-11"	ST.						651
A-905	50	12'-5"	ST.						2111
A-906	8	4'-8"	ST.						127
A-907	18	11'-3"	ST.						689
A-908	8	5'-9"	1	3'-0"	3'-0"				156
A-909	1	9'-3"	ST.						31
A-910	1	7'-4"	ST.						25
A-911	2	10'-0"	ST.						68
SERIES OF A-1001	1 SET OF 4 BARS	21'-10" TO 22'-4"	ST.					2	380
SERIES OF A-1002	1 SET OF 4 BARS	22'-1" TO 22'-10"	ST.					3	387
SERIES OF A-1003	2 SETS OF 4 BARS	21'-11" TO 22'-6½"	ST.					2½	765
SERIES OF A-1004	2 SETS OF 4 BARS	22'-4" TO 22'-11½"	ST.					2½	780
ABUTMENT #1 & #2 - LEFT & RIGHT TOTAL = 19323 LBS.									
PIER #1 & #2 LEFT & RIGHT									
P-501	216	5'-7"	3	2'-8"	1'-7"				1258
P-502	216	11'-6"	8	6"	2'-8"	4'-2"			2591
P-601	16	21'-6"	ST.						517
P-901	176	8'-6"	ST.						5086
P-1001	152	8'-6"	ST.						5559
P-1002	136	9'-6"	ST.						5559
P-1003	48	11'-1"	1	2'-8"	8'-8"				2289
P-1101	272	7'-0"	1	1'-0"	6'-3"				10,116
P-1102	46	17'-6"	ST.						4277
P-1103	140	18'-5"	ST.						13699
P-1104	46	19'-7"	ST.						4,786
P-1105	22	18'-5"	1	1'-0"	17'-8"				2,153
P-1106	22	19'-5"	1	1'-0"	18'-8"				2270
P-1107	22	19'-4"	1	1'-0"	18'-7"				2260
P-1108	22	20'-6"	1	1'-0"	19'-9"				2396
P-1109	20	25'-11"	ST.						2754
P-1110	20	18'-8"	ST.						1984
P-1111	16	10'-6"	9	3'-6"	3'-6"	1'-2½"			893
SPIRAL - - - - - 4755									
PIER #1 & #2 LEFT & RIGHT TOTAL = 75,202 LBS									
SLAB - LEFT & RIGHT									
S-501	292	5'-7"	5	8"	2'-2"	5"			1700
S-502	516	6'-1"	23	6"	1'-5"	2'-1"			3139
S-503	516	2'-6"	3	1'-5"	8"				1345
S-504	12	20'-10"	ST.						261
S-505	12	23'-6"	ST.						294
S-506	12	26'-0"	ST.						325

MARK	NO. REQ'D	LENGTH	TYPE	DIMENSIONS A	B	C	D	SERIES INCREMENTS	WEIGHT LBS.
SLAB LEFT & RIGHT (CONT'D.)									
SERIES OF S-601	2 SETS OF 20 40 BARS	13'-0" TO 18'-6½"	ST.					3½"	948
S-602	40	14'-6"	ST.						871
SERIES OF S-603	2 SETS OF 20 40 BARS	18'-0" TO 23'-6½"	ST.					3½"	1247
S-604	288	23'-6"	ST.						10,166
S-701	456	23'-8"	ST.						21,981
S-1001	40	24'-9"	ST.						4260
S-1002	84	36'-7"	ST.						13223
S-1003	42	28'-3"	6	26'-10"	1'-5"				5105
S-1004	40	24'-7"	6	23'-2"	1'-5"				4231
S-1005	42	30'-2"	6	28'-9"	1'-5"				5452
S-1006	40	26'-6"	6	25'-1"	1'-5"				4561
S-1007	42	26'-2"	ST.						4729
S-1008	40	20'-0"	ST.						3442
S-1009	168	41'-9"	ST.						30181
S-1010	48	24'-1"	ST.						4974
S-1101	156	34'-11"	ST.						2890
S-1102	76	19'-4"	ST.						7806
S-1103	76	14'-9"	ST.						5956
SLAB, LEFT & RIGHT TOTAL = 165,137 LBS.									
RAILING ⊗									
R-501	8	7'-4"	ST.						
R-502	16	8'-3"	ST.						
R-503	8	8'-6"	ST.						
R-504	80	15'-7"	ST.						
R-505	4	13'-3"	ST.						
R-506	4	14'-0"	ST.						
R-507	8	13'-7"	ST.						
R-508	8	18'-11"	ST.						
R-509	4	18'-9"	ST.						
R-510	4	19'-2"	ST.						
R-511	16	5'-4"	2						
R-512	24	4'-2"	4						
REPLACEMENT BARS									
RE-401	1	5'-3"	ST.						
RE-402	1	5'-3"	10	5'-3"	1'-4"				
RE-501	1	5'-6"	ST.						
RE-601	1	6'-0"	ST.						
RE-701	2	6'-3"	ST.						
RE-801	1	6'-6"	ST.						
RE-901	1	6'-10"	ST.						
RE-1001	5	7'-3"	ST.						
RE-1101	5	7'-9"	ST.						

SPIRAL REINFORCING SCHEDULE

MARK	NO. REQ'D	CORE DIA. OF SPIRAL	LENGTH OF SPIRAL	PITCH	NO. OF TURNS	WEIGHT LBS.
SP.401	4	2'-8"	15'-0¾"	4½"	43	947
SP.402	4	2'-8"	16'-1⅝"	4½"	46	1013
SP.403	4	2'-8"	16'-0⅛"	4½"	46	1013
SP.404	4	2'-8"	17'-1⅝"	4½"	49	1080
SPACERS	64					702
TOTAL SPIRALS						4755 LBS

GRAND TOTAL 259,662 LBS

⊗ RAILING REINFORCEMENT BARS WILL BE INCLUDED AS PART OF ITEM S/T FOR PAYMENT.

FED. RD.	STATE	PROJECT	
2	OHIO		

240
294

MAH.-18-9.89

MICROFILMED
APR 7 1989

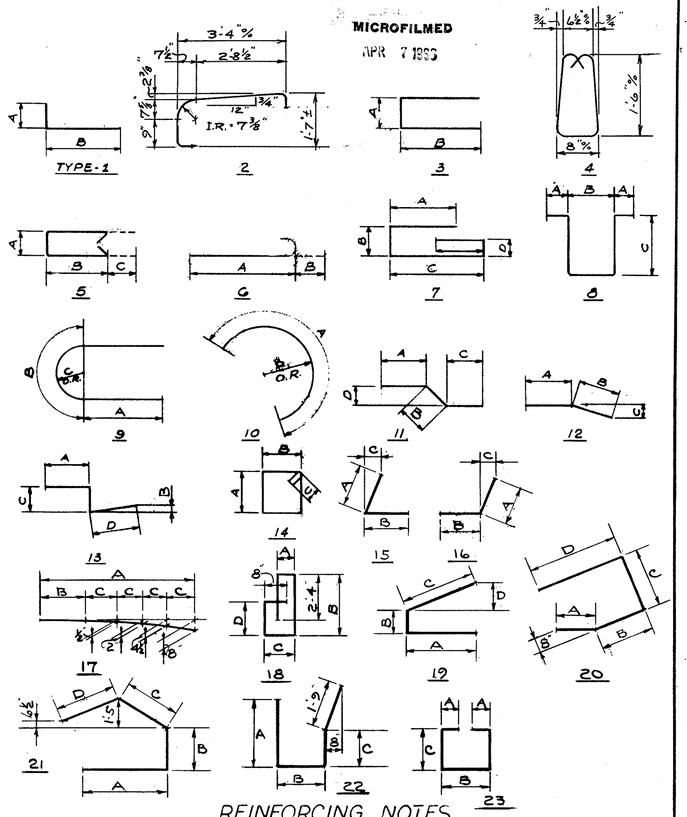

REINFORCING NOTES

THE LENGTH SHOWN IN THE STEEL SCHEDULE FOR THE SPIRAL BARS IS THE DISTANCE FROM THE TOP OF THE FOOTING TO THE BOTTOM OF THE PIER CAP. THE NUMBER OF TURNS SHOWN IN THE STEEL SCHEDULE FOR SPIRAL BARS IS THE LENGTH DIVIDED BY THE PITCH PLUS THREE TURNS (TOTAL NUMBER OF CLOSED COILS) EXPRESSED AS THE NEAREST WHOLE NUMBER. SPIRAL REINFORCING BARS SHALL NOT HAVE DEFORMATIONS, BUT SHALL IN OTHER RESPECTS CONFORM TO ITEM 509. ONE AND ONE HALF CLOSED COILS SHALL BE PROVIDED AT THE ENDS OF EACH SPIRAL UNIT. FOUR (4) STEEL CHANNEL, TEE OR ANGLE SPACERS WEIGHING APPOX. 0.68 LBS. PER LINEAL FT. OF SPACERS SHALL BE PROVIDED FOR EACH SPIRAL UNIT. THEY SHALL BE EQUALLY SPACED ALONG THE PERIPHERY OF EACH COIL. THE NUMBER OF POUNDS OF THESE SPACERS BASED ON 0.68 LBS. PER LINEAL FT. WILL BE PAID FOR AS REINFORCING STEEL AND IS INCLUDED IN THE TABULATED QUANTITY OF SPIRAL BARS.

BAR SIZE IS INDICATED IN THE BAR MARK. THE FIRST DIGIT WHERE THREE DIGITS ARE USED AND THE FIRST TWO DIGITS WHERE FOUR ARE USED INDICATE THE BAR SIZE NUMBER. FOR EXAMPLE A-601 IS A NO. 6 SIZE BAR AND P-1001 IS A NO. 10 SIZE BAR.

STATE OF OHIO
DEPARTMENT OF HIGHWAYS
BUREAU OF BRIDGES

BEISWENGER & HOCH, Consulting Engineers
AKRON, OHIO

REINFORCING SCHEDULE

BRIDGE Nº MAH-18-1178 L. & R.
OVER OHLTOWN ROAD
I-80 (S.R.-18) MAHONING COUNTY
STA. 620+26.78 To STA. 621+40.38

DESIGNED	DRAWN	TRACED	CHECKED	REVIEWED	DATE	REVISED
KJ	LNP		11-16-64	RDH	1-6-65	

FED. RD.	STATE	PROJECT	
2	OHIO		

MAH-18-9.89

MICROFILMED
APR 7 1983

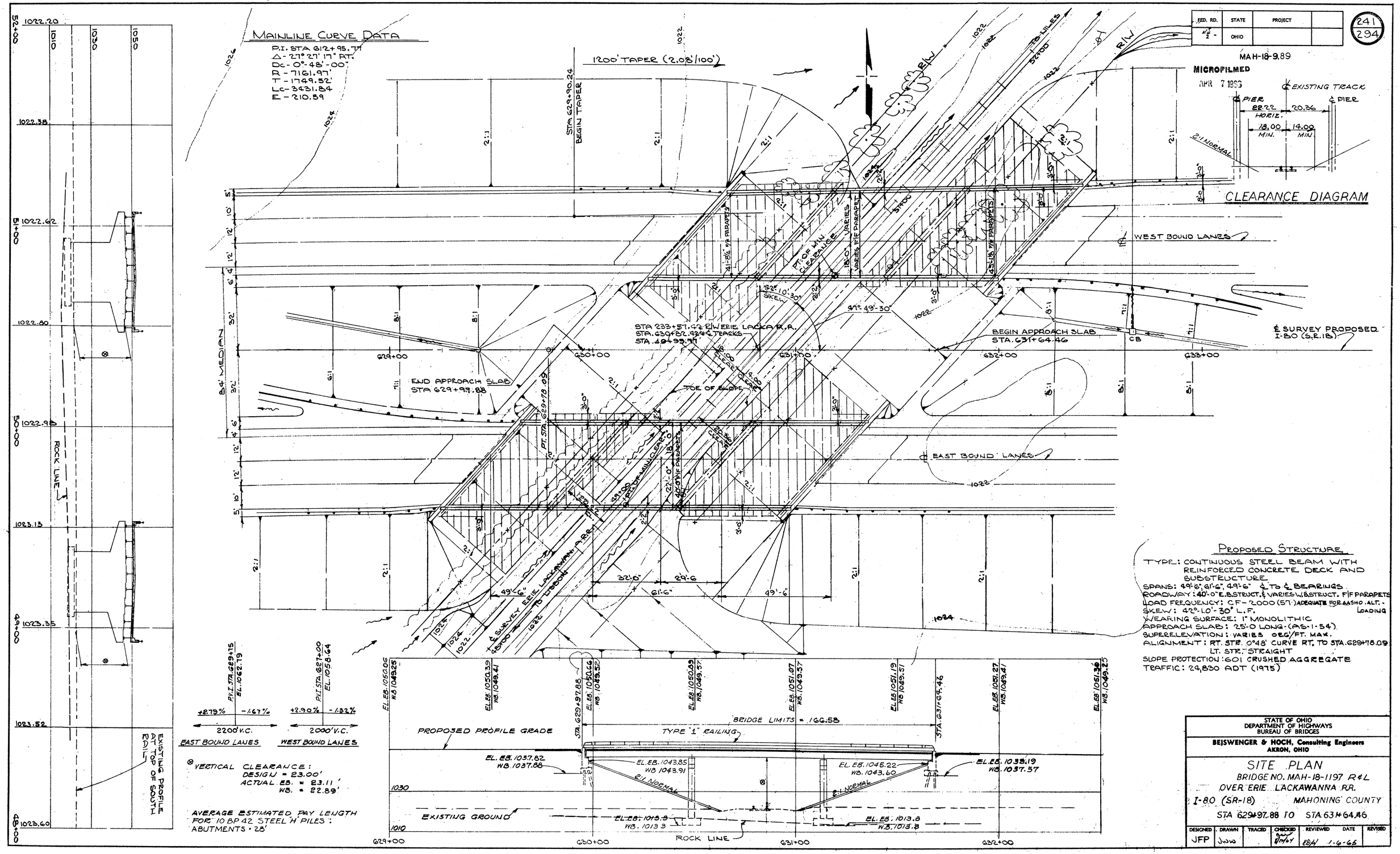

PROPOSED STRUCTURE

TYPE: CONTINUOUS STEEL BEAM WITH REINFORCED CONCRETE DECK AND SUBSTRUCTURE
SPANS: 49'-6", 61'-6", 49'-6" ℄ TO ℄ BEARINGS
ROADWAY: 40'-0" E.B. STRUCT. & VARIES W.B. STRUCT. F/F PARAPETS
LOAD FREQUENCY: CF-2000 (57) ADEQUATE FOR AASHO ALT. LOADING
SKEW: 42°-10'-30" L.F.
WEARING SURFACE: 1" MONOLITHIC
APPROACH SLAB: 25'-0 LONG (AS-1-54)
SUPERELEVATION: VARIES 0 EG/FT. MAX.
ALIGNMENT: RT. STR. 0°48' CURVE RT. TO STA. 629+78.09
LT. STR. STRAIGHT
SLOPE PROTECTION: 601 CRUSHED AGGREGATE
TRAFFIC: 24,830 ADT (1975)

STATE OF OHIO
DEPARTMENT OF HIGHWAYS
BUREAU OF BRIDGES

BEJSWENGER & HOCH, Consulting Engineers
AKRON, OHIO

SITE PLAN

BRIDGE NO. MAH-18-1197 R&L
OVER ERIE LACKAWANNA R.R.
I-80 (SR-18) MAHONING COUNTY
STA 629+97.88 TO STA 631+64.46

DESIGNED	DRAWN	TRACED	CHECKED	REVIEWED	DATE	REVISED
JFP	JWW		[illegible]	RBH	1-6-65	

MICROFILMED
APR 7 1989

FED. RD.	STATE	PROJECT	
2	OHIO		

MAH-18-9.89

242
294

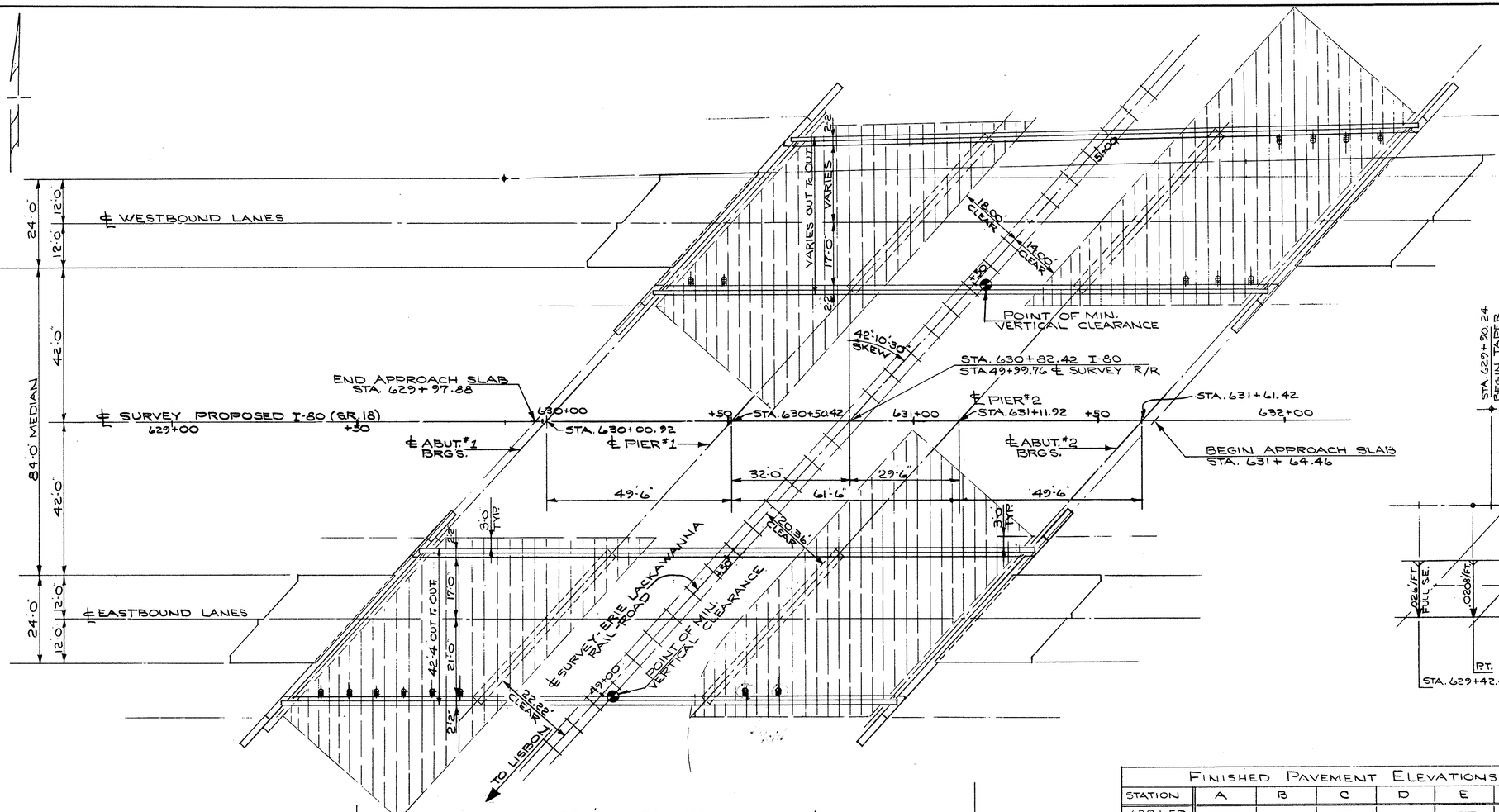

— ELEVATION —

✱ MINIMUM VERTICAL CLEARANCE
DESIGN - - - = 23.00'
ACTUAL, E.B. = 23.11'
W.B. = 22.89'

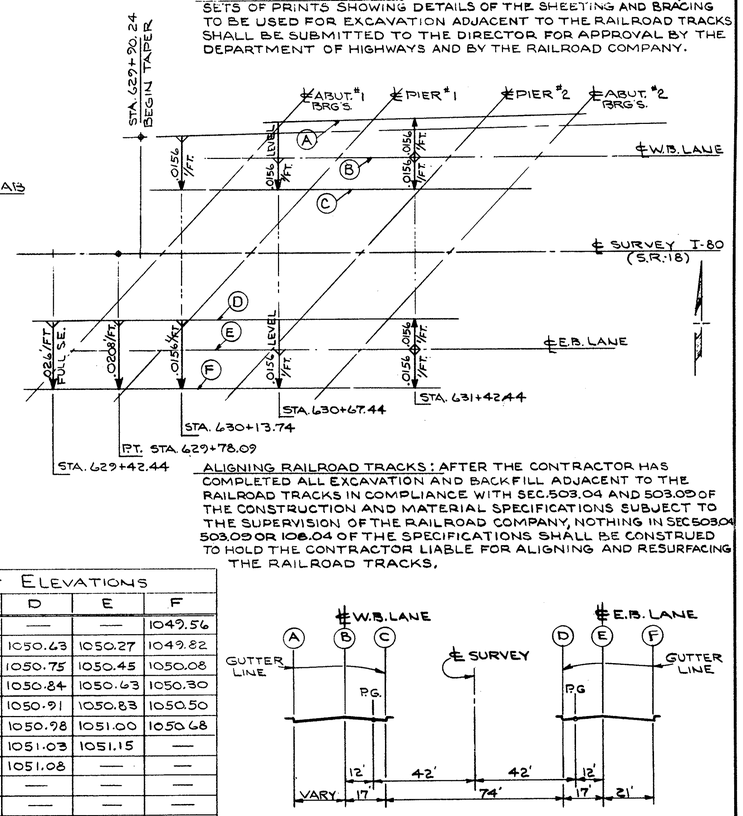

ALIGNING RAILROAD TRACKS: AFTER THE CONTRACTOR HAS COMPLETED ALL EXCAVATION AND BACKFILL ADJACENT TO THE RAILROAD TRACKS IN COMPLIANCE WITH SEC. 503.04 AND 503.09 OF THE CONSTRUCTION AND MATERIAL SPECIFICATIONS SUBJECT TO THE SUPERVISION OF THE RAILROAD COMPANY, NOTHING IN SEC 503.04 503.09 OR 108.04 OF THE SPECIFICATIONS SHALL BE CONSTRUED TO HOLD THE CONTRACTOR LIABLE FOR ALIGNING AND RESURFACING THE RAILROAD TRACKS.

— NOTES —

RAILROAD AERIAL LINES WILL BE RELOCATED BY THE RAILROAD. THE CONTRACTOR SHALL USE ALL PRECAUTIONS NECESSARY TO SEE THAT THE LINES ARE NOT DISTURBED DURING THE CONSTRUCTION STAGE AND SHALL COOPERATE WITH THE RAILROAD IN THE RELOCATION OF THESE LINES. THE COST OF THE RELOCATION SHALL BE INCLUDED IN THE RAILROAD FORCE ACCOUNT WORK.

CONSTRUCTION CLEARANCE OF 20.00 FT. VERTICALLY ABOVE THE TOP OF THE RAILROAD RAILS AND 8.00 FT. HORIZONTALLY FROM THE CENTER OF TRACKS SHALL BE MAINTAINED AT ALL TIMES.

SEE SHEET Nº 207 & 208 FOR NOTES # 1-4, 6B, 7*, 9-10, 13, 17-20, 22-25, 28

* NOTE #7 APPLIES TO PIERS ONLY.

SHEETING AND BRACING: BEFORE CONSTRUCTION IS STARTED, EIGHT SETS OF PRINTS SHOWING DETAILS OF THE SHEETING AND BRACING TO BE USED FOR EXCAVATION ADJACENT TO THE RAILROAD TRACKS SHALL BE SUBMITTED TO THE DIRECTOR FOR APPROVAL BY THE DEPARTMENT OF HIGHWAYS AND BY THE RAILROAD COMPANY.

FINISHED PAVEMENT ELEVATIONS

STATION	A	B	C	D	E	F
629+50	—	—	—	—	—	1049.56
+75	—	—	—	1050.63	1050.27	1049.82
630+00	—	—	—	1050.75	1050.45	1050.08
+25	—	—	—	1050.84	1050.63	1050.30
+50	—	1049.75	1049.48	1050.91	1050.83	1050.50
+75	1049.72	1049.76	1049.49	1050.98	1051.00	1050.68
631+00	1049.61	1049.75	1049.48	1051.03	1051.15	—
+25	1049.47	1049.73	1049.46	1051.08	—	—
+50	1049.35	1049.70	1049.43	—	—	—
+75	1049.29	1049.65	1049.38	—	—	—
632+00	1049.23	1049.59	—	—	—	—
+25	1049.14	—	—	—	—	—

— ESTIMATED QUANTITIES — (2 BRIDGES)

ITEM	TOTAL	UNIT	DESCRIPTION	SUPER	ABUTS.	PIERS	GEN.
503	1346	CU. YDS.	UNCLASSIFIED EXCAVATION		634	712	
503	11	CU. YDS.	ROCK EXCAVATION			11	
503	LUMP	SUM	COFFERDAMS, CRIBS AND SHEETING			L.S.	
511	433	CU. YDS.	CLASS 'C' CONC. SUPERSTRUCTURE	433			
511	246	CU. YDS.	CLASS 'E' CONC. ABUTS. ABOVE FTG'S.		246		
511	410	CU. YDS.	CLASS 'C' CONC. PIERS ABOVE FTG'S.			410	
511	334	CU. YDS.	CLASS 'E' CONC. PIER & ABUT. FTG'S.		197	137	

ITEM	TOTAL	UNIT	DESCRIPTION	SUPER	ABUTS.	PIERS	GEN.
509	2056050	LBS.	REINFORCING STEEL	125,602	28,577	51,471	
518	356,147	LBS.	STRUCTURAL STEEL	356,147			
514	356,147	LBS.	FIELD PAINTING OF STRUCT. STEEL	356,147			
517	666.06	LIN. FT.	RAILING TYPE "I"	666.06			
505	LUMP	SUM	FIRST TEST PILE				
507	1570	LIN. FT.	10 BP 42 STEEL "H" PILES		1570		
518	114	CU. YDS.	POROUS BACKFILL		114		
518	17	EACH	SCUPPERS "INCLUDING SUPPORTS"	17			

ITEM	TOTAL	UNIT	DESCRIPTION	SUPER	ABUTS.	PIERS	GEN.
518	268	LIN. FT.	6" PERFORATED HELICAL C.M.P. 707.06 INCLUDING SPECIALS		268		
518	155	LIN. FT.	6" HEICAL C.M.P. 707.06 NON-PERFORATED		155		
601	1786	SQ. YDS.	CRUSHED AGGREGATE SLOPE PROTECTION		1786		
825	2,210	SQ. YDS.	Concrete Surface Treatment	2,210			
808	433	EACH	WATER REDUCING SET RETARDING ADMIXTURE	433			

STATE OF OHIO
DEPARTMENT OF HIGHWAYS
BUREAU OF BRIDGES

BEISWENGER & HOCH, Consulting Engineers
AKRON, OHIO

GENERAL PLAN & ELEVATION

BRIDGE Nº MAH-18-1197 R. & L.
OVER ERIE LACKAWANNA R.R.
I-80 (S.R.-18) MAHONING COUNTY
STA. 629+97.88 To STA. 631+64.46

DESIGNED	DRAWN	TRACED	CHECKED	REVIEWED	DATE	REVISED
JFP	LNP		8/12/64	RBH	1-6-65	

MICROFILMED
APR 7 1993

FED. RD.	STATE	PROJECT	
2	OHIO		

MAH-18-9.89

243
294

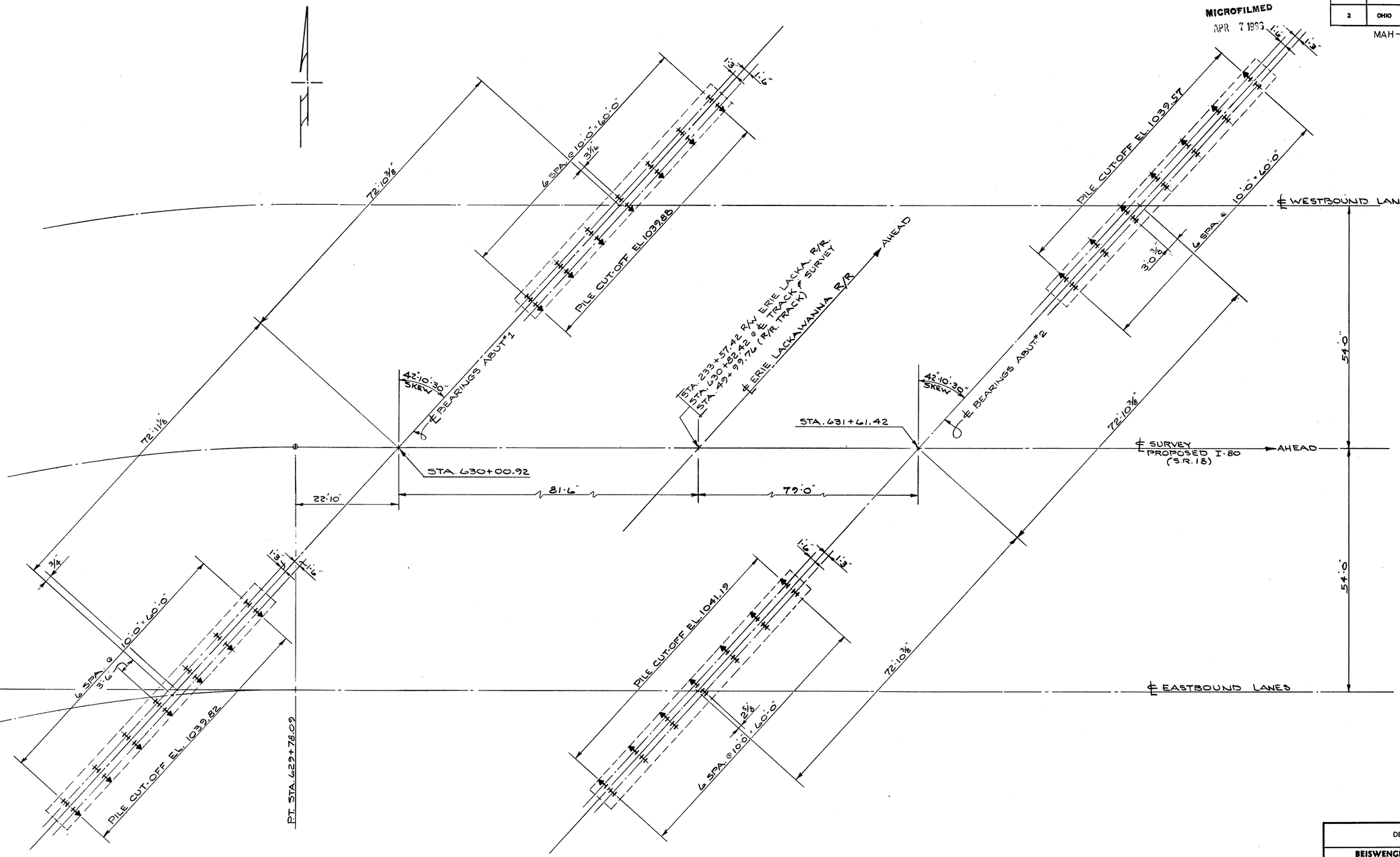

— PILING - PLAN. —

— ALL PILES TO BE 10 BP 42 STEEL "H" PILES. —

⟵ = INDICATES DIRECTION OF 1:4 BATTER OF PILES.

STATE OF OHIO
DEPARTMENT OF HIGHWAYS
BUREAU OF BRIDGES

BEISWENGER & HOCH, Consulting Engineers
AKRON, OHIO

PILING PLAN

BRIDGE Nº MAH-18-1197 R. & L.
OVER ERIE LACKAWANNA R.R.
I-80 (S.R-18) MAHONING COUNTY
STA. 629+97.88 To STA. 631+64.46

DESIGNED	DRAWN	TRACED	CHECKED	REVIEWED	DATE	REVISED
JFP	JNP		11/4/64	RBH	1-6-65	

MICROFILMED
APR 7 1993

FED. RD.	STATE	PROJECT	
2	OHIO		

244
294

MAH.-18-9.89

STA. 430+00.92 ℄ SURVEY

72'-10⅜"
18'-8 5/16" APPR. SLAB DIM.
15'-6 13/16" APPR. SLAB DIM.
50'-8 15/16" EXP. DAM
23'-10⅜" EXP. DAM DIM.
26'-10 13/16" EXP. DAM DIM.
28'-7 11/16"
28'-7⅜" ℄/℄ CONTR. JOINTS
12'-9 13/16"
℄ CONTR. JOINT
11'-7 7/16"
℄ WEST BOUND LANES
42°10'30" SKEW
17'-0 3/16"
12'-3 15/16"
℄ CONTR. JOINT
23'-9 1/16"
SEALING STRIP
6"ϕ PERFORATED C.M.P.
SEALING STRIP
℄ PILES
℄ BEARINGS
℄ BEAM
SLOPE ¾" TOWARD FACE OF ABUT. (TYP BETWEEN BEAM SEATS)
AHEAD
46'-3'-53" THIS BEAM ONLY
47'-13'-21" THIS BEAM ONLY
℄ PILES 1:4 BATTER
43'-1 7/16"
3 SPA @ 12'-0 13/16" - 38-5 7/16" ℄/℄ BEAMS
3 SPA @ 10'-0" - 30'-0"
3 SPA @ 10'-0" - 30'-0" ℄/℄ 10 BP 42 STEEL 'H' PILES
14'-6" ℄/℄ 6"ϕ PIPE DRAINS
53'-9⅜"
65'-0⅜"
81'-0⅜"
40'-7¼"

PLAN ABUTMENT Nº 1 LEFT

10'-10" SER. A-613 @ 1'-0"
5'-7" 4 A 606 @ 1'-0"
12'-2 11/16" 6 A 604 @ 1'-0"
10'-8 7/16" 35 A 605 @ 1'-0"
9'-10⅝" 11 A 604 @ 1'-0"
3'-8 3/16" 4 A 610 @ 1'-0"
10'-2" SER. A-614 @ 1'-0"
A-541 NS A-542 FS
EL. 1049.39 *
EL. 1049.69 *
EL. 1049.68 *
A-514 NS A-523 FS.
END LIMITS OF POROUS BACKFILL
BUTT JOINT IN EXP. DAM
BUTT JT. IN EXP. DAM
A-511 NS
A-529 FS.
A-528 FS
A-506 FS.
A-533 NS & FS.
A-510 NS & FS.
A-509 NS & FS.
A-508 NS & FS.
A-532 NS & FS.
A-531 NS & FS
EL. 1044.91
EL. 1044.98
A-506 NS & FS.
EL. 1045.11
EL. 1045.14
EL. 1045.24
EL. 1045.23
EL. 1044.91
TOP OF SLOPE
A-506 NS & FS.
3A-507
5A-506
TOP OF SLOPE
EL. 1043.91
3A-515
3A-515 NS
3A-508 NS 3A-506 FS
6A-603 FS
3A-507 NS
3-A-506 NS & FS.
37 A 505
3 (A-503 NS & 37 A 601 FS
3A-603 FS.
3A-529 NS 3A-510 FS
TOP OF SLOPE
EL. 1040.88
3A-501
3A-803 (3 LENGTHS)
46 A 502
4A-803 (3 LENGTHS)
4A-501
4A-501
EL. 1040.88
EL. 1037.88
6 SPA. @ 1'-6" = 9'-0" (TYP SPACING BETWEEN PILES)

— ELEVATION —

12"x½" PREMOLDED SEALING STRIP IN 13"x¾" RECESS (FULL WALL HEIGHT TO BOT. OF APPR. SLAB SEAT)
1⅝"x5½" KEY
SECTION AT BACKWALL
1'-6"x1'-6"x3" KEY CENTERED IN BRIDGE SEAT.
SECTION AT BRIDGE SEAT

ABUTMENT CONTRACTION JOINT DETAIL

A-541 (SECT. A-A) A-514 (SECT. E-E)
A-542 (SECT. A-A) A-523 (SECT. E-E)
A-511 (SECT. A-A) A-533 (SECT. E-E)
A-529 (SECT. A-A) A-533 (SECT. E-E)
A-606 OR SER. A-613 (SECT. A-A)
A-610 OR SER. A-614 (SECT. E-E)
A-510 (SECT. A-A) A-508 (SECT. E-E)
A-509 (SECT. A-A) A-532 (SECT. E-E)
A-504 (SECT. A-A) A-531 (SECT. E-E)
A-506 (SECT. A-A) A-510 (SECT. E-E)
A-508 (SECT. A-A) A-529 (SECT. E-E)
CONST. JTS.
A-803
A-502
A-603
— SECTION A-A & E-E —

A-511 (SECT. B-B) A-533 (SECT. C-C)
A-529 (SECT. BB) A-533 (SECT. CC)
A-510 (SECT. B-B) A-508 (SECT. C-C)
A-509 (SECT. B-B) A-532 (SECT. C-C)
A-506 (SECT. B-B) A-531 (SECT. C-C)
A-506 (SECT. B-B) A-510 (SECT. C-C)
CONST. JOINT
A-604
A-507 (SECT. B-B) A 515 (SECT. C-C)
A-502
A-803
A-601
A-503
A-501 CENTER UNDER CONTR. JOINT. (TYP)
— SECTION B-B & C-C —

APPROACH SLAB
A-605
POROUS BACKFILL
CRUSHED AGGREGATE SLOPE PROTECTION
2:1 NORMAL
6"ϕ PERFORATED C.M.P.
6"ϕ C.M.P. NON-PERF.
— SECTION D-D —

ALL LONGITUDINAL BARS ABOVE FOOTING ARE A-506 BARS.
SEE SECTION B-B & C-C FOR BAR Nos. & DIMENSIONS NOT SHOWN.

* INDICATES ELEVATIONS GIVEN TO HEEL OF ℄

STATE OF OHIO
DEPARTMENT OF HIGHWAYS
BUREAU OF BRIDGES

BEISWENGER & HOCH, Consulting Engineers
AKRON, OHIO

ABUTMENT # 1-L DETAILS

BRIDGE Nº MAH-18-1197 R. & L.
OVER ERIE LACKAWANNA R.R.
I-80 (S.R.-18) MAHONING COUNTY
STA. 629+97.88 To STA. 631+64.46

DESIGNED	DRAWN	TRACED	CHECKED	REVIEWED	DATE	REVISED
JFP	JAF		[illegible]	RDH	1-6-65	

FED. RD.	STATE	PROJECT	
2	OHIO		

MAH-18-9.89

245/294

MICROFILMED

25'-4 15/16" APPR. SLAB DIM.
55'-5" EXP. DAM
33'-4 5/8" EXP. DAM DIM.
31'-1 3/16" ℄/℄ CONTR. JOINTS
13'-8 3/8" APPR. SLAB DIM.
22'-0 3/8" EXP. DAM DIM.
26'-11 7/8"
11'-5 9/16"
22'-5 3/4"
8'-7 7/16"
26'-10 15/16"
15'-9 13/16"
℄ CONTRACTION JOINT
SEALING STRIP
6" ϕ PERFORATED C.M.P.
℄ W.B. LANE
℄ CONTRACTION JOINT
SEALING STRIP
℄ PILES
2'-0
2'-9
1'-6
1'-6
℄ PILES
1:4 BATTER
℄ BEARINGS
46°37'59"
47°13'21
47°49'30 TYP. U.N.
℄ BEAM
SLOPE ¾ TOWARD FACE OF ABUTMENT (TYP. BETWEEN BEAM SEATS)
2 SPA @ 8'-5 9/16" = 16'-11 1/8"
42°10'30" SKEW
3 SPA @ 12'-9 13/16" = 38'-5 7/16" ℄/℄ BEAMS
2 SPA @ 10'-0" = 20'-0" ℄/℄ 10 BP 42 STEEL 'H' PILES
14'-6" ℄/℄ 6" ϕ PIPE DRAINS
℄ SURVEY
STA. 631+61.42
49'-10"
4'-6"
5'-9"
14'-6"
4 SPA @ 10'-0" = 40'-0"
14'-3"
14'-3"
5'-9"
3'-1 3/8"
8'-0"
45'-4"
7'-6 5/16"
58'-4 9/16"
69'-0"
85'-0"
72'-10 3/8"

PLAN ABUTMENT Nº 2 LEFT

10'-6" 5'-7" 10'-10 7/8" 21'-6 7/8" 9'-6 5/16" 13'-4 15/16" 3'-8" 9'-10"
7 1/16" SER. OF A-616 @ 1'-0" 1'-0" 5A-615 @ 1'-0" 1'-0" 9A-604 @ 1'-0" 1/8" 1'-0" 39 A-605 @ 1'-0" 1'-0" 8A-604 @ 1'-0" 1'-0" 4 SPA @ 1'-0" SER. A-614 @ 1'-0" 4 15/16"
1'-4 1/2" 1'-4 3/16"
A
A-513 NS
A-514 FS
10°
B
*EL. 1049.03
EL. 1047.90
D
*EL. 1049.47
BUTT. JOINT IN EXP. DAM
EL. 1048.06
C
*EL. 1049.25
E
A-514 NS
A-542 FS
END LIMITS OF POROUS BACKFILL
A-512 NS
A-543 FS
BUTT. JOINT IN EXP. DAM
A-534 FS.
A-539 FS.
A-529 FS.
A-520 NS.
A-606
A-519 NS FFS
A-542 FS.
A-538 NS FFS
A-537 NS FFS
EL. 1044.60
EL. 1044.71
EL. 1044.72
4 A-534 NS FFS.
EL. 1044.88
EL. 1044.82
EL. 1044.78
A-518 NS FFS.
TOP OF SLOPE
EL. 1044.60
4:2 3/16
3'-11 3/4"
A-517 NS FFS
3 A-536 NS
3 A-517 FS
5 A-603
3 A-535
5 A-534
TOP OF SLOPE
EL. 1044.60
41 A-505
3 A-533
3 A-507 NS
3 A-517 FS
3 A-535 NS
41 A-503 NS & 41 A-601 FS.
3 A-534 NS FFS
3 A-533 NS
5'-5"
EL. 1044.60
EL. 1040.57
3-A-501
4-A-501
48-A-502
3-A-804 (3 LENGTHS)
4-A-804 (3 LENGTHS)
3 A-501
4 A-501
A-603
EL. 1037.57
A
LB
D
LC
LE
9 1'-6" 1'-6" 9" 6 SPA @ 1'-6" = 9'-0" (TYP.) 6"
SPACING BETWEEN PILES

— ELEVATION —

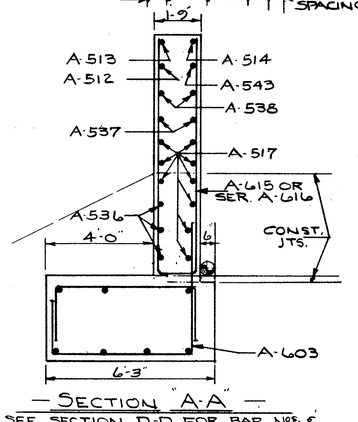

— SECTION "A-A" —
SEE SECTION D-D FOR BAR Nos. & DIMENSIONS NOT SHOWN.

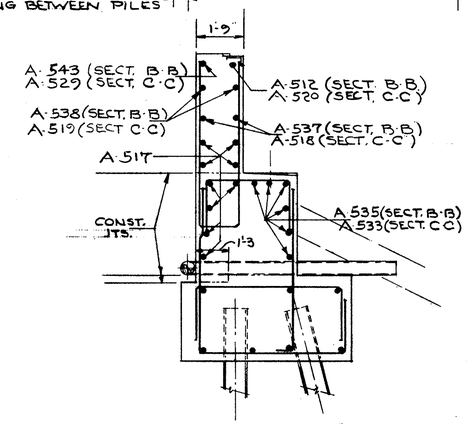

— SECTION B-B & C-C —
SEE SECTION D-D FOR BAR Nos. DIMENSIONS, & DETAILS NOT SHOWN

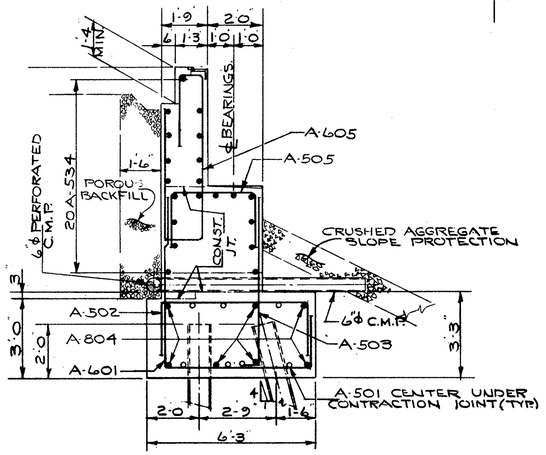

— SECTION "D-D" —

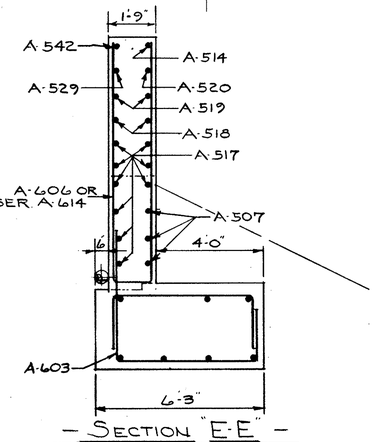

— SECTION "E-E" —
SEE SECTION D-D FOR BAR Nos. & DIMENSIONS SHOWN.

* INDICATES ELEVATIONS GIVEN TO HEEL OF L

STATE OF OHIO
DEPARTMENT OF HIGHWAYS
BUREAU OF BRIDGES

BEISWENGER & HOCH, Consulting Engineers
AKRON, OHIO

ABUTMENT* 2-L. DETAILS

BRIDGE Nº MAH-18-1197 R & L.
OVER ERIE LACKAWANNA R. R.
I-80 (S.R.-18) MAHONING COUNTY
STA. 629+97.88 To STA. 631+64.46

DESIGNED	DRAWN	TRACED	CHECKED	REVIEWED	DATE	REVISED
JFP	LNP		11/14/64	RSH	1-6-65	

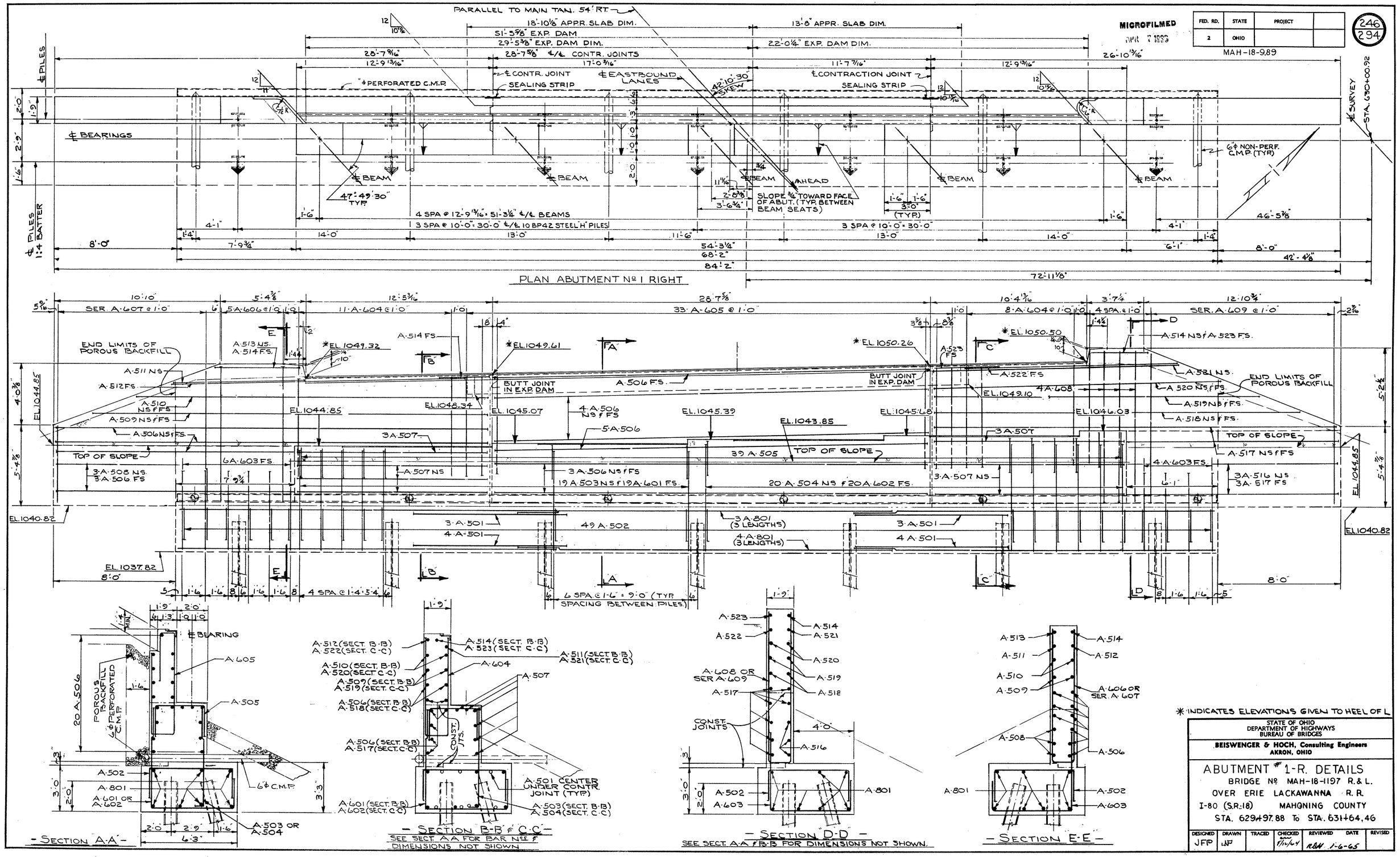

* INDICATES ELEVATIONS GIVEN TO HEEL OF L

STATE OF OHIO
DEPARTMENT OF HIGHWAYS
BUREAU OF BRIDGES

BEISWENGER & HOCH, Consulting Engineers
AKRON, OHIO

ABUTMENT # 1-R. DETAILS
BRIDGE No MAH-18-1197 R. & L.
OVER ERIE LACKAWANNA R. R.
I-80 (S.R. 18) MAHONING COUNTY
STA. 629+97.88 To STA. 631+64.46

DESIGNED	DRAWN	TRACED	CHECKED	REVIEWED	DATE	REVISED
JFP	LAP		8/12/64	RBH	1-6-65	

FED. RD.	STATE	PROJECT	
2	OHIO		

247
294

MAH-18-9.89

MICROFILMED

℄ SURVEY STA. 631+61.42

72'-10⅜"
18'-8 3/16" APPR. SLAB DIM.
51'-3¼" EXP. DAM
23'-10⅛" EXP. DAM DIM.
13'-8⅜" APPR. SLAB DIM.
27'-5⅛" EXP. DAM DIM.
28'-7⅝" ℄/℄ CONTR. JOINTS
17'-0 3/16"
29'-6 1/16"
12'-9 13/16"
11'-7 7/16"
23'-8 11/16"
12'-9 13/16"
42'-10.30" SKEW
12/10⅜
3'-0" LEVEL (TYP)
1'-6" 1'-6"
6"ϕ PERFORATED C.M.P.
6"ϕ NON-PERF. C.M.P.
℄ CONTRACTION JOINT SEALING STRIP
℄ EASTBOUND LANES
℄ BEARINGS
℄ BEAM
SLOPE ¾" TOWARD FACE OF ABUT. (TYP. BETWEEN BEAM SEATS)
AHEAD
2'-8⅜"
℄ PILES
℄ PILES 1:4 BATTER
13'-10 1/2"
10'-0"
2'-0"
2'-9"
1'-6"
42'-7¾"
2'-11½"
1'-6"
3 SPA @ 10'-0" = 30'-0"
4 SPA @ 12'-9 3/16" = 51'-3¼" ℄/℄ BEAMS
3 SPA @ 10'-0" = 30'-0" ℄/℄ 10 BP 42 STEEL 'H' PILES
14'-6" ℄/℄ 6"ϕ PIPE DRAINS
9'-11½"
8'-8⅜"
14'-3"
13'-0"
13'-5"
2'-11½"
9½"
2'-10⅛"
8'-0"
8'-0"
39'-8¼"
54'-3¼"
65'-11"
81'-11"

PLAN ABUTMENT Nº 2 RIGHT

11'-2" | 5'-7" | 12'-2 11/16" | 28'-7⅝" | 10'-4 5/16" | 3'-7⅛" | 9'-8⅝"

8¼" SER. A-611 @ 1'-0" | 1'-0" | 5 A-610 @ 1'-0" | 1'-0" | 6 A-604 @ 1'-0" | 1'-0" | 33 A-605 @ 1'-0" | 1'-0" | 12 A-604 @ 1'-0" | 1'-0" | 4 A-606 @ 1'-0" | SER A-612 @ 1'-0" | 2¾"

A-541 NS
A-542 FS
A-610 OR SER. A-611
A-511 NS
A-528 FS
A-529 FS
A-527 NS & FS
A-526 NS & FS
A-525 NS & FS
A-512 NS
A-525 FS
A-514 NS
A-523 FS
A-521 NS & FS
A-520 NS & FS
A-530 NS & FS
A-606 OR SER. A-612
A-510 NS & FS
A-507 NS
A-512 NS
A-525 FS
A-603 FS
A-507 NS
A-506 NS & FS
A-507 NS
A-503 FS
A-507 NS
A-510 FS
A-603 FS

*EL. 1051.14
*EL. 1051.00
*EL. 1050.71
EL. 1049.66
EL. 1046.52
EL. 1046.53
EL. 1046.53
EL. 1046.33
EL. 1046.22
EL. 1046.22
EL. 1045.22
EL. 1042.19
EL. 1039.19

END LIMITS OF POROUS BACKFILL
BUTT. JOINT IN EXP. DAM
TOP OF SLOPE
4'-4"
5'-5"
EL. 1046.22
4'-0½"
5'-4⅞"
1'-4 5/16"
2"
10"
¾"

3 A-501
4 A-501
48 A-502
3 A-802 (3 LENGTHS)
4 A-802 (3 LENGTHS)
3 A-501
4 A-501
7 A-603 FS
38 A-503 NS & 38 A-601 FS.
38 A-505
5 A-506
4 A-506 NS & FS.
3 SPA @ 1'-6" = 4'-6"
2 SPA @ 1'-6" = 3'-0"
6 SPA @ 1'-6" = 9'-0" (TYP. SPACING BETWEEN PILES)
1'-0" 1'-0" 3½"
8"

— ELEVATION —

*INDICATES ELEVATIONS GIVEN TO HEEL OF ℄

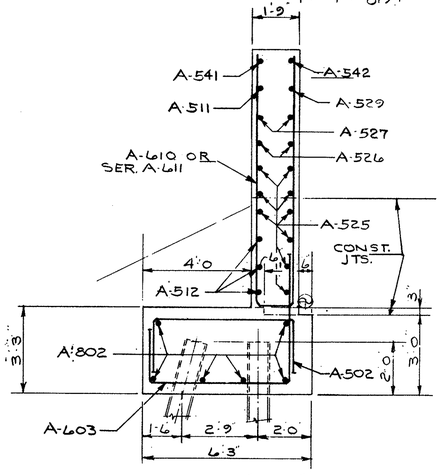

— SECTION "A-A" —

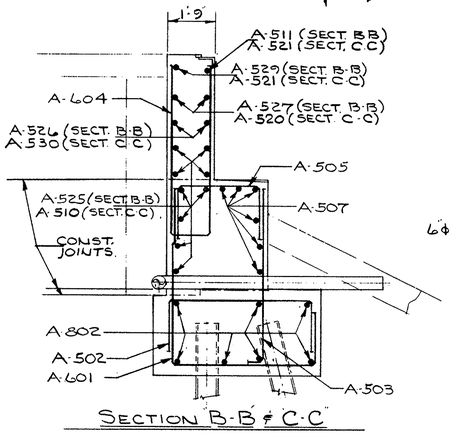

SECTION B-B & C-C

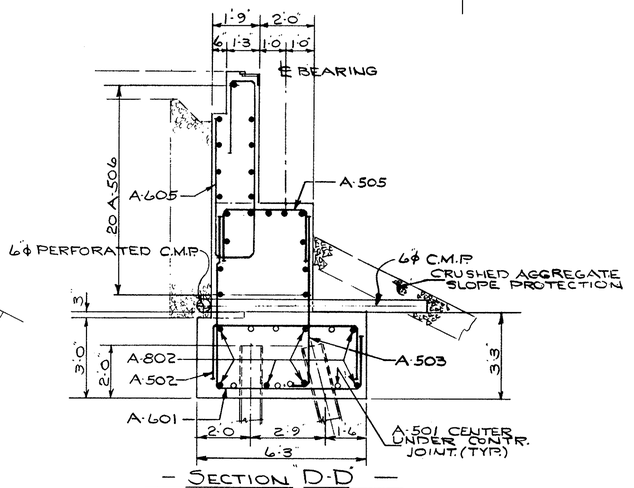

— SECTION "D-D" —

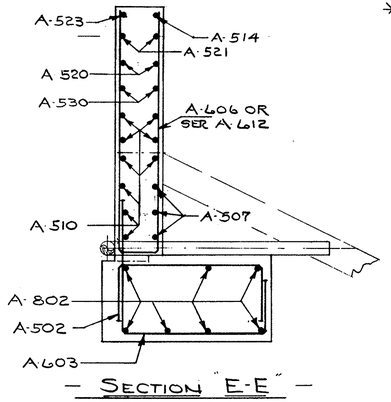

— SECTION "E-E" —

STATE OF OHIO
DEPARTMENT OF HIGHWAYS
BUREAU OF BRIDGES

BEISWENGER & HOCH, Consulting Engineers
AKRON, OHIO

ABUTMENT 2-R DETAILS

BRIDGE Nº MAH-18-1197 R. & L.
OVER ERIE LACKAWANNA R.R.
I-80 (S.R.-18) MAHONING COUNTY
STA. 629+97.88 To STA. 631+64.46

DESIGNED	DRAWN	TRACED	CHECKED	REVIEWED	DATE	REVISED
JFP	LNP		11/17/64	RSH	1-6-65	

MICROFILMED
APR 7 1993

FED. RD.	STATE	PROJECT	
2	OHIO		

248
294

MAH-18-9.89

55'-3" PIER #1 57'-0" PIER #2
3 SPA. @ 12'-9 13/16" = 38'-5 7/16" PIER #1 & #2
2 SPA. @ 12'-10" = 25'-8" P#1 & P#2
25'-3" PIER #1 27'-0" PIER #2
42°-10'-30" SKEW
2'-8 3/8"
℄ PIER
℄ BEAM
℄ W.B. LANES
℄ SURVEY
STA 630+50.42 PIER #1
STA 631+11.92 PIER #2
14'-1½" P#1 15'-0" P#2
17'-1½" P#1 18'-0" P#2
3'-0" 28'-3" P#1 34'-3" P#1 30'-0" P#2 36'-0" P#2 3'-0"
76'-0 5/16" PIER #1 76'-10 1/8" PIER #2

- PLAN - PIER #1 & #2 - LEFT -

PIER #1 EL. 1044.77
PIER #2 EL. 1044.55
PIER #1 EL. 1044.85
PIER #2 EL. 1044.65
PIER #1 EL. 1044.74
PIER #2 EL. 1044.57
PIER #1 EL. 1044.57
PIER #2 EL. 1044.48
PIER #1 EL. 1044.47
PIER #2 EL. 1044.41
PIER #1 EL. 1044.57
PIER #2 EL. 1044.52
9 P-503 @ 1'-0" P#1 & #2
9 P-503 @ 6" P#1 & P#2
7 P-1105 P#1 & P#2
7 P-1103 P#1
7 P-1104 P#2
13 P-502 @ 2'-0" PIER #1
14 P-502 @ 2'-0" PIER #2
P-1105 NS & FS P#1 ONLY
P-607 NS & FS PIER #1
P-608 NS & FS PIER #2
4 P-603 PIER #1 & #2
P-605 NS & FS P#1
P-606 NS & FS P#2
6" P#1 NS & FS P#1
5⅜" P#2 NS & FS P#2
14 P-503 @ 11½" TOP & SER P-504 BOTT PIER #1 & #2
9" SER P-508 BOTT P#1 & #2
SER P-509 BOTT P#1 & #2
13'-6"
13 P-804 NS & FS @ 2'-0" PIER #1
14 P-804 NS & FS @ 2'-0" PIER #2
12 P-802 NS & FS @ 2'-0" PIER #1
13 P-802 NS & FS @ 2'-0" PIER #2
12 P-506 NS & FS
12 P-507 NS & FS
25'-3" PIER #1 27'-0" PIER #2
2" CL (TYP)
P-510
P-804
12 P-506 @ 2'-0" PIER #1
12 P-507 @ 2'-0" PIER #2
12 P-802 NS & FS @ 2'-0" PIER #1
13 P-802 NS & FS @ 2'-0" PIER #2
13 P-804 NS & FS @ 2'-0" PIER #1
14 P-804 NS & FS @ 2'-0" PIER #2
7½" P-1
6" P-2
12 P-510 @ 2'-0"
22'-8" PIER #1
22'-7 7/16" PIER #2
25 P-801 NS & FS @ 1'-0" PIER #1
27 P-801 NS & FS @ 1'-0" PIER #2
2 P-801
2 P-801
9 P-903 PIER #1, 9 P-904 PIER #2
34 P-901 @ 1'-0" PIER #1
36 P-901 @ 1'-0" PIER #2
34'-3" PIER #1
36'-0" PIER #2
PIER #1 EL. 1013.30
PIER #2 EL. 1013.30

- ELEVATION -

P-1103 P#1
P-1104 P#2
P-1105
P-502
P-607 P#1
P-608 P#2
P-605 P#1
P-606 P#2
CONST. JOINT
P-804
P-802
CONSTRUCTION JOINT
P-801
9 P-903 @ 1'-0" P#1
9 P-904 @ 1'-0" P#2
9'-0" TYP

- SECTION A-A -

P-1103 P#1
P-1104 P#2
P-1105
P-503
P-1105 PIER #1 ONLY
P-607 P#1
P-608 P#2
SER P-509 OR SER P-508
P-603

- SECTION B-B -

SER P-504

- SECTION C-C -

SEE SECTION B-B FOR BAR NOS NOT SHOWN

STATE OF OHIO
DEPARTMENT OF HIGHWAYS
BUREAU OF BRIDGES

BEISWENGER & HOCH, Consulting Engineers
AKRON, OHIO

PIER # 1 & # 2 L. DETAILS

BRIDGE No MAH-18-1197 R. & L.
OVER ERIE LACKAWANNA R.R.
I-80 (SR-18) MAHONING COUNTY
STA. 629+97.88 To STA. 631+64.46

DESIGNED	DRAWN	TRACED	CHECKED	REVIEWED	DATE	REVISED
JFP	JNP			BDH	1-6-65	

MICROFILMED
APR 7 1993

FED. RD.	STATE	PROJECT	
2	OHIO		

MAH-18-9.89

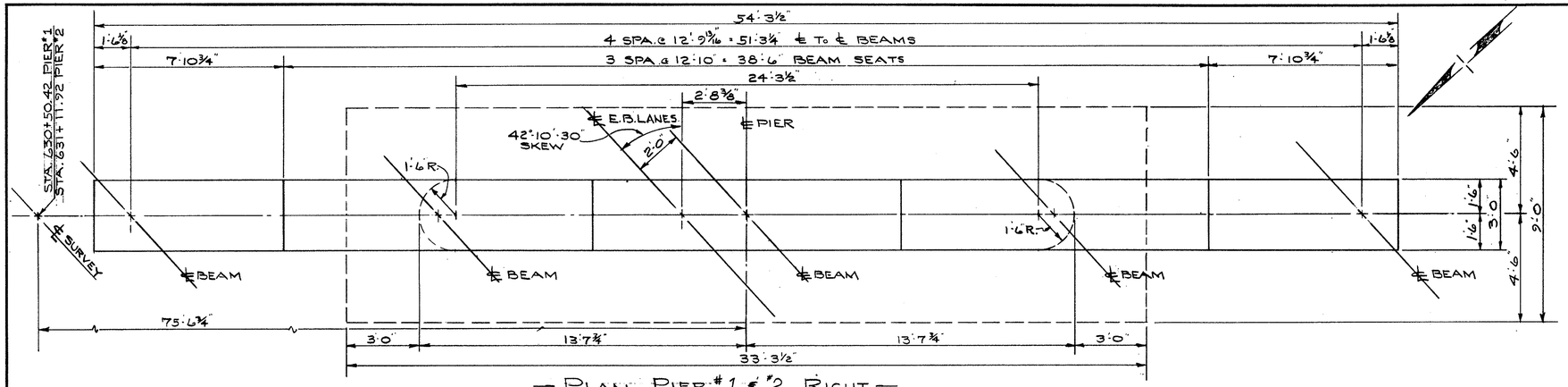

— PLAN PIER #1 & #2 RIGHT —

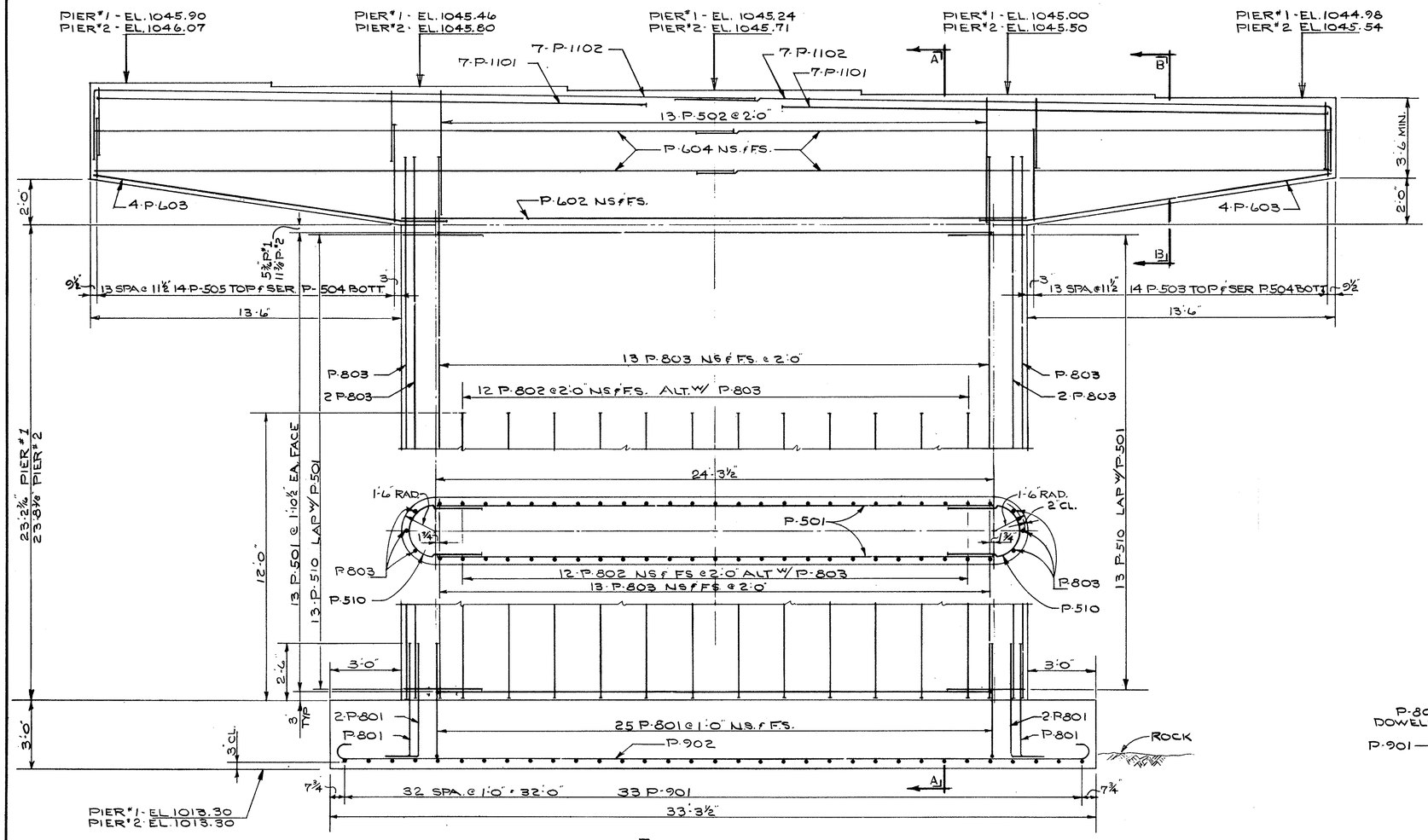

— ELEVATION —

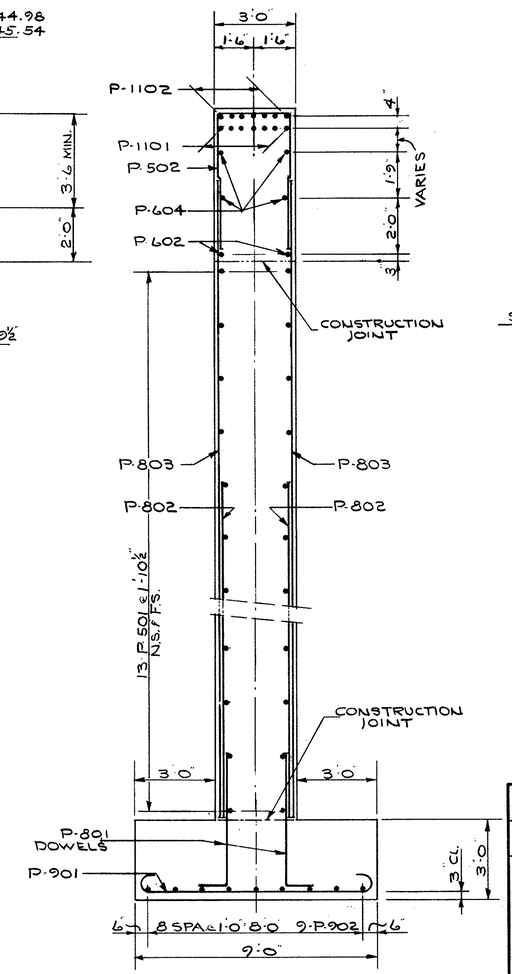

— SECTION "A-A" —

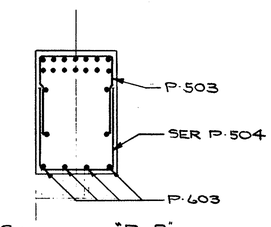

— SECTION "B-B" —

SEE SECTION "A-A" FOR BAR NOS. NOT SHOWN

STATE OF OHIO
DEPARTMENT OF HIGHWAYS
BUREAU OF BRIDGES

BEISWENGER & HOCH, Consulting Engineers
AKRON, OHIO

PIER 1 & 2 R. DETAILS
BRIDGE No. MAH-18-1197 R. & L.
OVER ERIE LACKAWANNA R.R.
I-80 (S.R.-18) MAHONING COUNTY
STA. 629+97.88 To STA. 631+64.46

DESIGNED	DRAWN	TRACED	CHECKED	REVIEWED	DATE	REVISED
JFP	JNP		8/1/64	RDH	1-6-65	

MICROFILMED
APR 7 1989

FED. RD.	STATE	PROJECT	
2	OHIO		

250/294

MAH,-18-9.89

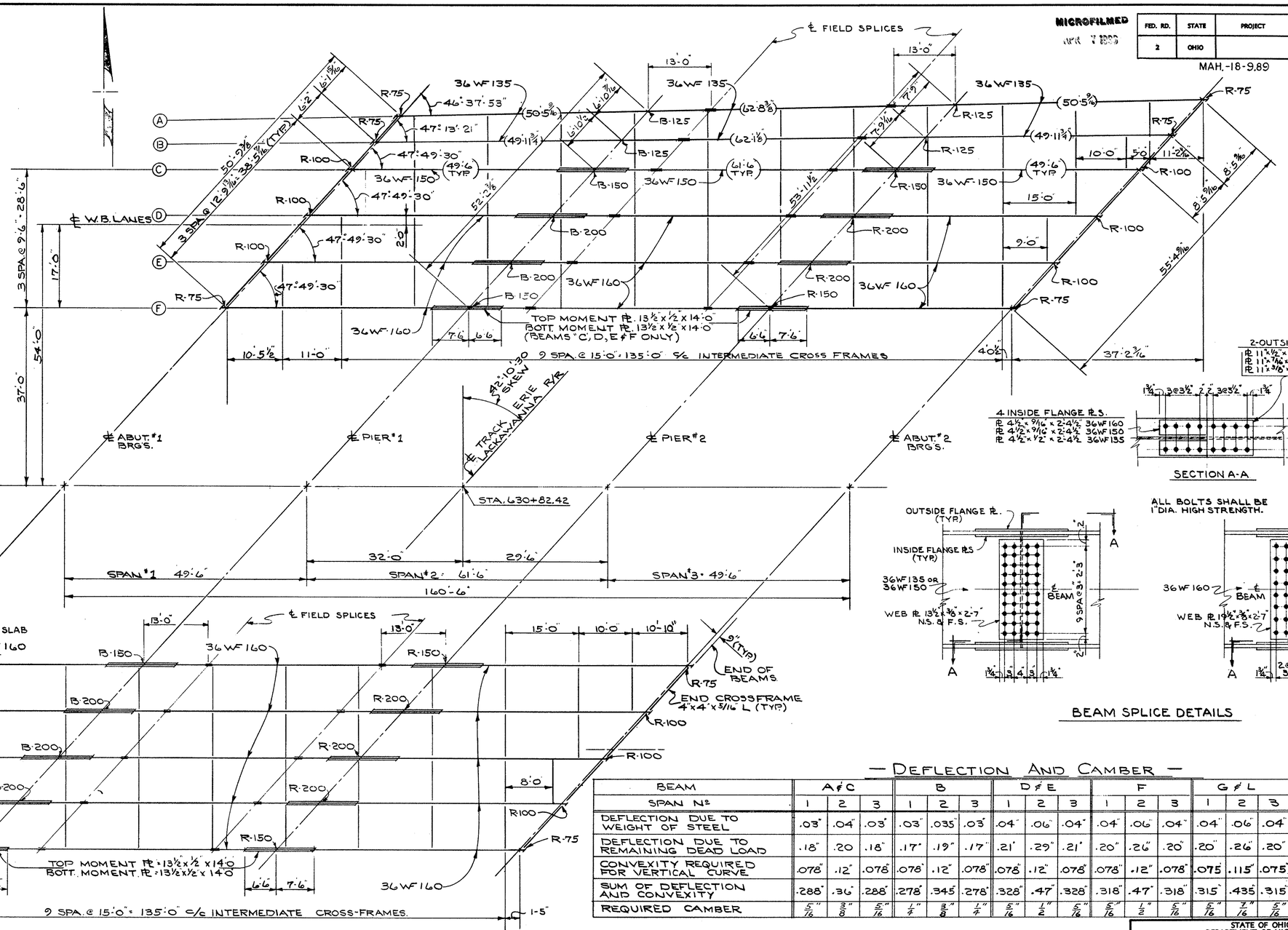

— FRAMING PLAN —

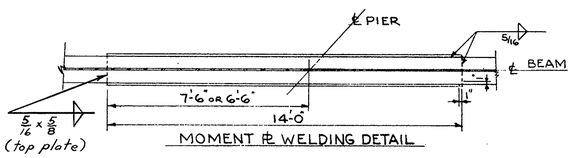

MOMENT ℙ WELDING DETAIL

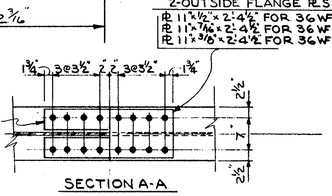

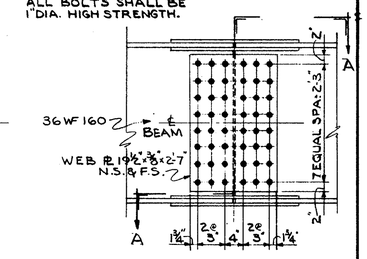

BEAM SPLICE DETAILS

— DEFLECTION AND CAMBER —

BEAM	A & C			B			D & E			F			G & L			H, J & K		
SPAN Nº	1	2	3	1	2	3	1	2	3	1	2	3	1	2	3	1	2	3
DEFLECTION DUE TO WEIGHT OF STEEL	.03"	.04"	.03"	.03"	.035"	.03"	.04"	.06"	.04"	.04"	.06"	.04"	.04"	.06"	.04"	.04"	.06"	.04
DEFLECTION DUE TO REMAINING DEAD LOAD	.18"	.20	.18"	.17"	.19"	.17"	.21"	.29"	.21"	.20"	.26"	.20"	.20"	.26"	.20"	.21"	.29	.21
CONVEXITY REQUIRED FOR VERTICAL CURVE	.078"	.12"	.078"	.078"	.12"	.078"	.078"	.12"	.078"	.078"	.12"	.078"	.075"	.115"	.075"	.075"	.115"	.075"
SUM OF DEFLECTION AND CONVEXITY	.288"	.36"	.288"	.278"	.345"	.278"	.328"	.47"	.328"	.318"	.47"	.318"	.315"	.435"	.315"	.325"	.465"	.325"
REQUIRED CAMBER	5/16"	3/8"	5/16"	1/4"	3/8"	1/4"	5/16"	1/2"	5/16"	5/16"	1/2"	5/16"	5/16"	7/16"	5/16"	5/16"	7/16	5/16"

STATE OF OHIO
DEPARTMENT OF HIGHWAYS
BUREAU OF BRIDGES

BEISWENGER & HOCH, Consulting Engineers
AKRON, OHIO

FRAMING PLAN

BRIDGE Nº MAH-18-1197 R. & L.
OVER ERIE LACKAWANNA R.R.
I-80 (S.R.-18) MAHONING COUNTY
STA. 629+97.88 To STA. 631+64.46

DESIGNED	DRAWN	TRACED	CHECKED	REVIEWED	DATE	REVISED
JFP	LMP		8/17/64	ROH	1-6-65	

MICROFILMED
MAR 7 1990

FED. RD.	STATE	PROJECT	
2	OHIO		

MAH-18-9.89

251
294

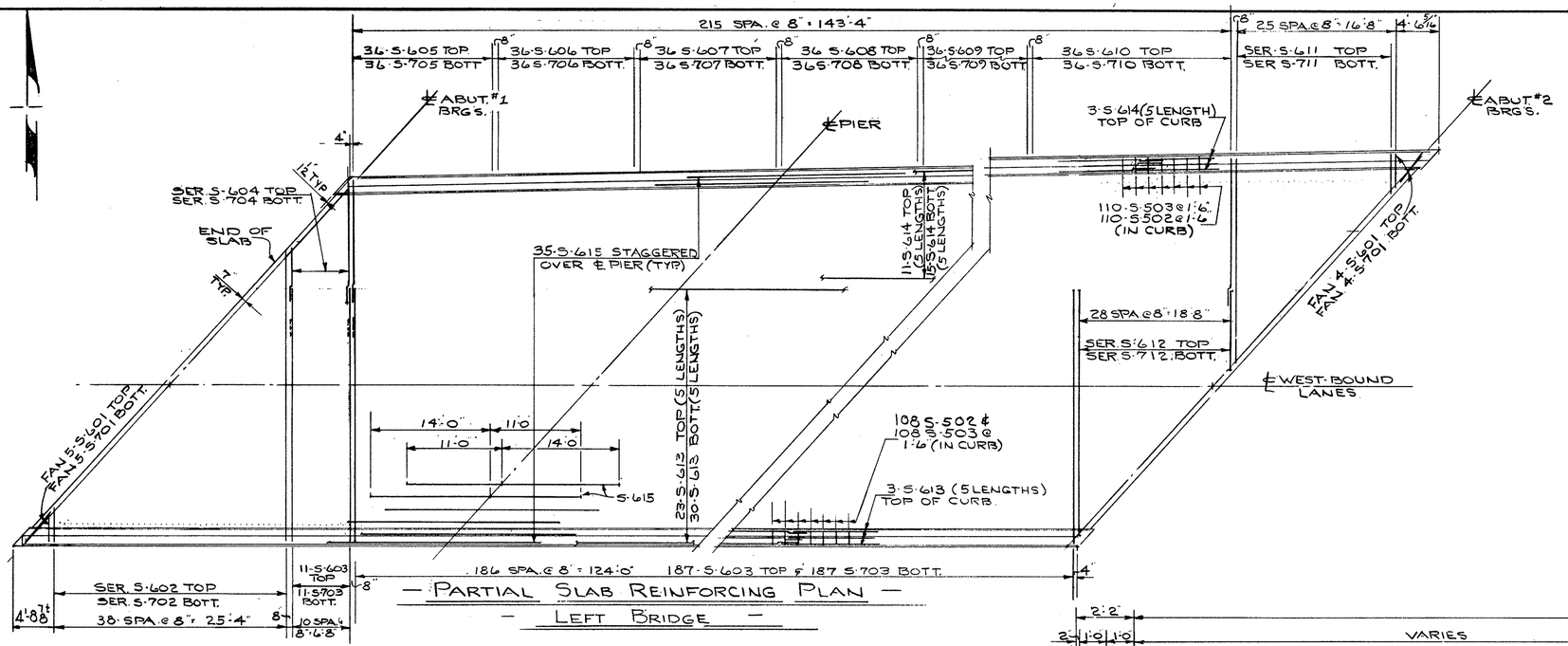

— PARTIAL SLAB REINFORCING PLAN —
— LEFT BRIDGE —

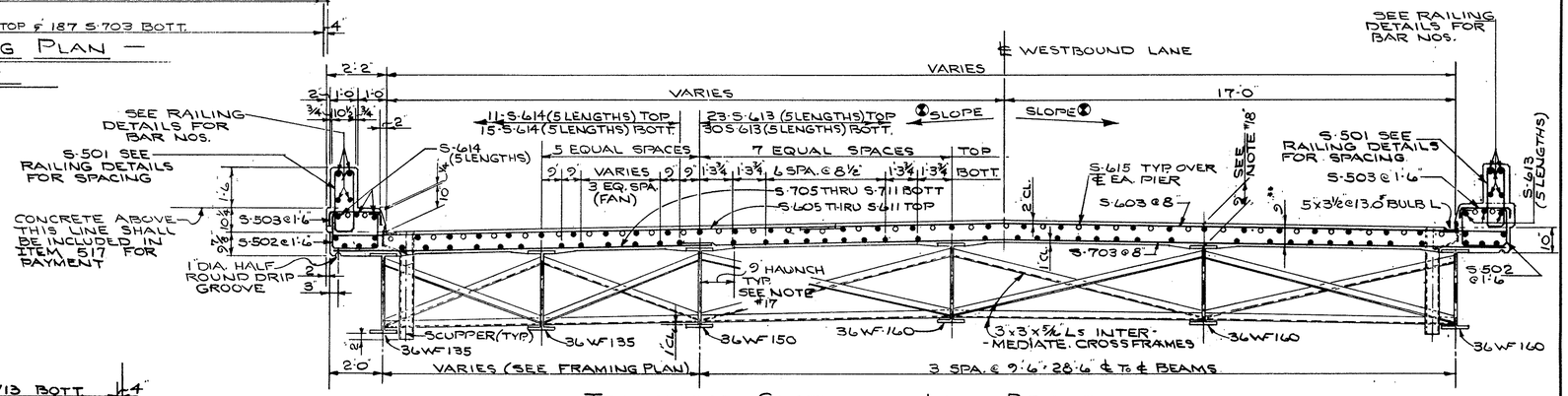

— TRANSVERSE SECTION — LEFT BRIDGE —
NORTH — SOUTH

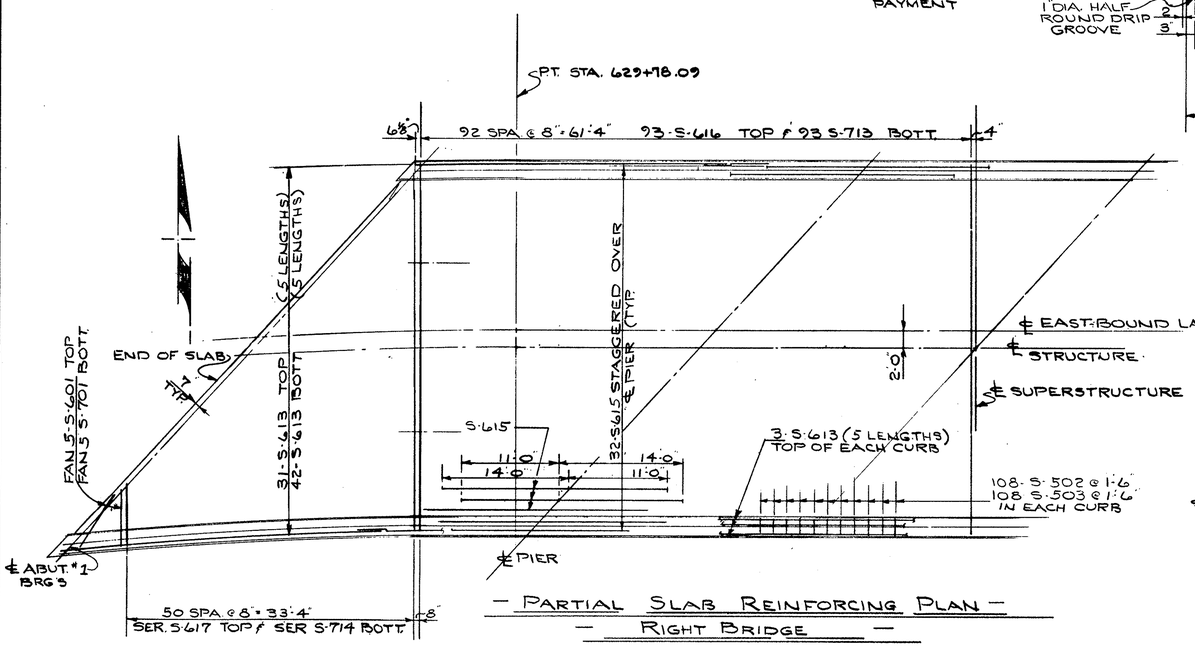

— PARTIAL SLAB REINFORCING PLAN —
— RIGHT BRIDGE —

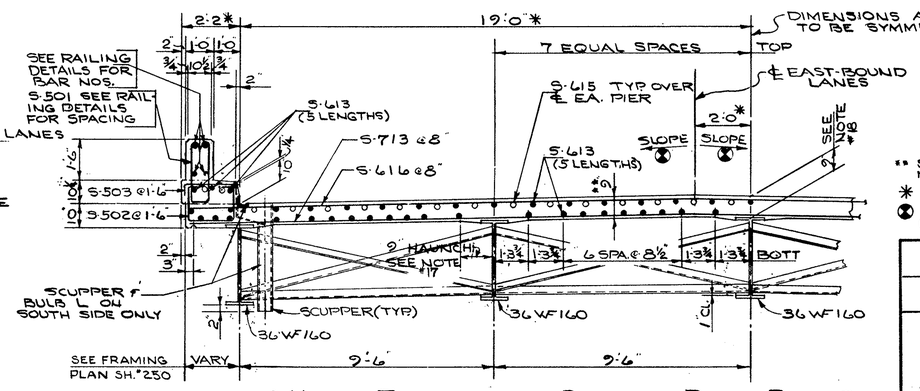

— HALF TRANSVERSE SECTION — RIGHT BRIDGE —
NORTH — SOUTH

** SLAB THICKNESS SHOWN INCLUDES 1" FOR MONOLITHIC WEARING SURFACE.
* INDICATES RADIAL DIMENSIONS
SEE PLAN SKETCH SHEET Nº 242 FOR ROADWAY SLOPE

STATE OF OHIO
DEPARTMENT OF HIGHWAYS
BUREAU OF BRIDGES

BEISWENGER & HOCH, Consulting Engineers
AKRON, OHIO

SLAB DETAILS

BRIDGE Nº MAH-18-1197 R.& L.
OVER ERIE LACKAWANNA R.R.
I-80 (SR-18) MAHONING COUNTY
STA. 629+97.88 To STA. 631+64.46

DESIGNED	DRAWN	TRACED	CHECKED	REVIEWED	DATE	REVISED
JFP	JNP		11/1/64	BBH	1-6-65	

FED. RD.	STATE	PROJECT	
2	OHIO		

252
294

MAH-18-9.89

MICROFILMED
APR 7 1966

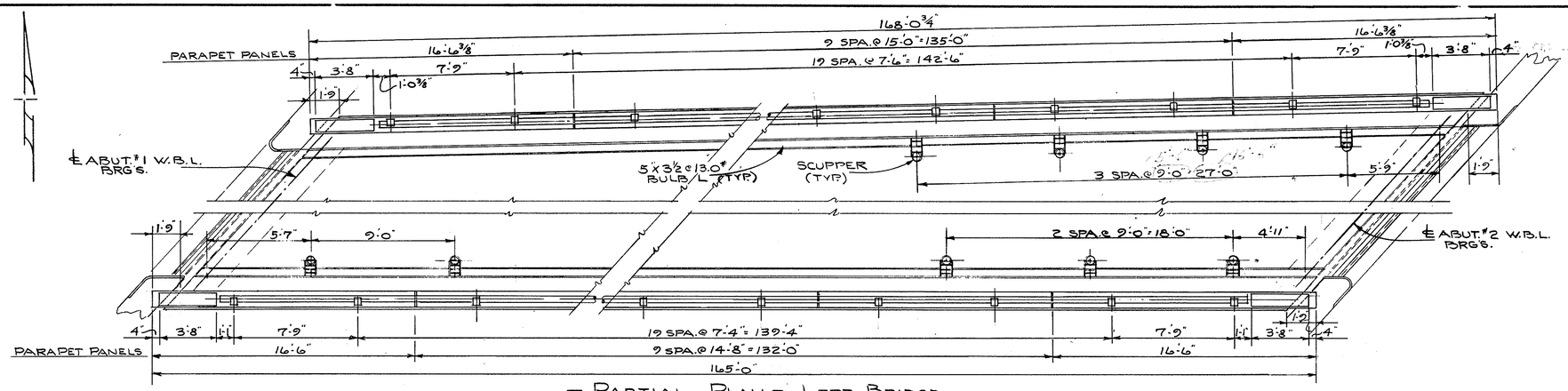

— PARTIAL PLAN — LEFT BRIDGE —

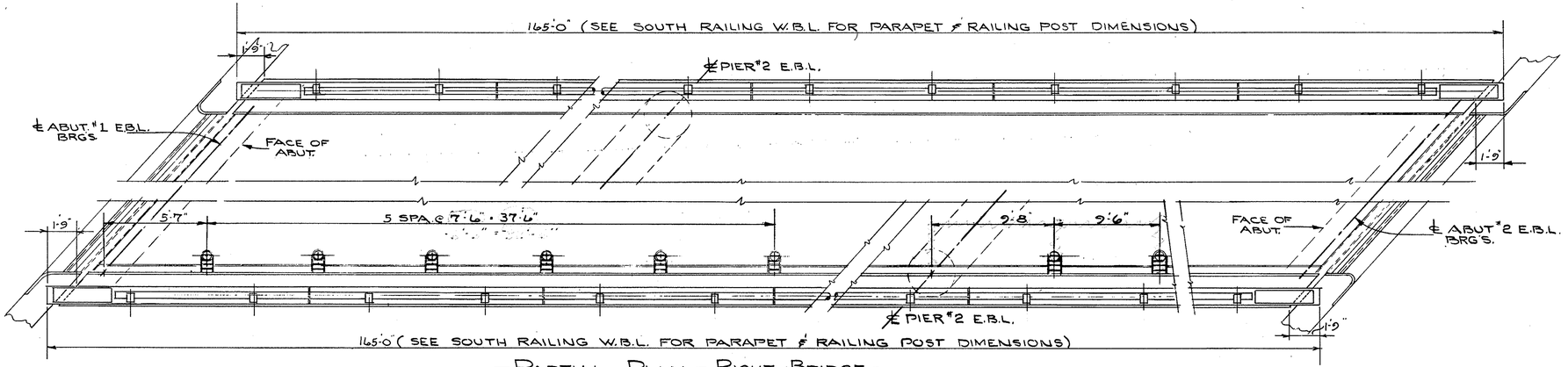

— PARTIAL PLAN — RIGHT BRIDGE —

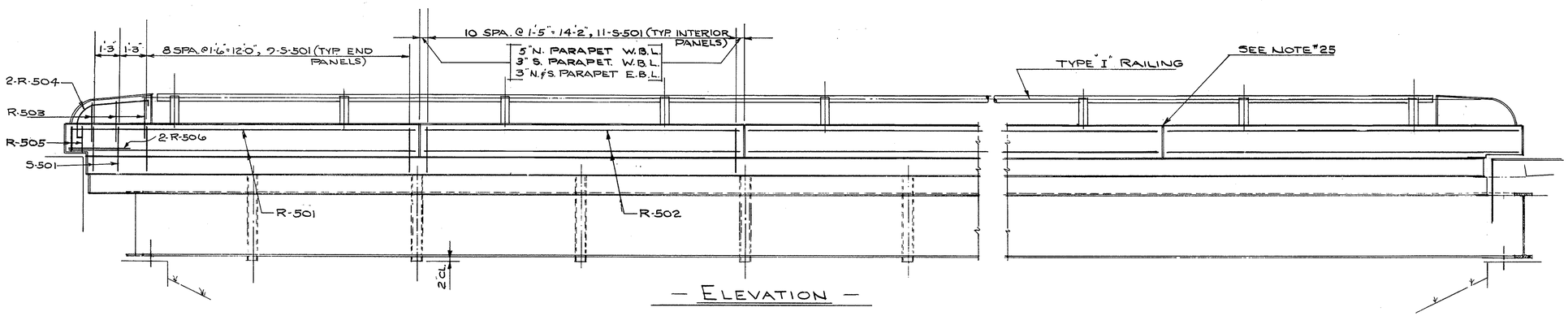

— ELEVATION —

STATE OF OHIO
DEPARTMENT OF HIGHWAYS
BUREAU OF BRIDGES

BEISWENGER & HOCH, Consulting Engineers
AKRON, OHIO

RAILING & DRAINAGE
BRIDGE No. MAH-18-1197 R.&L.
OVER ERIE LACKAWANNA R.R.
I-80 (S.R.-18) MAHONING COUNTY
STA. 629+97.88 To STA. 631+64.46

DESIGNED	DRAWN	TRACED	CHECKED	REVIEWED	DATE	REVISED
JFP	JNP		1/14/64	RDH	1-6-65	

FED. RD.	STATE	PROJECT	
2	OHIO		

MAH-18-9.89

253
294

MICROFILMED
APR 7 1993

MARK	NO. REQ'D	LENGTH	TYPE	DIMENSIONS A	B	C	D	SERIES INCREMENTS	WEIGHT LBS.
PIERS #1 & #2 - RIGHT									
P-501	52	24'-3"	ST.						1315
P-502	26	11'-5"	3	2'-8"	4'-6"				310
P-503	28	8'-5"	3	2'-8"	3'-0"				246
SERIES OF P-504	4 SETS OF 14 BARS	6'-3" TO 10'-7" @ 4" INC.	3	2'-8"	1'-11" TO 4'-1"			2"	492
P-505	28	10'-3"	3	2'-8"	3'-11"				299
P-506	—	—	—						—
P-507	—	—	—						—
SERIES OF P-508	—	—	—						—
SERIES OF P-509	—	—	—						—
P-510	52	7'-2"	9	1'-7"	3'-10"	1'-3"			389
P-601	0	PEN							
P-602	4	27'-3"	ST.						164
P-603	16	15'-6"	12	2'-0"	13'-6"	2'-0"			372
P-604	16	28'-0"	ST.						673
P-801	112	6'-1"	1	1'-0"	5'-2"				1819
P-802	48	12'-0"	ST.						1538
P-803	64	26'-6"	ST.						4528
P-901	66	11'-0"	2	1'-3"	8'-6"				2468
P-902	18	35'-4"	2	1'-3"	32'-10"				2162
P-1101	28	24'-0"	ST.						3570
P-1102	28	31'-8"	1	3'-2"	28'-9"				4711
PIERS #1 & #2 - RIGHT TOTAL ——— 25,056 LBS.									
PIERS #1 & #2 - LEFT									
P-501	—	—	—						—
P-502	27	11'-5"	3	2'-8"	4'-6"				322
P-503	64	8'-5"	3	2'-8"	3'-0"				562
SERIES OF P-504	2 SETS OF 14 BARS	6'-3" TO 10'-7" @ 4" INC.	3	2'-8"	1'-11" TO 4'-1"			2"	246
P-505	—	—	—						—
P-506	24	25'-3"	ST.						632
P-507	24	27'-0"	ST.						676
SERIES OF P-508	2 SETS OF 9 BARS	6'-9" TO 9'-1" @ 3½" INC.	3	2'-8"	2'-8" TO 3'-4"			1¾"	149
SERIES OF P-509	2 SETS OF 9 BARS	9'-5" TO 10'-9" @ 2" INC.	3	2'-8"	3'-6" TO 4'-2"			1"	189
P-510	48	7'-2"	9	1'-7"	3'-10"	1'-3"			359
P-601	0	PEN							
P-602	—	—	—						—
P-603	16	15'-6"	12	2'-0"	13'-6"	2'-0"			373
P-604	—	—	—						—
P-605	2	27'-11"	ST.						84
P-606	2	29'-8"	ST.						89
P-607	8	28'-6"	ST.						342
P-608	8	29'-4"	ST.						352

MARK	NO. REQ'D	LENGTH	TYPE	DIMENSIONS A	B	C	D	SERIES INCREMENTS	WEIGHT LBS.
PIERS #1 & #2 - LEFT (CONT'D.)									
P-801	120	6'-1"	1	1'-0"	5'-2"				1949
P-802	50	12'-0"	ST.						1602
P-803	—	—	—						—
P-804	70	25'-6"	ST.						4766
P-901	70	11'-0"	2	1'-3"	8'-6"				2618
P-902	—	—	—						—
P-903	9	36'-3"	2	1'-3"	33'-9"				1109
P-904	9	38'-0"	2	1'-3"	35'-6"				1163
P-1101	—	—	—						—
P-1102	—	—	—						—
P-1103	14	32'-2"	1	3'-2"	29'-3"				2393
P-1104	14	33'-0"	1	3'-2"	30'-1"				2455
P-1105	30	25'-0"	ST.						3985
PIERS #1 & #2 LEFT - TOTAL ——— 26,415 LBS.									
SLAB (RIGHT BRIDGE)									
S-501	242	5'-7"	5	8"	2'-2"	5"			1408
S-502	216	4'-11"	15	1'-6"	1'-4"	7½"			1108
S-503	216	2'-6"	3	1'-6"	7'-2"				563
S-601	10	4'-2"	ST.						63
S-602	—	—	—						—
S-603	—	—	—						—
S-604	—	—	—						—
S-605	—	—	—						—
S-606	—	—	—						—
S-607	—	—	—						—
S-608	—	—	—						—
S-609	—	—	—						—
S-610	—	—	—						—
S-611	—	—	—						—
S-612	—	—	—						—
S-613	395	33'-11"	ST.						20,122
S-614	—	—	—						—
S-615	64	25'-0"	ST.						2403
S-616	186	41'-8"	ST.						11,641
SERIES OF S-617	2 SETS OF 51 BARS	4'-8" TO 41'-7¾"	ST.					8⅞"	3548
S-701	10	4'-2"	ST.						85
S-702	—	—	—						—
S-703	—	—	—						—
S-704	—	—	—						—
S-705	—	—	—						—
S-706	—	—	—						—
S-707	—	—	—						—
S-708	—	—	—						—
S-709	—	—	—						—
S-710	—	—	—						—
S-711	—	—	—						—
S-712	—	—	—						—
S-713	186	41'-8"	ST.						15,841
SERIES OF S-714	1 SET OF 51 BARS	4'-8" TO 41'-7¾"	ST.					8⅞"	2415
SLAB (RIGHT BRIDGE) TOTAL ——— 59,197 LBS.									

MARK	NO. REQ'D	LENGTH	TYPE	DIMENSIONS A	B	C	D	SERIES INCREMENTS	WEIGHT LBS.
SLAB (LEFT BRIDGE)									
S-501	242	5'-7"	5	8"	2'-2"	5"			1408
S-502	218	4'-11"	15	1'-6"	1'-4"	7½"			1118
S-503	218	2'-6"	3	1'-6"	7'-2"				568
S-601	9	4'-2"	ST.						56
SERIES OF S-602	1 SET OF 39 BARS	4'-10½" TO 33'-0"	ST.					8⅞"	1109
S-603	198	26'-7"	ST.						7906
SERIES OF S-604	1 SET OF 11 BARS	8'-11" TO 16'-3¾"	ST.					8⅞"	208
S-605	36	17'-2"	ST.						928
S-606	36	17'-8"	ST.						955
S-607	36	18'-2"	ST.						982
S-608	36	18'-8"	ST.						1009
S-609	36	19'-2"	ST.						1036
S-610	36	19'-8"	ST.						1063
SERIES OF S-611	1 SET OF 26 BARS	4'-7⅜" To 22'-7"	ST.					8⅝"	531
SERIES OF S-612	1 SET OF 29 BARS	5'-11" TO 18'-0"	ST.					8⅞"	521
S-613	280	33'-11"	ST.						14,264
S-614	145	34'-7"	ST.						7532
S-615	70	25'-0"	ST.						2628
S-701	9	4'-2"	ST.						77
SERIES OF S-702	1 SET OF 39 BARS	4'-10½" TO 33'-0"	ST.					8⅞"	1510
S-703	198	31'-6"	ST.						12748
SERIES OF S-704	1 SET OF 11 BARS	4'-4" TO 11'-8¾"	ST.					8⅞"	181
S-705	36	12'-7"	ST.						926
S-706	36	13'-1"	ST.						963
S-707	36	13'-7"	ST.						1000
S-708	36	14'-1"	ST.						1036
S-709	36	14'-7"	ST.						1073
S-710	36	15'-1"	ST.						1110
SERIES OF S-711	1 SET OF 26 BARS	4'-7⅜" TO 22'-7"	ST.					8⅝"	723
SERIES OF S-712	1 SET OF 29 BARS	10'-6" TO 31'-2½"	ST.					8⅞"	1236
SLAB (LEFT BRIDGE) TOTAL ——— 66,405 LBS.									

TOTAL - THIS SHEET = 177,073 LBS

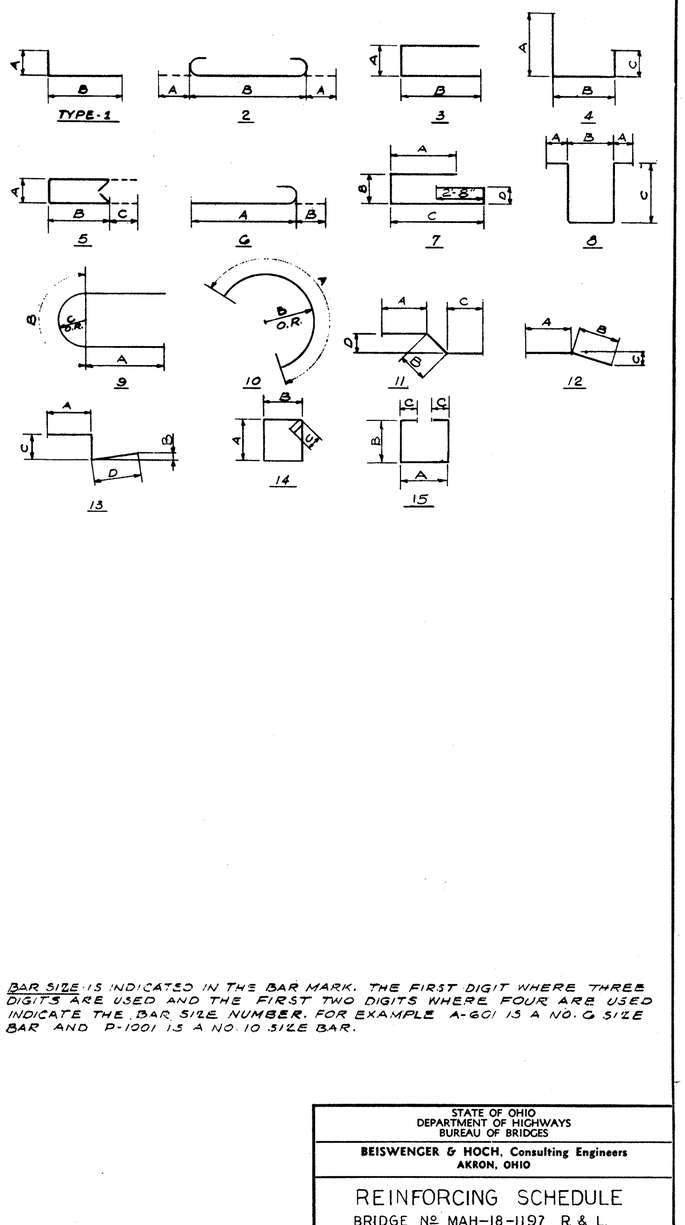

BAR SIZE IS INDICATED IN THE BAR MARK. THE FIRST DIGIT WHERE THREE DIGITS ARE USED AND THE FIRST TWO DIGITS WHERE FOUR ARE USED INDICATE THE BAR SIZE NUMBER. FOR EXAMPLE A-601 IS A NO. 6 SIZE BAR AND P-1001 IS A NO. 10 SIZE BAR.

STATE OF OHIO
DEPARTMENT OF HIGHWAYS
BUREAU OF BRIDGES

BEISWENGER & HOCH, Consulting Engineers
AKRON, OHIO

REINFORCING SCHEDULE

BRIDGE No. MAH-18-1197 R. & L.
OVER ERIE LACKAWANNA R.R.
I-80 (SR 18) MAHONING COUNTY
STA. 629+97.88 To STA. 631+64.46

DESIGNED	DRAWN	TRACED	CHECKED	REVIEWED	DATE	REVISED
JFP	LAF		GW 9/16/64	RBM	1-6-65	

MICROFILMED APR 7 1969

FED. RD.	STATE	PROJECT	
2	OHIO		

254/294

MAH-18-9.89

MARK	NO. REQ'D	LENGTH	TYPE	DIMENSIONS A	B	C	D	SERIES INCRE. MENTS	WEIGHT LBS.
ABUTMENT #1 & #2 - RIGHT.									
A-501	28	10'-0"	ST.						292
A-502	97	9'-2"	3	5'-5"	2'-0"				927
A-503	57	7'-0"	1	6"	6'-7"				416
A-504	20	7'-7"	1	6"	7'-2"				158
A-505	77	7'-2"	3	3'-5"	2'-0"				576
A-506	49	28'-3"	ST.						1444
A-507	27	12'-6"	ST.						352
A-508	3	17'-8"	ST.						55
A-509	2	25'-10"	ST.						54
A-510	11	23'-4"	ST.						268
A-511	2	20'-5"	ST.						43
A-512	4	18'-8"	ST.						78
A-513	1	4'-10"	ST.						5
A-514	4	3'-6"	ST.						15
A-515	—	—	—						—
A-516	3	15'-6"	ST.						49
A-517	7	26'-7"	ST.						194
A-518	2	23'-9"	ST.						50
A-519	2	21'-5"	ST.						45
A-520	4	18'-10"	ST.						79
A-521	3	16'-5"	ST.						51
A-522	1	14'-1"	ST.						15
A-523	3	4'-6"	ST.						14
A-524	1	2'-8"	ST.						3
A-525	9	29'-2"	ST.						274
A-526	2	26'-4"	ST.						55
A-527	2	23'-9"	ST.						50
A-528	1	8'-6"	ST.						9
A-529	1	13'-7"	ST.						14
A-530	2	21'-2"	ST.						44
A-541	1	5'-1"	ST.						5
A-542	1	3'-11"	ST.						4
A-601	57	13'-11"	4	6'-7"	5'-5"	2'-2"			1191
A-602	20	14'-6"	4	7'-2"	5'-5"	2'-2"			436
A-603	20	12'-7"	4	5'-3"	5'-5"	2'-2"			378
A-604	37	14'-2"	3	1'-5"	6'-6"				787
A-605	66	16'-2"	7	5'-2"	1'-5"	6'-6"	11"		1603
A-606	9	18'-10"	3	1'-5"	8'-10"				255
SERIES OF A-607	1 SET OF 11 BARS	11'-2" TO 18'-8" @ 9" INC.	3	1'-5"	5'-0" TO 8'-9"			4½	246
A-608	4	21'-6"	3	1'-5"	10'-2"				129
SERIES OF A-609	1 SET OF 13 BARS	11'-2" TO 20'-11" @ 9¾ INC.	3	1'-5"	5'-0" TO 9'-10½"			4⅜"	313
A-610	5	19'-8"	3	1'-5"	9'-3"				148
SERIES OF A-611	1 SET OF 11 BARS	11'-6" TO 19'-0" @ 9" INC.	3	1'-5"	5'-2" TO 8'-11"			4½"	252
SERIES OF A-612	1 SET OF 10 BARS	11'-2" TO 18'-8" @ 10" INC.	3	1'-5"	5'-0" TO 8'-9"			5"	224
A-801	21	24'-4"	ST.						1364
A-802	21	23'-8"	ST.						1327
ABUTMENT Nº 1 & 2 - RIGHT, TOTAL - - - - - - - - - - 14,292 LBS.									
ABUTMENT #1 & #2 - LEFT.									
A-501	28	10'-0"	ST.						292
A-502	94	9'-2"	3	5'-5"	2'-0"				899
A-503	78	7'-0"	1	6"	6'-7"				569
A-504	—	—	—						—
A-505	78	7'-2"	3	3'-5"	2'-0"				583
A-506	29	28'-3"	ST.						854
A-507	9	12'-6"	ST.						118
A-508	5	17'-8"	ST.						92
A-509	2	25'-10"	ST.						54
A-510	11	23'-4"	ST.						268
A-511	1	20'-5"	ST.						21

MARK	NO. REQ'D	LENGTH	TYPE	DIMENSIONS A	B	C	D	SERIES INCRE. MENTS	WEIGHT LBS.
ABUTMENT #1 & #2 - LEFT (CONT'D.)									
A-512	1	18'-8"	ST.						20
A-513	1	4'-10"	ST.						5
A-514	3	3'-6"	ST.						11
A-515	6	12'-0"	ST.						75
A-516	—	—	—						—
A-517	18	26'-7"	ST.						499
A-518	2	23'-9"	ST.						50
A-519	2	21'-5"	ST.						45
A-520	1	18'-10"	ST.						20
A-521	—	—	—						—
A-522	—	—	—						—
A-523	1	4'-6"	ST.						5
A-524	—	—	—						—
A-525	—	—	—						—
A-526	—	—	—						—
A-527	—	—	—						—
A-528	1	8'-6"	ST.						9
A-529	5	13'-7"	ST.						71
A-530	—	—	—						—
A-531	2	22'-6"	ST.						47
A-532	2	20'-4"	ST.						43
A-533	8	15'-4"	ST.						128
A-534	20	30'-9"	ST.						641
A-535	6	11'-2"	ST.						70
A-536	3	17'-6"	ST.						55
A-537	2	23'-10"	ST.						50
A-538	2	21'-2"	ST.						44
A-539	1	6'-5"	ST.						6
A-540	1	14'-0"	ST.						15
A-541	1	5'-1"	ST.						5
A-542	3	3'-11"	ST.						12
A-543	1	15'-10"	ST.						17
A-601	78	13'-11"	4	6'-7"	5'-5"	2'-2"			1630
A-602	—	—	—						—
A-603	16	12'-7"	4	5'-3"	5'-5"	2'-2"			302
A-604	34	14'-2"	3	1'-5"	6'-6"				723
A-605	74	16'-2"	7	5'-2"	1'-5"	6'-6"	11"		1797
A-606	8	18'-10"	3	1'-5"	8'-10"				226
SERIES OF A-607	—	—	—						—
A-608	—	—	—						—
SERIES OF A-609	—	—	—						—
A-610	4	19'-8"	3	1'-5"	9'-3"				118
SERIES OF A-611	—	—	—						—
SERIES OF A-612	—	—	—						—
SERIES OF A-613	1 SET OF 11 BARS	11'-8" TO 18'-9" @ 8½ INC.	3	1'-5"	5'-3" TO 8'-9½"			4¼"	251
SERIES OF A-614	2 SETS OF 10 + 20 BARS	11'-4" TO 18'-10" @ 10" INC.	3	1'-5"	5'-1" TO 8'-10"			5"	453
A-615	5	18'-10"	3	1'-5"	8'-10"				141
SERIES OF A-616	1 SET OF 10 BARS	11'-6" TO 18'-3" @ 9" INC.	3	1'-5"	5'-2" TO 8'-6½"			4½"	223
A-801	—	—	—						—
A-802	—	—	—						—
A-803	21	24'-1"	ST.						1350
A-804	21	24'-7"	ST.						1378
ABUTMENT Nº 1 & 2 - LEFT, TOTAL - - - - - - - - - - 14,285 LBS.									

MARK	NO. REQ'D	LENGTH	TYPE	DIMENSIONS A	B	C	D	SERIES INCRE. MENTS	WEIGHT LBS.

RAILING ⊛

R-501	32	16'-1"	ST.			
R-502	144	14'-4"	ST.			
R-503	24	4'-2"	15			
R-504	16	5'-4"	16			
R-505	16	3'-5"	5	8"	1'-1"	
R-506	16	3'-0"	ST.			

REPLACEMENT BARS

RE-501	2	5'-7"				
RE-601	5	5'-11"				
RE-701	3	6'-3"				
RE 801	2	6'-6"				
RE 901	1	6'-10"				
RE-1101	1	7'-6"				

GRAND TOTAL 205,650 LBS

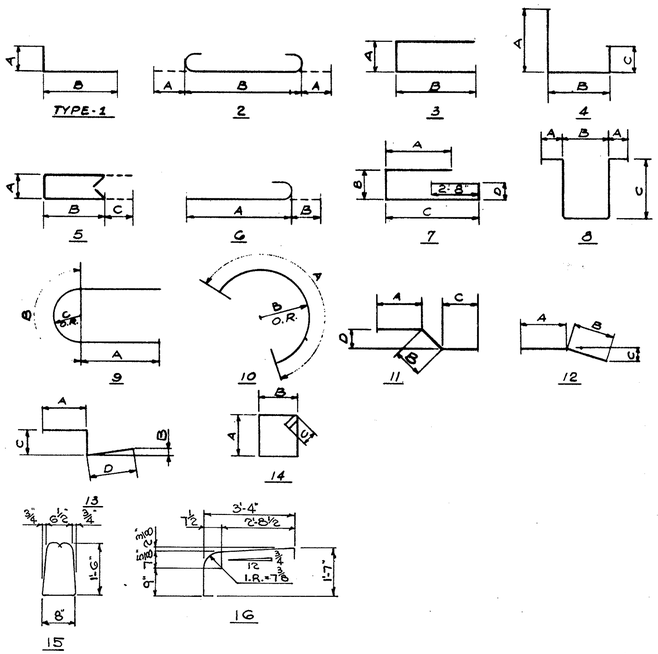

BAR SIZE IS INDICATED IN THE BAR MARK. THE FIRST DIGIT WHERE THREE DIGITS ARE USED AND THE FIRST TWO DIGITS WHERE FOUR ARE USED INDICATE THE BAR SIZE NUMBER. FOR EXAMPLE A-601 IS A NO. 6 SIZE BAR AND P-1001 IS A NO 10 SIZE BAR.

⊛ RAILING REINFORCEMENT BARS WILL BE INCLUDED AS PART OF ITEM 517 FOR PAYMENT

STATE OF OHIO
DEPARTMENT OF HIGHWAYS
BUREAU OF BRIDGES

BEISWENGER & HOCH, Consulting Engineers
AKRON, OHIO

REINFORCING SCHEDULE

BRIDGE Nº MAH-18-1197 R. & L.
OVER ERIE LACKAWANNA R.R.
I-80 (S.R.18) MAHONING COUNTY
STA. 629+97.88 To STA. 631+64.46

DESIGNED	DRAWN	TRACED	CHECKED	REVIEWED	DATE	REVISED
JFP	NP		EWH	RBH	1-6-65	

FED. RD.	STATE	PROJECT	
2	OHIO		

255
294

MAH-18-9.89

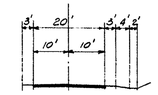

TYPICAL SECTION
EXISTING S.R.-46

MICROFILMED
APR 7 1969

FOUNDATION SOUNDINGS

FOUNDATION DESIGN AND FOUNDATION QUANTITIES ARE BASED ON A STUDY OF SOIL-SAMPLING SOUNDINGS MADE AT THE SITE. THIS SOUNDING INFORMATION MAY BE INSPECTED IN THE OFFICE OF THE BUREAU OF BRIDGES IN COLUMBUS OR IN THE DIVISION OFFICE, BUT THE STATE DOES NOT GUARANTEE THE ACCURACY THEREOF.

PROPOSED STRUCTURE

TYPE: CONTINUOUS STEEL GIRDERS WITH REINFORCED CONCRETE DECK AND SUBSTRUCTURE.
SKEW: 1°-22'-00" LF.
SPAN: 53'-0" - 81'-6" - 94'-9" - 61'-6" ℄ BEARINGS.
ROADWAY: 65'-0" ℄ PARAPETS - 2'-0" MEDIAN.
LOAD FREQUENCY: CF 2,000 (57) ADEQUATE FOR A.A.S.H.O. ALTERNATE LOADING.
WEARING SURFACE: 1" MONOLITH/C.
APPROACH SLAB: 25' LONG (AS-1-54)
ALIGNMENT: STRAIGHT
SUPERELEVATION: NONE
SLOPE PROTECTION: GO\ CRUSHED AGGREGATE

TRAFFIC COUNT: NORTH - 6,160 ADT 1975
SOUTH - 13,330 ADT 1975

STATE OF OHIO
DEPARTMENT OF HIGHWAYS
BUREAU OF BRIDGES

BEISWENGER & HOCH, Consulting Engineers
AKRON, OHIO

SITE PLAN

BRIDGE NO. MAH-18-1246
I-80 (S.R. 18) UNDER S.R. 46
MAHONING COUNTY
STA 656+85.29

DESIGNED	DRAWN	TRACED	CHECKED	REVIEWED	DATE	REVISED
JFP	KENESSY ROSE		HGH	EBH	1/4/65	

CURVE DATA
RAMP "E"

Δ = 7°-00'-00"
Dc = 1°-30'
R = 3819.72'
T = 233.62'
L = 466.67'
PC = 0+00 (78' LT. I-80 STA. 658+33.08)

AVERAGE ESTIMATED PAY LENGTH FOR 10BP42 PILES
ABUTMENT #1 = 15'

MICROFILMED
APR 7 1966

FED. RD.	STATE	PROJECT	
2	OHIO		

MAH-18-9.89

256
294

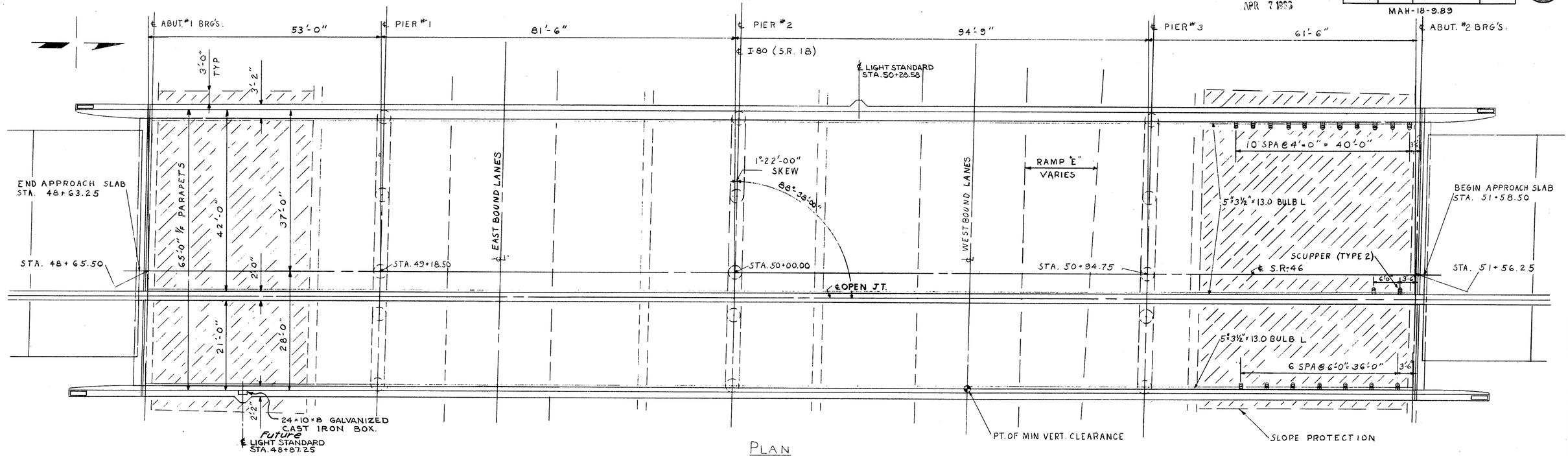

PLAN

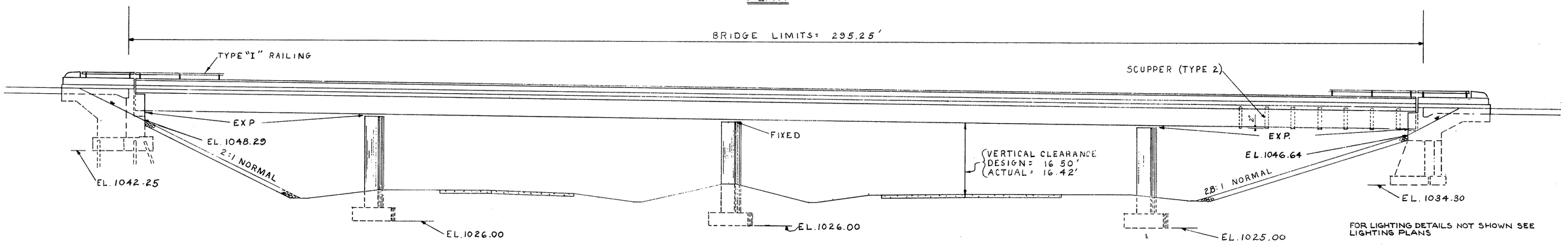

ELEVATION

FOR LIGHTING DETAILS NOT SHOWN SEE LIGHTING PLANS

SEE SHEETS #207 & 208 FOR GEN. NOTES NO. 1 THRU 4, (6-A, 6-B, 7), * 9 THRU 10, 13, 17 THRU 27

ESTIMATED QUANTITIES

ITEM	TOTAL	UNIT	DESCRIPTION	SUPER	ABUT'S	PIERS	GEN
503	212	CU.YDS.	ROCK EXCAVATION		8	204	
503	493	CU.YDS.	UNCLASSIFIED EXCAVATION		447	46	
511	631	CU.YDS.	CLASS "C" CONC. SUPERSTRUCTURE	631			
511	197	CU.YDS.	CLASS "E" CONC. ABUTS ABOVE FOOTINGS		197		
511	146	CU.YDS.	CLASS "C" CONC. PIERS ABOVE FOOTINGS			146	
511	189	CU.YDS.	CLASS "E" CONC. PIERS & ABUT FOOTINGS		82	107	
512	50	LIN.FT.	PREMOLDED SEALING STRIP		50		

ITEM	TOTAL	UNIT	DESCRIPTION	SUPER	ABUT'S	PIERS	GEN
509	261,883	LBS.	REINFORCING STEEL	171,905	25,531	64,447	
513	417,479	LBS.	STRUCTURAL STEEL	417,479			
514	417,479	LBS.	FIELD PAINTING OF STRUCTURAL STEEL	417,479			
516	97	SQ. FT.	1" PREFORMED EXPANSION JOINT FILLER AASHO Specs. M-153		97		
517	640.33	LIN.FT.	RAILING (TYPE I)	584.33	56.00		
505	LUMP	L.S.	FIRST TEST PILE				L.S.
507	330	LIN.FT.	STEEL PILES 10BP42		330		

ITEM	TOTAL	UNIT	DESCRIPTION	SUPER	ABUT'S	PIERS	GEN
625	LUMP	SUM.	LIGHTING QUANTITIES SEE SH # 202				L.S.
518	20	EACH	SCUPPERS, INCLUDING SUPPORTS	20			
518	53	CU.YDS	POROUS BACKFILL		53		
518	60	LIN.FT.	6" PERFORATED HELICAL C.M.P. 707.06 INCLUDING SPECIALS		60		
518	40	LIN.FT.	6" HELICAL C.M.P. 707.06 NONPERFORATED		40		
601	825	SQ.YDS.	CRUSHED AGGREGATE SLOPE PROTECTION	825			
825	2430	Sq.Yds.	Concrete Surface Treatment	2430			
808	631	EACH	WATER REDUCING, SET RETARDING ADMIXTURE	631			

* G-A APPLIES TO ABUTMENT No 2
G-B APPLIES TO ABUTMENT No 1
7 APPLIES TO ABUTMENT No 2 AND TO THE PIERS

STATE OF OHIO
DEPARTMENT OF HIGHWAYS
BUREAU OF BRIDGES

BEISWENGER & HOCH, Consulting Engineers
AKRON, OHIO

GENERAL PLAN & ELEVATION

BRIDGE No MAH-18-1246
I-80 (SR18) UNDER SR 46
MAHONING COUNTY
STA 656+85.29

DESIGNED	DRAWN	TRACED	CHECKED	REVIEWED	DATE	REVISED
JFP	JAK		HGH	RBW	11/65	

MICROFILMED
MAR 7 1990

FED. RD.	STATE	PROJECT	
2	OHIO		

MAH-18-9.89

257
294

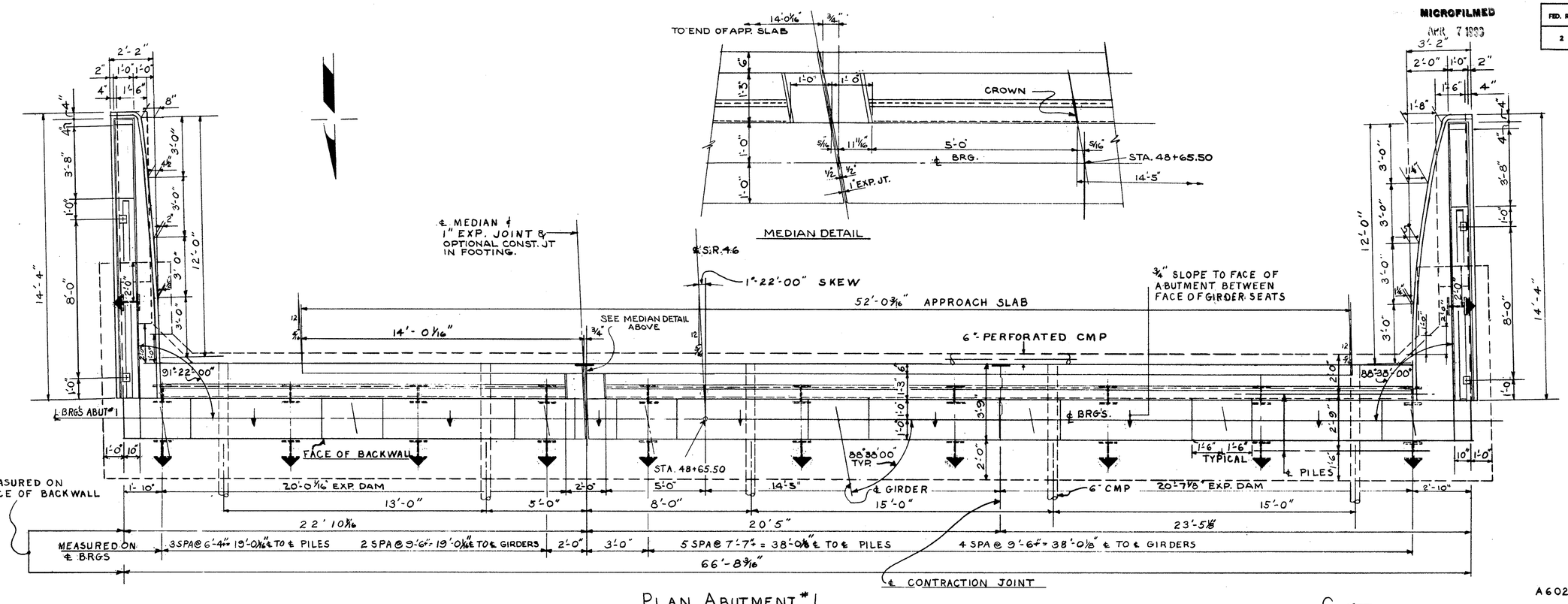

PLAN ABUTMENT #1

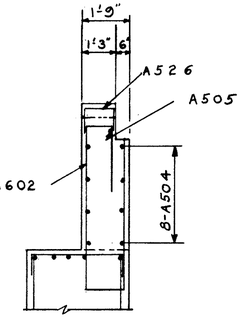

SECTION K-K

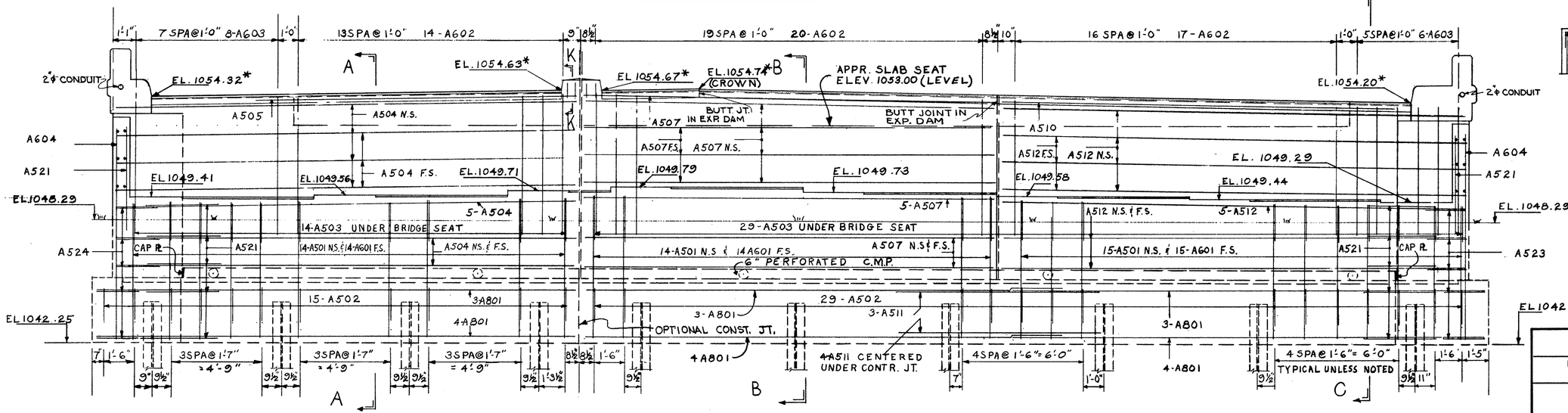

ELEVATION ABUTMENT #1

*ELEVATIONS GIVEN AT HEEL OF ANGLE
SEE STRUCTURAL GENERAL NOTE NO. 6B

STATE OF OHIO
DEPARTMENT OF HIGHWAYS
BUREAU OF BRIDGES

BEISWENGER & HOCH, Consulting Engineers
AKRON, OHIO

ABUTMENT #1

BRIDGE Nº MAH-18-1246
I-80 (SR18) UNDER SR46
MAHONING COUNTY
STA 656+85.29

DESIGNED	DRAWN	TRACED	CHECKED	REVIEWED	DATE	REVISED
JFP	JAK		HGH	RBH	1/4/65	

MICROFILMED
APR 7 1993

FED. RD.	STATE	PROJECT	
2	OHIO		

MAH-18-9.89

258
294

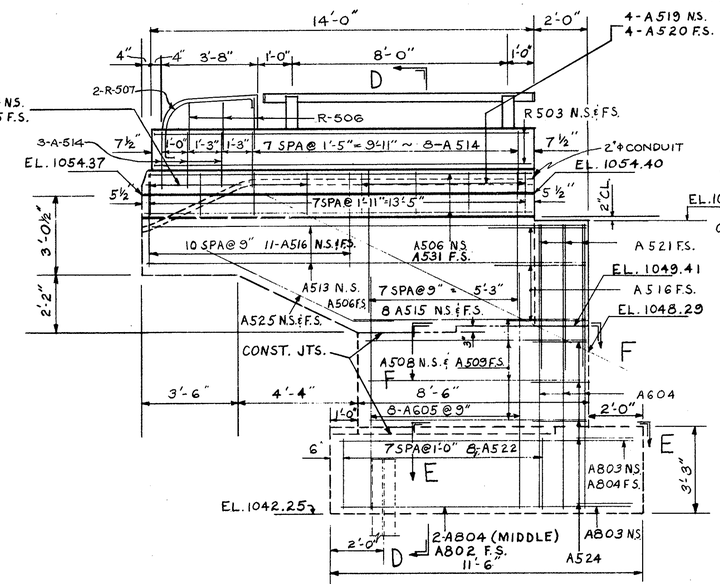

ELEVATION EAST WINGWALL ABUT. #1

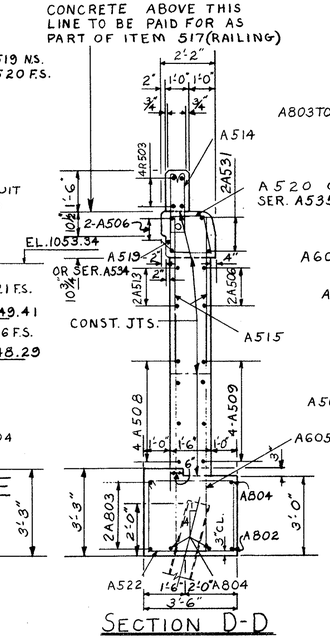

SECTION D-D

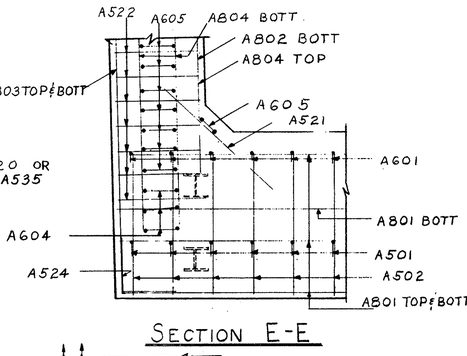

SECTION E-E

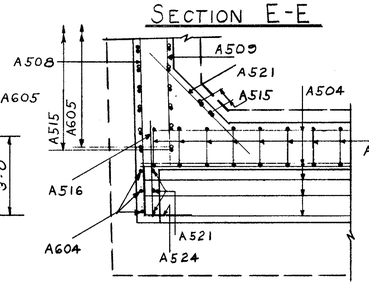

SECTION F-F

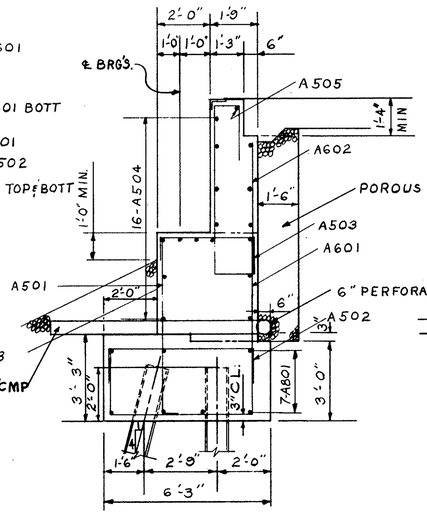

SECTION A-A

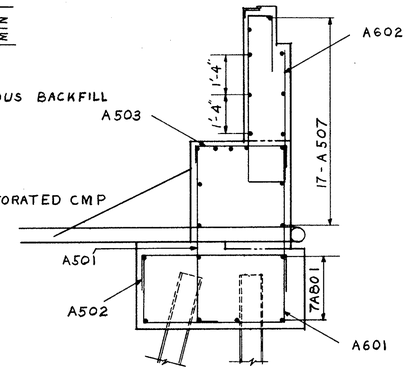

SECTION B-B

DIMENSIONS NOT GIVEN
SAME AS SEC. A-A

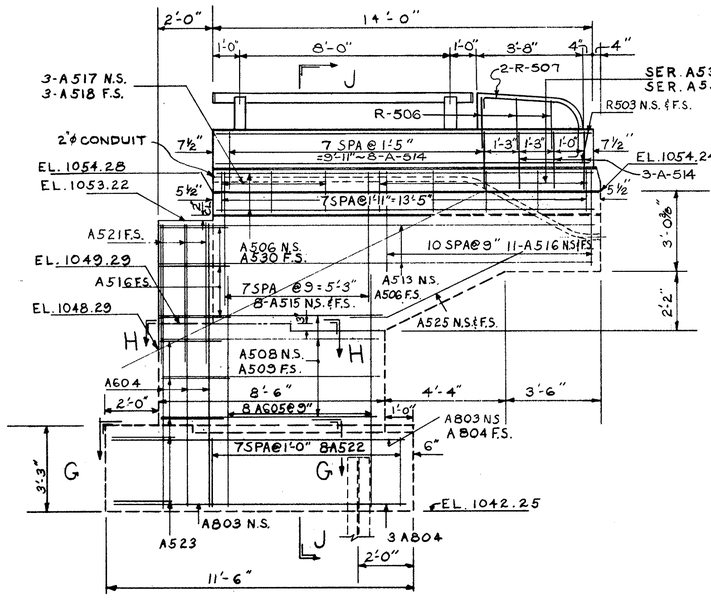

ELEVATION WEST WINGWALL ABUT. #1

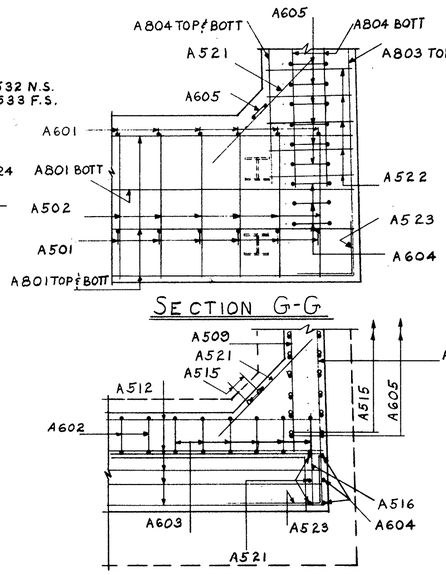

SECTION G-G

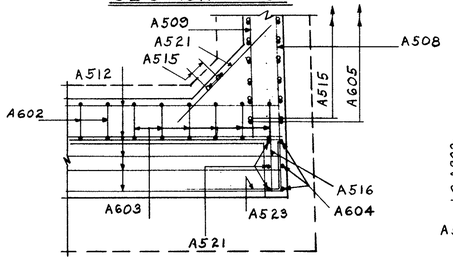

SECTION H-H

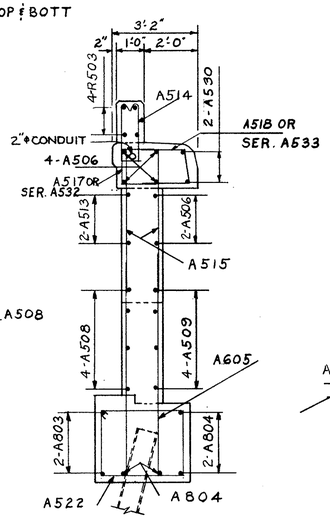

SECTION J-J

DIMENSIONS NOT GIVEN
SAME AS SEC. D-D

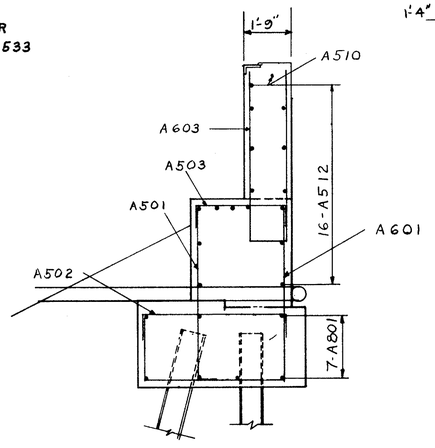

SECTION C-C

DIMENSIONS NOT GIVEN
SAME AS SEC. A-A

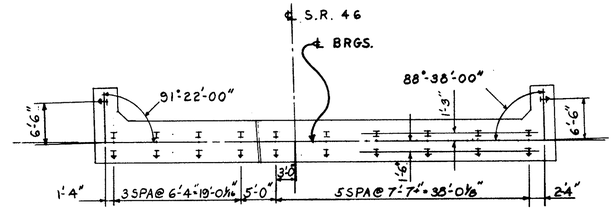

PILING PLAN

DENOTES 1:4 BATTERED PILES. ALL PILES 10BP42 CUT-OFF ELEV. 1044.25

STATE OF OHIO
DEPARTMENT OF HIGHWAYS
BUREAU OF BRIDGES

BEISWENGER & HOCH, Consulting Engineers
AKRON, OHIO

ABUTMENT #1 DETAILS & PILING PLAN

BRIDGE Nº MAH-18-1246
I-80 (SR18) UNDER SR46
MAHONING COUNTY
STA 656+85.29

DESIGNED	DRAWN	TRACED	CHECKED	REVIEWED	DATE	REVISED
JFP	JAK		HGH	RBH	11/4/65	

MICROFILMED
APR 7 1993

FED. RD.	STATE	PROJECT	
2	OHIO		

259
294

MAH-18-9.89

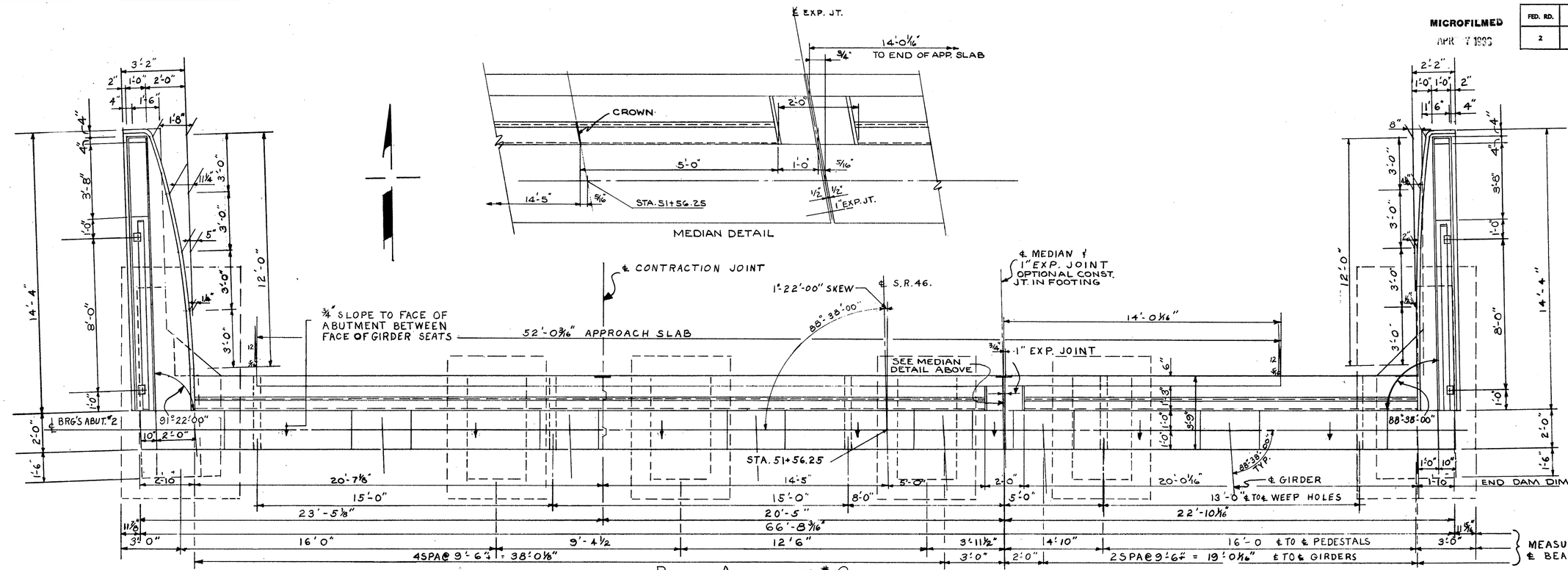

PLAN ABUTMENT * 2

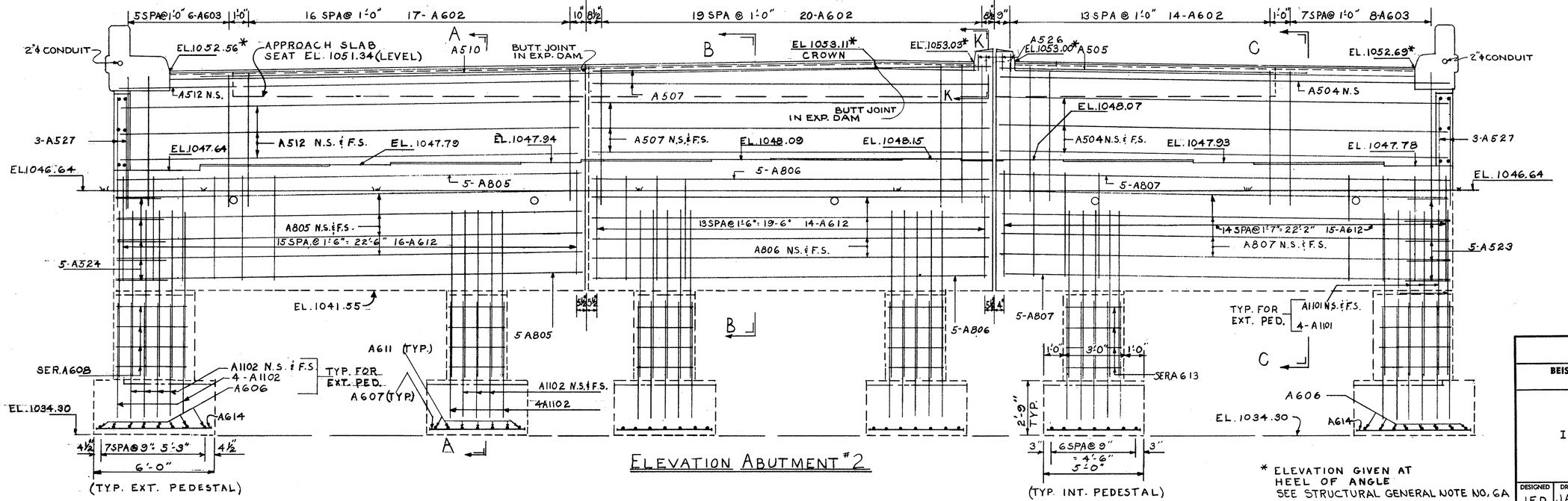

ELEVATION ABUTMENT #2

* ELEVATION GIVEN AT HEEL OF ANGLE
SEE STRUCTURAL GENERAL NOTE NO. 6A

STATE OF OHIO
DEPARTMENT OF HIGHWAYS
BUREAU OF BRIDGES

BEISWENGER & HOCH, Consulting Engineers
AKRON, OHIO

ABUTMENT * 2

BRIDGE Nº MAH-18-1246
I-80 (SR18) UNDER SR46
MAHONING COUNTY
STA 656+85.29

DESIGNED	DRAWN	TRACED	CHECKED	REVIEWED	DATE	REVISED
JFP	JAK		HGH	RDH	11/4/65	

MICROFILMED
APR 7 1980

FED. RD.	STATE	PROJECT	
2	OHIO		

MAH-18-9.89

260
294

ELEVATION WEST WINGWALL ABUT. #2

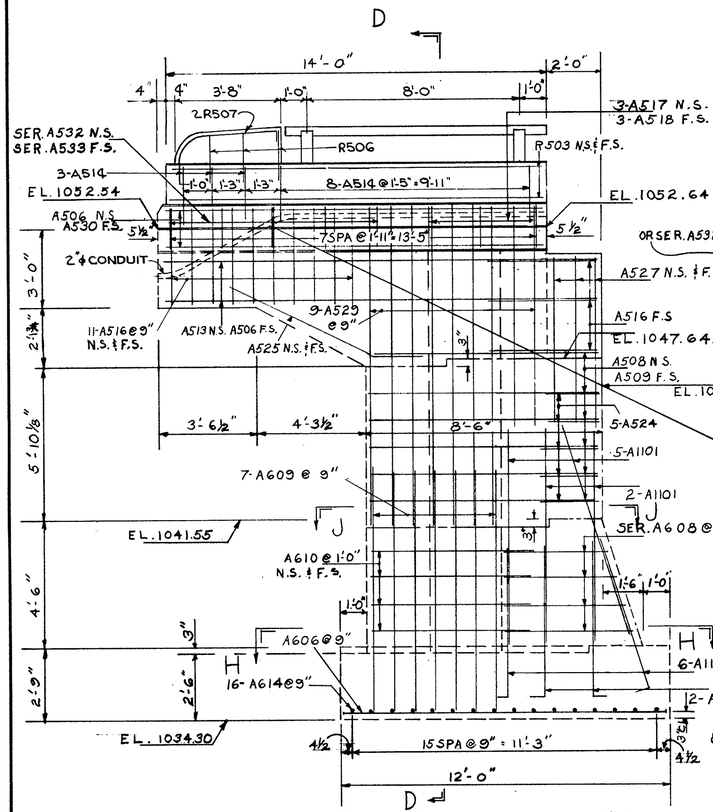

SECTION D-D

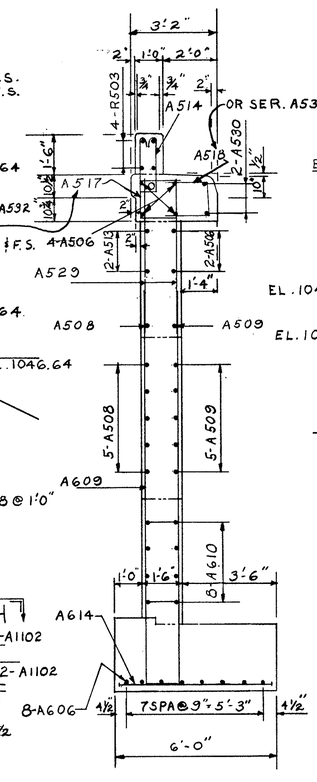

ELEVATION EAST WINGWALL ABUT. #2

SIMILAR TO WEST WINGWALL ABUT. #2
EXCEPT AS SHOWN

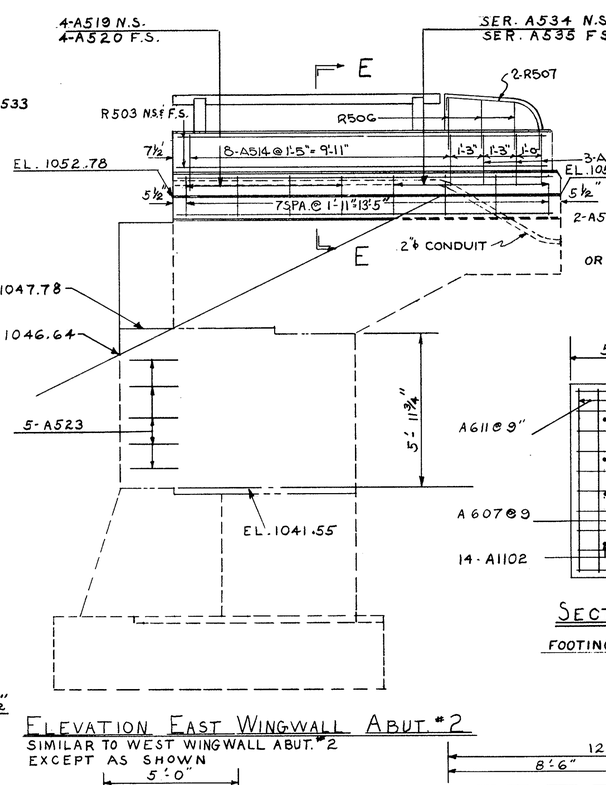

SECTION E-E

(OTHERWISE SAME AS SEC. D-D)

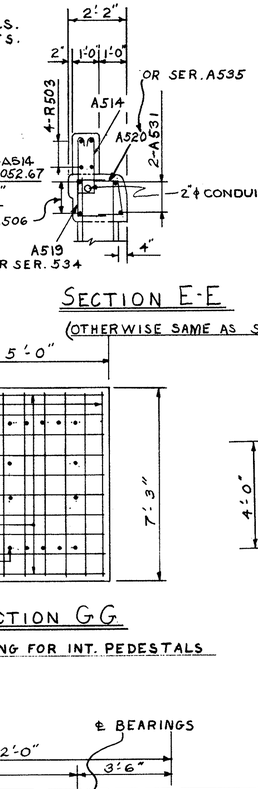

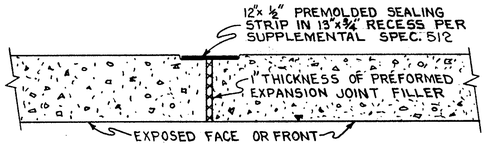

EXPANSION JOINT DETAIL

SECTION G-G

FOOTING FOR INT. PEDESTALS

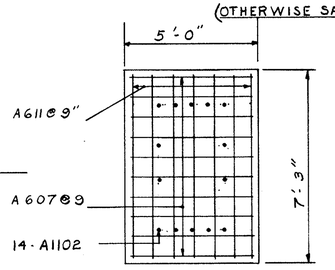

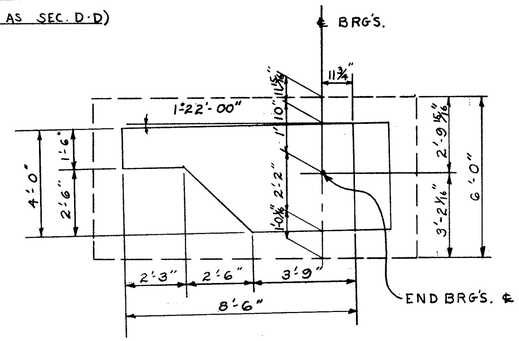

SECTION J-J

FOR EAST WINGWALL
(REINFORCING STL. SAME AS FOR WEST)

SECTION A-A

(FOR INT. PEDESTALS)

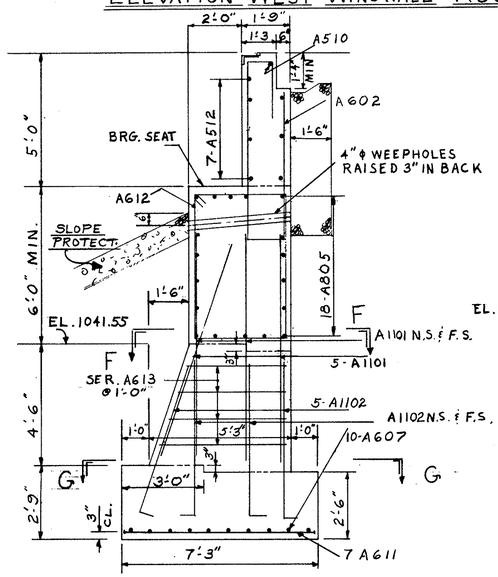

SECTION B-B

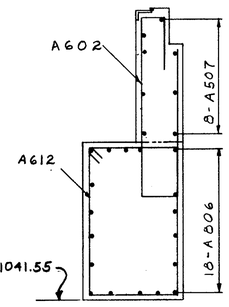

SECTION C-C

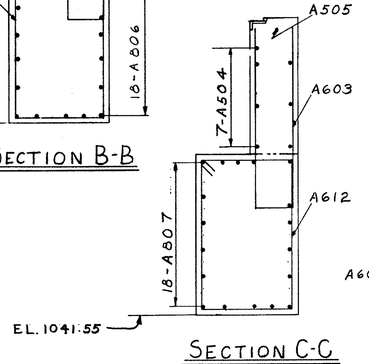

SECTION F-F

(FOR INT PEDESTALS)

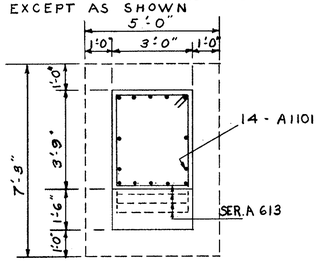

SECTION J-J

(FOR WEST WINGWALL)

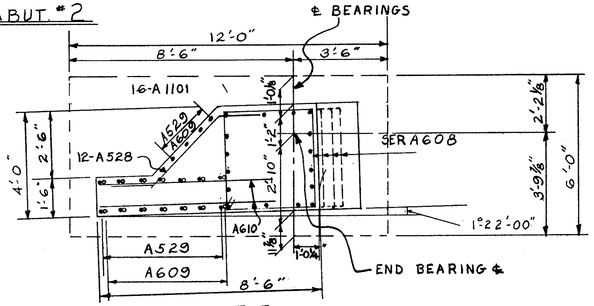

SECTION H-H

FOOTING FOR WEST WINGWALL
(FOOTING FOR EAST WINGWALL SIMILAR)

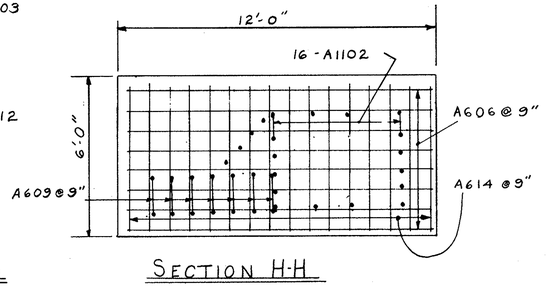

SECTION K-K

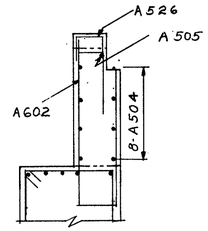

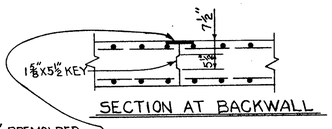

ABUTMENT CONTRACTION JOINT DETAIL

STATE OF OHIO
DEPARTMENT OF HIGHWAYS
BUREAU OF BRIDGES

BEISWENGER & HOCH, Consulting Engineers
AKRON, OHIO

ABUTMENT #2 DETAILS

BRIDGE Nº MAH-18-1246
I-80 SR18 UNDER SR 46
MAHONING COUNTY
STA 656+85.29

DESIGNED	DRAWN	TRACED	CHECKED	REVIEWED	DATE	REVISED
JFP	JAK		HGH	RBH	11/65	

FED. RD.	STATE	PROJECT	
2	OHIO		

MAH-18-9.89

261
294

MICROFILMED
APR 7 1993

N

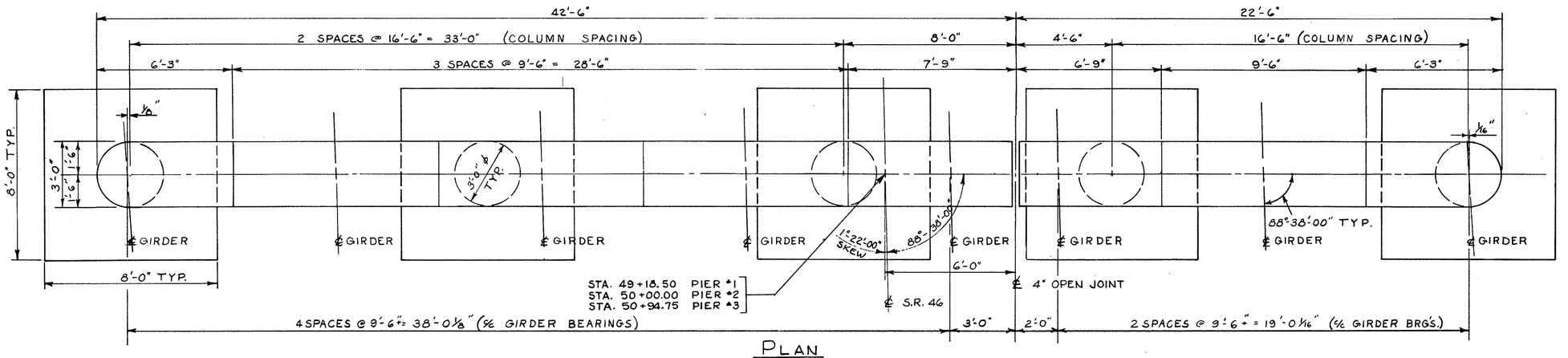

PLAN

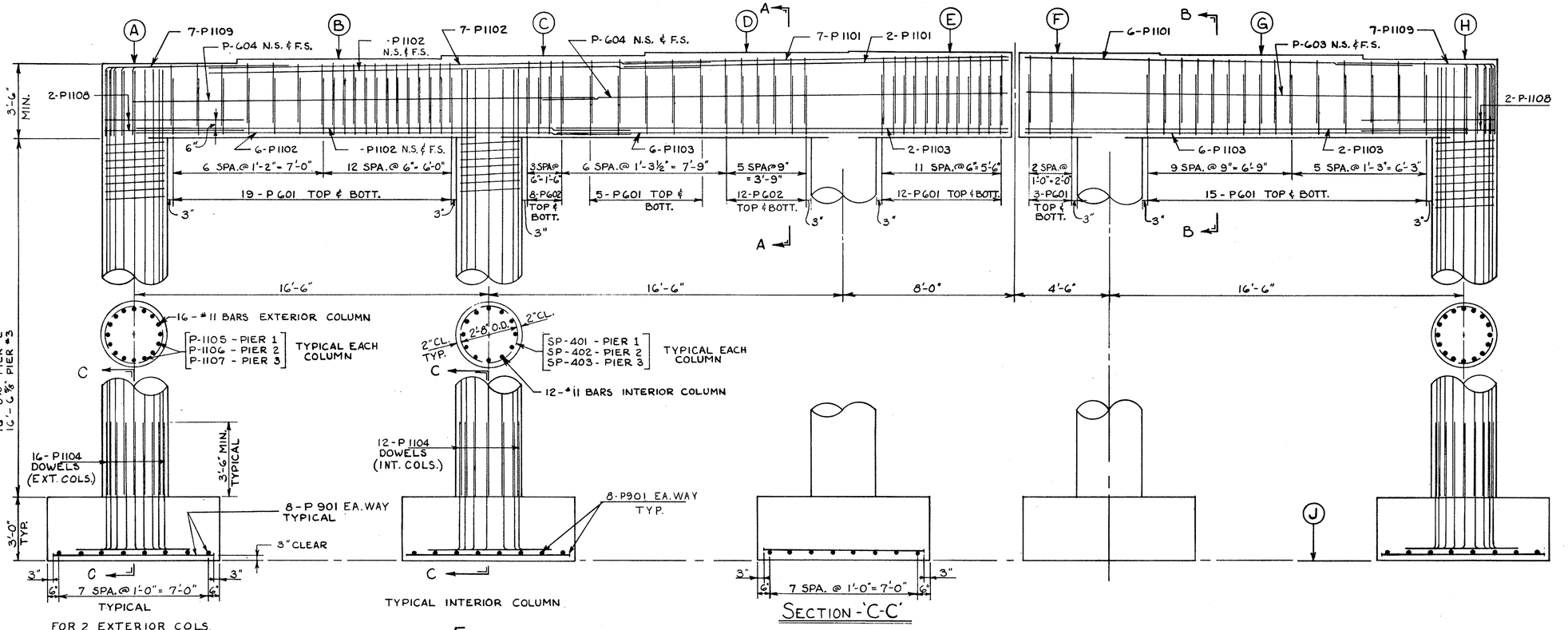

ELEVATION

SECTION - 'C-C'

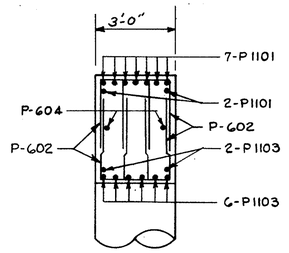

SECTION - 'A-A'

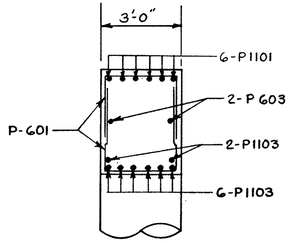

SECTION - 'B-B'

ELEVATION TABLE

	A	B	C	D	E	F	G	H	J
PIER #1	1049.27	1049.42	1049.57	1049.72	1049.77	1049.69	1049.55	1049.40	1026.00
PIER #2	1048.53	1048.68	1048.83	1048.98	1049.04	1048.96	1048.81	1048.67	1026.00
PIER #3	1048.05	1048.20	1048.35	1048.50	1048.55	1048.48	1048.33	1048.18	1025.00

STATE OF OHIO
DEPARTMENT OF HIGHWAYS
BUREAU OF BRIDGES

BEISWENGER & HOCH, Consulting Engineers
AKRON, OHIO

PIERS 1, 2 & 3

BRIDGE N° MAH-18-1246
I-80 (SR18) UNDER SR 46
MAHONING COUNTY
STA 656+85.29

DESIGNED	DRAWN	TRACED	CHECKED	REVIEWED	DATE	REVISED
JFP	JFP		HGH	RBH	1/9/65	

MICROFILMED
APR 7 1993

FED. RD.	STATE	PROJECT	
	OHIO		

262/294

MAH-18-9.89

290'-9" ℄ ABUT. #1 BRG'S TO ℄ ABUT. #2 BRG'S.

53'-0" SPAN #1 | 81'-6" SPAN #2 | 94'-9" SPAN #3 | 61'-6" SPAN #4

14'-0" | 67'-6" | 18'-0" | 59'-9" | 17'-0"

℄ ABUT. #1 BRG'S. E-100 | ℄ PIER #1 E-200 | FIELD SPLICE | ℄ PIER #2 F-250 | FIELD SPLICE | FIELD SPLICE | ℄ PIER #3 E-250 | ℄ ABUT. #2 BRG'S. E-100

11°-22'-00" SKEW

END CROSS FRAMES 4"x4"x5/16"

END OF GIRDER

℄ MEDIAN

℄ S.R. 46

℄ MEDIAN

35'-0" | 4 SPA @ 9'-6" = 38'-0" | 3'-0" | 4 SPA @ 9'-6" = 38'-0"

6'-0" | 2'-3"

27'-0" | 2 SPA @ 9'-6" = 19'-0" | 2'-0" | 2 SPA @ 9'-6" = 19'-0"

STA. 48+65.50 | STA. 49+18.50 | STA. 50+00.00 | STA. 50+94.75 | STA. 51+56.25

7" | 9" | 7" | 9"

15'-4 1/4" | 18 SPA. @ 14'-7" = 262'-6" ℄ INTERMEDIATE CROSS FRAMES | 14'-0 3/4"

FRAMING PLAN

292'-3" OUT TO OUT

53'-0" | 81'-6" | 94'-9" | 61'-6"

10'-6" | 7'-0" | 12'-6" | 10'-0" | 8'-0" | 12'-6"

℄ ABUT #1 BRG'S | ℄ PIER #1 | ℄ PIER #2 | ℄ PIER #3 | ℄ ABUT. #2 BRG'S

16"x1 1/8"x17'-6" PL TOP & BOTT.
16"x5/16"x43'-3" PL TOP & BOTT

1"x16"x7'-0" PL TOP & BOTT

16"x1"x55'-0" PL TOP & BOTT.

1 3/4"x16"x22'-6" PL TOP & BOTT.

1 5/16"x16"x8'-0" PL TOP & BOTT

16"x1 5/16"x59'-9" PL TOP & BOTT.

1 5/16"x16"x9'-0" PL TOP & BOTT

1 3/16"x16"x20'-6" PL TOP & BOTT.

1 3/16"x16"x49'-9" PL TOP & BOTT.

FIELD SPLICE | FIELD SPLICE | FIELD SPLICE

44"x 5/16" WEB PL

EQU. SPC'S. 2'-4" MAX.

15'-0" | 14'-0" | 15'-0" | 21'-0" | 18'-0" | 21'-0" | 17'-0" | 21'-0" | 21'-0"

CONTACT OF STIFFENERS TO GIRDER FLANGE

TOP | BOTTOM | TOP | BOTTOM | TOP | BOTTOM | TOP

SPACING NORMAL TO GIRDER ℄ S.R. 46.

SPACING ALONG ℄ BRG'S. OF ABUTS. ℄ PIERS

ELEVATION TYPICAL GIRDER

FOR ALL GIRDERS IN SPAN #4, NATURAL CAMBER, IF ANY, SHALL BE DOWN.

DEFLECTION & CAMBER

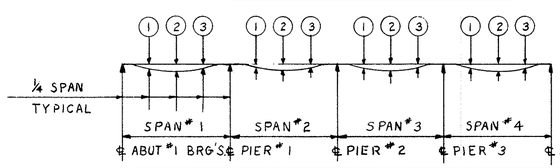

LOCATION	SPAN #1									SPAN #2								
	BM. A & INT.			BM. E & H			BM. F			BM. A & INT.			BM. E & H			BM. F		
	1	2	3	1	2	3	1	2	3	1	2	3	1	2	3	1	2	3
DEFLECTION DUE TO WEIGHT OF STEEL	.024	.026	.001	.024	.026	.001	.024	.026	.001	.045	.065	.026	.045	.065	.026	.045	.065	.026
DEFLECTION DUE TO REMAINING DEAD LOAD	.133	.142	.004	.111	.118	.003	.095	.100	.003	.250	.357	.144	.206	.295	.118	.176	.252	.101
CONVEXITY REQUIRED FOR VERTICAL CURVE	.197	.262	.197	.197	.262	.197	.197	.262	.197	.465	.620	.465	.465	.620	.465	.465	.620	.465
SUM OF DEFLECTION AND CONVEXITY	.354	.430	.202	.332	.406	.201	.316	.388	.201	.760	1.042	.635	.716	.980	.609	.686	.937	.592
REQUIRED CAMBER	3/8"	7/16"	3/16"	5/16"	3/8"	3/16"	5/16"	3/8"	3/16"	3/4"	1"	5/8"	3/4"	1"	5/8"	3/4"	1"	5/8"

LOCATION	SPAN #3									SPAN #4								
	BM. A & INT.			BM. E & H			BM. F			BM. A & INT.			BM. E & H			BM. F		
	1	2	3	1	2	3	1	2	3	1	2	3	1	2	3	1	2	3
DEFLECTION DUE TO WEIGHT OF STEEL	.084	.137	.088	.084	.137	.088	.084	.137	.088	-.011	.012	.020	-.011	.012	.020	-.011	.012	.020
DEFLECTION DUE TO REMAINING DEAD LOAD	.462	.752	.485	.383	.620	.400	.328	.533	.354	-.061	.064	.110	-.050	.053	.091	-.043	.045	.078
CONVEXITY REQUIRED FOR VERTICAL CURVE	0	0	0	0	0	0	0	0	0	-.264	-.352	-.264	-.264	-.352	-.264	-.264	-.352	-.264
SUM OF DEFLECTION AND CONVEXITY	.546	.889	.573	.467	.757	.488	.412	.670	.442	-.336	-.276	-.134	-.325	-.287	-.153	-.318	-.295	-.166
REQUIRED CAMBER	1/2"	7/8"	1/2"	1/2"	3/4"	1/2"	1/2"	7/8"	1/2"	-5/16"	-1/4"	-1/8"	-5/16"	-5/16"	-1/8"	-5/16"	-5/16"	-3/16"

STATE OF OHIO
DEPARTMENT OF HIGHWAYS
BUREAU OF BRIDGES

BEISWENGER & HOCH, Consulting Engineers
AKRON, OHIO

FRAMING PLAN

BRIDGE Nº MAH.-18-1246
I-80 (S.R.-18) UNDER S.R.-46
MAHONING COUNTY
STA. 656+85.29

DESIGNED	DRAWN	TRACED	CHECKED	REVIEWED	DATE	REVISED

MICROFILMED
APR 7 1995

FED. RD.	STATE	PROJECT	
2	OHIO		

263
294

MAH-18-9.89

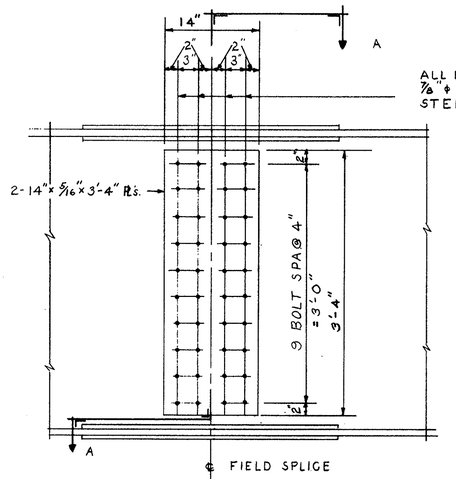

ALL BOLTS SHALL BE 7/8" ϕ HIGH STRENGTH STEEL BOLTS SEE NOTE No. 28

ELEVATION
TYPICAL WEB SPLICE

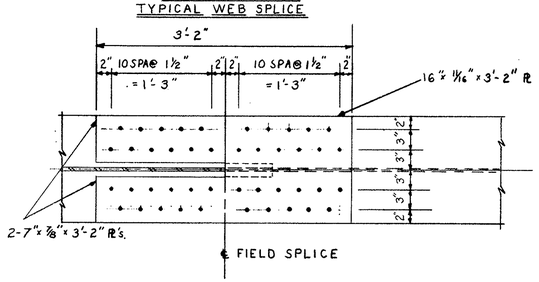

SECTION AA FOR 16"x 15/16" FLANGE

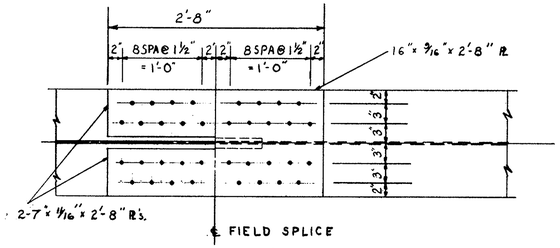

SECTION AA FOR 16"x 1" FLANGE

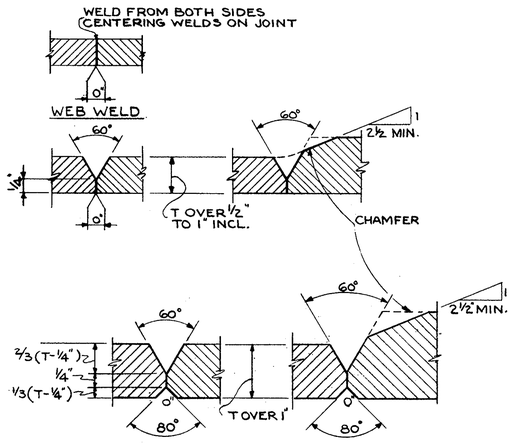

FLANGE WELDS

ALL OF THE ABOVE FULL PENETRATION WELDS SHALL BE BACK-GOUGED AND WELDED AFTER WELDING FAR SIDE. BUTT WELDS ON GIRDER FLANGE PLATES SHALL BE GROUND FLUSH, THE FINISH GRINDING BEING PARALLEL TO THE DIRECTION OF STRESS.

JOINT PREPARATION FOR SUBMERGED ARC WELDMENTS

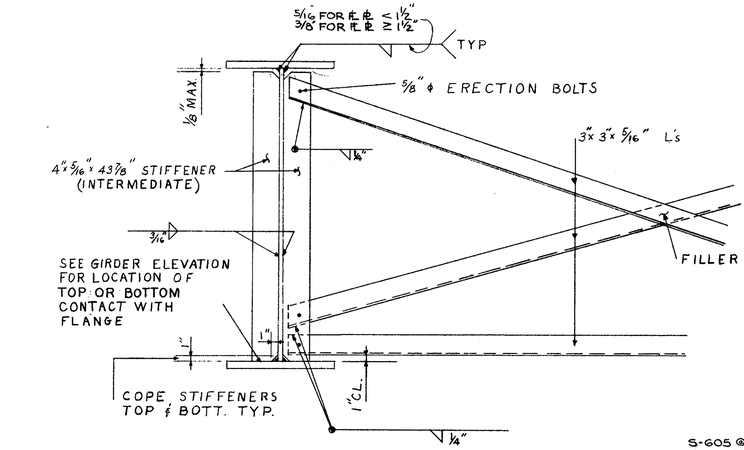

INTERMEDIATE CROSS FRAME AND STIFFENER DETAIL

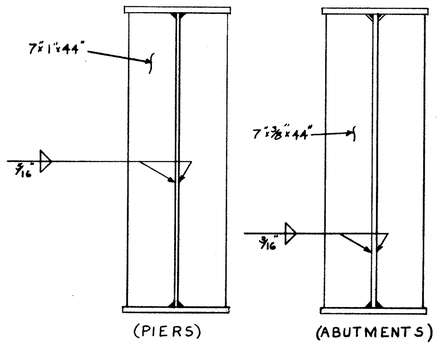

BEARING STIFFENERS

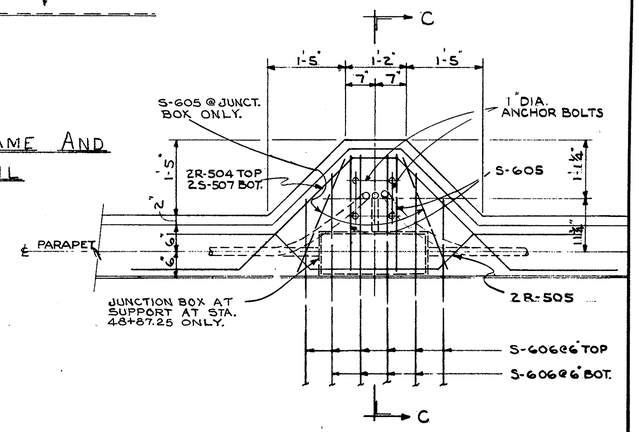

ANCHOR BOLT SPACING TO MATCH LIGHT STANDARD USED.

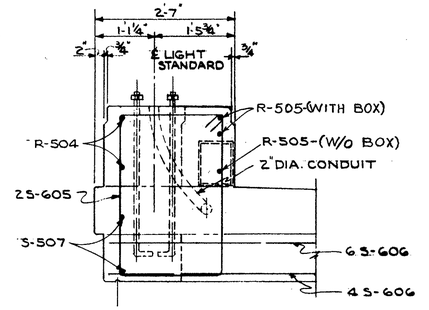

SECTION C-C

LIGHT STANDARD DETAIL
2 REQD.

STATE OF OHIO
DEPARTMENT OF HIGHWAYS
BUREAU OF BRIDGES

BEISWENGER & HOCH, Consulting Engineers
AKRON, OHIO

FRAMING DETAILS

BRIDGE No MAH-18-1246
I-80 (SR18) UNDER SR 46
MAHONING COUNTY
STA 656+85.29

DESIGNED	DRAWN	TRACED	CHECKED	REVIEWED	DATE	REVISED
JFP	JAK		HGH	RDH	1/4/65	

MICROFILMED
APR 7 1995

FED. RD.	STATE	PROJECT	
2	OHIO		

MAH-18-9.89

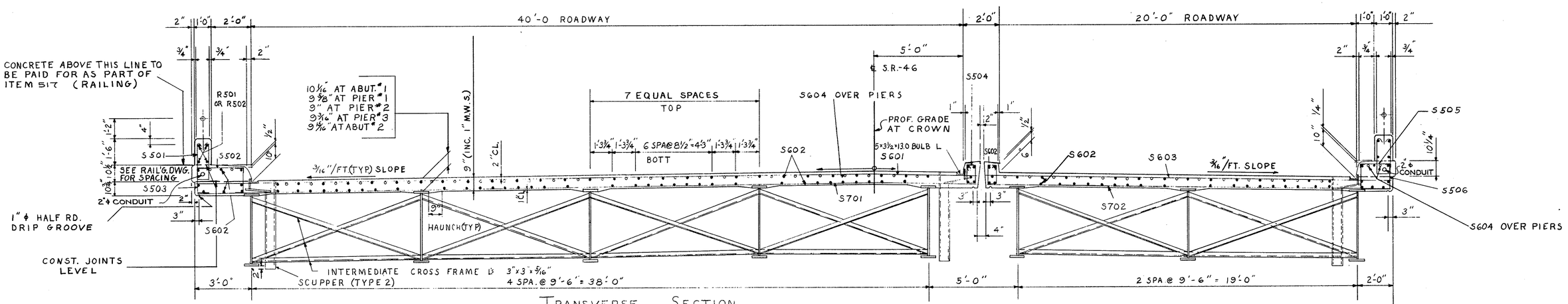

TRANSVERSE SECTION

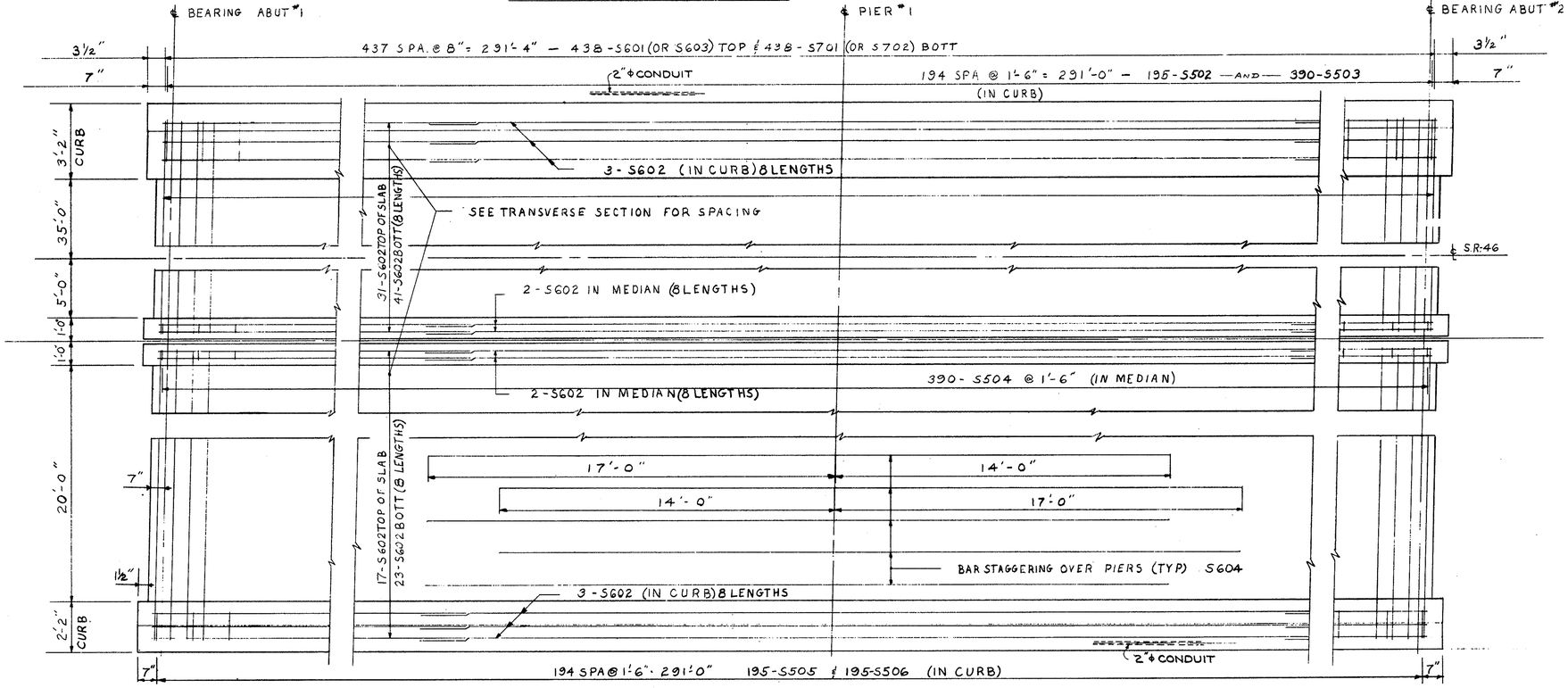

SLAB REINFORCING PLAN

STATE OF OHIO
DEPARTMENT OF HIGHWAYS
BUREAU OF BRIDGES

BEISWENGER & HOCH, Consulting Engineers
AKRON, OHIO

SLAB DETAILS

BRIDGE Nº MAH-18-1246
I-80 (SR 18) UNDER SR46
MAHONING COUNTY
STA 656+85.29

DESIGNED	DRAWN	TRACED	CHECKED	REVIEWED	DATE	REVISED
JFP	JAK		HGH	RDH	11/65	

MICROFILMED
APR 7 1993

FED. RD.	STATE	PROJECT	
2	OHIO		

MAH-18-9.89

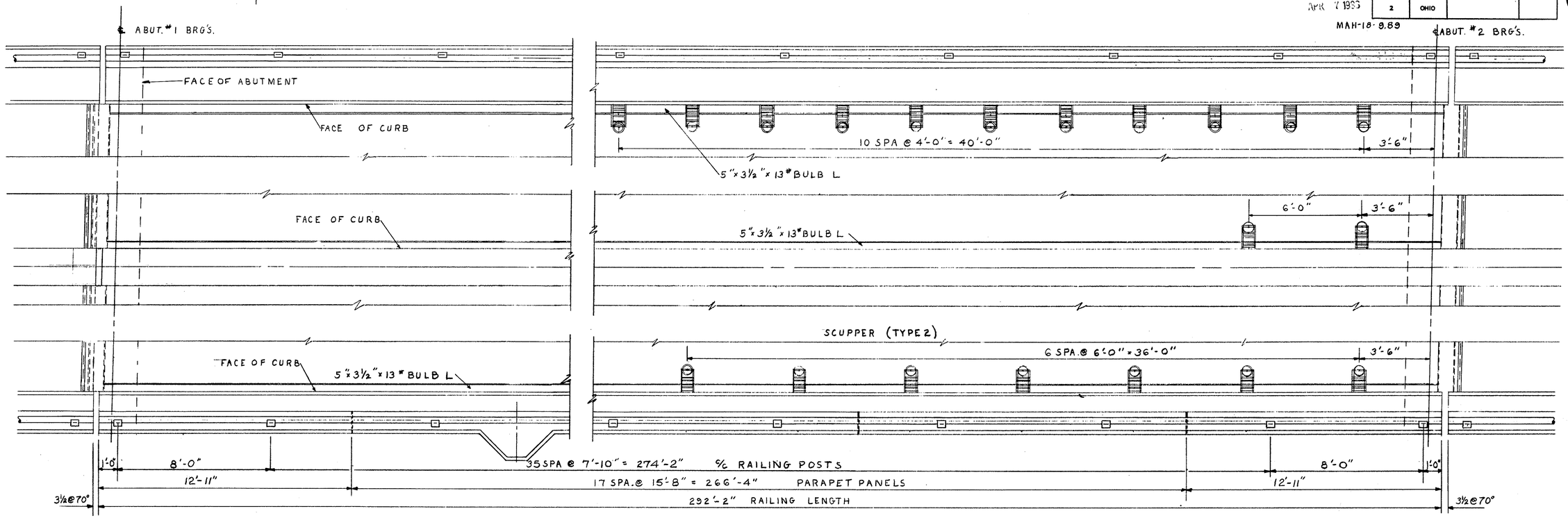

PARTIAL DECK PLAN

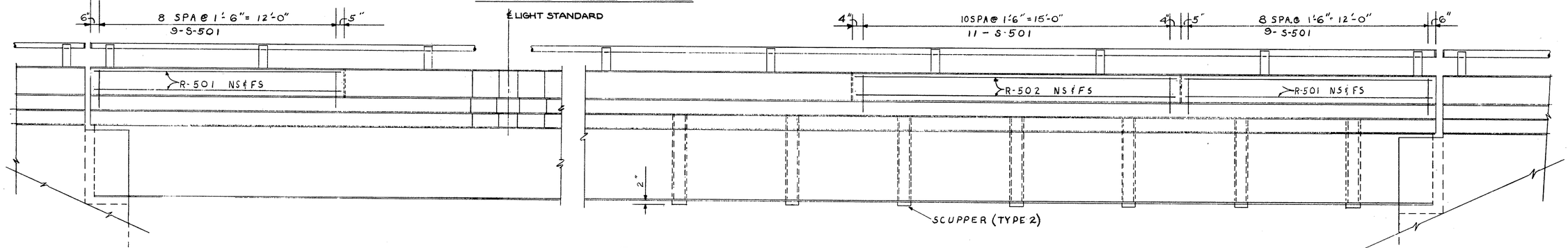

ELEVATION

STATE OF OHIO
DEPARTMENT OF HIGHWAYS
BUREAU OF BRIDGES

BEISWENGER & HOCH, Consulting Engineers
AKRON, OHIO

RAILING & DRAINAGE

BRIDGE N° MAH-18-1246
I-80 (SR 18) UNDER SR 46
MAHONING COUNTY
STA 656+85.29

DESIGNED	DRAWN	TRACED	CHECKED	REVIEWED	DATE	REVISED
JFP	JAK		HGH	RDH	1/4/95	

MARK	NO. REQ'D	LENGTH	TYPE	DIMENSIONS A	B	C	D	SERIES INCREMENTS	WEIGHT LBS.
ABUTMENT #1 & #2									
A501	43	6'-11"	1	6"	6'-6"				310
A502	44	8'-3"	3	5'-4"	1'-7"				379
A503	43	6'-4"	3	3'-5"	1'-7"				284
A504	23	22'-5"	ST.						539
A505	2	15'-7"	ST.						33
A506	20	14'-0"	ST.						292
A507	25	20'-0"	ST.						522
A508	20	8'-2"	ST.						171
A509	20	6'-2"	ST.						129
A510	2	18'-3"	ST.						38
A511	7	10'-0"	ST.						73
A512	30	23'-0"	ST.						720
A513	8	16'-0"	ST.						134
A514	44	5'-7"	5	8"	2'-2"	5"			256
A515	36	5'-4"	ST.						200
A516	50	3'-6"	ST.						182
A517	6	5'-3"	3	1'-4"	2'-1				33
A518	6	6'-3"	16	1'-4"	2'-8	2'-6"			39
A519	8	4'-1"	3	1'-4"	1'-6"				34
A520	8	4'-3"	16	1'-4"	1'-8"	1'-6			36
A521	16	5'-0"	ST.						84
A522	16	11'-2"	14	2'-6"	3'-0"	4"			186
A523	10	3'-10"	15	2'-0"	2'-0"	9/16"			40
A524	10	3'-10"	20	2'-0"	2'-0"	9/16"			40
A525	8	7'-7"	12	6'-0"	1'-7"	8½"			63
A526	8	2'-9"	3	11"	8"				17
A527	12	5'-7"	ST.						70
A528	24	6'-6"	11	1'-7"	3'-6½"	1'-7"	2'-6"		163
A529	36	11'-8"	ST.						438
A-530	4	13'-11"	18	1'-10"	12'-0"	1'-8"			58
A-531	4	13'-10"	19	1'-10"	12'-0"	8"			58
SERIES OF A-532	2 SETS OF 5 = 10 BARS	VARIES 2'-9" TO 3'-9" @ 6"	3	1'-4"	VARIES 1'-10" TO 10"			3"	39
SERIES OF A-533	2 SETS OF 5 = 10 BARS	VARIES 2'-11" TO 5'-7" @ 6"	16	1'-4"	VARIES 1'-0" TO 2'-4"	VARIES 10" TO 2'-2"		4"	45
SERIES OF A-534	2 SETS OF 4 = 8 BARS	VARIES 3'-9" TO 5'-3" @ 6"	3	1'-4"	VARIES 10" TO 1'-4"			2"	27
SERIES OF A-535	2 SETS OF 4 = 8 BARS	VARIES 2'-11" TO 5'-11" @ 6"	16	1'-4"	VARIES 1'-0" TO 1'-6"	VARIES 10" TO 1'-4"		2"	29
A-601	43	14'-3"	4	6'-8"	5'-4"	2'-6"			920
A-602	102	17'-2"	7	5'-8"	1'-5"	7'-0"	11"		2630
A-603	28	15'-2"	3	11'-5"	7'-0"				638
A-604	6	18'-3"	4	10'-8"	1'-2"	6'-8"			164
A-605	18	18'-9"	3	1'-2"	8'-11"				507
A-606	16	11'-6"	ST.						276
A-607	40	4'-6"	ST.						270
SERIES OF A-608	2 SETS OF 4 = 8 BARS	VARIES 14'-8" TO 16'-8" @ 8"	14	VARIES 3'-7" TO 4'-7"	8'-8"	4"		4"	188
A-609	14	18'-5"	3	1'-2"	8'-9"				387
A-610	16	6'-4"	ST						152
A-611	14	6'-9"	ST						142
A-612	45	18'-4"	14	3'-5"	5'-8"	4"			1240
SERIES OF A-613	4 SETS OF 4 = 16 BARS	VARIES 12'-8" TO 14'-8" @ 8"	14	VARIES 3'-7" TO 4'-7"	2'-8"	4"			329
A-614	32	5'-6"	ST						264
A-801	21	23'-6"	ST						1318
A-802	1	6'-0"	ST						16
A-803	4	11'-2"	ST						119
A-804	7	7'-0"	ST						131
A-805	18	23'-0"	ST						1106
A-806	18	20'-0"	ST						961
A-807	18	22'-5"	ST						1077
A-1101	88	8'-5"	ST						3935
A-1102	88	6'-5"	1	1'-0"	5'-8"				3000
ABUTMENT #1 & #2 TOTAL = 25,531 LBS.									

MARK	NO. REQ'D	LENGTH	TYPE	DIMENSIONS A	B	C	D	SERIES INCREMENTS	WEIGHT LBS.
PIERS #1, #2 & #3									
P601	324	8'-1"	3	2'-8"	2'-10"				3834
P602	120	7'-4"	3	1'-11"	2'-10"				1372
P603	6	21'-0"	ST.						189
P604	12	21'-6"	ST.						388
P901	240	7'-6"	ST.						6120
P1101	45	18'-0"	ST.						4304
P1102	51	23'-0"	ST.						6232
P1103	48	21'-0"	ST						5356
P1104	204	6'-10"	1	1'-0"	6'-1"				7406
P1105	68	20'-0"	ST.						7286
P1106	68	19'-3"	ST.						6955
P1107	68	19'-9"	ST.						7136
P1108	12	13'-8"	9	5'-0"	3'-8"	1'-2⅜"			872
P1109	42	11'-5"	15	3'-2"	8'-6"	0'-1"			2548
SPIRALS									4459
PIERS #1, #2 & #3 TOTAL									64,447 LBS.
SLAB									
S501	410	6'-1"	5	8"	2'-2"	5"			2,613
S502	195	3'-3"	3	2'-6"	6"				661
S503	390	2'-1"	3	1'-4"	6"				848
S504	390	3'-4"	14	1'-1"	6"	4"			1356
S505	195	2'-3"	3	1'-6"	6"				456
S506	195	4'-8"	17	6"	1'-4"	1'-6"			949
S-507	4	9'-11"	21	2'-0"	1'-10⅜"	10"	2'-8"		41
S601	438	43'-6"	ST.						28,618
S602	976	38'-2"	ST.						55951
S603	438	22'-6"	ST.						14,802
S604	135	31'-0"	ST.						6,286
S-605	4	9'-4"	14	3'-0"	1'-9"	4			56
S-606	20	6'-0"	ST						180
S701	438	43'-6"	ST.						38,944
S702	438	22'-6"	ST.						20,144
SLAB TOTAL									171,905 LBS.

MARK	NO. REQ'D	LENGTH	TYPE	DIMENSIONS A	B	C	D	SERIES INCREMENTS	WEIGHT LBS.
RAILING*									
R501	16	12'-6"	ST.						
R502	136	15'-4"	ST.						
R503	16	13'-8"	ST.						
R-504	4	9'-11"	21	2'-0"	1'-10⅜"	10"	2'-8"		
R-505	4	8'-0"	21	2'-0"	8"	2'-4"	11¼"		
R-506	12	4'-2"	2	8"	1'-6"	6½"	¾"		
R-507	8	5'-4"	6						
REPLACEMENT BARS									
RE-401	1	5'-3"	10	5'-3"	1'-4"				
RE-501	1	5'-6"	ST						
RE-601	6	6'-0"	ST						
RE-701	3	6'-3"	ST						
RE-801	1	6'-6"	ST						
RE-901	1	6'-10"	ST						
RE-1001	—	7'-3"	—						
RE-1101	3	7'-9"	ST						

SPIRAL REINFORCING SCHEDULE

MARK	NO. REQ'D	CORE DIA. OF SPIRAL	LENGTH OF SPIRAL	PITCH	NO. OF TURNS	WEIGHT LBS.
SP401	5	2'-8"	15'-9¼"	4½"	45	1239
SP402	5	2'-8"	16'-03⅜"	4½"	46	1267
SP403	5	2'-8"	16'-6⅝"	4½"	47	1295
SPACERS						658
TOTAL SPIRALS						4459 LBS.

GRAND TOTAL 261,883 LBS

*RAILING REINFORCEMENT BARS WILL BE INCLUDED AS PART OF ITEM 517 FOR PAYMENT.

MICROFILMED APR 7 1993

FED. RD.	STATE	PROJECT	
2	OHIO		

266 294

MAH-18-9.89

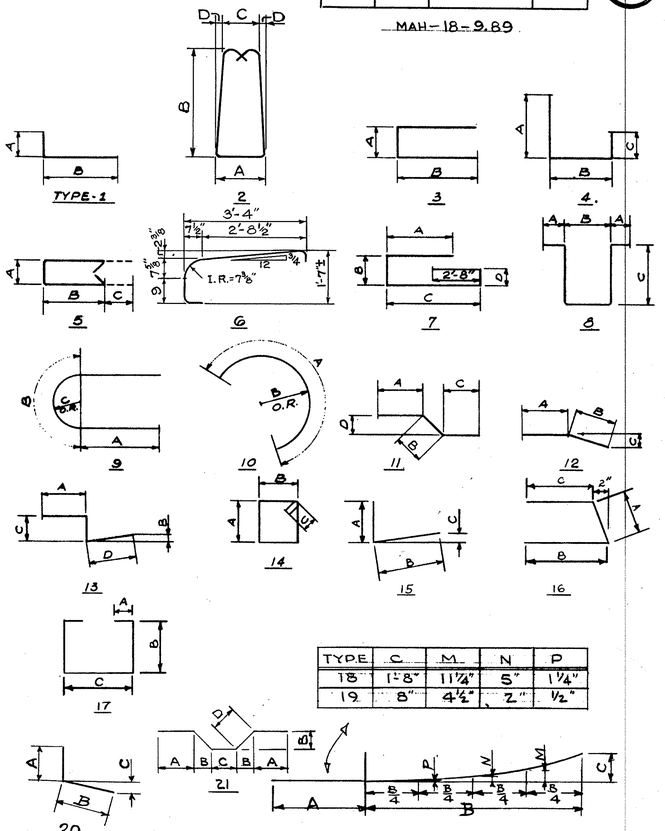

TYPE	C	M	N	P
18	1'-8"	11⅞"	5"	1¼"
19	8"	4½"	2"	½"

REINFORCING NOTES

THE LENGTH SHOWN IN THE STEEL SCHEDULE FOR THE SPIRAL BARS IS THE DISTANCE FROM THE TOP OF THE FOOTING TO THE BOTTOM OF THE PIER CAP. THE NUMBER OF TURNS SHOWN IN THE STEEL SCHEDULE FOR SPIRAL BARS IS THE LENGTH DIVIDED BY THE PITCH PLUS THREE TURNS (TOTAL NUMBER OF CLOSED COILS) EXPRESSED AS THE NEAREST WHOLE NUMBER. SPIRAL REINFORCING BARS SHALL NOT HAVE DEFORMATIONS, BUT SHALL IN OTHER RESPECTS CONFORM TO ITEM 509. ONE AND ONE HALF CLOSED COILS SHALL BE PROVIDED AT THE ENDS OF EACH SPIRAL UNIT. FOUR (4) STEEL CHANNEL, TEE OR ANGLE SPACERS WEIGHING APPOX. 0.68 LBS. PER LINEAL FT. OF SPACERS SHALL BE PROVIDED FOR EACH SPIRAL UNIT. THEY SHALL BE EQUALLY SPACED ALONG THE PERIPHERY OF EACH COIL. THE NUMBER OF POUNDS OF THESE SPACERS BASED ON 0.68 LBS. PER LINEAL FT. WILL BE PAID FOR AS REINFORCING STEEL AND IS INCLUDED IN THE TABULATED QUANTITY OF SPIRAL BARS.

BAR SIZE IS INDICATED IN THE BAR MARK. THE FIRST DIGIT WHERE THREE DIGITS ARE USED AND THE FIRST TWO DIGITS WHERE FOUR ARE USED INDICATE THE BAR SIZE NUMBER. FOR EXAMPLE A-601 IS A NO. 6 SIZE BAR AND P-1001 IS A NO. 10 SIZE BAR.

STATE OF OHIO
DEPARTMENT OF HIGHWAYS
BUREAU OF BRIDGES

BEISWENGER & HOCH, Consulting Engineers
AKRON, OHIO

REINFORCING SCHEDULE

BRIDGE Nº MAH-18-1246
I-80 SR18 UNDER SR46
MAHONING COUNTY
STA 656+85.29

DESIGNED	DRAWN	TRACED	CHECKED	REVIEWED	DATE	REVISED
J.F.P.	JAK		HGH	RBH	12/65	

#737596

FED. RD.	STATE	PROJECT	
2	OHIO	I-IG-80-5(4) 229	

188/275

1/28

MAH-80-3.37
RIGHT OF WAY SHEET

CENTER LINE SURVEY PLAT

MAHONING - 80 - 3.37

MAHONING COUNTY, OHIO

JACKSON TOWNSHIP, TRACT 15

AUSTINTOWN TOWNSHIP, TRACT 4, TRACT 5

RANGE 3 & 4 WEST; TOWNSHIP 2 NORTH

LIMITED ACCESS

THIS IMPROVEMENT HAS BEEN DECLARED A LIMITED ACCESS HIGHWAY FROM STATION 495+76.62 TO STATION 661+13.97 BY ACTION OF THE DIRECTOR OF HIGHWAYS AND RECORDED IN VOLUME 45, PAGE 1217, OF THE DIRECTORS JOURNAL PURSUANT TO LAW.
HEARINGS: DIRECTOR'S JOURNAL Vol 41 Pg 935 [illegible]
Dlk C[illegible] JOURNAL Vol 45 Pg [illegible] 60

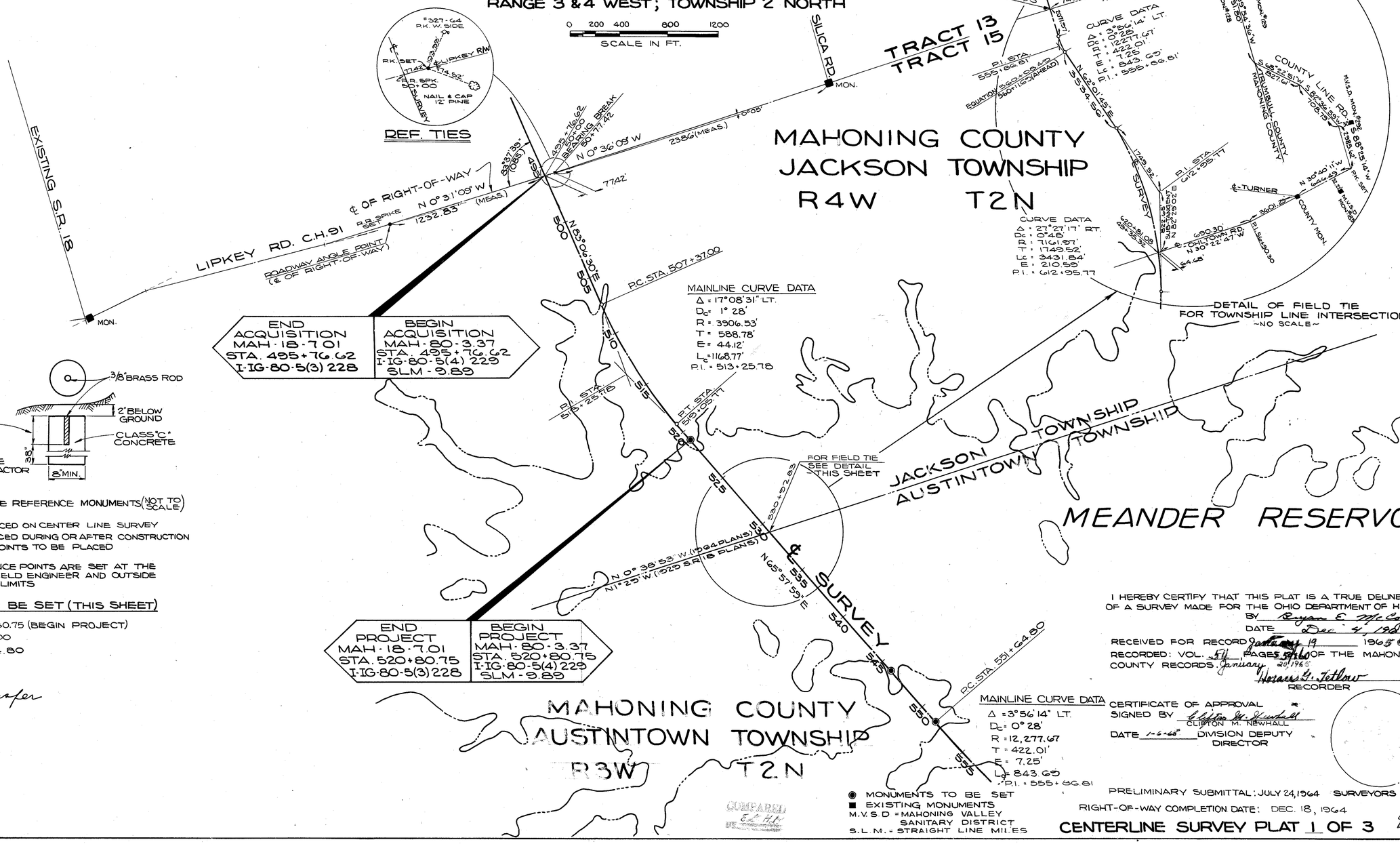

END ACQUISITION	BEGIN ACQUISITION
MAH-18-7.01	MAH-80-3.37
STA. 495+76.62	STA. 495+76.62
I-IG-80-5(3) 228	I-IG-80-5(4) 229
	SLM - 9.89

END PROJECT	BEGIN PROJECT
MAH-18-7.01	MAH-80-3.37
STA. 520+80.75	STA. 520+80.75
I-IG-80-5(3) 228	I-IG-80-5(4) 229
	SLM - 9.89

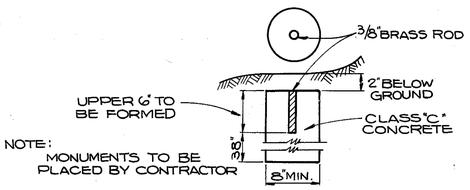

DETAIL OF CENTERLINE REFERENCE MONUMENTS (NOT TO SCALE)

NOTES:
- MONUMENTS TO BE PLACED ON CENTER LINE SURVEY
- MONUMENTS TO BE PLACED DURING OR AFTER CONSTRUCTION
- IRON PIN REFERENCE POINTS TO BE PLACED BEFORE CONSTRUCTION
- ALL IRON PIN REFERENCE POINTS ARE SET AT THE DISCRETION OF THE FIELD ENGINEER AND OUTSIDE OF THE CONSTRUCTION LIMITS

MONUMENTS TO BE SET (THIS SHEET)

P.O.T. STA. 520 + 80.75 (BEGIN PROJECT)
P.O.T. STA. 546+ 00
P.C. STA. 551 + 64.80

Needs Transfer
1-19-65
R. D.

◉ MONUMENTS TO BE SET
■ EXISTING MONUMENTS
M.V.S.D. = MAHONING VALLEY SANITARY DISTRICT
S.L.M. = STRAIGHT LINE MILES

I HEREBY CERTIFY THAT THIS PLAT IS A TRUE DELINEATION OF A SURVEY MADE FOR THE OHIO DEPARTMENT OF HIGHWAYS,
BY Bryan E. McCoy
DATE Dec. 4, 1964

RECEIVED FOR RECORD January 19 1965 @ 11:40 AM
RECORDED: VOL. 511 PAGES 576-580 OF THE MAHONING COUNTY RECORDS. January 20, 1965
Horace G. Tetlow
RECORDER

CERTIFICATE OF APPROVAL
SIGNED BY Clifton M. Newhall
CLIFTON M. NEWHALL
DATE 1-6-65 DIVISION DEPUTY DIRECTOR

PRELIMINARY SUBMITTAL: JULY 24, 1964 SURVEYORS SEAL
RIGHT-OF-WAY COMPLETION DATE: DEC. 18, 1964

CENTERLINE SURVEY PLAT 1 OF 3

$100.00

7376 20

FED. RD.	STATE	PROJECT	
2	OHIO	I-IG-80-5(4)229	

189/275

MAH-80-3.37

RIGHT OF WAY SHEET 2/28

CENTER LINE SURVEY PLAT

MAHONING - 80 - 3.37

MAHONING COUNTY, OHIO

JACKSON TOWNSHIP, TRACT 15

AUSTINTOWN TOWNSHIP, TRACT 4, TRACT 5

RANGE 3 & 4 WEST ; TOWNSHIP 2 NORTH

0 200 400 800 1200

SCALE IN FT.

LIMITED ACCESS

THIS IMPROVEMENT HAS BEEN DECLARED A LIMITED ACCESS HIGHWAY FROM STATION 495+76.62 TO STATION 661+13.97 BY ACTION OF THE DIRECTOR OF HIGHWAYS AND RECORDED IN VOLUME 45, PAGE 1217, OF THE DIRECTORS JOURNAL PURSUANT TO LAW.
HEARINGS:- DIRECTOR'S JOURNAL Vol. 41 Pg 935 12-18-56
DIRECTOR'S JOURNAL Vol. 41 Pg. 1217 11-3-60

MAINLINE CURVE DATA
Δ = 3°56'14" LT. T = 422.01'
D_c = 0° 28' E = 7.25'
R = 12,277.67 L_c = 843.69
P.I. = 555+86.81

MEANDER RESERVOIR

MAHONING COUNTY
AUSTINTOWN TOWNSHIP
R3W T2N

TURNER RD. CH. 103

OHLTOWN RD. CH. 105

TRACT 16
TRACT 5

PC STA. 551+64.80

PT STA. 560+08.49 (BACK)
560+11.69 (AHEAD)

P.I. STA. 555+86.81

545 550 555 565 570 575 580 590 600 605 610 615 620 625 640

℄ SURVEY

N 62° 01' 45" E

REF TIES

NAIL & CAP E SIDE 15" ELM
NAIL & CAP W SIDE 20" MAPLE
NAIL & CAP S SIDE 15" ELM
M.V.S.D. MON. 32 43+51.88
M.V.S.D. MON. 33 43+14.94
S.E. COR. GAR.
S.E. COR. HSE.
TURNER
& R/W
& ROW
132.75 & R/W
30.00
RADIUS
13.95 (ROADWAY PLANS)
13.93 (MEAS.)
℄ OF R/W
N 3° 21' 34" E
102° 15' 50" (OBS.)
275.00'
585+63.58
50+00
N 9° 42' 16" W
1305.30 (MEAS.)
℄ OF R/W
P.C. STA. 599+46.25
P.I.
STA. 612+95.77
N 30° 22' 47" W
50+00
102° 15' 50" (OBS.)
MON.
M.V.S.D. MON. 32 43+51.88
S.E. COR. GAR.
S.E. COR. HSE.
TURNER
REF. TIES
NAIL & CAP N. SIDE 24" CHERRY
NAIL & CAP N. ROOT 24" TREE
NAIL & CAP S. SIDE 20" MAPLE
PK NAIL
REF. TIES
(I-80) 620+81.06 (OHLTOWN) 45+35.32 ℄ R/W & ℄ CONSTRUCTION
MAINLINE CURVE DATA
Δ = 27° 27' 17" RT.
D_c = 0° 48'
R = 7141.97'
T = 1749.52'
L_c = 3431.84'
E = 210.59'
P.I. = 612+95.77
78° 18' 45" (OBS. TAN.)
50+00
803.70
104.35'
630+82.42 (℄ TRACKS & ℄ RIGHT-OF-WAY)
253+51.42 (R.R.)
ERIE-LACKAWANNA R.R.
S 41° 39' 32" W
78° 01' 30" (OBS.)
940.34' (MEAS.)
(OHLTOWN) 41+96.3
242+97.76 (R.R.)
21° 40' 00"
P.T. STA. 625+78.09
N 89° 25' 02" E
47° 49' 30" (OBS. BY R.R.)
TOP FIRE HYD.
82 IN-142
TRK. SPK. 42+43.42
NAIL & CAP S. SIDE 20" MAPLE
REF. TIES
TRACT 6
TRACT 5
TRACT 4
TRACT 5
TRACT 4
SILICA ROAD
C.H. 178
1234.20
N 30° 15' 18" W
MON
SILICA
200 N.TX.'S NAIL & CAP N. SIDE
TURNER
COUNTY MON.
NAIL & CAP N. SIDE
NAIL & CAP S. SIDE
REF. TIES

3/8" BRASS ROD
2" BELOW GROUND
UPPER 6" TO BE FORMED
CLASS "C" CONCRETE
36"
8" MIN.

NOTE:
MONUMENTS TO BE PLACED BY CONTRACTOR

DETAIL OF CENTERLINE REFERENCE MONUMENTS (NOT TO SCALE)

NOTES:
MONUMENTS TO BE PLACED ON CENTER LINE SURVEY UNLESS OTHERWISE INDICATED
MONUMENTS TO BE PLACED DURING OR AFTER CONSTRUCTION
IRON PIN REFERENCE POINTS TO BE PLACED BEFORE CONSTRUCTION
ALL IRON PIN REFERENCE POINTS ARE SET AT THE DISCRETION OF THE FIELD ENGINEER AND OUTSIDE OF THE CONSTRUCTION LIMITS

MONUMENTS TO BE SET (THIS SHEET)

P.O.T. STA. 546+00 — MONUMENTS DUPLICATED
P.C. STA. 551+64.80 — ON CENTER LINE SURVEY PLAT 1 OF 3
P.I. STA. 555+86.81 (PLACE AS INDICATED ON THE PLAN)
P.T. STA. 560+08.49 (BACK), 560+11.69 (AHEAD)
P.O.T. STA. 567+00
P.O.T. STA. 574+00
P.O.T. STA. 581+00
P.O.T. STA. 585+00
P.C. STA. 595+46.25
P.O.C. STA. 604+00

P.O.C. STA. 612+62.17 (MIDDLE ORDINATE)
P.O.C. STA. 622+00
P.T. STA. 625+78.09
P.O.T. STA. 637+00

Needs to Transfer 1-19-65 F.D.

◉ MONUMENTS TO BE SET
■ EXISTING MONUMENTS
M.V.S.D. = MAHONING VALLEY SANITARY DISTRICT

I HEREBY CERTIFY THAT THIS PLAT IS A TRUE DELINEATION OF A SURVEY MADE FOR THE OHIO DEPARTMENT OF HIGHWAYS.
BY Ryan E. McCloy
DATE Dec. 4, 1964

RECEIVED FOR RECORD January 19th 1965 @ 1:42 PM
RECORDED: VOL. 54, PAGE 66&64 OF THE MAHONING COUNTY RECORDS. January 20, 1965
Horace G. Tellow
RECORDER

CERTIFICATE OF APPROVAL
SIGNED BY Clifton M. Newhall
CLIFTON M. NEWHALL
DATE 1-6-65 DIVISION DEPUTY DIRECTOR

SURVEYORS SEAL

PRELIMINARY SUBMITTAL: JULY 24, 1964
RIGHT-OF-WAY COMPLETION DATE: DEC. 18, 1964

CENTERLINE SURVEY PLAT 2 OF 3

737619

FED. RD.	STATE	PROJECT	
2	OHIO	I-IG-80-5(4)229	

190/275

MAH-80-3.37
RIGHT OF WAY SHEET 3/28

LIMITED ACCESS

THIS IMPROVEMENT HAS BEEN DECLARED A LIMITED ACCESS HIGHWAY FROM STATION 495+76.62 TO STATION 661+13.97 BY ACTION OF THE DIRECTOR OF HIGHWAYS AND RECORDED IN VOLUME 45, PAGE 1217, OF THE DIRECTORS JOURNAL PURSUANT TO LAW.
HEADINGS:- DIRECTOR'S JOURNAL Vol. 41 Pg. 935 12-18-56
DIRECTOR'S JOURNAL Vol. 43 Pg. 1217 11-3-60

CENTER LINE SURVEY PLAT

MAHONING - 80 - 3.37

MAHONING COUNTY, OHIO

JACKSON TOWNSHIP, TRACT 15
AUSTINTOWN TOWNSHIP, TRACT 4, TRACT 5
RANGE 3 & 4 WEST; TOWNSHIP 2 NORTH

0 200 400 800 1200
SCALE IN FT.

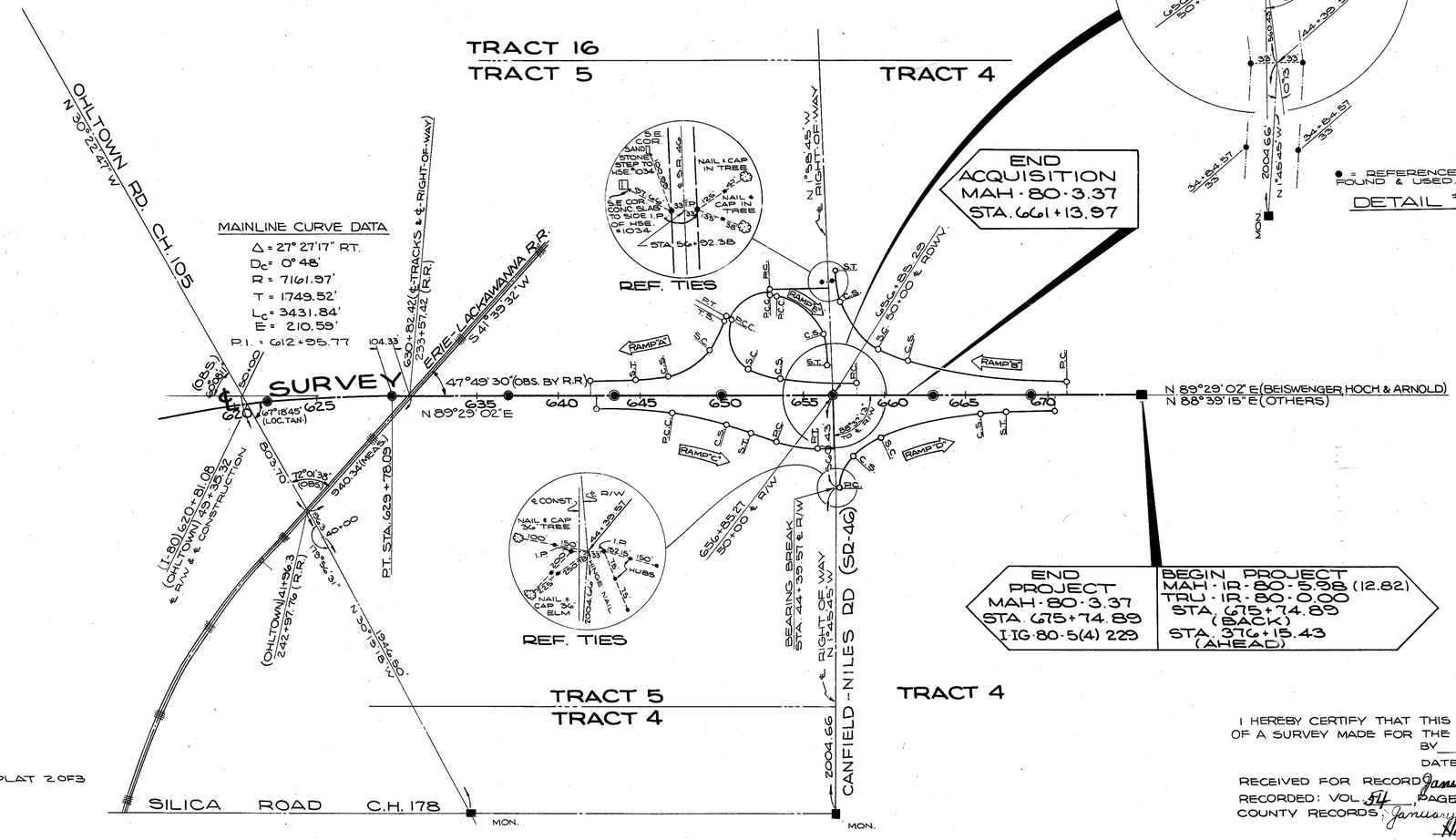

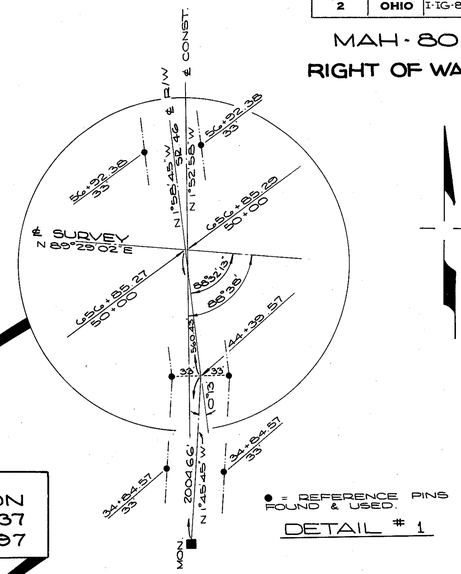

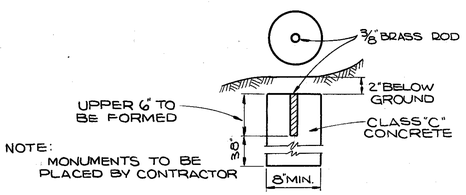

DETAIL OF CENTERLINE REFERENCE MONUMENTS (NOT TO SCALE)

NOTES:
MONUMENTS TO BE PLACED ON CENTER LINE SURVEY
MONUMENTS TO BE PLACED DURING OR AFTER CONSTRUCTION
IRON PIN REFERENCE POINTS TO BE PLACED BEFORE CONSTRUCTION
ALL IRON PIN REFERENCE POINTS ARE SET AT THE DISCRETION OF THE FIELD ENGINEER AND OUTSIDE OF THE CONSTRUCTION LIMITS

MONUMENTS TO BE SET (THIS SHEET)

P.O.C. STA. 622+00
P.T. STA. 629+78.09
P.O.T. STA. 637+00
— MONUMENTS DUPLICATED ON CENTERLINE SURVEY PLAT 2 OF 3
P.O.T. STA. 643+50
P.O.T. STA. 650+00
P.O.T. STA. 656+85.27
P.O.T. STA. 663+00
P.O.T. STA. 669+00

Needs no transfer
1-19-65
F.D.

I HEREBY CERTIFY THAT THIS PLAT IS A TRUE DELINEATION OF A SURVEY MADE FOR THE OHIO DEPARTMENT OF HIGHWAYS.
BY Bryan E. McCoy
DATE Dec 4, 1964

RECEIVED FOR RECORD January 19 1965 @ 1:41 P.M.
RECORDED: VOL. 514, PAGE 361 & 362 OF THE MAHONING COUNTY RECORDS, January 20, 1965.
Horace G. Yetkower
RECORDER

CERTIFICATE OF APPROVAL
SIGNED BY Clifton M. Newhall
CLIFTON M. NEWHALL
DATE 1-6-65 DIVISION DEPUTY DIRECTOR

$10.00

◉ MONUMENTS TO BE SET
■ EXISTING MONUMENTS
• IRON PINS LOCATED

RECOMMENDED
E.D.H.D.

PRELIMINARY SUBMITTAL: JULY 24, 1964 SURVEYORS SEAL
RIGHT-OF-WAY COMPLETION DATE: DEC. 18, 1964

CENTERLINE SURVEY PLAT 3 OF 3

PROPERTY MAP
MAHONING - 80 - 3.37

FED. RD.	STATE	PROJECT	
2	OHIO	I-IG-80-5(4)229	

191/275

MAH - 80 - 3.37
RIGHT OF WAY SHEET 4/28

END ACQUISITION
MAH-18-7.01
STA. 495+76.62
I-IG-80-5(3) 228

BEGIN ACQUISITION
MAH-80-3.37
STA. 495+76.62
I-IG-80-5(4) 229

SILICA RD.
C.H. 178

MAHONING COUNTY
JACKSON TOWNSHIP
R4W T2N

MAHONING COUNTY
AUSTINTOWN TOWNSHIP
R3W T2N

SALT SPRINGS TRACT 16
SALT SPRINGS TRACT 5

TURNER ROAD C.H. 103 (50')

THE MAHONING VALLEY SANITARY DISTRICT

TRACT 15

TRACT 5

RESERVOIR

N 1° 29' 00" W (1929 SR 18 PLANS)
N 0° 38' 53" W (1964 PLANS)

JACKSON TOWNSHIP
AUSTINTOWN TOWNSHIP
COUNTY LINE RD.

N 0° 36' 09" W
SALT SPRINGS TRACT 13
SALT SPRINGS TRACT 15

BEARING BREAK
50+77.42

N 33° 06' 30" E
1065.62'

P.C. STA. 501+37.00

P.T. STA. 519+05.77

P.C. STA. 551+64.80

P.T. STA. 560+08.49 (BACK)
560+11.69 (AHEAD)

S 136.8' (CALC.)
S 89° 37' 07" W (CALC.)

N 3° 21' 34" E

505 510 515 520 525 530 535 540 545 550 555 560 565 570 575 580 585 590

LA RW
RW
℄ SURVEY
N 65° 57' 59" E
N 62° 01' 45" E
530+92.83

HSE. ℄ R/W
GAR.
585+63.58
50+00

P.C. STA. 595+46.25

LIPKEY ROAD C.H. 91 (60')
N 0° 31' 09" W
1232.83'

BEARING BREAK

THE MAHONING VALLEY SANITARY DISTRICT

SALT SPRINGS TRACT 15
SALT SPRINGS TRACT 12

SALT SPRINGS TRACT 15
SALT SPRINGS TRACT 6

MEANDER

SALT SPRINGS TRACT 5
SALT SPRINGS TRACT 6

THE MAHONING VALLEY SANITARY DISTRICT

SALT SPRINGS TRACT 6
SALT SPRINGS TRACT 7

N 9° 42' 16" W

END PROJECT
MAH-18-7.01
STA. 520+80.75
I-IG-80-5(3) 228

BEGIN PROJECT
MAH-80-3.37
STA. 520+80.75
I-IG-80-5(4) 229

OHIO TELEPHONE & TELEGRAPH (EASEMENT)
(GRANTED AUTHORITY TO CONSTRUCT, MAINTAIN & OPERATE THESE LINES & POLES)
EASEMENT: VOL. 27, PAGE 554
VOL. 30, PAGE 19
(NO LIMITS SPECIFIED)

TRACT 6

MARY ISABELLE BOGGS (6)

W.E. & ALICE HESS (7)

SILICA ROAD C.H. 178 (60')

S.R. 18 (66')

AFFECTED UTILITY COMPANIES

THE MAHONING VALLEY SANITARY DISTRICT
P.O. BOX 298
YOUNGSTOWN, OHIO

AMERICAN TELEPHONE & TELEGRAPH
1538 UNION COMMERCE BUILDING
CLEVELAND, OHIO

OHIO BELL TELEPHONE
2405 MARKET ST.
YOUNGSTOWN, OHIO

OHIO EDISON
47 N. MAIN ST.
AKRON, OHIO

NOTES
1. ■ = EXISTING MONUMENTS

GRAPHIC SCALE
0 200' 400' 800' 1200' 1600'

PRELIMINARY SUBMITTAL DATE: JULY 24, 1964 RIGHT OF WAY COMPLETION DATE: DEC. 13, 1964			
Nº	REVISIONS	MADE BY	DATE
1	Added Metes & Bounds		2-1-65
2	IWL & IAWL Revised to ILA & IALA, All WD'S Pertaining to MVSD revised to Standard Easements Per I.O.C. Dated 11-18-65 to Elmer Dixon, with S.A. Guziak's Approval.		11-22-65

STA. 495+76.62 TO STA. 585+63.58
PROPERTY MAP 1 OF 2

PROPERTY MAP
MAHONING - 80 - 3.37

FED. RD.	STATE	PROJECT	
2	OHIO	I-IG-80-5(4)229	

192/275

MAH - 80 - 3.37
RIGHT OF WAY SHEET 5/28

HOWARD C. ROBINETTE & WINNIFRED J. ROBINETTE (11)
CONSTANTINE NIERADKA & ANNA NIERADKA (12)
THELMA BRADSHAW (13)
HOWARD BUCKNER, ET. AL. (14)
ROBERT B. LLOYD (20)
RUDOLPH & BEVERLY A. PENCE (21)
DONNEBELLE GURD (22)
JULIA R. JEFFRIES (23)
PAUL OSCAR CLINE & GEORGIA HELWIG CLINE (24)
ALFRED E. MASON & BERNICE V. MASON (25)
THE MAHONING VALLEY SANITARY DISTRICT (1A)

ALBIN E. ERICKSON (33A)
ALBIN E. ERICKSON (33B)
HATTIE C. PRICE (34)
WILLIAM A. CRAWFORD, ET. AL. (35)
FOREST B. CLARK, INCOMPETENT; UNION NATIONAL BANK OF YOUNGSTOWN, GUARDIAN (36)
JOHN F. MOHAN & MYRTLE M. MOHAN (37)
DOROTHY LLOYD HOOD, AKA MRS. HAROLD HOOD, AKA DOROTHY HOOD (38)

MRS. HAROLD HOOD, AKA DOROTHY LLOYD HOOD, AKA DOROTHY HOOD (38A)
MARGUERITE MALONEY (40)
ELLA M. MICHAEL, JOHN B. MICHAEL, JR. & VIRGINIA E. BRIGGS (41)
CHARLES WALTERS, JR. (42)
GLENN W. ALLEN (43)
OMIT PARCEL (44)

* NOTE - PARCEL 19WL etc., Case Nº 177685 & PARCEL 18 WL etc., Case Nº 177200 Consolidated upon written motion on behalf of the property owner. Both cases concluded per Journal entry dated 1/4/67.

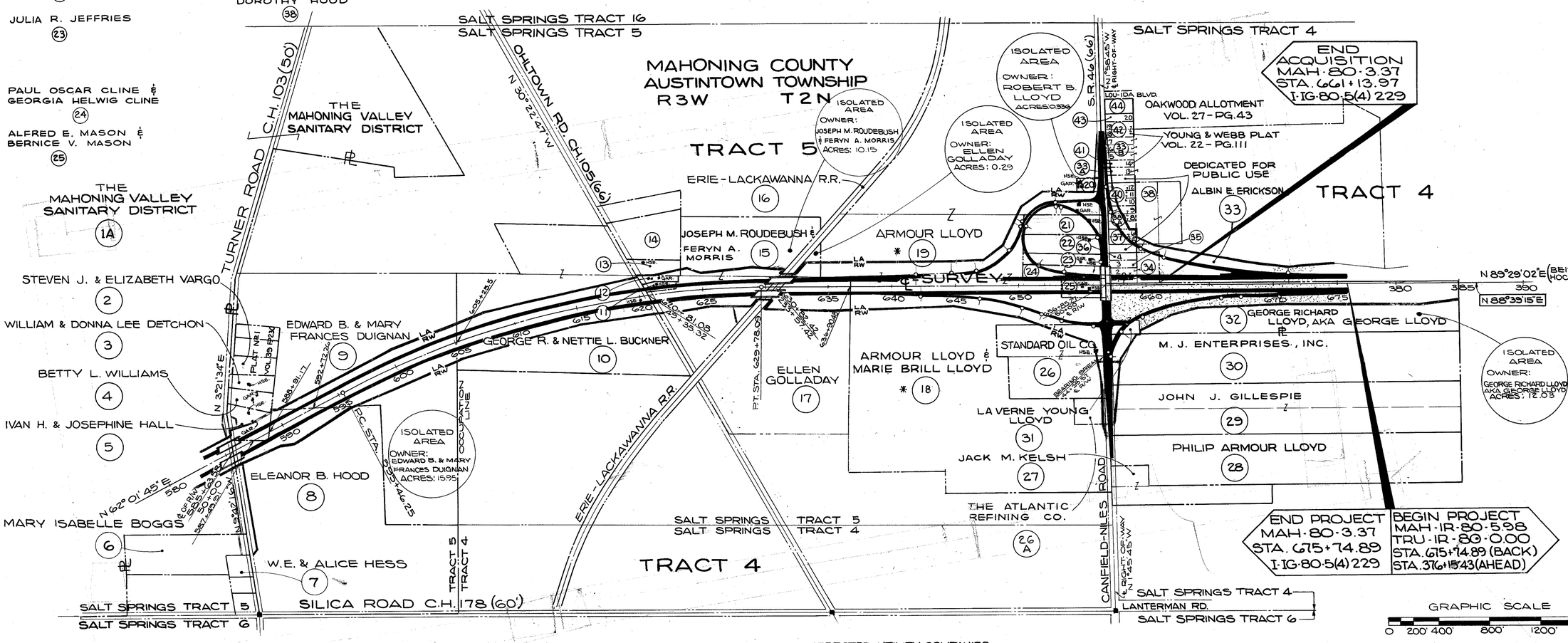

GRAPHIC SCALE
0 200' 400' 800' 1200' 1600'

AFFECTED UTILITY COMPANIES

OHIO BELL TELEPHONE
2405 MARKET ST.
YOUNGSTOWN, OHIO

OHIO EDISON
47 N. MAIN ST.
AKRON, OHIO

NOTES
1. ■ = EXISTING MONUMENTS.
2. BEARINGS APPEARING IN BLOCKED FORM [ ] ARE RELATED TO AN ADJACENT CONTRACT PREPARED BY OTHER CONSULTANTS.
3. THE SHADED AREA [ ] HAS BEEN PURCHASED UNDER A PREVIOUS CONTRACT.

PRELIMINARY SUBMITTAL DATE: JULY 24, 1964
RIGHT OF WAY COMPLETION DATE: DEC. 18, 1964

Nº	REVISIONS	MADE BY	DATE
1	Deleted Pcl. 24AWL, Combined with 24WL		1-9-65
2	Deleted Metes & Boounds Silica Rd.		2-1-65
3	Added Pcl 33B formerly IWL Under I80 12.92/0.00		
4	Deleted Isolated Area for 38, 38A & 40	R.L.M.	7-19-65
5	Name Change Pcl 36 WL		8-30-65
6	Combined Pcl. 18 With Pcl. 19	SAVO	11-23-66
7	Reseparate Pcls 18&19	Tullis	3/21/67

STA. 585+63.58 TO STA. 675+74.89
PROPERTY MAP 2 OF 2

FED. RD.	STATE	PROJECT	
2	OHIO	I-IG-80-5(4)229	

193
275

MAH-80-3.37

RIGHT OF WAY SHEET

6
28

KEY MAP

MAHONING-80-3.37

MAHONING COUNTY, OHIO

JACKSON TOWNSHIP, TRACT 15

AUSTINTOWN TOWNSHIP, TRACT 4, TRACT 5

RANGE 3 & 4 WEST; TOWNSHIP 2 NORTH

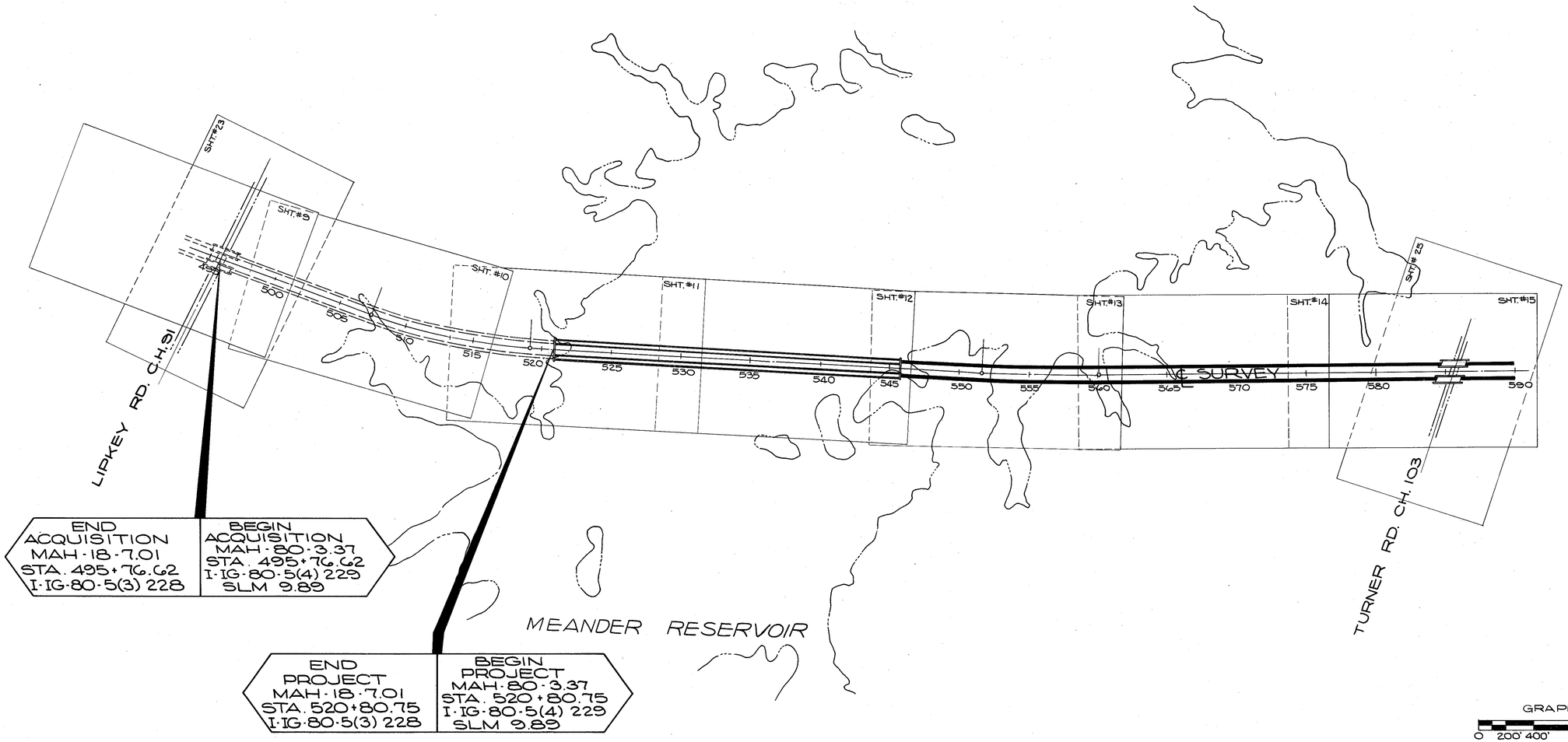

END ACQUISITION
MAH-18-7.01
STA. 495+76.62
I-IG-80-5(3) 228

BEGIN ACQUISITION
MAH-80-3.37
STA. 495+76.62
I-IG-80-5(4) 229
SLM 9.89

END PROJECT
MAH-18-7.01
STA. 520+80.75
I-IG-80-5(3) 228

BEGIN PROJECT
MAH-80-3.37
STA. 520+80.75
I-IG-80-5(4) 229
SLM 9.89

GRAPHIC SCALE

0 200' 400' 800' 1200' 1600'

━━ = PROPOSED CONSTRUCTION

= = = = TO BE CONSTRUCTED UNDER ANOTHER CONTRACT.

SLM = STRAIGHT LINE MILES

PRELIMINARY SUBMITTAL DATE: JULY 24, 1964 RIGHT OF WAY COMPLETION DATE: DEC. 18, 1964			
Nº	REVISIONS	MADE BY	DATE

STA. 495+00 TO STA. 590+00

KEY MAP 1 OF 2

FED. RD.	STATE	PROJECT	
2	OHIO	I-IG-80-5(4)229	

194
275

MAH-80-3.37
RIGHT OF WAY SHEET

7
28

KEY MAP
MAHONING-80-3.37
MAHONING COUNTY, OHIO
JACKSON TOWNSHIP, TRACT 15
AUSTINTOWN TOWNSHIP, TRACT 4, TRACT 5
RANGE 3 & 4 WEST; TOWNSHIP 2 NORTH

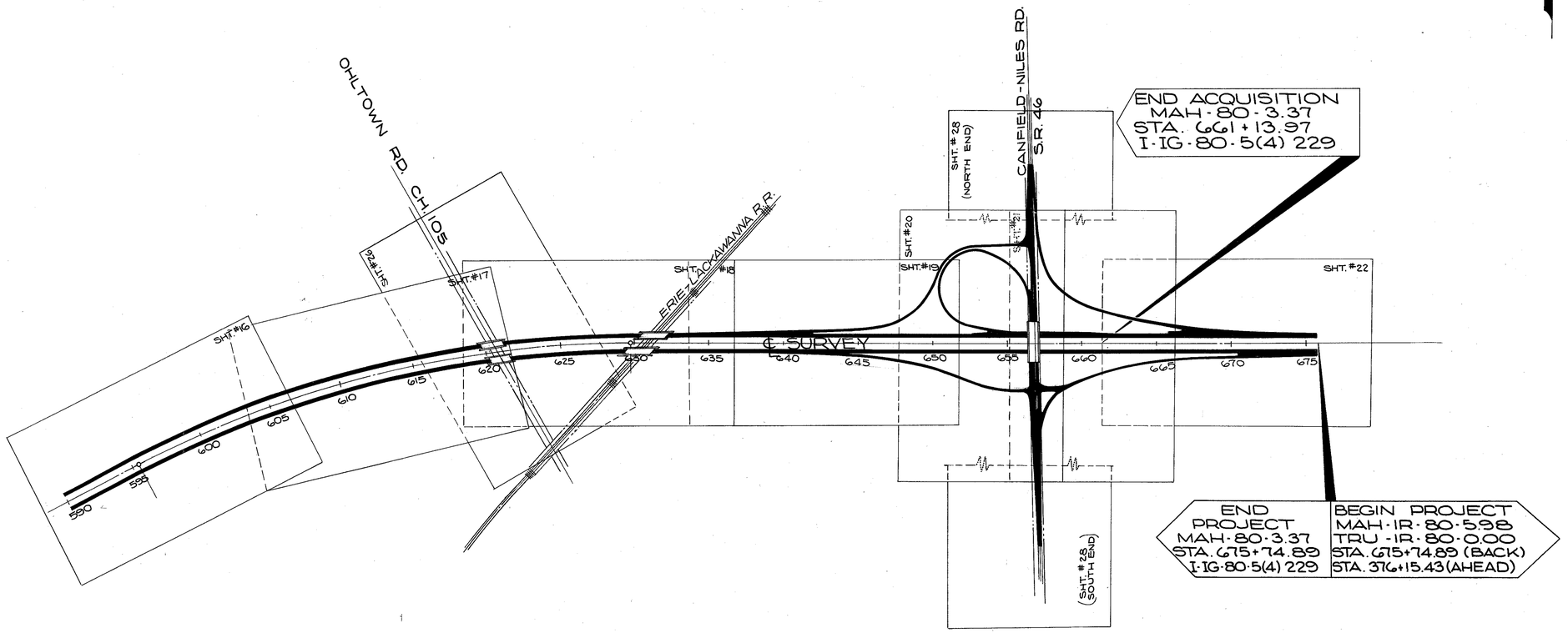

PROPOSED CONSTRUCTION

GRAPHIC SCALE
0 200' 400' 800' 1200' 1600'

PRELIMINARY SUBMITTAL DATE: JULY 24, 1964 RIGHT OF WAY COMPLETION DATE: DEC. 18, 1964			
NO.	REVISIONS	MADE BY	DATE

STA. 590+00 TO STA. 675+74.89
KEY MAP 2 OF 2

SUMMARY OF RIGHT-OF-WAY REQUIRED

TOTAL OWNERS = 39

FED. RD.	STATE	PROJECT	
2	OHIO	1-1G-80-5(4)229	

MAH-80-3.37
RIGHT-OF-WAY SHEET

195/275 — 8/28

PARCEL Nº	OWNER	DEED RECORD BOOK	DEED RECORD PAGE	DEED AREA TOTAL ACRES	DEED AREA PORTION ROAD OCCUPIES	DEED AREA CORRECTION (ACRES)	TO BE ACQUIRED LAND (ACRES)	TO BE ACQUIRED BLDGS.	RESIDUE LEFT	RESIDUE RIGHT	LAND ISOLATED (ACRES)	SHEET Nº	REMARKS	
1 LA	THE MAHONING VALLEY SANITARY DISTRICT	396	152	56.66 54.14	CANNOT DETERMINE	——	15.351	NO	CANNOT DETERMINE	——	——	9,10,11,23	T.B.A. HAS 0.173 AC OCCUPIED BY PRESENT RD.	I
1A-LA		390	10	22.00	CANNOT DETERMINE	——	23.637	NO	CANNOT DETERMINE	——	——	13,14,15,25	T.B.A. HAS 0.145 AC OCCUPIED BY PRESENT RD.	I
1AERIAL		389	342	35.50	CANNOT DETERMINE	——	10.359	NO	CANNOT DETERMINE	——	——	11,12,13	THE ACREAGE SHOWN IS THE TOTAL AERIAL WITHOUT DEDUCTION FOR PILING ACQ.	I
1		389	341	6.09	CANNOT DETERMINE	——	0.235	NO	CANNOT DETERMINE	——	——	11,		I
1A		387	570	7.56	CANNOT DETERMINE	——	0.235	NO	CANNOT DETERMINE	——	——	11,		I
1B		387	399	60.50	CANNOT DETERMINE	——	0.235	NO	CANNOT DETERMINE	——	——	11,		I
1C		387	335	68.34	CANNOT DETERMINE	——	0.235	NO	CANNOT DETERMINE	——	——	11,		I
1D		387	303	71.85	CANNOT DETERMINE	——	0.235	NO	CANNOT DETERMINE	——	——	11,		I
1E		387	185	35.61	CANNOT DETERMINE	——	0.235	NO	CANNOT DETERMINE	——	——	11,		I
1F		387	87	91.0	CANNOT DETERMINE	——	0.235	NO	CANNOT DETERMINE	——	——	11,		I
1G		386	473	66.0	CANNOT DETERMINE	——	0.235	NO	CANNOT DETERMINE	——	——	12,		I
1H		386	209	75.0	CANNOT DETERMINE	——	0.235	NO	CANNOT DETERMINE	——	——	12,		I
1J		381	319	5.5 26.17	CANNOT DETERMINE	——	0.235	NO	CANNOT DETERMINE	——	——	12,	NOTE:	I
1K							0.235	NO	CANNOT DETERMINE	——	——	12,	NO ATTEMPT HAS BEEN MADE TO MATCH THE PRESENT LEGAL DOCUMENTS (VOL. & PAGE) WITH THE VARIOUS PILING ACQ. OR OTHER PURCHASES	I
1L							0.235	NO	CANNOT DETERMINE	——	——	12,		I
1M							0.235	NO	CANNOT DETERMINE	——	——	12,		I
1N							0.235	NO	CANNOT DETERMINE	——	——	12,		I
1P							0.235	NO	CANNOT DETERMINE	——	——	12,		I
1Q							0.235	NO	CANNOT DETERMINE	——	——	12,		I
1R							0.235	NO	CANNOT DETERMINE	——	——	12,		I
1AA							0.235	NO	CANNOT DETERMINE	——	——	12,		I
1BB	(SEE ABOVE)						0.235	NO	CANNOT DETERMINE	——	——	12,		I
1CC							0.235	NO	CANNOT DETERMINE	——	——	12,13		I
1-T							3.674	NO	——	——	——	9,10,11,23	CONSTRUCT FIRE TRAILS, TEMP. RUNAROUND DRAINAGE PIPES & CULVERTS.	I
1A-T							2.813	NO	——	——	——	9,10,23	CONSTRUCT FIRE TRAILS, TEMP. RUNAROUND DRAINAGE PIPES & CULVERTS.	I
1E-T							0.124	NO	——	——	——	12,13	TO PLACE DUMPED ROCK PROTECTION AT BRIDGE ABUTMENT	I
1B-T							0.261	NO	——	——	——	13,	TO CONSTRUCT & RELOCATE A FIRE TRAIL	I
1C-T							5.660	NO	——	——	——	13,14,15,25	TO CONSTRUCT FIRE TRAILS & CULVERTS	I
1D-T							2.309	NO	——	——	——	14,15,25	TO CONSTRUCT FIRE TRAILS & CULVERTS	I
1D-1							0.116	NO	——	——	——	15,25	T.B.A. HAS 0.089 AS OCCUPIED BY PRESENT RD.	I
1D-2							0.406	NO	——	——	——	15,25	T.B.A. HAS 0.299 AC OCCUPIED BY PRESENT RD.	I
1-S							0.031	NO	——	——	——	25	TO CONSTRUCT A CLOSED STORM SEWER	I
2	STEPHEN J. & ELIZABETH VARGO	——	——	——	——	——	——	——	——	——	——	25	OMIT PARCEL	
3	WILLIAM A. & DONNA LEE DETCHON	——	——	——	——	——	——	——	——	——	——	25	OMIT PARCEL	
4	BETTY L. WILLIAMS	——	——	——	——	——	——	——	——	——	——	25	OMIT PARCEL	
5WL	IVAN H. & JOSEPHINE S. HALL	861	48	1.9	0.164	1.885	1.064	NO			——	15,25	T.B.A. HAS 0.065 AC OCCUPIED BY PRESENT RD.	I
5WD							0.105	NO	0.716	——	——	15,25	T.B.A. HAS 0.051 AC OCCUPIED BY PRESENT RD.	I
5T							0.011	NO			——	15,25	CHANNEL CLEANOUT	I
6WD							0.153				——	25	T.B.A. HAS 0.095 AS OCCUPIED BY PRESENT RD.	I
6S	MARY ISABELLE BOGGS	554	371	6.96	0.095	6.400	0.020	NO	——	6.247	——	25	TO CONSTRUCT A CLOSED STORM SEWER	I
6T							0.030				——	25	TO RECONSTRUCT A RESIDENTIAL DRIVE	I
7	W.E. & ALICE HESS	——	——	——	——	——	——	——	——	——	——	4,25	OMIT PARCEL	I
8WL	ELEANOR B. HOOD	360	80	48.7	1.829	48.454	3.677				——	15,25,16	T.B.A. HAS 0.121 AS OCCUPIED BY PRESENT RD.	I
8WD							0.947				——	15,25	T.B.A. HAS 0.417 AS OCCUPIED BY PRESENT RD.	I
8WA-1							——	NO	——	43.830	——	25	TO CONSTRUCT A FIELD DRIVE	I
8WA-2							——				——	25	TO RECONSTRUCT RESIDENTIAL DRIVE	I
8T							0.045				——	16	CHANNEL CLEANOUT	I
9WL	EDWARD B. & MARY FRANCES DUIGNAN	622	391	53.88	0.21	48.91	7.921	NO	25.04	15.95	1595(LL)	16,25,17	THE AREA OF THE TAKE DOES NOT ABUT ON THE EXISTING CROSSROAD	I
9T							0.020	NO			——	16,	CHANNEL CLEANOUT	I
10WL	GEORGE R. & NETTIE L. BUCKNER AKA GEORGE BUCKNER & NETTIE BUCKNER	525	301	26.00	0.657	28.311	9.816	YES	13.531	12.964	——	16,17,18,26	T.B.A. HAS 0.242 AC OCCUPIED BY PRESENT RD.	I
10WA		340	296	8.00	0.338	——	——	——			——	17,26		IG
11WL	HOWARD C. ROBINETTE & WINNIFRED J. ROBINETTE	625	561	0.25	0.09	0.34	0.34	YES	——	——	——	18,26	T.B.A. HAS 0.09 AC OCCUPIED BY PRESENT RD.	IG
12WL	CONSTANTINE NIERADKA & ANNE NIERADKA	956	138	0.295	0.06	0.34	0.34	YES	——	——	——	18,26	T.B.A. HAS 0.06 AC OCCUPIED BY PRESENT RD.	IG
13WL	THELMA BRADSHAW	909	81	1.105	0.114	1.106	0.117	NO	0.989	——	——	18,26	THE AREA OF TAKE DOES NOT ABUT ON THE EXISTING CROSSROAD.	IG
13WA		680	484								——	18,26	TO RECONSTRUCT A RESIDENTIAL DRIVE.	IG
14WL	HOWARD D. BUCKNER, ET AL	——	——	——	——	——	——	——	——	——	——	18,26	OMIT PARCEL	IG
15WL	JOSEPH M. ROUDEBUSH & FERYN A. MORRIS	1026	36	22.0625	0.525	20.374	5.944				——	18,26,27	T.B.A. HAS 0.148 AS OCCUPIED BY PRESENT RD.	IG
* 15X							0.032	NO	10.15	4.23	10.15(LL)	18,26	CHANNEL CLEANOUT	IG
15A-T							0.022				——	18,26	CHANNEL CLEANOUT	IG
16AERIAL	ERIE-LACKAWANNA R.R.	NOT AVAILABLE		CANNOT DETERMINE FROM AVAILABLE INFORMATION		——	0.380		CANNOT BE DETERMINED		——	18,27	THE AERIAL ACREAGE IS SHOWN	IG
16-SL							0.183				——	18,27	WITHOUT DEDUCTING FOR THE	IG
16A-SL							0.256				——	18,27	PILING ACQUISITION	IG
16X							0.068	NO			——	18,27	CHANNEL CLEANOUT	IG
16							0.009				——	18,27	FOR A DETAIL OF OVERLAPS,	IG
16A							0.010				——	18,27	SEE R/W SHEET Nº 27 OF 28	IG
16B							0.009				——	18,27		IG
16C							0.009				——	18,27		IG
17WL	ELLEN GOLLADAY	967	637	28.159	0.374	26.79	4.081					18,19,27	THE AREA OF THE TAKE DOES NOT ABUT ON THE EXISTING CROSSROAD	IG
17X		675	171				0.111	NO	0.29	22.42	0.29(LL)	18	CHANNEL CLEANOUT	IG
* 15S	JOSEPH M. ROUDEBUSH & FERYN A. MORRIS	1026	36				0.04	NO				18,26	TO CONSTRUCT A CLOSED STORM SEWER	

PARCEL Nº	OWNER	DEED RECORD BOOK	DEED RECORD PAGE	DEED AREA TOTAL ACRES	DEED AREA PORTION ROAD OCCUPIES	DEED AREA CORRECTION (ACRES)	TO BE ACQUIRED LAND (ACRES)	TO BE ACQUIRED BLDGS.	RESIDUE LEFT	RESIDUE RIGHT	LAND ISOLATED (ACRES)	SHEET Nº	REMARKS	
θ 18WL	ARMOUR LLOYD & MARIE BRILL LLOYD	590	349	61.964	0.707 (DEED) 0.555 (MINUS ATLANTIC REF.)	——	11.490					19,20	T.B.A. HAS 0.156 AS OCCUPIED BY PRESENT RD.	IG-I
18 WD							0.113	NO	——	49.34	——	28	T.B.A. HAS 0.083 AS OCCUPIED BY PRESENT RD.	I
18-T							0.02					28	To reconstruct a residential drive	I
θ 19WL	ARMOUR LLOYD	524 298	2 354	67.790	1.118 (DEED) 1.046 (MINUS ROBT. LLOYD)	67.327	7.991						T.B.A. HAS 0.137 AS OCCUPIED BY PRESENT RD.	IG-I
19 X							0.103	YES	41.25	——	——	19		I
19WD							0.384					20,28	T.B.A. HAS 0.283 AS OCCUPIED BY PRESENT RD.	I
20WL	ROBERT B. LLOYD	652	145	0.463	0.072	——	0.127	NO	0.3336	——	0.3336(LL)	20	T.B.A. HAS 0.072 AC OCCUPIED BY PRESENT RD.	I
21 WL	RUDOLPH & BEVERLY A. PENCE	871,969	555,585	2.217	0.12	——	2.22	YES	——	——	——	20	T.B.A. HAS 0.12 AC OCCUPIED BY PRESENT RD.	I
22WL	DONNEBELLE GURD	955	573	2.237	0.12	——	2.24	YES	——	——	——	20	T.B.A. HAS 0.12 AC OCCUPIED BY PRESENT RD.	I
23 WL	JULIA R. JEFFRIES AKA JULIA JEFFRIES	461,385	407,446	1,382	0.07	——	1.38	YES	——	——	——	20	T.B.A. HAS 0.07 AC OCCUPIED BY PRESENT RD.	I
24 WL	PAUL OSCAR CLINE & GEORGIA HELWIG CLINE	466,458 363	501,168 538	1.4488	0.07	——	1.4488	YES	——	——	——	20	T.B.A. HAS 0.07 AC OCCUPIED BY PRESENT RD.	I
25 WL	ALFRED E. MASON & BERNICE V. MASON	896	336	1.20	0.11	——	1.20	YES	——	——	——	20	T.B.A. HAS 0.11 AC OCCUPIED BY PRESENT RD.	I
26 WL	THE STANDARD OIL CO., AN OHIO CORPORATION	1,009	123	11.10	0.11	10.986	1.385	YES				19,20	T.B.A. HAS 0.218 AC OCCUPIED BY PRESENT RD.	I
26 WD							0.429	NO	——	9.172	——	20,28	T.B.A. HAS 0.220 AC OCCUPIED BY PRESENT RD.	I
* 26WA-1							——					20	FILL & GRADE BASEMENT WHERE NECESSARY	I
26A-WD	THE ATLANTIC REFINING CO., A PENNSYLVANIA CORP.	1,033	583	1.148	0.00	——	0.101	NO	——	1.047	——	28	ARMOUR PLAT # 1 Vol. 51 Pg. 190	I
27 T	JACK M. KELSH	697	523	5.00	0.233	5.034	0.048	NO	——	——	——	28	CONSTRUCT TEMPORARY RUNAROUND	I
28 T	PHILIP ARMOUR LLOYD	554	294	24.467	0.182	——	0.427	YES	——	——	——	28	CONSTRUCT TEMPORARY RUNAROUND	I
28 WA							——	——	——	——	——	28	TO RECONSTRUCT A RESIDENTIAL DRIVE	I
29 WD	JOHN J. GILLESPIE	1014	694	25.00	0.301	25.074	0.365	NO				28	T.B.A. HAS 0.242 AC OCCUPIED BY PRESENT RD.	I
29 T							0.712	NO	——	24.709	——	28	TO CONST. A TEMPORARY RUNAROUND	I
29WA-1							——	——				28	TO CONSTRUCT A FIELD DRIVE	I
30 WL	M.J. ENTERPRISES, INC., AN OHIO CORPORATION	1,015	405	25.00	0.300	25.032	——					28		I
30 WD							0.676	NO				21	T.B.A. HAS 0.163 AC OCCUPIED BY PRESENT RD.	I
30 T							0.321	NO	——	24.035	——	28	T.B.A. HAS 0.137 AS OCCUPIED BY PRESENT RD.	I
30 WA							0.753	NO	——	——	——	28	TO CONST. A TEMPORARY RUNAROUND	I
31 WL	LAVERNE YOUNG LLOYD	433	203	0.58	0.08	——	——					28	TO CONSTRUCT A FIELD DRIVE	I
32 WL	LAVERNE YOUNG LLOYD	1066	163	24.759	0.30 (DEED) 0.22 (MINUS LAVERNE LLOYD)	23.93	0.58	YES	——	——	——	21	T.B.A. HAS 0.08 AC OCCUPIED BY PRESENT RD.	I
* 33A-WL	ALBIN E. ERICKSON, TRUSTEE	870	452,454	24.94	——	SEE REMARKS	SEE REMARKS	NO	——	12.03	12.03(LL)	21	LAND PURCHASED UNDER CONT. TRU IR-80-5.68	I
33B-WD							12605 S.F.	NO	CANNOT BE DETERMINED - SEE REMARKS	——	——	28	DEED TO BE CONSIDERED VOID. ERROR OF ACCURACY IS APPROX. 1 FT. IN EVERY 162 FT.	I
33AWD							3883 S.F.	NO	——	——	——	28		I
33B-T							4081 S.F.	NO	——	——	——	28	TO CONST. A SERVICE ROAD	I
							13118 S.F.	NO	——	——	——	28	TO CONST. A TEMP. RUNAROUND (A SEPARATE PARCEL)	I
34WL	HATTIE C. PRICE	940	200	1.62	——	——	1.62	YES	——	——	——	21	AREA ALSO INCLUDES ALL OF LOT 1 (13200 S.F.) & ALL OF LOT 2 (13200 S.F.) OF THE YOUNG & WEBB PLAT VOL. 22, PG. 111.	I
		940	197											I
		583	608											I
		539	194											I
		534	264											I
35WL	WILLIAM A. CRAWFORD	994,584	198,72	0.303	——	——	13199 S.F.	YES	——	——	——	21		I
36WL	FORREST & CLARK, INCOMPETENT; UNION NATIONAL BANK OF YOUNGSTOWN, GUARDIAN	509	68	0.303	——	——	13199 S.F.	YES	——	——	——	21		I
37WL	JOHN F. MOHAN & MYRTLE M. MOHAN	618	243	0.606	——	——	26397 S.F.	YES	——	——	——	21		I
38WL	DOROTHY LLOYD HOOD AKA	591	521				8483 S.F.	NO	3.943	——	——	21		I
38A-WL	DOROTHY HOOD AKA	546	181	4.909	——	——	20255 S.F.	NO	0.444	——	——	21		I
38AWD	MRS. HAROLD HOOD	544	194				5012 S.F.	NO	——	——	——	21	TO CONSTRUCT A SERVICE ROAD	I
40WL	MARGUERITE MALONEY	546	180	0.909	——	——	9760 S.F.	NO	0.701	——	——	21		I
40WD							13611 S.F.	NO	——	——	——	21	TO CONSTRUCT A SERVICE ROAD	I
41WD	ELLA M. MICHAEL, JOHN B.	884	579	0.303	——	——	6431 S.F.	NO	0.265	——	——	28		I
♀ 42SA	MICHAEL JR. & VIRGINIA E. BRIGGS		576										TO CONSTRUCT A SERVICE ROAD	I
42T	CHARLES WALTERS JR.	782,726	152,180	0.606	——	——	6475 S.F.	NO	——	——	——	28	TO CONSTRUCT A TEMP. RUNAROUND	I
43T	GLENN W. ALLEN	669,579	401,88	0.303	——	——	4486 S.F.	NO	——	——	——	28	TO CONSTRUCT A TEMP. RUNAROUND	I
2GWA-2	THE STANDARD OIL CO., AN OHIO CORPORATION				(SEE PARCEL 26WL ABOVE)							28	TO RECONSTRUCT A RESIDENTIAL DRIVE	I
** 33WL	ALBIN E. ERICKSON, TRUSTEE	870	452,454	24.94			4.96	NO	SEE ABOVE REMARKS			21, 22	SEE ABOVE REMARKS	I

θ NOTE - Parcel 19WL, etc Case Nº 1776.85 & Parcel 18WL, etc, Case Nº 177200 consolidated upon written motion on behalf of the property owner. Both cases concluded per Journal Entry dated 1/4/67.

♀ 42SA - see sheet 28 for note.

FUNDING DATA

THE FOLLOWING ARE TO BE CONSIDERED "IG" PARCELS (RAILWAY-HIGHWAY-INTERSTATE)
10-WA, 11 WL, 12 WL, 13WL, 13WA, 15WL, 15X, 15AT, 15S, 16AER, 16SL, 16ASL, 16X 16, 16A, 16B, 16C, 17 WL, 17X, (PART) 18WL, AND (PART) 19 WL.

THE FOLLOWING PARCELS ARE TO BE CONSIDERED "I" PARCELS (INTERSTATE)
PARCELS 1 THRU 10WL INCL. (77.6%); 18WD, 18WA, 18WL (58.2%); 19X, 19WD, 19 WL (62.9%)
20WL THRU AND INCL. 43-T —— OMIT PARCELS 2, 3, 4, 7, AND 14

(1) * INDICATES SIMILAR PARCEL OUT OF NUMERICAL ORDER
(2) LL = LAND LOCKED
(3) RESIDUES ARE SHOWN AS BEING LEFT OR RIGHT OF THE MAINLINE ~ NOT LEFT OR RIGHT OF CROSSROADS
(4) T.B.A. = TO BE ACQUIRED
8 Changed Pcls. 33A, 38A, & 40 To 33AWD, 38AWL, & 40WD Deleted 41, Combined with 41WD. 7-23-65
9 Revised T.B.A. Pcls. 33AWL & 33AWD. 8-4-65
10 Name Change Pcl 36 WL 8-30-65

PRELIMINARY SUBMITTAL DATE: JULY 24, 1964
RIGHT-OF-WAY COMPLETION DATE: DEC. 18, 1964

6 Deleted Pcl. 29WA2. Revised Take Pcls. 30WL & 30WD. 6-4-65
7 Changed Take from Temporary to Permanent and changed parcels 33A-T to 33A, 38A-T to 38A, 40-T to 40 and 41-T to 41. Deleted Landlocked Area from parcels 38WL, 38A-WL and 40 WL.
R.L.M. 7-19-65

DATE OF PREPARATION		
REV.	DATE	DESCRIPTION
1	1-9-65	Deleted Pcl. 24AWL, Combined with 24WL.
2	2-1-65	General Revisions
3	3-15-65	Changed Pcl. 6WA To 6T
4	4-2-65	Added Pcl. 15S Chgd. Pcl 15-T to 15X
5	4-29-65	Added Pcl. 33WL Previously 1WL UNDER I 80 5.98-0.00 MAH-TRU & Deleted Structure

6 3/21/67 Parcel 19WL revised

11 13. 1WL & 1AWL Revised to 1LA & 1A-LA, All WD's Pertaining Thereto Deleted & Combined With 1LA. 11-23-65 Savo
12 14. Combined Pcl. 18 With Pcl. 19 11-23-66 Savo
13. 1WL & 1AWL Revised to 1LA & 1A-LA, All WD's Pertaining Thereto Deleted & Combined With 1LA. 11-23-65 Savo
14. Combined Pcl. 18 With Pcl. 19 11-23-66 Savo
15. 1WL & 1AWL Revised to 1LA & 1A-LA, All WD's Pertaining Thereto Deleted & Combined With 1LA. 11-23-65 Savo
11 Revised Pcl. 2&2AWD 9-29-65 Elmer Dixon With S.A. Gutzwiller
12 REVISED - ADDED FINDING DATA 10-5-65

FED. RD.	STATE	PROJECT	
2	OHIO	I-IG-80-5(4)229	

196 / 275

MAH-80-3.37
RIGHT OF WAY SHEET

9 / 28

MAHONING COUNTY
JACKSON TOWNSHIP
TRACT 13
RANGE 4 WEST TOWNSHIP 2 NORTH

LEGEND	
LA RW	LIMITED ACCESS RIGHT-OF-WAY (PROPOSED)
RW	PROPOSED AERIAL EASEMENT LINE
RW	SIDE ROAD RIGHT-OF-WAY (PROPOSED)
LA RW	LIMITED ACCESS AS PROPOSED UNDER PREVIOUS CONTRACT
	ALL PROPOSED EASEMENTS NOT INCLUDED ABOVE
	CONSTRUCTION LIMITS & LOT DIVISIONS
	EXISTING RIGHT OF WAY (SIDE ROADS)
PL	EXISTING PROPERTY LINES
	FORMER PROPERTY OR LOT LINE
x x x x	EXISTING & PROPOSED FENCE
	POLE FOR OHIO EDISON POWER LINES
	POLE FOR OHIO BELL TELEPHONE LINES
	POLE FOR OHIO EDISON & OHIO BELL TELEPHONE LINES

REF. TIES

#327-64 P.K. W. SIDE
S 89°03'30" E 1774.32'
NAIL & CAP 12" PINE
℄ LIPKEY R/W
P.K. SET
℄ SURVEY 1742'
R.R. SPIKE 50+00

FELIX VINCENT TESNER
LOUISE C. TESNER

DOROTHY N. SMITH

ROBERT J. SMITH

THE MAHONING VALLEY SANITARY DISTRICT

A SPECIAL PROP PLAT APPEARS ON SHT. 24 OF 28

POINT OF ACCESS FOR FIRE TRAIL ACCESS UNDER BRIDGE ONLY STA. 492+91 LT. 24' WIDTH

POINT OF ACCESS FOR FIRE TRAIL ACCESS UNDER BRIDGE ONLY. STA. 496+00 RT. 24' WIDTH

1-T 3.674 AC | 1-LA T.B.A. = 15.178 AC P.R.O. = 0.173 AC | 1A-T 2.813 AC

PROPOSED 24' FIRE TRAIL (FUTURE CONSTRUCTION)

CONSTRUCTION LIMITS

TOE OF SLOPE CONSTRUCTION LIMITS

℄ GRASS FIRE LANE

FUTURE CONSTRUCTION UNDER MAH.18-7.01

℄ PROPOSED 24' FIRE TRAIL (FUTURE CONSTRUCTION)

TO BE USED AS TEMPORARY RUNAROUND DURING CONSTRUCTION UNDER CONTRACT MAH.18-7.01

℄ RW-LIPKEY RD. (60') EXIST. RW

EXIST. RW

PROPOSED FIRE TRAIL MAH.18-7.01 UNDER CONTRACT

N 0° 36' 09" W EXIST. RW

N 0° 36' 09" W ℄ RW LIPKEY RD. (S.H.S) ROADWAY CONSTRUCTION UNDER MAH.18-7.01

N 0° 31' 09" W EXIST. RW

N 0° 31' 09" W ℄ RW-LIPKEY RD. (60') EXIST. RW

N 0° 31' 09" W

N 07° 53' 28" E

N 83° 06' 30" E

N 83° 00' 30" E

N 81° 39' 30" E

S 89° 20' 45" E 112.32'

N 83° 01' 34" E 600'

STA. 485+00

STA. 500+00 MATCH LINE

TREE ROW

8' FIELD DRIVE

10' ASPHALT DR.

ASPHALT DRIVE

1-STY FR. & STONE HOUSE

2'-4" SCATTERED POPULARS

2'-4" ELM THICKET

SCATTERED SMALL TREES

DBL. 18" APPLE

DBL. 15" APPLE

DBL. 12" APPLE

18" APPLE

24" APPLE

DBL. 15" CHERRY

6'-4" PLUM

2'-2" APPLES

24" OAK

2'-4" TREE ROW

OUTHOUSE

SEPARATED BRIDGES TO BE CONSTRUCTED UNDER MAH.18-7.01

CORN CRIB

14" APPLE

LAWN

½ ST. FR. HOUSE

GARAGE

FR. CHICKEN COOP

FR. SHEDS

BARN

TILE SILO

8' GRAVEL DRIVE

15" MAPLE

WOODS 2'-4" TREES

SMALL TREES

PINE TREES

BEARING BREAK

STA 495+46.43 49+96.67

495

496+20.68 (125) 51+20.07 (30)

496+06.81 50+03.33

495+75.82 I-80 50+00 (℄ ROADWAY-LIPKEY RD.)

495+76.62 I-80 50+00 (℄ RW-LIPKEY RD.)

495+82.83 (125') 48+77.57 (30')

495+62.66 (125) 48+74.22

496+00.90 (125) 51+25.76

END ACQUISITION MAH-18-7.01 STA. 495+76.62 I-IG-80-5(3) 228

BEGIN ACQUISITION MAH-80-3.37 STA. 495+76.62 I-IG-80-5(4) 229

FOR CROSSROAD DETAIL, SEE RW SHEET Nº 23 OF 28

NOTES: (1) SEE UPPER-LEFT FOR "LEGEND", THIS SHEET
(2) SEE RIGHT OF WAY SHEET Nº 13 FOR FENCE QUANTITIES

GRAPHIC SCALE
0 50' 100' 150' 200'

PARCELS 1-T & 1A-T USED FOR THE PURPOSE OF CONSTRUCTING FIRE TRAILS, TEMPORARY RUNAROUND AND DRAINAGE PIPES & CULVERTS.

PRELIMINARY SUBMITTAL DATE: JULY 24, 1964
RIGHT OF WAY COMPLETION DATE: DEC. 18, 1964

Nº	REVISIONS	MADE BY	DATE
1	General Revisions		2-1-65
2	1WL & 1AWL Revised to 1LA & 1ALA, All WD's Pertaining to MVSD revised to Standard Easements Per I.O.C. Dated 11-18-65 to Elmer Dixon with S.A. Guzick's Approval		11-22-65

STA. 485+00 TO STA. 500+00

FED. RD.	STATE	PROJECT	
2	OHIO	I-IG-80-5(4) 229	

197/275

THE MAHONING VALLEY SANITARY DISTRICT

MAH-80-3.37
RIGHT OF WAY SHEET

10/28

1/T — 3.674 Ac
1/LA — T.B.A. = 15.178 Ac, P.R.O. = 0.173 Ac
1A/T — 2.813 Ac

PARCELS 1-T & 1A-T USED FOR THE PURPOSE OF CONSTRUCTING FIRE TRAILS, TEMPORARY RUNAROUND AND DRAINAGE PIPES & CULVERTS.

(FOR PROPERTY PLAT, SEE RIGHT-OF-WAY SHEET 24 OF 28)

MAHONING COUNTY
JACKSON TOWNSHIP
TRACT 15
RANGE 4 WEST TOWNSHIP 2 NORTH

CURVE DATA
P.I. STA. 513 + 25.78
Δ = 17°08' 31" LT.
Dc = 1° 28' 00"
Rc = 3,906.53'
T = 588.78'
Lc = 1,168.77'
E = 44.12'

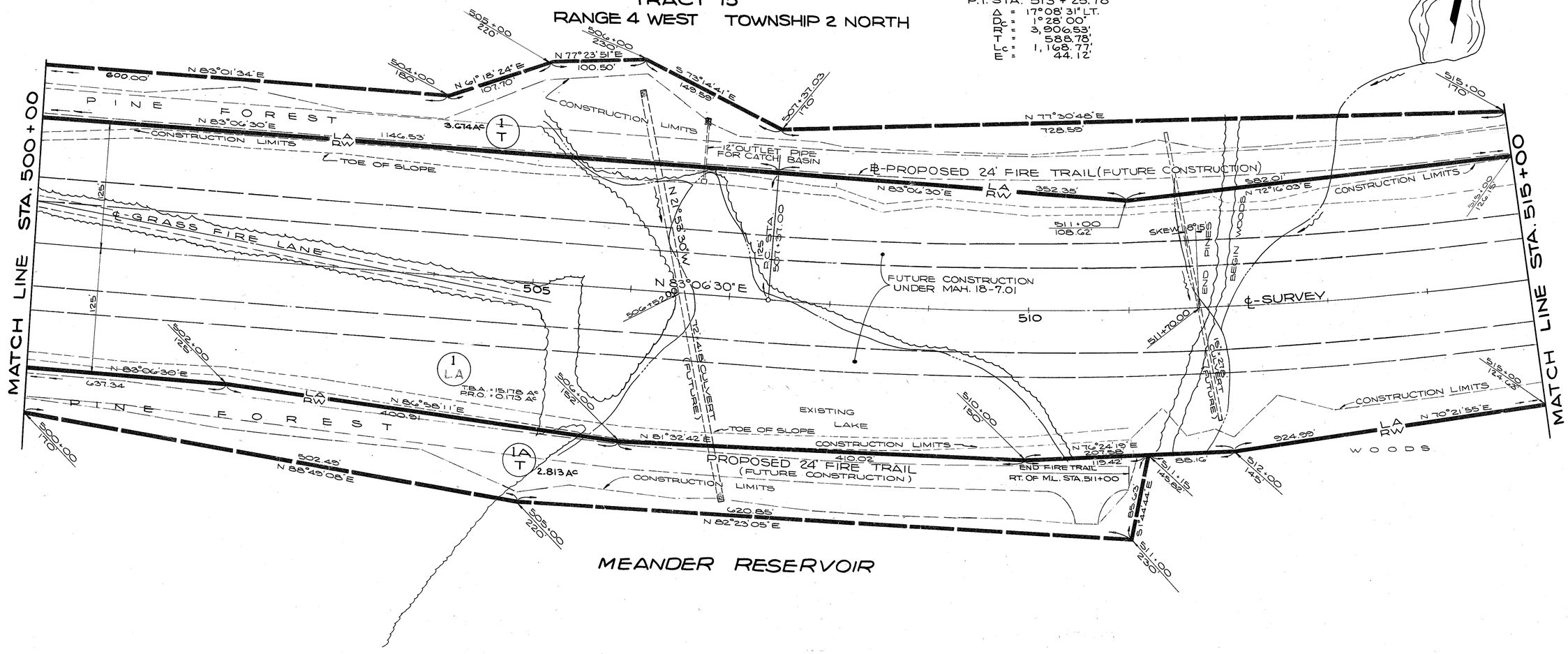

MEANDER RESERVOIR

NOTES: (1) SEE RIGHT-OF-WAY SHEET Nº 9 FOR THE "LEGEND"
(2) SEE RIGHT-OF-WAY SHEET Nº 13 FOR FENCE QUANTITIES

GRAPHIC SCALE
0 50' 100' 150' 200'

PRELIMINARY SUBMITTAL DATE: JULY 24, 1964
RIGHT OF WAY COMPLETION DATE: DEC. 18, 1964

Nº	REVISIONS	MADE BY	DATE
1	General Revisions		2-1-65
2	1WL & 1AWL Revised to 1LA & 1ALA, All WD'S Pertaing to MVSD revised to Standard Easements Per I.O.C. Dated 11-18-65 to Elmer Dixon with S.A. Guziak's Approval.		11-22-65

THE MAHONING VALLEY SANITARY DISTRICT

STA. 500+00 TO STA. 515+00

FED. RD.	STATE	PROJECT	
2	OHIO	I-IG-80-5(4)225	

198/275

MAH-80-3.37

RIGHT OF WAY SHEET 11/28

THE MAHONING VALLEY SANITARY DISTRICT

1 LA | 1 AERIAL | 1 | 1A | 1B | 1C | 1D | 1E | 1F | 1 T

T.B.A. 15.178 Ac
P.R.O. 0.173 Ac

10.359 Ac

T.B.A. = 0.235 Ac | T.B.A. = 0.235 Ac | T.B.A. = 0.235 Ac | T.B.A. = 0.235 Ac | T.B.A. = 0.235 Ac | T.B.A. = 0.235 Ac | T.B.A. = 0.235 Ac

3.674 Ac

PARCEL 1-T USED FOR THE PURPOSE OF CONSTRUCTING FIRE TRAILS, TEMPORARY RUNAROUND AND DRAINAGE PIPES & CULVERTS.

(FOR A PROPERTY PLAT, SEE R/W SHEET 24 OF 28)

CURVE DATA
P.I. STA. 513 + 25.78
Δ = 17° 08' 31" LT.
D_c = 1° 28' 00"
R = 3,906.53'
T = 588.78
L_c = 1,168.77'
E = 44.12'

MAHONING COUNTY
JACKSON TOWNSHIP
TRACT 15
RANGE 4 WEST TOWNSHIP 2 NORTH

MEANDER RESERVOIR

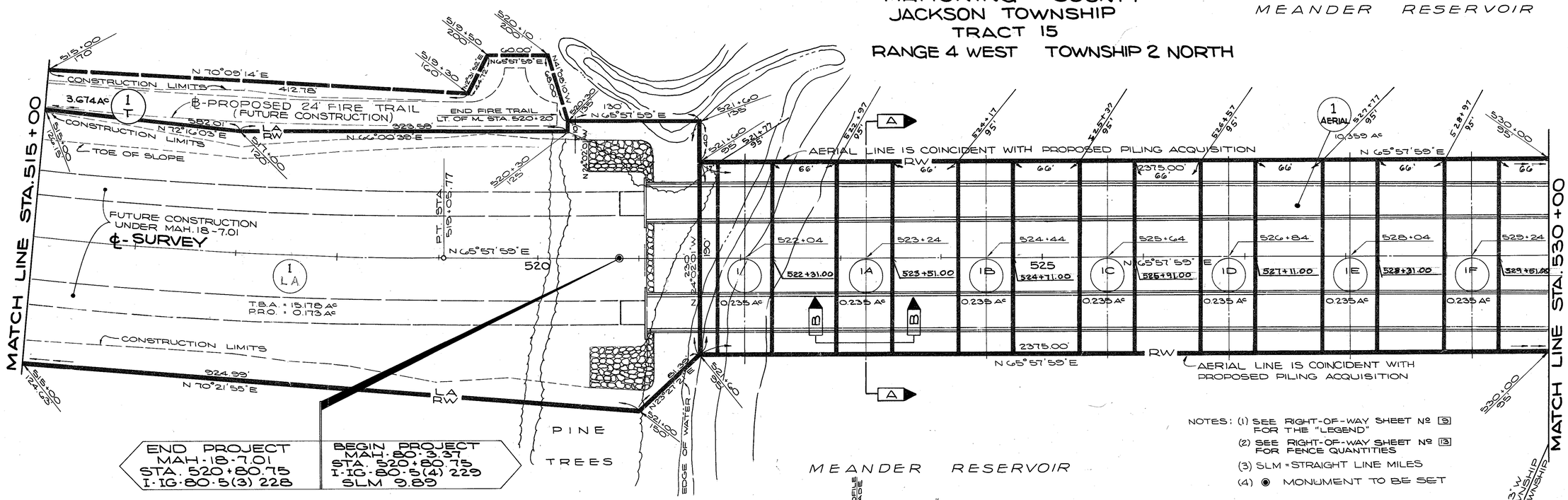

NOTES: (1) SEE RIGHT-OF-WAY SHEET Nº 5 FOR THE "LEGEND"
(2) SEE RIGHT-OF-WAY SHEET Nº 13 FOR FENCE QUANTITIES
(3) SLM = STRAIGHT LINE MILES
(4) ◉ MONUMENT TO BE SET

GRAPHIC SCALE
0 50' 100' 150' 200'

END PROJECT
MAH-18-7.01
STA. 520+80.75
I-IG-80-5(3) 228

BEGIN PROJECT
MAH-80-3.37
STA. 520+80.75
I-IG-80-5(4) 229
SLM 9.89

STATIONS & OFFSETS FOR THE BRIDGE PILING ACQUISITION

PARCEL	A	B	C	D
1	521+77 55.00'	522+31 55.00'	522+31 55.00'	521+77 95.00'
1A	523+51 55.00'	523+51 55.00'	523+51 55.00'	522+97 55.00'
1B	524+71 55.00'	524+71 55.00'	524+71 55.00'	524+17 55.00'
1C	525+37 55.00'	525+91 55.00'	525+91 55.00'	525+37 55.00'
1D	526+57 55.00'	527+11 55.00'	527+11 55.00'	526+57 55.00'
1E	527+77 55.00'	528+31 55.00'	528+31 55.00'	527+77 55.00'
1F	528+97 55.00'	529+51 55.00'	529+51 55.00'	528+97 55.00'

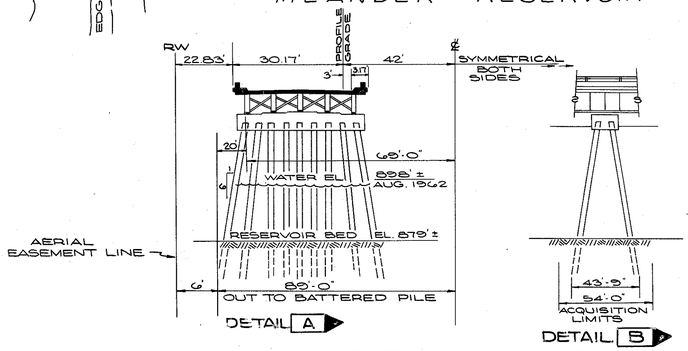

DETAIL OF COLUMNS AND BATTERED PILING FOR LOCATION OF R/W ACQUISITION @ THE MOST EXTREME EXAMPLE FOUND AT STA. 541+00 ±.

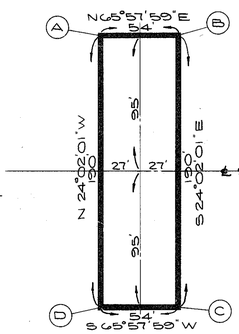

TYPICAL BRIDGE PILING ACQUISITION

PRELIMINARY SUBMITTAL DATE:	JULY 24, 1964		
RIGHT OF WAY COMPLETION DATE:	DEC. 18, 1964		
Nº	REVISIONS	MADE BY	DATE
1	General Revisions		2-1-65
2	Corrected Distances		7-16-65
3	IWL℄IAWL Revised to ILA℄IALA, All WD'S Pertaining to MVSD revised to Standard Easements Per I.O.C. Dated 11-18-65 to Elmer Dixon with S.A. Guziak's Approval		11-22-65

STA. 515+00 TO STA. 530+00

FED. RD.	STATE	PROJECT	
2	OHIO	I-IG-80-5(4)225	

100 / 275

MAH-80-3.37

12 / 28

THE MAHONING VALLEY SANITARY DISTRICT

RIGHT OF WAY SHEET

MAHONING COUNTY
JACKSON TOWNSHIP
TRACT 15
RANGE 4 WEST TOWNSHIP 2 NORTH

MAHONING COUNTY
AUSTINTOWN TOWNSHIP
TRACT 6
RANGE 3 WEST TOWNSHIP 2 NORTH

IG	IH	IJ	IK	IL	IM	IN	IP	IQ	IR	IAA	IBB	ICC	IE T
T.B.A.= 0.235 Ac	T.B.A.= 0.235 Ac	T.B.A.= 0.235 Ac	T.B.A.= 0.235 Ac	T.B.A.= 0.235 Ac	T.B.A.= 0.235 Ac	T.B.A.= 0.235 Ac	T.B.A.= 0.235 Ac	T.B.A.= 0.235 Ac	T.B.A.= 0.235 Ac	T.B.A.= 0.235 Ac	T.B.A.= 0.235 Ac	T.B.A.= 0.235 Ac	T.B.A.= 0.124 Ac TO PLACE DUMPED ROCK PROTECTION AT BRIDGE ABUTMENT

(FOR THE M.V.S.D. PROPERTY PLAT, SEE RIGHT-OF-WAY SHEET № 24 OF 28.)

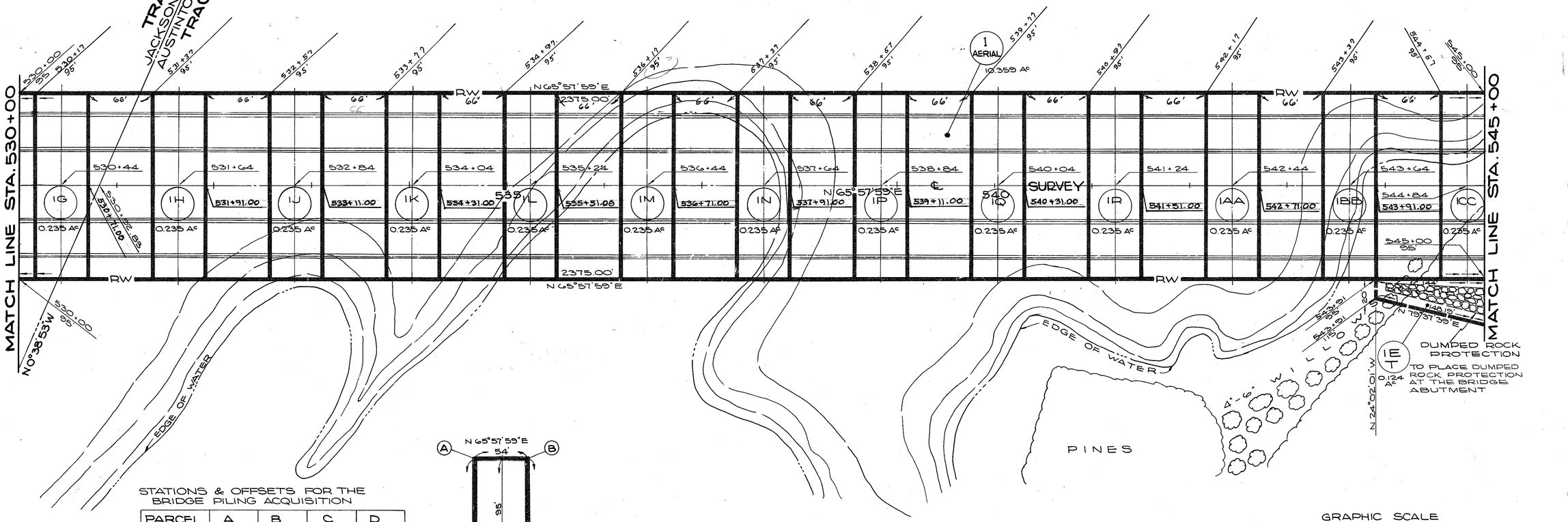

STATIONS & OFFSETS FOR THE BRIDGE PILING ACQUISITION

PARCEL	A	B	C	D
IG	530+17 95.00'	530+71 95.00'	530+71 95.00'	530+17 95.00'
IH	531+37 95.00'	531+91 95.00'	531+91 95.00'	531+37 95.00'
IJ	532+57 95.00'	533+11 95.00'	533+11 95.00'	532+57 95.00'
IK	533+77 95.00'	534+31 95.00'	534+31 95.00'	533+77 95.00'
IL	534+97 95.00'	535+51 95.00'	535+51 95.00'	534+97 95.00'
IM	536+17 95.00'	536+71 95.00'	536+71 95.00'	536+17 95.00'
IN	537+37 95.00'	537+91 95.00'	537+91 95.00'	537+37 95.00'
IP	538+57 95.00'	539+11 95.00'	539+11 95.00'	538+57 95.00'
IQ	539+77 95.00'	540+31 95.00'	540+31 95.00'	539+77 95.00'
IR	540+97 95.00'	541+51 95.00'	541+51 95.00'	540+57 95.00'
IAA	542+17 95.00'	542+71 95.00'	542+71 95.00'	542+17 95.00'
IBB	543+37 95.00'	543+91 95.00'	543+91 95.00'	543+37 95.00'
ICC	544+57 95.00'	545+17 95.00'	545+17 95.00'	544+57 95.00'

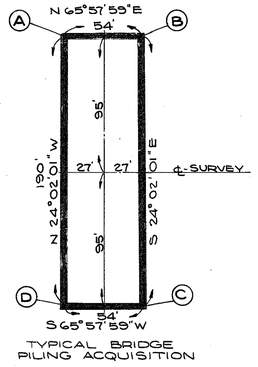

TYPICAL BRIDGE PILING ACQUISITION

NOTES: (1) SEE RIGHT-OF-WAY SHEET № 5 FOR THE "LEGEND"

(2) SEE RIGHT-OF-WAY SHEET № 13 FOR FENCE QUANTITIES

GRAPHIC SCALE

0 50' 100' 150' 200'

PRELIMINARY SUBMITTAL DATE: JULY 24, 1964
RIGHT OF WAY COMPLETION DATE: DEC. 18, 1964

№	REVISIONS	MADE BY	DATE
1	General Revisions		2-1-65
2 & 3	Corrected Distances IWL&IAWL Revised to ILA&IALA, All WD'S Pertaining to MVSD revised to Standard Easements Per I.C.C. Dated 11-18-65 to Elmer Dixon with S.A. Guziak's Approval.		7-16-65 11-22-65

THE MAHONING VALLEY SANITARY DISTRICT

STA. 530+00 TO STA. 545+00

FED. RD.	STATE	PROJECT	
2	OHIO	1-IG-80-5(4)229	

200/275

MAH-80-3.37

13/28

THE MAHONING VALLEY SANITARY DISTRICT

(1 AERIAL) 10.359 AC — FOR PROPERTY PLAT, SEE RIGHT-OF-WAY SHEET Nº 24 OF 28

(ICC) T.B.A.=0.235AC

(1B T) 0.261 AC — TO CONSTRUCT & RELOCATE A FIRE TRAIL

(1A LA) T.B.A. 23.492 AC, P.R.O. 0.145 AC — TO CONSTRUCT FIRE TRAILS & CULVERTS

(1C T) 5.560 AC

(1E T) 0.124 AC — TO PLACE DUMPED ROCK PROTECTION AT THE BRIDGE ABUTMENT

CURVE DATA

P.I. STA. 555+86.81
Δ = 3°56'14" LT.
D_C = 0°28'
R = 12,277.67'
T = 422.01'
L = 843.69'
E = 7.25'

MAHONING COUNTY
AUSTINTOWN TOWNSHIP
TRACT 5

MAHONING COUNTY
AUSTINTOWN TOWNSHIP
TRACT 6
RANGE 3 WEST TOWNSHIP 2 NORTH

MEANDER RES.
MEANDER RESERVOIR
PINES
TREES
WILLOWS
EDGE OF LAKE
EDGE OF WATER
MANHOLE #1 STA. 0+00
EXISTING SUBMERGED CABLES
BURIED CABLE MARKER (AS PROPOSED BY A.T. & T.)
EXCAVATE SPLICE PIT
3 RELOC. BURIED CABLES (AS PROPOSED BY A.T. & T.)
A.T. & T. CABLES
TIE TO ABUTMENT SEE ST'D DETAIL F-3
SCATTERED DEAD ELMS
CHAIN LINK FENCE (MOD.)
CONSTRUCTION LIMITS
DUMPED ROCK PROTECTION
DUMPED ROCK PROT.
TO PLACE DUMPED ROCK PROTECTION AT THE BRIDGE ABUTMENT
EXIST. FIRE TRAIL
PROPOSED 24' FIRE TRAIL
16' FIRE TRAIL (TO BE ABANDONED)
TO CONSTRUCT & RELOC. FIRE TRAILS
TO CONSTRUCT FIRE TRAILS & CULVERTS
ABANDONED CONC. POWER TOWER FOUNDATION
48"x 286' CULVERT
BEGIN FIRE TRAIL @ 125 RT. of M.L. STA. 554+00
MATCH LINE STA. 545+00
MATCH LINE STA. 560+00

NOTE:
THE EXISTING EASEMENTS FOR A.T. & T. ARE FOUND IN VOLUMES 27 & 30, PAGES 554 & 19 RESPECTIVELY. (NO LIMITS ARE SPECIFIED)

NOTES: (1) SEE RIGHT-OF-WAY SHEET Nº 5 FOR THE "LEGEND"
(2) SEE RIGHT-OF-WAY SHEET Nº 13 FOR FENCE QUANTITIES

GRAPHIC SCALE
0 50' 100' 150' 200'

~ FENCE QUANTITIES ~

R/W SHEET	STATION TO STATION		I-25 WOVEN WIRE FENCE TYPE 47 L.F. (I)	I-25 WOVEN WIRE FENCE TYPE 47 L.F. (IG)	I-26 CHAIN LINK FENCE AS PER PLAN	WOVEN WIRE FENCE I.A.P.A.	W.W.F. C.P.A.	W.W.F. E.P.A.	W.W.F. ABUT. CONN.	CHAIN LINK FENCE (PP) PULL PANEL	C.L.F. (EP) END PANEL	C.L.F. ABUT. CONN.
13	545+00	560+00	—	—	2907	—	—	—	—	9	—	4
14	560+00	575+00	—	—	3004	—	—	—	—	6	—	—
15	575+00	590+00	978	—	2079	4	6	2	4	4	—	4
16	590+00	605+00	3067	—	—	6	3	2	—	—	—	—
17	605+00	620+00	2209	848	—	6	1	—	1	—	—	—
18	620+00	635+00	—	3750	—	3	17	6	15	—	—	—
19	635+00	650+00	923	2200	—	6	4	3	—	—	—	—
20	650+00	656+85.27	1675	—	—	3	4	3	—	—	—	—
21	656+85.27	665+00	2219	—	—	6	7	1	—	—	—	—
22	665+00	675+74.89	2251	—	—	5	2	2	—	—	—	—
* 25	TURNER ROAD 41+00 TO 58+50		—	—	1012	—	—	—	—	5	2	—
28	S.R. 46 34+00 TO 39+00 58+50 TO 64+00		72	—	—	—	1	1	—	—	—	—
	TOTALS		13394	6798	9002	39	45	20	20	24	2	8

* ITEM I-26 12' CHAIN LINK FENCE GATE = 1 EA.
I.A.P.A. ~ INTERMEDIATE ANCHOR POST ASSEMBLY
C.P.A. ~ CORNER POST ASSEMBLY
E.P.A. ~ END POST ASSEMBLY

NOTE: FENCING USED WITHIN THE M.V.S.D. SHALL BE STANDARD CHAIN LINK FENCE, MODIFIED WITH A VERTICAL EXTENSION ARM & 3 STRANDS OF BARBED WIRE. THE BARBED WIRE SHALL MEET THE REQUIREMENTS OF SECTION M-10.38. THE VERTICAL EXTENSION ARM SHALL MEET THE REQUIREMENTS OF U.S.S. CYCLONE FENCE STYLE T-22 OR T-4 AS SHOWN ON THEIR DRAWING C8X-27-DET OR PAGE FENCE STYLE 3 TRV OR AN APPROVED EQUAL. THE END, CORNER AND GATE POSTS SHALL BE EXTENDED TO PROVIDE FOR THE BARBED WIRE.

PRELIMINARY SUBMITTAL DATE: JULY 24, 1964			
RIGHT OF WAY COMPLETION DATE: DEC. 18, 1964			
Nº	REVISIONS	MADE BY	DATE
1	General Revisions		2-1-65
2	IWL & IAWL Revised to 1LA & 1ALa, All WD's Pertaining to MVSD revised to Standard Easements Per I.O.C. Dated 11-18-65 to Elmer Dixon with S.A. Guzlak's Approval.		11-22-65

THE MAHONING VALLEY SANITARY DISTRICT

◉ = MONUMENT TO BE SET

STA. 545+00 TO STA. 560+00

FED. RD.	STATE	PROJECT	
2	OHIO	I-IG-80-5(4)225	

201/275

MAH-80-3.37

RIGHT OF WAY SHEET

14/28

THE MAHONING VALLEY SANITARY DISTRICT

(1A LA) TBA: 23.492 AC PRO.: 0.145 AC

(1C T) 5.660 AC TO CONSTRUCT FIRE TRAILS & CULVERTS

(1D T) 2.309 AC

(FOR PROPERTY PLAT, SEE RIGHT-OF-WAY SHEET 24 OF 28.)

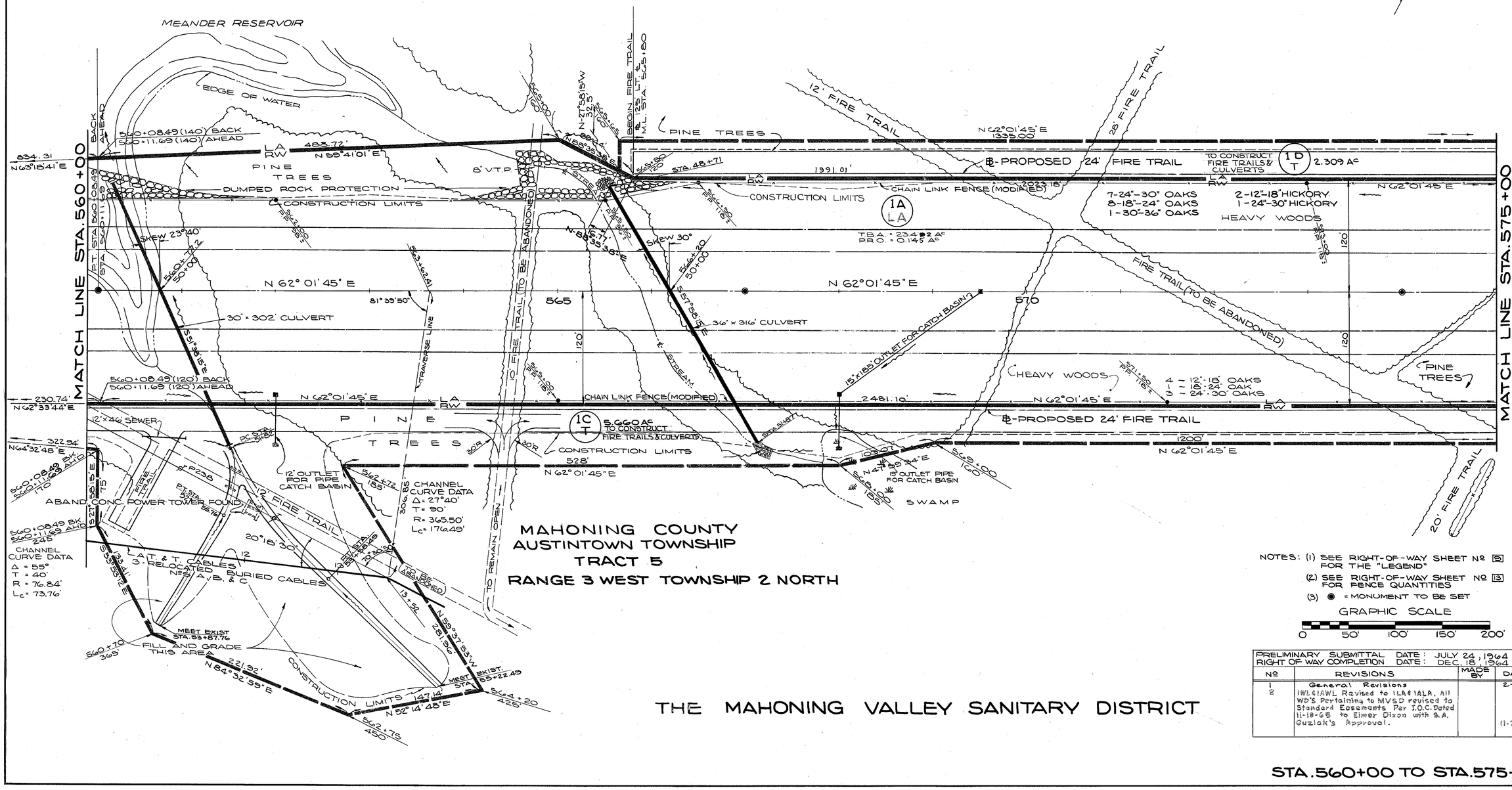

MAHONING COUNTY
AUSTINTOWN TOWNSHIP
TRACT 5
RANGE 3 WEST TOWNSHIP 2 NORTH

NOTES: (1) SEE RIGHT-OF-WAY SHEET Nº 12 FOR THE "LEGEND"

(2) SEE RIGHT-OF-WAY SHEET Nº 13 FOR FENCE QUANTITIES

(3) ◉ = MONUMENT TO BE SET

GRAPHIC SCALE

0 50' 100' 150' 200'

PRELIMINARY SUBMITTAL DATE: JULY 24, 1964
RIGHT OF WAY COMPLETION DATE: DEC. 18, 1964

Nº	REVISIONS	MADE BY	DATE
1	General Revisions		2-1-65
2	1WL&1AWL Revised to 1LA&1ALA. All WD'S Pertaining to MVSD revised to Standard Easements Per I.O.C. Dated 11-18-65 to Elmer Dixon with S.A. Guziak's Approval.		11-22-65

THE MAHONING VALLEY SANITARY DISTRICT

STA. 560+00 TO STA. 575+00

FED. RD.	STATE	PROJECT	
2	OHIO	I-IG-80-5(4)229	

202/275

MAH-80-3.37
RIGHT OF WAY SHEET 15/28

LEGEND	
OHIO BELL TELEPHONE POLES	
Φ	POLE FOR OHIO BELL TEL. LINES
●	RELOCATED OHIO BELL TEL. POLE
44/20	RURAL LEAD Nº /Nº OF POLE (O.B.T. Co.)
NOTE 44: RURAL LEAD Nº FOR TURNER RD.	

NOTE: 1 CABLE ON OHIO BELL TELEPHONE (O.B.T.) POLE LINE WILL BE REPLACED WHEN CUT IS MADE. POLES ARE 100 % O.B.T. — NO OHIO EDISON CONTACT

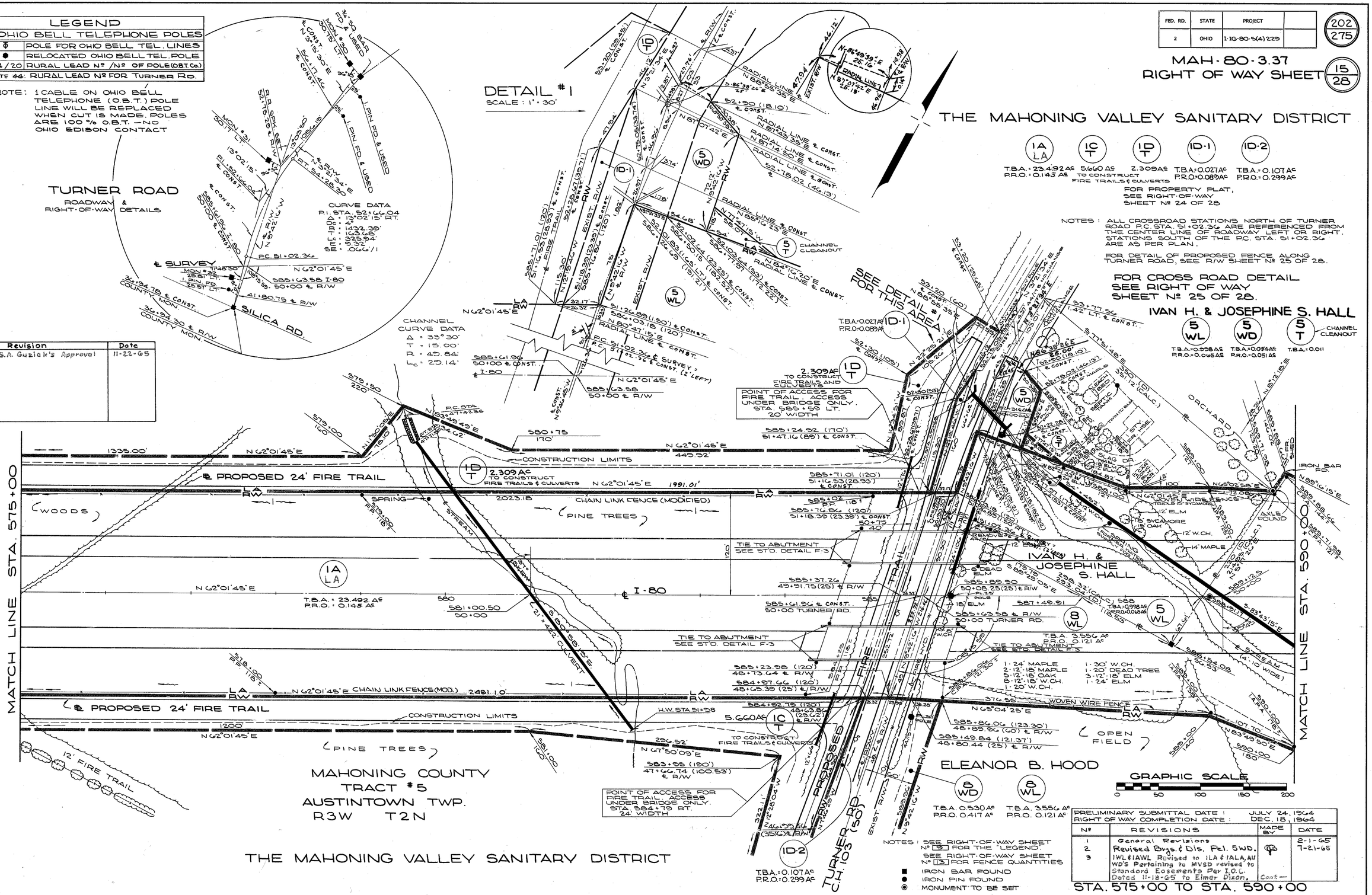

No.	Revision	Date
3	with S.A. Guziak's Approval	11-22-65

NOTES: SEE RIGHT-OF-WAY SHEET Nº 9 FOR THE "LEGEND".
SEE RIGHT-OF-WAY SHEET Nº 13 FOR FENCE QUANTITIES

■ IRON BAR FOUND
● IRON PIN FOUND
◉ MONUMENT TO BE SET

PRELIMINARY SUBMITTAL DATE: JULY 24, 1964
RIGHT OF WAY COMPLETION DATE: DEC. 18, 1964

Nº	REVISIONS	MADE BY	DATE
1	General Revisions		2-1-65
2	Revised Brgs. & Dis. Pcl. 5WD.		7-21-65
3	1WL & 1AWL Revised to 1LA & 1ALA, All WD's Pertaining to MVSD revised to Standard Easements Per I.O.C. Dated 11-18-65 to Elmer Dixon.	Cont. —	

STA. 575+00 TO STA. 590+00

FED. RD.	STATE	PROJECT	
2	OHIO	I-IG-80-5(4)229	

203/275

MAH-80-3.37

RIGHT OF WAY SHEET

16/28

MAHONING COUNTY
AUSTINTOWN TOWNSHIP
TRACT 5
RANGE 3 WEST TOWNSHIP 2 NORTH

CURVE DATA
P.I. STA. 612+95.77
Δ = 27° 27' 17" RT.
D_c = 0° 48' 00"
R = 7161.97'
T = 1749.52'
Lc = 3431.84'
E = 210.59'

CHANNEL CURVE DATA
Δ = 42°
R = 104.20'
T = 40'
Lc = 76.38'

CHANNEL CURVE DATA
Δ = 35°
T = 20'
R = 63.43'
Lc = 38.75'

ISOLATED AREA
OWNER: EDWARD B. & MARY FRANCIS DUIGNAN
ACRES: 15.95

NOTES: (1) SEE RIGHT-OF-WAY SHEET Nº 5 FOR THE "LEGEND"
(2) SEE RIGHT-OF-WAY SHEET Nº 13 FOR FENCE QUANTITIES
◉ MONUMENT TO BE SET
■ IRON BAR FOUND
● IRON PIN FOUND

GRAPHIC SCALE
0 50' 100' 150' 200'

PRELIMINARY SUBMITTAL DATE: JULY 24, 1964 RIGHT OF WAY COMPLETION DATE: DEC. 18, 1964			
Nº	REVISIONS	MADE BY	DATE
1	General Revisions		2-1-65

STA. 590+00 TO STA. 605+00

FED. RD.	STATE	PROJECT	
2	OHIO	I-IG-80-5(4) 229	

204/275

MAH-80-3.37

RIGHT OF WAY SHEET

17/28

GEORGE R & NETTIE L. BUCKNER

FOR CROSSROAD DETAIL, SEE RIGHT-OF-WAY SHEET 26 OF 28.

"3" PARCELS — END INTERSTATE

"IG" PARCELS — BEGIN INTERSTATE RAILROAD GRADE SEPARATION

AXEL FOUND & USED

N 9°21'41"W 359.40' OCCUPATION LINE

S 85° 35' 40" W 1421.76' (CALC.)

EDWARD B. & MARY FRANCES DUIGNAN

WJ WL

T.B.A. = 1.321 AC.
P.R.O. = 0.000 AC.

N 68°12'48"E 588.91'

605+77.10 147.41'

LA RW

WOVEN WIRE FENCE

N 68°01'05"E 228.04'

4" FIELD TILE

608+00 160'

N 76°27'44"E 408.81'

CURVE DATA
P.I. STA. 612+95.77
Δ = 27° 27' 17" RT.
D_c = 0° 48' 00
R = 7161.87'
T = 1749.52'
Lc = 3431.84'
E = 210.59'

612+00 140'

GEORGE R. & NETTIE L. BUCKNER

10 WL

T.B.A. = 9.574 AC.
R.R.O. = 0.242 AC.

608+00 14 P.A. 198'

1-14" ASH
32-12"-18" OAKS

S 78°41'34"W 397.43'

MEDIUM WOODS

612+00 140' P.A. 198'

CONSTRUCTION LIMITS

7-12" OAKS
ABANDONED SHAFT TO MINE (FILLED WITH BROWN)

WOODS

615+00 P.A. 150'

615+30 127.90'

S 77°09'30"W LA RW 438.78'

OPEN FIELD

4" FIELD DRAIN

4" MAPLE

6"-36" (1/4 CH.) S1+07.53 (36')

TIE TO ABUTMENT SEE STD. DETAIL E 3

9 WL

TREE ROW

STA. 605+00

MATCH LINE

605+25 S

40' x 40' TOBACCO LOC. BAN

E CROSSOVER 610+00

610

℄-SURVEY

615

616+00

STA. 620+00

MATCH LINE

10" APPLE

8" FIR

6" APPLE

WELLS

1½ STY. INSUL. BR.

CISTERN

4" DRAIN

SEPTIC TANK

8" SPRUCE

8" ARBOVITAE

BLK. GAR. & CRUSHED BRICK DRIS

10 WA

TO RECONSTRUCT A RESIDENTIAL DRIVE

℄ OHLTOWN RD.

END PAV'T. STA. 53+25

52 CH. 105

10" PEAR

5" CHERRY

LILAC

6-2-3" PLUM

4-3" CHERRY

CISTERN

12" PEAR

CONSTRUCTION LIMITS

WOVEN WIRE FENCE

393.24'
N 76°03'33"E

ASH & W. CH.
11-12-18" OAKS

7-12" OAKS
1-16" DBL. W.CH.

WOODS

OPEN FIELD

LA RW 632.58'
N 82°44'17"E

609+00 TAPA 133'

N 66°24'06"E 197.87'

611+00 TAPA 116'

611+00 120'

615+00 TAPA 116'

615+00 120'

N 73°00'41"E 414.49'

FIELD

604+77.52 131.67'

"IG" PORTION = 3.187 Ac. = 32.5 %
"I" PORTION = 6.629 Ac. = 67.5 %
100.0 % = 9.816 ACRES

G - FACTOR = 51.4 % IG
G - FACTOR = 77.6 % I

MAHONING COUNTY
AUSTINTOWN TOWNSHIP
TRACT 5
RANGE 3 WEST TOWNSHIP 2 NORTH

NOTES: (1) SEE RIGHT-OF-WAY SHEET Nº 9 FOR THE "LEGEND"
(2) SEE RIGHT-OF-WAY SHEET Nº 13 FOR FENCE QUANTITIES
(3) ● = MONUMENT TO BE SET

GRAPHIC SCALE
0 50' 100' 150' 200'

PRELIMINARY SUBMITTAL DATE: JULY 24, 1964
RIGHT OF WAY COMPLETION DATE: DEC. 18, 1964

Nº	REVISIONS	MADE BY	DATE
1.	FUNDING DATA ADDED	R.A.W.	10-5-65

STA. 605+00 TO STA. 620+00

FED. RD.	STATE	PROJECT	
2	OHIO	I-IG-80-5(4)225	

205 / 275

18 / 28

MAH-80-3.37

RIGHT OF WAY SHEET

LEGEND	
OHIO BELL TELEPHONE POLES	
○	POLE FOR OHIO EDISON & OHIO BELL TELEPHONE LINES
321N30	OHIO EDISON POLE DESIGNATION & Nº
9/34	RURAL LEAD Nº 9 / Nº OF POLE (O.B.T.)
NOTE : 9 = RURAL LEAD Nº OHLTOWN RD.	

NOTE : POLES ON THIS SHEET ARE OWNED BY OHIO EDISON. OHIO BELL TELEPHONE (O.B.T.) HAS 1 CABLE ON POLE LINE, WILL MOVE TO CONFORM TO OHIO EDISON PLANS.

GEORGE R. & NETTIE L. BUCKNER — (10 WL) — T.B.A. = 9.574 AS, P.R.O. = 0.242 AS

HOWARD C. ROBINETTE, WINNIFRED J. ROBINETTE — (11 WL) — T.B.A. = 0.25 AS, P.R.O. = 0.09 AS

CONSTANTINE NIERADKA & ANNA NIERADKA — (12 WL) — T.B.A. = 0.28 AS, P.R.O. = 0.06 AS

THELMA BRADSHAW — (13 WL) — T.B.A. = 0.117 AS, P.R.O. = 0.000 AS

ARMOUR LLOYD — (19 WL) — T.B.A. = 7.854 AS, P.R.O. = 0.137 AS

ERIE-LACKAWANNA R.R.

16 AERIAL — 0.380 AS	16 SL — 0.183 AS	16A SL — 0.256 AS	16 X — 0.068 AS CHANNEL CLEANOUT
16 — 0.009 AS	16A — 0.010 AS	16B — 0.009 AS	16C — 0.009 AS

HOWARD D. BUCKNER ET. AL. — (14 WL) — NO PURCHASE

SEE RIGHT OF WAY SHEET Nº 27 FOR LOCATION

ISOLATED AREA — OWNER: JOSEPH M. ROUDEBUSH & FERYN A. MORRIS — ACRES: 10.15

ISOLATED AREA — OWNER: ELLEN GOLLADAY — ACRES: 0.29

FOR A DETAIL OF THE ERIE-LACKAWANNA R.R. SEE RW SHEET Nº 27 OF 28.

FOR CROSSROAD DETAIL, SEE RW SHEET Nº 26 OF 28

MAHONING COUNTY
AUSTINTOWN TOWNSHIP
TRACT 5
RANGE 3 WEST TOWNSHIP 2 NORTH

CURVE DATA
P.I. STA. 612 + 95.77
Δ = 27° 27' 17" RT.
Dc = 0° 48' 00"
R = 7161.97'
T = 1749.52'
Lc = 3431.84'
E = 210.59'

GRAPHIC SCALE
0 50' 100' 150' 200'

NOTES: (1) SEE RIGHT-OF-WAY SHEET Nº 9 FOR THE "LEGEND"
(2) SEE RIGHT-OF-WAY SHEET Nº 13 FOR FENCE QUANTITIES
● IRON PINS FOUND
(3) ◉ MONUMENTS TO BE SET

PRELIMINARY SUBMITTAL DATE: JULY 24, 1964
RIGHT OF WAY COMPLETION DATE: DEC. 18, 1964

Nº	REVISIONS	MADE BY	DATE
1	Added Bearings & Distances Pcls. 11WL & 12WL	GS.	1-9-65
2	General Revisions		2-1-65
3	Added Pcl. 15S Chgd. Pcl 15T to 15X		4-2-65

STA. 620+00 TO STA. 635+00

FED. RD.	STATE	PROJECT	
2	OHIO	I-IG-80-5(4)229	

206 / 275

19 / 28

MAH - 80 - 3.37

RIGHT OF WAY SHEET

"IG" PORTION = 2.930 ACRES = 37.3 %
"I" PORTION = 4.924 ACRES = 62.7 %
100.0 % = 7.991 ACRES

G - FACTOR = 51.4 % - IG
G - FACTOR = 62.9 % - I

MAHONING COUNTY
AUSTINTOWN TOWNSHIP
RANGE 3 WEST TOWNSHIP 2 NORTH

TRACT 5

RAMP "A" STA. 8+00

RE-LOCATE A WATER COURSE FROM A PROP CULVERT

(19 X) 0.103 AS

"IG" PARCELS | "I" PARCELS

END INTERSTATE RAILROAD GRADE SEPARATION | BEGIN INTERSTATE

CHANNEL CURVE DATA
Δ = 75°50'
T = 41'
R = 52.63'
Lc = 69.66'

60" x 64' CULVERT

CHANNEL CURVE DATA
Δ = 47°
T = 60'
R = 137.99'
Lc = 113.19'

RAMP "A"

RAMP "C"

60" x 290' CULVERT

ARMOUR LLOYD

(19 WL)
T.B.A. = 7.854 AS
P.R.O. = 1.37 AS

TREE ROW
1 - 24" HICKORY
5 - 12" ASH
1 - 18" OAK
1 - 30" ASH

1 - 24" OAK
1 - 12" OAK
8 - 12" - 18" ELMS
2 - 12" ASH

1 - 15" ELM
7 - 12" - 18" OAKS
1 - 12" W. CHERRY
2 - 20" - 24" ASH
1 - DBL. 12" ASH

1 - 20" ASH
2 - 12" OAKS
3 - 12" - 18" ELMS

1 - 18" ELM
1 - 18" ASH

1 - 12" & 18" ELM
1 - 16" ASH
1 - 20" OAK

5 - 12" - 18" OAK
2 - 12" ASH
1 - 12" ELM

4 - 14" ASH
2 - 12" OAK
1 - 12" ELM
1 - DBL. 12" ASH

3 - 12" - 18" W.CH.
1 - 20" GUM

1 - 18" OAK
1 - 12" ELM

PASTURE

S 89°47'26" E 1052.19' WOVEN WIRE FENCE

N 85°11'36" E 200.56

N 51°42'31" E 166.16'

N 14°30'58" W 109.15'

N 0°30'58" W 286.17'

N 0°30'58" W

S 42°28'02" W

N 47°30'58" W 116.25'

N 22°02'54" E 313.05'

N 14°30'58" W 109.15'

N 0°30'58" W 286.17'

N 89°57'01" W 238.00'

S 89°55'15" E 1346.73'

TREE ROW

N 89°29'02" E

℄ - SURVEY

640

645

STA. 635+00

STA. 650+00

MATCH LINE

MATCH LINE

ELLEN GOLLADAY

(17 WL)
T.B.A. = 4.081 AS
P.R.O. = 0.00

WHEAT FIELD

1 - 20" ELM
2 - 12" ELM

5 - 18" - 24" ASH
3 - 18" - 24" OAKS
1 - 30" ELM
1 - 12" OAK
1 - 15" CHERRY
1 - 12" ELM

(18 WL)
T.B.A. = 11.334 AS
P.R.O. = 0.156 AS

N 87°54'50" E 389.07'

N 87°54'50" E 1350.50'

WOVEN WIRE FENCE

S 0°01'03" E

N 0°30'58" W

N 73°42'47" W 540.57'

PLUG END OF PIPE @ 168' RT. OF 647+00

PLUG END OF PIPE @ 185' LT. OF 647+00

SPA TIE TO HEADWALL

ARMOUR & MARIE BRILL LLOYD

(18 WL)
T.B.A. = 11.334 AS
P.R.O. = 0.156 AS

TO ℄ - S.R. 46

S 89°33'34" W 873.93'

S 1° 45' 46" E 249.11 (MEAS.)

STANDARD OIL CO.

(26 WL)
FOR ACREAGE, SEE SHEET Nº 20

SANITARY SEWER (PIPE TO BE PLACED AS PER CONSTRUCTION PLAT CONNECTED TO A USAGE IN THE FUTURE)

* NOTE -
PARCEL 19WL etc., Case Nº 177685 & PCL. 18WL etc., Case Nº 177200 consolidated upon written motion on behalf of the property owner. Both cases concluded per Journal Entry dated 1/4/67.

"IG" PORTION = 4.692 ACRES = 41.4 %
"I" PORTION = 6.641 ACRES = 58.6 %
100.0 % = 11.490
G - FACTOR = 51.4 % - IG
G - FACTOR = 58.2 % - I

NOTES: (1) SEE RIGHT-OF-WAY SHEET Nº 9 FOR THE "LEGEND"
(2) SEE RIGHT-OF-WAY SHEET Nº 13 FOR FENCE QUANTITIES
● = IRON PIN FOUND
◉ = MONUMENT TO BE SET

GRAPHIC SCALE
0 50 100 150 200

PRELIMINARY SUBMITTAL DATE: JULY 24, 1964 RIGHT OF WAY COMPLETION DATE: DEC. 18, 1964			
Nº	REVISIONS	MADE BY	DATE
1	General Revisions		2-1-65
2	Brg. & Dist. Added Pcl. 19X	R.A.W	7-22-65
3	REVISED - FUNDING DATA ADDED	RAW	10-5-65
4	COMBINED Pcl. 18 WITH Pcl. 19	SAVO	11-23-66
5	Revise Pcls 19WL, etc.		3/21/67
6	Revised % of acreage of "I" & "I-G" funding Pcl. 18WL & 19WL.		4-11-67

STA. 635+00 TO STA. 650+00

BEVERIDGE

FED. RD.	STATE	PROJECT	
2	OHIO	I-IG-80-5(4)229	

207
275

MA.H-80-3.37

RIGHT OF WAY SHEET

20
28

DETAIL OF ℄ INTERSECTIONS AND IRON PINS FOUND ON WEST R/W OF S.R. 46

* NOTE - Pcl. 19WL etc, Case №177685 & PCL. 18WL etc, Case №177200 consolidated upon written motion on behalf of the property owner. Both cases concluded per Journal Entry dated 1/4/67.

ARMOUR LLOYD

* 19 WL / 19 WD

T.B.A.=1.854 AC T.B.A.=0.101AC
P.R.O.=0.137 AC P.R.O.=0.283AC
PASTURE

MAHONING COUNTY
AUSTINTOWN TOWNSHIP
RANGE 3 WEST TOWNSHIP 2 NORTH
TRACT 5

MATCH LINE STA. 650+00

MATCH LINE STA. 43+00
FOR CONTINUATION, SEE RIGHT-OF-WAY SHEET № 26 OF 28

MATCH LINE STA. 58+50
SEE RIGHT-OF-WAY SHEET № 28

TRACT 4

STANDARD OIL CO. (26 WD) (26 WL) (26WA 1)
T.B.A.=0.009 AC P.R.O.=0.226 AC
T.B.A.=1.167 AC FILL, BASEMENT & GRADE WHERE NECESSARY P.R.O.=0.218 AC

PAUL OSCAR CLINE & GEORGIA HELWIG CLINE (24 WL)
T.B.A.=11.334 AC P.R.O.=0.156 AC

JULIA R. JEFFRIES (23 WL)
T.B.A.=1.31 AC P.R.O.=1.007 AC

DONNABELLE GURD (22 WL)
T.B.A.=2.12 AC P.R.O.=2.12 AC

RUDOLPH & BEVERLY A. PENCE (21 WL)
T.B.A.=6.11 AC P.R.O.=6.11 AC

ALFRED & BERNICE V. MASON (25 WL)
T.B.A.=1.094 AC P.R.O.=0.11 AC

ISOLATED AREA OWNED ROBERT B. LLOYD ACRES 0.33 GAc

ROBERT B. LLOYD (20 WL)
T.B.A.=0.0055 AC P.R.O.=0.0012 AC

(26 WD) T.B.A.=0.209 AC P.R.O.=0.270 AC

T.B.A.=1.167 AC P.R.O.=0.218 AC CHANNEL CURVE DATA Δ=31° T=12' R=43.27' Lc=23.4'

CHANNEL CURVE DATA Δ=73°30' T=37.34' R=50' Lc=64.14'

RAMP C · RAMP D · RAMP E · RAMP B

I-80 ℄ — S.R. 46

PC. STA. 11+23.61

PT. STA. 13+84.28

PC. STA. 3+70.01

T.S. STA. 11+02.68

650+40 (28.28') 620

652+00 T.S.

656+85.27 I-80 50+00 S.R. 46

STA. 43+70 10/17 P# 23742 RP & RL 50'3 45' W

STA. 45+64 10/16 P# 23741 RP & RL 55'3 14.5' & 64' W

STA. 47+30 10/16 P# 23740 RP & RL 55'3 64' W

STA. 44+38.73 BEARING BREAK STA. 44+39.57

HINGE NAIL FD. & USED

EDGE BLACK TOP

LEGEND

OHIO BELL TELEPHONE POLES

⬢	RELOCATED TELEPHONE POLE
⬢	JOINT POLE WITH OHIO EDISON
⬢→	RELOCATED POLE WITH DOWN GUY & ANCHOR
10/11	RURAL LEAD № / № OF POLE
P# —	OHIO EDISON TAG №
RP	REPLACE
RL	RELOCATE
RM	REMOVE
55'3	SIZE OF POLE (IN FEET) - CLASS №

NOTE: 10 = RURAL LEAD № FOR S.R. 46

NOTE: 1-CABLE ON POLE LINE WILL BE REPLACED WHEN POLES ARE REMOVED - MINIMUM CLEARANCE OVER I-80 WILL BE 27' ALL POLES ARE JOINT WITH OHIO EDISON.

NOTES: (1) SEE RIGHT-OF-WAY SHEET № 5 FOR THE "LEGEND"

(2) SEE RIGHT-OF-WAY SHEET № 13 FOR FENCE QUANTITIES

BEARINGS APPEARING IN BLOCKED FORM ▭ ARE RELATED TO AN ADJACENT CONTRACT PREPARED BY OTHER CONSULTANTS

◉ MONUMENT TO BE SET

● - IRON PIN FOUND (FOR DETAIL, SEE UPPER PORTION THIS SHEET)

PRELIMINARY SUBMITTAL DATE: JULY 24, 1964 RIGHT OF WAY COMPLETION DATE: DEC 18, 1964			
№	REVISIONS	MADE BY	DATE
1	General Revisions (Bearings & Distances)	RAW	1-9-65
2	Deleted Pcl 24WL, Combined with 24WL	"	" " "
3	Revised Bearings, Distances & Acres	"	2-1-65
4	Revised LO Line Pcl. 26WD.	RAW	5-3-65
5	℄ Dist. added	RAW	7-22-65
6.	Combined Pcl 18 With Pcl 19	SAVO	11-23-66

STA. 650+00 TO STA. 656+85.27

DETAIL OF ℄ INTERSECTIONS AND IRON PINS FOUND ON EAST R/W OF S.R. 46

FED. RD.	STATE	PROJECT	
2	OHIO	1-IG-80-5(4)229	

208 / 275

MAH-80-3.37

RIGHT OF WAY SHEET

21 / 28

MATCH LINE STA. 43+00

MATCH LINE STA. 58+50

RAMP "C"

RAMP "E"

℄ - S.R. 46

℄ - TEMPORARY RUNAROUND

℄ - I-80

RAMP "D" (S.R. 46)

RAMP "B"

RAMP "A"

DEDICATED ST. FOR PUBLIC USE (NOT CONSTRUCTED)

OPEN FIELD

LAVERNE YOUNG LLOYD

LaVERNE Y. LLOYD

HATTIE C. PRICE

ALBIN E. ERICKSON, TRUSTEE

DOROTHY HOOD

DOROTHY LLOYD HOOD

YOUNG & WEBB PLAT
VOL. 22, PG. 111
LOTS 1 THRU 20

M.J. ENTERPRISES, INC.
an OHIO CORPORATION

MAHONING COUNTY
AUSTINTOWN TOWNSHIP
TRACT #4
TOWNSHIP 2 NORTH
RANGE 3 WEST

35 WL — WILLIAM A. CRAWFORD

36 WL — FORREST B. CLARK, INCOMPETENT; UNION NATIONAL BANK OF YOUNGSTOWN, GUARDIAN

37 WL — JOHN F. MOHAN, & MYRTLE M. MOHAN

38A WL / 38A — MRS. HAROLD HOOD AKA DOROTHY HOOD AKA DOROTHY LLOYD HOOD

40 WL / 40 — MARGUERITE MALONEY

ISOLATED AREA
OWNER: GEORGE RICHARD LLOYD AKA GEORGE LLOYD
ACRES: 12.03

END ACQUISITION
STA. 666+13.97
MAH-18-9.89

THIS PARCEL TO BE ACQUIRED UNDER THE PLAN MAH IR-80-5.98-TRU IR-80-0.00

MATCH LINE STA. 665+00

REVISION: NAME CHANGE PCL. 32 WL-80-2 WL. 12/22/65

NOTES
(1) SEE RIGHT-OF-WAY SHEET Nº 5 FOR THE "LEGEND"
(2) SEE RIGHT-OF-WAY SHEET Nº 13 FOR FENCE QUANTITIES

BEARINGS APPEARING IN BLOCKED FORM ▭ ARE RELATED TO AN ADJACENT CONTRACT PREPARED BY OTHER CONSULTANTS
▨ PORTION OF TEMPORARY PAV'T. TO REMAIN FOR SERVICE ROAD
● = IRON PIN FOUND (FOR DETAIL, SEE UPPER PORTION THIS SHEET.)
◉ MONUMENT TO BE SET

GRAPHIC SCALE
0 50 100 150 200

PRELIMINARY SUBMITTAL DATE: JULY 24, 1964			
RIGHT OF WAY COMPLETION DATE: DEC. 18, 1964			
Nº	REVISIONS	MADE BY	DATE
1	Added Distances Pcls. 32 WL & 34 WL		1-9-65
2	General Revisions		2-1-65
3	Added 33 WL formerly 1 WL Under I 80 Mah-Tru. 12.82-0.00 Also deleted Structures on Parcel		4-29-65
4	Revised LA Line Between 30 WL & 30 WD		5-3-65
5	Changed 38 A-T to 38 A & 40 T to 40	R.L.M.	7-19-65
6	Changed Pcls. 38 A to 38 WD & 40 to 40 WD.		7-23-65
7	Name Change Pcl. 36 WL		8-30-65

STA. 656+85.27 TO STA. 665+00

FED. RD.	STATE	PROJECT	
2	OHIO	I-IG-80-5(4)229	

209/275

MAH-80-3.37

RIGHT OF WAY SHEET

22/28

MAHONING COUNTY
AUSTINTOWN TWP.
TRACT Nº4
T-2N R-3W

H.D. LEACH, TRUSTEE
CONT. 2.44 Ac.

ALBIN E. ERICKSON-TRUSTEE
CONT. = 4.96 AC.

END PROJECT	BEGIN PROJECT
MAH-80-3.37	MAH-IR-80-5.98
STA. 675+74.89	TRU-IR-80-0.00
I-IG-80-5(4)229	STA. 675+74.89 BACK
	STA. 376+15.43 AHEAD

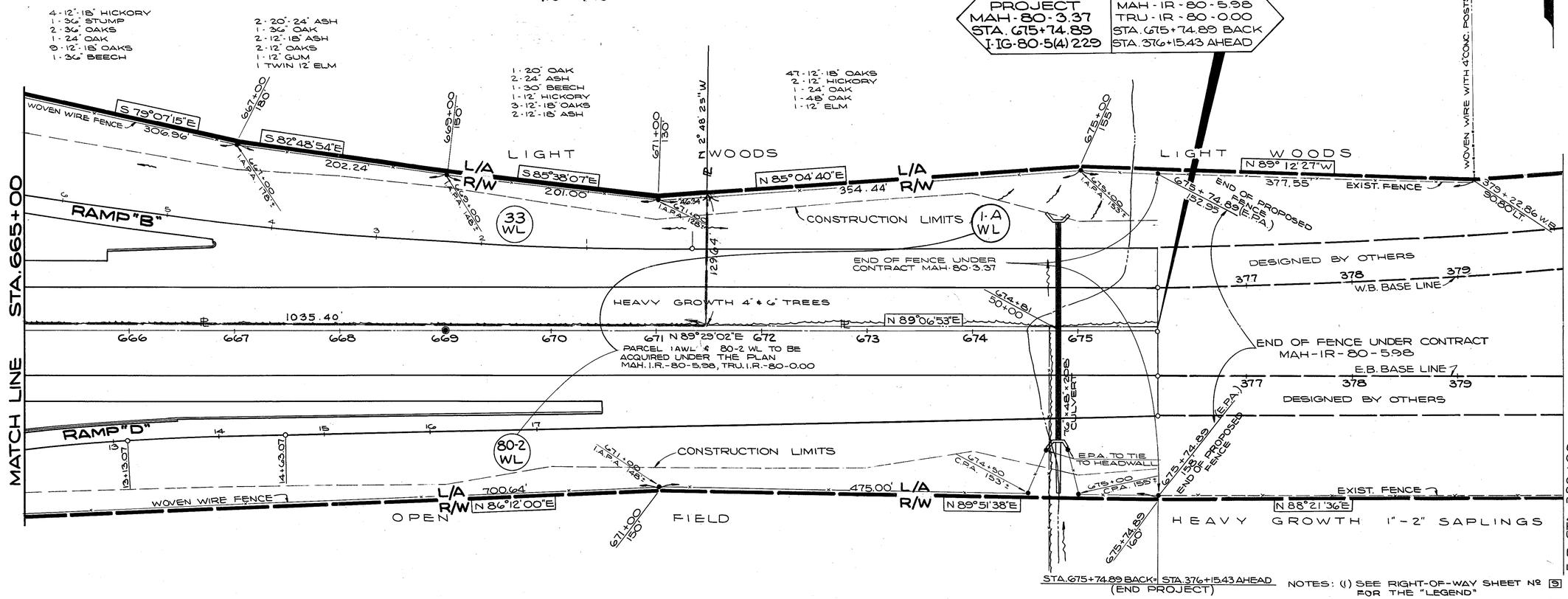

STA. 675+74.89 BACK = STA. 376+15.43 AHEAD
(END PROJECT)

NOTES: (1) SEE RIGHT-OF-WAY SHEET Nº 5 FOR THE "LEGEND"
(2) SEE RIGHT-OF-WAY SHEET Nº 13 FOR FENCE QUANTITIES
BEARINGS APPEARING IN BLOCKED FORM [ ] ARE RELATED TO AN ADJACENT CONTRACT
(3) ◉ MONUMENTS TO BE SET

GEORGE RICHARD LLOYD
T.B.A. = 11.68 AC.
P.R.O. = 0.22 AC.
CONT. = 11.90 AC.

PURCHASED WITH
CONTRACT MAH-IR-80-5.98
AND TRU-IR-80-0.00

MAHONING COUNTY
AUSTINTOWN TWP.
TRACT Nº4
T-2N R-3W

GRAPHIC SCALE
0 50 100 150 200

PRELIMINARY SUBMITTAL DATE: JULY 24, 1964 RIGHT OF WAY COMPLETION DATE: DEC. 18, 1964			
Nº	REVISIONS	MADE BY	DATE
1	Added 33WL formerly 1WL Under I80 MAH.-TRU. 12.82-0.00		4-29-65

STA. 665+00 TO STA. 675+74.89

FED. RD.	STATE	PROJECT	
2	OHIO	I-IG-80-5(4)229	

2.10 / 275

MAH-80-3.37

RIGHT OF WAY SHEET

23 / 28

MAHONING COUNTY
JACKSON TOWNSHIP
TRACT 13
RANGE 4 WEST TOWNSHIP 2 NORTH

END ACQUISITION
MAH-18-7.01
STA. 495+76.62
I-IG-80-5(3) 228

ROBERT J. SMITH

DOROTHY N. SMITH

FELIX VINCENT TESNER
LOUISE C. TESNER

THOMAS M. FITZER
JUSTINE M. FITZER

TRACT 13

TRACT 15

BEGIN ACQUISITION
MAH-80-3.37
STA. 495+76.62
I-IG-80-5(4) 229

MAHONING COUNTY
JACKSON TOWNSHIP
TRACT 15
RANGE 4 WEST TOWNSHIP 2 NORTH

THE MAHONING VALLEY SANITARY DISTRICT

PARCELS 1-T & 1A-T USED FOR THE PURPOSE OF CONSTRUCTING FIRE TRAILS, TEMPORARY RUNAROUND AND DRAINAGE PIPES & CULVERTS.

1A T — 2.813 AC

1 LA — T.B.A. = 15.178 AC, P.R.O. = 0.173 AC

1 T — 3.674 AC

FOR MAINLINE, SEE RIGHT-OF-WAY SHEET Nº 9 OF 28.

NOTES: (1) SEE RIGHT-OF-WAY SHEET Nº 5 FOR THE "LEGEND"
(2) SEE RIGHT-OF-WAY SHEET Nº 13 FOR FENCE QUANTITIES
● = IRON PINS LOCATED

GRAPHIC SCALE
0 50 100 150 200

PRELIMINARY SUBMITTAL DATE: JULY 24, 1964. RIGHT OF WAY COMPLETION DATE: DEC. 18, 1964			
Nº	REVISIONS	MADE BY	DATE
1	General Revisions		2-1-65
2	1WL & 1AWL Revised to 1LA & 1ALA, All WD'S Pertaining to MVSD revised to Standard Easements Per I.O.C. Dated 11-13-65 to Elmer Dixon, With S.A. Guziak's Approval.		11-22-65

LIPKEY ROAD
STA. 43+00 TO STA. 59+00

PROPERTY PLAT

THE MAHONING VALLEY SANITARY DISTRICT

FED. RD.	STATE	PROJECT	
2	OHIO	I-IG-80-5(4)229	

211

MAH-80-3.37
RIGHT OF WAY SHEET

24/28

END ACQUISITION	BEGIN ACQUISITION
MAH-18-7.01	MAH-80-3.37
STA. 495+76.62	STA. 495+76.62
I-IG-80-5(3)228	I-IG-80-5(4)229

END PROJECT	BEGIN PROJECT
MAH-18-7.01	MAH-80-3.37
STA. 520+80.75	STA. 520+80.75
I-IG-80-5(3) 228	I-IG-80-5(4) 229

MAHONING COUNTY
JACKSON TOWNSHIP
R4W T2N

MAHONING COUNTY
AUSTINTOWN TOWNSHIP
R3W T2N

SILICA RD.
C.H. 178

IRON PIN USED

(333.79 MEAS.)
(319' (COUNTY PB. 15 PG. 5))

BEARING BREAK

COUNTY MON. FD. & USED

0.46' (MEAS.)

(29.38' (MEAS.))

IRON FD.

M.V.S.D. MON.#112 FD.

89°29'40" (OBS.)
89°32' (PROPERTY PLAT-1932)

MON.#113

N 1°23'00" W (1925 S.R. 18 PLANS)
N 0°38'53" W (1964 PLANS)

RESERVOIR

TRACT 15

CURVE DATA
Δ = 17°08'31" LT.
D_c = 1°28'
R = 3906.53'
T = 588.78'
E = 44.12'
L_c = 1168.77'

THE MAHONING VALLEY SANITARY DISTRICT
1 LA

P.C. STA. 507+37.00

P.T. STA. 519+05.77

1 AERIAL

THE MAHONING VALLEY SANITARY DISTRICT

JACKSON TOWNSHIP
AUSTINTOWN TOWNSHIP

SALT SPRINGS TRACT 13
SALT SPRINGS TRACT 15

BEARING BREAK (COUNTY ROAD DEDICATION)

N 0°36'09" W

50+77.42

50+00

N 83°30'20" E
N 85°42'55" E
N 82°55'40" E
N 72°14'03" E
N 65°51'59" E

AERIAL EASEMENT LINE

2375' R/W

SURVEY

N 65°51'59" E

N 24°02'01" W

SALT SPRINGS TRACT 15
SALT SPRINGS TRACT 12

SALT SPRINGS TRACT 15
SALT SPRINGS TRACT 6

MEANDER

THE MAHONING VALLEY SANITARY DISTRICT

LIPKEY ROAD C.H. 91 (60')

N 0°31'09" W 283.83'

(7.5' (AS SHOWN IN DEDICATION RD.))

6.45' (CALC.)
(28.83' (MEAS.))

M.V.S.D. MON.#111 FD.

S.R. 18 (66')

OHIO TELEPHONE & TELEGRAPH
(EASEMENT)
(GRANTED AUTHORITY TO CONSTRUCT, MAINTAIN & OPERATE THESE LINES & POLES)
EASEMENT: VOL. 27, PAGE 554
VOL. 30, PAGE 19
(NO LIMITS SPECIFIED)

TRACT 6

TRACT 5

CURVE DATA
Δ = 3°56'14" LT.
D_c = 0°28'
R = 12,277.67'
T = 422.01'
E = 7.25'
L_c = 843.69'

P.C. STA. 551+64.80

560+08.49 (BACK)
560+11.65 (AHEAD)

THE MAHONING VALLEY SANITARY DISTRICT
1A LA

P.T. STA. 568+48.49

SALT SPRINGS TRACT 16
SALT SPRINGS TRACT 5

C.H. 103 (50')
TURNER ROAD

THE MAHONING VALLEY SANITARY DISTRICT

M.V.S.D. MON.#30

30.15'
36.58' BAR FD. & USED

M.V.S.D. MON.#31

M.V.S.D. MON.#30

N 3°21'34" E
108.45'

M.V.S.D. MON.#31

30.17' (MEAS.)
586.4' 120'

585+63.58
275.29'

585+00
60+00

N 62°01'45" E
2023.16'

SALT SPRINGS TRACT 5
SALT SPRINGS TRACT 6

M.V.S.D. MON.#33

314.45' (MEAS.)

80°46'27" (MEAS.)

N 24°02'01" W (63.04' (MEAS.))
229.81'

M.V.S.D. MON.#34

M.V.S.D. MON.#32

M.V.S.D. MON.#32

N 39°42' W

P.C. STA. 595+46.25

W.E. & ALICE HESS
7

MARY ISABELLE BOGGS
6

COUNTY MON. FD. & USED

SILICA ROAD C.H. 178

THE MAHONING VALLEY SANITARY DISTRICT

SALT SPRINGS TRACT 6
SALT SPRINGS TRACT 7

1 AERIAL
10.359 Ac

N 24°02'01" W

521+04 | 523+24 | 524+44 | 525+64 | 526+84 | 528+04 | 529+24 | 530+44 | 531+64 | 532+84 | 534+04 | 535+24 | 536+44 | 537+64 | 538+84 | 540+04 | 541+24 | 542+44 | 543+64 | 544+84 | 545+35

N 65°51'59" E
2375' R/W
AERIAL EASEMENT LINE
TYP. SEC.
℄ SURVEY

I | IA | IB | IC | ID | IE | IF | IG | IH | IJ | IK | IL | IM | IN | IP | IQ | IR | IAA | IBB | ICC

TYPICAL AREA OF ACQUISITION FOR EACH BRIDGE PILING IS 0.235 ACRES

DETAIL OF BRIDGE ACQUISITION ~ NO SCALE

GRAPHIC SCALE
0 200' 400' 800' 1200' 1600'

NOTES
1. ■ = EXISTING MONUMENTS
2. ——— = PROPOSED CONSTRUCTION
3. ═══ = TO BE CONSTRUCTED UNDER ANOTHER CONTRACT.

PRELIMINARY SUBMITTAL DATE: JULY 24, 1964
RIGHT OF WAY COMPLETION DATE: DEC. 18, 1964

Nº	REVISIONS	MADE BY	DATE
1	1WL & 1AWL Revised to 1LA & 1ALA, All WD'S Pertaining to MVSD revised to Standard Easements Per T.O.C. Dated 11-18-65 to Elmer Dixon with S.A. Guziak's Approval.		11-22-65

THE MAHONING VALLEY SANITARY DISTRICT PROPERTY PLAT

FED. RD.	STATE	PROJECT	
2	OHIO	I-IG-80-5(4) 229	

212/275

MAH-80-3.37

RIGHT OF WAY SHEET

25/28

MAHONING COUNTY
AUSTINTOWN TOWNSHIP
TRACT #5
TOWNSHIP 2 NORTH
RANGE 3 WEST

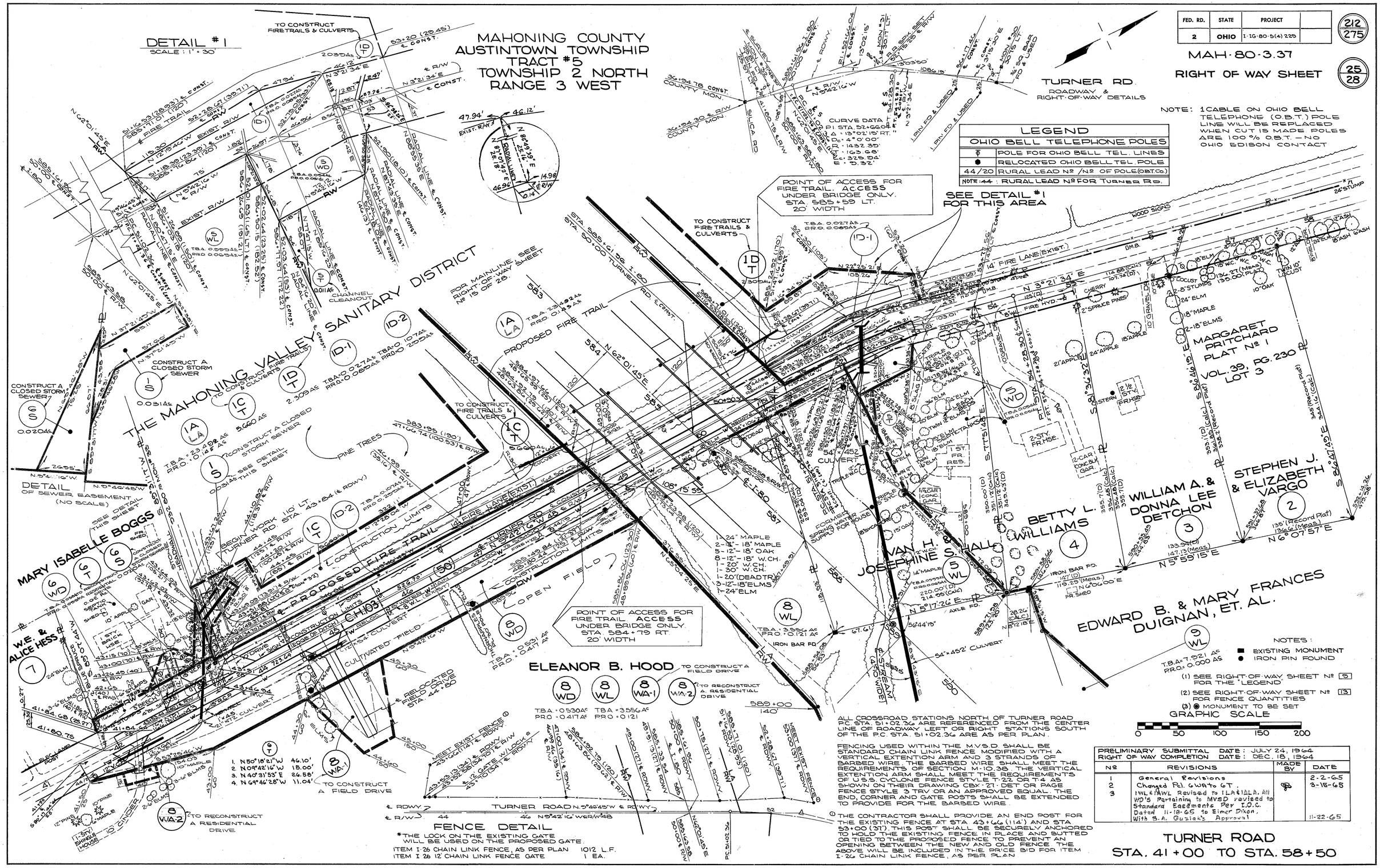

LEGEND	
OHIO BELL TELEPHONE POLES	
⊕	POLE FOR OHIO BELL TEL. LINES
●	RELOCATED OHIO BELL TEL. POLE
44/20	RURAL LEAD Nº /Nº OF POLE (O.B.T. Co.)
NOTE: 44 : RURAL LEAD Nº FOR TURNER RD.	

NOTE: 1 CABLE ON OHIO BELL TELEPHONE (O.B.T.) POLE LINE WILL BE REPLACED WHEN CUT IS MADE. POLES ARE 100% O.B.T. — NO OHIO EDISON CONTACT

NOTES:
- ■ EXISTING MONUMENT
- ● IRON PIN FOUND

(1) SEE RIGHT-OF-WAY SHEET Nº 9 FOR THE "LEGEND"
(2) SEE RIGHT-OF-WAY SHEET Nº 13 FOR FENCE QUANTITIES
(3) ◉ MONUMENT TO BE SET

GRAPHIC SCALE
0 50 100 150 200

ALL CROSSROAD STATIONS NORTH OF TURNER ROAD P.C. STA. 51+02.36 ARE REFERENCED FROM THE CENTER LINE OF ROADWAY LEFT OR RIGHT. STATIONS SOUTH OF THE P.C. STA. 51+02.36 ARE AS PER PLAN.

FENCING USED WITHIN THE M.V.S.D. SHALL BE STANDARD CHAIN LINK FENCE MODIFIED WITH A VERTICAL EXTENTION ARM AND 3 STRANDS OF BARBED WIRE. THE BARBED WIRE SHALL MEET THE REQUIREMENTS OF SECTION M-10.38. THE VERTICAL EXTENTION ARM SHALL MEET THE REQUIREMENTS OF U.S.S. CYCLONE FENCE STYLE T-22 OR T-4 AS SHOWN ON THEIR DRAWING CBX-27-DET OR PAGE FENCE STYLE 3 TRV OR AN APPROVED EQUAL. THE END, CORNER AND GATE POSTS SHALL BE EXTENDED TO PROVIDE FOR THE BARBED WIRE.

① THE CONTRACTOR SHALL PROVIDE AN END POST FOR THE EXISTING FENCE AT STA. 43+66 (114') AND STA. 53+00 (37'). THIS POST SHALL BE SECURELY ANCHORED TO HOLD THE EXISTING FENCE IN PLACE AND BUTTED OR TIED TO THE PROPOSED FENCE TO PREVENT AN OPENING BETWEEN THE NEW AND OLD FENCE. THE ABOVE WILL BE INCLUDED IN THE PRICE BID FOR ITEM I-26 CHAIN LINK FENCE, AS PER PLAN.

FENCE DETAIL

*THE LOCK ON THE EXISTING GATE WILL BE USED ON THE PROPOSED GATE.

ITEM I-26 CHAIN LINK FENCE, AS PER PLAN 1012 L.F.
ITEM I 26 12' CHAIN LINK FENCE GATE 1 EA.

PRELIMINARY SUBMITTAL DATE: JULY 24, 1964			
RIGHT OF WAY COMPLETION DATE: DEC. 18, 1964			
Nº	REVISIONS	MADE BY	DATE
1	General Revisions		2-2-65
2	Changed Pcl. 6WA to 6T.		3-15-65
3	IWL & IMWL Revised to ILA & IALA. All WD's Pertaining to MVSD revised to Standard Easements Per I.O.C. Dated 11-18-65 to Elmer Dixon, With S.A. Guziak's Approval		11-22-65

TURNER ROAD
STA. 41+00 TO STA. 58+50

LEGEND	
OHIO BELL TELEPHONE POLES	
○	POLE FOR OHIO EDISON & OHIO BELL TELEPHONE LINES
92 1N 30	OHIO EDISON POLE DESIGNATION & Nº
9/34	RURAL LEAD Nº / Nº OF POLE (O.B.T.)
NOTE : 9 - RURAL LEAD Nº OHLTOWN RD.	

NOTE : POLES ON THIS SHEET ARE OWNED BY OHIO EDISON, OHIO BELL TELEPHONE (O.B.T.) HAS 1 CABLE ON POLE LINE, WILL MOVE TO CONFORM TO OHIO EDISON PLANS.

FED. RD.	STATE	PROJECT	
2	OHIO	1-1G-80-5(4)229	

213 / 275

MAH-80-3.37

RIGHT OF WAY SHEET 26 / 28

MAHONING COUNTY
AUSTINTOWN TOWNSHIP
TRACT #5
TOWNSHIP 2 NORTH, RANGE 3 WEST

FOR MAINLINE, SEE RIGHT-OF-WAY SHEET Nº 17 OF 28

GEORGE R. & NETTIE L. BUCKNER

10 WL — T.B.A. = 9.574 Ac, P.R.O. = 0.242 Ac

10 WA — TO RECONSTRUCT A RESIDENTIAL DRIVE

15 S — 0.04 Ac

15 X — 0.032 Ac

13 WA — TO RECONSTRUCT A RESIDENTIAL DRIVE

13 WL — 0.117 Ac

15 WL — T.B.A. = 5.796 Ac, P.R.O. = 0.148 Ac

12 WL — T.B.A. = 0.28 Ac, P.R.O. = 0.06 Ac

11 WL — T.B.A. = 0.25 Ac, P.R.O. = 0.09 Ac

15 A-T — 0.022 Ac

14 WL — NO PURCHASE NECESSARY

15 T — 0.032 Ac

15 WL — T.B.A. = 5.796 Ac, P.R.O. = 0.148 Ac

15-A T — 0.022 Ac

JOSEPH M. ROUDEBUSH & FERYN A. MORRIS

FOR MAINLINE, SEE RIGHT-OF-WAY SHEET 18 OF 28

HOWARD D. BUCKNER, ET. AL.

VERNON R. & ELIZABETH STROUP

HOWARD C. ROBINETTE & WINNIFRED J. ROBINETTE

CONSTANTINE NIERADKA & ANNA NIERADKA

MAINLINE CURVE DATA
Δ = 27°27' 17" RT.
D_c = 0°48'
R = 7161.97'
T = 1749.52'
L = 3431.84'
E = 210.59'

CHANNEL CURVE DATA
Δ = 34°
T = 15'
R = 49.06'
L_c = 29.11'

NOTES: (1) SEE RIGHT-OF-WAY SHEET Nº 6 FOR THE "LEGEND"
(2) SEE RIGHT-OF-WAY SHEET Nº 13 FOR FENCE QUANTITIES
● IRON PIN OR SPIKE FOUND
◉ MONUMENT TO BE SET

GRAPHIC SCALE
0 50 100 150 200

PRELIMINARY SUBMITTAL DATE : JULY 24, 1964			
RIGHT OF WAY COMPLETION DATE : DEC. 15, 1964			
Nº	REVISIONS	MADE BY	DATE
1	General Revisions		2-2-65
2	Added Rt. 15 S Chgd Rt 15 T to 15 X		4-2-65

RIGHT OF WAY SHEET
OHLTOWN ROAD
STA. 44+00 TO STA. 58+00

FED. RD.	STATE	PROJECT	
2	OHIO	I-IG-80-5(4)229	

214 / 275

27 / 28

MAH-80-3.37
RIGHT OF WAY SHEET

JOSEPH M. ROUDEBUSH & FERYN A. MORRIS

ELLEN GOLLADAY

MAHONING COUNTY
AUSTINTOWN TOWNSHIP
TOWNSHIP 2 NORTH
RANGE 3 WEST
TRACT 5

MAINLINE CURVE DATA
P.I. STA. 612+95.77
Δ = 27°27'17" RT.
D_C = 0°48'00"
R = 7161.97'
T = 1749.52'
L_C = 3431.84'
E = 210.59

	CENTER LINE SURVEY STATION OFFSET	ERIE-LACKAWANNA RAILROAD STATION OFFSET
A	629+83.77 65.38'	234+72.12 29.22'
B	629+91.92 72.77'	234+72.12 18.22'
C	630+07.46 39.23'	234+36.83 29.22'
D	630+15.61 46.61'	234+36.83 18.22'
E	630+45.27 65.38'	234+30.82 16.36'
F	630+53.42 72.77'	234+30.82 27.36'
G	630+68.96 39.23'	233+95.53 16.36'
H	630+77.11 46.61'	233+95.53 27.36'
J	630+85.22 46.60'	233+21.03 29.22'
K	630+93.37 39.20'	233+21.03 18.22'
L	631+29.56 73.45'	232+84.78 29.22'
M	631+17.71 66.06'	238+84.78 18.22'
N	631+46.73 46.61'	232+79.71 16.36'
P	631+54.88 39.22'	232+79.71 27.36'
Q	631+72.24 74.77'	232+41.71 16.36'
R	631+80.39 67.39'	232+41.71 27.36'

ERIE-LACKAWANNA RAILROAD			AREA OF OVERLAP			
PARCEL Nº	EASEMENT REQUIRED	TOTAL AREA	HIGHWAY	AERIAL	SLOPE	TEMPORARY
16 AERIAL	AERIAL	16,565	1,593		12,302	
16	HIGHWAY	399		399		
16 A	HIGHWAY	418		418		
16 B	HIGHWAY	388		388		
16 C	HIGHWAY	388		388		
16 SL	SLOPE	7,978		6,008		
16A-SL	SLOPE	11,175		6,294		
16X	CHANNEL	2,974				

DETAIL OF SLOPE EASEMENTS PARCEL Nº'S. 16-SL & 16A-SL
~NO SCALE~

NOTES: (1) SEE RIGHT-OF-WAY SHEET Nº 9 FOR THE "LEGEND"
(2) SEE RIGHT-OF-WAY SHEET Nº 13 FOR FENCE QUANTITIES
(3) ◉ MONUMENTS TO BE SET

GRAPHIC SCALE
0 20 40 60 80

PRELIMINARY SUBMITTAL DATE: JULY 24, 1964
RIGHT OF WAY COMPLETION DATE: DEC. 18, 1964

Nº	REVISIONS	MADE BY	DATE
1	General Revisions (Distances & Offsets)	RB.	1-9-65
2	Revised R.R. Sta. for point "M".	RB.	4-15-66

ERIE-LACKAWANNA RAILROAD
RIGHT OF WAY PLAT

FED. RD.	STATE	PROJECT	
2	OHIO	I-IG-80-5(4)229	

215/275

28/28

MAH-80-3.37
RIGHT OF WAY SHEET

MAHONING COUNTY
AUSTINTOWN TOWNSHIP
TRACT #5
TOWNSHIP 2 NORTH
RANGE 3 WEST

DETAIL
NO SCALE

1674.86 (CONSULTANTS INFORMATION)
1660' (1964 PLAT) TO ℄ SILICA RD.

ATLANTIC REFINING CO.
STANDARD OIL
S.R. 46
N 1°45'45" W
S 89°32'31" W
S 89°33'15" W
41+27.03
790.84
0.05
33+09.67
33
41+09.77
33
33+09.11
41+10.2
26.5'
41+09.02

LEGEND	
OHIO BELL TELEPHONE POLES	
●	RELOCATED TELEPHONE POLE
●I	JOINT POLE WITH OHIO EDISON
●→×	RELOCATED POLE WITH DOWN GUY & ANCHOR
10/11	RURAL LEAD Nº / Nº OF POLE
P# —	OHIO EDISON TAG Nº
RP	REPLACE
RL	RELOCATE
RM	REMOVE
55' 3	SIZE OF POLE (IN FEET) - CLASS Nº
NOTE: 10 = RURAL LEAD Nº FOR S.R. 46	

NOTE:
1-CABLE ON POLE LINE WILL BE REPLACED WHEN POLES ARE REMOVED - MINIMUM CLEARANCE OVER I-80 WILL BE 27'
ALL POLES ARE JOINT WITH OHIO EDISON.

649+15.72 (649.32)
41+27.08 (790.84)
N 1°44'52" W
330.30 (CALC.)
T58.04
OCCUPATION LINE
0.05'
N 01°45'45" W
200'
S 89°33'15" W
250'
S 89°32'31" W
250'

THE ATLANTIC REFINING CO.
A PENNSYLVANIA CORP.
ARMOUR PLAT #1
Vol. 51, Pg. 190
T.B.A. 0.101 AC

ARMOUR & MARIE BRILL LLOYD
TO RECONSTRUCT A RESIDENTIAL DRIVE
18 T Cont. 0.02 AC
18 WD T.B.A. 0.031 P.R.O. 0.083

STANDARD OIL CO.
8"V.C.P.
TO RECONSTRUCT A RESIDENTIAL DRIVE
26 WA 2
26 WD T.B.A. 0.309 AC P.R.O. 0.220 AC

ALBIN E. ERICKSON, TRUSTEE
33A WD T.B.A. =4851 SQ.FT. =0.111 AC
33A WL T.B.A. =12605 SQ.FT. =0.289 AC
33B WD T.B.A. =3883 SQ.FT. =0.089 AC
33B T =13113 SQ.FT. = 0.301 AC

CHARLES WALTERS JR.
TO CONSTRUCT A TEMP. RUNAROUND
42 T = 6475 SQ.FT. = 0.149 AC

ELLA M. MICHAEL, ET.AL.
41 WD T.B.A. =6851 SQ.FT. =0.148 AC

GLENN W. ALLEN
43 T = 1486 SQ.FT. = 0.034 AC

NOTE:
FOR DETAILS OF S.R. 46 RIGHT OF WAY BETWEEN STA. 43+00 AND STA. 58+50 SEE RIGHT OF WAY SHEET Nº 20 & 21

ARMOUR LLOYD
19 WD T.B.A. = 0.101 AC P.R.O. = 0.283 AC

NOTE—
Special Waiver of damage agreement, indicated as Pcl. 42SA, signed, & executed 1-9-70 as per Concluded Jury Verdict Journal Entry dated Feb 7, 1969, case Nº 177396.

NOTE FOR PARCEL 42T
TEMPORARY SEPTIC OUTLET SYSTEM TO BE PROVIDED BY THE CONTRACTOR DURING THE USE OF THE TEMPORARY RUNAROUND. PERMANENT COMPENSATION DAMAGES (IF ANY) TO BE NEGOTIATED THROUGH RIGHT-OF-WAY AFTER THE REMOVAL OF THE TEMPORARY RUNAROUND.

STA. 43+00 MATCH LINE
STA. 58+50 MATCH LINE

℄ - S.R. 46 (66')
EXIST. RW
℄ R/W
W. VALVE MAIN

JACK M. KELSH
TO CONSTRUCT A TEMP. RUNAROUND
27 T 0.048 AC

PHILIP ARMOUR LLOYD
TO CONSTRUCT A TEMP. RUNAROUND
28 T 0.427 AC
28 WA
TO RECONSTRUCT A RESIDENTIAL DRIVE. DURING THE RECONSTRUCTION OF THE DRIVE, CARE MUST BE TAKEN TO AVOID DAMAGE TO THE LEACH BED

JOHN J. GILLESPIE
29 WA 1
29 T 0.712 AS
29 WD T.B.A. =0.123 AS P.R.O. =0.242 AS
To Construct a Field Drive

M J ENTERPRISES INC. or OHIO CORP.
30 T 0.753 AS
30 WA
30 WD
TO CONSTRUCT A TEMP. RUNAROUND
TO CONSTRUCT A FIELD DRIVE

RUN-AROUND CURVE DATA
Δ = 53°10'
Dc = 18°
R = 318.31'
T = 159.28'
Lc = 295.37'
E = 75.20'

RUN-AROUND CURVE DATA
Δ = 57°43' T = 175.41'
Dc = 18° L = 320.65'
R = 318.31' E = 81.90'

RUN-AROUND CURVE DATA
Δ = 26°01'36"
Dc = 18°
R = 318.31'
T = 73.57'
E = 35.33'
Lc = 144.59'

RUN-AROUND CURVE DATA
Δ = 30°34'36"
Dc = 18°
R = 318.31'
T = 86.91'
E = 43.72'
Lc = 169.87'

℄ - TEMPORARY RUN-AROUND
TO CONSTRUCT A TEMPORARY RUNAROUND
TO CONSTRUCT A TEMP. RUNAROUND
TO CONSTRUCT A FIELD DRIVE
TO CONSTRUCT A TEMPORARY RUNAROUND
TO CONSTRUCT A TEMP. RUNAROUND
TO CONSTRUCT A TEMPORARY RUNAROUND
TO CONSTRUCT A TEMP. RUNAROUND
TO CONSTRUCT A TEMPORARY RUNAROUND
TO CONSTRUCT A FIELD DRIVE

CORN FIELD
POND
WOODS
BARN
OUT HOUSE
SEPTIC TANK
GAS METER
STONE HOUSE
FIELD DR.
GRAVEL DR.
EXIST. RW
℄ R/W
W. VALVE MAIN

YOUNG & WEBB PLAT
VOL. 22, PG. 111
LOTS 1 THRU 20
LOT 13 LOT 14 LOT 15 LOT 16 LOT 17 LOT 18 LOT 19 LOT 20 LOT 15

OAKWOOD ALLOTMENT
VOL. 27, PG. 43
LOT 1 THRU 28, 31

ALBIN E. ERICKSON, TRUSTEE

NOTES: (1) SEE RIGHT-OF-WAY SHEET Nº 5 FOR THE "LEGEND"
(2) SEE RIGHT-OF-WAY SHEET Nº 13 FOR FENCE QUANTITIES

◎ = PROPOSED MANHOLE
● = PROPOSED CATCH BASIN

BEARINGS APPEARING IN BLOCKED FORM ▭ ARE RELATED TO AN ADJACENT CONTRACT PREPARED BY OTHER CONSULTANTS
XXXXX PORTION OF TEMPORARY PAVT. TO REMAIN FOR SERVICE ROAD
IIIIII PROPOSED SERVICE ROAD ENTRANCE
● = IRON PIN FOUND (FOR DETAIL, SEE R/W SHEET 20 OF 28.

GRAPHIC SCALE
0 50 100 150 200

6 Revised Pcl. 26AWD 9-29-65

PRELIMINARY SUBMITTAL DATE: JULY 24, 1964
RIGHT OF WAY COMPLETION DATE: DEC 18, 1964

Nº	REVISIONS	MADE BY	DATE
1	General Revisions		2-2-65
2	Deleted Pcl. 29WA2, Revised Pcls. 30WA & 29WA1.		6-4-65
3	Changed 33A T to 33A & 41T to 41	R.L.M	7-19-65
4	Changed 33A To 33AWD, Deleted 41 & Combined with 41WD.		7-28-65
5	Revised 33AWD to 33WD.		8-4-65

S.R. 46
STA. 34+00 TO STA. 43+00
STA. 58+50 TO STA. 64+00

G. COMBINED PCL. 18 WITH PCL. 19 11-23-66 S.Avo