FHWA REGION	STATE	PROJECT	
5	OHIO		

1/24

TRUMBULL COUNTY
TRU-88-4.31
SURFACE TRANSPORTATION PROGRAM
PID 10059

STATE OF OHIO
DEPARTMENT OF TRANSPORTATION

TRU-88-4.31

DESIGN DESIGNATION

CURRENT ADT (1993)	2620
DESIGN YEAR ADT (2013)	3150
D.H.V.	330
DIR. DIST.	50/50
TRUCK TRAFFIC	6%
DESIGN SPEED	60 MPH
LEGAL SPEED	55 MPH
RURAL MINOR ARTERIAL PRIMARY	

DESIGN EXCEPTION - NONE

MICROFILMED
MAY 14 1997

CONVENTIONAL SIGNS

PROPERTY LINE
RIGHT OF WAY — R/W —
EXISTING FENCES — x — x — x —
GENERAL POLE
VALVE
SIGN
TREE, STUMP
EXISTING GUARDRAIL
PROPOSED GUARDRAIL
UTILITY POLES: POWER,
TELEPHONE, LIGHT
EXISTING MANHOLE
EX. MANHOLE TO BE RESET

PROPOSED MANHOLE
EXISTING CATCH BASIN
EXISTING CATCH BASIN TO BE RESET
PROPOSED CATCH BASIN
HYDRANT
MAIL BOX — MB
PROPOSED STORM SEWER
EXISTING STORM SEWER — S —
EXISTING SANITARY SEWER — San. —
EXISTING WATER LINE — W —
EXISTING GAS LINE — G —
EXISTING TELEPHONE CABLE — T —
EXISTING ELECTRIC CABLE — E —

INDEX OF SHEETS

TITLE SHEET	1
TYPICAL SECTIONS	2
GENERAL NOTES	3-4
CALCULATIONS / ℄ SURVEY TIES	5
GENERAL SUMMARY	6-7
PLAN / PROFILE	8
CROSS SECTIONS	9-11
CHANNEL CROSS SECTIONS	12
STRUCTURES, 20' SPAN AND OVER	13-22
RIGHT OF WAY PLAN	24
SHEET 23 NOT USED	

LINE DATA

BEGIN WORK	STATION 225+10
BEGIN PROJECT	STATION 226+60
END PROJECT	STATION 228+40
END WORK	STATION 229+90

LENGTH OF PROJECT=180 LIN. FT.= 0.034 MILES
LENGTH OF WORK =480 LIN. FT.=0.091 MILES

FARMINGTON TOWNSHIP
TRUMBULL COUNTY

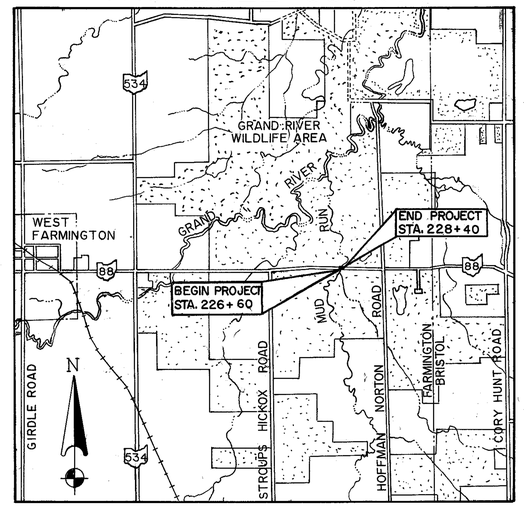

LOCATION MAP
0 2000 4000 6000
SCALE: 1"= 2000'

PORTION TO BE IMPROVED
U.S. ROUTE
STATE ROUTE
TRUMBULL COUNTY
CITY ROADS
DETOUR

STRUCTURE PLANS REVIEWED BY:
Burgess & Niple, Limited
Engineers and Architects

SCALES

PLAN: Horizontal 0' 20
PROFILE: Horizontal 0' 20' Vertical 0' 5'
CROSS-SECTIONS: Horizontal 0' 5' Vertical 0' 5'
OTHER SCALES AS NOTED

1995 SPECIFICATIONS

THE STANDARD SPECIFICATIONS OF THE STATE OF OHIO, DEPARTMENT OF TRANSPORTATION, INCLUDING CHANGES AND SUPPLEMENTAL SPECIFICATIONS LISTED IN THE PROPOSAL SHALL GOVERN THIS IMPROVEMENT.

I HEREBY APPROVE THESE PLANS AND DECLARE THAT THE MAKING OF THIS IMPROVEMENT WILL REQUIRE THE CLOSING TO TRAFFIC OF THE HIGHWAY AND THAT DETOURS WILL BE PROVIDED AS INDICATED IN THE PLANS.

SEE SHEET 4 FOR THE DETOUR ROUTE.

APPROVED David R. Dreger
DATE 6-7-94 DISTRICT DEPUTY DIRECTOR OF TRANSPORTATION

APPROVED B.D. Hamilammi / HEH
DATE 8-4-94 ENGINEER, BUREAU OF BRIDGES AND STRUCTURAL DESIGN

APPROVED Christopher L. Ruman
DATE 11-17-94 DEPUTY DIRECTOR, DESIGN

APPROVED Jerry Wray
DATE 11-17-94 DIRECTOR, DEPARTMENT OF TRANSPORTATION

Rev. 5-22-95

STANDARD CONSTRUCTION DRAWINGS						SUPPLEMENTAL SPECIFICATIONS	
NUMBER	DATE	NUMBER	DATE	NUMBER	DATE	NUMBER	DATE
AS-1-81	11-27-81	MC-11	8-1-78	PSBD-1-93	3-4-94	802	3-23-95
DBR-2-73	4-10-73					942	6-14-95
EXJ-3-82	8-1-84	MT-99.10	11-14-86			944	3-23-95
BP-3.1	2-21-92	MT-101.60	7-1-92			820	6-14-95
GR-1.1	5-6-91	MT-105.10	7-1-92				
GR-1.2	10-30-92	MT-105.11	7-1-92				
GR-1.3	2-21-92	TC-41.20	6-21-94				
GR-2.1	5-6-91	TC-52.10	4-3-79				
GR-3.4	5-6-91	TC-52.20	4-3-79				
		DBP 1-92	3-23-92				
		CPP 2-73	4-10-73				
		CPA 2-73	4-10-73				

UNDERGROUND UTILITIES
2 WORKING DAYS
BEFORE YOU DIG
Call: 800-362-2764 (Toll free)
OHIO UTILITIES PROTECTION SERVICE
NON-MEMBERS
MUST BE CALLED DIRECTLY

PLAN PREPARED BY
MICHAEL BENZA & ASSOCIATES, INC.
6820 W. Snowville Rd.
Brecksville, Ohio 44141
(216) 526-4206
P.E. NO. 32053
APPROVAL DATE 11/10/93

DEPARTMENT OF TRANSPORTATION
FEDERAL HIGHWAY ADMINISTRATION
APPROVED
DIVISION ADMINISTRATOR DATE

Project: TRU-88-4.31, PID 10059
Date of Letting: _____, 19___, Contract № _____

TRU-88-4.31
960111
24PGS
02-28-96

TRU-88-4.31

FHWA REGION	STATE	PROJECT	
5	OHIO		

TRUMBULL COUNTY
TRU-88-4.31

TYPICAL SECTION
TYPE 404 ON 301

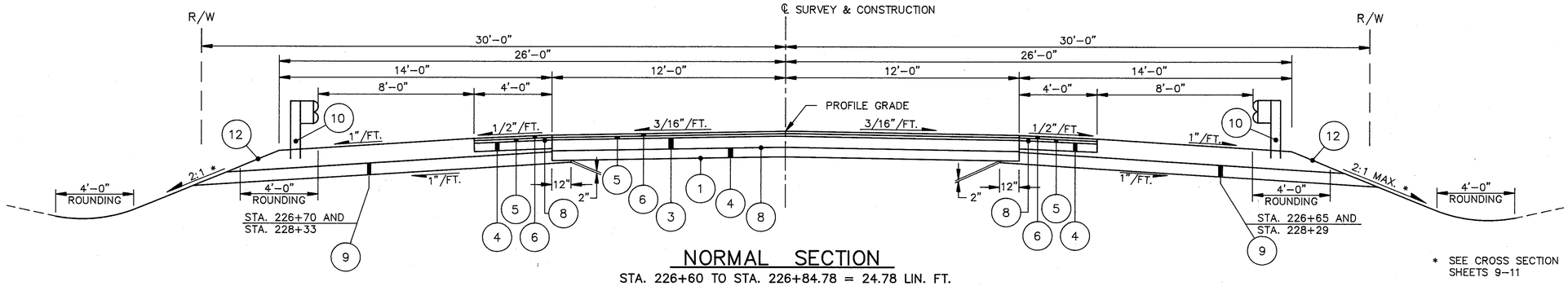

NORMAL SECTION

STA. 226+60 TO STA. 226+84.78 = 24.78 LIN. FT.
STA. 228+15.21 TO STA. 228+40 = 24.79 LIN. FT.
49.57 LIN. FT.

* SEE CROSS SECTION SHEETS 9–11

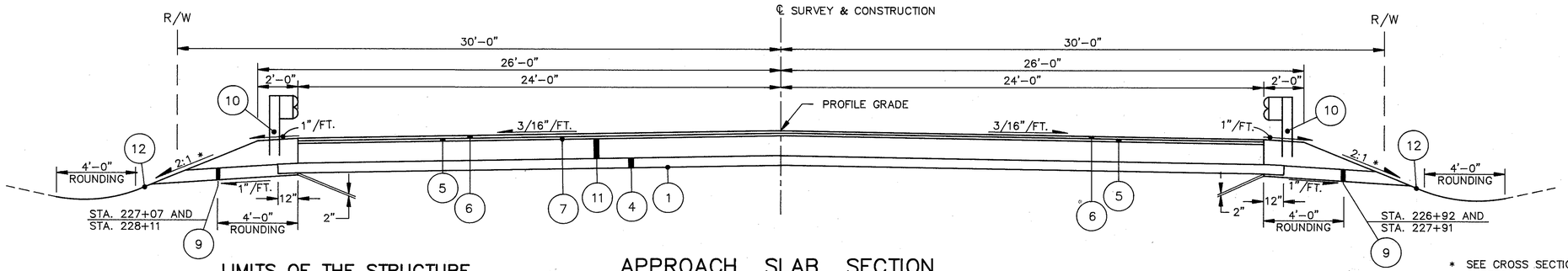

LIMITS OF THE STRUCTURE

STA. 227+04.78 TO STA. 227+95.21 = 90.43 LIN.FT.

APPROACH SLAB SECTION

STA. 226+84.78 TO STA. 227+04.78 = 20 LIN. FT.
STA. 227+95.21 TO STA. 228+15.21 = 20 LIN. FT.
40 LIN. FT.

* SEE CROSS SECTION SHEETS 9–11

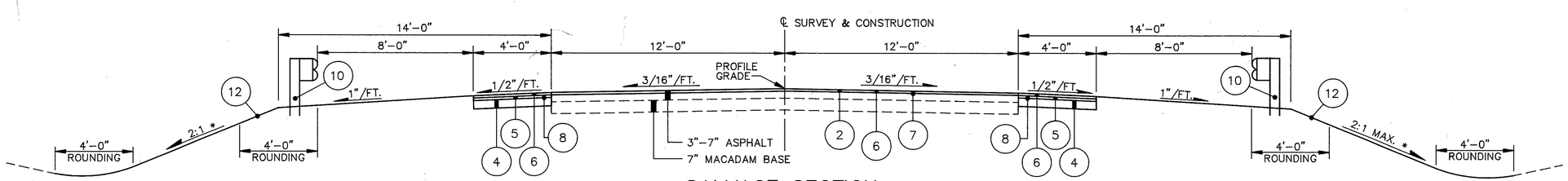

SALVAGE SECTION

STA. 225+89.5 TO STA. 226+60 = 70.50 LIN. FT.
STA. 228+40 TO STA. 229+10.75 = 70.75 LIN. FT.
141.25 LIN. FT.

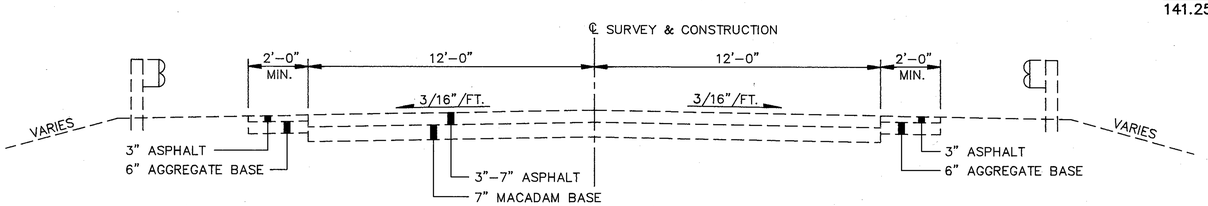

EXISTING SECTION

LEGEND

1. ITEM 203 – SUBGRADE COMPACTION
2. ITEM 254 – PAVEMENT PLANING, BITUMINOUS
3. ITEM 301 – 7" BITUMINOUS AGGREGATE BASE, AC-20
4. ITEM 304 – 6" AGGREGATE BASE, SEE PROPOSAL NOTE
5. ITEM 402 – 1 3/4" ASPHALT CONCRETE, AC-20
6. ITEM 404 – 1 1/4" ASPHALT CONCRETE, AC-20
7. ITEM 407 – TACK COAT (.075 GAL./S.Y.)
8. ITEM 408 – BITUMINOUS PRIME COAT (0.4 GAL./S.Y.)
9. ITEM 605 – AGGREGATE DRAINS
10. ITEM 606 – GUARDRAIL, TYPE 5
11. ITEM 611 – REINFORCED CONCRETE APPROACH SLAB, (T=13"), AS PER PLAN
12. ITEM 659 – SEEDING AND MULCHING

GENERAL NOTES

CALCULATED BY EAB 9/2/93
CHECKED BY TPB 10/28/93

FHWA REGION	STATE	PROJECT	
5	OHIO		

TRUMBULL COUNTY
TRU-88-4.31

GENERAL

ROUNDING

THE ROUNDING AT SLOPE BREAKPOINTS SHOWN ON THE TYPICAL SECTIONS APPLY TO ALL CROSS-SECTIONS EVEN THOUGH OTHERWISE SHOWN.

UTILITIES

LISTED BELOW ARE ALL UTILITIES LOCATED WITHIN THE PROJECT CONSTRUCTION LIMITS TOGETHER WITH THEIR RESPECTIVE OWNERS:

ELECTRIC	OHIO EDISON CO. 730 SOUTH AVE. YOUNGSTOWN, OHIO 44502 1-800-356-4633
TELEPHONE	UNITED TELEPHONE CO. P.O. BOX 311 WARREN, OHIO 44482 (216) 841-1214

THE LOCATION OF THE UNDERGROUND UTILITIES SHOWN ON THE PLANS ARE AS OBTAINED FROM THE OWNERS AS REQUIRED BY SECTION 153.64 O.R.C.

CONTINGENCY QUANTITIES

THE CONTRACTOR SHALL NOT ORDER MATERIALS OR PERFORM WORK FOR ITEMS DESIGNATED BY PLAN NOTE TO BE USED "AS DIRECTED BY ENGINEER" UNLESS AUTHORIZED BY THE ENGINEER. THE ACTUAL WORK LOCATIONS AND QUANTITIES USED FOR SUCH ITEMS SHALL BE INCORPORATED INTO THE FINAL CHANGE ORDER GOVERNING COMPLETION OF THIS PROJECT.

ELEVATION DATUM

ALL ELEVATIONS ARE BASED ON USGS DATUM.

EXISTING TYPICAL SECTIONS

EXISTING TYPICAL SECTIONS HAVE BEEN DEVELOPED FROM PAVEMENT CORES AND ARE BELIEVED TO REPRESENT THE WIDTH AND COMPOSITION OF THE EXISTING PAVEMENT, BUT THE STATE OF OHIO DOES NOT GUARANTEE THE ACCURACY OF SAME.

ROADWAY

ITEM 606 ANCHOR ASSEMBLY, TYPE E

THIS ITEM SHALL CONSIST OF FURNISHING AND INSTALLING AN ET-2000, OPTION "B", GUARDRAIL END TERMINAL AS MANUFACTURED BY SYRO STEEL COMPANY, 1170 N. STATE STREET, GIRARD, OHIO 44420 (TELEPHONE: 216-545-4373).

THE LENGTH OF THE ET-2000 SYSTEM IS CONSIDERED TO BE 50', INCLUSIVE OF TWO 25' LONG RAIL ELEMENTS. INSTALLATION SHALL BE IN ACCORDANCE WITH THE MANUFACTURER'S SPECIFICATIONS AND AT THE LOCATIONS SHOWN IN THE PLANS.

PAYMENT FOR THE ABOVE WORK SHALL BE MADE AT THE UNIT BID PRICE FOR ITEM 606, EACH, ANCHOR ASSEMBLY, TYPE E AND SHALL INCLUDE ALL LABOR, TOOLS, EQUIPMENT AND MATERIALS NECESSARY TO CONSTRUCT A COMPLETE AND FUNCTIONAL ANCHOR ASSEMBLY SYSTEM, INCLUDING ALL RELATED HARDWARE, NOT SEPARATELY SPECIFIED, AS REQUIRED BY THE MANUFACTURER.

CLEARING AND GRUBBING

ALTHOUGH THERE ARE NO TREES AND/OR STUMPS SPECIFICALLY MARKED FOR REMOVAL WITHIN THE LIMITS OF THIS PROJECT, A LUMP SUM QUANTITY HAS BEEN INCLUDED IN THE GENERAL SUMMARY FOR ITEM 201 CLEARING AND GRUBBING. ALL PROVISIONS AS SET FORTH IN THE SPECIFICATIONS UNDER THIS ITEM SHALL BE INCLUDED IN THE LUMP SUM PRICE BID FOR ITEM 201, CLEARING AND GRUBBING.

ITEM 203, EMBANKMENT USING GRANULAR MATERIALS

MATERIALS FURNISHED FOR THIS ITEM SHALL BE AS DEFINED IN 203.02.

EXCAVATION AND GRANULAR MATERIAL LIMITS FOR UNDERCUTTING WEAK AND/OR CONTAMINATED SUBGRADE AREAS ARE SHOWN ON THE CROSS SECTIONS.

IN ADDITION, THE FOLLOWING CONTINGENCY QUANTITY IS TO BE USED AS DIRECTED BY THE ENGINEER.

ITEM 203	EXCAVATION NOT INCLUDING EMBANKMENT Construction	170 CU.YD.
ITEM 203	EMBANKMENT USING GRANULAR MATERIAL	170 CU.YD.

JOINT SEALERS

ALL REFERENCES TO 705.01 OR 705.02 APPEARING ON STANDARD DRAWINGS OR PLANS, SHALL BE CONSIDERED TO READ 705.04.

EROSION CONTROL

TEMPORARY SOIL EROSION AND SEDIMENT CONTROL

THE FOLLOWING ESTIMATED QUANTITIES ARE TO BE USED, AS DIRECTED BY THE ENGINEER, FOR TEMPORARY EROSION AND SEDIMENT CONTROL MEASURES.

207	TEMPORARY SEEDING & MULCHING	150	S.Y.
207	STRAW OR HAY BALES	100	EA.
207	TEMPORARY BENCHES, DAMS & SEDIMENT BASINS	500	C.Y.
207	FILTER FABRIC FENCE	400	L.F.
659	COMMERCIAL FERTILIZER	.01	TON
659	WATER	1	M.GAL.

EROSION CONTROL

ITEM 601 IS PROVIDED IN THE PLANS FOR EROSION CONTROL. ROCK OF A STABLE NATURE WILL NOT BE REMOVED IN ORDER TO PLACE ANY OF THIS ITEM. THE ENGINEER SHALL CHECK AND NON-PERFORM QUANTITIES OR ADJUST LOCATIONS AND QUANTITIES FOR THIS ITEM WHERE INDICATED BY FIELD CONDITIONS DURING CONSTRUCTION. IN ADDITION, THIS ITEM SHALL MEET THE REQUIREMENTS OF 108.04.

ITEM 659 SEEDING & MULCHING

QUANTITIES FOR SEEDING ARE CALCULATED FOR THE SOIL AREAS BETWEEN TEN (10) FEET OUTSIDE THE WORK LIMITS, AS SHOWN ON THE CROSS-SECTIONS.

STREAM CONSTRUCTION CONSTRAINTS

NO IN-STREAM BLASTING WILL BE PERMITTED WITHOUT PRIOR WRITTEN PERMISSION OF THE CHIEF OF THE DIVISION OF WILDLIFE, ODNR, IN ACCORDANCE WITH OHIO REVISED CODE SECTION 1533.58.

GENERAL NOTES

PAVEMENT

ITEM 408, BITUMINOUS PRIME COAT

THE RATE OF APPLICATION OF 408 BITUMINOUS PRIME COAT SHALL BE SUBJECT TO ADJUSTMENT, AS DIRECTED BY THE ENGINEER. PLAN QUANTITIES INDICATE AN AVERAGE APPLICATION RATE OF 0.40 GAL PER SQUARE YARD OF BITUMINOUS PRIME COAT FOR ESTIMATING PURPOSES ONLY.

ITEM 611, REINFORCED CONCRETE APPROACH SLAB (T=13") AS PER PLAN

THE REINFORCING STEEL FOR THE APPROACH SLABS OF THIS STRUCTURE SHALL BE EPOXY COATED IN CONFORMANCE WITH 509.

TWO SEPARATE THICKNESSES OF CLEAR OR OPAQUE POLYETHYLENE FILM, 705.06, SHALL BE PLACED ON THE PREPARED SUBBASE AND WHERE THE APPROACH SLAB IS TO BE CONSTRUCTED. THE POLYETHYLENE FILMS SHALL COMPLETELY COVER THE FULL LENGTH AND WIDTH OF THE SUBBASE BETWEEN THE SIDEWALL FORMS FOR THE APPROACH SLAB.

MATERIALS, LABOR AND INSTALLATION SHALL BE INCLUDED FOR PAYMENT IN THIS ITEM 611, REINFORCED CONCRETE APPROACH SLAB (T=13"), AS PER PLAN.

MAINTENANCE OF TRAFFIC

ITEM 614, MAINTAINING TRAFFIC

THE DETOUR SHOWN ON THIS SHEET SHALL NOT BE PLACED INTO EFFECT UNTIL THE CONTRACTOR IS READY TO REMOVE THE EXISTING BRIDGE. UNTIL THE DETOUR IS PLACED INTO EFFECT, TWO-WAY TRAFFIC SHALL BE MAINTAINED AT ALL TIMES. WHILE THE DETOUR IS IN EFFECT THE CONTRACTOR SHALL CONTINUOUSLY PROCEED WITH WORK ON THE BRIDGE, INCLUDING APPROACH SLABS AND GUARDRAIL, UNTIL THAT PORTION OF THE WORK IS COMPLETED. IF THE CONTRACTOR CANNOT PROCEED WITH CONSTRUCTION OF THE ADJOINING PAVEMENT BECAUSE OF WEATHER OR SCHEDULIING LIMITATIONS, THE DETOUR SHALL BE REMOVED AND THE REMAINDER OF THE WORK SHALL BE ACCOMPLISHED UNDER TRAFFIC. THE DURATION OF THE DETOUR SHALL BE SUBJECT TO THE APPROVAL OF THE ENGINEER.

THE CONTRACTOR SHALL FURNISH, ERECT, MAINTAIN AND SUBSEQUENTLY REMOVE APPROVED TRAFFIC CONTROL DEVICES AS PER ITEM 614, MAINTAINING TRAFFIC, INCLUDING BARRICADES AND SIGNS IN ACCORDANCE WITH STANDARD DRAWING MT-101.60. DETOUR SIGNS AND SUPPORTS WILL BE ERECTED AND MAINTAINED BY THE STATE. THE CONTRACTOR SHALL PROVIDE AT LEAST 18 DAYS NOTICE TO THE DISTRICT TRAFFIC ENGINEER PRIOR TO CLOSURE, BY CALLING (216) 297-0801 EXT. 339.

ACCESS TO LOCAL PROPERTY OWNERS SHALL BE MAINTAINED AT ALL TIMES.

PAYMENT FOR ALL LABOR, EQUIPMENT AND MATERIALS SHALL BE INCLUDED IN THE LUMP SUM PRICE BID FOR ITEM 614, MAINTAINING TRAFFIC, UNLESS SEPARATELY ITEMIZED IN THE PLAN.

NOTICE OF CLOSURE SIGNS, AS DETAILED IN THESE PLANS, SHALL BE ERECTED BY THE CONTRACTOR AT LEAST ONE WEEK IN ADVANCE OF THE SCHEDULED ROAD CLOSURE. THE SIGNS SHALL BE ERECTED ON THE RIGHT HAND SIDE OF THE ROAD FACING TRAFFIC. THEY SHALL BE PLACED SO AS NOT TO INTERFERE WITH THE VISIBILITY OF ANY OTHER TRAFFIC CONTROL SIGNS. THEY SHOULD BE ERECTED AT THE POINT OF CLOSURE, AND THE MAXIMUM POST SIZE IS A #3 POST.

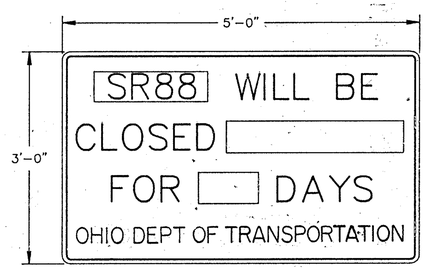

OC-60A
(MOUNTED ON TYPE III BARRICADE)

DUST CONTROL

THE CONTRACTOR SHALL FURNISH AND APPLY WATER AND CALCIUM CHLORIDE FOR DUST CONTROL AS DIRECTED BY THE ENGINEER. THE FOLLOWING CONTINGENCY QUANTITIES HAVE BEEN INCLUDED FOR DUST CONTROL PURPOSES:

ITEM 616, WATER	10 M.GAL.
ITEM 616, CALCIUM CHLORIDE	1 TON

PAVEMENT MARKINGS

THE ROADWAY SHALL NOT BE OPENED TO TRAFFIC UNTIL THE PERMANENT PAVEMENT MARKINGS ARE IN PLACE.

DETOUR LIMITATION

TWO-WAY TRAFFIC SHALL BE MAINTAINED AT ALL TIMES, EXCEPT FOR A PERIOD BETWEEN JUNE 10TH AND AUGUST 23RD, IN WHICH THROUGH TRAFFIC MAY BE DETOURED AS SHOWN ON SHEET 4.

AUGUST 23RD SHALL BE CONSIDERED AS AN INTERIM COMPLETION DATE AND FOR EACH CALENDAR DAY BEYOND AUGUST 23RD THAT THE ROADWAY REMAINS CLOSED TO TRAFFIC, THE CONTRACTOR WILL BE ASSESSED LIQUIDATED DAMAGES IN ACCORDANCE WITH 108.07.

FAILURE TO COMPLY

IF THERE IS ANY FAILURE TO COMPLY WITH THE PROVISIONS FOR THE MAINTENANCE OF TRAFFIC AS SET FORTH IN THESE PLANS AND NOTES, OR WITH THE PROVISIONS OF THE OMUCTD, THE HIGHWAY SHALL NOT BE CONSIDERED TO BE IN A CONDITION FOR THE SAFE AND CONVENIENT USE BY THE TRAVELLING PUBLIC. ANY FAILURE TO KEEP THE HIGHWAY IN A CONDITION FOR THE SAFE AND CONVENIENT USE BY THE TRAVELLING PUBLIC SHALL BE CONSIDERED TO BE A BREACH OF CONTRACT AND WORK SHALL BE SUSPENDED UNTIL THE CONTRACTOR COMPLIES WITH THE AFORMENTIONED PROVISIONS.

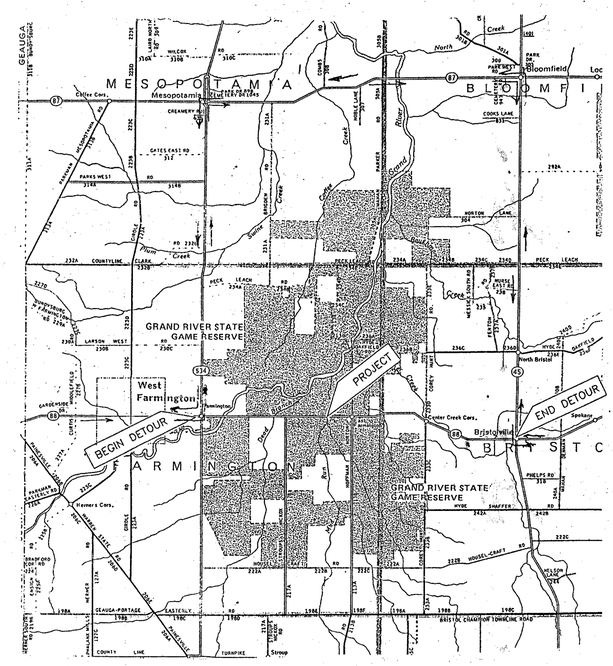

REVISED 5-22-95

CALCULATIONS

CALCULATED BY EAB 9/2/93
CHECKED BY TPB 10/28/93

FHWA REGION	STATE	PROJECT	
5	OHIO		

TRUMBULL COUNTY
TRU–88–4.31

LINE No.	DESCRIPTION	QUANTITY	UNIT
1	TREATED SHOULDERS: STA. 225+89.50 TO STA. 226+84.78 LT. & RT.		
2	(95.28)(4)(2)/9 = 84.7 SQ.YD.		
3	STA. 228+15.21 TO STA. 229+10.75 LT. & RT.		
4	(95.54)(4)(2)/9 = 84.9 SQ.YD.		
5			
6	SUBTOTAL = 169.6 SQ.YD.		
7			
8	NORMAL SECTION: STA. 226+60 TO STA. 226+84.78		
9	(24.78)(24)/9 = 66.1 SQ.YD.		
10	STA. 228+15.21 TO STA. 228+40		
11	(24.79)(24)/9 = 66.1 SQ.YD.		
12			
13	SUBTOTAL = 132.2 SQ.YD.		
14			
15	APPROACH SLAB: STA. 226+84.78 TO STA. 227+04.78		
16	(20)(48)/9 = 106.7 SQ.YD.		
17	STA. 227+95.21 TO STA. 228+15.21		
18	(20)(48)/9 = 106.7 SQ.YD.		
19			
20	SUBTOTAL = 213.4 SQ.YD.		
21			
22	ITEM 203 EMBANKMENT USING GRANULAR MATERIAL	420	CU.YD.
23	NORMAL SECTION		
24	(24.78 + 24.79)[(24)(3) + 10(3.6)]/27 = 198 CU.YD.		
25	APPROACH SLABS		
26	[(20+20)(50)(3)]/27 = 222 CU.YD.		
27			
28	SUBTOTAL = 420 CU.YD.		
29			
30	ITEM 203 SUBGRADE COMPACTION	354	SQ.YD.
31	LINE 13 + 20(50)(2)/9		
32	(132.2 + 222.2) = 354 SQ.YD.		
33			
34	ITEM 254 PAVEMENT PLANING, BITUMINOUS	377	SQ.YD.
35	STA. 225+89.5 TO STA. 226+60		
36	70.5(24)/9 = 188.0 SQ.YD.		
37	STA. 228+40 TO STA. 229+10.75		
38	70.75(24)/9 = 188.7 SQ.YD.		
39			
40	SUBTOTAL = 376.7 SQ.YD.		
41			
42	ITEM 301 BITUMINOUS AGGREGATE BASE, AC–20	26	CU.YD.
43	LINE 13 (132.2)(7/36) = 25.7 CU.YD.		
44			
45	ITEM 304 AGGREGATE BASE	87	CU.YD.
46	LINE 6 + LINE 13 + 20(50)(2)/9		
47	(169.6 + 132.2 + 222.2)(6/36) = 87.3 CU.YD.		
48			
49	ITEM 402 ASPHALT CONCRETE, AC–20	25	CU.YD.
50	LINE 6 + LINE 13 + LINE 20		
51	(169.6 + 132.2 + 213.4)(1.75/36) = 25 CU.YD.		
52			
53	ITEM 404 ASPHALT CONCRETE, AC–20	31	CU.YD.
54	LINE 6 + LINE 13 + LINE 20 + LINE 40		
55	(169.6 + 132.2 + 213.4 + 376.7)(1.25/36) = 30.9 CU.YD.		
56			
57	ITEM 407 TACK COAT	44	GAL.
58	LINE 20 + LINE 40		
59	(213.4 + 376.7)(.075 GAL./S.Y.) = 44.3 GAL.		

LINE No.	DESCRIPTION	QUANTITY	UNIT
60			
61	ITEM 408 BITUMINOUS PRIME COAT	121	GAL.
62	LINE 6 + LINE 13		
63	(169.6 + 132.2)(.4 GAL/S.Y.) = 120.7 GAL.		
64			
65	ITEM 601 ROCK CHANNEL PROTECTION, TYPE B, 2'–6" THICK	169	CU.YD
66	[58(9) + 2(6)(16) + 58(14) + 21(8) + 6(21)](2.5/27) = 168.5 CU.YD.		
67			
68	ITEM 611 REINFORCED CONCRETE APPROACH SLAB (T=13")	213	SQ.YD.
69	LINE 20 213.4 SQ.YD.		
70			
71	ITEM 802 BARRIER REFLECTORS, TYPE A	6	EA.
72	STA. 226+10.75, LT. TO STA. 229+10.75, LT. = 300 LIN.FT.		
73	300 LIN.FT. @ 100 FT. INTERVALS = 3		
74	STA. 225+89.50, RT. TO STA. 228+89.50, RT. = 300 LIN.FT.		
75	300 LIN.FT. @ 100 FT. INTERVALS = 3		
76			
77	ITEM 659 Commercial Fertilizer		
78	749 × 9 × 20 /1000 /2000	0.07	TON
79			
80	ITEM 659 WATER		
81	749 × 9 × 240 /1000 /1000	2	M.GAL.
82			
83			

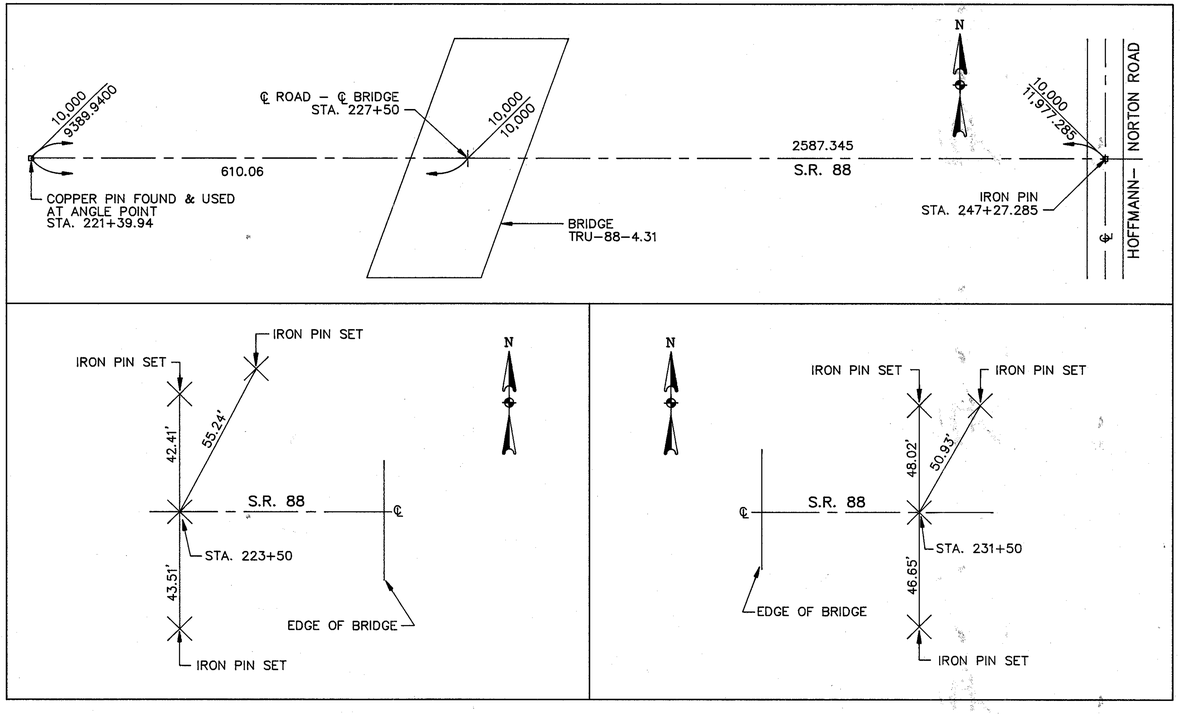

GENERAL SUMMARY

CALCULATED BY EAB 9/2/93
CHECKED BY TPB 10/28/93

FHWA REGION	STATE	PROJECT	
5	OHIO		

TRUMBULL COUNTY
TRU-88-4.31

ITEM	GENERAL NOTES SHEET 3	GENERAL NOTES SHEET 4	SHEET NUMBER 5	8	9	10	11	12	13	14	15	16	17	18	19	20	21	22	23	24	ITEM	ITEM EXT.	TOTAL QUANTITY	UNIT	DESCRIPTION	FOR AS PER PLAN, SEE SHEET NO.
																									ROADWAY	
201	LUMP																				201	11000	LUMP		CLEARING & GRUBBING	
202				295																	202	38000	295	LIN.FT.	GUARDRAIL REMOVED	
203	170						615	147													203	12000	932	CU.YD.	EXCAVATION NOT INCLUDING EMBANKMENT CONSTRUCTION	
203							80														203	20000	80	CU.YD.	EMBANKMENT	
203	170		420																		203	21000	590	CU.YD.	EMBANKMENT USING GRANULAR MATERIAL	
203			354																		203	50000	354	SQ.YD.	SUBGRADE COMPACTION	
606				350																	606	13000	350	LIN.FT.	GUARDRAIL, TYPE 5	
606				4																	606	26100	4	EACH	ANCHOR ASSEMBLY, TYPE E	
606				4																	606	35140	4	EACH	BRIDGE TERMINAL ASSEMBLY, TYPE 4	
																									EROSION CONTROL	
207	150																				207	10000	150	SQ.YD.	TEMPORARY SEEDING & MULCHING	
207	400																				207	30000	400	LIN.FT.	FILTER FABRIC FENCE	
207	500																				207	50000	500	CU.YD.	TEMPORARY BENCHES DAMS & SEDIMENT BASINS	
207	100																				207	70000	100	EACH	STRAW & HAY BALES	
601			169																		601	32104	169	CU.YD.	ROCK CHANNEL PROTECTION, TYPE B, WITH FABRIC FILTER	
659							749														659	10000	749	SQ.YD.	SEEDING & MULCHING	
659	.01		.07																		659	20000	0.08	TON	COMMERCIAL FERTILIZER	
659	1		2																		659	35000	3	M.GAL.	WATER	
																									DRAINAGE	
605				104																	605	31100	104	LIN.FT.	AGGREGATE DRAIN	
																									PAVEMENT	
254			377																		254	01000	377	SQ.YD.	PAVEMENT PLANING, BITUMINOUS	
301			26																		301	10002	26	CU.YD.	BITUMINOUS AGGREGATE BASE, AC-20	
304			87																		304	20000	87	CU.YD.	AGGREGATE BASE	
402			25																		402	20000	25	CU.YD.	ASPHALT CONCRETE, AC-20	
404			31																		404	20000	31	CU.YD.	ASPHALT CONCRETE, AC-20	
407			44																		407	10000	44	GAL.	TACK COAT	
408			121																		408	10000	121	GAL.	BITUMINOUS PRIME COAT	
611			213																		611	15001	213	SQ.YD.	REINFORCED CONCRETE APPROACH SLAB, (T=13"), AS PER PLAN	4

GENERAL SUMMARY

CALCULATED BY EAB 9/2/93
CHECKED BY TPB 10/28/93

FHWA REGION	STATE	PROJECT	
5	OHIO		

TRUMBULL COUNTY
TRU-88-4.31

ITEM	GENERAL NOTES SHEET 3	GENERAL NOTES SHEET 4	SHEET NUMBER 5	8	9	10	11	12	13	14	15	16	17	18	19	20	21	22	23	24	ITEM	ITEM EXT.	TOTAL QUANTITY	UNIT	DESCRIPTION	FOR AS PER PLAN, SEE SHEET NO.
																									TRAFFIC CONTROL	
642				.18																	642	00102	.18	MILE	EDGE LINE, TYPE 2	
642				.09																	642	00302	.09	MILE	CENTER LINE, TYPE 2	
802			6																		802	00100	6	EA.	BARRIER REFLECTOR, TYPE A	
																									MAINTENANCE OF TRAFFIC	
614				.09																	614	21000	.09	MILE	TEMPORARY CENTER LINE, CLASS I	
616		10																			616	10000	10	M.GAL.	WATER	
616		1																			616	20000	1	TON	CALCIUM CHLORIDE	
																									FOR STRUCTURES, 20' SPAN & OVER GENERAL SUMMARY, SEE SHEET 14	
614		LUMP																			614	11000	LUMP		MAINTAINING TRAFFIC	
619		LUMP																			619	15000	LUMP		FIELD OFFICE, TYPE A	
623		LUMP																			623	10000	LUMP		CONSTRUCTION LAYOUT STAKES	
624		LUMP																			624	10000	LUMP		MOBILIZATION	
																					SPECIAL	61925000	LUMP		COMPUTER EQUIPMENT FOR TYPE A OFFICE (SEE PROPOSAL NOTE)	

CALCULATED BY E.A.B. 10/15/92
CHECKED BY T.P.B. 10/29/92

FHWA REGION	STATE	PROJECT	
5	OHIO		

TRUMBULL COUNTY
TRU-88-4.31

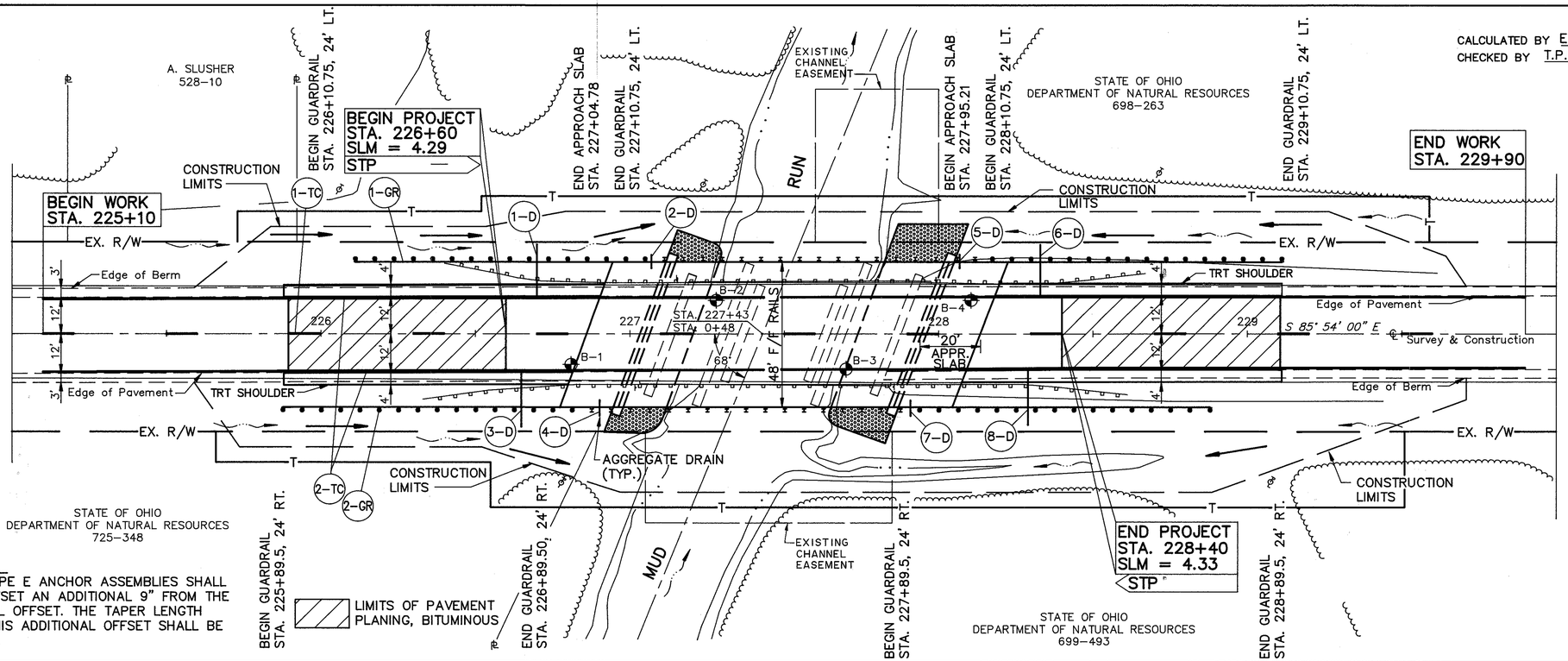

NOTE:
ALL TYPE E ANCHOR ASSEMBLIES SHALL BE OFFSET AN ADDITIONAL 9" FROM THE NORMAL OFFSET. THE TAPER LENGTH FOR THIS ADDITIONAL OFFSET SHALL BE 12'-6".

NOTE:
FOR ℄ SURVEY TIES, SEE SHEET 5.

BENCH MARK: NAIL IN 7" ELM TREE STA. 231+13, 75' LT. ELEV. = 829.86

BENCH MARK: NAIL IN 11" ELM TREE STA. 224+07, 61' LT. ELEV. = 832.92

USGS SURVEY MARKER USED AS REFERENCE – B-163

LOCATED ON THE EAST SIDE OF THE SOUTH WINGWALL ON 2ND BRIDGE S.R. 88.

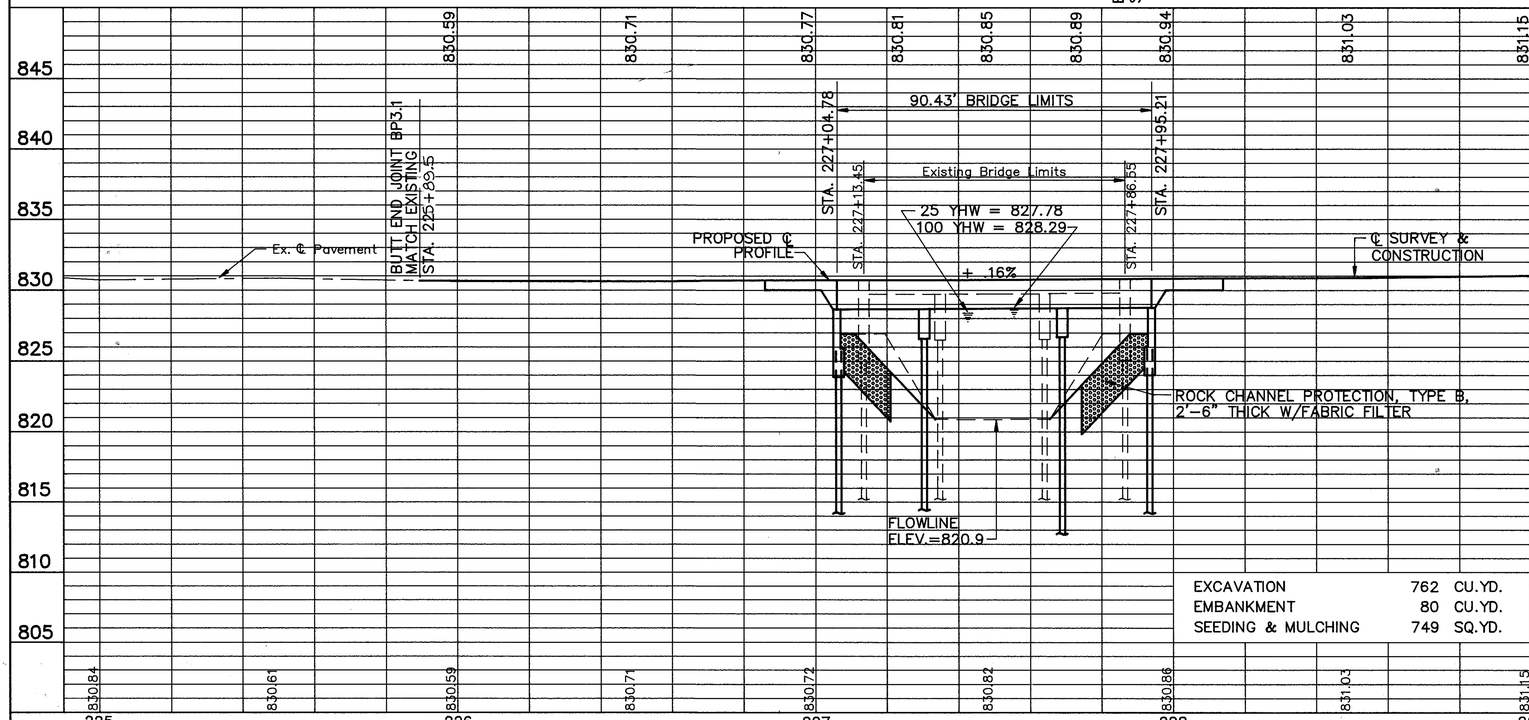

EXCAVATION	762	CU.YD.
EMBANKMENT	80	CU.YD.
SEEDING & MULCHING	749	SQ.YD.

EXISTING STRUCTURE

STRUCTURE FILE NO. 7805705
TYPE: CONTINUOUS CONCRETE SLAB WITH CAPPED PILE SUBSTRUCTURE.
SPANS: 22', 27'-6", 22' C/C BRG'S
ROADWAY: 32'-0" FACE TO FACE OF RAILS
LOADING: S-15-46
SKEW: 20° LEFT FORWARD
WEARING SURFACE: ASPHALT CONCRETE
APPROACH SLAB: NONE
ALIGNMENT: TANGENT

PROPOSED STRUCTURE

TYPE: THREE SPAN PRE-STRESSED NONCOMPOSITE CONCRETE BOX BEAM WITH CAPPED PILE PIERS AND ABUTMENTS.
SPANS: 25', 36', 25' C/C BRG'S
ROADWAY: 48' FACE TO FACE OF RAILS
LOADING: HS20-44 AND THE ALTERNATE MILITARY LOADING
SKEW: 20° LEFT FORWARD
WEARING SURFACE: ASPHALT CONCRETE (2-1/2"MIN.)
APPROACH SLAB: AS-1-81 (20'-0" LONG)
ALIGNMENT: TANGENT
CROWN: NORMAL (0.0156 FT./FT.)

REF. No.	STATION TO STATION	SIDE	202 GUARDRAIL REMOVED LIN. FT.	605 AGGREGATE DRAIN LIN. FT.	606 BRIDGE TERMINAL ASSEMBLY TYPE 4 EACH	606 GUARDRAIL TYPE 5 LIN. FT.	606 ANCHOR ASSEMBLY TYPE E EACH	614 TEMPORARY CENTERLINE CLASS I MILES	642 CENTER LINE DASHED YELLOW MILES	642 EDGE LINES WHITE MILES
1-D	226+70	LT		19						
2-D	227+07	LT		7						
3-D	226+65	RT		19						
4-D	226+92	RT		7						
5-D	228+11	LT		7						
6-D	228+33	LT		19						
7-D	227+91	RT		7						
8-D	228+29	RT		19						
1-GR	226+10.75 TO 229+10.75	LT	147		2	175	2		.09	.18
2-GR	225+89.5 TO 228+89.5	RT	148		2	175	2		.09	.18
1-TC	225+10 TO 229+90	℄						.09		
2-TC	225+10 TO 229+90	RT/LT								
TOTALS TO GEN. SUM.			295	104	4	350	4	.09	.09	.18

PLAN AND PROFILE

TRUMBULL COUNTY
TRU-88-4.31

9/24

CALCULATED BY E.A.B. 9/07/93
CHECKED BY T.P.B. 10/08/93

	END AREA CUT SQ.FT.	END AREA FILL SQ.FT.	VOLUME CUT CU.YD.	VOLUME FILL CU.YD.
226+00	5	5	2	2
225+50	0	0		
225+00	0	0		
224+50				
224+00				
223+50				
TOTAL			2	2

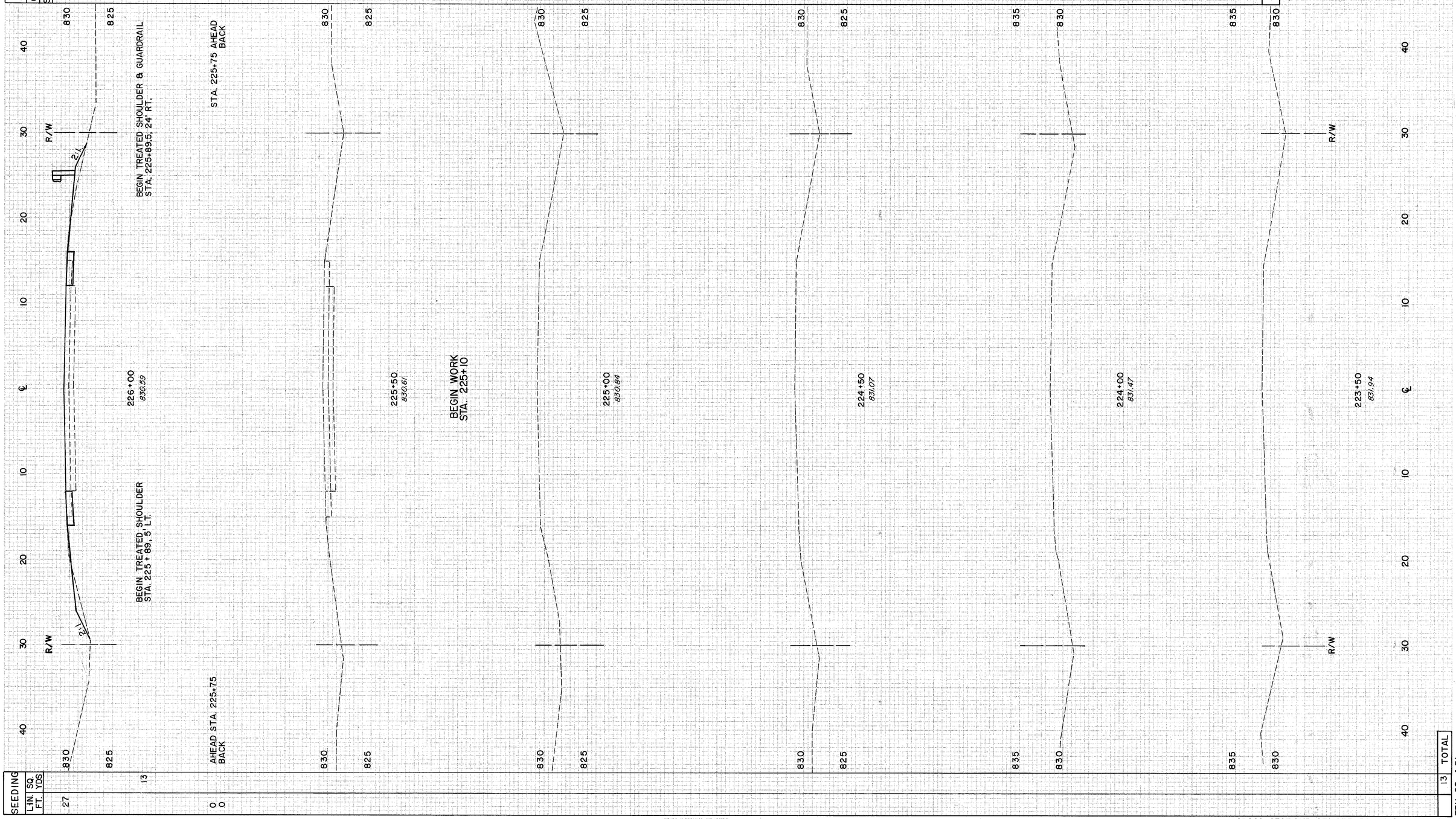

SEEDING	
LIN. FT.	SQ. YDS
27	13
0	
0	
TOTAL	13

TRU-88-4.31

CROSS SECTIONS STA. 223+50 TO STA. 226+00

PLATE 3-FULL CROSS SECTION-FULL LINE

ORIGINAL SURVEY	BY	DATE
NOTES		
CROSS SECTIONS		
NOTE BOOK		
NO.		

FINAL SURVEY	BY	DATE
NOTES		
CROSS SECTIONS		
NOTE BOOK		
NO.		

SEEDING LIN FT	SEEDING SQ YDS		END AREA CUT SQ.FT	END AREA FILL SQ.FT	VOLUME CUT CU.YD	VOLUME FILL CU.YD
					11	29
28		END NORMAL SECTION END PROJECT — END GRANULAR MATERIAL STA. 228+40 AHEAD	5	13		
		BACK	152	5.5		
	77				140	5
28		AHEAD STA. 228+15.21 COS 20°	152	5.5		
32		BACK — STA. 228+15.21 COS 20° AHEAD	211	11		
		BACK				
	54	END APPROACH SLAB STA. 228+15.21 COS 20°			119	6
32			211	11		
	17				37	2
32		AHEAD STA. 227+95.21 COS 20° — BEGIN APPROACH SLAB STA. 227+95.21 COS 20° — BEGIN GRANULAR MATERIAL STA. 227+95.21 COS 20° AHEAD	211	11		
0		BACK — BEGIN GUARDRAIL STA. 277+89.5, 24' RT.	0	0		
0			0	0		
	0	END APPROACH SLAB STA. 227+04.78 COS 20° — END GUARDRAIL STA. 227+10.75, 24' LT.				
0		AHEAD STA. 227+04.78 COS 20° — END GRANULAR MATERIAL STA. 227+04.78 COS 20° AHEAD	0	0		
42		BACK	211	16		
	22				37	3
42			211	16		
	71	END GUARDRAIL STA. 226+89.5, 24' RT.			117	9
42		AHEAD STA. 226+84.78 COS 20° — BEGIN APPROACH SLAB STA. 226+84.78 COS 20° — STA. 226+84.78 COS 20° AHEAD	211	16		
28		BACK	151	7		
					140	7
		BEGIN GRANULAR MATERIAL STA. 226+60 AHEAD	151	7		
		BACK	5	5		
	77					
					11	11
		TOTAL			612	72
28		BEGIN GUARDRAIL STA. 226+10.75, 24' LT.				
	183	BEGIN NORMAL SECTION BEGIN PROJECT				
501	TOTAL					

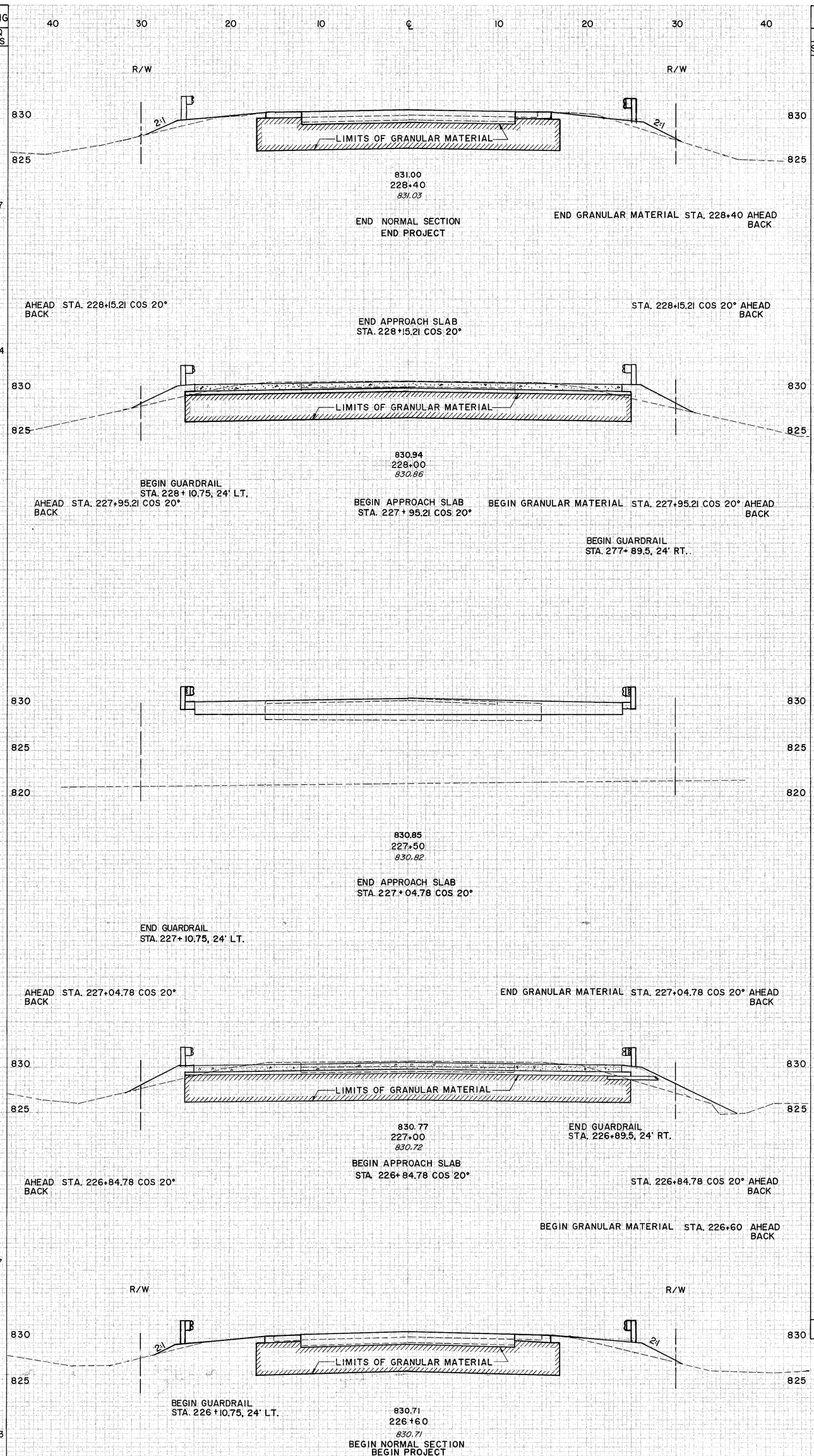

CROSS SECTIONS STA. 226+50 TO STA. 228+50

TRU-88-4.31

TRUMBULL COUNTY

TRU-88-4.31

CALCULATED BY E.A.B. 9/07/93

CHECKED BY T.P.B. 10/08/93

10/24

TRUMBULL COUNTY
TRU-88-4.31

11
24

CALCULATED BY E.A.B. 9/07/93
CHECKED BY T.P.B. 10/08/93

END AREA CUT SQ.FT.	END AREA FILL SQ.FT.	VOLUME CUT CU.YD.	VOLUME FILL CU.YD.	
0	0			231+50
0	0			
5	13	1	6	231+00
				230+50
				230+00
				229+50
				229+00
TOTAL TO GENERAL SUMMARY		615	80	

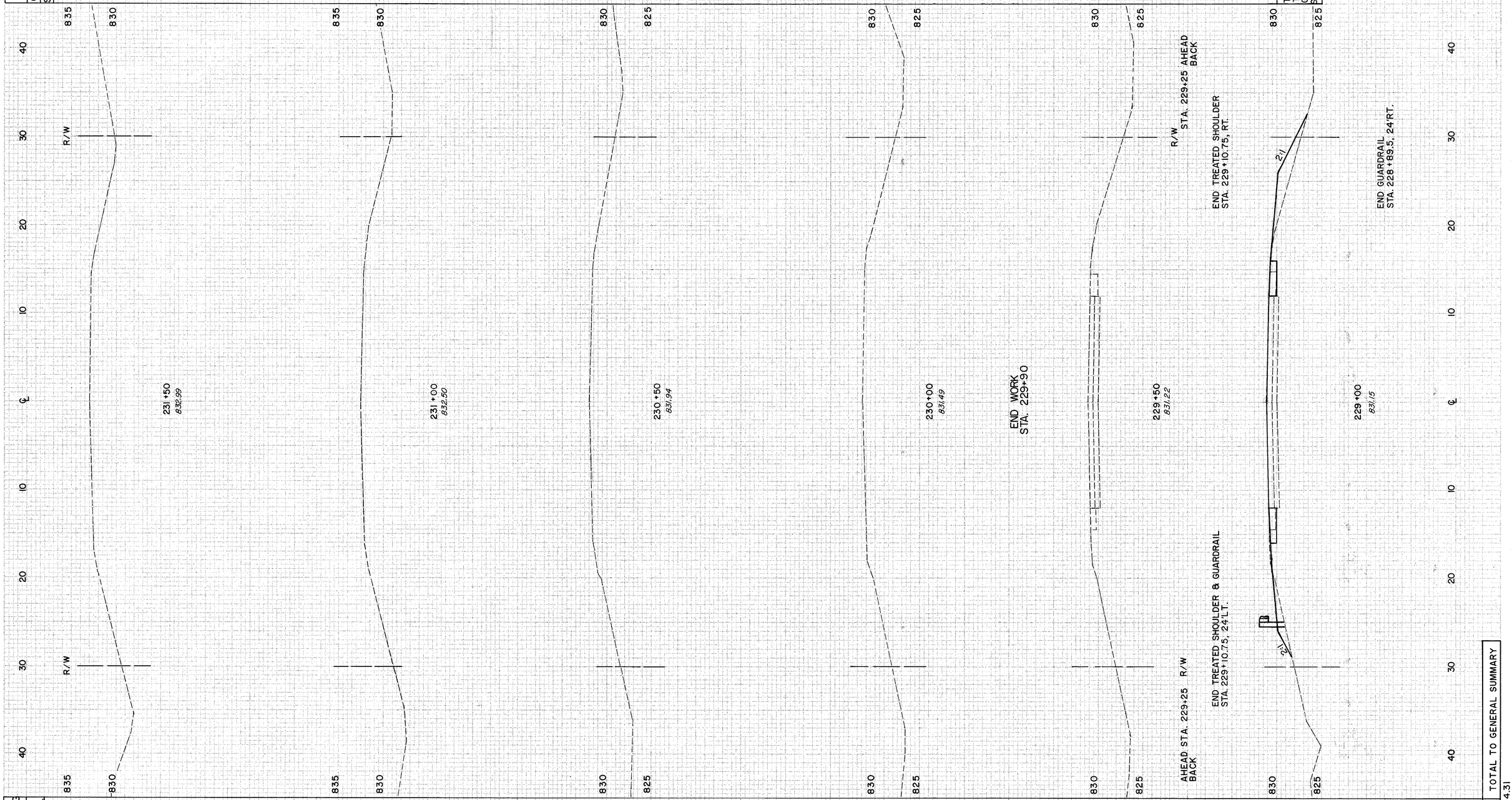

SEEDING LIN FT.	SEEDING SQ YDS.	
0	0	
42		
30		
193		
749		TOTAL TO GENERAL SUMMARY

TRU-88-4.31

CROSS SECTIONS STA. 229+00 TO STA. 231+50

PLATE 3-FULL CROSS SECTION-FULL LINE

CALCULATED BY E.A.B. 9/07/93
CHECKED BY T.P.B. 10/08/93

TRUMBULL COUNTY
TRU-88-4.31

12
24

SEEDING	
LIN FT	SQ YDS

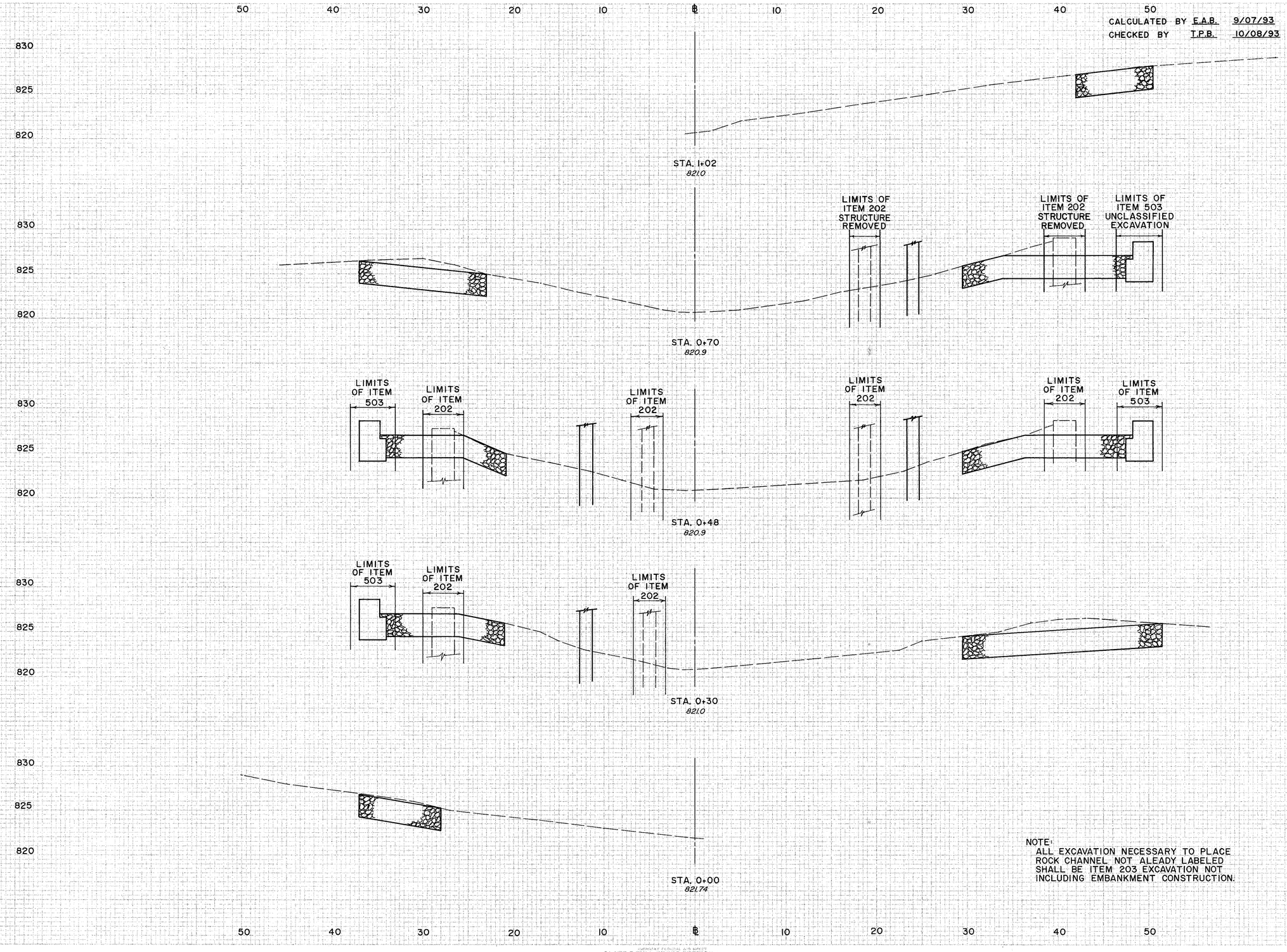

	END AREA		VOLUME	
	CUT SQFT	FILL SQFT	CUT CUYD	FILL CUYD
	22			
			26	
830 AHEAD	22			
BACK	76			
			50	
	50			
			47	
830 AHEAD	90			
BACK	22			
			24	
	22			
TOTAL			147	

CHANNEL CROSS SECTIONS

TRU-88-4.31

FINAL SURVEY
ORIGINAL SURVEY
HIGHWAY FLOODS AND BRIDGE
PLATE 3-FULL CROSS SECTION FULL LINE

FHWA REGION	STATE	PROJECT	
5	OHIO		

13/24

TRUMBULL COUNTY
TRU.–88–4.31

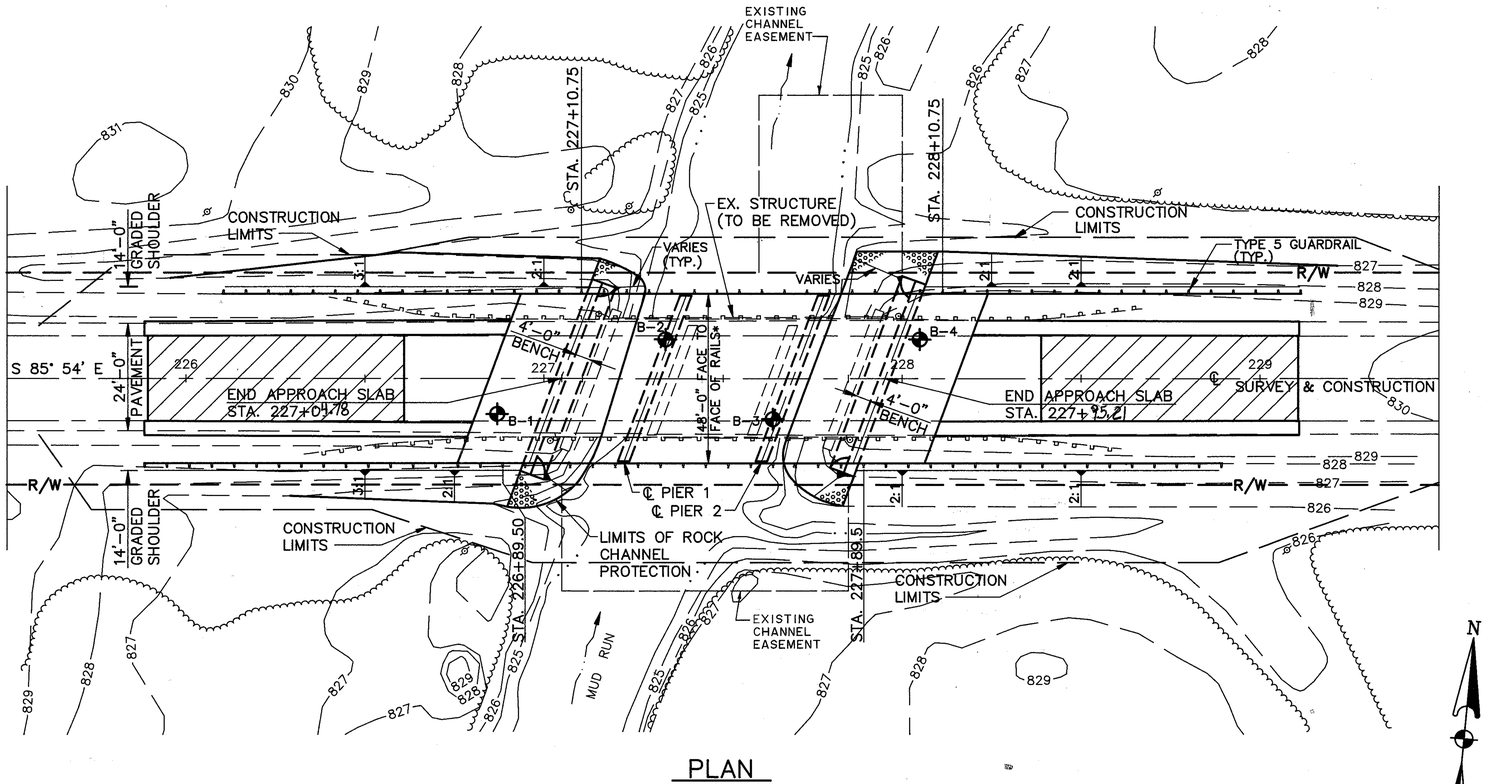

PLAN

BENCH MARK
NAIL IN 11" ELM TREE STA. 224+07, 61' LT. ELEV. = 832.92

LIMITS OF PAVEMENT PLANING, BITUMINOUS

NOTE: CHANNEL EXCAVATION SHALL BE PRIMARILY FOR THE PLACEMENT OF SLOPE PROTECTION. LIMITS AND QUANTITIES WILL BE SHOWN ON THE CHANNEL CROSS SECTIONS SHEET 12.

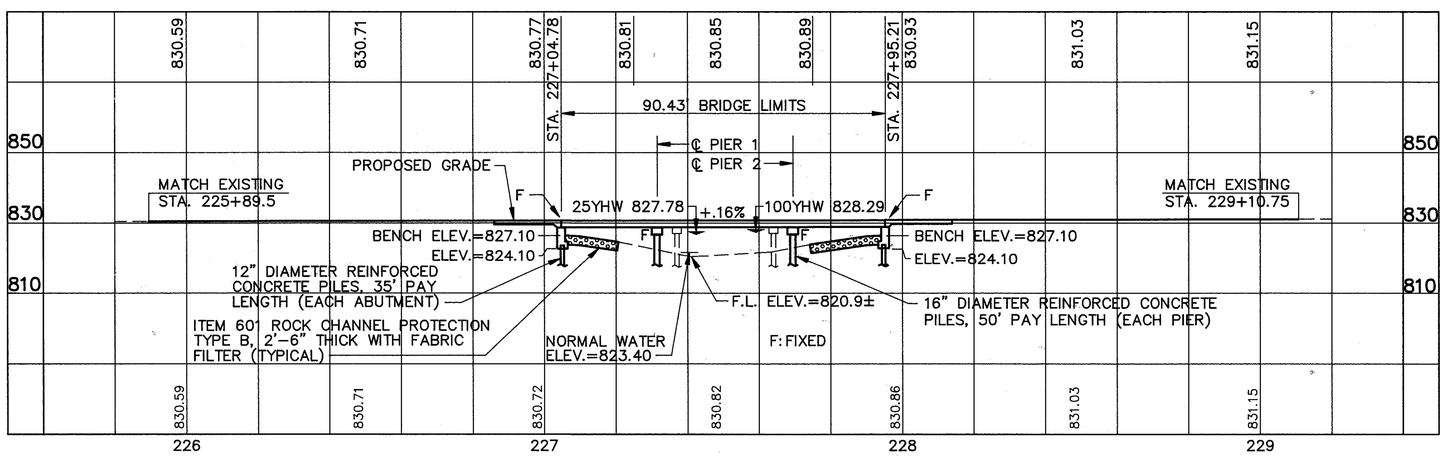

PROFILE ALONG ℄ SURVEY & CONSTRUCTION

REVIEWED BY BURGESS & NIPLE, LTD.
D.R.K. 03/21/94

HYDRAULIC DATA

25 YEARS		100 YEARS	
Q_{25}	= 985cfs.	Q_{100}	= 1294cfs.
V_{25}	= 3.36fps.	V_{100}	= 4.09fps.
HW_{25} ELEVATION	= 827.78	HW_{100} ELEVATION	= 828.29

DRAINAGE AREA = 13.94 SQUARE MILES

EARTHWORK

EARTHWORK LIMITS SHOWN ARE APPROXIMATE. ACTUAL SLOPES SHALL CONFORM TO PLAN CROSS SECTIONS.

TRAFFIC DATA

A.D.T. (1993) = 3570 (TOTAL BOTH WAYS)
A.D.T. (2013) = 5305 (TOTAL BOTH WAYS)

EXISTING STRUCTURE

TYPE: CONTINUOUS CONCRETE SLAB WITH CAPPED PILE SUBSTRUCTURE.
SPANS: 22', 27'–6", 22' C/C BRG'S
ROADWAY: 32'–0" FACE TO FACE OF RAILS
LOADING: S–15–46
SKEW: 20° LEFT FORWARD
WEARING SURFACE: ASPHALT CONCRETE
APPROACH SLAB: NONE
ALIGNMENT: TANGENT
STRUCTURAL FILE NO. 7805705

PROPOSED STRUCTURE

TYPE: THREE SPAN PRE–STRESSED NONCOMPOSITE CONCRETE BOX BEAM WITH CAPPED PILE PIERS AND ABUTMENTS.
SPANS: 25', 36', 25' C/C BRG'S
ROADWAY: 48' FACE TO FACE OF RAILS
LOADING: HS20–44 AND THE ALTERNATE MILITARY LOADING
SKEW: 20° LEFT FORWARD
WEARING SURFACE: ASPHALT CONCRETE (2–1/2"MIN.)
APPROACH SLAB: AS–1–81 (20'–0" LONG)
ALIGNMENT: TANGENT
CROWN: NORMAL (0.0156 FT./FT.)

MICHAEL BENZA & ASSOCIATES, INC. 1 / 10
CONSULTING ENGINEERS
BRECKSVILLE, OHIO

SITE PLAN
BRIDGE NO. TRU–88–0431
OVER MUD RUN
TRUMBULL COUNTY STA. 227+04.78
227+95.21

DESIGNED	DRAWN	TRACED	CHECKED	REVIEWED	DATE	REVISE
E.A.B.	R.L.R.		T.P.B.	J.N.S.	4/93	1/94

CALCULATED BY E.A.B. 5/10/93
CHECKED BY T.P.B. 9/15/93

FHWA REGION	STATE	PROJECT	
5	OHIO		

TRUMBULL COUNTY
TRU-88-4.31

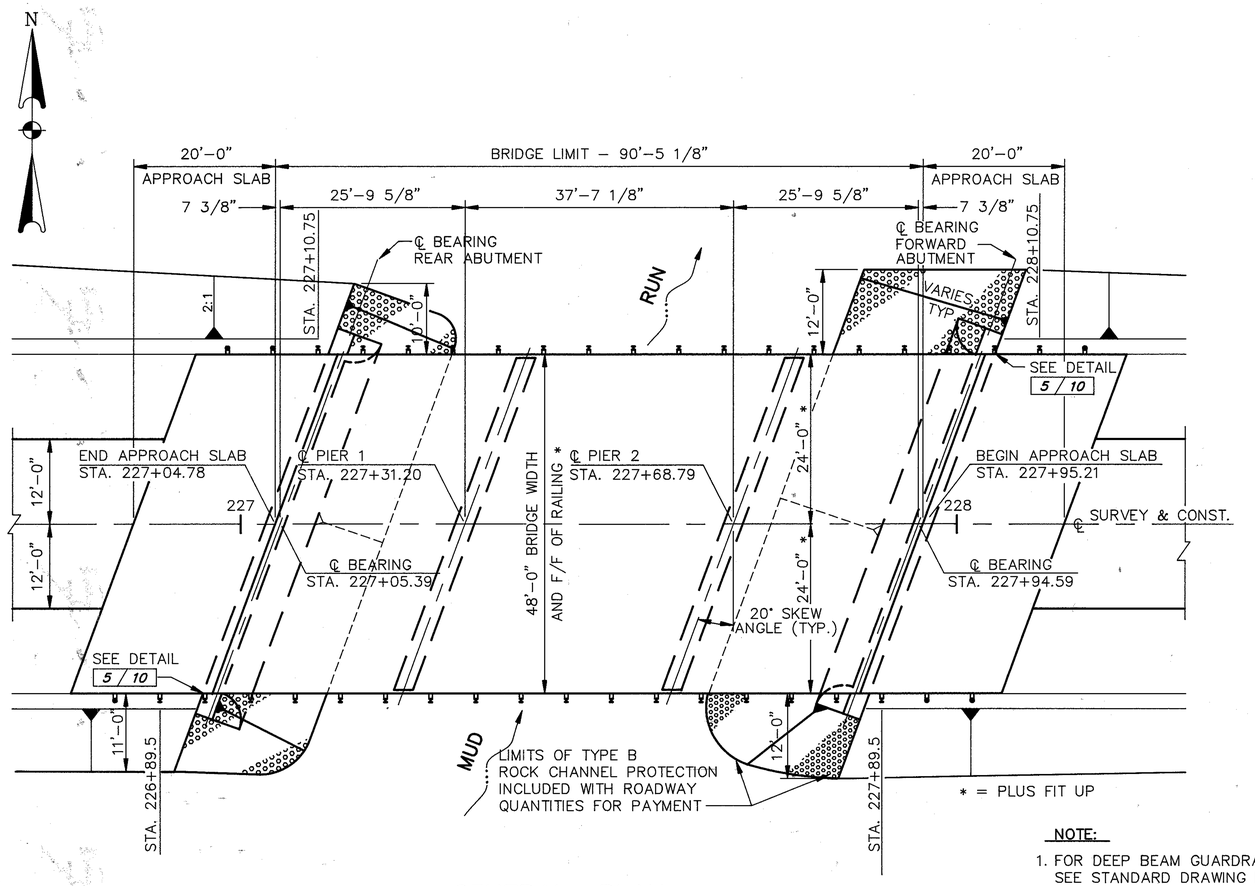

GENERAL PLAN

NOTE:

1. FOR DEEP BEAM GUARDRAIL DETAILS SEE STANDARD DRAWING DBR-2-73 DATED 4-10-73.
2. FOR ITEM 203 EXCAVATION NOT INCLUDING CONSTRUCTION SEE CHANNEL CROSS SECTIONS SHEET 12.
3. FOR BACKWALL MOUNTED POST DETAIL SEE SHEET 5/10

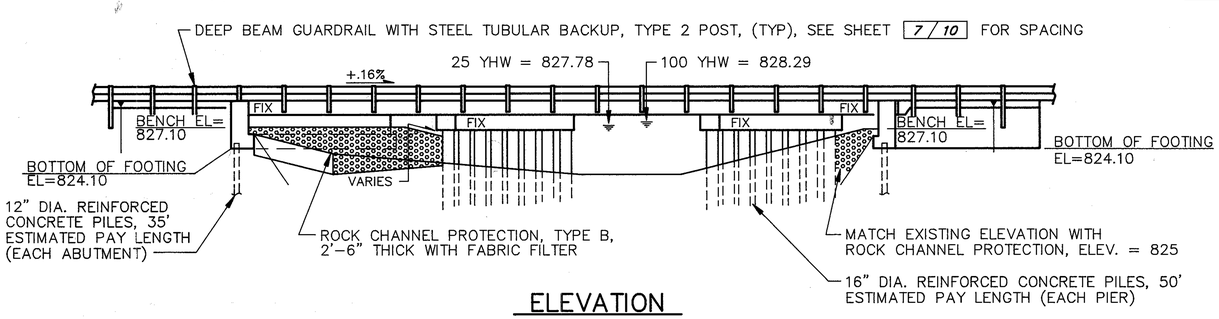

ELEVATION

ESTIMATED QUANTITIES

ITEM	ITEM EXTENT.	TOTAL QUANTITY	UNIT	DESCRIPTION	ABUTMENT	PIERS	SUPER-STRUCTURE	GENERAL
202	11002	LUMP		STRUCTURE REMOVED, OVER 20 FOOT SPAN				LUMP
403	20000	27	CU.YD.	ASPHALT CONCRETE, AC-20			27	
404	20000	18	CU.YD.	ASPHALT CONCRETE, AC-20			18	
503	21101	82	CU.YD.	UNCLASSIFIED EXCAVATION, AS PER PLAN	82			
505	11100	LUMP		PILE DRIVING EQUIPMENT MOBILIZATION				LUMP
507	21100	560	LIN.FT.	12" CAST-IN-PLACE REINFORCED	560			
				CONCRETE PILES				
507	45000	800	LIN.FT.	16" CAST-IN-PLACE REINFORCED		800		
				CONCRETE PILES				
509	15820	12,249	POUND	EPOXY COATED REINFORCING STEEL, GRADE 60	6742	4801	706	
511	34002	7	CU.YD.	CLASS S CONCRETE, HIGH EARLY STRENGTH			7	
511	42500	36	CU.YD.	CLASS C CONCRETE, PIER CAP		36		
511	43500	56	CU.YD.	CLASS C CONCRETE, ABUTMENT INCLUDING	56			
				FOOTING				
512	55800	504	SQ.YD.	TYPE D WATERPROOFING			504	
SPECIAL	51267500	50	SQ.YD.	SEALING OF CONCRETE SURFACES, (SEE PROPOSAL NOTE)		11	39	
SPECIAL	51267502	47	SQ.YD.	SEALING OF CONCRETE SURFACES (EPOXY),	47			
				(SEE PROPOSAL NOTE)				
515	53500	24	EACH	PRESTRESSED CONCRETE BOX BEAM			24	
				(16'-30' LENGTH)B17-48(SEE PROPOSAL NOTE)				
515	53700	12	EACH	PRESTRESSED CONCRETE BOX BEAM			12	
				(30'-40' LENGTH)B17-48(SEE PROPOSAL NOTE)				
516	13600	234	SQ.FT.	1" PREFORMED EXPANSION JOINT FILLER	234			
516	31011	102	LIN.FT.	2" DEEP JOINT SEALER, AS PER PLAN	102			
SPECIAL	51631200	102	LIN.FT.	SAWING & SEALING BITUMINOUS			102	
				CONCRETE JOINTS				
516	41100	72	EACH	1/8" PREFORMED BEARING PAD, 711.21	24	48		
516	43100	144	EACH	ELASTOMERIC BEARING WITH INTERNAL	48	96		
				LAMINATES ONLY (NEOPRENE)(8"x8"x1")				
				(SEE PROPOSAL NOTE)				
517	72300	200	LIN.FT.	RAILING (DEEP BEAM RAIL WITH STEEL			200	
				TUBULAR BACKUP AND TYPE 2 STEEL				
				POSTS AND ANCHOR BOLTS)(SEE PROPOSAL				
				NOTE)				
518	21200	28	CU.YD.	POROUS BACKFILL WITH FILTER FABRIC	28			
SPECIAL	51822300	181	LIN.FT.	STEEL DRIP STRIP			181	
518	40001	120	LIN.FT.	6" PERFORATED CORRUGATED PLASTIC PIPE,	120			
				AS PER PLAN				
518	40011	32	LIN.FT.	6" NON-PERFORATED CORRUGATED PLASTIC	32			
				PIPE, INCLUDING SPECIALS, AS PER PLAN				

MICHAEL BENZA & ASSOCIATES, INC. 2/10
CONSULTING ENGINEERS
BRECKSVILLE, OHIO

GENERAL PLAN
BRIDGE NO. TRU-88-0431
OVER MUD RUN

DESIGNED	DRAWN	TRACED	CHECKED	REVIEWED	DATE	REVISED
E.A.B.	T.L.W.		T.P.B.	J.N.S.	10/93	1/94

GENERAL NOTES

REFERENCE DRAWINGS

REFERENCE SHALL BE MADE TO STANDARD DRAWINGS

PSBD–1–81 REVISED 6–20–89
AS 1–81 DATED 11–27–81
DBR 2–73 DATED 4–10–73

AND SUPPLEMENTAL SPECIFICATIONS:

944 DATED 3–18–92

DESIGN SPECIFICATIONS

THIS STRUCTURE CONFORMS TO "STANDARD SPECIFICATIONS FOR HIGHWAY BRIDGES" ADOPTED BY THE AMERICAN ASSOCIATION OF STATE HIGHWAY AND TRANSPORTATION OFFICIALS, 1992, INCLUDING THE 1993 INTERMIN SPECIFIC–ATIONS AND THE OHIO "SUPLEMENT" TO THESE SPECIFICATIONS.

DESIGN DATA:

CONCRETE CLASS C – COMPRESSIVE STRENGTH 4000 P.S.I.

REINFORCING STEEL – ASTM A615, A616 OR A617
GRADE 60, MINIMUM YIELD STRENGTH 60,000 P.S.I.

MILD REINFORCING STEEL FOR THE CONCRETE PRESTRESSED BEAMS MAY BE EITHER GRADE 40, MINIMUM YIELD STRENGTH 40,000 P.S.I. OR GRADE 60, MINIMUM YIELD STRENGTH 60,000 P.S.I.

CONCRETE FOR PRESTRESSED BEAMS
UNIT STRESS – 2200 P.S.I. COMPRESSION
444 P.S.I. TENSION

PRESTRESSING STRANDS ARE TO BE 1/2" DIAMETER, SEVEN WIRE, UNCOATED STRESS RELIEVED STRANDS.
THE DESIGN DATA IS AS FOLLOWS:
Ab = .153 SQ. IN.
F's = 270,000 PSI
INITIAL STRESS=0.7 F's = 189,000 PSI
STRESS AT RELEASE=.63 F's = 170,00 PSI

BEAM CONCRETE STRENGTH:
MINIMUM AT 28 DAYS F'c = 5500 PSI
MINIMUM AT TIME OF INITIAL PRESTRESS F'ci = 4000 PSI

DECK PROTECTION METHOD – TYPE D WATERPROOFING, ASPHALT CONCRETE OVERLAY, SEALING OF CONCRETE SURFACES, STEEL DRIP STRIPS, AND EPOXY COATED REINFORCING STEEL.

ITEM SPECIAL, SEALING OF CONCRETE SURFACES

A CONCRETE SEALER SHALL BE APPLIED TO THE CONCRETE SURFACES SHOWN ON SHEETS 4/10 AND 7/10. SEE THE PROPOSAL FOR SURFACE PREPARATION REQUIREMENTS, APPLICATION RATE, MATERIAL REQUIREMENTS AND APPLICATION PROCEDURES.

ELASTOMERIC BEARINGS

ELASTOMERIC BEARINGS SHALL COMPLY WITH 516 AND ARTICLES 18.2.5 THROUGH 18.2.8 OF SECTION 18, BEARING DEVICES, DIVISION II, CONSTRUCTION, OF THE AASHTO STANDARD SPECIFICATIONS FOR HIGHWAY BRIDGES. BEARINGS SHALL BE GRADE 3, 50–DUROMETER ELASTOMER, AND SHALL BE SUBJECTED TO THE LOAD TESTING REQUIREMENTS CORRESPONDING TO DESIGN METHOD A. TESTING SHALL BE INCLUDED IN THE PRICE BID FOR THE BEARINGS.

PREFORMED BEARING PADS, 711.21

PREFORMED BEARING PADS, 711.21, 1/8–INCH THICK AND WITH THE SAME PLAN DIMENSION AS THE ELASTOMERIC BEARINGS, SHALL BE PROVIDED AS SHIMS TO ACCOMMODATE ANY NONPARALLELISM BETWEEN BEAM BOTTOMS AND BRIDGE SEATS. ANY REMAINING SHIMS SHALL BECOME THE PROPERTY OF THE STATE.

REMOVAL OF EXISTING STRUCTURE

WHEN NO LONGER NEEDED TO MAINTAIN TRAFFIC THE EXISTING STRUCTURE SHALL BE REMOVED. ABUTMENTS SHALL BE REMOVED TO ELEV. 824. PIERS SHALL BE REMOVED TO ELEV. 820.

ITEM 503, UNCLASSIFIED EXCAVATION, AS PER PLAN

UNCLASSIFIED EXCAVATION SHALL BE IN ACCORDANCE WITH 503 EXCEPT THAT THE BACKFILL MATERIAL BEHIND THE ABUTMENTS SHALL BE 203 GRANULAR MATERIAL PLACED IN LIFTS NOT TO EXCEED A THICKNESS OF SIX (6) INCHES.

PILE DESIGN LOADS

THE DESIGN LOAD FOR THE ABUTMENT PILES IS 32 TONS PER PILE AND THE DESIGN LOAD FOR THE PIER PILES IS 53 TONS PER PILE.

UTILITIES

ANY EXISTING PRIVATELY OWNED UTILITY FACILITIES ENCOUNTERED AT THE SITE OF THE WORK WHICH WILL INTERFERE WITH PORTIONS OF THE FINISHED ROADWAYS OR STRUCTURES SHALL BE REMOVED OR RELOCATED BY THE OWNER.

THE CONTRACTOR AND OWNERS ALL REQUESTED TO COOPERATE BY ARRANGING THEIR WORK IN SUCH A MANNER THAT INCONVENIENCE TO EITHER WOULD BE HELD TO A MINIMUM.

THE CONTRACTOR SHALL BE RESPONSIBLE TO VERIFY THE LOCATION OF ALL UTILITIES WHICH MAY BE AFFECTED BY THIS PROJECT TO AVOID DAMAGE TO THE UTILITIES.

PILE DRIVING CONSTRAINTS

PRIOR TO DRIVING PILES, THE SPILL THROUGH SLOPES AND THE BRIDGE APPROACH EMBANKMENT BEHIND THE ABUTMENTS SHALL BE CONSTRUCTED UP TO THE LEVEL OF THE SUBGRADE ELEVATION FOR A MINIMUM DISTANCE OF 200 FEET BEHIND EACH ABUTMENT. THE EXCAVATION FOR THE ABUTMENT FOOTINGS AND THE INSTALLATION OF THE ABUTMENT AND PIER PILES, FOR PIERS 1–16, SHALL NOT BEGIN UNTIL AFTER THE ABOVE REQUIRED EMBANKMENT HAS BEEN CONSTRUCTED.

ITEM 518, 6" PERFORATED CORRUGATED PLASTIC PIPE, AS PER PLAN

CORRUGATED PIPE USED IN ABUTMENT DRAINAGE SHALL BE 6 INCH DIAMETER, PLASTIC CORRUGATED AS PER SUPPLEMENTAL SPECIFICATION 944, AASHTO M294, TYPE SP.

ITEM 518, 6" NON–PERFORATED CORRUGATED PLASTIC PIPE, INCLUDING SPECIALS, AS PER PLAN

CORRUGATED PIPE USED IN ABUTMENT DRAINAGE SHALL BE 6 INCH DIAMETER, PLASTIC CORRUGATED AS PER SUPPLEMENTAL SPECIFICATION 944, AASHTO M294, TYPE S. THIS ITEM SHALL INCLUDE ALL ELBOWS, TEES AND END CAPS REQUIRED TO COMPLETE THE ABUTMENT DRAINAGE SYSTEM.

FHWA REGION	STATE	PROJECT	
5	OHIO		

TRUMBULL COUNTY
TRU-88-4.31

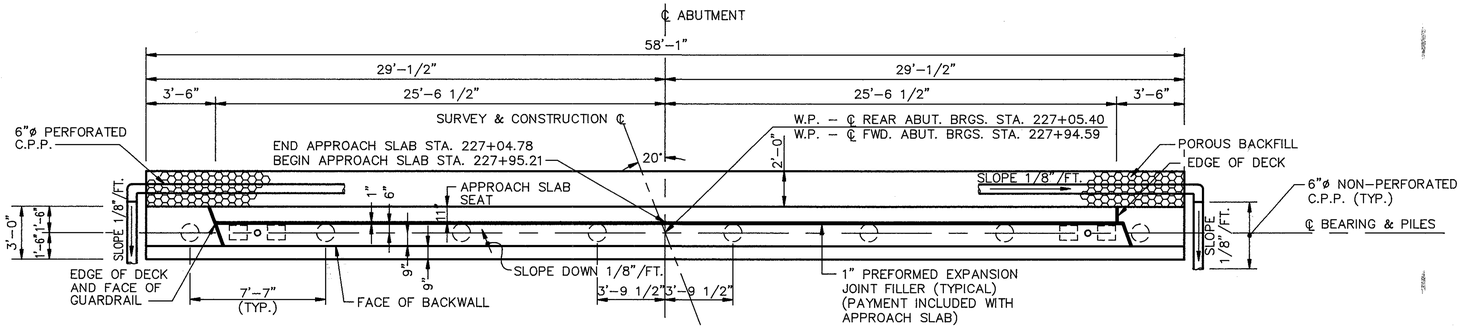

PLAN

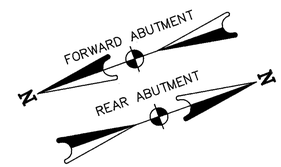

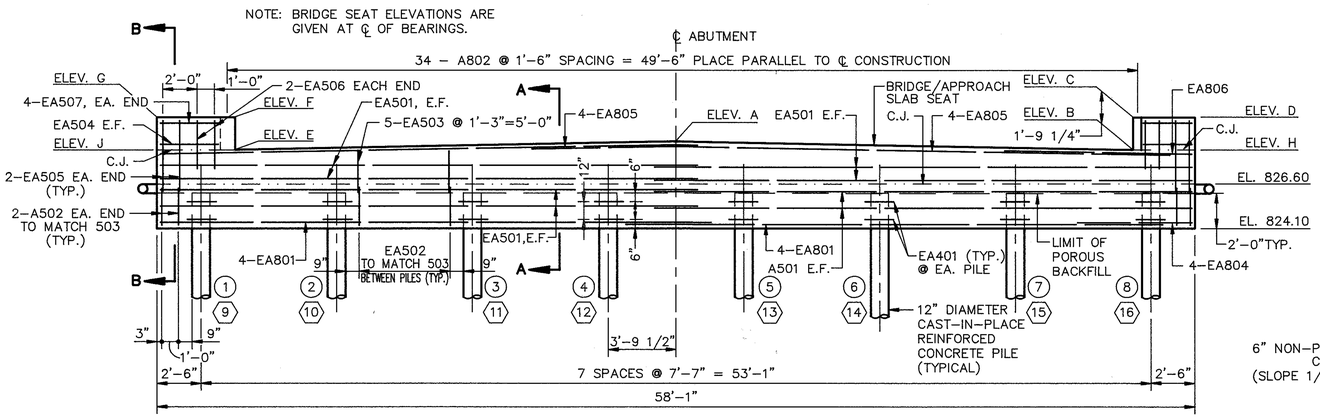

ELEVATION

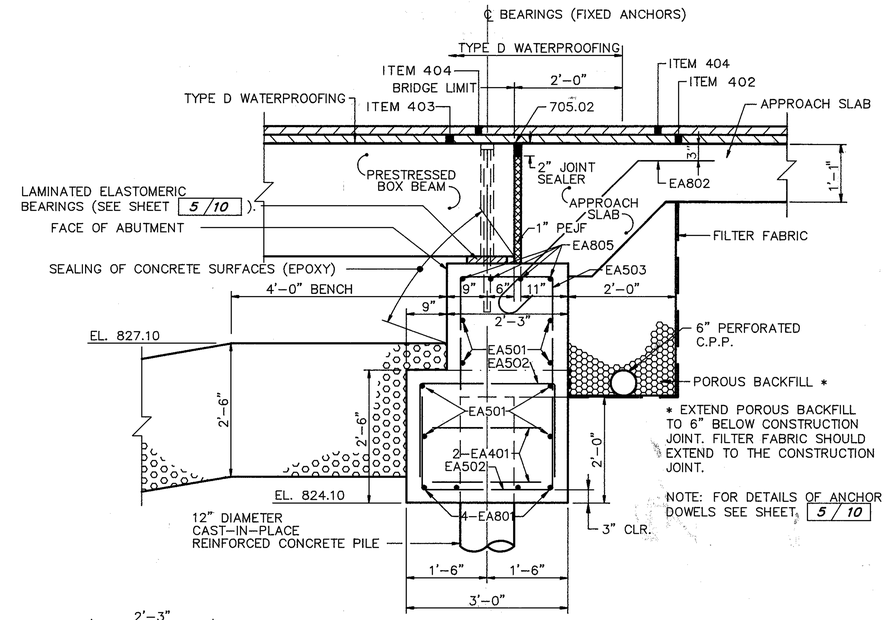

SECTION A–A

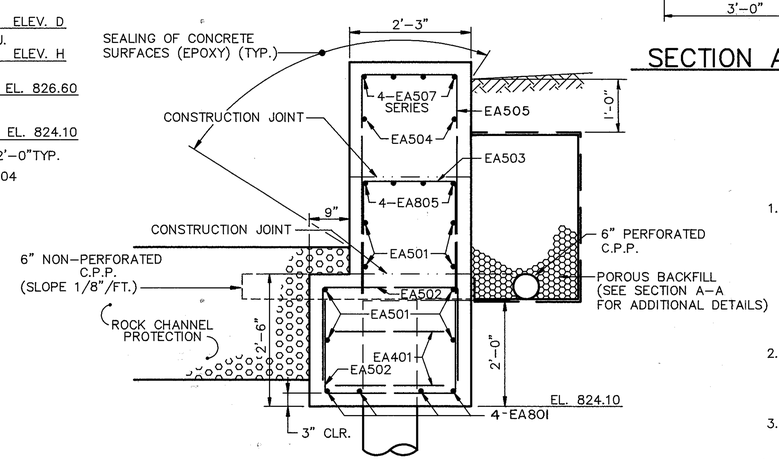

SECTION B–B

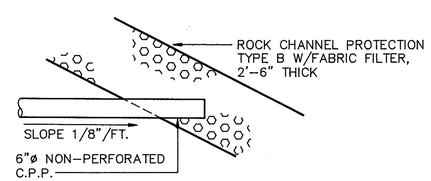

6"ø CPP TERMINATION DETAIL

NOTES

1. POROUS BACKFILL: 2'-0" THICK SHALL EXTEND UP TO THE PLANE OF THE SUBGRADE, TO 1'-0" BELOW PROPOSED GROUND SURFACE AND LATERALLY TO THE ENDS OF THE WINGWALLS. FILTER FABRIC CONFORMING TO 712.09, TYPE "A" SHALL BE PLACED BETWEEN THE POROUS BACKFILL & SOIL BACKFILL. FILTER FABRIC SHALL BE INCLUDED WITH POROUS BACKFILL FOR PAYMENT.
2. BRIDGE SEAT REINFORCING: REINFORCING STEEL IN THE BRIDGE SEAT SHALL BE ACCURATELY PLACED TO AVOID INTERFERENCE WITH THE DRILLING OF THE ANCHOR BAR HOLES.
3. CONCRETE ABOVE THE HORIZONTAL CONSTRUCTION JOINT AT BRIDGE SEAT LEVEL SHALL NOT BE PLACED UNTIL AFTER BEAMS ARE ERECTED.
4. FOR REINFORCEMENT SCHEDULE SEE SHEET 9/10

LEGEND

N.F. = NEAR FACE
F.F. = FAR FACE
E.F. = EACH FACE
EA. = EACH
P.E.J.F. = PREFORMED EXPANSION JOINT FILLER
W.P. = WORK POINT
TYP. = TYPICAL
C.P.P. = CORREGATED PLASTIC PIPE

(1) PILE NUMBER REAR ABUTMENT
(9) PILE NUMBER FORWARD ABUTMENT

MINIMUM LAP BAR LENGTHS

NO. 4 BAR 1'-3"
NO. 5 BAR 1'-7"
NO. 8 BAR 4'-9"

ELEVATIONS AND DIMENSIONS

LOCATION	A	B	C	D	E	F	G	H	J
R. ABUTMENT	829.01	828.65	830.42	830.39	828.62	830.39	830.36	828.60	828.57
F. ABUTMENT	829.15	828.76	830.53	830.50	828.79	830.56	830.53	828.71	828.74

MICHAEL BENZA & ASSOCIATES, INC. 4/10
CONSULTING ENGINEERS
BRECKSVILLE, OHIO

ABUTMENT DETAILS
BRIDGE NO. TRU-88-0431
OVER MUD RUN

DESIGNED	DRAWN	TRACED	CHECKED	REVIEWED	DATE	REVISED
E.A.B.	T.L.W.		T.P.B.	J.N.S.	10/93	1/94

FHWA REGION	STATE	PROJECT	
5	OHIO		

TRUMBULL COUNTY
TRU-88-4.31

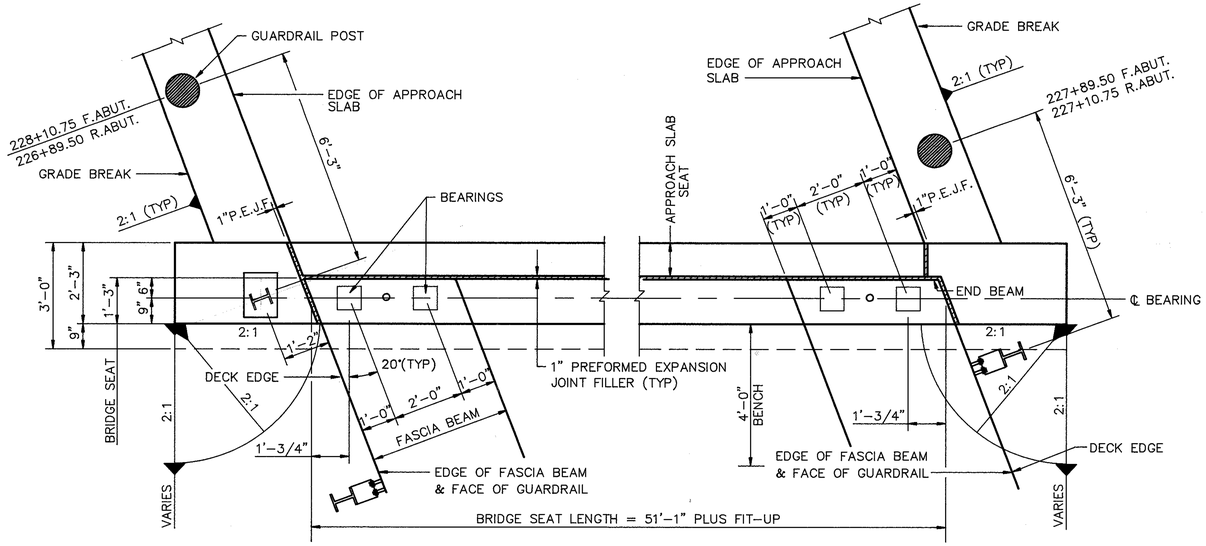

PART PLAN OF INTEGRAL ABUTMENT

FOWARD ABUTMENT AS SHOWN, REAR ABUTMENT – OPP. HAND

LEGEND

P.E.J.F. = PREFORMED EXPANSION JOINT FILLER

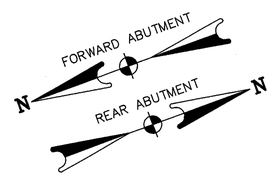

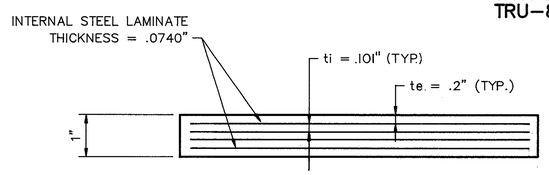

LAMINATED ELASTOMERIC FIXED BEARING 50 DUROMETER

FOR LOCATION SEE SHEET 4/10 AND 6/10

FIXED BEARINGS B21-48	
SIZE	L=8" W=8"
DEAD LOAD REACTION	13.6 K
LIVE LOAD REACTION	17.5 K
MAXIMUM DESIGN LOAD	31.1 K

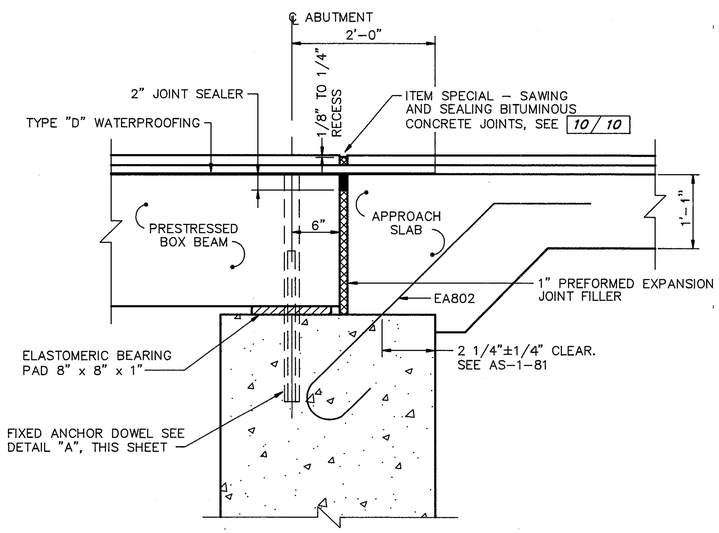

BEAM CONNECTION OVER ABUTMENT

NOTE: FOR DETAIL OF BEAM CONNECTION OVER PIER SEE SHEET 6/10

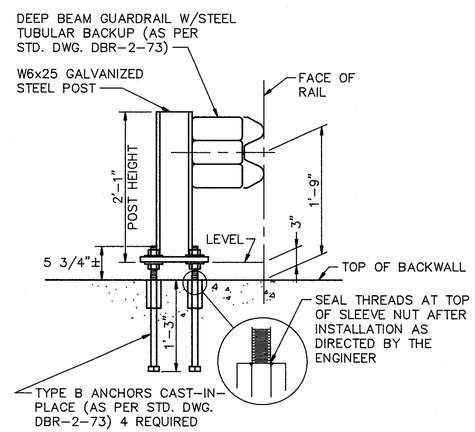

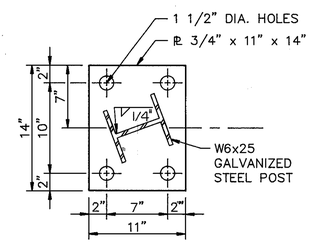

NOTE: STEEL PLATES, ANCHORS, NUTS & WASHERS SHALL BE GALVANIZED AS PER 711.02. COST OF THE BACKWALL MOUNTED POSTS, BASE PLATES, CONNECTIONS AND ANCHORAGE SHALL BE INCLUDED WITH ITEM 517, RAILING FOR PAYMENT.

BACKWALL MOUNTED RAILPOST

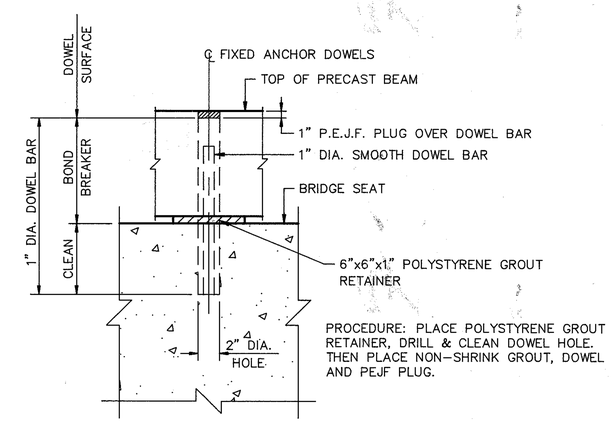

DETAIL "A"

FIXED ANCHOR DOWEL

MICHAEL BENZA & ASSOCIATES, INC. 5/10
CONSULTING ENGINEERS
BRECKSVILLE, OHIO

ABUTMENT & EXPANSION JOINT DETAILS
BRIDGE NO. TRU-88-0431
OVER MUD RUN

DESIGNED	DRAWN	TRACED	CHECKED	REVIEWED	DATE	REVISED
E.A.B.	T.L.W.		T.P.B.	J.N.S.	10/93	1/94

FHWA REGION	STATE	PROJECT	
5	OHIO		

TRUMBULL COUNTY
TRU–88–4.31

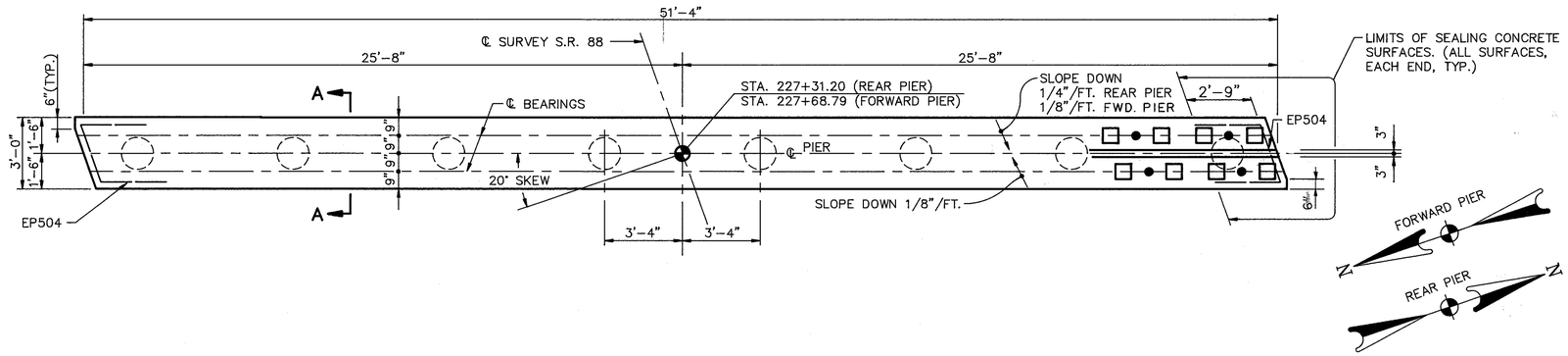

PLAN

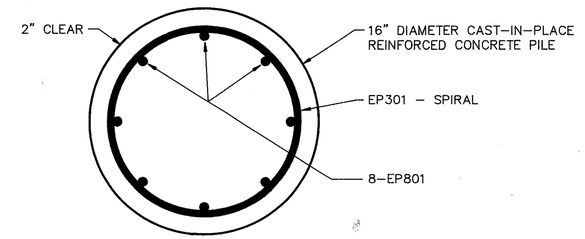

CONCRETE PILE DETAIL

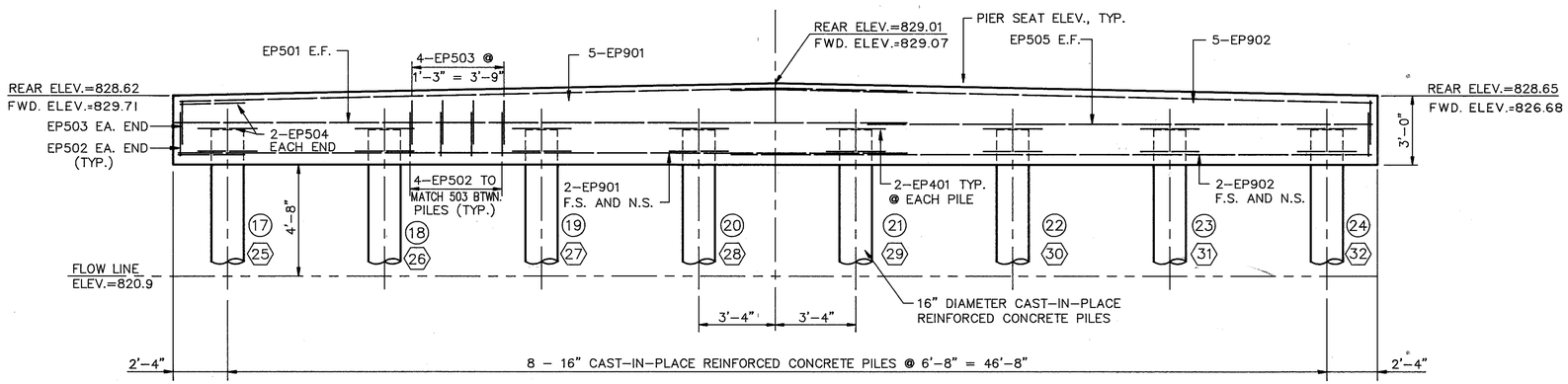

ELEVATION

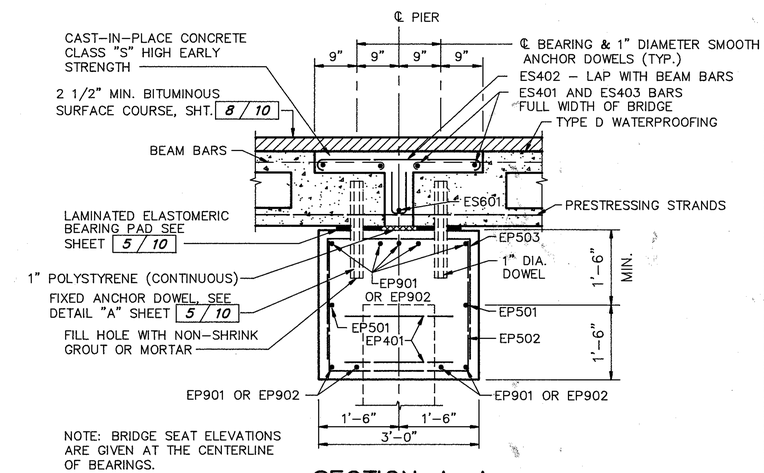

SECTION A–A
BEAM CONNECTION OVER PIER

LEGEND

N.F. = NEAR FACE
F.F. = FAR FACE
E.F. = EACH FACE
N.S. = NEAR SIDE
F.S. = FAR SIDE
P.E.J.F. = PREFORMED EXPANSION JOINT FILLER

(19) PILE NUMBER REAR PIER PILES
⟨27⟩ PILE NUMBER FORWARD PIER PILES

NOTES:

1. BRIDGE SEAT REINFORCING: REINFORCING STEEL IN THE VICINITY OF THE BRIDGE SEAT SHALL BE ACCURATELY PLACED TO AVOID INTERFERENCE WITH THE DRILLING OF ANCHOR BAR HOLES.
2. FOR REINFORCEMENT SCHEDULE, SEE SHEET 9 / 10.

MINIMUM LAP BAR LENGTHS

NO. 4 BAR 1'–3"
NO. 5 BAR 1'–7"
NO. 6 BAR 2'–7"
NO. 9 BAR 7'–3"

MICHAEL BENZA & ASSOCIATES, INC. 6 / 10
CONSULTING ENGINEERS
BRECKSVILLE, OHIO

PIER DETAILS

BRIDGE NO. TRU–88–0431
OVER MUD RUN

DESIGNED	DRAWN	TRACED	CHECKED	REVIEWED	DATE	REVISED
E.A.B.	R.L.R.		T.P.B.	J.N.S.	10/93	1/94

FHWA REGION	STATE	PROJECT	
5	OHIO		

TRUMBULL COUNTY
TRU-88-4.31

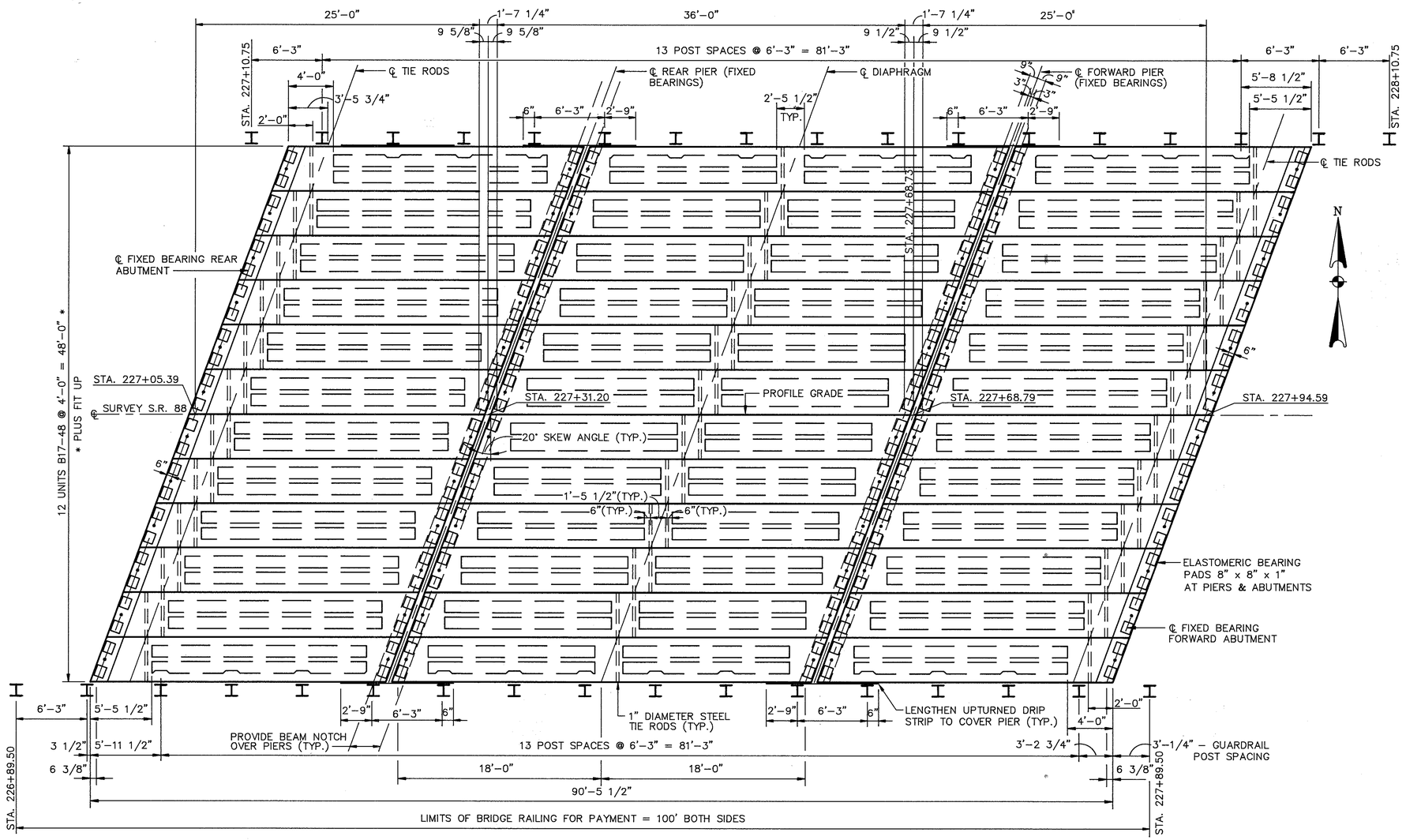

SUPERSTRUCTURE PLAN

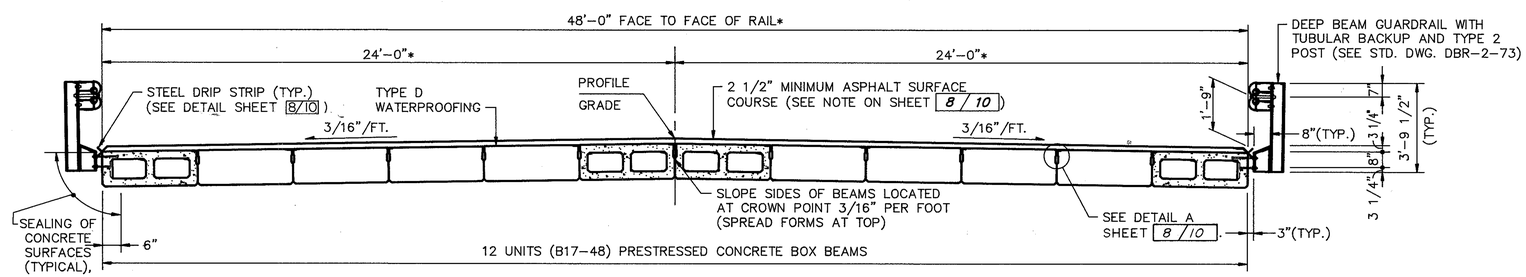

TYPICAL TRANSVERSE DECK SECTION

MICHAEL BENZA & ASSOCIATES, INC. 7/10
CONSULTING ENGINEERS
BRECKSVILLE, OHIO

SUPERSTRUCTURE PLAN AND DETAILS

BRIDGE NO. TRU-88-0431
OVER MUD RUN

DESIGNED	DRAWN	TRACED	CHECKED	REVIEWED	DATE	REVISED
E.A.B.	T.L.W.		T.P.B.	J.N.S.	10/93	1/94

FHWA REGION	STATE	PROJECT	
5	OHIO		

TRUMBULL COUNTY
TRU–88–4.31

20/24

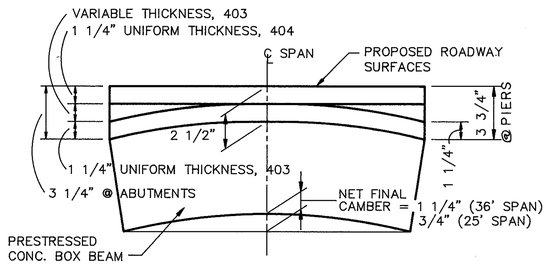

ASPHALT THICKNESS DIAGRAM

CAMBER NOTES

CALCULATED CAMBER AT TIME OF PAVING INCLUDING ALLOWANCE FOR CAMBER GROWTH DUE TO CREEP IS 1 1/4" (36' SPAN) AND 3/4" (25' SPAN). CALCULATED DEFLECTION DUE TO WEIGHT OF SURFACE COURSE AND RAILING IS NEGLIGIBLE.
NET FINAL CAMBER OF BEAMS IS 1 1/4". THIS IS 1 1/4" IN EXCESS OF THE AMOUNT REQUIRED TO PLACE THE TOP OF THE BEAM PARALLEL TO PROFILE GRADE. THIS EXCESS AMOUNT SHALL BE COMPENSATED FOR BY THICKENING THE 403 LEVELING COURSE FROM 1 1/4" AT CENTER OF SPANS TO 2 1/2" AT ENDS OF SPANS.

ASPHALT CONCRETE SURFACE COURSE: SHALL CONSIST OF A VARIABLE THICKNESS OF 403 AND 1 1/4" THICKNESS OF 404. THE 403 SHALL BE PLACED IN TWO OPERATIONS. THE FIRST COURSE SHALL BE OF 1 1/4" UNIFORM THICKNESS. THE SECOND COURSE SHALL BE FEATHERED TO PLACE THE SURFACE PARALLEL TO AND 1 1/4" BELOW FINAL PAVEMENT SURFACE ELEVATION.

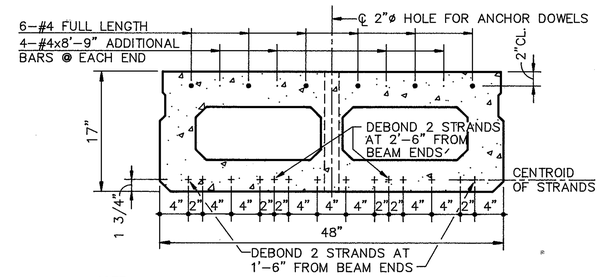

NOTE: SEE STD. DWG. PSBD–1–81 FOR DIM. AND SIZE & SPACING OF TRANVERSE REINFORCING NOT SHOWN.

TYPICAL BEAM SECTION (B17–48) 36' SPAN

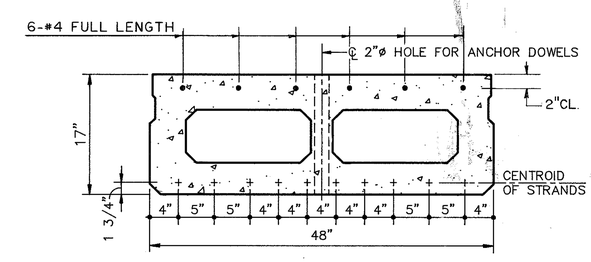

NOTE: SEE STD. DWG. PSBD–1–81 FOR DIM. AND SIZE & SPACING OF TRANVERSE REINFORCING NOT SHOWN.

TYPICAL BEAM SECTION (B17–48) 25' SPAN

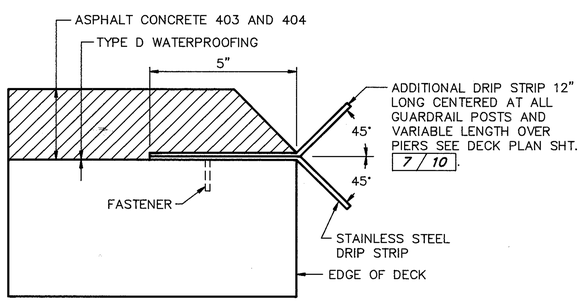

DRIP STRIP DETAIL

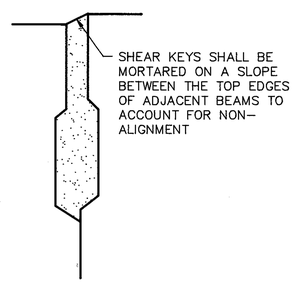

DETAIL A

STAINLESS STEEL DRIP STRIP: PRIOR TO APPLYING WATERPROOFING, A BENT DRIP STRIP SHALL BE INSTALLED ALONG THE EDGES OF THE DECK. AN ADDITIONAL 1'–0" LONG DRIP STRIP SHALL ALSO BE INSTALLED CENTERED ON EACH POST.

THE STRIPS SHALL BE FASTENED AT 1'–6" C/C MAXIMUM WITH 1 1/4" x 5/32" x 1/4" FLAT HEAD DRIVE PIN AND WASHER (LENGTH x SHANK DIAMETER x HEAD DIAMETER) OR NO. 10 GALVANIZED SCREWS AND EXPANSION ANCHORS, SUBJECT TO APPROVAL OF THE ENGINEER. THE STRIPS SHALL BE PLACED THE FULL LENGTH OF THE DECK, ENDING AT THE ABUTMENTS. THE STRIPS SHALL BE 8" x 0.105". WHERE SPLICES ARE REQUIRED THE INDIVIDUAL PIECES SHALL BE BUTTED TOGETHER. STAINLESS STEEL SHALL BE 22 GAUGE ASTM A167, TYPE 304, MILL FINISH.

THE FINAL PAY QUANTITY SHALL BE THE ACTUAL OVERALL LENGTH OF THE DRIP STRIP. ADDITIONAL STRIPS AT POSTS SHALL NOT BE MEASURED FOR PAYMENT.

PAYMENT SHALL BE AT THE CONTRACT PRICE BID FOR ITEM SPECIAL, LINEAR FEET, STEEL DRIP STRIP, WHICH SHALL INCLUDE ALL MATERIALS, LABOR, TOOLS, AND INCIDENTALS NECESSARY TO COMPLETE THE ITEM.

MICHAEL BENZA & ASSOCIATES, INC. 8/10
CONSULTING ENGINEERS
BRECKSVILLE, OHIO

SUPERSTRUCTURE SECTION AND DETAILS
BRIDGE NO. TRU–88–0431
OVER MUD RUN

DESIGNED	DRAWN	TRACED	CHECKED	REVIEWED	DATE	REVISED
E.A.B.	R.L.R./T.L.W.		T.P.B.	J.N.S.	10/93	1/94

CALCULATED BY E.A.B. 9/10/93
CHECKED BY T.P.B. 10/7/93

FHWA REGION	STATE	PROJECT	
5	OHIO		

TRUMBULL COUNTY
TRU-88-4.31

REINFORCING STEEL FOR SUBSTRUCTURE

MARK	NUMBER	LENGTH	WEIGHT	TYPE	A	B	C	D	E	F
ABUTMENTS										
EA401	32	8'-1"	173	1	2'-0"	1'-8'	2'-0"	1'-8"	6"	6"
EA501	32	30'-0"	1002	STR						
EA502	156	5'-9"	936	2	1'-8"	2'-8"	1'-8"			
EA503	78	7'-4"	597	2	2'-10"	1'-11"	2'-10"			
EA504	4 SERIES OF 2 = 8	VAR.2'-7" TO 3'-1" INCR. 6"	24	STR						
EA505	8	11'-4"	95	2	4'-10"	1'-11"	4'-10"			
EA506	8	5'-11"	49	2	2'-2"	1'-10"	2'-2"			
EA507	4 SERIES OF 4 = 16	VAR.2'-7" TO 3'-1" INCR. 2"	47	STR						
EA801	16	30'-0"	1282	STR						
EA802	68	5'-3"	953	3	2'-11"	1'-5"				
EA804	8	7'-1"	151	STR						
EA805	16	30'-0"	1282	STR						
EA806	8	7'-1"	151	STR						
TOTAL = 6742										

REINFORCING STEEL FOR PIERS

MARK	NUMBER	LENGTH	WEIGHT	TYPE	A	B	C	D	E	F
PIERS (FORWARD & REAR)										
EP301 *	16	150'-9"		5	12"	1'-0"	150'-9"	48		
EP401	32	8'-3"	176	1	2'-0"	1'-8"		1'-8"	8"	8"
EP501	4	30'-0"	125	STR						
EP502	60	7'-5"	464	2	2'-6"	2'-8"	2'-6"			
EP503	60	6'-11"	433	2	2'-3"	2'-8"	2'-3"			
EP504	8	7'-7"	63	4	2'-6"	2'-10"	2'-6"			
EP505	4	20'-10"	87	STR						
EP801 *	128	49'-6"		STR	16917					
EP901	18	30'-0"	1836	STR						
EP902	18	26'-5"	1617	STR						
TOTAL = 4801										

REINFORCING STEEL FOR SUPERSTRUCTURE

MARK	NUMBER	LENGTH	WEIGHT	TYPE	A	B	C	D	E	F
DIAPHRAGM										
ES401	8	30'-0"	160	STR						
ES402	98	3'-10"	251	6	2'-10"					
ES403	8	22'-3"	119	STR						
ES601	6	19'-6"	176	STR						
TOTAL = 706										

*INCLUDED WITH ITEM 507 CAST-IN-PLACE REINFORCED CONCRETE PILES FOR PAYMENT.

BENDING DIAGRAM

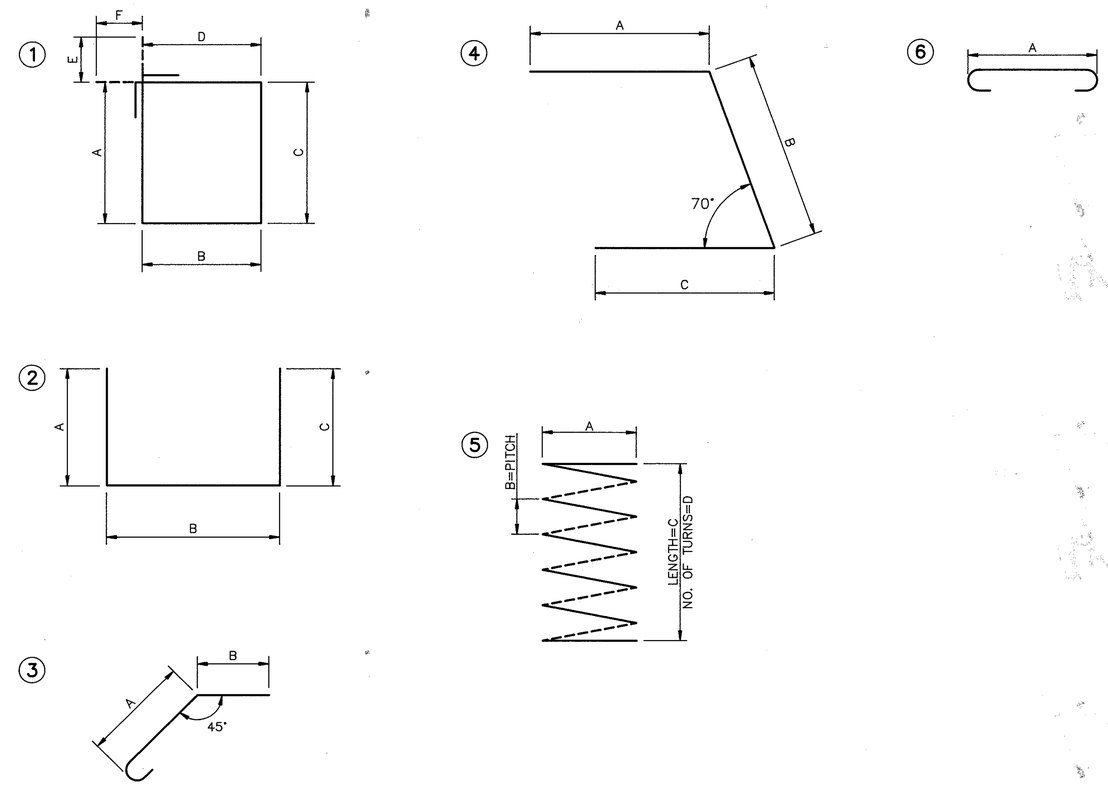

NOTES:

1. ALL REINFORCING SHALL BE EPOXY COATED.
2. ALL DIMENSIONS ARE OUT TO OUT OF BAR.
3. SPIRAL REINFORCING BARS: THE "LENGTH" SHOWN IN THE STEEL LIST FOR THE SPIRAL BARS IS THE LENGTH OF THE SPIRAL ALONG THE AXIS OF THE SPIRAL. ONE AND ONE-HALF CLOSED-COIL TURNS SHALL BE PROVIDED AT ENDS OF EACH SPIRAL UNIT. FOUR STEEL CHANNEL, TEE OR ANGLE SPACERS, WEIGHING APPROXIMATELY 0.80 LB. PER LINEAR FEET OF SPACER, SHALL BE PROVIDED FOR EACH SPIRAL UNIT. THEY SHALL BE EQUALLY SPACED ALONG THE PERIPHERY OF THE COILS. THE NUMBER OF POUNDS OF THESE SPACERS, BASED ON 3.20 LBS. PER LINEAR FOOT, WILL BE PAID FOR AS REINFORCING STEEL AND IS INCLUDED IN THE TABULATED QUANTITIES OF SPIRAL BARS.
4. REINFORCING STEEL:
   A. ALL BAR DIMENSIONS ARE GIVEN OUT TO OUT
   B. ALL BARS OF A SERIES SHALL VARY IN LENGTH BY A CONSTANT INCREMENT
   C. REQUIRED BAR LAP LENGTHS ARE SHOWN ON THE PLANS

MICHAEL BENZA & ASSOCIATES, INC. 9/10
CONSULTING ENGINEERS
BRECKSVILLE, OHIO

REINFORCEMENT SCHEDULE
BRIDGE NO. TRU-88-0431
OVER MUD RUN

DESIGNED	DRAWN	TRACED	CHECKED	REVIEWED	DATE	REVISED
E.A.B.	T.L.W.		T.P.B.	J.N.S.	10/93	1/94

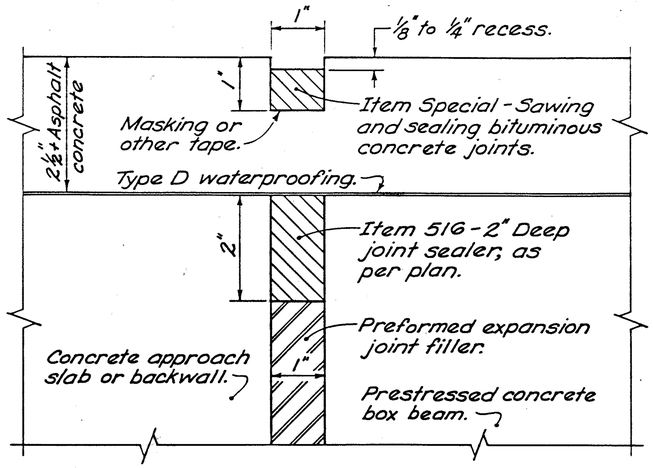

SEALING OF JOINTS AT ABUTMENTS

ITEM SPECIAL - SAWING AND SEALING BITUMINOUS CONCRETE JOINTS

1) Description:

This work shall consist of cutting and sealing transverse joints on the new bituminous concrete overlay of box beam bridges. Bituminous concrete joints shall be constructed directly over, and in line with, the existing underlying transverse abutment joint of the box beams.

2) Materials:

The joint sealant shall meet the requirements of ASTM Specification D3405, Joint sealants, Hot-poured, for Concrete and Aspalt Pavements. Acceptable alternate materials are:

Roof-Flex 176, polyurethane, as produced by the Carboline Company, 350 Hanley Industrial Court, St. Louis, Missouri 63144 (Roger Zubal, 614-877-3406); a silicone sealant meeting Federal Specifications TT-S-001543A Class A (one-part silicone sealants) and TT-S-00230C Class A (one-component sealants), such as those manufactured by General Electric, Silicone Products Division, 6155 Rockside Rd., Rockside Square I, Independence, Ohio 44131 (John Fromholtz, 216-447-1750) or Dow Corning, 3737 Park East, Beachwood, Ohio 44122 (Robert Ruppel, 216-464-2330); or Sof-Seal, a cold-applied, low-modulus, two-component polymeric compound horizontal sealant as manufactured by W. R. Meadows, Inc., P.O. Box 543, Elgin, Illinois 60121 (Robert Cameron, 312-683-4500). Sealant will be accepted on the basis of the manufacturer's certification that it conforms to the requirements of these specifications.

3) Construction Details:

A) General: The contractor shall conduct his operation so that the cutting, cleaning and sealing of transverse joints is a continuous operation that will be performed as soon as practical after the paving, but no later than four (4) days after placement of the asphalt concrete surface course. Traffic shall not be allowed to knead together or damage the joint cut prior to sealing.

B) Cutting of Transverse Joints: The contractor shall saw or rout transverse joints to the dimensions shown in the details on this sheet. The cut joints shall lie directly above each box beam abutment joint. The joint location shall be marked on the new asphalt surface with a chalk line, or by some other acceptable method, before cutting. Details of the method for locating and accurately marking the proposed cuts shall be subject to the approval of the Engineer prior to starting any surfacing or paving operations.

The blade or blades shall be of such size that the full width and depth of the cut can be made with one pass. Dry or wet cutting will be allowed. Joints shall extend the full width of the bridge.

C) Cleaning Joints: Dry sawed joints shall be thoroughly cleaned with a sufficient amount of compressed air to remove any dirt, dust, or deleterious matter. Wet sawed joints shall be washed clean of all cuttings by flushing with a jet of water and with other tools as necessary. After flushing, the joint shall be blown out with compressed air. When the surfaces are thoroughly clean and dry, and just prior to placing the joint sealer, compressed air having a pressure of at least 90 p.s.i. shall be used to blow out the joint and remove all traces of dust.

In the event freshly cut joints become contaminated before they are sealed, they shall be recleaned of all foreign material by high pressure water jet.

D) Sealing Joints: The joint shall be thoroughly dried before the sealant is placed. After cleaning and drying, a bond-breaker (tape) shall be applied to the bottom of the groove.

Hot-poured joint sealant material shall be heated in a kettle or melter constructed as a double boiler, with the space between the inner and outer shells filled with oil or other heat transfer medium. Positive temperature control and mechanical agitation shall be provided. Heating must be in strict accordance with the manufacturer's recommendation. Joint sealer material shall never be kept heated at the pouring temperature for more than four (4) hours and shall never be reheated. Sealer left in the applicator at the end of a day's work shall be removed and discarded.

Hot-poured sealant shall be applied immediately through a nozzle, which must project into the sawed joint, filling from the bottom up. The seal shall completely fill the joint in such a manner that, after cooling, the level of the sealer will not be higher than 1/8" below the pavement surface. Any depression in the cooled seal greater than 3/16" shall be brought up to the specified limit by further addition of hot-poured sealant. Care shall be taken in the sealing of the joints so that the final appearance will present a neat fine line.

The cold applied sealant materials (polyurethane, silicone, and polymeric compounds) shall be installed as per manufacturers' recommendations, or as directed by the Engineer. The sealant shall be installed when the ambient temperature is 40 degrees F or higher. Traffic shall not be allowed on the joint for one hour after application of the sealant.

4) Method of Measurement:

The quantity to be paid for under this item will be the number of linear feet of joints sawed and sealed as per the above requirements.

5) Basis of Payment:

The unit price per linear foot for Item Special - "Sawing and sealing bituminous concrete joints" shall include the cost of all labor, materials, and equipment necessary to complete the work, including the furnishing and placing of the joint sealer material.

ITEM 516 - 2" DEEP JOINT SEALER, AS PER PLAN

This item shall meet the material (para. 2) and sealing (para. 3D) specifications of Item Special - Sawing and sealing bituminous concrete joints.

FHWA REGION	STATE	PROJECT	
5	OHIO	STP-89	

24/24

1/1

TRUMBULL COUNTY
TRU-88-4.31

TRUMBULL COUNTY, FARMINGTON TOWNSHIP
ORIGINAL LOT 85 & 86

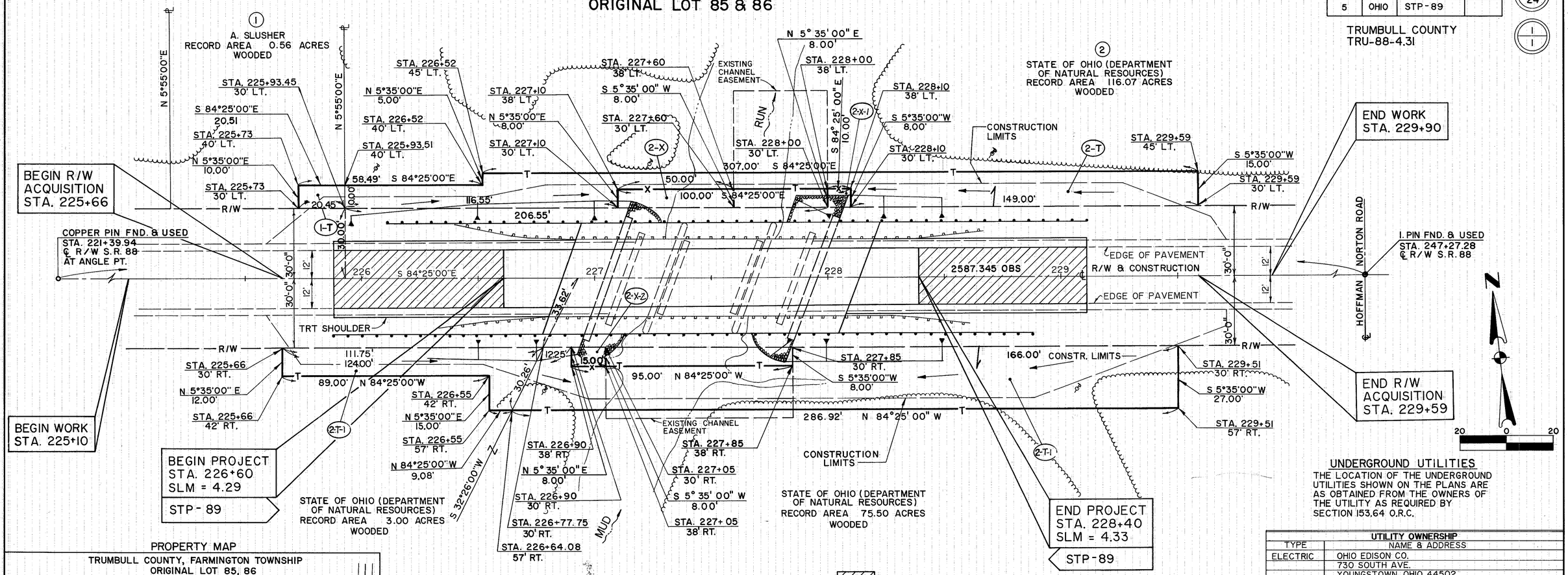

UNDERGROUND UTILITIES

THE LOCATION OF THE UNDERGROUND UTILITIES SHOWN ON THE PLANS ARE AS OBTAINED FROM THE OWNERS OF THE UTILITY AS REQUIRED BY SECTION 153.64 O.R.C.

UTILITY OWNERSHIP	
TYPE	NAME & ADDRESS
ELECTRIC	OHIO EDISON CO.
	730 SOUTH AVE.
	YOUNGSTOWN, OHIO 44502
TELEPHONE	UNITED TELEPHONE CO.
	P.O. BOX 311
	WARREN, OHIO 44482

PROPERTY MAP

TRUMBULL COUNTY, FARMINGTON TOWNSHIP
ORIGINAL LOT 85, 86

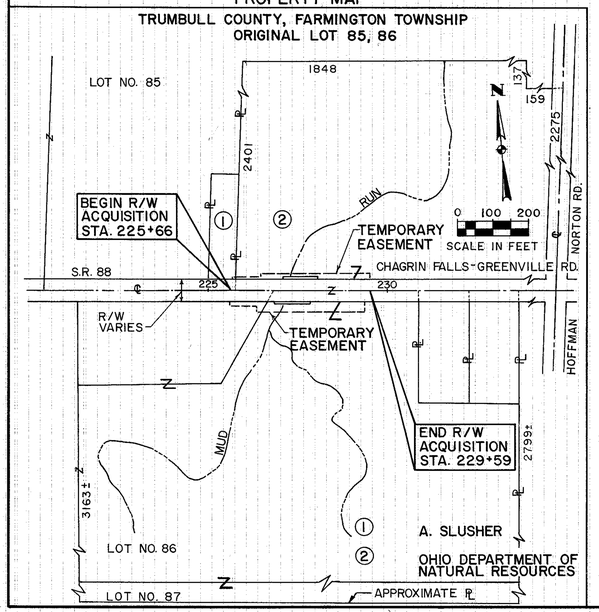

SUMMARY OF ADDITIONAL RIGHT OF WAY

NO. OF STRUCTURES 0. NO. OF PROPERTY OWNERS 2 NO. OF TOTAL TAKES 0. STATE JOB NO. 049610 PID NO. 10059

PARCEL NO.	OWNER	SHEET NO.	OWNERS RECORD VOL.	OWNERS RECORD PAGE	AUDITOR'S PARCEL NO.	RECORD AREA (AC)	TOTAL P.R.O.	GROSS TAKE	P.R.O. IN TAKE	NET TAKE	STRUCTURE	NET RESIDUE LEFT	NET RESIDUE RIGHT	TYPE FUND	REMARKS	AS ACQUIRED VOL.	AS ACQUIRED PAGE
1-T	A. SLUSHER	1	528	10	50-039700	0.561	0.052	0.005	0	0.005		0.509		STATE	TEMP. FOR GRADING		
2-X	STATE OF OHIO (DEPARTMENT OF NATURAL RESOURCES)	1	698	263	58-000001	116.07	1.47	0.009	0	0.009				STATE	CHANNEL EASEMENT		
2-X-1		1						0.002	0	0.002				STATE	CHANNEL EASEMENT		
2-T		1						0.101	0	0.101				STATE	TEMP. FOR GRADING		
2-X-2		1	699	493	58-00001	75.5	0.31	0.003	0	0.003				STATE	CHANNEL EASEMENT		
2-T-1		1	725	348	58-00001	3.00	0.375	0.191	0	0.191				STATE	TEMP. FOR GRADING		
	TOTAL					195.57	2.155					114.60	77.815				

REV.	DATE	DESCRIPTION

DATE OF COMPLETION:

TRU-88-4.31

RIGHT OF WAY PLAN

STATE OF OHIO
DEPARTMENT OF TRANSPORTATION

TRU-88-4.31

FARMINGTON TOWNSHIP
TRUMBULL COUNTY
RIGHT - OF - WAY

STATE JOB NO. 049610

FHWA REGION	STATE	PROJECT	
5	OHIO	STP-89	

TRUMBULL COUNTY
TRU-88-4.31
PID 10059

23/24

0/1

CONVENTIONAL SIGNS

LIMITED ACCESS (ONLY)	LA
RIGHT-OF-WAY	R/W
LIMITED ACCESS & RIGHT-OF-WAY	LA & R/W
EXISTING RIGHT-OF-WAY	
PROPERTY LINE	ℙ
EXISTING FENCE (IN EXISTING FENCE)	X ℙ X
GENERAL POLE	
UTILITY POLES: POWER, TELEPHONE, LIGHT	
TREE, STUMP (TO BE REMOVED)	
COUNTY LINE	
TOWNSHIP LINE	
SECTION LINE	
CORPORATION LINE	
CENTER LINE	352 353
RAILROAD	OR
EXISTING FENCE	
PROPOSED FENCE	
EXISTING GUARDRAIL	
PROPOSED GUARDRAIL	
CONSTRUCTION LIMITS	
DETOUR	

INDEX OF SHEETS

TITLE SHEET	0
PROPERTY MAP, RIGHT-OF-WAY PLAN, SUMMARY OF ADDITIONAL RIGHT-OF-WAY	1

UNDERGROUND UTILITIES
2 WORKING DAYS
BEFORE YOU DIG
Call... 800-362-2764 (Toll Free)
OHIO UTILITIES PROTECTION SERVICE
NON-MEMBERS
MUST BE CALLED DIRECTLY

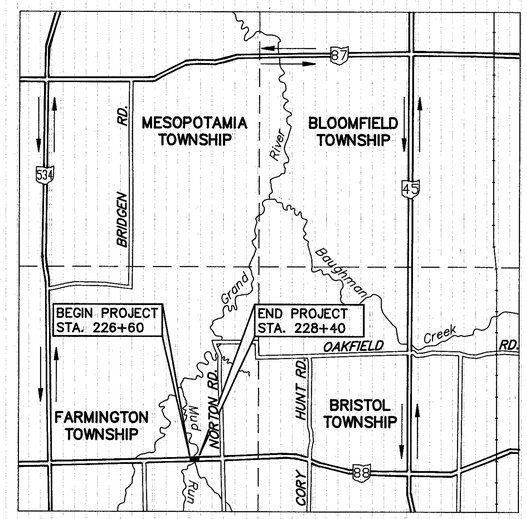

LOCATION & DETOUR MAP

2000 0 1000 2000 4000
(IN FEET)

Portion to be Improved
State & Federal Routes
Other Roads
Detour

SCALES IN FEET

PLAN ..... Horizontal 20 0 20

PROJECT DESCRIPTION:

IMPROVEMENT OF 0.03 MILES OF STATE ROUTE 88 BY REPLACEMENT OF ONE (1) STRUCTURE OVER MUD RUN RIVER INCLUDING APPROACH RECONSTRUCTION AND MINOR CHANNEL REGRADING AND RESLOPING.

ACQUIRING AGENCY: STATE OF OHIO

1993 SPECIFICATIONS

THE STANDARD SPECIFICATIONS OF THE STATE OF OHIO, DEPARTMENT OF TRANSPORTATION, INCLUDING CHANGES AND SUPPLEMENTAL SPECIFICATIONS LISTED IN THE PROPOSAL SHALL GOVERN THIS IMPROVEMENT.

I HEREBY APPROVE THESE PLANS AND DECLARE THAT THE MAKING OF THIS IMPROVEMENT WILL REQUIRE THE CLOSING TO TRAFFIC OF THE HIGHWAY AND THAT PROVISIONS FOR THE MAINTENANCE AND SAFETY OF TRAFFIC WILL BE AS SET FORTH ON THE PLANS AND ESTIMATES.

Approved _____
Date _____ Director, Department of Transportation.

Approved _____
Date _____ Assistant Deputy Director, Office of Real Estate Administration.

TRUMBULL COUNTY
TRU-88-4.31

File No.

Date of Letting: _____, 19____
Contract No. _____

PLAN PREPARED BY
MICHAEL BENZA & ASSOCIATES INC.
— CONSULTING ENGINEERS —
BRECKSVILLE, OHIO 44141 (216) 526-4206
Michael Benza P.E. 32053
9-8-93 APPROVED DATE

TRU-88-4.31

TITLE SHEET

FHWA REGION	STATE	PROJECT	
5	OHIO	STP-89	

24/24

1/1

TRUMBULL COUNTY
TRU-88-4.31

TRUMBULL COUNTY, FARMINGTON TOWNSHIP
ORIGINAL LOT 85 & 86

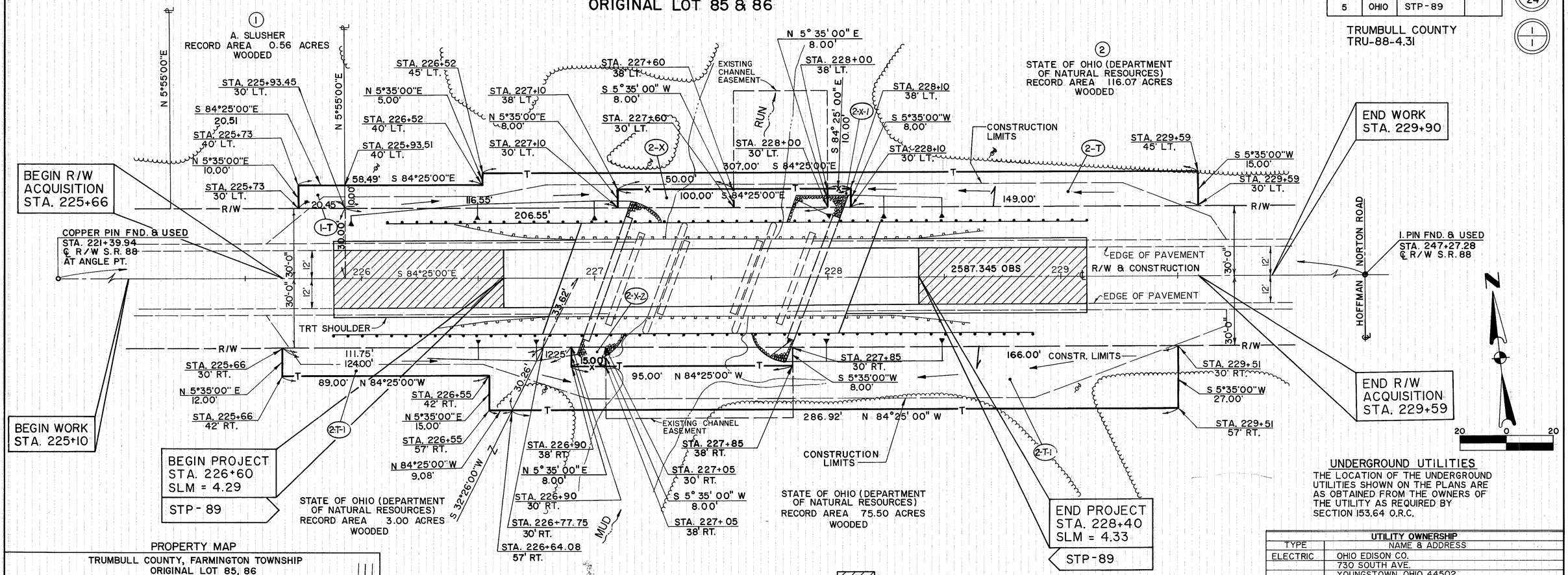

UNDERGROUND UTILITIES

THE LOCATION OF THE UNDERGROUND UTILITIES SHOWN ON THE PLANS ARE AS OBTAINED FROM THE OWNERS OF THE UTILITY AS REQUIRED BY SECTION 153.64 O.R.C.

UTILITY OWNERSHIP	
TYPE	NAME & ADDRESS
ELECTRIC	OHIO EDISON CO.
	730 SOUTH AVE.
	YOUNGSTOWN, OHIO 44502
TELEPHONE	UNITED TELEPHONE CO.
	P.O. BOX 311
	WARREN, OHIO 44482

PROPERTY MAP

TRUMBULL COUNTY, FARMINGTON TOWNSHIP
ORIGINAL LOT 85, 86

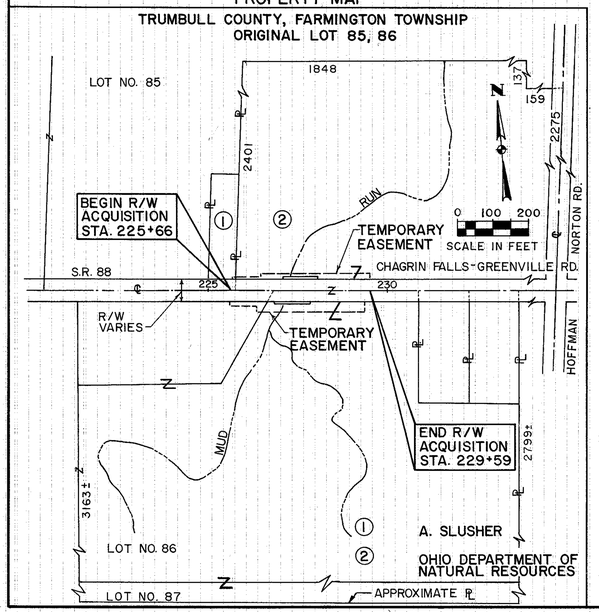

SUMMARY OF ADDITIONAL RIGHT OF WAY

NO. OF STRUCTURES 0. NO. OF PROPERTY OWNERS 2 NO. OF TOTAL TAKES 0. STATE JOB NO. 049610 PID NO. 10059

PARCEL NO.	OWNER	SHEET NO.	OWNERS RECORD VOL.	OWNERS RECORD PAGE	AUDITOR'S PARCEL NO.	RECORD AREA (AC)	TOTAL P.R.O.	GROSS TAKE	P.R.O. IN TAKE	NET TAKE	STRUCTURE	NET RESIDUE LEFT	NET RESIDUE RIGHT	TYPE FUND	REMARKS	AS ACQUIRED VOL.	AS ACQUIRED PAGE
1-T	A. SLUSHER	1	528	10	50-039700	0.561	0.052	0.005	0	0.005		0.509		STATE	TEMP. FOR GRADING		
2-X	STATE OF OHIO (DEPARTMENT OF NATURAL RESOURCES)	1	698	263	58-000001	116.07	1.47	0.009	0	0.009				STATE	CHANNEL EASEMENT		
2-X-1		1						0.002	0	0.002				STATE	CHANNEL EASEMENT		
2-T		1						0.101	0	0.101				STATE	TEMP. FOR GRADING		
2-X-2		1	699	493	58-00001	75.5	0.31	0.003	0	0.003				STATE	CHANNEL EASEMENT		
2-T-1		1	725	348	58-00001	3.00	0.375	0.191	0	0.191				STATE	TEMP. FOR GRADING		
	TOTAL					195.57	2.155					114.60	77.815				

REV.	DATE	DESCRIPTION

DATE OF COMPLETION:

TRU-88-4.31

RIGHT OF WAY PLAN

INTRODUCTION

THE RESULTS OF FIELD AND LABORATORY TESTING, AND SUBSURFACE EXPLORATION FINDINGS FOR THE PROPOSED REPLACEMENT OF THE BRIDGE OVER MUD RUN ON STATE ROUTE 88 IN EAST FARMINGTON, OHIO ARE PRESENTED IN THIS REPORT. SUBSURFACE CONDITIONS WERE IDENTIFIED BY AN EXPLORATION CONSISTING OF FOUR STANDARD PENETRATION TEST BORINGS. SAMPLES FROM HE BORINGS WERE RETURNED TO THE LABORATORY WHERE SELECTED SAMPLES WERE TESTED. THE FIELD AND LABORATORY TESTS WERE INTERPRETED BY GEOTECHNICAL ENGINEERING METHODS IN ORDER TO DEVELOP FOUNDATION RECOMMENDATIONS FOR REPLACEMENT OF THE BRIDGE.

THE EXISTING BRIDGE IS A THREE-SPAN STRUCTURE APPROXIMATELY 76 FT IN LENGTH AND 32 FT IN WIDTH MEASURED OUT-TO-OUT OF THE CONCRETE DECK. THE INTERMEDIATE PIERS SET IN THE RIVER CONSIST OF REINFORCED CONCRETE PILE CAPS EACH OF WHICH IS SUPPORTED ON SEVEN PILES. THE ABUTMENTS ARE REINFORCED CONCRETE PILE CAPS EACH SUPPORTED ON FIVE PILES. THE PILES ARE 16 INCH SQUARE REINFORCED CONCRETE DRIVEN TO APPROXIMATELY 20 FT DEPTHS. THE TOPS OF THE PILES AT THE PIERS ARE EXPOSED BENEATH THE PILE CAPS. THE PIERS AND ABUTMENTS ARE SKEWED AT AN ANGLE OF APPROXIMATELY 20 DEGREES TO THE AXIS OF THE BRIDGE. AT THE TIME OF OUR FIELD TESTING, THE SURFACE OF THE WATER WAS ABOUT 5 FT BELOW THE DECK, AND THE DEPTH OF THE WATER BENEATH THE BRIDGE AT ITS DEEPEST POINT WAS ABOUT 3-1/2 FT.

GEOLOGY OF THE SITE

THE PROJECT SITE IS SITUATED NEAR THE SOUTH END OF A NARROW, RELATIVELY DEEP, NORTH-SOUTH TRENDING, PREGLACIAL VALLEY WHICH HAS BEEN FILLED WITH GLACIAL TILL, AND AT SHALLOWER DEPTHS, LAKE BOTTOM SOIL DEPOSITS. THE PRESENT DAY GRAND RIVER FLOWS ALONG A BAND OF LACUSTRINE DEPOSITS WHICH EXTENDS FROM S.R. 5 IN SOUTHINGTON AT ITS SOUTH TERMINUS WHERE IT IS ABOUT 6 MILES WIDE, AND GRADUALLY NARROWS TO ABOUT 2-1/2 MILES IN WIDTH AT ITS NORTH END AT INTERSTATE 90 SOUTH OF ASHTABULA. LACUSTRINE DEPOSITS TYPICALLY CONSIST OF FINE GRAINED SILTS AND CLAYS INTERBEDDED WITH THIN SAND LAYERS.

MUD RUN WHICH IS A NORTH FLOWING TRIBUTARY OF THE GRAND RIVER, CROSSES S.R. 88 JUST WEST OF EAST FARMINGTON. THE LAKE BOTTOM DEPOSITS ARE RELATIVELY DEEP IN THE PROJECT AREA AND ARE UNDERLAIN BY GROUND MORAINE DEPOSITS WHICH ARE IN TURN UNDERLAIN BY THE DEVONIAN AGE, OHIO SHALE FORMATION. BEDROCK WAS ENCOUNTERED AT A DEPTH OF APPROXIMATELY 80 FT IN THE PROJECT AREA. THE BEDROCK WHICH WAS CLASSIFIED AS SILTSTONE BECAUSE OF ITS GRAINY FEEL IS UNWEATHERED. THE ROCK'S HARDNESS RANGED FROM MODERATELY HARD TO HARD WITHIN THE DEPTHS EXPLORED.

EXPLORATION

SUBSURFACE CONDITIONS WERE STUDIED BY AN EXPLORATION PROGRAM CONSISTING OF FOUR STANDARD PENETRATION TEST BORINGS. THE BORING LOCATIONS WERE SELECTED BY EDP CONSULTANTS. GROUND SURFACE ELEVATIONS AT THE BORINGS WERE MEASURED BY DIFFERENTIAL LEVELING WITH REFERENCE TO A TEMPORARY BENCHMARK, A P.K. NAIL IN AN 11 INCH ELM TREE 61 FT NORTH OF S.R. 88 AT STATION 224+07, SET BY MICHAEL BENZA AND ASSOCIATES. THE ELEVATION OF THE TEMPORARY BENCHMARK WAS GIVEN AS 832.92 FT. THE APPROXIMATE LOCATIONS OF THE BORINGS ARE SHOWN ON THE ENCLOSED BORING LOCATION PLAN. SURFACE ELEVATIONS WHICH WERE REFERENCED TO THE TEMPORARY BENCHMARK ARE LISTED ON THE BORING LOGS.

THE BORINGS WERE DRILLED AND SAMPLED PER ODOT SPECIFICATIONS TO DEPTHS RANGING FROM 79 TO 86-1/2 FT REFERENCED TO THE SURFACE OF THE BRIDGE DECK. B-1 AND B-4 WERE DRILLED THROUGH THE ROADWAY AT THE APPROACHES TO THE BRIDGE USING 3-1/4 INCH I.D. HOLLOW STEM AUGERS TURNED BY A TRUCK-MOUNTED CME 55 DRILL RIG. B-2 AND B-3, WHICH WERE DRILLED THROUGH THE BRIDGE DECK BY SETTING CASING, WERE DRILLED BY WASH BORING METHODS USING A 3-1/8 INCH TRICONE BIT.

SOIL SAMPLES WERE OBTAINED AT SPECIFIED INTERVALS USING A TWO INCH O.D. SPLIT-BARREL SAMPLER. THE NUMBER OF BLOWS OF A 140 POUND HAMMER DROPPING 30 INCHES WAS RECORDED FOR EACH OF THREE, SIX INCH PENETRATION INTERVALS AT EVERY SAMPLE LOCATION. WHEN SAMPLING IN ROCK OR HARD SOIL WHERE A PENETRATION OF LESS THAN 6 INCHES WAS ATTAINED FOR 50 HAMMER BLOWS, THE ACTUAL BLOW COUNT AND PENETRATION FOR THAT SAMPLE INTERVAL WERE RECORDED. THIN-WALL SHELBY TUBES WERE HYDRAULICALLY PRESSED TO OBTAIN UNDISTURBED SAMPLES FROM B-1; 10 TO 12 FT AND 21 TO 23 FT, B-2; 15 TO 17 FT AND 26 TO 28 FT, B-3; 16 TO 18 FT AND 25.5 TO 27.5 FT, AND B-4; 10 TO 12 FT AND 29.5 TO 31.5 FT.

THE BORINGS WERE CORED AT B-1 FROM 81.5 TO 85.5 FT, AND B-3 FROM 77.5 TO 86 FT. B-3 WAS ALSO CORED FROM 70 TO 77.5 FT WHEN IT APPEARED FROM THE HIGH BLOWCOUNTS AND GRAVEL IN THE PRECEDING SPT SAMPLE THAT BEDROCK HAD BEEN ENCOUNTERED. HOWEVER, FROM THE LOW SAMPLE RECOVERY AND OBSERVATION OF THE CORE MATERIAL IT BECAME OBVIOUS THAT BEDROCK HAD NOT YET BEEN REACHED AND THE SECOND CORE RUN WAS MADE.

BEDROCK WAS CORED USING AN NX SIZE, DOUBLE-TUBE, DIAMOND BIT CORE BARREL. CORE SAMPLES WERE MEASURED FOR PERCENT RECOVERY, THEN PLACED IN CORRUGATED PLASTIC CORE BOXES AND MAINTAINED IN A MOIST CONDITION UNTIL EXAMINED, CLASSIFIED, AND TESTED.

MEASUREMENTS OF GROUNDWATER IN THE BOREHOLES WERE MADE AT INITIAL ENCOUNTER AND THE COMPLETION OF DRILLING. THE RESULTS OF THIS FIELD EXPLORATION ARE PRESENTED ON THE ENCLOSED BORING LOGS. THE BOREHOLES WERE BACKFILLED UPON COMPLETION.

LABORATORY TESTING

SAMPLES WERE DELIVERED TO THE LABORATORY, WHERE THEY WERE EXAMINED AND CLASSIFIED BY A GEOTECHNICAL ENGINEER USING SOIL TESTS AND/OR VISUAL MANUAL METHODS PER OHIO DEPARTMENT OF TRANSPORTATION, BUREAU OF TESTING PROCEDURES SPECIFICATIONS. SELECTED SOIL SAMPLES WERE TESTED FOR MOISTURE CONTENT, PARTICLE SIZE ANALYSIS WITH ONE-POINT HYDROMETER READINGS, LIQUID AND PLASTIC LIMITS, UNCONFINED COMPRESSIVE STRENGTH OF SOILS. UNIAXIAL COMPRESSIVE STRENGTH TESTS WERE COMPLETED ON SELECTED ROCK CORES.

THE SAMPLE LOCATIONS AND DEPTHS ARE LISTED IN THE TABLE INCLUDED WITH THIS REPORT. WATER CONTENTS, LIQUID AND PLASTIC LIMITS, AND GRAIN SIZE ANALYSIS RESULTS ARE LISTED ON THE BORING LOGS. THE RESULTS OF THE GRAIN SIZE ANALYSIS TESTS AND STRESS-STRAIN CURVES FROM THE UNCONFINED COMPRESSION TESTS ARE PRESENTED GRAPHICALLY ON ENCLOSED DATA SHEETS. THE ROCK CORE UNIAXIAL COMPRESSION TEST RESULTS ARE PRESENTED IN AN ENCLOSED TABLE.

SUBSURFACE EXPLORATION FINDINGS

THE SITE'S EXPLORATION ENCOUNTERED A PROFILE CONSISTING OF THE LACUSTRINE DEPOSITS UNDERLAIN BY OVERCONSOLIDATED GROUND MORAINE FOLLOWED BY SHALE OR SILTSTONE BEDROCK.

THE PROFILE CAN GENERALLY BE DESCRIBED AS CONSISTING OF THE FOLLOWING STRATA:

0 TO 6 FT; *ASPHALT*, GRAVEL *BASE*, SAND, SILT, AND CLAY *FILL* WITH BRICK AND ORGANIC CONTAMINATION, AND MEDIUM BROWN OR BROWN AND GRAY *SILT AND CLAY*. AT B-2 AND B-3 WHICH WERE DRILLED THROUGH THE BRIDGE DECK, THE GROUND SURFACE WAS 8-1/2 FT BELOW THE SURFACE OF THE DECK. THIS IS APPROXIMATELY 1 FT HIGHER IN ELEVATION THAN THE 821 FT ELEVATION ESTABLISHED FOR THE CHANNEL BOTTOM AT THE TIME OF BRIDGE'S ORIGINAL CONSTRUCTION. THE AVERAGE THICKNESS OF THE DECK WAS MEASURED TO BE 15 INCHES. AT B-1, B-3, AND B-4 THE THICKNESS OF THE ASPHALT AND THE BRIDGE DECK WAS MEASURED AFTER THE SURFACE HAD BEEN GROUND IN PREPARATION FOR RESURFACING THUS THE THICKNESSES INDICATED ON THE LOGS WILL NOT NECESSARILY BE CONSISTENT WITH THE THICKNESSES THAT WILL EXIST WHEN THIS PROJECT IS CONSTRUCTED.

6 TO 16 FT; GENERALLY STIFF WITH SOME MEDIUM LAYERS OF BROWN AND GRAY *SILT AND CLAY*. THIS STRATA CONTAINED ZONES OF ORGANIC CONTAMINATION, SOME WITH FIBROUS ORGANIC MATERIAL SUCH AS PARTIALLY DECAYED ROOTS AND LEAVES. THE BROWN AND GRAY COLOR INDICATES THAT THIS LAYER IS PARTIALLY SATURATED SINCE MINERALS IN THE SOIL OXIDIZE WHEN IN CONTACT WITH AIR IN THE SOIL VOIDS AND CHANGING COLOR FROM GRAY TO BROWN.

16 TO 68 FT; GENERALLY STIFF TO VERY STIFF GRAY *SILT AND CLAY*. AT B-2 FROM APPROXIMATELY 16 TO 30 FT THIS STRATA CONSISTED OF INTERBEDDED LAYERS OF *GRAVEL WITH SAND*, AND *SILT AND CLAY*. AT B-3 MEDIUM CONSISTENCY, ORGANICALLY CONTAMINATED *SILT AND CLAY* AND VERY SOFT *SILT AND CLAY* LAYERS WERE ENCOUNTERED IN THE ZONE FROM 16 TO ABOUT 28 FT. SOME ZONES IN THE UPPER PORTION OF THE STRATA ARE SOFTER IN CONSISTENCY THAN THE SPT BLOWCOUNTS WOULD SUGGEST. THE TRANSITION FROM LAKE BOTTOM TO GROUND MORAINE DEPOSITS OCCURS WITHIN THIS STRATA. ALTHOUGH IT WAS IMPOSSIBLE TO POSITIVELY DETERMINE THE DEPTH OF THE TRANSITION FROM THE SPLIT-BARREL SAMPLES, WE ESTIMATE THAT THE TRANSITION OCCURS AT A DEPTH OF ABOUT 60 FT.

68 TO 70 FT; VERY STIFF GRAY *SILT AND CLAY*, DENSE GRAY *SANDY SILT*, AND FIRM GRAY *SAND*.

70 TO 81 FT; HARD GRAY *GRAVELLY CLAY*.

BELOW 81 FT; MODERATELY HARD TO HARD GRAY *SILTSTONE* OR *SHALE* BEDROCK.

GROUNDWATER WAS ENCOUNTERED DURING DRILLING AT DEPTHS RANGING FROM 11 FT AT B-1 TO 14 FT AT B-4. GROUNDWATER LEVELS AT COMPLETION WERE 10 FT AT B-1 AND 7 FT AT B-4.

LEGEND

X/Y/Z — SPLIT-BARREL SAMPLED BORING, WITH SHELBY TUBE SAMPLES

FIGURES IN THE STD. PEN. (N) COLUMN OF THE BORING LOGS INDICATE THE NUMBER OF BLOWS FOR STANDARD PENETRATION TEST, EACH NUMBER IS FOR SIX INCHES OF PENETRATION. IF ONLY TWO NUMBERS ARE GIVEN, THEY ARE THE LAST TWO SIX INCHES SAMPLING INTERVALS.

INDICATES THE WATER LEVEL ON COMPLETION IN THE BORING

SYMBOLS OF SOIL AND ROCK TYPES

- ASPHALT, BASE
- FINE SAND
- GRAVEL AND/OR STONE FRAGMENTS
- SILT
- SANDY SILT
- SILTY CLAY
- SILT AND CLAY
- CLAY
- GRAVELLY CLAY
- SILTSTONE

CALCULATED BY J.L. 11/13/92
CHECKED BY A.J.E. 11/13/92

FHWA REGION	STATE	PROJECT	
5	OHIO		

2/4

TRUMBULL COUNTY
TRU -88-4.31

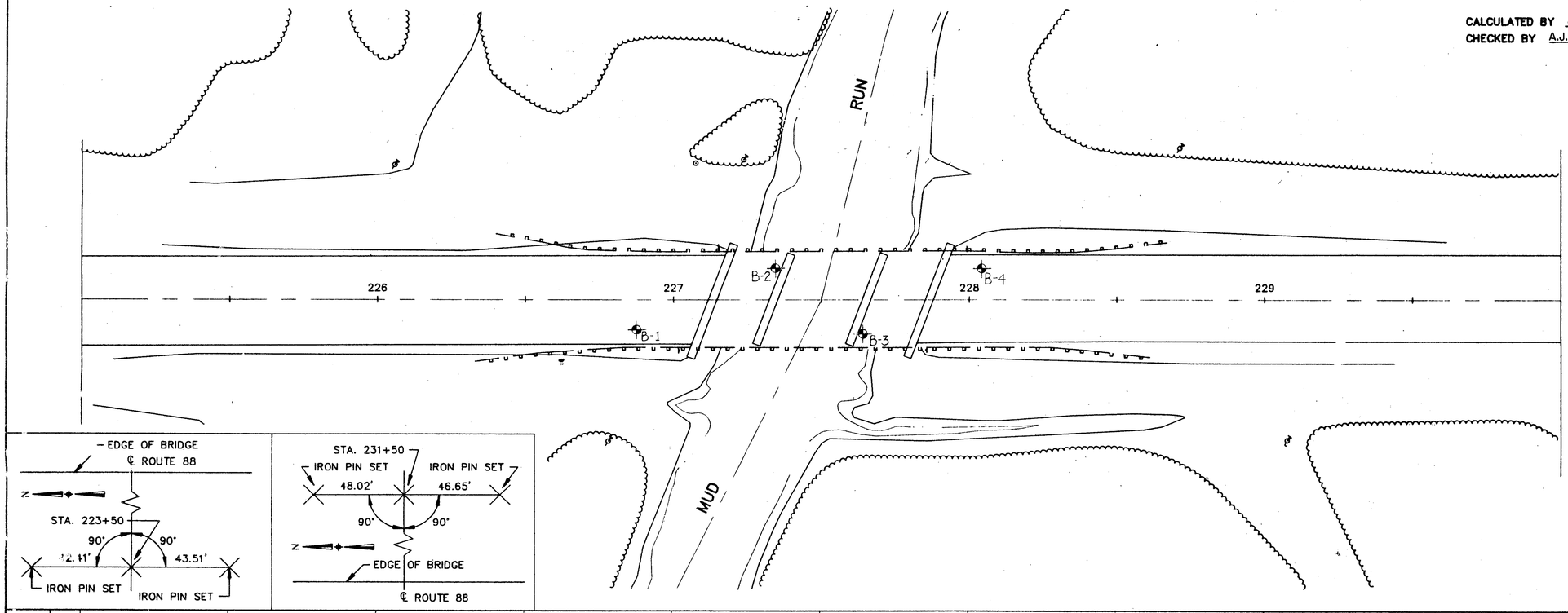

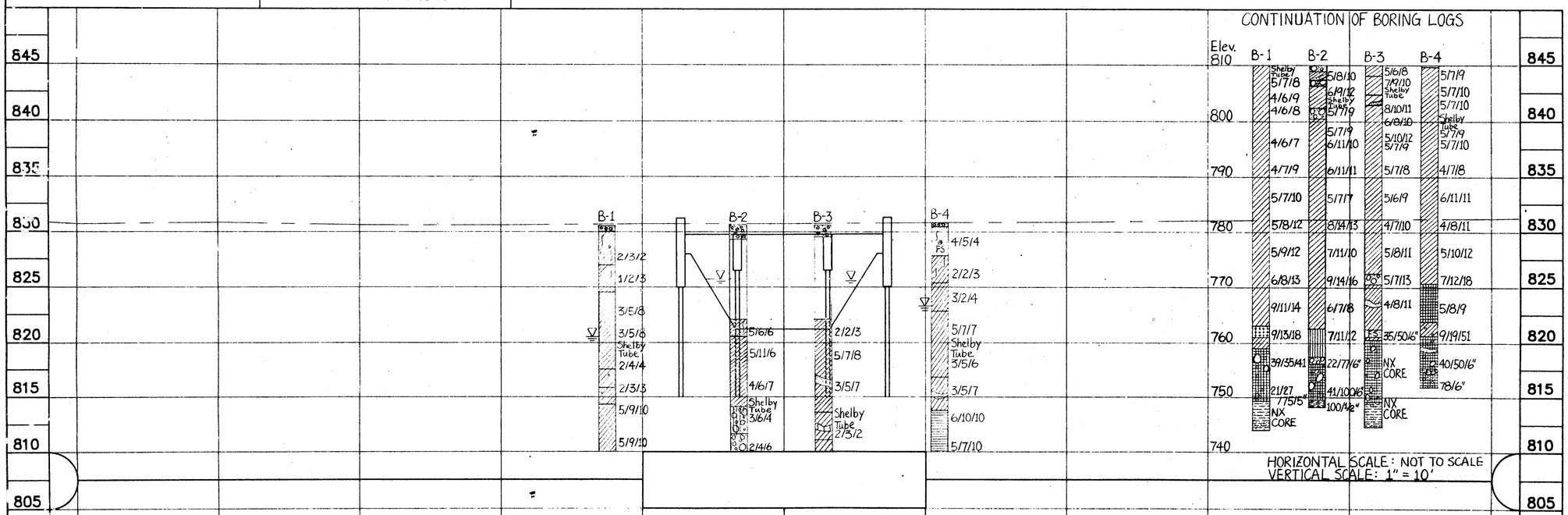

REF. No.	STATION TO STATION	SIDE

TOTALS

TRU -88-4.31

CALCULATED BY J.L. 11/13/92
CHECKED BY A.J.E. 11/13/92

FHWA REGION	STATE	PROJECT	
5	OH10		

TRUMBULL COUNTY
TRU -88-4.31

3/4

LOG OF BORING

Date Started 8-25-92 Sampler Type SPLIT-BARREL Water Elev. Immediate 819.6 ft
Date Completed 8-25-92 After___ Hours ___
Project Identification: BRIDGE TRU 88-4.31 EAST FARMINGTON, OHIO
Boring No. 1 Station & Offset 226+81 R 10FT Surface Elev. 830.6 ft

Elev.	Depth	Std. Pen.(N)	Description	Field No.	Lab. Nos. So.	%Agg	%CS	%FS	%Silt	%Clay	LL	PI	WC	SHTL Class
	0		ASPHALT* (1") BASE (7")											
	2	2- 3- 2	FILL: GRAY ORGANICALLY CONTAMINATED SILT AND CLAY WITH GRAVEL	1	1								25	VIS
827.1	4	1- 2- 3	MEDIUM BROWN SILT AND CLAY TRACE OF ORGANICS	2	2								20	VIS
824.6	6													
	8	3- 5- 5	MEDIUM TO STIFF BROWN WITH GRAY SILT AND CLAY	3	3								23	VIS
	10	3- 5- 8		4	4								24	VIS
	12	Shelby Tube Rec. 24"		5	5								21	VIS
817.6		2- 4- 4		6	6								21	VIS
815.8	14	2- 3- 3	MEDIUM GRAY SILT AND CLAY WITH GRAVEL	7	7								21	VIS
814.3	16	5- 9-10	STIFF BROWN SILT AND CLAY WITH GRAVEL	8	8 9 10								19 28 23	VIS
	18													
	20	5- 9-10		9	11						34	13	23	A-6a
	22	Shelby Tube Rec. 24"		10										
	24	5- 7- 8		11	12						32	12	25	A-6a
	26	4- 6- 9	GENERALLY STIFF TO VERY STIFF GRAY SILT AND CLAY	12	13						32	12	23	A-6a
	28	4- 6- 8		13	14								21	VIS
	30		(continued on next page)											

Particle Sizes: Agg.->2.00 mm, Coarse Sand=2.00-0.42 mm, Fine Sand=0.42-0.074 mm, Silt =0.074-0.005 mm, Clay=<0.05 mm

EDP CONSULTANTS, INC.

Boring No. 1 Station & Offset 226+81 R 10FT Surface Elev. 830.6 FT Project: BRIDGE TRU 88-4.31 EAST FARMINGTON, OHIO

Elev.	Depth	Std. Pen.(N)	Description	Field No.	Lab. Nos. So.	%Agg	%CS	%FS	%Silt	%Clay	LL	PI	WC	SHTL Class
	30													
	32													
	34	4- 6- 7		14	15								25	VIS
	36													
	38													
	40	4- 7- 9		15	16								25	VIS
	42													
	44													
	46	5- 7-10		16	17								19	VIS
	48		STIFF TO VERY STIFF GRAY SILT AND CLAY											
	50	5- 8-12		17	18								20	VIS
	52													
	54													
	56	5- 9-12		18	19								21	VIS
	58													
	60	6- 8-13		19	20								22	VIS
	62													
	64	9-11-14	(continued on next page)	20	21								26	VIS

Particle Sizes: Agg.->2.00 mm, Coarse Sand=2.00-0.42 mm, Fine Sand=0.42-0.074 mm, Silt =0.074-0.005 mm, Clay=<0.05 mm

EDP CONSULTANTS, INC.

Boring No. 1 Station & Offset 226+81 R 10FT Surface Elev. 830.6 FT. Project: BRIDGE TRU 88 4.31 EAST FARMINGTON, OHIO

Elev.	Depth	Std. Pen.(N)	Description	Field No.	Lab. Nos. So.	%Agg	%CS	%FS	%Silt	%Clay	LL	PI	WC	SHTL Class
	64	9-11-14	STIFF TO VERY STIFF GRAY SILT AND CLAY											
	66													
763.1	68		DENSE GRAY SILT											
761.1	70	9-13-18	VERY STIFF GRAY SILT AND CLAY	21	22 23								28 13	VIS
759.1	72													
	74	39-35-41	HARD GRAY GRAVELLY CLAY	22	24								13	VIS
	76													
	78													
	80	21-27 -75/5"		23	25								16	VIS
749.6	82													
	84	NX CORE 81.5 FT TO 86.5 FT REC. 100%	MODERATELY HARD TO HARD GRAY SILTSTONE	24										
744.1	86													
	88		BORING STOPPED AT 86.5 FT. WATER ENCOUNTERED AT 11 FT. WATER ON COMPLETION AT 10 FT.											
	90													
	92		* ASPHALT THICKNESS MEASURED AFTER THE SURFACE WAS GROUND IN PREPARATION FOR RESURFACING											
	94													
	96													
	98													

Particle Sizes: Agg.->2.00 mm, Coarse Sand=2.00-0.42 mm, Fine Sand=0.42-0.074 mm, Silt =0.074-0.005 mm, Clay=<0.05 mm

EDP CONSULTANTS, INC.

LOG OF BORING

Date Started 09-03-92 Sampler Type SPLIT-BARREL Water Elev. Immediate 825.9 FT
Date Completed 09-03-92 After___ Hours ___
Project Identification: BRIDGE TRU 88-4.31 EAST FARMINGTON, OHIO
Boring No. 2 Station & Offset 227+28 L 11FT Surface Elev. 830.7 FT

Elev.	Depth	Std. Pen.(N)	Description	Field No.	Lab. Nos. So.	%Agg	%CS	%FS	%Silt	%Clay	LL	PI	WC	SHTL Class
	0		BRIDGE DECK (16-1/2")											
	2		AIR											
825.9	4													
	6		WATER											
822.2	8		BROWN SAND, GRAY CLAY, GRAVEL,											
820.7	10	5- 6- 6	CONCRETE, ORGANICS (RIVER SEDIMENT)	25	1 2								26 20	VIS
818.7	12	5-11- 6	STIFF BROWN WITH GRAY SILT AND CLAY WITH SAND	26	3								22	VIS
	14	4- 6- 7		27	4								21	VIS
814.2	16	Shelby Tube Rec. 20.5"	FIRM GRAY GRAVEL WITH SAND AND	28										
811.7	18	3- 6- 4	SILT	29	5	42	15	11	15.5	16.5	28	10	27	A-2-4
	20		FIRM GRAY GRAVEL WITH SAND											
809.2	22	2- 4- 6		30	6	40	23	10.4	9.6	17			21	A-1-b
807.7		5- 9-10	VERY STIFF GRAY SILT AND CLAY WITH SAND SEAMS	31	7								28	VIS
806.7	24		FIRM GRAY GRAVEL WITH SAND											
	26	6- 9-12	VERY STIFF GRAY SILT AND CLAY	32	8								22	VIS
802.7	28	Shelby Tube Rec. 24"	FIRM GRAY GRAVEL WITH SAND	33	9								21	
		5- 7- 9		34	10	35	30	13.5	9.0	12.5				A-1-b
800.7	30		(continued on next page)											

Particle Sizes: Agg.->2.00 mm, Coarse Sand=2.00-0.42 mm, Fine Sand=0.42-0.074 mm, Silt =0.074-0.005 mm, Clay=<0.05 mm

EDP CONSULTANTS, INC.

Boring No. 2 Station & Offset 227+28 L 11FT Surface Elev. 830.7 FT Project: BRIDGE TRU 88-4.31 EAST FARMINGTON, OHIO

Elev.	Depth	Std. Pen.(N)	Description	Field No.	Lab. Nos. So.	%Agg	%CS	%FS	%Silt	%Clay	LL	PI	WC	SHTL Class
800.7	30		FIRM GRAY GRAVEL WITH SAND											
	32				11								23	
	34	5- 7- 9		35	12						33	13		A-6a
	36	6-11-10		36	13								23	VIS
	38													
	40	6-11-11		37	14								21	VIS
	42													
	44													
	46	5- 7- 7		38	15								23	VIS
	48		VERY STIFF GRAY SILT AND CLAY											
	50	8-14-13		39	16 17						32	13	17	A-6a
	52													
	54													
	56	7-11-10		40	18						32	13	22	A-6a
	58													
	60	9-14-16		41	19								33	VIS
	62													
	64	6- 7- 8	(continued on next page)	42	20								27	VIS

Particle Sizes: Agg.->2.00 mm, Coarse Sand=2.00-0.42 mm, Fine Sand=0.42-0.074 mm, Silt =0.074-0.005 mm, Clay=<0.05 mm

EDP CONSULTANTS, INC.

Boring No. 2 Station & Offset 227+28 L 11FT Surface Elev. 830.7 FT Project: BRIDGE TRU 88-4.31 EAST FARMINGTON, OHIO

Elev.	Depth	Std. Pen.(N)	Description	Field No.	Lab. Nos. So.	%Agg	%CS	%FS	%Silt	%Clay	LL	PI	WC	SHTL Class
	64	6- 7- 8	VERY STIFF GRAY SILT AND CLAY											
	66													
762.7	68				21								12	
	70	7-11-12	DENSE GRAY SANDY SILT	43	22						22	6		A-4a
757.7	72													
756.2	74		FIRM GRAY GRAVEL WITH SAND		23								11	
	76	22-77/6"		44	24	44	39	4.8	7.7	4.5				A-1-b
	78													
	80		HARD GRAY GRAVELLY CLAY											
749.7		41-100/6"		45	25								10	
748.2	82	100/1/2"	GRAY SHALE	46										
	84													
	86													
	88													
	90		BORING STOPPED AT 82.5 FT. WATER ENCOUNTERED AT 4.8 FT. WATER ON COMPLETION AT 4.8 FT.											
	92													
	94													
	96													
	98													

Particle Sizes: Agg.->2.00 mm, Coarse Sand=2.00-0.42 mm, Fine Sand=0.42-0.074 mm, Silt =0.074-0.005 mm, Clay=<0.05 mm

EDP CONSULTANTS, INC.

TRU-88-4.31

CALCULATED BY J.L. 11/13/92
CHECKED BY A.J.E. 11/13/92

FHWA REGION	STATE	PROJECT	
5	OHIO		

4/4

TRUMBULL COUNTY
TRU - 88-4.31

LOG OF BORING

Date Started 08-20-92 Sampler Type SPLIT-BARREL Water Elev. Immediate 825.8 FT
Date Completed 08-21-92 After ___ Hours ___
Project Identification: BRIDGE TRU 88-4.31 EAST FARMINGTON, OHIO
Boring No. 3 Station & Offset 227+70 R 11.5FT Surface Elev. 830.6 FT

Elev.	Depth	Std. Pen. (N)	Description	Field No.	Lab. Nos. So.	%Agg	%CS	%FS	%Silt	%Clay	LL	PI	WC	SHTL Class
	0		BRIDGE DECK* (13-1/2")											
	2		AIR											
825.8	4													
	6		WATER											
822.1	8													
	10	2- 2- 3		47	1								24	VIS
	12	5- 7- 8		48	2								25	VIS
	14		MEDIUM TO STIFF BROWN WITH GRAY SILT AND CLAY WITH SAND SEAMS											
	16	3- 5- 7		49	3								20	VIS
813.6		Shelby Tube												
812.8	18	Rec. 18"	STIFF GRAY SILT AND CLAY WITH SAND AND SAND PARTINGS	50										
811.1		2- 3- 2		51	4								28	VIS
	20		MEDIUM GRAY SILT AND CLAY WITH SAND AND ORGANICS											
808.1	22	5- 6- 8	STIFF GRAY SILT AND CLAY WITH SHALE FRAGMENTS	52	5								22	VIS
	24	7- 9-10	VERY STIFF GRAY SILT AND CLAY	53	6								25	VIS
805.1	26	Shelby Tube	VERY SOFT GRAY SILT AND CLAY WITH SAND SEAMS										33	
		Rec. 24"		54									28	
803.1	28		VERY STIFF GRAY SILT AND CLAY		7								21	
		8-10-11		55	8						34	14		A-6a
	30		(continued on next page)											

Particle Sizes: Agg.->2.00 mm, Coarse Sand-2.00-0.42 mm, Fine Sand-0.42-0.074 mm, Silt =0.074-0.005 mm, Clay=<0.05 mm

EDP CONSULTANTS, INC.

Boring No. 3 Station & Offset 227+70 R 11.5FT Surface Elev. 830.6 FT Project: BRIDGE TRU 88-4.31 EAST FARMINGTON, OHIO

Elev.	Depth	Std. Pen. (N)	Description	Field No.	Lab. Nos. So.	%Agg	%CS	%FS	%Silt	%Clay	LL	PI	WC	SHTL Class
	30	6- 8-10												
	32													
	34	5-10-12		56	9								24	VIS
		5- 7- 9		57	10								24	VIS
	36													
	38													
	40	5- 7- 8		58	11								21	VIS
	42													
	44		VERY STIFF GRAY SILT AND CLAY											
		5- 6- 9		59	12								25	VIS
	46													
	48													
	50	4- 7-10		60	13								19	VIS
	52													
	54													
		5- 8-11		61	14								21	VIS
	56													
772.6	58													
			FIRM GRAY GRAVEL WITH SAND											
770.6	60	5- 7-13		62	15	5	45	18.6	14.2	17.2				A-1-b
					16									
	62												20	
			VERY STIFF GRAY SILT AND CLAY WITH											
	64	4- 8-11	SAND SEAMS	63										
		(NO REC.)	(continued on next page)											

Particle Sizes: Agg.->2.00 mm, Coarse Sand-2.00-0.42 mm, Fine Sand-0.42-0.074 mm, Silt =0.074-0.005 mm, Clay=<0.05 mm

EDP CONSULTANTS, INC.

Boring No. 3 Station & Offset 227+70 R 11.5FT Surface Elev. 830.7 FT Project: BRIDGE TRU 88-4.31 EAST FARMINGTON, OHIO

Elev.	Depth	Std. Pen. (N)	Description	Field No.	Lab. Nos. So.	%Agg	%CS	%FS	%Silt	%Clay	LL	PI	WC	SHTL Class
	64													
		4- 8-11	VERY STIFF GRAY SILT AND CLAY WITH											
	66	(NO REC.)	SAND SEAMS											
762.6	68													
761.1			FIRM GRAY FINE SAND											
760.8	70	35-50/6"	HARD GRAY SILT AND CLAY	64	17							15		
	72													
		NX CORE												
	74	70.0 FT TO												
		77.5 FT		65										
	76	REC. 36%	HARD GRAY GRAVELLY CLAY											
	78													
	80													
		NX CORE												
749.3	82	77.5 FT TO	MODERATELY HARD TO HARD GRAY	66										
		86.0 FT	SILTSTONE WITH HARD CLAY LAYER											
	84	REC. 92%	AT 80.5 TO 81.3 FT & FRACTURED ZONES											
			OF SOFTER SHALE AT 81.5 TO 81.7 FT,											
744.6	86		82.1 TO 82.5 FT, 83.9 TO 84.1 FT,											
			84.9 TO 85.1 FT, AND 85.6 TO 86.0 FT											
	88													
	90		BORING STOPPED AT 86.0 FT.											
			WATER ENCOUNTERED AT 4.8 FT.											
	92		WATER ON COMPLETION AT 4.8 FT.											
	94		* THE THICKNESS OF THE DECK WAS											
			MEASURED AFTER THE SURFACE HAD											
	96		BEEN GROUND IN PREPARATION FOR											
			RESURFACING											
	98													

Particle Sizes: Agg.->2.00 mm, Coarse Sand-2.00-0.42 mm, Fine Sand-0.42-0.074 mm, Silt =0.074-0.005 mm, Clay=<0.05 mm

EDP CONSULTANTS, INC.

LOG OF BORING

Date Started 09-28-92 Sampler Type SPLIT-BARREL Water Elev. Immediate 816.8 FT
Date Completed 08-28-92 After ___ Hours ___
Project Identification: BRIDGE TRU 88-4.31 EAST FARMINGTON, OHIO
Boring No. 4 Station & Offset 228+10.5 L 11FT Surface Elev. 830.8 FT

Elev.	Depth	Std. Pen. (N)	Description	Field No.	Lab. Nos. So.	%Agg	%CS	%FS	%Silt	%Clay	LL	PI	WC	SHTL Class
	0		ASPHALT* (4")											
	2	4- 5- 4	FILL: BROWN FINE TO MEDIUM SAND WITH BRICK FRAGMENTS AND TRACE OF ORGANICS	67	1									
827.8	4													
		2- 2- 3	MEDIUM GRAY ORGANICALLY CONTAMINATED SILT AND CLAY	68	2								23	
825.3	6													
		3- 2- 4	MEDIUM GRAY SILT AND CLAY	69	3								38	
822.8	8													
	10	5- 7- 7		70	4								22	
	12	Shelby Tube	STIFF BROWN WITH GRAY SILT AND CLAY											
		Rec. 24"		71										
		3- 5- 6		72	5								26	
816.8	14													
			STIFF BROWN AND GRAY SILT AND CLAY											
	16	3- 5- 7	WITH SAND SEAMS	73	6								19	
813.8					7								25	
	18	6-10-10		74	8								18	
			VERY STIFF BROWN AND GRAY SILTY CLAY											
	20				9								26	
809.8		5- 7-10		75	10						40	17		A-6b
	22				11								21	
		5- 7- 9		76	12						32	12		A-6a
	24													
	26	5- 7-10	GENERALLY VERY STIFF GRAY SILT AND	77	13								25	
			CLAY											
	28	5- 7-10		78	14								20	
	30		(continued on next page)											

Particle Sizes: Agg.->2.00 mm, Coarse Sand-2.00-0.42 mm, Fine Sand-0.42-0.074 mm, Silt =0.074-0.005 mm, Clay=<0.05 mm

EDP CONSULTANTS, INC.

Boring No. 4 Station & Offset 228+10.5 L 11FT Surface Elev. 830.8 FT Project: BRIDGE TRU 88-4.31 EAST FARMINGTON, OHIO

Elev.	Depth	Std. Pen. (N)	Description	Field No.	Lab. Nos. So.	%Agg	%CS	%FS	%Silt	%Clay	LL	PI	WC	SHTL Class
	30	Shelby Tube												
		Rec. 24"		79	15								21	VIS
	32													
		5- 7- 9		80	16								23	VIS
	34													
		5- 7-10		81	17								23	VIS
	36													
	38													
	40	4- 7- 8		82	18								24	VIS
	42													
	44		VERY STIFF GRAY SILT AND CLAY WITH											
			SAND SEAMS AT 43.5 TO 45.0 FT											
		6-11-11		83	19								26	VIS
	46													
	48													
	50	4- 8-11		84	20								31	VIS
	52													
	54													
		5-10-12		85	21								22	VIS
	56													
	58													
770.8	60	7-12-18		86	22								13	VIS
	62													
			VERY STIFF GRAY CLAY											
	64				23								30	
		5- 8- 9	(continued on next page)	87	24						43	17		A-7-6

Particle Sizes: Agg.->2.00 mm, Coarse Sand-2.00-0.42 mm, Fine Sand-0.42-0.074 mm, Silt =0.074-0.005 mm, Clay=<0.05 mm

EDP CONSULTANTS, INC.

Boring No. 4 Station & Offset 228+10.5 L 11FT Surface Elev. 830.8 FT Project: BRIDGE TRU 88-4.31 EAST FARMINGTON, OHIO

Elev.	Depth	Std. Pen. (N)	Description	Field No.	Lab. Nos. So.	%Agg	%CS	%FS	%Silt	%Clay	LL	PI	WC	SHTL Class
	64													
		5- 8- 9	VERY STIFF GRAY CLAY											
	66													
763.8	68													
			VERY STIFF TO HARD GRAY SILT AND											
761.3			CLAY WITH SAND AND GRAVEL											
	70	9-19-51		88	25							14	VIS	
	72													
	74		HARD GRAY GRAVELLY CLAY WITH SAND											
		40-53/6"	AND SILT SEAMS	89	26							11	VIS	
	76													
	78				27							12		
751.9		78/6"		90	28							9	VIS	
	80													
	82													
	84		BORING STOPPED AT 78.9 FT.											
			WATER ENCOUNTERED AT 14 FT.											
	86		WATER ON COMPLETION AT 7 FT.											
	88													
	90		* ASPHALT THICKNESS WAS MEASURED											
			AFTER THE SURFACE WAS GROUND IN											
			PREPARATION FOR RESURFACING											
	92													
	94													
	96													
	98													

Particle Sizes: Agg.->2.00 mm, Coarse Sand-2.00-0.42 mm, Fine Sand-0.42-0.074 mm, Silt =0.074-0.005 mm, Clay=<0.05 mm

EDP CONSULTANTS, INC.

TRU -88-4.31